RKB
BEARING INDUSTRIES

# BEARINGS CATALOGUE

No. BC2010-A

RKB BEARING INDUSTRIES **Bearings Catalogue**

© 2010 The contents of this catalogue are copyright of the publisher

Every care has been taken to ensure the accuracy of the information in the present catalogue but no liability can be accepted for any errors or omissions contained herein, or in case losses and/or damages (direct, indirect, consequential) should occur. RKB Bearing Industries reserves the right to make amendments and withdraw bearings from production without prior notice.

Single row radial ball bearings

Double row radial ball bearings

Double row self-aligning ball bearings

Single row separable ball bearings

Single and double row angular contact ball bearings

Single row duplex ball bearings

Single and double direction thrust ball bearings

Single row cylindrical roller bearings

Double row spherical roller bearings

Spherical roller thrust bearings

Taper roller bearings

RKB
BEARING INDUSTRIES

*The Alternative Power*

The **RKB** Group is an international manufacturing organization operating in the bearing industry with headquarters in Switzerland. The experience gained in this sector provides **RKB** with the know-how and expertise necessary for the development and production of technological value-added bearings, particularly in the field of heavy duty machines and equipments. All **RKB** bearings are manufactured in conformity with the International Standards in owned plants that are ISO 9001 and ISO 14001 certified. Thanks to its pioneer business model, based on a vertically integrated system, **RKB** offers reliable cost-effective solutions in the long run, with extreme operational flexibility, leading-edge service and the quality typical of a consistent premium-class bearing source. With a worldwide distribution network and exports to more than 50 Countries, **RKB** is globally recognized as *"The Alternative Power"* in the bearing industry.

# Contents


**Introduction** V
Roadmap for eligibility criteria XII
Recommendations to customers XIII

**RKB Bearings Production Range** XV

**RKB Bearings Catalogue** 3
Materials, design and load ratings 5
Suffix system 10
Bearing tolerances definitions 11
Bearing tolerances definitions (Italian) 12
Bearing tolerances definitions (Spanish) 14
Bearing tolerances data 17
Snap ring and groove tolerances 22
Radial internal clearance 23

Single row radial ball bearings 31
Double row radial ball bearings 42
Double row self-aligning ball bearings 44
Adapter sleeves 48
Single row separable ball bearings 50
Single row angular contact ball bearings 51
Double row angular contact ball bearings 54
Single row duplex ball bearings 58
Single direction thrust ball bearings 62
Double direction thrust ball bearings 66
Single direction thrust ball bearings with spherical housing washers 68
Double direction thrust ball bearings with spherical housing washers 72
Single row cylindrical roller bearings 76
Double row spherical roller bearings 92
Spherical roller thrust bearings 110
Taper roller bearings 114

**Appendix** 121
Dimensional tolerances of shaft 122
Dimensional tolerances of housing bore 123
Conversion tables 124

**General conditions** 127

The present catalogue lists the types and technical specifications of the standard ball and roller bearings manufactured and offered by **RKB** Bearing Industries. All the bearings in this catalogue are produced in accordance with the standards of the International Organization for Standardization (ISO). The load ratings in this volume are principally based on ISO 281 and ISO 76, but are not calculated according to the latest available bearing design and execution. In order to get further background information on calculations please ask **RKB** Technical Department for related data. Unilaterally empowered factors, formulas and tables are not taken into consideration.
This catalogue is intended to be a critical information and advisory instrument for all technical issues regarding rolling bearings, and a guideline for machine and equipment designers.

The standard products described in this publication only partially cover the range of bearings manufactured by **RKB**. In fact, rolling bearing technology is in constant development and **RKB** Bearing Industries specializes most of all in technological, big size and application optimized bearings, both in through-hardened steel and case-hardened steel.
Therefore, due to the necessity of incessantly revising and optimizing products, **RKB** adopted the Technical Fiche method to offer the most accurate and up-to-date data in compliance with the latest available executions (examples on page VI, VII, VIII, IX, X, and XI). So, because of continuous redesign and technological progress, this catalogue cannot be considered exhaustive in terms of product range and executions. For this reason, for a more comprehensive knowledge of the bearing families manufactured by **RKB** please refer to the Bearings Production Range enclosed here and contact **RKB** Technical Department to request the most updated technical fiche of the products of your interest.

Then, although this catalogue is correct at the time of going to press, bearings supplied may be of a different design to that specified.
The listing of bearing types and sizes in this catalogue does not imply that they are always available and customers are advised to check with **RKB** Sales Department before committing themselves to any particular bearing.
A technical advisory service is available on a confidential basis. Any customer who wishes to take advantage of this service should submit a drawing or sketch and all details of the proposed application to **RKB** Technical Department.

RKB



# Deep groove ball bearings

GGC140410

## 618/750 MB

| Main boundary dimensions (mm) | |
|---|---|
| d | 750 |
| D | 920 |
| B | 78 |

| Technical data | | | |
|---|---|---|---|
| Basic load ratings (kN) | Dyn. | $C_r$ | 525 |
| | Stat. | $C_{0r}$ | 1250 |
| Mass (kg) | | | 116 |
| Cage material | | | Brass |
| Radius min (mm) | | $r_1$ | 5,0 |
| | | $r_2$ | 5,0 |
| | | $r_3$ | 5,0 |
| | | $r_4$ | 5,0 |
| Precision class | | | P0 |
| e | | | - |
| Radial clearance (mm) | | | CN |
| Configuration/Design | | | 618/MB |

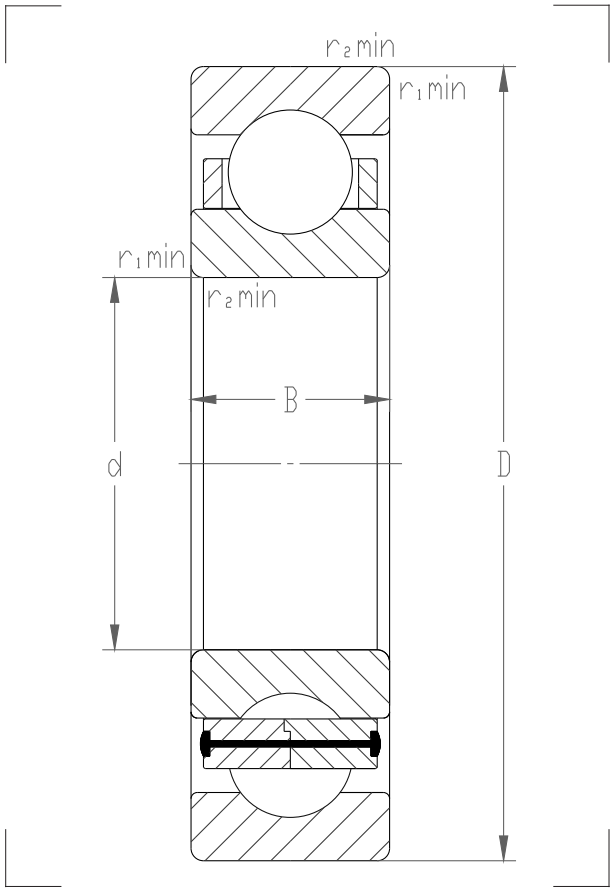


| Technical notes |
|---|
| - Machined brass cage guided on inner ring (rivet-type)<br>- Speed rating oil lubrication 600 rpm<br>- 29 balls dia 1-7/8"<br>- Outer ring raceway diameter 882,625<br>- Inner ring raceway diameter 787,375<br>- Raceways curvature R25 |

Sketch scale is free.
Load ratings are principally based on ISO 281 and ISO 76, but not calculated according to the latest bearing design and execution. For further background ask for related calculations.
Single-sided empowered factors, formulas and tables are not taken into consideration.
Also refer to RKB Affidavit of Conformance (LJSA) for related compliance to International Standards.
Every care has been taken to ensure the accuracy of the information in the present drawing but no liability can be accepted for any errors or omissions contained herein, or in case losses and/or damages (direct, indirect, consequential) should occur.
RKB Bearing Industries reserves the right of any amendment without notice.

For reference only. Copyright © RKB Bearing Industries - Switzerland

# Cylindrical roller bearings

CC270510

## NU 2032 EMAC3ZB

| Main boundary dimensions (mm) | |
|---|---|
| d | 160 |
| D | 240 |
| B | 48 |
| F | 180 |

| Technical data | | | |
|---|---|---|---|
| Basic load ratings (kN) | Dyn. | $C_r$ | 410 |
| | Stat. | $C_{0r}$ | 670 |
| Mass (kg) | | | 8,0 |
| Cage material | | | Brass |
| Radius min (mm) | $r_1$ | | 1,5 |
| | $r_2$ | | 1,5 |
| | $r_3$ | | 2,1 |
| | $r_4$ | | 2,1 |
| Precision class | | | P0 |
| e | | | - |
| Radial clearance (mm) | | | C3 |
| Configuration/Design | | | NU/EMA |

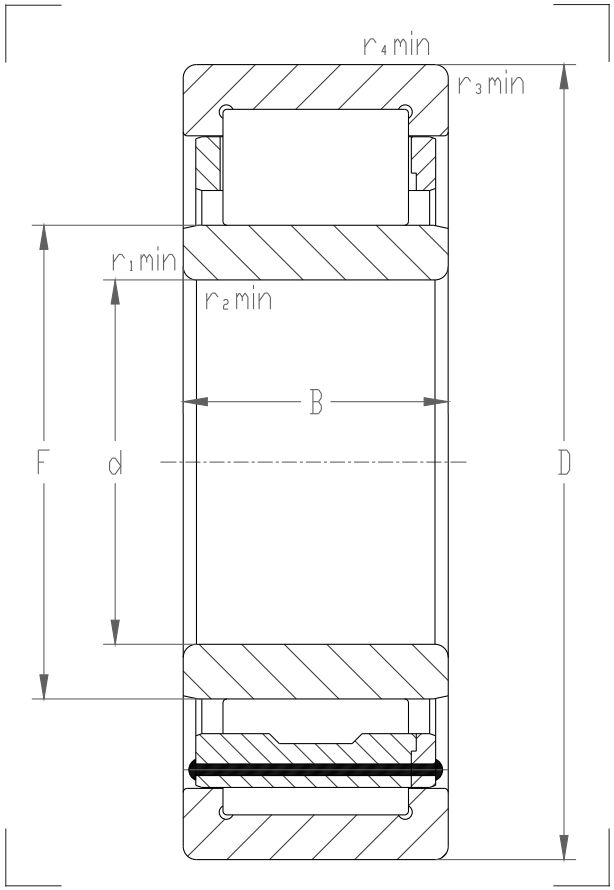


| Technical notes |
|---|
| - Optimized inner geometry E Type<br>- Machined brass cage guided on outer ring (rivet-type)<br>- ZB roller profile<br>- Max axial displacement +/-2 mm<br>- For general industry purpose |

Sketch scale is free.
Load ratings are principally based on ISO 281 and ISO 76, but not calculated according to the latest bearing design and execution. For further background ask for related calculations.
Single-sided empowered factors, formulas and tables are not taken into consideration.
Also refer to RKB Affidavit of Conformance (LJSA) for related compliance to International Standards.
Every care has been taken to ensure the accuracy of the information in the present drawing but no liability can be accepted for any errors or omissions contained herein, or in case losses and/or damages (direct, indirect, consequential) should occur.
RKB Bearing Industries reserves the right of any amendment without notice.

For reference only. Copyright © RKB Bearing Industries - Switzerland

RKB

RKB Bearings Technical Fiche

# Spherical roller bearings

GGC260510

## 24192 CAC3W33X

| Main boundary dimensions (mm) | |
|---|---|
| d | 460 |
| D | 760 |
| B | 300 |

| Technical data | | | |
|---|---|---|---|
| Basic load ratings (kN) | Dyn. | $C_r$ | 7300 |
| | Stat. | $C_{0r}$ | 14000 |
| Mass (kg) | | | 547,0 |
| Cage material | | | Brass |
| Radius min (mm) | | $r_1$ | 7,5 |
| | | $r_2$ | 7,5 |
| | | $r_3$ | - |
| | | $r_4$ | - |
| Precision class | | | P0 |
| e | | | 0,37/13°30' |
| Radial clearance (mm) | | | C3 |
| Configuration/Design | | | CAW33X |

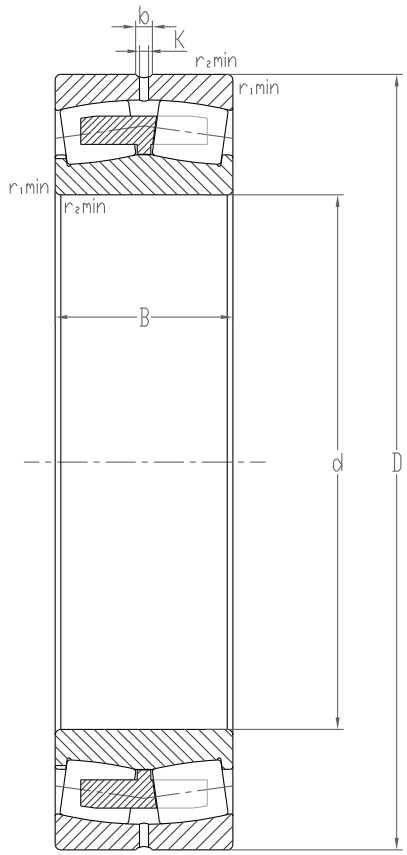


| Technical notes |
|---|
| - Annular groove and 6 lubrication holes in outer ring b;K (suffix W33X)<br>- Optimized cage design (integrated guiding slinger)<br>- For general industry purpose |

Sketch scale is free.
Load ratings are principally based on ISO 281 and ISO 76, but not calculated according to the latest bearing design and execution. For further background ask for related calculations.
Single-sided empowered factors, formulas and tables are not taken into consideration.
Also refer to RKB Affidavit of Conformance (LJSA) for related compliance to International Standards.
Every care has been taken to ensure the accuracy of the information in the present drawing but no liability can be accepted for any errors or omissions contained herein, or in case losses and/or damages (direct, indirect, consequential) should occur.
RKB Bearing Industries reserves the right of any amendment without notice.

For reference only. Copyright © RKB Bearing Industries - Switzerland

# Double row taper roller bearings

CC200510

## TDO 331605 A3HA1ZBBT2B

| Main boundary dimensions (mm) | |
|---|---|
| d | 498,475 |
| D | 634,873 |
| T | 177,800 |
| C | 142,875 |

| Technical data | | | |
|---|---|---|---|
| Basic load ratings (kN) | Dyn. | $C_r$ | 2550 |
| | Stat. | $C_{0r}$ | 7300 |
| Mass (kg) | | | 125,0 |
| Cage material | | | Pressed steel |
| Radius min (mm) | | $r_1$ | 6,4 |
| | | $r_2$ | 6,4 |
| | | $r_3$ | 1,5 |
| | | $r_4$ | 1,5 |
| Precision class | | | CL2 |
| e | | | 0,35/K factor 1,70 |
| Radial clearance (mm) | | | B.E.P. 0,850/1,100 |
| Configuration/Design | | | TDO/A3 |

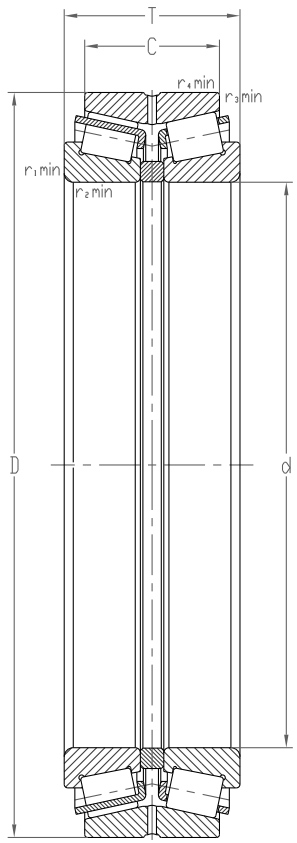


| Technical notes |
|---|
| - Double cup with annular groove and lubrication holes. One hole counter bored for locking pin (Ka 28,4;Kb 13,5)<br>- Cone spacer with annular groove and lubrication holes<br>- Case-hardened steel for rings<br>- 2x47 ZB rollers<br>- Cage max protusion 8,5<br>- Marked zones<br>- Q.C.C.D.S. certificate data sheet included |

Sketch scale is free.
Load ratings are principally based on ISO 281 and ISO 76, but not calculated according to the latest bearing design and execution. For further background ask for related calculations.
Single-sided empowered factors, formulas and tables are not taken into consideration.
Also refer to RKB Affidavit of Conformance (LJSA) for related compliance to International Standards.
Every care has been taken to ensure the accuracy of the information in the present drawing but no liability can be accepted for any errors or omissions contained herein, or in case losses and/or damages (direct, indirect, consequential) should occur.
RKB Bearing Industries reserves the right of any amendment without notice.

For reference only. Copyright © RKB Bearing Industries - Switzerland

# Cylindrical roller bearings

CC100510

## NNCF 5036 VZB

| Main boundary dimensions (mm) | |
|---|---|
| d | 180 |
| D | 280 |
| B | 136 |

| Technical data | | | |
|---|---|---|---|
| Basic load ratings (kN) | Dyn. | $C_r$ | 1300 |
| | Stat. | $C_{0r}$ | 2500 |
| Mass (kg) | | | 30,0 |
| Cage material | | | - |
| Radius min (mm) | | $r_1$ | 2,1 |
| | | $r_2$ | 2,1 |
| | | $r_3$ | - |
| | | $r_4$ | - |
| Precision class | | | P0 |
| e | | | - |
| Radial clearance (mm) | | | CN |
| Configuration/Design | | | NNCF50/V |

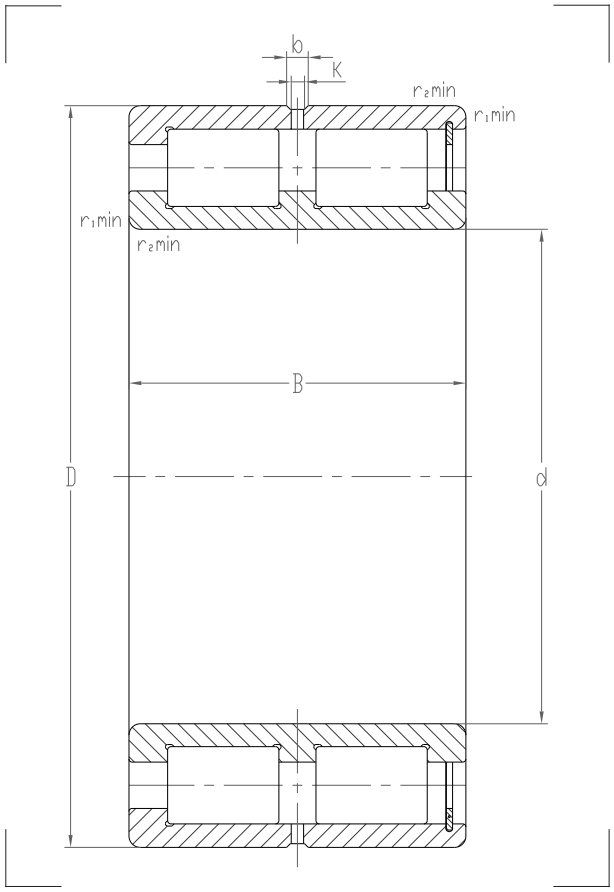


| Technical notes |
|---|
| - AWT Technology for rings and rollers (anti-wear surface treatment)<br>- Permissible axial displacement +/-8 mm<br>- Annular groove and 4 lubrication holes in outer ring (b;K) |

Sketch scale is free.
Load ratings are principally based on ISO 281 and ISO 76, but not calculated according to the latest bearing design and execution. For further background ask for related calculations.
Single-sided empowered factors, formulas and tables are not taken into consideration.
Also refer to RKB Affidavit of Conformance (LJSA) for related compliance to International Standards.
Every care has been taken to ensure the accuracy of the information in the present drawing but no liability can be accepted for any errors or omissions contained herein, or in case losses and/or damages (direct, indirect, consequential) should occur.
RKB Bearing Industries reserves the right of any amendment without notice.

For reference only. Copyright © RKB Bearing Industries - Switzerland

RKB

# Cylindrical roller thrust bearings

CC280510

## AT 626

| Main boundary dimensions (mm) | |
|---|---|
| d | 88,900 |
| $D_3$ | 138,887 |
| H | 33,325 |

| Technical data | | | |
|---|---|---|---|
| Basic load ratings (kN) | Dyn. | $C_a$ | 165 |
| | Stat. | $C_{0a}$ | 588 |
| Mass (kg) | | | 1,71 |
| Cage material | | | Brass |
| Radius min (mm) | $r_1$ | | 1,5 |
| | $r_2$ | | 1,5 |
| | $r_3$ | | 1,5 |
| | $r_4$ | | 1,5 |
| Precision class | | | Normal |
| e | | | - |
| Radial clearance (mm) | | | - |
| Configuration/Design | | | Inch/AT600 |

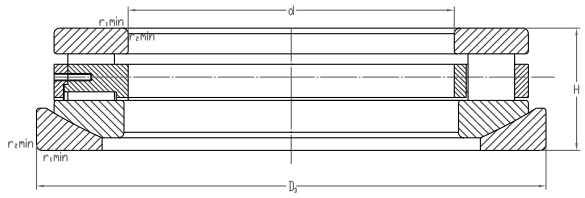


| Technical notes |
|---|
| - Optimized cage design (elastic pin-type retention method)<br>- 18 rollers<br>- For general industry purpose |

Sketch scale is free.
Load ratings are principally based on ISO 281 and ISO 76, but not calculated according to the latest bearing design and execution. For further background ask for related calculations.
Single-sided empowered factors, formulas and tables are not taken into consideration.
Also refer to RKB Affidavit of Conformance (LJSA) for related compliance to International Standards.
Every care has been taken to ensure the accuracy of the information in the present drawing but no liability can be accepted for any errors or omissions contained herein, or in case losses and/or damages (direct, indirect, consequential) should occur.
RKB Bearing Industries reserves the right of any amendment without notice.

For reference only. Copyright © RKB Bearing Industries - Switzerland

# Roadmap for eligibility criteria

**Procurement compliance procedure for technological bearings**
The knowledge and experience gained over the years, along with the close cooperation with international academic centers, have enabled **RKB** to establish the steps of the procurement compliance procedure for technological bearings. For reasons of responsibility and transparency, all customers are invited to read thoroughly and follow carefully the following roadmap:

(1) Signing of non-disclosure agreement (where required).

(2) Commercial evaluation (price, delivery terms and conditions).

(3) Technical merit evaluation (application analysis and evaluation, project development, bearing size and type selection, bearing load calculations for verification, bearing engineering and design, bearing drawings, setting and tuning, guidelines and instructions, technical specifications and protocols, advanced software engineering, traceability validation).

(4) Supplier evaluation: standing (including assets, liabilities, equity and capital expenditures), general information, essential background and qualifications.

(5) Representations and warranties (certifications, affidavits, declarations and references).

(6) Visits, audits and approval of operations and supply chain (level of integration).

(7) Laboratory analyses and certifications.

(8) Tests/trials on the application and certifications.

(9) Homologation formalities (product meets regulatory standards and specifications).

This procedure is of paramount importance to ensure high levels of product reliability and quality, and to guarantee the correctness of the relationship with clients. In fact, by establishing the rights, obligations and responsibility in the procurement process of technological bearings, the compliance procedures have the objective of ensuring that:

- Products are in conformity with related International Standards and/or technical documentation.
- Expected characteristics, parameters and performance are accomplished.
- Deals are executed in transparency, without misleading or deceiving conduct with regard to corporate and product consistency and reliability, through an appropriate scoring model.

# Recommendations to customers

As a matter of responsibility, **RKB** has also developed a series of recommendations in order to help customers choose after due consideration and keep away from unpleasant surprises:

(1) **Homologation roadmap**
Always follow the Roadmap for eligibility criteria in the procurement process of technological bearings.

(2) **Representations and warranties**
Always formally define representations and warranties to avoid incurring fraudulent cases, including misleading or deceiving conduct with regard to corporate consistency and reliability.

(3) **Scientific background and conformity to International Standards**
As a matter of transparency, always request suppliers to show the scientific background (quantitative and qualitative) and technical conformity to related International Standards of the data provided during the process of technical evaluation and compliance.

(4) **Bearing mixing**
Never mix **RKB** rolling bearings with not eligible products on the same equipment or machine.

(5) **Big size and technological bearings**
The manufacturing knowledge, technology, procedures and processes for big size (in particular heavy series and extra-thin series from 260 mm bore on) and technological bearings are extremely complex and critical compared to smaller sizes. In fact from designing and engineering to raw material selection, forging, heat-treatments, machinings, assembling and all related multilevel quality controls, it is state-of-the-art to manufacture a conventional qualified rolling bearing that meets performance requirements and International Standards. Once again **RKB** suggests, particularly in the procurement process of the above mentioned products, to strictly follow an efficient and reliable homologation roadmap.

(6) **Spurious sources**
Always investigate and formally define the level of integration (in-house operations) of bearing manufacturers to avoid the risk of selecting spurious sources.

RKB
BEARING INDUSTRIES

# BEARINGS
# PRODUCTION RANGE

# Deep groove ball bearings

Non-separable, for operations at high speeds, of simple design and little maintenance, RKB deep groove ball bearings are the most versatile and popular bearings in rolling applications.

The internal designs are the Conrad assembly (the majority of the production) and the filling slot assembly (for special applications with cage or with full ball complement).
The single row deep groove ball bearings can take radial and double direction axial loads.
They have limited abilities to compensate for errors of misalignment. Because of the values, in order to avoid inadmissible high additional loads and noise increase as a result of complex relationships among several influencing factors, the permissible misalignments are considered those between 2 to 10 minutes of arc depending on the bearing series.

The basic design of RKB deep groove ball bearings is open type either with boundary metric dimensions in accordance with ISO 15:1988 or with inch dimensions as per American AFBMA specifications.
The version with a snap ring groove on the outer ring (suffix N) for the easy axial location in the housing is in accordance with ISO 464.

When required by the application, these ball bearings are also produced in the sealed and shielded versions that have the seal recesses in the outer rings (suffix 2RS and ZZ). In case of bearings with shields, there is a small interstice between the shield and the rib of the inner ring; in case of bearings with seals, the oil resistant elastic rubber lip runs on the groove on the side of the inner ring or directly on the outside surface of the inner ring.
Bearings sealed and shielded on both sides manufactured in series are delivered filled with normal lithium base grease of consistency NLGI 2 or with special grease suitable for specific applications.

RKB single row deep groove ball bearings are produced as standard to normal tolerances P0. Higher precision bearings in accordance with ISO 492:2002 can be considered.
The radial clearance, according to ISO 5753, can be normal or in different classes as per international specifications.

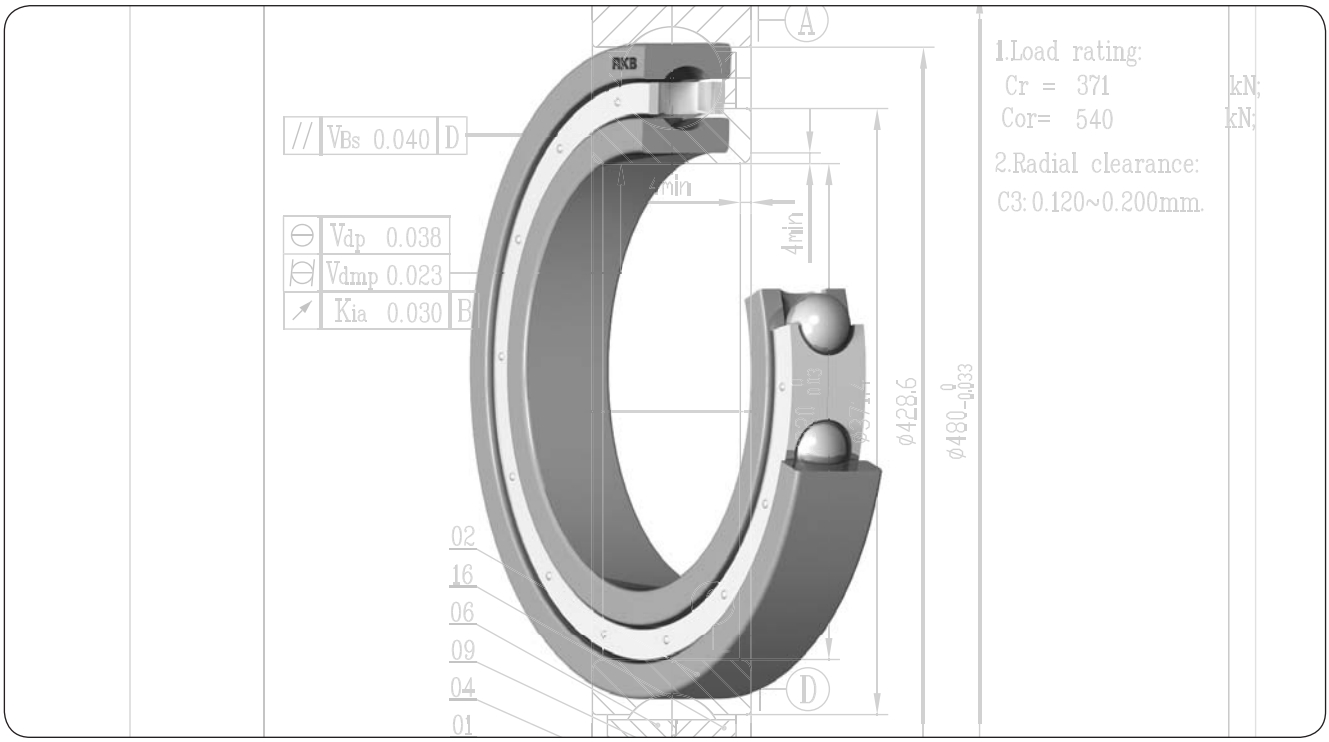

The axial clearance is generally not standardized and depends on the values of the radial clearance, ball size and raceway radius.

The cage depends on the bearing series and size; RKB single row deep groove ball bearings are supplied with one of the following designs: ribbon type cage of steel or brass sheet, riveted type of steel or brass sheet and machined brass type centered on balls, inner ring or outer ring.

Large size bearings are also available in special executions such as lubrication grooves in the guiding surfaces of machined brass cage (suffix MAS or MBS) and/or one notch in the outer ring side face to prevent ring from rotating (suffix N1).

Non ISO standard dimensions (including special part numbers) can be manufactured on request.

## Highlights

| | |
|---|---|
| **Part number:** | 6236 MP63A |
| Bore: | 180 mm |
| Outside diameter: | 320 mm |
| Width: | 52 mm |
| Mass: | 18,9 kg |
| Dynamic load carrying capacity: | 225 kN |
| Static load carrying capacity: | 238 kN |
| Application: | Traction Motors |

# Single row angular contact ball bearings

RKB single row angular contact ball bearings are designed to accommodate combined loads acting in radial and axial direction. They can take axial loads in one direction only.
When radially loaded, in the bearing occurs an axially acting load which has to be compensated. For this reason one bearing or paired bearings are mounted on each shaft end.
These bearings are not separable and their use at relatively high speed is allowed.
Manufactured in various constructive versions, they can be with different contact angles, depending on the application (suffix AC, A and B).

RKB produces two types of single row angular contact ball bearings: those of normal design and those intended for paired mounting (used respectively for tandem arrangement, DB and DF arrangements when axial loads have to be taken in both directions).

In the case of single row angular contact ball bearings the efforts between rings and rolling elements are transmitted at an angle to a plane perpendicular to the bearing axis. The value of this angle depends on the magnitude of the raceway radius, ball diameter and radial clearance in the bearing when the curvature centers of the raceway are in the same plane.

The main dimensions are in accordance with ISO/R 15. The values for the tolerance of the normal, P6 and P5 classes conform to ISO 492.
Internal axial clearance or preload is obtained only when the bearings are mounted in the assembly and depends on the location of the second bearing which assures the shaft axial guiding.

RKB single row angular contact ball bearings are fitted with a cage type depending on series and size: pressed steel sheet cage, machined brass cage guided on balls or on the inner ring and machined steel cage.

Large size paired 718 and 719 series bearings in DF and DB configuration for power transmission equipment are included in RKB production program.

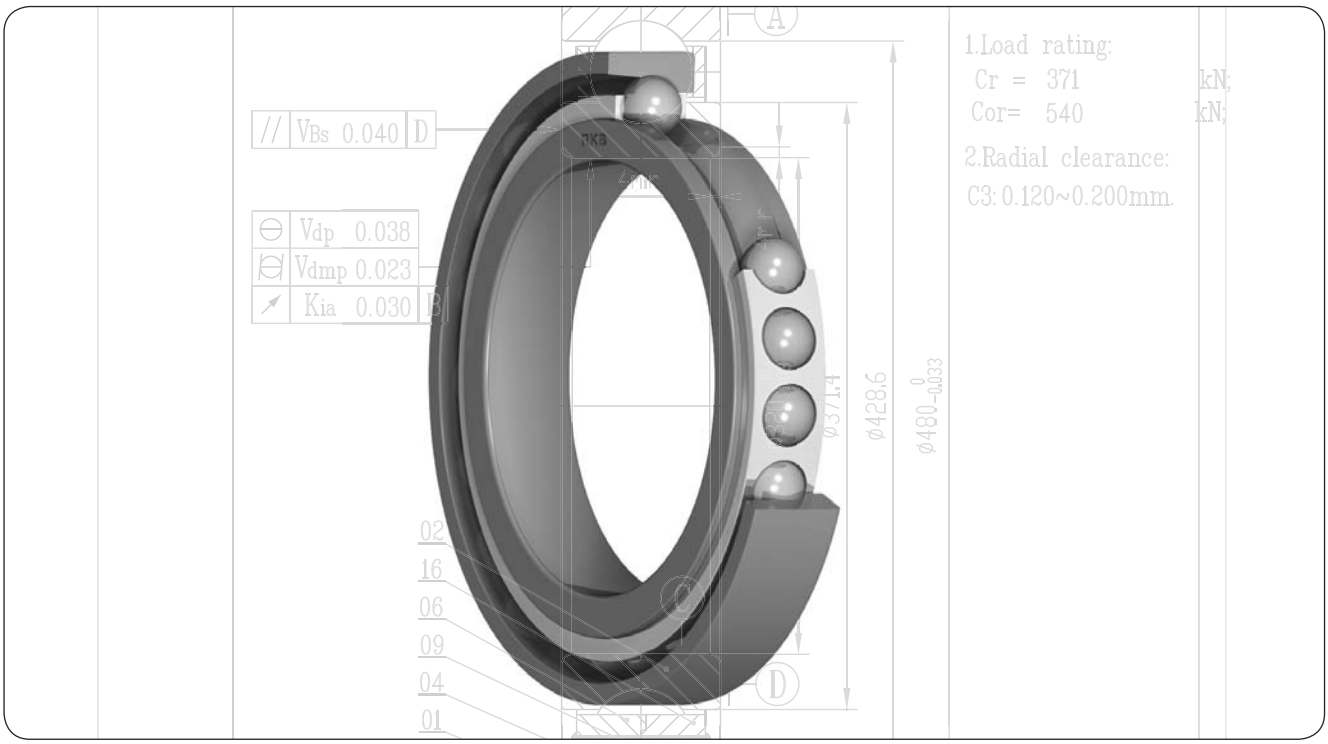

**Four-point angular contact ball bearings (single row duplex ball bearings)**

RKB four-point angular contact ball bearings are single row bearings where the raceway is designed to accommodate significant axial loads in both directions.
Generally they have contact angle of either 35° or 45°.
They need less axial space than double row or paired angular contact ball bearings.
The four-point contact ball bearings have a split two-part inner (bearing designation QJ) or outer (bearing designation Q) ring, allowing a large number of balls to be incorporated, thus providing a high load carrying capacity.
The bearings are of separable design of the parts.

To prevent rotation of the outer ring (when split inner ring) all the bearings with outside diameter over 160 mm are provided with locating slots (suffix N).

The main boundary dimensions are in accordance to ISO 15.
The tolerances have values conform to ISO 492 and the normal class is for RKB standard production.
The fitted cage is machined brass centered on outer ring for the standard common type QJ with split inner ring.
RKB produces these bearings with normal axial internal clearance measured before mounting under zero measuring loads, but most sizes can also be supplied with greater or smaller clearance to special order.

## Highlights

| | |
|---|---|
| **Part number:** | 719/600 AMBP6DFA250-300 |
| Bore: | 600 mm |
| Outside diameter: | 800 mm |
| Width: | 180 mm |
| Mass: | 250 kg |
| Dynamic load carrying capacity: | 1170 kN |
| Static load carrying capacity: | 3450 kN |
| Application: | Steel Industry |

# Double row angular contact ball bearings

RKB double row angular contact ball bearings are equivalent to two single row paired angular contact ball bearings in the arrangement back-to-back or face-to-face. So they can accept radial loads together with axial loads acting in both directions.
The width is narrower than the two equivalent single row bearings in pair.

The large double row angular contact ball bearings of RKB production range include bearings specially designed for rolling mills (bearing designation series 305 followed by three numbers).

The standardized items of the series ISO 32 and 33 have the filling slot and are non-separable, thus single direction axial loads should be applied.

The special bearings with drawing number of series 305 can have either split two-part inner ring or split two-part outer ring. They are non-separable and usually are mounted with radial play in the housing.
In the bearings with split two-part inner ring the load lines refer to the back-to-back arrangement.
The load lines of the bearings with split two-part outer ring are in the face-to-face arrangement.

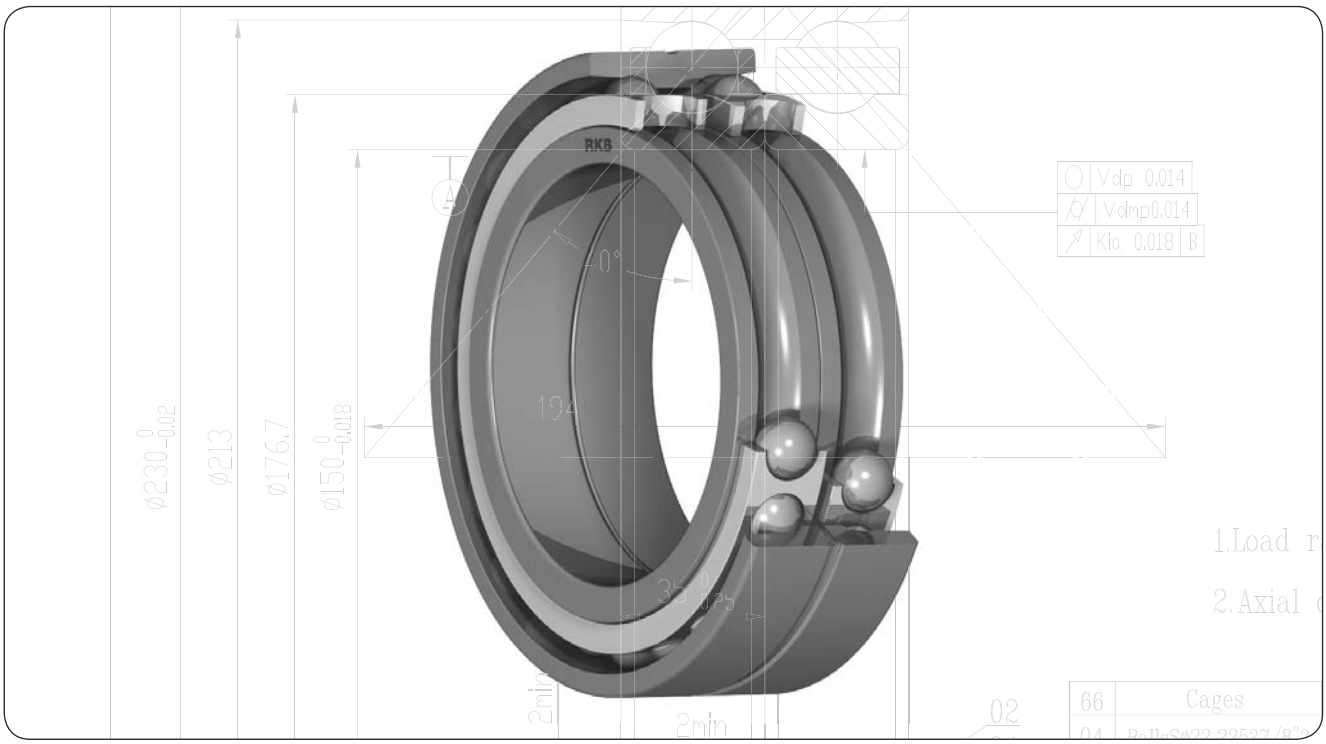

The main dimensions of bearing series 32 and 33 are as per ISO 15 specifications.
The dimensions of bearing series 305 do not follow any standards, but are internationally accepted and recognized in the rolling mill applications.
The manufacturing tolerances conform to ISO 492 for normal class specification, but running accuracy grade is in accordance with P6 at least.
These bearings are generally produced with a uniform axial internal clearance, but special values suitable for specific applications can be supplied on request.

The double row angular contact ball bearings in RKB production program are normally filled with two machined brass cage (one for each ball row).

## Highlights

| | |
|---|---|
| **Part number:** | 305269 DP6 |
| Bore: | 280 mm |
| Outside diameter: | 389,5 mm |
| Width: | 92 mm |
| Mass: | 34,1 kg |
| Dynamic load carrying capacity: | 400 kN |
| Static load carrying capacity: | 750 kN |
| Application: | Rolling Mill Stands/Steel Industry |

# Cylindrical roller bearings

RKB produces cylindrical roller bearings in various design styles, sizes and dimension series.

RKB heavy duty radial cylindrical roller bearings are designed to provide the highest possible radial capacity for the given cross section and to perform under heavy radial loads. These bearings incorporate improved internal proportions developed through computer assisted optimization studies, to make the maximum use of the total available cross-sectional area. The rollers have controlled contour to redistribute end stress concentration and provide more uniform distribution of the applied loads (suffix ZB). Their surface finishing maximizes lubricant film formation and optimizes rolling motion.

The standard ISO assortment of RKB production program includes single and double row bearings with a cage that can accommodate heavy radial loads and operation at high speeds.

A complete range in various executions of full complement of rollers suitable for more heavy loads at moderate speeds is also available.
Large size bearings can be supplied with surface treated rollers (suffix B).

In addition to the standard assortment, RKB cylindrical roller bearing range is comprehensive of open and sealed multi row for rolling mills in many executions and designes, backing bearings for cold rolling mills and indexing roller units for continuous furnace.

Besides to the inch dimension series as per AFBMA specifications, RKB offers the American style series 5200 and 5300 metric cylindrical roller bearings with enhanced radial capacity due to its internal design proportions, with double ribbed outer ring and with manufacturing tolerances established for the interchangeable components.

The single row cylindrical roller bearings are manufactured in various constructive versions, depending on the position of the ribs on the rings (e.g. bearing designation NU, NJ, NUP and N).

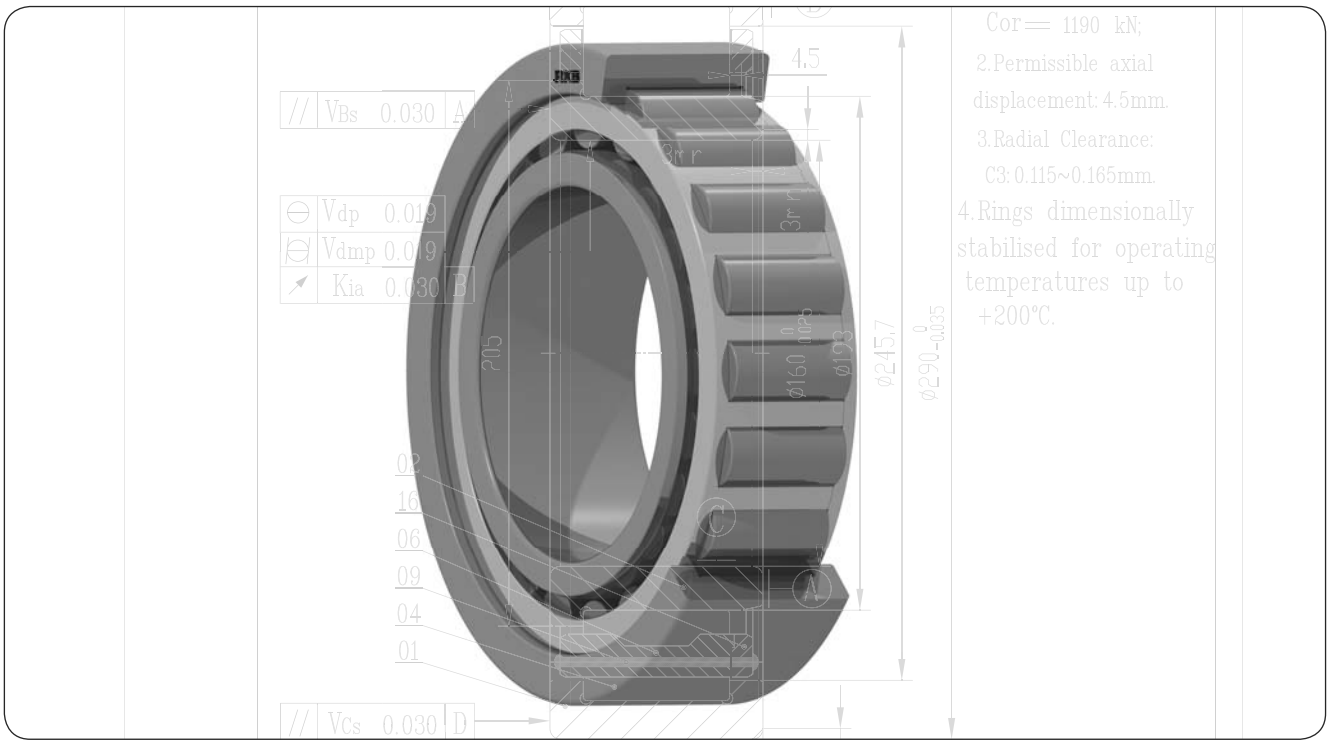

Depending on size and design, the bearings are equipped as standard with one of the following cages: unhardened pressed steel roller centered, one-piece window type brass inner or outer ring centered, two-piece machined brass roller centered (suffix M) or outer ring centered (suffix MA) or inner ring centered (suffix MB) and steel pin-type for pierced rollers.
Lubrication grooves in the guiding surfaces of machined brass cages are also available (suffix MAS and MBS).

RKB cylindrical roller bearings undergo a special heat treatment of stress relieving which allows them to be operated up to a temperature of +150 °C.
The tolerances are in accordance with ISO 492:2002.
The radial internal clearance, even smaller or greater than normal, is in accordance with the range class of ISO 5753 measured for unmounted bearings under zero measuring loads.
The axial internal clearance for fixed design bearings, which can locate the shaft axially in both directions, is specified as per experienced rule.
Bearings with no standard radial clearance or with special stated values required by specific applications can be supplied to special order.

Bearings made of case hardened carburizing alloy steels can be produced for particular applications, where required (suffix HA1, HA2, HA3 and HA4).
Besides, special treatments for rings and rollers are available (e.g. bainite quenching hardened for rings - suffix HB1 -, anti-wear surface treatment etc.).

## Highlights

| | |
|---|---|
| **Part number:** | NU 18/900 MASP6ZBS1AVH |
| Bore: | 900 mm |
| Outside diameter: | 1090 mm |
| Width: | 85 mm |
| Mass: | 168 kg |
| Dynamic load carrying capacity: | 2320 kN |
| Static load carrying capacity: | 5950 kN |
| Application: | Azimuthal Retractable Thruster/Shipyard Industry |

# Multi row cylindrical roller bearings

RKB cylindrical roller bearings with four or six rows have low cross section, high load carrying capacity and stiffness, and are particularly used for metal rolling equipment in mills, where the equipment has been scaled down and jet loads remain high.
These bearings are only able to accommodate radial loads, therefore they are mounted together with deep groove or angular contact ball bearings or with taper roller bearings which take up the axial loads. The four-row cylindrical roller bearings are of separable design, which considerably simplifies mounting, maintenance and inspection.

RKB cylindrical roller bearings can tolerate moderate to high shaft speeds. The rollers and outer races are carefully matched to ensure the best load distribution.
Inner rings (designation L) are interchangeable with other assemblies (designation R). Moreover, RKB multi row bearings allow direct interchange with main premium competitor products.
RKB has a flexible manufacturing program of different styles (also special) and sizes for multi row bearings.
They have cylindrical bore and some sizes are also available with tapered bore as required by the application or by maintenance request.

The use of multi row cylindrical roller bearings in metal rolling mills exposes them to very heavy stresses, sometimes to impact loadings. The rings and rollers can be manufactured with very high quality case hardened carburizing alloy steels. Deep case depth and special heat treatment ensure superior size stability, fracture toughness and reliability.

Where the bearings are mounted with a loose fit on the roll neck, RKB multi row cylindrical roller bearings have C2 internal radial clearance and are supplied with a helical groove in the bore and/or lubrication grooves in the side faces of the bearing rings for the efficient lubrication of the mating parts (e.g. suffix AC).

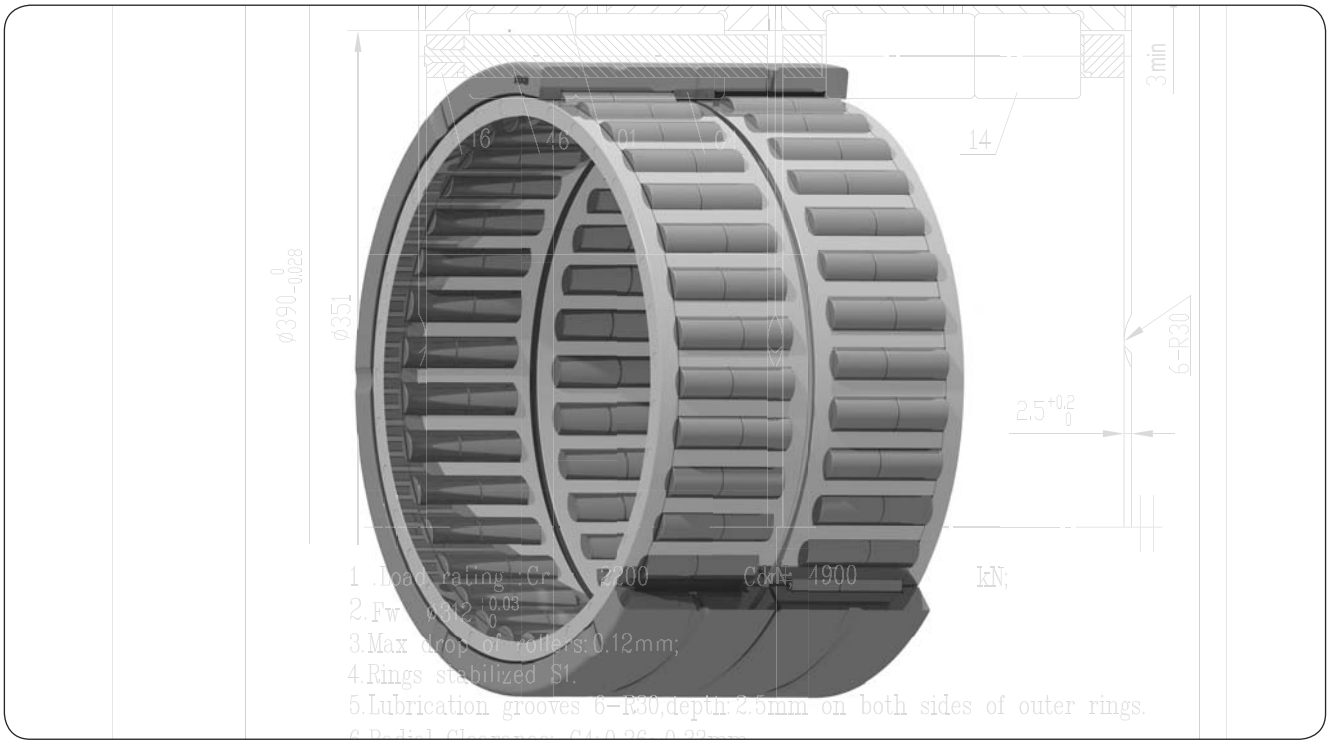

To match the applications in the proper way, RKB produces the multi row cylindrical roller bearings in several construction designs within given geometric series.
The various designs differ basically in the number of inner and outer rings, in the number of loose or integral flanges on the outer ring, in the cage type, in the number of rollers in the cage pocket etc.
Furthermore, on order RKB can produce the four-row cylindrical roller bearings sealed at both sides by radial rubbing seals or with wider inner ring with concentric shoulder.

The boundary dimensions of these bearings are not standardized. However most of them have bore and outside diameter corresponding to ISO 15 series 9 and series 0. They are produced with the normal precision grade for roll neck bearings, which means tolerances conform to class P6 for dimensional and running accuracy with values as per ISO 492.

## Highlights

| | |
|---|---|
| **Part number:** | 313822 GB2DXS1 |
| Bore: | 280 mm |
| Outside diameter: | 390 mm |
| Width: | 220 mm |
| Mass: | 88 kg |
| Dynamic load carrying capacity: | 2200 kN |
| Static load carrying capacity: | 4900 kN |
| Application: | Rolling Mill Stands/Steel Industry |

# Double row spherical roller bearings

RKB spherical roller bearings are self-aligning and consequently insensitive to the misalignment of the shaft relative to the housing and insensitive to shaft deflection or bending. The permissible value is up to 3.5° approximately depending on bearing series and size.

These bearings have two rows of rollers with sphered raceway in the outer ring and two inner ring raceways inclined at the proper angle to the bearing axis.

Used to operate in arduous conditions, leading in design, RKB spherical roller bearings can accommodate, in addition to high radial loads, axial loads acting in both directions.

The production range of RKB spherical roller bearings comprises open bearings, sealed bearings (suffix 2CZ1) and bearings for vibratory applications (suffix ROVS).
Besides, RKB offers spherical roller bearings customized for specific applications, as, for instance, bearings with split outer ring for higher permissible misalignment (suffix WOR) or with increased width dimension and consequent larger rollers for milling applications (project designation SRB) or for the support of the rolls of cold rolling Pilger mills for tubes.

RKB program includes the spherical roller bearings with both cylindrical and tapered bore (1:12 or 1:30 depending on series). Tapered bore bearings can either be mounted on tapered shaft seats or with sleeve on cylindrical shafts.
Limiting load may result in lubrication problems, specially in the case of large bearings. So such bearings are provided with annular groove and lubrication holes in the outer and/or in the inner ring (suffix W33, W33X, W20, W26 etc.).
Depending on the bearing series, size and/or application, RKB spherical roller bearings are manufactured in different constructive internal design versions (e.g. CA, MB, MF, CC etc.).
RKB small and medium size spherical roller bearings are usually fitted with pressed steel cage or one-piece machined brass cage where the bearings have a central guide rib on the inner ring and symmetrical rollers with large dimensions for increased carrying capacity.
The bearings of normal design, with a central fixed rib, are fitted with machined brass or steel cage guided on the rollers or on the inner ring or outer ring raceway.

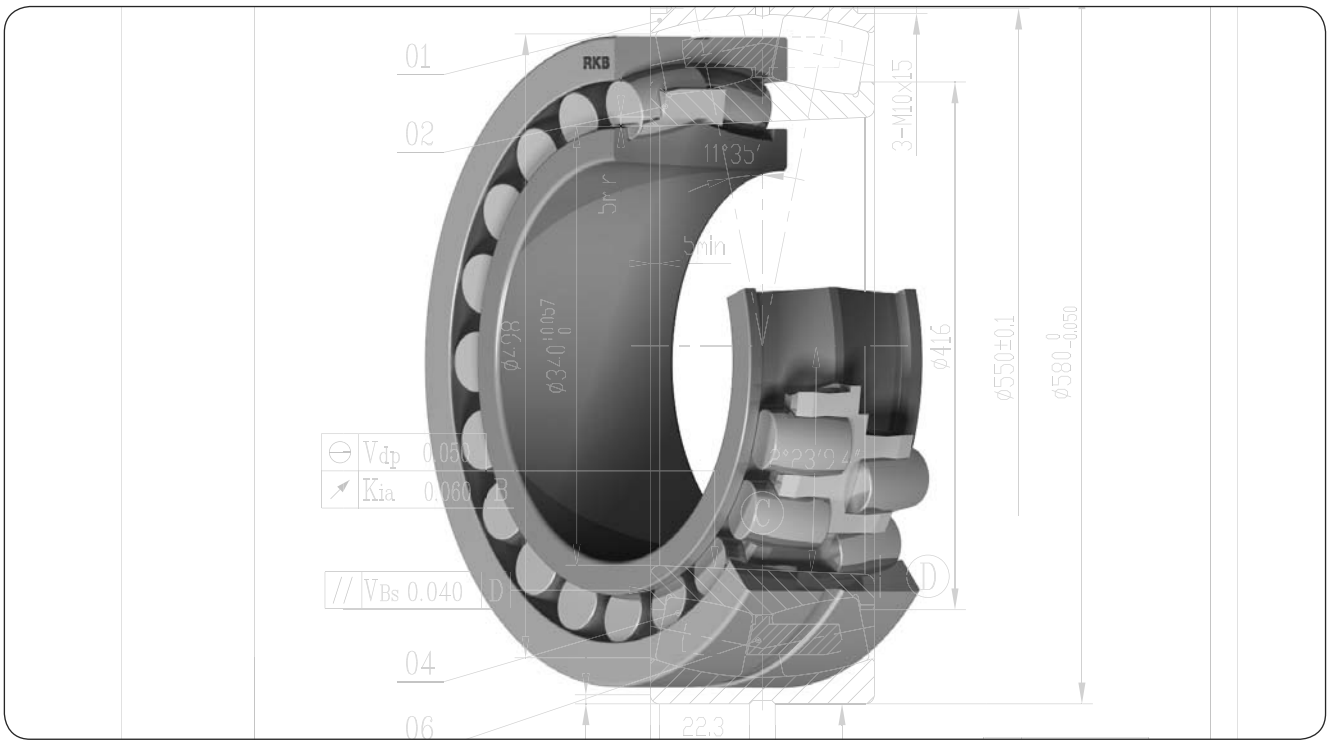

The main dimensions are in accordance with ISO 15.
The radial clearance can be normal, larger than normal (suffix C3, C4 and C5) or smaller than normal (suffix C2), measured on unloaded bearing in accordance with ISO 5753.

RKB spherical roller bearings of all series and sizes are stress relieved. They undergo a special heat treatment so that they can be used up to an operating temperature of +150 °C for long periods without inadmissible dimensional changes occurring.
Some of RKB spherical roller bearings are also manufactured in the sealed version with contact seal on both sides. The seals are reinforced with steel sheet and made of an oil and wear resistant rubber (as nitrile butadiene for universal usage - suffix 2CZ1 - or fluoro base - suffix 2CZ - to withstand operating temperature up to about +200 °C).

In order to locate the spherical roller bearings with the tapered bore onto a cylindrical seating, the adapter (designation H) or withdrawal (designation AH) sleeves are the most commonly used components with large shafts with h9 and h10 tolerance. They are easy-to-mount on smooth or stepped shafts and require no additional location.
Adapter sleeves are supplied along with lock nut and locking device (washer or clip).
For large sized bearings, both adapter and withdrawal sleeves are provided with oil grooves and oil duct at the threaded side to enable the oil injection method to be used for easy mounting and dismounting (designation OH and AOH).

All ISO series (also the outmoded series, such as 202 and 203) are in RKB manufacturing program with both straight bore (no suffix) and tapered bore (suffix K).

## Highlights

| | |
|---|---|
| **Part number:** | 232/750 KCAC3W33XS1 |
| Bore: | 750 mm |
| Outside diameter: | 1360 mm |
| Width: | 475 mm |
| Mass: | 2956 kg |
| Dynamic load carrying capacity: | 19000 kN |
| Static load carrying capacity: | 36000 kN |
| Application: | Mines and Minerals Industry |

# Single row taper roller bearings and matched paired sets

RKB taper roller bearings have the rolling elements under the form of frustum of cone. They roll on tapered surface which, if extended, converges towards a single point on the bearing axis.
The rollers are guided tangentially by the cage and axially by the big rib of the inner ring, on which they have contact. As between rollers and raceways there is linear contact, they can take heavy radial loads. They can also take heavy axial or combined loads, depending on the contact angle caused by the tapered elements.
The contact angle is the one of the outer raceway generatrix.

The single row taper roller bearings are of separable design, which means the outer ring/cup and the inner ring/cone with rollers and cage assembly can be separately mounted.
RKB taper roller bearings are manufactured both in standardized (metric and inch sizes) and in non-standardized constructive version.

The metric single bearings have standardized dimensions as listed in ISO 355:1977 and those designated with prefix J conform to American AFBMA 19.1/1987.
The inch size bearings conform to American AFBMA 19/1974.

The taper roller bearings can carry only single direction axial loads. Under pure radial loads, an axial force is induced within the bearings so that they cannot be used singly and a second bearing is required.
A correct operational clearance or preload has to be identified for the correct performance and reliability of the application.
RKB taper roller bearings have pressed steel cage as standard. For large size and/or heavy engineering applications, the steel pin-type cage and case hardened carburizing alloy steels can be considered.
RKB single row taper roller bearings can also be produced with a rib on the outer cup as a flange to be used when the housing cannot be manufactured with shoulder, but only with a passed through hole so that, in this case, axial location can be provided by the bearing cup.

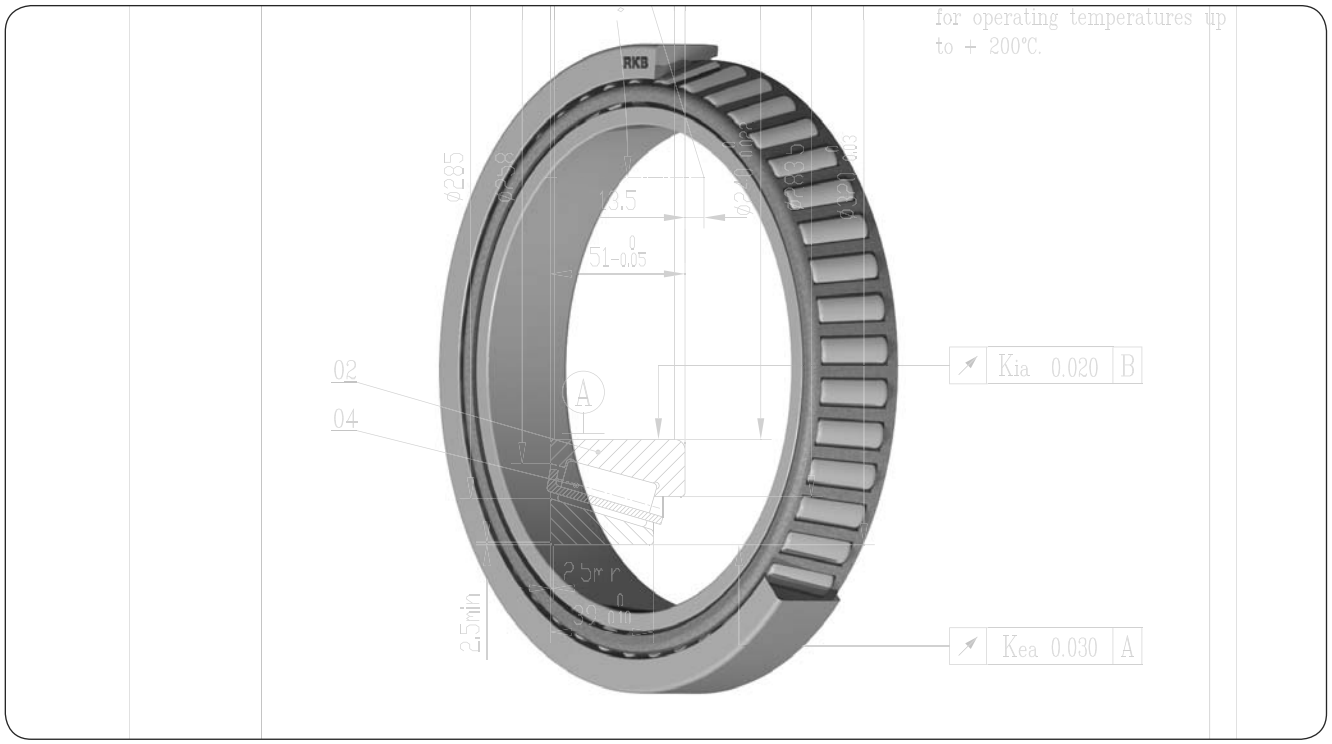

When the load carrying capacity of a single row is inadequate or where the load has to be located in both directions, RKB produces the single row taper roller bearings as ready-to-mount matched pairs.

The matched pairs, generally metric sized, in “O” back-to-back (designation DB) or “X” face-to-face (designation DF) arrangements, locate the shaft in both axial directions and the optimum axial play in the two bearings is adjusted and guaranteed after mounting.
In case of taper roller bearings, clearance should be in radial direction, but it is measured and adjusted in axial direction.

RKB paired matching sets are made to normal and CLN class tolerances as standard corresponding to ISO 492:1986.
The tolerances of the total width of the pair are not standardized, but an international common specification is applied.

The matched pairs of taper roller bearings incorporate pressed steel cages guided on rollers.

## Highlights

| | |
|---|---|
| **Part number:** | LL 788349/310 HA1ZB |
| Bore: | 1066,800 mm |
| Outside diameter: | 1219,200 mm |
| Width: | 65,088 mm |
| Mass: | 106,5 kg |
| Dynamic load carrying capacity: | 1550 kN |
| Static load carrying capacity: | 4800 kN |
| Application: | Power Transmission Equipment for the Maltese Falcon Sailing Yacht (Dynarig Concept) |

# Double row taper roller bearings

RKB double row taper roller bearings can take up heavy loads and are stiff.
Suitable for combined radial and axial loads, they locate axially the shaft in both directions with the stated axial end play (also defined as BEP - Bench End Play) or given preload.
The basic styles are two-row converging TDI configuration and two-row diverging TDO configuration.

Rings and rollers are made of high chrome through hardening steels or case hardened carburizing alloy steels depending on the application.
Cages for RKB double row taper roller bearings are stamped pressed steel. A steel pin-type cage, which allows a larger complement of rollers for higher capacity, is also available.
This style of bearing set simplifies design and reduces the danger of bearing clearance changes due to axial shaft expansion.
It is important the definition of the proper internal play related to the application.

RKB bearings in TDI configuration have a double cone assembly and two single cups and they are generally supplied with a cup spacer.
The cup spacer of each bearing is face ground after accurate measurement of the distance between adjacent cup faces to obtain a predetermined internal play. Consequently, spacers or components may not be interchanged.
An annular groove and lubrication holes are included in the spacer. The contact angle converges, so the use of these bearings will not appreciably increase the rigidity of the shaft mounting.
RKB also produces the taper roller steep contact angle TDIS version with higher thrust capacity (while the radial one is reduced) than the TDI type, normally used as back-up thrust bearings in rolling mills.
These TDIS bearings have combination of face slots (e.g. N, N1, N2 etc.) and bore key-way for locking the cone on the shaft.
Also helical groove in the bore and lubrication grooves in side faces of double cone and/or retention sleeve with annular groove and lubrication holes can be provided.

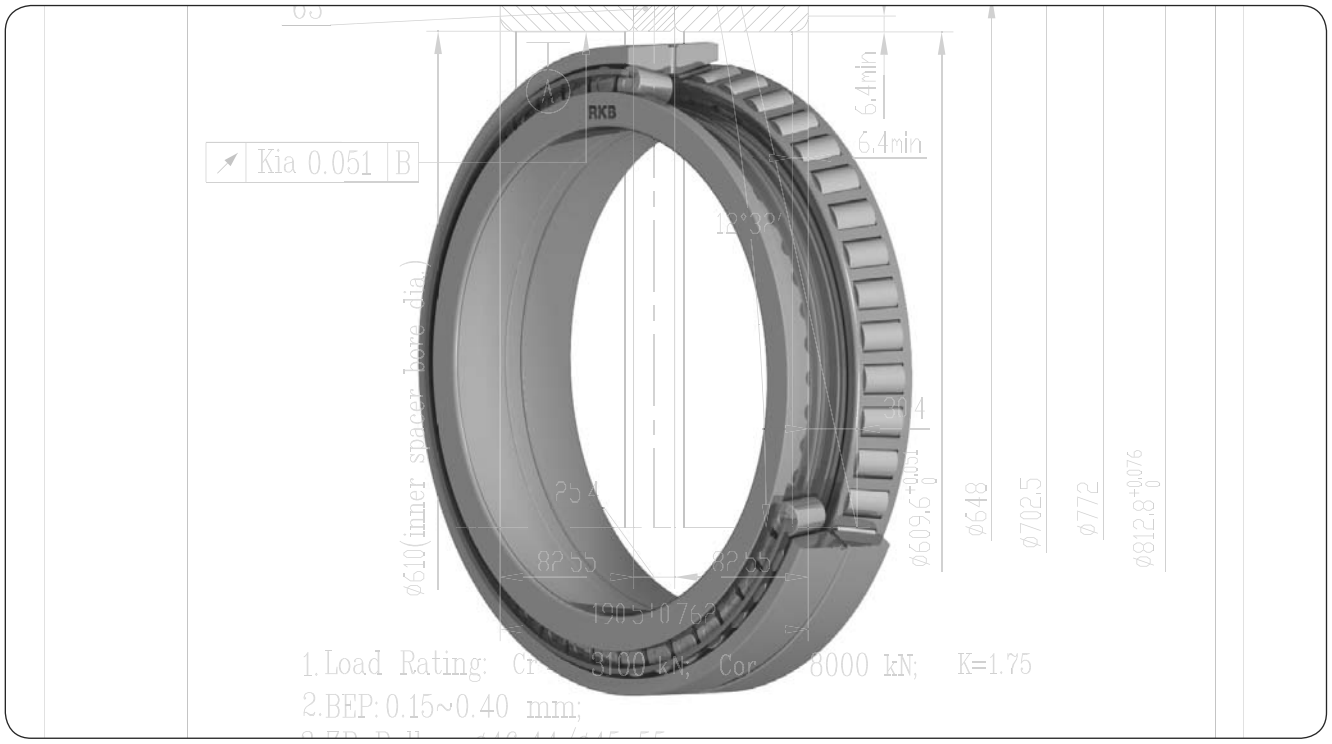

RKB bearings in TDO configuration have a double cup, two single cone assemblies and can be supplied with a shaft supported cone spacer.
The spacer for individual cones is face ground to obtain the desired internal play for the assembly.
So, also in this case, spacers and components may not be interchanged. An annular groove and oil holes are included in the cone spacer.
The TDO style bearings are mainly used in a floating cup mounting. So the counterbored hole in the cup is for a drilled dowel pin which prevents rotation of the loosely fitted double cup. Additional features of a lubrication groove and oil holes in the double cup for simplified lubrication through the outer ring are included (suffix CD). However, this style of bearings are usually lubricated through the shaft by use of oil holes and a groove in the cone spacer.

In the TDO type the contact angle diverges, so the rigidity of the shaft mounting is increased to resist overturning moments.

Bearing sets with steep contact angle and intermediate ring, pierced rollers and steel pin-type cage (TDOS design), bearing sets with extended inner rings which abut each other (TDONA and TDONASW designs), bearing sets with heavy wall cup (TNASWH design) and bearing sets with shields of pressed steel (TDO 4422 design) are also in RKB manufacturing program.

Most of TDI and TDO double row taper roller bearings are produced with inch dimensions as per American AFBMA 19/1974 and as per RKB standard practice, dimensional and running accuracy grade is in accordance with class 2 or 4.

## Highlights

| | |
|---|---|
| **Part number:** | TDO 331554 A7HA1ZBBT2B |
| Bore: | 723,900 mm |
| Outside diameter: | 914,400 mm |
| Width: | 187,325 mm |
| Mass: | 267 kg |
| Dynamic load carrying capacity: | 3800 kN |
| Static load carrying capacity: | 9650 kN |
| Application: | Power Transmission Industry |

# Four-row taper roller bearings

RKB four-row taper roller bearings are installed as complete assemblies and take axial loads in addition to heavy radial loads, so that generally it is not requested separate thrust bearings in such arrangements.
They are commonly used in rolling mill applications.
For quick roll changes, the bearings have a loose fit on the roll necks, but there is the disadvantage that the inner rings wander on their seatings causing wear. To reduce these negative effects, RKB bearings have a helical groove in the bore and lubrication grooves in the side faces of the inner rings. These grooves enable lubricant to be supplied to the contact surfaces of the inner ring and seating.
Since wear and shock resistance under heavy rolling loads is a requirement for roll neck bearings, highest quality carburizing grade bearing alloy steels are normally used in RKB four-row taper roller bearings.
Besides, for large size bearings, pierced rollers and steel pin-type cage for maximum load ratings possible are applied.
The induced thrust resulting from radial loading is cancelled within the double cones and it eliminates excessive loads on clamping and spacing members.

RKB produces this style of bearings in two base designs, TQO and TQI configuration, where the main difference is the mutual arrangement of the roller complements and the number of inner and outer rings dictated by this.

The TQO type is composed in its standard configuration of two double cone assemblies, one central double cup, two single cups and factory adjusted cup and cone spacers.
The spacers of each bearing are face ground after accurate measurement of the distance between adjacent cups and cones to obtain the asked initial play (also defined as BEP - Bench End Play). So the bearing parts cannot be interchanged and they are individually marked for proper assembly.
Lubrication grooves and oil holes are provided in the cup spacers and in the double cup. Furthermore, lubricant slots in the cones side faces and cone spacer permit the lubricant to go through the bearing to the roll neck.
These bearings can be provided with lateral extension of the double cones used as sealing surface. This sealing feature offers better protection against hostile environment.
For high speed rolling mill requirements, the TQO bearing sets may have tapered bore with features of high capacity, compactness and a mounting system that guarantees a positive interference fit on the roll neck.

The TQI type is composed in its standard configuration of one double cone assembly, two single cone assemblies and two double cups.
A four-separated individual single cup configuration is also available. This design facilitates the reworking of the bearing.

These bearings are fitted with pressed steel cage or with pierced rollers and steel pin-type cage. The fact that contact angles diverge makes the bearings well suited to resist to warping and misalignment.
The version with tapered bore that, with its three-cone design, assures easy assembly and disassembly (designation TQIT and TQITE) is also available.
In RKB sealed TQOS type sets, four-row taper roller bearings have been developed to improve the lubrication in service. The incorporation of this type of bearing simplifies design, reduces grease consumption and routine maintenance requirements and attains longer service life.
The seals, fitted on both sides of the bearing set, are produced in several designs depending on bearing size and application needs; the most common ones are the integrated lateral unitized seals (European version), the integrated lateral narrow seals (compact seal concept) and the loose flange lateral unitized seals (Japanese version).
So the basic design with the garter seal, made by reinforced fluoro rubber and steel spring, is located in the integral external cups.
Alternatively, the separate seal carrier flanges are matched to the cups and a chock type seal runs on extended surface of inner rings.
Furthermore, RKB seals have been redesigned in new type to increase seal durability and efficiency: while maintaining an overall narrow profile, these seals optimize the available space by utilizing the area directly adjacent to or underneath the cage bore, with the result of the usage of longer rollers with consequent increased bearing capacity similar to open type version.

RKB sealed four-row taper roller bearings are usually provided also with O-rings in the outboard cup outside diameter to seal contaminants from the bearing outer diameter and/or with a cone seal set designed to accommodate relative motion between inner rings and to prevent build-up of negative pressure (anti-vortex system technology for longer bearing life and less lubricant deterioration).

Phosphate treatment for rings, rollers and spacers (suffix PT4) for anti-rust and anti-corrosion properties under water, alkalescent and acidescent working conditions is also available.

RKB produces special executions of TQO made of four single cups and two double cone assemblies (design without spacers).

Most of TQO and TQI four-row taper roller bearings are manufactured with inch dimensions as per American AFBMA 19/1974 and as per RKB standard practice, dimensional and running accuracy grade is in accordance with class 2 or 4.

## Highlights

| | |
|---|---|
| **Part number:** | TQO 331925 A2AHA1ZBBT4B |
| Bore: | 609,600 mm |
| Outside diameter: | 813,562 mm |
| Width: | 479,425 mm |
| Mass: | 695 kg |
| Dynamic load carrying capacity: | 10500 kN |
| Static load carrying capacity: | 30000 kN |
| Application: | Rolling Mill/Steel Industry |

# Thrust ball and cylindrical roller bearings

RKB thrust ball bearings are manufactured in two versions: single and double direction. They can carry heavy axial loads, but they cannot take radial loads.

The single direction bearings consist of shaft washer, housing washer with flat support surface and ball cage assembly. The bearings are of separable design for a simple mounting of the parts.

The double direction thrust ball bearings can take axial loads in both directions. Such a bearing consists of a shaft central washer, two housing washers and two ball cage assemblies. The bearings are of separable design and ball cage assemblies are interchangeable with the corresponding single direction bearings.

Thrust ball bearings with sphered housing washer can be used with sphered seating housing to compensate the misalignment between the support surface in the housing and in the shaft.

The boundary dimensions of RKB thrust ball bearings in metric size conform to ISO 104:1979 with several dimensional series.
They are produced to normal tolerance class in accordance with ISO 199:1997.

RKB big size thrust ball bearings are normally fitted with machined brass cage (suffix M). Machined steel cage (suffix F) is also available.

RKB cylindrical roller thrust bearings are generally used to take over heavy pure axial loads, to carry shock loads and to be stiff into a little axial space with simple design.
They are manufactured for the axial support of a shaft in one direction and are available as single or multi rows of rollers.
Double direction cylindrical roller thrust bearings can be easily obtained with assembly of the standard roller cage and washers together with an appropriately designed intermediate washer. If the support shaft shoulder is heat treated and ground, it can be used as a raceway for the roller cage assembly.

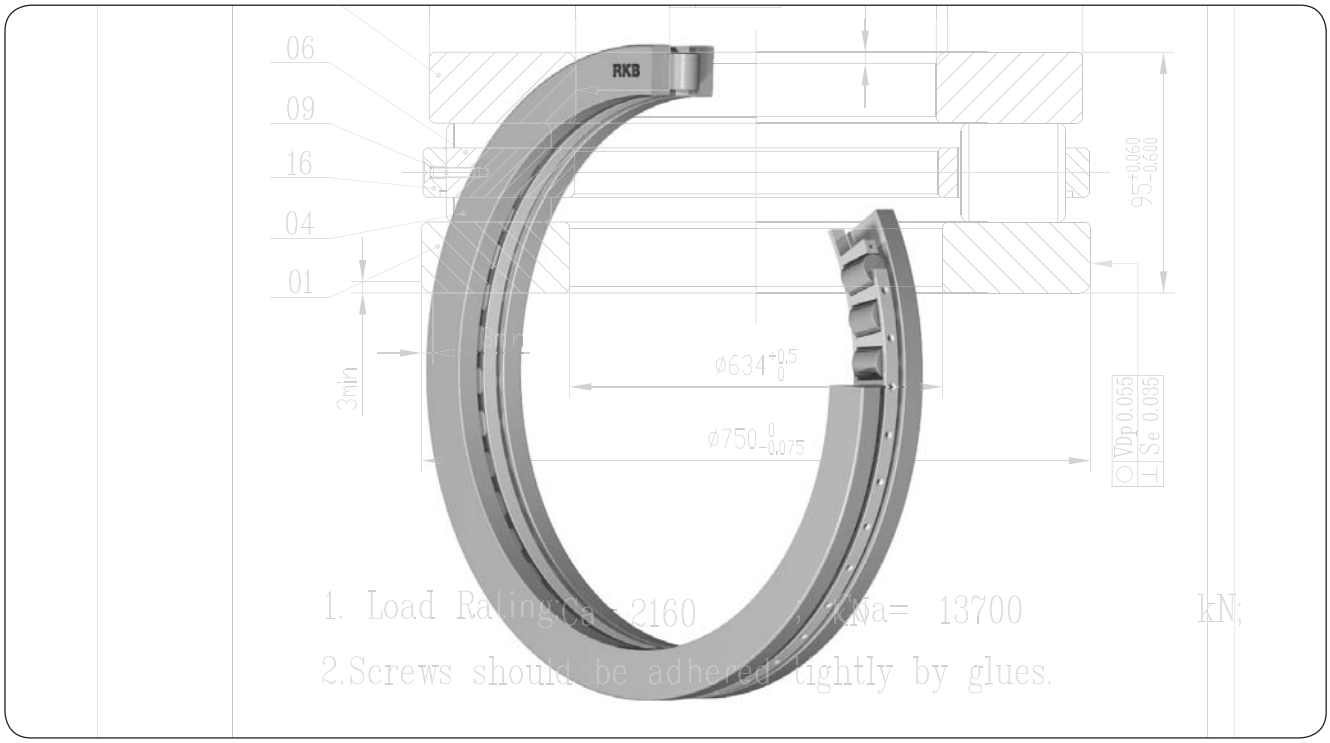

In case of more rows, the rollers have various lengths and are alternatively mounted.
To avoid side friction, one of the side of the roller can be crown profiled.

The boundary dimensions of RKB cylindrical roller thrust bearings conform to ISO 104:1979.
Angular misalignment between shaft and housing is not permitted.
In order to guarantee a proper arrangement of the rolling parts for the satisfactory operation, the cylindrical roller thrust bearings have always to be submitted to a given minimum load, specially when high speeds, high accelerations or rapid changes of load directions are involved.

Both machined brass and steel cages are available as standard.
RKB production range also includes inch size cylindrical roller thrust bearings, engineered up to 50 inches outside diameter in conformance with RBEC accuracy specifications.
Executions requiring antirotation devices on the plates and lifting holes are also available.
There are standard design variations of RKB inch series thrust bearings. Each design is based on a standard single acting with addition of special components to modify its function: the AT aligning type with sphered housing plate for a possible initial static misalignment up to 3°; the crane hook thrust type with the weather shed pressed on the rotating plate; the DT double acting thrust bearing and the DAT aligning style combination of DT and AT types; the SDT simplified double acting thrust with only one roller assembly and two thrust plates.

## Highlights

| | |
|---|---|
| **Part number:** | TCRB 431M2203A |
| Bore: | 419,500 mm |
| Outside diameter: | 571,400 mm |
| Height: | 89,000 mm |
| Mass: | 66,3 kg |
| Dynamic load carrying capacity: | 1860 kN |
| Static load carrying capacity: | 11200 kN |
| Application: | Mines and Minerals Industry |

# Spherical roller thrust bearings

In RKB spherical roller thrust bearings the load is transmitted from one raceway to the other under an angle of about 50° related to the bearing axis.

They can take over heavy axial loads and simultaneously they can accommodate radial loads with values of up to 55% of the axial load magnitude.

An important feature of spherical roller thrust bearings is their self-aligning capability, thanks to the design of the housing and shaft washer raceways with a large number of asymmetrical rollers and the proper conformity with the paths.

RKB spherical thrust bearings have a machined brass cage guided by a sleeve clamped in the shaft washer bore (suffix EM). The shaft washer and the cage with rollers form a non-separable unit.
The overall dimensions of the spherical roller thrust bearings are in accordance with ISO 104:1979, so that they are interchangeable with different designs, even the earlier ones (suffix B).
Where the cage guiding sleeve also serves as a spacer sleeve, the spacer sleeve needed between the shaft washer and the shaft shoulder has to be checked and, if necessary, remachined when substituted with different bearing designs.

These RKB bearings as standard are manufactured to normal tolerance class as specified in ISO 199:1997. However the tolerance for the total height is tighter than that specified by ISO.

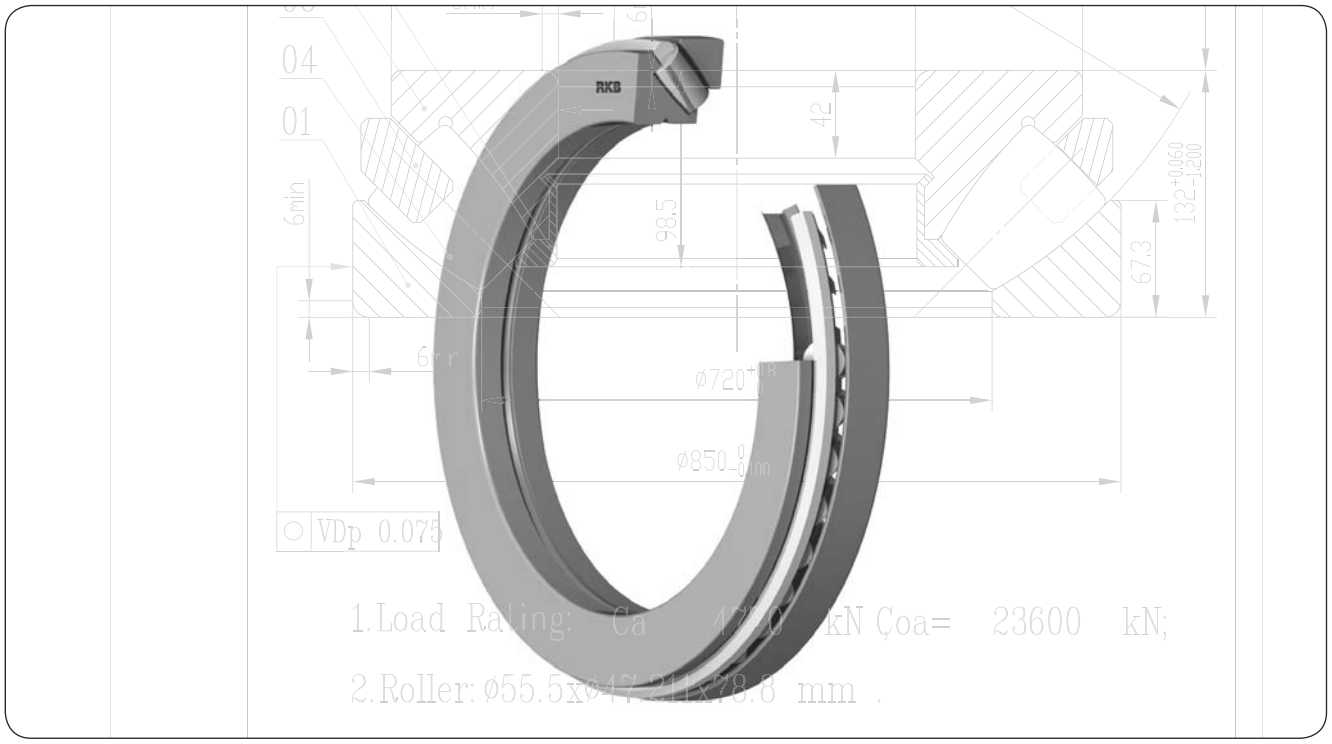

## Highlights

| | |
|---|---|
| **Part number:** | 294/670 EMN1EBEVO |
| Bore: | 670 mm |
| Outside diameter: | 1150 mm |
| Height: | 290 mm |
| Mass: | 1160 kg |
| Dynamic load carrying capacity: | 16000 kN |
| Static load carrying capacity: | 68000 kN |
| Application: | Plastic Industry |

# Taper roller thrust bearings

RKB taper roller thrust bearings have the following separable parts: shaft washer, housing washer and rolling element assembly.
RKB manufacturing program includes the single direction type, the double direction type and the screw-down special type.

RKB single direction taper roller thrust bearings are manufactured in two constructive versions, with tapered raceway on both washers or on only one.
The rollers are radially guided by the rib of one washer. They have controlled contour to redistribute end stress concentration and provide more uniform distribution of the applied loads (suffix ZB).
These bearings can also be produced in the version without the cage to obtain the maximum axial load carrying capacity (suffix V).
The most common series are T type, TK type and 351 type.
Bearings made of case hardened carburizing alloy steels can be produced for particular applications where required.

RKB double direction taper roller thrust bearings are normally used in the rolling mill applications associated with a multi row cylindrical roller bearing.
RKB produces this type of bearing in two constructive versions, either with central plane shaft washer and taper raceways in both housing washers or with both plane housing washers and taper raceways in the central shaft washer.
A special sleeve is arranged between the two housing washers, so that, when mounting, no special adjustment of the bearing is required.
As the double direction taper roller bearings are usually mounted with loose fit on the roll neck, the shaft washer is normally provided with one or two locating slots that, engaged with key-way or similar devices, prevent the shaft washer from rotating on the seating.
If the load carrying capacity is not adequate to the expected life, TDIS type can be used in alternative.
The most common series are 350 type, 351 type, 353 type and TTK type.

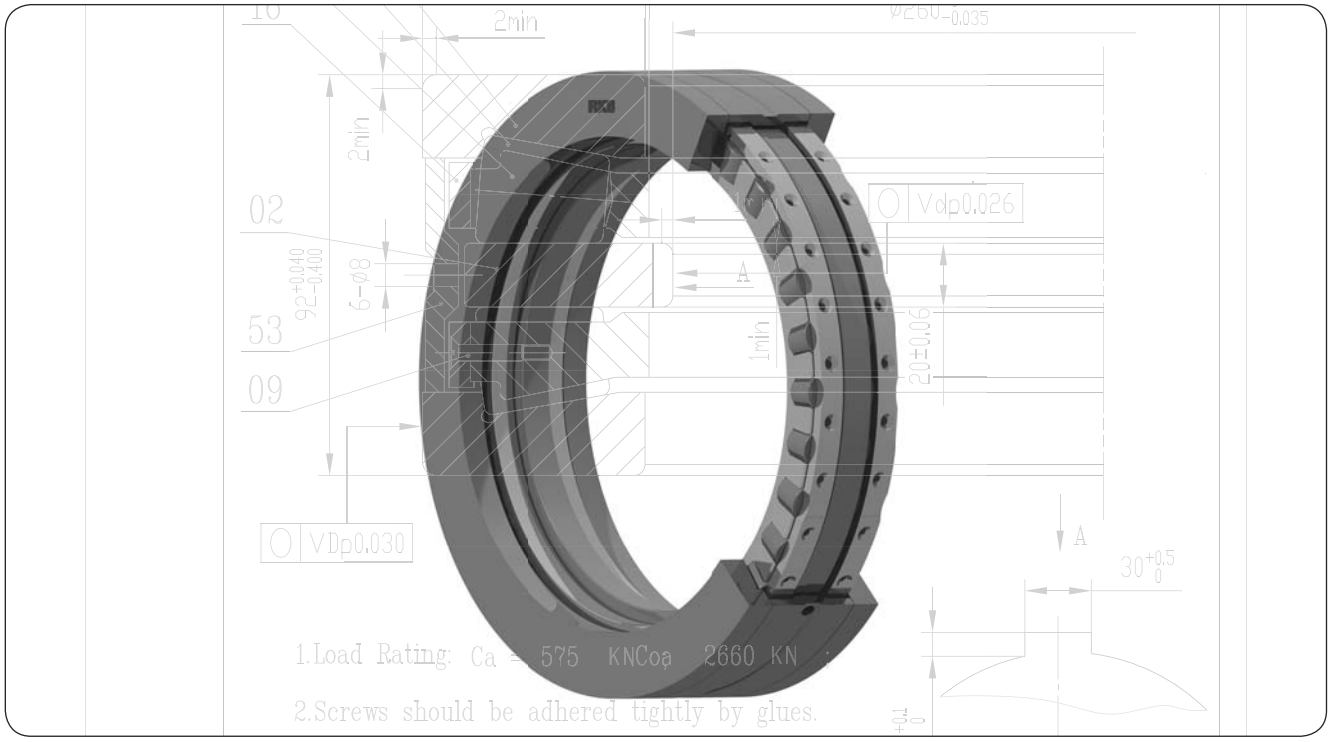

RKB screw-down bearings are a special design of the single direction taper roller thrust bearings used for rolling mill arrangements.
They are generally produced with case hardened carburizing alloy steels and with full complement of long rollers of large diameter to accommodate very heavy axial loads and shocks.

In order to accept the angular movements of the screw spindle with respect to the support without detrimental effects on bearing performance, the bearings have one sphered washer that could be either the shaft or the housing washer. An additional concave sphered pressure plate can be supplied with the bearing.
Usually screw-down bearings are custom-made to meet the specific requirements of different applications.

The dimensions of taper roller thrust bearings are not standardized.
The main boundary dimensions are produced with normal tolerances according to ISO 199:1979.

## Highlights

| | |
|---|---|
| **Part number:** | 350981 C |
| Bore: | 260 mm |
| Outside diameter: | 360 mm |
| Height: | 92 mm |
| Mass: | 25,8 kg |
| Dynamic load carrying capacity: | 575 kN |
| Static load carrying capacity: | 2660 kN |
| Application: | Rolling Mill/Steel Industry |

RKB

BEARING INDUSTRIES

# BEARINGS CATALOGUE

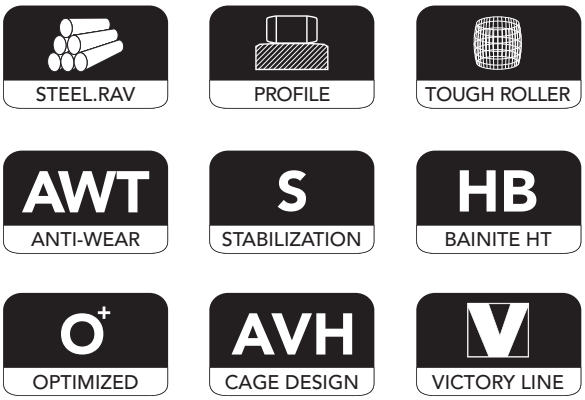


**Bearing steels**

**RKB** makes use of SAE 52100 steel to manufacture rolling bearings for common applications. Under certain circumstances and most of all for medium and large size bearings, SAE 52100/A is adopted. Regarding critical applications, a special bearing steel (SAE A485 or **RKB** Type.RAV), with higher cleanliness and specific mechanical properties, is used. This steel, obtained through the Vacuum Degassed Electroslag Remelting process (VAC-ESR), has lower levels of non-metallic inclusions (according to ASTM E3 and ASTM E45) and ensures premium product reliability and performance. As for the manufacture of rollers, **RKB** can use SAE 52100/A.F forged steel (Tough Roller Technology) to guarantee better resistance to corrosion, wear, fatigue and stationary loads, especially in harsh conditions.

All **RKB** bearing steels are hardened and heat treated to obtain optimum mechanical properties. In addition to the conventional thermal cycles, **RKB** can perform two special heat treatments on its products: **RKB** Bainite Treatment (HB) for decreasing ring crack incidence and **RKB** Dimensional Stabilization Treatment (S) for ring dimensional stability up to an operating temperature of 350 ºC.

Finally, two thermo-chemical surface treatments are available: **RKB** Anti-Wear Treatment (AWT), essential to reduce the metal-on-metal friction between contact surfaces, and **RKB** Phosphate Treatment (PT), suitable for bearings operating in highly corrosive environments.

**Design**

Metric bearings conform to the International Standard ISO 15 general plan for boundary dimensions (DIN 616), whereas inch bearings conform to the dimensions given in BS 292 (pt. 2). Bearing internal dimensions are not standardised and **RKB** designs are optimised for load capacity to incorporate the maximum size and number of rolling elements that are consistent with reasonable ring proportions and cage design requirements. Popular bearings have a wide variety of cage types including pressed steel cages centred on the rolling elements.

**RKB** manufactures many cages moulded in polyamide and other machined from brass. Bearings fitted with synthetic rubber seals are suitable for a normal temperature range of –20 °C to +100 °C, and when two seals are fitted the bearings are prelubricated with a lithium grease which is suitable for this temperature range. The same temperature limitation also applies to metal shielded bearings when the standard lithium grease is used.

Separable rings of single row duplex ball bearings and cylindrical roller bearings with matched rings must not be interchanged from one bearing to another. The components are individually matched to give correct tracking/clearance and any mixing could promote early failure.

# Materials, design and load ratings

**Higher load ratings for RKB bearings**

**Dynamic load ratings**
The dynamic load ratings in this catalogue have been increased to reflect the improved performance associated with the **RKB** use of cleaner bearing steels. The life adjustment factor ($a_2$) given in previous **RKB** publications for improved materials, as permitted in International Standard 281/1, has now been incorporated in the up-rated load capacities. The calculation of Equivalent Load (P) and Rating Life ($L_{10}$) remains unchanged. The previous life adjustment factors have been appropriately amended.

Rating Life ($L_{10}$) may be adjusted to take account of:

- Increased reliability requirements (factor $a_1$ from table 9-1, page 9).
- Reduction of material hardness due to temperature (factor $a_2$ from table 9-2, page 9).
- Lubrication effectiveness (factor $a_3$ from graph 4, page 8).

The adjusted life $L_{10}a = a_1 \cdot a_2 \cdot a_3 \cdot L_{10}$.

**Limitations**
The basic relationship between load and life is valid only for properly mounted, conventionally loaded and adequately lubricated bearings protected from foreign matter and not subjected to extreme operating conditions such as excessive misalignment, speed or temperature. When the equivalent load exceeds 40% of the dynamic or 100% of the static rating, or when bearings with interrupted raceways are used (i.e. those with filling slots) the life calculation must be regarded more as means of comparison with other similarly loaded applications rather than an accurate assessment of fatigue life. The performance of sealed and shielded bearings may be limited by the life of the lubricant rather than by bearing fatigue. Please refer to **RKB** Technical Department for advice.

**Static load ratings**
The basis for ball bearing ratings is unchanged. Roller bearing ratings are increased having been re-calculated on the basis of a nominal permissible contact stress at the heaviest loaded roller of 4000 MPa. The new values permit greater loading that will give acceptable performance for most applications; however, previously permitted overload factors will have to be reduced.

**RKB premium brand bearings - Victory Line**
Victory Line is the premium brand of **RKB** created for all those critical applications requiring new design opportunities. The bearings of Victory Line capitalize on the latest knowledge of micro-geometry and surface topography, and on the best improved steels and manufacturing technologies. These products are endowed with the highest possible level of innovation, performance and reliability.

VICTORY LINE
*The Step Forward*

**Graph 1 Minimum oil viscosity for known operating temperature**

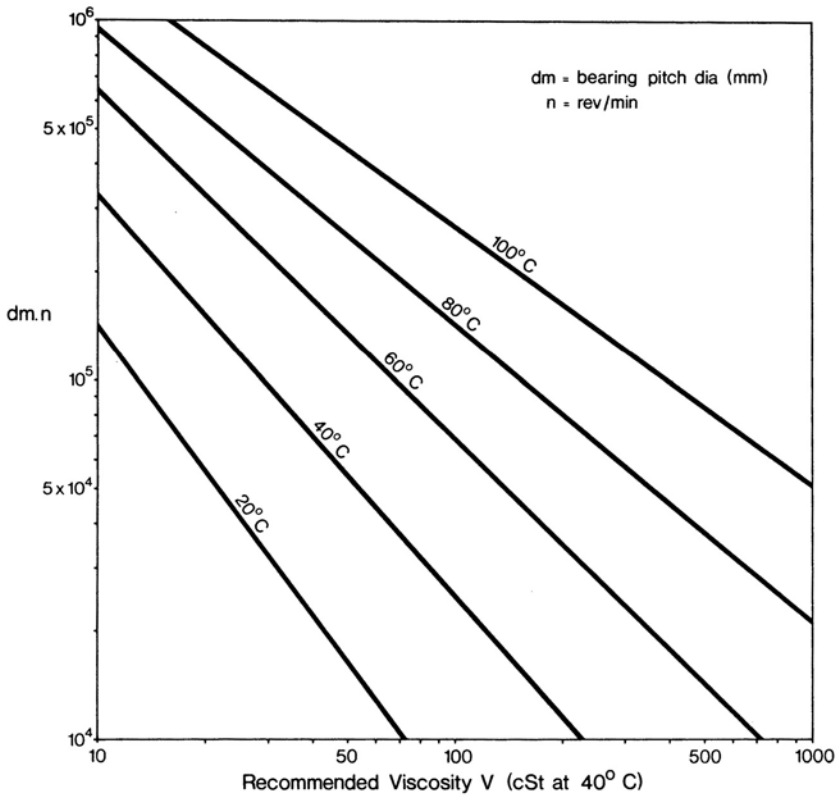


The temperature relates to the actual temperature that the bearing achieves, or is estimated to achieve, in service when taking into account all environmental and operating conditions.

**Graph 2 Minimum oil viscosity – operating temperature not known**

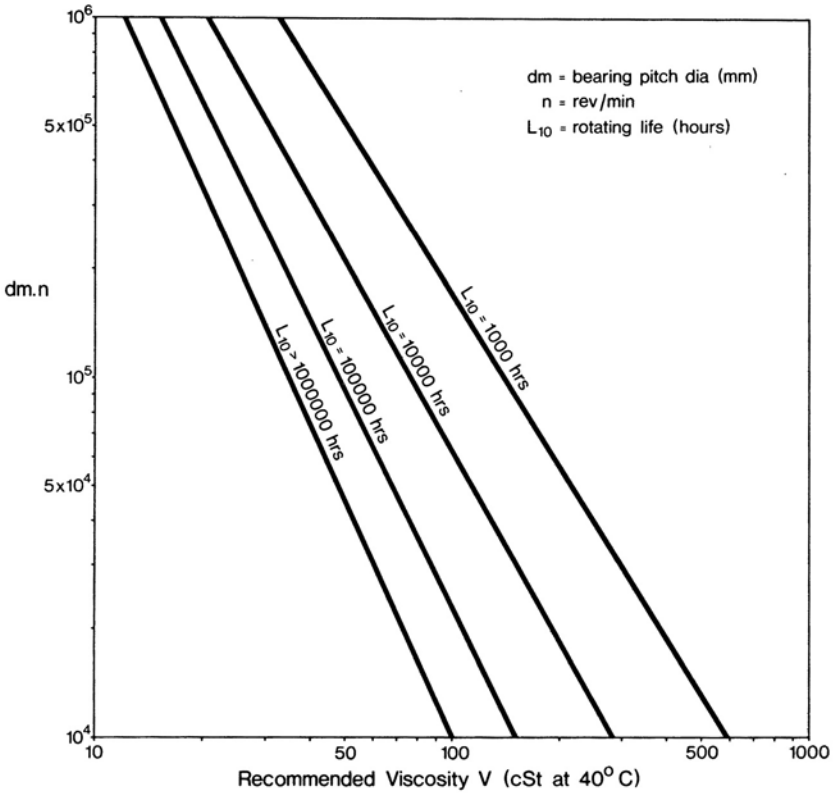


This graph is valid for normal ambient temperature conditions and where there is reasonable heat dissipation.

**Graph 3 Conversion of lubricant viscosity ratio at 40°C ($V_r$) to viscosity ratio at the operating temperature ($V_t$)**

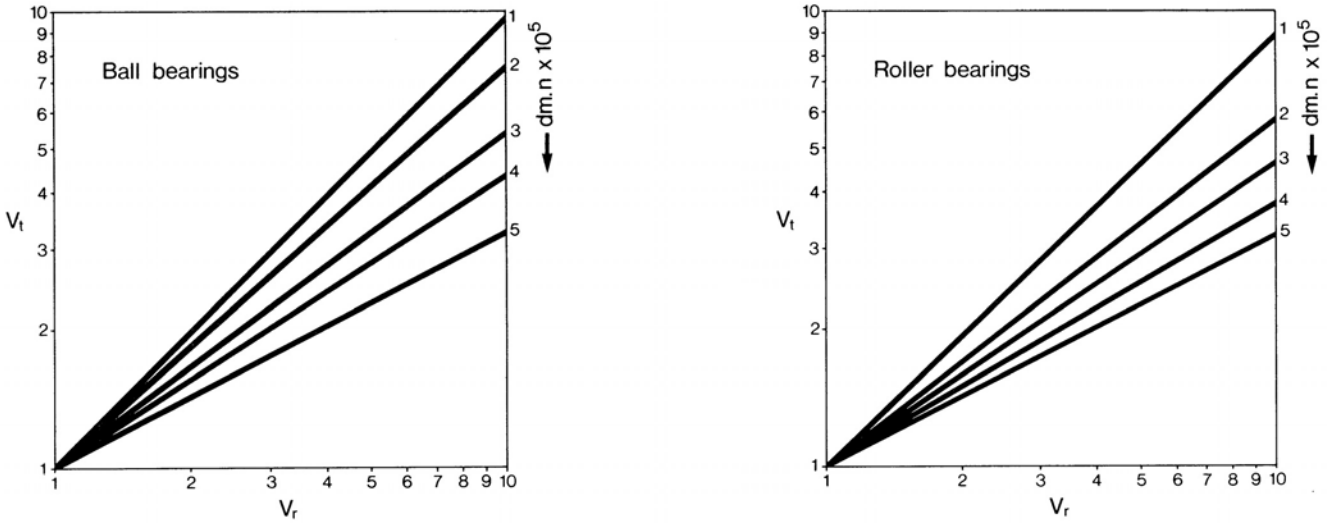


**Graph 4 Lubrication factor $a_3$**

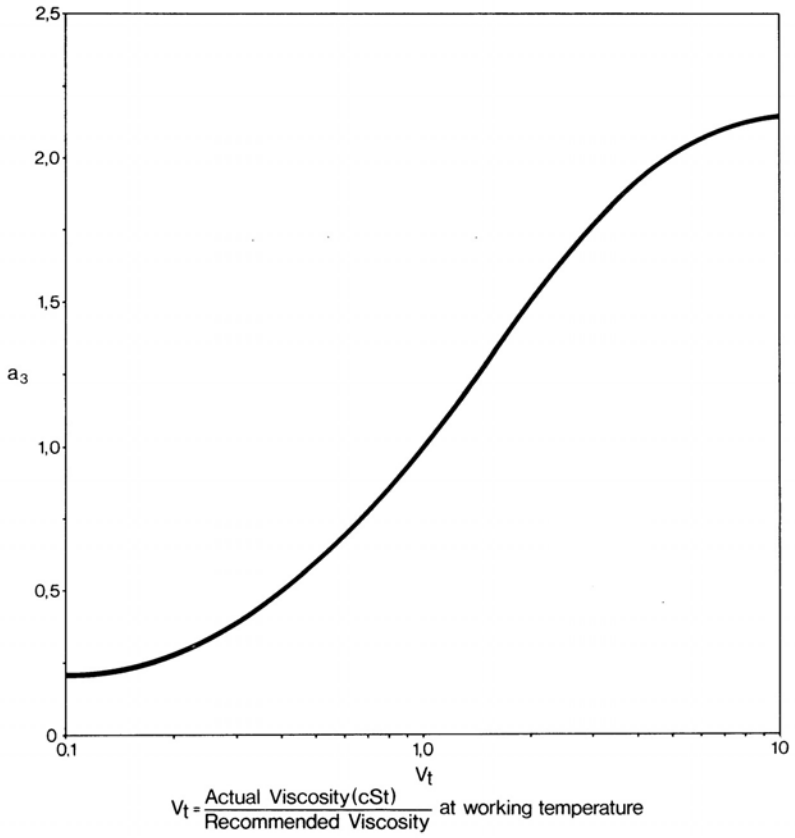




RKB

### Reliability factor $a_1$

Critical applications may require reliabilities greater than 90%, and in such cases the $L_{10}$ life should be multiplied by the factor $a_1$ given in the following table.

Table 9-1

| Reliability % | Ln | Life factor $a_1$ |
|---|---|---|
| 90 | $L_{10}$ | 1,0 |
| 95 | $L_5$ | 0,62 |
| 96 | $L_4$ | 0,53 |
| 97 | $L_3$ | 0,44 |
| 98 | $L_2$ | 0,33 |
| 99 | $L_1$ | 0,21 |

### Temperature factor $a_2$

The effect of temperatures of 150 °C and higher is to reduce the bearing material hardness. The factor $a_2$ given in the following table allows for this reduction but assumes that effective lubrication is maintained at the operating temperature.

Table 9-2

| Operating temperature °C | | Life factor $a_2$ | |
|---|---|---|---|
| over | incl. | Ball | Roller |
| — | 150 | 1,0 | 1,0 |
| 150 | 175 | 0,86 | 0,85 |
| 175 | 200 | 0,72 | 0,70 |
| 200 | 225 | 0,58 | 0,54 |

It should be noted that standard bearings are stabilised for operating temperatures up to 125 °C.

### Lubrication factor $a_3$

Satisfactory bearing performance is dependent on there being an adequate lubricant film at the rolling element and raceway contacts. The value of $a_3$ is therefore related to speed and lubricant viscosity at the operating temperature.
The procedure for obtaining the factor $a_3$ for specific bearings and operating conditions is as follows:

(1) Obtain the **RKB** recommended lubricant viscosity (V) at 40 °C using graphs 1 and 2 on page 7.

(2) Determine the actual lubricant viscosity (cSt) at 40 °C.

(3) Divide the viscosity obtained in (2) above by the viscosity obtained in (1) to obtain the viscosity ratio ($V_r$) at 40 °C.

(4) Use graph 3, page 8 to find $V_t$ which is the viscosity ratio at the operating temperature. For speeds less than dm.n of $10^5$ or for a $V_r$ ratio less than 1, it is reasonable to take $V_t = V_r$.

(5) Using the value for $V_t$ obtained in (4) the lubrication factor $a_3$ is obtained from graph 4, page 8.

# Suffix system

Variations of standard bearing designs may be indicated by suffixes to the basic bearing reference, and a list of those most commonly in use is given below.
Special bearings will normally have a numerical prefix to the basic bearing reference if they can be reasonably associated with a standard bearing. In other cases special designations are used.

| Suffix | Definition |
|---|---|
| A*/* | Special manufacturing tolerance for axial clearance where */* gives the min/max values in micrometres |
| B | 40° contact angle |
| CN | Normal grade of radial internal clearance (not marked) |
| C2 | Internal clearance less than normal |
| C3 | Internal clearance greater than normal |
| C4 | Internal clearance greater than C3 |
| C5 | Internal clearance greater than C4 |
| E | Inch series bearings over 4″ bore – whole number bore sizes only |
| K | Tapered bore |
| LOC | Location bearing having reduced outside diameter |
| M | Machined brass cage located on rolling elements |
| MA | Machined brass cage located in the outer ring bore |
| MB | Machined brass cage located on the inner ring outside diameter |
| MNA | MA cage riveted type |
| MNB | MB cage riveted type |
| N | Snap ring groove on outer ring outside diameter |
| NR | N type with locating snap ring |
| P*/* | Special manufacturing tolerance for axial interference where */* gives the min/max values in micrometres |
| Q** | Special feature where ** is the specification number |
| R*/* | Special manufacturing tolerance for radial internal clearance where */* gives the min/max values in micrometres |
| RS | Bearing fitted with one synthetic rubber seal |
| -2RS | Bearing fitted with two synthetic rubber seals |
| RSN | Bearing with seal fitted on opposite side to the snap ring groove |
| RSNR | RSN bearing with locating snap ring |
| RSZ | Bearing fitted with one seal and one shield |
| RSZN | RSZ bearing with snap ring groove on same side as shield |
| S* | Special heat stabilised bearing where * gives the specification number |
| U | Universally faced angular contact ball bearing |
| W33 | Spherical roller bearing with lubricating holes and groove |
| Z | Bearing fitted with one metal shield |
| -2Z | Bearing fitted with two metal shields |
| ZN | Z bearing with snap ring groove on the opposite side to the shield |
| ZNB | Z bearing with snap ring groove on the same side as the shield |

For other suffixes refer to **RKB**.

## Definitions

The symbols used in this section are in accordance with ISO recommendations and they are defined as

### Inner rings

| | | |
|---|---|---|
| $d$ | = | the nominal bore diameter |
| $d_{mp}$ | = | the arithmetical mean of the largest and smallest actual single diameters of a bore in a single radial plane |
| $d_s$ | = | a single diameter of a bore |
| $\Delta_{dmp}$ | = | the deviation of the mean bore diameter in a single plane |
| | = | $d_{mp} - d$ |
| $\Delta_{ds}$ | = | the deviation of a single bore diameter |
| | = | $d_s - d$ |
| $K_{ia}$ | = | the radial runout of an assembled bearing inner ring relative to a fixed point on the bearing outer ring, both inner and outer raceways being in contact with the rolling elements at the relevant angular position of measurement |

### Outer rings

| | | |
|---|---|---|
| $D$ | = | the nominal outside diameter |
| $D_{mp}$ | = | the arithmetical mean of the largest and smallest actual single outside diameters in a single radial plane |
| $D_s$ | = | a single outside diameter |
| $\Delta_{Dmp}$ | = | the deviation of the mean outside diameter in a single plane |
| | = | $D_{mp} - D$ |
| $\Delta_{Ds}$ | = | the deviation of a single outside diameter |
| | = | $D_s - D$ |
| $K_{ea}$ | = | the radial runout of an assembled bearing outer ring relative to a fixed point on the bearing inner ring, both inner and outer raceways being in contact with the rolling elements at the relevant angular position of measurement |

### Ring widths – radial and angular contact bearings

| | | |
|---|---|---|
| $B$ | = | the nominal inner ring width |
| $C$ | = | the nominal outer ring width |
| $B_s$ | = | a single inner ring width |
| $C_s$ | = | a single outer ring width |
| $\Delta_{Bs}$ | = | the deviation of a single inner ring width |
| | = | $B_s - B$ |
| $\Delta_{Cs}$ | = | the deviation of a single outer ring width |
| | = | $C_s - C$ |
| $V_{Bs}$ | = | the inner ring width variation |
| | = | the difference between the largest and smallest actual single widths of an inner ring |
| $V_{Cs}$ | = | the outer ring width variation |

### Thrust ball bearings

| | | |
|---|---|---|
| $T$ | = | the nominal height of an assembled bearing |
| $T_m$ | = | the actual height of an assembled bearing |
| $\Delta_{Tm}$ | = | the bearing height deviation |
| | = | $T_m - T$ |
| $S_i$ | = | the shaft washer raceway runout relative to the flat seat face |
| $S_e$ | = | the housing washer raceway runout relative to the flat seat face |

**Nomenclatura**
I simboli usati in questa sezione sono quelli delle specifiche ISO e sono definiti come segue:

**Anello interno**

| | | |
|---|---|---|
| $d$ | = | diametro nominale del foro |
| $d_{mp}$ | = | media aritmetica tra il massimo ed il minimo diametro del foro effettivamente misurabili in un solo piano radiale |
| $d_s$ | = | misura effettiva del diametro del foro |
| $\Delta_{dmp}$ | = | scostamento in uno stesso piano del diametro medio |
| | = | $d_{mp} - d$ |
| $\Delta_{ds}$ | = | scostamento del diametro effettivo del foro |
| | = | $d_s - d$ |
| $K_{ia}$ | = | difetto radiale di rotazione dell'anello interno assemblato riferito a un punto fisso sull'anello esterno del cuscinetto, con entrambe le piste interna ed esterna a contatto con gli elementi rotolanti nella posizione angolare di misurazione |

**Anello esterno**

| | | |
|---|---|---|
| $D$ | = | diametro esterno nominale |
| $D_{mp}$ | = | media aritmetica tra il massimo e il minimo diametro esterno effettivamente misurabili in un solo piano radiale |
| $D_s$ | = | misura effettiva del diametro esterno |
| $\Delta_{Dmp}$ | = | scostamento in uno stesso piano del diametro esterno medio |
| | = | $D_{mp} - D$ |
| $\Delta_{Ds}$ | = | scostamento del diametro effettivo del diametro esterno |
| | = | $D_s - D$ |
| $K_{ea}$ | = | difetto radiale di rotazione dell'anello esterno assemblato riferito a un punto fisso sull'anello interno del cuscinetto, con entrambe le piste interna ed esterna a contatto con gli elementi di rotolamento nella posizione angolare di misurazione |

**Larghezza degli anelli – cuscinetti radiali e obliqui**

| | | |
|---|---|---|
| $B$ | = | larghezza nominale dell'anello interno |
| $C$ | = | larghezza nominale dell'anello esterno |
| $B_s$ | = | larghezza effettiva dell'anello interno |
| $C_s$ | = | larghezza effettiva dell'anello esterno |
| $\Delta_{Bs}$ | = | scostamento della larghezza effettiva dell'anello interno |
| | = | $B_s - B$ |
| $\Delta_{Cs}$ | = | scostamento della lunghezza effettiva dell'anello esterno |
| | = | $C_s - C$ |
| $V_{Bs}$ | = | variazione di larghezza dell'anello interno |
| | = | la differenza fra la lunghezza massima e minima effettivamente misurabili su un anello interno |
| $V_{Cs}$ | = | variazione di larghezza dell'anello esterno |

**Cuscinetti reggispinta a sfere**

| | | |
|---|---|---|
| $T$ | = | altezza nominale di un cuscinetto assemblato |
| $T_m$ | = | altezza effettiva di un cuscinetto assemblato |
| $\Delta_{Tm}$ | = | scostamento dell'altezza del cuscinetto |
| | = | $T_m - T$ |
| $S_i$ | = | difetto di rotazione della pista della ralla centrata sull'albero rispetto alla facciata di appoggio |
| $S_e$ | = | difetto di rotazione della pista della ralla destinata all'alloggiamento rispetto alla facciata di appoggio |

**Definiciones**
Los símbolos empleados en ésta sección están de acuerdo con las recomendaciones ISO y se definen de la siguiente manera:

**Aros interiores**

| | | |
|---|---|---|
| $d$ | = | el diámetro interior nominal |
| $d_{mp}$ | = | la media aritmética de los diámetros interiores mayor y menor reales, dentro de un solo plano radial |
| $d_s$ | = | un diámetro interior único |
| $\Delta_{dmp}$ | = | la desviación del diámetro interior medio en un solo plano |
| | = | $d_{mp} - d$ |
| $\Delta_{ds}$ | = | la desviación de un solo diámetro interior |
| | = | $d_s - d$ |
| $K_{ia}$ | = | el salto radial del aro interior de un rodamiento ensamblado, relativo a un punto fijo en el aro exterior del rodamiento. Tanto la pista interior como la exterior estando en contacto con los elementos rodantes en la posición angular precisa de medición |

**Aros exteriores**

| | | |
|---|---|---|
| $D$ | = | el diámetro exterior nominal |
| $D_{mp}$ | = | la media aritmética de los diámetros exteriores mayor y menor reales, dentro de un solo plano radial |
| $D_s$ | = | un diámetro exterior único |
| $\Delta_{Dmp}$ | = | la desviación del diámetro exterior medio en un solo plano |
| | = | $D_{mp} - D$ |
| $\Delta_{Ds}$ | = | la desviación de un solo diámetro exterior |
| | = | $D_s - D$ |
| $K_{ea}$ | = | el salto radial del aro exterior de un rodamiento ensamblado, relativo a un punto fijo en el aro interior del rodamiento. Tanto la pista interior como la exterior estando en contacto con los elementos rodantes en la posición angular precisa de medición |

**Ancho del aro – rodamientos radiales y de contacto angular**

| | | |
|---|---|---|
| $B$ | = | ancho nominal del aro interior |
| $C$ | = | ancho nominal del aro exterior |
| $B_s$ | = | un solo ancho del aro interior |
| $C_s$ | = | un solo ancho del aro exterior |
| $\Delta_{Bs}$ | = | la desviación de un solo ancho del aro interior |
| | = | $B_s - B$ |
| $\Delta_{Cs}$ | = | la desviación de un solo ancho del aro exterior |
| | = | $C_s - C$ |
| $V_{Bs}$ | = | la variación en el ancho del aro interior |
| | = | la diferencia entre el ancho mayor y menor de un aro interior |
| $V_{Cs}$ | = | la variación en el ancho del aro exterior |

**Rodamientos de bolas de empuje axial**

| | | |
|---|---|---|
| $T$ | = | la altura nominal de un rodamiento ensamblado |
| $T_m$ | = | la altura real de un rodamiento ensamblado |
| $\Delta_{Tm}$ | = | la desviación de la altura de un rodamiento |
| | = | $T_m - T$ |
| $S_i$ | = | el salto en la pista de la arandela del eje, relativo al plano del alojamiento |
| $S_e$ | = | el salto en la pista de la arandela del alojamiento, relativo al plano del alojamento |

**Metric bearings**
RKB limits of accuracy for standard metric bearings are given in tables 18-1 and 18-2. The bore, outside diameter, and width tolerances are comparable with ABEC 1 and conform to the ISO 'Normal Class'. The RKB tolerances for running accuracy are generally closer than both the ABEC 1 and ISO Normal Class requirements.

**Metric taper roller bearings**
RKB limits of accuracy for standard metric taper roller bearing are given in tables 21-1, 21-2 and 21-3. These dimensions conform to the ISO 355.

**Thrust ball bearings**
RKB limits of accuracy for metric thrust ball bearings are given in tables 20-1 and 20-2.

**Sealed and shielded bearings**
The tolerances for the outer rings of bearings fitted with seals or shields differ from those for the open bearings in that the outside diameter deviation $\Delta_{Ds}$ is greater to allow for the effects of fitting the seals or shields. See table 18-2.

**Note**
The cylindrical bore diameter and outside diameter tolerances do not necessarily apply within a distance of three times the ring corner radius from the ring face.

# Bearing tolerances

**Inner ring tolerances – metric radial and angular contact ball bearings**
**0,001 mm units**

Table 18-1

| d mm | | $\Delta_{dmp}$ | | $\Delta_{ds}$ | | $K_{ia}$ | $\Delta_{Bs}$ | | $V_{Bs}$ |
|---|---|---|---|---|---|---|---|---|---|
| over | incl | high | low | high | low | max | high | low | max |
| 2,5 | 10 | 0 | − 8 | + 2 | −10 | 7,5 | 0 | −120 | 15 |
| 10 | 18 | 0 | − 8 | + 3 | −11 | 10 | 0 | −120 | 20 |
| 18 | 30 | 0 | −10 | + 3 | −13 | 10 | 0 | −120 | 20 |
| 30 | 50 | 0 | −12 | + 3 | −15 | 13 | 0 | −120 | 20 |
| 50 | 80 | 0 | −15 | + 4 | −19 | 15 | 0 | −150 | 25 |
| 80 | 120 | 0 | −20 | + 5 | −25 | 20 | 0 | −200 | 25 |
| 120 | 180 | 0 | −25 | + 6 | −31 | 25 | 0 | −250 | 30 |
| 180 | 250 | 0 | −30 | + 8 | −38 | 30 | 0 | −300 | 30 |
| 250 | 315 | 0 | −35 | + 9 | −44 | 40 | 0 | −350 | 35 |
| 315 | 400 | 0 | −40 | +10 | −50 | 50 | 0 | −400 | 40 |

$\Delta_{ds}$ applies to: ISO diameter series 4 and 3, all sizes.
ISO diameter series 2, up to and including d = 180mm
ISO diameter series 0, up to and including d = 40 mm

$K_{ia}$ does not apply to double row spherical roller bearings which are made to comply with ISO normal class tolerances.

**Outer ring tolerances – metric radial and angular contact ball bearings**
**0,001 mm units**

Table 18-2

| D mm | | $\Delta_{Dmp}$ | | $\Delta_{Ds}$ | | $K_{ea}$ |
|---|---|---|---|---|---|---|
| over | incl | high | low | high | low | max |
| 18 | 30 | 0 | − 9 | + 2 | −11 | 10 |
| 30 | 50 | 0 | −11 | + 3 | −14 | 13 |
| 50 | 80 | 0 | −13 | + 4 | −17 | 15 |
| 80 | 120 | 0 | −15 | + 5 | −20 | 18 |
| 120 | 150 | 0 | −18 | + 6 | −24 | 20 |
| 150 | 180 | 0 | −25 | + 7 | −32 | 23 |
| 180 | 250 | 0 | −30 | + 8 | −38 | 25 |
| 250 | 315 | 0 | −35 | + 9 | −44 | 30 |
| 315 | 400 | 0 | −40 | +10 | −50 | 35 |

$\Delta_{Ds}$ applies to: ISO diameter series 4 and 3, all sizes.
ISO diameter series 2, up to and including D = 315 mm
ISO diameter series 0, up to and including D = 80 mm

$K_{ea}$ does not apply to double row spherical roller bearings which are made to comply with ISO normal class tolerances.

The width deviation ($\Delta_{Cs}$) and variation ($V_{Cs}$) for an outer ring is the same as that of the inner ring ($\Delta_{Bs}$ and $V_{Bs}$) of the same bearing.

**Inner ring tolerances – magneto bearings – metric single row separable ball bearings**
**0,001 mm units**

Table 19-1

| d mm | | $\Delta_{dmp}$ | | $\Delta_{ds}$ | | $K_{ia}$ |
|---|---|---|---|---|---|---|
| over | incl | high | low | high | low | max |
| 2,5 | 9 | 0 | – 8 | +2 | –10 | 8 |
| 9 | 18 | 0 | – 8 | +2 | –10 | 10 |
| 18 | 30 | 0 | –10 | +2 | –13 | 13 |

**Outer ring tolerances – magneto bearings – metric single row separable ball bearings**
**0,001 mm units**

Table 19-2

| D mm | | $\Delta_{Dmp}$ | | $\Delta_{Ds}$ | | $K_{ea}$ |
|---|---|---|---|---|---|---|
| over | incl | high | low | high | low | max |
| 10 | 30 | +10 | 0 | +13 | –2 | 15 |
| 30 | 50 | +10 | 0 | +18 | –5 | 20 |

**Width tolerances – magneto bearings – metric single row separable ball bearings**
**0,001 mm units**

Table 19-3

| Sizes | Width tolerances apply to | high | low |
|---|---|---|---|
| All sizes | Individual rings ( $\Delta_{Bs}$ and $\Delta_{Cs}$) | 0 | –120 |
| | Across assembled bearing | +120 | –120 |

# Bearing tolerances

**Shaft washer bore and assembled bearing height tolerances– metric thrust ball bearings**
**0,001 mm units** Table 20-1

| d mm | | $\Delta_{dmp}$ | | $S_i$ | $\Delta_{Tm}$ | |
|---|---|---|---|---|---|---|
| over | incl | high | low | max | high | low |
| 9 | 18 | 0 | − 8 | 10 | 0 | − 75 |
| 18 | 30 | 0 | −10 | 10 | 0 | − 75 |
| 30 | 50 | 0 | −12 | 10 | 0 | −100 |
| 50 | 80 | 0 | −15 | 10 | 0 | −125 |
| 80 | 120 | 0 | −20 | 15 | 0 | −150 |
| 120 | 180 | 0 | −25 | 15 | 0 | −175 |
| 180 | 250 | 0 | −30 | 20 | 0 | −200 |

The above tolerances do not apply to the housing washers which are made to clear the shaft.

**Housing washer O/D tolerances – metric thrust ball bearings**
**0,001 mm units** Table 20-2

| D mm | | $\Delta_{Dmp}$ | |
|---|---|---|---|
| over | incl | high | low |
| 10 | 18 | 0 | −11 |
| 18 | 30 | 0 | −13 |
| 30 | 50 | 0 | −16 |
| 50 | 80 | 0 | −19 |
| 80 | 120 | 0 | −22 |
| 120 | 180 | 0 | −25 |
| 180 | 250 | 0 | −30 |
| 250 | 315 | 0 | −35 |
| 315 | 400 | 0 | −40 |

These tolerances apply to both shaft and housing washers up to 170 mm outside diameter, they do not apply to shaft washers above this size which are made to clear the housing.
The raceway runout of the housing washer ($S_e$) is the same as that of the shaft washer of the same bearing.

**Inner ring tolerances – tapered roller bearings**
**0,001 mm units** Table 21-1

| d mm | | ∆dmp | | Vdp | Vdmp | Kia |
|---|---|---|---|---|---|---|
| over | incl | high | low | max | max | max |
| 10 1) | 18 | 0 | -12 | 12 | 9 | 15 |
| 18 | 30 | 0 | -12 | 12 | 9 | 18 |
| 30 | 50 | 0 | -12 | 12 | 9 | 20 |
| 50 | 80 | 0 | -15 | 15 | 11 | 25 |
| 80 | 120 | 0 | -20 | 20 | 15 | 30 |
| 120 | 180 | 0 | -25 | 25 | 19 | 35 |
| 180 | 250 | 0 | -30 | 30 | 23 | 50 |
| 250 | 315 | 0 | -35 | 35 | 26 | 60 |
| 315 | 400 | 0 | -40 | 40 | 30 | 70 |

**Outer ring tolerances – tapered roller bearings**
**0,001 mm units** Table 21-2

| D mm | | ∆Dmp | | VDp | VDmp | Kea |
|---|---|---|---|---|---|---|
| over | incl | high | low | max | max | max |
| 18 1) | 30 | 0 | -12 | 12 | 9 | 18 |
| 30 | 50 | 0 | -14 | 14 | 11 | 20 |
| 50 | 80 | 0 | -16 | 16 | 12 | 25 |
| 80 | 120 | 0 | -18 | 18 | 14 | 35 |
| 120 | 150 | 0 | -20 | 20 | 15 | 40 |
| 150 | 180 | 0 | -25 | 25 | 19 | 45 |
| 180 | 250 | 0 | -30 | 30 | 23 | 50 |
| 250 | 315 | 0 | -35 | 35 | 26 | 60 |
| 315 | 400 | 0 | -40 | 40 | 30 | 70 |
| 400 | 500 | 0 | -45 | 45 | 34 | 80 |
| 500 | 630 | 0 | -50 | 50 | 38 | 100 |

**Inner and outer ring tolerances – tapered roller bearings**
**0,001 mm units** Table 21-3

| d mm | | ∆Bs DCs | | ∆Ts | | ∆T1s | | ∆T2s | |
|---|---|---|---|---|---|---|---|---|---|
| over | incl | high | low | high | low | high | low | high | low |
| 10 1) | 18 | 0 | -120 | +200 | 0 | +100 | 0 | +100 | 0 |
| 18 | 30 | 0 | -120 | +200 | 0 | +100 | 0 | +100 | 0 |
| 30 | 50 | 0 | -120 | +200 | 0 | +100 | 0 | +100 | 0 |
| 50 | 80 | 0 | -150 | +200 | 0 | +100 | 0 | +100 | 0 |
| 80 | 120 | 0 | -200 | +200 | -200 | +100 | -100 | +100 | -100 |
| 120 | 180 | 0 | -250 | +350 | -250 | +150 | -150 | +200 | -100 |
| 180 | 250 | 0 | -300 | +350 | -250 | +150 | -150 | +200 | -100 |
| 250 | 315 | 0 | -350 | +350 | -250 | +150 | -150 | +200 | -100 |
| 315 | 400 | 0 | -400 | +400 | -400 | +200 | -200 | +200 | -200 |

1) This value included

# Snap ring and groove tolerances

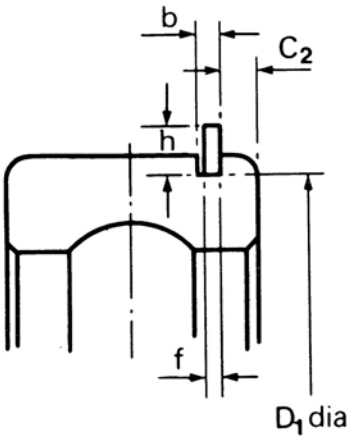


**Snap ring and groove tolerances – metric bearings**
**0,001 mm units**

Table 22-1

| D mm | | b | | f | | h | | $C_2$ | | $D_1$ | |
|---|---|---|---|---|---|---|---|---|---|---|---|
| over | incl | high | low | high | low | high | low | high | low | high | low |
| 28 | 52 | +220 | −80 | +50 | −50 | +75 | −75 | + 80 | − 80 | 0 | −250 |
| 52 | 55 | +220 | −80 | +50 | −50 | +75 | −75 | +100 | −100 | 0 | −250 |
| 55 | 130 | +220 | −80 | +50 | −50 | +75 | −75 | +100 | −100 | 0 | −500 |
| 130 | 250 | +220 | −80 | +50 | −50 | +75 | −75 | +120 | −120 | 0 | −500 |

**Snap ring and groove tolerances – inch bearings**
**0,0001 inch units**

Table 22-2

| D inch | | b | | f | | h | | $C_2$ | | $D_1$ | |
|---|---|---|---|---|---|---|---|---|---|---|---|
| over | incl | high | low | high | low | high | low | high | low | high | low |
| 2 | 2,25 | +90 | −30 | +20 | −20 | +30 | −30 | +30 | −30 | 0 | −200 |
| 2,25 | 5 | +90 | −30 | +20 | −20 | +30 | −30 | +40 | −40 | 0 | −200 |
| 5 | 5,5 | +90 | −30 | +20 | −20 | +30 | −30 | +50 | −50 | 0 | −200 |

# Radial internal clearance

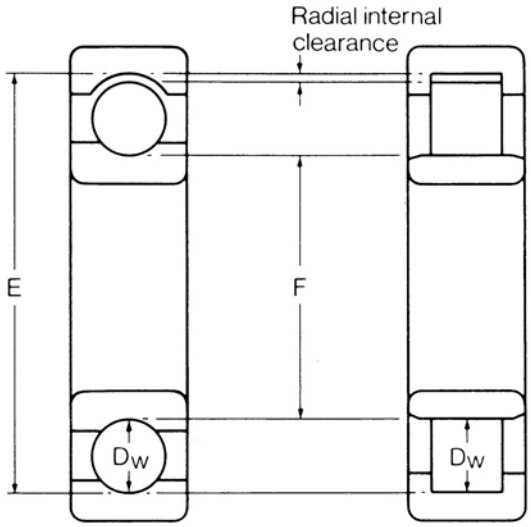


Bearing radial internal clearance relates to the total clearance between the raceways and rolling elements measured normal to the bearing axis.

In single row radial ball and cylindrical roller bearings this may be simply defined as being equal to the difference between the mean outer raceway diameter (E) and the sum of the mean inner raceway diameter (F) and twice the mean diameter of the rolling elements (2 Dw).

i.e. Radial internal clearance = E − (F + 2 Dw)

This feature is not easily checked in assembled bearings, particularly ball bearings where the rolling elements should be central to the raceways. Allowance must also be made for the elastic deformation of rolling elements and raceways under gauging load.

Bearings are made to four standard groups of internal clearance

| | | |
|---|---|---|
| C2 0 | (one dot) | smallest clearance – please check availability |
| CN 00 | (two dot) | normal clearance |
| C3 000 | (three dot) | larger clearance than normal |
| C4 0000 | (four dot) | larger clearance than C3 – please check availability |
| C5 | | larger clearance than C4 – please check availability |

Standard bearings are supplied normal clearance (CN) unless ordered differently. Normal clearance bearings are not marked with the internal clearance code. Radial ball bearings and spherical roller bearings have some axial clearance and this depends on rolling element size, raceway curvature, and radial internal clearance.

Values of radial internal clearance for the various bearing types are given in the following tables.

# Radial internal clearance

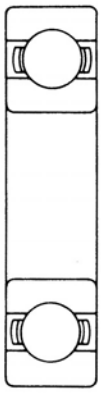

**Radial internal clearance – single row radial ball bearings**
**0,001 mm units**

Table 24-1

| d | | | | Radial internal clearance groups | | | | | | | |
|---|---|---|---|---|---|---|---|---|---|---|---|
| | | | | C2 | | CN (normal) | | C3 | | C4 | |
| mm | | inch | | | | | | | | | |
| over | incl | over | incl | low | high | low | high | low | high | low | high |
| 2,5 | 10 | $\frac{1}{8}$ | $\frac{3}{8}$ | 0 | 7 | 2 | 13 | 8 | 23 | — | — |
| 10 | 18 | $\frac{3}{8}$ | $\frac{11}{16}$ | 0 | 9 | 3 | 18 | 11 | 25 | 18 | 33 |
| 18 | 24 | $\frac{11}{16}$ | $\frac{15}{16}$ | 0 | 10 | 5 | 20 | 13 | 28 | 20 | 36 |
| 24 | 30 | $\frac{15}{16}$ | $1\frac{1}{8}$ | 0 | 11 | 5 | 20 | 13 | 28 | 23 | 41 |
| 30 | 40 | $1\frac{1}{8}$ | $1\frac{9}{16}$ | 0 | 11 | 6 | 20 | 15 | 33 | 28 | 46 |
| 40 | 50 | $1\frac{9}{16}$ | $1\frac{15}{16}$ | 0 | 11 | 6 | 23 | 18 | 36 | 30 | 51 |
| 50 | 65 | $1\frac{15}{16}$ | $2\frac{1}{2}$ | 0 | 15 | 8 | 28 | 23 | 43 | 38 | 61 |
| 65 | 80 | $2\frac{1}{2}$ | $3\frac{1}{8}$ | 0 | 15 | 10 | 30 | 25 | 51 | 46 | 71 |
| 80 | 100 | $3\frac{1}{8}$ | $3\frac{7}{8}$ | 0 | 18 | 12 | 36 | 30 | 58 | 53 | 84 |
| 100 | 120 | $3\frac{7}{8}$ | $4\frac{11}{16}$ | 2,5 | 20 | 15 | 41 | 36 | 66 | 61 | 97 |
| 120 | 140 | $4\frac{11}{16}$ | $5\frac{1}{2}$ | 2,5 | 23 | 18 | 48 | 41 | 81 | 71 | 114 |
| 140 | 160 | $5\frac{1}{2}$ | $6\frac{1}{4}$ | 2,5 | 23 | 18 | 53 | 46 | 91 | 81 | 130 |
| 160 | 180 | $6\frac{1}{4}$ | 7 | 2,5 | 25 | 20 | 61 | 53 | 102 | 91 | 147 |
| 180 | 200 | 7 | $7\frac{7}{8}$ | 2,5 | 30 | 25 | 71 | 63 | 117 | 107 | 163 |
| 200 | 225 | $7\frac{7}{8}$ | $8\frac{7}{8}$ | 2,5 | 35 | 28 | 86 | 76 | 137 | 127 | 193 |
| 225 | 250 | $8\frac{7}{8}$ | $9\frac{7}{8}$ | 2,5 | 38 | 30 | 97 | 86 | 157 | 147 | 221 |
| 250 | 280 | $9\frac{7}{8}$ | 11 | 2,5 | 41 | 33 | 102 | 91 | 168 | 157 | 241 |
| 280 | 315 | 11 | $12\frac{3}{8}$ | 2,5 | 64 | 46 | 114 | 104 | 185 | 175 | 264 |
| 315 | 355 | $12\frac{3}{8}$ | 14 | 2,5 | 64 | 46 | 124 | 115 | 206 | 196 | 295 |
| 355 | 400 | 14 | $15\frac{3}{4}$ | 2,5 | 74 | 56 | 145 | 135 | 236 | 226 | 335 |

**Radial internal clearance – single row radial ball bearings**
**0,0001 inch units**

Table 24-2

| d | | | | Radial internal clearance groups | | | | | | | |
|---|---|---|---|---|---|---|---|---|---|---|---|
| | | | | C2 | | CN (normal) | | C3 | | C4 | |
| mm | | inch | | | | | | | | | |
| over | incl | over | incl | low | high | low | high | low | high | low | high |
| 2,5 | 10 | $\frac{1}{8}$ | $\frac{3}{8}$ | 0 | 3 | 1 | 5 | 3 | 9 | — | — |
| 10 | 18 | $\frac{3}{8}$ | $\frac{11}{16}$ | 0 | 3,5 | 1 | 7 | 4,5 | 10 | 7 | 13 |
| 18 | 24 | $\frac{11}{16}$ | $\frac{15}{16}$ | 0 | 4 | 2 | 8 | 5 | 11 | 8 | 14 |
| 24 | 30 | $\frac{15}{16}$ | $1\frac{1}{8}$ | 0 | 4,5 | 2 | 8 | 5 | 11 | 9 | 16 |
| 30 | 40 | $1\frac{1}{8}$ | $1\frac{9}{16}$ | 0 | 4,5 | 2,5 | 8 | 6 | 13 | 11 | 18 |
| 40 | 50 | $1\frac{9}{16}$ | $1\frac{15}{16}$ | 0 | 4,5 | 2,5 | 9 | 7 | 14 | 12 | 20 |
| 50 | 65 | $1\frac{15}{16}$ | $2\frac{1}{2}$ | 0 | 6 | 3 | 11 | 9 | 17 | 15 | 24 |
| 65 | 80 | $2\frac{1}{2}$ | $3\frac{1}{8}$ | 0 | 6 | 4 | 12 | 10 | 20 | 18 | 28 |
| 80 | 100 | $3\frac{1}{8}$ | $3\frac{7}{8}$ | 0 | 7 | 5 | 14 | 12 | 23 | 21 | 33 |
| 100 | 120 | $3\frac{7}{8}$ | $4\frac{11}{16}$ | 0 | 8 | 6 | 16 | 14 | 26 | 24 | 38 |
| 120 | 140 | $4\frac{11}{16}$ | $5\frac{1}{2}$ | 1 | 9 | 7 | 19 | 16 | 32 | 28 | 45 |
| 140 | 160 | $5\frac{1}{2}$ | $6\frac{1}{4}$ | 1 | 9 | 7 | 21 | 18 | 36 | 32 | 51 |
| 160 | 180 | $6\frac{1}{4}$ | 7 | 1 | 10 | 8 | 24 | 21 | 40 | 36 | 58 |
| 180 | 200 | 7 | $7\frac{7}{8}$ | 1 | 12 | 10 | 28 | 25 | 46 | 42 | 64 |
| 200 | 225 | $7\frac{7}{8}$ | $8\frac{7}{8}$ | 1 | 14 | 11 | 34 | 30 | 54 | 50 | 76 |
| 225 | 250 | $8\frac{7}{8}$ | $9\frac{7}{8}$ | 1 | 15 | 12 | 38 | 34 | 62 | 58 | 87 |
| 250 | 280 | $9\frac{7}{8}$ | 11 | 1 | 16 | 13 | 40 | 36 | 66 | 62 | 95 |
| 280 | 315 | 11 | $12\frac{3}{8}$ | 1 | 25 | 18 | 45 | 41 | 73 | 69 | 104 |
| 315 | 355 | $12\frac{3}{8}$ | 14 | 1 | 25 | 18 | 49 | 45 | 81 | 77 | 116 |
| 355 | 400 | 14 | $15\frac{3}{4}$ | 1 | 29 | 22 | 57 | 53 | 93 | 89 | 132 |

These inch values are rounded conversions. Exact values for both inch and metric bearings are as listed in the metric units given in table 24-1.

## Radial internal clearance – cylindrical roller bearings with matched rings 0,001 mm units

Table 25-1

| d | | | | Radial internal clearance groups | | | | | | | |
|---|---|---|---|---|---|---|---|---|---|---|---|
| mm | | inch | | C2 | | CN (normal) | | C3 | | C4 | |
| over | incl | over | incl | low | high | low | high | low | high | low | high |
| 6 | 24 | $\frac{1}{4}$ | $\frac{15}{16}$ | 10 | 20 | 20 | 30 | 35 | 45 | 45 | 55 |
| 24 | 30 | $\frac{15}{16}$ | $1\frac{1}{8}$ | 10 | 25 | 25 | 35 | 40 | 50 | 50 | 60 |
| 30 | 40 | $1\frac{1}{8}$ | $1\frac{9}{16}$ | 12 | 25 | 25 | 40 | 45 | 55 | 55 | 70 |
| 40 | 50 | $1\frac{9}{16}$ | $1\frac{15}{16}$ | 15 | 30 | 30 | 45 | 50 | 65 | 65 | 80 |
| 50 | 65 | $1\frac{15}{16}$ | $2\frac{1}{2}$ | 15 | 35 | 35 | 50 | 55 | 75 | 75 | 90 |
| 65 | 80 | $2\frac{1}{2}$ | $3\frac{1}{8}$ | 20 | 40 | 40 | 60 | 70 | 90 | 90 | 110 |
| 80 | 100 | $3\frac{1}{8}$ | $3\frac{7}{8}$ | 25 | 45 | 45 | 70 | 80 | 105 | 105 | 125 |
| 100 | 120 | $3\frac{7}{8}$ | $4\frac{11}{16}$ | 25 | 50 | 50 | 80 | 95 | 120 | 120 | 145 |
| 120 | 140 | $4\frac{11}{16}$ | $5\frac{1}{2}$ | 30 | 60 | 60 | 90 | 105 | 135 | 135 | 160 |
| 140 | 160 | $5\frac{1}{2}$ | $6\frac{1}{4}$ | 35 | 65 | 65 | 100 | 115 | 150 | 150 | 180 |
| 160 | 180 | $6\frac{1}{4}$ | 7 | 35 | 75 | 75 | 110 | 125 | 165 | 165 | 200 |
| 180 | 200 | 7 | $7\frac{7}{8}$ | 40 | 80 | 80 | 120 | 140 | 180 | 180 | 220 |
| 200 | 225 | $7\frac{7}{8}$ | $8\frac{7}{8}$ | 45 | 90 | 90 | 135 | 155 | 200 | 200 | 240 |
| 225 | 250 | $8\frac{7}{8}$ | $9\frac{7}{8}$ | 50 | 100 | 100 | 150 | 170 | 215 | 215 | 265 |
| 250 | 280 | $9\frac{7}{8}$ | 11 | 55 | 110 | 110 | 165 | 185 | 240 | 240 | 295 |
| 280 | 315 | 11 | $12\frac{3}{8}$ | 60 | 120 | 120 | 180 | 205 | 265 | 265 | 325 |
| 315 | 355 | $12\frac{3}{8}$ | 14 | 65 | 135 | 135 | 200 | 225 | 295 | 295 | 360 |
| 355 | 400 | 14 | $15\frac{3}{4}$ | 75 | 150 | 150 | 225 | 255 | 330 | 330 | 405 |

## Radial internal clearance – cylindrical roller bearings with matched rings 0,0001 inch units

Table 25-2

| d | | | | Radial internal clearance groups | | | | | | | |
|---|---|---|---|---|---|---|---|---|---|---|---|
| mm | | inch | | C2 | | CN (normal) | | C3 | | C4 | |
| over | incl | over | incl | low | high | low | high | low | high | low | high |
| 6 | 24 | $\frac{1}{4}$ | $\frac{15}{16}$ | 4 | 8 | 8 | 12 | 14 | 18 | 18 | 22 |
| 24 | 30 | $\frac{15}{16}$ | $1\frac{1}{8}$ | 4 | 10 | 10 | 14 | 16 | 20 | 20 | 24 |
| 30 | 40 | $1\frac{1}{8}$ | $1\frac{9}{16}$ | 5 | 10 | 10 | 16 | 18 | 22 | 22 | 28 |
| 40 | 50 | $1\frac{9}{16}$ | $1\frac{15}{16}$ | 6 | 12 | 12 | 18 | 20 | 26 | 26 | 31 |
| 50 | 65 | $1\frac{15}{16}$ | $2\frac{1}{2}$ | 6 | 14 | 14 | 20 | 22 | 30 | 30 | 35 |
| 65 | 80 | $2\frac{1}{2}$ | $3\frac{1}{8}$ | 8 | 16 | 16 | 24 | 28 | 35 | 35 | 43 |
| 80 | 100 | $3\frac{1}{8}$ | $3\frac{7}{8}$ | 10 | 18 | 18 | 28 | 31 | 41 | 41 | 49 |
| 100 | 120 | $3\frac{7}{8}$ | $4\frac{11}{16}$ | 10 | 20 | 20 | 31 | 37 | 47 | 47 | 57 |
| 120 | 140 | $4\frac{11}{16}$ | $5\frac{1}{2}$ | 12 | 24 | 24 | 35 | 41 | 53 | 53 | 63 |
| 140 | 160 | $5\frac{1}{2}$ | $6\frac{1}{4}$ | 14 | 26 | 26 | 39 | 45 | 59 | 59 | 71 |
| 160 | 180 | $6\frac{1}{4}$ | 7 | 14 | 30 | 30 | 43 | 49 | 65 | 65 | 79 |
| 180 | 200 | 7 | $7\frac{7}{8}$ | 16 | 31 | 31 | 47 | 55 | 71 | 71 | 87 |
| 200 | 225 | $7\frac{7}{8}$ | $8\frac{7}{8}$ | 18 | 35 | 35 | 53 | 61 | 79 | 79 | 94 |
| 225 | 250 | $8\frac{7}{8}$ | $9\frac{7}{8}$ | 20 | 39 | 39 | 59 | 67 | 85 | 85 | 104 |
| 250 | 280 | $9\frac{7}{8}$ | 11 | 22 | 43 | 43 | 65 | 73 | 94 | 94 | 116 |
| 280 | 315 | 11 | $12\frac{3}{8}$ | 24 | 47 | 47 | 71 | 81 | 104 | 104 | 128 |
| 315 | 355 | $12\frac{3}{8}$ | 14 | 26 | 53 | 53 | 79 | 89 | 116 | 116 | 142 |
| 355 | 400 | 14 | $15\frac{3}{4}$ | 30 | 59 | 59 | 89 | 100 | 130 | 130 | 159 |

These inch values are rounded conversions. Exact values for both inch and metric bearings are listed in the metric units given in table 25-1.

# Radial internal clearance

**Radial internal clearance – double row self-aligning ball bearings**
**0,001 mm units**

Table 26-1

| d | | | | Radial internal clearance groups | | | | | | | |
|---|---|---|---|---|---|---|---|---|---|---|---|
| mm | | inch | | C2 | | CN (normal) | | C3 | | C4 | |
| over | incl | over | incl | low | high | low | high | low | high | low | high |
| 2,5 | 6 | $\frac{1}{8}$ | $\frac{7}{32}$ | 1 | 5 | 5 | 10 | 10 | 15 | 15 | 21 |
| 6 | 10 | $\frac{7}{32}$ | $\frac{3}{8}$ | 2 | 6 | 6 | 12 | 12 | 19 | 19 | 27 |
| 10 | 14 | $\frac{3}{8}$ | $\frac{9}{16}$ | 2 | 6 | 6 | 13 | 13 | 21 | 21 | 30 |
| 14 | 18 | $\frac{9}{16}$ | $\frac{11}{16}$ | 3 | 8 | 8 | 15 | 15 | 23 | 23 | 32 |
| 18 | 24 | $\frac{11}{16}$ | $\frac{15}{16}$ | 4 | 10 | 10 | 17 | 17 | 25 | 25 | 34 |
| 24 | 30 | $\frac{15}{16}$ | $1\frac{1}{8}$ | 5 | 11 | 11 | 19 | 19 | 29 | 29 | 40 |
| 30 | 40 | $1\frac{1}{8}$ | $1\frac{9}{16}$ | 6 | 13 | 13 | 23 | 23 | 34 | 34 | 46 |
| 40 | 50 | $1\frac{9}{16}$ | $1\frac{15}{16}$ | 6 | 14 | 14 | 25 | 25 | 37 | 37 | 50 |
| 50 | 65 | $1\frac{15}{16}$ | $2\frac{1}{2}$ | 7 | 16 | 16 | 30 | 30 | 45 | 45 | 65 |
| 65 | 80 | $2\frac{1}{2}$ | $3\frac{1}{8}$ | 8 | 18 | 18 | 35 | 35 | 54 | 54 | 76 |
| 80 | 100 | $3\frac{1}{8}$ | $3\frac{7}{8}$ | 9 | 22 | 22 | 42 | 42 | 64 | 64 | 89 |
| 100 | 120 | $3\frac{7}{8}$ | $4\frac{11}{16}$ | 10 | 25 | 25 | 50 | 50 | 75 | 75 | 105 |
| 120 | 140 | $4\frac{11}{16}$ | $5\frac{1}{2}$ | 10 | 30 | 30 | 60 | 60 | 90 | 90 | 130 |
| 140 | 160 | $5\frac{1}{2}$ | $6\frac{1}{4}$ | 15 | 35 | 35 | 70 | 70 | 110 | 110 | 150 |

**Radial internal clearance – double row self-aligning ball bearings**
**0,0001 inch units**

Table 26-2

| d | | | | Radial internal clearance groups | | | | | | | |
|---|---|---|---|---|---|---|---|---|---|---|---|
| mm | | inch | | C2 | | CN (normal) | | C3 | | C4 | |
| over | incl | over | incl | low | high | low | high | low | high | low | high |
| 2,5 | 6 | $\frac{1}{8}$ | $\frac{7}{32}$ | 0,5 | 2 | 2 | 4 | 4 | 6 | 6 | 8 |
| 6 | 10 | $\frac{7}{32}$ | $\frac{3}{8}$ | 1 | 2,5 | 2,5 | 5 | 5 | 7,5 | 7,5 | 11 |
| 10 | 14 | $\frac{3}{8}$ | $\frac{9}{16}$ | 1 | 2,5 | 2,5 | 5 | 5 | 8 | 8 | 12 |
| 14 | 18 | $\frac{9}{16}$ | $\frac{11}{16}$ | 1 | 3 | 3 | 6 | 6 | 9 | 9 | 13 |
| 18 | 24 | $\frac{11}{16}$ | $\frac{15}{16}$ | 1,5 | 4 | 4 | 6,5 | 6,5 | 10 | 10 | 13 |
| 24 | 30 | $\frac{15}{16}$ | $1\frac{1}{8}$ | 2 | 4,5 | 4,5 | 7,5 | 7,5 | 11 | 11 | 16 |
| 30 | 40 | $1\frac{1}{8}$ | $1\frac{9}{16}$ | 2,5 | 5 | 5 | 9 | 9 | 13 | 13 | 18 |
| 40 | 50 | $1\frac{9}{16}$ | $1\frac{15}{16}$ | 2,5 | 5,5 | 5,5 | 10 | 10 | 15 | 15 | 20 |
| 50 | 65 | $1\frac{15}{16}$ | $2\frac{1}{2}$ | 3 | 6,5 | 6,5 | 12 | 12 | 18 | 18 | 26 |
| 65 | 80 | $2\frac{1}{2}$ | $3\frac{1}{8}$ | 3 | 7 | 7 | 14 | 14 | 21 | 21 | 30 |
| 80 | 100 | $3\frac{1}{8}$ | $3\frac{7}{8}$ | 3,5 | 9 | 9 | 17 | 17 | 25 | 25 | 35 |
| 100 | 120 | $3\frac{7}{8}$ | $4\frac{11}{16}$ | 4 | 10 | 10 | 20 | 20 | 30 | 30 | 41 |
| 120 | 140 | $4\frac{11}{16}$ | $5\frac{1}{2}$ | 4 | 12 | 12 | 24 | 24 | 35 | 35 | 51 |
| 140 | 160 | $5\frac{1}{2}$ | $6\frac{1}{4}$ | 6 | 14 | 14 | 28 | 28 | 43 | 43 | 59 |

These inch values are rounded conversions. Exact values for both inch and metric bearings are listed in the metric units, given in table 26-1.

**Radial internal clearance – double row spherical roller bearings with cylindrical bores**
**0,001 mm units**

Table 27-1

| d mm | | Radial internal clearance groups | | | | | | | |
|---|---|---|---|---|---|---|---|---|---|
| | | C2 | | CN (normal) | | C3 | | C4 | |
| over | incl | low | high | low | high | low | high | low | high |
| 24 | 30 | 15 | 25 | 25 | 40 | 40 | 55 | 55 | 75 |
| 30 | 40 | 15 | 30 | 30 | 45 | 45 | 60 | 60 | 80 |
| 40 | 50 | 20 | 35 | 35 | 55 | 55 | 75 | 75 | 100 |
| 50 | 65 | 20 | 40 | 40 | 65 | 65 | 90 | 90 | 120 |
| 65 | 80 | 30 | 50 | 50 | 80 | 80 | 110 | 110 | 145 |
| 80 | 100 | 35 | 60 | 60 | 100 | 100 | 135 | 135 | 180 |
| 100 | 120 | 40 | 75 | 75 | 120 | 120 | 160 | 160 | 210 |
| 120 | 140 | 50 | 95 | 95 | 145 | 145 | 190 | 190 | 240 |
| 140 | 160 | 60 | 110 | 110 | 170 | 170 | 220 | 220 | 280 |
| 160 | 180 | 65 | 120 | 120 | 180 | 180 | 240 | 240 | 310 |
| 180 | 200 | 70 | 130 | 130 | 200 | 200 | 260 | 260 | 340 |
| 200 | 225 | 80 | 140 | 140 | 220 | 220 | 290 | 290 | 380 |
| 225 | 250 | 90 | 150 | 150 | 240 | 240 | 320 | 320 | 420 |

**Radial internal clearance – double row spherical roller bearings with tapered bores**
**0,001 mm units**

Table 27-2

| d mm | | Radial internal clearance groups | | | | | | | |
|---|---|---|---|---|---|---|---|---|---|
| | | C2 | | CN (normal) | | C3 | | C4 | |
| over | incl | low | high | low | high | low | high | low | high |
| 24 | 30 | 20 | 30 | 30 | 40 | 40 | 55 | 55 | 75 |
| 30 | 40 | 25 | 35 | 35 | 50 | 50 | 65 | 65 | 85 |
| 40 | 50 | 30 | 45 | 45 | 60 | 60 | 80 | 80 | 100 |
| 50 | 65 | 40 | 55 | 55 | 75 | 75 | 95 | 95 | 120 |
| 65 | 80 | 50 | 70 | 70 | 95 | 95 | 120 | 120 | 150 |
| 80 | 100 | 55 | 80 | 80 | 110 | 110 | 140 | 140 | 180 |
| 100 | 120 | 65 | 100 | 100 | 135 | 135 | 170 | 170 | 220 |
| 120 | 140 | 80 | 120 | 120 | 160 | 160 | 200 | 200 | 260 |
| 140 | 160 | 90 | 130 | 130 | 180 | 180 | 230 | 230 | 300 |
| 160 | 180 | 100 | 140 | 140 | 200 | 200 | 260 | 260 | 340 |
| 180 | 200 | 110 | 160 | 160 | 220 | 220 | 290 | 290 | 370 |
| 200 | 225 | 120 | 180 | 180 | 250 | 250 | 320 | 320 | 410 |
| 225 | 250 | 140 | 200 | 200 | 270 | 270 | 350 | 350 | 450 |

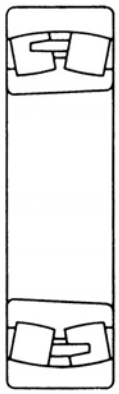

RKB

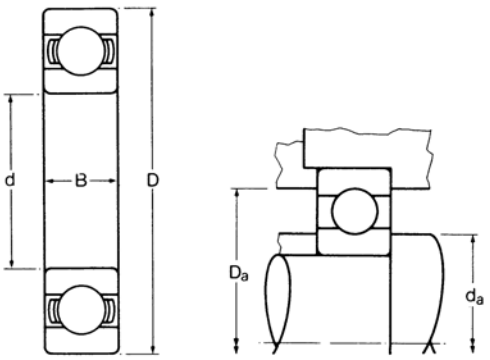


# Single row radial ball bearings

## 160 EXTRA LIGHT NARROW SERIES

METRIC SIZES

ISO DIMENSION SERIES 00

| RKB designation | Dimensions millimetres | | | RKB load ratings† newtons | | Normal limiting speeds rev/min | | Weight kg | Shaft and housing dimensions millimetres | | |
|---|---|---|---|---|---|---|---|---|---|---|---|
| | | | | dynamic | static | grease | oil | approx | max fillet radius | da min | Da max |
| | d | D | B | $C_r$ | $C_{or}$ | | | | | | |
| **16002** | 15 | 32 | 8 | 5 350 | 2 200 | 23 000 | 29 000 | 0,025 | 0,3 | 16,8 | 30,2 |
| **16003** | 17 | 35 | 8 | 5 800 | 2 500 | 20 000 | 25 000 | 0,032 | 0,3 | 18,8 | 33,2 |
| **16004** | 20 | 42 | 8 | 9 750 | 3 200 | 16 500 | 21 000 | 0,050 | 0,3 | 21,8 | 40,2 |
| **16005** | 25 | 47 | 8 | 7 550 | 3 750 | 14 000 | 18 000 | 0,060 | 0,3 | 26,8 | 45,2 |
| **16006** | 30 | 55 | 9 | 11 700 | 6 000 | 12 000 | 15 000 | 0,085 | 0,3 | 31,8 | 53,2 |
| **16007** | 35 | 62 | 9 | 12 700 | 7 100 | 10 500 | 13 000 | 0,110 | 0,3 | 36,8 | 60,2 |
| **16008** | 40 | 68 | 9 | 13 700 | 8 000 | 9 500 | 12 000 | 0,125 | 0,3 | 41,8 | 66,2 |
| **16009** | 45 | 75 | 10 | 16 200 | 9 500 | 8 500 | 10 500 | 0,170 | 0,6 | 48,2 | 71,8 |
| **16010** | 50 | 80 | 10 | 16 700 | 10 200 | 8 000 | 10 000 | 0,180 | 0,6 | 53,2 | 76,8 |
| **16013** | 65 | 100 | 11 | 22 000 | 15 000 | 6 300 | 7 500 | 0,300 | 0,6 | 68,2 | 96,8 |
| **16020** | 100 | 150 | 16 | 45 600 | 33 500 | 4 100 | 4 900 | 0,910 | 1,0 | 104,6 | 145,4 |
| **16022** | 110 | 170 | 19 | 59 500 | 43 000 | 3 700 | 4 400 | 1,46 | 1,0 | 114,6 | 165,4 |

## 161 EXTRA LIGHT NARROW SERIES

METRIC SIZES

ISO DIMENSION SERIES 00

| | | | | | | | | | | | |
|---|---|---|---|---|---|---|---|---|---|---|---|
| **16100** | 10 | 28 | 8 | 4 620 | 1 960 | 28 000 | 34 000 | 0.022 | 0.3 | 12 | 26 |
| **16101** | 12 | 30 | 8 | 5 070 | 2 360 | 26 000 | 32 000 | 0.023 | 0.3 | 14 | 28 |

**Larger sizes, sealed and shielded types are available on request**

**Please check availability**

# Single row radial ball bearings

## 60 EXTRA LIGHT SERIES

METRIC SIZES

ISO DIMENSION SERIES 10

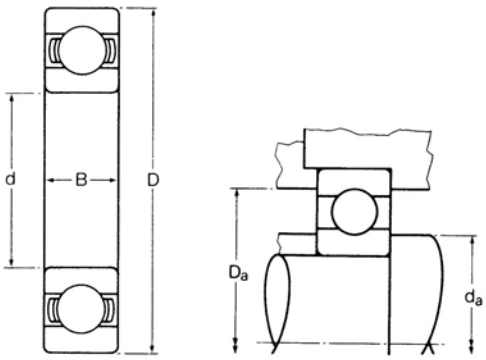


| RKB designations | | | | | | | Dimensions | | | RKB load ratings† | |
|---|---|---|---|---|---|---|---|---|---|---|---|
| basic bearing | with one shield | with two shields | with one seal | with two seals | with snap ring groove | with groove and snap ring | millimetres | | | newtons | |
| | | | | | | | | | | dynamic | static |
| | Z | –2Z | RS | –2RS | N | NR | d | D | B | $C_r$ | $C_{or}$ |
| **6000** | 6000Z | 6000–2Z | 6000RS | 6000–2RS | | | 10 | 26 | 8 | 4 750 | 1 950 |
| **6001** | 6001Z | 6001–2Z | 6001RS | 6001–2RS | | | 12 | 28 | 8 | 5 300 | 2 230 |
| **6002** | 6002Z | 6002–2Z | 6002RS | 6002–2RS | 6002N | 6002NR | 15 | 32 | 9 | 5 800 | 2 510 |
| **6003** | 6003Z | 6003–2Z | 6003RS | 6003–2RS | 6003N | 6003NR | 17 | 35 | 10 | 7 050 | 3 030 |
| **6004** | 6004Z | 6004–2Z | 6004RS | 6004–2RS | 6004N | 6004NR | 20 | 42 | 12 | 9 750 | 4 450 |
| **6005** | 6005Z | 6005–2Z | 6005RS | 6005–2RS | 6005N | 6005NR | 25 | 47 | 12 | 10 500 | 4 950 |
| **6006** | 6006Z | 6006–2Z | 6006RS | 6006–2RS | 6006N | 6006NR | 30 | 55 | 13 | 15 700 | 7 750 |
| **6007** | 6007Z | 6007–2Z | 6007RS | 6007–2RS | 6007N | 6007NR | 35 | 62 | 14 | 16 600 | 8 500 |
| **6008** | 6008Z | 6008–2Z | 6008RS | 6008–2RS | 6008N | 6008NR | 40 | 68 | 15 | 19 700 | 10 300 |
| **6009** | 6009Z | 6009–2Z | 6009RS | 6009–2RS | 6009N | 6009NR | 45 | 75 | 16 | 24 400 | 13 400 |
| **6010** | 6010Z | 6010–2Z | 6010RS | 6010–2RS | 6010N | 6010NR | 50 | 80 | 16 | 22 700 | 13 100 |
| **6011** | 6011Z | 6011–2Z | 6011RS | 6011–2RS | 6011N | 6011NR | 55 | 90 | 18 | 29 400 | 17 000 |
| **6012** | 6012Z | 6012–2Z | 6012RS | 6012–2RS | 6012N | 6012NR | 60 | 95 | 18 | 33 600 | 19 700 |
| **6013** | 6013Z | 6013–2Z | 6013RS | 6013–2RS | 6013N | 6013NR | 65 | 100 | 18 | 31 800 | 19 600 |
| **6014** | 6014Z | 6014–2Z | 6014RS | 6014–2RS | 6014N | 6014NR | 70 | 110 | 20 | 42 700 | 25 700 |
| **6015** | | | 6015RS | 6015–2RS | 6015N | 6015NR | 75 | 115 | 20 | 41 100 | 26 100 |
| **6016** | | | 6016RS | 6016–2RS | 6016N | 6016NR | 80 | 125 | 22 | 49 600 | 31 300 |
| **6017** | | | 6017RS | 6017–2RS | 6017N | 6017NR | 85 | 130 | 22 | 51 500 | 33 500 |
| **6018** | | | | | 6018N | 6018NR | 90 | 140 | 24 | 60 500 | 39 100 |
| **6019** | | | 6019RS | 6019–2RS | | | 95 | 145 | 24 | 63 000 | 41 900 |
| **6020** | | | | | | | 100 | 150 | 24 | 62 500 | 42 500 |
| **6021** | | | | | | | 105 | 160 | 26 | 75 500 | 51 000 |
| **6022** | | | | | | | 110 | 170 | 28 | 85 500 | 57 500 |
| **6024** | | | | | | | 120 | 180 | 28 | 86 000 | 62 000 |
| **6026** | | | | | | | 130 | 200 | 33 | 109 000 | 80 000 |
| **6028** | | | | | | | 140 | 210 | 33 | 113 000 | 85 000 |
| **6030** | | | | | | | 150 | 225 | 35 | 134 000 | 97 500 |
| **6032** | | | | | | | 160 | 240 | 38 | 145 000 | 104 000 |
| **6034** | | | | | | | 170 | 260 | 42 | 175 000 | 137 000 |
| **6036** | | | | | | | 180 | 280 | 46 | 181 000 | 140 000 |

**Please check availability**

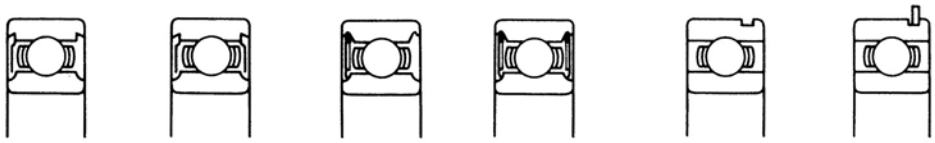

Z –2Z RS –2RS N NR

| Normal limiting speeds rev/min grease | oil | types RS and –2RS | Weight kg approx (basic bearing) | Shaft and housing dimensions millimetres max fillet radius | $d_a$ min | $d_a$ max | $D_a$ min | $D_a$ max | RKB designation (basic bearing) |
|---|---|---|---|---|---|---|---|---|---|
| 25 500 | 34 500 | 18 000 | 0,020 | 0,3 | 12,0 | 12,7 | 23,1 | 24,0 | **6000** |
| 23 500 | 32 000 | 16 500 | 0,023 | 0,3 | 13,2 | 14,7 | 25,1 | 26,8 | **6001** |
| 21 000 | 28 000 | 14 600 | 0,030 | 0,3 | 16,2 | 18,3 | 28,7 | 30,8 | **6002** |
| 19 000 | 26 000 | 13 500 | 0,038 | 0,3 | 18,2 | 20,3 | 31,5 | 33,8 | **6003** |
| 16 500 | 22 500 | 11 600 | 0,069 | 0,6 | 22,4 | 24,6 | 37,3 | 39,6 | **6004** |
| 14 600 | 19 500 | 10 200 | 0,080 | 0,6 | 27,4 | 29,7 | 42,4 | 44,6 | **6005** |
| 12 600 | 17 000 | 8 800 | 0,116 | 1,0 | 34,0 | 34,5 | 50,5 | 51,0 | **6006** |
| 11 200 | 15 000 | 7 800 | 0,156 | 1,0 | 39,0 | 40,6 | 56,4 | 58,0 | **6007** |
| 10 100 | 13 600 | 7 100 | 0,191 | 1,0 | 44,0 | 45,2 | 62,7 | 64,0 | **6008** |
| 9 100 | 12 300 | 6 400 | 0,245 | 1,0 | 49,0 | 50,5 | 69,6 | 71,0 | **6009** |
| 8 300 | 11 200 | 5 800 | 0,264 | 1,0 | 54,0 | 57,4 | 74,7 | 76,0 | **6010** |
| 7 600 | 10 300 | 5 300 | 0,394 | 1,0 | 59,0 | 62,2 | 82,8 | 86,0 | **6011** |
| 7 100 | 9 600 | 5 000 | 0,419 | 1,0 | 64,0 | 66,5 | 88,6 | 91,0 | **6012** |
| 6 700 | 9 000 | 4 700 | 0,449 | 1,0 | 69,0 | 72,1 | 92,7 | 96,0 | **6013** |
| 6 100 | 8 200 | 4 300 | 0,608 | 1,0 | 74,0 | 77,2 | 102,6 | 106,0 | **6014** |
| 5 800 | 7 800 | 4 050 | 0,680 | 1,0 | 79,0 | 83,6 | 107,2 | 111,0 | **6015** |
| 5 300 | 7 200 | 3 700 | 0,907 | 1,0 | 84,0 | 88,9 | 116,1 | 121,0 | **6016** |
| 5 000 | 6 800 | 3 500 | 0,907 | 1,0 | 89,0 | 94,5 | 121,4 | 126,0 | **6017** |
| 4 600 | 6 300 | | 1,16 | 1,5 | 96,0 | 100,8 | 131,1 | 134,0 | **6018** |
| 4 400 | 6 000 | 3 100 | 1,21 | 1,5 | 101,0 | 105,7 | 135,6 | 139,0 | **6019** |
| 4 100 | 4 900 | | 1,26 | 1,5 | 106,0 | 109,2 | 141,0 | 144,0 | **6020** |
| 2 000 | 4 000 | | 1,62 | 2,0 | 113,0 | 115,8 | 148,3 | 152,0 | **6021** |
| 3 800 | 5 100 | | 1,97 | 2,0 | 118,0 | 121,7 | 158,2 | 162,0 | **6022** |
| 3 400 | 4 000 | | 2,53 | 2,0 | 128,0 | 131,8 | 168,1 | 172,0 | **6024** |
| 3 100 | 3 700 | | 3,81 | 2,0 | 138,0 | 144,3 | 185,7 | 192,0 | **6026** |
| 2 800 | 3 300 | | 4,02 | 2,0 | 148,0 | 155,7 | 196,8 | 202,0 | **6028** |
| 1 300 | 2 700 | | 4,94 | 2,0 | 158,0 | 164,6 | 210,6 | 217,0 | **6030** |
| 1 200 | 2 400 | | 5,95 | 2,0 | 168,0 | 174,5 | 225,5 | 232,0 | **6032** |
| 2 200 | 2 600 | | 8,07 | 2,0 | 178,0 | 187,2 | 242,8 | 252,0 | **6034** |
| 1 000 | 2 000 | | 10,7 | 2,0 | 188,0 | 204,2 | 261,4 | 272,0 | **6036** |

**Larger sizes are available on request**

# Single row radial ball bearings

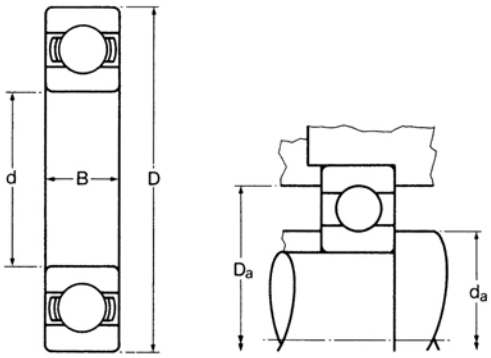


## 62 LIGHT SERIES

METRIC SIZES

ISO DIMENSION SERIES 02

| RKB designations | | | | | | | Dimensions | | | RKB load ratings† | |
|---|---|---|---|---|---|---|---|---|---|---|---|
| basic | with one | with two | with one | with two | with snap ring | with groove and | millimetres | | | newtons | |
| bearing | shield | shields | seal | seals | groove | snap ring | | | | dynamic | static |
| | Z | –2Z | RS | –2RS | N | NR | d | D | B | $C_r$ | $C_{or}$ |
| **6200** | 6200Z | 6200–2Z | 6200RS | 6200–2RS | 6200N | 6200NR | 10 | 30 | 9 | 6 200 | 2 650 |
| **6201** | 6201Z | 6201–2Z | 6201RS | 6201–2RS | 6201N | 6201NR | 12 | 32 | 10 | 7 050 | 3 040 |
| **6202** | 6202Z | 6202–2Z | 6202RS | 6202–2RS | 6202N | 6202NR | 15 | 35 | 11 | 8 050 | 3 530 |
| **6203** | 6203Z | 6203–2Z | 6203RS | 6203–2RS | 6203N | 6203NR | 17 | 40 | 12 | 9 950 | 4 470 |
| **6204** | 6204Z | 6204–2Z | 6204RS | 6204–2RS | 6204N | 6204NR | 20 | 47 | 14 | 13 300 | 6 200 |
| **6205** | 6205Z | 6205–2Z | 6205RS | 6205–2RS | 6205N | 6205NR | 25 | 52 | 15 | 14 500 | 6 950 |
| **6206** | 6206Z | 6206–2Z | 6206RS | 6206–2RS | 6206N | 6206NR | 30 | 62 | 16 | 20 200 | 10 000 |
| **6207** | 6207Z | 6207–2Z | 6207RS | 6207–2RS | 6207N | 6207NR | 35 | 72 | 17 | 26 700 | 13 600 |
| **6208** | 6208Z | 6208–2Z | 6208RS | 6208–2RS | 6208N | 6208NR | 40 | 80 | 18 | 34 000 | 17 800 |
| **6209** | 6209Z | 6209–2Z | 6209RS | 6209–2RS | 6209N | 6209NR | 45 | 85 | 19 | 34 000 | 17 800 |
| **6210** | 6210Z | 6210–2Z | 6210RS | 6210–2RS | 6210N | 6210NR | 50 | 90 | 20 | 36 500 | 19 800 |
| **6211** | 6211Z | 6211–2Z | 6211RS | 6211–2RS | 6211N | 6211NR | 55 | 100 | 21 | 45 100 | 25 100 |
| **6212** | 6212Z | 6212–2Z | 6212RS | 6212–2RS | 6212N | 6212NR | 60 | 110 | 22 | 54 500 | 30 900 |
| **6213** | 6213Z | 6213–2Z | 6213RS | 6213–2RS | 6213N | 6213NR | 65 | 120 | 23 | 59 500 | 34 100 |
| **6214** | 6214Z | 6214–2Z | 6214RS | 6214–2RS | 6214N | 6214NR | 70 | 125 | 24 | 64 500 | 37 400 |
| **6215** | 6215Z | 6215–2Z | 6215RS | 6215–2RS | 6215N | 6215NR | 75 | 130 | 25 | 69 000 | 41 200 |
| **6216** | 6216Z | 6216–2Z | 6216RS | 6216–2RS | 6216N | 6216NR | 80 | 140 | 26 | 80 500 | 49 000 |
| **6217** | 6217Z | 6217–2Z | 6217RS | 6217–2RS | 6217N | 6217NR | 85 | 150 | 28 | 87 500 | 52 500 |
| **6218** | 6218Z | 6218–2Z | 6218RS | 6218–2RS | 6218N | 6218NR | 90 | 160 | 30 | 93 000 | 57 500 |
| **6219** | | | | | 6219N | 6219NR | 95 | 170 | 32 | 106 000 | 66 500 |
| **6220** | | | | | 6220N | 6220NR | 100 | 180 | 34 | 120 000 | 74 500 |
| **6221** | | | | | | | 105 | 190 | 36 | 135 000 | 87 000 |
| **6222** | | | | | | | 110 | 200 | 38 | 147 000 | 98 500 |
| **6224** | | | | | | | 120 | 215 | 40 | 150 000 | 102 000 |
| **6226** | | | | | | | 130 | 230 | 40 | 172 000 | 123 000 |
| **6228** | | | | | | | 140 | 250 | 42 | 184 000 | 136 000 |
| **6230** | | | | | | | 150 | 270 | 45 | 183 000 | 138 000 |
| **6232** | | | | | | | 160 | 290 | 48 | 238 000 | 196 000 |
| **6234** | | | | | | | 170 | 310 | 52 | 237 000 | 196 000 |
| **6236** | | | | | | | 180 | 320 | 52 | 266 000 | 230 000 |
| **6238** | | | | | | | 190 | 340 | 55 | 281 000 | 248 000 |
| **6240** | | | | | | | 200 | 360 | 58 | 279 000 | 265 000 |
| **6244** | | | | | | | 220 | 400 | 65 | 356 000 | 348 000 |

**Please check availability**

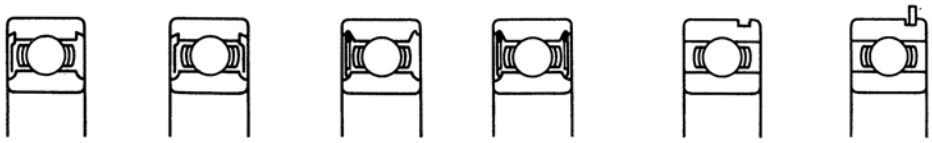

Z –2Z RS –2RS N NR

| Normal limiting speeds rev/min grease | oil | types RS and –2RS | Weight kg approx (basic bearing) | Shaft and housing dimensions millimetres max fillet radius | $d_a$ min | $d_a$ max | $D_a$ min | $D_a$ max | RKB designation (basic bearing) |
|---|---|---|---|---|---|---|---|---|---|
| 23 500 | 32 000 | 16 500 | 0,031 | 0,6 | 14,0 | 14,0 | 25,0 | 26,0 | **6200** |
| 22 000 | 29 500 | 15 500 | 0,034 | 0,6 | 14,4 | 15,9 | 28,6 | 29,6 | **6201** |
| 19 500 | 26 500 | 13 800 | 0,043 | 0,6 | 17,4 | 19,1 | 31,3 | 32,6 | **6202** |
| 18 000 | 24 000 | 12 500 | 0,062 | 0,6 | 19,4 | 21,8 | 36,1 | 37,6 | **6203** |
| 15 500 | 21 000 | 10 800 | 0,099 | 1,0 | 24,0 | 25,1 | 42,5 | 43,0 | **6204** |
| 14 000 | 19 000 | 9 800 | 0,123 | 1,0 | 29,0 | 30,1 | 47,6 | 48,0 | **6205** |
| 11 700 | 15 500 | 8 200 | 0,198 | 1,0 | 36,0 | 36,0 | 55,0 | 56,0 | **6206** |
| 10 100 | 13 600 | 7 100 | 0,276 | 1,0 | 42,0 | 43,0 | 63,0 | 65,0 | **6207** |
| 9 000 | 12 200 | 6 300 | 0,351 | 1,0 | 44,0 | 48,3 | 73,7 | 76,0 | **6208** |
| 8 400 | 11 400 | 5 900 | 0,397 | 1,0 | 49,0 | 52,7 | 78,1 | 81,0 | **6209** |
| 7 800 | 10 600 | 5 500 | 0,446 | 1,0 | 54,0 | 57,7 | 83,2 | 86,0 | **6210** |
| 7 100 | 9 500 | 4 900 | 0,590 | 1,5 | 61,0 | 63,8 | 92,2 | 94,0 | **6211** |
| 6 400 | 8 700 | 4 500 | 0,771 | 1,5 | 66,0 | 69,1 | 100,9 | 104,0 | **6212** |
| 5 900 | 7 900 | 4 100 | 0,966 | 1,5 | 71,0 | 76,2 | 109,7 | 114,0 | **6213** |
| 5 600 | 7 500 | 3 900 | 1,05 | 1,5 | 76.0 | 80,5 | 115,6 | 119,0 | **6214** |
| 5 300 | 7 100 | 3 700 | 1,13 | 1,5 | 81,0 | 84,8 | 120,4 | 124,0 | **6215** |
| 4 900 | 6 600 | 3 400 | 1,37 | 2,0 | 88,0 | 92,5 | 130,6 | 132,0 | **6216** |
| 4 500 | 6 100 | 3 100 | 1,71 | 2,0 | 93,0 | 97,5 | 138,7 | 142,0 | **6217** |
| 4 300 | 5 800 | 3 000 | 2,57 | 2,0 | 98,0 | 105,2 | 146,6 | 152,0 | **6218** |
| 4 000 | 5 400 | | 2,72 | 2,0 | 103,0 | 111,8 | 156,2 | 162,0 | **6219** |
| 3 800 | 5 100 | | 3,12 | 2,0 | 108,0 | 116,8 | 166,1 | 172,0 | **6220** |
| 3 500 | 4 700 | | 4,42 | 2,0 | 113,0 | 122,9 | 173,7 | 182,0 | **6221** |
| 3 300 | 4 400 | | 5,17 | 2,0 | 118,0 | 129,0 | 182,9 | 192,0 | **6222** |
| 2 500 | 3 200 | | 5,15 | 2,0 | 132,0 | 138,2 | 198,6 | 203,0 | **6224** |
| 2 700 | 3 700 | | 7,08 | 2,5 | 140,0 | 152,4 | 212,6 | 220,0 | **6226** |
| 2 500 | 3 400 | | 8,98 | 2,5 | 150,0 | 163,3 | 226,8 | 240,0 | **6228** |
| 2 300 | 3 100 | | 9,41 | 2,5 | 164,0 | 178,6 | 248,4 | 256,0 | **6230** |
| 2 100 | 2 800 | | 13,7 | 2,5 | 170,0 | 189,5 | 265,7 | 280,0 | **6232** |
| 1 000 | 2 000 | | 16,7 | 3,0 | 182,0 | 201,9 | 278,1 | 298,0 | **6234** |
| 1 800 | 2 500 | | 17,2 | 3,0 | 192,0 | 210,7 | 293,2 | 308,0 | **6236** |
| 1 700 | 2 300 | | 21,7 | 3,0 | 202,0 | 219,4 | 311,8 | 328,0 | **6238** |
| 1 600 | 1 900 | | 27,0 | 3,0 | 212,0 | 236,5 | 328,6 | 348,0 | **6240** |
| 700 | 1 400 | | 36,4 | 3,0 | 232,0 | 259,1 | 360,7 | 388,0 | **6244** |

**Larger sizes are available on request**

# Single row radial ball bearings

## 63 MEDIUM SERIES

METRIC SIZES

ISO DIMENSION SERIES 03

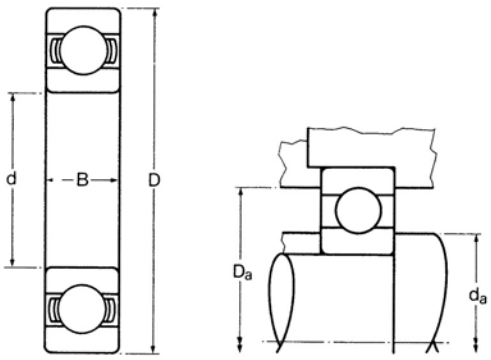


| RKB designations | | | | | | | Dimensions | | | RKB load ratings† | |
|---|---|---|---|---|---|---|---|---|---|---|---|
| basic bearing | with one shield | with two shields | with one seal | with two seals | with snap ring groove | with groove and snap ring | millimetres | | | newtons | |
| | | | | | | | | | | dynamic | static |
| | Z | –2Z | RS | –2RS | N | NR | d | D | B | $C_r$ | $C_{or}$ |
| **6300** | 6300Z | 6300–2Z | 6300RS | 6300–2RS | 6300N | 6300NR | 10 | 35 | 11 | 8 400 | 3 760 |
| **6301** | 6301Z | 6301–2Z | 6301RS | 6301–2RS | 6301N | 6301NR | 12 | 37 | 12 | 10 100 | 4 640 |
| **6302** | 6302Z | 6302–2Z | 6302RS | 6302–2RS | 6302N | 6302NR | 15 | 42 | 13 | 12 300 | 5 600 |
| **6303** | 6303Z | 6303–2Z | 6303RS | 6303–2RS | 6303N | 6303NR | 17 | 47 | 14 | 14 500 | 6 700 |
| **6304** | 6304Z | 6304–2Z | 6304RS | 6304–2RS | 6304N | 6304NR | 20 | 52 | 15 | 16 500 | 7 800 |
| **6305** | 6305Z | 6305–2Z | 6305RS | 6305–2RS | 6305N | 6305NR | 25 | 62 | 17 | 22 100 | 10 600 |
| **6306** | 6306Z | 6306–2Z | 6306RS | 6306–2RS | 6306N | 6306NR | 30 | 72 | 19 | 30 800 | 15 800 |
| **6307** | 6307Z | 6307–2Z | 6307RS | 6307–2RS | 6307N | 6307NR | 35 | 80 | 21 | 34 600 | 17 900 |
| **6308** | 6308Z | 6308–2Z | 6308RS | 6308–2RS | 6308N | 6308NR | 40 | 90 | 23 | 46 200 | 24 700 |
| **6309** | 6309Z | 6309–2Z | 6309RS | 6309–2RS | 6309N | 6309NR | 45 | 100 | 25 | 54 900 | 29 900 |
| **6310** | 6310Z | 6310–2Z | 6310RS | 6310–2RS | 6310N | 6310NR | 50 | 110 | 27 | 64 500 | 35 600 |
| **6311** | 6311Z | 6311–2Z | 6311RS | 6311–2RS | 6311N | 6311NR | 55 | 120 | 29 | 74 500 | 41 800 |
| **6312** | 6312Z | 6312–2Z | 6312RS | 6312–2RS | 6312N | 6312NR | 60 | 130 | 31 | 85 000 | 48 500 |
| **6313** | 6313Z | 6313–2Z | 6313RS | 6313–2RS | 6313N | 6313NR | 65 | 140 | 33 | 96 500 | 55 500 |
| **6314** | 6314Z | 6314–2Z | 6314RS | 6314–2RS | 6314N | 6314NR | 70 | 150 | 35 | 108 000 | 63 500 |
| **6315** | 6315Z | 6315–2Z | 6315RS | 6315–2RS | 6315N | 6315NR | 75 | 160 | 37 | 118 000 | 71 500 |
| **6316** | 6316Z | 6316–2Z | | | 6316N | 6316NR | 80 | 170 | 39 | 128 000 | 80 000 |
| **6317** | | | | | 6317N | 6317NR | 85 | 180 | 41 | 138 000 | 89 500 |
| **6318** | | | | | 6318N | 6318NR | 90 | 190 | 43 | 148 000 | 99 000 |
| **6319** | | | | | 6319N | 6319NR | 95 | 200 | 45 | 149 000 | 99 000 |
| **6320** | | | | | 6320N | 6320NR | 100 | 215 | 47 | 170 000 | 120 000 |
| **6321** | | | | | | | 105 | 225 | 49 | 191 000 | 143 000 |
| **6322** | | | | | | | 110 | 240 | 50 | 203 000 | 155 000 |
| **6324** | | | | | | | 120 | 260 | 55 | 226 000 | 180 000 |
| **6326** | | | | | | | 130 | 280 | 58 | 250 000 | 208 000 |
| **6328** | | | | | | | 140 | 300 | 62 | 263 000 | 223 000 |
| **6330** | | | | | | | 150 | 320 | 65 | 288 000 | 253 000 |
| **6332** | | | | | | | 160 | 340 | 68 | 313 000 | 286 000 |
| **6334** | | | | | | | 170 | 360 | 72 | 339 000 | 321 000 |
| **6336** | | | | | | | 180 | 380 | 75 | 352 000 | 357 000 |
| **6338** | | | | | | | 190 | 400 | 78 | 397 000 | 402 000 |

**Please check availability**

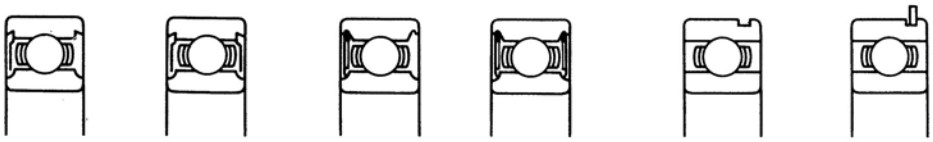

Z –2Z RS –2RS N NR

| Normal limiting speeds rev/min grease | oil | types RS and –2RS | Weight kg approx (basic bearing) | Shaft and housing dimensions millimetres max fillet radius | $d_a$ min | $d_a$ max | $D_a$ min | $D_a$ max | RKB designation (basic bearing) |
|---|---|---|---|---|---|---|---|---|---|
| 21 500 | 29 000 | 15 000 | 0,049 | 0,6 | 12,4 | 15,5 | 30,0 | 32,6 | **6300** |
| 20 000 | 27 000 | 14 000 | 0,061 | 1,0 | 16,0 | 16,5 | 32,5 | 33,0 | **6301** |
| 17 500 | 24 000 | 12 400 | 0,081 | 1,0 | 19,0 | 20,1 | 37,6 | 38,0 | **6302** |
| 16 000 | 21 500 | 11 200 | 0,109 | 1,0 | 21,0 | 22,9 | 41,9 | 43,0 | **6303** |
| 14 700 | 20 000 | 10 300 | 0,144 | 1,0 | 24,0 | 26,2 | 45,2 | 48,0 | **6304** |
| 12 200 | 16 500 | 8 500 | 0,220 | 1,0 | 29,0 | 33,0 | 55,1 | 58,0 | **6305** |
| 10 600 | 14 300 | 7 400 | 0,331 | 1,0 | 34,0 | 39,1 | 64,5 | 68,0 | **6306** |
| 9 400 | 12 700 | 6 600 | 0,446 | 1,5 | 41,0 | 43,9 | 71,1 | 74,0 | **6307** |
| 8 400 | 11 300 | 5 900 | 0,590 | 1,5 | 46,0 | 49,5 | 81,3 | 84,0 | **6308** |
| 7 500 | 10 200 | 5 300 | 0,794 | 1,5 | 51,0 | 55,1 | 89,9 | 94,0 | **6309** |
| 6 800 | 9 200 | 4 800 | 1,06 | 2,0 | 58,0 | 61,0 | 99,1 | 102,0 | **6310** |
| 6 200 | 8 400 | 4 400 | 1,35 | 2,0 | 63,0 | 66,8 | 108,2 | 112,0 | **6311** |
| 5 700 | 7 700 | 4 000 | 1,69 | 2,0 | 68,0 | 73,4 | 117,9 | 122,0 | **6312** |
| 5 300 | 7 100 | 3 700 | 2,07 | 2,0 | 73,0 | 79,2 | 128,3 | 132,0 | **6313** |
| 4 900 | 6 600 | 3 400 | 2,49 | 2,0 | 78,0 | 85,3 | 136,1 | 142,0 | **6314** |
| 4 600 | 6 200 | 3 200 | 2,98 | 2,0 | 83,0 | 90,7 | 144,5 | 152,0 | **6315** |
| 4 200 | 5 700 | | 3,58 | 2,0 | 88,0 | 97,3 | 154,4 | 162,0 | **6316** |
| 4 000 | 5 400 | | 4,25 | 2,5 | 95,0 | 102,1 | 162,3 | 170,0 | **6317** |
| 3 700 | 5 000 | | 5,85 | 2,5 | 100,0 | 109,2 | 172,7 | 180,0 | **6318** |
| 3 500 | 4 700 | | 6,80 | 2,5 | 105,0 | 116,8 | 180,3 | 190,0 | **6319** |
| 3 200 | 4 400 | | 7,03 | 2,5 | 110,0 | 124,2 | 194,1 | 205,0 | **6320** |
| 3 100 | 4 200 | | 9,53 | 2,5 | 115,0 | 128,0 | 204,2 | 215,0 | **6321** |
| 2 900 | 3 900 | | 9,70 | 2,5 | 120,0 | 136,4 | 215,6 | 230,0 | **6322** |
| 2 600 | 3 500 | | 15,4 | 2,5 | 130,0 | 148,3 | 233,9 | 250,0 | **6324** |
| 2 400 | 3 200 | | 18,4 | 3,0 | 142,0 | 159,0 | 251,0 | 268,0 | **6326** |
| 2 200 | 2 900 | | 22,4 | 3,0 | 152,0 | 172,5 | 267,7 | 288,0 | **6328** |
| 2 000 | 2 700 | | 24,9 | 3,0 | 162,0 | 184,2 | 285,8 | 308,0 | **6330** |
| 1 900 | 2 500 | | 32,1 | 3,0 | 172,0 | 196,0 | 304,0 | 328,0 | **6332** |
| 1 700 | 2 300 | | 37,4 | 3,0 | 182,0 | 208,0 | 322,0 | 348,0 | **6334** |
| 800 | 1 600 | | 40,8 | 3,0 | 192,0 | 220,0 | 340,0 | 368,0 | **6336** |
| 750 | 1 500 | | 49,8 | 4,0 | 206,0 | 233,0 | 357,0 | 384,0 | **6338** |

**Larger sizes are available on request**

# Single row radial ball bearings

## 64 HEAVY SERIES

METRIC SIZES

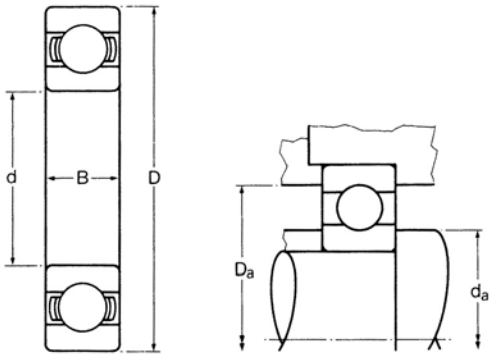


ISO DIMENSION SERIES 04

| RKB designation | Dimensions millimetres | | | RKB load ratings† newtons | | Normal limiting speeds rev/min | | Weight kg | Shaft and housing dimensions millimetres | | | | |
|---|---|---|---|---|---|---|---|---|---|---|---|---|---|
| | | | | dynamic | static | grease | oil | approx | max fillet | $d_a$ | | $D_a$ | |
| | d | D | B | $C_r$ | $C_{or}$ | | | | radius | min | max | min | max |
| **6403** | 17 | 62 | 17 | 22 100 | 10 600 | 12 200 | 16 500 | 0,255 | 1,0 | 21,0 | 33,0 | 55,1 | 58,0 |
| **6404** | 20 | 72 | 19 | 30 700 | 15 600 | 10 600 | 14 300 | 0,390 | 1,0 | 24,0 | 35,1 | 62,2 | 68,0 |
| **6405** | 25 | 80 | 21 | 34 700 | 17 900 | 9 400 | 12 700 | 0,526 | 1,5 | 31,0 | 45,0 | 71,9 | 74,0 |
| **6406** | 30 | 90 | 23 | 42 200 | 21 700 | 8 400 | 11 300 | 0,689 | 1,5 | 36,0 | 49,5 | 81,3 | 84,0 |
| **6407** | 35 | 100 | 25 | 55 000 | 29 900 | 7 500 | 10 200 | 0,916 | 1,5 | 41,0 | 55,6 | 90,7 | 94,0 |
| **6408** | 40 | 110 | 27 | 64 500 | 35 600 | 6 800 | 9 200 | 1,21 | 2,0 | 48,0 | 61,4 | 99,6 | 102,0 |
| **6409** | 45 | 120 | 29 | 74 500 | 41 800 | 6 200 | 8 400 | 1,53 | 2,0 | 53,0 | 67,6 | 108,7 | 112,0 |
| **6410** | 50 | 130 | 31 | 85 000 | 48 500 | 5 700 | 7 700 | 1,90 | 2,0 | 58,0 | 73,4 | 117,9 | 122,0 |
| **6411** | 55 | 140 | 33 | 96 500 | 55 500 | 5 300 | 7 100 | 2,31 | 2,0 | 63,0 | 79,2 | 128,3 | 132,0 |
| **6412** | 60 | 150 | 35 | 108 000 | 63 500 | 4 900 | 6 600 | 2,80 | 2,0 | 68,0 | 85,3 | 136,1 | 142,0 |
| **6413** | 65 | 160 | 37 | 118 000 | 71 500 | 4 600 | 6 200 | 3,25 | 2,0 | 73,0 | 90,7 | 144,5 | 152,0 |
| **6414** | 70 | 180 | 42 | 138 000 | 89 500 | 4 000 | 5 400 | 5,03 | 2,5 | 80,0 | 102,1 | 162,3 | 170,0 |
| **6415** | 75 | 190 | 45 | 148 000 | 89 500 | 1 900 | 3 900 | 7,03 | 2,5 | 85,0 | 106,4 | 166,6 | 180,0 |
| **6416** | 80 | 200 | 48 | 170 000 | 125 000 | 1 900 | 3 700 | 8,30 | 2,5 | 90,0 | 102,9 | 179,1 | 190,0 |
| **6417** | 85 | 210 | 52 | 159 000 | 109 000 | 1 700 | 3 400 | 9,84 | 3,0 | 97,0 | 117,6 | 184,2 | 198,0 |
| **6418** | 90 | 225 | 54 | 170 000 | 120 000 | 1 600 | 3 200 | 12,4 | 3,0 | 102,0 | 124,0 | 193,8 | 213,0 |
| **6420** | 100 | 250 | 58 | 214 000 | 170 000 | 1 400 | 2 900 | 16,2 | 3,0 | 112,0 | 130,6 | 219,5 | 238,0 |

**Please check availability**

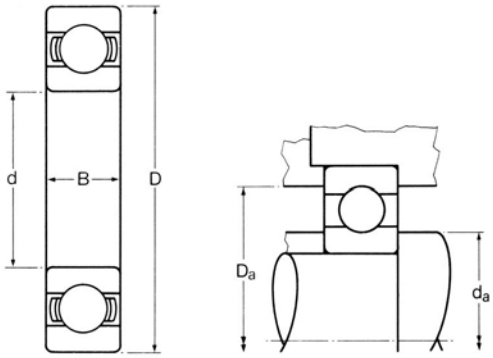


# Single row radial ball bearings

## 618 SUPER LIGHT

METRIC SIZES

ISO DIMENSION SERIES 18

| RKB designation | Dimensions millimetres | | | RKB load ratings† newtons | | Normal limiting speeds rev/min | | Weight kg | Shaft and housing dimensions millimetres | | |
|---|---|---|---|---|---|---|---|---|---|---|---|
| | | | | dynamic | static | grease | oil | approx | max fillet radius | da min | Da max |
| | d | D | B | $C_r$ | $C_{or}$ | | | | | | |
| **61800** | 10 | 19 | 5 | 1 380 | 585 | 36 000 | 43 000 | 0.0055 | 0.3 | 12 | 17 |
| **61801** | 12 | 21 | 5 | 1 430 | 670 | 32 000 | 38 000 | 0.0063 | 0.3 | 14 | 19 |
| **61802** | 15 | 24 | 5 | 1 560 | 800 | 28 000 | 34 000 | 0.0074 | 0.3 | 17 | 22 |
| **61803** | 17 | 26 | 5 | 1 680 | 930 | 24 000 | 30 000 | 0.0082 | 0.3 | 19 | 24 |
| **61804** | 20 | 32 | 7 | 2 700 | 1 500 | 19 000 | 24 000 | 0.018 | 0.3 | 22 | 30 |
| **61805** | 25 | 37 | 7 | 4 360 | 2 600 | 17 000 | 20 000 | 0.022 | 0.3 | 27 | 35 |
| **61806** | 30 | 42 | 7 | 4 490 | 2 900 | 15 000 | 18 000 | 0.027 | 0.3 | 32 | 40 |
| **61807** | 35 | 47 | 7 | 4 750 | 3 200 | 13 000 | 16 000 | 0.03 | 0.3 | 37 | 45 |
| **61808** | 40 | 52 | 7 | 4 940 | 3 450 | 11 000 | 14 000 | 0.034 | 0.3 | 42 | 50 |
| **61809** | 45 | 58 | 7 | 6 050 | 4 300 | 9 500 | 12 000 | 0.04 | 0.3 | 47 | 56 |
| **61810** | 50 | 65 | 7 | 6 240 | 4 750 | 9 000 | 11 000 | 0.052 | 0.3 | 52 | 63 |
| **61811** | 55 | 72 | 9 | 8 320 | 6 200 | 8 500 | 10 000 | 0.083 | 0.3 | 57 | 70 |
| **61812** | 60 | 78 | 10 | 8 710 | 6 700 | 7 500 | 9 000 | 0.11 | 0.3 | 62 | 76 |
| **61813** | 65 | 85 | 10 | 11 700 | 9 150 | 7 000 | 8 500 | 0.13 | 0.6 | 69 | 81 |
| **61814** | 70 | 90 | 10 | 12 100 | 10 000 | 6 700 | 8 000 | 0.14 | 0.6 | 74 | 86 |
| **61815** | 75 | 95 | 10 | 12 500 | 10 800 | 6 300 | 7 500 | 0.15 | 0.6 | 79 | 91 |
| **61816** | 80 | 100 | 10 | 12 400 | 10 800 | 6 000 | 7 000 | 0.15 | 0.6 | 84 | 96 |
| **61817** | 85 | 110 | 13 | 19 500 | 16 600 | 5 300 | 6 300 | 0.27 | 1 | 90 | 105 |
| **61818** | 90 | 115 | 13 | 19 500 | 17 000 | 5 300 | 6 300 | 0.28 | 1 | 95 | 110 |
| **61819** | 95 | 120 | 13 | 19 900 | 17 600 | 5 000 | 6 000 | 0.3 | 1 | 100 | 115 |
| **61820** | 100 | 125 | 13 | 19 900 | 18 300 | 4 800 | 5 600 | 0.31 | 1 | 105 | 120 |
| **61821** | 105 | 130 | 13 | 20 800 | 19 600 | 4 500 | 5 300 | 0.32 | 1 | 110 | 125 |
| **61822** | 110 | 140 | 16 | 28 100 | 26 000 | 4 300 | 5 000 | 0.6 | 1 | 115 | 135 |
| **61824** | 120 | 150 | 16 | 29 100 | 28 000 | 3 800 | 4 500 | 0.65 | 1 | 125 | 145 |
| **61826** | 130 | 165 | 18 | 37 700 | 43 000 | 3 600 | 4 300 | 0.93 | 1.1 | 136.5 | 158.5 |
| **61828** | 140 | 175 | 18 | 39 000 | 46 500 | 3 400 | 4 000 | 0.99 | 1.1 | 146.5 | 168.5 |
| **61830** | 150 | 190 | 20 | 48 800 | 61 000 | 3 000 | 3 600 | 1.40 | 1.1 | 156.5 | 183.5 |
| **61832** | 160 | 200 | 20 | 49 400 | 64 000 | 2 800 | 3 400 | 1.45 | 1.1 | 166.5 | 193.5 |
| **61834** | 170 | 215 | 22 | 61 800 | 78 000 | 2 600 | 3 200 | 1.9 | 1.1 | 176.5 | 208.5 |
| **61836** | 180 | 225 | 22 | 62 400 | 81 500 | 2 400 | 3 000 | 2 | 1.1 | 186.5 | 218.5 |
| **61838** | 190 | 240 | 24 | 76 100 | 98 000 | 2 200 | 2 800 | 2.6 | 1.5 | 195 | 232 |
| **61840** | 200 | 250 | 24 | 76 100 | 102 000 | 2 200 | 2 800 | 2.7 | 1.5 | 208 | 242 |

**Larger sizes, sealed and shielded types are available on request**

**Please check availability**

# Single row radial ball bearings

## 619 SUPER LIGHT

METRIC SIZES

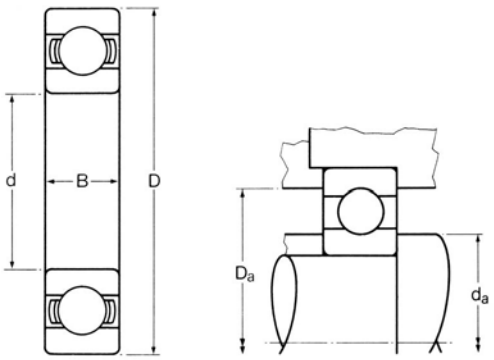


ISO DIMENSION SERIES 19

| RKB designation | Dimensions millimetres | | | RKB load ratings† newtons | | Normal limiting speeds rev/min | | Weight kg | Shaft and housing dimensions millimetres | | |
|---|---|---|---|---|---|---|---|---|---|---|---|
| | | | | dynamic | static | grease | oil | approx | max fillet radius | da min | Da max |
| | d | D | B | $C_r$ | $C_{or}$ | | | | | | |
| **61900** | 10 | 22 | 6 | 1 950 | 750 | 34 000 | 40 000 | 0.010 | 0.3 | 12 | 20 |
| **61901** | 12 | 24 | 6 | 2 250 | 980 | 30 000 | 36 000 | 0.011 | 0.3 | 14 | 22 |
| **61902** | 15 | 28 | 7 | 4 030 | 2 040 | 24 000 | 30 000 | 0.016 | 0.3 | 17 | 26 |
| **61903** | 17 | 30 | 7 | 4 360 | 2 320 | 22 000 | 28 000 | 0.018 | 0.3 | 19 | 28 |
| **61904** | 20 | 37 | 9 | 6 370 | 3 650 | 18 000 | 22 000 | 0.038 | 0.3 | 22 | 35 |
| **61905** | 25 | 42 | 9 | 6 630 | 4 000 | 16 000 | 19 000 | 0.045 | 0.3 | 27 | 40 |
| **61906** | 30 | 42 | 9 | 4 490 | 2 900 | 15 000 | 18 000 | 0.027 | 0.3 | 32 | 45 |
| **61907** | 35 | 55 | 10 | 9 560 | 6 200 | 11 000 | 14 000 | 0.08 | 0.6 | 39 | 51 |
| **61908** | 40 | 62 | 12 | 13 800 | 9 300 | 10 000 | 13 000 | 0.12 | 0.6 | 44 | 58 |
| **61909** | 45 | 68 | 12 | 14 000 | 9 800 | 9 000 | 11 000 | 0.14 | 0.6 | 49 | 64 |
| **61910** | 50 | 72 | 12 | 14 600 | 10 400 | 8 500 | 10 000 | 0.14 | 0.6 | 54 | 68 |
| **61911** | 55 | 80 | 13 | 15 900 | 11 400 | 8 000 | 9 500 | 0.19 | 1 | 60 | 75 |
| **61912** | 60 | 85 | 13 | 16 500 | 12 000 | 7 500 | 9 000 | 0.20 | 1 | 65 | 80 |
| **61913** | 65 | 90 | 13 | 17 400 | 13 400 | 6 700 | 8 000 | 0.22 | 1 | 70 | 85 |
| **61914** | 70 | 100 | 16 | 23 800 | 18 300 | 6 300 | 7 500 | 0.35 | 1 | 75 | 95 |
| **61915** | 75 | 105 | 16 | 24 200 | 19 300 | 6 000 | 7 000 | 0.37 | 1 | 80 | 100 |
| **61916** | 80 | 110 | 16 | 25 100 | 20 400 | 5 600 | 6 700 | 0.40 | 1 | 85 | 105 |
| **61917** | 85 | 120 | 18 | 31 900 | 30 000 | 5 300 | 6 300 | 0.55 | 1.1 | 91.5 | 113.5 |
| **61918** | 90 | 125 | 18 | 33 200 | 31 500 | 5 000 | 6 000 | 0.59 | 1.1 | 96.5 | 118.5 |
| **61919** | 95 | 130 | 18 | 33 800 | 33 500 | 4 800 | 5 600 | 0.61 | 1.1 | 101.5 | 123.5 |
| **61920** | 100 | 140 | 20 | 42 300 | 41 500 | 4 500 | 5 300 | 0.83 | 1.1 | 106.5 | 133.5 |
| **61921** | 105 | 145 | 20 | 44 200 | 44 000 | 4 300 | 5 000 | 0.87 | 1.1 | 111.5 | 138.5 |
| **61922** | 110 | 150 | 20 | 43 600 | 45 000 | 4 000 | 4 800 | 0.9 | 1.1 | 116.5 | 143.5 |
| **61924** | 120 | 165 | 22 | 55 300 | 57 000 | 3 600 | 4 300 | 1.2 | 1.1 | 126.5 | 158.5 |
| **61926** | 130 | 180 | 24 | 65 000 | 67 000 | 3 400 | 4 000 | 1.6 | 1.5 | 138 | 172 |
| **61928** | 140 | 190 | 24 | 66 300 | 72 000 | 3 200 | 3 800 | 1.7 | 1.5 | 148 | 182 |
| **61930** | 150 | 210 | 28 | 88 400 | 93 000 | 2 800 | 3 400 | 3.05 | 2 | 159 | 201 |
| **61932** | 160 | 220 | 28 | 92 300 | 98 000 | 2 600 | 3 200 | 3.25 | 2 | 169 | 211 |

**Larger sizes, sealed and shielded types are available on request**

**Please check availability**

# Double row radial ball bearings
# Double row self-aligning ball bearings

# Double row radial ball bearings

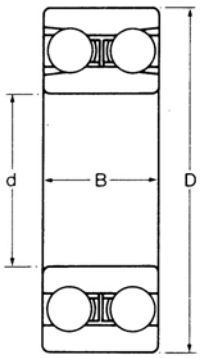


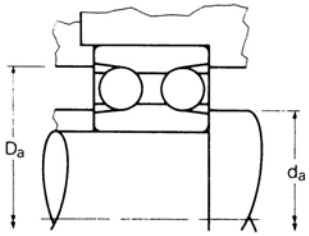


## 42 LIGHT SERIES

METRIC SIZES

ISO DIMENSION SERIES 22

| RKB designation | Dimensions millimetres | | | RKB load ratings† newtons | | Normal limiting speeds rev/min | | Weight kg | Shaft and housing dimensions millimetres | | | | |
|---|---|---|---|---|---|---|---|---|---|---|---|---|---|
| | | | | dynamic | static | grease | oil | approx | max fillet radius | $d_a$ min | $d_a$ max | $D_a$ min | $D_a$ max |
| | d | D | B | $C_r$ | $C_{or}$ | | | | | | | | |
| **4200** | 10 | 30 | 14 | 10 500 | 6 050 | 9 500 | 19 000 | 0,054 | 0,6 | 12,4 | 14,7 | 25,7 | 27,6 |
| **4201** | 12 | 32 | 14 | 10 700 | 6 050 | 8 800 | 17 500 | 0,059 | 0,6 | 14,4 | 16,8 | 27,7 | 29,6 |
| **4202** | 15 | 35 | 14 | 12 600 | 7 600 | 7 900 | 16 000 | 0,064 | 0,6 | 17,4 | 19,6 | 30,5 | 32,6 |
| **4203** | 17 | 40 | 16 | 17 100 | 10 900 | 7 100 | 14 200 | 0,100 | 0,6 | 19,4 | 22,1 | 34,8 | 37,6 |
| **4204** | 20 | 47 | 18 | 25 400 | 17 000 | 6 200 | 12 400 | 0,159 | 1,0 | 24,0 | 25,7 | 41,7 | 43,0 |
| **4205** | 25 | 52 | 18 | 25 700 | 17 000 | 5 500 | 11 000 | 0,181 | 1,0 | 29,0 | 31,0 | 47,0 | 48,0 |
| **4206** | 30 | 62 | 20 | 34 200 | 24 300 | 4 700 | 9 500 | 0,277 | 1,0 | 34,0 | 37,6 | 55,1 | 58,0 |
| **4207** | 35 | 72 | 23 | 32 600 | 24 700 | 4 100 | 8 200 | 0,463 | 1,0 | 39,0 | 46,0 | 62,0 | 68,0 |
| **4208** | 40 | 80 | 23 | 50 500 | 39 200 | 3 700 | 7 300 | 0,553 | 1,0 | 44,0 | 50,3 | 70,9 | 76,0 |
| **4209** | 45 | 85 | 23 | 52 500 | 41 800 | 3 400 | 6 800 | 0,621 | 1,0 | 49,0 | 55,1 | 75,9 | 81,0 |
| **4210** | 50 | 90 | 23 | 54 500 | 44 400 | 3 100 | 6 300 | 0,635 | 1,0 | 54,0 | 61,2 | 81,8 | 86,0 |
| **4211** | 55 | 100 | 25 | 57 000 | 45 500 | 2 800 | 5 600 | 0,870 | 1,5 | 61,0 | 66,8 | 89,2 | 94,0 |
| **4212** | 60 | 110 | 28 | 79 000 | 67 500 | 2 500 | 5 100 | 1,19 | 1,5 | 66,0 | 73,9 | 99,3 | 104,0 |

**Larger sizes are available on request**

**Please check availability**

# Double row radial ball bearings

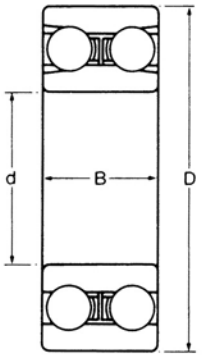


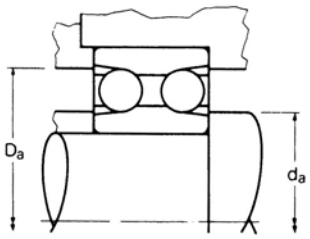


MEDIUM SERIES **43**

METRIC SIZES

ISO DIMENSION SERIES 23

| **RKB** designation | Dimensions millimetres | | | **RKB** load ratings† newtons | | Normal limiting speeds rev/min | | Weight kg | Shaft and housing dimensions millimetres | | | | |
|---|---|---|---|---|---|---|---|---|---|---|---|---|---|
| | | | | dynamic | static | grease | oil | approx | max fillet radius | $d_a$ min | $d_a$ max | $D_a$ min | $D_a$ max |
| | d | D | B | $C_r$ | $C_{or}$ | | | | | | | | |
| **4300** | 10 | 35 | 17 | 14 300 | 8 900 | 8 600 | 17 500 | 0,091 | 0,6 | 12,4 | 16,3 | 29,0 | 32,6 |
| **4301** | 12 | 37 | 17 | 14 700 | 8 900 | 8 100 | 16 000 | 0,100 | 1,0 | 16,0 | 18,5 | 31,2 | 33,0 |
| **4302** | 15 | 42 | 17 | 18 200 | 11 300 | 7 100 | 14 200 | 0,127 | 1,0 | 19,0 | 21,6 | 36,1 | 38,0 |
| **4303** | 17 | 47 | 19 | 22 000 | 13 900 | 6 500 | 12 900 | 0,172 | 1,0 | 21,0 | 24,1 | 39,9 | 43,0 |
| **4304** | 20 | 52 | 21 | 30 100 | 20 600 | 5 800 | 11 700 | 0,240 | 1,0 | 24,0 | 28,2 | 45,7 | 48,0 |
| **4305** | 25 | 62 | 24 | 40 700 | 28 700 | 4 900 | 9 900 | 0,376 | 1,0 | 29,0 | 33,5 | 54,4 | 58,0 |
| **4306** | 30 | 72 | 27 | 49 700 | 36 400 | 4 300 | 8 500 | 0,576 | 1,0 | 34,0 | 40,1 | 62,2 | 68,0 |
| **4307** | 35 | 80 | 31 | 52 500 | 39 400 | 3 800 | 7 600 | 0,771 | 1,5 | 41,0 | 47,8 | 69,8 | 74,0 |
| **4308** | 40 | 90 | 33 | 74 500 | 58 000 | 3 400 | 6 800 | 1,07 | 1,5 | 46,0 | 52,1 | 79,0 | 84,0 |
| **4309** | 45 | 100 | 36 | 91 000 | 72 500 | 3 000 | 6 100 | 1,45 | 1,5 | 51,0 | 58,2 | 88,1 | 94,0 |
| **4310** | 50 | 110 | 40 | 109 000 | 88 500 | 2 800 | 5 500 | 1,93 | 2,0 | 58,0 | 63,8 | 97,0 | 102,0 |
| **4311** | 55 | 120 | 43 | 138 000 | 116 000 | 2 500 | 5 000 | 2,44 | 2,0 | 63,0 | 68,8 | 106,9 | 112,0 |
| **4312** | 60 | 130 | 46 | 139 000 | 116 000 | 2 300 | 4 600 | 3,05 | 2,0 | 68,0 | 76,2 | 114,3 | 122,0 |

**Larger sizes are available on request**

**Please check availability**

# Double row self-aligning ball bearings

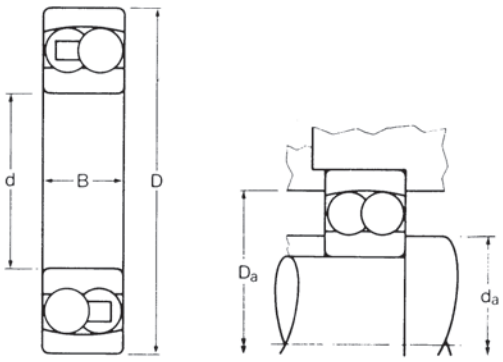


## 12 LIGHT SERIES

METRIC SIZES

ISO DIMENSION SERIES 02

| RKB designation | Dimensions millimetres | | | RKB load ratings† newtons | | Normal limiting speeds rev/min | | Weight kg | Shaft and housing dimensions millimetres | | | | |
|---|---|---|---|---|---|---|---|---|---|---|---|---|---|
| | | | | dynamic | static | grease | oil | approx | max fillet radius | $d_a$ min | $d_a$ max | $D_a$ min | $D_a$ max |
| | d | D | B | $C_r$ | $C_{or}$ | | | | | | | | |
| **126** | 6 | 19 | 6 | 2 600 | 520 | 32 000 | 40 000 | 0,009 | 0,3 | 8,0 | 9,4 | 16,0 | 17,0 |
| **127** | 7 | 22 | 7 | 2 750 | 655 | 29 500 | 40 000 | 0,014 | 0,3 | 8,2 | 11,7 | 18,3 | 20,8 |
| **129** | 9 | 26 | 8 | 4 000 | 925 | 28 000 | 36 000 | 0,022 | 0,6 | 13,0 | 13,5 | 21,8 | 22,0 |
| **1200** | 10 | 30 | 9 | 4 250 | 995 | 23 500 | 32 000 | 0,027 | 0,6 | 12,4 | 15,7 | 24,9 | 27,6 |
| **1201** | 12 | 32 | 10 | 5 650 | 1 480 | 22 000 | 29 500 | 0,041 | 0,6 | 14,4 | 17,8 | 27,9 | 29,6 |
| **1202** | 15 | 35 | 11 | 7 700 | 2 020 | 20 000 | 27 000 | 0,054 | 0,6 | 17,4 | 19,3 | 31,0 | 32,6 |
| **1203** | 17 | 40 | 12 | 8 250 | 2 420 | 18 000 | 24 000 | 0,073 | 0,6 | 19,4 | 22,1 | 33,8 | 37,6 |
| **1204** | 20 | 47 | 14 | 10 800 | 3 150 | 15 500 | 21 000 | 0,122 | 1,0 | 26,0 | 28,7 | 37,9 | 41,0 |
| **1205** | 25 | 52 | 15 | 13 100 | 4 350 | 13 800 | 18 500 | 0,150 | 1,0 | 29,0 | 31,2 | 46,2 | 48,0 |
| ***1206** | 30 | 62 | 16 | 16 300 | 5 800 | 11 700 | 16 000 | 0,231 | 1,0 | 34,0 | 37,3 | 53,8 | 58,0 |
| ***1207** | 35 | 72 | 17 | 16 400 | 6 650 | 10 200 | 13 800 | 0,318 | 1,0 | 39,0 | 45,0 | 61,2 | 68,0 |
| ***1208** | 40 | 80 | 18 | 20 000 | 8 500 | 9 100 | 12 300 | 0,417 | 1,0 | 47,0 | 54,3 | 66,6 | 73,0 |
| ***1209** | 45 | 85 | 19 | 22 700 | 9 600 | 8 500 | 11 400 | 0,481 | 1,0 | 49,0 | 54,9 | 74,4 | 81,0 |
| ***1210** | 50 | 90 | 20 | 23 600 | 10 800 | 7 900 | 10 600 | 0,531 | 1,0 | 54,0 | 59,9 | 79,5 | 86,0 |
| ***1211** | 55 | 100 | 21 | 27 800 | 13 400 | 7 100 | 9 600 | 0,703 | 1,5 | 61,0 | 67,3 | 88,6 | 94,0 |
| **1212** | 60 | 110 | 22 | 31 500 | 15 500 | 3 200 | 6 500 | 0,998 | 1,5 | 66,0 | 73,9 | 96,8 | 104,0 |
| ***1213** | 65 | 120 | 23 | 32 300 | 17 200 | 3 000 | 5 900 | 1,22 | 1,5 | 71,0 | 81,3 | 104,4 | 114,0 |
| **1214** | 70 | 125 | 24 | 36 900 | 19 700 | 2 800 | 5 600 | 1,32 | 1,5 | 76,0 | 85,6 | 110,0 | 119,0 |
| ***1215** | 75 | 130 | 25 | 40 400 | 21 400 | 2 700 | 5 300 | 1,46 | 1,5 | 81,0 | 89,9 | 115,8 | 124,0 |
| **1216** | 80 | 140 | 26 | 41 600 | 23 500 | 2 500 | 4 900 | 1,76 | 2,0 | 88,0 | 97,3 | 123,4 | 132,0 |
| ***1217** | 85 | 150 | 28 | 51 000 | 28 400 | 2 300 | 4 600 | 2,19 | 2,0 | 93,0 | 103,1 | 132,6 | 142,0 |
| **1218** | 90 | 160 | 30 | 59 000 | 31 800 | 2 100 | 4 300 | 2,58 | 2,0 | 98,0 | 109,2 | 141,7 | 152,0 |
| **1219** | 95 | 170 | 32 | 68 500 | 38 700 | 2 000 | 4 000 | 3,23 | 2,0 | 103,0 | 115,8 | 150,1 | 162,0 |
| ***1220** | 100 | 180 | 34 | 74 500 | 42 500 | 1 900 | 3 800 | 3,88 | 2,0 | 108,0 | 122,4 | 158,5 | 172,0 |
| **1221** | 105 | 190 | 36 | 82 500 | 48 600 | 1 700 | 3 500 | 4,66 | 2,0 | 113,0 | 129,3 | 166,6 | 182,0 |
| ***1222** | 110 | 200 | 38 | 89 000 | 53 000 | 1 600 | 3 300 | 5,67 | 2,0 | 118,0 | 135,9 | 175,3 | 192,0 |

*These sizes are also available with bores having a taper of 1:12 and are denoted by suffix K.
Adapter sleeves are also available for these sizes - see page 48

**Please check availability**

# Double row self-aligning ball bearings

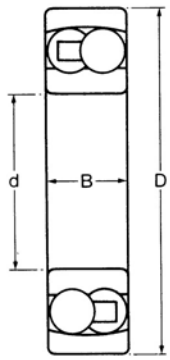


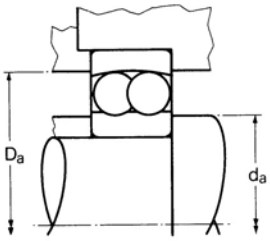


MEDIUM SERIES **13**

METRIC SIZES

ISO DIMENSION SERIES 03

| **RKB** designation | Dimensions millimetres | | | **RKB** load ratings† newtons | | Normal limiting speeds rev/min | | Weight kg | Shaft and housing dimensions millimetres | | | | |
|---|---|---|---|---|---|---|---|---|---|---|---|---|---|
| | | | | dynamic | static | grease | oil | approx | max fillet radius | $d_a$ min | $d_a$ max | $D_a$ min | $D_a$ max |
| | d | D | B | $C_r$ | $C_{or}$ | | | | | | | | |
| **135** | 5 | 19 | 6 | 2 360 | 460 | 33 500 | 45 500 | 0,009 | 0,3 | 6,2 | 9,4 | 16,0 | 17,8 |
| **1300** | 10 | 35 | 11 | 6 750 | 1 730 | 10 800 | 21 500 | 0,059 | 0,6 | 12,4 | 17,5 | 28,4 | 32,6 |
| **1301** | 12 | 37 | 12 | 8 450 | 2 070 | 10 100 | 20 000 | 0,073 | 1,0 | 16,0 | 18,5 | 31,2 | 33,0 |
| **1302** | 15 | 42 | 13 | 9 750 | 2 630 | 8 900 | 18 000 | 0,091 | 1,0 | 19,0 | 22,1 | 35,6 | 38,0 |
| **1303** | 17 | 47 | 14 | 12 900 | 3 670 | 8 100 | 16 000 | 0,136 | 1,0 | 21,0 | 24,9 | 39,9 | 43,0 |
| **1304** | 20 | 52 | 15 | 12 900 | 4 010 | 14 600 | 19 500 | 0,177 | 1,0 | 24,0 | 29,0 | 43,9 | 48,0 |
| **1305** | 25 | 62 | 17 | 18 700 | 6 000 | 12 300 | 16 500 | 0,263 | 1,0 | 29,0 | 34,8 | 53,1 | 58,0 |
| **1306** | 30 | 72 | 19 | 22 200 | 7 750 | 10 700 | 14 400 | 0,395 | 1,0 | 34,0 | 41,4 | 61,5 | 68,0 |
| **1307** | 35 | 80 | 21 | 26 100 | 9 800 | 9 500 | 12 900 | 0,517 | 1,5 | 41,0 | 48,5 | 70,1 | 74,0 |
| **1308** | 40 | 90 | 23 | 30 700 | 12 200 | 8 500 | 11 400 | 0,717 | 1,5 | 46,0 | 53,8 | 77,2 | 84,0 |
| **1309** | 45 | 100 | 25 | 38 100 | 15 800 | 3 800 | 7 600 | 0,971 | 1,5 | 54,0 | 62,7 | 83,1 | 91,0 |
| **1310** | 50 | 110 | 27 | 42 800 | 16 200 | 3 400 | 6 900 | 1,27 | 2,0 | 58,0 | 65,8 | 95,2 | 102,0 |
| **1311** | 55 | 120 | 29 | 53 500 | 22 500 | 3 100 | 6 300 | 1,61 | 2,0 | 63,0 | 72,4 | 103,6 | 112,0 |
| **1312** | 60 | 130 | 31 | 60 500 | 26 600 | 2 900 | 5 800 | 2,03 | 2,0 | 68,0 | 79,2 | 112,3 | 122,0 |
| **1313** | 65 | 140 | 33 | 68 000 | 31 100 | 2 700 | 5 300 | 2,50 | 2,0 | 73,0 | 85,9 | 120,4 | 132,0 |
| **1314** | 70 | 150 | 35 | 74 500 | 33 000 | 2 500 | 4 900 | 3,03 | 2,0 | 78,0 | 91,7 | 129,6 | 142,0 |
| **1315** | 75 | 160 | 37 | 82 500 | 38 300 | 2 300 | 4 600 | 3,62 | 2,0 | 83,0 | 98,3 | 137,9 | 152,0 |
| **1316** | 80 | 170 | 39 | 92 500 | 42 200 | 2 100 | 4 300 | 4,31 | 2,0 | 88,0 | 104,4 | 147,1 | 162,0 |
| **1317** | 85 | 180 | 41 | 102 000 | 48 500 | 2 000 | 4 000 | 4,76 | 2,5 | 95,0 | 110,0 | 155,2 | 170,0 |
| **1318** | 90 | 190 | 43 | 144 000 | 62 500 | 1 900 | 3 800 | 6,08 | 2,5 | 100,0 | 113,0 | 168,9 | 180,0 |
| **1319** | 95 | 200 | 45 | 162 000 | 76 000 | 1 800 | 3 500 | 7,21 | 2,5 | 105,0 | 119,9 | 177,8 | 190,0 |
| **1320** | 100 | 215 | 47 | 159 000 | 75 500 | 1 600 | 3 300 | 9,30 | 2,5 | 110,0 | 129,0 | 188,2 | 205,0 |

The balls may protrude slightly beyond the width of the rings on bearings of 90 mm bore diameter and over.

**Please check availability**

# Double row self-aligning ball bearings

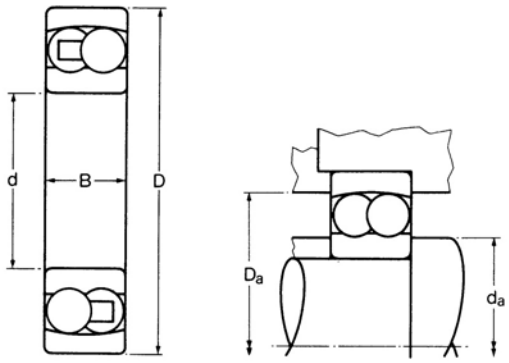


## 22 LIGHT WIDE SERIES

METRIC SIZES

ISO DIMENSION SERIES 22

| RKB designation | Dimensions millimetres | | | RKB load ratings† newtons | | Normal limiting speeds rev/min | | Weight kg | Shaft and housing dimensions millimetres | | | | |
|---|---|---|---|---|---|---|---|---|---|---|---|---|---|
| | | | | dynamic | static | grease | oil | approx | max fillet radius | $d_a$ min | $d_a$ max | $D_a$ min | $D_a$ max |
| | d | D | B | $C_r$ | $C_{or}$ | | | | | | | | |
| **2200** | 10 | 30 | 14 | 7 500 | 1 680 | 25 000 | 32 000 | 0,054 | 0,6 | 14,0 | 14,0 | 26,0 | 26,0 |
| **2201** | 12 | 32 | 14 | 6 700 | 1 670 | 22 000 | 29 500 | 0,059 | 0,6 | 14,4 | 16,2 | 27,8 | 29,6 |
| **2202** | 15 | 35 | 14 | 7 950 | 2 160 | 20 000 | 27 000 | 0,064 | 0,6 | 17,4 | 19,5 | 30,7 | 32,6 |
| **2203** | 17 | 40 | 16 | 10 200 | 2 800 | 18 000 | 24 000 | 0,100 | 0,6 | 19,4 | 21,5 | 34,5 | 37,6 |
| **2204** | 20 | 47 | 18 | 12 500 | 3 610 | 15 500 | 21 000 | 0,159 | 1,0 | 24,0 | 25,9 | 41,4 | 43,0 |
| **2205** | 25 | 52 | 18 | 13 000 | 4 250 | 13 800 | 18 500 | 0,181 | 1,0 | 29,0 | 31,0 | 46,3 | 48,0 |
| **2206** | 30 | 62 | 20 | 19 100 | 6 450 | 11 700 | 16 000 | 0,277 | 1,0 | 34,0 | 36,9 | 55,4 | 58,0 |
| **2207** | 35 | 72 | 23 | 23 700 | 8 900 | 10 200 | 13 800 | 0,431 | 1,0 | 39,0 | 43,6 | 63,8 | 68,0 |
| **2208** | 40 | 80 | 23 | 26 800 | 10 500 | 9 100 | 12 300 | 0,526 | 1,0 | 44,0 | 50,2 | 71,8 | 76,0 |
| ***2209** | 45 | 85 | 23 | 23 200 | 10 000 | 8 500 | 11 400 | 0,572 | 1,0 | 49,0 | 54,7 | 76,2 | 81,0 |
| **2210** | 50 | 90 | 23 | 27 200 | 12 000 | 7 900 | 10 600 | 0,621 | 1,0 | 54,0 | 59,5 | 80,9 | 86,0 |
| ***2211** | 55 | 100 | 25 | 27 300 | 13 300 | 5 600 | 7 100 | 0,810 | 1,5 | 64,0 | 70,0 | 85,0 | 91,0 |
| **2212** | 60 | 110 | 28 | 35 100 | 16 200 | 5 000 | 6 300 | 1,09 | 1,5 | 69,0 | 75,0 | 95,0 | 101,0 |
| ***2213** | 65 | 120 | 31 | 45 000 | 21 400 | 4 500 | 5 600 | 1,46 | 1,5 | 74,0 | 80,0 | 105,0 | 111,0 |

*These sizes are also available with bores having a taper of 1:12 and are denoted by suffix K.
Adapter sleeves are also available for these sizes - see page 48

**Larger sizes are available on request**

**Please check availability**

# Double row self-aligning ball bearings

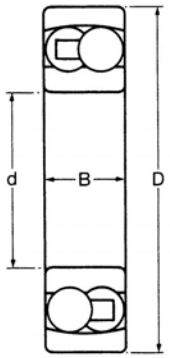


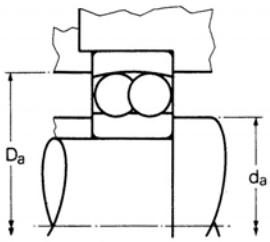


MEDIUM WIDE SERIES **23**

METRIC SIZES

ISO DIMENSION SERIES 23

| RKB designation | Dimensions millimetres | | | RKB load ratings† newtons | | Normal limiting speeds rev/min | | Weight kg | Shaft and housing dimensions millimetres | | | | |
|---|---|---|---|---|---|---|---|---|---|---|---|---|---|
| | | | | dynamic | static | grease | oil | approx | max fillet radius | $d_a$ min | $d_a$ max | $D_a$ min | $D_a$ max |
| | d | D | B | $C_r$ | $C_{or}$ | | | | | | | | |
| **2300** | 10 | 35 | 17 | 10 500 | 2 180 | 21 500 | 29 000 | 0,091 | 0,6 | 12,4 | 14,2 | 30,5 | 32,6 |
| **2301** | 12 | 37 | 17 | 11 300 | 2 540 | 20 000 | 27 000 | 0,100 | 1,0 | 16,0 | 17,0 | 33,0 | 33,0 |
| **2302** | 15 | 42 | 17 | 12 500 | 3 230 | 18 000 | 24 000 | 0,127 | 1,0 | 19,0 | 20,9 | 36,6 | 38,0 |
| **2303** | 17 | 47 | 19 | 15 200 | 4 050 | 16 000 | 22 000 | 0,172 | 1,0 | 21,0 | 24,1 | 41,2 | 43,0 |
| **2304** | 20 | 52 | 21 | 16 000 | 4 840 | 14 600 | 19 500 | 0,218 | 1,0 | 24,0 | 28,0 | 45,5 | 48,0 |
| **2305** | 25 | 62 | 24 | 22 400 | 7 050 | 12 300 | 16 500 | 0,367 | 1,0 | 29,0 | 34,0 | 54,5 | 58,0 |
| **2306** | 30 | 72 | 27 | 27 600 | 8 600 | 10 700 | 14 400 | 0,549 | 1,0 | 34,0 | 40,1 | 64,2 | 68,0 |
| **2307** | 35 | 80 | 31 | 34 200 | 11 800 | 9 500 | 12 900 | 0,748 | 1,5 | 41,0 | 44,2 | 70,6 | 74,0 |
| **2308** | 40 | 90 | 33 | 43 200 | 13 900 | 8 500 | 11 400 | 0,998 | 1,5 | 46,0 | 50,0 | 79,6 | 84,0 |
| **2309** | 45 | 100 | 36 | 52 500 | 19 100 | 7 600 | 10 300 | 1,34 | 1,5 | 51,0 | 58,1 | 90,5 | 94,0 |
| **2310** | 50 | 110 | 40 | 63 000 | 23 300 | 6 900 | 9 300 | 1,78 | 2,0 | 58,0 | 63,6 | 99,7 | 102,0 |
| **2311** | 55 | 120 | 43 | 71 000 | 27 700 | 6 300 | 8 500 | 2,28 | 2,0 | 63,0 | 70,0 | 107,3 | 112,0 |
| **2312** | 60 | 130 | 46 | 83 000 | 32 900 | 5 800 | 7 800 | 2,83 | 2,0 | 68,0 | 76,0 | 116,9 | 122,0 |
| **2313** | 65 | 140 | 48 | 88 000 | 35 700 | 5 300 | 7 200 | 3,50 | 2,0 | 73,0 | 81,0 | 123,8 | 132,0 |
| **2314** | 70 | 150 | 51 | 97 500 | 44 700 | 3 600 | 4 500 | 3,90 | 2,0 | 82,0 | 92,0 | 128,0 | 138,0 |

# Adapter sleeves

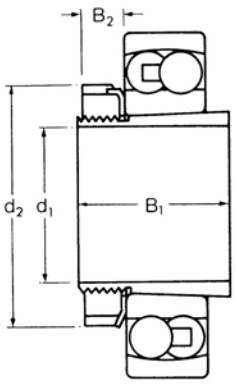


| **RKB** designations | | Dimensions | | | | |
|---|---|---|---|---|---|---|
| basic | adapter | inches | millimetres | | | |
| bearing | sleeve | $d_1$ | $d_1$ | $d_2$ | $B_1$ | approx $B_2$ |
| **1206 K** | H206– $\frac{7}{8}$ | $\frac{7}{8}$ | 22,225 | 45 | 27 | 8 |
| | H206 | | 25 | | | |
| | H206–1 | 1 | 25,400 | | | |
| **1207 K** | H207–$1\frac{1}{8}$ | $1\frac{1}{8}$ | 28,575 | 52 | 29 | 9 |
| | H207 | | 30 | | | |
| **1208 K** | H208–$1\frac{1}{4}$ | $1\frac{1}{4}$ | 31,750 | 58 | 31 | 10 |
| | H208–$1\frac{3}{8}$ | $1\frac{3}{8}$ | 34,925 | | | |
| | H208 | | 35 | | | |
| **1209 K** | H209–$1\frac{1}{2}$ | $1\frac{1}{2}$ | 38,100 | 65 | 33 | 11 |
| | H209 | | 40 | | | |
| **1210 K** | H210–$1\frac{5}{8}$ | $1\frac{5}{8}$ | 41,275 | 70 | 35 | 12 |
| | H210–$1\frac{3}{4}$ | $1\frac{3}{4}$ | 44,450 | | | |
| | H210 | | 45 | | | |
| **1211 K** | H211–$1\frac{7}{8}$ | $1\frac{7}{8}$ | 47,625 | 75 | 37 | 12 |
| | H211 | | 50 | | | |
| | H211–2 | 2 | 50,800 | | | |
| **1213 K** | H213–$2\frac{1}{4}$ | $2\frac{1}{4}$ | 57,150 | 85 | 40 | 14 |
| | H213 | | 60 | | | |
| | H213–$2\frac{3}{8}$ | $2\frac{3}{8}$ | 60,325 | | | |
| **1215 K** | H215–$2\frac{1}{2}$ | $2\frac{1}{2}$ | 63,500 | 98 | 43 | 15 |
| | H215 | | 65 | | | |
| | H215–$2\frac{5}{8}$ | $2\frac{5}{8}$ | 66,675 | | | |
| **1217 K** | H217 | | 75 | 110 | 50 | 18 |
| | H217–3 | 3 | 76,200 | | | |
| **1220 K** | H220–$3\frac{1}{2}$ | $3\frac{1}{2}$ | 88,900 | 130 | 58 | 20 |
| | H220 | | 90 | | | |
| **1222 K** | H222 | | 100 | 145 | 63 | 21 |
| | H222–4 | 4 | 101,600 | | | |
| **2209 K** | H309–$1\frac{1}{2}$ | $1\frac{1}{2}$ | 38,100 | 65 | 39 | 11 |
| | H309 | | 40 | | | |
| **2211 K** | H311–$1\frac{7}{8}$ | $1\frac{7}{8}$ | 47,625 | 75 | 45 | 12 |
| | H311 | | 50 | | | |
| | H311–2 | 2 | 50,8 | | | |
| **2213K** | H313–$2\frac{1}{4}$ | $2\frac{1}{4}$ | 57,150 | 85 | 50 | 14 |
| | H313 | | 60 | | | |
| | H313–$2\frac{3}{8}$ | $2\frac{3}{8}$ | 60,325 | | | |

Please enquire regarding the availability of other sizes.

**Please check availability**

# Single row separable ball bearings (magneto type)
# Single row angular contact ball bearings
# Double row angular contact ball bearings

# Single row separable ball bearings (magneto type)

## E SERIES

METRIC SIZES

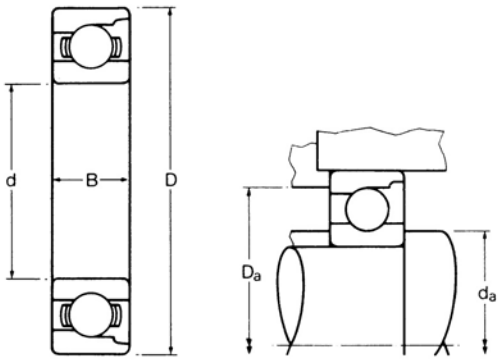


| RKB designation | Dimensions millimetres | | | RKB load ratings† newtons | | Normal limiting speeds rev/min | | Weight kg | Shaft and housing dimensions millimetres | | | | |
|---|---|---|---|---|---|---|---|---|---|---|---|---|---|
| | | | | dynamic | static | grease | oil | approx | max fillet radius | $d_a$ min | $d_a$ max | $D_a$ min | $D_a$ max |
| | d | D | B | $C_r$ | $C_{or}$ | | | | | | | | |
| E 3 | 3 | 16 | 5 | 1 620 | 245 | 33 000 | 41 200 | 0,005 | 0,1 | 4,2 | 7,8 | 13,0 | 14,8 |
| E 4 | 4 | 16 | 5 | 1 620 | 245 | 33 000 | 41 200 | 0,005 | 0,1 | 5,2 | 7,8 | 13,0 | 14,8 |
| E 5 | 5 | 16 | 5 | 1 620 | 245 | 33 000 | 41 200 | 0,005 | 0,1 | 6,2 | 7,8 | 13,0 | 14,8 |
| E 6 | 6 | 21 | 7 | 2 960 | 390 | 30 000 | 37 500 | 0,011 | 0,3 | 7,8 | 9,6 | 16,7 | 19,2 |
| E 7 | 7 | 22 | 7 | 3 180 | 465 | 29 000 | 36 200 | 0,013 | 0,3 | 8,8 | 10,6 | 17,7 | 20,2 |
| E 8 | 8 | 24 | 7 | 3 370 | 530 | 28 000 | 35 000 | 0,016 | 0,3 | 9,8 | 11,9 | 19,0 | 22,2 |
| E 9 | 9 | 28 | 8 | 4 430 | 720 | 26 000 | 32 500 | 0,023 | 0,3 | 10,8 | 14,4 | 22,6 | 26,2 |
| E 10 | 10 | 28 | 8 | 4 430 | 720 | 26 000 | 32 500 | 0,022 | 0,3 | 11,8 | 14,4 | 22,6 | 26,2 |
| E 11 | 11 | 32 | 7 | 3 570 | 735 | 23 000 | 28 700 | 0,029 | 0,3 | 12,8 | 17,5 | 24,9 | 30,2 |
| E 12 | 12 | 32 | 7 | 3 570 | 735 | 23 000 | 28 700 | 0,028 | 0,3 | 13,8 | 17,5 | 24,9 | 30,2 |
| E 13 | 13 | 30 | 7 | 3 570 | 735 | 25 000 | 31 200 | 0,022 | 0,3 | 14,8 | 17,5 | 24,9 | 28,2 |
| E 15 | 15 | 35 | 8 | 4 700 | 1 000 | 20 000 | 25 000 | 0,034 | 0,3 | 16,8 | 20,5 | 29,0 | 33,2 |
| E 17 | 17 | 44 | 11 | 5 800 | 1 350 | 16 200 | 20 200 | 0,079 | 0,6 | 20,6 | 24,5 | 35,1 | 40,4 |
| E 19 | 19 | 40 | 9 | 3 570 | 930 | 17 000 | 21 200 | 0,048 | 0,4 | 21,4 | 24,2 | 32,8 | 37,6 |
| E 20 | 20 | 47 | 12 | 9 200 | 2 040 | 14 000 | 17 500 | 0,089 | 1,0 | 24,6 | 27,1 | 38,9 | 42,4 |

*The tolerance on the outside diameter is 0 to +0,010 mm which differs slightly from the series EN bearings

**Please check availability**

# Single row angular contact ball bearings

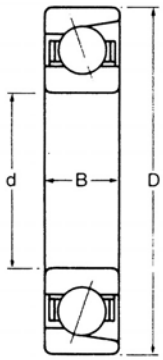


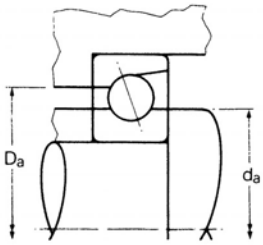


EXTRA LIGHT SERIES **70**

METRIC SIZES

20° contact angle

ISO DIMENSION SERIES 10

| RKB designation | Dimensions millimetres | | | RKB load ratings† newtons | | Normal limiting speeds rev/min | | Weight kg | Shaft and housing dimensions millimetres | | | | |
|---|---|---|---|---|---|---|---|---|---|---|---|---|---|
| | | | | dynamic | static | grease | oil | approx | max fillet radius | $d_a$ min | $d_a$ max | $D_a$ min | $D_a$ max |
| | d | D | B | $C_r$ | $C_{or}$ | | | | | | | | |
| **7000** | 10 | 26 | 8 | 5 450 | 2 350 | 12 900 | 25 500 | 0,014 | 0,3 | 11,2 | 14,2 | 20,8 | 24,8 |
| **7001** | 12 | 28 | 8 | 5 950 | 2 620 | 11 900 | 23 500 | 0,018 | 0,3 | 13,2 | 17,0 | 23,6 | 26,8 |
| **7002** | 15 | 32 | 9 | 6 750 | 3 140 | 10 400 | 21 000 | 0,027 | 0,3 | 16,2 | 20,3 | 26,9 | 30,8 |
| **7003** | 17 | 35 | 10 | 7 100 | 3 400 | 9 600 | 19 000 | 0,036 | 0,3 | 18,2 | 23,1 | 29,5 | 33,8 |
| **7004** | 20 | 42 | 12 | 10 700 | 5 100 | 8 300 | 16 500 | 0,059 | 0,6 | 22,4 | 26,7 | 35,6 | 39,6 |
| **7005** | 25 | 47 | 12 | 12 500 | 6 500 | 7 300 | 14 600 | 0,073 | 0,6 | 27,4 | 32,5 | 41,4 | 44,6 |
| **7006** | 30 | 55 | 13 | 16 100 | 8 850 | 6 300 | 12 600 | 0,104 | 1,0 | 34,0 | 38,4 | 46,5 | 51,0 |
| **7007** | 35 | 62 | 14 | 19 500 | 10 900 | 5 600 | 11 200 | 0,168 | 1,0 | 39,0 | 44,4 | 53,1 | 58,0 |
| **7008** | 40 | 68 | 15 | 20 900 | 12 400 | 5 100 | 10 100 | 0,209 | 1,0 | 44,0 | 49,8 | 58,4 | 64,0 |
| **7009** | 45 | 75 | 16 | 25 700 | 15 900 | 4 600 | 9 100 | 0,263 | 1,0 | 49,0 | 55,4 | 64,8 | 71,0 |
| **7010** | 50 | 80 | 16 | 25 500 | 15 800 | 4 200 | 8 500 | 0,286 | 1,0 | 54,0 | 60,5 | 69,8 | 76,0 |
| **7011** | 55 | 90 | 18 | 34 700 | 22 100 | 3 800 | 7 600 | 0,417 | 1,0 | 59,0 | 67,3 | 78,5 | 86,0 |
| **7012** | 60 | 95 | 18 | 36 800 | 24 600 | 3 600 | 7 100 | 0,449 | 1,0 | 64,0 | 71,1 | 83,3 | 91,0 |
| **7013** | 65 | 100 | 18 | 36 500 | 24 600 | 3 300 | 6 700 | 0,472 | 1,0 | 69,0 | 77,2 | 88,4 | 96,0 |
| **7014** | 70 | 110 | 20 | 47 600 | 32 700 | 3 000 | 6 100 | 0,658 | 1,0 | 74,0 | 83,8 | 96,5 | 106,0 |
| **7015** | 75 | 115 | 20 | 48 700 | 34 300 | 2 900 | 5 800 | 0,694 | 1,0 | 79,0 | 89,2 | 101,9 | 111,0 |
| **7016** | 80 | 125 | 22 | 59 500 | 42 100 | 2 700 | 5 300 | 0,925 | 1,0 | 84,0 | 95,5 | 109,7 | 121,0 |
| **7017** | 85 | 130 | 22 | 61 000 | 44 100 | 2 500 | 5 000 | 0,962 | 1,0 | 89,0 | 101,1 | 115,3 | 126,0 |
| **7018** | 90 | 140 | 24 | 72 500 | 52 500 | 2 300 | 4 700 | 1,26 | 1,5 | 96,0 | 108,0 | 123,7 | 134,0 |

**Larger sizes are available on request**

**Please check availability**

# Single row angular contact ball bearings

## 72 B LIGHT SERIES

METRIC SIZES
40° contact angle

ISO DIMENSION SERIES 02

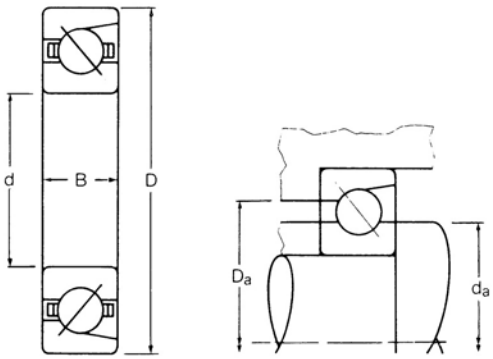


| RKB designation | Dimensions millimetres | | | RKB load ratings† newtons | | Normal limiting speeds rev/min | | Shaft and housing dimensions millimetres | | | | |
|---|---|---|---|---|---|---|---|---|---|---|---|---|
| | | | | dynamic | static | grease | oil | max fillet radius | $d_a$ min | $d_a$ max | $D_a$ min | $D_a$ max |
| | d | D | B | $C_r$ | $C_{or}$ | | | | | | | |
| **7200 B** | 10 | 30 | 9 | 6 350 | 2 610 | 11 900 | 23 500 | 0,6 | 12,4 | 18,9 | 22,8 | 27,6 |
| **7201 B** | 12 | 32 | 10 | | | | | 0,6 | 14,4 | | | 29,6 |
| **7202 B** | 15 | 35 | 11 | 8 350 | 3 800 | 20 000 | 25 000 | 0,6 | 19,0 | 22,8 | 27,5 | 31,0 |
| **7203 B** | 17 | 40 | 12 | 10 300 | 4 700 | 16 000 | 20 000 | 0,6 | 21,0 | 26,5 | 31,8 | 36,0 |
| **7204 B** | 20 | 47 | 14 | 13 800 | 6 500 | 7 800 | 15 500 | 1,0 | 24,0 | 30,7 | 36,6 | 43,0 |
| **7205 B** | 25 | 52 | 15 | 17 400 | 8 600 | 6 900 | 13 800 | 1,0 | 29,0 | 35,9 | 42,2 | 48,0 |
| **7206 B** | 30 | 62 | 16 | 21 400 | 10 900 | 10 000 | 12 000 | 1,0 | 36,0 | 41,1 | 51,8 | 56,0 |
| **7207 B** | 35 | 72 | 17 | 30 400 | 16 000 | 5 100 | 10 200 | 1,0 | 39,0 | 49,7 | 58,3 | 68,0 |
| **7208 B** | 40 | 80 | 18 | 35 900 | 19 700 | 4 600 | 9 100 | 1,0 | 44,0 | 55,6 | 64,8 | 76,0 |
| **7209 B** | 45 | 85 | 19 | 37 500 | 21 200 | 4 200 | 8 500 | 1,0 | 49,0 | 60,6 | 69,8 | 81,0 |
| **7210 B** | 50 | 90 | 20 | 38 900 | 22 700 | 6 300 | 8 000 | 1,0 | 57,0 | 65,6 | 74,8 | 83,0 |
| **7211 B** | 55 | 100 | 21 | 48 200 | 28 800 | 3 600 | 7 100 | 1,5 | 61,0 | 72,6 | 82,7 | 94,0 |
| **7212 B** | 60 | 110 | 22 | 55 500 | 33 200 | 3 200 | 6 500 | 1,5 | 66,0 | 79,5 | 90,9 | 104,0 |
| **7213 B** | 65 | 120 | 23 | 66 000 | 41 400 | 4 500 | 5 600 | 1,5 | 74,0 | 87,0 | 99,5 | 111,0 |
| **7214 B** | 70 | 125 | 24 | 72 000 | 45 900 | 2 200 | 4 500 | 1,5 | 76,0 | 91,5 | 103,9 | 119,0 |
| **7215 B** | 75 | 130 | 25 | 74 500 | 48 700 | 2 100 | 4 200 | 1,5 | 81,0 | 97,4 | 109,8 | 124,0 |
| **7216 B** | 80 | 140 | 26 | 83 500 | 54 500 | 2 000 | 3 900 | 2,0 | 88,0 | 105,0 | 118,5 | 132,0 |
| **7217 B** | 85 | 150 | 28 | 90 000 | 59 000 | 2 300 | 4 600 | 2,0 | 93,0 | 110,6 | 124,5 | 142,0 |
| **7218 B** | 90 | 160 | 30 | 111 000 | 74 500 | 2 100 | 4 300 | 2,0 | 98,0 | 118,3 | 134,0 | 152,0 |
| **7219 B** | 95 | 170 | 32 | 120 000 | 80 000 | 2 000 | 4 000 | 2,0 | 103,0 | 125,0 | 141,7 | 162,0 |
| **7220 B** | 100 | 180 | 34 | 135 000 | 91 000 | 1 900 | 3 800 | 2,0 | 108,0 | 131,3 | 149,3 | 172,0 |
| **7221 B** | 105 | 190 | 36 | 148 000 | 103 000 | 1 800 | 3 500 | 2,0 | 113,0 | 138,4 | 157,5 | 182,0 |
| **7222 B** | 110 | 200 | 38 | 160 000 | 115 000 | 1 700 | 3 300 | 2,0 | 118,0 | 146,2 | 166,4 | 192,0 |
| **7224 B** | 120 | 215 | 40 | 157 000 | 116 000 | 1 500 | 3 000 | 2,0 | 128,0 | 159,0 | 178,1 | 207,0 |
| **7226 B** | 130 | 230 | 40 | 193 000 | 152 000 | 1 100 | 2 200 | 2,5 | 140,0 | 169,1 | 191,5 | 220,0 |
| **7228 B** | 140 | 250 | 42 | 205 000 | 167 000 | 1 300 | 2 500 | 2,5 | 150,0 | 183,6 | 207,1 | 240,0 |
| **7230 B** | 150 | 270 | 45 | 234 000 | 201 000 | 1 200 | 2 300 | 2,5 | 160,0 | 197,5 | 223,2 | 260,0 |

**Please check availability**

# Single row angular contact ball bearings

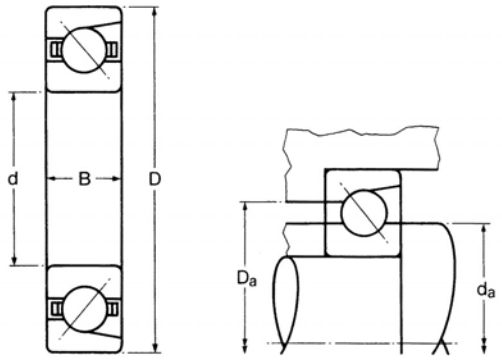


MEDIUM SERIES **73 B**

METRIC SIZES

40° contact angle

ISO DIMENSION SERIES 03

| RKB designation | Dimensions millimetres | | | RKB load ratings† newtons | | Normal limiting speeds rev/min | | Shaft and housing dimensions millimetres | | | | |
|---|---|---|---|---|---|---|---|---|---|---|---|---|
| | | | | dynamic | static | grease | oil | max fillet radius | $d_a$ min | $d_a$ max | $D_a$ min | $D_a$ max |
| | d | D | B | $C_r$ | $C_{or}$ | | | | | | | |
| **7300 B** | 10 | 35 | 11 | 9 150 | 3 840 | 10 800 | 21 500 | 0,6 | 12,4 | 20,5 | 26,0 | 32,6 |
| **7301 B** | 12 | 37 | 12 | 10 000 | 4 150 | 10 100 | 20 000 | 1,0 | 16,0 | 21,7 | 27,6 | 33,0 |
| **7302 B** | 15 | 42 | 13 | 12 100 | 5 350 | 8 900 | 18 000 | 1,0 | 19,0 | 25,7 | 31,6 | 38,0 |
| **7303 B** | 17 | 47 | 14 | | | | | 1,0 | 21,0 | | | 43,0 |
| **7304 B** | 20 | 52 | 15 | 18 000 | 8 500 | 13 000 | 17 000 | 1,0 | 27,0 | 31,8 | 39,2 | 45,0 |
| **7305 B** | 25 | 62 | 17 | 25 400 | 12 800 | 10 000 | 13 000 | 1,0 | 32,0 | 40,1 | 48,7 | 55,0 |
| **7306 B** | 30 | 72 | 19 | 33 800 | 17 100 | 9 000 | 11 500 | 1,0 | 37,0 | 47,1 | 56,7 | 65,0 |
| **7307 B** | 35 | 80 | 21 | 38 100 | 20 600 | 8 000 | 10 400 | 1,5 | 44,0 | 52,6 | 62,8 | 71,0 |
| **7308 B** | 40 | 90 | 23 | 51 000 | 28 400 | 8 400 | 11 300 | 1,5 | 46,0 | 59,8 | 71,0 | 84,0 |
| **7309 B** | 45 | 100 | 25 | 57 500 | 31 500 | 3 000 | 6 100 | 1,5 | 51,0 | 66,5 | 78,7 | 94,0 |
| **7310 B** | 50 | 110 | 27 | 72 000 | 40 800 | 3 400 | 6 900 | 2,0 | 58,0 | 73,5 | 86,8 | 102,0 |
| **7311 B** | 55 | 120 | 29 | 82 000 | 48 000 | 4 500 | 5 600 | 2,0 | 66,0 | 80,4 | 95,2 | 109,0 |
| **7312 B** | 60 | 130 | 31 | 93 500 | 55 500 | 2 900 | 5 800 | 2,0 | 68,0 | 88,0 | 103,5 | 122,0 |
| **7313 B** | 65 | 140 | 33 | 106 000 | 64 000 | 5 300 | 7 100 | 2,0 | 73,0 | 95,9 | 112,5 | 132,0 |
| **7314 B** | 70 | 150 | 35 | 119 000 | 73 000 | 2 500 | 4 900 | 2,0 | 78,0 | 101,3 | 119,3 | 142,0 |
| **7315 B** | 75 | 160 | 37 | 130 000 | 82 000 | 2 300 | 4 600 | 2,0 | 83,0 | 108,2 | 127,0 | 152,0 |
| **7316 B** | 80 | 170 | 39 | 140 000 | 92 000 | 2 100 | 4 300 | 2,0 | 88,0 | 116,2 | 136,4 | 162,0 |
| **7317 B** | 85 | 180 | 41 | 151 000 | 103 000 | 2 000 | 4 000 | 2,5 | 95,0 | 122,1 | 143,5 | 170,0 |
| **7318 B** | 90 | 190 | 43 | 163 000 | 114 000 | 1 900 | 3 800 | 2,5 | 100,0 | 129,1 | 151,6 | 180,0 |
| **7319 B** | 95 | 200 | 45 | 171 000 | 123 000 | 1 800 | 3 500 | 2,5 | 105,0 | 137,7 | 160,1 | 190,0 |
| **7320 B** | 100 | 215 | 47 | 198 000 | 150 000 | 1 300 | 2 600 | 2,5 | 110,0 | 146,8 | 172,6 | 205,0 |
| **7321 B** | 105 | 225 | 49 | 210 000 | 164 000 | 1 500 | 3 100 | 2,5 | 115,0 | 152,1 | 178,8 | 215,0 |
| **7322 B** | 110 | 240 | 50 | 235 000 | 192 000 | 1 400 | 2 900 | 2,5 | 120,0 | 162,2 | 191,4 | 230,0 |
| **7324 B** | 120 | 260 | 55 | 247 000 | 208 000 | 1 300 | 2 600 | 2,5 | 130,0 | 175,8 | 204,7 | 250,0 |
| **7326 B** | 130 | 280 | 58 | 287 000 | 256 000 | 1 200 | 2 400 | 3,0 | 142,0 | 188,7 | 222,2 | 268,0 |
| **7328 B** | 140 | 300 | 62 | 302 000 | 277 000 | 1 100 | 2 200 | 3,0 | 152,0 | 203,6 | 237,1 | 288,0 |
| **7330 B** | 150 | 320 | 65 | 331 000 | 319 000 | 800 | 1 600 | 3.0 | 162,0 | 220.1 | 254,7 | 308,0 |

# Double row angular contact ball bearings

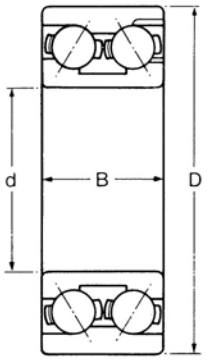


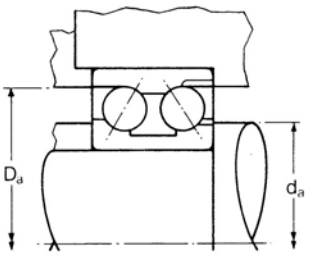


## 32 LIGHT SERIES

METRIC SIZES

32° contact angle

ISO DIMENSION SERIES 32

| **RKB** designation | Dimensions millimetres | | | **RKB** load ratings† newtons | | Normal limiting speeds rev/min | | Weight kg | Shaft and housing dimensions millimetres | | | | |
|---|---|---|---|---|---|---|---|---|---|---|---|---|---|
| | | | | dynamic | static | grease | oil | approx | max fillet radius | da min | da max | Da min | Da max |
| | d | D | B | $C_r$ | $C_{or}$ | | | | | | | | |
| **3200** | 10 | 30 | 14 | 9 900 | 5 200 | 16 000 | 22 000 | 0,052 | 0,6 | 14 | 17 | 25 | 26 |
| **3201** | 12 | 32 | 15,9 | 11 800 | 6 450 | 15 000 | 20 000 | 0,063 | 0,6 | 16 | 19 | 27 | 28 |
| **3203** | 17 | 40 | 17,5 | 17 100 | 10 100 | 11 000 | 15 000 | 0,103 | 0,6 | 21 | 25 | 34 | 36 |
| **3204** | 20 | 47 | 20,6 | 21 100 | 12 800 | 9 500 | 13 000 | 0,168 | 1,0 | 26 | 29 | 40 | 41 |
| **3205** | 25 | 52 | 20,6 | 23 300 | 14 900 | 8 500 | 11 000 | 0,194 | 1,0 | 31 | 34 | 45 | 46 |
| **3206** | 30 | 62 | 23,8 | 33 400 | 22 300 | 7 000 | 9 500 | 0,316 | 1,0 | 36 | 41 | 55 | 56 |
| **3207** | 35 | 72 | 27 | 42 600 | 29 200 | 6 000 | 8 000 | 0,484 | 1,0 | 42 | 48 | 63 | 65 |
| **3208** | 40 | 80 | 30,2 | 51 500 | 36 100 | 5 400 | 7 500 | 0,654 | 1,0 | 47 | 53 | 70 | 73 |
| **3209** | 45 | 85 | 30,2 | 56 000 | 41 200 | 5 000 | 6 700 | 0,709 | 1,0 | 52 | 58 | 75 | 78 |
| **3210** | 50 | 90 | 30,2 | 63 000 | 47 300 | 4 600 | 6 200 | 0,764 | 1,0 | 57 | 63 | 81 | 83 |
| **3211** | 55 | 100 | 33,3 | 70 500 | 54 000 | 4 200 | 5 600 | 1,05 | 1,5 | 64 | 70 | 89 | 91 |
| **3212** | 60 | 110 | 36,5 | 87 500 | 68 000 | 3 800 | 5 000 | 1,40 | 1,5 | 69 | 77 | 98 | 101 |
| **3213** | 65 | 120 | 38,1 | 96 500 | 76 000 | 3 600 | 4 700 | 1,75 | 1,5 | 74 | 84 | 106 | 111 |

The **RKB** double-row angular contact bearings are also available on request with the inverted angle and in the sealed version and/or in the shielded version.

**Larger sizes are available on request**

**Please check availability**

# Double row angular contact ball bearings

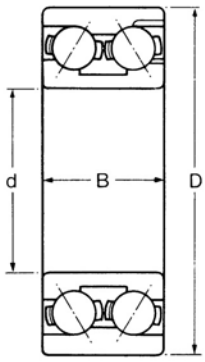


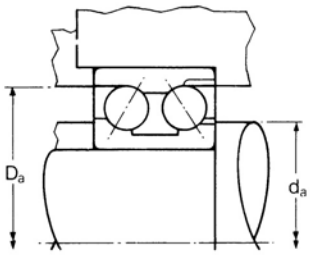


MEDIUM SERIES **33**

METRIC SIZES

32° contact angle

ISO DIMENSION SERIES 33

| **RKB** designation | Dimensions millimetres | | | **RKB** load ratings† newtons | | Normal limiting speeds rev/min | | Weight kg | Shaft and housing dimensions millimetres | | | | |
|---|---|---|---|---|---|---|---|---|---|---|---|---|---|
| | | | | dynamic | static | grease | oil | approx | max fillet radius | da min | da max | Da min | Da max |
| | d | D | B | $C_r$ | $C_{or}$ | | | | | | | | |
| **3304** | 20 | 52 | 22,2 | 25 500 | 15 800 | 8 500 | 12 000 | 0,230 | 1,0 | 27 | 31 | 44 | 45 |
| **3305** | 25 | 62 | 25,4 | 35 500 | 22 700 | 7 000 | 10 000 | 0,369 | 1,0 | 32 | 38 | 52 | 55 |
| **3306** | 30 | 72 | 30,2 | 46 800 | 30 900 | 6 000 | 8 500 | 0,585 | 1,0 | 37 | 44 | 61 | 65 |
| **3307** | 35 | 80 | 34,9 | 59 500 | 40 400 | 5 300 | 7 400 | 0,816 | 1,5 | 44 | 51 | 69 | 71 |
| **3308** | 40 | 90 | 36,5 | 73 500 | 51 000 | 4 800 | 6 700 | 1,07 | 1,5 | 49 | 57 | 78 | 81 |
| **3309** | 45 | 100 | 39,7 | 89 000 | 63 000 | 4 300 | 6 000 | 1,42 | 1,5 | 54 | 63 | 87 | 91 |
| **3310** | 50 | 110 | 44,4 | 107 000 | 81 000 | 3 700 | 5 200 | 1,93 | 2,0 | 61 | 72 | 97 | 99 |
| **3312** | 60 | 130 | 54 | 136 000 | 106 000 | 3 200 | 4 400 | 3,24 | 2,0 | 72 | 86 | 114 | 118 |
| **3313** | 65 | 140 | 58,7 | 158 000 | 124 000 | 3 000 | 4 200 | 4,08 | 2,0 | 77 | 90 | 122 | 128 |
| **3314** | 70 | 150 | 63,5 | 180 000 | 144 000 | 2 700 | 3 700 | 5,04 | 2,0 | 82 | 99 | 133 | 138 |
| **3316** | 80 | 170 | 68,3 | 229 000 | 188 000 | 2 400 | 3 300 | 6,93 | 2,0 | 92 | 111 | 150 | 158 |

The **RKB** double-row angular contact bearings are also available on request with the inverted angle and in the sealed version and/or in the shielded version.

**Larger sizes are available on request**

**Please check availability**

RKB

# Single row duplex ball bearings

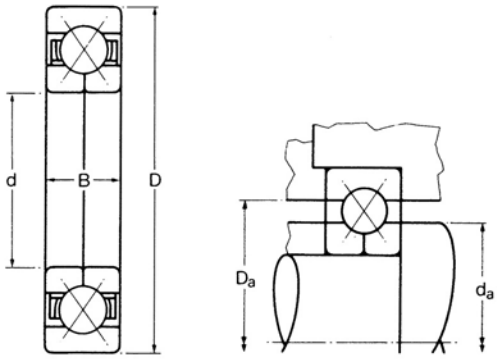


## QJ 2 LIGHT SERIES

METRIC SIZES

35° contact angle

ISO DIMENSION SERIES 02

| RKB designation | Dimensions millimetres | | | RKB load ratings† newtons | | Normal limiting speeds rev/min | | Weight kg | Shaft and housing dimensions millimetres | | | | |
|---|---|---|---|---|---|---|---|---|---|---|---|---|---|
| | | | | dynamic | static | grease | oil | approx | max fillet radius | $d_a$ min | $d_a$ max | $D_a$ min | $D_a$ max |
| | d | D | B | $C_r$ | $C_{or}$ | | | | | | | | |
| QJ 204 | 20 | 47 | 14 | 11 400 | 6 350 | 7 800 | 15 500 | 0,136 | 1,0 | 24,0 | 30,7 | 36,6 | 43,0 |
| QJ 205 | 25 | 52 | 15 | 12 800 | 7 600 | 6 900 | 13 800 | 0,168 | 1,0 | 29,0 | 35,8 | 41,7 | 48,0 |
| QJ 206 | 30 | 62 | 16 | 24 600 | 12 900 | 5 800 | 11 600 | 0,254 | 1,0 | 34,0 | 42,9 | 49,3 | 58,0 |
| QJ 207 | 35 | 72 | 17 | 31 800 | 17 100 | 5 000 | 9 900 | 0,345 | 1,0 | 39,0 | 50,3 | 57,2 | 68,0 |
| QJ 208 | 40 | 80 | 18 | 37 700 | 21 100 | 4 500 | 9 000 | 0,454 | 1,0 | 44,0 | 56,4 | 64,3 | 76,0 |
| QJ 209 | 45 | 85 | 19 | 31 800 | 19 900 | 4 200 | 8 500 | 0,499 | 1,0 | 49,0 | 60,9 | 69,1 | 81,0 |
| QJ 210 | 50 | 90 | 20 | 36 900 | 22 800 | 3 900 | 7 900 | 0,576 | 1,0 | 54,0 | 65,8 | 74,2 | 86,0 |
| QJ 211 | 55 | 100 | 21 | 50 500 | 30 900 | 3 500 | 7 000 | 0,744 | 1,5 | 61,0 | 72,9 | 82,3 | 94,0 |
| QJ 212 | 60 | 110 | 22 | 52 500 | 32 800 | 3 200 | 6 500 | 0,957 | 1,5 | 66,0 | 80,0 | 90,2 | 104,0 |
| QJ 213 | 65 | 120 | 23 | 73 000 | 46 100 | 3 000 | 5 900 | 1,22 | 1,5 | 71,0 | 87,1 | 98,3 | 114,0 |
| QJ 214 | 70 | 125 | 24 | 69 500 | 44 700 | 2 800 | 5 600 | 1,29 | 1,5 | 76,0 | 91,7 | 103,6 | 119,0 |
| QJ 215 | 75 | 130 | 25 | 72 000 | 47 500 | 2 700 | 5 300 | 1,47 | 1,5 | 81,0 | 96,7 | 108,5 | 124,0 |
| QJ 216 | 80 | 140 | 26 | 81 500 | 53 500 | 2 400 | 4 800 | 1,70 | 2,0 | 88,0 | 103,6 | 116,6 | 132,0 |
| QJ 217 | 85 | 150 | 28 | 91 500 | 62 000 | 2 300 | 4 600 | 2,28 | 2,0 | 93,0 | 110,7 | 124,5 | 142,0 |
| QJ 218 | 90 | 160 | 30 | 106 000 | 79 000 | 2 100 | 4 300 | 2,79 | 2,0 | 98,0 | 117,6 | 132,3 | 152,0 |
| QJ 219 | 95 | 170 | 32 | 116 000 | 79 500 | 2 000 | 4 000 | 3,27 | 2,0 | 103,0 | 123,7 | 140,0 | 162,0 |
| QJ 220 | 100 | 180 | 34 | 132 000 | 91 000 | 1 900 | 3 700 | 3,97 | 2,0 | 108,0 | 131,8 | 148,3 | 172,0 |

Duplex bearings are also available in the model series Q2 with split outer ring with same data.

**Larger sizes are available on request**

These bearings are also supplied with reduced O/D for location duties – add suffix 'LOC' to the basic designation.

**Please check availability**

# Single row duplex ball bearings

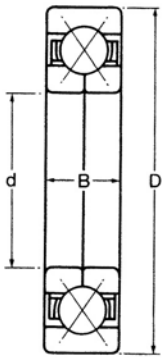


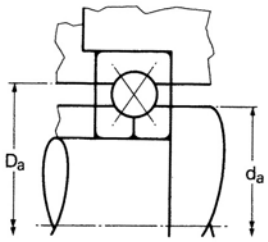


MEDIUM SERIES **QJ 3**

METRIC SIZES

35° contact angle

ISO DIMENSION SERIES 03

| RKB designation | Dimensions millimetres | | | RKB load ratings† newtons | | Normal limiting speeds rev/min | | Weight kg | Shaft and housing dimensions millimetres | | | | |
|---|---|---|---|---|---|---|---|---|---|---|---|---|---|
| | | | | dynamic | static | grease | oil | approx | max fillet radius | $d_a$ min | $d_a$ max | $D_a$ min | $D_a$ max |
| | d | D | B | $C_r$ | $C_{or}$ | | | | | | | | |
| **QJ 304** | 20 | 52 | 15 | 14 000 | 7 650 | 7 300 | 14 600 | 0,191 | 1,0 | 24,0 | 33,0 | 39,1 | 48,0 |
| **QJ 305** | 25 | 62 | 17 | 28 000 | 14 300 | 6 200 | 12 300 | 0,281 | 1,0 | 29,0 | 41,1 | 48,0 | 58,0 |
| **QJ 306** | 30 | 72 | 19 | 35 200 | 18 300 | 5 300 | 10 700 | 0,449 | 1,0 | 34,0 | 46,5 | 55,6 | 68,0 |
| **QJ 307** | 35 | 80 | 21 | 36 500 | 18 500 | 4 800 | 9 500 | 0,544 | 1,5 | 41,0 | 53,3 | 62,0 | 74,0 |
| **QJ 308** | 40 | 90 | 23 | 50 500 | 27 900 | 4 200 | 8 500 | 0,771 | 1,5 | 46,0 | 59,4 | 70,6 | 84,0 |
| **QJ 309** | 45 | 100 | 25 | 64 500 | 36 900 | 3 800 | 7 600 | 1,03 | 1,5 | 51,0 | 66,8 | 78,2 | 94,0 |
| **QJ 310** | 50 | 110 | 27 | 75 500 | 43 600 | 3 300 | 6 700 | 1,41 | 2,0 | 58,0 | 73,9 | 86,4 | 102,0 |
| **QJ 311** | 55 | 120 | 29 | 80 000 | 47 500 | 3 100 | 6 300 | 1,75 | 2,0 | 63,0 | 79,2 | 95,5 | 112,0 |
| **QJ 312** | 60 | 130 | 31 | 98 000 | 59 500 | 2 900 | 5 800 | 2,16 | 2,0 | 68,0 | 85,9 | 105,2 | 122,0 |
| **QJ 313** | 65 | 140 | 33 | 111 000 | 68 500 | 2 700 | 5 300 | 2,66 | 2,0 | 73,0 | 94,2 | 111,0 | 132,0 |
| **QJ 314** | 70 | 150 | 35 | 118 000 | 73 000 | 2 400 | 4 800 | 3,18 | 2,0 | 78,0 | 101,6 | 118,6 | 142,0 |
| **QJ 315** | 75 | 160 | 37 | 130 000 | 83 000 | 2 300 | 4 600 | 3,86 | 2,0 | 83,0 | 108,5 | 126,7 | 152,0 |
| **QJ 316** | 80 | 170 | 39 | 143 000 | 95 000 | 2 100 | 4 300 | 4,63 | 2,0 | 88,0 | 115,5 | 134,4 | 162,0 |
| **QJ 317** | 85 | 180 | 41 | 149 000 | 101 000 | 2 000 | 4 000 | 5,40 | 2,5 | 95,0 | 122,9 | 142,3 | 170,0 |
| **QJ 318** | 90 | 190 | 43 | 170 000 | 119 000 | 1 900 | 3 800 | 6,40 | 2,5 | 100,0 | 129,8 | 150,6 | 180,0 |
| **QJ 319** | 95 | 200 | 45 | 180 000 | 132 000 | 1 800 | 3 500 | 7,67 | 2,5 | 105,0 | 136,6 | 158,8 | 190,0 |
| **QJ 320** | 100 | 215 | 47 | 195 000 | 148 000 | 1 600 | 3 300 | 9,53 | 2,5 | 110,0 | 145,8 | 169,2 | 205,0 |
| **QJ 321** | 105 | 225 | 49 | 205 000 | 159 000 | 1 500 | 3 100 | 10,9 | 2,5 | 115,0 | 153,2 | 177,3 | 215,0 |
| **QJ 322** | 110 | 240 | 50 | 232 000 | 189 000 | 1 400 | 2 900 | 12,6 | 2,5 | 120,0 | 162,3 | 188,0 | 230,0 |

Duplex bearings are also available in the model series Q3 with split outer ring with same data.

**Larger sizes are available on request**

These bearings are also supplied with reduced O/D for location duties – add suffix 'LOC' to the basic designation.

**Please check availability**

# Single and double direction thrust ball bearings

# Single direction thrust ball bearings

## 511 EXTRA LIGHT SERIES

METRIC SIZES

ISO DIMENSION SERIES 11

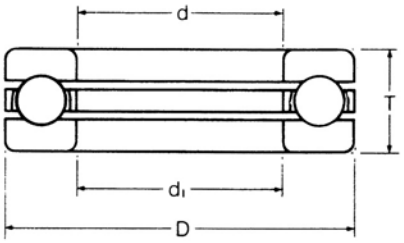


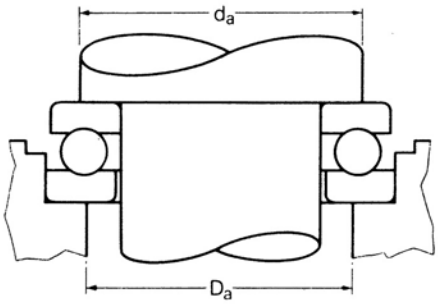


| RKB designation | Dimensions millimetres | | | | RKB load ratings† newtons | | Normal limiting speeds rev/min | | Weight kg | Shaft and housing dimensions millimetres | | |
|---|---|---|---|---|---|---|---|---|---|---|---|---|
| | | | | | dynamic | static | grease | oil | approx | max fillet radius | $d_a$ min | $D_a$ max |
| | d | $d_1$ | D | T | $C_a$ | $C_{oa}$ | | | | | | |
| **51100** | 10 | 11 | 24 | 9 | 10 300 | 11 200 | 8 000 | 11 000 | 0,020 | 0,3 | 18 | 16 |
| **51101** | 12 | 13 | 26 | 9 | 10 800 | 12 200 | 7 100 | 10 000 | 0,022 | 0,3 | 20 | 18 |
| **51102** | 15 | 16 | 28 | 9 | 11 000 | 13 500 | 7 100 | 10 000 | 0,024 | 0,3 | 23 | 20 |
| **51103** | 17 | 18 | 30 | 9 | 11 800 | 15 500 | 7 100 | 10 000 | 0,028 | 0,3 | 25 | 22 |
| **51104** | 20 | 21 | 35 | 10 | 15 700 | 21 200 | 5 600 | 8 000 | 0,040 | 0,3 | 29 | 26 |
| **51105** | 25 | 26 | 42 | 11 | 18 900 | 28 500 | 4 500 | 6 300 | 0,059 | 0,6 | 35 | 32 |
| **51106** | 30 | 32 | 47 | 11 | 19 300 | 31 900 | 3 600 | 5 000 | 0,068 | 0,6 | 40 | 37 |
| **51107** | 35 | 37 | 52 | 12 | 20 500 | 37 500 | 3 200 | 4 500 | 0,085 | 0,6 | 45 | 42 |
| **51108** | 40 | 42 | 60 | 13 | 27 900 | 49 900 | 2 800 | 4 000 | 0,120 | 0,6 | 52 | 48 |
| **51109** | 45 | 47 | 65 | 14 | 29 000 | 54 500 | 2 500 | 3 600 | 0,150 | 0,6 | 57 | 53 |
| **51110** | 50 | 52 | 70 | 14 | 29 600 | 59 500 | 2 200 | 3 200 | 0,160 | 0,6 | 62 | 58 |
| **51111** | 55 | 57 | 78 | 16 | 35 900 | 72 000 | 2 000 | 2 800 | 0,240 | 0,6 | 69 | 64 |
| **51112** | 60 | 62 | 85 | 17 | 43 100 | 89 500 | 1 800 | 2 500 | 0,290 | 1,0 | 75 | 70 |
| **51113** | 65 | 67 | 90 | 18 | 45 100 | 94 500 | 1 800 | 2 500 | 0,340 | 1,0 | 80 | 75 |
| **51114** | 70 | 72 | 95 | 18 | 45 100 | 100 000 | 1 600 | 2 200 | 0,360 | 1,0 | 85 | 80 |
| **51115** | 75 | 77 | 100 | 19 | 50 500 | 112 000 | 1 600 | 2 200 | 0,420 | 1,0 | 90 | 85 |
| **51116** | 80 | 82 | 105 | 19 | 52 000 | 120 000 | 1 400 | 2 000 | 0,430 | 1,0 | 95 | 90 |
| **51117** | 85 | 87 | 110 | 19 | 53 000 | 125 000 | 1 400 | 2 000 | 0,460 | 1,0 | 100 | 95 |
| **51118** | 90 | 92 | 120 | 22 | 61 500 | 150 000 | 1 200 | 1 800 | 0,680 | 1,0 | 108 | 102 |
| **51120** | 100 | 102 | 135 | 25 | 88 500 | 212 000 | 1 100 | 1 600 | 0,990 | 1,0 | 121 | 114 |

**Larger sizes are available on request**

**Please check availability**

# Single direction thrust ball bearings

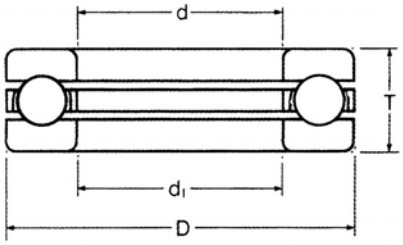


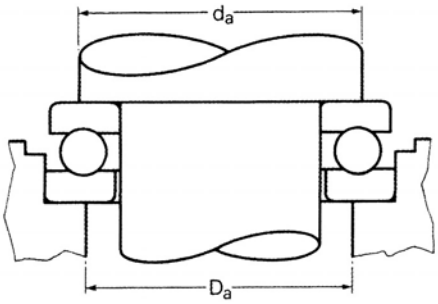


## 512 LIGHT SERIES

METRIC SIZES

ISO DIMENSION SERIES 12

| RKB designation | Dimensions millimetres | | | | RKB load ratings† newtons | | Normal limiting speeds rev/min | | Weight kg | Shaft and housing dimensions millimetres | | |
|---|---|---|---|---|---|---|---|---|---|---|---|---|
| | | | | | dynamic | static | grease | oil | approx | max fillet radius | $d_a$ min | $D_a$ max |
| | d | $d_1$ | D | T | $C_a$ | $C_{oa}$ | | | | | | |
| **51200** | 10 | 12 | 26 | 11 | 13 200 | 13 700 | 7 100 | 10 000 | 0,030 | 0,6 | 20 | 16 |
| **51201** | 12 | 14 | 28 | 11 | 13 800 | 15 000 | 7 100 | 10 000 | 0,034 | 0,6 | 22 | 18 |
| **51202** | 15 | 17 | 32 | 12 | 17 100 | 19 600 | 6 300 | 9 000 | 0,046 | 0,6 | 25 | 22 |
| **51203** | 17 | 19 | 35 | 12 | 17 800 | 21 500 | 5 600 | 8 000 | 0,053 | 0,6 | 28 | 24 |
| **51204** | 20 | 22 | 40 | 14 | 23 100 | 29 900 | 4 500 | 6 300 | 0,082 | 0,6 | 32 | 28 |
| **51205** | 25 | 27 | 47 | 15 | 29 000 | 39 900 | 3 600 | 5 000 | 0,120 | 0,6 | 38 | 34 |
| **51206** | 30 | 32 | 52 | 16 | 30 100 | 46 400 | 3 200 | 4 500 | 0,144 | 0,6 | 43 | 39 |
| **51207** | 35 | 37 | 62 | 18 | 40 400 | 62 500 | 2 800 | 4 000 | 0,220 | 1,0 | 51 | 46 |
| **51208** | 40 | 42 | 68 | 19 | 48 600 | 78 500 | 2 500 | 3 600 | 0,270 | 1,0 | 57 | 51 |
| **51209** | 45 | 47 | 73 | 20 | 52 000 | 86 000 | 2 200 | 3 200 | 0,320 | 1,0 | 62 | 56 |
| **51210** | 50 | 52 | 78 | 22 | 56 000 | 96 000 | 2 000 | 2 800 | 0,390 | 1,0 | 67 | 61 |
| **51211** | 55 | 57 | 90 | 25 | 77 000 | 134 000 | 1 800 | 2 500 | 0,610 | 1,0 | 76 | 69 |
| **51212** | 60 | 62 | 95 | 26 | 74 000 | 134 000 | 1 600 | 2 200 | 0,690 | 1,0 | 81 | 74 |
| **51213** | 65 | 67 | 100 | 27 | 81 500 | 153 000 | 1 600 | 2 200 | 0,770 | 1,0 | 86 | 79 |
| **51214** | 70 | 72 | 105 | 27 | 83 000 | 160 000 | 1 400 | 2 000 | 0,810 | 1,0 | 91 | 84 |
| **51215** | 75 | 77 | 110 | 27 | 84 500 | 170 000 | 1 400 | 2 000 | 0,860 | 1,0 | 96 | 89 |
| **51216** | 80 | 82 | 115 | 28 | 86 500 | 179 000 | 1 400 | 2 000 | 0,950 | 1,0 | 101 | 94 |
| **51217** | 85 | 88 | 125 | 31 | 110 000 | 223 000 | 1 200 | 1 800 | 1,29 | 1,0 | 109 | 101 |
| **51218** | 90 | 93 | 135 | 35 | 135 000 | 270 000 | 1 100 | 1 600 | 1,77 | 1,0 | 117 | 108 |
| **51220** | 100 | 103 | 150 | 38 | 155 000 | 318 000 | 1 000 | 1 400 | 2,36 | 1,0 | 130 | 120 |

**Larger sizes are available on request**

**Please check availability**

# Single direction thrust ball bearings

## 513 MEDIUM SERIES

METRIC SIZES

ISO DIMENSION SERIES 13

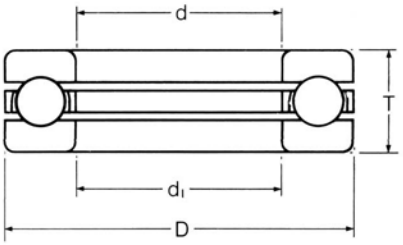


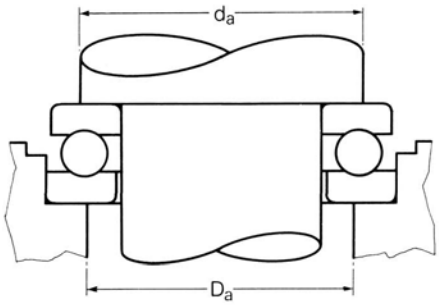


| RKB designation | Dimensions millimetres | | | | RKB load ratings† newtons | | Normal limiting speeds rev/min | | Weight kg approx | Shaft and housing dimensions millimetres | | |
|---|---|---|---|---|---|---|---|---|---|---|---|---|
| | | | | | dynamic | static | grease | oil | | | | |
| | d | $d_1$ | D | H | $C_a$ | $C_{oa}$ | | | | $r_a$ max | $d_a$ min | $D_a$ max |
| **51305** | 25 | 27 | 52 | 18 | 34 500 | 55 000 | 3 400 | 4 500 | 0.17 | 1 | 41 | 36 |
| **51306** | 30 | 32 | 60 | 21 | 37 700 | 65 500 | 2 800 | 3 800 | 0.26 | 1 | 48 | 42 |
| **51307** | 35 | 37 | 68 | 24 | 49 400 | 88 000 | 2 400 | 3 400 | 0.38 | 1 | 55 | 48 |
| **51308** | 40 | 42 | 78 | 26 | 61 800 | 112 000 | 2 000 | 3 000 | 0.53 | 1 | 63 | 55 |
| **51309** | 45 | 47 | 85 | 28 | 76 100 | 140 000 | 1 900 | 2 800 | 0.66 | 1 | 69 | 61 |
| **51310** | 50 | 52 | 95 | 31 | 88 400 | 173 000 | 1 800 | 2 600 | 0.94 | 1 | 77 | 68 |
| **51311** | 55 | 57 | 105 | 35 | 104 000 | 208 000 | 1 600 | 2 200 | 1.30 | 1 | 85 | 75 |
| **51312** | 60 | 62 | 110 | 35 | 101 000 | 208 000 | 1 600 | 2 200 | 1.35 | 1 | 90 | 80 |
| **51313** | 65 | 67 | 115 | 36 | 106 000 | 220 000 | 1 500 | 2 000 | 1.50 | 1 | 95 | 85 |
| **51314** | 70 | 72 | 125 | 40 | 135 000 | 300 000 | 1 400 | 1 900 | 2.00 | 1 | 103 | 92 |
| **51315** | 75 | 77 | 135 | 44 | 163 000 | 360 000 | 1 200 | 1 700 | 2.60 | 1.5 | 111 | 99 |
| **51316** | 80 | 82 | 140 | 44 | 159 000 | 360 000 | 1 200 | 1 700 | 2.70 | 1.5 | 116 | 104 |
| **51317** | 85 | 88 | 150 | 49 | 190 000 | 425 000 | 1 100 | 1 600 | 3.55 | 1.5 | 124 | 111 |
| **51318** | 90 | 93 | 155 | 50 | 195 000 | 465 000 | 1 000 | 1 500 | 3.8 | 1.5 | 129 | 116 |
| **51320** | 100 | 103 | 170 | 55 | 229 000 | 560 000 | 950 | 1 400 | 4.95 | 1.5 | 142 | 128 |
| **51322** | 110 | 113 | 190 | 63 | 276 000 | 720 000 | 850 | 1 200 | 7.85 | 2 | 158 | 142 |
| **51324** | 120 | 123 | 210 | 70 | 325 000 | 915 000 | 800 | 1 100 | 11.0 | 2 | 173 | 157 |
| **51326** | 130 | 134 | 225 | 75 | 358 000 | 1 060 000 | 750 | 1 000 | 13.0 | 2 | 186 | 169 |
| **51328** | 140 | 144 | 240 | 80 | 397 000 | 1 220 000 | 700 | 950 | 15.5 | 2 | 199 | 181 |
| **51330** | 150 | 154 | 250 | 80 | 410 000 | 1 290 000 | 670 | 900 | 6.5 | 2 | 209 | 191 |
| **51332** | 160 | 164 | 270 | 87 | 449 000 | 1 500 000 | 630 | 850 | 21.0 | 2.5 | 225 | 205 |
| **51334** | 170 | 174 | 280 | 87 | 468 000 | 1 600 000 | 600 | 800 | 22.0 | 2.5 | 235 | 215 |
| **51336** | 180 | 184 | 300 | 95 | 520 000 | 1 830 000 | 560 | 750 | 28.5 | 2.5 | 251 | 229 |
| **51340** | 200 | 205 | 340 | 110 | 624 000 | 2 400 000 | 80 | 630 | 44.5 | 3 | 283 | 257 |

**Larger sizes are available on request**

**Please check availability**

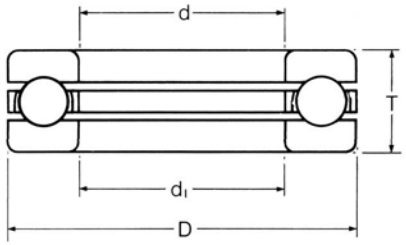


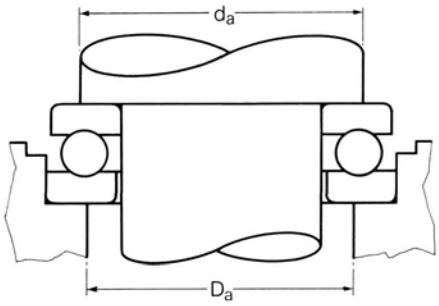


## 514 HEAVY SERIES

METRIC SIZES

ISO DIMENSION SERIES 14

| RKB designation | Dimensions millimetres | | | | RKB load ratings† newtons | | Normal limiting speeds rev/min | | Weight Kg | Shaft and housing dimensions millimetres | | |
|---|---|---|---|---|---|---|---|---|---|---|---|---|
| | | | | | dynamic | static | grease | oil | approx | | | |
| | d | $d_1$ | D | H | $C_a$ | $C_{oa}$ | | | | $r_a$ max | $d_a$ min | $D_a$ max |
| **51405** | 25 | 27 | 60 | 24 | 55 300 | 90 000 | 2 600 | 3 600 | 0.34 | 1 | 46 | 39 |
| **51406** | 30 | 32 | 70 | 28 | 72 800 | 125 000 | 2 000 | 3 000 | 0.52 | 1 | 54 | 46 |
| **51407** | 35 | 37 | 80 | 32 | 87 100 | 156 000 | 1 800 | 2 600 | 0.76 | 1 | 62 | 53 |
| **51408** | 40 | 42 | 90 | 36 | 112 000 | 204 000 | 1 700 | 2 400 | 1.10 | 1 | 70 | 60 |
| **51409** | 45 | 47 | 100 | 39 | 130 000 | 240 000 | 1 600 | 2 200 | 1.40 | 1 | 78 | 67 |
| **51410** | 50 | 52 | 110 | 43 | 159 000 | 310 000 | 1 500 | 2 000 | 2.00 | 1.5 | 86 | 74 |
| **51411** | 55 | 57 | 120 | 48 | 178 000 | 360 000 | 1 300 | 1 800 | 2.55 | 1.5 | 94 | 81 |
| **51412** | 60 | 62 | 130 | 51 | 199 000 | 400 000 | 1 100 | 1 600 | 3.10 | 1.5 | 102 | 88 |
| **51413** | 65 | 68 | 140 | 56 | 216 000 | 450 000 | 1 000 | 1 500 | 4.00 | 2 | 110 | 95 |
| **51414** | 70 | 73 | 150 | 60 | 234 000 | 500 000 | 950 | 1 400 | 5.00 | 2 | 118 | 402 |
| **51415** | 75 | 78 | 160 | 65 | 251 000 | 560 000 | 900 | 1 300 | 6.75 | 2 | 126 | 109 |
| **51416** | 80 | 83 | 170 | 68 | 270 000 | 620 000 | 850 | 1 200 | 7.95 | 2 | 133 | 117 |
| **51417** | 85 | 88 | 180 | 72 | 286 000 | 680 000 | 850 | 1 200 | 9.45 | 2 | 141 | 124 |
| **51418** | 90 | 93 | 190 | 77 | 307 000 | 750 000 | 800 | 1 100 | 11.0 | 2 | 149 | 131 |
| **51420** | 100 | 103 | 210 | 85 | 371 000 | 965 000 | 700 | 950 | 15.0 | 2.5 | 165 | 145 |
| **51422** | 110 | 113 | 230 | 95 | 410 000 | 1 140 000 | 630 | 850 | 20.0 | 2.5 | 181 | 159 |
| **51424** | 120 | 123 | 250 | 102 | 423 000 | 1 220 000 | 600 | 800 | 25.5 | 3 | 197 | 173 |
| **51426** | 130 | 134 | 270 | 110 | 520 000 | 1 600 000 | 560 | 750 | 32.0 | 3 | 213 | 187 |
| **51428** | 140 | 144 | 280 | 112 | 520 000 | 1 600 000 | 530 | 700 | 34.5 | 3 | 223 | 197 |
| **51430** | 150 | 154 | 300 | 120 | 559 000 | 1 800 000 | 500 | 670 | 42.5 | 3 | 239 | 211 |

**Larger sizes are available on request**

**Please check availability**

# Double direction thrust ball bearings

## 522 LIGHT SERIES

METRIC SIZES

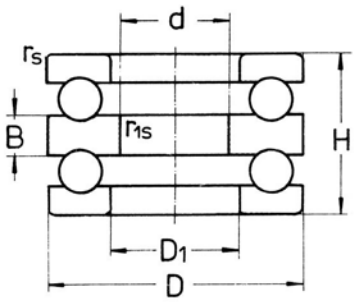


ISO DIMENSION SERIES 22

| RKB designation | Dimensions millimetres | | | | | | | RKB load ratings† newtons | | Factor | Normal limiting speeds rev/min | | Weight Kg approx |
|---|---|---|---|---|---|---|---|---|---|---|---|---|---|
| | | | | | | | | dynamic | static | | grease | oil | |
| | d | D | H | rs/min | r1s/min | $D_1$ | B | $C_a$ | $C_{oa}$ | M | | | |
| **52202** | 10 | 32 | 22 | 0.6 | 0.3 | 17 | 5 | 16 600 | 24 800 | 0.004 | 5 000 | 6 700 | 0.085 |
| **52204** | 15 | 40 | 26 | 0.6 | 0.3 | 22 | 6 | 22 300 | 37 700 | 0.008 | 4 300 | 5 600 | 0.150 |
| **52205** | 20 | 47 | 28 | 0.6 | 0.3 | 27 | 7 | 27 700 | 50 400 | 0.014 | 3 800 | 5 000 | 0.230 |
| **52206** | 25 | 52 | 29 | 0.6 | 0.3 | 32 | 7 | 28 100 | 54 300 | 0.014 | 3 600 | 4 800 | 0.272 |
| **52207** | 30 | 62 | 34 | 1 | 0.3 | 37 | 8 | 40 700 | 83 800 | 0.029 | 3 000 | 4 000 | 0.402 |
| **52208** | 30 | 68 | 36 | 1 | 0.6 | 42 | 9 | 46 900 | 98 300 | 0.05 | 2 800 | 3 800 | 0.540 |
| **52209** | 35 | 73 | 37 | 1 | 0.6 | 47 | 9 | 47 700 | 105 000 | 0.044 | 2 600 | 3 600 | 0.620 |
| **52210** | 40 | 78 | 39 | 1 | 0.6 | 52 | 9 | 48 500 | 111 000 | 0.07 | 2 400 | 3 400 | 0.710 |
| **52211** | 45 | 90 | 45 | 1 | 0.6 | 57 | 10 | 69 400 | 159 000 | 0.12 | 1 900 | 2 800 | 1.12 |
| **52212** | 50 | 95 | 46 | 1 | 0.6 | 62 | 10 | 73 600 | 179 000 | 0.12 | 1 900 | 2 800 | 1.25 |
| **52213** | 55 | 100 | 47 | 1 | 0.6 | 67 | 10 | 74 800 | 189 000 | 0.14 | 1 800 | 2 600 | 1.36 |
| **52214** | 55 | 105 | 47 | 1 | 1 | 72 | 10 | 73 600 | 189 000 | 0.16 | 1 800 | 2 600 | 1.48 |
| **52215** | 60 | 110 | 47 | 1 | 1 | 77 | 10 | 77 400 | 209 000 | 0.18 | 1 700 | 2 400 | 1.57 |
| **52216** | 65 | 115 | 48 | 1 | 1 | 82 | 10 | 78 500 | 218 000 | 0.22 | 1 700 | 2 400 | 1.69 |
| **52217** | 70 | 125 | 55 | 1 | 1 | 88 | 12 | 92 300 | 251 000 | 0.38 | 1 600 | 2 200 | 2.34 |
| **52218** | 75 | 135 | 62 | 1.1 | 1 | 93 | 14 | 117 000 | 326 000 | 0.55 | 1 500 | 2 000 | 3.22 |
| **52220** | 85 | 150 | 67 | 1.1 | 1 | 103 | 15 | 147 000 | 410 000 | 0.7 | 1 300 | 1 800 | 4.29 |
| **52222** | 95 | 160 | 67 | 1.1 | 1 | 113 | 15 | 148 000 | 431 000 | 0.8 | 1 200 | 1 700 | 4.68 |
| **52224** | 100 | 170 | 68 | 1.1 | 1.1 | 123 | 15 | 154 000 | 472 000 | 1 | 1 100 | 1 600 | 5.24 |
| **52226** | 110 | 190 | 80 | 1.5 | 1.1 | 133 | 18 | 203 000 | 622 000 | 1.7 | 950 | 1 400 | 7.74 |
| **52228** | 120 | 200 | 81 | 1.5 | 1.1 | 143 | 18 | 215 000 | 669 000 | 2 | 950 | 1 400 | 8.95 |
| **52230** | 130 | 215 | 89 | 1.5 | 1.1 | 153 | 20 | 244 000 | 768 000 | 2.8 | 900 | 1 300 | 10.6 |
| **52232** | 140 | 225 | 90 | 1.5 | 1.1 | 163 | 20 | 247 000 | 803 000 | 3.2 | 850 | 1 200 | 12.2 |
| **52234** | 150 | 240 | 97 | 1.5 | 1.1 | 173 | 21 | 269 000 | 874 000 | 4.5 | 800 | 1 100 | 15.2 |

**Larger sizes are available on request**

**Please check availability**

# Double direction thrust ball bearings

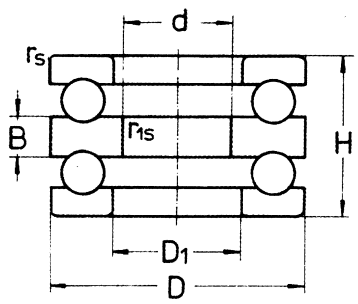


## 523 MEDIUM SERIES

METRIC SIZES

ISO DIMENSION SERIES 23

| RKB designation | Dimensions millimetres d | D | H | rs/min | r1s/min | $D_1$ | B | RKB load ratings† newtons dynamic Ca | static Coa | Factor M | Normal limiting speeds rev/min grease | oil | Weight Kg approx |
|---|---|---|---|---|---|---|---|---|---|---|---|---|---|
| 52305 | 20 | 52 | 34 | 1 | 0.3 | 27 | 8 | 35 700 | 61 400 | 0.02 | 3 200 | 4 300 | 0.033 |
| 52306 | 25 | 60 | 38 | 1 | 0.3 | 32 | 9 | 42 800 | 78 700 | 0.029 | 2 800 | 3 800 | 0.490 |
| 52307 | 30 | 68 | 44 | 1 | 0.3 | 37 | 10 | 55 500 | 105 000 | 0.05 | 2 400 | 3 400 | 0.710 |
| 52308 | 30 | 78 | 49 | 1 | 0.6 | 42 | 12 | 69 300 | 135 000 | 0.08 | 2 000 | 3 000 | 1.06 |
| 52309 | 35 | 85 | 52 | 1 | 0.6 | 47 | 12 | 80 800 | 163 000 | 0.12 | 1 900 | 2 800 | 1.29 |
| 52310 | 40 | 95 | 58 | 1.1 | 0.6 | 52 | 14 | 91 600 | 186 000 | 0.18 | 1 800 | 2 600 | 1.86 |
| 52311 | 45 | 105 | 64 | 1.1 | 0.6 | 57 | 15 | 119 000 | 246 000 | 0.26 | 1 600 | 2 200 | 2.51 |
| 52312 | 50 | 110 | 64 | 1.1 | 0.6 | 62 | 15 | 124 000 | 267 000 | 0.28 | 1 600 | 2 200 | 2.68 |
| 52313 | 55 | 115 | 65 | 1.1 | 0.6 | 67 | 15 | 128 000 | 287 000 | 0.32 | 1 500 | 2 000 | 2.90 |
| 52314 | 55 | 125 | 72 | 1.1 | 1 | 72 | 16 | 148 000 | 339 000 | 0.53 | 1 400 | 1 900 | 3.90 |
| 52315 | 60 | 135 | 79 | 1.5 | 1 | 77 | 18 | 171 000 | 396 000 | 0.75 | 1 200 | 1 700 | 4.83 |
| 52316 | 65 | 140 | 79 | 1.5 | 1 | 82 | 18 | 176 000 | 424 000 | 0.8 | 1 200 | 1 700 | 5.06 |
| 52317 | 70 | 150 | 87 | 1.5 | 1 | 88 | 19 | 206 000 | 489 000 | 1.1 | 1 100 | 1 600 | 6.43 |
| 52318 | 75 | 155 | 88 | 1.5 | 1 | 93 | 19 | 213 000 | 524 000 | 1.2 | 1 000 | 1 500 | 6.60 |
| 52320 | 85 | 170 | 97 | 1.5 | 1 | 103 | 21 | 236 000 | 596 000 | 1.8 | 950 | 1 400 | 8.90 |
| 52322 | 95 | 190 | 110 | 2 | 1 | 113 | 24 | 280 000 | 754 000 | 2.8 | 850 | 1 200 | 13.8 |
| 52324 | 100 | 210 | 123 | 2.1 | 1.1 | 123 | 27 | 325 000 | 931 000 | 4.5 | 800 | 1 100 | 17.2 |
| 52330 | 130 | 250 | 140 | 2.1 | 1.1 | 154 | 31 | 370 000 | 1 200 000 | 9 | 670 | 900 | 27.4 |
| 52332 | 140 | 270 | 140 | 2.1 | 1.1 | 164 | 31 | 470 000 | 1 570 000 | 12 | 630 | 850 | 26.2 |

## 524 HEAVY SERIES

METRIC SIZES

ISO DIMENSION SERIES 24

| | | | | | | | | | | | | | |
|---|---|---|---|---|---|---|---|---|---|---|---|---|---|
| 52405 | 15 | 60 | 45 | 1 | 0.3 | 27 | 11 | 55 600 | 89 400 | 0.044 | 2 600 | 3 600 | 0.630 |
| 52406 | 20 | 70 | 52 | 1 | 0.6 | 32 | 12 | 72 800 | 126 000 | 0.08 | 2 000 | 3 000 | 1.00 |
| 52407 | 25 | 80 | 59 | 1.1 | 0.6 | 37 | 14 | 87 100 | 155 000 | 0.13 | 1 800 | 2 600 | 1.44 |
| 52408 | 30 | 90 | 65 | 1.1 | 0.6 | 42 | 15 | 113 000 | 205 000 | 0.23 | 1 700 | 2 400 | 2.08 |
| 52409 | 35 | 100 | 72 | 1.1 | 0.6 | 47 | 17 | 130 000 | 242 000 | 0.32 | 1 600 | 2 200 | 2.71 |
| 52410 | 40 | 110 | 78 | 1.5 | 0.6 | 52 | 18 | 148 000 | 283 000 | 0.48 | 1 500 | 2 000 | 3.56 |
| 52411 | 45 | 120 | 87 | 1.5 | 0.6 | 57 | 20 | 178 000 | 359 000 | 0.67 | 1 300 | 1 800 | 4.70 |
| 52412 | 50 | 130 | 93 | 1.5 | 0.6 | 62 | 21 | 201 000 | 397 000 | 0.85 | 1 100 | 1 600 | 6.33 |
| 52413 | 50 | 140 | 101 | 2 | 1 | 68 | 23 | 232 000 | 493 000 | 1.1 | 1 000 | 1 500 | 8.03 |
| 52420 | 80 | 210 | 150 | 2 | 1 | 103 | 33 | 368 000 | 983 000 | 5.3 | 700 | 950 | 26.6 |

**Larger sizes are available on request**

**Please check availability**

# Single direction thrust ball bearings with spherical housing washers

## 532 LIGHT SERIES

METRIC SIZES

ISO DIMENSION SERIES 12

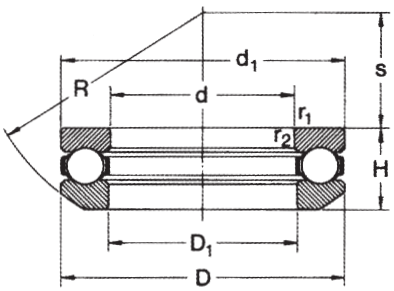


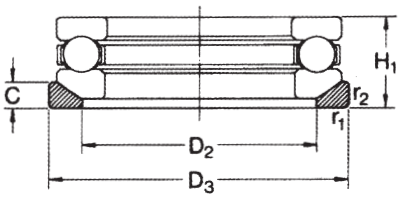


| RKB designation basic bearing | washer | Dimensions millimetres d | D | H | RKB load ratings† newtons dynamic $C_a$ | static $C_{oa}$ | Factor A | Normal limiting speeds rev/min grease | oil | Weight washer basic bearing Kg | approx |
|---|---|---|---|---|---|---|---|---|---|---|---|
| **53201** | U 201 | 12 | 28 | 11.4 | 13 300 | 19 000 | 1.9 | 6 000 | 8 000 | 0.033 | 0.012 |
| **53202** | U 202 | 15 | 32 | 13.3 | 16 500 | 25 000 | 3.3 | 5 300 | 7 000 | 0.049 | 0.014 |
| **53203** | U 203 | 17 | 35 | 13.2 | 17 200 | 27 500 | 3.9 | 5 000 | 6 700 | 0.056 | 0.015 |
| **53204** | U 204 | 20 | 40 | 14.7 | 22 500 | 37 500 | 7.3 | 4 500 | 6 000 | 0.082 | 0.020 |
| **53205** | U 205 | 25 | 47 | 16.7 | 27 600 | 50 000 | 13 | 4 000 | 5 300 | 0.12 | 0.032 |
| **53206** | U 206 | 30 | 52 | 17.8 | 25 500 | 47 500 | 11 | 3 600 | 4 800 | 0.14 | 0.038 |
| **53207** | U 207 | 35 | 62 | 19.9 | 35 100 | 67 000 | 23 | 3 000 | 4 000 | 0.22 | 0.057 |
| **53208** | U 208 | 40 | 68 | 20.3 | 46 800 | 98 000 | 49 | 2 800 | 3 800 | 0.28 | 0.070 |
| **53209** | U 209 | 45 | 73 | 21.3 | 39 000 | 80 000 | 33 | 2 600 | 3 600 | 0.30 | 0.087 |
| **53210** | U 210 | 50 | 78 | 23.5 | 49 400 | 106 000 | 58 | 2 400 | 3 400 | 0.37 | 0.10 |
| **53211** | U 211 | 55 | 90 | 27.3 | 61 800 | 134 000 | 93 | 1 900 | 2 800 | 0.60 | 0.15 |
| **53212** | U 212 | 60 | 95 | 28 | 62 400 | 140 000 | 100 | 1 900 | 2 800 | 0.66 | 0.16 |
| **53213** | U 213 | 65 | 100 | 28.7 | 63 700 | 150 000 | 120 | 1 800 | 2 600 | 0.73 | 0.18 |
| **53214** | U 214 | 70 | 105 | 28.8 | 65 000 | 160 000 | 130 | 1 800 | 2 600 | 0.78 | 0.19 |
| **53215** | U 215 | 75 | 110 | 28.3 | 67 600 | 170 000 | 150 | 1 700 | 2 400 | 0.81 | 0.21 |
| **53216** | U 216 | 80 | 115 | 29.5 | 76 100 | 190 000 | 190 | 1 700 | 2 400 | 0.90 | 0.22 |
| **53217** | U 217 | 85 | 125 | 33.1 | 97 500 | 250 000 | 330 | 1 600 | 2 200 | 1.20 | 0.29 |
| **53218** | U 218 | 90 | 135 | 38.5 | 119 000 | 300 000 | 470 | 1 500 | 2 000 | 1.70 | 0.42 |
| **53220** | U 220 | 100 | 150 | 40.9 | 124 000 | 320 000 | 530 | 1 300 | 1 800 | 2.20 | 0.50 |
| **53222** | U 222 | 110 | 160 | 40.2 | 130 000 | 360 000 | 670 | 1 200 | 1 700 | 2.35 | 0.56 |
| **53224** | U 224 | 120 | 170 | 40.8 | 140 000 | 400 000 | 830 | 1 100 | 1 600 | 2.55 | 0.65 |
| **53226** | U 226 | 130 | 190 | 47.9 | 186 000 | 540 000 | 1 500 | 950 | 1 400 | 3.95 | 0.90 |
| **53228** | U 228 | 140 | 200 | 48.6 | 190 000 | 570 000 | 1 700 | 950 | 1 400 | 4.25 | 1.20 |

**Larger sizes are available on request**

**Please check availability**

# Single direction thrust ball bearings with spherical housing washers

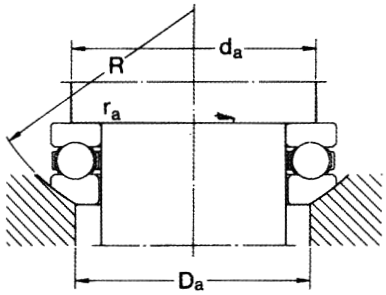


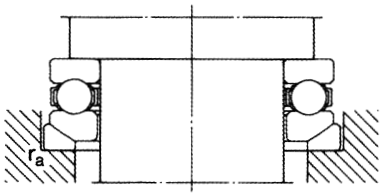


**Dimensions millimetres**

**Shaft and housing dimensions millimetres**

| d | $d_1$ | $D_1$ | $D_2$ | $D_3$ | C | $H_1$ | R | s | r1 2 min | $d_a$ min | $D_a$ max | $r_a$ max |
|---|---|---|---|---|---|---|---|---|---|---|---|---|
| 12 | 28 | 14 | 20 | 30 | 3.5 | 13 | 25 | 11.5 | 0.6 | 22 | 20 | 0.6 |
| 15 | 32 | 17 | 24 | 35 | 4 | 15 | 28 | 12 | 0.6 | 25 | 24 | 0.6 |
| 17 | 35 | 19 | 26 | 38 | 4 | 15 | 32 | 16 | 0.6 | 28 | 26 | 0.6 |
| 20 | 40 | 22 | 30 | 42 | 5 | 17 | 36 | 18 | 0.6 | 32 | 30 | 0.6 |
| 25 | 47 | 27 | 36 | 50 | 5.5 | 19 | 40 | 19 | 0.6 | 38 | 36 | 0.6 |
| 30 | 52 | 32 | 42 | 55 | 5.5 | 20 | 45 | 22 | 0.6 | 43 | 42 | 0.6 |
| 35 | 62 | 37 | 48 | 65 | 7 | 22 | 50 | 24 | 1 | 51 | 48 | 1 |
| 40 | 68 | 42 | 55 | 72 | 7 | 23 | 56 | 28.5 | 1 | 57 | 55 | 1 |
| 45 | 73 | 47 | 60 | 78 | 7.5 | 24 | 56 | 26 | 1 | 62 | 60 | 1 |
| 50 | 78 | 52 | 62 | 82 | 7.5 | 26 | 64 | 32.5 | 1 | 67 | 62 | 1 |
| 55 | 90 | 57 | 72 | 95 | 9 | 30 | 72 | 35 | 1 | 76 | 72 | 1 |
| 60 | 95 | 62 | 78 | 100 | 9 | 31 | 72 | 32.5 | 1 | 81 | 78 | 1 |
| 65 | 100 | 67 | 82 | 105 | 9 | 32 | 80 | 40 | 1 | 86 | 82 | 1 |
| 70 | 105 | 72 | 88 | 110 | 9 | 32 | 80 | 38 | 1 | 91 | 88 | 1 |
| 75 | 110 | 77 | 92 | 115 | 9.5 | 32 | 90 | 49 | 1 | 96 | 92 | 1 |
| 80 | 115 | 82 | 98 | 120 | 10 | 33 | 90 | 46 | 1 | 101 | 98 | 1 |
| 85 | 125 | 88 | 105 | 130 | 11 | 37 | 100 | 52 | 1 | 109 | 105 | 1 |
| 90 | 135 | 93 | 110 | 140 | 13.5 | 42 | 100 | 45 | 1.1 | 117 | 110 | 1 |
| 100 | 150 | 103 | 125 | 155 | 14 | 45 | 112 | 52 | 1.1 | 130 | 125 | 1 |
| 110 | 160 | 113 | 135 | 165 | 14 | 45 | 125 | 65 | 1.1 | 140 | 135 | 1 |
| 120 | 170 | 123 | 145 | 175 | 15 | 46 | 125 | 61 | 1.1 | 150 | 145 | 1 |
| 130 | 187 | 133 | 160 | 195 | 17 | 53 | 140 | 67 | 1.5 | 166 | 160 | 1.5 |
| 140 | 197 | 143 | 170 | 210 | 17 | 55 | 160 | 87 | 1.5 | 176 | 170 | 1.5 |

# Single direction thrust ball bearings with spherical housing washers

## 533 MEDIUM SERIES

METRIC SIZES

ISO DIMENSION SERIES 13

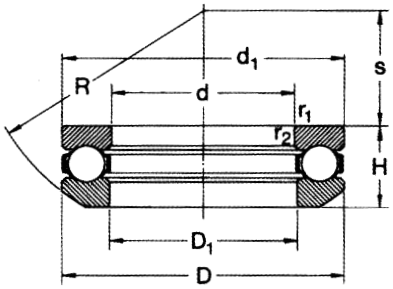


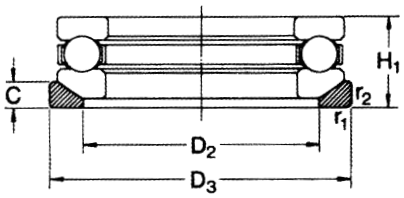


| RKB designation basic bearing | washer | Dimensions millimetres d | D | H | RKB load ratings† newtons dynamic $C_a$ | static $C_{oa}$ | Factor A | Normal limiting speeds rev/min grease | oil | Weight washer basic bearing Kg | approx |
|---|---|---|---|---|---|---|---|---|---|---|---|
| **53306** | U 306 | 30 | 60 | 22.6 | 37 700 | 65 500 | 22 | 2 800 | 3 800 | 0.27 | 0.056 |
| **53307** | U 307 | 35 | 68 | 25.6 | 49 400 | 88 000 | 40 | 2 400 | 3 400 | 0.38 | 0.084 |
| **53308** | U 308 | 40 | 78 | 28.5 | 61 800 | 112 000 | 65 | 2 000 | 3 000 | 0.55 | 0.12 |
| **53309** | U 309 | 45 | 85 | 30.1 | 76 100 | 140 000 | 100 | 1 900 | 2 800 | 0.66 | 0.17 |
| **53310** | U 310 | 50 | 95 | 34.4 | 88 400 | 173 000 | 160 | 1 800 | 2 600 | 0.97 | 0.23 |
| **53311** | U 311 | 55 | 105 | 39.3 | 104 000 | 208 000 | 220 | 1 600 | 2 200 | 1.40 | 0.28 |
| **53312** | U 312 | 60 | 110 | 38.3 | 101 000 | 208 000 | 220 | 1 600 | 2 200 | 1.40 | 0.31 |
| **53313** | U 313 | 65 | 115 | 39.4 | 106 000 | 220 000 | 250 | 1 500 | 2 000 | 1.55 | 0.34 |
| **53314** | U 314 | 70 | 125 | 44.2 | 135 000 | 300 000 | 470 | 1 400 | 1 900 | 2.10 | 0.41 |
| **53315** | U 315 | 75 | 135 | 48.1 | 163 000 | 360 000 | 670 | 1 200 | 1 700 | 2.65 | 0.55 |
| **53316** | U 316 | 80 | 140 | 47.6 | 159 000 | 360 000 | 670 | 1 200 | 1 700 | 2.75 | 0.57 |
| **53317** | U 317 | 85 | 150 | 53.1 | 190 000 | 425 000 | 940 | 1 100 | 1 600 | 3.55 | 0.81 |
| **53318** | U 318 | 90 | 155 | 54.6 | 195 000 | 465 000 | 1 100 | 1 000 | 1 500 | 3.85 | 0.84 |
| **53320** | U 320 | 100 | 170 | 59.2 | 229 000 | 560 000 | 1 600 | 950 | 1 400 | 5.00 | 0.95 |
| **53322** | U 322 | 110 | 190 | 67.2 | 276 000 | 720 000 | 2 700 | 850 | 1 200 | 7.80 | 1.30 |
| **53324** | U 324 | 120 | 210 | 74.1 | 325 000 | 915 000 | 4 400 | 800 | 1 100 | 10.5 | 2.00 |

## 534 HEAVY SERIES

METRIC SIZES

ISO DIMENSION SERIES 14

| | | | | | | | | | | | |
|---|---|---|---|---|---|---|---|---|---|---|---|
| **53408** | U 408 | 40 | 90 | 38.2 | 112 000 | 204 000 | 220 | 1 700 | 2 400 | 1.10 | 0.25 |
| **53409** | U 409 | 45 | 100 | 42.4 | 130 000 | 240 000 | 300 | 1 600 | 2 000 | 1.45 | 0.32 |
| **53410** | U 410 | 50 | 110 | 45.6 | 159 000 | 310 000 | 500 | 1 500 | 2 000 | 1.90 | 0.41 |
| **53412** | U 412 | 60 | 130 | 54 | 199 000 | 400 000 | 830 | 1 100 | 1 600 | 3.10 | 0.71 |
| **53414** | U 141 | 70 | 150 | 63.6 | 234 000 | 500 000 | 1 300 | 950 | 1 400 | 5.50 | 1.00 |
| **53415** | U 415 | 75 | 160 | 69 | 251 000 | 560 000 | 1 600 | 900 | 1 300 | 6.85 | 1.25 |
| **53416** | U 416 | 80 | 170 | 72.2 | 270 000 | 620 000 | 2 000 | 850 | 1 200 | 8.00 | 1.40 |
| **53418** | U 418 | 90 | 190 | 81.2 | 307 000 | 750 000 | 2 900 | 800 | 1 100 | 11.0 | 1.90 |
| **53420** | U 420 | 100 | 210 | 90 | 371 000 | 965 000 | 4 800 | 700 | 950 | 15.0 | 2.90 |

**Please check availability**

# Single direction thrust ball bearings with spherical housing washers

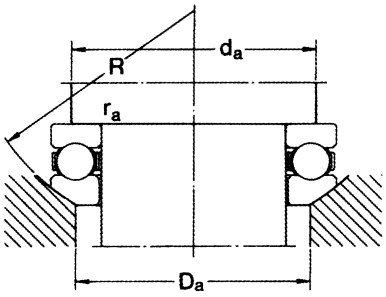


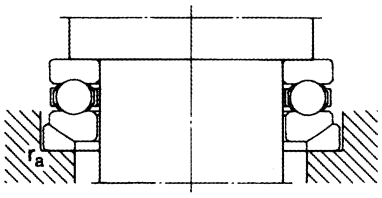


**Dimensions millimetres**

**Shaft and housing dimensions millimetres**

| d | $d_1$ | $D_1$ | $D_2$ | $D_3$ | C | $H_1$ | R | s | r1 2 min | $d_a$ min | $D_a$ max | $r_a$ max |
|---|---|---|---|---|---|---|---|---|---|---|---|---|
| 30 | 60 | 32 | 45 | 62 | 7 | 25 | 50 | 22 | 1 | 48 | 45 | 1 |
| 35 | 68 | 37 | 52 | 72 | 7.5 | 28 | 56 | 24 | 1 | 55 | 52 | 1 |
| 40 | 78 | 42 | 60 | 82 | 8.5 | 31 | 64 | 28 | 1 | 63 | 60 | 1 |
| 45 | 85 | 47 | 65 | 90 | 10 | 33 | 64 | 25 | 1 | 69 | 65 | 1 |
| 50 | 95 | 52 | 72 | 100 | 11 | 37 | 72 | 28 | 1.1 | 77 | 72 | 1 |
| 55 | 105 | 57 | 80 | 110 | 11.5 | 42 | 80 | 30 | 1.1 | 85 | 80 | 1 |
| 60 | 110 | 62 | 85 | 115 | 11.5 | 42 | 90 | 41 | 1.1 | 90 | 85 | 1 |
| 65 | 115 | 67 | 90 | 120 | 12.5 | 43 | 90 | 38.5 | 1.1 | 95 | 90 | 1 |
| 70 | 125 | 72 | 98 | 130 | 13 | 48 | 100 | 43 | 1.1 | 103 | 98 | 1 |
| 75 | 135 | 77 | 105 | 140 | 15 | 52 | 100 | 37 | 1.5 | 111 | 105 | 1.5 |
| 80 | 140 | 82 | 110 | 145 | 15 | 52 | 112 | 50 | 1.5 | 116 | 110 | 1.5 |
| 85 | 150 | 88 | 115 | 155 | 17.5 | 58 | 112 | 43 | 1.5 | 124 | 115 | 1.5 |
| 90 | 155 | 93 | 120 | 160 | 18 | 59 | 112 | 40 | 1.5 | 129 | 120 | 1.5 |
| 100 | 170 | 103 | 135 | 175 | 18 | 64 | 125 | 46 | 1.5 | 142 | 135 | 1.5 |
| 110 | 187 | 113 | 150 | 195 | 20.5 | 72 | 140 | 51 | 2 | 158 | 150 | 2 |
| 120 | 205 | 123 | 165 | 220 | 22 | 80 | 160 | 63 | 2.1 | 173 | 165 | 2 |
| 40 | 90 | 42 | 65 | 95 | 12 | 42 | 72 | 26 | 1.1 | 70 | 65 | 1 |
| 45 | 100 | 47 | 72 | 105 | 12.5 | 46 | 80 | 29 | 1.1 | 78 | 72 | 1 |
| 50 | 110 | 52 | 80 | 115 | 14 | 50 | 90 | 35 | 1.5 | 86 | 80 | 1.5 |
| 60 | 130 | 62 | 95 | 135 | 16 | 58 | 100 | 34 | 1.5 | 102 | 95 | 1.5 |
| 70 | 150 | 73 | 110 | 155 | 19.5 | 69 | 112 | 34 | 2 | 118 | 110 | 2 |
| 75 | 160 | 78 | 115 | 165 | 21 | 75 | 125 | 42 | 2 | 126 | 115 | 2 |
| 80 | 170 | 83 | 125 | 175 | 22 | 78 | 125 | 36 | 2.1 | 133 | 125 | 2 |
| 90 | 187 | 93 | 140 | 195 | 25.5 | 88 | 140 | 40 | 2.1 | 149 | 140 | 2 |
| 100 | 205 | 103 | 155 | 220 | 27 | 98 | 160 | 50 | 3 | 165 | 155 | 2.5 |

**Larger sizes are available on request**

# Double direction thrust ball bearings with spherical housing washers

## 542 LIGHT SERIES

METRIC SIZES

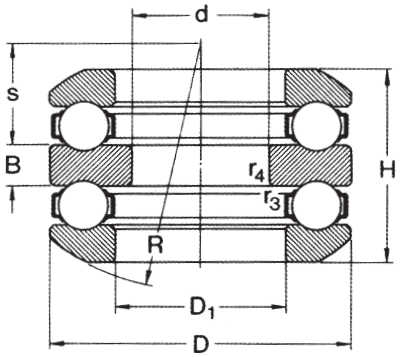


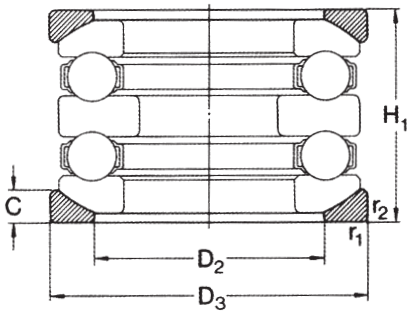


ISO DIMENSION SERIES 22

| RKB designation basic | washer bearing | Dimensions millimetres d | D | H | RKB load ratings† newtons dynamic $C_a$ | static $C_{oa}$ | Factor A | Normal limiting speeds rev/min grease | oil | Weight washer basic bearing Kg | approx |
|---|---|---|---|---|---|---|---|---|---|---|---|
| **54207** | U 207 | 30 | 62 | 37.8 | 35 100 | 67 000 | 23 | 3 000 | 4 000 | 0.42 | 0.057 |
| **54208** | U 208 | 30 | 68 | 38.6 | 46 800 | 98 000 | 49 | 2 800 | 3 800 | 0.56 | 0.070 |
| **54211** | U 211 | 45 | 90 | 49.6 | 61 800 | 134 000 | 93 | 1 900 | 2 800 | 1.15 | 0.15 |

## 543 MEDIUM SERIES

METRIC SIZES

ISO DIMENSION SERIES 23

| | | | | | | | | | | | |
|---|---|---|---|---|---|---|---|---|---|---|---|
| **54306** | U 306 | 25 | 60 | 41.3 | 37 700 | 65 500 | 22 | 2 800 | 3 800 | 0.47 | 0.056 |
| **54307** | U 307 | 30 | 68 | 47.2 | 49 400 | 88 000 | 40 | 2 400 | 3 400 | 0.68 | 0.084 |
| **54308** | U 308 | 30 | 78 | 54.1 | 61 800 | 112 000 | 65 | 2 000 | 3 000 | 1.05 | 0.12 |
| **54309** | U 309 | 35 | 85 | 56.3 | 76 100 | 140 000 | 100 | 1 900 | 2 800 | 1.25 | 0.17 |
| **54310** | U 310 | 40 | 95 | 64.7 | 88 400 | 173 000 | 160 | 1 800 | 2 600 | 1.85 | 0.23 |
| **54312** | U 312 | 50 | 110 | 70.7 | 101 000 | 208 000 | 220 | 1 600 | 2 200 | 2.60 | 0.31 |
| **54316** | U 316 | 65 | 140 | 86.1 | 159 000 | 360 000 | 670 | 1 200 | 1 700 | 5.05 | 0.57 |
| **54317** | U 317 | 70 | 150 | 92.5 | 190 000 | 425 000 | 940 | 1 100 | 1 600 | 6.35 | 0.813 |

## 544 HEAVY SERIES

METRIC SIZES

ISO DIMENSION SERIES 24

| | | | | | | | | | | | |
|---|---|---|---|---|---|---|---|---|---|---|---|
| **54409** | U 409 | 35 | 100 | 78.9 | 130 000 | 240 000 | 300 | 1 600 | 2 200 | 2.70 | 0.32 |
| **54410** | U 410 | 40 | 110 | 83.2 | 159 000 | 310 000 | 500 | 1 500 | 2 000 | 3.55 | 0.46 |
| **54416** | U 416 | 65 | 170 | 128.5 | 270 000 | 620 000 | 2 000 | 850 | 1 200 | 14.0 | 1.40 |
| **54420** | U 420 | 80 | 210 | 159.9 | 371 000 | 965 000 | 4 800 | 700 | 950 | 26.0 | 2.90 |

**Please check availability**

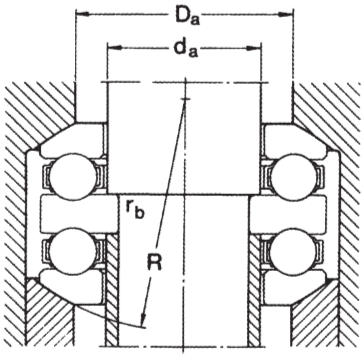


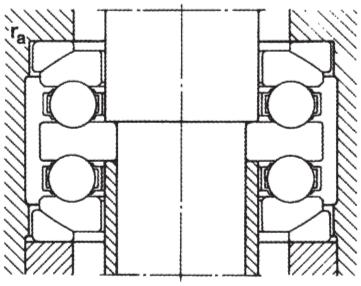


**Dimensions**
**millimetres**

**Shaft and housing dimensions**
**millimetres**

| d | $D_1$ | $D_2$ | $D_3$ | B | C | $H_1$ | R | s | r1 2 min | r3 4 min | $d_a$ max | $D_a$ max | $r_a$ max | $r_b$ min |
|---|---|---|---|---|---|---|---|---|---|---|---|---|---|---|
| 30 | 37 | 48 | 65 | 8 | 7 | 42 | 50 | 21 | 1 | 0.3 | 35 | 48 | 1 | 0.3 |
| 30 | 42 | 55 | 72 | 9 | 7 | 44 | 56 | 25 | 1 | 0.6 | 40 | 55 | 1 | 0.6 |
| 45 | 57 | 72 | 95 | 10 | 9 | 55 | 72 | 32.5 | 1 | 0.6 | 55 | 72 | 1 | 0.6 |
| 25 | 32 | 45 | 62 | 9 | 7 | 46 | 50 | 19.5 | 1 | 0.3 | 30 | 45 | 1 | 0.3 |
| 30 | 37 | 52 | 72 | 10 | 7.5 | 52 | 56 | 21 | 1 | 0.3 | 35 | 52 | 1 | 0.3 |
| 30 | 42 | 60 | 82 | 12 | 8.5 | 59 | 64 | 23.5 | 1 | 0.6 | 40 | 60 | 1 | 0.6 |
| 35 | 47 | 65 | 90 | 12 | 10 | 62 | 64 | 21 | 1 | 0.6 | 45 | 65 | 1 | 0.6 |
| 40 | 52 | 72 | 100 | 14 | 11 | 70 | 72 | 23 | 1.1 | 0.6 | 50 | 72 | 1 | 0.6 |
| 50 | 62 | 85 | 115 | 15 | 11.5 | 78 | 90 | 36.5 | 1.1 | 0.6 | 60 | 85 | 1 | 0.6 |
| 65 | 82 | 110 | 145 | 18 | 15 | 95 | 112 | 45.5 | 1.5 | 1 | 80 | 110 | 1.5 | 1 |
| 70 | 88 | 115 | 155 | 19 | 17.5 | 105 | 112 | 39 | 1.5 | 1 | 85 | 115 | 1.5 | 1 |
| 35 | 47 | 72 | 105 | 17 | 12.5 | 86 | 80 | 23.5 | 1.1 | 0.6 | 45 | 72 | 1 | 0.6 |
| 40 | 52 | 80 | 115 | 18 | 14 | 92 | 90 | 30 | 1.5 | 0.6 | 50 | 80 | 1.5 | 0.6 |
| 65 | 83 | 125 | 175 | 27 | 22 | 140 | 125 | 30.5 | 2.1 | 1 | 80 | 125 | 2 | 1 |
| 80 | 103 | 155 | 220 | 33 | 27 | 176 | 160 | 43.5 | 3 | 1.1 | 100 | 155 | 2.5 | 1 |

RKB

# Single row cylindrical roller bearings

## NJ 2 LIGHT SERIES

METRIC SIZES

ISO DIMENSION SERIES 02

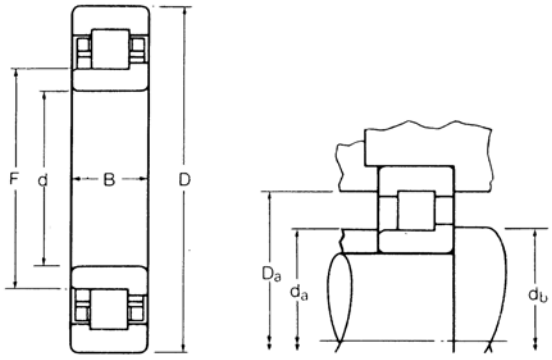


| RKB designation | Dimensions millimetres | | | | RKB load ratings† newtons | | Normal limiting speeds rev/min | | Weight kg | Shaft and housing dimensions millimetres | | | | | |
|---|---|---|---|---|---|---|---|---|---|---|---|---|---|---|---|
| | | | | | dynamic | static | grease | oil | approx | max fillet radius | $d_a$ min | $d_a$ max | $d_b$ max | $D_a$ min | $D_a$ max |
| | d | D | B | F | $C_r$ | $C_{or}$ | | | | | | | | | |
| **NJ 200** | 10 | 30 | 9 | 14,4 | 9 650 | 6 650 | 23 500 | 32 000 | 0,038 | 0,6 | 12,4 | 14,2 | 15,8 | 24,1 | 27,6 |
| **NJ 201** | 12 | 32 | 10 | 17,2 | 8 400 | 6 150 | 12 100 | 24 000 | 0,045 | 0,6 | 14,4 | 17,0 | 18,3 | 25,9 | 29,6 |
| **NJ 202** | 15 | 35 | 11 | 20,2 | 9 800 | 7 750 | 10 900 | 22 000 | 0,055 | 0,6 | 17,4 | 20,1 | 21,3 | 28,7 | 32,6 |
| **NJ 203** | 17 | 40 | 12 | 22,9 | 11 600 | 9 050 | 18 000 | 24 000 | 0,073 | 0,6 | 19,4 | 22,8 | 24,2 | 32,8 | 37,6 |
| **NJ 204** | 20 | 47 | 14 | 27,0 | 22 800 | 19 400 | 15 500 | 20 500 | 0,116 | 1,0 | 24,0 | 26,9 | 28,3 | 39,7 | 43,0 |
| **NJ 205** | 25 | 52 | 15 | 32,0 | 24 500 | 22 100 | 13 600 | 18 500 | 0,141 | 1,0 | 29,0 | 31,9 | 33,3 | 44,7 | 48,0 |
| **NJ 206** | 30 | 62 | 16 | 38,5 | 33 100 | 31 300 | 11 600 | 15 500 | 0,220 | 1,0 | 34,0 | 38,4 | 40,0 | 53,0 | 58,0 |
| **NJ 207** | 35 | 72 | 17 | 43,8 | 42 100 | 38 300 | 10 100 | 13 700 | 0,305 | 1,0 | 39,0 | 43,7 | 45,7 | 61,9 | 68,0 |
| **NJ 208** | 40 | 80 | 18 | 50,0 | 47 700 | 46 300 | 9 100 | 12 300 | 0,406 | 1,0 | 44,0 | 49,9 | 51,9 | 68,1 | 76,0 |
| **NJ 209** | 45 | 85 | 19 | 55,0 | 54 000 | 56 000 | 8 500 | 11 400 | 0,463 | 1,0 | 49,0 | 54,9 | 57,4 | 73,1 | 81,0 |
| **NJ 210** | 50 | 90 | 20 | 60,4 | 56 500 | 60 500 | 7 800 | 10 600 | 0,531 | 1,0 | 54,0 | 60,3 | 62,3 | 78,5 | 86,0 |
| **NJ 211** | 55 | 100 | 21 | 66,5 | 72 000 | 79 000 | 7 100 | 9 600 | 0,699 | 1,5 | 61,0 | 66,4 | 68,6 | 86,4 | 94,0 |
| **NJ 212** | 60 | 110 | 22 | 73,5 | 81 000 | 85 500 | 6 300 | 8 600 | 0,866 | 1,5 | 66,0 | 73,4 | 76,0 | 97,0 | 104,0 |
| **NJ 213** | 65 | 120 | 23 | 79,6 | 92 000 | 98 000 | 5 800 | 7 900 | 1,17 | 1,5 | 71,0 | 79,2 | 82,6 | 104,8 | 114,0 |
| **NJ 214** | 70 | 125 | 24 | 84,5 | 102 000 | 114 000 | 5 500 | 7 500 | 1,32 | 1,5 | 76,0 | 84,3 | 87,4 | 109,5 | 119,0 |
| **NJ 215** | 75 | 130 | 25 | 88,5 | 107 000 | 122 000 | 5 300 | 7 200 | 1,44 | 1,5 | 81,0 | 88,4 | 91,4 | 113,3 | 124,0 |
| **NJ 216** | 80 | 140 | 26 | 95,3 | 108 000 | 121 000 | 4 200 | 5 200 | 1,75 | 2,0 | 88,0 | 95,0 | 98,6 | 120,4 | 132,0 |
| **NJ 217** | 85 | 150 | 28 | 101,8 | 122 000 | 137 000 | 3 900 | 4 800 | 2,15 | 2,0 | 93,0 | 101,6 | 105,4 | 129,8 | 142,0 |
| **NJ 218** | 90 | 160 | 30 | 107,0 | 168 000 | 189 000 | 4 200 | 5 700 | 2,41 | 2,0 | 98,0 | 106,9 | 110,7 | 141,3 | 152,0 |
| **NJ 219** | 95 | 170 | 32 | 113,5 | 185 000 | 217 000 | 4 000 | 5 400 | 3,23 | 2,0 | 103,0 | 113,3 | 118,1 | 146,8 | 162,0 |
| **NJ 220** | 100 | 180 | 34 | 120,0 | 191 000 | 231 000 | 3 800 | 5 100 | 3,88 | 2,0 | 108,0 | 119,8 | 124,7 | 153,3 | 172,0 |
| **NJ 222** | 110 | 200 | 38 | 132,5 | 266 000 | 311 000 | 3 300 | 4 500 | 4,91 | 2,0 | 118,0 | 131,1 | 136,9 | 173,0 | 192,0 |
| **NJ 224** | 120 | 215 | 40 | 143,5 | 290 000 | 358 000 | 2 000 | 3 300 | 6,80 | 2,0 | 128,0 | 143,2 | 149,4 | 185,1 | 207,0 |
| **NJ 226** | 130 | 230 | 40 | 156,0 | 299 000 | 381 000 | 1 800 | 3 100 | 7,44 | 2,5 | 140,0 | 155,7 | 161,8 | 198,9 | 220,0 |
| **NJ 228** | 140 | 250 | 42 | 172,3 | 334 000 | 413 000 | 1 600 | 2 800 | 9,30 | 2,5 | 150,0 | 172,1 | 175,5 | 221,2 | 240,0 |
| **NJ 230** | 150 | 270 | 45 | 182,0 | 404 000 | 518 000 | 2 300 | 3 100 | 11,9 | 2,5 | 160,0 | 181,8 | 189,0 | 232,2 | 260,0 |
| **NJ 232** | 160 | 290 | 48 | 195,0 | 445 000 | 578 000 | 1 400 | 2 300 | 14,8 | 2,5 | 170,0 | 194,8 | 202,4 | 249,2 | 280,0 |
| **NJ 234** | 170 | 310 | 52 | 208,0 | 508 000 | 675 000 | 1 300 | 2 100 | 18,2 | 3,0 | 182,0 | 207,7 | 215,9 | 263,3 | 298,0 |
| **NJ 236** | 180 | 320 | 52 | 218,0 | 525 000 | 713 000 | 1 200 | 2 000 | 18,9 | 3,0 | 192,0 | 217,9 | 225,8 | 273,8 | 308,0 |
| **NJ 238** | 190 | 340 | 55 | 231,0 | 713 000 | 955 000 | 1 100 | 1 900 | 23,4 | 3,0 | 202,0 | 230,8 | 239,5 | 292,3 | 328,0 |
| **NJ 240** | 200 | 360 | 58 | 244,0 | 681 000 | 939 000 | 1 000 | 1 800 | 27,2 | 3,0 | 212,0 | 243,8 | 253,0 | 306,1 | 348,0 |

**Larger sizes are available on request**

**Please check availability**

# Single row cylindrical roller bearings

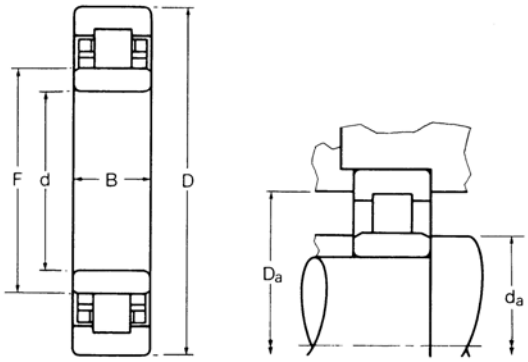


LIGHT SERIES **NU 2**

METRIC SIZES

ISO DIMENSION SERIES 02

| RKB designation | Dimensions millimetres | | | | RKB load ratings† newtons | | Normal limiting speeds rev/min | | Weight kg | Shaft and housing dimensions millimetres | | | | |
|---|---|---|---|---|---|---|---|---|---|---|---|---|---|---|
| | | | | | dynamic | static | grease | oil | approx | max fillet radius | $d_a$ min | $d_a$ max | $D_a$ min | $D_a$ max |
| | d | D | B | F | $C_r$ | $C_{or}$ | | | | | | | | |
| **NU 200** | 10 | 30 | 9 | 14,4 | 9 650 | 6 650 | 23 500 | 32 000 | 0,037 | 0,6 | 12,4 | 14,2 | 24,1 | 27,6 |
| **NU 201** | 12 | 32 | 10 | 17,2 | 8 400 | 6 150 | 12 100 | 24 000 | 0,044 | 0,6 | 14,4 | 17,0 | 25,9 | 29,6 |
| **NU 202** | 15 | 35 | 11 | 20,2 | 9 800 | 7 750 | 10 900 | 22 000 | 0,054 | 0,6 | 17,4 | 20,1 | 28,7 | 32,6 |
| **NU 203** | 17 | 40 | 12 | 22,9 | 11 600 | 9 050 | 18 000 | 24 000 | 0,071 | 0,6 | 19,4 | 22,8 | 32,8 | 37,6 |
| **NU 204** | 20 | 47 | 14 | 27,0 | 22 800 | 19 400 | 15 500 | 20 500 | 0,113 | 1,0 | 24,0 | 26,9 | 39,7 | 43,0 |
| **NU 205** | 25 | 52 | 15 | 32,0 | 24 500 | 22 100 | 13 600 | 18 500 | 0,137 | 1,0 | 29,0 | 31,9 | 44,7 | 48,0 |
| **NU 206** | 30 | 62 | 16 | 38,5 | 33 100 | 31 300 | 11 600 | 15 500 | 0,215 | 1,0 | 34,0 | 38,4 | 53,0 | 58,0 |
| **NU 207** | 35 | 72 | 17 | 43,8 | 42 100 | 38 300 | 10 100 | 13 700 | 0,299 | 1,0 | 39,0 | 43,7 | 61,9 | 68,0 |
| **NU 208** | 40 | 80 | 18 | 50,0 | 47 700 | 46 300 | 9 100 | 12 300 | 0,397 | 1,0 | 44,0 | 49,9 | 68,1 | 76,0 |
| **NU 209** | 45 | 85 | 19 | 55,0 | 54 000 | 56 000 | 8 500 | 11 400 | 0,454 | 1,0 | 49,0 | 54,9 | 73,1 | 81,0 |
| **NU 210** | 50 | 90 | 20 | 60,4 | 56 500 | 60 500 | 7 800 | 10 600 | 0,517 | 1,0 | 54,0 | 60,3 | 78,5 | 86,0 |
| **NU 211** | 55 | 100 | 21 | 66,5 | 72 000 | 79 000 | 7 100 | 9 600 | 0,685 | 1,5 | 61,0 | 66,4 | 86,4 | 94,0 |
| **NU 212** | 60 | 110 | 22 | 73,5 | 81 000 | 85 500 | 6 300 | 8 600 | 0,844 | 1,5 | 66,0 | 73,4 | 97,0 | 104,0 |
| **NU 213** | 65 | 120 | 23 | 79,6 | 92 000 | 98 000 | 5 800 | 7 900 | 1,13 | 1,5 | 71,0 | 79,2 | 104,8 | 114,0 |
| **NU 214** | 70 | 125 | 24 | 84,5 | 102 000 | 114 000 | 5 500 | 7 500 | 1,28 | 1,5 | 76,0 | 84,3 | 109,5 | 119,0 |
| **NU 215** | 75 | 130 | 25 | 88,5 | 107 000 | 122 000 | 5 300 | 7 200 | 1,40 | 1,5 | 81,0 | 88,4 | 113,3 | 124,0 |
| **NU 216** | 80 | 140 | 26 | 95,3 | 108 000 | 121 000 | 4 200 | 5 200 | 1,70 | 2,0 | 88,0 | 95,0 | 120,4 | 132,0 |
| **NU 217** | 85 | 150 | 28 | 101,8 | 122 000 | 137 000 | 3 900 | 4 800 | 2,10 | 2,0 | 93,0 | 101,6 | 129,8 | 142,0 |
| **NU 218** | 90 | 160 | 30 | 107,0 | 168 000 | 189 000 | 4 200 | 5 700 | 2,36 | 2,0 | 98,0 | 106,9 | 141,3 | 152,0 |
| **NU 219** | 95 | 170 | 32 | 113,5 | 185 000 | 217 000 | 4 000 | 5 400 | 3,14 | 2,0 | 103,0 | 113,3 | 146,8 | 162,0 |
| **NU 220** | 100 | 180 | 34 | 120,0 | 191 000 | 231 000 | 3 800 | 5 100 | 3,78 | 2,0 | 108,0 | 119,8 | 153,3 | 172,0 |
| **NU 222** | 110 | 200 | 38 | 132,5 | 266 000 | 311 000 | 3 300 | 4 500 | 4,81 | 2,0 | 118,0 | 132,4 | 173,0 | 192,0 |
| **NU 224** | 120 | 215 | 40 | 143,5 | 290 000 | 358 000 | 2 000 | 3 300 | 6 35 | 2,0 | 128,0 | 143,2 | 185,1 | 207,0 |
| **NU 226** | 130 | 230 | 40 | 156,0 | 299 000 | 381 000 | 1 800 | 3 100 | 7,26 | 2,5 | 140,0 | 155,7 | 198,9 | 220,0 |
| **NU 228** | 140 | 250 | 42 | 172,3 | 334 000 | 413 000 | 1 600 | 2 800 | 9,07 | 2,5 | 150,0 | 172,1 | 221,2 | 240,0 |
| **NU 230** | 150 | 270 | 45 | 182,0 | 404 000 | 518 000 | 2 300 | 3 100 | 11,6 | 2,5 | 160,0 | 181,8 | 232,2 | 260,0 |
| **NU 232** | 160 | 290 | 48 | 195,0 | 445 000 | 578 000 | 1 400 | 2 300 | 14,5 | 2,5 | 170,0 | 194,8 | 249,2 | 280,0 |
| **NU 234** | 170 | 310 | 52 | 208,0 | 508 000 | 675 000 | 1 300 | 2 100 | 17,8 | 3,0 | 182,0 | 207,7 | 263,3 | 298,0 |
| **NU 236** | 180 | 320 | 52 | 218,0 | 525 000 | 713 000 | 1 200 | 2 000 | 18,4 | 3,0 | 192,0 | 217,9 | 273,8 | 308,0 |
| **NU 238** | 190 | 340 | 55 | 231,0 | 713 000 | 955 000 | 1 100 | 1 900 | 22,8 | 3,0 | 202,0 | 230,8 | 292,3 | 328,0 |
| **NU 240** | 200 | 360 | 58 | 244,0 | 681 000 | 939 000 | 1 000 | 1 800 | 26,6 | 3,0 | 212,0 | 243,8 | 306,1 | 348,0 |

**Larger sizes are available on request**

**Please check availability**

# Single row cylindrical roller bearings

## N 2 LIGHT SERIES

METRIC SIZES

ISO DIMENSION SERIES 02

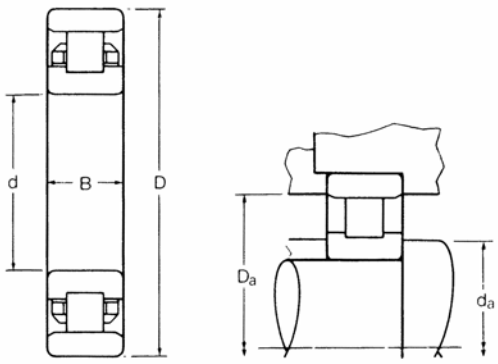


| RKB designation | Dimensions millimetres | | | RKB load ratings† newtons | | Normal limiting speeds rev/min | | Weight kg | Shaft and housing dimensions millimetres | | | | |
|---|---|---|---|---|---|---|---|---|---|---|---|---|---|
| | | | | dynamic | static | grease | oil | approx | max fillet radius | $d_a$ min | $d_a$ max | $D_a$ min | $D_a$ max |
| | d | D | B | $C_r$ | $C_{or}$ | | | | | | | | |
| N 200 | 10 | 30 | 9 | 8 300 | 6 000 | 14 200 | 23 500 | 0,029 | 0,6 | 12,4 | 16,5 | 25,1 | 27,6 |
| N 201 | 12 | 32 | 10 | 8 400 | 6 150 | 13 200 | 22 000 | 0,030 | 0,6 | 14,4 | 18,3 | 26,9 | 29,6 |
| N 202 | 15 | 35 | 11 | 9 800 | 7 750 | 11 900 | 20 000 | 0,035 | 0,6 | 17,4 | 21,3 | 30,0 | 32,6 |
| N 203 | 17 | 40 | 12 | 11 600 | 9 050 | 18 000 | 24 000 | 0,070 | 0,6 | 19,4 | 24,2 | 34,0 | 37,6 |
| N 204 | 20 | 47 | 14 | 22 800 | 19 400 | 15 500 | 20 500 | 0,112 | 1,0 | 24,0 | 28,3 | 41,1 | 43,0 |
| N 205 | 25 | 52 | 15 | 24 500 | 22 100 | 13 600 | 18 500 | 0,135 | 1,0 | 29,0 | 33,3 | 46,1 | 48,0 |
| N 206 | 30 | 62 | 16 | 33 100 | 31 300 | 11 600 | 15 500 | 0,212 | 1,0 | 34,0 | 40,0 | 54,6 | 58,0 |
| N 207 | 35 | 72 | 17 | 42 100 | 38 300 | 10 100 | 13 700 | 0,294 | 1,0 | 39,0 | 45,7 | 63,9 | 68,0 |
| N 208 | 40 | 80 | 18 | 47 700 | 46 300 | 9 100 | 12 300 | 0,391 | 1,0 | 44,0 | 51,9 | 70,1 | 76,0 |
| N 209 | 45 | 85 | 19 | 54 000 | 56 000 | 8 500 | 11 400 | 0,450 | 1,0 | 49,0 | 57,4 | 75,1 | 81,0 |
| N 210 | 50 | 90 | 20 | 56 500 | 60 500 | 7 800 | 10 600 | 0,513 | 1,0 | 54,0 | 62,3 | 80,5 | 86,0 |
| N 211 | 55 | 100 | 21 | 72 000 | 79 000 | 7 100 | 9 600 | 0,676 | 1,5 | 61,0 | 68,6 | 88,6 | 94,0 |
| N 212 | 60 | 110 | 22 | 81 000 | 85 500 | 6 300 | 8 600 | 0,835 | 1,5 | 66,0 | 76,0 | 99,6 | 104,0 |
| N 213 | 65 | 120 | 23 | 92 000 | 98 000 | 3 500 | 5 900 | 1,08 | 1,5 | 71,0 | 81,8 | 106,9 | 114,0 |
| N 214 | 70 | 125 | 24 | 102 000 | 114 000 | 3 400 | 5 600 | 1,19 | 1,5 | 76,0 | 86,4 | 112,0 | 119,0 |
| N 215 | 75 | 130 | 25 | 107 000 | 122 000 | 3 200 | 5 300 | 1,28 | 1,5 | 81,0 | 91,7 | 116,8 | 124,0 |
| N 216 | 80 | 140 | 26 | 126 000 | 143 000 | 2 900 | 4 900 | 1,53 | 2,0 | 88,0 | 99,8 | 128,0 | 132,0 |
| N 217 | 85 | 150 | 28 | 142 000 | 167 000 | 2 700 | 4 600 | 2,15 | 2,0 | 93,0 | 104,4 | 135,1 | 142,0 |
| N 218 | 90 | 160 | 30 | 168 000 | 189 000 | 4 200 | 5 700 | 2,33 | 2,0 | 98,0 | 110,7 | 145,1 | 152,0 |
| N 219 | 95 | 170 | 32 | 185 000 | 217 000 | 2 400 | 4 000 | 2,93 | 2,0 | 103,0 | 118,1 | 151,6 | 162,0 |
| N 220 | 100 | 180 | 34 | 191 000 | 231 000 | 2 300 | 3 800 | 3,56 | 2,0 | 108,0 | 124,7 | 158,2 | 172,0 |
| N 221 | 105 | 190 | 36 | 246 000 | 293 000 | 2 100 | 3 500 | 4,25 | 2,0 | 113,0 | 132,1 | 171,5 | 182,0 |
| N 222 | 110 | 200 | 38 | 266 000 | 311 000 | 3 300 | 4 500 | 4,76 | 2,0 | 118,0 | 136,9 | 178,8 | 192,0 |
| N 224 | 120 | 215 | 40 | 290 000 | 358 000 | 1 800 | 3 000 | 6,26 | 2,0 | 128,0 | 149,4 | 191,3 | 207,0 |
| N 226 | 130 | 230 | 40 | 299 000 | 381 000 | 1 700 | 2 800 | 7,17 | 2,5 | 140,0 | 161,8 | 203,7 | 220,0 |
| N 228 | 140 | 250 | 42 | 364 000 | 461 000 | 1 500 | 2 500 | 8,98 | 2,5 | 150,0 | 175,5 | 226,6 | 240,0 |
| N 230 | 150 | 270 | 45 | 404 000 | 518 000 | 1 400 | 2 300 | 11,3 | 2,5 | 160,0 | 189,0 | 239,3 | 260,0 |
| N 232 | 160 | 290 | 48 | 445 000 | 578 000 | 1 300 | 2 100 | 14,0 | 2,5 | 170,0 | 202,4 | 255,5 | 280,0 |
| N 234 | 170 | 310 | 52 | 508 000 | 675 000 | 1 200 | 2 000 | 17,4 | 3,0 | 182,0 | 215,9 | 271,5 | 298,0 |
| N 236 | 180 | 320 | 52 | 525 000 | 713 000 | 1 100 | 1 900 | 18,1 | 3,0 | 192,0 | 225,8 | 281,7 | 308,0 |
| N 238 | 190 | 340 | 55 | 605 000 | 817 000 | 1 000 | 1 700 | 21,8 | 3,0 | 202,0 | 239,5 | 301,0 | 328,0 |
| N 240 | 200 | 360 | 58 | 681 000 | 939 000 | 950 | 1 600 | 25,9 | 3,0 | 212,0 | 253,0 | 317,3 | 348,0 |

**Larger sizes are available on request**

**Please check availability**

# Single row cylindrical roller bearings

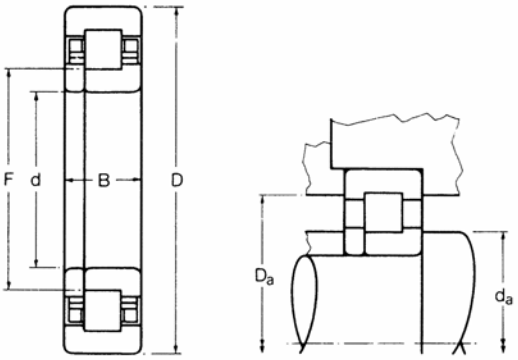


LIGHT SERIES **NUP 2**

METRIC SIZES

ISO DIMENSION SERIES 02

| RKB designation | Dimensions millimetres | | | | RKB load ratings† newtons | | Normal limiting speeds rev/min | | Weight kg | Shaft and housing dimensions millimetres | | | | |
|---|---|---|---|---|---|---|---|---|---|---|---|---|---|---|
| | | | | | dynamic | static | grease | oil | approx | max fillet | $d_a$ | | $D_a$ | |
| | d | D | B | F | $C_r$ | $C_{or}$ | | | | radius* | min | max | min | max |
| **NUP 200** | 10 | 30 | 9 | 14,4 | 9 650 | 6 650 | 23 500 | 32 000 | 0,039 | 0,6 | 12,4 | 15,8 | 24,1 | 27,6 |
| **NUP 201** | 12 | 32 | 10 | 17,2 | 8 400 | 6 150 | 12 100 | 24 000 | 0,046 | 0,6 | 14,4 | 18,3 | 25,9 | 29,6 |
| **NUP 202** | 15 | 35 | 11 | 20,2 | 9 800 | 7 750 | 10 900 | 22 000 | 0,058 | 0,6 | 17,4 | 21,3 | 28,7 | 32,6 |
| **NUP 203** | 17 | 40 | 12 | 22,9 | 11 600 | 9 050 | 18 000 | 24 000 | 0,075 | 0,6 | 19,4 | 24,2 | 32,8 | 37,6 |
| **NUP 204** | 20 | 47 | 14 | 27,0 | 22 800 | 19 400 | 15 500 | 20 500 | 0,118 | 1,0 | 24,0 | 28,3 | 39,7 | 43,0 |
| **NUP 205** | 25 | 52 | 15 | 32,0 | 24 500 | 22 100 | 13 600 | 18 500 | 0,144 | 1,0 | 29,0 | 33,3 | 44,7 | 48,0 |
| **NUP 206** | 30 | 62 | 16 | 38,5 | 33 100 | 31 300 | 11 600 | 15 500 | 0,225 | 1,0 | 34,0 | 40,0 | 53,0 | 58,0 |
| **NUP 207** | 35 | 72 | 17 | 43,8 | 42 100 | 38 300 | 10 100 | 13 700 | 0,312 | 1,0 | 39,0 | 45,7 | 61,9 | 68,0 |
| **NUP 208** | 40 | 80 | 18 | 50,0 | 47 700 | 46 300 | 9 100 | 12 300 | 0,415 | 1,0 | 44,0 | 51,9 | 68,1 | 76,0 |
| **NUP 209** | 45 | 85 | 19 | 55,0 | 54 000 | 56 000 | 8 500 | 11 400 | 0,475 | 1,0 | 49,0 | 57,4 | 73,1 | 81,0 |
| **NUP 210** | 50 | 90 | 20 | 60,4 | 56 500 | 60 500 | 7 800 | 10 600 | 0,540 | 1,0 | 54,0 | 62,3 | 78,5 | 86,0 |
| **NUP 211** | 55 | 100 | 21 | 66,5 | 72 000 | 79 000 | 7 100 | 9 600 | 0,712 | 1,5 | 61,0 | 68,6 | 86,4 | 94,0 |
| **NUP 212** | 60 | 110 | 22 | 73,5 | 81 000 | 85 500 | 6 300 | 8 600 | 0,885 | 1,5 | 66,0 | 76,0 | 97,0 | 104,0 |
| **NUP 213** | 65 | 120 | 23 | 79,6 | 92 000 | 98 000 | 3 800 | 6 500 | 1,20 | 1,5 | 71,0 | 82,6 | 102,6 | 114,0 |
| **NUP 214** | 70 | 125 | 24 | 84,5 | 102 000 | 114 000 | 5 600 | 7 600 | 1,36 | 1,5 | 76,0 | 87,4 | 106,9 | 119,0 |
| **NUP 215** | 75 | 130 | 25 | 88,5 | 107 000 | 122 000 | 5 400 | 7 300 | 1,48 | 1,5 | 81,0 | 91,4 | 111,0 | 124,0 |
| **NUP 216** | 80 | 140 | 26 | 95,3 | 108 000 | 121 000 | 4 900 | 6 700 | 1,80 | 2,0 | 88,0 | 98,6 | 120,4 | 132,0 |
| **NUP 217** | 85 | 150 | 28 | 101,8 | 122 000 | 137 000 | 4 600 | 6 200 | 2,22 | 2,0 | 93,0 | 105,4 | 129,8 | 142,0 |
| **NUP 218** | 90 | 160 | 30 | 107,0 | 168 000 | 189 000 | 4 200 | 5 700 | 2,46 | 2,0 | 98,0 | 110,7 | 141,3 | 152,0 |
| **NUP 219** | 95 | 170 | 32 | 113,5 | 185 000 | 217 000 | 4 000 | 5 400 | 3,31 | 2,0 | 103,0 | 118,1 | 146,8 | 162,0 |
| **NUP 220** | 100 | 180 | 34 | 120,0 | 191 000 | 231 000 | 3 800 | 5 100 | 3,99 | 2,0 | 108,0 | 124,7 | 153,3 | 172,0 |
| **NUP 222** | 110 | 200 | 38 | 132,5 | 266 000 | 311 000 | 3 300 | 4 500 | 5,01 | 2,0 | 118,0 | 136,9 | 173,0 | 192,0 |
| **NUP 224** | 120 | 215 | 40 | 143,5 | 290 000 | 358 000 | 2 000 | 3 300 | 6,67 | 2,0 | 128,0 | 149,4 | 185,1 | 207,0 |
| **NUP 226** | 130 | 230 | 40 | 156,0 | 299 000 | 381 000 | 1 800 | 3 100 | 7,62 | 2,5 | 140,0 | 161,8 | 198,9 | 220,0 |
| **NUP 228** | 140 | 250 | 42 | 172,3 | 334 000 | 413 000 | 1 600 | 2 800 | 9,48 | 2,5 | 150,0 | 175,5 | 221,2 | 240,0 |
| **NUP 230** | 150 | 270 | 45 | 182,0 | 404 000 | 518 000 | 2 300 | 3 100 | 12,2 | 2,5 | 160,0 | 189,0 | 232,2 | 260,0 |
| **NUP 232** | 160 | 290 | 48 | 195,0 | 445 000 | 578 000 | 1 400 | 2 300 | 15,2 | 2,5 | 170,0 | 202,4 | 249,2 | 280,0 |
| **NUP 234** | 170 | 310 | 52 | 208,0 | 508 000 | 675 000 | 1 300 | 2 100 | 18,6 | 3,0 | 182,0 | 215,9 | 263,3 | 298,0 |
| **NUP 236** | 180 | 320 | 52 | 218,0 | 525 000 | 713 000 | 1 200 | 2 000 | 19,3 | 3,0 | 192,0 | 225,8 | 273,8 | 308,0 |
| **NUP 238** | 190 | 340 | 55 | 231,0 | 713 000 | 955 000 | 1 100 | 1 900 | 23,8 | 3,0 | 202,0 | 239,5 | 292,3 | 328,0 |
| **NUP 240** | 200 | 360 | 58 | 244,0 | 681 000 | 939 000 | 1 000 | 1 800 | 27,7 | 3,0 | 212,0 | 253,0 | 306,1 | 348,0 |

**Larger sizes are available on request**

*Does not apply to the loose rib.

**Please check availability**

# Single row cylindrical roller bearings

## NF 2 LIGHT SERIES

METRIC SIZES

ISO DIMENSION SERIES 02

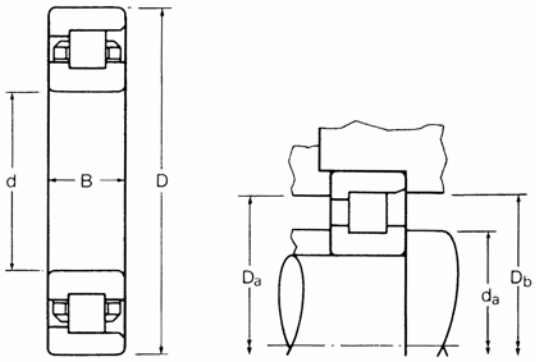


| RKB designation | Dimensions millimetres | | | RKB load ratings† newtons | | Normal limiting speeds rev/min | | Weight kg | Shaft and housing dimensions millimetres | | | | | |
|---|---|---|---|---|---|---|---|---|---|---|---|---|---|---|
| | | | | dynamic | static | grease | oil | approx | max fillet radius | $d_a$ min | $d_a$ max | $D_a$ min | $D_a$ max | $D_b$ min |
| | d | D | B | $C_r$ | $C_{or}$ | | | | | | | | | |
| NF 200 | 10 | 30 | 9 | 8 300 | 6 000 | 14 200 | 23 500 | 0,035 | 0,6 | 12,4 | 16,5 | 24,1 | 27,6 | 25,1 |
| NF 201 | 12 | 32 | 10 | 8 400 | 6 150 | 13 200 | 22 000 | 0,042 | 0,6 | 14,4 | 18,3 | 25,9 | 29,6 | 26,9 |
| NF 202 | 15 | 35 | 11 | 9 800 | 7 750 | 11 900 | 20 000 | 0,050 | 0,6 | 17,4 | 21,3 | 28,7 | 32,6 | 30,0 |
| NF 203 | 17 | 40 | 12 | 11 600 | 9 050 | 18 000 | 24 000 | 0,077 | 0,6 | 19,4 | 24,2 | 32,8 | 37,6 | 34,0 |
| NF 204 | 20 | 47 | 14 | 22 800 | 19 400 | 15 500 | 20 500 | 0,114 | 1,0 | 24,0 | 28,3 | 39,7 | 43,0 | 41,1 |
| NF 205 | 25 | 52 | 15 | 24 500 | 22 100 | 13 600 | 18 500 | 0,140 | 1,0 | 29,0 | 33,3 | 44,7 | 48,0 | 46,1 |
| NF 206 | 30 | 62 | 16 | 33 100 | 31 300 | 11 600 | 15 500 | 0,218 | 1,0 | 34,0 | 40,0 | 53,0 | 58,0 | 54,6 |
| NF 207 | 35 | 72 | 17 | 42 100 | 38 300 | 10 100 | 13 700 | 0,302 | 1,0 | 39,0 | 45,7 | 61,9 | 68,0 | 63,9 |
| NF 208 | 40 | 80 | 18 | 47 700 | 46 300 | 9 100 | 12 300 | 0,402 | 1,0 | 44,0 | 51,9 | 68,1 | 76,0 | 70,1 |
| NF 209 | 45 | 85 | 19 | 54 000 | 56 000 | 8 500 | 11 400 | 0,461 | 1,0 | 49,0 | 57,4 | 73,1 | 81,0 | 75,1 |
| NF 210 | 50 | 90 | 20 | 56 500 | 60 500 | 7 800 | 10 600 | 0,525 | 1,0 | 54,0 | 62,3 | 78,5 | 86,0 | 80,5 |
| NF 211 | 55 | 100 | 21 | 72 000 | 79 000 | 7 100 | 9 600 | 0,693 | 1,5 | 61,0 | 68,6 | 86,4 | 94,0 | 88,6 |
| NF 212 | 60 | 110 | 22 | 81 000 | 85 500 | 6 300 | 8 600 | 0,858 | 1,5 | 66,0 | 76,0 | 97,0 | 104,0 | 99,6 |
| NF 213 | 65 | 120 | 23 | 92 000 | 98 000 | 3 500 | 5 900 | 1,13 | 1,5 | 71,0 | 81,8 | 103,4 | 114,0 | 106,9 |
| NF 214 | 70 | 125 | 24 | 102 000 | 114 000 | 3 400 | 5 600 | 1,24 | 1,5 | 76,0 | 86,4 | 108,5 | 119,0 | 112,0 |
| NF 215 | 75 | 130 | 25 | 107 000 | 122 000 | 3 200 | 5 300 | 1,36 | 1,5 | 81,0 | 91,7 | 113,5 | 124,0 | 116,8 |
| NF 216 | 80 | 140 | 26 | 126 000 | 143 000 | 2 900 | 4 900 | 1,61 | 2,0 | 88,0 | 99,8 | 124,2 | 132,0 | 128,0 |
| NF 217 | 85 | 150 | 28 | 142 000 | 167 000 | 2 700 | 4 600 | 2,04 | 2,0 | 93,0 | 104,4 | 130,8 | 142,0 | 135,1 |
| NF 218 | 90 | 160 | 30 | 168 000 | 189 000 | 4 200 | 5 700 | 2,40 | 2,0 | 98,0 | 110,7 | 141,3 | 152,0 | 145,1 |
| NF 219 | 95 | 170 | 32 | 185 000 | 217 000 | 2 400 | 4 000 | 3,01 | 2,0 | 103,0 | 118,1 | 146,8 | 162,0 | 151,6 |
| NF 220 | 100 | 180 | 34 | 191 000 | 231 000 | 2 300 | 3 800 | 3,74 | 2,0 | 108,0 | 124,7 | 153,3 | 172,0 | 158,2 |
| NF 221 | 105 | 190 | 36 | 246 000 | 293 000 | 2 100 | 3 500 | 4,34 | 2,0 | 113,0 | 132,1 | 166,1 | 182,0 | 171,5 |
| NF 222 | 110 | 200 | 38 | 266 000 | 311 000 | 3 300 | 4 500 | 4,88 | 2,0 | 118,0 | 136,9 | 173,0 | 192,0 | 178,8 |
| NF 224 | 120 | 215 | 40 | 290 000 | 358 000 | 1 800 | 3 000 | 6,53 | 2,0 | 128,0 | 149,4 | 185,1 | 207,0 | 191,3 |
| NF 226 | 130 | 230 | 40 | 299 000 | 381 000 | 1 700 | 2 800 | 7,12 | 2,5 | 140,0 | 161,8 | 198,9 | 220,0 | 203,7 |
| NF 228 | 140 | 250 | 42 | 364 000 | 461 000 | 1 500 | 2 500 | 8,98 | 2,5 | 150,0 | 175,5 | 221,2 | 240,0 | 226,6 |
| NF 230 | 150 | 270 | 45 | 404 000 | 518 000 | 1 400 | 2 300 | 11,3 | 2,5 | 160,0 | 189,0 | 232,2 | 260,0 | 239,3 |
| NF 232 | 160 | 290 | 48 | 445 000 | 578 000 | 1 300 | 2 100 | 14,1 | 2,5 | 170,0 | 202,4 | 249,2 | 280,0 | 255,5 |
| NF 234 | 170 | 310 | 52 | 508 000 | 675 000 | 1 200 | 2 000 | 18,6 | 3,0 | 182,0 | 215,9 | 263,3 | 298,0 | 271,5 |
| NF 236 | 180 | 320 | 52 | 525 000 | 713 000 | 1 100 | 1 900 | 18,4 | 3,0 | 192,0 | 225,8 | 273,8 | 308,0 | 281,7 |
| NF 238 | 190 | 340 | 55 | 605 000 | 817 000 | 1 000 | 1 700 | 22,2 | 3,0 | 202,0 | 239,5 | 292,3 | 328,0 | 301,0 |
| NF 240 | 200 | 360 | 58 | 681 000 | 939 000 | 950 | 1 600 | 26,3 | 3,0 | 212,0 | 253,0 | 306,1 | 348,0 | 317,3 |

**Larger sizes are available on request**

**Please check availability**

# Single row cylindrical roller bearings

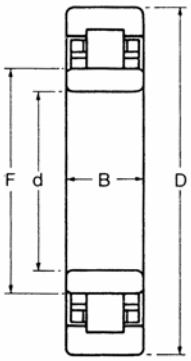


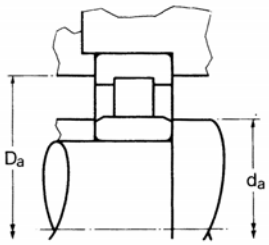


## NU 3 MEDIUM SERIES

METRIC SIZES

ISO DIMENSION SERIES 03

| RKB designation | Dimensions millimetres | | | | RKB load ratings† newtons | | Normal limiting speeds rev/min | | Weight kg | Shaft and housing dimensions millimetres | | | | |
|---|---|---|---|---|---|---|---|---|---|---|---|---|---|---|
| | | | | | dynamic | static | grease | oil | approx | max fillet | $d_a$ | | $D_a$ | |
| | d | D | B | F | $C_r$ | $C_{or}$ | | | | radius | min | max | min | max |
| NU 300 | 10 | 35 | 11 | 16,9 | 10 700 | 7 800 | 11 900 | 24 000 | 0,063 | 0,6 | 12,4 | 16,7 | 26,9 | 32,6 |
| NU 301 | 12 | 37 | 12 | 18,9 | 11 700 | 8 850 | 20 000 | 27 000 | 0,075 | 1,0 | 16,0 | 18,7 | 28,7 | 33,0 |
| NU 302 | 15 | 42 | 13 | 22,1 | 14 200 | 10 700 | 18 000 | 24 000 | 0,099 | 1,0 | 19,0 | 22,1 | 33,5 | 38,0 |
| NU 303 | 17 | 47 | 14 | 24,9 | 18 800 | 14 800 | 16 000 | 22 000 | 0,130 | 1,0 | 21,0 | 24,9 | 37,6 | 43,0 |
| NU 304 | 20 | 52 | 15 | 28,5 | 26 600 | 22 100 | 14 400 | 19 500 | 0,158 | 1,0 | 24,0 | 28,4 | 43,0 | 48,0 |
| NU 305 | 25 | 62 | 17 | 35,0 | 35 000 | 30 600 | 12 200 | 16 500 | 0,250 | 1,0 | 29,0 | 34,9 | 51,3 | 58,0 |
| NU 306 | 30 | 72 | 19 | 42,0 | 45 500 | 41 900 | 10 500 | 14 100 | 0,378 | 1,0 | 34,0 | 41,9 | 60,1 | 68,0 |
| NU 307 | 35 | 80 | 21 | 46,2 | 58 000 | 52 500 | 9 400 | 12 700 | 0,485 | 1,5 | 41,0 | 46,1 | 67,9 | 74,0 |
| NU 308 | 40 | 90 | 23 | 53,5 | 72 500 | 68 500 | 8 300 | 11 200 | 0,676 | 1,5 | 46,0 | 53,4 | 77,0 | 84,0 |
| NU 309 | 45 | 100 | 25 | 58,5 | 82 000 | 78 500 | 7 600 | 10 300 | 0,912 | 1,5 | 51,0 | 58,4 | 83,8 | 94,0 |
| NU 310 | 50 | 110 | 27 | 65,0 | 98 500 | 94 500 | 6 800 | 9 200 | 1,16 | 2,0 | 58,0 | 64,9 | 93,9 | 102,0 |
| NU 311 | 55 | 120 | 29 | 70,5 | 111 000 | 108 000 | 6 200 | 8 400 | 1,62 | 2,0 | 63,0 | 70,3 | 102,9 | 112,0 |
| NU 312 | 60 | 130 | 31 | 77,0 | 136 000 | 138 000 | 5 800 | 7 800 | 1,89 | 2,0 | 68,0 | 76,9 | 109,5 | 122,0 |
| NU 313 | 65 | 140 | 33 | 83,5 | 164 000 | 167 000 | 5 200 | 7 100 | 2,31 | 2,0 | 73,0 | 83,4 | 119,6 | 132,0 |
| NU 314 | 70 | 150 | 35 | 90,0 | 154 000 | 163 000 | 4 900 | 6 600 | 2,93 | 2,0 | 78,0 | 89,6 | 127,8 | 142,0 |
| NU 315 | 75 | 160 | 37 | 95,5 | 209 000 | 217 000 | 4 500 | 6 100 | 3,52 | 2,0 | 83,0 | 95,2 | 136,9 | 152,0 |
| NU 316 | 80 | 170 | 39 | 103,0 | 234 000 | 248 000 | 4 200 | 5 700 | 3,97 | 2,0 | 88,0 | 102,9 | 146,3 | 162,0 |
| NU 317 | 85 | 180 | 41 | 108,0 | 259 000 | 273 000 | 3 300 | 4 000 | 4,99 | 2,5 | 95,0 | 107,7 | 149,9 | 170,0 |
| NU 318 | 90 | 190 | 43 | 115,0 | 245 000 | 273 000 | 3 800 | 5 100 | 5,81 | 2,5 | 100,0 | 114,8 | 157,0 | 180,0 |
| NU 319 | 95 | 200 | 45 | 120,8 | 309 000 | 345 000 | 3 500 | 4 800 | 6,94 | 2,5 | 105,0 | 120,6 | 169,4 | 190,0 |
| NU 320 | 100 | 215 | 47 | 129,5 | 324 000 | 372 000 | 3 300 | 4 500 | 8,57 | 2,5 | 110,0 | 129,2 | 177,0 | 205,0 |
| NU 321 | 105 | 225 | 49 | 135,0 | 343 000 | 390 000 | 3 100 | 4 200 | 9,84 | 2,5 | 115,0 | 134,8 | 185,2 | 215,0 |
| NU 322 | 110 | 240 | 50 | 143,0 | 379 000 | 435 000 | 2 900 | 3 900 | 11,2 | 2,5 | 120,0 | 142,9 | 196,1 | 230,0 |
| NU 324 | 120 | 260 | 55 | 154,0 | 395 000 | 451 000 | 2 700 | 3 600 | 14,7 | 2,5 | 130,0 | 153,9 | 209,8 | 250,0 |
| NU 326 | 130 | 280 | 58 | 167,0 | 540 000 | 633 000 | 2 400 | 3 200 | 18,1 | 3,0 | 142,0 | 166,8 | 231,1 | 268,0 |
| NU 328 | 140 | 300 | 62 | 180,0 | 584 000 | 693 000 | 2 200 | 3 000 | 22,0 | 3,0 | 152,0 | 179,8 | 246,9 | 288,0 |
| NU 330 | 150 | 320 | 65 | 193,0 | 683 000 | 820 000 | 1 200 | 2 000 | 27,1 | 3,0 | 162,0 | 192,8 | 265,2 | 308,0 |
| NU 332 | 160 | 340 | 68 | 208,0 | 870 000 | 1 040 000 | 1 100 | 1 900 | 32,7 | 3,0 | 172,0 | 203,7 | 290,3 | 328,0 |
| NU 334 | 170 | 360 | 72 | 220,0 | 901 000 | 1 100 000 | 1 000 | 1 700 | 37,9 | 3,0 | 182,0 | 217,1 | 300,7 | 348,0 |

**Larger sizes are available on request**

**Please check availability**

# Single row cylindrical roller bearings

## NUP 3 MEDIUM SERIES

METRIC SIZES

ISO DIMENSION SERIES 03

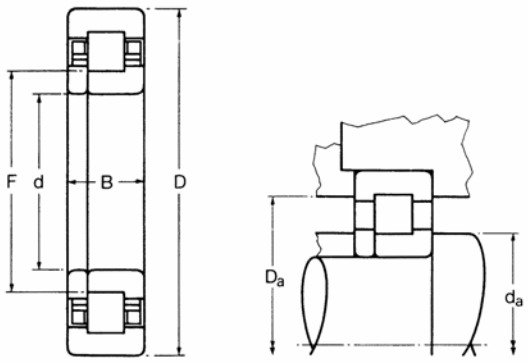


| RKB designation | Dimensions millimetres | | | | RKB load ratings† newtons | | Normal limiting speeds rev/min | | Weight kg | Shaft and housing dimensions millimetres | | | | |
|---|---|---|---|---|---|---|---|---|---|---|---|---|---|---|
| | | | | | dynamic | static | grease | oil | approx | max fillet | $d_a$ | | $D_a$ | |
| | d | D | B | F | $C_r$ | $C_{or}$ | | | | radius* | min | max | min | max |
| NUP 300 | 10 | 35 | 11 | 16,9 | 10 700 | 7 800 | 11 900 | 24 000 | 0,066 | 0,6 | 12,4 | 18,3 | 26,9 | 32,6 |
| NUP 301 | 12 | 37 | 12 | 18,9 | 11 700 | 8 850 | 20 000 | 27 000 | 0,078 | 1,0 | 16,0 | 20,2 | 28,7 | 33,0 |
| NUP 302 | 15 | 42 | 13 | 22,1 | 14 200 | 10 700 | 18 000 | 24 000 | 0,105 | 1,0 | 19,0 | 23,6 | 33,5 | 38,0 |
| NUP 303 | 17 | 47 | 14 | 24,9 | 18 800 | 14 800 | 16 000 | 22 000 | 0,137 | 1,0 | 21,0 | 26,7 | 37,6 | 43,0 |
| NUP 304 | 20 | 52 | 15 | 28,5 | 26 600 | 22 100 | 14 400 | 19 500 | 0,164 | 1,0 | 24,0 | 30,0 | 43,0 | 48,0 |
| NUP 305 | 25 | 62 | 17 | 35,0 | 35 000 | 30 600 | 12 200 | 16 500 | 0,260 | 1,0 | 29,0 | 36,7 | 51,3 | 58,0 |
| NUP 306 | 30 | 72 | 19 | 42,0 | 45 500 | 41 900 | 10 500 | 14 100 | 0,393 | 1,0 | 34,0 | 43,9 | 60,1 | 68,0 |
| NUP 307 | 35 | 80 | 21 | 46,2 | 58 000 | 52 500 | 9 400 | 12 700 | 0,508 | 1,5 | 41,0 | 48,5 | 67,9 | 74,0 |
| NUP 308 | 40 | 90 | 23 | 53,5 | 72 500 | 68 500 | 8 300 | 11 200 | 0,703 | 1,5 | 46,0 | 56,0 | 77,0 | 84,0 |
| NUP 309 | 45 | 100 | 25 | 58,5 | 82 000 | 78 500 | 7 600 | 10 300 | 0,953 | 1,5 | 51,0 | 61,2 | 83,8 | 94,0 |
| NUP 310 | 50 | 110 | 27 | 65,0 | 98 500 | 94 500 | 6 800 | 9 200 | 1,21 | 2,0 | 58,0 | 68,1 | 93,9 | 102,0 |
| NUP 311 | 55 | 120 | 29 | 70,5 | 111 000 | 108 000 | 6 400 | 8 600 | 1,73 | 2,0 | 63,0 | 74,0 | 98,6 | 112,0 |
| NUP 312 | 60 | 130 | 31 | 77,0 | 136 000 | 138 000 | 5 800 | 7 800 | 1,97 | 2,0 | 68,0 | 80,5 | 109,5 | 122,0 |
| NUP 313 | 65 | 140 | 33 | 83,5 | 164 000 | 167 000 | 5 200 | 7 100 | 2,40 | 2,0 | 73,0 | 87,4 | 119,6 | 132,0 |
| NUP 314 | 70 | 150 | 35 | 90,0 | 154 000 | 163 000 | 3 200 | 5 500 | 3,13 | 2,0 | 78,0 | 94,5 | 123,4 | 142,0 |
| NUP 315 | 75 | 160 | 37 | 95,5 | 209 000 | 217 000 | 4 600 | 6 300 | 3,85 | 2,0 | 83,0 | 100,8 | 133,4 | 152,0 |
| NUP 316 | 80 | 170 | 39 | 103,0 | 234 000 | 248 000 | 4 200 | 5 700 | 4,12 | 2,0 | 88,0 | 107,7 | 146,3 | 162,0 |
| NUP 317 | 85 | 180 | 41 | 108,0 | 259 000 | 273 000 | 4 000 | 5 400 | 5,31 | 2,5 | 95,0 | 113,8 | 149,9 | 170,0 |
| NUP 318 | 90 | 190 | 43 | 115,0 | 245 000 | 273 000 | 3 800 | 5 100 | 6,21 | 2,5 | 100,0 | 120,9 | 157,0 | 180,0 |
| NUP 319 | 95 | 200 | 45 | 120,8 | 309 000 | 345 000 | 3 500 | 4 800 | 7,48 | 2,5 | 105,0 | 127,5 | 169,4 | 190,0 |
| NUP 320 | 100 | 215 | 47 | 129,5 | 324 000 | 372 000 | 3 300 | 4 500 | 9,03 | 2,5 | 110,0 | 136,1 | 177,0 | 205,0 |
| NUP 321 | 105 | 225 | 49 | 135,0 | 343 000 | 390 000 | 3 100 | 4 200 | 10,3 | 2,5 | 115,0 | 140,9 | 185,2 | 215,0 |
| NUP 322 | 110 | 240 | 50 | 143,0 | 379 000 | 435 000 | 2 900 | 3 900 | 12,0 | 2,5 | 120,0 | 150,3 | 196,1 | 230,0 |
| NUP 324 | 120 | 260 | 55 | 154,0 | 395 000 | 451 000 | 2 700 | 3 600 | 15,3 | 2,5 | 130,0 | 161,8 | 209,8 | 250,0 |
| NUP 326 | 130 | 280 | 58 | 167,0 | 540 000 | 633 000 | 2 400 | 3 200 | 19,0 | 3,0 | 142,0 | 174,5 | 231,1 | 268,0 |
| NUP 328 | 140 | 300 | 62 | 180,0 | 584 000 | 693 000 | 2 200 | 3 000 | 23,2 | 3,0 | 152,0 | 189,4 | 246,9 | 288,0 |
| NUP 330 | 150 | 320 | 65 | 193,0 | 683 000 | 820 000 | 1 200 | 2 000 | 28,5 | 3,0 | 162,0 | 203,2 | 265,2 | 308,0 |
| NUP 332 | 160 | 340 | 68 | 208,0 | 870 000 | 1 040 000 | 1 100 | 1 900 | 33,0 | 3,0 | 172,0 | 213,6 | 290,3 | 328,0 |
| NUP 334 | 170 | 360 | 72 | 220,0 | 901 000 | 1 100 000 | 1 000 | 1 700 | 39,5 | 3,0 | 182,0 | 229,1 | 300,7 | 348,0 |

**Larger sizes are available on request**

*Does not apply to the loose rib.

**Please check availability**

# Single row cylindrical roller bearings

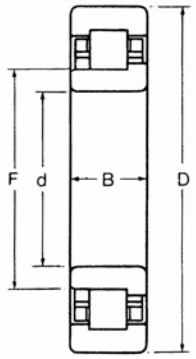


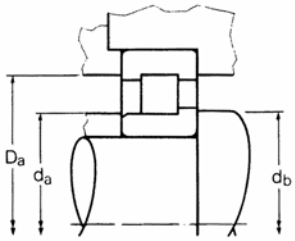


MEDIUM SERIES **NJ 3**

METRIC SIZES

ISO DIMENSION SERIES 03

| RKB designation | Dimensions millimetres | | | | RKB load ratings† newtons | | Normal limiting speeds rev/min | | Weight kg | Shaft and housing dimensions millimetres | | | | | |
|---|---|---|---|---|---|---|---|---|---|---|---|---|---|---|---|
| | | | | | dynamic | static | grease | oil | approx | max fillet radius | $d_a$ min | $d_a$ max | $d_b$ max | $D_a$ min | $D_a$ max |
| | d | D | B | F | $C_r$ | $C_{or}$ | | | | | | | | | |
| **NJ 300** | 10 | 35 | 11 | 16,9 | 10 700 | 7 800 | 11 900 | 24 000 | 0,065 | 0,6 | 12,4 | 16,7 | 18,3 | 26,9 | 32,6 |
| **NJ 301** | 12 | 37 | 12 | 18,9 | 11 700 | 8 850 | 20 000 | 27 000 | 0,077 | 1,0 | 16,0 | 18,7 | 20,2 | 28,7 | 33,0 |
| **NJ 302** | 15 | 42 | 13 | 22,1 | 14 200 | 10 700 | 18 000 | 24 000 | 0,102 | 1,0 | 19,0 | 22,1 | 23,6 | 33,5 | 38,0 |
| **NJ 303** | 17 | 47 | 14 | 24,9 | 18 800 | 14 800 | 16 000 | 22 000 | 0,134 | 1,0 | 21,0 | 24,9 | 26,7 | 37,6 | 43,0 |
| **NJ 304** | 20 | 52 | 15 | 28,5 | 26 600 | 22 100 | 14 400 | 19 500 | 0,161 | 1,0 | 24,0 | 28,4 | 30,0 | 43,0 | 48,0 |
| **NJ 305** | 25 | 62 | 17 | 35,0 | 35 000 | 30 600 | 12 200 | 16 500 | 0,255 | 1,0 | 29,0 | 34,9 | 36,7 | 51,3 | 58,0 |
| **NJ 306** | 30 | 72 | 19 | 42,0 | 45 500 | 41 900 | 10 500 | 14 100 | 0,386 | 1,0 | 34,0 | 41,9 | 43,9 | 60,1 | 68,0 |
| **NJ 307** | 35 | 80 | 21 | 46,2 | 58 000 | 52 500 | 9 400 | 12 700 | 0,494 | 1,5 | 41,0 | 46,1 | 48,5 | 67,9 | 74,0 |
| **NJ 308** | 40 | 90 | 23 | 53,5 | 72 500 | 68 500 | 8 300 | 11 200 | 0,689 | 1,5 | 46,0 | 53,4 | 56,0 | 77,0 | 84,0 |
| **NJ 309** | 45 | 100 | 25 | 58,5 | 82 000 | 78 500 | 7 600 | 10 300 | 0,934 | 1,5 | 51,0 | 58,4 | 61,2 | 83,8 | 94,0 |
| **NJ 310** | 50 | 110 | 27 | 65,0 | 98 500 | 94 500 | 6 800 | 9 200 | 1,18 | 2,0 | 58,0 | 64,9 | 68,1 | 93,9 | 102,0 |
| **NJ 311** | 55 | 120 | 29 | 70,5 | 111 000 | 108 000 | 6 200 | 8 400 | 1,68 | 2,0 | 63,0 | 70,3 | 74,1 | 102,9 | 112,0 |
| **NJ 312** | 60 | 130 | 31 | 77,0 | 136 000 | 138 000 | 5 800 | 7 800 | 1,93 | 2,0 | 68,0 | 76,9 | 80,5 | 109,5 | 122,0 |
| **NJ 313** | 65 | 140 | 33 | 83,5 | 164 000 | 167 000 | 5 200 | 7 100 | 2,36 | 2,0 | 73,0 | 83,4 | 87,4 | 119,6 | 132,0 |
| **NJ 314** | 70 | 150 | 35 | 90,0 | 154 000 | 163 000 | 3 200 | 5 500 | 3,01 | 2,0 | 78,0 | 89,6 | 94,5 | 123,4 | 142,0 |
| **NJ 315** | 75 | 160 | 37 | 95,5 | 209 000 | 217 000 | 4 500 | 6 100 | 3,74 | 2,0 | 83,0 | 95,2 | 100,8 | 136,9 | 152,0 |
| **NJ 316** | 80 | 170 | 39 | 103,0 | 234 000 | 248 000 | 4 200 | 5 700 | 4,05 | 2,0 | 88,0 | 102,9 | 107,7 | 146,3 | 162,0 |
| **NJ 317** | 85 | 180 | 41 | 108,0 | 259 000 | 273 000 | 3 300 | 4 000 | 5,17 | 2,5 | 95,0 | 107,7 | 113,8 | 149,9 | 170,0 |
| **NJ 318** | 90 | 190 | 43 | 115,0 | 245 000 | 273 000 | 3 800 | 5 100 | 6,08 | 2,5 | 100,0 | 114,8 | 120,9 | 157,0 | 180,0 |
| **NJ 319** | 95 | 200 | 45 | 120,8 | 309 000 | 345 000 | 3 500 | 4 800 | 7,03 | 2,5 | 105,0 | 120,6 | 127,5 | 169,4 | 190,0 |
| **NJ 320** | 100 | 215 | 47 | 129,5 | 324 000 | 372 000 | 3 300 | 4 500 | 8,80 | 2,5 | 110,0 | 129,2 | 136,1 | 177,0 | 205,0 |
| **NJ 321** | 105 | 225 | 49 | 135,0 | 343 000 | 390 000 | 3 100 | 4 200 | 10,1 | 2,5 | 115,0 | 134,8 | 140,9 | 185,2 | 215,0 |
| **NJ 322** | 110 | 240 | 50 | 143,0 | 379 000 | 435 000 | 2 900 | 3 900 | 11,7 | 2,5 | 120,0 | 142,9 | 150,3 | 196,1 | 230,0 |
| **NJ 324** | 120 | 260 | 55 | 154,0 | 395 000 | 451 000 | 2 700 | 3 600 | 15,0 | 2,5 | 130,0 | 153,9 | 161,8 | 209,8 | 250,0 |
| **NJ 326** | 130 | 280 | 58 | 167,0 | 540 000 | 633 000 | 2 400 | 3 200 | 18,5 | 3,0 | 142,0 | 166,8 | 174,5 | 231,1 | 268,0 |
| **NJ 328** | 140 | 300 | 62 | 180,0 | 584 000 | 693 000 | 2 200 | 3 000 | 22,6 | 3,0 | 152,0 | 179,8 | 189,4 | 246,9 | 288,0 |
| **NJ 330** | 150 | 320 | 65 | 193,0 | 683 000 | 820 000 | 1 200 | 2 000 | 27,9 | 3,0 | 162,0 | 192,8 | 203,2 | 265,2 | 308,0 |
| **NJ 332** | 160 | 340 | 68 | 208,0 | 870 000 | 1 040 000 | 1 100 | 1 900 | 32,3 | 3,0 | 172,0 | 203,7 | 213,6 | 290,3 | 328,0 |
| **NJ 334** | 170 | 360 | 72 | 220,0 | 901 000 | 1 100 000 | 1 000 | 1 700 | 38,6 | 3,0 | 182,0 | 217,1 | 229,1 | 300,7 | 348,0 |

**Larger sizes are available on request**

**Please check availability**

# Single row cylindrical roller bearings

## NF 3 MEDIUM SERIES

METRIC SIZES

ISO DIMENSION SERIES 03

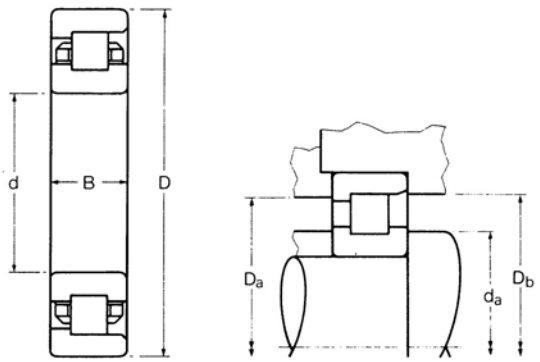


| RKB designation | Dimensions millimetres | | | RKB load ratings† newtons | | Normal limiting speeds rev/min | | Weight kg | Shaft and housing dimensions millimetres | | | | | |
|---|---|---|---|---|---|---|---|---|---|---|---|---|---|---|
| | | | | dynamic | static | grease | oil | approx | max fillet radius | $d_a$ min | $d_a$ max | $D_a$ min | $D_a$ max | $D_b$ min |
| | d | D | B | $C_r$ | $C_{or}$ | | | | | | | | | |
| **NF 300** | 10 | 35 | 11 | 10 700 | 7 800 | 13 000 | 21 500 | 0,062 | 0,6 | 12,4 | 18,3 | 26,9 | 32,6 | 28,2 |
| **NF 301** | 12 | 37 | 12 | 11 700 | 8 850 | 12 100 | 20 000 | 0,072 | 1,0 | 16,0 | 20,3 | 29,0 | 33,0 | 30,2 |
| **NF 302** | 15 | 42 | 13 | 14 200 | 10 700 | 10 700 | 18 000 | 0,097 | 1,0 | 19,0 | 23,6 | 33,5 | 38,0 | 35,1 |
| **NF 303** | 17 | 47 | 14 | 18 800 | 14 800 | 9 700 | 16 000 | 0,131 | 1,0 | 21,0 | 26,7 | 37,6 | 43,0 | 39,4 |
| **NF 304** | 20 | 52 | 15 | 26 600 | 22 100 | 14 400 | 19 500 | 0,159 | 1,0 | 24,0 | 30,0 | 43,0 | 48,0 | 44,6 |
| **NF 305** | 25 | 62 | 17 | 35 000 | 30 600 | 12 200 | 16 500 | 0,254 | 1,0 | 29,0 | 36,7 | 51,3 | 58,0 | 53,1 |
| **NF 306** | 30 | 72 | 19 | 45 500 | 41 900 | 10 500 | 14 100 | 0,383 | 1,0 | 34,0 | 43,9 | 60,1 | 68,0 | 62,1 |
| **NF 307** | 35 | 80 | 21 | 58 000 | 52 500 | 9 400 | 12 700 | 0,494 | 1,5 | 41,0 | 48,5 | 67,9 | 74,0 | 70,3 |
| **NF 308** | 40 | 90 | 23 | 72 500 | 68 500 | 8 300 | 11 200 | 0,685 | 1,5 | 46,0 | 56,0 | 77,0 | 84,0 | 79,6 |
| **NF 309** | 45 | 100 | 25 | 82 000 | 78 500 | 7 600 | 10 300 | 0,925 | 1,5 | 51,0 | 61,2 | 83,8 | 94,0 | 86,6 |
| **NF 310** | 50 | 110 | 27 | 98 500 | 94 500 | 6 800 | 9 200 | 1,17 | 2,0 | 58,0 | 68,1 | 93,9 | 102,0 | 97,1 |
| **NF 311** | 55 | 120 | 29 | 111 000 | 108 000 | 3 800 | 6 300 | 1,60 | 2,0 | 63,0 | 75,9 | 100,1 | 112,0 | 103,9 |
| **NF 312** | 60 | 130 | 31 | 136 000 | 138 000 | 5 800 | 7 800 | 1,91 | 2,0 | 68,0 | 80,5 | 109,5 | 122,0 | 113,1 |
| **NF 313** | 65 | 140 | 33 | 164 000 | 167 000 | 5 200 | 7 100 | 2,34 | 2,0 | 73,0 | 87,4 | 119,6 | 132,0 | 123,6 |
| **NF 314** | 70 | 150 | 35 | 151 000 | 153 000 | 2 900 | 4 900 | 2,92 | 2,0 | 78,0 | 94,5 | 123,2 | 142,0 | 130,8 |
| **NF 315** | 75 | 160 | 37 | 209 000 | 217 000 | 2 700 | 4 600 | 3,55 | 2,0 | 83,0 | 100,8 | 133,4 | 152,0 | 139,7 |
| **NF 316** | 80 | 170 | 39 | 234 000 | 248 000 | 4 200 | 5 700 | 4,02 | 2,0 | 88,0 | 107,7 | 146,3 | 162,0 | 151,1 |
| **NF 317** | 85 | 180 | 41 | 259 000 | 273 000 | 2 400 | 4 000 | 4,99 | 2,5 | 95,0 | 113,5 | 151,4 | 170,0 | 158,0 |
| **NF 318** | 90 | 190 | 43 | 287 000 | 308 000 | 2 300 | 3 800 | 5,90 | 2,5 | 100,0 | 121,2 | 158,7 | 180,0 | 165,6 |
| **NF 319** | 95 | 200 | 45 | 296 000 | 318 000 | 2 100 | 3 500 | 7,25 | 2,5 | 105,0 | 127,5 | 169,4 | 190,0 | 174,8 |
| **NF 320** | 100 | 215 | 47 | 296 000 | 323 000 | 2 000 | 3 300 | 8,48 | 2,5 | 110,0 | 136,1 | 177,0 | 205,0 | 183,6 |
| **NF 321** | 105 | 225 | 49 | 343 000 | 390 000 | 1 900 | 3 100 | 9,62 | 2,5 | 115,0 | 140,9 | 185,2 | 215,0 | 192,3 |
| **NF 322** | 110 | 240 | 50 | 380 000 | 420 000 | 1 700 | 2 900 | 11,5 | 2,5 | 120,0 | 149,4 | 199,5 | 230,0 | 208,0 |
| **NF 324** | 120 | 260 | 55 | 444 000 | 485 000 | 1 600 | 2 600 | 15,3 | 2,5 | 130,0 | 162,3 | 212,3 | 250,0 | 220,7 |
| **NF 326** | 130 | 280 | 58 | 540 000 | 633 000 | 1 400 | 2 400 | 17,9 | 3,0 | 142,0 | 174,5 | 231,1 | 268,0 | 240,0 |
| **NF 328** | 140 | 300 | 62 | 584 000 | 693 000 | 1 300 | 2 200 | 21,9 | 3,0 | 152,0 | 189,4 | 246,9 | 288,0 | 256,3 |
| **NF 330** | 150 | 320 | 65 | 683 000 | 820 000 | 2 000 | 2 700 | 27,9 | 3,0 | 162,0 | 203,2 | 265,2 | 308,0 | 275,6 |
| **NF 332** | 160 | 340 | 68 | 870 000 | 1 040 000 | 1 800 | 2 500 | 33,1 | 3,0 | 172,0 | 213,6 | 290,3 | 328,0 | 300,2 |
| **NF 334** | 170 | 360 | 72 | 901 000 | 1 100 000 | 1 000 | 1 700 | 36,7 | 3,0 | 182,0 | 229,1 | 300,7 | 348,0 | 312,7 |

**Larger sizes are available on request**

**Please check availability**

# Single row cylindrical roller bearings

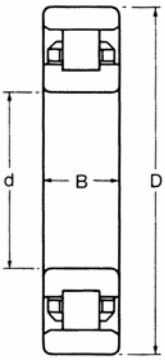


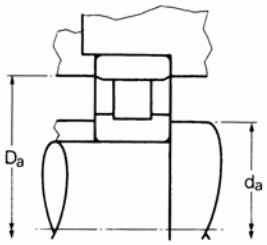


MEDIUM SERIES **N 3**

METRIC SIZES

ISO DIMENSION SERIES 03

| RKB designation | Dimensions millimetres | | | RKB load ratings† newtons | | Normal limiting speeds rev/min | | Weight kg | Shaft and housing dimensions millimetres | | | | |
|---|---|---|---|---|---|---|---|---|---|---|---|---|---|
| | | | | dynamic | static | grease | oil | approx. | max fillet radius | $d_a$ min | $d_a$ max | $D_a$ min | $D_a$ max |
| | d | D | B | $C_r$ | $C_{or}$ | | | | | | | | |
| **N 300** | 10 | 35 | 11 | 10 700 | 7 800 | 13 000 | 21 500 | 0,059 | 0,6 | 12,4 | 18,3 | 28,2 | 32,6 |
| **N 301** | 12 | 37 | 12 | 11 700 | 8 850 | 12 100 | 20 000 | 0,064 | 1,0 | 16,0 | 20,3 | 30,2 | 33,0 |
| **N 302** | 15 | 42 | 13 | 14 200 | 10 700 | 10 700 | 18 000 | 0,086 | 1,0 | 19,0 | 23,6 | 35,1 | 38,0 |
| **N 303** | 17 | 47 | 14 | 18 800 | 14 800 | 9 700 | 16 000 | 0,127 | 1,0 | 21,0 | 26,7 | 39,4 | 43,0 |
| **N 304** | 20 | 52 | 15 | 26 600 | 22 100 | 14 400 | 19 500 | 0,154 | 1,0 | 24,0 | 30,0 | 44,6 | 48,0 |
| **N 305** | 25 | 62 | 17 | 35 000 | 30 600 | 12 200 | 16 500 | 0,245 | 1,0 | 29,0 | 36,7 | 53,1 | 58,0 |
| **N 306** | 30 | 72 | 19 | 45 500 | 41 900 | 10 500 | 14 100 | 0,372 | 1,0 | 34,0 | 43,9 | 62,1 | 68,0 |
| **N 307** | 35 | 80 | 21 | 58 000 | 52 500 | 9 400 | 12 700 | 0,476 | 1,5 | 41,0 | 48,5 | 70,3 | 74,0 |
| **N 308** | 40 | 90 | 23 | 72 500 | 68 500 | 8 300 | 11 200 | 0,662 | 1,5 | 46,0 | 56,0 | 79,6 | 84,0 |
| **N 309** | 45 | 100 | 25 | 82 000 | 78 500 | 7 600 | 10 300 | 0,898 | 1,5 | 51,0 | 61,2 | 86,6 | 94,0 |
| **N 310** | 50 | 110 | 27 | 98 500 | 94 500 | 6 800 | 9 200 | 1,13 | 2,0 | 58,0 | 68,1 | 97,1 | 102,0 |
| **N 311** | 55 | 120 | 29 | 111 000 | 108 000 | 3 800 | 6 300 | 1,52 | 2,0 | 63,0 | 75,9 | 103,9 | 112,0 |
| **N 312** | 60 | 130 | 31 | 136 000 | 138 000 | 5 800 | 7 800 | 1,86 | 2,0 | 68,0 | 80,5 | 113,1 | 122,0 |
| **N 313** | 65 | 140 | 33 | 164 000 | 167 000 | 5 200 | 7 100 | 2,28 | 2,0 | 73,0 | 87,4 | 123,6 | 132,0 |
| **N 314** | 70 | 150 | 35 | 151 000 | 153 000 | 2 900 | 4 900 | 2,82 | 2,0 | 78,0 | 94,5 | 130,8 | 142,0 |
| **N 315** | 75 | 160 | 37 | 209 000 | 217 000 | 2 700 | 4 600 | 3,44 | 2,0 | 83,0 | 100,8 | 139,7 | 152,0 |
| **N 316** | 80 | 170 | 39 | 234 000 | 248 000 | 4 200 | 5 700 | 3,92 | 2,0 | 88,0 | 107,7 | 151,1 | 162,0 |
| **N 317** | 85 | 180 | 41 | 259 000 | 273 000 | 2 400 | 4 000 | 4,81 | 2,5 | 95,0 | 113,5 | 158,0 | 170,0 |
| **N 318** | 90 | 190 | 43 | 287 000 | 308 000 | 2 300 | 3 800 | 5,72 | 2,5 | 100,0 | 121,2 | 165,6 | 180,0 |
| **N 319** | 95 | 200 | 45 | 296 000 | 318 000 | 2 100 | 3 500 | 7,08 | 2,5 | 105,0 | 127,5 | 174,8 | 190,0 |
| **N 320** | 100 | 215 | 47 | 296 000 | 323 000 | 2 000 | 3 300 | 8,21 | 2,5 | 110,0 | 136,1 | 183,6 | 205,0 |
| **N 321** | 105 | 225 | 49 | 343 000 | 390 000 | 1 900 | 3 100 | 10,1 | 2,5 | 115,0 | 140,9 | 192,3 | 215,0 |
| **N 322** | 110 | 240 | 50 | 380 000 | 420 000 | 1 700 | 2 900 | 11,1 | 2,5 | 120,0 | 149,4 | 208,0 | 230,0 |
| **N 324** | 120 | 260 | 55 | 444 000 | 485 000 | 1 600 | 2 600 | 14,7 | 2,5 | 130,0 | 162,3 | 220,7 | 250,0 |
| **N 326** | 130 | 280 | 58 | 540 000 | 633 000 | 1 400 | 2 400 | 17,9 | 3,0 | 142,0 | 174,5 | 240,0 | 268,0 |
| **N 328** | 140 | 300 | 62 | 584 000 | 693 000 | 1 300 | 2 200 | 21,9 | 3,0 | 152,0 | 189,4 | 256,3 | 288,0 |
| **N 330** | 150 | 320 | 65 | 683 000 | 820 000 | 2 000 | 2 700 | 26,0 | 3,0 | 162,0 | 203,2 | 275,6 | 308,0 |
| **N 332** | 160 | 340 | 68 | 870 000 | 1 040 000 | 1 800 | 2 500 | 30,7 | 3,0 | 172,0 | 213,6 | 300,2 | 328,0 |
| **N 334** | 170 | 360 | 72 | 901 000 | 1 100 000 | 1 000 | 1 700 | 36,5 | 3,0 | 182,0 | 229,1 | 312,7 | 348,0 |

**Larger sizes are available on request**

**Please check availability**

# Single row cylindrical roller bearings

## N 10 EXTRA LIGHT SERIES

METRIC SIZES

ISO DIMENSION SERIES 10

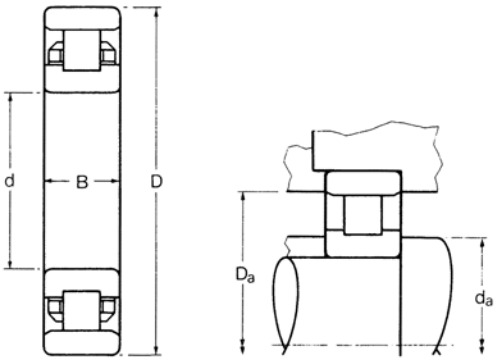


| RKB designation | Dimensions millimetres | | | RKB load ratings† newtons | | Normal limiting speeds rev/min | | Weight kg | Shaft and housing dimensions millimetres | | | | |
|---|---|---|---|---|---|---|---|---|---|---|---|---|---|
| | | | | dynamic | static | grease | oil | approx | max fillet radius | $d_a$ min | $d_a$ max | $D_a$ min | $D_a$ max |
| | d | D | B | $C_r$ | $C_{or}$ | | | | | | | | |
| **N 1004** | 20 | 42 | 12 | 13 600 | 11 300 | 10 000 | 16 500 | 0,067 | 0,6 | 22,4 | 26,9 | 36,8 | 39,6 |
| **N 1005** | 25 | 47 | 12 | 15 200 | 13 600 | 8 800 | 14 600 | 0,080 | 0,6 | 27,4 | 31,8 | 41,7 | 44,6 |
| **N 1006** | 30 | 55 | 13 | 24 800 | 24 300 | 7 600 | 12 600 | 0,113 | 1,0 | 34,0 | 37,8 | 49,3 | 51,0 |
| **N 1007** | 35 | 62 | 14 | 26 700 | 26 100 | 6 700 | 11 200 | 0,170 | 1,0 | 39,0 | 43,7 | 56,4 | 58,0 |
| **N 1008** | 40 | 68 | 15 | 27 700 | 28 200 | 6 100 | 10 100 | 0,191 | 1,0 | 44,0 | 48,7 | 61,5 | 64,0 |
| **N 1009** | 45 | 75 | 16 | 34 200 | 35 500 | 9 100 | 12 200 | 0,255 | 1,0 | 49,0 | 54,0 | 68,5 | 71,0 |
| **N 1010** | 50 | 80 | 16 | 35 400 | 38 000 | 5 100 | 8 500 | 0,284 | 1,0 | 54,0 | 59,4 | 73,4 | 76,0 |
| **N 1011** | 55 | 90 | 18 | 43 400 | 48 000 | 4 600 | 7 600 | 0,404 | 1,0 | 59,0 | 66,5 | 82,0 | 86,0 |
| **N 1012** | 60 | 95 | 18 | 44 700 | 51 000 | 4 300 | 7 100 | 0,446 | 1,0 | 64,0 | 71,6 | 87,1 | 91,0 |
| **N 1013** | 65 | 100 | 18 | 47 600 | 56 500 | 4 000 | 6 700 | 0,454 | 1,0 | 69,0 | 76,7 | 92,2 | 96,0 |
| **N 1014** | 70 | 110 | 20 | 64 500 | 76 500 | 3 700 | 6 100 | 0,680 | 1,0 | 74,0 | 82,5 | 100,8 | 106,0 |
| **N 1015** | 75 | 115 | 20 | 66 500 | 80 500 | 3 500 | 5 800 | 0,708 | 1,0 | 79,0 | 87,3 | 105,7 | 111,0 |
| **N 1016** | 80 | 125 | 22 | 77 000 | 94 500 | 3 200 | 5 300 | 0,939 | 1,0 | 84,0 | 94,2 | 113,8 | 121,0 |
| **N 1017** | 85 | 130 | 22 | 81 500 | 104 000 | 3 000 | 5 000 | 0,998 | 1,0 | 89,0 | 99,1 | 118,9 | 126,0 |
| **N 1018** | 90 | 140 | 24 | 98 500 | 123 000 | 2 800 | 4 700 | 1,25 | 1,5 | 96,0 | 106,2 | 128,5 | 134,0 |
| **N 1019** | 95 | 145 | 24 | 101 000 | 129 000 | 2 700 | 4 500 | 1,41 | 1,5 | 101,0 | 111,0 | 133,6 | 139,0 |
| **N 1020** | 100 | 150 | 24 | 104 000 | 135 000 | 2 600 | 4 300 | 1,59 | 1,5 | 106,0 | 116,0 | 138,4 | 144,0 |

**Larger sizes are available on request**

**Please check availability**

# Single row cylindrical roller bearings

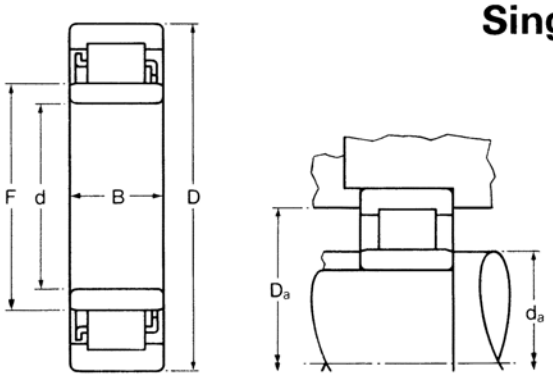


LIGHT WIDE SERIES **NU 22**

METRIC SIZES

ISO DIMENSION SERIES 22

| RKB designation | Dimensions millimetres | | | | RKB load ratings† newtons | | Normal limiting speeds rev/min | | Weight kg | Shaft and housing dimensions millimetres | | | | | |
|---|---|---|---|---|---|---|---|---|---|---|---|---|---|---|---|
| | | | | | dynamic | static | grease | oil | approx | max fillet radius inner ring | max fillet radius outer ring | $d_a$ min | $d_a$ max | $D_a$ min | $D_a$ max |
| | d | D | B | F | $C_r$ | $C_{or}$ | | | | | | | | | |
| **NU 2205** | 25 | 52 | 18 | 32 | 24 800 | 23 400 | 11 500 | 14 000 | 0,163 | 0,6 | 1,0 | 29,2 | 31,0 | 43,5 | 46,4 |
| **NU 2206** | 30 | 62 | 20 | 38,5 | 34 200 | 33 800 | 9 500 | 12 000 | 0,262 | 0,6 | 1,0 | 34,2 | 37,0 | 51,9 | 56,4 |
| **NU 2207** | 35 | 72 | 23 | 43,8 | 50 500 | 51 000 | 8 300 | 10 000 | 0,402 | 0,6 | 1,0 | 39,2 | 43,0 | 59,9 | 65,0 |
| **NU 2208** | 40 | 80 | 23 | 50 | 60 000 | 62 000 | 7 300 | 9 000 | 0,490 | 1,0 | 1,0 | 45,6 | 49,0 | 67,9 | 73,0 |
| **NU 2209** | 45 | 85 | 23 | 55 | 63 000 | 68 000 | 7 000 | 8 500 | 0,536 | 1,0 | 1,0 | 50,6 | 54,0 | 73,0 | 78,0 |
| **NU 2210** | 50 | 90 | 23 | 60,4 | 66 000 | 73 500 | 6 300 | 7 600 | 0,580 | 1,0 | 1,0 | 55,6 | 58,0 | 78,3 | 83,0 |
| **NU 2211** | 55 | 100 | 25 | 66,5 | 77 500 | 87 000 | 5 700 | 7 000 | 0,780 | 1,0 | 1,5 | 60,6 | 65,0 | 86,4 | 91,0 |
| **NU 2212** | 60 | 110 | 28 | 73,5 | 98 500 | 116 000 | 5 100 | 6 200 | 1,07 | 1,5 | 1,5 | 69,0 | 71,0 | 95,1 | 101,0 |
| **NU 2215** | 75 | 130 | 31 | 88,5 | 132 000 | 160 000 | 4 300 | 5 200 | 1,57 | 1,5 | 1,5 | 84,0 | 87,0 | 113,8 | 121,0 |
| **NU 2216** | 80 | 140 | 33 | 95,3 | 154 000 | 190 000 | 4 000 | 4 800 | 1,96 | 2,0 | 2,0 | 91,0 | 94,0 | 122,5 | 129,0 |

**Larger sizes are available on request**

**Please check availability**

# Single row cylindrical roller bearings

## NU 23 MEDIUM WIDE SERIES

METRIC SIZES

ISO DIMENSION SERIES 23

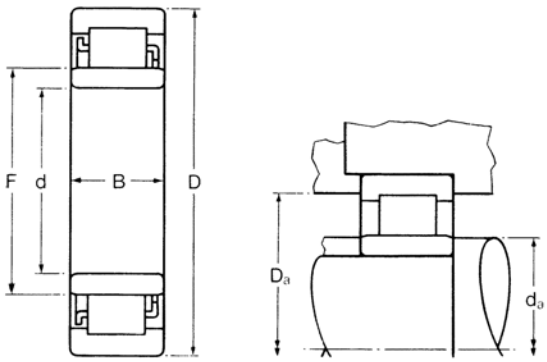


| RKB designation | Dimensions millimetres | | | | RKB load ratings† newtons | | Normal limiting speeds rev/min | | Weight kg | Shaft and housing dimensions millimetres | | | | | |
|---|---|---|---|---|---|---|---|---|---|---|---|---|---|---|---|
| | | | | | dynamic | static | grease | oil | approx | max fillet radius inner ring | max fillet radius outer ring | $d_a$ min | $d_a$ max | $D_a$ min | $D_a$ max |
| | d | D | B | F | $C_r$ | $C_{or}$ | | | | | | | | | |
| **NU 2305** | 25 | 62 | 24 | 35 | 43 800 | 41 000 | 9 500 | 11 500 | 0,340 | 1,0 | 1,0 | 32,0 | 33,0 | 51,0 | 55,0 |
| **NU 2306** | 30 | 72 | 27 | 42 | 53 000 | 51 000 | 8 000 | 9 500 | 0,500 | 1,0 | 1,0 | 37,0 | 40,0 | 59,9 | 65,0 |
| **NU 2307** | 35 | 80 | 31 | 46,2 | 62 000 | 60 000 | 7 100 | 8 500 | 0,696 | 1,0 | 1,5 | 42,0 | 45,0 | 65,9 | 71,0 |
| **NU 2308** | 40 | 90 | 33 | 53,5 | 84 500 | 88 000 | 6 300 | 7 600 | 0,956 | 1,5 | 1,5 | 49,0 | 51,0 | 75,1 | 81,0 |
| **NU 2309** | 45 | 100 | 36 | 58,5 | 101 000 | 103 000 | 5 600 | 6 700 | 1,25 | 1,5 | 1,5 | 54,0 | 57,0 | 83,8 | 91,0 |
| **NU 2310** | 50 | 110 | 40 | 65 | 126 000 | 134 000 | 5 000 | 6 000 | 1,69 | 2,0 | 2,0 | 61,0 | 63,0 | 92,0 | 99,0 |
| **NU 2312** | 60 | 130 | 46 | 77 | 174 000 | 189 000 | 4 200 | 5 000 | 2,69 | 2,0 | 2,0 | 72,0 | 75,0 | 109,4 | 118,0 |
| **NU 2314** | 70 | 150 | 51 | 90 | 219 000 | 247 000 | 3 700 | 4 500 | 3,97 | 2,0 | 2,0 | 82,0 | 87,0 | 126,0 | 138,0 |
| **NU 2316** | 80 | 170 | 58 | 103 | 284 000 | 336 000 | 3 200 | 3 800 | 5,83 | 2,0 | 2,0 | 92,0 | 99,0 | 142,6 | 158,0 |
| **NU 2317** | 85 | 180 | 60 | 108 | 308 000 | 357 000 | 3 000 | 3 600 | 6 62 | 2,5 | 2,5 | 97,0 | 106,0 | 151,3 | 168,0 |
| **NU 2320** | 100 | 215 | 73 | 129,5 | 450 000 | 553 000 | 2 500 | 3 000 | 11,9 | 2,5 | 2,5 | 112,0 | 125,0 | 180,0 | 203,0 |

**Larger sizes are available on request**

**Please check availability**

# Single row cylindrical roller bearings

**Cylindrical roller bearings are made with the following alternative rib arrangements for the series indicated.**

**Imperial sizes with inch dimensions are also available on request BSI references and standards.**

Please enquire regarding availability of particular sizes.

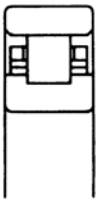

**N 4**

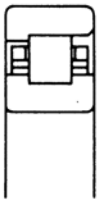

**NF 10**
**NF 4**

**XLRJA**
**LRJA**
**MRJA**

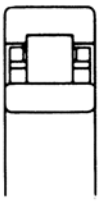

**NU 4**

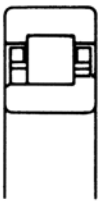

**NJ 4**

**MMRJA**

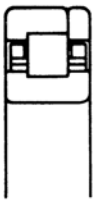

**NP 2**
**NP 3**

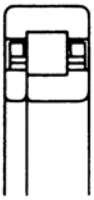

**NUP 4**

**MMRJB**

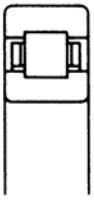

**NC 2**
**NC 3**

**XLLRJN**
**LLRJN**
**MMRJN**

**Please check availability**

# Double row spherical roller bearings

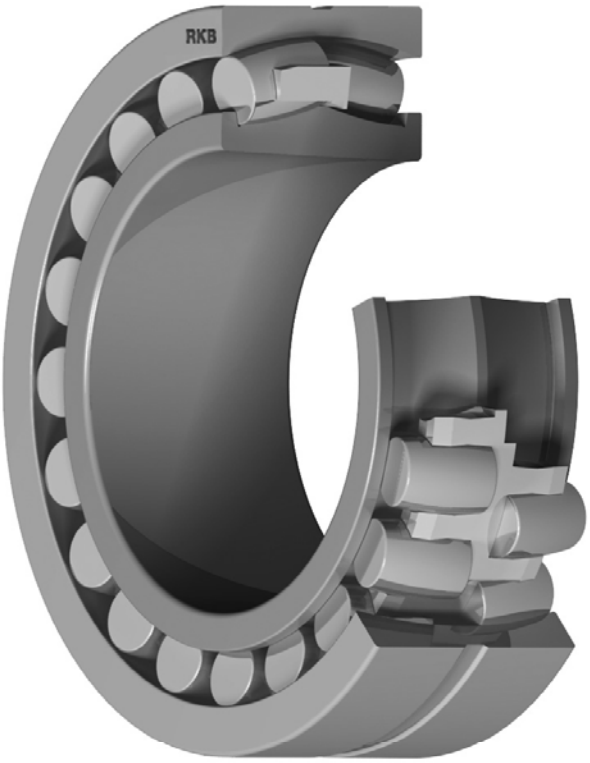

# Double row spherical roller bearings

## 230 EXTRA LIGHT SERIES

METRIC SIZES

ISO DIMENSION SERIES 30

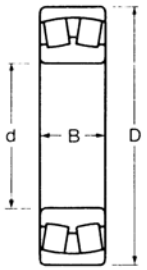


Bearing with cylindrical bore

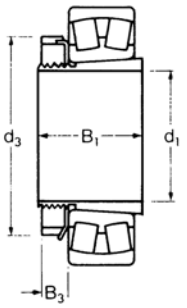


Bearing with adapter sleeve

| RKB designations | | | | Dimensions | | | | | | | | | | |
|---|---|---|---|---|---|---|---|---|---|---|---|---|---|---|
| basic bearing with cylindrical bore* | adapter sleeve metric bore | adapter sleeve inch bore | withdrawal sleeve metric bore | millimetres d | $d_1$ | $d_2$ | D | B | $d_3$ | $d_4$ | $B_1$ | $B_2$ | $B_3$ | $B_4$ |
| **230 22** | | | | 110 | | | 170 | 45 | | | | | | |
| **230 24** | H3024 | H3024–4¼ | AHX3024 | 120 | 110 | 115 | 180 | 46 | 145 | 130 | 72 | 60 | 22 | 13 |
| **230 26** | H3026 | H3026–4½ | AHX3026 | 130 | 115 | 125 | 200 | 52 | 155 | 140 | 80 | 67 | 23 | 14 |
| **230 28** | H3028 | H3028–5 | AHX3028 | 140 | 125 | 135 | 210 | 53 | 165 | 150 | 82 | 68 | 24 | 14 |
| **230 30** | H3030 | H3030–5¼ | AHX3030 | 150 | 135 | 145 | 225 | 56 | 180 | 160 | 87 | 72 | 26 | 15 |
| **230 32** | H3032 | H3032–5½ | AH 3032 | 160 | 140 | 150 | 240 | 60 | 190 | 170 | 93 | 77 | 28 | 16 |
| **230 34** | H3034 | H3034–6 | AH 3034 | 170 | 150 | 160 | 260 | 67 | 200 | 180 | 101 | 85 | 29 | 17 |
| **230 36** | H3036 | | AH 3036 | 180 | 160 | 170 | 280 | 74 | 210 | 190 | 109 | 92 | 30 | 17 |
| **230 38** | H3038 | | AH 3038 | 190 | 170 | 180 | 290 | 75 | 220 | 205 | 112 | 96 | 31 | 18 |
| **230 40** | H3040 | | AH 3040 | 200 | 180 | 190 | 310 | 82 | 240 | 215 | 120 | 102 | 32 | 19 |
| **230 44** | H3044 | | AH 3044 | 220 | 200 | 200 | 340 | 90 | 260 | 235 | 126 | 111 | 41 | 20 |
| **230 48** | H3048 | | AH 3048 | 240 | 220 | 220 | 360 | 92 | 290 | 260 | 133 | 116 | 46 | 21 |
| **230 52** | H3052 | | AH 3052 | 260 | 240 | 240 | 400 | 104 | 310 | 280 | 145 | 128 | 46 | 23 |

*For bearings with 1 : 12 tapered bore add suffix 'K', e.g. 230 24K.
If bearings are required with a radial groove and three lubrication holes add suffix 'W33', e.g. 230 48 W33.
When ordering a bearing with an adapter or withdrawal sleeve, add the designation of the latter component to that of the bearing with tapered bore, e.g. 230 30K + H3030.
For $d_1 \leqslant 180$ mm the adapter sleeves are provided with a lock washer.
For $d_1 > 180$ mm the adapter sleeves have a locking clamp and dimension $B_3$ includes the width of the locking screw.

**Please check availability**

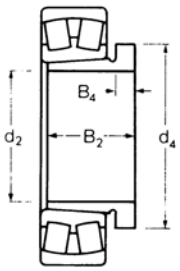


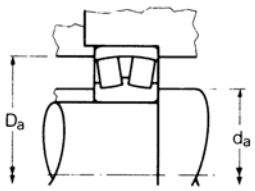


Bearing with withdrawal sleeve

| **RKB** load ratings† | | Normal limiting speeds | | Weights | | | Shaft and housing dimensions | | | | | **RKB** |
|---|---|---|---|---|---|---|---|---|---|---|---|---|
| newtons | | rev/min | | kg approx | | | millimetres | | | | | designation |
| dynamic $C_r$ | static $C_{or}$ | grease | oil | basic bearing | with adapter sleeve | with withdrawal sleeve | max fillet radius | $d_a$ min | $d_a$ max | $D_a$ min | $D_a$ max | (basic bearing) |
| 285 000 | 455 000 | 1 700 | 2 200 | 4,00 | | | 2,0 | 119 | 125 | 153 | 161 | **230 22** |
| 275 000 | 460 000 | 1 600 | 2 100 | 4,35 | 6,03 | 4,85 | 2,0 | 129 | 135 | 163 | 171 | **230 24** |
| 350 000 | 580 000 | 1 500 | 1 900 | 6,35 | 9,07 | 7,12 | 2,0 | 139 | 147 | 180 | 191 | **230 26** |
| 360 000 | 620 000 | 1 400 | 1 800 | 6,85 | 9,84 | 7,67 | 2,0 | 149 | 157 | 190 | 201 | **230 28** |
| 405 000 | 700 000 | 1 300 | 1 700 | 8,26 | 11,9 | 9,16 | 2,0 | 161 | 168 | 204 | 214 | **230 30** |
| 460 000 | 810 000 | 1 200 | 1 600 | 10,2 | 15,1 | 12,0 | 2,0 | 171 | 180 | 218 | 229 | **230 32** |
| 630 000 | 1 100 000 | 1 100 | 1 400 | 13,4 | 19,0 | 15,4 | 2,0 | 181 | 192 | 235 | 249 | **230 34** |
| 750 000 | 1 340 000 | 1 000 | 1 300 | 17,6 | 23,9 | 19,9 | 2,0 | 191 | 206 | 252 | 269 | **230 36** |
| 720 000 | 1 260 000 | 900 | 1 200 | 18,8 | 25,7 | 21,6 | 2,0 | 200 | 213 | 262 | 280 | **230 38** |
| 915 000 | 1 630 000 | 900 | 1 200 | 24,1 | 32,6 | 27,2 | 2,0 | 211 | 227 | 279 | 299 | **230 40** |
| 1 060 000 | 1 930 000 | 800 | 1 000 | 31,5 | 40,9 | 38,0 | 2,5 | 232 | 247 | 306 | 328 | **230 44** |
| 1 120 000 | 2 120 000 | 700 | 900 | 34,9 | 47,0 | 42,6 | 2,5 | 252 | 268 | 327 | 348 | **230 48** |
| 1 460 000 | 2 650 000 | 630 | 800 | 50,7 | 64,5 | 59,9 | 3,0 | 275 | 291 | 361 | 385 | **230 52** |

**Larger sizes are available on request**

# Double row spherical roller bearings

## 231 EXTRA LIGHT WIDE SERIES

METRIC SIZES

ISO DIMENSION SERIES 31

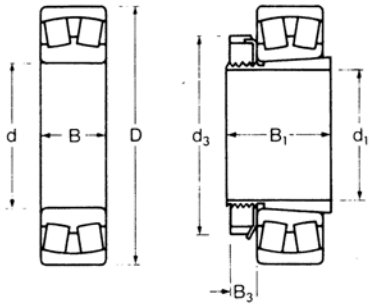


Bearing with cylindrical bore

Bearing with adapter sleeve

| RKB designations | | | | Dimensions | | | | | | | | | | |
|---|---|---|---|---|---|---|---|---|---|---|---|---|---|---|
| basic bearing with cylindrical bore* | adapter sleeve metric bore | adapter sleeve inch bore | withdrawal sleeve metric bore | millimetres d | $d_1$ | $d_2$ | D | B | $d_3$ | $d_4$ | $B_1$ | $B_2$ | $B_3$ | $B_4$ |
| **231 20** | H3120 | H3120–3½ | AHX3120 | 100 | 90 | 95 | 165 | 52 | 130 | 110 | 76 | 64 | 20 | 11 |
| **231 22** | H3122 | H3122–4 | AHX3122 | 110 | 100 | 105 | 180 | 56 | 145 | 120 | 81 | 68 | 21 | 11 |
| **231 24** | H3124 | H3124–4¼ | AHX3124 | 120 | 110 | 115 | 200 | 62 | 155 | 130 | 88 | 75 | 22 | 12 |
| **231 26** | H3126 | H3126–4½ | AHX3126 | 130 | 115 | 125 | 210 | 64 | 165 | 140 | 92 | 78 | 23 | 12 |
| **231 28** | H3128 | H3128–5 | AHX3128 | 140 | 125 | 135 | 225 | 68 | 180 | 150 | 97 | 83 | 24 | 14 |
| **231 30** | H3130 | H3130–5¼ | AHX3130 | 150 | 135 | 145 | 250 | 80 | 195 | 165 | 111 | 96 | 26 | 15 |
| **231 32** | H3132 | H3132–5½ | AH 3132 | 160 | 140 | 150 | 270 | 86 | 210 | 180 | 119 | 103 | 28 | 16 |
| **231 34** | H3134 | H3134–6 | AH 3134 | 170 | 150 | 160 | 280 | 88 | 220 | 190 | 122 | 104 | 29 | 16 |
| **231 36** | H3136 | | AH 3136 | 180 | 160 | 170 | 300 | 96 | 230 | 200 | 131 | 116 | 30 | 19 |
| **231 38** | H3138 | | AH 3138 | 190 | 170 | 180 | 320 | 104 | 240 | 210 | 141 | 125 | 31 | 20 |
| **231 40** | H3140 | | AH 3140 | 200 | 180 | 190 | 340 | 112 | 250 | 220 | 150 | 134 | 32 | 21 |
| **231 44** | H3144X | | AH 3144 | 220 | 200 | 200 | 370 | 120 | 280 | 240 | 161 | 145 | 35 | 23 |
| **231 48** | H3148X | | AH 3148 | 240 | 220 | 220 | 400 | 128 | 300 | 260 | 172 | 154 | 37 | 25 |
| **231 52** | H3152X | | AH 3152 | 260 | 240 | 240 | 440 | 144 | 330 | 290 | 190 | 172 | 39 | 26 |

*For bearings with 1 : 12 tapered bore add suffix 'K', e.g. 231 30K.
If bearings are required with a radial groove and three lubrication holes add suffix 'W33', e.g. 231 48 W33.
When ordering a bearing with an adapter or withdrawal sleeve, add the designation of the latter component to that of the bearing with tapered bore, e.g. 231 26K + H3126.

**Please check availability**

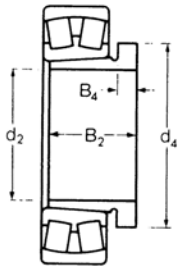


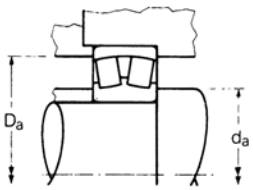


Bearing with withdrawal sleeve

| **RKB** load ratings† newtons | | Normal limiting speeds rev/min | | Weights kg approx | | | Shaft and housing dimensions millimetres | | | | **RKB** designation |
|---|---|---|---|---|---|---|---|---|---|---|---|
| dynamic $C_r$ | static $C_{or}$ | grease | oil | basic bearing | with adapter sleeve | with withdrawal sleeve | max fillet radius | $d_a$ min | $d_a$ max | $D_a$ max | (basic bearing) |
| 315 000 | 490 000 | 1 600 | 2 000 | 4,53 | 6,18 | 5,05 | 2,0 | 111 | 115 | 154 | **231 20** |
| 350 000 | 560 000 | 1 600 | 2 000 | 5,76 | 7,84 | 6,35 | 2,0 | 121 | 127 | 169 | **231 22** |
| 460 000 | 750 000 | 1 400 | 1 800 | 8,33 | 10,7 | 9,03 | 2,0 | 131 | 142 | 189 | **231 24** |
| 460 000 | 770 000 | 1 400 | 1 800 | 9,10 | 12,5 | 9,91 | 2,0 | 141 | 149 | 199 | **231 26** |
| 560 000 | 930 000 | 1 300 | 1 700 | 10,8 | 14,8 | 11,8 | 2,0 | 153 | 162 | 212 | **231 28** |
| 690 000 | 1 210 000 | 1 000 | 1 200 | 16,4 | 21,4 | 17,7 | 2,0 | 162 | 176 | 238 | **231 30** |
| 800 000 | 1 320 000 | 1 000 | 1 200 | 20,5 | 27,6 | 23,1 | 2,0 | 173 | 189 | 257 | **231 32** |
| 850 000 | 1 430 000 | 900 | 1 200 | 22,4 | 30,1 | 25,1 | 2,0 | 182 | 197 | 268 | **231 34** |
| 1 020 000 | 1 730 000 | 900 | 1 200 | 28,4 | 37,9 | 31,7 | 2,5 | 194 | 209 | 286 | **231 36** |
| 1 140 000 | 2 000 000 | 800 | 1 000 | 35,5 | 45,2 | 39,3 | 2,5 | 204 | 223 | 306 | **231 38** |
| 1 270 000 | 2 160 000 | 800 | 1 000 | 43,7 | 54,4 | 47,8 | 2,5 | 214 | 231 | 326 | **231 40** |
| 1 560 000 | 2 750 000 | 700 | 900 | 54,8 | 67,8 | 63,5 | 3,0 | 237 | 253 | 353 | **231 44** |
| 1 800 000 | 3 150 000 | 630 | 800 | 67,6 | 82,9 | 77,6 | 3,0 | 257 | 276 | 383 | **231 48** |
| 2 160 000 | 3 900 000 | 560 | 700 | 93,6 | 113 | 107 | 3,0 | 277 | 302 | 423 | **231 52** |

**Larger sizes are available on request**

**Please check availability**

# Double row spherical roller bearings

## 222 LIGHT SERIES

METRIC SIZES

ISO DIMENSION SERIES 22

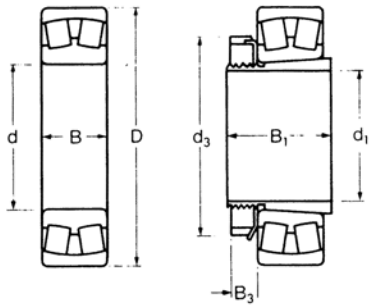


Bearing with cylindrical bore

Bearing with adapter sleeve

| RKB designations | | | | Dimensions | | | | | | | | | | |
|---|---|---|---|---|---|---|---|---|---|---|---|---|---|---|
| basic bearing with cylindrical bore* | adapter sleeve metric bore | adapter sleeve inch bore | withdrawal sleeve metric bore | millimetres d | $d_1$ | $d_2$ | D | B | $d_3$ | $d_4$ | $B_1$ | $B_2$ | $B_3$ | $B_4$ |
| 222 05 | H 305 | H 305– $\frac{3}{4}$ | | 25 | 20 | | 52 | 18 | 38 | | 29 | | 8 | |
| 222 06 | H 306 | H 306–1 | | 30 | 25 | | 62 | 20 | 45 | | 31 | | 8 | |
| 222 07 | H 307 | | | 35 | 30 | | 72 | 23 | 52 | | 35 | | 9 | |
| 222 08 | H 308 | H 308–1$\frac{1}{4}$ | AH 308 | 40 | 35 | 35 | 80 | 23 | 58 | 45 | 36 | 29 | 10 | 6 |
| 222 09 | H 309 | H 309–1$\frac{1}{2}$ | AH 309 | 45 | 40 | 40 | 85 | 23 | 65 | 50 | 39 | 31 | 11 | 6 |
| 222 10 | H 310 | H 310–1$\frac{3}{4}$ | AHX 310 | 50 | 45 | 45 | 90 | 23 | 70 | 55 | 42 | 35 | 12 | 7 |
| 222 11 | H 311 | H 311–2 | AHX 311 | 55 | 50 | 50 | 100 | 25 | 75 | 60 | 45 | 37 | 12 | 7 |
| 222 12 | H 312 | H 312–2$\frac{1}{8}$ | AHX 312 | 60 | 55 | 55 | 110 | 28 | 80 | 65 | 47 | 40 | 13 | 8 |
| 222 13 | H 313 | H 313–2$\frac{1}{4}$ | AH 313 | 65 | 60 | 60 | 120 | 31 | 85 | 75 | 50 | 42 | 14 | 8 |
| 222 14 | H 314 | | AH 314 | 70 | 60 | 65 | 125 | 31 | 92 | 80 | 52 | 43 | 14 | 8 |
| 222 15 | H 315 | H 315–2$\frac{1}{2}$ | AH 315 | 75 | 65 | 70 | 130 | 31 | 98 | 85 | 55 | 45 | 15 | 8 |
| 222 16 | H 316 | H 316–2$\frac{3}{4}$ | AH 316 | 80 | 70 | 75 | 140 | 33 | 105 | 90 | 59 | 48 | 17 | 8 |
| 222 17 | H 317 | H 317–3 | AHX 317 | 85 | 75 | 80 | 150 | 36 | 110 | 95 | 63 | 52 | 18 | 9 |
| 222 18 | H 318 | H 318–3$\frac{1}{4}$ | AHX 318 | 90 | 80 | 85 | 160 | 40 | 120 | 100 | 65 | 53 | 18 | 9 |
| 222 19 | H 319 | | AHX 319 | 95 | 85 | 90 | 170 | 43 | 125 | 105 | 68 | 57 | 19 | 10 |
| 222 20 | H 320 | H 320–3$\frac{1}{2}$ | AHX 320 | 100 | 90 | 95 | 180 | 46 | 130 | 110 | 71 | 59 | 20 | 10 |
| 222 22 | H 322 | H 322–4 | AHX3122 | 110 | 100 | 105 | 200 | 53 | 145 | 120 | 77 | 68 | 21 | 11 |
| 222 24 | H3124 | H3124–4$\frac{1}{4}$ | AHX3124 | 120 | 110 | 115 | 215 | 58 | 155 | 130 | 88 | 75 | 22 | 12 |
| 222 26 | H3126 | H3126–4$\frac{1}{2}$ | AHX3126 | 130 | 115 | 125 | 230 | 64 | 165 | 140 | 92 | 78 | 23 | 12 |
| 222 28 | H3128 | H3128–5 | AHX3128 | 140 | 125 | 135 | 250 | 68 | 180 | 150 | 97 | 83 | 24 | 14 |
| 222 30 | H3130 | H3130–5$\frac{1}{4}$ | AHX3130 | 150 | 135 | 145 | 270 | 73 | 195 | 165 | 111 | 96 | 26 | 15 |
| 222 32 | H3132 | H3132–5$\frac{1}{2}$ | AH 3132 | 160 | 140 | 150 | 290 | 80 | 210 | 180 | 119 | 103 | 28 | 16 |
| 222 34 | H3134 | H3134–6 | AH 3134 | 170 | 150 | 160 | 310 | 86 | 220 | 190 | 122 | 104 | 29 | 16 |
| 222 36 | H3136 | | AH 2236 | 180 | 160 | 170 | 320 | 86 | 230 | 200 | 131 | 105 | 30 | 17 |
| 222 38 | H3138 | | AH 2238 | 190 | 170 | 180 | 340 | 92 | 240 | 210 | 141 | 112 | 31 | 18 |
| 222 40 | H3140 | | AH 2240 | 200 | 180 | 190 | 360 | 98 | 250 | 220 | 150 | 118 | 32 | 19 |
| 222 44 | H3144X | | AH 2244 | 220 | 200 | 200 | 400 | 108 | 280 | 240 | 161 | 130 | 35 | 20 |
| 222 48 | H3148X | | AH 2248 | 240 | 220 | 220 | 440 | 120 | 300 | 260 | 172 | 144 | 37 | 21 |

*For bearings with 1 : 12 tapered bore add suffix 'K', e.g. 222 05K.
If bearings are required with a radial groove and three lubrication holes add suffix 'W33' e.g. 222 36 W33.
When ordering a bearing with an adapter or withdrawal sleeve, add the designation of the latter component to that of the bearing with tapered bore, e.g. 222 09K + H309.

**Please check availability**

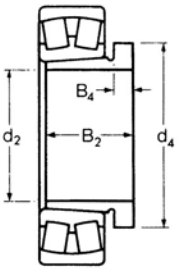


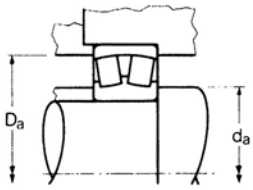


Bearing with withdrawal sleeve

| **RKB** load ratings† newtons | | Normal limiting speeds rev/min | | Weights kg approx | | | Shaft and housing dimensions millimetres | | | | | **RKB** designation |
|---|---|---|---|---|---|---|---|---|---|---|---|---|
| dynamic $C_r$ | static $C_{or}$ | grease | oil | basic bearing | with adapter sleeve | with withdrawal sleeve | max fillet radius | $d_a$ min | $d_a$ max | $D_a$ min | $D_a$ max | (basic bearing) |
| 33 500 | 35 500 | 6 800 | 8 900 | 0,182 | 0,265 | | 1,0 | 31 | 34 | 45 | 46 | **222 05** |
| 45 000 | 48 000 | 5 700 | 7 400 | 0,290 | 0,409 | | 1,0 | 36 | 40 | 54 | 56 | **222 06** |
| 60 000 | 66 000 | 4 900 | 6 400 | 0,431 | 0,572 | | 1,0 | 42 | 47 | 63 | 65 | **222 07** |
| 70 000 | 76 000 | 4 300 | 5 700 | 0,549 | 0,726 | 0,626 | 1,0 | 47 | 53 | 71 | 73 | **222 08** |
| 75 000 | 83 000 | 4 000 | 5 200 | 0,608 | 0,844 | 0,703 | 1,0 | 52 | 58 | 76 | 78 | **222 09** |
| 79 000 | 88 000 | 3 700 | 4 900 | 0,649 | 0,939 | 0,771 | 1,0 | 57 | 62 | 81 | 83 | **222 10** |
| 93 000 | 104 000 | 3 400 | 4 400 | 0,880 | 1,21 | 1,02 | 1,5 | 64 | 69 | 90 | 91 | **222 11** |
| 117 000 | 131 000 | 3 100 | 4 000 | 1,21 | 1,58 | 1,38 | 1,5 | 69 | 75 | 97 | 101 | **222 12** |
| 141 000 | 161 000 | 2 800 | 3 700 | 1,59 | 2,02 | 1 81 | 1,5 | 74 | 82 | 108 | 111 | **222 13** |
| 147 000 | 173 000 | 2 700 | 3 500 | 1,67 | 2,35 | 1,91 | 1,5 | 79 | 87 | 113 | 116 | **222 14** |
| 153 000 | 185 000 | 2 500 | 3 300 | 1,76 | 2,55 | 2,03 | 1,5 | 84 | 92 | 118 | 121 | **222 15** |
| 175 000 | 212 000 | 2 400 | 3 100 | 2,16 | 3,14 | 2,48 | 2,0 | 91 | 99 | 127 | 129 | **222 16** |
| 204 000 | 250 000 | 2 200 | 2 900 | 2,75 | 3,87 | 3,12 | 2,0 | 96 | 105 | 135 | 139 | **222 17** |
| 255 000 | 325 000 | 2 100 | 2 700 | 3,55 | 4,85 | 3,94 | 2,0 | 101 | 112 | 144 | 149 | **222 18** |
| 275 000 | 360 000 | 2 000 | 2 600 | 4,31 | 5,76 | 4,76 | 2,0 | 108 | 120 | 153 | 157 | **222 19** |
| 305 000 | 400 000 | 1 900 | 2 400 | 5,17 | 6,76 | 5,62 | 2,0 | 113 | 127 | 162 | 167 | **222 20** |
| 390 000 | 520 000 | 1 700 | 2 200 | 7,40 | 9,43 | 7,98 | 2,0 | 123 | 139 | 179 | 187 | **222 22** |
| 460 000 | 630 000 | 1 600 | 2 000 | 9,30 | 11,7 | 10,1 | 2,0 | 133 | 151 | 193 | 202 | **222 24** |
| 550 000 | 770 000 | 1 400 | 1 900 | 11,7 | 15,2 | 12,6 | 2,5 | 144 | 162 | 206 | 216 | **222 26** |
| 590 000 | 810 000 | 1 300 | 1 700 | 15,0 | 19,0 | 16,0 | 2,5 | 154 | 176 | 225 | 236 | **222 28** |
| 690 000 | 980 000 | 1 200 | 1 600 | 18,5 | 23,6 | 19,9 | 2,5 | 164 | 192 | 242 | 256 | **222 30** |
| 680 000 | 1 010 000 | 1 200 | 1 500 | 23,4 | 30,6 | 26,1 | 2,5 | 174 | 204 | 260 | 276 | **222 32** |
| 780 000 | 1 180 000 | 1 100 | 1 400 | 29,0 | 36,8 | 31,8 | 3,0 | 188 | 217 | 277 | 292 | **222 34** |
| 800 000 | 1 230 000 | 1 000 | 1 400 | 30,5 | 39,4 | 34,1 | 3,0 | 198 | 228 | 287 | 302 | **222 36** |
| 940 000 | 1 450 000 | 1 000 | 1 300 | 37,4 | 47,6 | 41,5 | 3,0 | 208 | 240 | 306 | 322 | **222 38** |
| 1 120 000 | 1 740 000 | 900 | 1 200 | 45,0 | 56,2 | 49,4 | 3,0 | 218 | 253 | 323 | 342 | **222 40** |
| 1 360 000 | 2 150 000 | 800 | 1 100 | 63,1 | 76,2 | 72,1 | 3,0 | 238 | 285 | 358 | 382 | **222 44** |
| 1 860 000 | 2 850 000 | 750 | 1 000 | 84,8 | 101 | 95,3 | 3,0 | 258 | 310 | 394 | 422 | **222 48** |

**Larger sizes are available on request**

# Double row spherical roller bearings

## 232 LIGHT WIDE SERIES

METRIC SIZES

ISO DIMENSION SERIES 32

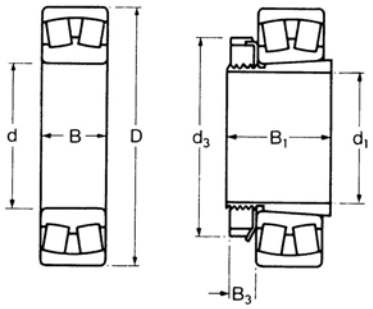


Bearing with cylindrical bore

Bearing with adapter sleeve

| RKB designations | | | | Dimensions | | | | | | | | | | |
|---|---|---|---|---|---|---|---|---|---|---|---|---|---|---|
| basic bearing with cylindrical bore* | adapter sleeve metric bore | adapter sleeve inch bore | withdrawal sleeve metric bore | millimetres d | $d_1$ | $d_2$ | D | B | $d_3$ | $d_4$ | $B_1$ | $B_2$ | $B_3$ | $B_4$ |
| **232 18** | H2318 | H2318–3¼ | AHX3218 | 90 | 80 | 85 | 160 | 52,4 | 120 | 100 | 86 | 63 | 18 | 10 |
| **232 20** | H2320 | H2320–3½ | AHX3220 | 100 | 90 | 95 | 180 | 60,3 | 130 | 110 | 97 | 73 | 20 | 11 |
| **232 22** | H2322 | H2322–4 | AHX3222 | 110 | 100 | 105 | 200 | 69,8 | 145 | 125 | 105 | 82 | 21 | 11 |
| **232 24** | H2324 | H2324–4¼ | AHX3224 | 120 | 110 | 115 | 215 | 76 | 155 | 135 | 112 | 90 | 22 | 13 |
| **232 26** | H2326 | H2326–4½ | AHX3226 | 130 | 115 | 125 | 230 | 80 | 165 | 145 | 121 | 98 | 23 | 15 |
| **232 28** | H2328 | H2328–5 | AHX3228 | 140 | 125 | 135 | 250 | 88 | 180 | 155 | 131 | 104 | 24 | 15 |
| **232 30** | H2330 | H2330–5¼ | AHX3230 | 150 | 135 | 145 | 270 | 96 | 195 | 165 | 139 | 114 | 26 | 17 |
| **232 32** | H2332 | H2332–5½ | AH 3232 | 160 | 140 | 150 | 290 | 104 | 210 | 180 | 147 | 124 | 28 | 20 |
| **232 34** | H2334 | H2334–6 | AH 3234 | 170 | 150 | 160 | 310 | 110 | 220 | 190 | 154 | 134 | 29 | 24 |
| **232 36** | H2336 | | AH 3236 | 180 | 160 | 170 | 320 | 112 | 230 | 200 | 161 | 140 | 30 | 25 |
| **232 38** | H2338 | | AH 3238 | 190 | 170 | 180 | 340 | 120 | 240 | 210 | 169 | 145 | 31 | 25 |
| **232 40** | H2340 | | AH 3240 | 200 | 180 | 190 | 360 | 128 | 250 | 220 | 176 | 153 | 32 | 24 |
| **232 44** | H2344X | | AH 2344 | 220 | 200 | 200 | 400 | 144 | 280 | 240 | 186 | 181 | 35 | 30 |

*For bearings with 1 :12 tapered bore add suffix 'K', e.g. 232 18K.
If bearings are required with a radial groove and three lubrication holes add suffix 'W33' e.g. 232 38 W33.
When ordering a bearing with an adapter or withdrawal sleeve, add the designation of the latter component to that of the bearing with tapered bore, e.g. 232 24K + H2324.

**Please check availability**

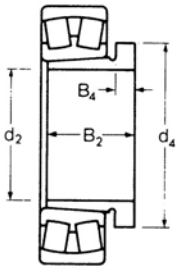


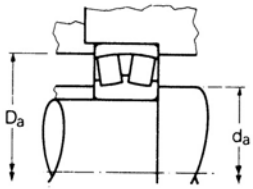


Bearing with withdrawal sleeve

| **RKB** load ratings† newtons | | Normal limiting speeds rev/min | | Weights kg approx | | | Shaft and housing dimensions millimetres | | | | | **RKB** designation |
|---|---|---|---|---|---|---|---|---|---|---|---|---|
| dynamic $C_r$ | static $C_{or}$ | grease | oil | basic bearing | with adapter sleeve | with withdrawal sleeve | max fillet radius | $d_a$ min | $d_a$ max | $D_a$ min | $D_a$ max | (basic bearing) |
| 320 000 | 470 000 | 1 800 | 2 200 | 4,68 | 6,23 | 5,12 | 2,0 | 101 | 107 | 140 | 149 | **232 18** |
| 405 000 | 610 000 | 1 600 | 2 000 | 6,85 | 8,80 | 7,44 | 2,0 | 113 | 119 | 157 | 167 | **232 20** |
| 490 000 | 740 000 | 1 500 | 1 900 | 9,89 | 12,4 | 10,7 | 2,0 | 123 | 132 | 174 | 187 | **232 22** |
| 600 000 | 940 000 | 1 400 | 1 800 | 12,2 | 15,1 | 13,2 | 2,0 | 133 | 142 | 186 | 202 | **232 24** |
| 590 000 | 940 000 | 1 200 | 1 600 | 14,5 | 18,7 | 15,7 | 2,5 | 144 | 152 | 201 | 216 | **232 26** |
| 780 000 | 1 270 000 | 1 200 | 1 600 | 19,0 | 24,1 | 20,3 | 2,5 | 154 | 163 | 218 | 236 | **232 28** |
| 800 000 | 1 280 000 | 1 100 | 1 400 | 24,5 | 30,8 | 26,0 | 2,5 | 164 | 175 | 235 | 256 | **232 30** |
| 1 060 000 | 1 700 000 | 900 | 1 200 | 31,0 | 39,2 | 34,2 | 2,5 | 174 | 190 | 251 | 276 | **232 32** |
| 1 200 000 | 1 930 000 | 800 | 1 000 | 37,5 | 46,6 | 41,2 | 3,0 | 187 | 202 | 269 | 293 | **232 34** |
| 1 290 000 | 2 080 000 | 800 | 1 000 | 39,8 | 50,0 | 44,0 | 3,0 | 197 | 209 | 279 | 303 | **232 36** |
| 1 500 000 | 2 500 000 | 800 | 1 000 | 47,4 | 58,6 | 51,9 | 3,0 | 207 | 222 | 295 | 323 | **232 38** |
| 1 600 000 | 2 650 000 | 700 | 900 | 58,1 | 70,4 | 63,2 | 3,0 | 217 | 237 | 311 | 343 | **232 40** |
| 1 850 000 | 3 100 000 | 700 | 900 | 81,6 | 96,2 | 93,0 | 3,0 | 238 | 263 | 346 | 382 | **232 44** |

**Larger sizes are available on request**

# Double row spherical roller bearings

## 213 MEDIUM SERIES

METRIC SIZES

ISO DIMENSION SERIES 03

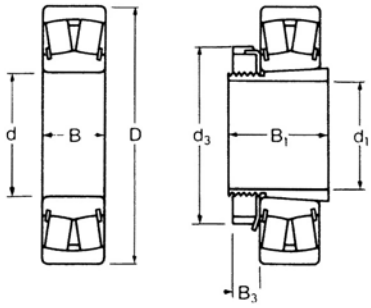


Bearing with cylindrical bore

Bearing with adapter sleeve

| RKB designations | | | | Dimensions | | | | | | | | | | |
|---|---|---|---|---|---|---|---|---|---|---|---|---|---|---|
| basic bearing with cylindrical bore* | adapter sleeve metric bore | adapter sleeve inch bore | withdrawal sleeve metric bore | millimetres d | $d_1$ | $d_2$ | D | B | $d_3$ | $d_4$ | $B_1$ | $B_2$ | $B_3$ | $B_4$ |
| **213 05** | | | | 25 | | | 62 | 17 | | | | | | |
| **213 06** | | | | 30 | | | 72 | 19 | | | | | | |
| **213 07** | | | | 35 | | | 80 | 21 | | | | | | |
| **213 08** | H308 | H308–1¼ | AH 308 | 40 | 35 | 35 | 90 | 23 | 58 | 45 | 36 | 29 | 10 | 6 |
| **213 09** | H309 | H309–1½ | AH 309 | 45 | 40 | 40 | 100 | 25 | 65 | 50 | 39 | 31 | 11 | 6 |
| **213 10** | H310 | H310–1¾ | AHX310 | 50 | 45 | 45 | 110 | 27 | 70 | 55 | 42 | 35 | 12 | 7 |
| **213 11** | H311 | H311–1⅞ | AHX311 | 55 | 50 | 50 | 120 | 29 | 75 | 60 | 45 | 37 | 12 | 7 |
| **213 12** | H312 | H312–2⅛ | AHX312 | 60 | 55 | 55 | 130 | 31 | 80 | 65 | 47 | 40 | 13 | 8 |
| **213 13** | H313 | H313–2¼ | AH 313 | 65 | 60 | 60 | 140 | 33 | 85 | 75 | 50 | 42 | 14 | 8 |
| **213 14** | H314 | | AH 314 | 70 | 60 | 65 | 150 | 35 | 92 | 80 | 52 | 43 | 14 | 8 |
| **213 15** | H315 | H315–2½ | AH 315 | 75 | 65 | 70 | 160 | 37 | 98 | 85 | 55 | 45 | 15 | 8 |
| **213 16** | H316 | H316–2¾ | AH 316 | 80 | 70 | 75 | 170 | 39 | 105 | 90 | 59 | 48 | 17 | 8 |
| **213 17** | H317 | H317–3 | AHX317 | 85 | 75 | 80 | 180 | 41 | 110 | 95 | 63 | 52 | 18 | 9 |
| **213 18** | H318 | H318–3¼ | AHX318 | 90 | 80 | 85 | 190 | 43 | 120 | 100 | 65 | 53 | 18 | 9 |

* For bearings with 1 : 12 tapered bore add suffix 'K', e.g. 21308K.
If bearings are required with a radial groove and three lubrification holes add suffix "W33' e.g. 21312 W33.
When ordering a bearing with an adapter or withdrawal sleeve, add the designation of the latter component to that of the bearing with tapered bore, e.g. 213 13K + H313.

**Please check availability**

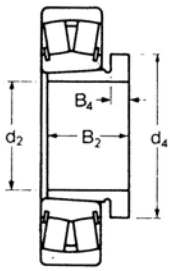


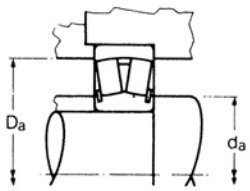


Bearing with withdrawal sleeve

| **RKB** load ratings† newtons | | Normal limiting speeds rev/min | | Weights kg approx | | | Shaft and housing dimensions millimetres | | | | | **RKB** designation |
|---|---|---|---|---|---|---|---|---|---|---|---|---|
| dynamic $C_r$ | static $C_{or}$ | grease | oil | basic bearing | with adapter sleeve | with withdrawal sleeve | max fillet radius | $d_a$ min | $d_a$ max | $D_a$ min | $D_a$ max | (basic bearing) |
| 43 000 | 41 000 | 5 200 | 6 700 | 0,250 | | | 1,0 | 32 | 33 | 53 | 55 | **213 05** |
| 56 000 | 55 000 | 4 300 | 5 600 | 0,380 | | | 1,0 | 37 | 38 | 61 | 65 | **213 06** |
| 69 000 | 71 000 | 3 800 | 5 000 | 0,508 | | | 1,5 | 44 | 45 | 68 | 71 | **213 07** |
| 84 000 | 90 000 | 3 400 | 4 400 | 0,712 | 0,889 | 0,789 | 1,5 | 49 | 52 | 77 | 81 | **213 08** |
| 102 000 | 111 000 | 3 000 | 4 000 | 0,948 | 1,18 | 1,04 | 1,5 | 54 | 58 | 86 | 91 | **213 09** |
| 122 000 | 140 000 | 2 800 | 3 600 | 1,21 | 1,49 | 1,33 | 2,0 | 61 | 65 | 94 | 99 | **213 10** |
| 147 000 | 171 000 | 2 500 | 3 300 | 1,58 | 1,91 | 1,72 | 2,0 | 66 | 70 | 104 | 109 | **213 11** |
| 164 000 | 193 000 | 2 300 | 3 000 | 1,96 | 2,32 | 2,12 | 2,0 | 73 | 77 | 112 | 117 | **213 12** |
| 191 000 | 223 000 | 2 100 | 2 800 | 2,45 | 2,87 | 2,66 | 2,0 | 78 | 82 | 122 | 127 | **213 13** |
| 210 000 | 248 000 | 2 000 | 2 600 | 2,99 | 3,67 | 3,23 | 2,0 | 83 | 88 | 129 | 137 | **213 14** |
| 238 000 | 285 000 | 1 900 | 2 400 | 3,56 | 4,34 | 3,82 | 2,0 | 88 | 93 | 138 | 147 | **213 15** |
| 260 000 | 310 000 | 1 800 | 2 300 | 4,18 | 5,17 | 4,49 | 2,0 | 93 | 100 | 147 | 157 | **213 16** |
| 295 000 | 360 000 | 1 700 | 2 200 | 4,99 | 6,08 | 5,35 | 2,5 | 99 | 106 | 156 | 166 | **213 17** |
| 315 000 | 395 000 | 1 600 | 2 000 | 5,81 | 7,08 | 6,17 | 2,5 | 104 | 113 | 165 | 176 | **213 18** |

**Larger sizes are available on request**

# Double row spherical roller bearings

## 223 MEDIUM WIDE SERIES

METRIC SIZES

ISO DIMENSION SERIES 23

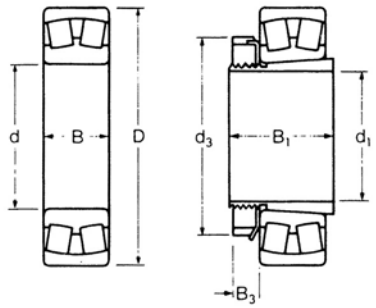


Bearing with cylindrical bore

Bearing with adapter sleeve

| RKB designations | | | | Dimensions | | | | | | | | | | |
|---|---|---|---|---|---|---|---|---|---|---|---|---|---|---|
| basic bearing with cylindrical bore* | adapter sleeve metric bore | adapter sleeve inch bore | withdrawal sleeve metric bore | millimetres d | $d_1$ | $d_2$ | D | B | $d_3$ | $d_4$ | $B_1$ | $B_2$ | $B_3$ | $B_4$ |
| **223 08** | H2308 | H2308–1¼ | AH 2308 | 40 | 35 | 35 | 90 | 33 | 58 | 45 | 46 | 40 | 10 | 7 |
| **223 09** | H2309 | H2309–1½ | AH 2309 | 45 | 40 | 40 | 100 | 36 | 65 | 50 | 50 | 44 | 11 | 7 |
| **223 10** | H2310 | H2310–1¾ | AHX2310 | 50 | 45 | 45 | 110 | 40 | 70 | 55 | 55 | 50 | 12 | 9 |
| **223 11** | H2311 | H2311–2 | AHX2311 | 55 | 50 | 50 | 120 | 43 | 75 | 60 | 59 | 54 | 12 | 10 |
| **223 12** | H2312 | | AHX2312 | 60 | 55 | 55 | 130 | 46 | 80 | 65 | 62 | 58 | 13 | 11 |
| **223 13** | H2313 | H2313–2¼ | AH 2313 | 65 | 60 | 60 | 140 | 48 | 85 | 75 | 65 | 61 | 14 | 12 |
| **223 14** | H2314 | | AHX2314 | 70 | 60 | 65 | 150 | 51 | 92 | 80 | 68 | 64 | 14 | 12 |
| **223 15** | H2315 | H2315–2½ | AHX2315 | 75 | 65 | 70 | 160 | 55 | 98 | 85 | 73 | 68 | 15 | 12 |
| **223 16** | H2316 | H2316–2¾ | AHX2316 | 80 | 70 | 75 | 170 | 58 | 105 | 90 | 78 | 71 | 17 | 12 |
| **223 17** | H2317 | H2317–3 | AHX2317 | 85 | 75 | 80 | 180 | 60 | 110 | 95 | 82 | 74 | 18 | 13 |
| **223 18** | H2318 | H2318–3¼ | AHX2318 | 90 | 80 | 85 | 190 | 64 | 120 | 100 | 86 | 79 | 18 | 14 |
| **223 19** | H2319 | | AHX2319 | 95 | 85 | 90 | 200 | 67 | 125 | 105 | 90 | 85 | 19 | 16 |
| **223 20** | H2320 | H2320–3½ | AHX2320 | 100 | 90 | 95 | 215 | 73 | 130 | 110 | 97 | 90 | 20 | 16 |
| **223 22** | H2322 | H2322–4 | AHX2322 | 110 | 100 | 105 | 240 | 80 | 145 | 125 | 105 | 98 | 21 | 16 |
| **223 24** | H2324 | H2324–4¼ | AHX2324 | 120 | 110 | 115 | 260 | 86 | 155 | 135 | 112 | 105 | 22 | 17 |
| **223 26** | H2326 | H2326–4½ | AHX2326 | 130 | 115 | 125 | 280 | 93 | 165 | 145 | 121 | 115 | 23 | 19 |
| **223 28** | H2328 | H2328–5 | AHX2328 | 140 | 125 | 135 | 300 | 102 | 180 | 155 | 131 | 125 | 24 | 20 |
| **223 30** | H2330 | H2330–5¼ | AHX2330 | 150 | 135 | 145 | 320 | 108 | 195 | 165 | 139 | 135 | 26 | 24 |
| **223 32** | H2332 | H2332–5½ | AH 2332 | 160 | 140 | 150 | 340 | 114 | 210 | 180 | 147 | 140 | 28 | 24 |
| **223 34** | H2334 | H2334–6 | AH 2334 | 170 | 150 | 160 | 360 | 120 | 220 | 190 | 154 | 146 | 29 | 24 |

*For bearings with 1 : 12 tapered bore add suffix 'K', e.g. 223 16K.
If bearings are required with a radial groove and three lubrication holes add suffix 'W33', e.g. 223 28 W33.
When ordering a bearing with an adapter or withdrawal sleeve, add the designation of the latter component to that of the bearing with tapered bore, e.g. 223 26K + AHX2326.

**Please check availability**

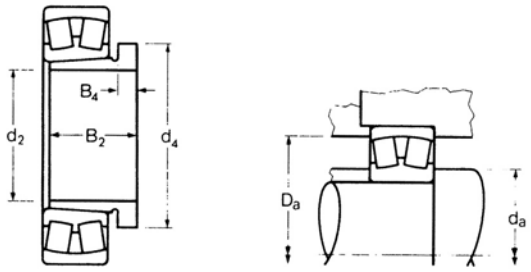


Bearing with withdrawal sleeve

| **RKB** load ratings† newtons | | Normal limiting speeds rev/min | | Weights kg approx | | | Shaft and housing dimensions millimetres | | | | | **RKB** designation |
|---|---|---|---|---|---|---|---|---|---|---|---|---|
| dynamic $C_r$ | static $C_{or}$ | grease | oil | basic bearing | with adapter sleeve | with withdrawal sleeve | max fillet radius | $d_a$ min | $d_a$ max | $D_a$ min | $D_a$ max | (basic bearing) |
| 115 000 | 129 000 | 3 900 | 5 000 | 0,993 | 1,20 | 1,10 | 1,5 | 49 | 51 | 76 | 81 | **223 08** |
| 137 000 | 163 000 | 3 400 | 4 500 | 1,35 | 1,60 | 1,48 | 1,5 | 54 | 59 | 84 | 91 | **223 09** |
| 168 000 | 202 000 | 3 100 | 4 100 | 1,81 | 2,13 | 1,98 | 2,0 | 61 | 65 | 93 | 99 | **223 10** |
| 198 000 | 240 000 | 2 900 | 3 700 | 2,33 | 2,70 | 2,53 | 2,0 | 66 | 71 | 102 | 109 | **223 11** |
| 230 000 | 280 000 | 2 600 | 3 400 | 2,91 | 3,32 | 3,14 | 2,0 | 73 | 77 | 111 | 117 | **223 12** |
| 247 000 | 300 000 | 2 400 | 3 200 | 3,48 | 3,96 | 3,80 | 2,0 | 78 | 83 | 120 | 127 | **223 13** |
| 280 000 | 325 000 | 2 300 | 3 000 | 4,20 | 4,99 | 4,58 | 2,0 | 83 | 87 | 130 | 137 | **223 14** |
| 325 000 | 385 000 | 2 100 | 2 800 | 5,22 | 6,17 | 5,62 | 2,0 | 88 | 92 | 139 | 147 | **223 15** |
| 370 000 | 460 000 | 2 000 | 2 600 | 6,17 | 7,30 | 6,62 | 2,0 | 93 | 100 | 147 | 157 | **223 16** |
| 395 000 | 510 000 | 1 900 | 2 500 | 7,12 | 8,44 | 7,67 | 2,5 | 99 | 108 | 154 | 166 | **223 17** |
| 435 000 | 550 000 | 1 800 | 2 300 | 8,48 | 9,98 | 9,07 | 2,5 | 104 | 113 | 165 | 176 | **223 18** |
| 415 000 | 510 000 | 1 700 | 2 200 | 9,93 | 11,7 | 10,6 | 2,5 | 109 | 119 | 174 | 186 | **223 19** |
| 465 000 | 570 000 | 1 600 | 2 100 | 12,5 | 14,5 | 13,3 | 2,5 | 114 | 126 | 186 | 201 | **223 20** |
| 770 000 | 1 030 000 | 1 400 | 1 900 | 18,1 | 20,4 | 19,1 | 2,5 | 124 | 141 | 207 | 226 | **223 22** |
| 790 000 | 1 020 000 | 1 300 | 1 700 | 22,9 | 25,6 | 24,0 | 2,5 | 134 | 150 | 226 | 246 | **223 24** |
| 910 000 | 1 200 000 | 1 200 | 1 600 | 28,6 | 32,6 | 30,0 | 3,0 | 148 | 165 | 242 | 262 | **223 26** |
| 1 070 000 | 1 440 000 | 1 100 | 1 500 | 36,2 | 41,0 | 37,2 | 3,0 | 158 | 177 | 260 | 282 | **223 28** |
| 1 170 000 | 1 600 000 | 1 100 | 1 400 | 43,6 | 49,4 | 45,4 | 3,0 | 168 | 189 | 277 | 302 | **223 30** |
| 1 200 000 | 1 660 000 | 1 000 | 1 300 | 51,7 | 59,9 | 55,3 | 3,0 | 178 | 205 | 293 | 322 | **223 32** |
| 1 310 000 | 1 840 000 | 950 | 1 200 | 62,1 | 70,8 | 66,2 | 3,0 | 188 | 217 | 310 | 342 | **223 34** |

**Larger sizes are available on request**

# Double row spherical roller bearings

## 240 SERIES

METRIC SIZES

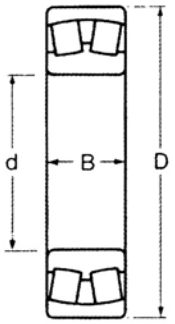


ISO DIMENSION SERIES 40

| RKB designations basic bearing with cylindrical bore | with taper bore | withdrawal sleeve metric bore | Dimensions millimetres d | $d_2$ | D | B | $d_4$ | $B_2$ | $B_4$ | RKB load ratings† newtons dynamic $C_r$ | static $Co_r$ | Normal limiting speeds rev/min grease | oil |
|---|---|---|---|---|---|---|---|---|---|---|---|---|---|
| 24024 | -K | AH 24024 | 120 | 115 | 180 | 60 | M 125X2 | 73 | 82 | 374 000 | 670 000 | 1 600 | 2 000 |
| 24026 | -K | AH 24026 | 130 | 125 | 200 | 69 | M 135X2 | 83 | 93 | 477 000 | 815 000 | 1 500 | 1 900 |
| 24028 | -K | AH 24028 | 140 | 135 | 210 | 69 | M 145X2 | 83 | 93 | 495 000 | 900 000 | 1 400 | 1 800 |
| 24030 | -K | AH 24030 | 150 | 145 | 225 | 75 | M 155X3 | 90 | 101 | 564 000 | 1 040 000 | 1 300 | 1 700 |
| 24032 | -K | AH 24032 | 160 | 150 | 240 | 80 | M 170X3 | 95 | 106 | 656 000 | 1 200 000 | 1 100 | 1 500 |
| 24034 | -K | AH 24034 | 170 | 160 | 260 | 90 | M 180X3 | 106 | 117 | 799 000 | 1 460 000 | 1 000 | 1 400 |
| 24036 | -K | AH 24036 | 180 | 170 | 280 | 100 | M 190X3 | 116 | 127 | 937 000 | 1 730 000 | 950 | 1 300 |
| 24038 | -K | AH 24038 | 190 | 180 | 290 | 100 | M 200X3 | 118 | 131 | 978 000 | 1 800 000 | 950 | 1 300 |
| 24040 | -K | AH 24040 | 200 | 190 | 310 | 109 | Tr 210X4 | 127 | 140 | 1 130 000 | 2 120 000 | 900 | 1 200 |
| 24044 | -K | AOH 24044 | 220 | 200 | 340 | 118 | Tr 230X4 | 138 | 152 | 1 360 000 | 2 600 000 | 850 | 1 100 |
| 24048 | -K | AOH 24048 | 240 | 220 | 360 | 118 | Tr 250X4 | 138 | 153 | 1 380 000 | 2 700 000 | 800 | 1 000 |
| 24052 | -K | AOH 24052 | 260 | 240 | 400 | 140 | Tr 270X4 | 162 | 178 | 1 760 000 | 3 450 000 | 700 | 900 |
| 24056 | -K | AOH 24056 | 280 | 260 | 420 | 140 | Tr 290X4 | 162 | 179 | 1 780 000 | 3 800 000 | 670 | 850 |
| 24060 | -K | AOH 24060 | 300 | 280 | 460 | 160 | Tr 310X5 | 184 | 202 | 2 350 000 | 4 750 000 | 600 | 750 |
| 24064 | -K | AOH 24064 | 320 | 300 | 480 | 160 | Tr 330X5 | 184 | 202 | 2 480 000 | 5 100 000 | 560 | 700 |
| 24068 | -K | AOH 24068 | 340 | 320 | 520 | 180 | Tr 360X5 | 206 | 225 | 2 990 000 | 6 200 000 | 530 | 670 |
| 24072 | -K | AOH 24072 | 360 | 340 | 540 | 180 | Tr 380X5 | 206 | 226 | 3 110 000 | 6 550 000 | 500 | 630 |
| 24076 | -K | AOH 24076 | 380 | 360 | 560 | 200 | Tr 400X5 | 208 | 228 | 3 160 000 | 6 800 000 | 480 | 600 |
| 24080 | -K | AOH 24080 | 400 | 380 | 600 | 200 | Tr 420X5 | 228 | 248 | 3 620 000 | 7 800 000 | 450 | 750 |
| 24084 | -K | AOH 24084 | 420 | 400 | 620 | 200 | Tr 440X5 | 230 | 252 | 3 740 000 | 8 150 000 | 380 | 480 |
| 24088 | -K | AOH 24088 | 440 | 420 | 650 | 212 | Tr 460X5 | 242 | 264 | 4 080 000 | 8 800 000 | 360 | 450 |
| 24092 | -K | | | 460 | | 680 | | 218 | | 4 370 000 | 9 500 000 | 340 | 430 |
| 24096 | -K | | | 480 | | 700 | | 218 | | 4 490 000 | 10 000 000 | 340 | 430 |
| 240/500 | -K | | | 500 | | 720 | | 218 | | 4 600 000 | 10 400 000 | 320 | 400 |
| 240/530 | -K | | | 530 | | 780 | | 250 | | 5 640 000 | 12 700 000 | 280 | 360 |
| 240/560 | -K | | | 560 | | 820 | | 258 | | 6 210 000 | 14 000 000 | 260 | 340 |
| 240/600 | -K | | | 600 | | 870 | | 272 | | 6 730 000 | 15 600 000 | 240 | 320 |
| 240/630 | -K | | | 630 | | 920 | | 290 | | 7 530 000 | 17 300 000 | 220 | 300 |
| 240/670 | -K | | | 670 | | 980 | | 308 | | 8 450 000 | 20 000 000 | 200 | 280 |
| 240/710 | -K | | | 710 | | 1 030 | | 315 | | 8 970 000 | 22 000 000 | 190 | 260 |
| 240/750 | -K | | | 750 | | 1 090 | | 335 | | 9 950 000 | 24 000 000 | 180 | 240 |
| 240/800 | -K | | | 800 | | 1 150 | | 345 | | 10 900 000 | 27 500 000 | 170 | 220 |
| 240/850 | -K | | | 850 | | 1 220 | | 365 | | 12 000 000 | 30 000 000 | 160 | 200 |
| 240/900 | -K | | | 900 | | 1 280 | | 375 | | 12 900 000 | 32 500 000 | 150 | 190 |
| 240/950 | -K | | | 950 | | 1 360 | | 412 | | 14 800 000 | 39 000 000 | 130 | 170 |
| 240/1000 | -K | | | 1 000 | | 1 420 | | 412 | | 15 400 000 | 40 500 000 | 120 | 160 |
| 240/1060 | -K | | | 1 060 | | 1 500 | | 438 | | 17 300 000 | 45 500 000 | 110 | 120 |

For bearings with 1 : 30 tapered bore add suffix 'K', 30' e.g. 24030 K30.
If bearings are required with a radial groove and three lubrification holes add suffix "W33' e.g. 24056 W33.
When ordering a bearing with an adapter or withdrawal sleeve, add the designation of the latter component to that of the bearing with tapered bore, e.g. 24052 K30 + AOH 24052.

**Please check availability**

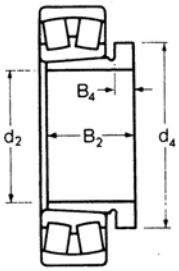


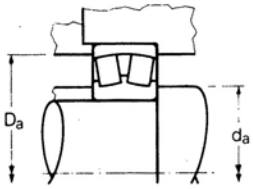


| Weights | | Shaft and housing dimensions | | |
|---|---|---|---|---|
| Kg | approx | millimetres | | |
| basic bearing | withdrawal sleeve | max fillet radius | $d_a$ min | $D_a$ max |
| 5,30 | 0,70 | 2 | 130 | 170 |
| 7,85 | 0,88 | 2 | 140 | 190 |
| 8,35 | 0,95 | 2 | 150 | 200 |
| 10,5 | 1,05 | 2 | 162 | 213 |
| 12,5 | 2,30 | 2 | 172 | 228 |
| 17,0 | 2,70 | 2 | 182 | 248 |
| 22,5 | 3,20 | 2 | 192 | 268 |
| 23,5 | 3,55 | 2 | 202 | 278 |
| 30,0 | 4,00 | 2 | 212 | 298 |
| 39,0 | 8,20 | 2,5 | 326 | 234 |
| 42,0 | 8,05 | 2,5 | 254 | 346 |
| 63,5 | 10,5 | 3 | 278 | 382 |
| 67,5 | 11,5 | 3 | 298 | 402 |
| 95,5 | 14,0 | 3 | 318 | 442 |
| 98,0 | 15,0 | 3 | 338 | 462 |
| 135 | 18,0 | 4 | 362 | 498 |
| 140 | 20,0 | 4 | 382 | 518 |
| 145 | 23,5 | 4 | 402 | 538 |
| 200 | 27,0 | 4 | 422 | 578 |
| 205 | 29,0 | 4 | 442 | 598 |
| 240 | 32,0 | 5 | 468 | 622 |
| 275 | | | | |
| 285 | | | | |
| 295 | | | | |
| 410 | | | | |
| 465 | | | | |
| 540 | | | | |
| 655 | | | | |
| 790 | | | | |
| 895 | | | | |
| 1 065 | | | | |
| 1 200 | | | | |
| 1 410 | | | | |
| 1 570 | | | | |
| 1 990 | | | | |
| 2 140 | | | | |
| 2 515 | | | | |

**Larger sizes are available on request**

# Double row spherical roller bearings

## 241 SERIES

METRIC SIZES

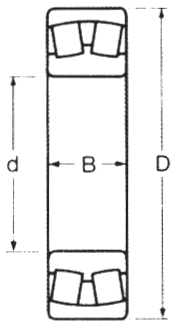


ISO DIMENSION SERIES 41

| RKB designations | | | Dimensions | | | | | | RKB | | load ratings† | Normal limitings | |
|---|---|---|---|---|---|---|---|---|---|---|---|---|---|
| | | | millimetres | | | | | | newtons | | speeds rev/min | | |
| basic bearing with cylindrical bore | with taper bore | withdrawal sleeve metric bore | d | $d_2$ | D | B | $d_4$ | $B_2$ | $B_4$ | dynamic $C_r$ | static $C_{or}$ | grease | oil |
| **24122** | -K | AH 24122 | 110 | 105 | 180 | 69 | M 115X2 | 82 | 91 | 460 000 | 750 000 | 1 000 | 1 400 |
| **24124** | -K | AH 24124 | 120 | 115 | 200 | 80 | M 130X2 | 93 | 102 | 575 000 | 950 000 | 900 | 1 200 |
| **24126** | -K | AH 24126 | 130 | 125 | 210 | 80 | M 140X2 | 94 | 104 | 587 000 | 1 000 000 | 900 | 1 200 |
| **24128** | -K | AH 24128 | 140 | 135 | 225 | 85 | M 150X2 | 99 | 109 | 673 000 | 1 160 000 | 850 | 1 100 |
| **24130** | -K | AH 24130 | 150 | 145 | 250 | 100 | M 160X3 | 115 | 126 | 897 000 | 1 530 000 | 800 | 1 000 |
| **24132** | -K | AH 24132 | 160 | 150 | 270 | 109 | M 170X3 | 124 | 135 | 1 040 000 | 1 760 000 | 700 | 900 |
| **24134** | -K | AH 24134 | 170 | 160 | 280 | 109 | M 180X3 | 125 | 136 | 1 070 000 | 1 860 000 | 670 | 850 |
| **24136** | -K | AH 24136 | 180 | 170 | 300 | 118 | M 190X3 | 134 | 145 | 1 220 000 | 2 160 000 | 630 | 800 |
| **24138** | -K | AH 24138 | 190 | 180 | 320 | 128 | M 200X3 | 146 | 159 | 1 400 000 | 2 500 000 | 600 | 750 |
| **24140** | -K | AH 24140 | 200 | 190 | 340 | 140 | Tr 210X4 | 158 | 171 | 1 580 000 | 2 800 000 | 560 | 700 |
| **24144** | -K | AOH 24144 | 220 | 200 | 370 | 150 | Tr 230X4 | 170 | 184 | 1 840 000 | 3 350 000 | 500 | 630 |
| **24148** | -K | AOH 24148 | 240 | 220 | 400 | 160 | Tr 260X4 | 180 | 195 | 2 100 000 | 3 900 000 | 480 | 600 |
| **24152** | -K | AOH 24152 | 260 | 240 | 440 | 180 | Tr 280X4 | 202 | 218 | 2 620 000 | 4 800 000 | 430 | 530 |
| **24156** | -K | AOH 24156 | 280 | 260 | 460 | 180 | Tr 300X4 | 202 | 219 | 2 670 000 | 5 100 000 | 400 | 500 |
| **24160** | -K | AOH 24160 | 300 | 280 | 500 | 200 | Tr 320X5 | 224 | 242 | 3 280 000 | 6 300 000 | 360 | 450 |
| **24164** | -K | AOH 24164 | 320 | 300 | 540 | 218 | Tr 340X5 | 242 | 260 | 3 740 000 | 7 100 000 | 340 | 430 |
| **24168** | -K | AOH 24168 | 340 | 320 | 580 | 243 | Tr 360X5 | 269 | 288 | 4 660 000 | 8 650 000 | 320 | 400 |
| **24172** | -K | AOH 24172 | 360 | 340 | 600 | 243 | Tr 380X5 | 269 | 289 | 4 490 000 | 8 650 000 | 300 | 380 |
| **24176** | -K | AOH 24176 | 380 | 360 | 620 | 243 | Tr 400X5 | 271 | 291 | 4 600 000 | 9 150 000 | 190 | 260 |
| **24180** | -K | AOH 24180 | 400 | 380 | 650 | 250 | Tr 420X5 | 278 | 298 | 4 890 000 | 9 800 000 | 180 | 240 |
| **24184** | -K | AOH 24184 | 420 | 400 | 700 | 280 | Tr 440X5 | 310 | 332 | 5 750 000 | 11 400 000 | 170 | 220 |
| **24188** | -K | AOH 24188 | 440 | 420 | 720 | 280 | Tr 460X5 | 310 | 332 | 5 980 000 | 12 200 000 | 170 | 220 |
| **24192** | -K | AOH 24192 | | 440 | 760 | 300 | Tr 480X5 | 332 | 355 | 7 250 000 | 14 600 000 | 160 | 200 |
| **24196** | -K | AOH 24196 | | 460 | 790 | 308 | Tr 500X5 | 340 | 363 | 7 250 000 | 15 000 000 | 150 | 190 |
| **241/500** | -K | AOH 241/500 | | 480 | 830 | 325 | Tr 530X6 | 360 | 383 | 8 630 000 | 17 000 000 | 140 | 180 |
| **241/530** | -K | AOH 241/530 | | 500 | 870 | 335 | Tr 550X6 | 370 | 394 | 9 200 000 | 19 000 000 | 130 | 170 |
| **241/560** | -K | AOH 241/560 | | 530 | 920 | 355 | Tr 580X6 | 393 | 417 | 10 500 000 | 21 600 000 | 120 | 160 |
| **241/600** | -K | AOH 241/600 | | 560 | 980 | 375 | Tr 630X6 | 413 | 439 | 10 700 000 | 22 800 000 | 110 | 150 |
| **241/630** | -K | AOH 241/630 | | 600 | 1 030 | 400 | Tr 650X6 | 440 | 466 | 12 700 000 | 27 000 000 | 100 | 140 |

For bearings with 1 : 30 tapered bore add suffix 'K', 30' e.g. 24138 K30.
If bearings are required with a radial groove and three lubrification holes add suffix "W33' e.g. 24160 W33.
When ordering a bearing with an adapter or withdrawal sleeve, add the designation of the latter component to that of the bearing with tapered bore, e.g. 24136 K30 + AH 24136.

**Please check availability**

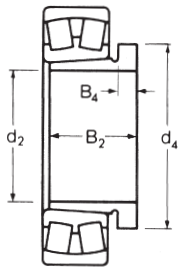


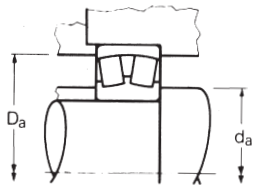


| Weights | | Shaft and housing dimensions | | |
|---|---|---|---|---|
| kg | approx | millimetres | | |
| basic bearing | withdrawal sleeve | max fillet radius | $d_a$ min | $D_a$ max |
| 6.75 | 0.71 | 2 | 120 | 170 |
| 10.0 | 1.00 | 2 | 130 | 190 |
| 10.5 | 1.05 | 2 | 140 | 200 |
| 12.5 | 1.30 | 2 | 152 | 213 |
| 19.5 | 1.55 | 2 | 162 | 238 |
| 25.0 | 3.05 | 2 | 172 | 258 |
| 26.0 | 3.25 | 2 | 182 | 268 |
| 32.5 | 3.75 | 2.5 | 194 | 286 |
| 41.0 | 4.45 | 2.5 | 204 | 306 |
| 51.0 | 5.05 | 2.5 | 214 | 326 |
| 64.0 | 10.0 | 3 | 238 | 352 |
| 79.0 | 11.5 | 3 | 258 | 382 |
| 110 | 14.0 | 3 | 278 | 422 |
| 115 | 15.0 | 4 | 302 | 438 |
| 155 | 18.5 | 4 | 322 | 478 |
| 205 | 20.5 | 4 | 342 | 518 |
| 265 | 25.5 | 4 | 362 | 558 |
| 265 | 26.0 | 4 | 382 | 578 |
| 295 | 31.0 | 4 | 402 | 598 |
| 335 | 35.0 | 5 | 428 | 622 |
| 440 | 39.0 | 5 | 448 | 672 |
| 455 | 42.5 | 5 | 468 | 692 |
| 550 | 50.0 | 6 | 496 | 724 |
| 595 | 51.5 | 6 | 516 | 754 |
| 735 | 57.0 | 6 | 536 | 794 |
| 820 | 86.0 | 6 | 566 | 834 |
| 970 | 97.0 | 6 | 596 | 884 |
| 1 180 | 120 | 6 | 636 | 944 |
| 1 380 | 130 | 6 | 666 | 994 |

**Larger sizes are available on request**

# Double row spherical roller bearings

## 239 SERIES

METRIC SIZES

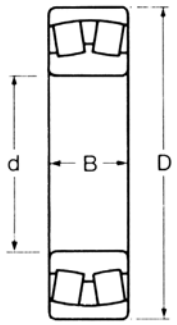


ISO DIMENSION SERIES 39

| RKB designations basic bearing with cylindrical bore | with taper bore | Dimensions millimetres d | D | B | RKB load ratings† dynamic $C_r$ | static $C_{or}$ | Normal limiting speeds rev/min grease | oil | Weight Kg approx | Shaft and housing dimensions millimetres da min | Da max | ra max |
|---|---|---|---|---|---|---|---|---|---|---|---|---|
| **239 36** | -K | 180 | 250 | 52 | 431 000 | 830 000 | 1 700 | 2 200 | 8.20 | 190 | 240 | 2 |
| **239 38** | -K | 190 | 260 | 52 | 414 000 | 800 000 | 1 700 | 2 200 | 8.40 | 200 | 250 | 2 |
| **239 40** | -K | 200 | 280 | 60 | 546 000 | 1 040 000 | 1 600 | 2 000 | 11.5 | 212 | 268 | 2 |
| **239 44** | -K | 220 | 300 | 60 | 546 000 | 1 080 000 | 1 500 | 1 900 | 13.0 | 232 | 288 | 2 |
| **239 48** | -K | 240 | 320 | 60 | 564 000 | 1 160 000 | 1 300 | 1 700 | 14.0 | 252 | 308 | 2 |
| **239 52** | -K | 260 | 360 | 75 | 880 000 | 1 800 000 | 1 100 | 1 500 | 24.0 | 272 | 348 | 2 |
| **239 56** | -K | 280 | 380 | 75 | 845 000 | 1 760 000 | 1 000 | 1 400 | 26.0 | 292 | 368 | 2 |
| **239 60** | -K | 300 | 420 | 90 | 1 200 000 | 2 500 000 | 950 | 1 300 | 40.5 | 314 | 406 | 2.5 |
| **239 64** | -K | 320 | 440 | 90 | 1 240 000 | 2 700 000 | 900 | 1 200 | 42.0 | 334 | 426 | 2.5 |
| **239 68** | -K | 340 | 460 | 90 | 1 270 000 | 2 800 000 | 900 | 1 200 | 45.5 | 354 | 446 | 2.5 |
| **239 72** | -K | 360 | 480 | 90 | 1 290 000 | 2 900 000 | 850 | 1 100 | 46.5 | 374 | 466 | 3 |
| **239 76** | -K | 380 | 520 | 106 | 1 730 000 | 3 800 000 | 800 | 1 000 | 69.0 | 398 | 502 | 3 |
| **239 80** | -K | 400 | 540 | 106 | 1 730 000 | 3 900 000 | 750 | 950 | 71.0 | 418 | 522 | 3 |
| **239 84** | -K | 420 | 560 | 106 | 1 760 000 | 4 150 000 | 700 | 900 | 74.5 | 438 | 542 | 3 |
| **239 88** | -K | 440 | 600 | 118 | 2 100 000 | 4 900 000 | 670 | 850 | 99.5 | 458 | 582 | 3 |
| **239 92** | -K | 460 | 620 | 118 | 2 190 000 | 5 000 000 | 430 | 530 | 105 | 478 | 602 | 3 |
| **239 96** | -K | 480 | 650 | 128 | 2 530 000 | 5 700 000 | 400 | 500 | 125 | 502 | 628 | 4 |
| **239 /500** | -K | 500 | 670 | 128 | 2 530 000 | 6 000 000 | 400 | 500 | 130 | 522 | 648 | 4 |
| **239 /530** | -K | 530 | 710 | 136 | 2 820 000 | 6 700 000 | 360 | 450 | 155 | 552 | 688 | 4 |
| **239 /560** | -K | 560 | 750 | 140 | 3 050 000 | 7 200 000 | 340 | 430 | 175 | 582 | 778 | 4 |
| **239 /600** | -K | 600 | 800 | 150 | 3 450 000 | 8 300 000 | 320 | 400 | 220 | 622 | 778 | 4 |
| **239 /630** | -K | 630 | 850 | 165 | 3 970 000 | 9 800 000 | 280 | 360 | 280 | 658 | 822 | 5 |
| **239 /670** | -K | 670 | 900 | 170 | 4 370 000 | 10 800 000 | 260 | 340 | 315 | 698 | 872 | 5 |
| **239 /710** | -K | 710 | 950 | 180 | 4 770 000 | 12 000 000 | 240 | 320 | 365 | 738 | 922 | 5 |
| **239 /750** | -K | 750 | 1 000 | 185 | 5 180 000 | 13 200 000 | 220 | 300 | 420 | 778 | 972 | 5 |
| **239 /800** | -K | 800 | 1 060 | 195 | 5 640 000 | 14 300 000 | 200 | 280 | 470 | 828 | 1 032 | 5 |
| **239 /850** | -K | 850 | 1 120 | 200 | 5 980 000 | 15 600 000 | 190 | 260 | 560 | 878 | 1 092 | 5 |
| **239 /900** | -K | 900 | 1 180 | 206 | 6 440 000 | 17 000 000 | 180 | 240 | 605 | 928 | 1 152 | 5 |
| **239 /950** | -K | 950 | 1 250 | 224 | 7 250 000 | 19 600 000 | 170 | 220 | 755 | 986 | 1 214 | 6 |
| **239 /1060** | -K | 1 060 | 1 400 | 250 | 9 550 000 | 26 000 000 | 140 | 180 | 1 100 | 1 096 | 1 364 | 6 |

* For bearings with 1 : 12 tapered bore add suffix 'K', e.g. 23940 K.
If bearings are required with a radial groove and three lubrification holes add suffix "W33' e.g. 23948 W33.

**Larger sizes are available on request**

**Please check availability**

RKB

# Spherical roller thrust bearings

## 292 SERIES

METRIC SIZES

ISO DIMENSION

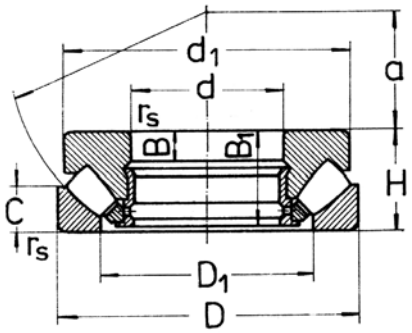


| RKB designations | Dimensions millimetres | | | | | | | | | | RKB load ratings† newtons | | Normal limiting speeds rev/min | Weight Kg approx |
|---|---|---|---|---|---|---|---|---|---|---|---|---|---|---|
| | d | D | H | $d_1$ | $D_1$ | B | $B_1$ | C | rs/min | a | dynamic $C_r$ | static $C_{or}$ | oil | |
| **29230** | 150 | 215 | 39 | 208 | 177 | 11 | 37 | 20 | 1.5 | 80 | 395 000 | 1 570 000 | 1 800 | 4.55 |
| **29232** | 160 | 225 | 39 | 220 | 188 | 11 | 37 | 20 | 1.5 | 87 | 410 000 | 1 680 000 | 1 700 | 4.80 |
| **29234** | 170 | 240 | 42 | 235 | 201 | 13 | 40 | 22 | 1.5 | 93 | 470 000 | 1 900 000 | 1 600 | 5.95 |
| **29236** | 180 | 250 | 42 | 245 | 211 | 14 | 40 | 21 | 1.5 | 97 | 485 000 | 2 020 000 | 1 600 | 6.25 |
| **29238** | 190 | 270 | 48 | 262 | 226 | 14 | 45 | 25.5 | 2 | 103 | 500 000 | 2 200 000 | 1 400 | 8.7 |
| **29240** | 200 | 280 | 48 | 270 | 236 | 15 | 45 | 24 | 2 | 108 | 610 000 | 2 620 000 | 1 400 | 8.90 |
| **29244** | 220 | 300 | 48 | 292 | 254 | 15 | 45 | 24 | 2 | 117 | 630 000 | 2 760 000 | 1 300 | 10.0 |
| **29248** | 240 | 340 | 60 | 330 | 283 | 19 | 57 | 30 | 2.1 | 130 | 920 000 | 3 970 000 | 1 100 | 16.5 |
| **29252** | 260 | 360 | 60 | 350 | 302 | 19 | 57 | 30 | 2.1 | 139 | 960 000 | 4 355 000 | 1 100 | 18.5 |
| **29256** | 280 | 380 | 60 | 370 | 323 | 19 | 57 | 30 | 2.1 | 150 | 975 000 | 4 465 000 | 1 000 | 19.5 |
| **29260** | 300 | 420 | 73 | 405 | 353 | 21 | 69 | 38 | 3 | 162 | 1 230 000 | 5 500 000 | 900 | 30.5 |
| **29264** | 320 | 440 | 73 | 430 | 372 | 21 | 69 | 38 | 3 | 172 | 1 325 000 | 6 230 000 | 850 | 34.0 |
| **29268** | 340 | 460 | 73 | 445 | 395 | 21 | 69 | 37 | 3 | 183 | 1 330 000 | 6 300 000 | 850 | 33.5 |
| **29272** | 360 | 500 | 85 | 485 | 423 | 25 | 81 | 44 | 4 | 194 | 1 710 000 | 7 765 000 | 750 | 51.0 |
| **29276** | 380 | 520 | 85 | 505 | 441 | 27 | 81 | 42 | 4 | 202 | 1 820 000 | 8 800 000 | 700 | 53.0 |
| **29280** | 400 | 540 | 85 | 526 | 460 | 27 | 81 | 42 | 4 | 212 | 1 900 000 | 9 570 000 | 700 | 57.0 |
| **29284** | 420 | 580 | 95 | 564 | 489 | 30 | 91 | 46 | 4 | 225 | 2 290 000 | 11 200 000 | 630 | 75.5 |
| **29288** | 440 | 600 | 95 | 585 | 508 | 30 | 91 | 46 | 5 | 235 | 2 380 000 | 11 900 000 | 630 | 78.0 |
| **29292** | 460 | 620 | 95 | 605 | 530 | 30 | 91 | 46 | 5 | 245 | 2 380 000 | 12 100 000 | 600 | 81.0 |
| **29296** | 480 | 650 | 103 | 635 | 556 | 33 | 99 | 53 | 5 | 259 | 2 700 000 | 13 500 000 | 560 | 98.0 |
| **292/500** | 500 | 670 | 103 | 654 | 574 | 33 | 99 | 55 | 5 | 268 | 2 755 000 | 14 260 000 | 560 | 105 |
| **292/530** | 530 | 710 | 109 | 692 | 610 | 35 | 105 | 57 | 5 | 288 | 3 010 000 | 15 900 000 | 530 | 125 |
| **292/560** | 560 | 750 | 115 | 732 | 644 | 37 | 111 | 61 | 5 | 302 | 3 440 000 | 18 400 000 | 480 | 140 |
| **292/600** | 600 | 800 | 122 | 780 | 688 | 39 | 117 | 60 | 5 | 321 | 3 570 000 | 18 600 000 | 450 | 170 |
| **292/630** | 630 | 850 | 132 | 830 | 723 | 42 | 127 | 67 | 6 | 338 | 4 620 000 | 23 600 000 | 400 | 210 |
| **292/670** | 670 | 900 | 140 | 880 | 773 | 45 | 135 | 73 | 6 | 361 | 4 830 000 | 26 200 000 | 380 | 255 |
| **292/710** | 710 | 950 | 145 | 930 | 815 | 46 | 140 | 73 | 6 | 380 | 6 000 000 | 29 300 000 | 340 | 290 |
| **292/750** | 750 | 1 000 | 150 | 977 | 858 | 48 | 144 | 74 | 6 | 409 | 5 900 000 | 31 000 000 | 340 | 325 |
| **292/800** | 800 | 1 060 | 155 | 1035 | 911 | 52 | 149 | 77 | 7.5 | 434 | 6 390 000 | 35 335 000 | 320 | 388 |

Because of the internal design of this bearing model, the lubrication with oil have tobe preferred. Grease lube could be considered only when applied loads and speeds are low and proper relube internal determined.

**Larger sizes are available on request**

**Please check availability**

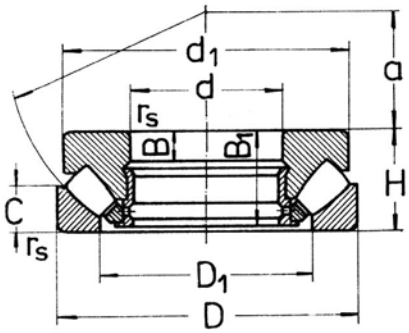


**293** SERIES

METRIC SIZES

ISO DIMENSION

| RKB designations | Dimensions millimetres | | | | | | | | | | RKB load ratings† speeds rev/min | | Normal limiting | Weight Kg approx |
|---|---|---|---|---|---|---|---|---|---|---|---|---|---|---|
| | d | D | H | $d_1$ | $D_1$ | B | $B_1$ | C | rs/min. | a | dynamic $C_r$ | static $C_{or}$ | oil | |
| **29330** | 150 | 250 | 60 | 240 | 190 | 20 | 57 | 28 | 2.1 | 87 | 800 000 | 2 850 000 | 1 400 | 11.5 |
| **29332** | 160 | 270 | 67 | 260 | 203 | 23 | 64 | 33 | 3 | 92 | 910 000 | 3 470 000 | 1 200 | 16.0 |
| **29334** | 170 | 280 | 67 | 270 | 215 | 23 | 64 | 30.5 | 3 | 96 | 980 000 | 3 550 000 | 1 200 | 16.5 |
| **29336** | 180 | 300 | 73 | 290 | 227 | 25 | 69 | 35.5 | 3 | 103 | 1 150 000 | 4 300 000 | 1 100 | 20.5 |
| **29338** | 190 | 320 | 78 | 308 | 243 | 27 | 74 | 36 | 4 | 110 | 1 305 000 | 4 820 000 | 1 000 | 25.5 |
| **29340** | 200 | 340 | 85 | 325 | 257 | 29 | 81 | 40 | 4 | 116 | 1 500 000 | 5 605 000 | 950 | 32.0 |
| **29344** | 220 | 360 | 85 | 345 | 273 | 29 | 81 | 41 | 4 | 125 | 1 540 000 | 6 190 000 | 950 | 34.5 |
| **29348** | 240 | 380 | 85 | 365 | 295 | 29 | 81 | 40.5 | 4 | 135 | 1 580 000 | 6 420 000 | 900 | 36.5 |
| **29352** | 260 | 420 | 95 | 405 | 324 | 32 | 91 | 46 | 5 | 148 | 1 995 000 | 8 175 000 | 800 | 51.0 |
| **29356** | 280 | 440 | 95 | 423 | 343 | 32 | 91 | 45.5 | 5 | 158 | 2 070 000 | 8 705 000 | 800 | 54.0 |
| **29360** | 300 | 480 | 109 | 460 | 372 | 37 | 105 | 51 | 5 | 168 | 2 580 000 | 10 510 000 | 700 | 76.0 |
| **29364** | 320 | 500 | 109 | 482 | 391 | 37 | 105 | 53 | 5 | 180 | 2 555 000 | 10 770 000 | 670 | 81.0 |
| **29368** | 340 | 540 | 122 | 520 | 428 | 41 | 117 | 59 | 5 | 192 | 3 125 000 | 12 430 000 | 630 | 106 |
| **29372** | 360 | 560 | 122 | 540 | 448 | 41 | 117 | 59 | 5 | 202 | 3 150 000 | 12 800 000 | 600 | 110 |
| **29376** | 380 | 600 | 132 | 580 | 477 | 44 | 127 | 63 | 6 | 216 | 3 805 000 | 15 475 000 | 530 | 140 |
| **29380** | 400 | 620 | 132 | 596 | 494 | 44 | 127 | 64 | 6 | 225 | 3 805 000 | 16 140 000 | 530 | 146 |
| **29384** | 420 | 650 | 140 | 626 | 520 | 48 | 135 | 68 | 6 | 235 | 4 260 000 | 17 700 000 | 500 | 170 |
| **29388** | 440 | 680 | 145 | 655 | 540 | 49 | 140 | 70.5 | 6 | 249 | 4 360 000 | 19 300 000 | 480 | 180 |
| **29392** | 460 | 710 | 150 | 685 | 567 | 51 | 144 | 72 | 6 | 257 | 4 910 000 | 21 000 000 | 450 | 215 |
| **29396** | 480 | 730 | 150 | 705 | 591 | 51 | 144 | 73.5 | 6 | 270 | 4 950 000 | 21 700 000 | 450 | 220 |
| **293/500** | 500 | 750 | 150 | 725 | 611 | 51 | 144 | 74 | 6 | 280 | 5 100 000 | 22 600 000 | 430 | 235 |
| **293/530** | 530 | 800 | 160 | 772 | 648 | 54 | 154 | 76 | 7.5 | 295 | 5 950 000 | 26 200 000 | 400 | 270 |
| **293/560** | 560 | 850 | 175 | 822 | 690 | 60 | 168 | 85 | 7.5 | 310 | 6 500 000 | 28 800 000 | 380 | 320 |
| **293/600** | 600 | 900 | 180 | 870 | 731 | 61 | 173 | 87 | 7.5 | 335 | 7 200 000 | 33 300 000 | 340 | 400 |
| **293/630** | 630 | 950 | 190 | 918 | 761 | 68 | 183 | 92 | 9.5 | 359 | 8 200 000 | 38 000 000 | 320 | 485 |
| **293/670** | 670 | 1 000 | 200 | 968 | 813 | 68 | 193 | 96 | 9.5 | 372 | 8 350 000 | 38 800 000 | 300 | 545 |
| **293/710** | 710 | 1 060 | 212 | 1 028 | 855 | 72 | 204 | 103 | 9.5 | 405 | 9 650 000 | 45 500 000 | 280 | 660 |
| **293/750** | 750 | 1 120 | 224 | 1 086 | 910 | 76 | 216 | 109 | 9.5 | 415 | 10 600 000 | 49 900 000 | 260 | 770 |
| **293/800** | 800 | 1 180 | 230 | 1 146 | 965 | 78 | 222 | 111 | 9.5 | 440 | 11 300 000 | 54 400 000 | 240 | 865 |

Because of the internal design of this bearing model, the lubrication with oil have tobe preferred. Grease lube could be considered only when applied loads and speeds are low and proper relube internal determined.

**Larger sizes are available on request**

**Please check availability**

# Spherical roller thrust bearings

## 294 SERIES

METRIC SIZES

ISO DIMENSION

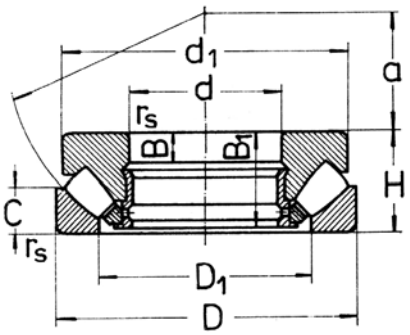


| RKB designations | Dimensions millimetres | | | | | | | | | | RKB load ratings† | | Normal limiting speeds rev/min oil | Weight Kg approx |
|---|---|---|---|---|---|---|---|---|---|---|---|---|---|---|
| | d | D | H | $d_1$ | $D_1$ | B | $B_1$ | C | rs/min | a | dynamic $C_r$ | static $C_{or}$ | | |
| **29430** | 150 | 300 | 90 | 285 | 207 | 32 | 86 | 43.4 | 4 | 92 | 1 510 000 | 5 085 000 | 1 100 | 30.0 |
| **29432** | 160 | 320 | 95 | 300 | 223 | 34 | 91 | 45.5 | 5 | 99 | 1 655 000 | 5 650 000 | 1 000 | 35.0 |
| **29434** | 170 | 340 | 103 | 324 | 236 | 37 | 99 | 50 | 5 | 104 | 1 880 000 | 6 550 000 | 950 | 45.8 |
| **28436** | 180 | 360 | 109 | 342 | 250 | 39 | 105 | 53 | 5 | 110 | 2 135 000 | 7 435 000 | 900 | 52.0 |
| **29438** | 190 | 380 | 115 | 360 | 264 | 41 | 111 | 55.5 | 5 | 117 | 2 345 000 | 8 220 000 | 850 | 61.0 |
| **29440** | 200 | 400 | 122 | 380 | 277 | 43 | 117 | 59.4 | 5 | 122 | 2 580 000 | 9 160 000 | 800 | 72.0 |
| **29444** | 220 | 420 | 122 | 400 | 300 | 43 | 117 | 58.5 | 6 | 132 | 2 660 000 | 9 630 000 | 750 | 76.5 |
| **29448** | 240 | 440 | 122 | 420 | 322 | 43 | 117 | 59 | 6 | 142 | 2 720 000 | 10 040 000 | 700 | 81.5 |
| **29452** | 260 | 480 | 132 | 460 | 346 | 48 | 127 | 63 | 6 | 154 | 3 210 000 | 12 125 000 | 670 | 106 |
| **29456** | 280 | 520 | 145 | 495 | 372 | 52 | 140 | 70 | 6 | 166 | 3 810 000 | 14 675 000 | 630 | 137 |
| **29460** | 300 | 540 | 145 | 515 | 392 | 52 | 140 | 70.5 | 6 | 175 | 3 930 000 | 15 580 000 | 600 | 145 |
| **29464** | 320 | 580 | 155 | 555 | 422 | 55 | 149 | 74.5 | 7.5 | 191 | 4 450 000 | 17 246 000 | 560 | 178 |
| **29468** | 340 | 620 | 170 | 590 | 445 | 61 | 164 | 84 | 7.5 | 201 | 5 160 000 | 20 390 000 | 500 | 226 |
| **29472** | 360 | 640 | 170 | 610 | 474 | 61 | 164 | 82 | 7.5 | 210 | 5 205 000 | 20 202 000 | 500 | 234 |
| **29476** | 380 | 670 | 175 | 640 | 494 | 63 | 168 | 85 | 7.5 | 222 | 5 695 000 | 23 120 000 | 480 | 263 |
| **29480** | 400 | 710 | 185 | 680 | 525 | 67 | 178 | 89.5 | 7.5 | 234 | 6 450 000 | 26 000 000 | 450 | 310 |
| **29484** | 420 | 730 | 185 | 700 | 545 | 67 | 178 | 90.5 | 7.5 | 244 | 6 600 000 | 27 000 000 | 430 | 325 |
| **29488** | 440 | 780 | 206 | 745 | 577 | 74 | 199 | 100 | 9.5 | 257 | 7 805 000 | 31 530 000 | 380 | 420 |
| **29492** | 460 | 800 | 206 | 765 | 596 | 74 | 199 | 101.5 | 9.5 | 268 | 7 850 000 | 32 800 000 | 380 | 425 |
| **29496** | 480 | 850 | 224 | 810 | 625 | 81 | 216 | 108 | 9.5 | 280 | 9 455 000 | 38 865 000 | 340 | 542 |
| **294/500** | 500 | 870 | 224 | 830 | 648 | 81 | 216 | 110 | 9.5 | 290 | 9 200 000 | 39 200 000 | 340 | 560 |
| **294/530** | 530 | 920 | 236 | 880 | 686 | 86 | 228 | 116 | 9.5 | 308 | 10 300 000 | 43 100 000 | 320 | 650 |
| **294/560** | 560 | 980 | 250 | 940 | 727 | 82 | 242 | 122 | 12 | 328 | 11 800 000 | 50 000 000 | 300 | 810 |
| **294/600** | 600 | 1 030 | 258 | 990 | 769 | 92 | 249 | 128 | 12 | 349 | 12 940 000 | 55 555 000 | 280 | 900 |
| **294/630** | 630 | 1 090 | 280 | 1 040 | 815 | 100 | 270 | 137 | 12 | 365 | 14 100 000 | 60 800 000 | 260 | 1 100 |
| **294/670** | 670 | 1 150 | 290 | 1 105 | 864 | 106 | 280 | 141 | 15 | 387 | 15 100 000 | 66 700 000 | 240 | 1 260 |
| **294/710** | 710 | 1 220 | 308 | 1 165 | 917 | 112 | 298 | 149 | 15 | 415 | 17 200 000 | 75 000 000 | 220 | 1 500 |
| **294/750** | 750 | 1 280 | 315 | 1 220 | 964 | 116 | 305 | 153 | 15 | 436 | 18 300 000 | 83 300 000 | 200 | 1 650 |
| **294/800** | 800 | 1 360 | 335 | 1 300 | 1 034 | 120 | 324 | 165 | 15 | 462 | 19 800 000 | 91 100 000 | 190 | 2 025 |

Because of the internal design of this bearing model, the lubrication with oil have tobe preferred. Grease lube could be considered only when applied loads and speeds are low and proper relube internal determined.

**Larger sizes are available on request**

**Please check availability**

RKB

# Taper roller bearings

## 320 SERIES

METRIC SIZES

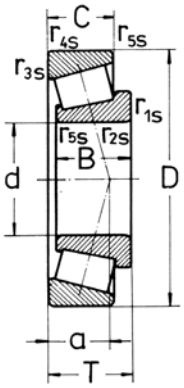


ISO DIMENSION

| RKB designations | | ISO series | Dimensions millimetres d | D | B | C | T | r1s,r2s min | r3s,r4s min | r5 min | a | RKB load ratings† newtons dynamic $C_r$ | e | Y | newtons static $C_{or}$ | Y0 | Normal limiting speeds grease | oil | Weight Kg approx |
|---|---|---|---|---|---|---|---|---|---|---|---|---|---|---|---|---|---|---|---|
| **32004XA** | 3CC | | 20 | 42 | 15 | 12 | 15 | 0.6 | 0.6 | 0.3 | 10 | 26 000 | 0.37 | 1.6 | 28 500 | 0.9 | 8 500 | 12 000 | 0.097 |
| **32005XA** | 4CC | | 25 | 47 | 15 | 11.5 | 15 | 0.6 | 0.6 | 0.3 | 11 | 26 000 | 0.43 | 1.4 | 33 500 | 0.8 | 8 000 | 11 000 | 0.113 |
| **32006XA** | 4CC | | 30 | 55 | 17 | 13 | 17 | 1 | 1 | 0.3 | 13 | 34 000 | 0.43 | 1.4 | 45 500 | 0.8 | 6 700 | 9 000 | 0.017 |
| **32007XA** | 4CC | | 35 | 62 | 18 | 14 | 18 | 1 | 1 | 0.3 | 15 | 35 900 | 0.46 | 1.3 | 52 400 | 0.7 | 6 000 | 8 000 | 0.220 |
| **32008XA** | 3CD | | 40 | 68 | 19 | 14.5 | 19 | 1 | 1 | 0.3 | 15 | 48 800 | 0.37 | 1.6 | 65 600 | 0.9 | 5 300 | 7 000 | 0.270 |
| **32009XA** | 3CC | | 45 | 75 | 20 | 15.5 | 20 | 1 | 1 | 0.3 | 16 | 57 000 | 0.4 | 1.5 | 82 200 | 0.8 | 4 800 | 6 300 | 0.330 |
| **32010XA** | 3CC | | 50 | 80 | 20 | 15.5 | 20 | 1 | 1 | 0.3 | 18 | 58 500 | 0.43 | 1.4 | 88 500 | 0.8 | 4 500 | 6 000 | 0.360 |
| **32011XA** | 3CC | | 55 | 90 | 23 | 17.5 | 23 | 1.5 | 1.5 | 0.6 | 20 | 77 000 | 0.4 | 1.5 | 117 000 | 0.8 | 4 000 | 5 300 | 0.540 |
| **32012XA** | 4CC | | 65 | 95 | 23 | 17.5 | 23 | 1.5 | 1.5 | 0.6 | 21 | 78 500 | 0.43 | 1.4 | 119 000 | 0.8 | 3 800 | 5 000 | 0.580 |
| **32013XA** | 4CC | | 65 | 100 | 23 | 17.5 | 23 | 1.5 | 1.5 | 0.6 | 22 | 80 600 | 0.46 | 1.3 | 123 000 | 0.7 | 3 400 | 4 500 | 0.620 |
| **32014XA** | 4CC | | 70 | 110 | 25 | 19 | 25 | 1.5 | 1.5 | 0.6 | 23 | 95 600 | 0.43 | 1.4 | 143 000 | 0.8 | 3 200 | 4 300 | 0.830 |
| **32015XA** | 4CC | | 75 | 115 | 25 | 19 | 25 | 1.5 | 1.5 | 0.6 | 25 | 97 300 | 0.46 | 1.3 | 149 000 | 0.7 | 3 000 | 4 000 | 0.880 |
| **32016XA** | 3CC | | 80 | 125 | 29 | 22 | 29 | 1.5 | 1.5 | 0.6 | 27 | 130 000 | 0.43 | 1.4 | 198 000 | 0.8 | 2 600 | 3 600 | 1.24 |
| **32017XA** | 4CC | | 85 | 130 | 29 | 22 | 29 | 1.5 | 1.5 | 0.6 | 28 | 136 000 | 0.44 | 1.4 | 213 000 | 0.8 | 2 400 | 3 400 | 1.30 |
| **32018XA** | 3CC | | 90 | 140 | 32 | 24 | 32 | 2 | 1.5 | 0.6 | 30 | 159 000 | 0.43 | 1.4 | 246 000 | 0.8 | 2 200 | 3 200 | 1.70 |
| **32019XA** | 4CC | | 95 | 145 | 32 | 24 | 32 | 2 | 1.5 | 0.6 | 31 | 163 000 | 0.44 | 1.4 | 257 000 | 0.8 | 2 200 | 3 200 | 1.80 |
| **32020XA** | 4CC | | 100 | 150 | 32 | 24 | 32 | 2 | 1.5 | 0.6 | 32 | 171 000 | 0.46 | 1.3 | 277 000 | 0.7 | 2 000 | 3 000 | 1.85 |
| **32021XA** | 4DC | | 105 | 160 | 35 | 26 | 35 | 2.5 | 2 | 0.6 | 34 | 204 000 | 0.44 | 1.4 | 334 000 | 0.8 | 1 900 | 2 800 | 2.42 |
| **32022XA** | 4DC | | 110 | 170 | 38 | 29 | 38 | 2.5 | 2 | 0.6 | 36 | 235 000 | 0.43 | 1.4 | 382 000 | 0.8 | 1 800 | 2 600 | 3.06 |
| **32024XA** | 4DC | | 120 | 180 | 38 | 29 | 38 | 2.5 | 2 | 0.6 | 39 | 238 000 | 0.46 | 1.3 | 397 000 | 0.7 | 1 700 | 2 400 | 3.25 |
| **32026XA** | 4EC | | 130 | 200 | 45 | 34 | 45 | 2.5 | 2 | 0.6 | 42 | 315 000 | 0.43 | 1.4 | 526 000 | 0.8 | 1 600 | 2 200 | 4.93 |
| **32028XA** | 4DC | | 140 | 210 | 45 | 34 | 45 | 2.5 | 2 | 0.6 | 46 | 312 000 | 0.46 | 1.3 | 529 000 | 0.7 | 1 600 | 2 200 | 5.23 |
| **32030XA** | 4EC | | 150 | 225 | 48 | 36 | 48 | 3 | 2.5 | 1 | 49 | 355 000 | 0.46 | 1.3 | 620 000 | 0.7 | 1 500 | 2 000 | 6.35 |
| **32032XA** | 4EC | | 160 | 240 | 51 | 38 | 51 | 3 | 2.5 | 1 | 52 | 402 000 | 0.46 | 1.4 | 696 000 | 0.7 | 1 300 | 1 800 | 7.75 |
| **32034XA** | 4EC | | 170 | 260 | 57 | 43 | 57 | 3 | 2.5 | 1 | 56 | 480 000 | 0.44 | 1.4 | 865 000 | 0.8 | 1 200 | 1 700 | 10.5 |
| **32036XA** | 3FD | | 180 | 280 | 64 | 48 | 64 | 3 | 2.5 | 1 | 59 | 599 000 | 0.43 | 1.4 | 1 037 000 | 0.8 | 1 100 | 1 600 | 14.5 |
| **32038XA** | 4FD | | 190 | 290 | 64 | 48 | 64 | 3 | 2.5 | 1 | 62 | 609 000 | 0.44 | 1.4 | 1 077 000 | 0.8 | 1 000 | 1 500 | 15.0 |
| **32040XA** | 4FD | | 200 | 310 | 70 | 53 | 70 | 3 | 2.5 | 1 | 66 | 716 000 | 0.43 | 1.4 | 1 356 000 | 0.8 | 950 | 1 400 | 19.5 |
| **32044XA** | 4FD | | 220 | 340 | 76 | 57 | 76 | 4 | 3 | 1 | 72 | 850 000 | 0.43 | 1.4 | 1 537 000 | 0.8 | 900 | 1 300 | 25.5 |
| **32048XA** | 4FD | | 240 | 360 | 76 | 57 | 76 | 4 | 3 | 1 | 78 | 870 000 | 0.46 | 1.3 | 1 690 000 | 0.7 | 850 | 1 200 | 27.5 |
| **32052XA** | 4FC | | 260 | 400 | 87 | 65 | 87 | 5 | 4 | 1.5 | 84 | 1 153 000 | 0.43 | 1.4 | 2 141 000 | 0.8 | 800 | 1 100 | 40.0 |
| **32056XA** | 4FC | | 280 | 420 | 87 | 65 | 87 | 5 | 4 | 1.5 | 89 | 1 150 000 | 0.46 | 1.3 | 2 250 000 | 0.7 | 750 | 1 000 | 40.5 |
| **32064X** | 4GD | | 320 | 480 | 100 | 74 | 100 | 5 | 4 | 1.5 | 103 | 1 535 000 | 0.46 | 1.3 | 2 935 000 | 0.7 | 630 | 850 | 63.0 |

**Please check availability**

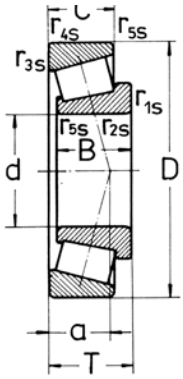


# 302 SERIES

METRIC SIZES

ISO DIMENSION

| RKB designations | | ISO series | Dimensions millimetres d | D | B | C | T | r1s,r2s min | r3s,r4s min | r5 min | a | RKB load ratings† newtons dynamic $C_r$ | e | Y | newtons static $C_{or}$ | Y0 | Normal limiting speeds grease | oil | Weight Kg approx |
|---|---|---|---|---|---|---|---|---|---|---|---|---|---|---|---|---|---|---|---|
| 30203A | 2DB | | 17 | 40 | 12 | 11 | 13.25 | 1 | 1 | 0.3 | 10 | 18 300 | 0.35 | 1.7 | 19 000 | 0.9 | 9 000 | 13 000 | 0.074 |
| 30204A | 2DB | | 20 | 47 | 14 | 12 | 15.25 | 1 | 1 | 0.3 | 11 | 25 800 | 0.35 | 1.7 | 26 400 | 0.9 | 8 000 | 11 000 | 0.120 |
| 30205A | 3CC | | 25 | 52 | 15 | 13 | 16.25 | 1 | 1 | 0.3 | 12 | 30 100 | 0.37 | 1.6 | 39 200 | 0.9 | 7 500 | 10 000 | 0.150 |
| 30206A | 3DB | | 30 | 62 | 16 | 14 | 17.25 | 1 | 1 | 0.3 | 14 | 40 500 | 0.37 | 1.6 | 45 100 | 0.9 | 6 300 | 8 500 | 0.220 |
| 30207A | 3DB | | 35 | 72 | 17 | 15 | 18.25 | 1.5 | 1.5 | 0.6 | 15 | 50 500 | 0.37 | 1.6 | 54 700 | 0.9 | 5 300 | 7 000 | 0.320 |
| 30208A | 3DB | | 40 | 80 | 18 | 16 | 19.75 | 1.5 | 1.5 | 0.6 | 16 | 57 900 | 0.37 | 1.6 | 62 400 | 0.9 | 4 800 | 6 300 | 0.420 |
| 30209A | 3DB | | 45 | 85 | 19 | 16 | 20.75 | 1.5 | 1.5 | 0.6 | 18 | 60 100 | 0.4 | 1.5 | 67 100 | 0.8 | 4 500 | 6 000 | 0.470 |
| 30210A | 3DB | | 50 | 90 | 20 | 17 | 21.75 | 1.5 | 1.5 | 0.6 | 19 | 69 700 | 0.43 | 1.4 | 81 300 | 0.8 | 4 300 | 5 600 | 0.530 |
| 30211A | 3DB | | 55 | 100 | 21 | 18 | 22.75 | 2 | 1.5 | 0.6 | 20 | 83 000 | 0.4 | 1.5 | 95 200 | 0.8 | 3 800 | 5 000 | 0.690 |
| 30212A | 3EB | | 60 | 110 | 22 | 19 | 23.75 | 2 | 1.5 | 0.6 | 22 | 91 600 | 0.4 | 1.5 | 105 000 | 0.8 | 3 400 | 4 500 | 0.860 |
| 30213A | 3EB | | 65 | 120 | 23 | 20 | 24.75 | 2 | 1.5 | 0.6 | 23 | 111 000 | 0.4 | 1.5 | 129 000 | 0.8 | 3 000 | 4 000 | 1.10 |
| 30214A | 3EB | | 70 | 125 | 24 | 21 | 26.25 | 2 | 1.5 | 0.6 | 25 | 119 000 | 0.43 | 1.4 | 143 000 | 0.8 | 3 000 | 4 000 | 1.22 |
| 30215A | 4DB | | 75 | 130 | 25 | 22 | 27.25 | 2 | 1.5 | 0.6 | 27 | 134 000 | 0.43 | 1.4 | 166 000 | 0.8 | 2 800 | 2 800 | 1.33 |
| 30216A | 3EB | | 80 | 140 | 26 | 22 | 28.25 | 2.5 | 2 | 0.6 | 28 | 145 000 | 0.43 | 1.4 | 177 000 | 0.8 | 2 400 | 3 400 | 1.59 |
| 30217A | 3EB | | 85 | 150 | 28 | 24 | 30.5 | 2.5 | 2 | 0.6 | 30 | 167 000 | 0.43 | 1.4 | 206 000 | 0.8 | 2 200 | 3 200 | 2.00 |
| 30218A | 3FB | | 90 | 160 | 30 | 26 | 32.5 | 2.5 | 2 | 0.6 | 31 | 190 000 | 0.43 | 1.4 | 238 000 | 0.8 | 2 200 | 3 000 | 2.49 |
| 30219A | 2FB | | 95 | 170 | 32 | 27 | 34.5 | 3 | 2.5 | 1 | 33 | 210 000 | 0.43 | 1.4 | 264 000 | 0.8 | 1 900 | 2 800 | 2.96 |
| 30220A | 3FB | | 100 | 180 | 34 | 29 | 37 | 3 | 2.5 | 1 | 35 | 238 000 | 0.43 | 1.4 | 303 000 | 0.8 | 1 900 | 2 800 | 3.54 |
| 30221A | 3FB | | 105 | 190 | 36 | 30 | 39 | 3 | 2.5 | 1 | 37 | 270 000 | 0.43 | 1.4 | 350 000 | 0.8 | 1 800 | 2 600 | 4.26 |
| 30222A | 3FB | | 110 | 200 | 38 | 32 | 41 | 3 | 2.5 | 1 | 39 | 304 000 | 0.43 | 1.4 | 396 000 | 0.8 | 1 700 | 2 400 | 5.00 |
| 30224A | 4FB | | 120 | 215 | 40 | 34 | 43.5 | 3 | 2.5 | 1 | 43 | 340 000 | 0.43 | 1.4 | 459 000 | 0.8 | 1 600 | 2 200 | 6.01 |
| 30226A | 4FB | | 130 | 230 | 40 | 34 | 43.75 | 4 | 3 | 1 | 45 | 367 000 | 0.43 | 1.4 | 485 000 | 0.8 | 1 500 | 2 000 | 7.60 |
| 30228A | 4FB | | 140 | 250 | 42 | 36 | 45.75 | 4 | 3 | 1 | 47 | 396 000 | 0.43 | 1.4 | 527 000 | 0.8 | 1 400 | 1 900 | 8.50 |
| 30230A | 4GB | | 150 | 270 | 45 | 38 | 49 | 4 | 3 | 1 | 50 | 457 000 | 0.43 | 1.4 | 618 000 | 0.8 | 1 300 | 1 800 | 10.7 |
| 30232A | 4GB | | 160 | 290 | 48 | 40 | 52 | 4 | 3 | 1 | 54 | 520 000 | 0.43 | 1.4 | 710 000 | 0.8 | 1 100 | 1 600 | 13.6 |
| 30234A | 4GB | | 170 | 310 | 52 | 43 | 57 | 5 | 4 | 1.5 | 58 | 610 000 | 0.43 | 1.4 | 844 000 | 0.8 | 1 000 | 1 500 | 19.0 |
| 30236A | 4GB | | 180 | 320 | 52 | 43 | 57 | 5 | 4 | 1.5 | 61 | 584 000 | 0.46 | 1.3 | 825 000 | 0.7 | 1 000 | 1 500 | 20.0 |
| 30260 | 4GB | | 300 | 540 | 85 | 71 | 96 | 6 | 5 | 1.5 | 103 | 1 350 000 | 0.43 | 1.4 | 1 900 000 | 0.8 | 600 | 800 | 86.0 |

**Larger sizes are available on request**

**Please check availability**

# Taper roller bearings

## 303 SERIES

METRIC SIZES

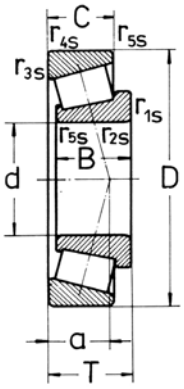


ISO DIMENSION

| RKB designations | | ISO series | Dimensions millimetres d | D | B | C | T | r1s,r2 min | sr3s,r4s min | r5 min | a | RKB load ratings† newtons dynamic $C_r$ | e | Y | newtons static $C_{or}$ | Y0 | Normal limiting speeds grease | oil | Weight Kg approx |
|---|---|---|---|---|---|---|---|---|---|---|---|---|---|---|---|---|---|---|---|
| **30302A** | 2FB | | 15 | 42 | 13 | 11 | 14.25 | 1 | 1 | 0.3 | 9 | 21 500 | 0.28 | 2.1 | 19 800 | 1.1 | 9 000 | 13 000 | 0.090 |
| **30303A** | 2FB | | 17 | 47 | 14 | 12 | 15.25 | 1 | 1 | 0.3 | 10 | 26 000 | 0.28 | 2.1 | 24 500 | 1.1 | 8 500 | 12 000 | 0.130 |
| **30304A** | 2FB | | 20 | 52 | 15 | 13 | 16.25 | 1.5 | 1.5 | 0.6 | 11 | 32 000 | 0.3 | 2 | 32 000 | 1.1 | 8 000 | 11 000 | 0.170 |
| **30305A** | 2FB | | 25 | 62 | 17 | 15 | 18.25 | 1.5 | 1.5 | 0.6 | 13 | 43 000 | 0.3 | 2 | 43 000 | 1.1 | 6 700 | 9 000 | 0.250 |
| **30306A** | 2FB | | 30 | 72 | 19 | 16 | 20.75 | 1.5 | 1.5 | 0.6 | 15 | 52 900 | 0.31 | 1.9 | 51 800 | 1.1 | 5 600 | 7 500 | 0.380 |
| **30307A** | 2FB | | 35 | 80 | 21 | 18 | 22.75 | 2 | 1.5 | 0.6 | 16 | 71 200 | 0.31 | 1.9 | 72 500 | 1.1 | 5 000 | 6 700 | 0.520 |
| **30308A** | 2FB | | 40 | 90 | 23 | 20 | 25.25 | 2 | 1.5 | 0.6 | 19 | 83 900 | 0.35 | 1.7 | 91 300 | 0.9 | 4 500 | 6 000 | 0.700 |
| **30309A** | 2FB | | 45 | 100 | 25 | 22 | 27.25 | 2 | 1.5 | 0.6 | 21 | 106 000 | 0.35 | 1.7 | 118 000 | 0.9 | 4 000 | 5 300 | 0.920 |
| **30310A** | 2FB | | 50 | 110 | 27 | 23 | 29.25 | 2.5 | 2 | 0.6 | 23 | 120 000 | 0.35 | 1.7 | 133 000 | 0.9 | 3 600 | 4 800 | 1.19 |
| **30311A** | 2FB | | 55 | 120 | 29 | 25 | 31.5 | 2.5 | 2 | 0.6 | 24 | 146 000 | 0.35 | 1.7 | 166 000 | 0.9 | 3 200 | 4 300 | 1.53 |
| **30312A** | 2FB | | 60 | 130 | 31 | 26 | 33.5 | 3 | 2.5 | 1 | 26 | 164 000 | 0.35 | 1.7 | 187 000 | 0.9 | 3 000 | 4 000 | 1.90 |
| **30313A** | 2GB | | 65 | 140 | 33 | 28 | 36 | 3 | 2.5 | 1 | 28 | 191 000 | 0.35 | 1.7 | 220 000 | 0.9 | 2 600 | 3 600 | 2.30 |
| **30314A** | 2GB | | 70 | 150 | 35 | 30 | 38 | 3 | 2.5 | 1 | 29 | 224 000 | 0.35 | 1.7 | 264 000 | 0.9 | 2 400 | 3 400 | 3.00 |
| **30315A** | 2GB | | 75 | 160 | 37 | 31 | 40 | 3 | 2.5 | 1 | 31 | 246 000 | 0.35 | 1.7 | 289 000 | 0.9 | 2 600 | 3 600 | 3.40 |
| **30316A** | 2GB | | 80 | 170 | 39 | 33 | 42.5 | 3 | 2.5 | 1 | 33 | 277 000 | 0.35 | 1.7 | 329 000 | 0.9 | 2 000 | 3 000 | 4.00 |
| **30317A** | 2GB | | 85 | 180 | 41 | 34 | 44.5 | 4 | 3 | 1 | 35 | 298 000 | 0.35 | 1.7 | 354 000 | 0.9 | 1 900 | 2 800 | 4.70 |
| **30318A** | 2GB | | 90 | 190 | 43 | 36 | 46.5 | 4 | 3 | 1 | 36 | 328 000 | 0.35 | 1.7 | 394 000 | 0.9 | 1 700 | 2 400 | 5.50 |
| **30319A** | 2GB | | 95 | 200 | 45 | 38 | 49.5 | 4 | 3 | 1 | 39 | 350 000 | 0.35 | 1.7 | 449 000 | 0.9 | 1 800 | 2 600 | 6.70 |
| **30320A** | 2GB | | 100 | 215 | 47 | 39 | 51.5 | 4 | 3 | 1 | 40 | 404 000 | 0.35 | 1.7 | 492 000 | 0.9 | 1 700 | 2 400 | 7.90 |
| **30322A** | 2GB | | 110 | 240 | 50 | 42 | 54.5 | 4 | 3 | 1 | 43 | 479 000 | 0.35 | 1.7 | 588 000 | 0.9 | 1 600 | 2 200 | 12.5 |
| **30324A** | 2GB | | 120 | 260 | 55 | 46 | 59.5 | 4 | 3 | 1 | 47 | 568 000 | 0.35 | 1.7 | 712 000 | 0.8 | 1 500 | 2 000 | 13.6 |
| **30326A** | 2GB | | 130 | 280 | 58 | 49 | 63.75 | 5 | 4 | 1.5 | 51 | 640 000 | 0.35 | 1.7 | 820 000 | 0.9 | 1 300 | 1 800 | 19.5 |

**Larger sizes are available on request**

**Please check availability**

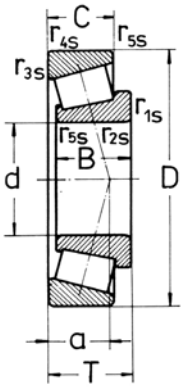


# 313 SERIES

METRIC SIZES

ISO DIMENSION

| RKB designations | ISO series | dimensions millimetres d | D | B | C | T | r1s,r2s min | r3s,r4 min | sr5 min | a | Load ratings† newtons dynamic $C_r$ | e | Y | newtons static $C_{or}$ | Y0 | Normal limiting speeds grease | oil | Weight Kg approx |
|---|---|---|---|---|---|---|---|---|---|---|---|---|---|---|---|---|---|---|
| **31305A** | 7FB | 25 | 62 | 17 | 13 | 18.25 | 1.5 | 1.5 | 0.6 | 20 | 39 000 | 0.83 | 0.7 | 41 000 | 0.4 | 5 600 | 7 500 | 0.255 |
| **31306A** | 7FB | 30 | 72 | 19 | 14 | 20.75 | 1.5 | 1.5 | 0.6 | 22 | 46 500 | 0.83 | 0.7 | 49 500 | 0.4 | 5 000 | 6 700 | 0.390 |
| **31307A** | 7FB | 35 | 80 | 21 | 15 | 22.75 | 2 | 1.5 | 0.6 | 25 | 58 100 | 0.83 | 0.7 | 64 000 | 0.4 | 4 500 | 6 000 | 0.520 |
| **31308A** | 7FB | 40 | 90 | 23 | 17 | 25.25 | 2 | 1.5 | 0.6 | 28 | 74 600 | 0.83 | 0.7 | 60 800 | 0.4 | 4 000 | 5 300 | 0.685 |
| **31309A** | 7FB | 45 | 100 | 25 | 18 | 27.25 | 2 | 1.5 | 0.6 | 31 | 88 900 | 0.83 | 0.7 | 97 100 | 0.4 | 3 400 | 4 500 | 0.915 |
| **31310A** | 7FB | 50 | 110 | 27 | 19 | 29.25 | 2.5 | 2 | 0.6 | 34 | 102 000 | 0.83 | 0.7 | 112 000 | 0.4 | 3 200 | 4 300 | 1.16 |
| **31311A** | 7FB | 55 | 120 | 29 | 21 | 31.5 | 2.5 | 2 | 0.6 | 37 | 118 000 | 0.83 | 0.7 | 133 000 | 0.4 | 2 800 | 3 800 | 1.49 |
| **31312A** | 7FB | 60 | 130 | 31 | 22 | 33.5 | 3 | 2.5 | 1 | 39 | 140 000 | 0.83 | 0.7 | 158 000 | 0.4 | 2 600 | 3 600 | 1.83 |
| **31313A** | 7GB | 65 | 140 | 33 | 23 | 36 | 3 | 2.5 | 1 | 42 | 164 000 | 0.83 | 0.7 | 189 000 | 0.4 | 2 200 | 3 200 | 2.25 |
| **31314A** | 7GB | 70 | 150 | 35 | 25 | 38 | 3 | 2.5 | 1 | 45 | 185 000 | 0.83 | 0.7 | 215 000 | 0.4 | 2 000 | 3 000 | 2.82 |
| **31315A** | 7GB | 75 | 160 | 37 | 26 | 40 | 3 | 2.5 | 1 | 48 | 213 000 | 0.83 | 0.7 | 251 000 | 0.4 | 1 900 | 2 800 | 3.50 |
| **31316A** | 7GB | 80 | 170 | 39 | 27 | 42.5 | 3 | 2.5 | 1 | 52 | 222 000 | 0.83 | 0.7 | 275 000 | 0.4 | 1 900 | 2 800 | 4.07 |
| **31317A** | 7GB | 85 | 180 | 41 | 28 | 44.5 | 4 | 3 | 1 | 55 | 245 000 | 0.83 | 0.7 | 298 000 | 0.4 | 1 800 | 2 600 | 5.08 |
| **31318A** | 7GB | 90 | 190 | 43 | 30 | 46.5 | 4 | 3 | 1 | 57 | 270 000 | 0.83 | 0.7 | 330 000 | 0.4 | 1 700 | 2 400 | 5.92 |
| **31319A** | 7GB | 95 | 200 | 45 | 32 | 49.5 | 4 | 3 | 1 | 60 | 300 000 | 0.83 | 0.7 | 365 000 | 0.4 | 1 700 | 2 400 | 6.95 |
| **31326XA** | 7GB | 130 | 280 | 66 | 44 | 72 | 5 | 4 | 1.5 | 87 | 597 000 | 0.83 | 0.7 | 761 000 | 0.4 | 1 200 | 1 700 | 18.6 |
| **31328XA** | 7GB | 140 | 300 | 70 | 47 | 77 | 5 | 4 | 1.5 | 90 | 714 000 | 0.83 | 0.7 | 935 000 | 0.4 | 1 200 | 1 700 | 23.9 |

**Larger sizes are available on request**

**Please check availability**

# Taper roller bearings

## 322 SERIES

METRIC SIZES

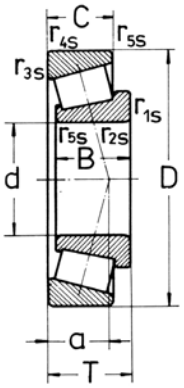


ISO DIMENSION

| RKB designations | ISO series | Dimensions millimetres d | D | B | C | T | r1s,r2s min | r3s,r4s min | r5s min | a | RKB load ratings† newtons dynamic $C_r$ | e | Y | newtons static $C_{or}$ | Y0 | Normal limiting speeds grease | oil | Weight Kg approx |
|---|---|---|---|---|---|---|---|---|---|---|---|---|---|---|---|---|---|---|
| **32205A** | 2CD | 25 | 52 | 18 | 15 | 19.25 | 1 | 1 | 0.3 | 16 | 31 000 | 0.33 | 1.8 | 37 000 | 1 | 7 500 | 10 000 | 0.182 |
| **32206A** | 3DC | 30 | 62 | 20 | 17 | 21.25 | 1 | 1 | 0.3 | 15 | 49 000 | 0.37 | 1.6 | 61 000 | 0.9 | 6 300 | 8 500 | 0.280 |
| **32207A** | 3DC | 35 | 72 | 23 | 19 | 24.25 | 1.5 | 1.5 | 0.6 | 17 | 66 200 | 0.37 | 1.6 | 77 500 | 0.9 | 5 300 | 7 000 | 0.420 |
| **32208A** | 3DC | 40 | 80 | 23 | 19 | 24.75 | 1.5 | 1.5 | 0.6 | 19 | 66 200 | 0.37 | 1.6 | 79 500 | 0.9 | 4 800 | 6 300 | 0.510 |
| **32209A** | 3DC | 45 | 85 | 23 | 20 | 24.75 | 1.5 | 1.5 | 0.6 | 20 | 76 500 | 0.4 | 1.5 | 91 600 | 0.8 | 4 500 | 6 000 | 0.560 |
| **32210A** | 3DC | 50 | 90 | 23 | 19 | 24.75 | 1.5 | 1.5 | 0.6 | 21 | 79 100 | 0.43 | 1.4 | 95 800 | 0.8 | 4 300 | 5 600 | 0.600 |
| **32211A** | 3DC | 55 | 100 | 25 | 21 | 26.75 | 2 | 1.5 | 0.6 | 22 | 96 200 | 0.4 | 1.5 | 115 000 | 0.8 | 3 800 | 5 000 | 0.820 |
| **32212A** | 3EC | 60 | 110 | 28 | 24 | 29.75 | 2 | 1.5 | 0.6 | 24 | 122 000 | 0.4 | 1.5 | 152 000 | 0.8 | 3 400 | 4 500 | 1.10 |
| **32213A** | 3EC | 65 | 120 | 31 | 27 | 32.75 | 2 | 1.5 | 0.6 | 27 | 149 000 | 0.4 | 1.5 | 189 000 | 0.8 | 3 000 | 4 000 | 1.48 |
| **32214A** | 3EC | 70 | 125 | 31 | 27 | 33.25 | 2 | 1.5 | 0.6 | 28 | 157 000 | 0.43 | 1.4 | 204 000 | 0.8 | 2 800 | 3 800 | 1.56 |
| **32215A** | 4DC | 75 | 130 | 31 | 27 | 33.25 | 2 | 1.5 | 0.6 | 29 | 157 000 | 0.43 | 1.4 | 205 000 | 0.8 | 2 600 | 3 600 | 2.62 |
| **32216A** | 3EC | 80 | 140 | 33 | 28 | 35.25 | 2.5 | 2 | 0.6 | 30 | 180 000 | 0.43 | 1.4 | 232 000 | 0.8 | 2 400 | 3 400 | 2.00 |
| **32217A** | 3EC | 85 | 150 | 36 | 30 | 38.5 | 2.5 | 2 | 0.6 | 33 | 213 000 | 0.43 | 1.4 | 283 000 | 0.8 | 2 200 | 3 200 | 2.50 |
| **32218A** | 3FC | 90 | 160 | 40 | 34 | 42.5 | 2.5 | 2 | 0.6 | 36 | 251 000 | 0.43 | 1.4 | 340 000 | 0.8 | 2 000 | 3 000 | 3.30 |
| **32219A** | 3FC | 95 | 170 | 43 | 37 | 45.5 | 3 | 2.5 | 1 | 39 | 281 000 | 0.43 | 1.4 | 390 000 | 0.8 | 1 900 | 2 800 | 4.00 |
| **32220A** | 3FC | 100 | 180 | 46 | 39 | 49 | 3 | 2.5 | 1 | 41 | 320 000 | 0.43 | 1.4 | 444 000 | 0.8 | 1 800 | 2 600 | 4.76 |
| **32221A** | 3FC | 105 | 190 | 50 | 43 | 53 | 3 | 2.5 | 1 | 44 | 358 000 | 0.43 | 1.4 | 510 000 | 0.8 | 1 800 | 2 600 | 5.90 |
| **32222A** | 3FC | 110 | 200 | 53 | 46 | 56 | 3 | 2.5 | 1 | 46 | 406 000 | 0.43 | 1.4 | 580 000 | 0.8 | 1 700 | 2 400 | 6.90 |
| **32224A** | 4FD | 120 | 215 | 58 | 50 | 61.5 | 3 | 2.5 | 1 | 51 | 446 000 | 0.43 | 1.4 | 653 000 | 0.8 | 1 600 | 2 200 | 8.59 |
| **32226A** | 4FD | 130 | 230 | 64 | 54 | 67.75 | 4 | 3 | 1 | 56 | 551 000 | 0.43 | 1.4 | 836 000 | 0.8 | 1 500 | 2 000 | 10.7 |
| **32228A** | 4FD | 140 | 250 | 68 | 58 | 71.75 | 4 | 3 | 1 | 60 | 602 000 | 0.43 | 1.4 | 907 000 | 0.8 | 1 400 | 1 900 | 13.9 |
| **32230A** | 4GD | 150 | 270 | 73 | 60 | 77 | 4 | 3 | 1 | 64 | 705 000 | 0.43 | 1.4 | 1 080 000 | 0.8 | 1 200 | 1 700 | 17.9 |
| **32232A** | 4GD | 160 | 290 | 80 | 67 | 84 | 4 | 3 | 1 | 70 | 840 000 | 0.43 | 1.4 | 1 400 000 | 0.8 | 1 100 | 1 600 | 25.5 |
| **32234A** | 4GD | 170 | 310 | 86 | 71 | 91 | 5 | 4 | 1.5 | 75 | 889 000 | 0.43 | 1.4 | 1 377 000 | 0.8 | 1 000 | 1 500 | 29.3 |
| **32236A** | 4GD | 180 | 320 | 86 | 71 | 91 | 5 | 4 | 1.5 | 78 | 974 000 | 0.46 | 1.3 | 1 571 000 | 0.7 | 950 | 1 400 | 27.4 |
| **32238A** | 4GD | 190 | 340 | 92 | 75 | 97 | 5 | 4 | 1.5 | 81 | 1 080 000 | 0.43 | 1.4 | 1 860 000 | 0.8 | 900 | 1 300 | 39.5 |
| **32240A** | 3GD | 200 | 360 | 98 | 82 | 104 | 5 | 4 | 1.5 | 83 | 1 220 000 | 0.4 | 1.5 | 2 020 000 | 0.8 | 900 | 1 300 | 33.0 |
| **32248** | | 240 | 440 | 120 | 100 | 127 | 5 | 4 | 1.5 | 105 | 1 750 000 | 0.43 | 1.4 | 2 869 000 | 0.8 | 750 | 1 000 | 81.0 |

**Larger sizes are available on request**

**Please check availability**

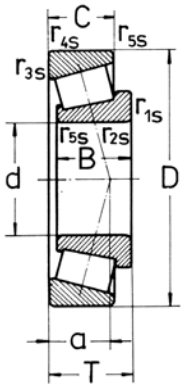


## 323 SERIES

METRIC SIZES

ISO DIMENSION

| RKB designations | ISO series | d | D | B | C | T | r1s,r2s min | r3s,r4s min | r5 min | a | RKB load ratings† newtons dynamic $C_r$ | e | Y | newtons static $C_{or}$ | Y0 | Normal limiting speeds grease | oil | Weight Kg approx |
|---|---|---|---|---|---|---|---|---|---|---|---|---|---|---|---|---|---|---|
| | | Dimensions millimetres | | | | | | | | | | | | | | | | |
| **32303A** | 2FD | 17 | 47 | 19 | 16 | 20.25 | 1 | 1 | 0.3 | 12 | 34 000 | 0.28 | 2.1 | 35 500 | 1.1 | 8 000 | 11 000 | 0.170 |
| **32304A** | 2FD | 20 | 52 | 21 | 18 | 22.25 | 1.5 | 1.5 | 0.6 | 14 | 42 500 | 0.3 | 2 | 47 000 | 1.1 | 7 500 | 10 000 | 0.221 |
| **32305A** | 2FD | 25 | 62 | 24 | 20 | 25.25 | 1.5 | 1.5 | 0.6 | 15 | 58 300 | 0.3 | 2 | 60 300 | 1.1 | 6 000 | 8 000 | 0.360 |
| **32306A** | 2FD | 30 | 72 | 27 | 23 | 28.75 | 1.5 | 1.5 | 0.6 | 18 | 75 800 | 0.31 | 1.9 | 82 700 | 1.1 | 5 300 | 7 000 | 0.550 |
| **32307A** | 2FD | 35 | 80 | 31 | 25 | 32.75 | 2 | 1.5 | 0.6 | 20 | 95 300 | 0.31 | 1.9 | 106 000 | .1 | 4 800 | 6 300 | 0.730 |
| **32308A** | 2FD | 40 | 90 | 33 | 27 | 35.25 | 2 | 1.5 | 0.6 | 23 | 105 000 | 0.35 | 1.7 | 122 000 | 0.9 | 4 000 | 5 300 | 0.993 |
| **32309A** | 2FD | 45 | 100 | 36 | 30 | 38.25 | 2 | 1.5 | 0.6 | 25 | 133 000 | 0.35 | 1.7 | 159 000 | 0.9 | 3 600 | 4 800 | 1.25 |
| **32310A** | 2FD | 50 | 110 | 40 | 33 | 42.25 | 2.5 | 2 | 0.6 | 27 | 160 000 | 0.35 | 1.7 | 194 000 | 0.9 | 3 200 | 4 300 | 1.83 |
| **32311A** | 2FD | 55 | 120 | 43 | 35 | 45.5 | 2.5 | 2 | 0.6 | 29 | 191 000 | 0.35 | 1.7 | 235 000 | 0.9 | 3 000 | 4 000 | 2.21 |
| **32312A** | 2FD | 60 | 130 | 46 | 37 | 48.5 | 3 | 2.5 | 1 | 31 | 229 000 | 0.35 | 1.7 | 288 000 | 0.9 | 2 600 | 3 600 | 2.80 |
| **32313A** | 2GD | 65 | 140 | 48 | 39 | 51 | 3 | 2.5 | 1 | 33 | 256 000 | 0.35 | 1.7 | 322 000 | 0.9 | 2 400 | 3 400 | 3.49 |
| **32314A** | 2GD | 70 | 150 | 51 | 42 | 54 | 3 | 2.5 | 1 | 36 | 297 000 | 0.35 | 1.7 | 381 000 | 0.9 | 2 200 | 3 200 | 4.10 |
| **32315A** | 2GD | 75 | 160 | 55 | 45 | 58 | 3 | 2.5 | 1 | 38 | 350 000 | 0.35 | 1.7 | 460 000 | 0.9 | 2 000 | 3 000 | 5.00 |
| **32316A** | 2GD | 80 | 170 | 58 | 48 | 61.5 | 3 | 2.5 | 1 | 41 | 383 000 | 0.35 | 1.7 | 503 000 | 0.9 | 1 900 | 2 800 | 5.90 |
| **32317A** | 2GD | 85 | 180 | 60 | 49 | 63.5 | 4 | 3 | 1 | 42 | 400 000 | 0.35 | 1.7 | 555 000 | 0.9 | 1 800 | 2 600 | 6.85 |
| **32318A** | 2GD | 90 | 190 | 64 | 53 | 67.5 | 4 | 3 | 1 | 44 | 461 000 | 0.35 | 1.7 | 612 000 | 0.9 | 1 700 | 2 400 | 8.21 |
| **32319A** | 2GD | 95 | 200 | 67 | 55 | 71.5 | 4 | 3 | 1 | 47 | 500 000 | 0.35 | 1.7 | 670 000 | 0.9 | 1 700 | 2 400 | 11.0 |
| **32320A** | 2GD | 100 | 215 | 73 | 60 | 77.5 | 4 | 3 | 1 | 53 | 578 000 | 0.35 | 1.7 | 780 000 | 0.9 | 1 600 | 2 200 | 14.0 |
| **32321A** | 2GD | 105 | 225 | 77 | 63 | 81.5 | 4 | 3 | 1 | 53 | 405 000 | 0.35 | 1.7 | 815 000 | 0.9 | 1 500 | 2 000 | 14.5 |
| **32322A** | 2GD | 110 | 240 | 80 | 65 | 84.5 | 4 | 3 | 1 | 55 | 699 000 | 0.35 | 1.7 | 956 000 | 0.9 | 1 400 | 1 900 | 16.4 |
| **32324A** | 2GD | 120 | 260 | 86 | 69 | 90.5 | 4 | 3 | 1 | 60 | 799 000 | 0.35 | 1.7 | 1 104 000 | 0.9 | 1 300 | 1 800 | 24.5 |
| **32326A** | | 130 | 280 | 93 | 78 | 98.75 | 5 | 4 | 1.5 | 66 | 947 000 | 0.35 | 1.7 | 1 333 000 | 0.9 | 1 100 | 1 600 | 27.6 |

**Larger sizes are available on request**

**Please check availability**

# Taper roller bearings

## 329 SERIES

METRIC SIZES

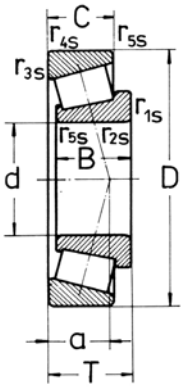


ISO DIMENSION

| RKB designations | ISO series | Dimensions millimetres d | D | B | C | T | r1s,r2s min | r3s,r4s min | r5 min | a | RKB load ratings† newtons dynamic $C_r$ | e | Y | newtons static $C_{or}$ | Y0 | Normal limiting speeds grease | oil | Weight Kg approx |
|---|---|---|---|---|---|---|---|---|---|---|---|---|---|---|---|---|---|---|
| **32934A** | 3DC | 170 | 230 | 38 | 30 | 38 | 2.5 | 2 | 0.6 | 42 | 280 000 | 0.37 | 1.6 | 572 000 | 0.9 | 1 400 | 1 900 | 4.50 |
| **32936A** | 4DC | 180 | 250 | 45 | 34 | 45 | 2.5 | 2 | 0.6 | 53 | 350 000 | 0.48 | 1.3 | 727 000 | 0.7 | 1 200 | 1 700 | 6.65 |
| **32938A** | 4DC | 190 | 260 | 45 | 34 | 45 | 2.5 | 2 | 0.6 | 55 | 358 000 | 0.48 | 1.3 | 772 000 | 0.7 | 1 100 | 1 600 | 7.00 |
| **32940A** | 3EC | 200 | 280 | 51 | 39 | 51 | 3 | 2.5 | 1 | 53 | 474 000 | 0.4 | 1.5 | 950 000 | 0.8 | 1 000 | 1 500 | 9.50 |
| **32944M** | 3EC | 220 | 300 | 51 | 39 | 51 | 3 | 2.5 | 1 | 58 | 407 000 | 0.43 | 1.4 | 827 000 | 0.8 | 950 | 1 400 | 11.2 |
| **32960** | 3FD | 300 | 420 | 76 | 57 | 76 | 4 | 3 | 1 | 65 | 1 006 000 | 0.29 | 2.1 | 1 973 000 | 1.1 | 700 | 950 | 31.5 |
| **32972** | 4FD | 360 | 480 | 76 | 57 | 76 | 4 | 3 | 1 | 77 | 1 130 000 | 0.31 | 1.9 | 2 411 000 | 1.1 | 600 | 800 | 40.5 |

**Larger sizes are available on request**

**Please check availability**

RKB
BEARING INDUSTRIES

# APPENDIX

Dimensional Tolerances of Shaft

Unit $\mu m = 0.001$ mm

| Dimensional Divisions (mm) | | a | c | d | e | f | | g | | h | | | | | | js | | j | | k | | m | | n | | p | | r | | Dimensional Divisions (mm) | |
|---|---|---|---|---|---|---|---|---|---|---|---|---|---|---|---|---|---|---|---|---|---|---|---|---|---|---|---|---|---|---|---|
| over | Incl. | a13 | c12 | d6 | e6 | f5 | f6 | g5 | g6 | h5 | h6 | h7 | h8 | h9 | h10 | js5 | js6 | j5 | j6 | k5 | k6 | m5 | m6 | n5 | n6 | p5 | p6 | r6 | r7 | Over | Incl |
| 3 | 6 | −270<br>−450 | −70<br>−190 | −30<br>−38 | −20<br>−28 | −10<br>−15 | −10<br>−18 | −4<br>−9 | −4<br>−12 | 0<br>−5 | 0<br>−8 | 0<br>−12 | 0<br>−18 | 0<br>−30 | 0<br>−48 | ±2.5 | ±4 | +3<br>−2 | +6<br>−2 | +6<br>+1 | +9<br>+1 | +9<br>+4 | +12<br>+4 | +13<br>+8 | +16<br>+8 | +17<br>+12 | +20<br>+12 | +23<br>+15 | +27<br>+15 | 3 | 6 |
| 6 | 10 | −280<br>−500 | −80<br>−230 | −40<br>−49 | −25<br>−34 | −13<br>−19 | −13<br>−22 | −5<br>−11 | −5<br>−14 | 0<br>−6 | 0<br>−9 | 0<br>−15 | 0<br>−22 | 0<br>−36 | 0<br>−58 | ±3 | ±4.5 | +4<br>−2 | +7<br>−2 | +7<br>+1 | +10<br>+1 | +12<br>+6 | +15<br>+6 | +16<br>+10 | +19<br>+10 | +21<br>+15 | +24<br>+15 | +28<br>+19 | +34<br>+19 | 6 | 10 |
| 10 | 14 | −290<br>−560 | −95<br>−275 | −50<br>−61 | −32<br>−43 | −16<br>−24 | −16<br>−27 | −6<br>−14 | −6<br>−17 | 0<br>−8 | 0<br>−11 | 0<br>−18 | 0<br>−27 | 0<br>−43 | 0<br>−70 | ±4 | ±5.5 | +5<br>−3 | +8<br>−3 | +9<br>+1 | +12<br>+1 | +15<br>+7 | +18<br>+7 | +20<br>+12 | +23<br>+12 | +26<br>+18 | +29<br>+18 | +34<br>+23 | +41<br>+23 | 10 | 14 |
| 14 | 18 | | | | | | | | | | | | | | | | | | | | | | | | | | | | | 14 | 18 |
| 18 | 24 | −300<br>−630 | −110<br>−320 | −65<br>−78 | −40<br>−53 | −20<br>−29 | −20<br>−33 | −7<br>−16 | −7<br>−20 | 0<br>−9 | 0<br>−13 | 0<br>−21 | 0<br>−33 | 0<br>−52 | 0<br>−84 | ±4.5 | ±6.5 | +5<br>−4 | +9<br>−4 | +11<br>+2 | +15<br>+2 | +17<br>+8 | +21<br>+8 | +24<br>+15 | +28<br>+15 | +31<br>+22 | +35<br>+22 | +41<br>+28 | +49<br>+28 | 18 | 24 |
| 24 | 30 | | | | | | | | | | | | | | | | | | | | | | | | | | | | | 24 | 30 |
| 30 | 40 | −310<br>−700 | −120<br>−370 | −80<br>−96 | −50<br>−66 | −25<br>−36 | −25<br>−41 | −9<br>−20 | −9<br>−25 | 0<br>−11 | 0<br>−16 | 0<br>−25 | 0<br>−39 | 0<br>−62 | 0<br>−100 | ±5.5 | ±8 | +6<br>−5 | +11<br>−5 | +13<br>+2 | +18<br>+2 | +20<br>+9 | +25<br>+9 | +28<br>+17 | +33<br>+17 | +37<br>+26 | +42<br>+26 | +50<br>+34 | +59<br>+34 | 30 | 40 |
| 40 | 50 | −320<br>−710 | −130<br>−380 | | | | | | | | | | | | | | | | | | | | | | | | | | | 40 | 50 |
| 50 | 65 | −340<br>−800 | −140<br>−440 | −100<br>−119 | −60<br>−79 | −30<br>−43 | −30<br>−49 | −10<br>−23 | −10<br>−29 | 0<br>−13 | 0<br>−19 | 0<br>−30 | 0<br>−46 | 0<br>−74 | 0<br>−120 | ±6.5 | ±9.5 | +6<br>−7 | +12<br>−7 | +15<br>+2 | +21<br>+2 | +24<br>+11 | +30<br>+11 | +33<br>+20 | +39<br>+20 | +45<br>+32 | +51<br>+32 | +60<br>+41 | +71<br>+41 | 50 | 65 |
| 65 | 80 | −360<br>−820 | −150<br>−450 | | | | | | | | | | | | | | | | | | | | | | | | | +62<br>+43 | +73<br>+43 | 65 | 80 |
| 80 | 100 | −380<br>−920 | −170<br>−520 | −120<br>−142 | −72<br>−94 | −36<br>−51 | −36<br>−58 | −12<br>−27 | −12<br>−34 | 0<br>−15 | 0<br>−22 | 0<br>−35 | 0<br>−54 | 0<br>−87 | 0<br>−140 | ±7.5 | ±11 | +6<br>−9 | +13<br>−9 | +18<br>+3 | +25<br>+3 | +28<br>+13 | +35<br>+13 | +38<br>+23 | +45<br>+23 | +52<br>+37 | +59<br>+37 | +73<br>+51 | +86<br>+51 | 80 | 100 |
| 100 | 120 | −410<br>−950 | −180<br>−530 | | | | | | | | | | | | | | | | | | | | | | | | | +76<br>+54 | +89<br>+54 | 100 | 120 |
| 120 | 140 | −460<br>−1090 | −200<br>−600 | | | | | | | | | | | | | | | | | | | | | | | | | +88<br>+63 | +103<br>+63 | 120 | 140 |
| 140 | 160 | −520<br>−1150 | −210<br>−610 | −145<br>−170 | −85<br>−110 | −43<br>−61 | −43<br>−68 | −14<br>−32 | −14<br>−39 | 0<br>−18 | 0<br>−25 | 0<br>−40 | 0<br>−63 | 0<br>−100 | 0<br>−160 | ±9 | ±12.5 | +7<br>−11 | +14<br>−11 | +21<br>+3 | +28<br>+3 | +33<br>+15 | +40<br>+15 | +45<br>+27 | +52<br>+27 | +61<br>+43 | +68<br>+43 | +90<br>+65 | +105<br>+65 | 140 | 160 |
| 160 | 180 | −580<br>−1210 | −230<br>−630 | | | | | | | | | | | | | | | | | | | | | | | | | +93<br>+68 | +108<br>+68 | 160 | 180 |
| 180 | 200 | −660<br>−1380 | −240<br>−700 | | | | | | | | | | | | | | | | | | | | | | | | | +106<br>+77 | +123<br>+77 | 180 | 200 |
| 200 | 225 | −740<br>−1460 | −260<br>−720 | −170<br>−199 | −100<br>−129 | −50<br>−70 | −50<br>−79 | −15<br>−35 | −15<br>−44 | 0<br>−20 | 0<br>−29 | 0<br>−46 | 0<br>−72 | 0<br>−115 | 0<br>−185 | ±10 | ±14.5 | +7<br>−13 | +16<br>−13 | +24<br>+4 | +33<br>+4 | +37<br>+17 | +46<br>+17 | +51<br>+31 | +60<br>+31 | +70<br>+50 | +79<br>+50 | +109<br>+80 | +126<br>+80 | 200 | 225 |
| 225 | 250 | −820<br>−1540 | −280<br>−740 | | | | | | | | | | | | | | | | | | | | | | | | | +113<br>+84 | +130<br>+84 | 225 | 250 |
| 250 | 280 | −920<br>−1730 | −300<br>−820 | −190<br>−222 | −110<br>−142 | −56<br>−79 | −56<br>−88 | −17<br>−40 | −17<br>−49 | 0<br>−23 | 0<br>−32 | 0<br>−52 | 0<br>−81 | 0<br>−130 | 0<br>−210 | ±11.5 | ±16 | +7<br>−16 | +16<br>−16 | +27<br>+4 | +36<br>+4 | +43<br>+20 | +52<br>+20 | +57<br>+34 | +66<br>+34 | +79<br>+56 | +88<br>+56 | +126<br>+94 | +146<br>+94 | 250 | 280 |
| 280 | 315 | −1050<br>−1860 | −330<br>−850 | | | | | | | | | | | | | | | | | | | | | | | | | +130<br>+98 | +150<br>+98 | 280 | 315 |
| 315 | 355 | −1200<br>−2090 | −360<br>−930 | −210<br>−246 | −125<br>−161 | −62<br>−87 | −62<br>−98 | −18<br>−43 | −18<br>−54 | 0<br>−25 | 0<br>−36 | 0<br>−57 | 0<br>−89 | 0<br>−140 | 0<br>−230 | ±12.5 | ±18 | +7<br>−18 | +18<br>−18 | +29<br>+4 | +40<br>+4 | +46<br>+21 | +57<br>+21 | +62<br>+37 | +73<br>+37 | +87<br>+62 | +98<br>+62 | +144<br>+108 | +165<br>+108 | 315 | 355 |
| 355 | 400 | −1350<br>−2240 | −400<br>−970 | | | | | | | | | | | | | | | | | | | | | | | | | +150<br>+114 | +171<br>+114 | 355 | 400 |
| 400 | 450 | −1500<br>−2470 | −440<br>−1070 | −230<br>−270 | −135<br>−175 | −68<br>−95 | −68<br>−108 | −20<br>−47 | −20<br>−60 | 0<br>−27 | 0<br>−40 | 0<br>−63 | 0<br>−97 | 0<br>−155 | 0<br>−250 | ±13.5 | ±20 | +7<br>−20 | +20<br>−20 | +32<br>+5 | +45<br>+5 | +50<br>+23 | +63<br>+23 | +67<br>+40 | +80<br>+40 | +95<br>+68 | +108<br>+68 | +166<br>+126 | +189<br>+126 | 400 | 450 |
| 450 | 500 | −1650<br>−2620 | −480<br>−1110 | | | | | | | | | | | | | | | | | | | | | | | | | +172<br>+132 | +195<br>+132 | 450 | 500 |

Dimensional Tolerances of housing Bore

Unit $\mu m = 0.001$ mm

| Dimensional Divisions (mm) | | E | | F | | G | | | H | | | | | | Js | | J | | K | | M | | N | | P | | R | | Dimensional Divisions (mm) | |
|---|---|---|---|---|---|---|---|---|---|---|---|---|---|---|---|---|---|---|---|---|---|---|---|---|---|---|---|---|---|---|
| over | Incl. | E10 | E11 | F6 | F7 | F8 | G6 | G7 | H5 | H6 | H7 | H8 | H9 | H10 | Js6 | Js7 | J6 | J7 | K6 | K7 | M6 | M7 | N6 | N7 | P6 | P7 | R6 | R7 | Over | Incl. |
| 3 | 6 | +68<br>+20 | +95<br>+20 | +18<br>+10 | +22<br>+10 | +28<br>+10 | +12<br>+4 | +16<br>+4 | +5<br>0 | +8<br>0 | +12<br>0 | +18<br>0 | +30<br>0 | +48<br>0 | ±4 | ±6 | +5<br>−3 | +6<br>−6 | +2<br>−6 | +3<br>−9 | −1<br>−9 | 0<br>−12 | −5<br>−13 | −4<br>−16 | −9<br>−17 | −8<br>−20 | −12<br>−20 | −11<br>−23 | 3 | 6 |
| 6 | 10 | +83<br>+25 | +115<br>+25 | +22<br>+13 | +28<br>+13 | +35<br>+13 | +14<br>+5 | +20<br>+5 | +6<br>0 | +9<br>0 | +15<br>0 | +22<br>0 | +36<br>0 | +58<br>0 | ±4.5 | ±7.5 | +5<br>−4 | +8<br>−7 | +2<br>−7 | +5<br>−10 | −3<br>−12 | 0<br>−15 | −7<br>−16 | −4<br>−19 | −12<br>−21 | −9<br>−24 | −16<br>−25 | −13<br>−28 | 6 | 10 |
| 10 | 14 | +102<br>+32 | +142<br>+32 | +27<br>+16 | +34<br>+16 | +43<br>+16 | +17<br>+6 | +24<br>+6 | +8<br>0 | +11<br>0 | +18<br>0 | +27<br>0 | +43<br>0 | +70<br>0 | ±5.5 | ±9 | +6<br>−5 | +10<br>−8 | +2<br>−9 | +6<br>−12 | −4<br>−15 | 0<br>−18 | −9<br>−20 | −5<br>−23 | −15<br>−26 | −11<br>−29 | −20<br>−31 | −16<br>−34 | 10<br>14 | 14<br>18 |
| 18 | 24 | +124<br>+40 | +170<br>+40 | +33<br>+20 | +41<br>+20 | +53<br>+20 | +20<br>+7 | +28<br>+7 | +9<br>0 | +13<br>0 | +21<br>0 | +33<br>0 | +52<br>0 | +84<br>0 | ±6.5 | ±10.5 | +8<br>−5 | +12<br>−9 | +2<br>−11 | +6<br>−15 | −4<br>−17 | 0<br>−21 | −11<br>−24 | −7<br>−28 | −18<br>−31 | −14<br>−35 | −24<br>−37 | −20<br>−41 | 18<br>24 | 24<br>30 |
| 30 | 40 | +150<br>+50 | +210<br>+50 | +41<br>+25 | +50<br>+25 | +64<br>+25 | +25<br>+9 | +34<br>+9 | +11<br>0 | +16<br>0 | +25<br>0 | +39<br>0 | +62<br>0 | +100<br>0 | ±8 | ±12.5 | +10<br>−6 | +14<br>−11 | +3<br>−13 | +7<br>−18 | −4<br>−20 | 0<br>−25 | −12<br>−28 | −8<br>−33 | −21<br>−37 | −17<br>−42 | −29<br>−45 | −25<br>−50 | 30<br>40 | 40<br>50 |
| 50 | 65 | +180<br>+60 | +250<br>+60 | +49<br>+30 | +60<br>+30 | +76<br>+30 | +29<br>+10 | +40<br>+10 | +13<br>0 | +19<br>0 | +30<br>0 | +46<br>0 | +74<br>0 | +120<br>0 | ±9.5 | ±15 | +13<br>−6 | +18<br>−12 | +4<br>−15 | +9<br>−21 | −5<br>−24 | 0<br>−30 | −14<br>−33 | −9<br>−39 | −26<br>−45 | −21<br>−51 | −35<br>−54 | −30<br>−60 | 50<br>65 | 65<br>80 |
| 80 | 100 | +212<br>+72 | +292<br>+72 | +58<br>+36 | +71<br>+36 | +90<br>+36 | +34<br>+12 | +47<br>+12 | +15<br>0 | +22<br>0 | +35<br>0 | +54<br>0 | +87<br>0 | +140<br>0 | ±11 | ±17.5 | +16<br>−6 | +22<br>−13 | +4<br>−18 | +10<br>−25 | −6<br>−28 | 0<br>−35 | −16<br>−38 | −10<br>−45 | −30<br>−52 | −24<br>−59 | −37<br>−56<br>−44<br>−66 | −32<br>−62<br>−38<br>−73 | 80<br>100 | 100<br>120 |
| 120 | 140 | | | | | | | | | | | | | | | | | | | | | | | | | | −47<br>−69<br>−56<br>−81 | −41<br>−76<br>−48<br>−88 | 120 | 140 |
| 140 | 160 | +245<br>+85 | +335<br>+85 | +68<br>+43 | +83<br>+43 | +106<br>+43 | +39<br>+14 | +54<br>+14 | +18<br>0 | +25<br>0 | +40<br>0 | +63<br>0 | +100<br>0 | +160<br>0 | ±12.5 | ±20 | +18<br>−7 | +26<br>−14 | +4<br>−21 | +12<br>−28 | −8<br>−33 | 0<br>−40 | −20<br>−45 | −12<br>−52 | −36<br>−61 | −28<br>−68 | −58<br>−83 | −50<br>−90 | 140 | 160 |
| 160 | 180 | | | | | | | | | | | | | | | | | | | | | | | | | | −61<br>−86 | −53<br>−93 | 160 | 180 |
| 180 | 200 | | | | | | | | | | | | | | | | | | | | | | | | | | −68<br>−97 | −60<br>−106 | 180 | 200 |
| 200 | 225 | +285<br>+100 | +390<br>+100 | +79<br>+50 | +96<br>+50 | +122<br>+50 | +44<br>+15 | +61<br>+15 | +20<br>0 | +29<br>0 | +46<br>0 | +72<br>0 | +115<br>0 | +185<br>0 | ±14.5 | ±23 | +22<br>−7 | +30<br>−16 | +5<br>−24 | +13<br>−33 | −8<br>−37 | 0<br>−46 | −22<br>−51 | −14<br>−60 | −41<br>−70 | −33<br>−79 | −71<br>−100 | −63<br>−109 | 200 | 225 |
| 225 | 250 | | | | | | | | | | | | | | | | | | | | | | | | | | −75<br>−104 | −67<br>−113 | 225 | 250 |
| 250 | 280 | +320<br>+110 | +430<br>+110 | +88<br>+56 | +108<br>+56 | +137<br>+56 | +49<br>+17 | +69<br>+17 | +23<br>0 | +32<br>0 | +52<br>0 | +81<br>0 | +130<br>0 | +210<br>0 | ±16 | ±26 | +25<br>−7 | +36<br>−16 | +5<br>−27 | +16<br>−36 | −9<br>−41 | 0<br>−52 | −25<br>−57 | −14<br>−66 | −47<br>−79 | −36<br>−88 | −85<br>−117 | −74<br>−126 | 250 | 280 |
| 280 | 315 | | | | | | | | | | | | | | | | | | | | | | | | | | −89<br>−121 | −78<br>−130 | 280 | 315 |
| 315 | 355 | +355<br>+125 | +485<br>+125 | +98<br>+62 | +119<br>+62 | +151<br>+62 | +54<br>+18 | +75<br>+18 | +25<br>0 | +36<br>0 | +57<br>0 | +89<br>0 | +140<br>0 | +230<br>0 | ±18 | ±28.5 | +29<br>−7 | +39<br>−18 | +7<br>−29 | +17<br>−40 | −10<br>−46 | 0<br>−57 | −26<br>−62 | −16<br>−73 | −51<br>−87 | −41<br>−98 | −97<br>−133 | −87<br>−144 | 315 | 355 |
| 355 | 400 | | | | | | | | | | | | | | | | | | | | | | | | | | −103<br>−139 | −93<br>−150 | 355 | 400 |
| 400 | 450 | +385<br>+135 | +535<br>+135 | +108<br>+68 | +131<br>+68 | +165<br>+68 | +60<br>+20 | +83<br>+20 | +27<br>0 | +40<br>0 | +63<br>0 | +97<br>0 | +155<br>0 | +250<br>0 | ±20 | ±31.5 | +33<br>−7 | +43<br>−20 | +8<br>−32 | +18<br>−45 | −10<br>−50 | 0<br>−63 | −27<br>−67 | −17<br>−80 | −55<br>−95 | −45<br>−108 | −113<br>−153 | −103<br>−166 | 400 | 450 |
| 450 | 500 | | | | | | | | | | | | | | | | | | | | | | | | | | −119<br>−159 | −109<br>−172 | 450 | 500 |

# Conversion tables

## Load and force conversion

When using the conversion tables below please refer to the centre columns in each table, i.e.
in the first table: 1 newton = 0,22481 lbf
in the second table: 1 kg = 2,2046 lb.

**Newtons to pounds force and pounds force to newtons**

| N | | lbf |
|---|---|---|
| 4,448 | 1 | 0,22481 |
| 8,896 | 2 | 0,44962 |
| 13,345 | 3 | 0,67443 |
| 17,793 | 4 | 0,89924 |
| 22,241 | 5 | 1,12404 |
| 26,689 | 6 | 1,34885 |
| 31,138 | 7 | 1,57366 |
| 35,586 | 8 | 1,79847 |
| 40,034 | 9 | 2,02328 |
| 44,482 | 10 | 2,24809 |
| 48,930 | 11 | 2,47290 |
| 53,379 | 12 | 2,69771 |
| 57,827 | 13 | 2,92252 |
| 62,275 | 14 | 3,14733 |
| 66,723 | 15 | 3,37213 |
| 71,172 | 16 | 3,59694 |
| 75,620 | 17 | 3,82175 |
| 80,068 | 18 | 4,04656 |
| 84,516 | 19 | 4,27137 |
| 88,964 | 20 | 4,49618 |

**Kilogrammes to pounds and pounds to kilogrammes**

| kg | | lb |
|---|---|---|
| 0,4536 | 1 | 2,2046 |
| 0,9072 | 2 | 4,4092 |
| 1,3608 | 3 | 6,6139 |
| 1,8144 | 4 | 8,8185 |
| 2,2680 | 5 | 11,0231 |
| 2,7216 | 6 | 13,2277 |
| 3,1751 | 7 | 15,4324 |
| 3,6287 | 8 | 17,6370 |
| 4,0823 | 9 | 19,8416 |
| 4,5359 | 10 | 22,0462 |
| 4,9895 | 11 | 24,2508 |
| 5,4431 | 12 | 26,4555 |
| 5,8967 | 13 | 28,6601 |
| 6,3503 | 14 | 30,8647 |
| 6,8039 | 15 | 33,0693 |
| 7,2575 | 16 | 35,2740 |
| 7,7111 | 17 | 37,4786 |
| 8,1647 | 18 | 39,6832 |
| 8,6183 | 19 | 41,8878 |
| 9,0718 | 20 | 44,0925 |

## Tolerance conversion

The table below gives a rounded conversion and should be used for reference only when converting metric tolerances to inch units

**Tolerance conversion from 0,001 mm units to 0,0001 inch units**

| 0,001 mm units | 0 | 10 | 20 | 30 | 40 | 50 | 60 | 70 | 80 | 90 |
|---|---|---|---|---|---|---|---|---|---|---|
| 0 | 0 | 3,9 | 7,9 | 11,8 | 15,7 | 19,7 | 23,6 | 27,5 | 31,5 | 35,4 |
| 1 | 0,4 | 4,3 | 8,3 | 12,2 | 16,1 | 20,1 | 24,0 | 27,9 | 31,9 | 35,8 |
| 2 | 0,8 | 4,7 | 8,7 | 12,6 | 16,5 | 20,5 | 24,4 | 28,3 | 32,3 | 36,2 |
| 3 | 1,2 | 5,1 | 9,0 | 13,0 | 16,9 | 20,9 | 24,8 | 28,7 | 32,7 | 36,6 |
| 4 | 1,6 | 5,5 | 9,4 | 13,4 | 17,3 | 21,2 | 25,2 | 29,1 | 33,1 | 37,0 |
| 5 | 2,0 | 5,9 | 9,8 | 13,8 | 17,7 | 21,6 | 25,6 | 29,5 | 33,5 | 37,4 |
| 6 | 2,4 | 6,3 | 10,2 | 14,2 | 18,1 | 22,0 | 26,0 | 29,9 | 33,8 | 37,8 |
| 7 | 2,8 | 6,7 | 10,6 | 14,6 | 18,5 | 22,4 | 26,4 | 30,3 | 34,2 | 38,2 |
| 8 | 3,1 | 7,1 | 11,0 | 15,0 | 18,9 | 22,8 | 26,8 | 30,7 | 34,6 | 38,6 |
| 9 | 3,5 | 7,5 | 11,4 | 15,3 | 19,3 | 23,2 | 27,2 | 31,1 | 35,0 | 39,0 |

| mm | 0 | 10 | 20 | 30 | 40 | 50 | 60 | 70 | 80 | 90 |
|---|---|---|---|---|---|---|---|---|---|---|
| 0 | inch | 0,39370 | 0,78740 | 1,18110 | 1,57480 | 1,96850 | 2,36220 | 2,75590 | 3,14961 | 3,54331 |
| 1 | 0,03937 | 0,43307 | 0,82677 | 1,22047 | 1,61417 | 2,00787 | 2,40157 | 2,79528 | 3,18898 | 3,58268 |
| 2 | 0,07874 | 0,47244 | 0,86614 | 1,25984 | 1,65354 | 2,04724 | 2,44094 | 2,83464 | 3,22835 | 3,62205 |
| 3 | 0,11811 | 0,51181 | 0,90551 | 1,29921 | 1,69291 | 2,08661 | 2,48031 | 2,87402 | 3,26772 | 3,66142 |
| 4 | 0,15748 | 0,55118 | 0,94488 | 1,33858 | 1,73228 | 2,12598 | 2,51968 | 2,91338 | 3,30709 | 3,70079 |
| 5 | 0,19685 | 0,59055 | 0,98425 | 1,37795 | 1,77165 | 2,16535 | 2,55906 | 2,95276 | 3,34646 | 3,74016 |
| 6 | 0,23622 | 0,62992 | 1,02362 | 1,41732 | 1,81102 | 2,20472 | 2,59842 | 2,99212 | 3,38583 | 3,77953 |
| 7 | 0,27559 | 0,66929 | 1,06299 | 1,45669 | 1,85039 | 2,24409 | 2,63780 | 3,03150 | 3,42520 | 3,81890 |
| 8 | 0,31496 | 0,70866 | 1,10236 | 1,49606 | 1,88976 | 2,28346 | 2,67716 | 3,07087 | 3,46457 | 3,85827 |
| 9 | 0,35433 | 0,74803 | 1,14173 | 1,53543 | 1,92913 | 2,32283 | 2,71654 | 3,11024 | 3,50394 | 3,89764 |

| mm | 0 | 100 | 200 | 300 | 400 | 500 | 600 | 700 | 800 | 900 |
|---|---|---|---|---|---|---|---|---|---|---|
| 0 | inch | 3,93701 | 7,87402 | 11,8110 | 15,7480 | 19,6850 | 23,6220 | 27,5590 | 31,4961 | 35,4331 |
| 5 | 0,19685 | 4,13386 | 8,07087 | 12,0079 | 15,9449 | 19,8819 | 23,8189 | 27,7559 | 31,6929 | 35,6299 |
| 10 | 0,39370 | 4,33071 | 8,26772 | 12,2047 | 16,1417 | 20,0787 | 24,0157 | 27,9528 | 31,8898 | 35,8268 |
| 15 | 0,59055 | 4,52756 | 8,46457 | 12,4016 | 16,3386 | 20,2756 | 24,2126 | 28,1496 | 32,0866 | 36,0236 |
| 20 | 0,78740 | 4,72441 | 8,66142 | 12,5984 | 16,5354 | 20,4724 | 24,4094 | 28,3464 | 32,2835 | 36,2205 |
| 25 | 0,98425 | 4,92126 | 8,85827 | 12,7953 | 16,7323 | 20,6693 | 24,6063 | 28,5433 | 32,4803 | 36,4173 |
| 30 | 1,18110 | 5,11811 | 9,05512 | 12,9921 | 16,9291 | 20,8661 | 24,8031 | 28,7402 | 32,6772 | 36,6142 |
| 35 | 1,37795 | 5,31496 | 9,25197 | 13,1890 | 17,1260 | 21,0630 | 25,0000 | 28,9370 | 32,8740 | 36,8110 |
| 40 | 1,57480 | 5,51181 | 9,44882 | 13,3858 | 17,3228 | 21,2598 | 25,1968 | 29,1338 | 33,0709 | 37,0079 |
| 45 | 1,77165 | 5,70866 | 9,64567 | 13,5827 | 17,5197 | 21,4567 | 25,3937 | 29,3307 | 33,2677 | 37,2047 |
| 50 | 1,96850 | 5,90551 | 9,84252 | 13,7795 | 17,7165 | 21,6535 | 25,5906 | 29,5276 | 33,4646 | 37,4016 |
| 55 | 2,16535 | 6,10236 | 10,0394 | 13,9764 | 17,9134 | 21,8504 | 25,7874 | 29,7244 | 33,6614 | 37,5984 |
| 60 | 2,36220 | 6,29921 | 10,2362 | 14,1732 | 18,1102 | 22,0472 | 25,9842 | 29,9212 | 33,8583 | 37,7953 |
| 65 | 2,55906 | 6,49606 | 10,4331 | 14,3701 | 18,3071 | 22,2441 | 26,1811 | 30,1181 | 34,0551 | 37,9921 |
| 70 | 2,75590 | 6,69291 | 10,6299 | 14,5669 | 18,5039 | 22,4409 | 26,3780 | 30,3150 | 34,2520 | 38,1890 |
| 75 | 2,95276 | 6·88976 | 10,8268 | 14,7638 | 18,7008 | 22,6378 | 26,5748 | 30,5118 | 34,4488 | 38,3858 |
| 80 | 3,14961 | 7·08661 | 11,0236 | 14,9606 | 18,8976 | 22,8346 | 26,7716 | 30,7087 | 34,6457 | 38,5827 |
| 85 | 3,34646 | 7·28346 | 11,2205 | 15,1575 | 19,0945 | 23,0315 | 26,9685 | 30,9055 | 34,8425 | 38,7795 |
| 90 | 3,54331 | 7·48031 | 11,4173 | 15,3543 | 19,2913 | 23,2283 | 27,1654 | 31,1024 | 35,0394 | 38,9764 |
| 95 | 3,74016 | 7·67716 | 11,6142 | 15,5512 | 19,4882 | 23,4252 | 27,3622 | 31,2992 | 35,2362 | 39,1732 |

| mm | inch |
|---|---|
| 0,001 | 0,000039 |
| 0,002 | 0,000079 |
| 0,003 | 0,000118 |
| 0,004 | 0,000157 |
| 0,005 | 0,000197 |
| 0,006 | 0,000236 |
| 0,007 | 0,000276 |
| 0,008 | 0,000315 |
| 0,009 | 0,000354 |

| mm | inch |
|---|---|
| 0,01 | 0,00039 |
| 0,02 | 0,00079 |
| 0,03 | 0,00118 |
| 0,04 | 0,00157 |
| 0,05 | 0,00197 |
| 0,06 | 0,00236 |
| 0,07 | 0,00276 |
| 0,08 | 0,00315 |
| 0,09 | 0,00354 |

| mm | inch |
|---|---|
| 0,1 | 0,00394 |
| 0,2 | 0,00787 |
| 0,3 | 0,01181 |
| 0,4 | 0,01575 |
| 0,5 | 0,01968 |
| 0,6 | 0,02362 |
| 0,7 | 0,02756 |
| 0,8 | 0,03150 |
| 0,9 | 0,03543 |

1 METRE = 39,37 INCHES

**In this document RKB Europe SA is also referred to as "the Company".**

**1 Scope of Applicability**

1.1 These General Terms and Conditions apply to all contracts of sale of any type of good and or services, unless otherwise expressly agreed in writing with the Customer.

1.2 Any General Terms and Conditions of the Customer shall apply only if and to the extent to which the Company has expressly consented thereto in writing. An express rejection of the Customer's general conditions is not required.

**2 Contract Formation**

2.1 The Customer's order must be in writing and validly signed.

2.2 A Customer's order shall always be subject to the Company's written confirmation ("acceptance" or "confirmation of order") and the contract shall be deemed to have been concluded only upon such written confirmation ("acceptance" or "confirmation of order") by the Company.

2.3 A purchase shall also be considered concluded by delivering the ordered goods in case where no written confirmation ("acceptance" or "confirmation of order") was issued by the Company.

2.4 Any price list, illustration, catalogue, brochure, circular, advertisement, and other descriptive document constitute no offer, but only an approximate guide and shall be binding on the Company only upon written confirmation ("acceptance" or "confirmation of order") stating a limited acceptance period. Where no acceptance period is specified for the time-limited offer, a 30 days period, starting with the first notice (i.e. "information delivery"), will apply. Where the Company places a time-limited offer, the duly signed Customer's acceptance must reach the Company within the mentioned time-limit in order to be binding for the Company. Any time-limited offer for prompt delivery is subject to prior sales ("first come, first served").

2.5 Where special materials are ordered, the Company reserves the right to ship and charge 10% more or less than the quantity ordered. The Company shall call Customer attention on the difference between the quantity ordered and the quantity to be delivered by the Company, without any interference on contract formation between the parties and for the quantity unilaterally accepted by the Company. Unless otherwise agreed in writing the Company does not accept any restriction of its right to manufacture, sell or offer to any other Customers, goods which may be manufactured specially for a specific Customer or Customers or goods of like pattern.

2.6 The Company reserves right to cancel any uncompleted order, or to suspend delivery, should any of the Customer's commitments to the Company not be met.

**3 Contract Amendments**

3.1 No subsequent agreement, understanding alterations or amendments of a contract in any way altering these terms and conditions shall be binding upon the Company unless made in writing and validly signed by an authorized officer of all parties.

**4 Price**

4.1 For Customers with registered offices in the Swiss Confederation and Customers with registered offices outside the European Union, Company's prices include, except for Value Added Tax (VAT), such other taxes and duties payable in the Swiss Confederation. Duties payable outside the Swiss Confederation are for the Customer's account.

4.2 For Customers with registered offices within the European Union, Company's prices include, except for Value Added Tax (VAT), such other taxes and duties payable in the European Union area.

4.3 Prices include normal packing for both domestic and export markets. Unless otherwise expressly agreed upon in writing, the contract price does not include performances such as, however not limited to, installation, start up, training of Customer's operation and maintenance employees or engineers.

4.4 Shipping costs are for the buyer's account (see below: EXW clause 6.2) .

4.5 The Company may make appropriate price increases after contract formation if raw material suppliers have raised their prices significantly between contract formation and delivery date.

**5 Payment**

5.1 Unless otherwise agreed, payment shall be net cash and made within 30 days from the date of shipment delivery. Any payments must be made in full without any deduction. Whatever the means of payment used, payment shall not be deemed to have been effected before the Company's account has been fully and irrevocably credited.

5.2 If the Customer fails to pay by the stipulated date, the Company shall be entitled to interest from the day on which payment was due. The rate of interest shall be 8% above the rate of the main refinancing facility on the European Central Bank in force on the due date of payment. After having notified the Customer in writing, the Company may also suspend its contract performance (i.e. future deliveries and/or warranties) until the Company's account has been fully and irrevocably credited.

5.3 If the Customer has not paid the amount due within three months the Company shall be entitled to terminate the contract by notice in writing to the Customer and to claim compensation for the loss it has incurred.

5.4 If, in the space of time in-between contract formation and product shipment, circumstances affecting the general credit of the customer arise, the company shall have the right to deliver only after receipt of full and unconditional payment.

**6 Delivery**

6.1 The INCOTERMS (see: www.incoterms.com) in their respectively valid version shall apply for interpreting standard trade terms.

6.2 Unless agreed upon differently in writing, deliveries

6.2.1 to Customers with registered offices within the territory of the Swiss Confederation or a non European Union country ("third country") will be made ex works (EXW) Balerna (Via Primo Agosto, CH-6828 Balerna – Switzerland)

6.2.2 to Customers with registered offices within the territory of the European Union will be made ex works (EXW) Milano (Via Ernesto Teodoro Moneta 41, I-20161 Milano – Italy)

6.3 Unless agreed upon differently in writing, "delivery period" is 10 months and shall run from the date of contract formation.

6.4 Unless otherwise expressly agreed upon in writing, delivery dates stated by the Company or delivery dates in the end of a "delivery period" are approximate and shall not be deemed "fixed" under article 102 para. 2 of the Swiss Code of Obligations. In case of non-delivery at delivery date (stated by the Company or in the end of a "delivery period"), the Customer must exhort the Company and set a reasonable time limit ("grace period") to the Company (article 107 para. 1 of the Swiss Code of Obligations).

6.5 Compensation for damages in accordance with article 97 para. 1 ("non-delivery") of the Swiss Code of Obligations, is excluded in case of slight negligence by the Company or its employees or any auxiliary person (article 100 para. 1 Swiss Code of Obligations). Analogically, compensation for damages in accordance with article 107 para. 2 ("late delivery") of the Swiss Code of Obligations, is also excluded in case of slight negligence by the Company or its employees or any auxiliary person.

6.6 The presumption of article 190 of the Swiss Code of Obligations shall not apply.

6.7 The Company shall have the right to part deliveries, unless the Customer suffers unreasonable or inequitable harm thereby.

**7 Warranty**

7.1 The Company warrants that at the time of delivery the goods sold hereunder shall be free from defects in material and workmanship. The Customer is obliged to promptly examine the goods upon delivery and shall notify in writing defects without undue delay to the Company. The notification must detail the goods and the defects. If the Customer fails to comply with these obligations, the goods shall be deemed to have been accepted as faultless. The Company reserves the right to reject all claims for shortage made without undue delay and in any event every claim reaching the Company later that fourteen days after shipment delivery.

7.2 The same waiver of redhibitory action (annulment) or impairment ("actio quanti minoris"), in accordance to art. 205 para. 1 of the Swiss Code of Obligations, shall apply post-delivery. During a period of 12 months after the goods have been put into operation, but not exceeding 18 months after the passing of risks under clause 6.2 (or differing agreement), the Company warrants that the goods shall be free from defects in material and workmanship. During this time period the Company shall, at its own choice, replace or repair goods or issue credit for goods becoming "objectionable". If the daily use of the goods exceeds that which is agreed, this period shall be reduced proportionately.

7.3 Notice of defects shall be given immediately and, under no circumstances, later than fourteen days after the expiry of the periods set forth under clause 7.2. If the Customer fails to notify the Company in writing of a defect within the time limits set forth, he loses his right to have the defect remedied. Where the defect is such that it may cause damage, the Customer shall immediately inform the Company. The Customer shall bear the risk of damage resulting from his failure so to notify.

7.4 Warranty applies, provided the allegedly "objectionable good" is returned for examination and our inspection demonstrates the good not to be free from defects in materials and workmanship (i.e. objectionable). Warranty doesn't apply if the Company's inspection demonstrates that the product was not properly mounted, lubricated or used. The allegedly "objectionable goods" may be returned at the expense of the Company only upon receipt by the Customer of definite shipping instructions from the Company.

7.5 If the Customer submits a warranty claim and no defect is found for which the Company is liable, the Company shall be entitled to compensation for the costs it has incurred as a result of the notice.

7.6 Once the Company, based on its examination, decides in favour of warranty according to clause 7 it shall repair the defect at its own cost and without undue delay or proceed to the shipment of a good free from defects in material and workmanship. If, within a reasonable time, the Company fails to fulfil its warranty obligations, the Customer may by written notice exhort the Company and set a time limit (grace period) for completion of the warranty. If, within such final time period, the Company fails to fulfil its obligations, the Customer may proceed with a replacement of the "objectionable good" by a third party. Reimbursement by the Company for reasonable costs incurred shall be in full settlement of the Company's liabilities for the said defect and shall in no event exceed the contractual value of the good subject to warranty.

7.7 In the event the Company determines that it is unable to remedy by repair or replacement of any "objectionable good", the Company's sole and exclusive remedy shall then be refund of the purchase price, or so much of the purchase price as has been paid by the Customer.

7.8 When a defect in a part of the delivered product has been remedied, the Company shall be liable for defects in the repaired or replaced part under the same terms and conditions as those applicable to the original product for a period of 12 months. For the remaining parts of the product the period set forth under clause 7.3 shall be extended only by a period equal to the period during which the product has been out of operation as a result of the defect.

7.9 The Customer shall at his own expense arrange for any dismantling and reassembly of equipment to the extent that this is necessary to remedy the defect. No dismantling or reassembly of the defective part is performed by the Company. The Company has fulfilled his obligations in respect of the defect when it delivers to the Customer a duly repaired or replaced part. Necessary transport of the product and or parts thereof from the Company to the Customer in connection with the remedying of defects for which the Company is liable shall be at expense of the Company.

7.10 Defective parts which have been replaced shall be property of the Company.

7.11 Specific qualities of the goods or fitness for particular purposes shall be deemed to have been warranted only if expressly stated in writing.

7.12 In addition to what explicitly stated under clause 7.1-7.11, no warranty shall apply:

7.12.1 To defects arising out of material provided, or out of a design furnished, by the Customer;

7.12.2 To defects due to causes arising after the risk has passed under clause 6.2 (or differing agreement);

7.12.3 To defective parts delivered by third parties, however the Company shall be obliged to assign to the Customer its corresponding claims against third parties;

7.12.4 To faults or damage by abnormal use or arising in consequence of faulty maintenance, fault repair by the Customer, alterations carried out without the Company's written consent, negligence or improper handling or storage of the goods by the Customer or his agents;

7.12.5 To consequences for any inexpert alterations or repairs carried out by unauthorised persons;

7.12.6 For the sale of used goods;

7.12.7 To goods not in the plant of the original Customer;

7.12.8 If and as long as the Customer fails to comply with his obligations under the contract, unless his failure to comply is negligible or the Customer is legally entitled to refuse performance.

7.13 The remedies under clause 7 shall be Customer's exclusive remedies for breach of this warranty or other claims for defects in goods. The Company makes no warranties, either express or implied (including, without limitation, warranties of merchantability or fitness for a particular purpose), other than those above set forth. The full purpose of this exclusive remedy shall be to provide the Customer with repair and replacement of defective goods in the manner provided for. This exclusive remedy shall not be deemed to have failed of its essential purpose so long as the Company is willing and able to repair and replace defective goods in the described manner.

8 Consequential damages and losses

8.1 Company's responsibility for any claims, damages, losses or liabilities arising out of or related to its performance of this contract or the goods covered hereunder, including but not limited to, any repair or replacement of goods under the warranty shall not exceed the sales price of the particular individual product which is the source of buyer's claim.

8.2 In no event shall the Company be liable for any special, indirect, consequential, or punitive damages of any character, including but not limited to, loss of use of productive facilities or equipment, loss of profits, loss of production, loss of use, loss of contracts or for any other consequential or indirect loss whatsoever, whether suffered by buyer or any third party, irrespective of whether such claims or actions for damages are based upon contract, warranty, negligence, strict liability or otherwise.

8.3 Article 1 of the Swiss Product Liability Law ("Legge federale sulla responsabilità per danno da prodotti" [LRDP]; "Produktehaftpflichtgesetz" [PrHG]), outlaws the exclusion of liability for damages to a person or damages resulting out of the private use or consumption of the good. Swiss Product Liability Law shall not apply to goods leaving the territory of the Swiss Confederation in case where a foreign "strict liability" ("responsabilità causale", "Kausalhaftung") of the same nature is less stringent.

9 "Force majeure"

9.1 Either party shall be entitled to suspend performance of his obligations to the extent that such performance is impeded or made unreasonably onerous by any of the following circumstances: industrial disputes and any other circumstance beyond the control of the parties such as fire, war, extensive military mobilization, insurrection, requisition, seizure, embargo, restrictions in the use of power and defects or delays in deliveries by sub-contractors caused by any such circumstances.

9.2 A circumstance referred to in this clause, whether occurring prior to, or after the formation of the contract, shall give a right to suspension or delivery extension only if its effect on the performance of the contract could not be foreseen at the time of the formation of the contract.

9.3 The party claiming to be affected by "force majeure" shall notify the other party in writing without delay on the intervention and on the cessation of such circumstance.

9.4 If either party suffers unreasonable or inequitable harm by a delay due to "force majeure", the respective party shall have the right to rescind the contract after giving notice in writing.

10 Retention of Proprietary Rights

10.1 The goods delivered, including technical documents, shall remain property of the Company until the Company's claims against the Customer have been satisfied in full.

10.2 The Customer must notify the Company without delay of any attachment or other violation of the ownership of the Company by third parties.

10.3 If and to the extent the Company has claims against the Customer arising from transactions or dealings of any nature with the same Customer other than those referred to at the above clause 10.1, all goods supplied to the Customer shall remain property of the Company until all Company's claims against the Customer from all such transactions or dealings have been satisfied in full. If the value of the security provided exceeds the claims to be secured by more than twenty percentage points the Company shall be obliged to release the security of its choice at the Customer's request.

10.4 If the Customer fails to make any payment when due, he shall be obliged to return the goods that are subject to the Company's ownership rights after notice has been given by the Company, without affecting other rights. The Customer shall, in such event, be obliged to ship back theses goods to the Company at his own risk and expense. The Customer shall be obligated to insure the goods delivered at his own expenses as long as they remain property of the Company.

10.5 If the goods with respect to which title has been retained become part of a new item by way of connection or is built-in and if such item is owned by the Customer, it is hereby agreed that the Customer transfers co-ownership to the new item to the Company and acts as bailee without compensation for such item. The Company's co-ownership share shall be determined by the relationship of the value of the goods with respect to which title was retained to the value of the new item. The Customer hereby assigns to the Company all claims against Company's Customers resulting from the sale of the goods with respect to which title was retained. If the goods with respect to which title was retained are sold together with other goods that are not owned by the Company, then the Customer assigns to the Company such part of the claim resulting from the sale that is equal to the invoiced amount for the goods with respect to which title was retained. If an item with respect to which title was retained is only partially owned by us and is sold, the part of the claim resulting from the sale that is assigned to the Company will be equal to the company's percentage of ownership in the goods with respect to which title was retained. The Company grants authority to the Customer to collect any claims resulting from the further sale of the retained goods. If requested, all Customer must deliver to the Company all information and documents required to enforce the Company's rights.

10.6 If the law of the country where the goods are situated after delivery does not permit to the Company to retain the property of the goods, the Company shall be entitled to rights as closely related to the Company's rights stated above, as the law permits. The Customer shall give to the Company every assistance in taking any measure required to protect Company's rights of property or such other rights as aforesaid.

10.7 The retention of title under clause 10.1-10.6 shall not affect the passing of risk under clause 6.2 (INCOTERMS).

11 Intellectual Property Rights

11.1 The Company shall not be liable if the manufacturing of the goods supplied is based on specifications or drawings provided by the Customer or if the application of the goods infringes third party rights.

11.2 The Customer agrees to indemnify and hold the Company harmless for any loss, cost, liability or expense resulting from infringement, or claimed infringement, of Intellectual Property Rights in connection with goods manufactured by the Company in accordance with Customer's specifications..

12 Regulation (EC) No. 1334/2000

12.1 Regulation (EC) No. 1334/2000 sets up a Community regime for the control of exports of dual-use items and technology. "Dual-use" items are goods, including software and technology, which can be used for both civil and military purposes.

12.2 According to the regulation CE 1334/2000, the Company declares that all the products it handles as per business scope are generic mechanical components and therefore intended for civil purposes only."

12.3 The Customer agrees to indemnify and hold the Company harmless for any loss, cost, liability or expense resulting from infringement, or claimed infringement, of Regulation (EC) No. 1334/2000.

13 Confidentiality

13.1 The Customer shall keep strictest secrecy about and may not disclose the contents of technical documents or any know-how to any third party. The Customer may not use such technical data or know-how for any purpose other than those envisaged by the contract.

13.2 This confidentiality obligation shall remain in force also after the expiration of the sale contract.

14 Severability

14.1 Even if an individual provision herein is or becomes invalid the remaining provisions of the contract or of the General Conditions shall remain valid. This also applies to issues the parties intended but failed to address.

15 Drawings and other documents

15.1 The Company reserves all property rights and copyrights for cost estimates, drawings and other documents provided to the Customer. Those documents may not be utilised for purposes other than those specified by the Company or otherwise disclosed to third parties.

16 Applicable Law and Jurisdiction

16.1 The validity, construction and interpretation of all documents relating to this sale, and the rights and duties of the parties thereto shall be governed by the laws of the Swiss Confederation, excluding the provisions of the United Nations Convention on Contracts for the International Sale of Goods dated 11 April 1980 (CISG).

16.2 For all disputes arising out of or in connection with the contractual relationship between the Company and its contractual counterpart (the Customer), where the amount in controversy, excluding court fees and legal expenses, is below CHF 200'000.—, the competent jurisdiction shall be Lugano (Switzerland).

16.3 Where the amount in controversy, excluding court fees and legal expenses, is beyond CHF 200'000.—, all disputes arising out of or in connection with the contractual relationship between the Company and its contractual counterpart (the Customer), shall be finally settled in arbitration under the Rules of Arbitration of the International Chamber of Commerce (ICC), by three arbitrators appointed in accordance with the said Rules. The place of arbitration shall be Zurich (Switzerland). The language of the arbitration shall be English. Any Party shall have the right to have recourse to and shall be bound by the pre-arbitral referee procedure of the International Chamber of Commerce (ICC) in accordance with its Rules for a Pre-Arbitral Referee Procedure. Neither party shall be prevented from having recourse to a court of competent jurisdiction for the purpose of seeking urgent conservatory or interim measures, being specified that the arbitral tribunal shall also have the power to order such measures.

16.4 Any dispute arising out of or in connection with the interpretation of clause 16.2 and/or clause 16.3 shall be finally settled in arbitration under the Rules of Arbitration of the International Chamber of Commerce (ICC), by three arbitrators appointed in accordance with the said Rules. The place of arbitration shall be Zurich (Switzerland). The arbitral tribunal shall resolve about its competency, according to the amount in controversy. Specifics under clause 16.3 shall apply.

# RKB Europe SA
# Limited Warranty
# Edition December 2007

---

Limited Warranty and Limitation of Liability: RKB Europe SA, for itself and its related companies and subsidiaries (hereinafter described collectively as "RKB"), warrants that all RKB products sold will be free of defects in materials and workmanship for a period of twelve (12) months from date of delivery. The foregoing twelve (12) month warranty shall not be extended or changed by RKB furnishing any replacements, additions, attachments, accessories or repairs to the product subsequent to the date of delivery or acceptance. The foregoing warranty is the sole and exclusive warranty of RKB regarding the product.

Disclaimer of other warranties: other than the foregoing warranty, there are no express or implied warranties or any affirmations of fact or promises by RKB with respect to the product. RKB disclaims any warranties, express, implied or statutory, not specifically set forth above. Without limiting the generality of the foregoing, RKB expressly disclaims any implied warranties of merchantability, fitness for any particular purpose, infringement or any representations of fact or quality not expressly set forth herein.

Limitation of liability and remedies: RKB's sole responsibility and liability incurred as a result of the sale and/or use of the product, and the purchaser's exclusive remedy against RKB under any warranty shall be limited to the repair or replacement, at RKB's option, of product components not conforming to the warranty. The total liability of RKB shall in no event exceed the amount actually paid to RKB by purchaser with respect to the product. This limitation of remedy is intended by the parties to survive even if the remedy is claimed to have failed of its essential purpose. Purchaser's full and complete performance of all obligations of purchaser recited in this agreement is a condition precedent to RKB's warranty obligations and liabilities herein.

Purchaser's damages and limitations: in no event shall RKB be liable to purchaser, its assigns or agents, for economic loss, incidental or consequential damages, in contract or in tort, including but not limited to, any damages for lost profits, down-time, lost production, failure to meet purchaser's sales contracts, or defects in purchaser's materials or workmanship arising directly or indirectly from the use of the product.

RKB
BEARING INDUSTRIES

Via Primo Agosto · 6828 Balerna · Switzerland
P.O. BOX 169 · 6830 Chiasso 3 · Switzerland
Phone + 41 91 260 09 30 · Fax + 41 91 260 09 50
info@rkbeurope.com · www.rkbbearings.com
VAT No. 682 866

*The Alternative Power*

Printed in Switzerland on environmentally friendly paper

Engineered in Switzerland
Technological Bearings

The Swiss Mark · Certified Value

RUNI-BC-YLX-A