YITONG®

ISO9001:2000

YITONG INDUSTRY (NINGBO) CO., LTD.

www.yi-tong.com

Wire Guides and Straightening Rollers – type A or AT

Field of Application: The straightening of cables, strips and wires is performed in steps with successive stages until the final product is obtained. To rationalize the handling between the different steps the material is stocked on reels or on bobbins and takes forms which are not natural.

For every production step, it is therefore necessary to carry out the inverse process by taking the material off its support. At that moment, the straightening operation takes place. It may be divided into three steps:

- The straightening, consisting of putting the material back into its original shape. The operation is carried out by the first straightening rollers.
- The removal of the residual constraint in the material, due to the winding on the bobbin. This operation is performed by the rollers located in the central part of the straightener.
- The forming of the wire carried out by the last rollers on the straightener, generally placed at an angle of 90° compared to the angle of the first rollers.

Often it is necessary to combine these three steps. That is the reason why the straightener uses 5, 7, 9, 11 or even 13 rollers placed in two planes.

The manufacturing precision of the roller has a major influence on the quality of the final product (wires) as well as on the service life of the rollers. It is therefore essential that the rectified **"V"** notch on the outer ring has the same geometric characteristics and precision as the rest of the bearing. For this reason, the notch on a **YITONG** roller is precise machined prior to bearing assembly.

Grinding this notch on an assembled standard bearing is risky, as the bearing may be damaged. An acceptable uniformity and geometrical precision can thus not be guaranteed. The service life of the roller is much shorter and the quality of wire drawing suffers accordingly.

Among numerous applications using thread guides and straightening rollers, **YITONG** has managed to make a name for itself in the field of specialized wire drawing companies, producing steel cables for the tire industry.

The following machines use the same type of special rollers:

- Machine tools for fiberglass cables (lawn mowers)
- Machines for spring manufacturing
- Machines for metal wires
- Machines for spooling, un-spooling and rewinding
- Fine and high precision wire drawing

YITONG is equipped with all the necessary tooling for the production of such bearings.

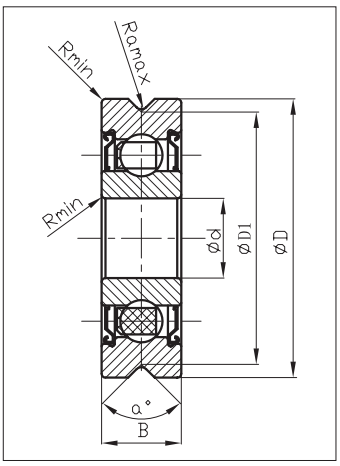

Roller No.	Weight	Dimensions (mm)							Load Ratings	
YITONG®	≈(g)	d	D	D1	B	Ra	a	R	Cw	Cow
						max		min	(KN)	(KN)
A507.2Z	11	5	21	19	6	0.5	90	0.3	2.2	0.89
A507.2RS	11	5	21	19	6	0.5	90	0.3	2.2	0.89
A603.2Z	11	6	21	19	6	0.5	90	0.3	2.2	0.89
A603.2RS	11	6	21	19	6	0.5	90	0.3	2.2	0.89
A806.2Z	19	8	26	23	7	0.5	90	0.3	3.3	1.37
A806.2RS	19	8	26	23	7	0.5	90	0.3	3.3	1.37
A1001.2Z	31	10	30	27	8	0.5	90	0.3	4.55	1.97
A1001.2RS	31	10	30	27	8	0.5	90	0.3	4.55	1.97
A1002.2Z	46	10	35	31	9	0.5	90	0.6	6	2.68
A1002.2RS	46	10	35	31	9	0.5	90	0.6	6	2.68
A1500.2Z	104	15	47	41	11	0.5	90	0.6	7.6	3.7
A1500.2RS	104	15	47	41	11	0.5	90	0.6	7.6	3.7
AT8E00*	34	8	25	20.4	14	0.7	70	2	5.09	2.6

*** Two rows of balls**

Track rollers for Vee bars/Plain rollers type FR/LR

The backlash setting and the pre-tensioning of the rollers takes place via the eccentric hub of the rollers of the series FR.., FR..R or LR.., LR..R.
The FR..Z and LR..Z series are the concentric models. In the eccentric rollers, the inner bolts are provided with two holes. These allow for the adjustment of the backlash. If a roller is located in its zero position, the teeth backlash will be the standard value of 0.05 mm flank clearance.
The service life of the system will be reduced by excessive tensioning. With too little tension the rollers will not run, or will wear due to the poor meshing.

Friction

The roller guides have a very low coefficient of friction. This value is slightly increased by the fitting of wipers to the rails.

Corrosion resistance

Elements of the series with the suffix ..R are available in stainless steel.

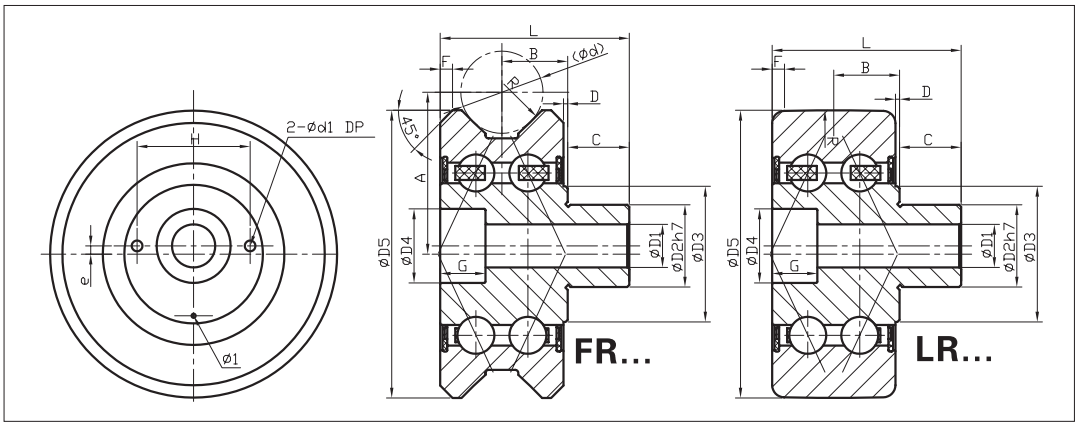

YITONG®	Roller No.	Dimensions (mm)																		Load Ratings	
		A	B	C	D	e	F	G	H	L	D1	D2	D3	D4	D5	d	d1	DP	R	Cw (KN)	Cow (KN)
ROLLER FOR VEE BARS	FR10	22.62	10.5	10	1	1	2	6.8	15.4	30	6.4	15	20.8	11	42	9	2.6	3	200	4.9	5.3
	FR10Z	22.62	10.5	10	1	0	2	6.8	15.4	30	6.4	15	20.8	11	42	9	2.6	3	200	4.9	5.3
	FR15	29.65	12	12	1	1	2	9	18.5	35	8.4	15	23.8	14	53	14	2.6	3	250	7.2	6.8
	FR15Z	29.65	12	12	1	0	2	9	18.5	35	8.4	15	23.8	14	53	14	2.6	3	250	7.2	6.8
	FR20	36.2	16	15	1	1	3	11	22.5	46	10.5	20	22.7	18	63	20	2.6	3	300	10.2	9.5
	FR20Z	36.2	16	15	1	0	3	11	22.5	46	10.5	20	22.7	18	63	20	2.6	3	300	10.2	9.5
	FR22	39.4	16	15	1	2	3	11	27.5	46	10.5	20	33	18	70	20	2.6	3	300	24.6	16.2
	FR22Z	39.4	16	15	1	2	3	11	27.5	46	10.5	20	33	18	70	20	2.6	3	300	24.6	16.2
	FR25	43.42	20.5	20	1	1	3.5	13	27.5	60	13	25	35.6	20	77	24	4.1	4.5	360	16.3	15
	FR25Z	43.42	20.5	20	1	0	3.5	13	27.5	60	13	25	35.6	20	77	24	4.1	4.5	360	16.3	15
	FR35	61.25	30	25	1	1	7.5	17.5	42	84	17	40	56.9	30	107	35	4.1	4.5	500	28.4	32
	FR35Z	61.25	30	25	1	0	7.5	17.5	42	84	17	40	56.9	30	107	35	4.1	4.5	500	28.4	32
PLAIN ROLLER	LR10		10.5	10	1	1	2	6.8	15.4	30	6.4	15	20.8	11	47		2.6	3	500	4.9	5.3
	LR10Z		10.5	10	1	0	2	6.8	15.4	30	6.4	15	20.8	11	47		2.6	3	500	4.9	5.3
	LR15		12	12	1	1	2	9	18.5	35	8.4	15	23.8	14	47		2.6	3	500	7.2	6.8
	LR15Z		12	12	1	0	2	9	18.5	35	8.4	15	23.8	14	47		2.6	3	500	7.2	6.8
	LR20		16	15	1	1	3	11	22.5	46	10.5	20	22.7	18	72		2.6	3	500	10.2	9.5
	LR20Z		16	15	1	0	3	11	22.5	46	10.5	20	22.7	18	72		2.6	3	500	10.2	9.5
	LR25		20.5	20	1	1	3.5	13	27.5	60	13	25	35.6	20	85		4.1	4.5	500	.16.3	15
	LR25Z		20.5	20	1	0	3.5	13	27.5	60	13	25	35.6	20	85		4.1	4.5	500	16.3	15
	LR35		30	25	1	1	7.5	17.5	42	84	17	40	56.9	30	100		4.1	4.5	500	28.4	32
	LR35Z		30	25	1	0	7.5	17.5	42	84	17	40	56.9	30	100		4.1	4.5	500	28.4	32

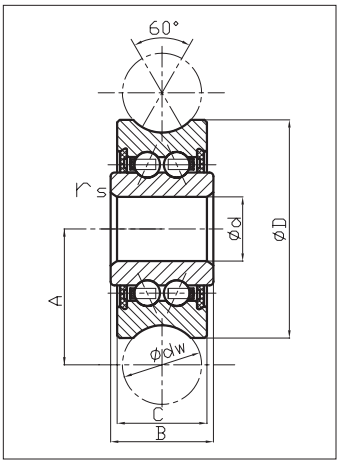

Track Roller No.	Weight	Dimensions (mm)							Load Ratings		
									Cw	Cow	Fr perm
YITONG®	≈(g)	dw	d	D	C	B	A	rs	(KN)	(KN)	(KN)
LFR 50/4 NPP	3.5	5	4	13	6	7	8.04	0.2	1.05	0.85	1.15
LFR 50/5-4 KDD	7.5	4	5	16	7	8	9	0.2	1.2	0.86	1.3
LFR 50/5-4 NPP	7.5	4	5	16	7	8	9	0.2	1.2	0.86	1.3
LFR 50/5 KDD	8	6	5	17	7	8	10.5	0.2	1.27	0.82	1.3
LFR 50/5 NPP	8	6	5	17	7	8	10.5	0.2	1.27	0.82	1.3
LFR 50/8 KDD	24	6	8	24	11	11	14	0.3	3.67	2.28	1.3
LFR 50/8 NPP	24	6	8	24	11	11	14	0.3	3.67	2.28	1.3
LFR 50/8-8 KDD	24	8	8	24	11	11	14.75	0.3	3.67	2.28	1.3
LFR 50/8-8 NPP	24	8	8	24	11	11	14.75	0.3	3.67	2.28	1.3
LFR 30/8 KDD	31	10	8	26.8	11	13	16.7	0.3	3.67	2.28	1.3
LFR 30/8 NPP	31	10	8	26.8	11	13	16.7	0.3	3.67	2.28	1.3
LFR 5201 KDD	68	10	12	35	15.9	15.9	20.65	0.3	8.5	5.1	5.1
LFR 5201 NPP	68	10	12	35	15.9	15.9	20.65	0.3	8.5	5.1	5.1
LFR 5301 KDD	130	10	12	42	19	19	24	0.6	13	7.7	7.5
LFR 5301 NPP	130	10	12	42	19	19	24	0.6	13	7.7	7.5
LFR 5301-20 KDD	125	20	12	42	19	19	28	0.6	13	7.7	7.5
LFR 5301-20 NPP	125	20	12	42	19	19	28	0.6	13	7.7	7.5
LFR 5201-12 KDD	68	12	12	35	15.9	15.9	21.75	0.3	8.4	5	5.1
LFR 5201-12 NPP	68	12	12	35	15.9	15.9	21.75	0.3	8.4	5	5.1

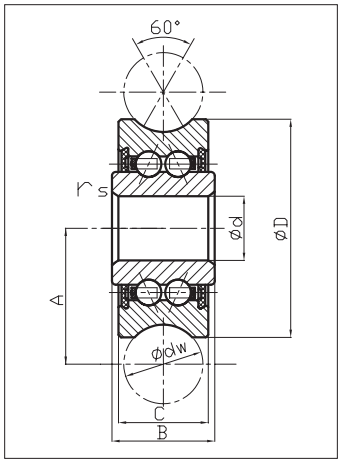

Track Roller No.	Weight	Dimensions (mm)							Load Ratings		
									Cw	Cow	Fr perm
YITONG	≈(g)	dw	d	D	C	B	A	rs	(KN)	(KN)	(KN)
LFR 5201-14 KDD	107	14	12	39.9	18	20	24	0.3	8.9	5	6.7
LFR 5201-14 NPP	107	14	12	39.9	18	20	24	0.3	8.9	5	6.7
LFR 5201-10.40 KDD	115	10	12	39.9	18	20	22	0.3	8.9	5	6.7
LFR 5201-10.40 NPP	115	10	12	39.9	18	20	22	0.3	8.9	5	6.7
LFR 5302 KDD	163	10	15	47	19	19	26.65	1	16.2	9.2	6.2
LFR 5302 NPP	163	10	15	47	19	19	26.65	1	16.2	9.2	6.2
LFR 5204-16 KDD*	195	16	20	52	20.6	22.6	31.5	0.6	16.8	9.5	12.1
LFR 5204-16 NPP*	195	16	20	52	20.6	22.6	31.5	0.6	16.8	9.5	12.1
LFR 5206-20 KDD*	435	20	25	72	23.8	25.8	41	0.6	29.5	16.6	20.7
LFR 5206-20 NPP*	435	20	25	72	23.8	25.8	41	0.6	29.5	16.6	20.7
LFR 5206-25 KDD*	425	25	25	72	23.8	25.8	43.5	0.6	29.2	16.4	23.1
LFR 5206-25 NPP*	425	25	25	72	23.8	25.8	43.5	0.6	29.2	16.4	23.1
LFR 5207-30 KDD*	660	30	30	80	27	29	51	1	38	20.8	21.4
LFR 5207-30 NPP*	660	30	30	80	27	29	51	1	38	20.8	21.4
LFR 5208-40 KDD*	1360	40	40	98	36	38	62.5	1	54.8	29	55
LFR 5208-40 NPP*	1360	40	40	98	36	38	62.5	1	54.8	29	55
LFR 5308-50 KDD*	1400	50	40	110	44	46	72.5	1.1	53	39.5	69
LFR 5308-50 NPP*	1400	50	40	110	44	46	72.5	1.1	53	39.5	69

***Can be relubricated through a hole in the inner ring.**

Track rollers with Gothic arch groove – type SG

The function of series SG rollers is same as the series LFR rollers. But they are mainly used in the flat track and in the condition required compact structure. After rollers are installed to the slider, the shaft will be not or seldom over the roller's side planes.

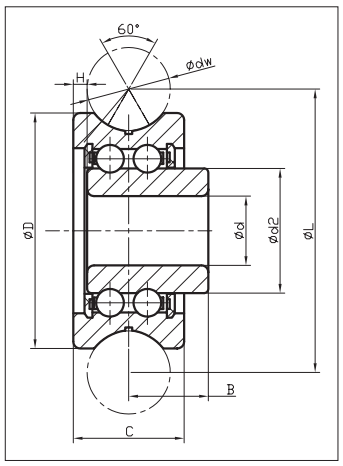

Track Roller No.	Weight	Dimensions (mm)								Load Ratings		
										Cw	Cow	Fr perm
YITONG®	≈(g)	dw	d	D	C	B	L	d2	H	(KN)	(KN)	(KN)
SG15	8	6	5	17	8	5.75	20.46	8.6	1	1.27	0.82	1.3
SG15-10	9	10	5	17	8	5.75	25.5	8.6	1	1.27	0.82	1.3
SG20	25	8	6	24	11	7.25	28.62	11.1	1.2	3.4	1.7	1.3
SG25	49	10	8	30	14	8.5	35.77	13	1.5	3.67	2.28	1.3
SG35	136	12	12	42	19	12.5	48.93	18	1.5	8.5	5.1	5.1
SG15N	8	6	5	17	8	5.75	20.46	8.6	0.5	1.27	0.82	1.3
SG20N	25	8	6	24	11	7.25	28.62	11.1	0.7	3.4	1.7	1.3
SG25N	49	10	8	30	14	8.5	35.77	13	1	3.67	2.28	1.3
SG35N	136	12	12	42	19	12.5	48.93	18	1	8.5	5.1	5.1
LFR 50/5-4 N	8	4	5	16	7	5	18	6.9	0	2.02	0.93	1.3
LFR 50/5-5	8	5	5	17	7	5	20	6.9	0	2.02	0.93	1.3
LFR 50/5 N	8	6	5	17	7	5	21	6.9	0	2.02	0.93	1.3
LFR 50/8 N	25	6	8	24	11	7	28	12.3	0	3.67	2.28	1.3
LFR 50/8-8 N	25	8	8	24	11	7	29	12.3	0	3.67	2.28	1.3

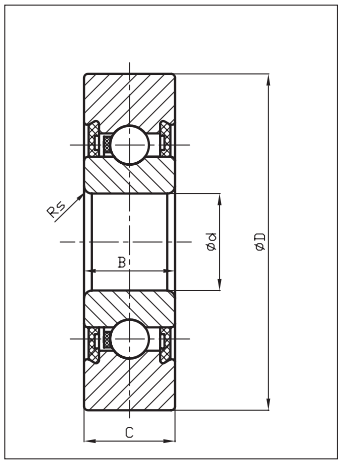

LR2...KDD/LR6...KDD
LR2...NPP/LR6...NPP

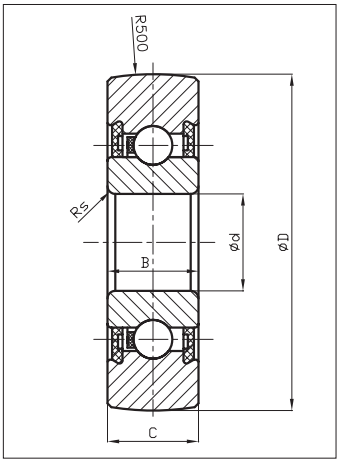

LR2...KDDU/LR6...KDDU
LR2...NPPU/LR6...NPPU

Track Roller No.	YITONG®				Dimensions(mm)					Basic Load Ratings		Fatigue Limit Load	Speed		Weight
Designation	Seals		Shields		D	d	B	C	Rs	Cw(N)	Cow(N)	Puw(N)	nD seals	nD shields	≈(g)
LR604	NPP	NPPU	KDD	KDDU	13	4	4	4	0.2	860	350	7	24000	35000	10
LR605	NPP	NPPU	KDD	KDDU	16	5	5	5	0.2	1190	490	10	23000	33000	10
LR606	NPP	NPPU	KDD	KDDU	19	6	6	6	0.3	1740	700	40	22000	31000	10
LR607	NPP	NPPU	KDD	KDDU	22	7	6	6	0.3	2130	870	46	20000	29000	10
LR608	NPP	NPPU	KDD	KDDU	24	8	7	7	0.3	2750	1250	58	19000	28000	20
LR6000	NPP	NPPU	KDD	KDDU	28	10	8	8	0.3	3650	1700	52	17000	24000	20
LR6001	NPP	NPPU	KDD	KDDU	30	12	8	8	0.3	4300	2100	77	16000	22000	30
LR200	NPP	NPPU	KDD	KDDU	32	10	9	9	0.6	4350	2130	88	13000	17000	50
LR201	NPP	NPPU	KDD	KDDU	35	12	10	10	0.6	5600	2700	112	12000	15000	50
LR201-15	NPP	NPPU	KDD	KDDU	35	12	15	10	0.6	5600	2700	112	12000	15000	70
LR202	NPP	NPPU	KDD	KDDU	40	15	11	11	0.6	6500	3300	136	11000	13000	70
LR202-14	NPP	NPPU	KDD	KDDU	40	15	14.4	11	0.6	6500	3300	136	11000	13000	80

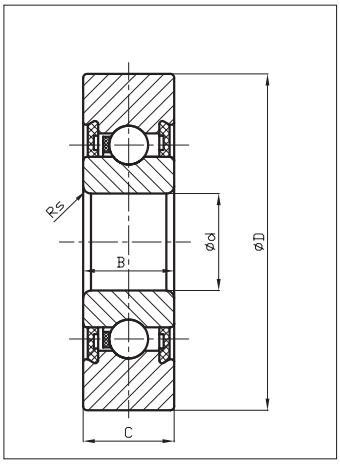

LR2...KDD/LR2...NPP

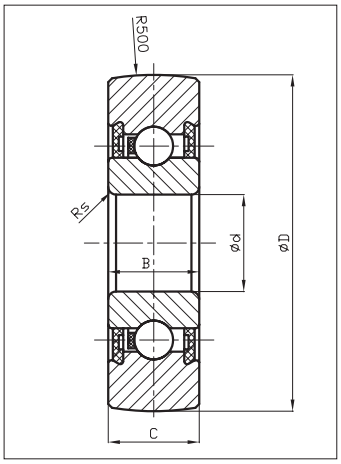

LR2...KDDU/LR2...NPPU

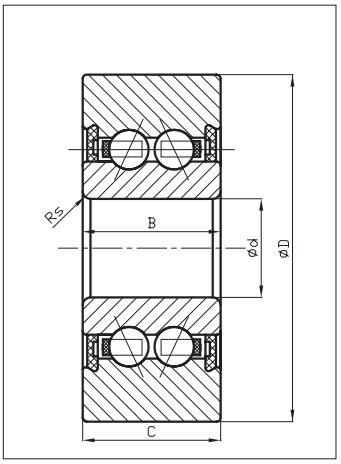

LR50...KDD/LR50...NPP

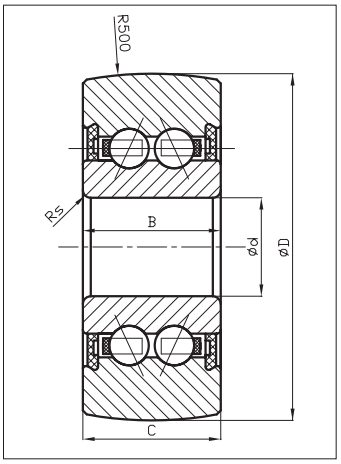

LR50...KDDU/LR50...NPPU

Track Roller No.	YITONG				Dimensions(mm)					Basic Load Ratings		Fatigue Limit Load	Speed		Weight
Designation	Seals		Shields		D	d	B	C	Rs	Cw(N)	C0w(N)	Puw(N)	nD seals	nD shields	≈(g)
LR203	NPP	NPPU	KDD	KDDU	47	17	12	12	0.6	8400	4400	183	9000	12000	110
LR204	NPP	NPPU	KDD	KDDU	52	20	14	14	1	10500	5600	233	8000	10000	150
LR205	NPP	NPPU	KDD	KDDU	62	25	15	15	1	12500	7100	291	7000	8500	230
LR206	NPP	NPPU	KDD	KDDU	72	30	16	16	1	16600	9600	391	5500	7500	330
LR207	NPP	NPPU	KDD	KDDU	80	35	17	17	1.1	20200	11900	490	4500	6300	400
LR208	NPP	NPPU	KDD	KDDU	85	40	18	18	1.1	22800	13600	530	4000	5000	450
LR209	NPP	NPPU	KDD	KDDU	90	45	19	19	1.1	22500	13700	564	3600	4500	500
LR50/5	NPP	NPPU	KDD	KDDU	17	5	7	7	0.2	1650	950	39	12000	16000	10
LR50/6	NPP	NPPU	KDD	KDDU	19	6	9	9	0.3	2650	1310	54	11000	15000	20
LR50/7	NPP	NPPU	KDD	KDDU	22	7	10	10	0.3	3300	1690	69	10000	14000	20
LR50/8	NPP	NPPU	KDD	KDDU	24	8	11	11	0.3	4200	2360	120	10000	14000	30
LR5000	NPP	NPPU	KDD	KDDU	28	10	12	12	0.3	4750	2850	118	9000	13000	30
LR5001	NPP	NPPU	KDD	KDDU	30	12	12	12	0.3	4950	3100	128	8500	11000	30
LR5002	NPP	NPPU	KDD	KDDU	35	15	13	13	0.3	6500	4100	170	7000	10000	50
LR5003	NPP	NPPU	KDD	KDDU	40	17	14	14	0.3	7700	5200	214	6000	9000	70
LR5004	NPP	NPPU	KDD	KDDU	47	20	16	16	0.6	11500	7700	317	5500	8000	120
LR5005	NPP	NPPU	KDD	KDDU	52	25	16	16	0.6	11600	8100	332	4700	7000	150
LR5006	NPP	NPPU	KDD	KDDU	62	30	19	19	1	15800	11800	492	4000	6000	250
LR5007	NPP	NPPU	KDD	KDDU	68	35	20	20	1	17600	13100	490	4000	5300	300

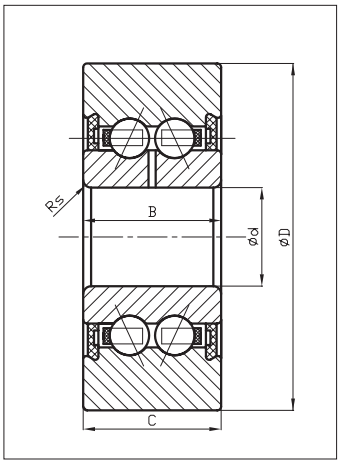

LR52...KDD/LR53...KDD
LR52...NPP/LR53...NPP

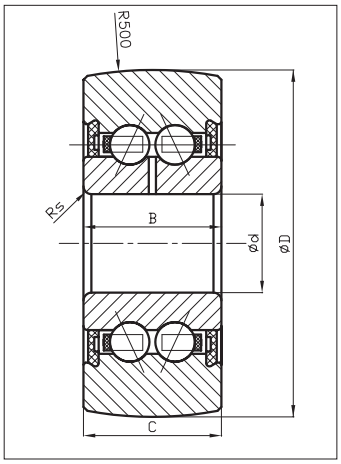

LR52...KDDU/LR53...KDDU
LR52...NPPU/LR53...NPPU

Track Roller No.	YITONG®				Dimensions(mm)					Basic Load Ratings		Fatigue Limit Load	Speed		Weight
Designation	Seals		Shields		D	d	B	C	Rs	Cw(N)	Cow(N)	Puw(N)	nD seals	nD shields	≈(g)
LR5200	NPP	NPPU	KDD	KDDU	32	10	14	14	0.6	6800	4050	168	8000	11000	70
LR5201	NPP	NPPU	KDD	KDDU	35	12	15.9	15.9	0.6	8600	5100	211	7500	10000	80
LR5202	NPP	NPPU	KDD	KDDU	40	15	15.9	15.9	0.6	9800	6200	258	7000	10000	110
LR5203	NPP	NPPU	KDD	KDDU	47	17	17.5	17.5	0.6	12600	8200	342	5500	7500	170
LR5204	NPP	NPPU	KDD	KDDU	52	20	20.6	20.6	1	15800	10500	433	5000	7000	230
LR5205	NPP	NPPU	KDD	KDDU	62	25	20.6	20.6	1	18500	13000	532	4500	6500	340
LR5206	NPP	NPPU	KDD	KDDU	72	30	23.8	23.8	1	24600	21400	880	3500	5000	510
LR5207	NPP	NPPU	KDD	KDDU	80	35	27	27	1.1	30500	22400	927	2800	3900	660
LR5208	NPP	NPPU	KDD	KDDU	85	40	30.2	30.2	1.1	34500	25500	1060	2500	3500	750
LR5302	NPP	NPPU	KDD	KDDU	47	15	19	19	1	14600	9200	380	6500	10000	150
LR5303	NPP	NPPU	KDD	KDDU	52	17	22.2	22.2	1	17200	11100	462	4700	6500	210
LR5304	NPP	NPPU	KDD	KDDU	62	20	22.2	22.2	1.1	21100	14500	606	4500	6500	340
LR5305	NPP	NPPU	KDD	KDDU	72	25	25.4	25.4	1.1	27500	19500	813	3900	5500	500
LR5306	NPP	NPPU	KDD	KDDU	80	30	30.2	30.2	1.1	36500	26500	1100	3100	4300	670
LR5307	NPP	NPPU	KDD	KDDU	90	35	34.9	34.9	1.5	44500	33000	1370	2500	3600	970
LR5308	NPP	NPPU	KDD	KDDU	100	40	36.5	36.5	1.5	56000	42000	1750	2300	3300	1200

*** Series LR52...and LR53...can be re–lubricated through a hole in the inner ring.**

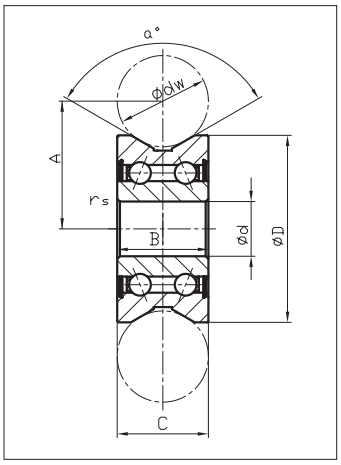

Track Roller No.	Weight	Dimensions (mm)								Load Ratings	
YITONG®	≈(g)	dw	d	D	B	C	A	α	rs	Cw(KN)	Cow(KN)
LV20/7 ZZ	17	10	7	22	11	11	14.5	120	0.3	3.78	2.05
LV20/8 ZZ	49	10	8	30	14	14	18.1	120	0.3	5.13	2.67
LV202-38 ZZ	87	10	15	38	17	17	22.25	120	0.5	8.47	5.37
LV202-40 ZZ	110	10	15	40	18	18	22	120	0.5	8.47	5.37
LV201 ZZ	130	20	12	41	20	20	28	120	0.3	8.47	5.37
LV202-41 ZZ	116	20	15	41	20	20	28	120	0.5	8.47	5.37
LV203 ZZ	325	20	17	58	25	25	35	120	0.5	14.66	9.1
LV204-57 ZZ	290	30	20	57	22	22	41	120	0.6	14.66	9.1
LV204-58 ZZ	310	30	20	58	25	25	41	120	0.6	14.66	9.1
LV201-14. 2RS	107	14	12	39.9	20.1	18	24	100	0.5	8.9	5

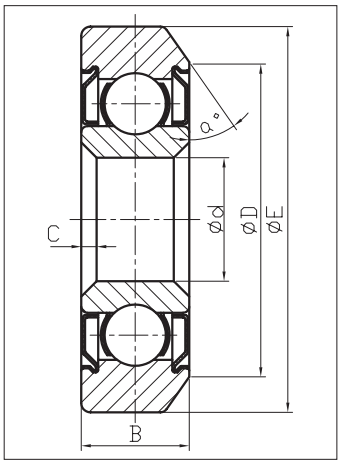

Track Roller No.	Weight	Dimensions (mm)						Load Ratings	
								Cw	Cow
YITONG®	≈(g)	B	D	E	d	C	a	(KN)	(KN)
RE701ZZ	3	4	9.63	12.7	4	0.35	35	0.71	0.27
RE701.2RS									
RE702ZZ	17	7	20.4	25	8	1	35	3.3	1.36
RE702.2RS									
RE703ZZ	40	9	27.17	34	10	1	35	6.04	2.68
RE703.2RS									
RE704ZZ	80	14	42	54	14	1.5	35	9.5	4.8
RE704.2RS									
RE901ZZ	3	4	9.63	12.7	4	0.35	45	0.71	0.27
RE901.2RS									
RE902ZZ	17	7	20.4	25	8	1	45	3.3	1.36
RE902.2RS									
RE903ZZ	40	9	27.17	34	10	1	45	6.04	2.68
RE903.2RS									
RE807.2RS	12	6	18.5	22	7	0.5	40	2.2	0.9

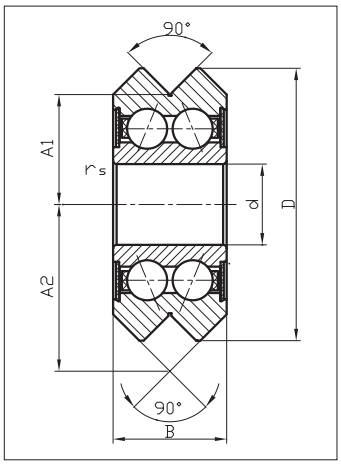

Guide Wheel No.	Weight	Dimensions (mm)						Load Ratings	
YITONG®	≈(g)	d	D	B	A1	A2	rs	Cw(KN)	Cow(KN)
YTGW0	5	4	14.84	6.35	5.94	9.12	0.3	1	0.5
YTGW0X	5	4	14.84	6.35	5.94	9.12	0.3	1	0.5
YTGW1	11	4.763	19.56	7.87	7.93	11.86	0.3	2.2	1
YTGW1X	11	4.763	19.56	7.87	7.93	11.86	0.3	2.2	1
YTGW2	38	9.525	30.73	11.1	12.7	18.24	0.3	4.9	2.5
YTGW2X	38	9.525	30.73	11.1	12.7	18.24	0.3	4.9	2.5
YTGW3	130	12	45.72	15.88	19.05	26.98	0.6	9.4	4.9
YTGW3X	130	12	45.72	15.88	19.05	26.98	0.6	9.4	4.9
YTGW4	280	15	59.94	19.05	25.4	34.93	1	14.8	8.2
YTGW4X	280	15	59.94	19.05	25.4	34.93	1	14.8	8.2
YTGW4XL	580	22	75.39	25.4	31.75	44.45	1.1	20.6	14.3
YTGW4XXL	580	22	75.39	25.4	31.75	44.45	1.1	20.6	14.3
YTGW1SSX*	11	4.763	19.56	7.87	7.93	11.86	0.3	2.2	1
YTGW2SSX*	38	9.525	30.73	11.1	12.7	18.24	0.3	4.9	2.5
YTGW3SSX*	130	12	45.72	15.88	19.05	26.98	0.6	9.4	4.9
YTGW4SSX*	280	15	59.94	19.05	25.4	34.93	1	14.8	8.2

*** Wheels are made of the stainless steel (440C)**

Diabolo–rollers, Track rollers for tubular rail

The Diabolo rollers are special arranged in the meat hook that running on a long tubular rail in the Abattoirs. These rollers feature to accept high carrying loads and to have long service life. The rollers have different hardness in external profile surface and internal structure so that the rails are prevented from wear in operation. These rollers are filled with high-grade grease which can run in the range - 40℃ to + 180℃ with waterproof & anti-washing function.

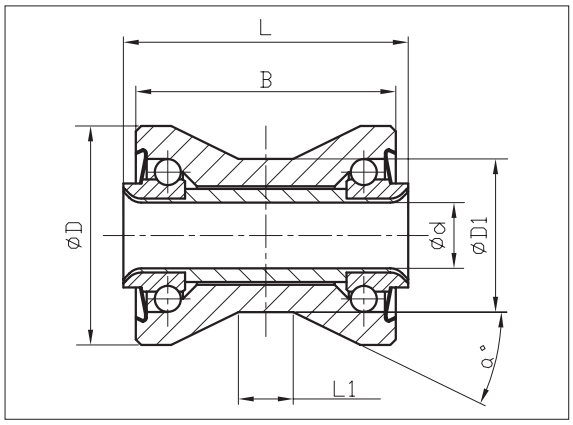

Track Roller No.	Weight ≈(g)	Dimensions (mm)						
YITONG®		d	D	D1	B	L	L1	α
YTA100	130	10	35	24	34	36	10	26
YTA101	230	12	40	28	45	47	10	23.2
YTA102	273	12	40	28	47.5	52	10	26
YTA200	137	10	36	24	34	36	10	26

Axial angular contact ball bearings, for screw mounting.

- are complete units consisting of a single-piece outer ring, a two-piece inner ring, balls, cage assemblies and seals
- are double direction angular contact ball bearings with a 60° contact angle in an O arrangement
- can support axial loads from both directions as well as radial loads
- are preloaded after assembly by a precision locknut
- are protected from contamination by lip seals or gap seals
- are greased with a lithium complex soap base grease to SHELL Alvania RL3
- can be relubricated
- are suitable for operating temperatures from -30℃ to +120℃ (limited by the grease, sealing ring material and the plastic ball cages)
- are precision bearings, e.g. for use with screw drives
- outer ring is suitable for flange mounting
- lip seals or gap seals on both sides

Bearing No.	Dimensions (mm)													Load Ratings			Limiting Speed n_G rpm
YITONG	d	D	B	b	d1	d2	D1	l	J	r_1 min	r min	t	m (1)	Ca(KN)	Coa(KN)	Cua(KN)	
ZKLF 1255.2RS	12	55	25	3	25	6.5	33.5	17	42	0.6	0.3	120	0.37	17	24.7	0.91	3800
ZKLF 1560.2RS	15	60	25	3	28	6.5	36	17	46	0.6	0.3	120	0.43	17.9	28	1.04	3500
ZKLF 1762.2RS	17	62	25	3	30	6.5	38	17	48	0.6	0.3	120	0.45	18.8	31	1.15	3300
ZKLF 2068.2RS	20	68	28	3	34.5	6.5	44	19	53	0.6	0.3	90	0.61	26	47	1.74	3000
ZKLF 2575.2RS	25	75	28	3	40.5	6.5	49	19	58	0.6	0.3	90	0.72	27.5	55	2.04	2600
ZKLF 3080.2RS	30	80	28	3	45.5	6.5	54	19	63	0.6	0.3	60	0.78	29	64	2.37	2200
ZKLF 3590.2RS	35	90	34	3	52	8.5	63	25	75	0.6	0.3	90	1.13	41	89	3.3	2000
ZKLF 40100.2RS	40	100	34	3	58	8.5	68	25	80	0.6	0.3	90	1.46	43	101	3.75	1800
ZKLF 50115.2RS	50	115	34	3	72	8.5	82	25	94	0.6	0.3	60	1.86	46.5	126	4.65	1500

(1) Weight≈(kg)

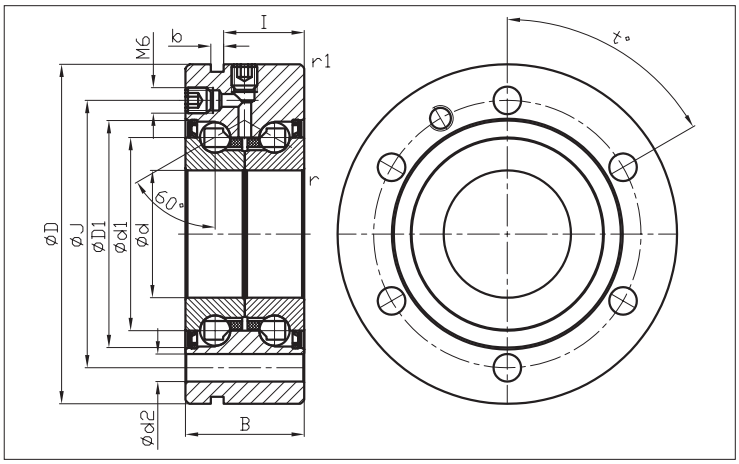

Bearing No.	Dimensions (mm)													Load Ratings			Limiting Speed n_G rpm
YITONG®	d	D	B	b	d1	d2	D1	l	J	r_1 min	r min	t	m (1)	Ca(KN)	Coa(KN)	Cua(KN)	
ZKLF 1255.2Z	12	55	25	3	25	6.5	33.5	17	42	0.6	0.3	120	0.37	17	24.7	0.91	7600
ZKLF 1560.2Z	15	60	25	3	28	6.5	36	17	46	0.6	0.3	120	0.43	17.9	28	1.04	7000
ZKLF 1762.2Z	17	62	25	3	30	6.5	38	17	48	0.6	0.3	120	0.45	18.8	31	1.15	6600
ZKLF 2068.2Z	20	68	28	3	34.5	6.5	44	19	53	0.6	0.3	90	0.61	26	47	1.74	5400
ZKLF 2575.2Z	25	75	28	3	40.5	6.5	49	19	58	0.6	0.3	90	0.72	27.5	55	2.04	4700
ZKLF 3080.2Z	30	80	28	3	45.5	6.5	54	19	63	0.6	0.3	60	0.78	29	64	2.37	4300
ZKLF 3590.2Z	35	90	34	3	52	8.5	63	25	75	0.6	0.3	90	1.13	41	89	3.3	3800
ZKLF 40100.2Z	40	100	34	3	58	8.5	68	25	80	0.6	0.3	90	1.46	43	101	3.75	3300
ZKLF 50115.2Z	50	115	34	3	72	8.5	82	25	94	0.6	0.3	60	1.86	46.5	126	4.65	3000
ZKLF 1255.2RS PE	12	55	25	3	25	6.8	33.5	17	42	0.6	0.3	120	0.37	17	24.7	0.91	3800
ZKLF 1560.2RS PE	15	60	25	3	28	6.8	36	17	46	0.6	0.3	120	0.43	17.9	28	1.04	3500
ZKLF 1762.2RS PE	17	62	25	3	30	6.8	38	17	48	0.6	0.3	120	0.45	18.8	31	1.15	3300
ZKLF 2068.2RS PE	20	68	28	3	34.5	6.8	44	19	53	0.6	0.3	90	0.61	26	47	1.74	3000
ZKLF 2575.2RS PE	25	75	28	3	40.5	6.8	49	19	58	0.6	0.3	90	0.72	27.5	55	2.04	2600
ZKLF 3080.2RS PE	30	80	28	3	45.5	6.8	54	19	63	0.6	0.3	60	0.78	29	64	2.37	2200
ZKLF 3590.2RS PE	35	90	34	3	52	8.8	63	25	75	0.6	0.3	90	1.13	41	89	3.3	2000
ZKLF 40100.2RS PE	40	100	34	3	58	8.8	68	25	80	0.6	0.3	90	1.46	43	101	3.75	1800
ZKLF 50115.2RS PE	50	115	34	3	72	8.8	82	25	94	0.6	0.3	60	1.86	46.5	126	4.65	1500

(1) Weight≈(kg)
(2) Suffix PE: increased tolerances

Axial angular contact ball bearings

- are complete units consisting of a single-piece outer ring, a two-piece inner ring, balls, cage assemblies and seals
- are double direction angular contact ball bearings with a 60° contact angle in an O arrangement
- can support axial loads from both directions as well as radial loads
- are preloaded after assembly by a precision locknut
- are protected from contamination by lip seals or gap seals
- are greased with a lithium complex soap base grease to SHELL Alvania RL3
- can be relubricated
- are suitable for operating temperatures from -30℃ to +120℃ (limited by the grease, sealing ring material and the plastic ball cages)
- are precision bearings, e.g. for use with screw drives
- lip seals or gap seals on both sides

Bearing No.	Dimensions (mm)								Load Ratings			Limiting Speed n_G rpm
YITONG	d	D	B	d1	D1	r_1 min	r min	m(1)	Ca(KN)	Coa(KN)	Cua(KN)	
ZKLN 0619.2Z	6	19	12	12	16.5	0.3	0.3	0.02	4.9	6.1	0.226	14000
ZKLN 0624.2RS	6	24	15	14	19.5	0.6	0.3	0.03	6.9	8.5	0.315	6800
ZKLN 0624.2RS PE	6	24	15	14	19.5	0.6	0.3	0.03	6.9	8.5	0.315	6800
ZKLN 0624.2Z	6	24	15	14	19.5	0.3	0.3	0.03	6.9	8.5	0.315	12000
ZKLN 0832.2RS	8	32	20	19	26.5	0.6	0.3	0.09	12.5	16.3	0.6	5100
ZKLN 0832.2Z	8	32	20	19	26.5	0.6	0.3	0.09	12.5	16.3	0.6	9500
ZKLN 1034.2RS	10	34	20	21	28.5	0.6	0.3	0.1	13.4	18.8	0.7	4600
ZKLN 1034.2RS PE	10	34	20	21	28.5	0.6	0.3	0.1	13.4	18.8	0.7	4600
ZKLN 1034.2Z	10	34	20	21	28.5	0.6	0.3	0.1	13.4	18.8	0.7	8600
ZKLN 1242.2RS	12	42	25	25	33.5	0.6	0.3	0.2	17	24.7	0.91	3800
ZKLN 1242.2RS PE	12	42	25	25	33.5	0.6	0.3	0.2	17	24.7	0.91	3800
ZKLN 1242.2Z	12	42	25	25	33.5	0.6	0.3	0.2	17	24.7	0.91	7600

(1) Weight≈(kg)
(2) Suffix PE: increased tolerances

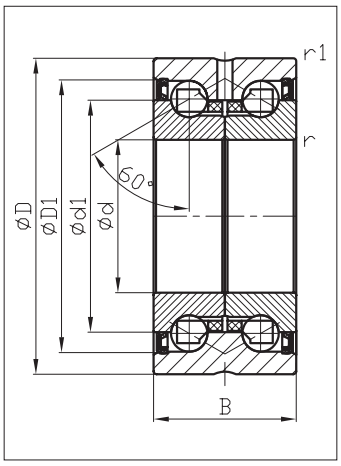

Bearing No.	Dimensions (mm)								Load Ratings			Limiting Speed n_G rpm
YITONG®	d	D	B	d1	D1	r_1 min	r min	m(1)	Ca(KN)	Coa(KN)	Cua(KN)	
ZKLN 1545.2RS	15	45	25	28	36	0.6	0.3	0.21	17.9	28	1.04	3500
ZKLN 1545.2RS PE	15	45	25	28	36	0.6	0.3	0.21	17.9	28	1.04	3500
ZKLN 1545.2Z	15	45	25	28	36	0.6	0.3	0.21	17.9	28	1.04	7000
ZKLN 1747.2RS	17	47	25	30	38	0.6	0.3	0.22	18.8	31	1.15	3300
ZKLN 1747.2RS PE	17	47	25	30	38	0.6	0.3	0.22	18.8	31	1.15	3300
ZKLN 1747.2Z	17	47	25	30	38	0.6	0.3	0.22	18.8	31	1.15	6600
ZKLN 2052.2RS	20	52	28	34.5	44	0.6	0.3	0.31	26	47	1.74	3000
ZKLN 2052.2RS PE	20	52	28	34.5	44	0.6	0.3	0.31	26	47	1.74	3000
ZKLN 2052.2Z	20	52	28	34.5	44	0.6	0.3	0.31	26	47	1.74	5400
ZKLN 2557.2RS	25	57	28	40.5	49	0.6	0.3	0.34	27.5	55	2.04	2600
ZKLN 2557.2RS PE	25	57	28	40.5	49	0.6	0.3	0.34	27.5	55	2.04	2600
ZKLN 2557.2Z	25	57	28	40.5	49	0.6	0.3	0.34	27.5	55	2.04	4700
ZKLN 3062.2RS	30	62	28	45.5	54	0.6	0.3	0.39	29	64	2.37	2200
ZKLN 3062.2RS PE	30	62	28	45.5	54	0.6	0.3	0.39	29	64	2.37	2200
ZKLN 3062.2Z	30	62	28	45.5	54	0.6	0.3	0.39	29	64	2.37	4300
ZKLN 3572.2RS	35	72	34	52	63	0.6	0.3	0.51	41	89	3.3	2000
ZKLN 3572.2Z	35	72	34	52	63	0.6	0.3	0.51	41	89	3.3	3800
ZKLN 4075.2RS	40	75	34	58	68	0.6	0.3	0.61	43	101	3.75	1800
ZKLN 4075.2Z	40	75	34	58	68	0.6	0.3	0.61	43	101	3.75	3300
ZKLN 5090.2RS	50	90	34	72	82	0.6	0.3	0.88	46.5	126	4.65	1500
ZKLN 5090.2RS PE	50	90	34	72	82	0.6	0.3	0.88	46.5	126	4.65	1500
ZKLN 5090.2Z	50	90	34	72	82	0.6	0.3	0.88	46.5	126	4.65	3000

(1) Weight≈(kg)
(2) Suffix PE: increased tolerances