DODGE®

2009

BEARING ENGINEERING CATALOG SUPPLEMENT

ULTRA KLEEN
E-Z KLEEN
EXTREME DUTY
IMPERIAL-HD
S2000-HD

BALDOR®

To receive a copy of the DODGE Bearing Engineering Catalog, DODGE Gearing Engineering Catalog or DODGE Power Transmission Components Engineering Catalog, contact your local authorized DODGE Distributor or www.baldor.com.

MEMBER OF . . .

AMERICAN GEAR MANUFACTURERS ASSOCIATION

MECHANICAL POWER TRANSMISSION ASSOCIATION

AFBMA
ANTI-FRICTION BEARING MANUFACTURERS ASSOCIATION

AMERICAN SUPPLY AND MACHINERY MANUFACTURERS ASSOCIATION, INC

BEARING SPECIALISTS ASSOCIATION

POWER TRANSMISSION DISTRIBUTORS ASSOCIATION

CONVEYOR MANUFACTURERS ASSOCIATION

DODGE Products are Manufactured in ISO 9002 Certified Plants

Made in U.S.A.

Prices and data indicated in this document are for your convenience and were correct at time of printing with the exception of clerical and/or printing errors. Possession of this document by any person or company is not to be construed as an offer to sell to him or to anyone else the goods listed herein at the prices stated.

ALL DATA AND PRICES ARE SUBJECT TO CHANGE WITHOUT NOTICE and shall be subject to those prices in effect at time of shipments. All published and quoted prices are based upon the application of, and all sales are expressly subject to, the Company's Standard Terms and Conditions of Sales are available upon request. This document supersedes all previously published catalog/pricing documents.

WARNING
The information provided for Product Interchange in this catalog is for use only as a general reference by persons qualified to recognize unreasonable selection options. Products suggested as substitutes may have dimensional, rating, pricing and other differences from products to be replaced. This selection method must be used in conjunction with the applicable product catalog which contains important precautions and other pertinent information.

In illustrations throughout this catalog, safety guards have been removed for photographic purposes.

© 2009 Baldor Electric Company

WARNING: Because of the possible danger to person(s) or property from accidents which may result from the improper use of products, it is important that correct procedures be followed: Products must be used in accordance with the engineering information specified in the catalog. Proper installation, maintenance and operation procedures must be observed. The instructions in the instruction manuals must be followed. Inspections should be made as necessary to assure safe operation under prevailing conditions. Proper guards and other suitable safety devices or procedures as may be described or as may be specified in safety codes should be provided, and are neither provided by Baldor Electric nor are the responsibility of Baldor Electric. This unit and its associated equipment must be installed, adjusted and maintained by qualified personnel who are familiar with the construction and operation of all equipment in the system and the potential hazards involved. When risk to persons or property may be involved, a holding device must be an integral part of the driven equipment beyond the speed reducer output shaft.

DODGE®

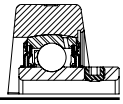

Table of Contents

Ball Bearing

ULTRA KLEEN

Features/Benefits 2
How to Order/Nomenclature. 5
Easy Selection 6
Selection/Dimensions 14
Accessories (End Covers) 29

E-Z KLEEN

Features/Benefits 30
How to Order/Nomenclature. 35
Selection 36
Easy Selection 38
Selection/Dimensions 48
Accessories (End Covers) 90

Extreme Duty

Features/Benefits 91
Easy Selection 92
Selection 94
Selection/Dimensions 96
Accessories (End Covers) 129

Roller Bearing

IMPERIAL-HD

Features/Benefits 131
How to Order/Nomenclature. 134
Specification. 135
Selection 136
Dimensions & Part Numbers. 144

S2000-HD

Features/Benefits 172
Selection 173
Dimensions & Part Numbers. 179
Type E Steel Pillow Block 193
SAFS Steel Pillow Block 202

Part Number Index 210

FEATURES/BENEFITS

ULTRA KLEEN
Polymer and Stainless Steel Housed Mounted Bearings

Insert: The Dodge ULTRA KLEEN features inserts made of 100% stainless steel and includes set screws positioned at 65 degree angles to provide maximum locking force without compromising inner ring strength. The inserts each include a stainless anti-rotation pin to prevent insert rotation in the housing under load which may cause premature bearing failure. Stainless inserts eliminate the possibility of contamination due to chipping and flaking, commonly found in inserts which are coated with zinc or thin-dense chrome.

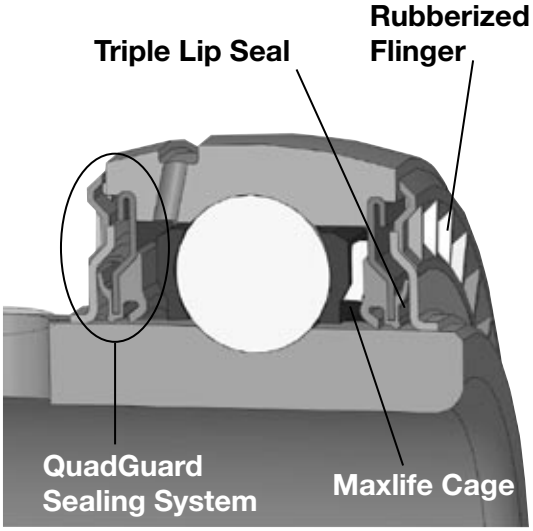

Sealing: Retaining lubrication and preventing contamination from entering the bearing is critical in harsh environments. That is why Dodge has developed the premium QuadGuard® sealing system for maximum sealing effectiveness under these conditions. The seal includes two patented features unique to Dodge bearings; these features are standard on the ULTRA KLEEN product. The first is a triple-lip seal designed to maximize sealing and produce less drag than other multi-lip seals. The Dodge patented triple-lip design uses a mechanically retained seal with two contact points on the inner ring and one contact point riding against the flinger surface. Three points of contact maximize the ability of the seal to guard against contamination and to retain lubricants. The QuadGuard seal incorporates the industry's first (and only) patented rubberized flinger. This flinger uses molded rubber to provide additional protection from contaminants entering the bearing. The baffle design of the rubber on the external surface of the flinger enhances the removal of liquid as the flinger rotates. Grease chambers on the internal surface prevent lubricants from exiting the bearing during operation while allowing purging during re-lubrication. This superior design will increase service life in dirty environments thus leading to extended up-time for our customers. When used in conjunction with one another, the triple-lip seal and rubberized flinger create a sealing system that is ideal for demanding environments.

Retainer: The Maxlife® Cage is the product of extensive research and development in retainer technology and industry leading engineering. The cage features a two-piece design that creates a grease compartment around each of the rolling elements. These compartments allow balls to be constantly in contact with grease, so a good oil film will always exist to prevent wear and minimize friction and heat. The Maxlife cage reduces the relative motion between bearing components and grease which results in lower operating temperatures and extended life. The compartmental construction of the cage tends to hold in the grease and prevent it from being washed out in extremely wet or dirty conditions. This feature allows the bearing to be re-lubricated with less frequency than standard designs require, while extending bearing life.

Lubrication: 100% filled with H1, food grade grease

ULTRA KLEEN
Polymer and Stainless Steel Housed Mounted Bearings

Housings: The ULTRA KLEEN is available in a wide variety of both polymer and stainless housing designs.

- **Polymer**
  - 204 to 210 Series (3/4” bore to 2”, 20mm to 50mm)
    - Pillow Block
    - Two-Bolt Flange
    - Four-Bolt Flange
  - 204 to 207 Series (3/4” bore to 1-7/16”, 20mm to 50mm)
    - Tapped Base
    - Flange Bracket
    - Wide Slot Take-Up
  - Solid cross-section base housings
  - No core cavities to trap contaminants
  - Anti-Microbial agent retards bacterial and fungal growth
  - All stainless hardware and fittings
  - Housing strength exceeds bearing static capacity
  - End covers available

- **Stainless**
  - 204 to 208, 210 Series
    - Pillow Block
    - Two-Bolt Flange
    - Four-Bolt Flange
    - Narrow Slot Take-Up
    - Wide Slot Take-Up
    - Tapped Base
    - Flange Bracket (no 208, 209)
  - 204-207 Series
    - Light Duty Two-Bolt Flange, LFT
    - Light Duty Three-bolt Flange, LF
  - 300 Series stainless steel casting
  - End covers available

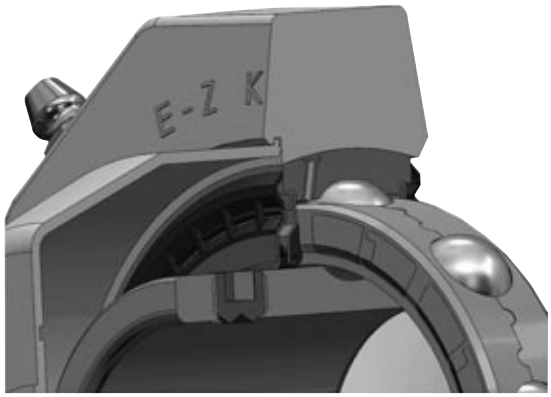

End Covers

All Dodge EZ KLEEN and ULTRA KLEEN bearings include a housing groove to accept a snap-on polymer end cover. These durable covers are easy to install and each is provided with a drain hole to prevent moisture from collecting inside the cover. The snap-on style of end cover incorporates an additional lip on the mounting surface for a rigid fit within the housing. This tight fit creates a better seal prevents movement of the cover during operation and high-pressure cleaning. Dodge snap-on end covers provide positive sealing in wet environments and create safer working conditions by enclosing rotating shafts.

FEATURES/BENEFITS

EZ Kleen-SC, DL, GT Ultra Kleen-SC

EZ Kleen-SC, DL, GT Ultra Kleen-SC	End-Cover Capability		Sealing		Retainer
	End-Cover Groove	Snap-On End Cover	Triple-Lip Seal	Stainless Rubberized Flinger	Maxlife Cage
Standard Features	X	X	X	X	X

Housing Capability Stainless							
Housing Style	**204**	**205**	**206**	**207**	**208**	**209**	**210**
P2B	X	X	X	X	X		X
F2B	X	X	X	X	X		X
F4B	X	X	X	X	X		X
FB	X	X	X	X			X
TB	X	X	X	X	X		X
NSTU	X	X	X	X	X		X
WSTU	X	X	X	X	X		X
LF	X	X	X	X			
LFT	X	X	X	X			

Housing Capability Polymer							
Housing Style	**204**	**205**	**206**	**207**	**208**	**209**	**210**
P2B	X	X	X	X	X	X	X
F2B	X	X	X	X	X	X	X
F4B	X	X	X	X	X	X	X
FB	X	X	X	X			
TB	X	X	X	X			
NSTU							
WSTU	X	X	X	X			
LF							
LFT							

ULTRA KLEEN Polymer and Stainless Steel Housed Mounted Bearings

HOW TO ORDER

There are two ways to specify DODGE ULTRA KLEEN ball bearings. Most of the product offerings have part numbers with listings shown throughout this brochure. Use of part numbers ensures accurate order processing.

When part numbers are not shown, the product may be specified by description or part name. This method is used when ordering units that include modifications or options. To order by description for options not covered by the nomenclature.

NOMENCLATURE

P2B - SCHUEZ - 104S = PSS

Modification Or Feature:
- SS = Stainless Steel Insert
- LL = Low torque labyrinth seal
- MOD = Modified
- NL = No Lube (sealed for life)
- P = Polymer housing
- SH = Stainless Steel Housing

Shaft Size:

Inches:
- First digit = Number of inches
- Second & third digits = Number of sixteenths of an inch
  - 104 = Indicates 1-4/16 or 1-1/4
- S = Next smaller ring size. E.g. 1-1/4 206 would be written as 104S
- L = Next larger ring size. E.g. 1/2 204 would be written as 008L

Metric:
- First two digits = number of millimeters
- M = Metric

Bearing Type:
- SC = Wide inner ring, normal duty, 65° setscrew locking
- Suffixes to the above:
  - EZ = E-Z KLEEN/ULTRA KLEEN (used with polymer or stainless steel housed units)
  - BEZ = Low backing height pillow block, E-Z KLEEN/ULTRA KLEEN
  - UEZ = higher back pillow block, E-Z KLEEN/ULTRA KLEEN (for interchangeability with competitive pillow blocks)

Housing:
- F2B = 2 bolt flange
- F4B = 4 bolt flange
- FB = Flanged bracket
- INS = Insert
- P2B = Pillow block, 2 bolt base
- TB = Tapped base pillow block
- WSTU = Wide slot take-up
- NSTU = Narrow slot take-up
- LF = 3 bolt, light duty flange
- LFT = 2 bolt, light duty flange

Selection of DODGE ULTRA KLEEN Polymer and Stainless Steel Housed Ball Bearings

DODGE ULTRA KLEEN mounted ball bearings are primarily designed for radial loading. However, they have the capacity to carry thrust loads and combined radial/thrust loads. The maximum recommended load which can be applied is limited by various components in the system, such as bearing, housing, shaft attachments, speed and life requirements as listed in this catalog and the instruction manual that accompanies each bearing. DODGE ULTRA KLEEN ball bearings have been applied successfully when these limits have been exceeded under controlled operating conditions. Contact DODGE Engineering for applications which exceed these recommendations.

Select a bearing from the Selection Table that has a radial load rating at the operating speed equal to or greater than the calculated Equivalent Radial Load for a desired L_{10} life. This simple method is all that is required for the majority of general applications and provides for occasional average shock loads.

L_{10} Hours Life-the life which may be expected for at least 90% of a given group of bearings operating under identical conditions.

Heavy Service-For heavy shock loads, frequent shock loads or severe vibrations, add up to 50% (according to severity of conditions) to the Equivalent Radial Load to obtain a Modified Equivalent Radial Load. Consult Application Engineering for additional selection assistance.
A maximum thrust load value of C/10 is recommended as a guide for general applications and will give adequate L_{10} life. If the thrust load exceeds this limit, it is advisable to use auxiliary thrust carrying devices, such as a shaft shoulder, snap ring, or a thrust collar. Where substantial radial load pulls the housing away from the mounting base, both the hold-down bolts and housing must be of adequate strength. Auxiliary load carrying devices, such as shear bars, are advisable for side or end-loading of pillow blocks and radial loads for flange units.

To determine the L_{10} hours life for loads and RPMs not listed use the following equation:

$$L_{10} = \left(\frac{C}{P}\right)^3 \left(\frac{16{,}667}{RPM}\right)$$

Where:
L_{10}= Life, hours
C = Dynamic Capacity, lbs. or N
P = Equivalent Radial Load, lbs. or N
n = Revolutions per minute

When the load on a ball bearing is solely a radial load with no thrust (axial) load, the Equivalent Radial Load (P) is equal to the actual radial load. However, when a thrust (axial) load is applied, the radial and thrust loads applied must be converted into an Equivalent Radial Load. Use X (radial factor) and Y (thrust factor) from Table 1 to convert the actual applied thrust and radial loads to an Equivalent Radial Load which has the same effect on the life of a bearing as a radial load of this magnitude.

Shaft Tolerances

Normal Shaft Size Inches	Recommended Shaft Tolerances SC
Up to 1-1/2”	+0.000 -.0005
Over 1-1/2 to 2”	+0.000 -.0010

$$P = XF_R + YF_A$$

Where:
P = Equivalent Radial Load, lbs.
F_R= Radial load, lbs.
F_A= Thrust load, lbs.
e = Thrust load to radial load factor (Table 1)
X = Radial load factor (Table 1)
Y = Thrust Factor (Table 1)
C_0= Basic static capacity (Selection Table)

To find X and Y, first calculate F_A/C_0 to determine e. Calculate F_A/F_R and compare to e to determine the X and Y factors to use from Table 1.

Substitute all known values into the Equivalent Radial Load equation. The Equivalent Radial Load (P) thus determined can be used in the L10 life formula or compared to the allowable Equivalent Radial Load rating desired in the expanded rating chart to select a bearing (Selection Table).

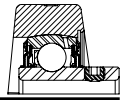

Selection of DODGE ULTRA KLEEN Polymer and Stainless Steel Housed Ball Bearings

If calculated value of P is less than F_R, use $P=F_R$.

Table 1

F_A/C_o	e	Radial/Thrust Factors			
		If F_A/F_R is equal to or less than e		If F_A/F_R is greater than e	
		$F_A/F_R \leq e$		$F_A/F_R > e$	
		X	Y	X	Y
0.014	0.19	1	0	0.56	2.30
0.021	0.21	1	0	0.56	2.15
0.028	0.22	1	0	0.56	1.99
0.042	0.24	1	0	0.56	1.85
0.056	0.26	1	0	0.56	1.71
0.07	0.27	1	0	0.56	1.63
0.084	0.28	1	0	0.56	1.55
0.11	0.30	1	0	0.56	1.45
0.17	0.34	1	0	0.56	1.31
0.28	0.38	1	0	0.56	1.15
0.42	0.42	1	0	0.56	1.04
0.56	0.44	1	0	0.56	1.00

Lubrication - DODGE Ball Bearings are lubricated at the factory and are ready to run. The bearings are initially lubricated with an aluminum complex based, H1 Food Grade grease and should be relubricated with the same or some equivalent. For high speeds, high loads, extreme temperatures and other abnormal operating conditions, special greases may be required. Contact DODGE Application Engineering for recommendations on these types of applications.

Misalignment - DODGE Ball Bearings are designed to allow a maximum of 2° static misalignment. These bearings are not suitable for dynamic misalignment. To ensure good alignment, mounting surfaces must be checked for flatness and must lie in the same plane. When tightening base bolts, each bolt should be alternately tightening in incremental torque values until full torque is achieved to prevent the angular shifting of the pillow block that occurs when one bolt is tightened to its full torque. Shimming may be required to minimize misalignment.

DODGE®

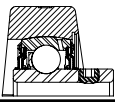

Table 2: Easy Selection for Polymer and Stainless Housed ULTRA KLEEN Mounted Ball Bearings - Inch and Metric

Ring Size	Shaft Size	Dynamic Capacity C, lbs.	Static Capacity CO, lbs.	L10 Life - Hours	Allowable Equivalent Radial Load Rating (lbs.) at Various RPM*											
	SC				50	150	250	500	750	1000	1250	1500	1600	1750	2000	2250
204	1/2	2464	1209	20000	629	436	368	292	255	232	215	203	198	192	184	177
	5/8			30000	550	381	322	255	223	203	188	177	173	168	161	155
	3/4			40000	500	346	292	232	203	184	171	161	157	153	146	140
	13/16			60000	436	303	255	203	177	161	149	140	137	133	128	123
	20mm			100000	368	255	215	171	149	136	126	118	116	113	108	103
205	7/8	2674	1362	20000	683	474	399	317	277	252	234	220	215	209	200	192
	15/16			30000	597	414	349	277	242	220	204	192	188	182	174	168
	1			40000	542	376	317	252	220	200	185	174	171	166	159	152
	25mm			60000	474	328	277	220	192	174	162	152	149	145	138	133
				100000	399	277	234	185	162	147	137	129	126	122	117	112
206	1-1/16	3713	1958	20000	948	658	555	440	385	349	324	305	299	290	277	267
	1-1/8			30000	829	574	485	385	336	305	283	267	261	253	242	233
	1-3/16			40000	753	522	440	349	305	277	257	242	237	230	220	212
	1-1/4			60000	658	456	385	305	267	242	225	212	207	201	192	185
	30mm			100000	555	385	324	257	225	204	190	179	175	170	162	156
207	1-1/4	4895	2667	20000	1250	867	731	580	507	461	428	402	394	382	366	352
	1-5/16			30000	1092	757	639	507	443	402	374	352	344	334	319	307
	1-3/8			40000	992	688	580	461	402	366	339	319	313	303	290	279
	1-7/16			60000	867	601	507	402	352	319	296	279	273	265	254	244
	35mm			100000	731	507	428	339	296	269	250	235	230	224	214	206
208		6232	3484	20000	1592	1104	931	739	645	586	544	512	501	487	465	448
	1-1/2			30000	1391	964	813	645	564	512	476	448	438	425	407	391
	1-5/8			40000	1263	876	739	586	512	465	432	407	398	386	369	355
	40mm			60000	1104	765	645	512	448	407	377	355	348	337	323	310
				100000	931	645	544	432	377	343	318	300	293	285	272	262
209		6707	3872	20000	1713	1188	1002	795	695	631	586	551	540	524	501	482
	1-5/8			30000	1497	1038	875	695	607	551	512	482	471	458	438	421
	1-11/16			40000	1360	943	795	631	551	501	465	438	428	416	398	382
	1-3/4			60000	1188	824	695	551	482	438	406	382	374	363	347	334
	45mm			100000	1002	695	586	465	406	369	343	322	316	306	293	282
210		6707	3872	20000	1713	1188	1002	795	695	631	586	551	540	524	501	482
	1-15/16			30000	1497	1038	875	695	607	551	512	482	471	458	438	421
	2			40000	1360	943	795	631	551	501	465	438	428	416	398	382
	50mm			60000	1188	824	695	551	482	438	406	382	374	363	347	334
				100000	1002	695	586	465	406	369	343	322	316	306	293	282

* Slight interference fit required when operating on the right of the heavy line or in the shaded area.

▲ Piloted flange only

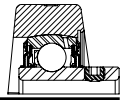

Table 2: Easy Selection for Polymer and Stainless Housed ULTRA KLEEN Mounted Ball Bearings - Inch and Metric

Ring Size	Shaft Size SC	Dynamic Capacity C, lbs.	Static Capacity C0, lbs.	L10 Life - Hours	Allowable Equivalent Radial Load Rating (lbs.) at Various RPM*											
					2500	2750	3000	3250	3500	3600	4000	4500	5000	5250	5500	6000
204	1/2	2464	1209	20000	171	166	161	157	153	151	146	140	136	133	131	128
	5/8			30000	149	145	140	137	133	132	128	123	118	117	115	111
	3/4			40000	136	131	128	124	121	120	116	111	108	106	104	101
	13/16			60000	118	115	111	109	106	105	101	97	94	93	91	88
	20mm			100000	100	97	94	92	89	88	85	82	79	78	77	75
205	7/8	2674	1362	20000	185	180	174	170	166	164	159	152	147	145	143	138
	15/16			30000	162	157	152	148	145	143	138	133	129	126	125	121
	1			40000	147	143	138	135	132	130	126	121	117	115	113	110
	25mm			60000	129	125	121	118	115	114	110	106	102	100	99	96
				100000	108	105	102	99	97	96	93	89	86	85	83	81
206	1-1/16	3713	1958	20000	257	249	242	236	230	228	220	212	204	201		
	1-1/8			30000	225	218	212	206	201	199	192	185	179	176		
	1-3/16			40000	204	198	192	187	183	181	175	168	162	160		
	1-1/4			60000	179	173	168	164	160	158	153	147	142	139		
	30mm			100000	151	146	142	138	135	133	129	124	119	118		
207	1-1/4	4895	2667	20000	339	329	319	311	303	301	290	279				
	1-5/16			30000	296	287	279	272	265	263	254	244				
	1-3/8			40000	269	261	254	247	241	239	230	221				
	1-7/16			60000	235	228	221	216	210	208	201	193				
	35mm			100000	198	192	187	182	177	176	170	163				
208		6232	3484	20000	432	419	407	396	386	383	369					
	1-1/2			30000	377	366	355	346	337	334	323					
	1-5/8			40000	343	332	323	314	307	304	293					
	40mm			60000	300	290	282	275	268	265	256					
				100000	253	245	238	232	226	224	216					
209		6707	3872	20000	465	450	438	426	416	412	398					
	1-5/8			30000	406	394	382	372	363	360	347					
	1-11/16			40000	369	358	347	338	330	327	316					
	1-3/4			60000	322	312	303	295	288	286	276					
	45mm			100000	272	263	256	249	243	241	233					
210		6707	3872	20000	465	450	438	426	416	412						
	1-15/16			30000	406	394	382	372	363	360						
	2			40000	369	358	347	338	330	327						
	50mm			60000	322	312	303	295	288	286						
				100000	272	263	256	249	243	241						

* Slight interference fit required when operating on the right of the heavy line or in the shaded area.

▲ Piloted flange only

ULTRA KLEEN Polymer Housings

General Resistance to Chemical Groups at Room Temperature (20°C/68°F)

Chemical Group	Condition Or Subgroup	Resistance
Inorganic Acids (non-oxidizing)	concentrated	-
	diluted (1:1)	+1.00
	highly diluted	+1.00
Inorganic Acids (oxidizing)	concentrated	-
	diluted (1:1)	-
	highly diluted	+
Organic Acids	concentrated	=
	diluted (1:1)	+
	highly diluted	+
Bases	concentrated	-
	diluted (1:1)	-
	highly diluted	=
Salt Solutions	acidic	+
	neutral	+
	basic	=
Aliphatic Hydrocarbons		+
	oils and greases	+
Aromatic Hydrocarbons		=
	phenols	-
Halogenated Hydrocarbons	perhalogenated	+
	partially halogenated	-
Alcohols	monovalent	+
	polyvalent	=
Ketones		=
Esters		=
Ethers		+

(1) except hydrofluoric acid

(+) excellent resistance (=) good-fair resistance (-) fair-poor resistance (blank) no data available

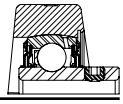

Chemical Resistance Chart

Chemical Agent	Solution Conc.	@ 23°C (73°F)		@ 60°C (140°F)		@ 80°C (175°F)
		Polymer Housing	Polymer Insert	Polymer Housing	Polymer Insert	Polymer Housing
A						
Acetic Acid	5%	+	+	=		=
Acetic Acid	10%	+		=		=
Acetic Acid	20%	=	-	=	-	=
Acetic Acid	80%	=	-	=	-	=
Acetic Acid	100%	=		=		=
Acetone		=	=			
Ammonium Chloride	10%		+		+	
Ammonium Hydroxide	10%	=	-			
Ammonium Hydroxide	conc.	-				
Aniline		+	=		=	
B						
Benzene		=	=	=	=	
Bleaching Lye		+		+		
Brake Fluid		+	+	+	+	+
Butane		+				
Butanol		=		=		
Butyl Acetate		+		=		
C						
Calcium Chloride	5%	+	+	+		
Calcium Chloride	10%	+		+		
Calcium Hydroxide	10%		+		+	
Calcium Hypochlorite		+		+		
Carbon Disulphide		+				
Carbon Tetrachloride		+	+			
Castor Oil			+			
Chloroform		-				
Chromic Acid	40%	+		-		-
Citric Acid	10%	+		+		+
Cottonseed Oil		+		+		+
Cresol		-		-		-
D						
Detergents	1%	+	+	=		-
Detergents	25%	+	+	=		-
Dibutyl Phthalate		+		+		
Diesel Oil		+				
Dioxane		+	=	-	=	
E						
Ethanol		+	=			
Ether (diethyl-)		+				
Ethyl Acetate		=	=			
Ethylene Dichloride		-				

(+) excellent resistance (=) good-fair resistance (-) fair-poor resistance (blank) no data available

Chemical Resistance Chart

Chemical Agent	Solution Conc.	@ 23°C (73°F)		@ 60°C (140°F)		@ 80°C (175°F)
		Polymer Housing	Polymer Insert	Polymer Housing	Polymer Insert	Polymer Housing
F						
Ferrous Chloride	5%		+			
Formic Acid	5%	+		=		+
Formic Acid	90%	=		-		-
Freon 11		+				
G						
Gasoline		+	+			
Glycerol (Glycerin)		=		=		
Glycol		=		=		
Grease		+	+	+	+	+
H						
Heptane		+				
Hexane		+	+		+	
Hydrochloric Acid	10%	+	-	=	-	-
Hydrochloric Acid	90%	-	-	-	-	-
Hydrofluoric Acid	5%	-		-		-
Hydrofluoric Acid	50%	-		-		-
Hydrogen Peroxide	3%	+	+			
Hydrogen Peroxide	30%	=	+			
I J						
Isoamyle Alcohol			=		=	
Isopropanol		=		=		
K L						
Kerosene		+	+		+	
Lithium Chloride	43%		+		+	
M						
Methanol		+	=		=	
Methylene Chloride		-	+	-		
Methyl Ethyl Ketone		+	+	=	+	
Methyl Salicylate			+			
Mineral Oil		+	+	+	+	+
Motor Oils		+	+	+	+	+
N						
Nitric Acid	10%	+	-	=	-	=
Nitric Acid	40%	-	-	-	-	-
Nitric Acid	70%	-	-	-	-	-
O						
Oleic Acid	100%	+		+		+
Olive Oil		+	+	+	+	+
P						
Perchloroethylene		+	=	=	=	
Petroleum Ether		+				
Phenol		=		-	-	-
Phosphoric Acid	3%	+		+		+

(+) excellent resistance (=) good-fair resistance (-) fair-poor resistance (blank) no data available

Chemical Resistance Chart

Chemical Agent	Solution Conc.	@ 23°C (73°F)		@ 60°C (140°F)		@ 80°C (175°F)
		Polymer Housing	Polymer Insert	Polymer Housing	Polymer Insert	Polymer Housing
P (cont)						
Phosphoric Acid	30%	+	-	+	-	+
Phosphoric Acid	85%	+	-	+	-	-
Potassium Chloride	10%	+		=		-
P (Continued)						
Potassium Dichromate	10%	+				
Potassium Hydroxide	1%	-		-		-
Potassium Hydroxide	10%	-		-		-
Potassium Hydroxide	60%	-		-		-
Potassium Permanganate	10%	+	+		+	
S						
Silicone Fluids		+		+		+
Soap Solution	1%	+	+	=	=	-
Sodium Bicarbonate	10%	+		=		-
Sodium Bisulfate	5%		+			
Sodium Bisulfite	5%	+	-			
Sodium Bisulfite	10%	+	-	=		-
Sodium Carbonate	10%	+		-		-
Sodium Carbonate	20%	+		-		-
Sodium Chloride	10%	+	+	=	+	-
Sodium Hydroxide	1%	-		-		-
Sodium Hydroxide	10%	-	-	-		-
Sodium Hydroxide	60%	-		-		-
Sodium Hypochlorite	5%	+	-			
Sodium Hypochlorite	10%	+		=		-
Sulfuric Acid	3%	+	-	+	-	+
Sulfuric Acid	30%	+	-	+	-	-
Sulfuric Acid	98%	-	-	-	-	-
T						
Tetrahydofuran		=				
Toulene		+	=			
Transformer Oil		+	+	+	+	+
Trichlorethylene		=				
Triethylamine			=		=	
Turpentine		+				
V						
Vaseline		+		+		+
Vegetable Oils		+	+	+	+	+
W						
Water		+	+	=	=	-
White Spirits		+				
X						
Xylene		+				

(+) excellent resistance (=) good-fair resistance (-) fair-poor resistance (blank) no data available

ULTRA KLEEN Mounted Bearings

SCEZ PSS Normal Duty Polymer Housed Pillow Blocks

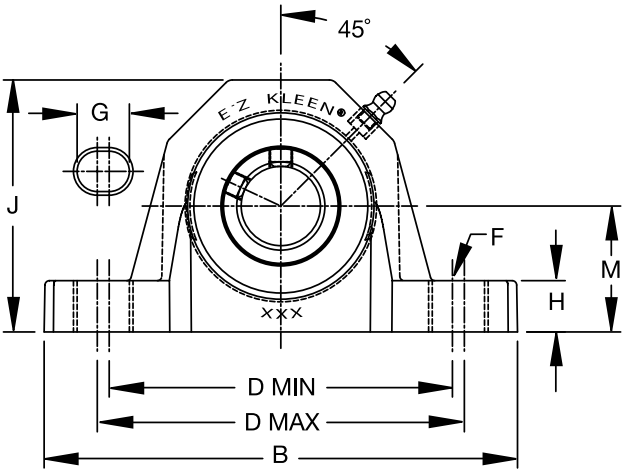

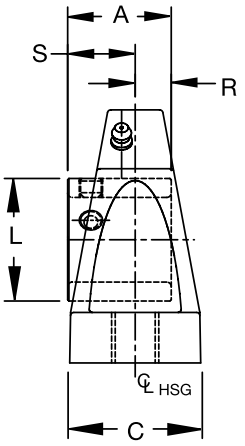

Series	Shaft Size	With Stainless Steel Insert		Weight lbs kg	A	B	C	D		F Bolt Dia.	G	H	J	L	M	R	S
		Part No.	Description					min.	max.								
204	3/4	**136695**	P2B-SCEZ-012-PSS	0.64	1-5/32	5-1/32	1-31/64	3-43/64	3-59/64	3/8	19/32	39/64	2-5/8	1-1/8	1-5/16	27/64	47/64
	20 mm	***136740***	*P2B-SCEZ-20M-PSS*	*0.30*	*29.4*	*127.8*	*37.7*	*93.3*	*99.6*	*M10*	*15.1*	*15.5*	*66.7*	*28.6*	*33.3*	*10.7*	*18.7*
205	1	**136696**	P2B-SCEZ-100-PSS	0.69	1-3/16	5-1/2	1-31/64	3-31/32	4-13/64	3/8	19/32	39/64	2-55/64	1-21/64	1-7/16	27/64	49/64
	25 mm	***136741***	*P2B-SCEZ-25M-PSS*	*0.32*	*30.2*	*139.7*	*37.7*	*100.8*	*106.8*	*M10*	*15.1*	*15.5*	*72.6*	*33.7*	*36.5*	*10.7*	*19.4*
206	1-3/16	**136697**	P2B-SCUEZ-103-PSS	1.13	1-25/64	6-5/16	1-25/32	4-39/64	4-57/64	1/2	23/32	45/64	3-11/32	1-37/64	1-11/16	31/64	29/32
	1-1/4	**136698**	P2B-SCUEZ-104S-PSS	1.11													
	30 mm	***136742***	*P2B-SCUEZ-30M-PSS*	*0.51*	*35.3*	*160.3*	*45.2*	*116.9*	*124.2*	*M12*	*18.3*	*17.9*	*84.9*	*40.1*	*42.9*	*12.3*	*23*
207	1-1/4	**136699**	P2B-SCEZ-104-PSS	1.68	1-17/32	6-35/64	1-7/8	4-13/16	5-1/8	1/2	23/32	23/32	3-57/64	1-27/32	1-7/8	1/2	1-1/32
	1-7/16	**136700**	P2B-SCEZ-107-PSS	1.52													
	35 mm	***136743***	*P2B-SCEZ-35M-PSS*	*0.74*	*38.9*	*166.3*	*47.8*	*122.2*	*130.2*	*M12*	*18.3*	*18.3*	*98.8*	*46.8*	*47.6*	*12.7*	*26.2*
208	1-1/2	**136701**	P2B-SCBEZ-108-PSS	2.08	1-11/16	7-13/64	2-7/64	5-7/64	5-41/64	1/2	7/8	49/64	4-11/64	2-3/64	1-15/16	19/32	1-3/32
	40 mm	***136744***	*P2B-SCBEZ-40M-PSS*	*0.88*	*42.9*	*183.0*	*53.6*	*129.6*	*143.3*	*M12*	*22.2*	*19.4*	*106*	*52*	*49.2*	*15.1*	*27.8*
209	1-11/16	**136702**	P2B-SCEZ-111-PSS	2.34	1-23/32	7-13/64	2-7/64	5-27/64	5-31/32	1/2	7/8	27/32	4-5/16	2-7/32	2-1/8	19/32	1-1/8
	1-3/4	**127694**	P2B-SCEZ-112-PSS	2.34													
	45 mm	***136745***	*P2B-SCEZ-45M-PSS*	*1.03*	43.7	183.0	53.6	137.7	151.6	M12	22.2	21.4	109.5	56.4	54	15.1	28.6
210	1-15/16	**136703**	P2B-SCEZ-115-PSS	2.65	1-3/4	8-1/16	2-23/64	6	6-9/16	5/8	1	59/64	4-9/16	2-7/16	2-1/4	19/32	1-5/32
	2	**136986**	P2B-SCEZ-200-PSS	2.58													
	50 mm	***136746***	*P2B-SCEZ-50M-PSS*	*1.30*	44.5	204.8	59.9	152.4	166.7	M16	25.4	23.4	115.9	61.9	57.2	15.1	29.4

ULTRA KLEEN Mounted Bearings

SCEZ SHSS Normal Duty Stainless Steel Housed Pillow Blocks

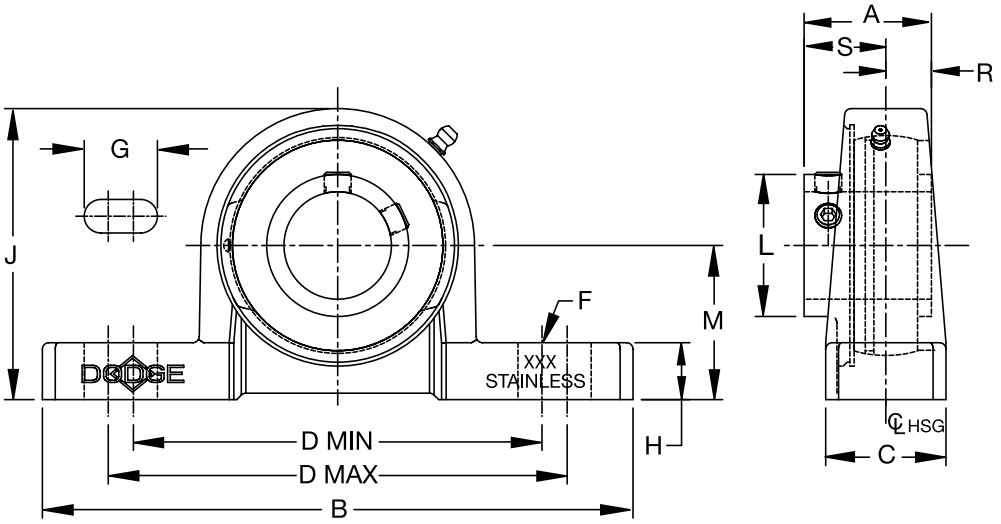

Series	Shaft Size	With Stainless Steel Insert		Weight lbs kg	A	B	C	D		F Bolt Dia.	G	H	J	L	M	R	S
		Part No.	Description					min.	max.								
204	3/4	**136773**	P2B-SCEZ-012-SHSS	1.31	1-5/32	5	1	3-3/8	4-3/16	3/8	27/32	1/2	2-1/2	1-1/8	1-5/16	27/64	47/64
	20mm	***136849***	*P2B-SCEZ-20M-SHSS*	*0.59*	*29.4*	*127.0*	*25.4*	*85.7*	*106.4*	*M10*	*21.4*	*12.7*	*63.5*	*28.6*	*33.3*	*10.7*	*18.7*
205	1	**136774**	P2B-SCEZ-100-SHSS	1.59	1-3/16	5-1/2	1-1/8	3-11/16	4-1/2	3/8	27/32	17/32	2-23/32	1-21/64	1-7/16	27/64	49/64
	25mm	***136850***	*P2B-SCEZ-25M-SHSS*	*0.73*	*30.2*	*139.7*	*28.6*	*93.7*	*114.3*	*M10*	*21.4*	*13.5*	*69.1*	*33.7*	*36.5*	*10.7*	*19.4*
206	1-3/16	**136775**	P2B-SCEZ-103-SHSS	2.33	1-25/64	6-1/4	1-1/4	4-17/64	5	1/2	15/16	17/32	3-1/8	1-37/64	1-5/8	31/64	29/32
	1-1/4	**136777**	P2B-SCEZ-104S-SHSS	2.29													
	30mm	***@***	*P2B-SCEZ-30M-SHSS*	*1.06*	*35.3*	*158.8*	*31.8*	*108.3*	*127*	*M12*	*23.8*	*13.5*	*79.4*	*40.1*	*41.3*	*12.3*	*23*
206 (SCU)	1-3/16	**136776**	P2B-SCUEZ-103-SHSS	2.44	1-25/64	6-1/4	1-1/4	4-17/64	5	1/2	15/16	19/32	3-3/16	1-37/64	1-11/16	31/64	29/32
	1-1/4	**136778**	P2B-SCUEZ-104S-SHSS	2.39													
	30mm	***136851***	*P2B-SCUEZ-30M-SHSS*	*1.11*	*35.3*	*158.8*	*31.8*	*108.3*	*127*	*M12*	*23.8*	*15.1*	*81*	*40.1*	*42.9*	*12.3*	*23*
207	1-1/4	**136779**	P2B-SCEZ-104-SHSS	3.36	1-17/32	6-1/2	1-3/8	4-11/16	5-7/16	1/2	15/16	9/16	3-5/8	1-27/32	1-7/8	1/2	1-1/32
	1-7/16	**136780**	P2B-SCEZ-107-SHSS	3.19													
	35 mm	***136852***	*P2B-SCEZ-35M-SHSS*	*1.47*	*38.9*	*165.1*	*34.9*	*119.1*	*138.1*	*M12*	*23.8*	*14.3*	*92.1*	*46.8*	*47.6*	*12.7*	*26.2*
208	1-1/2	**136781**	P2B-SCEZ-108-SHSS	4.39	1-11/16	7	1-1/2	5-3/16	6	1/2	31/32	3/4	4	2-3/64	2-1/8	19/32	1-3/32
	40mm	***@***	*P2B-SCEZ-40mm-SHSS*	*1.95*	*42.9*	*177.8*	*38.1*	*131.8*	*152.4*	*M12*	*24.6*	*19.1*	*101.6*	*52*	*54*	*15.1*	*27.8*
208 (SCB)	1-1/2	**136782**	P2B-SCBEZ-108-SHSS	3.93	1-11/16	7	1-1/2	5-3/16	6	1/2	31/32	9/16	3-13/16	2-3/64	1-15/16	19/32	1-3/32
	40mm	***136853***	*P2B-SCBEZ-40M-SHSS*	*1.74*	*42.9*	*177.8*	*38.1*	*131.8*	*152.4*	*M12*	*24.6*	*14.3*	*96.8*	*52*	*49.2*	*15.1*	*27.8*
210	1-15/16	**136783**	P2B-SCEZ-115-SHSS	5.14	1-3/4	8	1-5/8	5-49/64	6-11/16	5/8	1-9/64	5/8	4-5/16	2-7/16	2-1/4	19/32	1-5/32
	2	**136989**	P2B-SCEZ-200-SHSS	5.09													
	50 mm	***136854***	*P2B-SCEZ-50M-SHSS*	*2.29*	*44.6*	*203.2*	*41.3*	*146.4*	*169.9*	*M16*	*29*	*15.9*	*109.5*	*61.9*	*57.2*	*15.1*	*29.4*

@ Assembled to order

ULTRA KLEEN Mounted Bearings

SCEZ PSS Normal Duty Polymer Housed Tapped Base Pillow Blocks

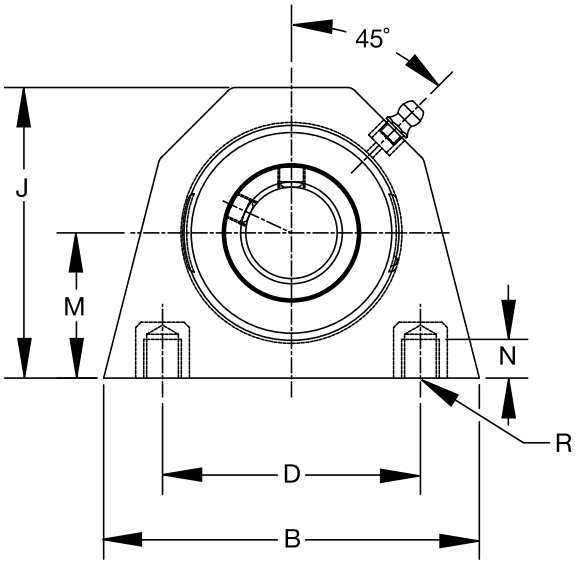

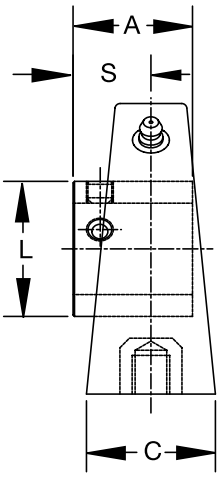

Series	Shaft Size	With Stainless Steel Insert		Weight lbs kg	A	B	C	D	J	L	M	N Thread Depth	R Bolt Hole Threads	S
		Part No.	Description											
204	3/4	**136704**	TB-SCEZ-012-PSS	0.60	1-5/32	3-1/4	1-31/64	2	2-21/32	1-1/8	1-5/16	13/32	3/8-16	47/64
	20 mm	***136747***	*TB-SCEZ-20M-PSS*	*0.29*	*29.4*	*82.6*	*37.7*	*50.8*	*67.6*	*28.6*	*33.3*	*10.2*	*M10x1.5*	*18.7*
205	1	**136705**	TB-SCEZ-100-PSS	0.58	1-3/16	3-1/4	1-1/2	2	2-57/64	1-21/64	1-7/16	13/32	3/8-16	49/64
	25 mm	***136748***	*TB-SCEZ-25M-PSS*	*0.28*	*30.2*	*82.6*	*38.1*	*50.8*	*73.3*	*33.7*	*36.5*	*10.2*	*M10x1.5*	*19.4*
206	1-3/16	**136706**	TB-SCEZ-103-PSS	1.09	1-25/64	4-3/8	1-37/64	3	3-3/8	1-37/64	1-11/16	29/64	7/16-14	29/32
	1-1/4	**136707**	TB-SCEZ-104S-PSS	1.07										
	30 mm	***136749***	*TB-SCEZ-30M-PSS*	*0.49*	*35.3*	*111.1*	*40.1*	*76.2*	*85.9*	*40.1*	*42.9*	*11.4*	*M10x1.5*	*23.0*
207	1-1/4	**136708**	TB-SCEZ-104-PSS	1.64	1-17/32	4-5/8	1-57/64	3-1/4	3-13/16	1-27/32	1-7/8	35/64	1/2-13	1-1/32
	1-7/16	**136709**	TB-SCEZ-107-PSS	1.48										
	35 mm	***136750***	*TB-SCEZ-35M-PSS*	*0.72*	*38.9*	*117.5*	*48.0*	*82.6*	*97.2*	*46.8*	*47.6*	*14.0*	*M12x1.75*	*26.2*

ULTRA KLEEN Mounted Bearings

SCEZ SHSS Normal Duty Stainless Steel Tapped Base Bearings

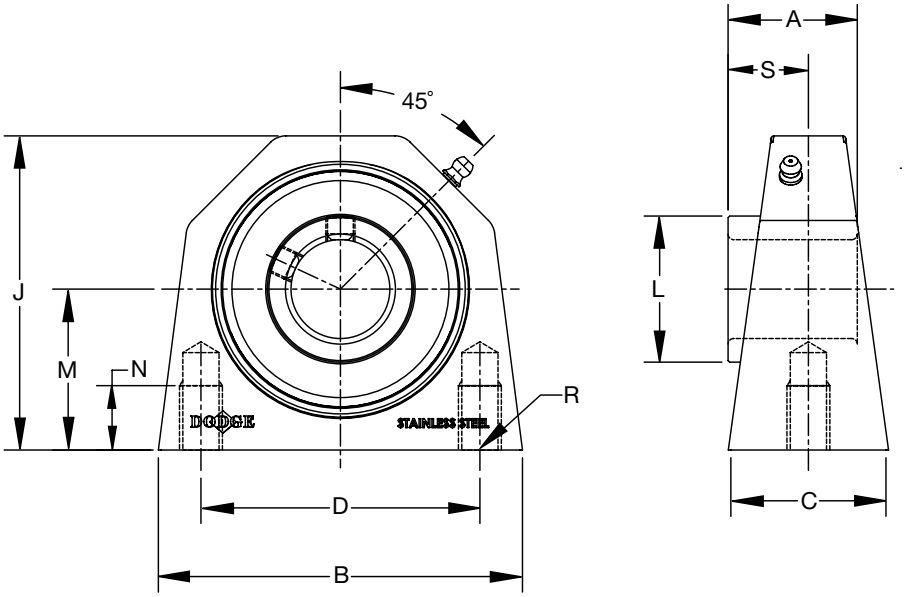

Series	Shaft Size	With Stainless Steel Insert		Weight lbs. kg	A	B	C	D	J	L	M	N	R	S
		Part No.	Description											
204	3/4	**136784**	TB-SCEZ-012-SHSS	1.27	1-5/32	2-7/8	1-31/64	2	2-1/2	1-1/8	1-5/16	29/64	3/8-16	47/64
	20 mm	***136855***	*TB-SCEZ-20M-SHSS*	*.576*	*29.4*	*73.0*	*37.6*	*50.8*	*63.6*	*28.6*	*33.3*	*11.4*	*M8x1.25*	*18.7*
205	1	**136785**	TB-SCEZ-100-SHSS	1.48	1-3/16	3	1-31/64	2	2-3/4	1-21/64	1-7/16	29/64	3/8-16	47/64
	25 mm	***136856***	*TB-SCEZ-25M-SHSS*	*.671*	*30.2*	*76.2*	*37.9*	*50.8*	*69.8*	*33.7*	*36.5*	*11.4*	*M10x1.5*	*19.4*
206	1-3/16	**136786**	TB-SCEZ-103-SHSS	2.49	1-25/64	4	1-9/16	3	3-7/32	1-37/64	1-11/16	7/8	7/16-14	1-11/16
	1-1/4	**136787**	TB-SCEZ-104S-SHSS											
	30 mm	***136857***	*TB-SCEZ-30M-SHSS*	*1.13*	*35.3*	*101.6*	*39.9*	*76.2*	*81.72*	*40.1*	*42.9*	*22.2*	*M10x1.5*	*42.9*
207	1-1/4	**136788**	TB-SCEZ-104-SHSS	3.55	1-7/32	4-1/4	1-7/8	3-1/4	3-21/32	1-27/32	1-7/8	3/4	1/2-13	1-1/32
	1-7/16	**136789**	TB-SCEZ-107-SHSS											
	35 mm	***136858***	*TB-SCEZ-35M-SHSS*	*1.61*	*38.9*	*108.0*	*47.6*	*82.6*	*93.0*	*46.8*	*47.6*	*19.1*	*M10x1.5*	*26.2*
208	1-1/2	**136788**	TB-SCEZ-104-SHSS	4.21	1-11/16	4-5/8	1-7/8	3-1/2	4	2-3/64	2-1/8	1	1/2-13	1-3/32
	40 mm	***136859***	*TB-SCEZ-40M-SHSS*	*1.91*	*42.9*	*117.5*	*47.6*	*88.9*	*101.6*	*52.0*	*54.0*	*25.4*	*M12x1.75*	*27.8*
210	1-15/16	**136792**	TB-SCEZ-115-SHSS	5.67	1-3/4	5-1/2	2	4	4-15/32	2-7/16	2-1/4	1-1/4	5/8-11	1-5/32
	2	**136990**	TB-SCEZ-200-SHSS											
	50mm	***136860***	*TB-SCEZ-50M-SHSS*	*2.57*	*44.5*	*139.7*	*50.8*	*101.6*	*113.5*	*61.9*	*57.2*	*31.8*	*M16x2*	*29.4*

ULTRA KLEEN Mounted Bearings

SCEZ PSS Normal Duty Polymer Housed 2 Bolt Flange Bearings

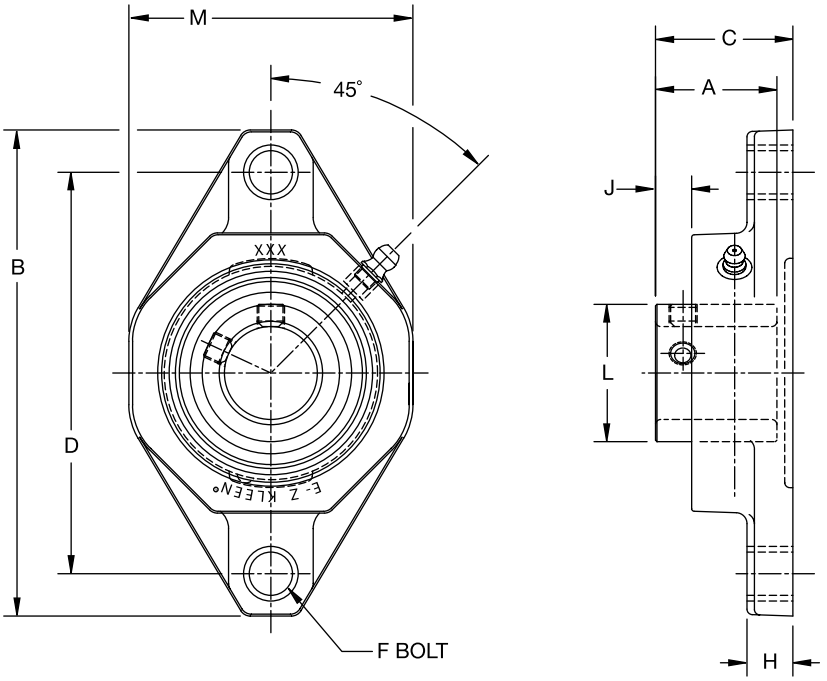

Series	Shaft Size	With Stainless Steel Insert		Weight lbs kg	A	B	C	D	F Bolt Dia.	H	J	L	M
		Part No.	Description										
204	3/4	**136710**	F2B-SCEZ-012-PSS	0.40	1-5/32	4-29/64	1-27/64	3-17/32	3/8	17/32	19/64	1-1/8	2-23/64
	20 mm	***136751***	*F2B-SCEZ-20M-PSS*	*0.24*	*29.4*	*113.0*	*36.1*	*90.0*	*M10*	*13.5*	*7.6*	*28.6*	*59.9*
205	1	**136711**	F2B-SCEZ-100-PSS	0.56	1-3/16	4-59/64	1-15/32	3-57/64	3/8	35/64	21/64	1-21/64	2-23/32
	25 mm	***136752***	*F2B-SCEZ-25M-PSS*	*0.28*	*30.2*	*125.0*	*37.3*	*99.0*	*M10*	*13.9*	*8.4*	*33.7*	*69.1*
206	1-3/16	**136712**	F2B-SCEZ-103-PSS	0.86	1-25/64	5-19/32	1-21/32	4-19/32	3/8	39/64	27/64	1-37/64	3-13/64
	1-1/4	**136713**	F2B-SCEZ-104S-PSS	0.84									
	30 mm	***136753***	*F2B-SCEZ-30M-PSS*	*0.39*	*35.3*	*142.1*	*42.1*	*116.5*	*M10*	*13.9*	*10.6*	*40.1*	*81.4*
207	1-1/4	**136714**	F2B-SCEZ-104-PSS	1.36	1-17/32	6-5/16	1-51/64	5-1/8	1/2	5/8	33/64	1-27/32	3-45/64
	1-7/16	**136715**	F2B-SCEZ-107-PSS	1.24									
	35 mm	***136754***	*F2B-SCEZ-35M-PSS*	*0.61*	*38.9*	*160.3*	*45.6*	*130.0*	*M12*	*15.9*	*13.2*	*46.8*	*94.1*
208	1-1/2	**136716**	F2B-SCEZ-108-PSS	1.82	1-11/16	6-25/32	1-31/32	5-21/32	1/2	43/64	33/64	2-3/64	4-1/16
	40 mm	***136755***	*F2B-SCEZ-40M-PSS*	*0.76*	*42.9*	*172.2*	*50.0*	*143.5*	*M12*	*17.1*	*13.2*	*52.0*	*103.1*
209	1-11/16	**136717**	F2B-SCEZ-111-PSS	2.00	1-23/32	7-5/64	2-1/64	5-27/32	9/16	23/32	9/16	2-7/32	4-5/16
	1-3/4	**127608**	F2B-SCEZ-112-PSS	2.00									
	45 mm	***136756***	*F2B-SCEZ-45M-PSS*	*0.88*	*43.7*	*179.8*	*51.2*	*148.5*	*M14*	*18.2*	*14.1*	*56.4*	*109.5*
210	1-15/16	**136718**	F2B-SCEZ-115-PSS	2.12	1-3/4	7-31/64	2-11/64	6-3/16	5/8	49/64	19/32	2-7/16	4-1/2
	2	**136987**	F2B-SCEZ-200-PSS	2.08									
	50mm	***136757***	*F2B-SCEZ-50M-PSS*	*0.96*	*44.5*	*190.1*	*55.2*	*157.0*	*M16*	*19.4*	*14.9*	*61.9*	*114.3*

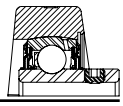

ULTRA KLEEN Mounted Bearings

SCEZ SHSS Normal Duty Stainless Steel Housed 2 Bolt Flange Bearings

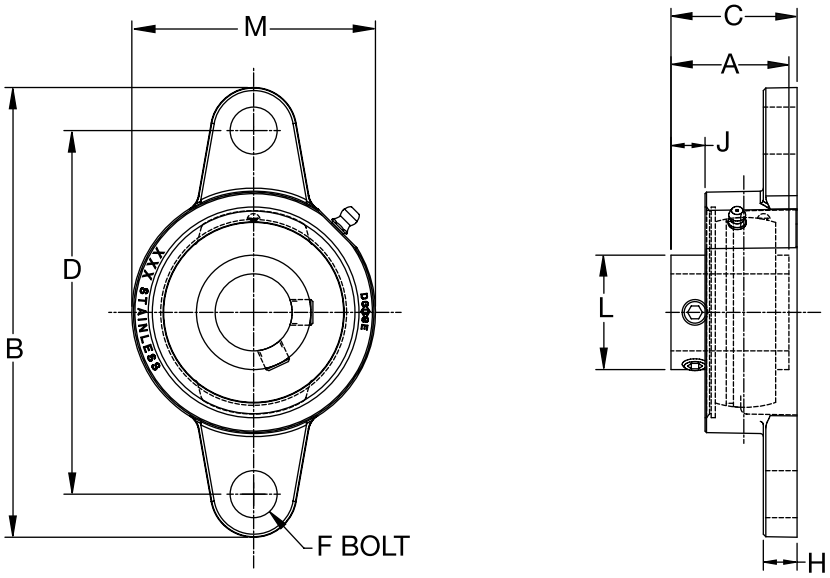

Series	Shaft Size	With Stainless Steel Insert		Weight lbs kg	A	B	C	D	F Bolt Dia.	H	J	L	M
		Part No.	Description										
204	3/4	**136793**	F2B-SCEZ-012-SHSS	0.95	1-5/32	4-3/8	1-1/4	3-17/32	3/8	21/64	11/32	1-1/8	2-3/8
	20 mm	***136861***	*F2B-SCEZ-20M-SHSS*	*0.42*	*29.4*	*111.1*	*31.8*	*89.7*	*M10*	*8.3*	*8.7*	*28.6*	*60.3*
205	1	**136794**	F2B-SCEZ-100-SHSS	1.21	1-3/16	4-57/64	1-11/32	3-57/64	3/8	23/64	3/8	1-21/64	2-5/8
	25 mm	***136862***	*F2B-SCEZ-25M-SHSS*	*0.55*	*30.2*	*124.2*	*34.1*	*98.8*	*M10*	*9.1*	*9.5*	*33.7*	*66.7*
206	1-3/16	**136795**	F2B-SCEZ-103-SHSS	1.91	1-25/64	5-33/64	1-9/16	4-19/32	3/8	23/64	27/64	1-37/64	3-1/8
	1-1/4	**136796**	F2B-SCEZ-104S-SHSS	1.87									
	30 mm	***136863***	*F2B-SCEZ-30M-SHSS*	*0.87*	*35.3*	*140.1*	*39.7*	*116.7*	*M10*	*9.1*	*10.7*	*40.1*	*79.4*
207	1-1/4	**136797**	F2B-SCEZ-104-SHSS	2.64	1-17/32	6-3/16	1-3/4	5-1/8	1/2	27/64	17/32	1-27/32	3-1/2
	1-7/16	**136798**	F2B-SCEZ-107-SHSS	2.47									
	35 mm	***136864***	*F2B-SCEZ-35M-SHSS*	*1.15*	*38.9*	*157.2*	*44.5*	*130.2*	*M12*	*10.7*	*13.5*	*46.8*	*88.9*
208	1-1/2	**136799**	F2B-SCEZ-108-SHSS	3.40	1-11/16	6-23/32	1-7/8	5-21/32	1/2	27/64	17/32	2-3/64	3-27/32
	40 mm	***136865***	*F2B-SCEZ-40M-SHSS*	*1.50*	*42.9*	*170.7*	*47.6*	*143.7*	*M12*	*10.7*	*13.5*	*52.0*	*97.6*
210	1-15/16	**136800**	F2B-SCEZ-115-SHSS	4.17	1-3/4	7-31/64	1-61/64	6-3/16	5/8	31/64	19/32	2-7/16	4-5/16
	2	**136991**	F2B-SCEZ-200-SHSS	4.13									
	50mm	***136866***	*F2B-SCEZ-50M-SHSS*	*1.87*	*44.5*	*190.1*	*49.6*	*157.2*	*M16*	*12.3*	*15.1*	*61.9*	*109.5*

ULTRA KLEEN Mounted Bearings

SCEZ PSS Normal Duty Polymer Housed Flange Bracket

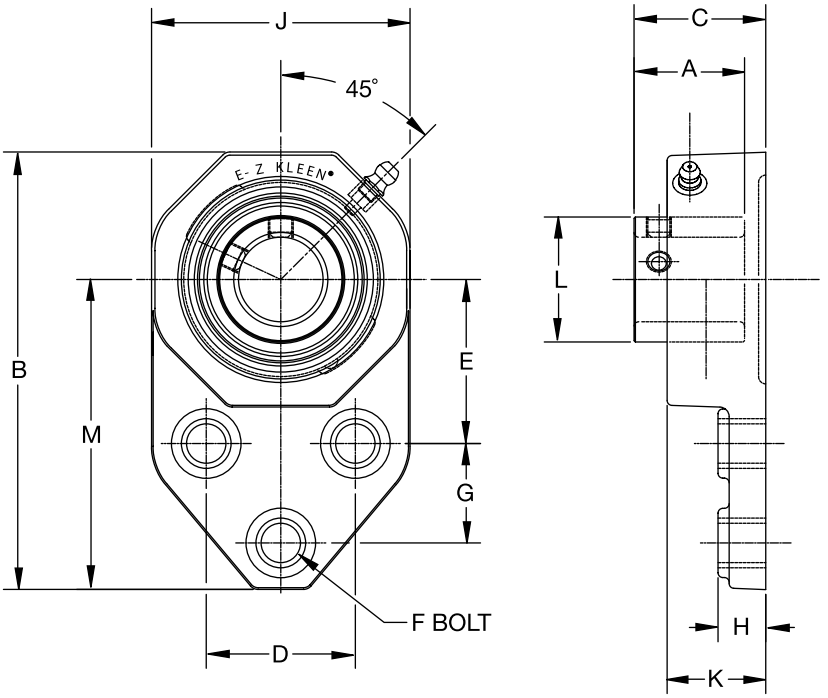

Series	Shaft Size	With Stainless Steel Insert		Weight lbs kg	A	B	C	D	E	F Bolt Dia.	G	H	I	J	K	L
		Part No.	Description													
204	3/4	**136719**	FB-SCEZ-012-PSS	0.47	1-5/32	4-25/64	1-27/64	1-1/2	1-11/16	3/8	7/8	17/32	3-3/16	2-11/32	1-1/8	1-1/8
	20 mm	***136758***	*FB-SCEZ-20M-PSS*	*0.23*	*29.4*	*111.5*	*37.3*	*38.1*	*42.9*	*M10*	*22.2*	*13.5*	*81.1*	*59.4*	*28.4*	*28.6*
205	1	**136720**	FB-SCEZ-100-PSS	0.69	1-3/16	4-29/32	1-15/32	1-5/8	1-13/16	3/8	1-1/8	35/64	3-17/32	2-23/32	1-9/64	1-21/64
	25 mm	***136759***	*FB-SCEZ-25M-PSS*	*0.32*	*30.2*	*124.6*	*40.1*	*41.3*	*46.1*	*M10*	*28.6*	*13.9*	*89.8*	*69.1*	*29.0*	*33.7*
206	1-3/16	**136721**	FB-SCEZ-103-PSS	1.07	1-25/64	5-31/64	1-21/32	1-7/8	2-1/16	3/8	1-1/4	39/64	3-57/64	3-13/64	1-1/4	1-37/64
	1-1/4	**136722**	FB-SCEZ-104S-PSS	1.05												
	30 mm	***136760***	*FB-SCEZ-30M-PSS*	*0.48*	*35.3*	*139.2*	*42.9*	*47.6*	*52.4*	*M10*	*31.8*	*15.5*	*98.6*	*81.3*	*31.8*	*40.1*
207	1-1/4	**136723**	FB-SCEZ-104-PSS	1.87	1-17/32	6-7/64	1-51/64	2	2-3/8	1/2	1-1/4	5/8	4-15/64	3-45/64	1-9/32	1-27/32
	1-7/16	**136724**	FB-SCEZ-107-PSS	1.71												
	35 mm	***136761***	*FB-SCEZ-35M-PSS*	*0.83*	*38.9*	*155.2*	*46.4*	*50.8*	*60.3*	*M12*	*31.8*	*15.9*	*107.6*	*94.1*	*32.5*	*46.8*

ULTRA KLEEN Mounted Bearings

SCEZ SHSS Normal Duty Stainless Steel Housed Flange Bracket Bearings

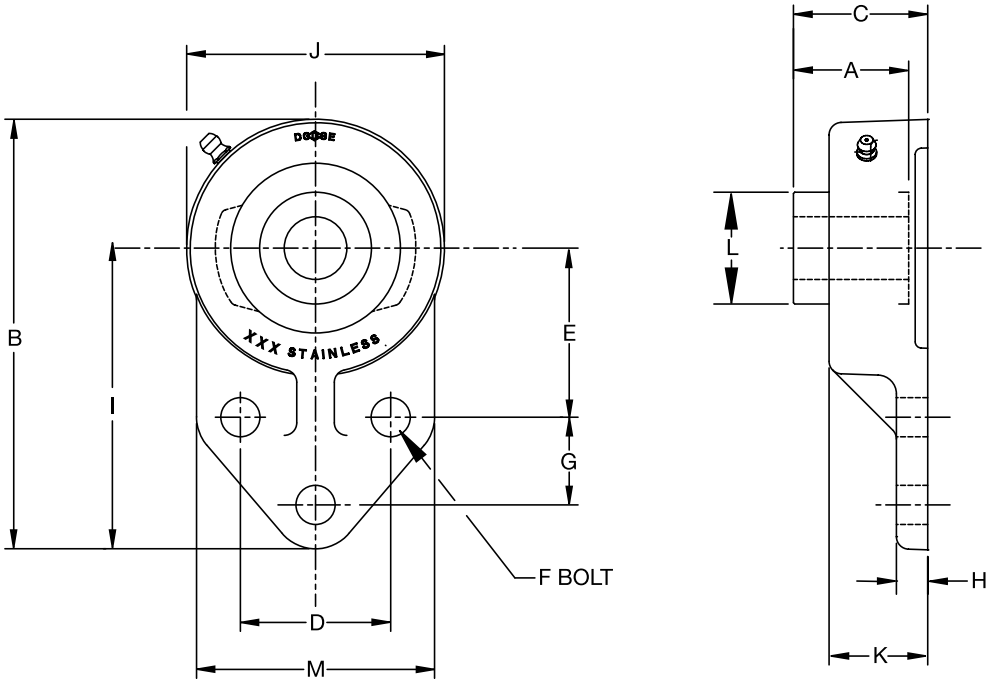

Series	Shaft Size	With Stainless Steel Insert		Weight lbs kgs	A	B	C	D	E	F Bolt Dia	G	H	I	J	K	L	M
		Part No.	Description														
204	3/4	**136801**	FB-SCEZ-012-SHSS	1.00	1-5/32	4-3/16	1-1/4	1-1/2	1-11/16	25/64	7/8	5/16	3	2-3/8	57/64	1-1/8	2-3/8
	20 mm	***136867***	*FB-SCEZ-20M-SHSS*	*.45*	*29.4*	*106.4*	*31.6*	*38.1*	*42.9*	*9.9*	*22.2*	*8.0*	*76.2*	*60.3*	*22.8*	*28.6*	*60.3*
205	1	**136802**	FB-SCEZ-100-SHSS	1.26	1-3/16	4-11/16	1-11/32	1-5/8	1-13/16	25/64	1-1/8	3/8	3-3/8	2-5/8	63/64	1-21/64	2-1/2
	25 mm	***136868***	*FB-SCEZ-25M-SHSS*	*.52*	*30.2*	*119.1*	*34.2*	*41.3*	*46.0*	*9.9*	*28.6*	*9.5*	*85.7*	*66.7*	*25.0*	*33.7*	*63.5*
206	1-3/16	**136803**	FB-SCEZ-103-SHSS	1.95	1-25/64	5-5/16	1-9/16	1-7/8	2-1/16	25/64	1-1/4	3/8	3-3/4	3-1/8	1-5/64	1-37/64	2-3/4
	1-1/4	**136804**	FB-SCEZ-104S-SHSS														
	30 mm	***136869***	*FB-SCEZ-30M-SHSS*	*.89*	*36.3*	*134.9*	*39.6*	*47.6*	*52.4*	*9.9*	*31.8*	*9.5*	*95.3*	*79.4*	*27.6*	*40.1*	*69.9*
207	1-1/4	**136805**	FB-SCEZ-104-SHSS	2.87	1-17/32	6	1-3/4	2	2-3/8	33/64	1-1/4	1/2	4-1/4	3-1/2	1-7/32	1-27/32	3-1/4
	1-7/16	**136806**	FB-SCEZ-107-SHSS														
	35 mm	***136870***	*FB-SCEZ-35M-SHSS*	*1.3*	*38.9*	*152.4*	*44.5*	*50.8*	*60.3*	*13.1*	*31.8*	*12.7*	*108.0*	*88.9*	*31.1*	*46.8*	*82.6*
210	1-15/16	**136808**	FB-SCEZ-115-SHSS	4.43	1-3/4	7-11/32	1-61/64	2-3/4	2-15/16	33/64	1-5/8	1/2	5-3/16	4-5/16	1-23/64	2-7/16	4
	2	**136992**	FB-SCEZ-200-SHSS														
	50mm	***136872***	*FB-SCEZ-50M-SHSS*	*2.01*	*44.5*	*186.5*	*49.5*	*69.9*	*74.6*	*13.1*	*41.3*	*12.7*	*131.8*	*109.5*	*34.4*	*36.5*	*101.6*

ULTRA KLEEN Mounted Bearings

SCEZ PSS Normal Duty Polymer Housed 4-Bolt Flange Bearings

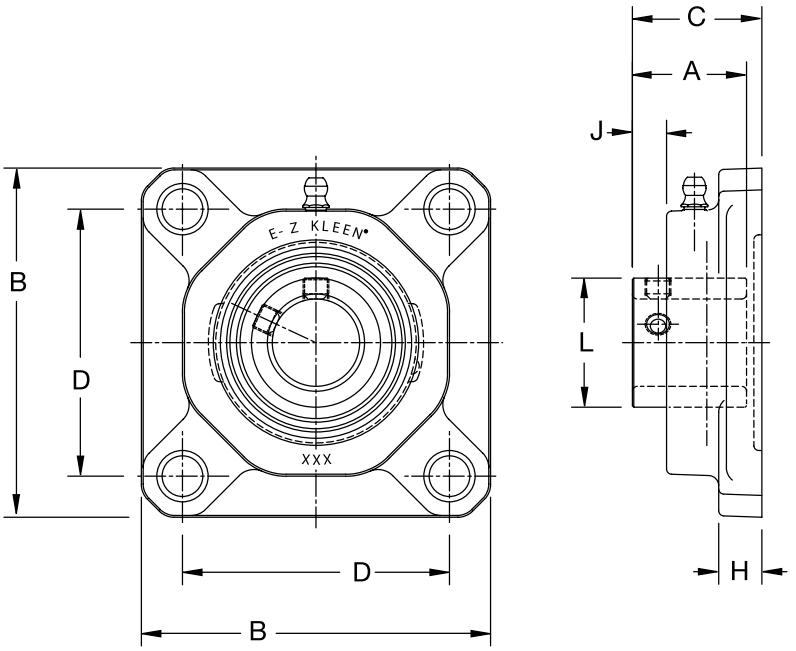

Series	Shaft Size	With Stainless Steel Insert		Weight lbs kg	A	B	C	D	F Bolt Dia.	H	J	L
		Part No.	Description									
204	3/4	**136725**	F4B-SCEZ-012-PSS	0.55	1-5/32	3-3/8	1-29/64	2-1/2	3/8	17/32	19/64	1-1/8
	20 mm	***136762***	*F4B-SCEZ-20M-PSS*	*0.27*	*29.4*	*85.9*	*36.8*	*63.5*	*M10*	*13.5*	*7.6*	*28.6*
205	1	**136726**	F4B-SCEZ-100-PSS	0.67	1-3/16	3-3/4	1-1/2	2-3/4	3/8	35/64	21/64	1-21/64
	25 mm	***136763***	*F4B-SCEZ-25M-PSS*	*0.32*	*30.2*	*95.3*	*38.1*	*70.0*	*M10*	*13.9*	*8.4*	*33.7*
206	1-3/16	**136727**	F4B-SCEZ-103-PSS	0.86	1-25/64	4-1/4	1-11/16	3-1/4	3/8	39/64	27/64	1-37/64
	1-1/4	**136728**	F4B-SCEZ-104S-PSS	0.84								
	30 mm	***136764***	*F4B-SCEZ-30M-PSS*	*0.39*	*35.3*	*108.1*	*42.8*	*82.5*	*M10*	*15.5*	*10.6*	*40.1*
207	1-1/4	**136729**	F4B-SCEZ-104-PSS	1.40	1-17/32	4-21/32	1-53/64	3-5/8	1/2	5/8	33/64	1-27/32
	1-7/16	**136730**	F4B-SCEZ-107-PSS	1.24								
	35 mm	***136765***	*F4B-SCEZ-35M-PSS*	*0.61*	*38.9*	*118.1*	*46.5*	*92.0*	*M12*	*15.9*	*13.2*	*46.8*
208	1-1/2	**136731**	F4B-SCEZ-108-PSS	1.82	1-11/16	5-1/8	2	4	1/2	43/64	33/64	2-3/64
	40 mm	***136766***	*F4B-SCEZ-40M-PSS*	*0.76*	*42.9*	*130.0*	*50.9*	*101.5*	*M12*	*16.9*	*13.3*	*52.0*
209	1-11/16	**136732**	F4B-SCEZ-111-PSS	2.00	1-23/32	5-3/8	2-1/32	4-1/8	9/16	23/32	9/16	2-7/32
	1-3/4	**127609**	F4B-SCEZ-112-PSS									
	45 mm	***136767***	*F4B-SCEZ-45M-PSS*	*0.88*	*43.7*	*136.7*	*51.7*	*105.0*	*M14*	*18.2*	*14.1*	*56.4*
210	1-15/16	**136733**	F4B-SCEZ-115-PSS	2.12	1-3/4	5-5/8	2-13/64	4-3/8	5/8	49/64	19/32	2-7/16
	2	**136988**	F4B-SCEZ-200-PSS	2.03								
	50mm	***136768***	*F4B-SCEZ-50M-PSS*	*0.96*	*44.5*	*142.7*	*56.0*	*111.0*	*M16*	*19.3*	*15.1*	*61.9*

ULTRA KLEEN Mounted Bearings

SCEZ SHSS Normal Duty Stainless Steel Housed 4-Bolt Flange Bearings

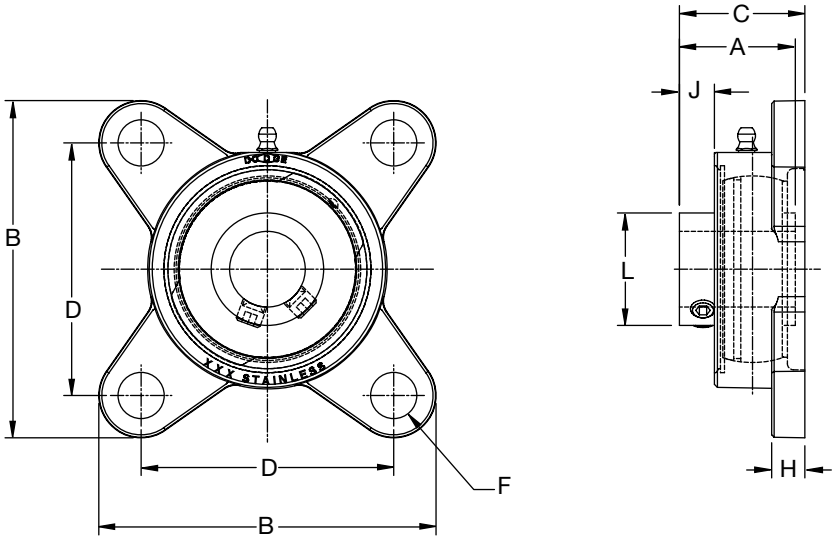

Series	Shaft Size	With Stainless Steel Insert		Weight lbs kg	A	B	C	D	F Bolt Dia.	H	J	L
		Part No.	Description									
204	3/4	**136825**	F4B-SCEZ-012-SHSS	1.08	1-5/32	3-11/32	1-1/4	2-1/2	3/8	21/64	11/32	1-1/8
	20 mm	***136885***	*F4B-SCEZ-20M-SHSS*	*0.49*	*29.4*	*84.9*	*31.8*	*63.5*	*M10*	*8.3*	*8.7*	*28.6*
205	1	**136826**	F4B-SCEZ-100-SHSS	1.39	1-3/16	3-3/4	1-11/32	2-3/4	3/8	23/64	3/8	1-21/64
	25 mm	***136886***	*F4B-SCEZ-25M-SHSS*	*0.63*	*30.2*	*95.3*	*34.1*	*69.9*	*M10*	*9.1*	*9.5*	*33.7*
206	1-3/16	**136827**	F4B-SCEZ-103-SHSS	2.09	1-25/64	4-5/32	1-9/16	3-1/4	3/8	23/64	27/64	1-37/64
	1-1/4	**136829**	F4B-SCEZ-104S-SHSS	2.05								
	30 mm	***136887***	*F4B-SCEZ-30M-SHSS*	*0.95*	*35.3*	*105.6*	*39.7*	*82.6*	*M10*	*9.1*	*10.7*	*40.1*
207	1-1/4	**136828**	F4B-SCEZ-104-SHSS	2.95	1-17/32	4-11/16	1-3/4	3-5/8	1/2	27/64	17/32	1-27/32
	1-7/16	**136830**	F4B-SCEZ-107-SHSS	2.78								
	35 mm	***136888***	*F4B-SCEZ-35M-SHSS*	*1.29*	*38.9*	*119.1*	*44.5*	*92.1*	*M12*	*10.7*	*13.5*	*46.8*
208	1-1/2	**136831**	F4B-SCEZ-108-SHSS	3.70	1-11/16	5-1/16	1-7/8	4	1/2	27/64	17/32	2-3/64
	40 mm	***136889***	*F4B-SCEZ-40M-SHSS*	*1.64*	*42.9*	*128.6*	*47.6*	*101.6*	*M12*	*10.7*	*13.5*	*52.0*
210	1-15/16	**136832**	F4B-SCEZ-115-SHSS	4.60	1-3/4	5-43/64	1-61/64	4-3/8	5/8	31/64	19/32	2-7/16
	2	**136993**	F4B-SCEZ-200-SHSS	4.56								
	50mm	***136890***	*F4B-SCEZ-50M-SHSS*	*2.07*	*44.5*	*144.1*	*49.6*	*111.1*	*M16*	*12.3*	*15.1*	*61.9*

ULTRA KLEEN Mounted Bearings

SCEZ PSS Normal Duty Polymer Housed Wide Slot Take-Up Bearings

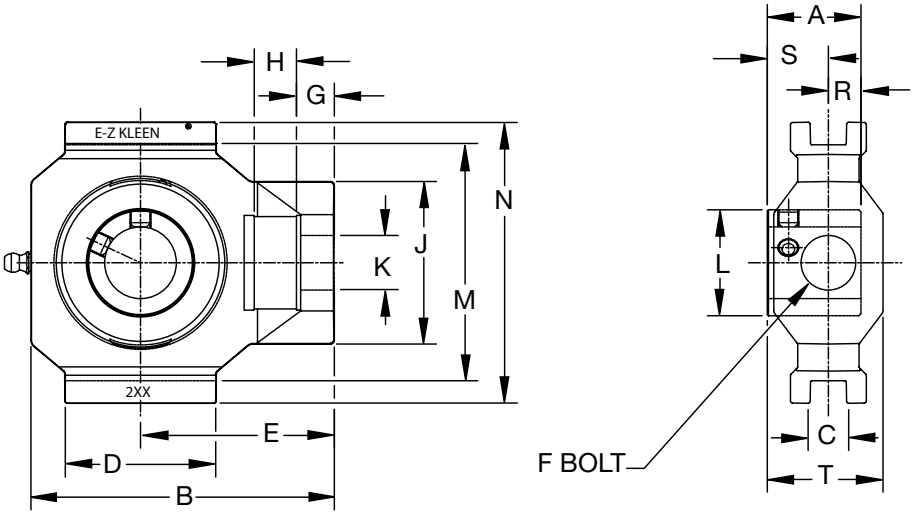

Series	Shaft Size	With Stainless Steel Insert		Weight lbs kg	Take-Up Frame No. Ref.	A	B	C**	D	E	F Thd Shaft	G
		Part No.	Description									
204	3/4	**136734**	WSTU-SCEZ-012-PSS	0.66	WS300	1-5/32	3-13/16	17/32	2	2-1/2	5/8	1/2
	20 mm	***136769***	*WSTU-SCEZ-20M-PSS*	*0.31*		*29.4*	*96.8*	*13.5*	*50.8*	*63.5*	*15.9*	*12.7*
205	1	**136735**	WSTU-SCEZ-100-PSS	0.72	WS300	1-3/16	3-15/16	17/32	2	2-9/16	5/8	1/2
	25 mm	***136770***	*WSTU-SCEZ-25M-PSS*	*0.34*		*30.2*	*100.0*	*13.5*	*50.8*	*65.1*	*15.9*	*12.7*
206	1-3/16	**136736**	WSTU-SCEZ-103-PSS		WS308	1-25/64	4-1/2	17/32	2-1/4	2-7/8	3/4	1/2
	1-1/4	**136737**	WSTU-SCEZ-104S-PSS	1.07								
	30 mm	***136771***	*WSTU-SCEZ-30M-PSS*	*0.49*		*35.3*	*114.3*	*13.5*	*57.2*	*73.0*	*19.1*	*12.7*
207	1-1/4	**136738**	WSTU-SCEZ-104-PSS	1.58	WS308	1-17/32	4-15/16	17/32	2-1/4	3-1/8	3/4	1/2
	1-7/16	**136739**	WSTU-SCEZ-107-PSS	1.42								
	35 mm	***136772***	*WSTU-SCEZ-35M-PSS*	*0.69*		*38.9*	*125.4*	*13.5*	*57.2*	*79.4*	*19.1*	*12.7*

Series	Shaft Size	With Stainless Steel Insert		H	J	K	L	M**	N	R	S	T
		Part No.	Description									
204	3/4	**136734**	WSTU-SCEZ-012-PSS	5/8	2 -3/32	1-9/64	1-1/8	3	3 -5/8	27/64	47/64	1-3/8
	20 mm	***136769***	*WSTU-SCEZ-20M-PSS*	*15.9*	*53.2*	*29.0*	*28.6*	*76.2*	*92.1*	*10.7*	*18.7*	*35.1*
205	1	**136735**	WSTU-SCEZ-100-PSS	5/8	2-1/8	1-9/64	1-21/64	3	3 -5/8	27/64	49/64	1-3/8
	25 mm	***136770***	*WSTU-SCEZ-25M-PSS*	*15.9*	*54.0*	*29.0*	*33.7*	*76.2*	*92.1*	*10.7*	*19.4*	*35.1*
206	1-3/16	**136736**	WSTU-SCEZ-103-PSS	5/8	2-3/8	1-3/8	1-37/64	3-1/2	4 -1/4	31/64	29/32	1-5/8
	1-1/4	**136737**	WSTU-SCEZ-104S-PSS									
	30 mm	***136771***	*WSTU-SCEZ-30M-PSS*	*15.9*	*60.3*	*34.9*	*40.1*	*88.9*	*108.0*	*12.3*	*23.0*	*41.1*
207	1-1/4	**136738**	WSTU-SCEZ-104-PSS	5/8	2-27/64	1-3/8	1-27/32	3-1/2	4 -1/4	32/64	1 -1/32	1-5/8
	1-7/16	**136739**	WSTU-SCEZ-107-PSS									
	35 mm	***136772***	*WSTU-SCEZ-35M-PSS*	*15.9*	*61.5*	*34.9*	*46.8*	*88.9*	*108.0*	*12.7*	*26.2*	*41.1*

** + or - .020” + or - .50 mm

ULTRA KLEEN Mounted Bearings

SCEZ SHSS Normal Duty Stainless Steel Housed Wide Slot Take-Up Bearings

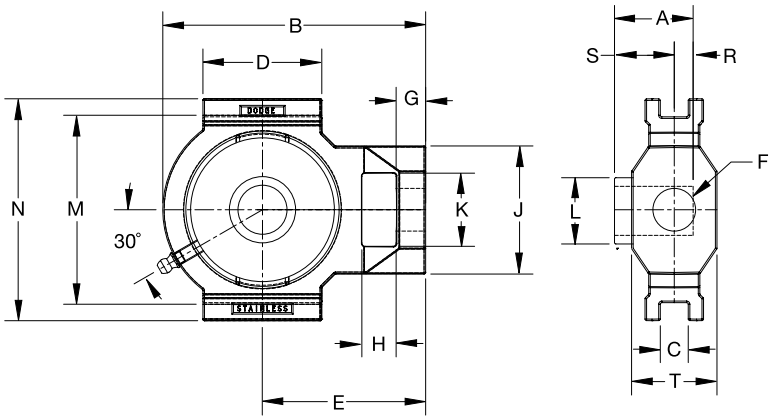

Series	Shaft Size	Standard Part No.	Standard Description	Weight lbs. kg	Take-Up Frame No. Ref.	A	B	C*	D	E	F Screw Dia	G
204	3/4	**136841**	WSTU-SCEZ-012-SHSS	2.14	WS300	1-5/32	3-31/32	17/32	2-13/64	2-9/16	45/64	9/16
	20mm	***136897***	*WSTU-SCEZ-20M-SHSS*	*.97*		*29.2*	*100.8*	*13.5*	*55.9*	*65*	*18.0*	*14.2*
205	1	**136842**	WSTU-SCEZ-100-SHSS	2.03	WS300	1-21/64	3-31/32	17/32	2-7/32	2-9/16	45/64	9/16
	25mm	***136898***	*WSTU-SCEZ-25M-SHSS*	*.92*		*33.6*	*100.8*	*13.5*	*55.9*	*65.0*	*18.0*	*14.2*
206	1-3/16	**136843**	WSTU-SCEZ-103-SHSS	3.36	WS308	1-25/64	5	17/32	2-17/64	2-3/32	13/16	9/16
	1-1/4	**136844**	WSTU-SCEZ-104S-SHSS									
	30mm	***136899***	*WSTU-SCEZ-30M-SHSS*	*1.52*		*35.3*	*126.8*	*13.5*	*57.4*	*78.6*	*20.6*	*14.2*
207	1-1/4	**136845**	WSTU-SCEZ-104-SHSS	3.21	WS308	1-17/32	4-63/64	17/32	2-17/64	3-3/32	13/16	9/16
	1-7/16	**136846**	WSTU-SCEZ-107-SHSS									
	35mm	***136900***	*WSTU-SCEZ-35M-SHSS*	*1.46*		*39.0*	*126.8*	*13.5*	*57.4*	*78.6*	*20.6*	*14.2*
208	1-1/2	**136847**	WSTU-SCEZ-108-SHSS	4.52	WS400	1-11/16	5-5/8	11/16	3-1/4	3-1/2	1-1/8	5/8
	40mm	***136901***	*WSTU-SCEZ-40M-SHSS*	*2.1*		*42.7*	*142.9*	*17.5*	*82.6*	*88.9*	*25.6*	*15.9*
210	1-15/16	**136848**	WSTU-SCEZ-115-SHSS	4.03	WS400	1-3/4	5-5/8	11/16	3-1/4	3-1/2	1-1/8	5/8
	2	**136995**	WSTU-SCEZ-200-SHSS									
	50mm	***136902***	*WSTU-SCEZ-50M-SHSS*	*1.83*		*44.3*	*142.9*	*17.5*	*82.6*	*88.9*	*28.6*	*15.9*

*+/- .015" +/- .38mm #+.010", -.020" +.25mm, -.50mm

Series	Shaft Size	Standard Part No.	Standard Description	H	J	K	L	M#	N	R	S	T
204	3/4	**136841**	WSTU-SCEZ-012-SHSS	21/32	2-1/8	1-9/64	1-7/64	3	3-5/8	27/64	23/32	1-3/8
	20mm	***136897***	*WSTU-SCEZ-20M-SHSS*	*16.5*	*53.9*	*29.1*	*28.3*	*76.5*	*92.2*	*10.8*	*18.4*	*35.1*
205	1	**136842**	WSTU-SCEZ-100-SHSS	21/32	2-1/8	1-9/64	1-21/64	3	3-5/8	9/16	49/64	1-3/8
	25mm	***136898***	*WSTU-SCEZ-25M-SHSS*	*16.5*	*53.9*	*29.1*	*33.6*	*76.5*	*92.2*	*14.3*	*19.3*	*35.1*
206	1-3/16	**136843**	WSTU-SCEZ-103-SHSS	21/32	2-7/16	1-25/64	1-37/64	3-17/32	4-13/64	31/64	29/32	1-5/8
	1-1/4	**136844**	WSTU-SCEZ-104S-SHSS									
	30mm	***136899***	*WSTU-SCEZ-30M-SHSS*	*16.5*	*61.7*	*35.2*	*39.9*	*89.5*	*106.7*	*12.3*	*23.0*	*41.2*
207	1-1/4	**136845**	WSTU-SCEZ-104-SHSS	21/32	2-7/16	1-25/64	1-27/32	3-17/32	4-13/64	1/2	1-1/32	1-5/8
	1-7/16	**136846**	WSTU-SCEZ-107-SHSS									
	35mm	***136900***	*WSTU-SCEZ-35M-SHSS*	*16.5*	*61.7*	*35.2*	*46.8*	*89.5*	*106.7*	*12.8*	*26.2*	*41.2*
208	1-1/2	**136847**	WSTU-SCEZ-108-SHSS	3/4	2-3/4	1-15/16	2-3/64	4	4-1/2	19/32	1-3/32	1-5/8
	40mm	***136901***	*WSTU-SCEZ-40M-SHSS*	*19.1*	*69.9*	*49.2*	*52.1*	*101.6*	*114.3*	*14.9*	*27.8*	*41.2*
210	1-15/16	**136848**	WSTU-SCEZ-115-SHSS	3/4	2-3/4	1-15/16	2-27/64	4	4-1/2	19/32	1-5/32	1-5/8
	2	**136995**	WSTU-SCEZ-200-SHSS									
	50mm	***136902***	*WSTU-SCEZ-50M-SHSS*	*19.1*	*69.9*	*49.2*	*61.7*	*101.6*	*114.3*	*14.9*	*29.4*	*41.2*

*+/- .015" +/- .38mm #+.010", -.020" +.25mm, -.50mm

ULTRA KLEEN Mounted Bearings

SCEZ SHSS Normal Duty Stainless Steel Housed Narrow Slot Take-Up Bearings

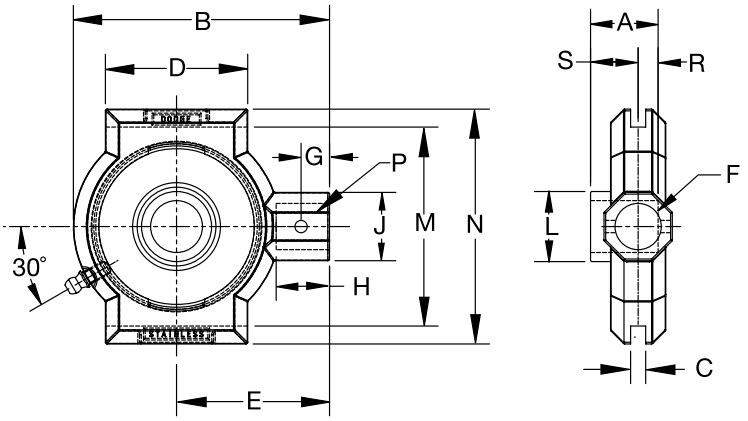

Series	Shaft Size	Standard Part No.	Standard Description	Weight lbs. kg	Take-Up Frame No. Ref.	A	B	C*	D	E	F Screw Dia	G
204	3/4	**136833**	NSTU-SCEZ-012-SHSS	1.16	NS210	1-7/64	3-31/64	17/64	1-1/2	2-3/16	13/16	7/16
	20mm	***136891***	*NSTU-SCEZ-20M-SHSS*	*.53*		*28.3*	*88.6*	*6.7*	*38.1*	*55.6*	*20.6*	*11.1*
205	1	**136834**	NSTU-SCEZ-100-SHSS	1.06	NS210	1-3/16	3-31/64	17/64	1-1/2	2-3/16	13/16	7/16
	25mm	***136892***	*NSTU-SCEZ-25M-SHSS*	*.48*		*30.1*	*88.6*	*6.7*	*38.1*	*55.6*	*20.6*	*11.1*
206	1-3/16	**136835**	NSTU-SCEZ-103-SHSS	2.51	NS308	1-25/64	4-1/2	17/64	2-1/2	2-11/16	15/16	1/2
	1-1/4	**136836**	NSTU-SCEZ-104S-SHSS									
	30mm	***136893***	*NSTU-SCEZ-30M-SHSS*	*1.14*		*35.3*	*114.3*	*6.7*	*63.5*	*68.3*	*20.6*	*12.7*
207	1-1/4	**136837**	NSTU-SCEZ-104-SHSS	2.65	NS308	1-17/32	4-1/2	17/64	2-1/2	2-11/16	13/16	1/2
	1-7/16	**136838**	NSTU-SCEZ-107-SHSS									
	35mm	***136894***	*NSTU-SCEZ-35M-SHSS*	*1.20*		*39.0*	*114.3*	*6.7*	*63.5*	*68.3*	*20.6*	*12.7*
208	1-1/2	**136839**	NSTU-SCEZ-108-SHSS	4.08	NS400	1-11/16	5-3/8	21/64	3	3-1/4	15/16	21/32
	40mm	***136895***	*NSTU-SCEZ-40M-SHSS*	*1.85*		*42.7*	*136.5*	*8.3*	*76.2*	*82.6*	*23.8*	*16.7*
210	1-15/16	**136840**	NSTU-SCEZ-115-SHSS	3.79	NS400	1-3/4	5-1/2	21/64	3	3-1/4	15/16	21/32
	2	**136994**	NSTU-SCEZ-200-SHSS									
	50mm	***136896***	*NSTU-SCEZ-50M-SHSS*	*1.72*		*44.3*	*139.7*	*8.3*	*76.2*	*82.6*	*23.8*	*16.7*

*+/- .015" +/- .38mm #+.010", -.020" +.25mm, -.50mm

Series	Shaft Size	Standard Part No.	Standard Description	H	J	L	M #	N	Pin Dia	R	S
204	3/4	**136833**	NSTU-SCEZ-012-SHSS	7/8	1-1/8	1-7/64	2-5/8	3-1/8	5/16	7/16	49/64
	20mm	***136891***	*NSTU-SCEZ-20M-SHSS*	*22.2*	*30.5*	*28.3*	*66.6*	*79.4*	*8.0*	*11*	*19.3*
205	1	**136834**	NSTU-SCEZ-100-SHSS	7/8	1-1/8	1-21/64	2-5/8	3-1/8	5/16	27/64	49/64
	25mm	***136892***	*NSTU-SCEZ-25M-SHSS*	*22.2*	*30.5*	*33.6*	*66.5*	*79.4*	*8.0*	*10.8*	*19.3*
206	1-3/16	**136835**	NSTU-SCEZ-103-SHSS	15/16	1-1/8	1-37/64	3-1/2	4-1/8	5/16	31/64	29/32
	1-1/4	**136836**	NSTU-SCEZ-104S-SHSS								
	30mm	***136893***	*NSTU-SCEZ-30M-SHSS*	*23.8*	*30.5*	*39.9*	*88.8*	*104.8*	*8.0*	*12.3*	*23.0*
207	1-1/4	**136837**	NSTU-SCEZ-104-SHSS	15/16	1-1/8	1-27/32	3-1/2	4-1/8	5/16	1/2	1-1/32
	1-7/16	**136838**	NSTU-SCEZ-107-SHSS								
	35mm	***136894***	*NSTU-SCEZ-35M-SHSS*	*23.8*	*30.5*	*46.8*	*88.8*	*104.8*	*8.0*	*12.8*	*26.2*
208	1-1/2	**136839**	NSTU-SCEZ-108-SHSS	1-5/32	1-1/2	2-3/64	4	4-3/4	3/8	19/32	1-1/32
	40mm	***136895***	*NSTU-SCEZ-40M-SHSS*	*29.4*	*38.1*	*52.1*	*101.6*	*120.7*	*9.6*	*14.9*	*27.8*
210	1-15/16	**136840**	NSTU-SCEZ-115-SHSS	1-5/32	1-1/2	2-27/64	4	4-3/4	3/8	19/32	1-5/32
	2	**136994**	NSTU-SCEZ-200-SHSS								
	50mm	***136896***	*NSTU-SCEZ-50M-SHSS*	*29.4*	*38.1*	*61.7*	*101.6*	*120.7*	*9.6*	*14.9*	*29.4*

*+/- .015" +/- .38mm #+.010", -.020" +.25mm, -.50mm

ULTRA KLEEN Mounted Bearings

SCEZ SHSS Normal Duty Stainless Steel Housed 3-Bolt Flange Bearings

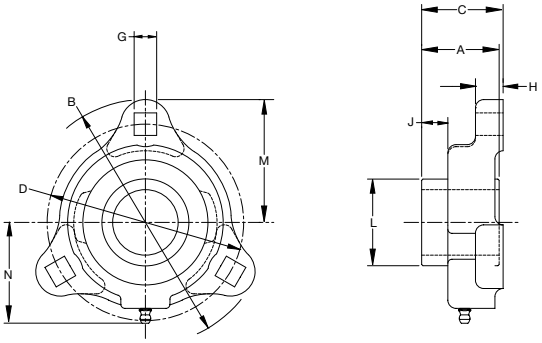

Series	Shaft Size	Standard Part No.	Standard Description	Weight lbs kg	A	B	C	D	G	H	J	L	M	N
204	3/4	**136809**	LF-SCEZ-012-SHSS	.64	1-5/32	3-9/16	1-7/32	2-13/16	11/32	27/64	3/8	1-1/8	1-25/32	1-35/64
	20 mm	***136873***	*LF-SCEZ-20M-SHSS*	*.29*	*29.4*	*90.5*	*30.8*	*71.4*	*8.7*	*10.7*	*9.4*	*28.6*	*45.3*	*39.3*
205	1	**136810**	LF-SCEZ-100-SHSS	.80	1-3/16	3-3/4	1-1/4	3	11/32	27/64	3/8	1-21/64	1-7/8	1-43/64
	25 mm	***136874***	*LF-SCEZ-25M-SHSS*	*.36*	*30.2*	*95.3*	*31.7*	*76.2*	*8.7*	*10.7*	*9.5*	*33.7*	*47.7*	*42.4*
206	1-3/16	**136811**	LF-SCEZ-103-SHSS	1.09	1-25/64	4-7/16	1-15/32	3-9/16	13/32	15/32	15/32	1-37/64	2-7/32	1-63/64
	1-1/4	**136812**	LF-SCEZ-104S-SHSS											
	30 mm	***136875***	*LF-SCEZ-30M-SHSS*	*.54*	*35.3*	*112.7*	*37.1*	*90.5*	*10.3*	*11.9*	*12.1*	*40.1*	*56.4*	*50.4*
207	1-1/4	**136813**	LF-SCEZ-104-SHSS	1.73	1-17/32	4-13/16	1-19/32	3-15/16	13/32	1/2	17/32	1-27/32	2-13/64	2-3/32
	1-7/16	**136814**	LF-SCEZ-107-SHSS											
	35 mm	***136876***	*LF-SCEZ-35M-SHSS*	*.79*	*38.9*	*122.2*	*40.6*	*100.0*	*10.3*	*12.7*	*13.6*	*46.8*	*61.1*	*53.1*

SCEZ SHSS Normal Duty Stainless Steel Housed 2-Bolt Flange Bearings

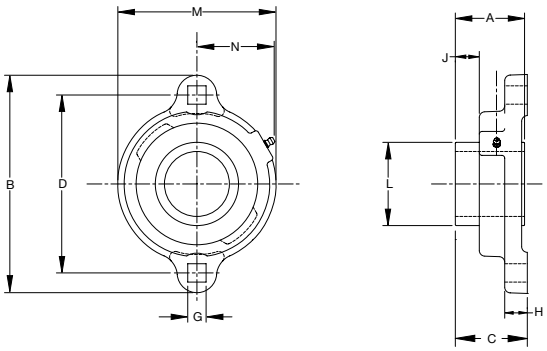

Series	Shaft Size	Standard Part No.	Standard Description	Weight lbs kg	A	B	C	D	G	H	J	L	M	N
204	3/4	**136817**	LFT-SCEZ-012-SHSS	.68	1-5/32	3-9/16	1-7/32	2-13/16	11/32	27/64	3/8	1-1/8	2-3/8	1-11/32
	20 mm	***136879***	*LFT-SCEZ-20M-SHSS*	*.31*	*29.4*	*90.5*	*30.8*	*71.5*	*8.7*	*10.7*	*9.4*	*28.6*	*60.4*	*34.1*
205	1	**136818**	LFT-SCEZ-100-SHSS	.84	1-3/16	3-3/4	1-14	3	11/32	27/64	3/8	1-21/64	2-5/8	1-7/16
	25 mm	***136880***	*LFT-SCEZ-25M-SHSS*	*.38*	*30.2*	*95.3*	*31.7*	*76*	*8.7*	*10.7*	*9.5*	*33.7*	*66.6*	*36.5*
206	1-3/16	**136819**	LFT-SCEZ-103-SHSS	1.88	1-25/64	4-7/16	1-15/32	3-9/16	13/32	15/32	15/32	1-37/64	3-1/4	1-23/32
	1-1/4	**136820**	LFT-SCEZ-104S-SHSS											
	30 mm	***136881***	*LFT-SCEZ-30M-SHSS*	*.85*	*35.3*	*112.7*	*37.1*	*90.5*	*10.3*	*11.9*	*12.1*	*40.1*	*82.6*	*43.7*
207	1-1/4	**136821**	LFT-SCEZ-104-SHSS	1.77	1-17/32	4-13/16	1-19/32	3-15/16	13/32	1/2	17/32	1-27/32	3-1/2	1-53/64
	1-7/16	**136822**	LFT-SCEZ-107-SHSS											
	35 mm	***136882***	*LFT-SCEZ-35M-SHSS*	*.80*	*38.9*	*122.2*	*40.6*	*100.0*	*10.3*	*12.7*	*13.6*	*46.8*	*89.0*	*46.4*

ULTRA KLEEN Mounted Bearings

SC Normal Duty Bearing Stainless Steel Inserts For Ultra Kleen Bearings

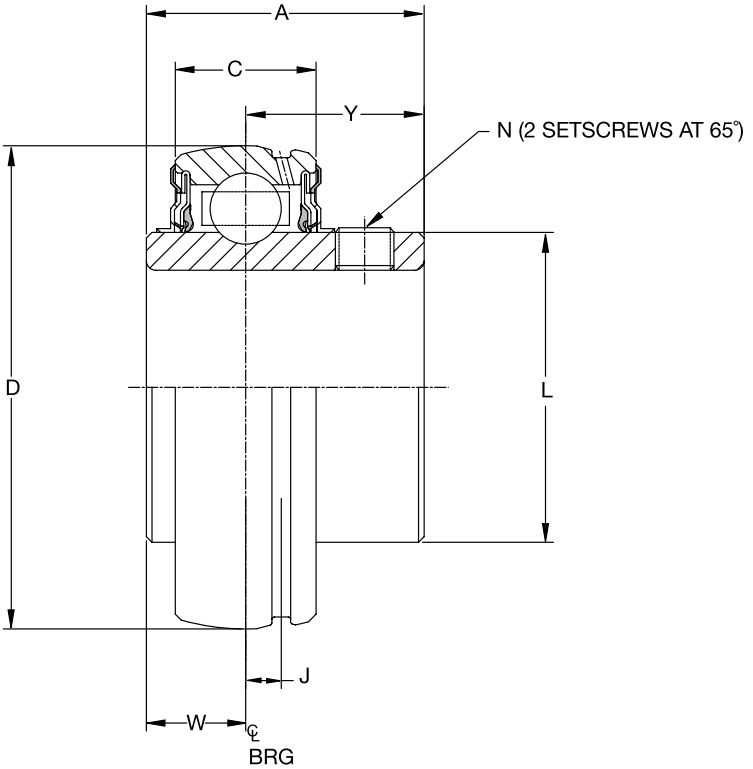

Series	Shaft Size	Stainless Steel Insert Part No.	Stainless Steel Insert Description	Weight lbs kg	A	C	D	J	L	N	W	Y
204	3/4	**127818**	INS-SC-012-SS	.32	1-5/32	.5906	1.8504	.152	1-1/8	10-32	27/64	47/64
	20 mm	***127861***	*INS-SC-20M-SS*	*.16*	*29.4*	*15.0*	*47.0*	*3.9*	*28.6*	*M6 x 1*	*10.7*	*18.7*
205	1	**127819**	INS-SC-100-SS	.37	1-3/16	.5906	2.0472	.152	1-21/64	¼-28	27/64	49/64
	25 mm	***127862***	*INS-SC-25M-SS*	*.18*	*30.2*	*15.0*	*52.0*	*3.9*	*33.7*	*M6 x 1*	*10.7*	*19.4*
206	1-3/16	**127820**	INS-SC-103-SS	.60	1-25/64	.7087	2.4409	.190	1-37/64	5/16-24	31/64	29/32
	1-1/4	**127821**	INS-SC-104S-SS	.58								
	30 mm	***127863***	*INS-SC-30M-SS*	*.27*	*35.3*	*18.0*	*62.0*	*4.8*	*40.1*	*M8 x 1.25*	*12.3*	*23.0*
207	1-1/4	**127822**	INS-SC-104-SS	1.02	1-17/32	.7480	2.8346	.202	1-27/32	5/16-24	1/2	1-1/32
	1-7/16	**127823**	INS-SC-107-SS	.86								
	35 mm	***127864***	*INS-SC-35M-SS*	*.44*	*38.9*	*19.0*	*72.0*	*5.1*	*46.8*	*M8 x 1.25*	*12.7*	*26.2*
208	1-1/2	**127824**	INS-SC-108-SS	1.27	1-11/16	.8661	3.1496	.224	2-3/64	5/16-24	19/32	1-3/32
	40 mm	***127865***	*INS-SC-40M-SS*	*.51*	*42.9*	*22.0*	*80.0*	*5.7*	*52.0*	*M8 x 1.25*	*15.1*	*27.8*
209	1-11/16	**127825**	INS-SC-111-SS	1.43	1-23/32	.8661	3.3465	.248	2-7/32	5/16-24	19/32	1-1/8
	1-3/4	**127804**	INS-SC-112-SS	1.43								
	45 mm	***127866***	*INS-SC-45M-SS*	*.62*	*43.7*	*22.0*	*85.0*	*6.3*	*56.4*	*M8 x 1.25*	*15.1*	*28.6*
210	1-15/16	**127826**	INS-SC-115-SS	1.48	1-3/4	.8661	3.5433	.248	2-7/16	3/8-24	19/32	1-5/32
	2	**127808**	INS-SC-200-SS	1.39								
	50 mm	***127867***	*INS-SC-50M-SS*	*.67*	*44.5*	*22.0*	*90.0*	*6.3*	*61.9*	*M10 x 1.5*	*15.1*	*29.4*

E-Z KLEEN/ULTRA KLEEN Mounted Bearings
Polymer and Stainless Steel Housed Mounted Bearings
End Closures

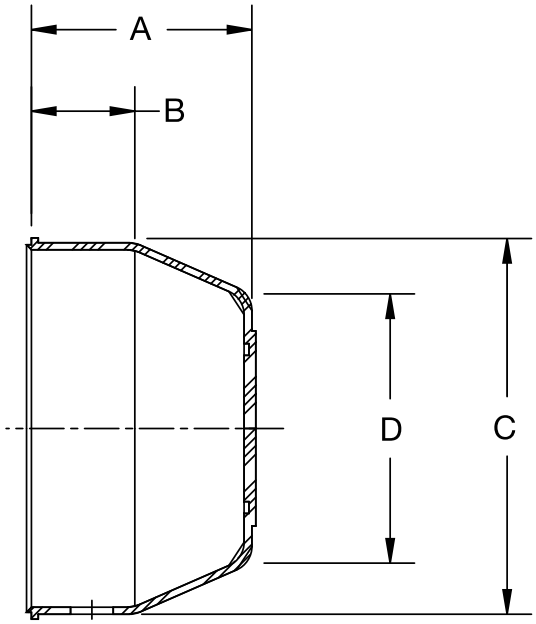

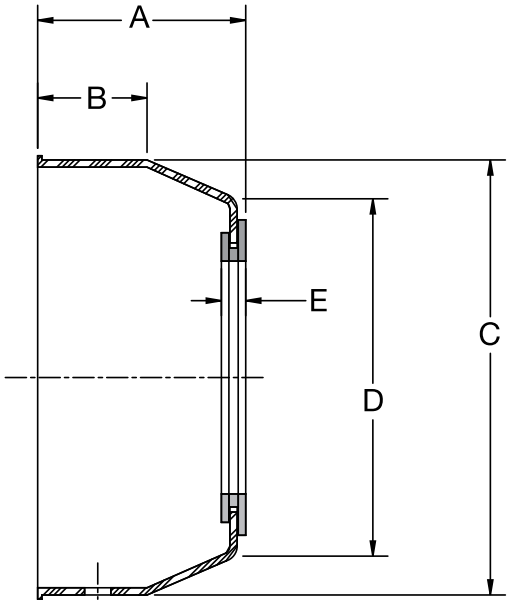

Series	For Shaft Size	Closed End Closure Part Number	Description	A	B	C	D	Open End Closure Part Number	Description	A	B	C	D	E
204	3/4	**128960**	ECC-EZ-204	1-1/8	17/32	1-29/32	1-3/8	**128974**	ECO-EZ-012	1-3/16	17/32	1-29/32	1-3/8	3/16
	20mm			*28.7*	*13.5*	*48.4*	*35.1*	***128991***	*ECO-EZ-20M*	*30.2*	*13.5*	*48.4*	*35.1*	*4.9*
205	1	**128961**	ECC-EZ-205	3/16	17/32	2-11/64	1-39/64	**128975**	ECO-EZ-100	1-1/4	17/32	2-11/64	1-39/64	3/16
	25mm			*30.2*	*13.5*	*55.1*	*40.9*	***128992***	*ECO-EZ-25M*	*35.3*	*14.2*	*63.5*	*50.0*	*4.9*
206	1-3/16 1-1/4	**128962**	ECC-EZ-206	1-21/64	9/16	2-1/2	31/32	**128976** **128989**	ECO-EZ-103 ECO-EZ-104S	1-25/64	9/16	2-1/2	31/32	3/16
	30mm			*33.8*	*14.2*	*63.5*	*50.0*	***128993***	*ECO-EZ-30M*	*35.3*	*14.2*	*63.5*	*50.0*	*4.9*
207	1-1/4 1-7/16	**128963**	ECC-EZ-207	1-15/32	11/16	2-29/32	2-5/16	**128977** **128990**	ECO-EZ-104 ECO-EZ-107	1-17/32	11/16	2-29/32	2-5/16	3/16
	35mm			*37.3*	*17.5*	*73.9*	*58.9*	***128994***	*ECO-EZ-35M*	*38.9*	*17.5*	*73.9*	*58.9*	*4.9*
208	1-1/2	**128964**	ECC-EZ-208	1-35/64	11/16	3-5/16	2-49/64	**128978**	ECO-EZ-108	1-19/32	11/16	3-5/16	2-49/64	13/64
	40mm			*39.1*	*17.5*	*84.1*	*70.1*	***128996***	*ECO-EZ-40M*	*40.6*	*17.5*	*84.1*	*70.1*	*5.1*
209	1-11/16 1-3/4	**128965**	ECC-EZ-209	1-19/32	23/32	3-1/2	2-7/8	**@**	ECO-EZ-111	1-21/32	23/32	3-1/2	2-7/8	13/64
	45mm			*40.4*	*18.3*	*88.9*	*72.9*	***@***	*ECO-EZ-45M*	*41.9*	*18.3*	*88.9*	*72.9*	*5.1*
210	1-15/16 2	**128966**	ECC-EZ-210	1-21/32	29/32	3-5/8	3	**128980**	ECO-EZ-115	1-23/32	29/32	3-5/8	3	13/64
	50mm			*42.2*	*23.1*	*91.4*	*76.2*	***128997***	*ECO-EZ-50M*	*43.7*	*23.1*	*91.4*	*76.2*	*5.1*

@ Made to order

E-Z KLEEN

Polymer and Stainless Steel Housed Mounted Bearings

Our goal at DODGE is to create the world's most successful customer. We do that by listening and responding to our customers' needs. Customers in the food and beverage processing industry told us they needed new and improved products that help make their industry safer - products that help in the fight against contamination from bacteria such as E. coli, salmonella, and staphylococcus aureus.

DODGE delivered by expanding our high performance E-Z KLEEN line with this new, improved generation of E-Z KLEEN engineered polymer housed ball and sleeve bearings and stainless steel housed ball bearings.

DODGE E-Z KLEEN with solid-base housing

Competitive bearing with cavities and fillings that can trap bacteria

RUGGED, SOLID-BASE HOUSING

- Manufactured with no cavities and no fillings -no traps for bacteria
- Features anti-microbial polymer that helps prevent bacterial and fungal growth (polymer housing)
- Housing strength exceeds static capacity of bearing
- Designed with stainless steel lube fittings and stainless steel ferrules in bolt holes (polymer housed)
- 316 Series stainless steel housing also available
- For no relube (NL) remove the lube fitting and install the polymer plug that is shipped with each bearing
- Retains dimensional stability in harsh environments
- No flaking or peeling, even after repeated washdowns
- Provides excellent chemical resistance
- Available with either open or closed end closures
- FDA/USDA compliant

STAINLESS HOUSING

- 300 Series Stainless Steel

POPULAR HOUSING STYLES

Polymer	Stainless Steel
• Pillow blocks	• Pillow blocks
• Tapped-base pillow blocks	• Tapped-base pillow blocks
• 2 and 4 bolt flange bearings	• Flange brackets
• Flange brackets	• Wide and narrow slot take-up bearings
• Wide slot take-up bearings	• 2 and 3 bolt light duty flange
	• 2 and 4 bolt flange bearings

- End covers available on both polymer and stainless housings

RESULTS OF HOUSING ANTI-MICROBIAL ACTIVITY AGAINST TEST ORGANISMS

Test Organism	Type of Organism	Growth-Free Zone (MM)	Contct Inhibition (%)
Staphylococcus aureus	Bacterial	0	100
Aspergillus niger	Fungal	0	100

E-Z KLEEN
QuadGuard Sealing System

For over 125 years, the DODGE brand has been synonymous with the best the industry has to offer. Bearing users in the food and beverage industry recognize that with DODGE they have access to the best selection of the highest quality mounted ball bearings available in the market.

The DODGE E-Z KLEEN and ULTRA KLEEN bearings for the food and beverage industry offer an array of features that provide extended life in these challenging conditions. DODGE has the only bearings in the industry to offer a patented triple-lip seal with a rubberized flinger called the QuadGuard™ sealing system. These units also include an exclusive ball retainer called the Maxlife™ cage that helps retain lubrication and prevents washout in wet environments.

DODGE
QuadGuard Sealing System

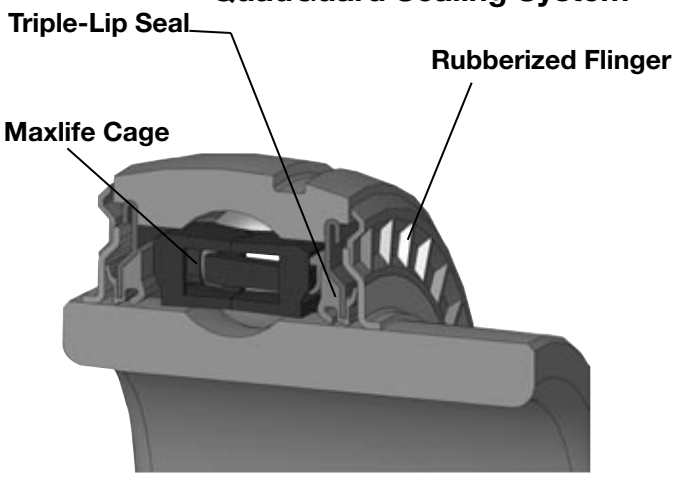

Combine these features with the a complete line of polymer and stainless housing offerings, concentric and adapter mounting options, and a world class manufacturing facility in Rogersville, Tennessee, and you have a family of mounted ball bearing products that are unsurpassed in the industry.

THREE SHAFT LOCKING SYSTEMS FROM STOCK

- SC - Two stainless-steel setscrews set 65 apart
- D-LOK - Corrosion resistant concentric collar
- GT-GRIP TIGHT

CORROSION-RESISTANT BALL BEARING INSERTS

- New QuadGuard sealing system with stainless triple-lip seal and rubberized flinger
- Corrosion-resistant inner and outer ring
- Stainless steel balls and lube fitting
- Stainless steel setscrews (SC) and stainless steel capscrew (DLOK)
- 100% Filled with H1, food grade grease
- Relubricable
- Anti-rotation pin
- Patented Maxlife cage extends grease life
- Offered in inch and metric sizes
- Temperature range -20° to +225° F

The QuadGuard seal consists of two patented features that are unique to DODGE bearings and are standard on the E-Z KLEEN and ULTRA KLEEN product.

- **Triple-lip seal**
  - Patented design
  - Mechanically retained seal with two contact points on the inner ring and one that rides against flinger surface
  - Three points of contact guard against contamination and keep in lubricants
  - Maximizes sealing with minimal increase in drag compared to a single lip design

- **Rubberized flinger**
  - Industry's first and only patented design
  - Molded rubber provides additional protection from contaminants entering the bearing
  - Baffle design of the rubber on the external surface of the flinger enhances the removal of liquid as it rotates
  - Extended rubber baffle outer diameter increases centrifugal acceleration to discard moisture and contamination away from bearing
  - Grease chambers on the internal surface prevent lubricants from exiting the bearing
  - Superior design increases service life in dirty environments thus leading to extended uptime

E-Z KLEEN
Corrosion Resistant Coating

The DODGE E-Z KLEEN ball bearing uses a patented, corrosion resistant coating that is superior to any coated product in the market.

- QuadGuard sealing system
- Maxlife cage
- Corrosion resistant insert has a patented nickel alloy Teflon composite coating
- Offered in setscrew (SC), concentric (D-LOK), and adapter mount (GRIP TIGHT) locking mechanisms
- Available in polymer and stainless housings

The DODGE E-Z KLEEN corrosion resistant (CR) insert out performs other coatings on the market today such as black oxide, zinc and thin dense chrome (TDC).

Tests have shown that the DODGE CR insert exhibited 300% longer bearing life than a typical TDC coated insert. The CR insert load capacity is not de-rated as compared to stainless inserts.

DODGE offers the CR insert in three patented locking mechanisms.

- Setscrew (SC)
  - 65° stainless set screws provide superior holding force without compromising the strength of the inner ring
  - Stainless anti-rotation pin to prevent insert from rotating in the housing
- Concentric (D-LOK)
  - Concentric locking accomplished with the use of a locking collar and slotted inner ring
  - Eliminates damage to stainless shafting caused by set screws
  - Reduced vibration as compared to set screws
- Adapter Mount (GRIP TIGHT)
  - DODGE-only patented thin wall adapter mount
  - Push/pull adapter mount system provides easy on/ easy off installation and removal
  - Built-in bearing puller reduces the time associated with removing bearings from shaft
  - Adapter mount does not damage stainless shafting
  - Interchangeable adapters reduce inventory

24 Hour Salt Fog Test Results

DODGE E-Z KLEEN Corrosion Resistant Insert – No corrosion after testing

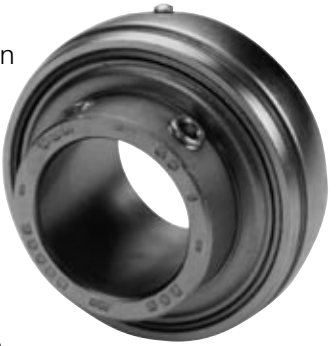

Black Oxide

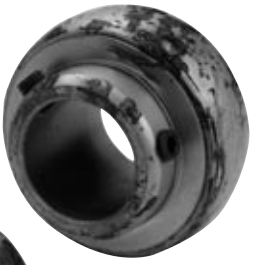

Zinc Plating

Thin Dense Chrome (TDC)

SC

D-LOK

GRIP TIGHT

E-Z KLEEN
Maxlife Cage

The Maxlife cage is the product of extensive research and development in retainer technology and industry leading engineering.

- Two-piece design that creates a grease compartment around each of the rolling elements
- Compartments provide constant contact between balls and grease so an oil film will always exist to prevent wear and minimize friction and heat
- Relative motion between the components and the grease is reduced which results in lower operating temperatures and extended life
- Compartmental construction of the cage holds in the grease and prevents it from being washed out in extremely wet conditions
- Exclusive design extends life with less frequency of re-lubrication than standard designs
- Included in both E-Z KLEEN and ULTRA KLEEN products

D-LOK DL

Dodge E-Z KLEEN bearings are available with the D-LOK concentric locking device that provides easy installation and 360˚ contact with the shaft.

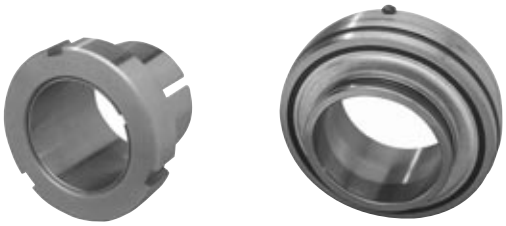

GRIP-TIGHT LOCKING SYSTEM

Full Contact on shaft for better grip, less vibration.

Setscrew locking can distort the inner ring and cause system-induced vibration. But with the DODGE GRIP-TIGHT Adapter, the adapter attaches itself to the shaft for full concentric contact - 360° through the length of the bearing. E-Z KLEEN and GRIP-TIGHT use stainless steel adapter sleeve and nut and provides easy-on and easy-off installation and removal.

DODGE®

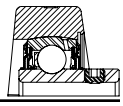

EZ KLEEN-SC, DL, GT ULTRA KLEEN-SC

EZ Kleen-SC, DL, GT Ultra Kleen-SC	End-Cover Capability		Sealing		Retainer
	End-Cover Groove	Snap-On End Cover	Triple-Lip Seal	Stainless Rubberized Flinger	Maxlife Cage
Standard Features	X	X	X	X	X

Housing Capability Stainless							
Housing Style	204	205	206	207	208	209	210
P2B	X	X	X	X	X		X
F2B	X	X	X	X	X		X
F4B	X	X	X	X	X		X
FB	X	X	X	X			X
TB	X	X	X	X	X		X
NSTU	X	X	X	X	X		X
WSTU	X	X	X	X	X		X
LF	X	X	X	X			
LFT	X	X	X	X			

Housing Capability Polymer							
Housing Style	204	205	206	207	208	209	210
P2B	X	X	X	X	X	X	X
F2B	X	X	X	X	X	X	X
F4B	X	X	X	X	X	X	X
FB	X	X	X	X			
TB	X	X	X	X			
NSTU							
WSTU	X	X	X	X			
LF							
LFT							

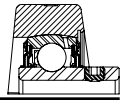

E-Z KLEEN Polymer and Stainless Steel Housed Mounted Bearings

HOW TO ORDER

There are two ways to specify DODGE E-Z KLEEN ball bearings. Most of the product offerings have part numbers with listings shown throughout this catalog. Use of part numbers ensures accurate order processing.

When part numbers are not shown, the product may be specified by description or part name. This method is used when ordering units that include modifications or options.

NOMENCLATURE

P2B - SCHUEZ - 104S = PCR

Modification Or Feature:
- CR = Corrosion resistant insert
- LL = Low torque labyrinth seal
- MOD = Modified
- NL = No Lube (sealed for life)
- P = Polymer housing
- SH = Stainless Steel Housing

Shaft Size:

Inches:
- First digit = Number of inches
- Second & third digits = Number of sixteenths of an inch
  - 104 = Indicates 1-4/16 or 1-1/4
- S = Next smaller ring size. E.g. 1-1/4 206 would be written as 104S
- L = Next larger ring size. E.g. 1/2 204 would be written as 008L

Metric:
- First two digits = number of millimeters
- M = Metric

Bearing Type:
- SC = Wide inner ring, normal duty, 65° setscrew locking
- DL = Wide inner ring, normal duty, concentric clamp collar
- GT = Wide inner ring, normal duty, thin wall adapter locking
- PS = Polymer Sleeve Insert

Suffixes to the above:
- EZ = E-Z KLEEN/ULTRA KLEEN (used with polymer or stainless steel housed units)
- BEZ = Low backing height pillow block, E-Z KLEEN/ULTRA KLEEN
- UEZ = higher back pillow block, E-Z KLEEN/ULTRA KLEEN (for interchangeability with competitive pillow blocks)

Housing:
- F2B = 2 bolt flange
- F4B = 4 bolt flange
- FB = Flanged bracket
- INS = Insert
- P2B = Pillow block, 2 bolt base
- TB = Tapped base pillow block
- WSTU = Wide slot take-up

Selection of DODGE E-Z KLEEN Polymer and Stainless Steel Housed Ball Bearings

DODGE E-Z KLEEN mounted ball bearings are primarily designed for radial loading. However, they have the capacity to carry thrust loads and combined radial/thrust loads. The maximum recommended load which can be applied is limited by various components in the system, such as bearing, housing, shaft attachments, speed and life requirements as listed in this catalog and the instruction manual that accompanies each bearing. DODGE E-Z KLEEN ball bearings have been applied successfully when these limits have been exceeded under controlled operating conditions. Contact DODGE Engineering for applications which exceed these recommendations.

Select a bearing from the Selection Table that has a radial load rating at the operating speed equal to or greater than the calculated Equivalent Radial Load for a desired L_{10} life. This simple method is all that is required for the majority of general applications and provides for occasional average shock loads.

L_{10} Hours Life – The life which may be expected for at least 90% of a given group of bearings operating under identical conditions.

Heavy Service – For heavy shock loads, frequent shock loads or severe vibrations, add up to 50% (according to severity of conditions) to the Equivalent Radial Load to obtain a Modified Equivalent Radial Load. Consult Application Engineering for additional selection assistance.

A maximum thrust load value of C/10 is recommended as a guide for general applications and will give adequate L_{10} life. If the thrust load exceeds this limit, it is advisable to use auxiliary thrust carrying devices, such as a shaft shoulder, snap ring, or a thrust collar. Where substantial radial load pulls the housing away from the mounting base, both the hold-down bolts and housing must be of adequate strength. Auxiliary load carrying devices, such as shear bars, are advisable for side or end-loading of pillow blocks and radial loads for flange units.

To determine the L_{10} hours life for loads and RPMs not listed use the following equation:

$$L_{10} = \left(\frac{C}{P}\right)^3 \left(\frac{16667}{RPM}\right)$$

Where:

L_{10}= Life, hours

C = Dynamic Capacity, lbs. or N

P = Equivalent Radial Load, lbs. or N

n = Revolutions per minute

When the load on a ball bearing is solely a radial load with no thrust (axial) load, the Equivalent Radial Load (P) is equal to the actual radial load. However, when a thrust (axial) load is applied, the radial and thrust loads applied must be converted into an Equivalent Radial Load. Use X (radial factor) and Y (thrust factor) from Table 1 to convert the actual applied thrust and radial loads to an Equivalent Radial Load which has the same effect on the life of a bearing as a radial load of this magnitude.

$$P = XF_R + YF_A$$

Where:

P = Equivalent Radial Load, lbs.
F_R= Radial load, lbs.
F_A= Thrust load, lbs.
e = Thrust load to radial load factor (Table 1)
X = Radial load factor (Table 1)
Y = Thrust Factor (Table 1)
C_0= Basic static capacity (Selection Table)

To find X and Y, first calculate F_A/C_0 to determine e. Calculate F_A/F_R and compare to e to determine the X and Y factors to use from Table 1.

Shaft Tolerances

Normal Shaft Size Inches	Recommended Shaft Tolerances SC & D-LOK Products (Inches)	Recommended Shaft Tolerances GRIP TIGHT Ball Bearings Inches
Up to 1-1/2”	+0.000 -.0005	+0.000 -0.002
Over 1-1/2 to 2”	+0.000 -.0010	+0.000 -.0.003

Selection of DODGE E-Z KLEEN Polymer and Stainless Steel Housed Ball Bearings

Table 1

F_A/C_o	e	Radial/Thrust Factors			
		If F_A/F_R is equal to or less than e		If F_A/F_R is greater than e	
		$F_A/F_R \leq e$		$F_A/F_R > e$	
		X	Y	X	V
.014	.19	1	0	0.56	2.30
.021	.21	1	0	0.56	2.15
.028	.22	1	0	0.56	1.99
.042	.24	1	0	0.56	1.85
.056	.26	1	0	0.56	1.71
.070	.27	1	0	0.56	1.63
.084	.28	1	0	0.56	1.55
.110	.30	1	0	0.56	1.45
.170	.34	1	0	0.56	1.31
.280	.38	1	0	0.56	1.15
.420	.42	1	0	0.56	1.04
.560	.44	1	0	0.56	1.00

Substitute all known values into the Equivalent Radial Load equation. The Equivalent Radial Load (P) thus determined can be used in the L10 life formula or compared to the allowable Equivalent Radial Load rating desired in the expanded rating chart to select a bearing (Selection Table).

If calculated value of P is less than F_R, use $P=F_R$.

Lubrication – DODGE Ball Bearings are lubricated at the factory and are ready to run. The bearings are initially lubricated with an aluminum complex based, H1 Food Grade grease and should be relubricated with the same or some equivalent. For high speeds, high loads, extreme temperatures and other abnormal operating conditions, special greases may be required. Contact DODGE Application Engineering for recommendations on these types of applications.

Misalignment – DODGE Ball Bearings are designed to allow a maximum of 2° static misalignment. These bearings are not suitable for dynamic misalignment. To ensure good alignment, mounting surfaces must be checked for flatness and must lie in the same plane. When tightening base bolts, each bolt should be alternately tightening in incremental torque values until full torque is achieved to prevent the angular shifting of the pillow block that occurs when one bolt is tightened to its full torque. Shimming may be required to minimize misalignment.

DODGE®

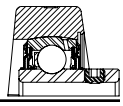

E-Z KLEEN SC and DL

Ring Size	Shaft Size SC	Shaft Size SCM	Dynamic Capacity C, lbs.	Static Capacity C_0, lbs.	L_{10} Life - Hours	Allowable Equivalent Radial Load Rating (lbs.) at Various RPM* 50	150	250	500	750	1000	1250	1500	1600	1750	2000	2250
204	1/2 5/8 3/4 13/16 20mm		2899	1390	20000	741	513	433	344	300	273	253	238	233	226	217	208
					30000	647	449	378	300	262	238	221	208	204	198	189	182
					40000	588	408	344	273	238	217	201	189	185	180	172	165
					60000	513	356	300	238	208	189	176	165	162	157	150	144
					100000	433	300	253	201	176	160	148	139	136	132	127	122
205	7/8 15/16 1 25mm		3146	1565	20000	804	557	470	373	326	296	275	259	253	246	235	226
					30000	702	487	411	326	285	259	240	226	221	215	205	197
					40000	638	442	373	296	259	235	218	205	201	195	187	179
					60000	557	386	326	259	226	205	191	179	176	170	163	157
					100000	470	326	275	218	191	173	161	151	148	144	137	132
206	1-1/16 1-1/8 1-3/16 1-1/4 30mm	1 25mm	4368	2250	20000	1116	774	652	518	452	411	382	359	351	341	326	314
					30000	975	676	570	452	395	359	333	314	307	298	285	274
					40000	886	614	518	411	359	326	303	285	279	271	259	249
					60000	774	536	452	359	314	285	265	249	244	237	226	217
					100000	652	452	382	303	265	240	223	210	206	199	191	183
207	1-1/4 1-5/16 1-3/8 1-7/16 35mm	1-3/16 1-1/4 30mm	5759	3065	20000	1471	1020	860	683	596	542	503	473	463	450	430	414
					30000	1285	891	752	596	521	473	439	414	405	393	376	361
					40000	1168	810	683	542	473	430	399	376	368	357	341	328
					60000	1020	707	596	473	414	376	349	328	321	312	298	287
					100000	860	596	503	399	349	317	294	277	271	263	252	242
208	1-1/2 1-5/8 40mm	1-7/16 1-1/2▲ 35mm	7332	4005	20000	1873	1299	1095	869	759	690	641	603	590	573	548	527
					30000	1636	1134	957	759	663	603	560	527	515	500	478	460
					40000	1487	1031	869	690	603	548	508	478	468	454	435	418
					60000	1299	900	759	603	527	478	444	418	409	397	380	365
					100000	1095	759	641	508	444	403	375	352	345	335	320	308
209	1-5/8 1-11/16 1-3/4 45mm	1-1/2 40mm	7891	4450	20000	2016	1398	1179	936	817	743	689	649	635	616	589	567
					30000	1761	1221	1030	817	714	649	602	567	555	538	515	495
					40000	1600	1109	936	743	649	589	547	515	504	489	468	450
					60000	1398	969	817	649	567	515	478	450	440	427	409	393
					100000	1179	817	689	547	478	434	403	379	371	360	345	331
210	1-15/16 2 50mm	1-11/16 1-3/4 45mm	7891	4450	20000	2016	1398	1179	936	817	743	689	649	635	616	589	567
					30000	1761	1221	1030	817	714	649	602	567	555	538	515	495
					40000	1600	1109	936	743	649	589	547	515	504	489	468	450
					60000	1398	969	817	649	567	515	478	450	440	427	409	393
					100000	1179	817	689	547	478	434	403	379	371	360	345	331

* Slight interference fit required when operating on the right of the heavy line or in the shaded area.

▲ Piloted flange only

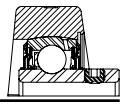

E-Z KLEEN SC and DL (continued)

Ring Size	Shaft Size SC	Shaft Size SCM	Dynamic Capacity C, lbs.	Static Capacity C_0, lbs.	L_{10} Life - Hours	Allowable Equivalent Radial Load Rating (lbs.) at Various RPM* 2500	2750	3000	3250	3500	3600	4000	4500	5000	5250	5500	6000
204	1/2 5/8 3/4 13/16 20mm		2899	1390	20000	201	195	189	184	180	178	172	165	160	157	155	150
					30000	176	170	165	161	157	155	150	144	139	137	135	131
					40000	160	155	150	146	143	141	136	131	127	125	123	119
					60000	139	135	131	128	125	123	119	115	111	109	107	104
					100000	118	114	111	108	105	104	101	97	93	92	90	88
205	7/8 15/16 1 25mm		3146	1565	20000	218	211	205	200	195	193	187	179	173	170	168	163
					30000	191	185	179	175	170	169	163	157	151	149	147	142
					40000	173	168	163	159	155	153	148	142	137	135	133	129
					60000	151	147	142	139	135	134	129	124	120	118	116	113
					100000	128	124	120	117	114	113	109	105	101	100	98	95
206	1-1/16 1-1/8 1-3/16 1-1/4 30mm	1 25mm	4368	2250	20000	303	293	285	278	271	268	259	249	240	237		
					30000	265	256	249	242	237	234	226	217	210	207		
					40000	240	233	226	220	215	213	206	198	191	188		
					60000	210	203	198	192	188	186	180	173	167	164		
					100000	177	172	167	162	158	157	151	146	141	138		
207	1-1/4 1-5/16 1-3/8 1-7/16 35mm	1-3/16 1-1/4 30mm	5759	3065	20000	399	387	376	366	357	354	341	328				
					30000	349	338	328	320	312	309	298	287				
					40000	317	307	298	290	283	281	271	261				
					60000	277	268	261	254	247	245	237	228				
					100000	234	226	220	214	209	207	200	192				
208	1-1/2 1-5/8 40mm	1-7/16 1-1/2▲ 35mm	7332	4005	20000	508	492	478	466	454	450	435					
					30000	444	430	418	407	397	393	380					
					40000	403	391	380	370	361	357	345					
					60000	352	341	332	323	315	312	301					
					100000	297	288	280	272	266	263	254					
209	1-5/8 1-11/16 1-3/4 45mm	1-1/2 40mm	7891	4450	20000	547	530	515	501	489	485	468					
					30000	478	463	450	438	427	423	409					
					40000	434	421	409	398	388	385	371					
					60000	379	367	357	348	339	336	324					
					100000	320	310	301	293	286	283	274					
210	1-15/16 2 50mm	1-11/16 1-3/4 45mm	7891	4450	20000	547	530	515	501	489	485						
					30000	478	463	450	438	427	423						
					40000	434	421	409	398	388	385						
					60000	379	367	357	348	339	336						
					100000	320	310	301	293	286	283						

* Slight interference fit required when operating on the right of the heavy line or in the shaded area.

▲ Piloted flange only

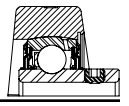

E-Z KLEEN GT

Ring Size	Shaft Size GT	Shaft Size GTM	Dynamic Capacity C, lbs.	Static Capacity C_0, lbs.	Allowable Equivalent Radial Load Rating (lbs.) at Various RPM*							
					L_{10} Life - Hours	50	150	250	500	750	1000	1500
204	3/4 20mm		2899	1390	20000	741	513	433	344	300	273	238
					30000	647	449	378	300	262	238	208
					40000	588	408	344	273	238	217	189
					60000	513	356	300	238	208	189	165
					100000	433	300	253	201	176	160	139
205	7/8 15/16 1 25mm	3/4	3146	1565	20000	804	557	470	373	326	296	259
					30000	702	487	411	326	285	259	226
					40000	638	442	373	296	259	235	205
					60000	557	386	326	259	226	205	179
					100000	470	326	275	218	191	173	151
206	1-1/8 1-3/16 1-1/4 30mm	1 25mm	4368	2250	20000	1116	774	652	518	452	411	359
					30000	975	676	570	452	395	359	314
					40000	886	614	518	411	359	326	285
					60000	774	536	452	359	314	285	249
					100000	652	452	382	303	265	240	210
207	1-1/4 1-3/8 1-7/16 35mm	1-3/16 1-1/4 30mm	5759	3065	20000	1471	1020	860	683	596	542	473
					30000	1285	891	752	596	521	473	414
					40000	1168	810	683	542	473	430	376
					60000	1020	707	596	473	414	376	328
					100000	860	596	503	399	349	317	277
208	1-1/2 40mm	1-7/16 1-1/2▲ 35mm	7332	4005	20000	1873	1299	1095	869	759	690	603
					30000	1636	1134	957	759	663	603	527
					40000	1487	1031	869	690	603	548	478
					60000	1299	900	759	603	527	478	418
					100000	1095	759	641	508	444	403	352
209	1-5/8 1-11/16 1-3/4 45mm	1-1/2 40mm	7891	4450	20000	2016	1398	1179	936	817	743	649
					30000	1761	1221	1030	817	714	649	567
					40000	1600	1109	936	743	649	589	515
					60000	1398	969	817	649	567	515	450
					100000	1179	817	689	547	478	434	379
210	1-15/16 2 50mm	1-11/16 1-3/4 45mm	7891	4450	20000	2016	1398	1179	936	817	743	649
					30000	1761	1221	1030	817	714	649	567
					40000	1600	1109	936	743	649	589	515
					60000	1398	969	817	649	567	515	450
					100000	1179	817	689	547	478	434	379

* Speed limit values reflect quad contact seal

▲ Piloted flange only

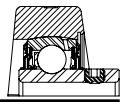

E-Z KLEEN GT (continued)

Ring Size	Shaft Size		Dynamic Capacity C, lbs.	Static Capacity C_0, lbs.	Allowable Equivalent Radial Load Rating (lbs.) at Various RPM*							
	GT	GTM			L_{10} Life - Hours	1750	2000	2200	2600	3000	3200	3600
204	3/4 20mm		2899	1390	20000	226	217	210	198	189	185	178
					30000	198	189	183	173	165	162	155
					40000	180	172	166	157	150	147	141
					60000	157	150	145	138	131	128	123
					100000	132	127	123	116	111	108	104
205	7/8 15/16 1 25mm	3/4	3146	1565	20000	246	235	228	215	205	201	193
					30000	215	205	199	188	179	176	169
					40000	195	187	181	171	163	159	153
					60000	170	163	158	149	142	139	134
					100000	144	137	133	126	120	117	113
206	1-1/8 1-3/16 1-1/4 30mm	1 25mm	4368	2250	20000	341	326	316	299	285	279	268
					30000	298	285	276	261	249	244	234
					40000	271	259	251	237	226	221	213
					60000	237	226	219	207	198	193	186
					100000	199	191	185	175	167	163	157
207	1-1/4 1-3/8 1-7/16 35mm	1-3/16 1-1/4 30mm	5759	3065	20000	450	430	417	394	376	368	354
					30000	393	376	364	344	328	321	309
					40000	357	341	331	313	298	292	281
					60000	312	298	289	273	261	255	245
					100000	263	252	244	230	220	215	207
208	1-1/2 40mm	1-7/16 1-1/2▲ 35mm	7332	4005	20000	573	548	531	502	478	468	450
					30000	500	478	463	438	418	409	393
					40000	454	435	421	398	380	372	357
					60000	397	380	368	348	332	325	312
					100000	335	320	310	293	280	274	263
209	1-5/8 1-11/16 1-3/4 45mm	1-1/2 40mm	7891	4450	20000	616	589	571	540	515	504	485
					30000	538	515	499	472	450	440	423
					40000	489	468	453	429	409	400	385
					60000	427	409	396	374	357	349	336
					100000	360	345	334	316	301	295	283
210	1-15/16 2 50mm	1-11/16 1-3/4 45mm	7891	4450	20000	616	589	571	540	515	504	485
					30000	538	515	499	472	450	440	423
					40000	489	468	453	429	409	400	385
					60000	427	409	396	374	357	349	336
					100000	360	345	334	316	301	295	283

* Speed limit values reflect quad contact seal

▲ Piloted flange only

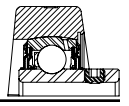

E-Z KLEEN GT (continued)

Ring Size	Shaft Size		Dynamic Capacity C, lbs.	Static Capacity C_0, lbs.	Allowable Equivalent Radial Load Rating (lbs.) at Various RPM*							
	GT	GTM			L_{10} Life - Hours	3840	4000	4240	4480	4800	5040	5300
204	3/4 20mm		2899	1390	20000	174	172	169	165	162	159	156
					30000	152	150	147	145	141	139	137
					40000	138	136	134	131	128	126	124
					60000	121	119	117	115	112	110	108
					100000	102	101	99	97	95	93	92
205	7/8 15/16 1 25mm	3/4	3146	1565	20000	189	187	183	180	176	173	170
					30000	165	163	160	157	153	151	148
					40000	150	148	145	143	139	137	135
					60000	131	129	127	125	122	120	118
					100000	111	109	107	105	103	101	99
206	1-1/8 1-3/16 1-1/4 30mm	1 25mm	4368	2250	20000	262	259	254	249	244	240	236
					30000	229	226	222	218	213	209	206
					40000	208	206	202	198	193	190	187
					60000	182	180	176	173	169	166	163
					100000	154	151	149	146	143	140	138
207	1-1/4 1-3/8 1-7/16 35mm	1-3/16 1-1/4 30mm	5759	3065	20000	346	341	335	329	321	316	
					30000	302	298	293	287	281	276	
					40000	275	271	266	261	255	251	
					60000	240	237	232	228	223	219	
					100000	202	200	196	192	188	185	
208	1-1/2 40mm	1-7/16 1-1/2▲ 35mm	7332	4005	20000	441	435	426	419			
					30000	385	380	372	366			
					40000	350	345	338	332			
					60000	306	301	296	290			
					100000	258	254	249	245			
209	1-5/8 1-11/16 1-3/4 45mm	1-1/2 40mm	7891	4450	20000	474	468	459				
					30000	414	409	401				
					40000	376	371	364				
					60000	329	324	318				
					100000	277	274	268				
210	1-15/16 2 50mm	1-11/16 1-3/4 45mm	7891	4450	20000	474						
					30000	414						
					40000	376						
					60000	329						
					100000	277						

* Speed limit values reflect quad contact seal
▲ Piloted flange only

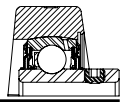

E-Z KLEEN GT (continued)

Ring Size	Shaft Size		Dynamic Capacity C, lbs.	Static Capacity C_0, lbs.	Allowable Equivalent Radial Load Rating (lbs.) at Various RPM*						
	GT	GTM			L_{10} Life - Hours	5600	6000	6500	7000	7200	8000
204	3/4 20mm		2899	1390	20000 30000 40000 60000 100000	154 134 122 107 90	150 131 119 104 88	146 128 116 101 85	143 125 113 99 83	141 123 112 98 83	136 119 108 95 80
205	7/8 15/16 1 25mm	3/4	3146	1565	20000 30000 40000 60000 100000	167 146 132 116 97	163 142 129 113 95	159 139 126 110 93	155 135 123 107 91	153 134 122 106 90	
206	1-1/8 1-3/16 1-1/4 30mm	1 25mm	4368	2250	20000 30000 40000 60000 100000	231 202 184 160 135	226 198 180 157 132				
207	1-1/4 1-3/8 1-7/16 35mm	1-3/16 1-1/4 30mm	5759	3065	20000 30000 40000 60000 100000						
208	1-1/2 40mm	1-7/16 1-1/2▲ 35mm	7332	4005	20000 30000 40000 60000 100000						
209	1-5/8 1-11/16 1-3/4 45mm	1-1/2 40mm	7891	4450	20000 30000 40000 60000 100000						
210	1-15/16 2 50mm	1-11/16 1-3/4 45mm	7891	4450	20000 30000 40000 60000 100000						

* Speed limit values reflect quad contact seal

▲ Piloted flange only

Chemical Resistance Chart

Chemical Agent	Solution Conc.	@ 23°C (73°F)		@ 60°C (140°F)		@ 80°C (175°F)
		Polymer Housing	Polymer Insert	Polymer Housing	Polymer Insert	Polymer Housing
A						
Acetic Acid	5%	+	+	=		=
Acetic Acid	10%	+		=		=
Acetic Acid	20%	=	-	=	-	=
Acetic Acid	80%	=	-	=	-	=
Acetic Acid	100%	=		=		=
Acetone		=	=			
Ammonium Chloride	10%		+		+	
Ammonium Hydroxide	10%	=	-			
Ammonium Hydroxide	conc.	-				
Aniline		+	=		=	
B						
Benzene		=	=	=	=	
Bleaching Lye		+		+		
Brake Fluid		+	+	+	+	+
Butane		+				
Butanol		=		=		
Butyl Acetate		+		=		
C						
Calcium Chloride	5%	+	+	+		
Calcium Chloride	10%	+		+		
Calcium Hydroxide	10%		+		+	
Calcium Hypochlorite		+		+		
Carbon Disulphide		+				
Carbon Tetrachloride		+	+			
Castor Oil			+			
Chloroform		-				
Chromic Acid	40%	+		-		-
Citric Acid	10%	+		+		+
Cottonseed Oil		+		+		+
Cresol		-		-		-
D						
Detergents	1%	+	+	=		-
Detergents	25%	+	+	=		-
Dibutyl Phthalate		+		+		
D (continued)						
Diesel Oil		+				
Dioxane		+	=	-	=	

(+) excellent resistance (=) good-fair resistance (-) fair-poor resistance (blank) no data available

Chemical Resistance Chart

Chemical Agent	Solution Conc.	@ 23°C (73°F)		@ 60°C (140°F)		@ 80°C (175°F)
		Polymer Housing	Polymer Insert	Polymer Housing	Polymer Insert	Polymer Housing
E						
Ethanol		+	=			
Ether (diethyl-)		+				
Ethyl Acetate		=	=			
Ethylene Dichloride		-				
F						
Ferrous Chloride	5%		+			
Formic Acid	5%	+		=		+
Formic Acid	90%	=		-		-
Freon 11		+				
G						
Gasoline		+	+			
Glycerol (Glycerin)		=		=		
Glycol		=		=		
Grease		+	+	+	+	+
H						
Heptane		+				
Hexane		+	+		+	
Hydrochloric Acid	10%	+	-	=	-	-
Hydrochloric Acid	90%	-	-	-	-	-
Hydrofluoric Acid	5%	-		-		-
Hydrofluoric Acid	50%	-		-		-
Hydrogen Peroxide	3%	+	+			
Hydrogen Peroxide	30%	=	+			
I J						
Isoamyle Alcohol			=		=	
Isopropanol		=		=		
K L						
Kerosene		+	+		+	
Lithium Chloride	43%		+		+	

(+) excellent resistance (=) good-fair resistance (-) fair-poor resistance (blank) no data available

Chemical Resistance Chart

Chemical Agent	Solution Conc.	@ 23°C (73°F)		@ 60°C (140°F)		@ 80°C (175°F)
		Polymer Housing	Polymer Insert	Polymer Housing	Polymer Insert	Polymer Housing
M						
Methanol		+	=		=	
Methylene Chloride		-	+	-		
M (continued)						
Methyl Ethyl Ketone		+	+	=	+	
Methyl Salicylate			+			
Mineral Oil		+	+	+	+	+
Motor Oils		+	+	+	+	+
N						
Nitric Acid	10%	+	-	=	-	=
Nitric Acid	40%	-	-	-	-	-
Nitric Acid	70%	-	-	-	-	-
O						
Oleic Acid	100%	+		+		+
Olive Oil		+	+	+	+	+
P						
Perchloroethylene		+	=	=	=	
Petroleum Ether		+				
Phenol		=		-	-	-
Phosphoric Acid	3%	+		+		+
Phosphoric Acid	30%	+	-	+	-	+
Phosphoric Acid	85%	+	-	+	-	-
P (continued)						
Potassium Chloride	10%	+		=		-
Potassium Dichromate	10%	+				
Potassium Hydroxide	1%	-		-		-
Potassium Hydroxide	10%	-		-		-
Potassium Hydroxide	60%	-		-		-
Potassium Permanganate	10%	+	+		+	

(+) excellent resistance (=) good-fair resistance (-) fair-poor resistance (blank) no data available

Chemical Resistance Chart

Chemical Agent	Solution Conc.	@ 23°C (73°F)		@ 60°C (140°F)		@ 80°C (175°F)
		Polymer Housing	Polymer Insert	Polymer Housing	Polymer Insert	Polymer Housing
S						
Silicone Fluids		+		+		+
Soap Solution	1%	+	+	=	=	-
Sodium Bicarbonate	10%	+		=		-
Sodium Bisulfate	5%		+			
Sodium Bisulfite	5%	+	-			
Sodium Bisulfite	10%	+	-	=		-
S (continued)						
Sodium Carbonate	10%	+		-		-
Sodium Carbonate	20%	+		-		-
S (continued)						
Sodium Chloride	10%	+	+	=	+	-
Sodium Hydroxide	1%	-		-		-
Sodium Hydroxide	10%	-	-	-		-
Sodium Hydroxide	60%	-		-		-
Sodium Hypochlorite	5%	+	-			
Sodium Hypochlorite	10%	+		=		-
Sulfuric Acid	3%	+	-	+	-	+
Sulfuric Acid	30%	+	-	+	-	-
Sulfuric Acid	98%	-	-	-	-	-
T						
Tetrahydofuran		=				
Toulene		+	=			
Transformer Oil		+	+	+	+	+
Trichlorethylene		=				
Triethylamine			=		=	
Turpentine		+				
V						
Vaseline		+		+		+
Vegetable Oils		+	+	+	+	+
W						
Water		+	+	=	=	-
White Spirits		+				
X						
Xylene		+				

(+) excellent resistance (=) good-fair resistance (-) fair-poor resistance (blank) no data available

E-Z KLEEN Mounted Bearings

GTEZ Normal Duty Polymer Housed Pillow Blocks

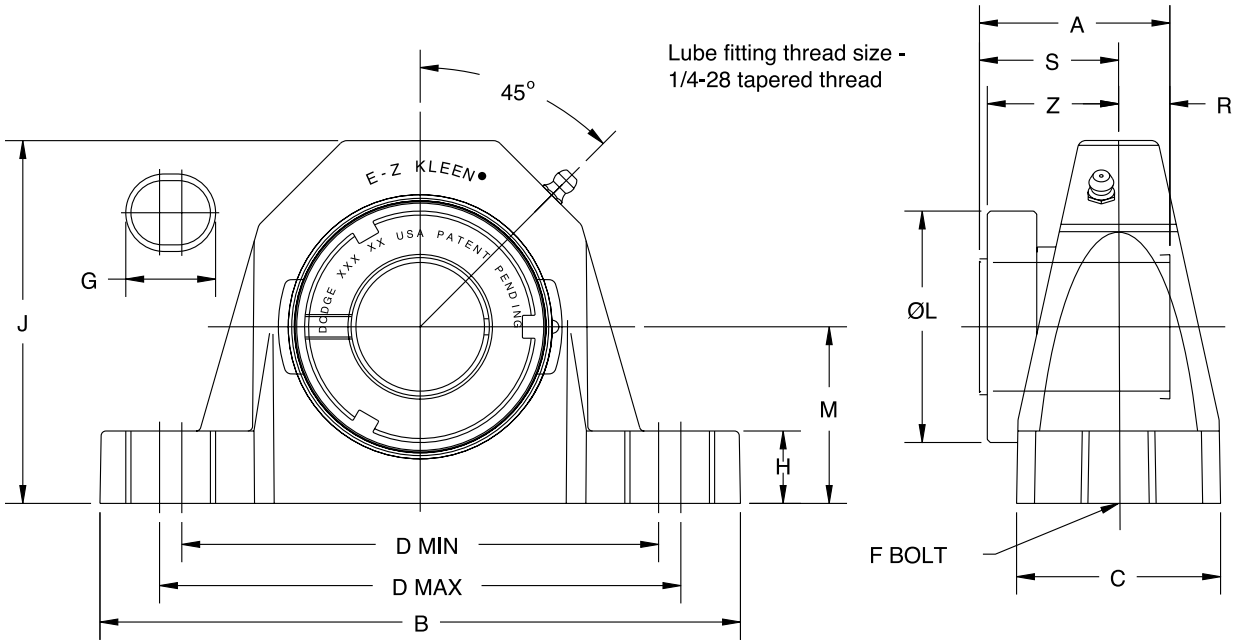

Series	Shaft Size	Complete Unit		Unit without Adapter		Adapter & Nut Assembly	
		Part No.	Description	Part No.	Description	Part No.	Description
204	3/4	**129244**	P2B-GTEZ-012-PCR	**129530**	P2B-GTEZ-04-PCR	**129967**	AN-GT-04-012-CR
	20mm	***129245***	*P2B-GTEZ-20M-PCR*			***129980***	*AN-GT-04-20M-CR*
205	1	**129246**	P2B-GTEZ-100-PCR	**129531**	P2B-GTEZ-05-PCR	**129968**	AN-GT-05-100-CR
	25mm	***129247***	*P2B-GTEZ-25M-PCR*			***129981***	*AN-GT-05-25M-CR*
206 (GTU)	1-1/8	**@**	P2B-GTUEZ-102-PCR	**129536**	P2B-GTUEZ-06-PCR	**129969**	AN-GT-06-102-CR
	1-3/16	**129248**	P2B-GTUEZ-103-PCR			**129602**	AN-GT-06-103-CR
	1-1/4	**129249**	P2B-GTUEZ-104S-PCR			**129603**	AN-GT-06-104S-CR
	30mm	***129250***	*P2B-GTUEZ-30M-PCR*			***129611***	*AN-GT-06-30M-CR*
207	1-1/4	**129251**	P2B-GTEZ-104-PCR	**129532**	P2B-GTEZ-07-PCR	**129972**	AN-GT-07-104-CR
	1-3/8	**129392**	P2B-GTEZ-106-PCR			**129973**	AN-GT-07-106-CR
	1-7/16	**129252**	P2B-GTEZ-107-PCR			**129974**	AN-GT-07-107-CR
	35mm	***129253***	*P2B-GTEZ-35M-PCR*			***129983***	*AN-GT-07-35M-CR*
208 (GTB)	1-1/2	**129254**	P2B-GTBEZ-108-PCR	**129535**	P2B-GTBEZ-08-PCR	**129606**	AN-GT-08-108-CR
	40mm	***129255***	*P2B-GTBEZ-40M-PCR*			***129613***	*AN-GT-08-40M-CR*
209	1-11/16	**129256**	P2B-GTEZ-111-PCR	**129533**	P2B-GTEZ-09-PCR	**129976**	AN-GT-09-111-CR
	1-3/4	**129396**	P2B-GTEZ-112-PCR			**129977**	AN-GT-09-112-CR
	45mm	***129257***	*P2B-GTEZ-45M-PCR*			***129985***	*AN-GT-09-45M-CR*
210	1-15/16	**129258**	P2B-GTEZ-115-PCR	**129534**	P2B-GTEZ-10-PCR	**129978**	AN-GT-10-115-CR
	2	**129393**	P2B-GTEZ-200-PCR			**129979**	AN-GT-10-200-CR
	50mm	***129259***	*P2B-GTEZ-50M-PCR*			***129986***	*AN-GT-10-50M-CR*

@ Assembled to order

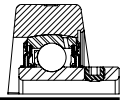

E-Z KLEEN Mounted Bearings

GTEZ Normal Duty Polymer Housed Pillow Blocks

Series	Shaft Size	Weight lbs kg	A	B	C	D min.	D max.	F Bolt Dia.	G	H	J	L	M	R#	S#	Z
204	3/4	0.9	1-15/32	5-1/32	1-31/64	3-43/64	3-59/64	3/8	19/32	39/64	2-5/8	1-1/2	1-5/16	31/64	63/64	1-3/64
	20mm	0.4	37.3	127.8	37.7	93.3	99.6	M10	15.1	15.5	66.7	38.1	33.3	12.3	25	26.6
205	1	1.1	1-29/64	5-1/2	1-31/64	3-31/32	4-13/64	3/8	19/32	39/64	2-55/64	1-51/64	1-7/16	1/2	61/64	1-1/64
	25mm	0.5	36.9	139.7	37.7	100.8	106.8	M10	15.1	15.5	72.6	45.6	36.5	12.8	24.2	25.8
206 (GTU)	1-1/8	1.8	1-39/64	6-5/16	1-25/32	4-39/64	4-57/64	1/2	23/32	45/64	3-11/32	2-5/64	1-11/16	17/32	1-5/64	1-1/8
	1-3/16	1.7														
	1-1/4	1.6														
	30mm	0.8	40.9	160.3	45.2	116.9	124.2	M12	18.3	17.9	84.9	52.8	42.9	13.5	27.4	28.6
207	1-1/4	2.5	1-5/8	6-35/64	1-7/8	4-13/16	5-1/8	1/2	23/32	23/32	3-57/64	2-3/8	1-7/8	9/16	1-1/16	1-9/64
	1-3/8	2.4														
	1-7/16	2.4														
	35mm	1.1	41.3	166.3	47.6	122.2	130.2	M12	18.3	18.3	98.8	60.3	47.6	14.3	27	29.0
208 (GTB)	1-1/2	3.0	1-27/32	7-13/64	2-7/64	5-7/64	5-41/64	1/2	7/8	49/64	4-11/64	2-5/8	1-15/16	21/32	1-3/16	1-15/64
	40mm	1.4	46.8	183.0	53.6	129.6	143.3	M12	22.2	19.4	106	66.7	49.2	16.7	30.2	31.4
209	1-11/16	3.4	1-55/64	7-13/64	2-7/64	5-31/32	5-27/64	1/2	7/8	27/32	4-5/16	2-5/64	2-1/8	21/32	1-3/16	1-9/32
	1-3/4	3.3														
	45mm	1.6	47.2	183.0	53.6	137.7	151.6	M12	22.2	21.4	109.5	72.6	54	16.7	30.2	32.5
210	1-15/16	4.2	1-55/64	8-1/16	2-23/64	6	6-9/16	5/8	1	59/64	4-9/16	3-1/8	2-1/4	21/32	1-13/64	1-9/32
	2	4.1														
	50mm	1.7	47.2	204.8	59.9	152.4	166.7	M16	25.4	23.4	115.9	79.4	57.2	16.7	30.6	32.5

#R & S dimensions will vary slightly depending on true shaft Diameter

E-Z KLEEN Mounted Bearings

GTEZ Normal Duty Stainless Steel Housed Pillow Blocks

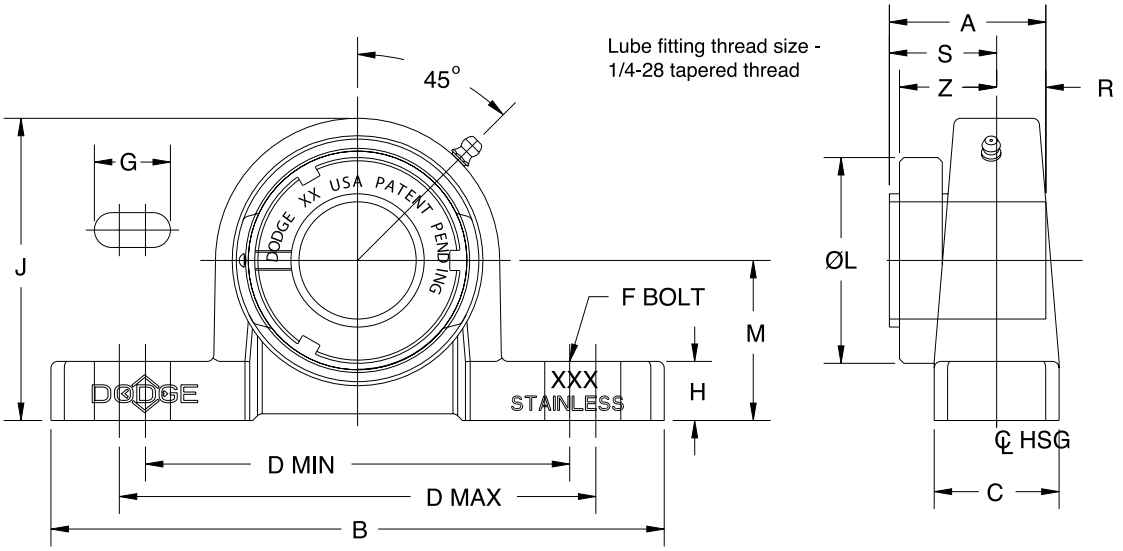

Series	Shaft Size	Complete Unit		Unit Without Adapter		Adapter & Nut Assembly	
		Part No.	Description	Part No.	Description	Part No.	Description
204	3/4	**129260**	P2B-GTEZ-012-SHCR	**129559**	P2B-GTEZ-04-SHCR	**129967**	AN-GT-04-012-CR
	20mm	***129261***	*P2B-GTEZ-20M-SHCR*			***129980***	*AN-GT-04-20M-CR*
205	1	**129262**	P2B-GTEZ-100-SHCR	**129560**	P2B-GTEZ-05-SHCR	**129968**	AN-GT-05-100-CR
	25mm	***129263***	*P2B-GTEZ-25M-SHCR*			***129981***	*AN-GT-05-25M-CR*
206	1-1/8	**064994**	P2B-GTEZ-102-SHCR	**129561**	P2B-GTEZ-06-SHCR	**129969**	AN-GT-06-102-CR
	1-3/16	**129264**	P2B-GTEZ-103-SHCR			**129970**	AN-GT-06-103-CR
	1-1/4	**@**	P2B-GTEZ-104S-SHCR			**129971**	AN-GT-06-104-CR
	30mm	***@***	*P2B-GTEZ-30M-SHCR*			***129982***	*AN-GT-06-30M-CR*
206 (GTU)	1-1/8	**@**	P2B-GTUEZ-102-SHCR	**129566**	P2B-GTUEZ-06-SHCR	**129969**	AN-GT-06-102-CR
	1-3/16	**129265**	P2B-GTUEZ-103-SHCR			**129602**	AN-GT-06-103-CR
	1-1/4	**129266**	P2B-GTUEZ-104S-SHCR			**129605**	AN-GT-06-104S-CR
	30mm	***129267***	*P2B-GTUEZ-30M-SHCR*			***129612***	*AN-GT-06-30M-CR*
207	1-1/4	**129268**	P2B-GTEZ-104-SHCR	**129562**	P2B-GTEZ-07-SHCR	**129972**	AN-GT-07-104-CR
	1-3/8	**067678**	P2B-GTEZ-106-SHCR			**129973**	AN-GT-07-106-CR
	1-7/16	**129269**	P2B-GTEZ-107-SHCR			**129974**	AN-GT-07-107-CR
	35mm	***129270***	*P2B-GTEZ-35M-SHCR*			***129983***	*AN-GT-07-35M-CR*
208	1-1/2	**129271**	P2B-GTEZ-108-SHCR	**129563**	P2B-GTEZ-08-SHCR	**129975**	AN-GT-08-108-CR
	40mm	***@***	*P2B-GTEZ-40M-SHCR*			***129984***	*AN-GT-08-40M-CR*
208 *(GTB)*	1-1/2	**129272**	P2B-GTBEZ-108-SHCR	**129565**	P2B-GTBEZ-08-SHCR	**129606**	AN-GT-08-108-CR
	40mm	***129273***	*P2B-GTBEZ-40M-SHCR*			***129613***	*AN-GT-08-40M-CR*
210	1-15/16	**129274**	P2B-GTEZ-115-SHCR	**129564**	P2B-GTEZ-10-SHCR	**129978**	AN-GT-10-115-CR
	2	**@**	P2B-GTEZ-200-SHCR			**129979**	AN-GT-10-200-CR
	50mm	***129275***	*P2B-GTEZ-50M-SHCR*			***129986***	*AN-GT-10-50M-CR*

@ Assembled to order

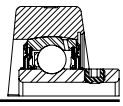

E-Z KLEEN Mounted Bearings

GTEZ Normal Duty Stainless Steel Housed Pillow Blocks

Series	Shaft Size	Weight lbs kg	A	B	C	D min.	D max.	F Bolt Dia.	G	H	J	L	M	R#	S#	Z
204	3/4	1.46	1-15/32	5	1	3-3/8	4-3/16	3/8	27/32	1/2	2-1/2	1-1/2	1-5/16	31/64	63/64	1-3/64
	20mm	*0.65*	*37.3*	*127.0*	*25.4*	*85.7*	*106.4*	*M10*	*21.4*	*12.7*	*63.5*	*38.1*	*33.3*	*12.3*	*25*	*26.7*
205	1	1.92	1-29/64	5-1/2	1-1/8	3-11/16	4-1/2	3/8	27/32	17/32	2-23/32	1-51/64	1-7/16	1/2	61/64	1-1/64
	25mm	*0.83*	*36.9*	*139.7*	*28.6*	*93.7*	*114.3*	*M10*	*21.4*	*13.5*	*68.7*	*45.6*	*36.5*	*12.7*	*24.2*	*25.9*
206	1-1/8	2.60	1-39/64	6-1/4	1-1/4	4-17/64	5	1/2	15/16	17/32	3-1/8	2-5/64	1-5/8	17/32	1-5/64	1-1/8
	1-3/16															
	1-1/4															
	30mm	*1.18*	*40.9*	*158.8*	*31.8*	*108.3*	*127*	*M12*	*23.8*	*13.5*	*79.4*	*52.8*	*41.3*	*13.5*	*27.4*	*28.7*
206 (GTU)	1-1/8	2.65	1-39/64	6-1/4	1-1/4	4-17/64	5	1/2	15/16	19/32	3-3/16	2-5/64	1-11/16	17/32	1-5/64	1-1/8
	1-3/16															
	1-1/4															
	30mm	*1.18*	*40.9*	*158.8*	*31.8*	*108.3*	*127*	*M12*	*23.8*	*15.1*	*81.0*	*52.8*	*42.9*	*13.5*	*27.4*	*28.7*
207	1-1/4	3.83	1-5/8	6-1/2	1-3/8	4-11/16	5-7/16	1/2	15/16	9/16	3-5/8	2-3/8	1-7/8	9/16	1-1/16	1-9/64
	1-3/8															
	1-7/16															
	35mm	*1.75*	*41.3*	*165.1*	*34.9*	*119.1*	*138.1*	*M12*	*23.8*	*14.3*	*92.1*	*60.3*	*47.6*	*14.3*	*27*	*29.1*
208	1-1/2	4.90	1-27/32	7	1-1/2	5-3/16	6	1/2	31/32	3/4	4	2-5/8	2-1/8	21/32	1-3/16	1-15/64
	40mm	*2.22*	*46.8*	*177.8*	*38.1*	*131.8*	*152.4*	*M12*	*24.6*	*19.1*	*101.6*	*66.7*	*54*	*16.7*	*30.2*	*31.5*
208 (GTB)	1-1/2	4.85	1-27/32	7	1-1/2	5-3/16	6	1/2	31/32	9/16	3-13/16	2-5/8	1-15/16	21/32	1-3/16	1-15/64
	40mm	*2.22*	*46.8*	*177.8*	*38.1*	*131.8*	*152.4*	*M12*	*24.6*	*14.3*	*96.8*	*66.7*	*49.2*	*16.7*	*30.2*	*31.5*
210	1-15/16	6.14	1-55/64	8	1-5/8	5-49/64	6-11/16	5/8	1-9/64	5/8	4-5/16	3-1/8	2-1/4	21/32	1-13/64	1-9/32
	2															
	50mm	*2.62*	*47.2*	*203.2*	*41.3*	*146.4*	*169.9*	*M16*	*29*	*15.9*	*109.5*	*79.4*	*57.2*	*16.7*	*30.6*	*32.6*

#R & S dimensions will vary slightly depending on true shaft diameter

E-Z KLEEN Mounted Bearings

SCEZ Normal Duty Polymer Housed Pillow Blocks

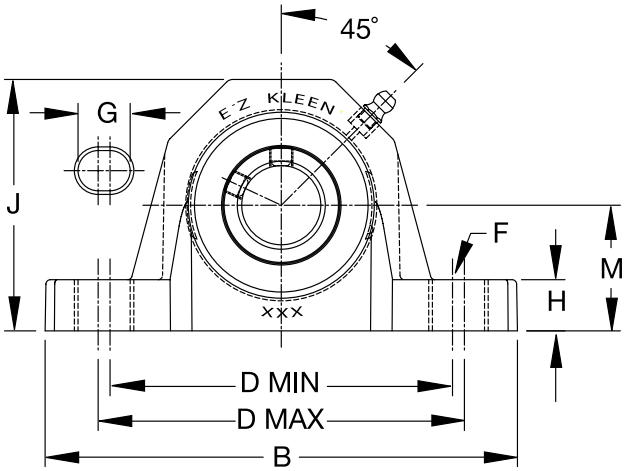

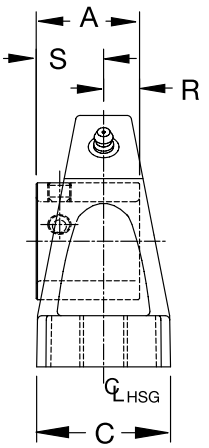

Series	Shaft Size	With Corrosion Resistant Insert		Standard Insert With Flingers	
		Part No.	Description	Part No.	Description
204	1/2	@	P2B-SCEZ-008L-PCR*	@	P2B-SCEZ-008L-P
	5/8	**068322**	P2B-SCEZ-010L-PCR*	**064572**	P2B-SCEZ-010L-P
	3/4	**127500**	P2B-SCEZ-012-PCR	@	P2B-SCEZ-012-P
	20 mm	***127545***	*P2B-SCEZ-20M-PCR*	@	*P2B-SCEZ-20M-P*
205	7/8	**064839**	P2B-SCEZ-014-PCR*	**062837**	P2B-SCEZ-014-P
	15/16	**058975**	P2B-SCEZ-015-PCR*	@	P2B-SCEZ-015-P
	1	**127501**	P2B-SCEZ-100-PCR	**058597**	P2B-SCEZ-100-P
	25 mm	***127546***	*P2B-SCEZ-25M-PCR*	@	*P2B-SCEZ-25M-P*
206	1-1/8	@	P2B-SCUEZ-102-PCR*	**067919**	P2B-SCUEZ-102-P
	1-3/16	**127502**	P2B-SCUEZ-103-PCR	@	P2B-SCUEZ-103-P
	1-1/4	**127503**	P2B-SCUEZ-104S-PCR	**058596**	P2B-SCUEZ-104S-P
	30 mm	***127547***	*P2B-SCUEZ-30M-PCR*	@	*P2B-SCUEZ-30M-P*
207	1-1/4	**127504**	P2B-SCEZ-104-PCR	**065655**	P2B-SCEZ-104-P
	1-5/16	**059722**	P2B-SCEZ-105-PCR*	@	P2B-SCEZ-105-P
	1-3/8	**058944**	P2B-SCEZ-106-PCR*	@	P2B-SCEZ-106-P
	1-7/16	**127505**	P2B-SCEZ-107-PCR	**064064**	P2B-SCEZ-107-P
	35 mm	***127548***	*P2B-SCEZ-35M-PCR*	@	*P2B-SCEZ-35M-P*
208	1-1/2	**127506**	P2B-SCBEZ-108-PCR	@	P2B-SCBEZ-108-P
	1-5/8	**068495**	P2B-SCBEZ-110-PCR*	@	P2B-SCBEZ-110-P
	40 mm	***127549***	*P2B-SCBEZ-40M-PCR*	@	*P2B-SCBEZ-40M-P*
209	1-5/8	@	P2B-SCBEZ-110L-PCR*	@	P2B-SCBEZ-110L-P
	1-11/16	**127507**	P2B-SCEZ-111-PCR	**067996**	P2B-SCEZ-111-P
	1-3/4	**058931**	P2B-SCEZ-112-PCR	@	P2B-SCEZ-112-P
	45 mm	***127550***	*P2B-SCEZ-45M-PCR*	@	*P2B-SCEZ-45M-P*
210	1-15/16	**127508**	P2B-SCEZ-115-PCR	**056497**	P2B-SCEZ-115-P
	2	**057898**	P2B-SCEZ-200-PCR	@	P2B-SCEZ-200-P
	50 mm	***127551***	*P2B-SCEZ-50M-PCR*	@	*P2B-SCEZ-50M-P*

@ Assembled to order

* 20 piece minimum

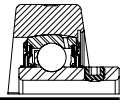

E-Z KLEEN Mounted Bearings

SCEZ Normal Duty Polymer Housed Pillow Blocks

Size	Shaft Series	Weight lbs kg	A	B	C	D min.	D max.	F Bolt Dia.	G	H	J	L	M	R	S
204	1/2	0.68	1-5/32	5-1/32	1-31/64	3-43/64	3-59/64	3/8	19/32	39/64	2-5/8	1-1/8	1-5/16	27/64	47/64
	5/8	0.66													
	3/4	0.64													
	20 mm	*0.30*	*29.4*	*127.8*	*37.7*	*93.3*	*99.6*	*M10*	*15.1*	*15.5*	*66.7*	*28.6*	*33.3*	*10.7*	*18.7*
205	7/8	0.73	1-3/16	5-1/2	1-31/64	3-31/32	4-13/64	3/8	19/32	39/64	2-55/64	1-21/64	1-7/16	27/64	49/64
	15/16	0.71													
	1	0.69													
	25 mm	*0.32*	*30.2*	*139.7*	*37.7*	*100.8*	*106.8*	*M10*	*15.1*	*15.5*	*72.6*	*33.7*	*36.5*	*10.7*	*19.4*
206	1-1/8	1.15	1-25/64	6-5/16	1-25/32	4-39/64	4-57/64	1/2	23/32	45/64	3-11/32	1-37/64	1-11/16	31/64	29/32
	1-3/16	1.13													
	1-1/4	1.11													
	30 mm	*0.51*	*35.3*	*160.3*	*45.2*	*116.9*	*124.2*	*M12*	*18.3*	*17.9*	*84.9*	*40.1*	*42.9*	*12.3*	*23*
207	1-1/4	1.68	1-17/32	6-35/64	1-7/8	4-13/16	5-1/8	1/2	23/32	23/32	3-57/64	1-27/32	1-7/8	1/2	1-1/32
	1-5/16	1.63													
	1-3/8	1.58													
	1-7/16	1.52													
	35 mm	*0.74*	*38.9*	*166.3*	*47.8*	*122.2*	*130.2*	*M12*	*18.3*	*18.3*	*98.8*	*46.8*	*47.6*	*12.7*	*26.2*
208	1-1/2	2.08	1-11/16	7-13/64	2-7/64	5-7/64	5-41/64	1/2	7/8	49/64	4-11/64	2-3/64	1-15/16	19/32	1-3/32
	1-5/8	2.00													
	40 mm	*0.88*	*42.9*	*183.0*	*53.6*	*129.6*	*143.3*	*M12*	*22.2*	*19.4*	*106*	*52*	*49.2*	*15.1*	*27.8*
209	1-5/8	2.41	1-23/32	7-13/64	2-7/64	5-27/64	5-31/32	1/2	7/8	27/32	4-5/16	2-7/32	2-1/8	19/32	1-1/8
	1-11/16	2.34													
	1-3/4	2.27													
	45 mm	*1.03*	*43.7*	*183.0*	*53.6*	*137.7*	*151.6*	*M12*	*22.2*	*21.4*	*109.5*	*56.4*	*54*	*15.1*	*28.6*
210	1-15/16	2.65	1-3/4	8-1/16	2-23/64	6	6-9/16	5/8	1	59/64	4-9/16	2-7/16	2-1/4	19/32	1-5/32
	2	2.58													
	50 mm	*1.30*	*44.5*	*204.8*	*59.9*	*152.4*	*166.7*	*M16*	*25.4*	*23.4*	*115.9*	*61.9*	*57.2*	*15.1*	*29.4*

E-Z KLEEN Mounted Bearings

SCEZ Normal Duty Stainless Steel Housed Pillow Blocks

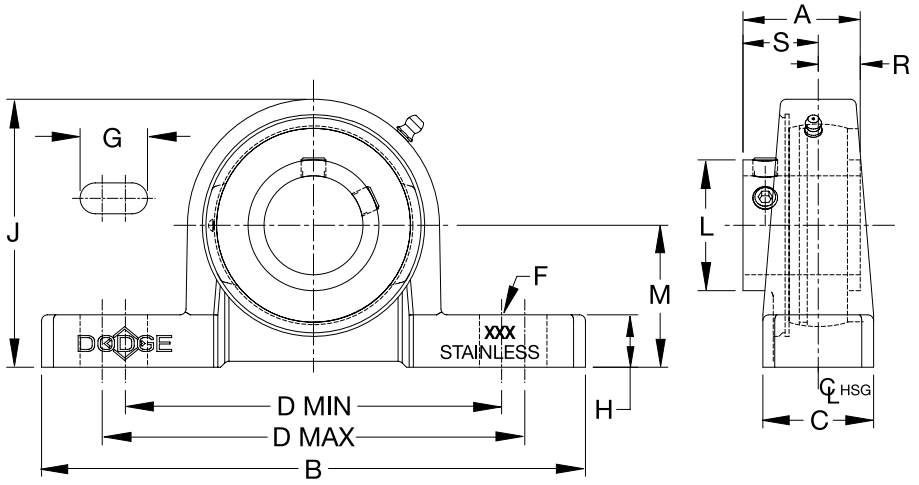

Series	Shaft Size	With Corrosion Resistant Insert		Standard Insert with Flingers	
		Part No.	Description	Part No.	Description
204	1/2	@	P2B-SCEZ-008L-SHCR	@	P2B-SCEZ-008L-SH
	5/8	**068236**	P2B-SCEZ-010L-SHCR*	@	P2B-SCEZ-010L-SH
	3/4	**127670**	P2B-SCEZ-012-SHCR	***059870***	P2B-SCEZ-012-SH
	20mm	***127697***	*P2B-SCEZ-20M-SHCR*	@	*P2B-SCEZ-20M-SH*
205	7/8	**056553**	P2B-SCEZ-014-SHCR*	***049996***	P2B-SCEZ-014-SH
	15/16	**067839**	P2B-SCEZ-015-SHCR*	@	P2B-SCEZ-015-SH
	1	**127671**	P2B-SCEZ-100-SHCR	***056796***	P2B-SCEZ-100-SH
	25mm	***127698***	*P2B-SCEZ-25M-SHCR*	@	*P2B-SCEZ-25M-SH*
206	1-1/8	@	P2B-SCEZ-102-SHCR*	***056548***	P2B-SCEZ-102-SH
	1-3/16	**127672**	P2B-SCEZ-103-SHCR	***056797***	P2B-SCEZ-103-SH
	1-1/4	**127674**	P2B-SCEZ-104S-SHCR	***067630***	P2B-SCEZ-104S-SH
	30mm	@	*P2B-SCEZ-30M-SHCR*	@	*P2B-SCEZ-30M-SH*
206 (SCU)	1-1/8	@	P2B-SCUEZ-102-SHCR*	@	P2B-SCUEZ-102-SH
	1-3/16	**127673**	P2B-SCUEZ-103-SHCR	@	P2B-SCUEZ-103-SH
	1-1/4	**127675**	P2B-SCUEZ-104S-SHCR	@	P2B-SCUEZ-104S-SH
	30mm	***127699***	*P2B-SCUEZ-30M-SHCR*	@	*P2B-SCUEZ-30M-SH*

@ Assembled to order * 20 piece minimum

Series	Shaft Size	Weight lbs kg	A	B	C	D min.	D max.	F Bolt Dia.	G	H	J	L	M	R	S
204	1/2	1.39	1-5/32	5	1	3-3/8	4-3/16	3/8	27/32	1/2	2-1/2	1-1/8	1-5/16	27/64	47/64
	5/8	1.35													
	3/4	1.31													
	20mm	0.59	29.4	127.0	25.4	85.7	106.4	M10	21.4	12.7	63.5	28.6	33.3	10.7	18.7
205	7/8	1.65	1-3/16	5-1/2	1-1/8	3-11/16	4-1/2	3/8	27/32	17/32	2-23/32	1-21/64	1-7/16	27/64	49/64
	15/16	1.62													
	1	1.59													
	25mm	0.73	30.2	139.7	28.6	93.7	114.3	M10	21.4	13.5	69.1	33.7	36.5	10.7	19.4
206	1-1/8	2.37	1-25/64	6-1/4	1-1/4	4-17/64	5	1/2	15/16	17/32	3-1/8	1-37/64	1-5/8	31/64	29/32
	1-3/16	2.33													
	1-1/4	2.29													
	30mm	1.06	35.3	158.8	31.8	108.3	127	M12	23.8	13.5	79.4	40.1	41.3	12.3	23
206 (SCU)	1-1/8	2.48	1-25/64	6-1/4	1-1/4	4-17/64	5	1/2	15/16	19/32	3-3/16	1-37/64	1-11/16	31/64	29/32
	1-3/16	2.44													
	1-1/4	2.39													
	30mm	1.11	35.3	158.8	31.8	108.3	127	M12	23.8	15.1	81	40.1	42.9	12.3	23

E-Z KLEEN Mounted Bearings

SCEZ Normal Duty Stainless Steel Housed Pillow Blocks

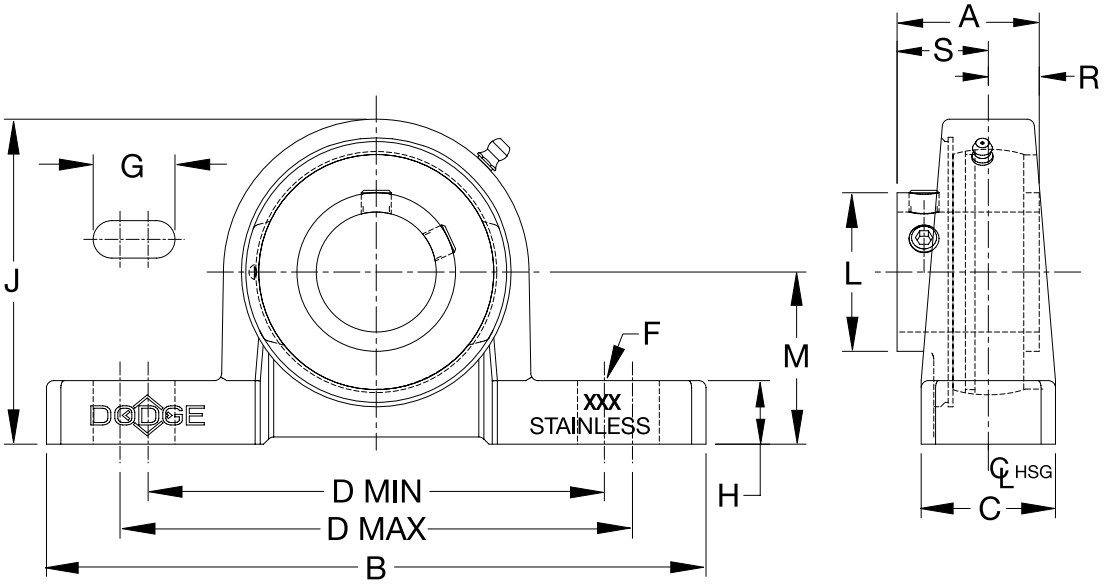

Series	Shaft Size	With Corrosion Resistant Insert		Standard Insert with Flingers	
		Part No.	Description	Part No.	Description
207	1-1/4	**127676**	P2B-SCEZ-104-SHCR	**059798**	P2B-SCEZ-104-SH
	1-3/8	**@**	P2B-SCEZ-106-SHCR*	**056525**	P2B-SCEZ-106-SH
	1-7/16	**127677**	P2B-SCEZ-107-SHCR	**059799**	P2B-SCEZ-107-SH
	35mm	***127700***	*P2B-SCEZ-35M-SHCR*	**@**	*P2B-SCEZ-35M-SH*
208	1-1/2	**127678**	P2B-SCEZ-108-SHCR	**056565**	P2B-SCEZ-108-SH
	1-5/8	**@**	P2B-SCEZ-110-SHCR*	**062874**	P2B-SCEZ-110-SH
	40mm	**@**	*P2B-SCEZ-40M-SHCR*	**@**	*P2B-SCEZ-40M-SH*
208	1-1/2	**127679**	P2B-SCBEZ-108-SHCR	**@**	P2B-SCBEZ-108-SH
(SCB)	*40mm*	***127701***	*P2B-SCBEZ-40M-SHCR*	**@**	*P2B-SCBEZ-40M-SH*
210	1-11/16	**@**	P2B-SCMEZ-111-SHCR	**@**	P2B-SCMEZ-111-SH
	1-15/16	**127680**	P2B-SCEZ-115-SHCR	**056800**	P2B-SCEZ-115-SH
	2	**@**	P2B-SCEZ-200-SHCR	**062879**	P2B-SCEZ-200-SH
	50mm	***127702***	*P2B-SCEZ-50M-SHCR*	**@**	*P2B-SCEZ-50M-SH*

@ Assembled to order * 20 piece minimum

Size	Shaft Series	Weight lbs kg	A	B	C	D		F Bolt Dia.	G	H	J	L	M	R	S
						min.	max.								
207	1-1/4	3.36	1-17/32	6-1/2	1-3/8	4-11/16	5-7/16	1/2	15/16	9/16	3-5/8	1-27/32	1-7/8	1/2	1-1/32
	1-3/8	3.25													
	1-7/16	3.19													
	35mm	*1.47*	*38.9*	*165.1*	*34.9*	*119.1*	*138.1*	*M12*	*23.8*	*14.3*	*92.1*	*46.8*	*47.6*	*12.7*	*26.2*
208	1-1/2	4.39	1-11/16	7	1-1/2	5-3/16	6	1/2	31/32	3/4	4	2-3/64	2-1/8	19/32	1-3/32
	1-5/8														
	40mm	*1.95*	*42.9*	*177.8*	*38.1*	*131.8*	*152.4*	*M12*	*24.6*	*19.1*	*101.6*	*52*	*54*	*15.1*	*27.8*
208	1-1/2	3.93	1-11/16	7	1-1/2	5-3/16	6	1/2	31/32	9/16	3-13/16	2-3/64	1-15/16	19/32	1-3/32
(SCB)	*40mm*	*1.74*	*42.9*	*177.8*	*38.1*	*131.8*	*152.4*	*M12*	*24.6*	*14.3*	*96.8*	*52*	*49.2*	*15.1*	*27.8*
210	1-11/16	5.14	1-3/4	8	1-5/8	5-49/64	6-11/16	5/8	1-9/64	5/8	4-5/16	2-7/16	2-1/4	19/32	1-5/32
	1-15/16	5.09													
	50mm	*2.29*	*44.6*	*203.2*	*41.3*	*146.4*	*169.9*	*M16*	*29*	*15.9*	*109.5*	*61.9*	*57.2*	*15.1*	*29.4*

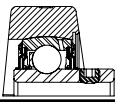

E-Z KLEEN Mounted Bearings

DLEZ Normal Duty Polymer Housed Pillow Blocks

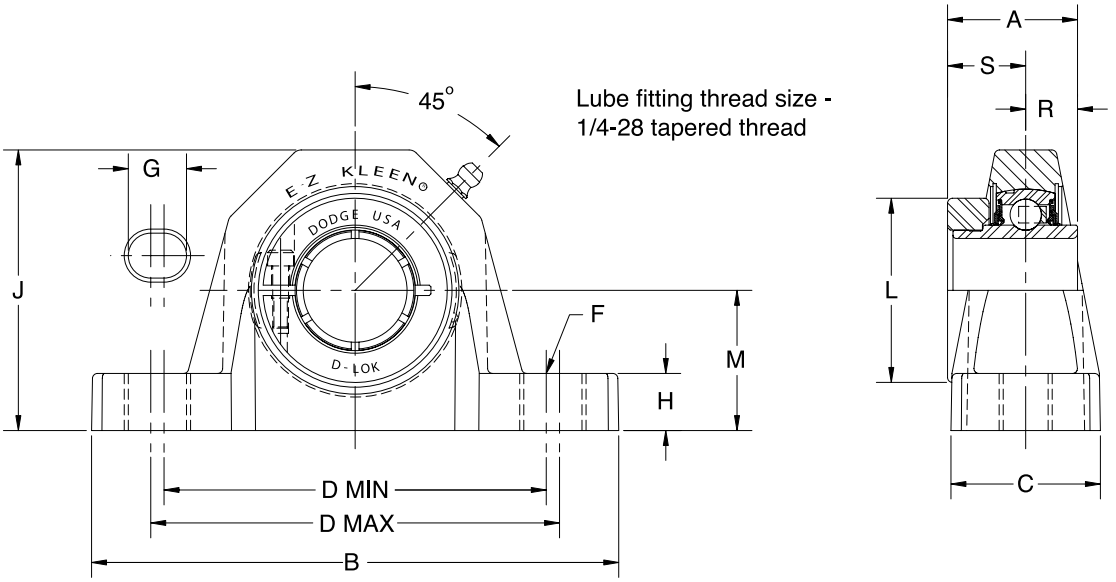

Series	Shaft Size	With Corrosion Resistant Insert		Standard Insert With Flingers	
		Part No.	Description	Part No.	Description
204	3/4	**127578**	P2B-DLEZ-012-PCR	@	P2B-DLEZ-012-P
	20 mm	***127623***	*P2B-DLEZ-20M-PCR*	@	*P2B-DLEZ-20M-P*
205	7/8	@	P2B-DLEZ-014-PCR*	@	P2B-DLEZ-014-P
	15/16	@	P2B-DLEZ-015-PCR*	@	P2B-DLEZ-015-P
	1	**127579**	P2B-DLEZ-100-PCR	@	P2B-DLEZ-100-P
	25 mm	***127624***	*P2B-DLEZ-25M-PCR*	@	*P2B-DLEZ-25M-P*
206 (DLU)	1-1/8	@	P2B-DLUEZ-102-PCR*	@	P2B-DLUEZ-102-P
	1-3/16	**127580**	P2B-DLUEZ-103-PCR	@	P2B-DLUEZ-103-P
	1-1/4	**127581**	P2B-DLUEZ-104S-PCR	@	P2B-DLUEZ-104S-P
	30 mm	***127625***	*P2B-DLUEZ-30M-PCR*	@	*P2B-DLUEZ-30M-P*
207	1-1/4	**127582**	P2B-DLEZ-104-PCR	@	P2B-DLEZ-104-P
	1-3/8	@	P2B-DLEZ-106-PCR*	@	P2B-DLEZ-106-P
	1-7/16	**127583**	P2B-DLEZ-107-PCR	@	P2B-DLEZ-107-P
	35 mm	***127626***	*P2B-DLEZ-35M-PCR*	@	*P2B-DLEZ-35M-P*
208	1-1/2	**127584**	P2B-DLBEZ-108-PCR	@	P2B-DLBEZ-108-P
(DLB)	*40 mm*	***127627***	*P2B-DLBEZ-40M-PCR*	@	*P2B-DLBEZ-40M-P*
209	1-5/8	**057442**	P2B-DLEZ-110L-PCR*	@	P2B-DLEZ-110L-P
	1-11/16	**127585**	P2B-DLEZ-111-PCR	@	P2B-DLEZ-111-P
	1-3/4	**062875**	P2B-DLEZ-112-PCR*	@	P2B-DLEZ-112-P
	45 mm	***127628***	*P2B-DLEZ-45M-PCR*	@	*P2B-DLEZ-45M-P*
210	1-15/16	**127586**	P2B-DLEZ-115-PCR	@	P2B-DLEZ-115-P
	2	**058516**	P2B-DLEZ-200-PCR	@	P2B-DLEZ-200-P
	50 mm	***127629***	*P2B-DLEZ-50M-PCR*	@	*P2B-DLEZ-50M-P*

@ Assembled to order

* 20 piece minimum

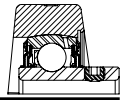

E-Z KLEEN Mounted Bearings

DLEZ Normal Duty Polymer Housed Pillow Blocks

Size	Shaft Series	Weight lbs kg	A	B	C	D min.	D max.	F Bolt Dia.	G	H	J	L	M	R	S
204	3/4	0.92	1-9/32	5-1/32	1-31/64	3-43/64	3-59/64	3/8	19/32	39/64	2-5/8	1-45/64	1-5/16	1/2	25/32
	20 mm	*0.42*	*32.5*	*127.8*	*37.7*	*93.3*	*99.6*	*M10*	*15.1*	*15.5*	*66.7*	*43.3*	*33.3*	*12.7*	*19.8*
205	7/8	1.32	1-7/16	5-1/2	1-31/64	3-31/32	4-13/64	3/8	19/32	39/64	2-55/64	2	1-7/16	9/16	7/8
	15/16	1.22													
	1	1.12													
	25 mm	*0.51*	*36.5*	*139.7*	*37.7*	*100.8*	*106.8*	*M10*	*15.1*	*15.5*	*72.6*	*50.8*	*36.5*	*14.3*	*22.2*
206 (DLU)	1-1/8	1.83	1-9/16	6-5/16	1-25/32	4-39/64	4-57/64	1/2	23/32	45/64	3-11/32	2-7/32	1-11/16	5/8	15/16
	1-3/16	1.73													
	1-1/4	1.63													
	30 mm	*0.79*	*39.7*	*160.3*	*45.2*	*116.9*	*124.2*	*M12*	*18.3*	*17.9*	*84.9*	*56.4*	*42.9*	*15.9*	*23.8*
207	1-1/4	2.46	1-3/4	6-35/64	1-7/8	4-13/16	5-1/8	1/2	23/32	23/32	3-57/64	2-11/16	1-7/8	11/16	1-1/16
	1-3/8	2.41													
	1-7/16	2.36													
	35 mm	*1.13*	*44.5*	*166.3*	*47.8*	*122.2*	*130.2*	*M12*	*18.3*	*18.3*	*98.8*	*68.3*	*47.6*	*17.5*	*27.0*
208 (DLB)	1-1/2	3.01	2	7-13/64	2-7/64	5-7/64	5-41/64	1/2	7/8	49/64	4-11/64	2-47/64	1-15/16	3/4	1-1/4
	40 mm	*1.39*	*50.8*	*183.0*	*53.6*	*129.6*	*143.3*	*M12*	*22.2*	*19.4*	*106*	*69.5*	*49.2*	*19.1*	*31.8*
209	1-5/8	3.51	2	7-13/64	2-7/64	5-27/64	5-31/32	1/2	7/8	27/32	4-5/16	2-63/64	2-1/8	3/4	1-1/4
	1-11/16	3.41													
	1-3/4	3.31													
	45 mm	*1.56*	*50.8*	*183.0*	*53.6*	*137.7*	*151.6*	*M12*	*22.2*	*21.4*	*109.5*	*75.8*	*54*	*19.1*	*31.8*
210	1-15/16	4.17	2-3/32	8-1/16	2-23/64	6	6-9/16	5/8	1	59/64	4-9/16	3-15/64	2-1/4	3/4	1-11/32
	2	4.07													
	50 mm	*1.68*	*53.2*	*204.8*	*59.9*	*152.4*	*166.7*	*M16*	*25.4*	*23.4*	*115.9*	*82.2*	*57.2*	*19.1*	*34.1*

E-Z KLEEN Mounted Bearings

DLEZ Normal Duty Stainless Steel Housed Pillow Blocks

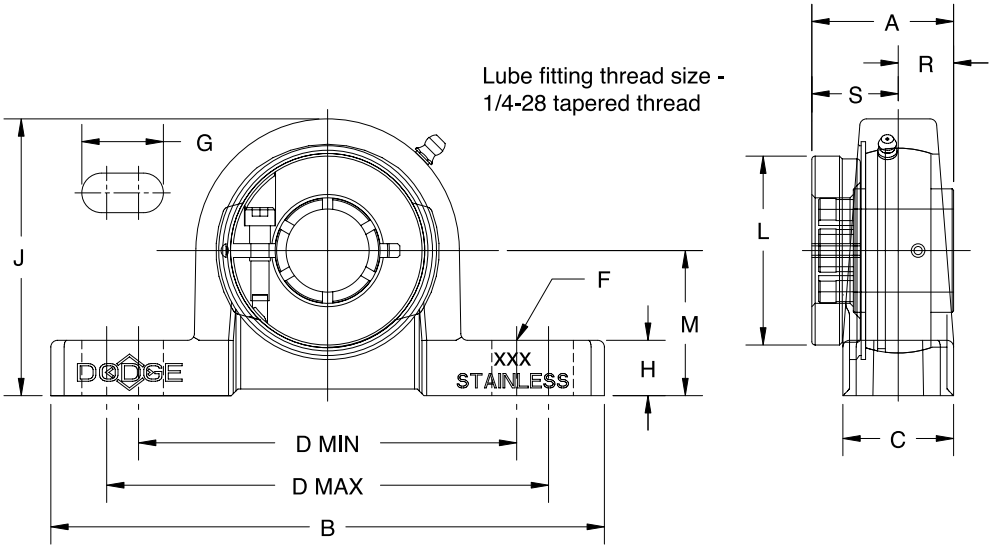

Series	Shaft Size	Part No.	Description	Weight lgs kg	A	B	C	D min.	D max.	F Bolt Dia.	G	H	J	L	M	R	S
204	3/4	**127715**	P2B-DLEZ-012-SHCR	1.46	1-9/32	5	1	3-3/8	4-3/16	3/8	27/32	1/2	2-1/2	1-45/64	1-5/16	1/2	25/32
	20mm	***127739***	*P2B-DLEZ-20M-SHCR*	*0.65*	*32.5*	*127.0*	*25.4*	*85.7*	*106.4*	*M10*	*21.4*	*12.7*	*63.5*	*43.3*	*33.3*	*12.7*	*19.8*
205	7/8	**@**	P2B-DLEZ-014-SHCR*	1.92	1-7/16	5-1/2	1-1/8	3-11/16	4-1/2	3/8	27/32	17/32	2-23/32	2	1-7/16	9/16	7/8
	15/16	**@**	P2B-DLEZ-015-SHCR*	1.87													
	1	**127716**	P2B-DLEZ-100-SHCR	1.82													
	25mm	***127740***	*P2B-DLEZ-25M-SHCR*	*0.83*	*36.5*	*139.7*	*28.6*	*93.7*	*114.3*	*M10*	*21.4*	*13.5*	*69.1*	*50.8*	*36.5*	*14.3*	*22.2*
206	1-1/8	**@**	P2B-DLEZ-102-SHCR*	2.60	1-9/16	6-1/4	1-1/4	4-17/64	5	1/2	15/16	17/32	3-1/8	11-7/26	1-5/8	5/8	15/16
	1-3/16	**127717**	P2B-DLEZ-103-SHCR	2.55													
	1-1/4	**127718**	P2B-DLEZ-104S-SHCR	2.50													
	30mm	***127741***	*P2B-DLEZ-30M-SHCR*	*1.18*	*39.7*	*158.8*	*31.8*	*108.3*	*127*	*M12*	*23.8*	*13.5*	*79.4*	*56.4*	*41.3*	*15.9*	*23.8*
206 (DLU)	1-1/8	**@**	P2B-DLUEZ-102-SHCR*	2.65	1-9/16	6-1/4	1-1/4	4-17/64	5	1/2	15/16	19/32	3-3/16	2-7/32	1-11/16	5/8	15/16
	1-3/16	**@**	P2B-DLUEZ-103-SHCR	2.60													
	1-1/4	**@**	P2B-DLUEZ-104S-SHCR	2.55													
	30mm	*@*	*P2B-DLUEZ-30M-SHCR*	*1.18*	*39.7*	*158.8*	*31.8*	*108.3*	*127*	*M12*	*23.8*	*15.1*	*81*	*56.4*	*42.9*	*15.9*	*23.8*
207	1-1/4	**127719**	P2B-DLEZ-104-SHCR	3.83	1-3/4	6-1/2	1-3/8	4-11/16	5-7/16	1/2	15/16	9/16	3-5/8	2-11/16	1-7/8	11/16	1-1/16
	1-3/8	**@**	P2B-DLEZ-106-SHCR*	3.74													
	1-7/16	**127720**	P2B-DLEZ-107-SHCR	3.66													
	35mm	***127742***	*P2B-DLEZ-35M-SHCR*	*1.75*	*44.5*	*165.1*	*34.9*	*119.1*	*138.1*	*M12*	*23.8*	*14.3*	*92.1*	*68.3*	*47.6*	*17.5*	*27*
208	1-1/2	**127721**	P2B-DLEZ-108-SHCR	4.90	2	7	1-1/2	5-3/16	6	1/2	31/32	3/4	4	2-47/64	2-1/8	3/4	1-1/4
	40mm	***127743***	*P2B-DLEZ-40M-SHCR*	*2.22*	*50.8*	*177.8*	*38.1*	*131.8*	*152.4*	*M12*	*24.6*	*19.1*	*101.6*	*69.5*	*54*	*19.1*	*31.8*
208	1-1/2	**049469**	P2B-DLBEZ-108-SHCR	4.85	2	7	1-1/2	5-3/16	6	1/2	31/32	9/16	3-13/16	2-47/64	1-15/16	3/4	1-1/4
(DLB)	*40mm*	***@***	*P2B-DLBEZ-40M-SHCR*	*2.22*	*50.8*	*177.8*	*38.1*	*131.8*	*152.4*	*M12*	*24.6*	*14.3*	*96.8*	*69.5*	*49.2*	*19.1*	*31.8*
210	1-11/16	**@**	P2B-DLMEZ-111-SHCR*	6.14	2-3/32	8	1-5/8	5-49/64	6-11/16	5/8	1-9/64	5/8	4-5/16	3-15/64	2-1/4	3/4	1-11/32
	1-15/16	**127722**	P2B-DLEZ-115-SHCR	5.77													
	50mm	***127744***	*P2B-DLEZ-50M-SHCR*	*2.62*	*53.2*	*203.2*	*41.3*	*146.4*	*169.9*	*M16*	*29*	*15.9*	*109.5*	*82.2*	*57.2*	*19.1*	*34.1*

@ Assembled to order * 20 piece minimum

E-Z KLEEN Mounted Bearings

GTEZ Normal Duty Polymer Housed Tapped Base Pillow Blocks

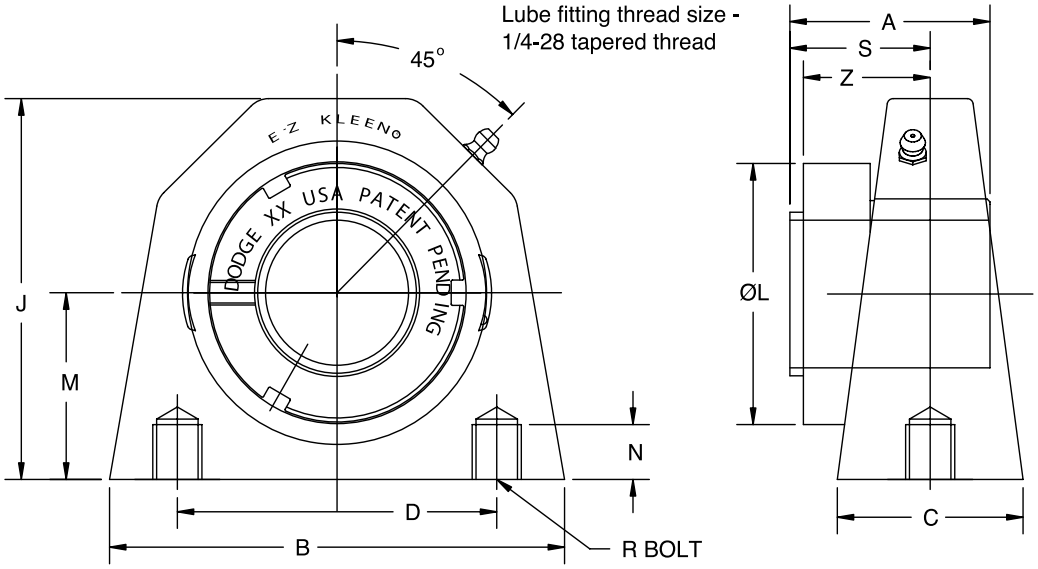

Series	Shaft Size	Complete Unit		Unit Without Adapter		Adapter & Nut Assembly	
		Part No.	Description	Part No.	Description	Part No.	Description
204	3/4	**129291**	TB-GTEZ-012-PCR	**129537**	TB-GTEZ-04-PCR	**129967**	AN-GT-04-012-CR
	20mm	***129292***	*TB-GTEZ-20M-PCR*	***129988***	*TB-GTEZ-04M-PCR*	***129980***	*AN-GT-04-20M-CR*
205	1	**129293**	TB-GTEZ-100-PCR	**129538**	TB-GTEZ-05-PCR	**129968**	AN-GT-05-100-CR
	25mm	***129294***	*TB-GTEZ-25M-PCR*	***129989***	*TB-GTEZ-05M-PCR*	***129981***	*AN-GT-05-25M-CR*
206	1 -1/8	**@**	TB-GTEZ-102-PCR			**129969**	AN-GT-06-102-CR
	1 -3/16	**129295**	TB-GTEZ-103-PCR	**129539**	TB-GTEZ-06-PCR	**129970**	AN-GT-06-103-CR
	1-1/4	**129296**	TB-GTEZ-104S-PCR			**129971**	AN-GT-06-104S-CR
	30mm	***129297***	*TB-GTEZ-30M-PCR*	***129990***	*TB-GTEZ-06M-PCR*	***129982***	*AN-GT-06-30M-CR*
207	1-1/4	**129298**	TB-GTEZ-104-PCR			**129972**	AN-GT-07-104-CR
	1 -3/8	**@**	TB-GTEZ-106-PCR	**129540**	TB-GTEZ-07-PCR	**129973**	AN-GT-07-106-CR
	1 -7/16	**129299**	TB-GTEZ-107-PCR			**129974**	AN-GT-07-107-CR
	35mm	***129300***	*TB-GTEZ-35M-PCR*	***129991***	*TB-GTEZ-07M-PCR*	***129983***	*AN-GT-07-35M-CR*

@ Assembled to order

Series	Shaft Size	Weight Lbs kg	A	B	C	D	J	L	M	N Thread Depth	R Bolt Hole Threads	S#	Z
204	3/4	0.88	1-15/32	3-1/4	1-31/64	2	2-21/32	1-1/2	1-5/16	13/32	3/8-16	63/64	1-3/64
	20 mm	*0.41*	*37.3*	*82.6*	*37.7*	*50.8*	*67.6*	*38.1*	*33.3*	*10.2*	*M10x1.5*	*25.0*	*26.7*
205	1	1.01	1-29/64	3-1/4	1-1/2	2	2-57/64	1-51/64	1-7/16	13/32	3/8-16	61/64	1-1/64
	25 mm	*0.47*	*36.9*	*82.6*	*37.7*	*50.8*	*73.3*	*45.6*	*36.5*	*10.2*	*M10x1.5*	*24.2*	*25.9*
206	1-1/8	1.79	1-39/64	4-3/8	1-37/64	3	3-3/8	2-5/64	1-11/16	29/64	7/16-14	1-5/64	1-1/8
	1-3/16	1.69											
	1-1/4	1.59											
	30 mm	*0.77*	*40.9*	*111.1*	*40.1*	*76.2*	*85.9*	*52.8*	*42.9*	*11.4*	*M10x1.5*	*27.4*	*28.7*
207	1-1/4	2.62	1-5/8	4-5/8	1-57/64	3-1/4	3-13/16	2-3/8	1-7/8	35/64	1/2-13	1-1/16	1-9/64
	1-3/8	2.42											
	1-7/16	2.32											
	35 mm	*1.11*	*41.3*	*117.5*	*48.0*	*82.6*	*97.2*	*60.3*	*47.6*	*14.0*	*M12x1.75*	*27.0*	*29.1*

#S dimension will vary slightly depending on true shaft diameter

E-Z KLEEN Mounted Bearings

SCEZ Normal Duty Polymer Housed Tapped Base Pillow Blocks

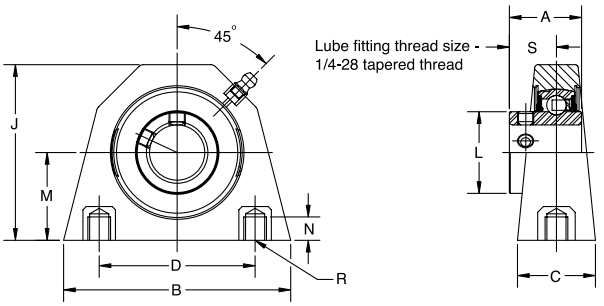

Series	Shaft Size	With Corrosion Resistant Insert		Standard Insert With Flingers		Weight lbs kg	A	B	C	D	J	L	M	N Thread Depth	R Bolt Hole Threads	S
		Part No.	Description	Part No.	Description											
204	1/2	@	TB-SCEZ-008L-PCR*	@	TB-SCEZ-008L-P	0.74	1-5/32	3-1/4	1-31/64	2	2-21/32	1-1/8	1-5/16	13/32	3/8-16	47/64
	5/8	@	TB-SCEZ-010L-PCR*	@	TB-SCEZ-010L-P	0.66										
	3/4	**127509**	TB-SCEZ-012-PCR	@	TB-SCEZ-012-P	0.60										
	20 mm	***127552***	*TB-SCEZ-20M-PCR*	*@*	*TB-SCEZ-20M-P*	*0.29*	*29.4*	*82.6*	*37.7*	*50.8*	*67.6*	*28.6*	*33.3*	*10.2*	*M10x1.5*	*18.7*
205	7/8	@	TB-SCEZ-014-PCR*	@	TB-SCEZ-014-P	0.72	1-3/16	3-1/4	1-1/2	2	2-57/64	1-21/64	1-7/16	13/32	3/8-16	49/64
	15/16	@	TB-SCEZ-015-PCR*	@	TB-SCEZ-015-P	0.64										
	1	**127510**	TB-SCEZ-100-PCR	@	TB-SCEZ-100-P	0.58										
	25 mm	***127553***	*TB-SCEZ-25M-PCR*	*@*	*TB-SCEZ-25M-P*	*0.28*	*30.2*	*82.6*	*38.1*	*50.8*	*73.3*	*33.7*	*36.5*	*10.2*	*M10x1.5*	*19.4*
206	1-1/8	@	TB-SCEZ-102-PCR*	@	TB-SCEZ-102-P	1.16	1-25/64	4-3/8	1-37/64	3	3-3/8	1-37/64	1-11/16	29/64	7/16-14	29/32
	1-3/16	**127511**	TB-SCEZ-103-PCR	@	TB-SCEZ-103-P	1.09										
	1-1/4	**127512**	TB-SCEZ-104S-PCR	**058632**	TB-SCEZ-104S-P	1.07										
	30 mm	***127554***	*TB-SCEZ-30M-PCR*	*@*	*TB-SCEZ-30M-P*	*0.49*	*35.3*	*111.1*	*40.1*	*76.2*	*85.9*	*40.1*	*42.9*	*11.4*	*M10x1.5*	*23.0*
207	1-1/4	**127513**	TB-SCEZ-104-PCR	@	TB-SCEZ-104-P	1.64	1-17/32	4-5/8	1-57/64	3-1/4	3-13/16	1-27/32	1-7/8	35/64	1/2-13	1-1/32
	1-5/16	@	TB-SCEZ-105-PCR*	@	TB-SCEZ-105-P	1.58										
	1-3/8	**056577**	TB-SCEZ-106-PCR*	@	TB-SCEZ-106-P	1.53										
	1-7/16	**127514**	TB-SCEZ-107-PCR	@	TB-SCEZ-107-P	1.48										
	35 mm	***127555***	*TB-SCEZ-35M-PCR*	*@*	*TB-SCEZ-35M-P*	*0.72*	*38.9*	*117.5*	*48.0*	*82.6*	*97.2*	*46.8*	*47.6*	*14.0*	*M12x1.75*	*26.2*

@ Assembled to order *20 piece minimum

SCEZ TB SHCR Normal Duty Stainless Steel Tapped Base Bearings

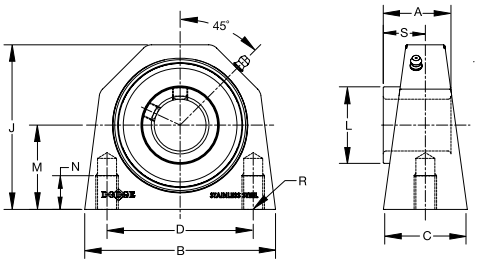

Series	Shaft Size	Corrosion Resistant Insert		Weight lbs kg	A	B	C	D	J	L	M	N	R	S
		Part No.	Description											
204	3/4	**136912**	TB-SCEZ-012-SHCR	1.27	1-5/32	2-7/8	1-31/64	2	2-1/2	1-1/8	1-5/16	29/64	3/8-16	47/64
	20 mm	***136955***	*TB-SCEZ-20M-SHCR*	*.58*	*29.4*	*73.0*	*37.6*	*50.8*	*63.6*	*28.6*	*33.3*	*11.4*	*M8x1.25*	*18.7*
205	1	**136913**	TB-SCEZ-100-SHCR	1.48	1-3/16	3	1-31/64	2	2-3/4	1-21/64	1-7/16	29/64	3/8-16	47/64
	25 mm	***136956***	*TB-SCEZ-25M-SHCR*	*.67*	*30.2*	*76.2*	*37.9*	*50.8*	*69.8*	*33.7*	*36.5*	*11.4*	*M10x1.5*	*19.4*
206	1-3/16	**136914**	TB-SCEZ-103-SHCR	3.55	1-25/64	4	1-9/16	3	3-7/32	1-37/64	1-11/16	7/8	7/16-14	1-11/16
	1-1/4	**136915**	TB-SCEZ-104S-SHCR											
	30 mm	***136957***	*TB-SCEZ-30M-SHCR*	*10.61*	*35.3*	*101.6*	*39.9*	*76.2*	*81.72*	*40.1*	*42.9*	*22.2*	*M10x1.5*	*42.9*
207	1-1/4	**136916**	TB-SCEZ-104-SHCR	4.21	1-7/32	4-1/4	1-7/8	3-1/4	3-21/32	1-27/32	1-7/8	3/4	1/2-13	1-1/32
	1-7/16	**136917**	TB-SCEZ-107-SHCR											
	35 mm	***136958***	*TB-SCEZ-35M-SHCR*	*1.91*	*38.9*	*108.0*	*47.6*	*82.6*	*93.0*	*46.8*	*47.6*	*19.1*	*M10x1.5*	*26.2*
208	1-1/2	**136918**	TB-SCEZ-108-SHCR	5.67	1-11/16	4-5/8	1-7/8	3-1/2	4	2-3/64	2-1/8	1	1/2-13	1-3/32
	40 mm	***136959***	*TB-SCEZ-40M-SHCR*	*2.57*	*42.9*	*117.5*	*47.6*	*88.9*	*101.6*	*52.0*	*54.0*	*25.4*	*M12x1.75*	*27.8*
210	1-15/16	**136919**	TB-SCEZ-115-SHCR	5.58	1-3/4	5-1/2	2	4	4-15/32	2-7/16	2-1/4	1-1/4	5/8-11	1-5/32
	50mm	***136960***	*TB-SCEZ-50M-SHCR*	*2.53*	*44.5*	*139.7*	*50.8*	*101.6*	*113.5*	*61.9*	*57.2*	*31.8*	*M16x2*	*29.4*

E-Z KLEEN Mounted Bearings

DLEZ Normal Duty Polymer Housed Tapped Base Pillow Blocks

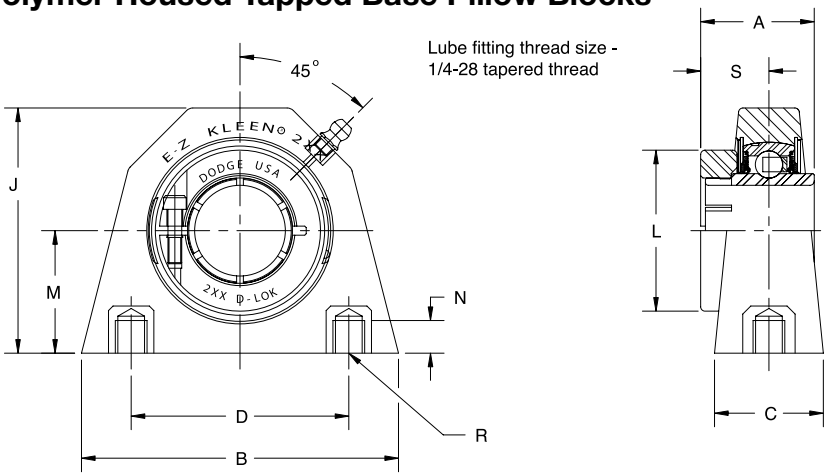

Series	Shaft Size	With Corrosion Resistant Insert		Standard Insert With Flingers	
		Part No.	Description	Part No.	Description
204	3/4	**127587**	TB-DLEZ-012-PCR	@	TB-DLEZ-012-P
	20 mm	***127630***	*TB-DLEZ-20M-PCR*	@	*TB-DLEZ-20M-P*
205	7/8	@	TB-DLEZ-014-PCR*	@	TB-DLEZ-014-P
	15/16	@	TB-DLEZ-015-PCR*	@	TB-DLEZ-015-P
	1	**127588**	TB-DLEZ-100-PCR	@	TB-DLEZ-100-P
	25 mm	***127631***	*TB-DLEZ-25M-PCR*	@	*TB-DLEZ-25M-P*
206	1-1/8	@	TB-DLEZ-102-PCR*	@	TB-DLEZ-102-P
	1-3/16	**127589**	TB-DLEZ-103-PCR	@	TB-DLEZ-103-P
	1-1/4	**127590**	TB-DLEZ-104S-PCR	@	TB-DLEZ-104S-P
	30 mm	***127632***	*TB-DLEZ-30M-PCR*	@	*TB-DLEZ-30M-P*
207	1-1/4	**127591**	TB-DLEZ-104-PCR	@	TB-DLEZ-104-P
	1-3/8	@	TB-DLEZ-106-PCR*	@	TB-DLEZ-106-P
	1-7/16	**127592**	TB-DLEZ-107-PCR	@	TB-DLEZ-107-P
	35 mm	***127633***	*TB-DLEZ-35M-PCR*	@	*TB-DLEZ-35M-P*

@ Assembled to order *20 piece minimum

Series	Shaft Size	Weight lbs kg	A	B	C	D	J	L	M	N Thread Depth	R Bolt Hole Threads	S
204	3/4	0.88	1-9/32	3-1/4	1-31/64	2	2-21/32	1-45/64	1-5/16	13/32	3/8-16	25/32
	20 mm	*0.41*	*32.5*	*82.6*	*37.7*	*50.8*	*67.6*	*43.3*	*33.3*	*10.2*	*M10x1.5*	*19.8*
205	7/8	1.12	1-7/16	3-1/4	1-1/2	2	2-57/64	2	1-7/16	13/32	3/8-16	7/8
	15/16	1.11										
	1	1.01										
	25 mm	*0.47*	*36.5*	*82.6*	*38.1*	*50.8*	*73.3*	*50.8*	*36.5*	*10.2*	*M10x1.5*	*22.2*
206	1-1/8	1.79	1-9/16	4-3/8	1-37/64	3	3-3/8	2-7/32	1-11/16	29/64	7/16-14	15/16
	1-3/16	1.69										
	1-1/4	1.59										
	30 mm	*0.77*	*39.7*	*111.1*	*40.1*	*76.2*	*85.9*	*56.4*	*42.9*	*11.4*	*M10x1.5*	*23.8*
207	1-1/4	2.62	1-3/4	4-5/8	1-57/64	3-1/4	3-13/16	2-11/16	1-7/8	35/64	1/2-13	1-1/16
	1-3/8	2.42										
	1-7/16	2.32										
	35 mm	*1.11*	*44.5*	*117.5*	*48.0*	*82.6*	*97.2*	*68.3*	*47.6*	*14.0*	*M12x1.75*	*27.0*

E-Z KLEEN Mounted Bearings

GTEZ Normal Duty Polymer Housed 2 Bolt Flange Bearings

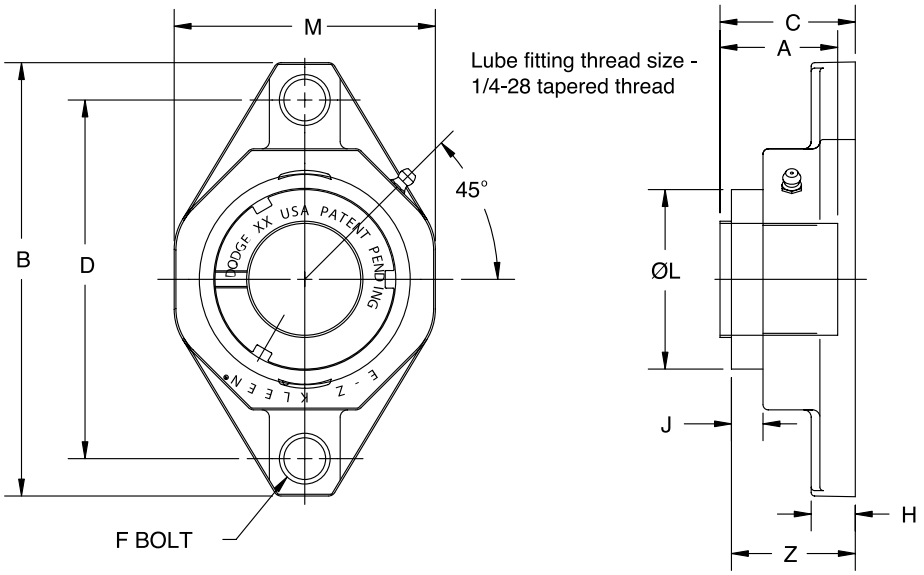

Series	Shaft Size	Complete Unit		Unit Without Adapter		Adapter & Nut Assembly	
		Part No.	Description	Part No.	Description	Part No.	Description
204	3/4	**129339**	F2B-GTEZ-012-PCR	**129548**	F2B-GTEZ-04-PCR	**129967**	AN-GT-04-012-CR
	20mm	***129340***	*F2B-GTEZ-20M-PCR*			***129980***	*AN-GT-04-20M-CR*
205	1	**129341**	F2B-GTEZ-100-PCR	**129549**	F2B-GTEZ-05-PCR	**129968**	AN-GT-05-100-CR
	25mm	***129342***	*F2B-GTEZ-25M-PCR*			***129981***	*AN-GT-05-25M-CR*
206	1 -1/8	**@**	F2B-GTEZ-102-PCR	**129550**	F2B-GTEZ-06-PCR	**129969**	AN-GT-06-102-CR
	1 -3/16	**129343**	F2B-GTEZ-103-PCR			**129970**	AN-GT-06-103-CR
	1-1/4	**129344**	F2B-GTEZ-104S-PCR			**129971**	AN-GT-06-104S-CR
	30mm	***129345***	*F2B-GTEZ-30M-PCR*			***129982***	*AN-GT-06-30M-CR*
207	1-1/4	**129346**	F2B-GTEZ-104-PCR	**129551**	F2B-GTEZ-07-PCR	**129972**	AN-GT-07-104-CR
	1 -3/8	**@**	F2B-GTEZ-106-PCR			**129973**	AN-GT-07-106-CR
	1 -7/16	**129347**	F2B-GTEZ-107-PCR			**129974**	AN-GT-07-107-CR
	35mm	***129348***	*F2B-GTEZ-35M-PCR*			***129983***	*AN-GT-07-35M-CR*
208	1-1/2	**129349**	F2B-GTEZ-108-PCR	**129552**	F2B-GTEZ-08-PCR	**129975**	AN-GT-08-108-CR
	40mm	***129350***	*F2B-GTEZ-40M-PCR*			***129984***	*AN-GT-08-40M-CR*
209	1-11/16	**129351**	F2B-GTEZ-111-PCR	**129553**	F2B-GTEZ-09-PCR	**129976**	AN-GT-09-111-CR
	1-3/4	**064147**	F2B-GTEZ-112-PCR			**129977**	AN-GT-09-112-CR
	45mm	***129352***	*F2B-GTEZ-45M-PCR*			***129985***	*AN-GT-09-45M-CR*
210	1-15/16	**129353**	F2B-GTEZ-115-PCR	**129554**	F2B-GTEZ-10-PCR	**129978**	AN-GT-10-115-CR
	2	**064503**	F2B-GTEZ-200-PCR			**129979**	AN-GT-10-200-CR
	50mm	***129354***	*F2B-GTEZ-50M-PCR*			***129986***	*AN-GT-10-50M-CR*

@ Assembled to order

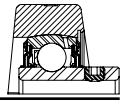

E-Z KLEEN Mounted Bearings

GTEZ Normal Duty Polymer Housed 2 Bolt Flange Bearings

Size	Shaft Series	Weight lbs kg	A	B	C#	D	F Bolt Dia.	H	J	L	M	Z
204	3/4	0.77	1-15/32	4-29/64	1-45/64	3-17/32	3/8	17/32	37/64	1-1/2	2-23/64	1-3/4
	20 mm	*0.36*	*37.3*	*113.1*	*43.3*	*89.7*	*M10*	*13.5*	*14.7*	*38.1*	*59.9*	*44.5*
205	1	1.01	1-29/64	4-59/64	1-11/16	3-57/64	3/8	35/64	17/32	1-51/64	2-23/32	1-3/4
	25 mm	*0.47*	*36.9*	*125.0*	*42.9*	*98.8*	*M10*	*13.9*	*13.5*	*45.6*	*69.1*	*44.5*
206	1-1/8	1.56	1-39/64	5-19/32	1-53/64	4-19/32	3/8	39/64	35/64	2-5/64	3-13/64	1-7/8
	1-3/16	1.46										
	1-1/4	1.36										
	30 mm	*0.57*	*40.9*	*142.1*	*46.4*	*116.7*	*M10*	*15.5*	*13.9*	*52.8*	*81.4*	*47.6*
207	1-1/4	2.18	1-5/8	6-5/16	1-27/32	5-1/8	1/2	5/8	35/64	2-3/8	3-45/64	1-59/64
	1-5/16	2.11										
	1-7/16	2.08										
	35 mm	*1.00*	*41.3*	*160.3*	*46.8*	*130.2*	*M12*	*15.9*	*13.9*	*60.3*	*94.1*	*48.8*
208	1-1/2	2.75	1-27/32	6-25/32	2-5/64	5-21/32	1/2	43/64	37/64	2-5/8	4-1/16	2-1/8
	40 mm	*1.26*	*46.8*	*172.2*	*52.8*	*143.7*	*M12*	*17.1*	*14.7*	*66.7*	*103.2*	*54.0*
209	1-5/8	3.11	1-55/64	7-5/64	2-5/64	5-27/32	9/16	23/32	19/32	2-55/64	4-5/16	2-11/64
	1-11/16	3.07										
	1-3/4	3.04										
	45 mm	*1.41*	*47.2*	*179.8*	*52.8*	*148.4*	*M14*	*18.3*	*15.1*	*72.6*	*109.5*	*55.2*
210	1-15/16	3.64	1-55/64	7-31/64	2-15/64	6-3/16	5/8	49/64	39/64	3-1/8	4-1/2	2-5/16
	2	3.60										
	50 mm	*1.67*	*47.2*	*190.1*	*56.8*	*157.2*	*M16*	*19.4*	*15.5*	*79.4*	*114.3*	*58.8*

#C dimension will vary slightly depending on true shaft diameter.

E-Z KLEEN Mounted Bearings

GTEZ Normal Duty Stainless Steel 2 Bolt Flange Bearings

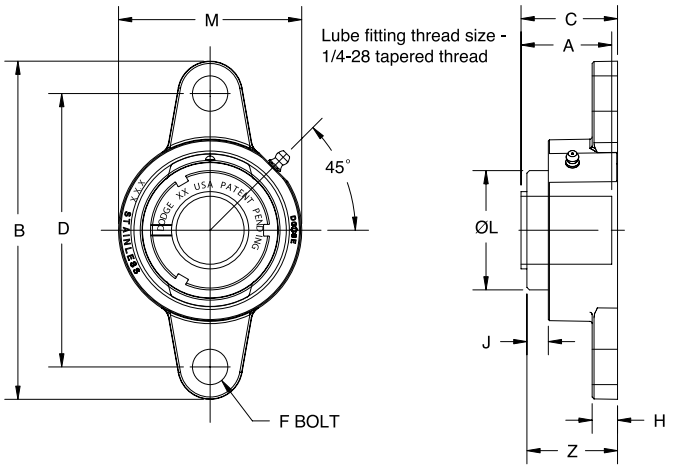

Series	Shaft Size	Complete Unit		Unit Without Adapter		Adapter & Nut Assembly	
		Part No.	Description	Part No.	Description	Part No.	Description
204	3/4	**129355**	F2B-GTEZ-012-SHCR	**129573**	F2B-GTEZ-04-SHCR	**129967**	AN-GT-04-012-CR
	20mm	***129356***	*F2B-GTEZ-20M-SHCR*			***129980***	*AN-GT-04-20M-CR*
205	1	**129357**	F2B-GTEZ-100-SHCR	**129574**	F2B-GTEZ-05-SHCR	**129968**	AN-GT-05-100-CR
	25mm	***129358***	*F2B-GTEZ-25M-SHCR*			***129981***	*AN-GT-05-25M-CR*
206	1-1/8	**@**	F2B-GTEZ-102-SHCR	**129575**	F2B-GTEZ-06-SHCR	**129969**	AN-GT-06-102-CR
	1-3/16	**129359**	F2B-GTEZ-103-SHCR			**129970**	AN-GT-06-103-CR
	1-1/4	**129360**	F2B-GTEZ-104S-SHCR			**129971**	AN-GT-06-104S-CR
	30mm	***129361***	*F2B-GTEZ-30M-SHCR*			***129982***	*AN-GT-06-30M-CR*
207	1-1/4	**129362**	F2B-GTEZ-104-SHCR	**129576**	F2B-GTEZ-07-SHCR	**129972**	AN-GT-07-104-CR
	1-3/8	**065694**	F2B-GTEZ-106-SHCR			**129973**	AN-GT-07-106-CR
	1-7/16	**129363**	F2B-GTEZ-107-SHCR			**129974**	AN-GT-07-107-CR
	35mm	***129364***	*F2B-GTEZ-35M-SHCR*			***129983***	*AN-GT-07-35M-CR*
208	1-1/2	**129365**	F2B-GTEZ-108-SHCR	**129577**	F2B-GTEZ-08-SHCR	**129975**	AN-GT-08-108-CR
	40mm	***129366***	*F2B-GTEZ-40M-SHCR*			***129984***	*AN-GT-08-40M-CR*
210	1-15/16	**129367**	F2B-GTEZ-115-SHCR	**129578**	F2B-GTEZ-10-SHCR	**129978**	AN-GT-10-115-CR
	2	**@**	F2B-GTEZ-200-SHCR			**129979**	AN-GT-10-200-CR
	50mm	***129368***	*F2B-GTEZ-50M-SHCR*			***129986***	*AN-GT-10-50M-CR*

@ Assembled to order

Series	Shaft Size	Weight lbs kg	A	B	C#	D	F Bolt Dia.	H	J	L	M	Z
204	3/4	1.10	1-15/32	4-3/8	1-1/2	3-17/32	3/8	21/64	39/64	1-1/2	2-3/8	1-9/16
	20mm	*0.49*	*37.3*	*111.1*	*38.1*	*89.7*	*M10*	*8.3*	*15.5*	*38.1*	*60.3*	*39.7*
205	1	1.43	1-29/64	4-57/64	1-35/64	3-57/64	3/8	23/64	9/16	1-51/64	2-5/8	1-19/32
	25mm	*0.65*	*36.9*	*124.2*	*39.3*	*98.8*	*M10*	*9.1*	*14.3*	*45.6*	*66.7*	*40.5*
206	1-1/8	2.21	1-39/64	5-33/64	1-47/64	4-19/32	3/8	23/64	35/64	2-5/64	3-1/8	1-25/32
	1-3/16	2.17										
	1-1/4	2.13										
	30mm	*0.98*	*40.9*	*140.1*	*44.1*	*116.7*	*M10*	*9.1*	*13.9*	*52.8*	*79.4*	*45.2*
207	1-1/4	3.12	1-5/8	6-3/16	1-25/32	5-1/8	1/2	27/64	35/64	2-3/8	3-1/2	1-55/64
	1-3/8	2.99										
	1-7/16	2.95										
	35mm	*1.42*	*41.3*	*157.2*	*44.8*	*130.2*	*M12*	*10.7*	*13.9*	*60.3*	*88.9*	*47.2*
208	1-1/2	3.91	1-27/32	6-23/32	1-63/64	5-21/32	1/2	27/64	37/64	2-5/8	3-27/32	2-1/32
	40mm	*1.77*	*46.8*	*170.7*	*50.4*	*143.7*	*M12*	*10.7*	*14.7*	*66.7*	*97.6*	*51.6*
210	1-15/16	4.89	1-55/64	7-31/64	2	6-3/16	5/8	31/64	19/32	3-1/8	4-5/16	2-5/64
	2	4.85										
	50mm	*2.20*	*47.2*	*190.1*	*50.8*	*157.2*	*M16*	*12.3*	*15.1*	*79.4*	*109.5*	*52.8*

#C dimension will vary slightly depending on true shaft diameter.

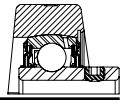

E-Z KLEEN Mounted Bearings

SCEZ Normal Duty Polymer Housed 2 Bolt Flange Bearings

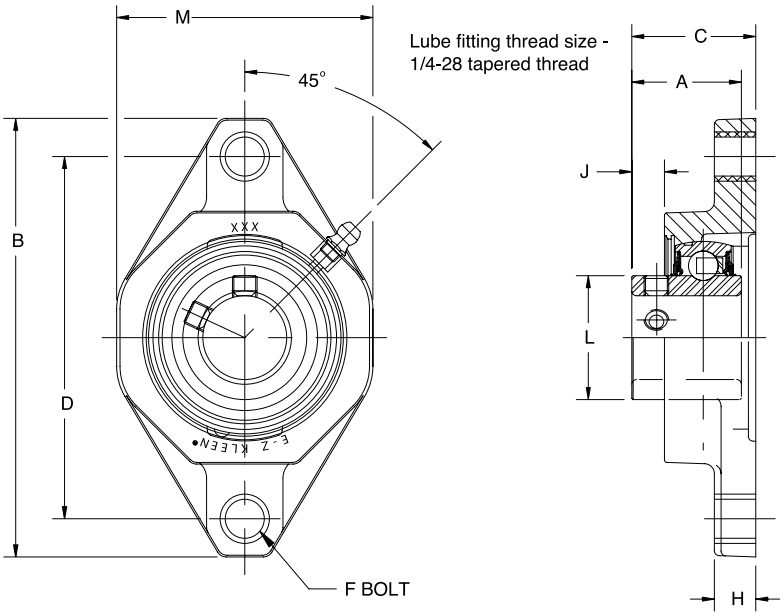

Series	Shaft Size	With Corrosion Resistant Insert		Standard Insert With Flingers		Weight lbs kg	A	B	C	D	F Bolt Dia.	H	J	L	M
		Part No.	Description	Part No.	Description										
204	1/2	**059823**	F2B-SCEZ-008L-PCR*	**@**	F2B-SCEZ-008L-P	0.48	1-5/32	4-29/64	1-27/64	3-17/32	3/8	17/32	19/64	1-1/8	2-23/64
	5/8	**058792**	F2B-SCEZ-010L-PCR*	**@**	F2B-SCEZ-010L-P	0.44									
	3/4	**127524**	F2B-SCEZ-012-PCR	**058404**	F2B-SCEZ-012-P	0.40									
	20 mm	***127563***	*F2B-SCEZ-20M-PCR*	**@**	*F2B-SCEZ-20M-P*	*0.24*	*29.4*	*113.0*	*36.1*	*90.0*	*M10*	*13.5*	*7.6*	*28.6*	*59.9*
205	7/8	**@**	F2B-SCEZ-014-PCR*	**@**	F2B-SCEZ-014-P	0.64	1-3/16	4-59/64	1-15/32	3-57/64	3/8	35/64	21/64	1-21/64	2-23/32
	15/16	**@**	F2B-SCEZ-015-PCR*	**@**	F2B-SCEZ-015-P	0.60									
	1	**127525**	F2B-SCEZ-100-PCR	**057524**	F2B-SCEZ-100-P	0.56									
	25 mm	***127564***	*F2B-SCEZ-25M-PCR*	**@**	*F2B-SCEZ-25M-P*	*0.28*	*30.2*	*125.0*	*37.3*	*99.0*	*M10*	*13.9*	*8.4*	*33.7*	*69.1*
206	1-1/8	**058470**	F2B-SCEZ-102-PCR*	**@**	F2B-SCEZ-102-P	0.88	1-25/64	5-19/32	1-21/32	4-19/32	3/8	39/64	27/64	1-37/64	3-13/64
	1-3/16	**127526**	F2B-SCEZ-103-PCR	**@**	F2B-SCEZ-103-P	0.86									
	1-1/4	**127527**	F2B-SCEZ-104S-PCR	**057594**	F2B-SCEZ-104S-P	0.84									
	30 mm	***127565***	*F2B-SCEZ-30M-PCR*	**@**	*F2B-SCEZ-30M-P*	*0.39*	*35.3*	*142.1*	*42.1*	*116.5*	*M10*	*13.9*	*10.6*	*40.1*	*81.4*
207	1-1/4	**127528**	F2B-SCEZ-104-PCR	**057687**	F2B-SCEZ-104-P	1.36	1-17/32	6-5/16	1-51/64	5-1/8	1/2	5/8	33/64	1-27/32	3-45/64
	1-5/16	**049380**	F2B-SCEZ-105-PCR*	**@**	F2B-SCEZ-105-P	1.32									
	1-3/8	**056893**	F2B-SCEZ-106-PCR*	**056526**	F2B-SCEZ-106-P	1.28									
	1-7/16	**127529**	F2B-SCEZ-107-PCR	**058941**	F2B-SCEZ-107-P	1.24									
	35 mm	***127566***	*F2B-SCEZ-35M-PCR*	**@**	*F2B-SCEZ-35M-P*	*0.61*	*38.9*	*160.3*	*45.6*	*130.0*	*M12*	*15.9*	*13.2*	*46.8*	*94.1*
208	1-1/2	**127530**	F2B-SCEZ-108-PCR	**056580**	F2B-SCEZ-108-P	1.82	1-11/16	6-25/32	1-31/32	5-21/32	1/2	43/64	33/64	2-3/64	4-1/16
	1-5/8	**@**	F2B-SCEZ-110-PCR*	**@**	F2B-SCEZ-110-P	1.78									
	40 mm	***127567***	*F2B-SCEZ-40M-PCR*	**@**	*F2B-SCEZ-40M-P*	*0.76*	*42.9*	*172.2*	*50.0*	*143.5*	*M12*	*17.1*	*13.2*	*52.0*	*103.1*
209	1-5/8	**@**	F2B-SCEZ-110L-PCR*	**@**	F2B-SCEZ-110L-P	2.04	1-23/32	7-5/64	2-1/64	5-27/32	9/16	23/32	9/16	2-7/32	4-5/16
	1-11/16	**127531**	F2B-SCEZ-111-PCR	**@**	F2B-SCEZ-111-P	2.00									
	1-3/4	**@**	F2B-SCEZ-112-PCR	**065786**	F2B-SCEZ-112-P	1.96									
	45 mm	***127568***	*F2B-SCEZ-45M-PCR*	**@**	*F2B-SCEZ-45M-P*	*0.88*	*43.7*	*179.8*	*51.2*	*148.5*	*M14*	*18.2*	*14.1*	*56.4*	*109.5*
210	1-15/16	**127532**	F2B-SCEZ-115-PCR	**058593**	F2B-SCEZ-115-P	2.12	1-3/4	7-31/64	2-11/64	6-3/16	5/8	49/64	19/32	2-7/16	4-1/2
	2	**049835**	F2B-SCEZ-200-PCR	**@**	F2B-SCEZ-200-P	2.08									
	50 mm	***127569***	*F2B-SCEZ-50M-PCR*	**@**	*F2B-SCEZ-50M-P*	*0.96*	*44.5*	*190.1*	*55.2*	*157.0*	*M16*	*19.4*	*14.9*	*61.9*	*114.3*

@ Assembled to order * 20 piece minimum

E-Z KLEEN Mounted Bearings

SCEZ Normal Duty Stainless Steel 2 Bolt Flange Bearings

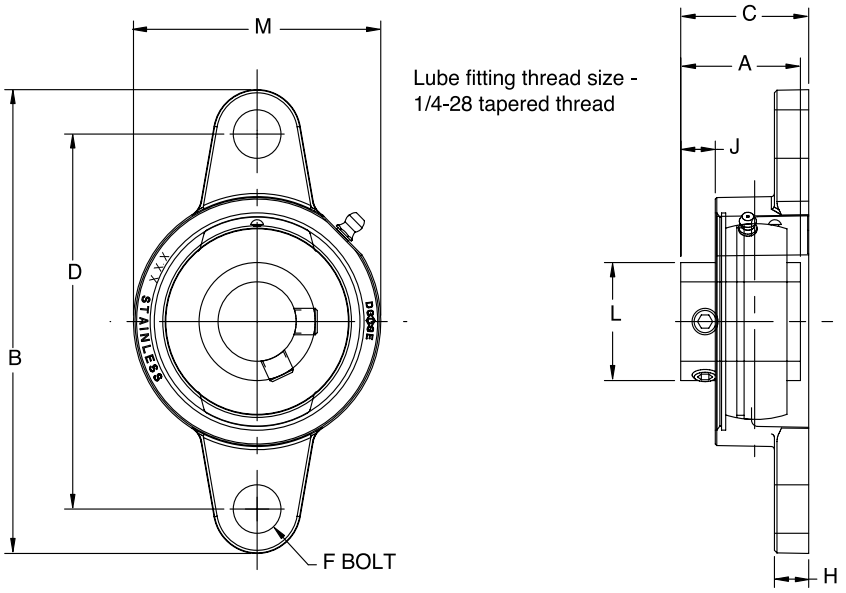

Series	Shaft Size	With Corrosion Resistant Insert		Standard Insert With Flingers		Weight lbs kg	A	B	C	D	F Bot Dia.	H	J	L	M
		Part No.	Description	Part No.	Description										
204	1/2	@	F2B-SCEZ-008L-SHCR*	@	F2B-SCEZ-008L-SH	1.04	1-5/32	4-3/8	1-1/4	3-17/32	3/8	21/64	11/32	1-1/8	2-3/8
	5/8	**062994**	F2B-SCEZ-010L-SHCR*	@	F2B-SCEZ-010L-SH	0.99									
	3/4	**127681**	F2B-SCEZ-012-SHCR	**056801**	F2B-SCEZ-012-SH	0.95									
	20mm	***127703***	*F2B-SCEZ-20M-SHCR*	@	*F2B-SCEZ-20M-SH*	*0.42*	*29.4*	*111.1*	*31.8*	*89.7*	*M10*	*8.3*	*8.7*	*28.6*	*60.3*
205	7/8	@	F2B-SCEZ-014-SHCR*	@	F2B-SCEZ-014-SH	1.25	1-3/16	4-57/64	1-11/32	3-57/64	3/8	23/64	3/8	1-21/64	2-5/8
	15/16	@	F2B-SCEZ-015-SHCR*	**049686**	F2B-SCEZ-015-SH	1.23									
	1	**127682**	F2B-SCEZ-100-SHCR	**056611**	F2B-SCEZ-100-SH	1.21									
	25mm	***127704***	*F2B-SCEZ-25M-SHCR*	@	*F2B-SCEZ-25M-SH*	*0.55*	*30.2*	*124.2*	*34.1*	*98.8*	*M10*	*9.1*	*9.5*	*33.7*	*66.7*
206	1-1/8	@	F2B-SCEZ-102-SHCR	@	F2B-SCEZ-102-SH	1.95	1-25/64	5-33/64	1-9/16	4-19/32	3/8	23/64	27/64	1-37/64	3-1/8
	1-3/16	**127683**	F2B-SCEZ-103-SHCR	**056971**	F2B-SCEZ-103-SH	1.91									
	1-1/4	**127684**	F2B-SCEZ-104S-SHCR	**056612**	F2B-SCEZ-104S-SH	1.87									
	30mm	***127705***	*F2B-SCEZ-30M-SHCR*	@	*F2B-SCEZ-30M-SH*	*0.87*	*35.3*	*140.1*	*39.7*	*116.7*	*M10*	*9.1*	*10.7*	*40.1*	*79.4*
207	1-1/4	**127685**	F2B-SCEZ-104-SHCR	**056802**	F2B-SCEZ-104-SH	2.64	1-17/32	6-3/16	1-3/4	5-1/8	1/2	27/64	17/32	1-27/32	3-1/2
	1-3/8	**056734**	F2B-SCEZ-106-SHCR*	@	F2B-SCEZ-106-SH	2.53									
	1-7/16	**127686**	F2B-SCEZ-107-SHCR	**056803**	F2B-SCEZ-107-SH	2.47									
	35mm	***127706***	*F2B-SCEZ-35M-SHCR*	@	*F2B-SCEZ-35M-SH*	*1.15*	*38.9*	*157.2*	*44.5*	*130.2*	*M12*	*10.7*	*13.5*	*46.8*	*88.9*
208	1-1/2	**127687**	F2B-SCEZ-108-SHCR	**056804**	F2B-SCEZ-108-SH	3.40	1-11/16	6-23/32	1-7/8	5-21/32	1/2	27/64	17/32	2-3/64	3-27/32
	1-5/8	**068283**	F2B-SCEZ-110-SHCR	—	—	3.10									
	40mm	***127707***	*F2B-SCEZ-40M-SHCR*	@	*F2B-SCEZ-40M-SH*	*1.50*	*42.9*	*170.7*	*47.6*	*143.7*	*M12*	*10.7*	*13.5*	*52.0*	*97.6*
210	1-11/16	@	F2B-SCMEZ-111-SHCR*	**056552**	F2B-SCMEZ-111-SH	4.21	1-3/4	7-31/64	1-61/64	6-3/16	5/8	31/64	19/32	2-7/16	4-5/16
	1-15/16	**127688**	F2B-SCEZ-115-SHCR	**056805**	F2B-SCEZ-115-SH	4.17									
	2	**062913**	F2B-SCEZ-200-SHCR	**056964**	F2B-SCEZ-200-SH	4.13									
	50mm	***127708***	*F2B-SCEZ-50M-SHCR*	@	*F2B-SCEZ-50M-SH*	*1.87*	*44.5*	*190.1*	*49.6*	*157.2*	*M16*	*12.3*	*15.1*	*61.9*	*109.5*

@ Assembled to order *20 piece minimum

E-Z KLEEN Mounted Bearings

DLEZ Normal Duty Polymer Housed 2 Bolt Flange Bearings

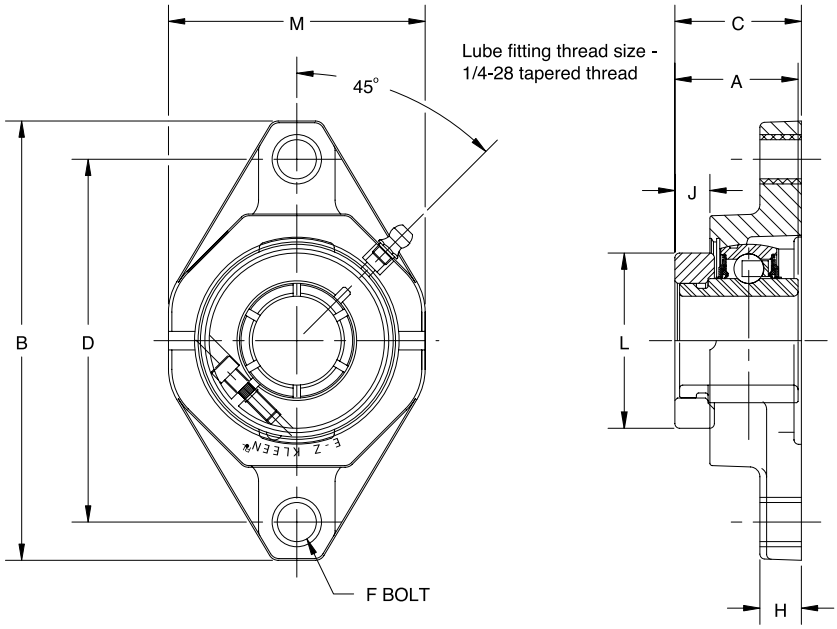

Series	Shaft Size	With Corrosion Resistant Insert		Standard Insert With Flingers		Weight lbs kg	A	B	C	D	F Bolt Dia.	H	J	L	M
		Part No.	Description	Part No.	Description										
204	3/4	**127602**	F2B-DLEZ-012-PCR	@	F2B-DLEZ-012-P	0.77	1-9/32	4-29/64	1-15/32	3-17/32	3/8	17/32	23/64	1-45/64	2-23/64
	20 mm	***127641***	*F2B-DLEZ-20M-PCR*	@	*F2B-DLEZ-20M-P*	*0.36*	*32.5*	*113.0*	*37.3*	*90.0*	*M10*	*13.5*	*9.1*	*43.3*	*59.9*
205	7/8	@	F2B-DLEZ-014-PCR*	@	F2B-DLEZ-014-P	1.09	1-7/16	4-59/64	1-37/64	3-57/64	3/8	35/64	7/16	2	2-23/32
	15/16	@	F2B-DLEZ-015-PCR*	@	F2B-DLEZ-015-P	1.05									
	1	**127603**	F2B-DLEZ-100-PCR	@	F2B-DLEZ-100-P	1.01									
	25 mm	***127642***	*F2B-DLEZ-25M-PCR*	@	*F2B-DLEZ-25M-P*	*0.47*	*36.5*	*125.0*	*40.1*	*99.0*	*M10*	*13.9*	*11.1*	*50.8*	*69.1*
206	1-1/8	@	F2B-DLEZ-102-PCR*	@	F2B-DLEZ-102-P	1.56	1-9/16	5-19/32	1-11/16	4-19/32	3/8	39/64	29/64	2-7/32	3-13/64
	1-3/16	**127604**	F2B-DLEZ-103-PCR	@	F2B-DLEZ-103-P	1.46									
	1-1/4	**127605**	F2B-DLEZ-104S-PCR	@	F2B-DLEZ-104S-P	1.36									
	30 mm	***127643***	*F2B-DLEZ-30M-PCR*	@	*F2B-DLEZ-30M-P*	*0.57*	*39.7*	*142.1*	*42.9*	*116.5*	*M10*	*13.9*	*11.5*	*56.4*	*81.4*
207	1-1/4	**127606**	F2B-DLEZ-104-PCR	@	F2B-DLEZ-104-P	2.18	1-3/4	6-5/16	1-53/64	5-1/8	1/2	5/8	35/64	2-11/16	3-45/64
	1-3/8	@	F2B-DLEZ-106-PCR*	@	F2B-DLEZ-106-P	2.11									
	1-7/16	**127607**	F2B-DLEZ-107-PCR	@	F2B-DLEZ-107-P	2.08									
	35 mm	***127644***	*F2B-DLEZ-35M-PCR*	@	*F2B-DLEZ-35M-P*	*1.00*	*44.5*	*160.3*	*46.4*	*130.0*	*M12*	*15.9*	*13.9*	*68.3*	*94.1*
208	1-1/2	**127608**	F2B-DLEZ-108-PCR	@	F2B-DLEZ-108-P	2.75	2	6-25/32	2-1/8	5-21/32	1/2	43/64	11/16	2-47/64	4-1/16
	40 mm	***127645***	*F2B-DLEZ-40M-PCR*	@	*F2B-DLEZ-40M-P*	*1.26*	*50.8*	*172.2*	*54.0*	*143.5*	*M12*	*17.1*	*17.5*	*69.5*	*103.1*
209	1-5/8	@	F2B-DLEZ-110L-PCR*	@	F2B-DLEZ-110L-P	3.11	2	7-5/64	2-9/64	5-27/32	9/16	23/32	11/16	2-63/64	4-5/16
	1-11/16	**127609**	F2B-DLEZ-111-PCR	@	F2B-DLEZ-111-P	3.07									
	1-3/4	@	F2B-DLEZ-112-PCR*	@	F2B-DLEZ-112-P	3.04									
	45 mm	***127646***	*F2B-DLEZ-45M-PCR*	@	*F2B-DLEZ-45M-P*	*1.41*	*50.8*	*179.8*	*54.4*	*148.5*	*M14*	*18.2*	*17.5*	*75.8*	*109.5*
210	1-15/16	**127610**	F2B-DLEZ-115-PCR	@	F2B-DLEZ-115-P	3.64	2-3/32	7-31/64	2-23/64	6-3/16	5/8	49/64	25/32	3-15/64	4-1/2
	2	**058515**	F2B-DLEZ-200-PCR	@	F2B-DLEZ-200-P	3.60									
	50 mm	***127647***	*F2B-DLEZ-50M-PCR*	@	*F2B-DLEZ-50M-P*	*1.67*	*53.2*	*190.1*	*59.9*	*157.0*	*M16*	*19.4*	*19.8*	*82.1*	*114.3*

@ Assembled to order *20 piece minimum

E-Z KLEEN Mounted Bearings

DLEZ Normal Duty Stainless Steel 2 Bolt Flange Bearings

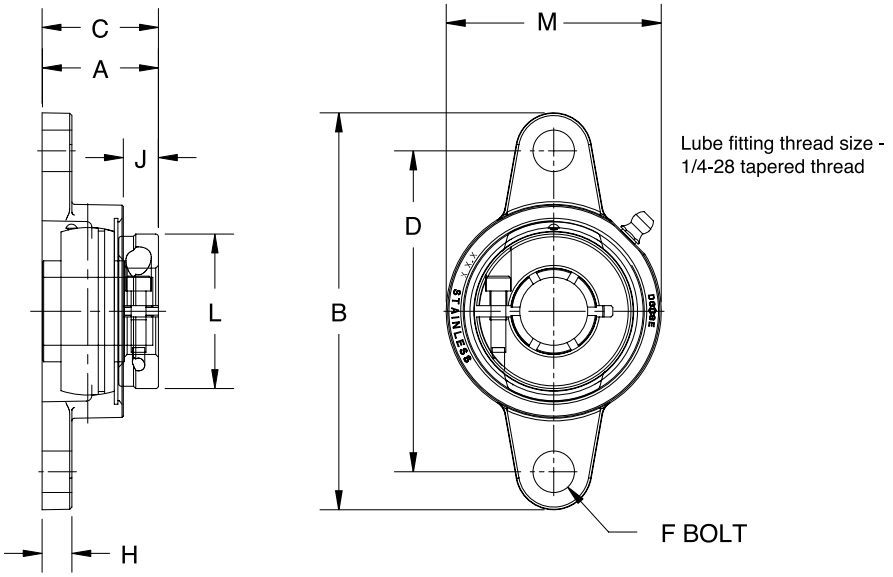

Series	Shaft Size	Part No.	Description	Weight lbs kg	A	B	C	D	F Bolt Dia.	H	J	L	M
204	3/4	**127723**	F2B-DLEZ-012-SHCR	1.10	1-9/32	4-3/8	1-19/64	3-17/32	3/8	21/64	13/32	1-45/64	2-3/8
	20mm	***127745***	*F2B-DLEZ-20M-SHCR*	*0.49*	*32.5*	*111.1*	*32.9*	*89.7*	*M10*	*8.3*	*10.3*	*43.3*	*60.3*
205	7/8	**@**	F2B-DLEZ-014-SHCR*	1.51	1-7/16	4-57/64	1-29/64	3-57/64	3/8	23/64	31/64	2	2-5/8
	15/16	**@**	F2B-DLEZ-015-SHCR*	1.47									
	1	**127724**	F2B-DLEZ-100-SHCR	1.43									
	25mm	***127746***	*F2B-DLEZ-25M-SHCR*	*0.65*	*36.5*	*124.2*	*36.9*	*98.8*	*M10*	*9.1*	*12.3*	*50.8*	*66.7*
206	1-1/8	**@**	F2B-DLEZ-102-SHCR	2.21	1-9/16	5-33/64	1-19/32	4-19/32	3/8	23/64	29/64	2-7/32	3-1/8
	1-3/16	**127725**	F2B-DLEZ-103-SHCR	2.17									
	1-1/4	**127726**	F2B-DLEZ-104S-SHCR	2.13									
	30mm	***127747***	*F2B-DLEZ-30M-SHCR*	*0.98*	*39.7*	*140.1*	*40.5*	*116.7*	*M10*	*9.1*	*11.5*	*56.4*	*79.4*
207	1-1/4	**127727**	F2B-DLEZ-104-SHCR	3.12	1-3/4	6-3/16	1-25/32	5-1/8	1/2	27/64	9/16	2-11/16	3-1/2
	1-3/8	**@**	F2B-DLEZ-106-SHCR*	2.99									
	1-7/16	**127728**	F2B-DLEZ-107-SHCR	2.95									
	35mm	***127748***	*F2B-DLEZ-35M-SHCR*	*1.42*	*44.5*	*157.2*	*45.2*	*130.2*	*M12*	*10.7*	*14.3*	*68.3*	*88.9*
208	1-1/2	**127729**	F2B-DLEZ-108-SHCR	3.91	2	6-23/32	2-1/32	5-21/32	1/2	27/64	11/16	2-47/64	3-27/32
	40mm	***127749***	*F2B-DLEZ-40M-SHCR*	*1.77*	*50.8*	*170.7*	*51.6*	*143.7*	*M12*	*10.7*	*17.5*	*69.5*	*97.6*
210	1-11/16	**@**	F2B-DLMEZ-111-SHCR*	4.89	2-3/32	7-31/64	2-9/64	6-3/16	5/8	31/64	25/32	3-15/64	4-5/16
	1-15/16	**127730**	F2B-DLEZ-115-SHCR	4.85									
	50mm	***127750***	*F2B-DLEZ-50M-SHCR*	*2.20*	*53.2*	*190.1*	*54.4*	*157.2*	*M16*	*12.3*	*19.8*	*82.2*	*109.5*

@ Assembled to order *20 piece minimum

E-Z KLEEN Mounted Bearings

SCEZ LF SHCR Normal Duty Stainless Steel 3 Bolt Flange Bearings

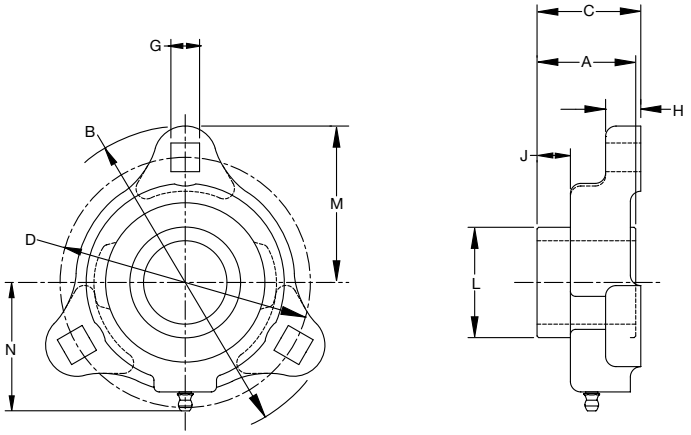

Series	Shaft Size	Corrosion Resistant Insert Part No.	Corrosion Resistant Insert Description	Weight lbs. kgs.	A	B	C	D	G	H	J	L	M	N
204	3/4	**136927**	LF-SCEZ-012-SHCR	.64	1-5/32	3-9/16	1-7/32	2-13/16	11/32	27/64	3/8	1-1/8	1-25/32	1-35/64
	20 mm	***136966***	*LF-SCEZ-20M-SHCR*	*.29*	*29.4*	*90.5*	*30.8*	*71.4*	*8.7*	*10.7*	*9.4*	*28.6*	*45.3*	*39.3*
205	1	**136928**	LF-SCEZ-100-SHCR	.80	1-3/16	3-3/4	1-1/4	3	11/32	27/64	3/8	1-21/64	1-7/8	1-43/64
	25 mm	***136967***	*LF-SCEZ-25M-SHCR*	*.36*	*30.2*	*95.3*	*31.7*	*76.2*	*8.7*	*10.7*	*9.5*	*33.7*	*47.7*	*42.4*
206	1-3/16	**136929**	LF-SCEZ-103-SHCR	1.23	1-25/64	4-7/16	1-15/32	3-9/16	13/32	15/32	15/32	1-37/64	2-7/32	1-63/64
	1-1/4	**136930**	LF-SCEZ-104S-SHCR											
	30 mm	***136968***	*LF-SCEZ-30M-SHCR*	*.56*	*35.3*	*112.7*	*37.1*	*90.5*	*10.3*	*11.9*	*12.1*	*40.1*	*56.4*	*50.4*
207	1-1/4	**136931**	LF-SCEZ-104-SHCR	1.73	1-17/32	4-13/16	1-19/32	3-15/16	13/32	1/2	17/32	1-27/32	2-13/64	2-3/32
	1-7/16	**136932**	LF-SCEZ-107-SHCR											
	35 mm	***136969***	*LF-SCEZ-35M-SHCR*	*.78*	*38.9*	*122.2*	*40.6*	*100.0*	*10.3*	*12.7*	*13.6*	*46.8*	*61.1*	*53.1*

SCEZ SHCR Normal Duty Stainless Steel Housed 2 Bolt Flange Bearings

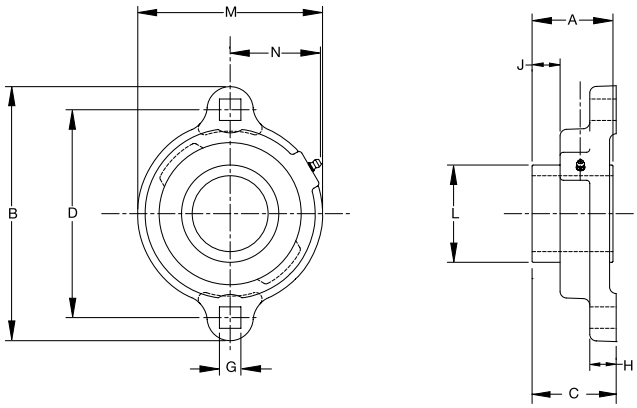

Series	Shaft Size	Corrosion Resistant Insert Part No.	Corrosion Resistant Insert Description	Weight lbs. kgs.	A	B	C	D	G	H	J	L	M	N
204	3/4	**136933**	LFT-SCEZ-012-SHCR	.68	1-5/32	3-9/16	1-7/32	2-13/16	11/32	27/64	3/8	1-1/8	2-3/8	1-11/32
	20 mm	***136970***	*LFT-SCEZ-20M-SHCR*	*.31*	*29.4*	*90.5*	*30.8*	*71.5*	*8.7*	*10.7*	*9.4*	*28.6*	*60.4*	*34.1*
205	1	**136934**	LFT-SCEZ-100-SHCR	.84	1-3/16	3-3/4	1-1/4	3	11/32	27/64	3/8	1-21/64	2-5/8	1-7/16
	25 mm	***136971***	*LFT-SCEZ-25M-SHCR*	*.38*	*30.2*	*95.3*	*31.7*	*76*	*8.7*	*10.7*	*9.5*	*33.7*	*66.6*	*36.5*
206	1-3/16	**136935**	LFT-SCEZ-103-SHCR	1.28	1-25/64	4-7/16	1-15/32	3-9/16	13/32	15/32	15/32	1-37/64	3-1/4	1-23/32
	1-1/4	**136936**	LFT-SCEZ-104S-SHCR											
	30 mm	***136972***	*LFT-SCEZ-30M-SHCR*	*.58*	*35.3*	*112.7*	*37.1*	*90.5*	*10.3*	*11.9*	*12.1*	*40.1*	*82.6*	*43.7*
207	1-1/4	**136937**	LFT-SCEZ-104-SHCR	1.77	1-17/32	4-13/16	1-19/32	3-15/16	13/32	1/2	17/32	1-27/32	3-1/2	1-53/64
	1-7/16	**136938**	LFT-SCEZ-107-SHCR											
	35 mm	***136973***	*LFT-SCEZ-35M-SHCR*	*.80*	*38.9*	*122.2*	*40.6*	*100.0*	*10.3*	*12.7*	*13.6*	*46.8*	*89.0*	*46.4*

E-Z KLEEN Mounted Bearings

GTEZ Normal Duty Polymer Housed Flange Bearings

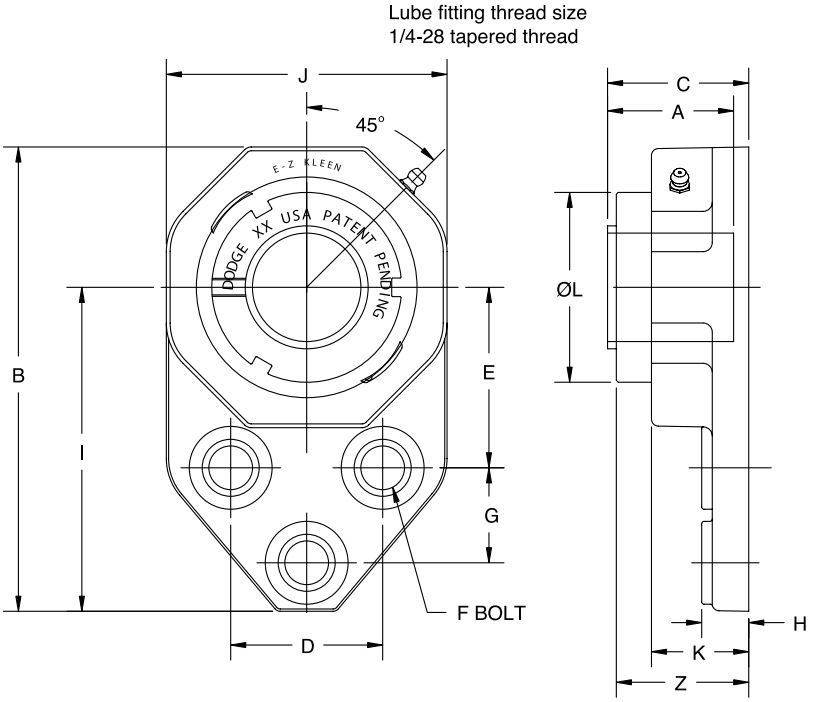

Series	Shaft Size	Complete Unit		Unit Without Adapter		Adapter & Nut Assembly	
		Part No.	Description	Part No.	Description	Part No.	Description
204	3/4	**129627**	FB-GTEZ-012-PCR	**129555**	FB-GTEZ-04-PCR	**129967**	AN-GT-04-012-CR
205	1	**129629**	FB-GTEZ-100-PCR	**129556**	FB-GTEZ-05-PCR	**129968**	AN-GT-05-100-CR
206	1-1/8	**@**	FB-GTEZ-102-PCR	**129557**	FB-GTEZ-06-PCR	**129969**	AN-GT-06-102-CR
	1-3/16	**129631**	FB-GTEZ-103-PCR			**129970**	AN-GT-06-103-CR
	1-1/4	**129632**	FB-GTEZ-104S-PCR			**129971**	AN-GT-06-104S-CR
207	1-1/4	**129634**	FB-GTEZ-104-PCR	**129558**	FB-GTEZ-07-PCR	**129972**	AN-GT-07-104-CR
	1-3/8	**@**	FB-GTEZ-106-PCR			**129973**	AN-GT-07-106-CR
	1-7/16	**129635**	FB-GTEZ-107-PCR			**129974**	AN-GT-07-107-CR

@ Assembled to order

Series	Shaft Size	Weight lbs kg	A	B	C#	D	E	F Bolt Dia.	G	H	I	J	K	L	Z
204	3/4	0.75	1-15/32	4-25/64	1-45/64	1-1/2	1-11/16	3/8	7/8	17/32	3-15/64	2-11/32	1-1/8	1-1/2	1-11/16
205	1	1.12	1-29/64	4-29/32	1-11/16	1-5/8	1-13/16	3/8	1-1/8	35/64	3-9/16	2-23/32	1-9/64	1-51/64	1-47/64
206	1-1/8	1.77	1-39/64	5-31/64	1-53/64	1-7/8	2-1/16	3/8	1-1/4	39/64	3-7/8	3-13/64	1-1/4	2-5/64	1-25/32
	1-3/16	1.67													
	1-1/4	1.57													
207	1-1/4	2.65	1-5/8	6-7/64	1-27/32	2	2-3/8	1/2	1-1/4	5/8	4-17/64	3-45/64	1-9/32	2-3/8	1-53/64
	1-3/8	2.58													
	1-7/16	2.55													

#C dimension will vary slightly depending on true shaft diameter.

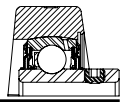

E-Z KLEEN Mounted Bearings

SCEZ Normal Duty Polymer Housed Flange Brackets

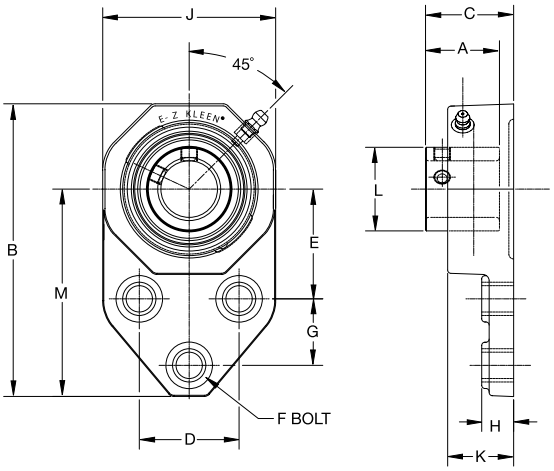

Series	Shaft Size	With Corrosion Resistant Insert		With Insert With Flingers	
		Part No.	Description	Part No.	Description
204	1/2	@	FB-SCEZ-008-PCR*	**062317**	FB-SCEZ-008-P
	5/8	@	FB-SCEZ-010-PCR*	@	FB-SCEZ-010-P
	3/4	**127533**	FB-SCEZ-012-PCR	**058336**	FB-SCEZ-012-P
	20 mm	***127570***	*FB-SCEZ-20M-PCR*	@	*FB-SCEZ-20M-P*
205	7/8	@	FB-SCEZ-014-PCR*	@	FB-SCEZ-014-P
	15/16	@	FB-SCEZ-015-PCR*	@	FB-SCEZ-015-P
	1	**127534**	FB-SCEZ-100-PCR	**057908**	FB-SCEZ-100-P
	25 mm	***127521***	*FB-SCEZ-25M-PCR*	@	*FB-SCEZ-25M-P*
206	1-1/8	@	FB-SCEZ-102-PCR*	@	FB-SCEZ-102-P
	1-3/16	**127535**	FB-SCEZ-103-PCR	@	FB-SCEZ-103-P
	1-1/4	**127536**	FB-SCEZ-104S-PCR	**058311**	FB-SCEZ-104S-P
	30 mm	***127522***	*FB-SCEZ-30M-PCR*	@	*FB-SCEZ-30M-P*
207	1-1/4	**127537**	FB-SCEZ-104-PCR	@	FB-SCEZ-104-P
	1-5/16	**058648**	FB-SCEZ-105-PCR*	@	FB-SCEZ-105-P
	1-3/8	@	FB-SCEZ-106-PCR*	@	FB-SCEZ-106-P
	1-7/16	**127538**	FB-SCEZ-107-PCR	@	FB-SCEZ-107-P
	35 mm	***127523***	*FB-SCEZ-35M-PCR*	@	*FB-SCEZ-35M-P*

@ Assembled to order * 20 piece minimum

Series	Shaft Size	Weight lbs kg	A	B	C	D	E	F Bolt Dia.	G	H	I	J	K	L
204	1/2	0.51	1-5/32	4-25/64	1-27/64	1-1/2	1-11/16	3/8	7/8	17/32	3-3/16	2-11/32	1-1/8	1-1/8
	5/8	0.49												
	3/4	0.47												
	20 mm	*0.23*	*29.4*	*111.5*	*37.3*	*38.1*	*42.9*	*M10*	*22.2*	*13.5*	*81.1*	*59.4*	*28.4*	*28.6*
205	7/8	0.73	1-3/16	4-29/32	1-15/32	1-5/8	1-13/16	3/8	1-1/8	35/64	3-17/32	2-23/32	1-9/64	1-21/64
	15/16	0.71												
	1	0.69												
	25 mm	*0.32*	*30.2*	*124.6*	*40.1*	*41.3*	*46.1*	*M10*	*28.6*	*13.9*	*89.8*	*69.1*	*29.0*	*33.7*
206	1-1/8	1.09	1-25/64	5-31/64	1-21/32	1-7/8	2-1/16	3/8	1-1/4	39/64	3-57/64	3-13/64	1-1/4	1-37/64
	1-3/16	1.07												
	1-1/4	1.05												
	30 mm	*0.48*	*35.3*	*139.2*	*42.9*	*47.6*	*52.4*	*M10*	*31.8*	*15.5*	*98.6*	*81.3*	*31.8*	*40.1*
207	1-1/4	1.87	1-17/32	6-7/64	1-51/64	2	2-3/8	1/2	1-1/4	5/8	4-15/64	3-45/64	1-9/32	1-27/32
	1-5/16	1.81												
	1-3/8	1.76												
	1-7/16	1.71												
	35 mm	*0.83*	*38.9*	*155.2*	*46.4*	*50.8*	*60.3*	*M12*	*31.8*	*15.9*	*107.6*	*94.1*	*32.5*	*46.8*

E-Z KLEEN Mounted Bearings

SCEZ SHCR Normal Duty Stainless Steel Flange Bracket Bearings

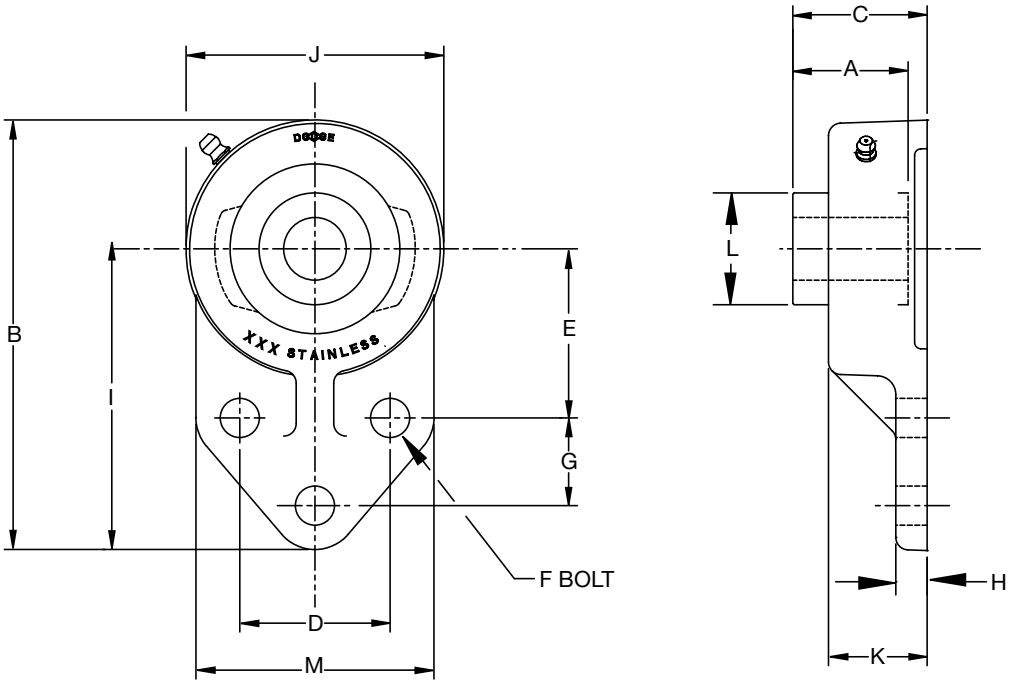

Series	Shaft Size	Corrosion Resistant Insert Part No.	Corrosion Resistant Insert Description	Weight lbs. kgs.	A	B	C	D	E	F Bolt Dia.	G	H	I	J	K	L	M
204	3/4	**136920**	FB-SCEZ-012-SHCR	1.00	1-5/32	4-3/16	1-1/4	1-1/2	1-11/16	25/64	7/8	5/16	3	2-3/8	57/64	1-1/8	2-3/8
	20 mm	***136961***	*FB-SCEZ-20M-SHCR*	*.45*	*29.4*	*106.4*	*31.6*	*38.1*	*42.9*	*9.9*	*22.2*	*8.0*	*76.2*	*60.3*	*22.8*	*28.6*	*60.3*
205	1	**136921**	FB-SCEZ-100-SHCR	1.26	1-3/16	4-11/16	1-11/32	1-5/8	1-13/16	25/64	1-1/8	3/8	3-3/8	2-5/8	63/64	1-21/64	2-1/2
	25 mm	***136962***	*FB-SCEZ-25M-SHCR*	*.52*	*30.2*	*119.1*	*34.2*	*41.3*	*46.0*	*9.9*	*28.6*	*9.5*	*85.7*	*66.7*	*25.0*	*33.7*	*63.5*
206	1-3/16	**136922**	FB-SCEZ-103-SHCR	1.96	1-25/64	5-5/16	1-9/16	1-7/8	2-1/16	25/64	1-1/4	3/8	3-3/4	3-1/8	1-5/64	1-37/64	2-3/4
	1-1/4	**136923**	FB-SCEZ-104S-SHCR														
	30 mm	***136963***	*FB-SCEZ-30M-SHCR*	*.89*	*36.3*	*134.9*	*39.6*	*47.6*	*52.4*	*9.9*	*31.8*	*9.5*	*95.3*	*79.4*	*27.6*	*40.1*	*69.9*
207	1-1/4	**136924**	FB-SCEZ-104-SHCR	2.87	1-17/32	6	1-3/4	2	2-3/8	33/64	1-1/4	1/2	4-1/4	3-1/2	1-7/32	1-27/32	3-1/4
	1-7/16	**136925**	FB-SCEZ-107-SHCR														
	35 mm	***136964***	*FB-SCEZ-35M-SHCR*	*1.3*	*38.9*	*152.4*	*44.5*	*50.8*	*60.3*	*13.1*	*31.8*	*12.7*	*108.0*	*88.9*	*31.1*	*46.8*	*82.6*
210	1-15/16	**136926**	FB-SCEZ-115-SHCR	4.47	1-3/4	7-11/32	1-61/64	2-3/4	2-15/16	33/64	1-5/8	1/2	5-3/16	4-5/16	1-23/64	2-7/16	4
	2	**@**	FB-SCEZ-200-SHCR														
	50mm	***136965***	*FB-SCEZ-50M-SHCR*	*2.03*	*44.5*	*186.5*	*49.5*	*69.9*	*74.6*	*13.1*	*41.3*	*12.7*	*131.8*	*109.5*	*34.4*	*36.5*	*101.6*

@ Assembled to order

E-Z KLEEN Mounted Bearings

DLEZ Normal Duty Polymer Housed Flange Brackets

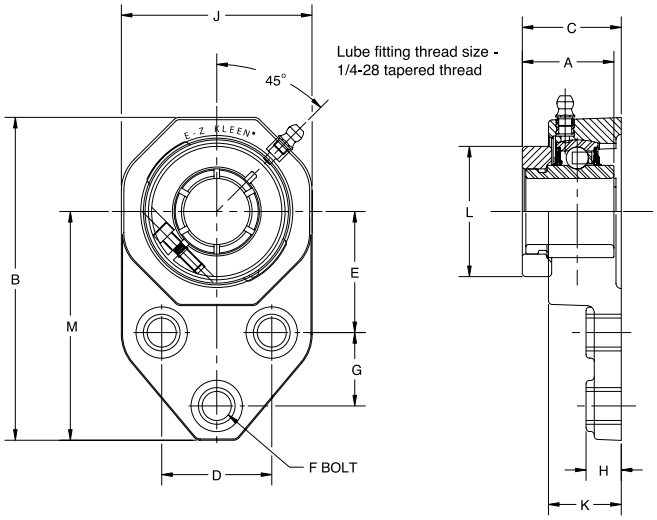

Series	Shaft Size	With Corrosion Resistant Insert		With Insert With Flingers	
		Part No.	Description	Part No.	Description
204	3/4	**127611**	FB-DLEZ-012-PCR	@	FB-DLEZ-012-P
	20 mm	***127648***	*FB-DLEZ-20M-PCR*	@	*FB-DLEZ-20M-P*
205	7/8	@	FB-DLEZ-014-PCR*	@	FB-DLEZ-014-P
	15/16	@	FB-DLEZ-015-PCR*	@	FB-DLEZ-015-P
	1	**127612**	FB-DLEZ-100-PCR	@	FB-DLEZ-100-P
	25 mm	***127649***	*FB-DLEZ-25M-PCR*	@	*FB-DLEZ-25M-P*
206	1-1/8	@	FB-DLEZ-102-PCR*	@	FB-DLEZ-102-P
	1-3/16	**127613**	FB-DLEZ-103-PCR	@	FB-DLEZ-103-P
	1-1/4	**127614**	FB-DLEZ-104S-PCR	@	FB-DLEZ-104S-P
	30 mm	***127650***	*FB-DLEZ-30M-PCR*	@	*FB-DLEZ-30M-P*
207	1-1/4	**127615**	FB-DLEZ-104-PCR	@	FB-DLEZ-104-P
	1-3/8	@	FB-DLEZ-106-PCR*	@	FB-DLEZ-106-P
	1-7/16	**127616**	FB-DLEZ-107-PCR	@	FB-DLEZ-107-P
	35 mm	***127651***	*FB-DLEZ-35M-PCR*	@	*FB-DLEZ-35M-P*

@ Assembled to order

* 20 piece minimum

Series	Shaft Size	Weight lbs kg	A	B	C	D	E	F Bolt Dia.	G	H	I	J	K	L
204	3/4	0.75	1-9/32	4-25/64	1-15/32	1-1/2	1-11/16	3/8	7/8	17/32	3-3/16	2-11/32	1-1/8	1-45/64
	20 mm	*0.35*	*32.5*	*111.5*	*37.3*	*38.1*	*42.9*	*M10*	*22.2*	*13.5*	*81.1*	*59.4*	*28.4*	*43.3*
205	7/8	1.32	1-7/16	4-29/32	1-37/64	1-5/8	1-13/16	3/8	1-1/8	35/64	3-17/32	2-45/64	1-9/64	2
	15/16	1.22												
	1	1.12												
	25 mm	*0.51*	*36.5*	*124.6*	*40.1*	*41.3*	*46.1*	*M10*	*28.6*	*13.9*	*89.8*	*68.8*	*29.0*	*50.8*
206	1-1/8	1.77	1-9/16	5-31/64	1-11/16	1-7/8	2-1/16	3/8	1-1/4	39/64	3-57/64	3-13/64	1-1/4	2-7/32
	1-3/16	1.67												
	1-1/4	1.57												
	30 mm	*0.76*	*39.7*	*139.3*	*42.9*	*47.6*	*52.4*	*M10*	*31.8*	*15.5*	*98.6*	*81.3*	*31.8*	*56.4*
207	1-1/4	2.65	1-3/4	6-7/64	1-53/64	2	2-3/8	1/2	1-1/4	5/8	4-15/64	3-45/64	1-9/32	2-11/16
	1-3/8	2.58												
	1-7/16	2.55												
	35 mm	*1.22*	*44.5*	*155.2*	*46.4*	*50.8*	*60.3*	*M12*	*31.8*	*15.9*	*107.6*	*94.1*	*32.5*	*68.3*

E-Z KLEEN Mounted Bearings

GTEZ Normal Duty Polymer Housed 4 Bolt Flange Bearings

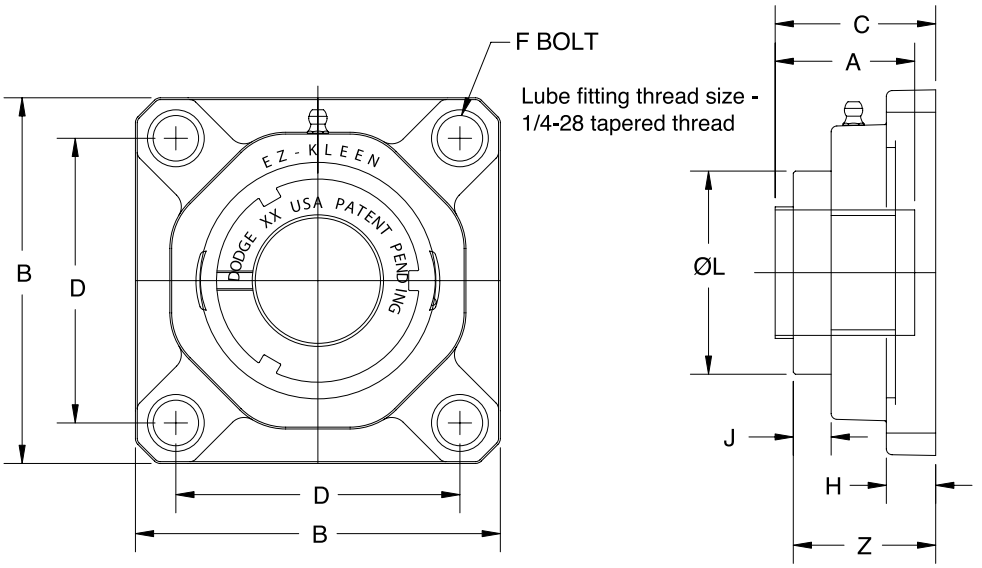

Series	Shaft Size	Complete Unit		Unit Without Adapter		Adapter & Nut Assembly	
		Part No.	Description	Part No.	Description	Part No.	Description
204	3/4	**129706**	F4B-GTEZ-012-PCR	**129541**	F4B-GTEZ-04-PCR	**129967**	AN-GT-04-012-CR
	20 mm	***129707***	*F4B-GTEZ-20M-PCR*			***129980***	*AN-GT-04-20M-CR*
205	1	**129708**	F4B-GTEZ-100-PCR	**129542**	F4B-GTEZ-05-PCR	**129968**	AN-GT-05-100-CR
	25 mm	***129709***	*F4B-GTEZ-25M-PCR*			***129981***	*AN-GT-05-25M-CR*
206	1-1/8	**068687**	F4B-GTEZ-102-PCR	**129543**	F4B-GTEZ-06-PCR	**129969**	AN-GT-06-102-CR
	1-3/16	**129710**	F4B-GTEZ-103-PCR			**129970**	AN-GT-06-103-CR
	1-1/4	**129711**	F4B-GTEZ-104S-PCR			**129971**	AN-GT-06-104S-CR
	30 mm	***129712***	*F4B-GTEZ-30M-PCR*			***129982***	*AN-GT-06-30M-CR*
207	1-1/4	**129713**	F4B-GTEZ-104-PCR	**129544**	F4B-GTEZ-07-PCR	**129972**	AN-GT-07-104-CR
	1-3/8	**@**	F4B-GTEZ-106-PCR			**129973**	AN-GT-07-106-CR
	1-7/16	**129714**	F4B-GTEZ-107-PCR			**129974**	AN-GT-07-107-CR
	35 mm	***129715***	*F4B-GTEZ-35M-PCR*			***129983***	*AN-GT-07-35M-CR*
208	1-1/2	**129716**	F4B-GTEZ-108-PCR	**129545**	F4B-GTEZ-08-PCR	**129975**	AN-GT-08-108-CR
	40 mm	***129717***	*F4B-GTEZ-40M-PCR*			***129984***	*AN-GT-08-40M-CR*
209	1-11/16	**129718**	F4B-GTEZ-111-PCR	**129546**	F4B-GTEZ-09-PCR	**129976**	AN-GT-09-111-CR
	1-3/4	**064584**	F4B-GTEZ-112-PCR			**129977**	AN-GT-09-112-CR
	45 mm	***129705***	*F4B-GTEZ-45M-PCR*			***129985***	*AN-GT-09-45M-CR*
210	1-15/16	**129719**	F4B-GTEZ-115-PCR	**129547**	F4B-GTEZ-10-PCR	**129978**	AN-GT-10-115-CR
	2	**129395**	F4B-GTEZ-200-PCR			**129979**	AN-GT-10-200-CR
	50 mm	***129720***	*F4B-GTEZ-50M-PCR*			***129986***	*AN-GT-10-50M-CR*

@ Assembled to order

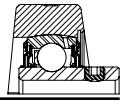

E-Z KLEEN Mounted Bearings

GTEZ Normal Duty Polymer Housed 4 Bolt Flange Bearings

Series	Shaft Size	Weight lbs kg	A	B	C#	D	F Bolt Dia.	H	J	L	Z
204	3/4	0.50	1-15/32	3-3/8	1-23/32	2-1/2	3/8	17/32	35/64	1-1/2	1-25/32
	20 mm	*0.30*	*37.3*	*85.7*	*43.7*	*63.5*	*M10*	*13.5*	*13.9*	*38.1*	*45.2*
205	1	0.90	1-29/64	3-3/4	1-45/64	2-3/4	3/8	35/64	17/32	1-51/64	1-49/64
	25 mm	*0.30*	*36.9*	*95.3*	*43.3*	*69.9*	*M10*	*13.9*	*13.5*	*45.6*	*44.8*
206	1-1/8	1.20	1-39/64	4-1/4	1-55/64	3-1/4	3/8	39/64	35/64	2-5/64	1-29/32
	1-3/16										
	1-1/4										
	30 mm	*0.50*	*40.9*	*108.0*	*47.2*	*82.6*	*M10*	*15.5*	*13.9*	*52.8*	*48.4*
207	1-1/4	1.60	1-5/8	4-21/32	1-7/8	3-5/8	1/2	5/8	35/64	2-3/8	1-61/64
	1-3/8										
	1-7/16										
	35 mm	*0.70*	*41.3*	*118.3*	*47.6*	*92.1*	*M12*	*15.9*	*13.9*	*60.3*	*49.6*
208	1-1/2	2.00	1-27/32	5-1/8	2-7/64	4	1/2	43/64	37/64	2-5/8	2-5/32
	40 mm	*0.90*	*46.8*	*130.2*	*53.6*	*101.6*	*M12*	*17.1*	*14.7*	*66.7*	*54.8*
209	1-11/16	2.30	1-55/64	5-3/8	2-7/64	4-1/8	9/16	23/32	19/32	2-55/64	2-13/64
	1-3/4										
	45 mm	*1.00*	*47.2*	*136.5*	*53.6*	*104.8*	*M14*	*18.3*	*15.1*	*72.6*	*56.0*
210	1-15/16	2.30	1-55/64	5-5/8	2-1/4	4-3/8	5/8	49/64	39/64	3-1/8	2-11/32
	2										
	50 mm	*1.10*	*47.2*	*142.7*	*57.2*	*111.0*	*M16*	*19.4*	*15.5*	*79.4*	*59.5*

#C dimension will vary slightly depending on true shaft diameter.

E-Z KLEEN Mounted Bearings

GTEZ Normal Duty Stainless Steel 4 Bolt Flange Bearings

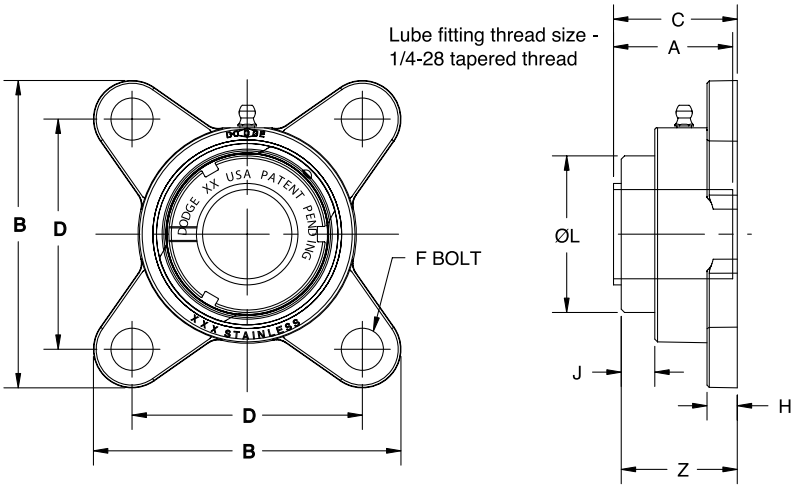

Series	Shaft Size	Complete Unit		Unit Without Adapter		Adapter & Nut Assembly	
		Part No.	Description	Part No.	Description	Part No.	Description
204	3/4	**129721**	F4B-GTEZ-012-SHCR	**129567**	F4B-GTEZ-04-SHCR	**129967**	AN-GT-04-012-CR
	20mm	***129722***	*F4B-GTEZ-20M-SHCR*			***129980***	*AN-GT-04-20M-CR*
205	1	**129723**	F4B-GTEZ-100-SHCR	**129568**	F4B-GTEZ-05-SHCR	**129968**	AN-GT-05-100-CR
	25mm	***129724***	*F4B-GTEZ-25M-SHCR*			***129981***	*AN-GT-05-25M-CR*
206	1 -1/8	**@**	F4B-GTEZ-102-SHCR	**129569**	F4B-GTEZ-06-SHCR	**129969**	AN-GT-06-102-CR
	1 -3/16	**129725**	F4B-GTEZ-103-SHCR			**129970**	AN-GT-06-103-CR
	1-1/4	**129726**	F4B-GTEZ-104S-SHCR			**129971**	AN-GT-06-104S-CR
	30mm	***129727***	*F4B-GTEZ-30M-SHCR*			***129982***	*AN-GT-06-30M-CR*
207	1-1/4	**129728**	F4B-GTEZ-104-SHCR	**129570**	F4B-GTEZ-07-SHCR	**129972**	AN-GT-07-104-CR
	1 -3/8	**064993**	F4B-GTEZ-106-SHCR			**129973**	AN-GT-07-106-CR
	1 -7/16	**129729**	F4B-GTEZ-107-SHCR			**129974**	AN-GT-07-107-CR
	35mm	***129730***	*F4B-GTEZ-35M-SHCR*			***129983***	*AN-GT-07-35M-CR*
208	1-1/2	**129731**	F4B-GTEZ-108-SHCR	**129571**	F4B-GTEZ-08-SHCR	**129975**	AN-GT-08-108-CR
	40mm	***129732***	*F4B-GTEZ-40M-SHCR*			***129984***	*AN-GT-08-40M-CR*
210	1-15/16	**129733**	F4B-GTEZ-115-SHCR	**129572**	F4B-GTEZ-10-SHCR	**129978**	AN-GT-10-115-CR
	2	**062901**	F4B-GTEZ-200-SHCR			**129979**	AN-GT-10-200-CR
	50mm	***129734***	*F4B-GTEZ-50M-SHCR*			***129986***	*AN-GT-10-50M-CR*

@ Assembled to order

Series	Shaft Size	Weight lbs kg	A	B	C#	D	F Bolt Dia.	H	J	L	Z
204	3/4	1.23	1-15/32	3-11/32	1-33/64	2-1/2	3/8	21/64	19/32	1-1/2	1-37/64
	20mm	*0.55*	*37.3*	*84.9*	*38.5*	*63.5*	*M10*	*8.3*	*15.1*	*38.1*	*40.1*
205	1	1.69	1-29/64	3-3/4	1-35/64	2-3/4	3/8	23/64	35/64	1-51/64	1-39/64
	25mm	*0.73*	*36.9*	*95.3*	*39.3*	*69.9*	*M10*	*9.1*	*13.9*	*45.6*	*40.9*
206	1 -1/8	2.41	1-39/64	4-5/32	1-47/64	3-1/4	3/8	23/64	35/64	2-5/64	1-25/32
	1 -3/16										
	1-1/4										
	30mm	*1.07*	*40.9*	*105.6*	*44.1*	*82.6*	*M10*	*9.1*	*13.9*	*52.8*	*45.2*
207	1-1/4	3.42	1-5/8	4-11/16	1-25/32	3-5/8	1/2	27/64	35/64	2-3/8	1-55/64
	1-3/8										
	1-7/16										
	35mm	*1.56*	*41.3*	*119.1*	*45.2*	*92.1*	*M12*	*10.7*	*13.9*	*60.3*	*47.2*
208	1-1/2	4.21	1-27/32	5-1/16	1-63/64	4	1/2	27/64	37/64	2-5/8	2-1/32
	40mm	*1.91*	*46.8*	*128.6*	*50.4*	*101.6*	*M12*	*10.7*	*14.7*	*66.7*	*51.6*
210	1-15/16	5.33	1-55/64	5-43/64	2	4-3/8	5/8	31/64	19/32	3-1/8	2-5/64
	2										
	50mm	*2.39*	*47.2*	*144.1*	*50.8*	*111.1*	*M16*	*12.3*	*15.1*	*79.4*	*52.8*

#C dimension will vary slightly depending on true shaft diameter.

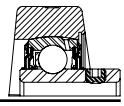

E-Z KLEEN Mounted Bearings

SCEZ Normal Duty Polymer Housed 4 Bolt Flange Bearings

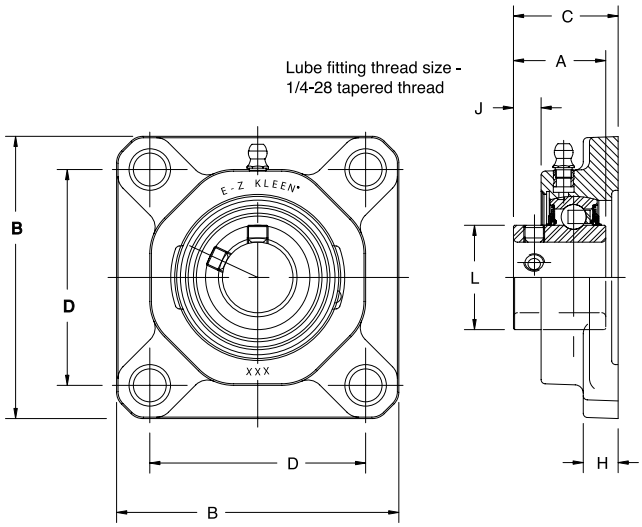

Series	Shaft Size	With Corrosion Resistant Insert		With Insert With Flingers		Weight Lb kg	A	B	C	D	F Bolt Dia.	H	J	L
		Part No.	Description	Part No.	Description									
204	1/2	@	F4B-SCEZ-008L-PCR*	@	F4B-SCEZ-008L-P	0.59	1-5/32	3-3/8	1-29/64	2-1/2	3/8	17/32	19/64	1-1/8
	5/8	@	F4B-SCEZ-010L-PCR*	@	F4B-SCEZ-010L-P	0.57								
	3/4	**127515**	F4B-SCEZ-012-PCR	**056440**	F4B-SCEZ-012-P	0.55								
	20 mm	***127556***	*F4B-SCEZ-20M-PCR*	*@*	*F4B-SCEZ-20M-P*	*0.27*	*29.4*	*85.9*	*36.8*	*63.5*	*M10*	*13.5*	*7.6*	*28.6*
205	7/8	**068424**	F4B-SCEZ-014-PCR*	@	F4B-SCEZ-014-P	0.71	1-3/16	3-3/4	1-1/2	2-3/4	3/8	35/64	21/64	1-21/64
	15/16	@	F4B-SCEZ-015-PCR*	@	F4B-SCEZ-015-P	0.69								
	1	**127516**	F4B-SCEZ-100-PCR	**058910**	F4B-SCEZ-100-P	0.67								
	25 mm	***127557***	*F4B-SCEZ-25M-PCR*	*@*	*F4B-SCEZ-25M-P*	*0.32*	*30.2*	*95.3*	*38.1*	*70.0*	*M10*	*13.9*	*8.4*	*33.7*
206	1-1/8	@	F4B-SCEZ-102-PCR*	@	F4B-SCEZ-102-P	0.89	1-25/64	4-1/4	1-11/16	3-1/4	3/8	39/64	27/64	1-37/64
	1-3/16	**127517**	F4B-SCEZ-103-PCR	@	F4B-SCEZ-103-P	0.86								
	1-1/4	**127518**	F4B-SCEZ-104S-PCR	**058594**	F4B-SCEZ-104S-P	0.84								
	30 mm	***127558***	*F4B-SCEZ-30M-PCR*	*@*	*F2B-SCEZ-30M-P*	*0.39*	*35.3*	*108.1*	*42.8*	*82.5*	*M10*	*15.5*	*10.6*	*40.1*
207	1-1/4	**127519**	F4B-SCEZ-104-PCR	@	F4B-SCEZ-104-P	1.40	1-17/32	4-21/32	1-53/64	3-5/8	1/2	5/8	33/64	1-27/32
	1-5/16	@	F4B-SCEZ-105-PCR*	@	F4B-SCEZ-105-P	1.35								
	1-3/8	**058294**	F4B-SCEZ-106-PCR*	**065780**	F4B-SCEZ-106-P	1.30								
	1-7/16	**127520**	F4B-SCEZ-107-PCR	@	F4B-SCEZ-107-P	1.24								
	35 mm	***127559***	*F4B-SCEZ-35M-PCR*	*@*	*F4B-SCEZ-35M-P*	*0.61*	*38.9*	*118.1*	*46.5*	*92.0*	*M12*	*15.9*	*13.2*	*46.8*
208	1-1/2	**127521**	F4B-SCEZ-108-PCR	**058595**	F4B-SCEZ-108-P	1.82	1-11/16	5-1/8	2	4	1/2	43/64	33/64	2-3/64
	1-5/8	@	F4B-SCEZ-110-PCR*	@	F4B-SCEZ-110-P	1.68								
	40 mm	***127560***	*F4B-SCEZ-40M-PCR*	*@*	*F4B-SCEZ-40M-P*	*0.76*	*42.9*	*130.0*	*50.9*	*101.5*	*M12*	*16.9*	*13.3*	*52.0*
209	1-5/8	@	F4B-SCEZ-110L-PCR*	@	F4B-SCEZ-110L-P	2.09	1-23/32	5-3/8	2-1/32	4-1/8	9/16	23/32	9/16	2-7/32
	1-11/16	**127522**	F4B-SCEZ-111-PCR	@	F4B-SCEZ-111-P	2.00								
	1-3/4	**057907**	F4B-SCEZ-112-PCR*	@	F4B-SCEZ-112-P	1.93								
	45 mm	***127561***	*F4B-SCEZ-45M-PCR*	*@*	*F4B-SCEZ-45M-P*	*0.88*	*43.7*	*136.7*	*51.7*	*105.0*	*M14*	*18.2*	*14.1*	*56.4*
210	1-15/16	**127523**	F4B-SCEZ-115-PCR	@	F4B-SCEZ-115-P	2.12	1-3/4	5-5/8	2-13/64	4-3/8	5/8	49/64	19/32	2-7/16
	2	**057899**	F4B-SCEZ-200-PCR	@	F4B-SCEZ-200-P	2.03								
	50 mm	***127562***	*F4B-SCEZ-50M-PCR*	*@*	*F4B-SCEZ-50M-P*	*0.96*	*44.5*	*142.7*	*56.0*	*111.0*	*M16*	*19.3*	*15.1*	*61.9*

@ Assembled to order * 20 piece minimum

E-Z KLEEN Mounted Bearings

SCEZ Normal Duty Stainless Steel 4 Bolt Flange Bearings

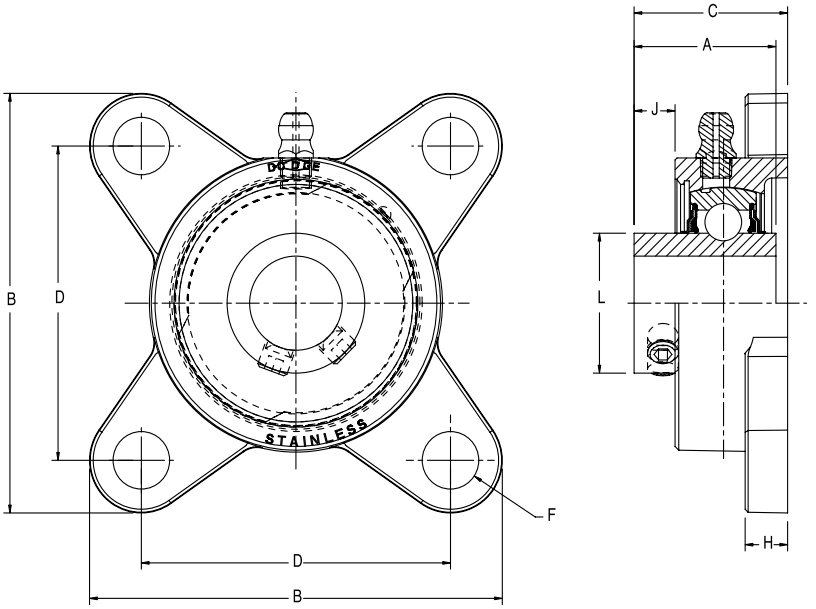

Series	Shaft Size	With Corrosion Resistant Insert		With Insert With Flingers		Weight lbs kg	A	B	C	D	F Bolt Dia.	H	J	L
		Part No.	Description	Part No.	Description									
204	1/2	@	F4B-SCEZ-008L-SHCR*	@	F4B-SCEZ-008L-SH	1.16	1-5/32	3-11/32	1-1/4	2-1/2	3/8	21/64	11/32	1-1/8
	5/8	@	F4B-SCEZ-010L-SHCR*	@	F4B-SCEZ-010L-SH	1.12								
	3/4	**127689**	F4B-SCEZ-012-SHCR	**056806**	F4B-SCEZ-012-SH	1.08								
	20mm	***127709***	*F4B-SCEZ-20M-SHCR*	@	*F4B-SCEZ-20M-SH*	*0.49*	*29.4*	*84.9*	*31.8*	*63.5*	*M10*	*8.3*	*8.7*	*28.6*
205	7/8	**065600**	F4B-SCEZ-014-SHCR*	@	F4B-SCEZ-014-SH	1.47	1-3/16	3-3/4	1-11/32	2-3/4	3/8	23/64	3/8	1-21/64
	15/16	@	F4B-SCEZ-015-SHCR*	@	F4B-SCEZ-015-SH	1.43								
	1	**127690**	F4B-SCEZ-100-SHCR	**056593**	F4B-SCEZ-100-SH	1.39								
	25mm	***127710***	*F4B-SCEZ-25M-SHCR*	@	*F4B-SCEZ-25M-SH*	*0.63*	*30.2*	*95.3*	*34.1*	*69.9*	*M10*	*9.1*	*9.5*	*33.7*
206	1-1/8	@	F4B-SCEZ-102-SHCR*	**049477**	F4B-SCEZ-102-SH	2.13	1-25/64	4-5/32	1-9/16	3-1/4	3/8	23/64	27/64	1-37/64
	1-3/16	**127691**	F4B-SCEZ-103-SHCR	**056807**	F4B-SCEZ-103-SH	2.09								
	1-1/4	**127692**	F4B-SCEZ-104S-SHCR	@	F4B-SCEZ-104S-SH	2.05								
	30mm	***127711***	*F4B-SCEZ-30M-SHCR*	@	*F4B-SCEZ-30M-SH*	*0.95*	*35.3*	*105.6*	*39.7*	*82.6*	*M10*	*9.1*	*10.7*	*40.1*
207	1-1/4	**127693**	F4B-SCEZ-104-SHCR	**056633**	F4B-SCEZ-104-SH	2.95	1-17/32	4-11/16	1-3/4	3-5/8	1/2	27/64	17/32	1-27/32
	1-3/8	@	F4B-SCEZ-106-SHCR*	@	F4B-SCEZ-106-SH	2.83								
	1-7/16	**127694**	F4B-SCEZ-107-SHCR	**056808**	F4B-SCEZ-107-SH	2.78								
	35mm	***127712***	*F4B-SCEZ-35M-SHCR*	@	*F4B-SCEZ-35M-SH*	*1.29*	*38.9*	*119.1*	*44.5*	*92.1*	*M12*	*10.7*	*13.5*	*46.8*
208	1-1/2	**127695**	F4B-SCEZ-108-SHCR	**056809**	F4B-SCEZ-108-SH	3.70	1-11/16	5-1/16	1-7/8	4	1/2	27/64	17/32	2-3/64
	1-5/8	@	F4B-SCEZ-110-SHCR*	**062340**	F4B-SCEZ-110-SH									
	40mm	***127713***	*F4B-SCEZ-40M-SHCR*	@	*F4B-SCEZ-40M-SH*	*1.64*	*42.9*	*128.6*	*47.6*	*101.6*	*M12*	*10.7*	*13.5*	*52.0*
210	1-11/16	@	F4B-SCMEZ-111-SHCR*	@	F4B-SCMEZ-111-SH	4.64	1-3/4	5-43/64	1-61/64	4-3/8	5/8	31/64	19/32	2-7/16
	1-3/4	@	F4B-SCMEZ-112-SHCR*	**065945**	F4B-SCMEZ-112-SH	4.40								
	1-15/16	**127696**	F4B-SCEZ-115-SHCR	**056810**	F4B-SCEZ-115-SH	4.60								
	2	**062542**	F4B-SCEZ-200-SHCR	@		4.56								
	50mm	***127714***	*F4B-SCEZ-50M-SHCR*	@	*F4B-SCEZ-50M-SH*	*2.07*	*44.5*	*144.1*	*49.6*	*111.1*	*M16*	*12.3*	*15.1*	*61.9*

@ Assembled to order *20 piece minimum

E-Z KLEEN Mounted Bearings

DLEZ Normal Duty Polymer Housed 4 Bolt Flange Bearings

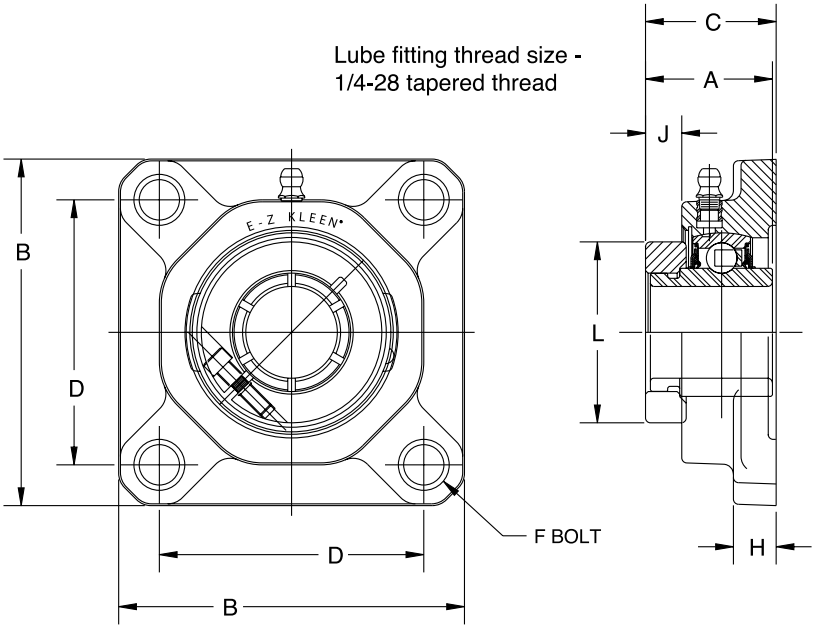

Series	Shaft Size	With Corrosion Resistant Insert		Standard Insert With Flingers		Weight lbs kg	A	B	C	D	F Bolt Dia.	H	J	L
		Part No.	Description	Part No.	Description									
204	3/4	**127593**	F4B-DLEZ-012-PCR	@	F4B-DLEZ-012-P	0.50	1-9/32	3-3/8	1-29/64	2-1/2	3/8	17/32	19/64	1-45/64
	20 mm	***127634***	*F4B-DLEZ-20M-PCR*	@	*F4B-DLEZ-20M-P*	*0.30*	*32.5*	*85.9*	*36.8*	*63.5*	*M10*	*13.5*	*7.6*	*43.3*
205	7/8	@	F4B-DLEZ-014-PCR*	@	F4B-DLEZ-014-P	0.90	1-7/16	3-3/4	1-1/2	2-3/4	3/8	35/64	21/64	2
	15/16	@	F4B-DLEZ-015-PCR*	@	F4B-DLEZ-015-P	0.80								
	1	**127594**	F4B-DLEZ-100-PCR	@	F4B-DLEZ-100-P	0.70								
	25 mm	***127635***	*F4B-DLEZ-25M-PCR*	@	*F4B-DLEZ-25M-P*	*0.30*	*36.5*	*95.3*	*38.1*	*70.0*	*M10*	*13.9*	*8.4*	*50.8*
206	1-1/8	@	F4B-DLEZ-102-PCR*	@	F4B-DLEZ-102-P	1.20	1-9/16	4-1/4	1-11/16	3-1/4	3/8	39/64	27/64	2-7/32
	1-3/16	**127595**	F4B-DLEZ-103-PCR	@	F4B-DLEZ-103-P	1.10								
	1-1/4	**127596**	F4B-DLEZ-104S-PCR	@	F4B-DLEZ-104S-P	1.10								
	30 mm	***127636***	*F4B-DLEZ-30M-PCR*	@	*F4B-DLEZ-30M-P*	*0.50*	*39.7*	*108.1*	*42.8*	*82.5*	*M10*	*15.5*	*10.6*	*56.4*
207	1-1/4	**127597**	F4B-DLEZ-104-PCR	@	F4B-DLEZ-104-P	1.60	1-3/4	4-21/32	1-53/64	3-5/8	1/2	5/8	33/64	2-11/16
	1-3/8	@	F4B-DLEZ-106-PCR*	@	F4B-DLEZ-106-P	1.50								
	1-7/16	**127598**	F4B-DLEZ-107-PCR	@	F4B-DLEZ-107-P	1.40								
	35 mm	***127637***	*F4B-DLEZ-35M-PCR*	@	*F4B-DLEZ-35M-P*	*0.70*	*44.5*	*118.1*	*46.5*	*92.0*	*M12*	*15.9*	*13.2*	*68.3*
208	1-1/2	**127599**	F4B-DLEZ-108-PCR	@	F4B-DLEZ-108-P	2.00	2	5-1/8	2	4	1/2	43/64	33/64	2-47/64
	40 mm	***127638***	*F4B-DLEZ-40M-PCR*	@	*F4B-DLEZ-40M-P*	*0.90*	*50.8*	*130.0*	*50.9*	*101.5*	*M12*	*16.9*	*13.3*	*69.5*
209	1-5/8	@	F4B-DLEZ-110L-PCR*	@	F4B-DLEZ-110L-P	2.30	2	5-3/8	2-1/32	4-1/8	9/16	23/32	9/16	2-63/64
	1-11/16	**127600**	F4B-DLEZ-111-PCR	@	F4B-DLEZ-111-P	2.20								
	1-3/4	@	F4B-DLEZ-112-PCR*	@	F4B-DLEZ-112-P	2.10								
	45 mm	***127639***	*F4B-DLEZ-45M-PCR*	@	*F4B-DLEZ-45M-P*	*1.00*	*50.8*	*136.7*	*51.7*	*105.0*	*M14*	*18.2*	*14.1*	*75.8*
210	1-15/16	**127601**	F4B-DLEZ-115-PCR	@	F4B-DLEZ-115-P	2.30	2-3/32	5-5/8	2-13/64	4-3/8	5/8	49/64	19/32	3-15/64
	2	**058514**	F4B-DLEZ-200-PCR*	@	F4B-DLEZ-200-P	2.20								
	50 mm	***127640***	*F4B-DLEZ-50M-PCR*	@	*F4B-DLEZ-50M-P*	*1.10*	*53.2*	*142.7*	*56.0*	*111.0*	*M16*	*19.3*	*15.1*	*82.1*

@ Assembled to order * 20 piece minimum

E-Z KLEEN Mounted Bearings

DLEZ Normal Duty Stainless Steel 4 Bolt Flange Bearings

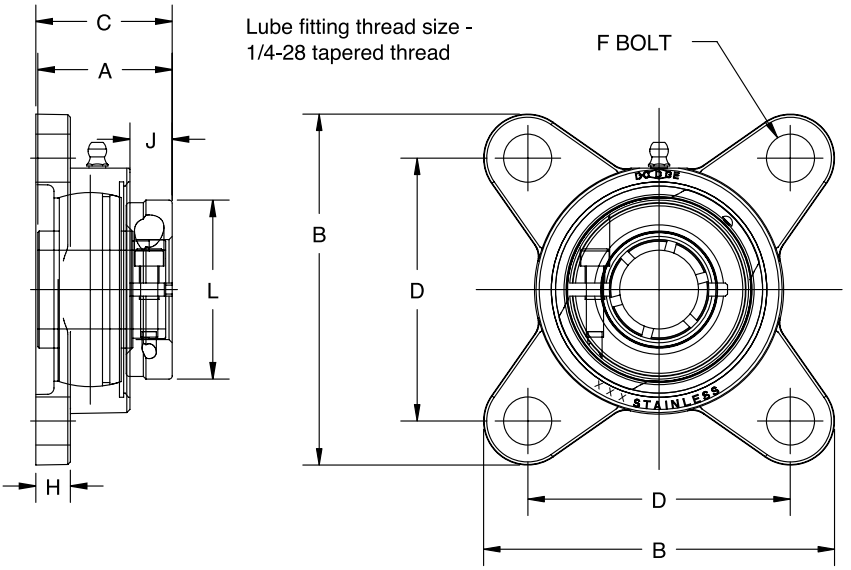

Series	Shaft Size	Part No.	Description	Weight lbs kg	A	B	C	D	F Bolt Dia.	H	J	L
204	3/4	**127731**	F4B-DLEZ-012-SHCR	1.23	1-9/32	3-11/32	1-19/64	2-1/2	3/8	21/64	13/32	1-45/64
	20mm	***127751***	*F4B-DLEZ-20M-SHCR*	*0.55*	*32.5*	*84.9*	*32.9*	*63.5*	*M10*	*8.3*	*10.3*	*43.3*
205	7/8	**@**	F4B-DLEZ-014-SHCR*	1.69	1-7/16	3-3/4	1-25/64	2-3/4	3/8	23/64	31/64	2
	15/16	**@**	F4B-DLEZ-015-SHCR*	1.65								
	1	**127732**	F4B-DLEZ-100-SHCR	1.61								
	25mm	***127752***	*F4B-DLEZ-25M-SHCR*	*0.73*	*36.5*	*95.3*	*35.3*	*69.9*	*M10*	*9.1*	*12.3*	*50.8*
206	1-1/8	**@**	F4B-DLEZ-102-SHCR*	2.41	1-9/16	4-5/32	1-19/32	3-1/8	3/8	23/64	29/64	2-7/32
	1-3/16	**127733**	F4B-DLEZ-103-SHCR	2.36								
	1-1/4	**127734**	F4B-DLEZ-104S-SHCR	2.31								
	30mm	***127753***	*F4B-DLEZ-30M-SHCR*	*1.07*	*39.7*	*105.6*	*40.5*	*82.6*	*M10*	*9.1*	*11.5*	*56.4*
207	1-1/4	**127735**	F4B-DLEZ-104-SHCR	3.42	1-3/4	4-11/16	1-25/32	3-5/8	1/2	27/64	9/16	2-11/16
	1-3/8	**@**	F4B-DLEZ-106-SHCR*	3.29								
	1-7/16	**127736**	F4B-DLEZ-107-SHCR	3.25								
	35mm	***127754***	*F4B-DLEZ-35M-SHCR*	*1.56*	*44.5*	*119.1*	*45.2*	*92.1*	*M12*	*10.7*	*14.3*	*68.3*
208	1-1/2	**127737**	F4B-DLEZ-108-SHCR	4.21	2	5-1/16	2-1/32	4	1/2	27/64	11/16	2-47/64
	40mm	***127755***	*F4B-DLEZ-40M-SHCR*	*1.91*	*50.8*	*128.6*	*51.6*	*101.6*	*M12*	*10.7*	*17.5*	*69.5*
210	1-11/16	**@**	F4B-DLEZM-111-SHCR*	5.33	2-3/32	5-43/64	2-9/64	4-3/8	5/8	31/64	25/32	3-15/64
	1-15/16	**127738**	F4B-DLEZ-115-SHCR	5.28								
	50mm	***127756***	*F4B-DLEZ-50M-SHCR*	*2.39*	*53.2*	*144.1*	*54.4*	*111.1*	*M16*	*12.3*	*19.8*	*82.2*

@ Assembled to order *20 piece minimum

E-Z KLEEN Mounted Bearings

SCEZ SHCR Normal Duty Stainless Steel Narrow Slot Take-Up Bearings

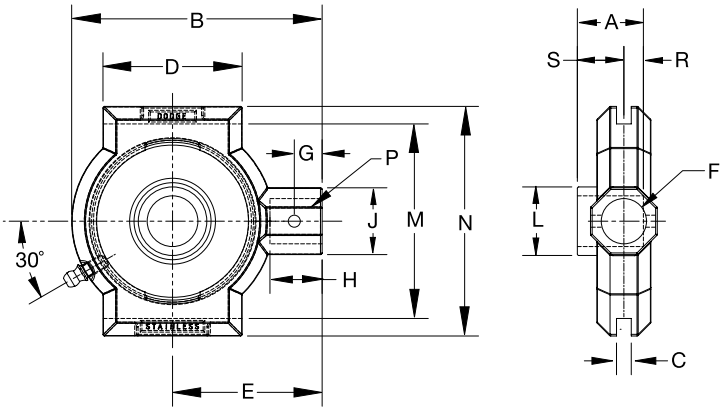

Series	Shaft Size	Standard Part No.	Standard Description	Weight lbs. kgs.	Take-Up Frame No. Ref.	A	B	C*	D	E	F Screw Dia	G
204	3/4	**136939**	NSTU-SCEZ-012-SHCR	1.16	NS210	1-7/64	3-31/64	17/64	1-1/2	2-3/16	13/16	7/16
	20 mm	***136974***	*NSTU-SCEZ-20M-SHCR*	*.53*		*28.3*	*88.6*	*6.7*	*38.1*	*55.6*	*20.6*	*11.1*
205	1	**136940**	NSTU-SCEZ-100-SHCR	1.06	NS210	1-3/16	3-31/64	17/64	1-1/2	2-3/16	13/16	7/16
	25 mm	***136975***	*NSTU-SCEZ-25M-SHCR*	*.48*		*30.1*	*88.6*	*6.7*	*38.1*	*55.6*	*20.6*	*11.1*
206	1-3/16	**136941**	NSTU-SCEZ-103-SHCR	2.51	NS308	1-25/64	4-1/2	17/64	2-1/2	2-11/16	15/16	1/2
	1-1/4	**136942**	NSTU-SCEZ-104S-SHCR									
	30 mm	***136976***	*NSTU-SCEZ-30M-SHCR*	*1.14*		*35.3*	*114.3*	*6.7*	*63.5*	*68.3*	*20.6*	*12.7*
207	1-1/4	**136943**	NSTU-SCEZ-104-SHCR	2.42	NS308	1-17/32	4-1/2	17/64	2-1/2	2-11/16	13/16	1/2
	1-7/16	**136944**	NSTU-SCEZ-107-SHCR									
	35 mm	***136977***	*NSTU-SCEZ-35M-SHCR*	*1.10*		*39.0*	*114.3*	*6.7*	*63.5*	*68.3*	*20.6*	*12.7*
208	1-1/2	**136945**	NSTU-SCEZ-108-SHCR	4.16	NS400	1-11/16	5-3/8	21/64	3	3-1/4	15/16	21/32
	40 mm	***136978***	*NSTU-SCEZ-40M-SHCR*	*1.89*		*42.7*	*136.5*	*8.3*	*76.2*	*82.6*	*23.8*	*16.7*
210	1-15/16	**136946**	NSTU-SCEZ-115-SHCR	3.87	NS400	1-3/4	5-1/2	21/64	3	3-1/4	15/16	21/32
	2	**@**	NSTU-SCEZ-200-SHCR									
	50mm	***136979***	*NSTU-SCEZ-50M-SHCR*	*1.76*		*44.3*	*139.7*	*8.3*	*76.2*	*82.6*	*23.8*	*16.7*

@ Assembled to order

Series	Shaft Size	Standard Part No.	Standard Description	H	J	L	M#	N	P Pin Dia	R	S
204	3/4	**136939**	NSTU-SCEZ-012-SHCR	7/8	1-1/8	1-7/64	2-5/8	3-1/8	5/16	7/16	49/64
	20 mm	***136974***	*NSTU-SCEZ-20M-SHCR*	*22.2*	*30.5*	*28.3*	*66.6*	*79.4*	*8.0*	*11*	*19.3*
205	1	**136940**	NSTU-SCEZ-100-SHCR	7/8	1-1/8	1-21/64	2-5/8	3-1/8	5/16	27/64	49/64
	25 mm	***136975***	*NSTU-SCEZ-25M-SHCR*	*22.2*	*30.5*	*33.6*	*66.5*	*79.4*	*8.0*	*10.8*	*19.3*
206	1-3/16	**136941**	NSTU-SCEZ-103-SHCR	15/16	1-1/8	1-37/64	3-1/2	4-1/8	5/16	31/64	29/32
	1-1/4	**136942**	NSTU-SCEZ-104S-SHCR								
	30 mm	***136976***	*NSTU-SCEZ-30M-SHCR*	*23.8*	*30.5*	*39.9*	*88.8*	*104.8*	*8.0*	*12.3*	*23.0*
207	1-1/4	**136943**	NSTU-SCEZ-104-SHCR	15/16	1-1/8	1-27/32	3-1/2	4-1/8	5/16	1/2	1-1/32
	1-7/16	**136944**	NSTU-SCEZ-107-SHCR								
	35 mm	***136977***	*NSTU-SCEZ-35M-SHCR*	*23.8*	*30.5*	*46.8*	*88.8*	*104.8*	*8.0*	*12.8*	*26.2*
208	1-1/2	**136945**	NSTU-SCEZ-108-SHCR	1-5/32	1-1/2	2-3/64	4	4-3/4	3/8	19/32	1-1/32
	40 mm	***136978***	*NSTU-SCEZ-40M-SHCR*	29.4	38.1	52.1	101.6	120.7	9.6	14.9	27.8
210	1-15/16	**136946**	NSTU-SCEZ-115-SHCR	1-5/32	1-1/2	2-27/64	4	4-3/4	3/8	19/32	1-5/32
	2	**@**	NSTU-SCEZ-200-SHCR								
	50mm	***136979***	*NSTU-SCEZ-50M-SHCR*	*29.4*	*38.1*	*61.7*	*101.6*	*120.7*	*9.6*	*14.9*	*29.4*

*+/- .015" +/- .38mm #+.010", -.020" +.25mm, -.50mm

E-Z KLEEN Mounted Bearings

GTEZ Normal Duty Polymer Housed Wide Slot Take-Up Bearings

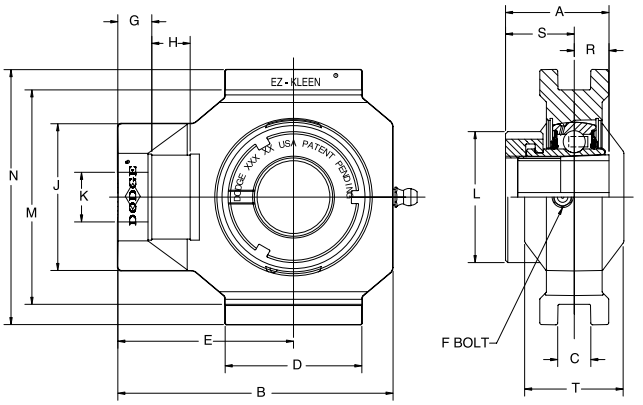

Series	Shaft Size	With Corrosion Resistant Insert		Unit without Adapter & Nut		Adapter & Nut Assembly	
		Part No.	Description	Part No.	Description	Part No.	Description
204	3/4	**136315**	WSTU-GTEZ-012-PCR	**136327**	WSTU-GTEZ-04-PCR	**129967**	AN-GT-04-012-CR
	20 mm	***136323***	*WSTU-GTEZ-20M-PCR*			***129980***	*AN-GT-04-20M-CR*
205	1	**136316**	WSTU-GTEZ-100-PCR	**136328**	WSTU-GTEZ-05-PCR	**129968**	AN-GT-05-100-CR
	25 mm	***136324***	*WSTU-GTEZ-25M-PCR*			***129981***	*AN-GT-05-25M-CR*
206	1-1/8	**136317**	WSTU-GTEZ-102-PCR	**136329**	WSTU-GTEZ-06-PCR	**129969**	AN-GT-06-102-CR
	1-3/16	**136318**	WSTU-GTEZ-103-PCR			**129970**	AN-GT-06-103-CR
	1-1/4	**136319**	WSTU-GTEZ-104S-PCR			**129971**	AN-GT-06-104S-CR
	30 mm	***136325***	*WSTU-GTEZ-30M-PCR*			***129982***	*AN-GT-06-30M-CR*
207	1-1/4	**136320**	WSTU-GTEZ-104-PCR	**136330**	WSTU-GTEZ-07-PCR	**129972**	AN-GT-07-104-CR
	1-3/8	**136321**	WSTU-GTEZ-106-PCR			**129973**	AN-GT-07-106-CR
	1-7/16	**136322**	WSTU-GTEZ-107-PCR			**129974**	AN-GT-07-107-CR
	35 mm	***136326***	*WSTU-GTEZ-35M-PCR*			***129983***	*AN-GT-07-35M-CR*

Series	Shaft Size	Weight lbs kg	Take-Up Frame No. Ref.	A	B	C**	D	E	F Thd Shaft	G
204	3/4	0.90	WS300	1-15/32	3-13/16	17/32	2	2-1/2	5/8	1/2
	20 mm	*0.40*		*37.3*	*96.8*	*13.5*	*50.8*	*63.5*	*15.9*	*12.7*
205	1	1.20	WS300	1-29/64	3-15/16	17/32	2	2-9/16	5/8	1/2
	25 mm	*0.50*		*36.9*	*100.1*	*13.5*	*50.8*	*65.0*	*15.9*	*12.7*
206	1-1/8	1.80	WS308	1-39/64	4-1/2	17/32	2-1/4	2-7/8	3/4	1/2
	1-3/16	1.70								
	1-1/4	1.60								
	30 mm	*0.80*		*40.9*	*114.3*	*13.5*	*57.2*	*73.0*	*19.1*	*12.7*
207	1-1/4	2.40	WS308	1-5/8	4-15/16	17/32	2-1/4	3-1/8	3/4	1/2
	1-3/8	2.30								
	1-7/16	2.30								
	35 mm	*1.08*		*41.3*	*125.2*	*13.5*	*57.2*	*79.2*	*19.1*	*12.7*

Series	Shaft Size	H	J	K	L	M**	N	R#	S#	T
204	3/4	5/8	2-3/32	1-9/64	1-1/2	3	3-5/8	31/64	63/64	1-3/8
	20 mm	*15.9*	*53.3*	*29.0*	*38.1*	*76.2*	*92.1*	*12.3*	*25.0*	*35.1*
205	1	5/8	2-1/8	1 -9/64	1-51/64	3	3-5/8	1/2	61/64	1-3/8
	25 mm	*15.9*	*53.8*	*29.0*	*45.6*	*76.2*	*92.1*	*12.8*	*24.2*	*35.1*
206	1-1/8	5/8	2-3/8	1-3/8	2-5/64	3 -1/2	4-1/4	17/32	1-5/64	1-5/8
	1-3/16									
	1-1/4									
	30 mm	*15.9*	*61.2*	*34.8*	*52.8*	*88.9*	*108.0*	*13.5*	*27.4*	*41.1*
207	1-1/4	5/8	2-27/64	1-3/8	2-3/8	3 -1/2	4-1/4	9/16	1-1/16	1-5/8
	1-3/8									
	1-7/16									
	35 mm	*15.9*	*61.5*	*34.8*	*60.3*	*88.9*	*108.0*	*14.3*	*27.0*	*41.1*

R & S dimension will vary slightly depending on true shaft diameter

** + or - .020

E-Z KLEEN Mounted Bearings

SCEZ Normal Duty Polymer Housed Wide Slot Take-Up Bearings

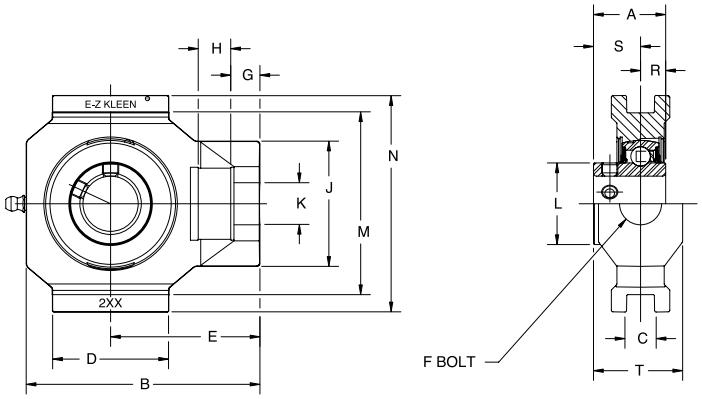

Series	Shaft Size	With Corrosion Resistant Insert		Standard Insert With Flingers		Weight Lbs kg	Take-Up Frame No. Ref.	A	B	C	D	E	F Thd Shaft	G
		Part No.	Description	Part No.	Description									
204	1/2	@	WSTU-SCEZ-008L-PCR*	@	WSTU-SCEZ-008L-P	0.86	WS300	1-5/32	3-13/16	17/32	2	2-1/2	5/8	1/2
	5/8	@	WSTU-SCEZ-010L-PCR*	@	WSTU-SCEZ-010L-P	0.76								
	3/4	**127539**	WSTU-SCEZ-012-PCR	@	WSTU-SCEZ-012-P	0.66								
	20 mm	***127574***	*WSTU-SCEZ-20M-PCR*	@	*WSTU-SCEZ-20M-P*	*0.31*		*29.4*	*96.8*	*13.5*	*50.8*	*63.5*	*15.9*	*12.7*
205	7/8	@	WSTU-SCEZ-014-PCR*	@	WSTU-SCEZ-014-P	0.92	WS300	1-3/16	3-15/16	17/32	2	2-9/16	5/8	1/2
	15/16	@	WSTU-SCEZ-015-PCR*	@	WSTU-SCEZ-015-P	0.82								
	1	**127540**	WSTU-SCEZ-100-PCR	**058940**	WSTU-SCEZ-100-P	0.72								
	25 mm	***127575***	*WSTU-SCEZ-25M-PCR*	@	*WSTU-SCEZ-25M-P*	*0.34*		*30.2*	*100.0*	*13.5*	*50.8*	*65.1*	*15.9*	*12.7*
206	1-1/8	@	WSTU-SCEZ-102-PCR*	@	WSTU-SCEZ-102-P	1.11	WS308	1-25/64	4-1/2	17/32	2-1/4	2-7/8	3/4	1/2
	1-3/16	**127541**	WSTU-SCEZ-103-PCR	@	WSTU-SCEZ-103-P	1.09								
	1-1/4	**127542**	WSTU-SCEZ-104S-PCR	@	WSTU-SCEZ-104S-P	1.07								
	30 mm	***127576***	*WSTU-SCEZ-30M-PCR*	@	*WSTU-SCEZ-30M-P*	*0.49*		*35.3*	*114.3*	*13.5*	*57.2*	*73.0*	*19.1*	*12.7*
207	1-1/4	**127543**	WSTU-SCEZ-104-PCR	@	WSTU-SCEZ-104-P	1.58	WS308	1-17/32	4-15/16	17/32	2-1/4	3-1/8	3/4	1/2
	1-5/16	@	WSTU-SCEZ-105-PCR*	@	WSTU-SCEZ-105-P	1.52								
	1-3/8	@	WSTU-SCEZ-106-PCR*	@	WSTU-SCEZ-106-P	1.47								
	1-7/16	**127544**	WSTU-SCEZ-107-PCR	@	WSTU-SCEZ-107-P	1.42								
	35 mm	***127577***	*WSTU-SCEZ-35M-PCR*	@	*WSTU-SCEZ-35M-P*	*0.69*		*38.9*	*125.4*	*13.5*	*57.2*	*79.4*	*19.1*	*12.7*

Series	Shaft Size	With Corrosion Resistant Insert		Standard Insert With Flingers		H	J	K	L	M**	N	R	S	T
		Part No.	Description	Part No.	Description									
204	1/2	@	WSTU-SCEZ-008L-PCR*	@	WSTU-SCEZ-008L-P	5/8	2 -3/32	1-9/64	1-1/8	3	3 -5/8	27/64	47/64	1-3/8
	5/8	@	WSTU-SCEZ-010L-PCR*	@	WSTU-SCEZ-010L-P									
	3/4	**127539**	WSTU-SCEZ-012-PCR	@	WSTU-SCEZ-012-P									
	20 mm	***127574***	*WSTU-SCEZ-20M-PCR*	@	*WSTU-SCEZ-20M-P*	*15.9*	*53.2*	*29.0*	*28.6*	*76.2*	*92.1*	*10.7*	*18.7*	*35.1*
205	7/8	@	WSTU-SCEZ-014-PCR*	@	WSTU-SCEZ-014-P	5/8	2-1/8	1-9/64	1-21/64	3	3 -5/8	27/64	49/64	1-3/8
	15/16	@	WSTU-SCEZ-015-PCR*	@	WSTU-SCEZ-015-P									
	1	**127540**	WSTU-SCEZ-100-PCR	**058940**	WSTU-SCEZ-100-P									
	25 mm	***127575***	*WSTU-SCEZ-25M-PCR*	@	*WSTU-SCEZ-25M-P*	*15.9*	*54.0*	*29.0*	*33.7*	*76.2*	*92.1*	*10.7*	*19.4*	*35.1*
206	1-1/8	@	WSTU-SCEZ-102-PCR*	@	WSTU-SCEZ-102-P	5/8	2-3/8	1-3/8	1-37/64	3-1/2	4 -1/4	31/64	29/32	1-5/8
	1-3/16	**127541**	WSTU-SCEZ-103-PCR	@	WSTU-SCEZ-103-P									
	1-1/4	**127542**	WSTU-SCEZ-104S-PCR	@	WSTU-SCEZ-104S-P									
	30 mm	***127576***	*WSTU-SCEZ-30M-PCR*	@	*WSTU-SCEZ-30M-P*	*15.9*	*60.3*	*34.9*	*40.1*	*88.9*	*108.0*	*12.3*	*23.0*	*41.1*
207	1-1/4	**127543**	WSTU-SCEZ-104-PCR	@	WSTU-SCEZ-104-P	5/8	2-27/64	1-3/8	1-27/32	3-1/2	4 -1/4	32/64	1-1/32	1-5/8
	1-5/16	@	WSTU-SCEZ-105-PCR*	@	WSTU-SCEZ-105-P									
	1-3/8	@	WSTU-SCEZ-106-PCR*	@	WSTU-SCEZ-106-P									
	1-7/16	**127544**	WSTU-SCEZ-107-PCR	@	WSTU-SCEZ-107-P									
	35 mm	***127577***	*WSTU-SCEZ-35M-PCR*	@	*WSTU-SCEZ-35M-P*	*15.9*	*61.5*	*34.9*	*46.8*	*88.9*	*108.0*	*12.7*	*26.2*	*41.1*

@ Assembled to order * 20 piece minimum ** + or - .020" + or - .50 mm

E-Z KLEEN Mounted Bearings

SCEZ SHCR Normal Duty Stainless Steel Wide Slot Take-Up Bearings

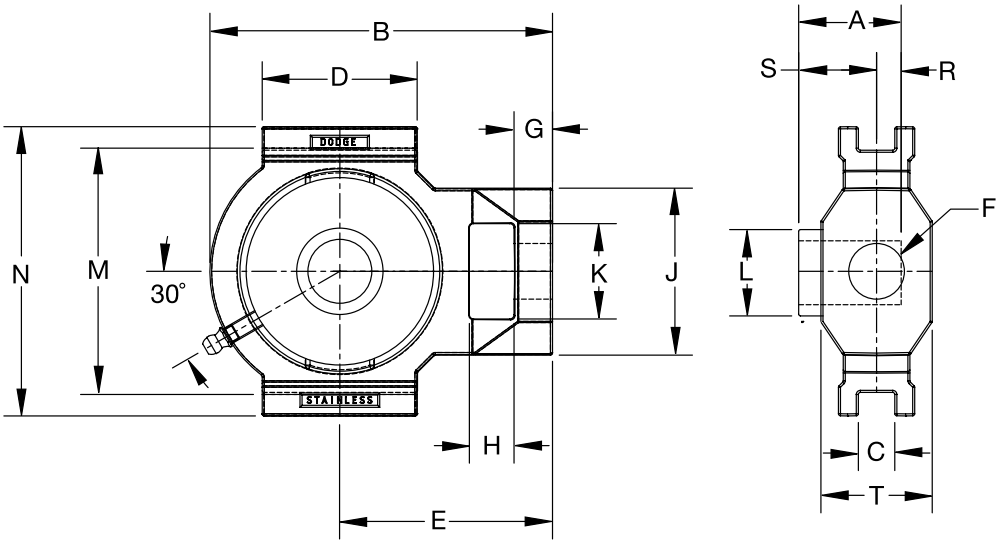

Series	Shaft Size	Standard Part No.	Standard Description	Weight lbs. kgs.	Take-Up Frame No. Ref.	A	B	C*	D	E	F Screw Dia	G
204	3/4	**136947**	WSTU-SCEZ-012-SHCR	2.14	WS300	1-5/32	3-31/32	17/32	2-13/64	2-9/16	45/64	9/16
	20 mm	***136980***	*WSTU-SCEZ-20M-SHCR*	*.97*		*29.2*	*100.8*	*13.5*	*55.9*	*65*	*18.0*	*14.2*
205	1	**136948**	WSTU-SCEZ-100-SHCR	2.03	WS300	1-21/64	3-31/32	17/32	2-7/32	2-9/16	45/64	9/16
	25 mm	***136981***	*WSTU-SCEZ-25M-SHCR*	*.92*		*33.6*	*100.8*	*13.5*	*55.9*	*65.0*	*18.0*	*14.2*
206	1-3/16	**136949**	WSTU-SCEZ-103-SHCR	3.31	WS308	1-25/64	5	17/32	2-17/64	2-3/32	13/16	9/16
	1-1/4	**136950**	WSTU-SCEZ-104S-SHCR									
	30 mm	***136982***	*WSTU-SCEZ-30M-SHCR*	*1.50*		*35.3*	*126.8*	*13.5*	*57.4*	*78.6*	*20.6*	*14.2*
207	1-1/4	**136951**	WSTU-SCEZ-104-SHCR	3.21	WS308	1-17/32	4-63/64	17/32	2-17/64	3-3/32	13/16	9/16
	1-7/16	**136952**	WSTU-SCEZ-107-SHCR									
	35 mm	***136983***	*WSTU-SCEZ-35M-SHCR*	*1.46*		*39.0*	*126.8*	*13.5*	*57.4*	*78.6*	*20.6*	*14.2*
208	1-1/2	**136953**	WSTU-SCEZ-108-SHCR	4.60	WS400	1-11/16	5-5/8	11/16	3-1/4	3-1/2	1-1/8	5/8
	40 mm	***136984***	*WSTU-SCEZ-40M-SHCR*	*2.09*		*42.7*	*142.9*	*17.5*	*82.6*	*88.9*	*25.6*	*15.9*
210	1-15/16	**136954**	WSTU-SCEZ-115-SHCR	4.12	WS400	1- 3/4	5-5/8	11/16	3-1/4	3-1/2	1-1/8	5/8
	2	**@**	WSTU-SCEZ-200-SHCR									
	50mm	***136985***	*WSTU-SCEZ-50M-SHCR*	*1.87*		*44.3*	*142.9*	*17.5*	*82.6*	*88.9*	*28.6*	*15.9*

@ Assembled to Order

Series	Shaft Size	Standard Part No.	Standard Description	H	J	K	L	M#	N	R	S	T
204	3/4	**136947**	WSTU-SCEZ-012-SHCR	21/32	2-1/8	1-9/64	1-7/64	3	3-5/8	27/64	23/32	1-3/8
	20mm	***136980***	*WSTU-SCEZ-20M-SHCR*	*16.5*	*53.9*	*29.1*	*28.3*	*76.5*	*92.2*	*10.8*	*18.4*	*35.1*
205	1	**136948**	WSTU-SCEZ-100-SHCR	21/32	2-1/8	1-9/64	1-21/64	3	3-5/8	9/16	49/64	1-3/8
	25mm	***136981***	*WSTU-SCEZ-25M-SHCR*	*16.5*	*53.9*	*29.1*	*33.6*	*76.5*	*92.2*	*14.3*	*19.3*	*35.1*
206	1-3/16	**136949**	WSTU-SCEZ-103-SHCR	21/32	2-7/16	1-25/64	1-37/64	3-17/32	4-13/64	31/64	29/32	1-5/8
	1-1/4	**136950**	WSTU-SCEZ-104S-SHCR									
	30mm	***136982***	*WSTU-SCEZ-30M-SHCR*	*16.5*	*61.7*	*35.2*	*39.9*	*89.5*	*106.7*	*12.3*	*23.0*	*41.2*
207	1-1/4	**136951**	WSTU-SCEZ-104-SHCR	21/32	2-7/16	1-25/64	1-27/32	3-17/32	4-13/64	1/2	1-1/32	1-5/8
	1-7/16	**136952**	WSTU-SCEZ-107-SHCR									
	35mm	***136983***	*WSTU-SCEZ-35M-SHCR*	*16.5*	*61.7*	*35.2*	*46.8*	*89.5*	*106.7*	*12.8*	*26.2*	*41.2*
208	1-1/2	**136953**	WSTU-SCEZ-108-SHCR	3/4	2- 3/4	1-15/16	2-3/64	4	4-1/2	19/32	1-3/32	1-5/8
	40mm	***136984***	*WSTU-SCEZ-40M-SHCR*	*19.1*	*69.9*	*49.2*	*52.1*	*101.6*	*114.3*	*14.9*	*27.8*	*41.2*
210	1-15/16	**136954**	WSTU-SCEZ-115-SHCR	3/4	2- 3/4	1-15/16	2-27/64	4	4-1/2	19/32	1-5/32	1-5/8
	2	**@**	WSTU-SCEZ-200-SHCR									
	50mm	***136985***	*WSTU-SCEZ-50M-SHCR*	*19.1*	*69.9*	*49.2*	*61.7*	*101.6*	*114.3*	*14.9*	*29.4*	*41.2*

*+/- .015" +/- .38mm #+.010", -.020" +.25mm, -.50mm

E-Z KLEEN Mounted Bearings

DLEZ Normal Duty Polymer Housed Wide Slot Take-Up Bearings

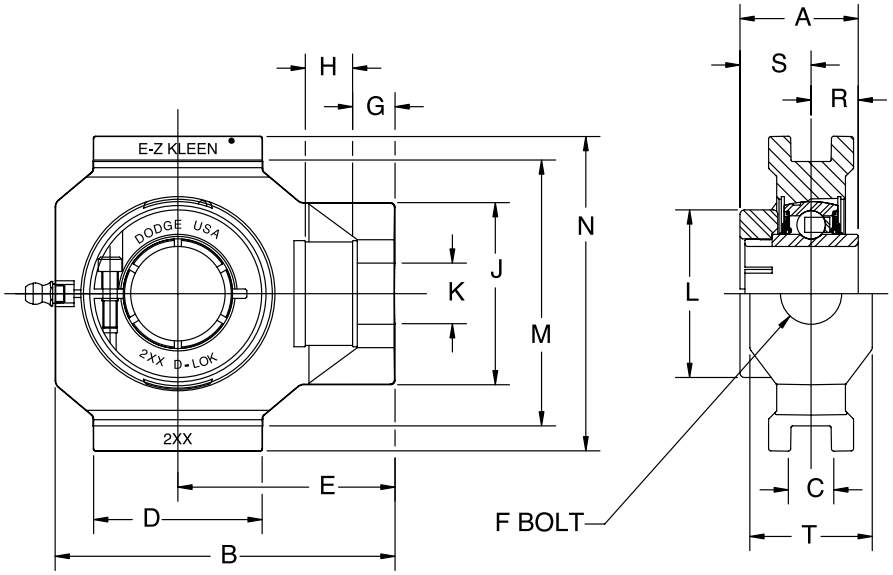

Series	Shaft Size	With Corrosion Resistant Insert		Standard Insert With Flingers		Weight lbs kg	Take-Up Frame No. Ref.	A	B	C**	D	E	F Thd Shaft	G
		Part No.	Description	Part No.	Description									
204	3/4	**127617**	WSTU-DLEZ-012-PCR	@	WSTU-DLEZ-012-P	0.66	WS300	1-5/32	3-13/16	17/32	2	2-1/2	5/8	1/2
	20 mm	***127652***	*WSTU-DLEZ-20M-PCR*	@	*WSTU-DLEZ-20M-P*	*0.31*		*29.4*	*96.8*	*13.5*	*50.8*	*63.5*	*15.9*	*12.7*
205	7/8	@	WSTU-DLEZ-014-PCR*	@	WSTU-DLEZ-014-P	0.92	WS300	1-3/16	3-15/16	17/32	2	2-9/16	5/8	1/2
	15/16	@	WSTU-DLEZ-015-PCR*	@	WSTU-DLEZ-015-P	0.82								
	1	**127618**	WSTU-DLEZ-100-PCR	@	WSTU-DLEZ-100-P	0.72								
	25 mm	***127653***	*WSTU-DLEZ-25M-PCR*	@	*WSTU-DLEZ-25M-P*	*0.34*		*30.2*	*100.0*	*13.5*	*50.8*	*65.1*	*15.9*	*12.7*
206	1-1/8	@	WSTU-DLEZ-102-PCR*	@	WSTU-DLEZ-102-P	1.11	WS308	1-25/64	4-1/2	17/32	2-1/4	2-7/8	3/4	1/2
	1-3/16	**127619**	WSTU-DLEZ-103-PCR	@	WSTU-DLEZ-103-P	1.09								
	1-1/4	**127620**	WSTU-DLEZ-104S-PCR	@	WSTU-DLEZ-104S-P	1.07								
	30 mm	***127654***	*WSTU-DLEZ-30M-PCR*	@	*WSTU-DLEZ-30M-P*	*0.49*		*35.3*	*114.3*	*13.5*	*57.2*	*73.0*	*19.1*	*12.7*
207	1-1/4	**127621**	WSTU-DLEZ-104-PCR	@	WSTU-DLEZ-104-P	1.58	WS308	1-17/32	4-15/16	17/32	2-1/4	3-1/8	3/4	1/2
	1-3/8	@	WSTU-DLEZ-106-PCR*	@	WSTU-DLEZ-106-P	1.47								
	1-7/16	**127622**	WSTU-DLEZ-107-PCR	@	WSTU-DLEZ-107-P	1.42								
	35 mm	***127655***	*WSTU-DLEZ-35M-PCR*	@	*WSTU-DLEZ-35M-P*	*0.69*		*38.9*	*125.4*	*13.5*	*57.2*	*79.4*	*19.1*	*12.7*

@ Assembled to order

Series	Shaft Size	With Corrosion Resistant Insert		Standard Insert With Flingers		H	J	K	L	M**	N	R	S	T
		Part No.	Description	Part No.	Description									
204	3/4	**127617**	WSTU-DLEZ-012-PCR	@	WSTU-DLEZ-012-P	5/8	2 -3/32	1-9/64	1-1/8	3	3-5/8	27/64	47/64	1-3/8
	20 mm	***127652***	*WSTU-DLEZ-20M-PCR*	@	*WSTU-DLEZ-20M-P*	*15.9*	*53.2*	*29.0*	*28.6*	*76.2*	*92.1*	*10.7*	*18.7*	*35.1*
205	7/8	@	WSTU-DLEZ-014-PCR*	@	WSTU-DLEZ-014-P	5/8	2-1/8	1-9/64	1-21/64	3	3-5/8	27/64	49/64	1-3/8
	15/16	@	WSTU-DLEZ-015-PCR*	@	WSTU-DLEZ-015-P									
	1	**127618**	WSTU-DLEZ-100-PCR	@	WSTU-DLEZ-100-P									
	25 mm	***127653***	*WSTU-DLEZ-25M-PCR*	@	*WSTU-DLEZ-25M-P*	*15.9*	*54.0*	*29.0*	*33.7*	*76.2*	*92.1*	*10.7*	*19.4*	*35.1*
206	1-1/8	@	WSTU-DLEZ-102-PCR*	@	WSTU-DLEZ-102-P	5/8	2-3/8	1-3/8	1-37/64	3-1/2	4-1/4	31/64	29/32	1-5/8
	1-3/16	**127619**	WSTU-DLEZ-103-PCR	@	WSTU-DLEZ-103-P									
	1-1/4	**127620**	WSTU-DLEZ-104S-PCR	@	WSTU-DLEZ-104S-P									
	30 mm	***127654***	*WSTU-DLEZ-30M-PCR*	@	*WSTU-DLEZ-30M-P*	*15.9*	*60.3*	*34.9*	*40.1*	*88.9*	*108.0*	*12.3*	*23.0*	*41.1*
207	1-1/4	**127621**	WSTU-DLEZ-104-PCR	@	WSTU-DLEZ-104-P	5/8	2-27/64	1-3/8	1-27/32	3-1/2	4-1/4	32/64	1-1/32	1-5/8
	1-3/8	@	WSTU-DLEZ-106-PCR*	@	WSTU-DLEZ-106-P									
	1-7/16	**127622**	WSTU-DLEZ-107-PCR	@	WSTU-DLEZ-107-P									
	35 mm	***127655***	*WSTU-DLEZ-35M-PCR*	@	*WSTU-DLEZ-35M-P*	*15.9*	*61.5*	*34.9*	*46.8*	*88.9*	*108.0*	*12.7*	*26.2*	*41.1*

** + or - .020” + or - .50 mm

E-Z KLEEN Mounted Bearings

GT Normal Duty Bearing Inserts for E-Z Kleen Bearings

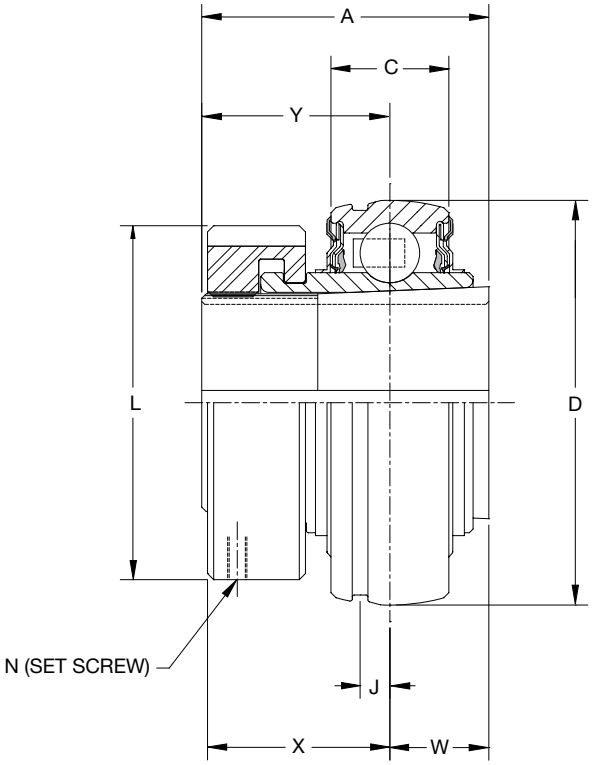

Series	Shaft Size	Complete Unit		Unit Without Adapter		Adapter & Nut Assembly	
		Part No.	Description	Part No.	Description	Part No.	Description
204	3/4	**129825**	INS-GT-012-CR	**129579**	INS-GT-04-CR	**129967**	AN-GT-04-012-CR
	20mm	***129826***	*INS-GT-20M-CR*			***129980***	*AN-GT-04-20M-CR*
205	1	**129827**	INS-GT-100-CR	**129580**	INS-GT-05-CR	**129968**	AN-GT-05-100-CR
	25mm	***129828***	*INS-GT-25M-CR*			***129981***	*AN-GT-05-25M-CR*
206	1-1/8	**@**	INS-GT-102-CR	**129581**	INS-GT-06-CR	**129969**	AN-GT-06-102-CR
	1-3/16	**129829**	INS-GT-103-CR			**129970**	AN-GT-06-103-CR
	1-1/4	**129830**	INS-GT-104S-CR			**129971**	AN-GT-06-104S-CR
	30mm	***129831***	*INS-GT-30M-CR*			***129982***	*AN-GT-06-30M-CR*
207	1-1/4	**129832**	INS-GT-104-CR	**129582**	INS-GT-07-CR	**129972**	AN-GT-07-104-CR
	1-3/8	**@**	INS-GT-106-CR			**129973**	AN-GT-07-106-CR
	1-7/16	**129833**	INS-GT-107-CR			**129974**	AN-GT-07-107-CR
	35mm	***129834***	*INS-GT-35M-CR*			***129983***	*AN-GT-07-35M-CR*
208	1-1/2	**129835**	INS-GT-108-CR	**129583**	INS-GT-08-CR	**129975**	AN-GT-08-108-CR
	40mm	***129836***	*INS-GT-40M-CR*			***129984***	*AN-GT-08-40M-CR*
209	1-11/16	**129837**	INS-GT-111-CR	**129584**	INS-GT-09-CR	**129976**	AN-GT-09-111-CR
	1- 3/4	**@**	INS-GT-112-CR			**129977**	AN-GT-09-112-CR
	45mm	***129838***	*INS-GT-45M-CR*			***129985***	*AN-GT-09-45M-CR*
210	1-15/16	**129839**	INS-GT-115-CR	**129585**	INS-GT-10-CR	**129978**	AN-GT-10-115-CR
	2	**@**	INS-GT-200-CR			**129979**	AN-GT-10-200-CR
	50mm	***129840***	*INS-GT-50M-CR*			***129986***	*AN-GT-10-50M-CR*

@ Assembled to order.

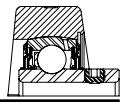

E-Z KLEEN Mounted Bearings

GT Normal Duty Bearing Inserts for E-Z Kleen Bearings

Series	Shaft Size	Weight lbs kg	A	C	D	J	L	N Screw (UNF)	W#	X	Y#
204	3/4 *20mm*	0.6 *0.3*	1-15/32 *37.3*	0.5906 *15.0*	1.8504 *47.0*	0.152 *3.9*	1-1/2 *38.1*	#10-32 x 1/4	31/64 *12.3*	1-3/64 *26.7*	63/64 *25.0*
205	1 *25mm*	0.8 *0.4*	1-29/64 *36.9*	0.5906 *15.0*	2.0472 *52.0*	0.152 *3.9*	1-51/64 *45.6*	#10-32 x 1/4	1/2 *12.8*	1-1/64 *25.9*	61/64 *24.2*
206	1-1/8 1-3/16 1-1/4 *30mm*	1.2 *0.6*	1-39/64 *40.9*	0.7087 *18.0*	2.4409 *62.0*	0.190 *4.8*	2-5/64 *52.8*	#10-32 x 1/4	17/32 *13.5*	1-1/8 *28.7*	1-5/64 *27.4*
207	1-1/4 1-3/8 1-7/16 *35mm*	1.8 *0.8*	1-5/8 *41.3*	0.7480 *19.0*	2.8346 *72.0*	0.202 *5.1*	2-3/8 *60.3*	#10-32 x 1/4	9/16 *14.3*	1-9/64 *29.1*	1-1/16 *27.0*
208	1-1/2 *40mm*	2.2 *1.0*	1-27/32 *46.8*	0.8661 *22.0*	3.1496 *80.0*	0.224 *5.7*	2-5/8 *66.7*	#10-32 x 1/4	21/32 *16.7*	1-15/64 *31.5*	1-3/16 *30.2*
209	1-11/16 1-3/4 *45mm*	2.5	1-55/64	0.8661	3.3465	0.248	2-55/64	#10-32 x 1/4	21/32	1-9/32	1-3/16
210	1-15/16 2 *50mm*	3.0 *1.4*	1-55/64 *47.2*	0.8661 *22.0*	3.5433 *90.0*	0.248 *6.3*	3-1/8 *79.4*	#10-32 x 1/4	21/32 *16.7*	1-9/32 *32.6*	1-13/64 *30.6*

#W & Y dimensions will vary slightly depending on true shaft diameter.

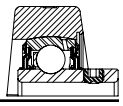

E-Z KLEEN Mounted Bearings

SC Normal Duty Bearing Corrosion Resistant Inserts for E-Z Kleen Bearings

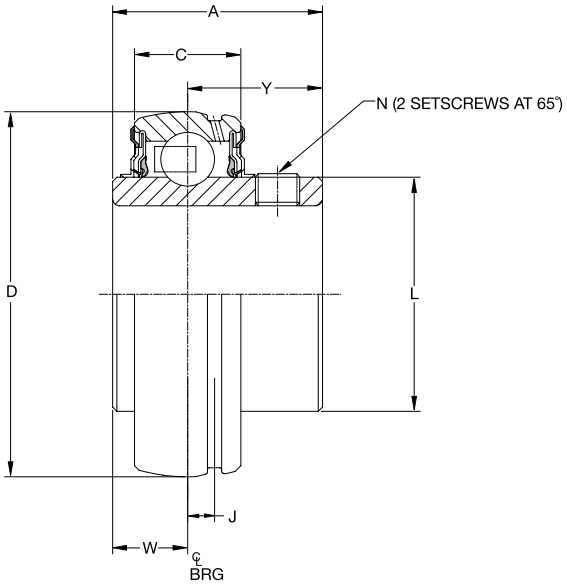

Series	Shaft Size	Insert with Flingers		Corrosion Resistant Insert		Weight lbs kg	A	C	D	J	L	N	W	Y
		Part No.	Description	Part No.	Description									
204	1/2	**@**	INS-SC-008L-FF	**052981**	INS-SC-008L-CR*	.38	1-5/32	.5906	1.8504	.152	1-1/8	10/32	27/64	47/64
	5/8	**124932**	INS-SC-010L-FF	**127073**	INS-SC-010L-CR*	.35								
	3/4	**123070**	INS-SC-012-FF	**045600**	INS-SC-012-CR	.32								
	20mm	***050524***	*INS-SC-20M-FF*	***125873***	*INS-SC-20M-CR*	*.16*	*29.4*	*15.0*	*47.0*	*3.9*	*28.6*	*M6 x 1*	*10.7*	*18.7*
205	7/8	**124931**	INS-SC-014-FF	**058665**	INS-SC-014-CR*	.43	1-3/16	.5906	2.0472	.152	1-21/64	1/4-28	27/64	49/64
	15/16	**123069**	INS-SC-015-FF	**@**	INS-SC-015-CR*	.40								
	1	**123071**	INS-SC-100-FF	**045601**	INS-SC-100-CR	.37								
	25mm	***052620***	*INS-SC-25M-FF*	***050580***	*INS-SC-25M-CR*	*.18*	*30.2*	*15.0*	*52.0*	*3.9*	*33.7*	*M6 x 1*	*10.7*	*19.4*
206	1-1/8	**123234**	INS-SC-102-FF	**058989**	INS-SC-102-CR*	.63	1-25/64	.7087	2.4409	.190	1-37/64	5/16-24	31/64	29/32
	1-3/16	**123072**	INS-SC-103-FF	**045602**	INS-SC-103-CR	.60								
	1-1/4	**123073**	INS-SC-104S-FF	**045603**	INS-SC-104S-CR	.58								
	30mm	***052621***	*INS-SC-30M-FF*	***125874***	*INS-SC-30M-CR*	*.27*	*35.3*	*18.0*	*62.0*	*4.8*	*40.1*	*M8 x 1.25*	*12.3*	*23.0*
207	1-1/4	**123074**	INS-SC-104-FF	**045412**	INS-SC-104-CR	1.02	1-17/32	.7480	2.8346	.202	1-27/32	5/16-24	1/2	1-1/32
	1-5/16	**057102**	INS-SC-105-FF	**058345**	INS-SC-105-CR*	.97								
	1-3/8	**123460**	INS-SC-106-FF	**058965**	INS-SC-106-CR*	.92								
	1-7/16	**123075**	INS-SC-107-FF	**045604**	INS-SC-107-CR	.86								
	35mm	***052622***	*INS-SC-35M-FF*	***050653***	*INS-SC-35M-CR*	*.44*	*38.9*	*19.0*	*72.0*	*5.1*	*46.8*	*M8 x 1.25*	*12.7*	*26.2*
208	1-1/2	**123076**	INS-SC-108-FF	**045605**	INS-SC-108-CR	1.27	1-11/16	.8661	3.1496	.224	2-3/64	5/16-24	19/32	1-3/32
	1-5/8	**123409**	INS-SC-110-FF	**@**	INS-SC-110-CR*	1.13								
	40mm	***052623***	*INS-SC-40M-FF*	***050654***	*INS-SC-40M-CR*	*.51*	*42.9*	*22.0*	*80.0*	*5.7*	*52.0*	*M8 x 1.25*	*15.1*	*27.8*
209	1-5/8	**@**	INS-SC-110L-FF	**@**	INS-SC-110L-CR*	1.49	1-23/32	.8661	3.3465	.248	2-7/32	5/16-24	19/32	1-1/8
	1-11/16	**@**	INS-SC-111-FF	**125004**	INS-SC-111-CR	1.43								
	1- 3/4	**045677**	INS-SC-112-FF	**054145**	INS-SC-112-CR*	1.36								
	45mm	***@***	*INS-SC-45M-FF*	***125005***	*INS-SC-45M-CR*	*.62*	*43.7*	*22.0*	*85.0*	*6.3*	*56.4*	*M8 x 1.25*	*15.1*	*28.6*
210	1-11/16	**@**	INS-SCM-111-FF	**@**	INS-SCM-111-CR*	1.82	1-3/4	.8661	3.5433	.248	2-7/16	3/8-24	19/32	1-5/32
	1-15/16	**123077**	INS-SC-115-FF	**045606**	INS-SC-115-CR	1.48								
	2	**123413**	INS-SC-200-FF	**045338**	INS-SC-200-CR*	1.39								
	50mm	***@***	*INS-SC-50M-FF*	***050656***	*INS-SC-50M-CR*	*.67*	*44.5*	*22.0*	*90.0*	*6.3*	*61.9*	*M10 x 1.5*	*15.1*	*29.4*

@ Assembled to order * 20 piece minimum

E-Z KLEEN Mounted Bearings

DL Normal Duty Bearing Corrosion Resistant Inserts for E-Z Kleen Bearings

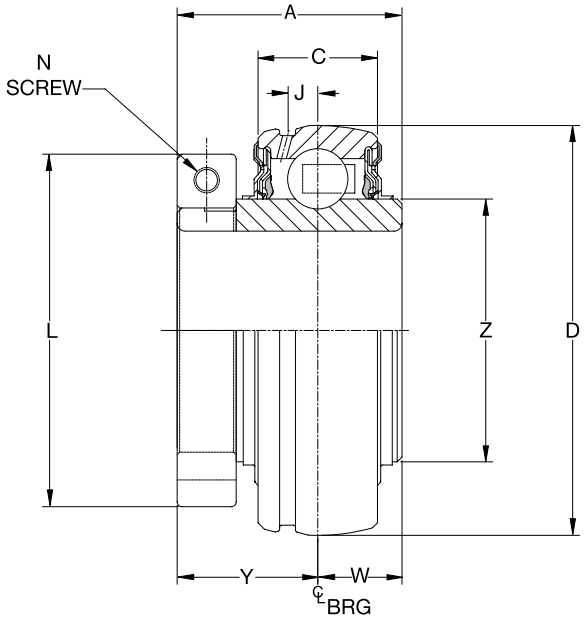

Series	Shaft Size	Insert with Flingers		Corrosion Resistant Insert		Weight lbs kg	A	C	D	J	L	N	W	Y	Z
		Part No.	Description	Part No.	Description										
204	3/4	**128646**	INS-DL-012	**126685**	INS-DL-012-CR	0.6	1-9/32	0.5906	1.8504	0.152	1-45/64	No. 8	1/2	25/32	1-1/8
	20mm	***126629***	*INS-DL-20M*	***126693***	*INS-DL-20M-CR*	*0.3*	*32.5*	*15.0*	*47.0*	*3.9*	*43.3*	*M4*	*12.7*	*19.8*	*28.6*
205	7/8	**128684**	INS-DL-014	**@**	INS-DL-014-CR*	0.8	1-7/16	0.5906	2.0472	0.152	2	No. 10	9/16	7/8	1-21/64
	15/16	**128647**	INS-DL-015	**@**	INS-DL-015-CR*	0.8									
	1	**128648**	INS-DL-100	**126686**	INS-DL-100-CR	0.8									
	25mm	***126630***	*INS-DL-25M*	***126694***	*INS-DL-25M-CR*	*0.4*	*36.5*	*15.0*	*52.0*	*3.9*	*50.8*	*M5*	*14.3*	*22.2*	*33.7*
206	1-1/8	**128649**	INS-DL-102	**059869**	INS-DL-102-CR*	1.2	1-9/16	0.7087	2.4409	0.190	2-7/32	No. 10	5/8	15/16	1-37/64
	1-3/16	**128650**	INS-DL-103	**126687**	INS-DL-103-CR	1.2									
	1-1/4	**128651**	INS-DL-104S	**126688**	INS-DL-104S-CR	1.1									
	30mm	***126631***	*INS-DL-30M*	***126695***	*INS-DL-30M-CR*	*0.6*	*39.7*	*18.0*	*62.0*	*4.8*	*56.4*	*M5*	*15.9*	*23.8*	*40.1*
207	1-1/4	**128652**	INS-DL-104	**126689**	INS-DL-104-CR	1.8	1- 3/4	0.7480	2.8346	0.202	2-11/16	1/4	11/16	1-1/16	1-27/32
	1-3/8	**128653**	INS-DL-106	**@**	INS-DL-106-CR*	1.8									
	1-7/16	**128654**	INS-DL-107	**052093**	INS-DL-107-CR	1.7									
	35mm	***126632***	*INS-DL-35M*	***126696***	*INS-DL-35M-CR*	*0.8*	*44.5*	*19.0*	*72.0*	*5.1*	*68.3*	*M6*	*17.5*	*27.0*	*46.8*
208	1-1/2	**128655**	INS-DL-108	**126690**	INS-DL-108-CR	2.2	2	0.8661	3.1496	0.224	2-47/64	1/4	3/4	1-1/4	2-3/64
	40mm	***126633***	*INS-DL-40M*	***126697***	*INS-DL-40M-CR*	*1.0*	*50.8*	*22.0*	*80.0*	*5.7*	*69.5*	*M6*	*19.1*	*31.8*	*52.0*
209	1-5/8	**128656**	INS-DL-110L	**@**	INS-DL-110L-CR*	2.5	2	0.8661	3.3465	0.248	2-63/64	1/4	3/4	1-1/4	2-7/32
	1-11/16	**128657**	INS-DL-111	**126691**	INS-DL-111-CR	2.5									
	1- 3/4	**128658**	INS-DL-112	**@**	INS-DL-112-CR*	2.5									
	45mm	***126634***	*INS-DL-45M*	***126698***	*INS-DL-45M-CR*	*1.2*	*50.8*	*22.2*	*85.8*	*6.4*	*75.8*	*M6*	*19.1*	*31.8*	*56.9*
210	1-11/16	**128672**	INS-DLM-111	**@**	INS-DLM-111-CR	3.0	2-3/32	0.8661	3.5433	0.248	3-15/64	1/4	3/4	1-11/32	2-7/16
	1-15/16	**128659**	INS-DL-115	**126692**	INS-DL-115-CR	3.0									
	2	**128660**	INS-DL-200	**053986**	INS-DL-200-CR*	3.0									
	50mm	***126635***	*INS-DL-50M*	***126699***	*INS-DL-50M-CR*	*1.4*	*53.2*	*22.0*	*90.0*	*6.3*	*82.1*	*M6*	*19.1*	*34.1*	*61.9*

@ Assembled to order

* 20 piece minimum

E-Z KLEEN/ULTRA KLEEN Mounted Bearings

Polymer and Stainless Steel Housed End Closures

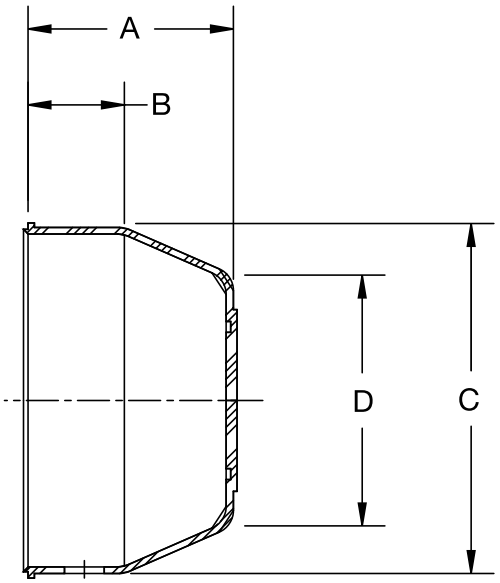

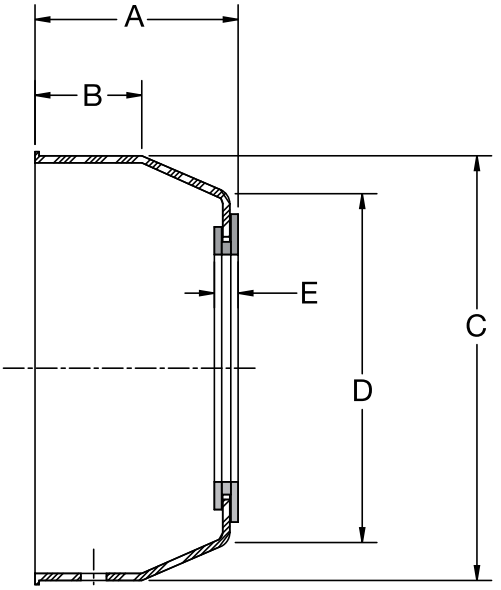

Series	For Shaft Size	Closed End Closure Part Number	Description	A	B	C	D	Open End Closure Part Number	Description	A	B	C	D	E
204	3/4 *20mm*	**128960**	ECC-EZ-204	1-1/8 *28.7*	17/32 *13.5*	1-29/32 *48.4*	1-3/8 *35.1*	**128974** ***128991***	ECO-EZ-012 *ECO-EZ-20M*	1-3/16 *30.2*	17/32 *13.5*	1-29/32 *48.4*	1-3/8 *35.1*	3/16 *4.9*
205	1 *25mm*	**128961**	ECC-EZ-205	3/16 *30.2*	17/32 *13.5*	2-11/64 *55.1*	1-39/64 *40.9*	**128975** ***128992***	ECO-EZ-100 *ECO-EZ-25M*	1-1/4 *31.8*	17/32 *13.5*	2-11/64 *55.1*	1-39/64 *40.9*	3/16 *4.9*
206	1-3/16 1-1/4 *30mm*	**128962**	ECC-EZ-206	1-21/64 *33.8*	9/16 *14.2*	2-1/2 *63.5*	31/32 *50.0*	**128976** **128989** ***128993***	ECO-EZ-103 ECO-EZ-104S *ECO-EZ-30M*	1-25/64 *35.3*	9/16 *14.2*	2-1/2 *63.5*	31/32 *50.0*	3/16 *4.9*
207	1-1/4 1-7/16 *35mm*	**128963**	ECC-EZ-207	1-15/32 *37.3*	11/16 *17.5*	2-29/32 *73.9*	2-5/16 *58.9*	**128977** **128990** ***128994***	ECO-EZ-104 ECO-EZ-107 *ECO-EZ-35M*	1-17/32 *38.9*	11/16 *17.5*	2-29/32 *73.9*	2-5/16 *58.9*	3/16 *4.9*
208	1-1/2 *40mm*	**128964**	ECC-EZ-208	1-35/64 *39.1*	11/16 *17.5*	3-5/16 *84.1*	2-49/64 *70.1*	**128978** ***128996***	ECO-EZ-108 *ECO-EZ-40M*	1-19/32 *40.6*	11/16 *17.5*	3-5/16 *84.1*	2-49/64 *70.1*	13/64 *5.1*
209	1-11/16 *45mm*	**128965**	ECC-EZ-209	1-19/32 *40.4*	23/32 *18.3*	3-1/2 *88.9*	2-7/8 *72.9*	**@** ***@***	ECO-EZ-111 *ECO-EZ-45M*	1-21/32 *41.9*	23/32 *18.3*	3-1/2 *88.9*	2-7/8 *72.9*	13/64 *5.1*
210	1-15/16 2 *50mm*	**128966**	ECC-EZ-210	1-21/32 *42.2*	29/32 *23.1*	3-5/8 *91.4*	3 *76.2*	**128980** ***128997***	ECO-EZ-115 *ECO-EZ-50M*	1-23/32 *43.7*	29/32 *23.1*	3-5/8 *91.4*	3 *76.2*	13/64 *5.1*

@ Assembled to order

Extreme Duty Set Screw Ball Bearings

The DODGE SC/SCMED Extreme Duty ball bearing offers extended life in the toughest industrial applications. Incorporating patented DODGE-only features such as the QuadGuard sealing system and the Maxlife ball cage, the DODGE SCED/ SCMED bearing outperforms the competition in demanding environments where increasing equipment uptime is critical to success. Extreme conditions require highly-engineered products that will last. The DODGE Extreme Duty ball bearing is up to the challenge

Insert: The Dodge Extreme Duty ball bearing incorporates 65° degree set screws that provide maximum locking force without compromising the strength of the inner ring. The inserts also include an anti-rotation pin that prevents the insert from rotating in the housing under load which causes premature failure.

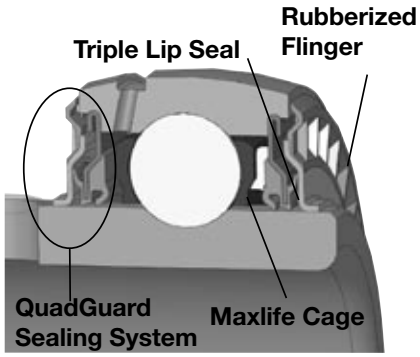

Sealing: The SCED uses the patented QuadGuard sealing system that offers superior protection in tough environments where there is significant risk of contamination. Industries such as aggregate, cement, paper, wood products and metals require a sealing system that will extend the life of the bearing in harsh conditions. There are two major components to the QuadGuard design. The first is a unique triple-lip seal design that maximizes sealing without sacrificing the speed rating compared to a single lip design. The Dodge patented triple-lip design uses a mechanically retained seal where there are two contact points on the inner ring and one that rides against the flinger surface. Three points of contact maximize the ability of the bearing to guard against contamination and keep in lubricants. The QuadGuard seal also incorporates the industry's first and only patented rubberized flinger. This flinger uses molded rubber to provide additional protection from contaminants entering the bearing. The baffle design of the rubber on the external surface of the flinger enhances the removal of liquid as it rotates. Grease chambers on the internal surface prevent lubricants from exiting the bearing. This superior design will increase service life in dirty environments thus leading to extended up-time for our customers. When used in conjunction with one another, the triple-lip seal and rubberized flinger create a sealing system that is perfect for demanding environments.

Retainer:

The Maxlife Cage is the product of extensive research and development in retainer technology and industry leading engineering. The cage consists of a two-piece design that creates a grease compartment around each of the rolling elements. These compartments allow balls to be constantly in contact with grease, so a good oil film will always exist to prevent wear and minimize friction and heat. The Maxlife cage reduces the relative motion between the components and the grease which results in lower operating temperatures and extended life. The compartmental construction of the cage tends to hold in the grease and prevent it from being washed out in extremely wet or dirty conditions. This feature allows for extended life and the ability for the bearing to be relubricated with less frequency than standard designs.

Lubrication:

Synthetic Grease

- SHC 220 PM Synthetic Grease Standard
- Extends grease Life. Less Maintenance Required
- Cooler operating temperatures
- Extends life in wet applications

Housings:

- Cast Iron
  - — Pillow blocks
  - — 2 and 4 –bolt flange bearings
  - — Tapped-base pillow blocks
  - — Piloted Flange
  - — Wide and narrow slot take-up bearings

Maxlife Cage

End-Covers:

Dodge Extreme Duty ball bearings contain a machined groove in the housing to accommodate a snap-on style polymer end-cover as a standard feature. The end-cover provides additional protection from the environment and creates a safer working environment for employees maintaining equipment. The snap-on style end-cover incorporates an additional lip on the mounting surface for a more rigid fit within the housing and enhanced sealing. The design is more durable than a bolt-on style that uses the grease fitting to secure the cover in place and can be easily knocked off the bearing housings. Closed and open end-covers are available.

Selection of Extreme Duty Set Screw Ball Bearings

DODGE Extreme Duty mounted ball bearings are primarily designed for radial loading. However, they have the capacity to carry thrust loads and combined radial/thrust loads. The maximum recommended load which can be applied is limited by various components in the system, such as bearing, housing, shaft attachments, speed and life requirements as listed in this catalog and the instruction manual that accompanies each bearing. DODGE Extreme Duty ball bearings have been applied successfully when these limits have been exceeded under controlled operating conditions. Contact DODGE Engineering for applications which exceed these recommendations.

Select a bearing from the Selection Table that has a radial load rating at the operating speed equal to or greater than the calculated Equivalent Radial Load for a desired L_{10} life. This simple method is all that is required for the majority of general applications and provides for occasional average shock loads.

L_{10} Hours Life-the life which may be expected for at least 90% of a given group of bearings operating under identical conditions.

Heavy Service-For heavy shock loads, frequent shock loads or severe vibrations, add up to 50% (according to severity of conditions) to the Equivalent Radial Load to obtain a Modified Equivalent Radial Load. Consult Application Engineering for additional selection assistance.

A maximum thrust load value of C/10 is recommended as a guide for general applications and will give adequate L_{10} life. If the thrust load exceeds this limit, it is advisable to use auxiliary thrust carrying devices, such as a shaft shoulder, snap ring, or a thrust collar. Where substantial radial load pulls the housing away from the mounting base, both the hold-down bolts and housing must be of adequate strength. Auxiliary load carrying devices, such as shear bars, are advisable for side or end-loading of pillow blocks and radial loads for flange units.

To determine the L_{10} hours life for loads and RPMs not listed use the following equation:

$$L10 = \left(\frac{C}{P}\right)^3 \left(\frac{16{,}667}{n}\right)$$

Where:

L_{10}= Life, hours

C = Dynamic Capacity, lbs. or N

P = Equivalent Radial Load, lbs. or N

n = Revolutions per minute

When the load on a ball bearing is solely a radial load with no thrust (axial) load, the Equivalent Radial Load (P) is equal to the actual radial load. However, when a thrust (axial) load is applied, the radial and thrust loads applied must be converted into an Equivalent Radial Load. Use X (radial factor) and Y (thrust factor) from Table 1 to convert the actual applied thrust and radial loads to an Equivalent Radial Load which has the same effect on the life of a bearing as a radial load of this magnitude.

$$P = XF_R + YF_A$$

Where:

P = Equivalent Radial Load, lbs.
F_R= Radial load, lbs.
F_A= Thrust load, lbs.
e = Thrust load to radial load factor (Table 1)
X = Radial load factor (Table 1)
Y = Thrust Factor (Table 1)
C_0= Basic static capacity (Selection Table)

To find X and Y, first calculate F_A/C_0 to determine e. Calculate F_A/F_R and compare to e to determine the X and Y factors to use from Table 1.

Shaft Tolerances		
Normal Shaft Size	Commercial Shaft Tolerance Inches	Recommended Shaft Tolerances Setscrew Ball Bearing Inches
Up to 1-1/2”	+0.000 -0.002	+0.0000 -0.0005
Over 1-1/2” to 2-1/2”	+0.000 -0.003	+0.0000 -0.0010
Over 2-1/2” to 4”	+0.000 -0.004	+0.0000 -0.0010

Selection of Extreme Duty Set Screw Ball Bearings

Table 1

FA/C0	e	Radial/Thrust Factors			
		If FA/FR is equal to or less than e		If FA/FR is greater than e	
		FA/FR ≤ e		FA/FR> e	
		X	Y	X	Y
0.014	0.19	1	0	0.56	2.30
0.021	0.21	1	0	0.56	2.15
0.028	0.22	1	0	0.56	1.99
0.042	0.24	1	0	0.56	1.85
0.056	0.26	1	0	0.56	1.71
0.07	0.27	1	0	0.56	1.63
0.084	0.28	1	0	0.56	1.55
0.11	0.30	1	0	0.56	1.45
0.17	0.34	1	0	0.56	1.31
0.28	0.38	1	0	0.56	1.15
0.42	0.42	1	0	0.56	1.04
0.56	0.44	1	0	0.56	1

Substitute all known values into the Equivalent Radial Load equation. The Equivalent Radial Load (P) thus determined can be used in the L10 life formula or compared to the allowable Equivalent Radial Load rating desired in the expanded rating chart to select a bearing (Selection Table).

If calculated value of P is less than F_R, use $P=F_R$.

Lubrication- DODGE Ball Bearings are lubricated at the factory and are ready to run. The bearings are initially lubricated with a lithium complex grease and should be relubricated with the same or some equivalent. For high speeds, high loads, extreme temperatures and other abnormal operating conditions, special greases may be required. Contact DODGE Application Engineering for recommendations on these types of applications.

Misalignment - DODGE Ball Bearings are designed to allow a maximum of 2º static misalignment. These bearings are not suitable for dynamic misalignment. To ensure good alignment, mounting surfaces must be checked for flatness and must lie in the same plane. When tightening base bolts, each bolt should be alternately tightening in incremental torque values until full torque is achieved to prevent the angular shifting of the pillow block that occurs when one bolt is tightened to its full torque. Shimming may be required to minimize misalignment.

Extreme Duty SCED/SCMED

Ring Size	Shaft Size SCED	Shaft Size SCMED	Dynamic Capacity C, lbs.	Static Capacity C_0, lbs.	L_{10} Life - Hours	Allowable Equivalent Radial Load Rating (lbs.) at Various RPM* 50	150	250	500	750	1000	1250	1500	1600	1750	2000	2250
204	1/2 5/8 3/4 13/16 20mm		2899	1390	**20000**	741	513	433	344	300	273	253	238	233	226	217	208
					30000	647	449	378	300	262	238	221	208	204	198	189	182
					40000	588	408	344	273	238	217	201	189	185	180	172	165
					60000	513	356	300	238	208	189	176	165	162	157	150	144
					100000	433	300	253	201	176	160	148	139	136	132	127	122
205	7/8 15/16 1 25mm		3146	1565	**20000**	804	557	470	373	326	296	275	259	253	246	235	226
					30000	702	487	411	326	285	259	240	226	221	215	205	17
					40000	638	442	373	296	259	235	218	205	201	195	187	179
					60000	557	386	326	259	226	205	191	179	176	170	163	157
					100000	470	326	275	218	191	173	161	151	148	144	137	132
206	1-1/16 1-1/8 1-3/16 1-1/4 30mm	1 25mm	4368	2250	**20000**	1116	774	652	518	452	411	382	359	351	341	326	314
					30000	975	676	570	452	395	359	333	314	307	298	285	274
					40000	886	614	518	411	359	326	303	285	279	271	259	249
					60000	774	536	452	359	314	285	265	249	244	237	226	217
					100000	652	452	382	303	265	240	223	210	206	199	191	183
207	1-1/4 1-5/16 1-3/8 1-7/16 35mm	1-3/16 1-1/4 30mm	5759	3065	**20000**	1471	1020	860	683	596	542	503	473	463	450	430	414
					30000	1285	891	752	596	521	473	439	414	405	393	376	361
					40000	1168	810	683	542	473	430	399	376	368	357	341	328
					60000	1020	707	596	473	414	376	349	328	321	312	298	287
					100000	860	596	503	399	349	317	294	277	271	263	252	242
208	1-1/2 1-5/8 40mm	1-7/16 1-1/2✦ 35mm	7332	4005	**20000**	1873	1299	1095	869	759	690	641	603	590	573	548	527
					30000	1636	1134	957	759	663	603	560	527	515	500	478	460
					40000	1487	1031	869	690	603	548	508	478	468	454	435	418
					60000	1299	900	759	603	527	478	444	418	409	397	380	365
					100000	1095	759	641	508	444	403	375	352	345	335	320	308
209	1-5/8 1-11/16 1-3/4 45mm	1-1/2 40mm	7891	4450	**20000**	1597	1107	934	741	648	588	546	514	503	488	467	449
					30000	1395	967	816	648	566	514	477	449	439	426	408	392
					40000	1268	879	741	588	514	467	433	408	399	388	371	356
					60000	1107	768	648	514	449	408	379	356	349	339	324	311
					100000	934	648	546	433	379	344	319	301	294	286	273	263
210	1-15/16 2 50mm	1-11/16 1-3/4 45mm	7891	4450	**20000**	2016	1398	1179	936	817	743	689	649	635	616	589	567
					30000	1761	1221	1030	817	714	649	602	567	555	538	515	495
					40000	1600	1109	936	743	649	589	547	515	504	489	468	450
					60000	1398	969	817	649	567	515	478	450	440	427	409	393
					100000	1179	817	689	547	478	434	403	379	371	360	345	331
211	2 2-3/16 2-1/4 55mm	1-15/16 2 50mm	9755	5630	**20000**	2492	1728	1457	1157	1010	918	852	802	785	762	729	701
					30000	2177	1509	1273	1010	883	802	744	701	686	665	636	612
					40000	1978	1371	1157	918	802	729	676	636	623	605	578	556
					60000	1728	1198	1010	802	701	636	591	556	544	528	505	486
					100000	1457	1010	852	676	591	537	498	469	459	445	426	410
212	2-1/4 2-7/16 60mm	2-3/16 2-1/4 55mm	11791	6955	**20000**	3012	2088	1761	1398	1221	1110	1030	969	949	921	881	847
					30000	2631	1824	1539	1221	1067	969	900	847	829	804	769	740
					40000	2391	1657	1398	1110	969	881	818	769	753	731	699	672
					60000	2088	1448	1221	969	847	769	714	672	658	638	611	587
					100000	1761	1221	1030	818	714	649	602	567	555	538	515	495
214	2-11/16 70mm	2-7/16 2-1/2 65mm	13995	8410	**20000**	3575	2479	2091	1659	1450	1317	1223	1150	1126	1093	1045	1005
					30000	3123	2165	1826	1450	1266	1150	1068	1005	984	955	913	878
					40000	2837	1967	1659	1317	1150	1045	970	913	894	867	830	798
					60000	2479	1719	1450	1150	1005	913	848	798	781	758	725	697
					100000	2091	1450	1223	970	848	770	715	673	658	639	611	588
215	2-15/16 75mm	2-11/16 70mm	14872	9255	**20000**	3799	2634	2222	1763	1540	1400	1299	1223	1197	1161	1111	1068
					30000	3319	2301	1941	1540	1346	1223	1135	1068	1045	1015	970	933
					40000	3015	2091	1763	1400	1223	1111	1031	970	950	922	882	848
					60000	2634	1826	1540	1223	1068	970	901	848	830	805	770	741
					100000	2222	1540	1299	1031	901	818	760	715	700	679	650	625
216		2-15/16 3 75mm	17407	11015	**20000**	4446	3083	2600	2064	1803	1638	1521	1431	1401	1359	1300	
					30000	3884	2693	2272	1803	1575	1431	1328	1250	1223	1187	1136	
					40000	3529	2447	2064	1638	1431	1300	1207	1136	1112	1079	1032	
					60000	3083	2138	1803	1431	1250	1136	1054	992	971	942	901	
					100000	2600	1803	1521	1207	1054	958	889	837	819	795	760	
218		3-7/16 3-1/2 85mm	21451	13940	**20000**	5479	3799	3204	2543	2222	2019	1874	1763	1726			
					30000	4787	3319	2799	2222	1941	1763	1637	1541	1508			
					40000	4349	3015	2543	2019	1763	1602	1487	1400	1370			
					60000	3799	2634	2222	1763	1541	1400	1299	1223	1197			
					100000	3204	2222	1874	1487	1299	1181	1096	1031	1009			

* Slight interference fit required when operating on the right of the heavy line or in the shaded area.

^ Piloted flange only

DODGE®

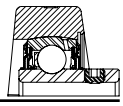

Extreme Duty SCED/SCMED

Ring Size	Shaft Size SCED	Shaft Size SCMED	Dynamic Capacity C, lbs.	Static Capacity C_0, lbs.	L_{10} Life - Hours	Allowable Equivalent Radial Load Rating (lbs.) at Various RPM* 2500	2750	3000	3250	3500	3600	4000	4500	5000	5250	5500	6000
204	1/2 5/8 3/4 13/16 20mm		2899	1390	**20000**	201	195	189	184	180	178	172	165	160	157	155	150
					30000	176	170	165	161	157	155	150	144	139	137	135	131
					40000	160	155	150	146	143	141	136	131	127	125	123	119
					60000	139	135	131	128	125	123	119	115	111	109	107	104
					100000	118	114	111	108	105	104	101	97	93	92	90	88
205	7/8 15/16 1 25mm		3146	1565	**20000**	218	211	205	200	195	193	187	179	173	170	168	163
					30000	191	185	179	175	170	169	163	157	151	149	147	142
					40000	173	168	163	159	155	153	148	142	137	135	133	129
					60000	151	147	142	139	135	134	129	124	120	118	116	113
					100000	128	124	120	117	114	113	109	105	101	100	98	95
206	1-1/16 1-1/8 1-3/16 1-1/4 30mm	1 25mm	4368	2250	**20000**	303	293	285	278	271	268	259	249	240	237		
					30000	265	256	249	242	237	234	226	217	210	207		
					40000	240	233	226	220	215	213	206	198	191	188		
					60000	210	203	198	192	188	186	180	173	167	164		
					100000	177	172	167	162	158	157	151	146	141	138		
207	1-1/4 1-5/16 1-3/8 1-7/16 35mm	1-3/16 1-1/4 30mm	5759	3065	**20000**	399	387	376	366	357	354	341	328				
					30000	349	338	328	320	312	309	298	287				
					40000	317	307	298	290	283	281	271	261				
					60000	277	268	261	254	247	245	237	228				
					100000	234	226	220	214	209	207	200	192				
208	1-1/2 1-5/8 40mm	1-7/16 1-1/2✦ 35mm	7332	4005	**20000**	508	492	478	466	454	450	435					
					30000	444	430	418	407	397	393	380					
					40000	403	391	380	370	361	357	345					
					60000	352	341	332	323	315	312	301					
					100000	297	288	280	272	266	263	254					
209	1-5/8 1-11/16 1-3/4 45mm	1-1/2 40mm	7891	4450	**20000**	433	420	515	397	388	384	371					
					30000	379	367	450	347	339	335	324					
					40000	344	333	409	315	308	305	24					
					60000	301	291	357	275	269	266	257					
					100000	254	246	301	232	227	224	217					
210	1-15/16 2 50mm	1-11/16 1-3/4 45mm	7891	4450	**20000**	547	530	515	501	489	485						
					30000	478	463	450	438	427	423						
					40000	434	421	409	398	388	385						
					60000	379	367	357	348	339	336						
					100000	320	310	301	293	286	283						
211	2 2-3/16 2-1/4 55mm	1-15/16 2 50mm	9755	5630	**20000**	676	655	636	620								
					30000	591	572	556	541								
					40000	537	520	505	492								
					60000	469	454	441	430								
					100000	396	383	372	362								
212	2-1/4 2-7/16 60mm	2-3/16 2-1/4 55mm	11791	6955	**20000**	818	792										
					30000	714	692										
					40000	649	629										
					60000	567	549										
					100000	478	463										
214	2-11/16 70mm	2-7/16 2-1/2 65mm	13995	8410	**20000**	970											
					30000	848											
					40000	770											
					60000	673											
					100000	567											
215	2-15/16 75mm	2-11/16 70mm	14872	9255	**20000**	1031											
					30000	901											
					40000	818											
					60000	715											
					100000	603											
216		2-15/16 3 75mm	17407	11015	**20000**												
					30000												
					40000												
					60000												
					100000												
218		3-7/16 3-1/2 85mm	21451	13940	**20000**												
					30000												
					40000												
					60000												
					100000												

* Slight interference fit required when operating on the right of the heavy line or in the shaded area.

^ Piloted flange only

EXTREME DUTY SETSCREW BALL BEARINGS

SCED AND SCUED NORMAL DUTY PILLOW BLOCKS

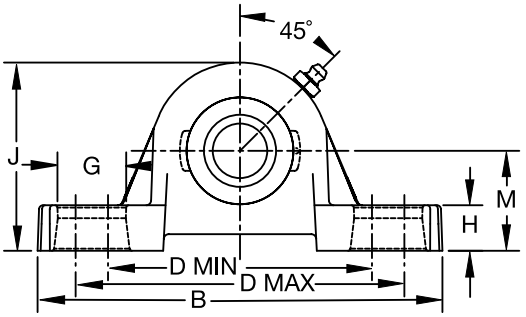

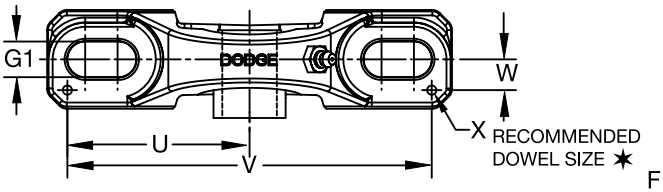

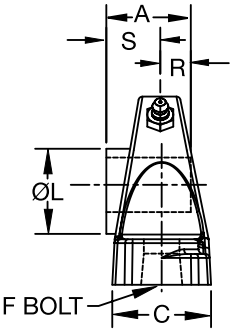

Series	Shaft Size	Standard Part No.	Description
204	1/2	@	P2B-SCED-008L
	5/8	@	P2B-SCED-010L
	3/4	**076000**	P2B-SCED-012
	20mm	***076220***	*P2B-SCED-20M*
205	7/8	@	P2B-SCED-014
	15/16	@	P2B-SCED-015
	1	**076001**	P2B-SCED-100
	25mm	***076221***	*P2B-SCED-25M*
206	1-1/16	@	P2B-SCED-101
	1-1/8	**076002**	P2B-SCED-102
	1-3/16	**076003**	P2B-SCED-103
	1-1/4	**076004**	P2B-SCED-104S
	30mm	***076222***	*P2B-SCED-30M*
206 (SCU)	1-1/16	@	P2B-SCUED-101
	1-1/8	@	P2B-SCUED-102
	1-3/16	@	P2B-SCUED-103
	1-1/4	@	P2B-SCUED-104S
	30mm	@	*P2B-SCUED-30M*
207	1-1/4	**076005**	P2B-SCED-104
	1-5/16	@	P2B-SCED-105
	1-3/8	**076006**	P2B-SCED-106
	1-7/16	**076007**	P2B-SCED-107
	35mm	***076223***	*P2B-SCED-35M*

@ Assembled to order.

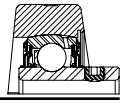

EXTREME DUTY SETSCREW BALL BEARINGS
SCED AND SCUED NORMAL DUTY PILLOW BLOCKS

Series	Shaft Size	Weight lbs. *kgs*	A	B	C	D Min.	D Max.	F Bolt Dia.	G	H
204	1/2	1.6	1-5/32	5-1/4	1-21/64	3-3/8	4-3/16	3/8	27/32	33/64
	5/8	1.5								
	3/4	1.4								
	20mm	*0.7*	*29.4*	*133.4*	*33.7*	*85.7*	*106.4*	*M10*	*21.4*	*13.1*
205	7/8	1.8	1-3/16	5-1/2	1-13/32	3-11/16	4-1/2	3/8	27/32	37/64
	15/16	1.7								
	1	1.6								
	25mm	*0.7*	*30.2*	*139.7*	*35.7*	*93.7*	*114.3*	*M10*	*21.4*	*14.7*
206	1-1/16	2.8	1-25/64	6-1/4	1-47/64	4-1/4	5	1/2	15/16	11/16
	1-1/8	2.7								
	1-3/16	2.6								
	1-1/4	2.5								
	30mm	*1.1*	*35.3*	*158.8*	*44.1*	*108.0*	*127.0*	*M12*	*23.8*	*17.5*
206 (SCU)	1-1/16	2.9	1-25/64	6-1/4	1-47/64	4-1/4	5	1/2	15/16	3/4
	1-1/8	2.8								
	1-3/16	2.7								
	1-1/4	2.6								
	30mm	*1.1*	*35.3*	*158.8*	*44.1*	*108.0*	*127.0*	*M12*	*23.8*	*19.1*
207	1-1/4	4.5	1-17/32	6-1/2	1-47/64	4-11/16	5-7/16	1/2	15/16	45/64
	1-5/16	4.4								
	1-3/8	4.3								
	1-7/16	4.2								
	35mm	*1.5*	*38.9*	*165.1*	*44.1*	*119.1*	*138.1*	*M12*	*23.8*	*17.9*

Series	Shaft Size	J	L	M	R	S	U	V	W	X
204	1/2	2-9/16	1-1/8	1-5/16	27/64	47/64	2-1/4	4-1/2	1/2	1/8
	5/8									
	3/4									
	20mm	*65.1*	*28.6*	*33.3*	*10.7*	*18.7*	*57.2*	*114.3*	*12.7*	*3.2*
205	7/8	2-25/32	1-5/16	1-7/16	27/64	49/64	2-1/2	5	1/2	3/16
	15/16									
	1									
	25mm	*70.6*	*33.3*	*36.5*	*10.7*	*19.4*	*63.5*	*127.0*	*12.7*	*4.8*
206	1-1/16	3-1/4	1-37/64	1-5/8	31/64	29/32	2-7/8	5-3/4	9/16	3/16
	1-1/8									
	1-3/16									
	1-1/4									
	30mm	*82.6*	*40.1*	*41.3*	*12.3*	*23.0*	*73.0*	*146.1*	*14.3*	*4.8*
206 (SCU)	1-1/16	3-5/16	1-37/64	1-11/16	31/64	29/32	2-7/8	5-3/4	9/16	3/16
	1-1/8									
	1-3/16									
	1-1/4									
	30mm	*84.1*	*40.1*	*42.9*	*12.3*	*23.0*	*73.0*	*146.1*	*14.3*	*4.8*
207	1-1/4	3-3/4	1-27/32	1-7/8	1/2	1-1/32	2-29/32	5-13/16	9/16	3/16
	1-5/16									
	1-3/8									
	1-7/16									
	35mm	*95.3*	*46.8*	*47.6*	*12.7*	*26.2*	*73.8*	*147.6*	*14.3*	*4.8*

Extreme Duty Setscrew Ball Bearings

SCED AND SCUED NORMAL DUTY PILLOW BLOCKS

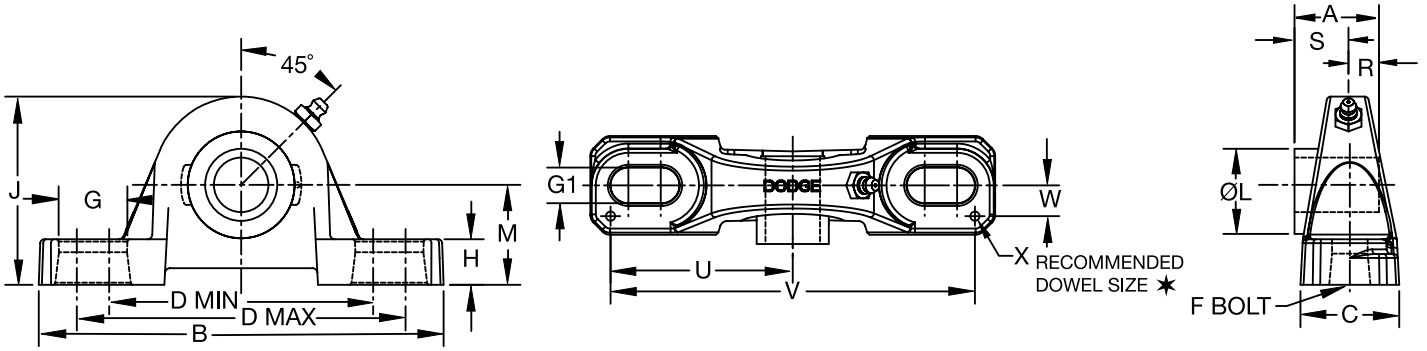

Series	Shaft Size	Standard Part No.	Description
208	1-1/2	**076008**	P2B-SCED-108
	1-5/8	**@**	P2B-SCED-110
	40mm	***076224***	*P2B-SCED-40M*
209	1-5/8	**@**	P2B-SCED-110L
	1-11/16	**076009**	P2B-SCED-111
	1-3/4	**076010**	P2B-SCED-112
	45mm	***076225***	*P2B-SCED-45M*
210	1-15/16	**076011**	P2B-SCED-115
	2	**076012**	P2B-SCED-200
	50mm	***076226***	*P2B-SCED-50M*
211	2	**076132**	P2B-SCMED-200
	2-3/16	**076133**	P2B-SCMED-203
	2-1/4	**@**	P2B-SCED-204
	55mm	***076227***	*P2B-SCED-55M*
212	2-1/4	**@**	P2B-SCMED-204
	2-7/16	**076014**	P2B-SCED-207
	60mm	***076228***	*P2B-SCED-60M*
214	2-1/2	**076135**	P2B-SCMED-208
	2-11/16	**076015**	P2B-SCED-211
	70mm	***076229***	*P2B-SCED-70M*
215	2-15/16	**076016**	P2B-SCED-215
	75mm	***076230***	*P2B-SCED-75M*
215 (SCU)	2-15/16	**@**	P2B-SCUED-215
	75mm	***@***	*P2B-SCUED-75M*
218	*90mm*	***@***	*P2B-SCED-90M*

@ Assembled to order

DODGE®

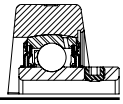

Extreme Duty Setscrew Ball Bearings

SCED AND SCUED NORMAL DUTY PILLOW BLOCKS

Series	Shaft Size	Weight lbs. *kgs*	A	B	C	D Min.	D Max.	F Bolt Dia.	G	H
208	1-1/2	5.4	1-11/16	7-1/4	1-15/16	5-3/16	5-7/8	1/2	29/32	15/16
	1-5/8	5.3								
	40mm	*2.2*	*42.9*	*184.2*	*49.2*	*131.8*	*149.2*	*M12*	*23.0*	*23.8*
209	1-5/8	6.6	1-23/32	7-7/16	2	5-1/2	6-3/16	1/2	29/32	3/4
	1-11/16	6.4								
	1-3/4	6.2								
	45mm	*2.2*	*43.7*	*188.9*	*50.8*	*139.7*	*161.9*	*M12*	*23.0*	*19.1*
210	1-15/16	7.2	1-3/4	8-1/8	2-1/4	6	6-11/16	5/8	1-1/16	3/4
	2	7.0								
	50mm	*2.6*	*44.5*	*206.4*	*57.2*	*152.4*	*169.9*	*M16*	*27.0*	*19.1*
211	2	9.0	1-27/32	8-7/8	2-5/16	6-3/8	7-7/16	5/8	1-7/32	7/8
	2-3/16	8.9								
	2-1/4	8.8								
	55mm	*3.3*	*46.8*	*225.4*	*58.7*	*161.9*	*188.9*	*M16*	*31.0*	*22.2*
212	2-1/4	10.8	1-63/64	9-1/2	2-3/8	6-7/8	7-15/16	5/8	1-7/32	7/8
	2-7/16	10.2								
	60mm	*4.2*	*50.4*	*241.3*	*60.3*	*174.6*	*201.6*	*M16*	*31.0*	*22.2*
214	2-1/2	15.5	2-15/64	10-3/4	2-11/16	7-1/2	8-1/2	3/4	1-5/16	15/16
	2-11/16	15.0								
	70mm	*6.9*	*56.8*	*273.1*	*68.3*	*190.5*	*215.9*	*M18*	*33.3*	*23.8*
215	2-15/16	20.5	2-9/32	11-3/4	2-7/8	8-1/2	9-1/2	7/8	1-7/16	1
	75mm	*7.9*	*57.9*	*298.5*	*73.0*	*215.9*	*241.3*	*M22*	*36.5*	*25.4*
215	2-15/16	20.7	2-9/32	11-3/4	2-7/8	8-1/2	9-1/2	7/8	1-7/16	1
(SCU)	*75mm*	*8.0*	*57.9*	*298.5*	*73.0*	*215.9*	*241.3*	*M22*	*36.5*	*25.4*
218	*90mm*	*13.6*	*63.1*	*355.6*	*85.7*	*261.9*	*295.3*	*M22*	*40.5*	*33.3*

Series	Shaft Size	J	L	M	R	S	U	V	W	X
208	1-1/2	4-3/16	2-3/64	2-1/8	19/32	1-3/32	3-17/64	6-17/32	11/16	3/16
	1-5/8									
	40mm	*106.4*	*52.0*	*54.0*	*15.1*	*27.8*	*82.9*	*165.9*	*17.5*	*4.8*
209	1-5/8	4-9/32	2-7/32	2-1/8	19/32	1-1/8	3-3/8	6-3/4	11/16	3/16
	1-11/16									
	1-3/4									
	45mm	*108.7*	*56.4*	*54.0*	*15.1*	*28.6*	*85.7*	*171.5*	*17.5*	*4.8*
210	1-15/16	4-17/32	2-7/16	2-1/4	19/32	1-5/32	3-11/16	7-3/8	13/16	3/16
	2									
	50mm	*115.1*	*61.9*	*57.2*	*15.1*	*29.4*	*93.7*	*187.3*	*20.6*	*4.8*
211	2	4-31/32	2-23/32	2-1/2	5/8	1-7/32	3-15/16	7-7/8	13/16	3/16
	2-3/16									
	2-1/4									
	55mm	*126.2*	*69.1*	*63.5*	*15.9*	*31.0*	*100.0*	*200.0*	*20.6*	*4.8*
212	2-1/4	5-13/32	2-31/32	2-3/4	43/64	1-5/16	4-1/4	8-1/2	7/8	3/16
	2-7/16									
	60mm	*137.3*	*75.4*	*69.9*	*17.1*	*33.3*	*108.0*	*215.9*	*22.2*	*4.8*
214	2-1/2	6-3/32	3-5/16	3	51/64	1-7/16	4-7/8	9-3/4	15/16	3/16
	2-11/16									
	70mm	*154.8*	*84.1*	*76.2*	*20.2*	*36.5*	*123.8*	*247.7*	*23.8*	*4.8*
215	2-15/16	6-3/4	3-5/8	3-1/2	13/16	1-15/32	5-31/64	10-31/32	1-3/64	3/16
	75mm	*171.5*	*92.1*	*88.9*	*20.6*	*37.3*	*139.3*	*278.6*	*26.6*	*4.8*
215	2-15/16	6-1/2	3-5/8	3-1/4	13/16	1-15/32	5-31/64	10-31/32	1-3/64	3/16
(SCU)	*75mm*	*165.1*	*92.1*	*82.6*	*20.6*	*37.3*	*139.3*	*278.6*	*26.6*	*4.8*
218	*90mm*	*203.2*	*110.7*	*101.6*	*23.4*	*39.7*	*116.7*	*333.4*	*30.2*	*4.8*

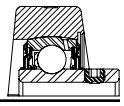

Extreme Duty Setscrew Ball Bearings

SCBED NORMAL DUTY PILLOW BLOCKS

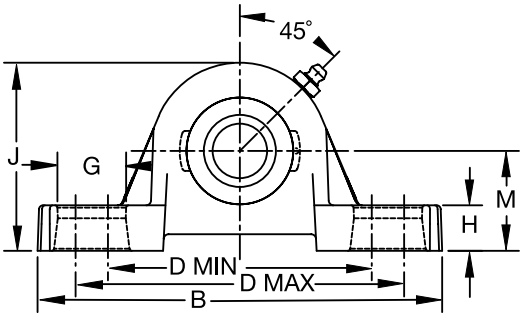

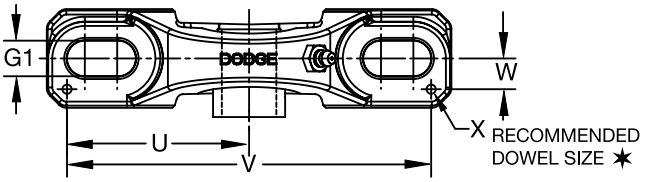

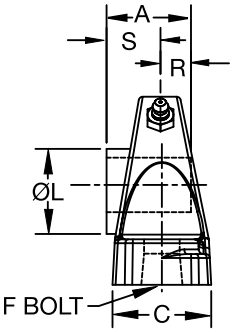

Series	Shaft Size	Part No.	Description	Weight lb. *kgs*	A	B	C	D Min.	D Max.	F Bolt Dia.	G	H
204	1/2	@	P2B-SCBED-008L	1.6	1-5/32	5-1/4	1-21/64	3-3/8	4-3/16	3/8	27/32	29/64
	5/8	@	P2B-SCBED-010L	1.5								
	3/4	@	P2B-SCBED-012	1.4								
	20mm	@	*P2B-SCBED-20M*	*0.7*	*29.4*	*133.4*	*33.7*	*85.7*	*106.4*	*M10*	*21.4*	*11.5*
205	7/8	@	P2B-SCBED-014	1.8	1-3/16	5-1/2	1-13/32	3-11/16	4-1/2	3/8	27/32	29/64
	15/16	@	P2B-SCBED-015	1.7								
	1	@	P2B-SCBED-100	1.6								
	25mm	@	*P2B-SCBED-25M*	*0.7*	*30.2*	*139.7*	*35.7*	*93.7*	*114.3*	*M10*	*21.4*	*11.5*
206	1-1/16	@	P2B-SCBED-101	2.8	1-25/64	6-1/4	1-47/64	4-1/4	5	1/2	15/16	5/8
	1-1/8	@	P2B-SCBED-102	2.7								
	1-3/16	@	P2B-SCBED-103	2.6								
	1-1/4	@	P2B-SCBED-104S	2.5								
	30mm	@	*P2B-SCBED-30M*	*1.1*	*35.3*	*158.8*	*44.1*	*108.0*	*127.0*	*M12*	*23.8*	*15.9*
207	1-1/4	@	P2B-SCBED-104	4.5	1-17/32	6-1/2	1-47/64	4-11/16	5-7/16	1/2	15/16	41/64
	1-5/16	@	P2B-SCBED-105	4.4								
	1-3/8	@	P2B-SCBED-106	4.3								
	1-7/16	@	P2B-SCBED-107	4.2								
	35mm	@	*P2B-SCBED-35M*	*1.5*	*38.9*	*165.1*	*44.1*	*119.1*	*138.1*	*M12*	*23.8*	*16.3*

@ Assembled to order.

Series	Shaft Size	J	L	M	R	S	U	V	W	X
204	1/2	2-1/2	1-1/8	1-1/4	27/64	47/64	2-1/4	4-1/2	1/2	1/8
	5/8									
	3/4									
	20mm	*63.5*	*28.6*	*31.8*	*10.7*	*18.7*	*57.2*	*114.3*	*12.7*	*3.2*
205	7/8	2-21/32	1-5/16	1-5/16	27/64	49/64	2-1/2	5	1/2	3/16
	15/16									
	1									
	25mm	*67.5*	*33.3*	*33.3*	*10.7*	*19.4*	*63.5*	*127.0*	*12.7*	*4.8*
206	1-1/16	3-3/16	1-37/64	1-9/16	31/64	29/32	2-7/8	5-3/4	9/16	3/16
	1-1/8									
	1-3/16									
	1-1/4									
	30mm	*81.0*	*40.1*	*39.7*	*12.3*	*23.0*	*73.0*	*146.1*	*14.3*	*4.8*
207	1-1/4	3-11/16	1-27/32	1-13/16	1/2	1-1/32	2-29/32	5-13/16	9/16	3/16
	1-5/16									
	1-3/8									
	1-7/16									
	35mm	*93.7*	*46.8*	*46.0*	*12.7*	*26.2*	*73.8*	*147.6*	*14.3*	*4.8*

Extreme Duty Setscrew Ball Bearings

SCBED NORMAL DUTY PILLOW BLOCKS

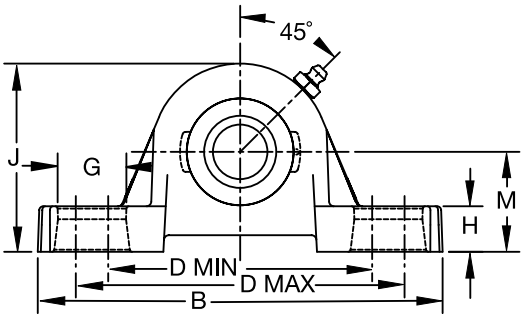

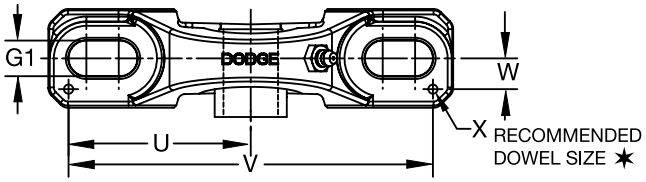

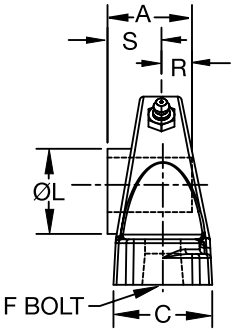

Series	Shaft Size	Part No.	Description	Weight lb kg	A	B	C	D Min	D Max	F Bolt Dia	G	H
208	1-1/2	@	P2B-SCBED-108	5.4	1-11/16	7-1/4	1-15/16	5-3/16	5-7/8	1/2	29/32	3/4
	1-5/8	@	P2B-SCBED-110	5.3								
	40mm	@	*P2B-SCBED-40M*	*2.2*	*42.9*	*184.2*	*49.2*	*131.8*	*149.2*	*M12*	*23.0*	*19.1*
209	1-5/8	@	P2B-SCBED-110L	6.6	1-23/32	7-7/16	2	5-1/2	6-3/8	1/2	29/32	11/16
	1-11/16	@	P2B-SCBED-111	6.4								
	1-3/4	@	P2B-SCBED-112	6.2								
	45mm	@	*P2B-SCBED-45M*	*2.2*	*43.7*	*188.9*	*50.8*	*139.7*	*161.9*	*M12*	*23.0*	*17.5*
210	1-15/16	@	P2B-SCBED-115	7.2	1-3/4	8-1/8	2-1/4	6	6-11/16	5/8	1-1/64	11/16
	2	@	P2B-SCBED-200	7.0								
	50mm	@	*P2B-SCBED-50M*	*2.6*	*44.5*	*206.4*	*57.2*	*152.4*	*169.9*	*M16*	*25.8*	*17.5*
211	2	@	P2B-SCBED-200L	9.0	1-27/32	8-7/8	2-5/16	6-3/8	7-7/16	5/8	1-7/32	13/16
	2-3/16	@	P2B-SCBED-203	8.9								
	2-1/4	@	P2B-SCBED-204	8.8								
	55mm	@	*P2B-SCBED-55M*	*3.3*	*46.8*	*225.4*	*58.7*	*161.9*	*188.9*	*M16*	*31.0*	*20.6*
212	2-1/4	@	P2B-SCBED-204L	10.8	1-63/64	9-1/2	2-3/8	6-7/8	7-15/16	5/8	1-7/32	13/16
	2-7/16	@	P2B-SCBED-207	10.2								
	60mm	@	*P2B-SCBED-60M*	*4.2*	*50.4*	*241.3*	*60.3*	*174.6*	*201.6*	*M16*	*31.0*	*20.6*
215	2-15/16	@	P2B-SCBED-215	20.5	2-9/32	11-3/4	2-7/8	8-1/2	9-1/2	7/8	1-7/16	1-1/16
	75mm	@	*P2B-SCBED-75M*	*7.9*	*57.9*	*298.5*	*73.0*	*215.9*	*241.3*	*M22*	*36.5*	*27.0*

@ Assembled to order.

Extreme Duty Setscrew Ball Bearings

SCMED MEDIUM DUTY PILLOW BLOCKS

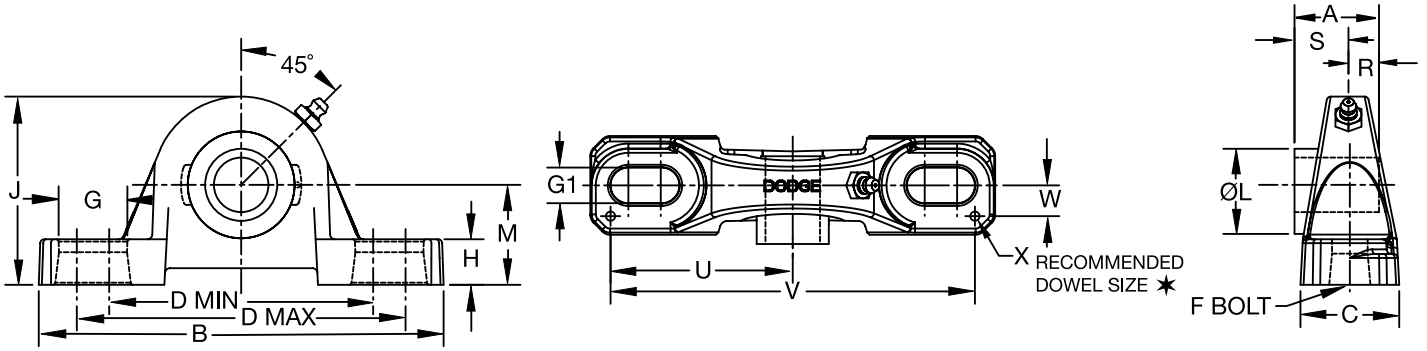

Series	Shaft Size	Standard Part No.	Description
206	1	**076125**	P2B-SCMED-100
	25mm	***076296***	*P2B-SCMED-25M*
206 (SCMU)	1	**@**	P2B-SCMU-100
	25mm	***@***	*P2B-SCMU-25M*
207	1-3/16	**076126**	P2B-SCMED-103
	1-1/4	**076005**	P2B-SCED-104
	30mm	***076297***	*P2B-SCMED-30M*
208	1-7/16	**076127**	P2B-SCMED-107
	35mm	***076298***	*P2B-SCMED-35M*
209	1-1/2	**076128**	P2B-SCMED-108
	1-5/8	**@**	P2B-SC-110L
	40mm	***076299***	*P2B-SCMED-40M*
210	1-11/16	**076129**	P2B-SCMED-111
	1-3/4	**076130**	P2B-SCMED-112
	45mm	***076300***	*P2B-SCMED-45M*
211	1-15/16	**076131**	P2B-SCMED-115
	2	**076132**	P2B-SCMED-200
	50mm	***076301***	*P2B-SCMED-50M*
212	2-3/16	**076133**	P2B-SCMED-203
	2-1/4	**@**	P2B-SCMED-204
	55mm	***076302***	*P2B-SCMED-55M*
214	2-7/16	**076134**	P2B-SCMED-207
	2-1/2	**076135**	P2B-SCMED-208
	65mm	***076303***	*P2B-SCMED-65M*
215	2-11/16	**076136**	P2B-SCMED-211
	70mm	***076304***	*P2B-SCMED-70M*
216	2-15/16	**076137**	P2B-SCMED-215
	3	**076138**	P2B-SCMED-300
	75mm	***076305***	*P2B-SCMED-75M*
218	3-7/16	**076139**	P2B-SCMED-307
	3-1/2	**076140**	P2B-SCMED-308
	85mm	***076306***	*P2B-SCMED-85M*

@ Assembled to order

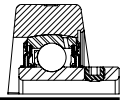

Extreme Duty Setscrew Ball Bearings

SCMED MEDIUM DUTY PILLOW BLOCKS

Series	Shaft Size	Weight lbs. *kgs*	A	B	C	D Min.	D Max.	F Bolt Dia.	G	H
206	1 *25mm*	3.0 *1.3*	1-25/64 *35.3*	6-1/4 *158.8*	1-47/64 *44.1*	4-1/4 *108.0*	5 *127.0*	1/2 *M12*	15/16 *23.8*	3/4 *19.1*
206 (SCMU)	1 *25mm*	3.1 *1.4*	1-25/64 *35.3*	6-1/4 *158.8*	1-47/64 *44.1*	4-1/4 *108.0*	5 *127.0*	1/2 *M12*	15/16 *23.8*	13/16 *20.6*
207	1-3/16 1-1/4 *30mm*	4.6 4.2 *2.0*	1-17/32 *38.9*	6-1/2 *165.1*	1-47/64 *44.1*	4-11/16 *119.1*	5-7/16 *138.1*	1/2 *M12*	15/16 *23.8*	45/64 *17.9*
208	1-7/16 *35mm*	5.4 *2.3*	1-11/16 *42.9*	7-1/4 *184.2*	1-15/16 *49.2*	5-3/16 *131.8*	5-7/8 *149.2*	1/2 *M12*	29/32 *23.0*	15/16 *23.8*
209	1-1/2 1-5/8 *40mm*	6.4 6.3 *2.7*	1-23/32 *43.7*	7-7/16 *188.9*	2 *50.8*	5-1/2 *139.7*	6-3/8 *161.9*	1/2 *M12*	29/32 *23.0*	3/4 *19.1*
210	1-11/16 1-3/4 *45mm*	7.4 7.3 *3.2*	1-3/4 *44.5*	8-1/8 *206.4*	2-1/4 *57.2*	6 *152.4*	6-11/16 *169.9*	5/8 *M16*	1-1/16 *22.0*	3/4 *19.1*
211	1-15/16 2 *50mm*	9.2 9.0 *3.9*	1-27/32 *46.8*	8-7/8 *225.4*	2-5/16 *58.7*	6-3/8 *161.9*	7-7/16 *188.9*	5/8 *M16*	1-7/32 *31.0*	7/8 *22.2*
212	2-3/16 2-1/4 *55mm*	11.0 10.8 *4.7*	1-63/64 *50.4*	9-1/2 *241.3*	2-3/8 *60.3*	6-7/8 *174.6*	7-15/16 *201.6*	5/8 *M16*	1-7/32 *31.0*	7/8 *22.2*
214	2-7/16 2-1/2 *65mm*	15.7 15.5 *6.7*	2-15/64 *56.8*	10-3/4 *273.1*	2-11/16 *68.3*	7-1/2 *190.5*	8-1/2 *215.9*	3/4 *M18*	1-5/16 *33.3*	15/16 *23.8*
215	2-11/16 *70mm*	21.0 *9.0*	2-9/32 *57.9*	11-3/4 *298.5*	2-7/8 *73.0*	8-1/2 *215.9*	9-1/2 *241.3*	7/8 *M22*	1-7/16 *36.5*	1 *25.4*
216	2-15/16 3 *75mm*	21.3 21.1 *9.0*	2-11/32 *59.5*	11-3/4 *298.5*	3 *76.2*	8-1/2 *215.9*	9-1/2 *241.3*	7/8 *M22*	1-7/16 *36.5*	1-1/4 *31.8*
218	3-7/16 3-1/2 *85mm*	31.8 31.3 *13.6*	2-31/64 *63.1*	14 *355.6*	3-3/8 *85.7*	10-5/16 *261.9*	11-5/8 *295.3*	7/8 *M22*	1-19/32 *40.5*	1-5/16 *33.3*

Series	Shaft Size	J	L	M	R	S	U	V	W	X
206	1 *25mm*	3-5/16 *84.2*	1-37/64 *40.1*	1-11/16 *41.3*	31/64 *12.3*	29/32 *23.0*	2-7/8 *73.0*	5-3/4 *146.1*	9/16 *14.3*	3/16 *4.8*
206 (SCMU)	1 *25mm*	3-3/8 *85.7*	1-37/64 *40.1*	1-3/4 *44.5*	31/64 *12.3*	29/32 *23.0*	2-7/8 *73.0*	5-3/4 *146.1*	9/16 *14.3*	3/16 *4.8*
207	1-3/16 1-1/4 *30mm*	3-3/4 *95.3*	1-27/32 *46.8*	1-7/8 *47.6*	1/2 *12.7*	1-1/32 *26.2*	2-29/32 *73.8*	5-13/16 *147.6*	9/16 *14.3*	3/16 *4.8*
208	1-7/16 *35mm*	4-3/16 *106.4*	2-3/64 *52.0*	2-1/8 *54.0*	19/32 *15.1*	1-3/32 *27.8*	3-17/64 *82.9*	6-17/32 *165.9*	11/16 *17.5*	3/16 *4.8*
209	1-1/2 1-5/8 *40mm*	4-9/32 *108.7*	2-7/32 *56.4*	2-1/8 *54.0*	19/32 *15.1*	1-1/8 *28.6*	3-3/8 *85.7*	6-3/4 *171.5*	11/16 *17.5*	3/16 *4.8*
210	1-11/16 1-3/4 *45mm*	4-17/32 *115.1*	2-7/16 *61.9*	2-1/4 *57.2*	19/32 *15.1*	1-5/32 *29.4*	3-11/16 *93.7*	7-3/8 *187.3*	13/16 *20.6*	3/16 *4.8*
211	1-15/16 2 *50mm*	4-31/32 *126.2*	2-23/32 *69.1*	2-1/2 *63.5*	5/8 *15.9*	1-7/32 *31.0*	3-15/16 *100.0*	7-7/8 *200.0*	13/16 *20.6*	3/16 *4.8*
212	2-3/16 2-1/4 *55mm*	5-13/32 *137.3*	2-31/32 *75.4*	2-3/4 *69.9*	43/64 *17.1*	1-5/16 *33.3*	4-1/4 *108.0*	8-1/2 *215.9*	7/8 *22.2*	3/16 *4.8*
214	2-7/16 2-1/2 *65mm*	6-3/32 *154.8*	3-5/16 *84.1*	3 *76.2*	51/64 *20.2*	1-7/16 *36.5*	4-7/8 *123.8*	9-3/4 *247.7*	15/16 *23.8*	3/16 *4.8*
215	2-11/16 *70mm*	6-3/4 *171.5*	3-5/8 *92.1*	3-1/2 *88.9*	13/16 *20.6*	1-15/32 *37.3*	5-31/64 *139.3*	10-31/32 *278.6*	1-3/64 *26.6*	3/16 *4.8*
216	2-15/16 *3* *75mm*	6-31/32 *177.0*	3-53/64 *97.2*	3-1/2 *88.9*	27/32 *21.4*	1-1/2 *38.1*	5-1/2 *139.7*	11 *279.4*	1-3/32 *27.8*	3/16 *4.8*
218	3-7/16 3-1/2 *85mm*	8 *203.2*	4-23/64 *110.7*	4 *101.6*	59/64 *23.4*	1-9/16 *39.7*	6-9/16 *166.7*	13-1/8 *333.4*	1-3/16 *30.2*	3/16 *4.8*

Extreme Duty Setscrew Ball Bearings

SCED NORMAL DUTY TAPPED BASE PILLOW BLOCKS

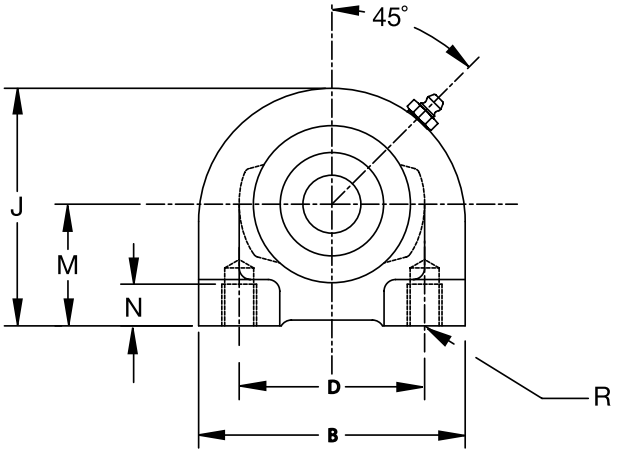

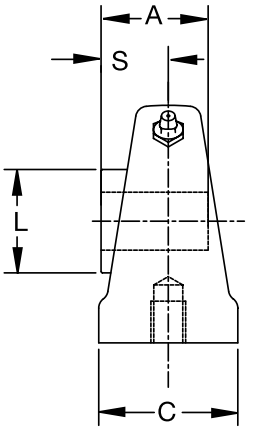

Series	Shaft Size	Part No.	Description	Weight lbs kg	A	B	C	D	J	L	M	N	R	S
204	1/2	@	TB-SCED-008	1.56	1-5/32	2-7/8	1-1/2	2	2-9/16	1-1/8	1-5/16	1/2	3/8- 16	47/64
	5/8	@	TB-SCED-010	1.53										
	3/4	**076017**	TB-SCED-012	1.50										
	20mm	***076231***	*TB-SCED-20M*	*0.06*	*29.4*	*73.0*	*38.1*	*50.8*	*65.1*	*28.6*	*33.3*	*12.7*	*M8x1.25*	*18.7*
205	7/8	@	TB-SCED-014	1.93	1-3/16	3	1-1/2	2.0	2-13/16	1-21/64	1-7/16	1/2	3/8- 16	49/64
	15/16	@	TB-SCED-015	1.90										
	1	**076018**	TB-SCED-100	1.87										
	25mm	***076232***	*TB-SCED-25M*	*0.07*	*30.2*	*76.2*	*38.1*	*50.8*	*71.4*	*33.7*	*36.5*	*12.7*	*M10x1.5*	*19.4*
206	1-1/16	@	TB-SCED-101	2.66	1-25/64	4	1-1/2	3.0	3-3/8	1-37/64	1-11/16	5/8	7/16 - 14	29/32
	1-1/8	**076019**	TB-SCED-102	2.62										
	1-3/16	**076020**	TB-SCED-103	2.59										
	1-1/4	**076021**	TB-SCED-104S	2.56										
	30mm	***076233***	*TB-SCED-30M*	*0.10*	*35.3*	*101.6*	*38.1*	*76.2*	*85.7*	*40.1*	*42.9*	*15.9*	*M10x1.5*	*23.0*
207	1-1/4	**076022**	TB-SCED-104	3.41	1-17/32	4-1/4	1-7/8	3-1/4	3-3/4	1-27/32	1-7/8	3/4	1/2 - 13	1-1/32
	1-5/16	@	TB-SCED-105	3.36										
	1-3/8	**076023**	TB-SCED-106	3.34										
	1-7/16	**076024**	TB-SCED-107	3.25										
	35mm	***076234***	*TB-SCED-35M*	*0.13*	*38.9*	*108.0*	*47.6*	*82.6*	*95.3*	*46.8*	*47.6*	*19.1*	*M10x1.5*	*26.2*
208	1-1/2	**076025**	TB-SCED-108	4.10	1-11/16	4-5/8	1-7/8	3-1/2	3-15/16	2-3/64	1-15/16	3/4	1/2-13	1-3/32
	1-5/8	@	TB-SCED-110	4.00										
	40mm	***076235***	*TB-SCED-40M*	*0.16*	*42.9*	*117.5*	*47.6*	*88.9*	*100.0*	*52.0*	*49.2*	*19.1*	*M12x1.75*	*27.8*
209	1-5/8	@	TB-SCED-110L	5.20	1-23/32	5	2	3-3/4	4-1/4	2-7/32	2-1/8	3/4	1/2-13	1-1/8
	1-11/16	**076026**	TB-SCED-111	5.00										
	1-3/4	**076027**	TB-SCED-112	4.90										
	45mm	***076236***	*TB-SCED-45M*	*0.20*	*43.7*	*127.0*	*50.8*	*95.3*	*108.0*	*56.4*	*54.0*	*19.1*	*M12x1.75*	*28.6*
210	1-15/16	**076028**	TB-SCED-115	5.40	1-3/4	5-1/2	2	4	4-5/8	2-7/16	2-1/4	7/8	5/8-11	1-5/32
	2	**076029**	TB-SCED-200	5.20										
	50mm	***076237***	*TB-SCED-50M*	*0.21*	*44.5*	*139.7*	*50.8*	*101.6*	*117.5*	*61.9*	*57.2*	*22.2*	*M16x2*	*29.4*
211	2	@	TB-SCED-200L	6.70	1-27/32	5-1/2	2	4	4-5/8	2-23/32	2-1/4	7/8	5/8 - 11	1-7/32
	2-3/16	**076030**	TB-SCED-203	6.50										
	2-1/4	@	TB-SCED-204	6.30										
	55mm	***076238***	*TB-SCED-55M*	*0.25*	*46.8*	*139.7*	*50.8*	*101.6*	*117.5*	*69.1*	*57.2*	*22.2*	*M16x2*	*31.0*

@ Assembled to order

Extreme Duty Setscrew Ball Bearings

SCED NORMAL DUTY 2-BOLT FLANGE BEARINGS

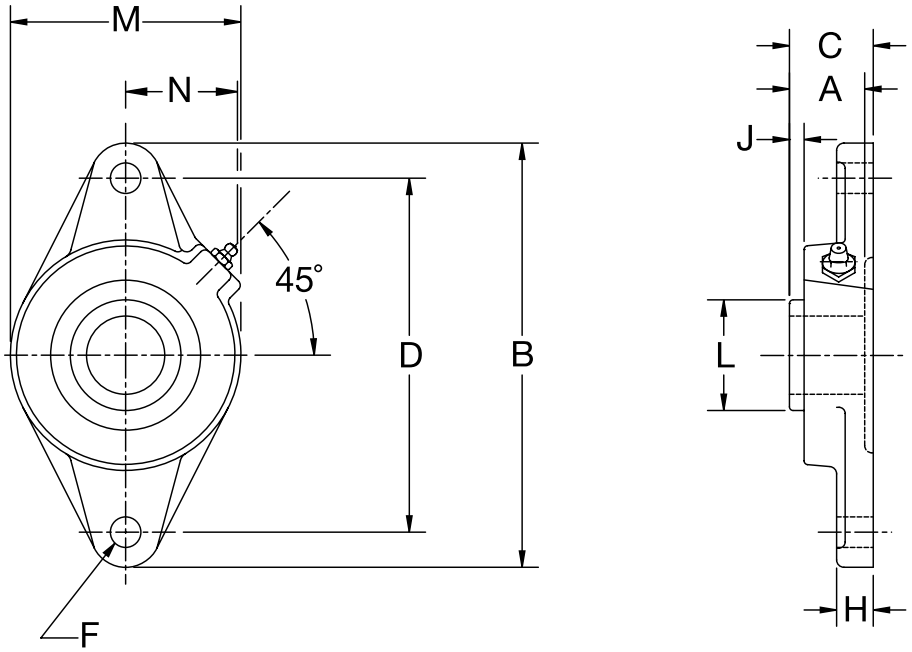

Series	Shaft Size	Standard Part No.	Description	Weight Lbs. kg	A	B	C	D	F Bolt Dia.	H	J	L	M	N
204	1/2	@	F2B-SCED-008L	1.6	1-5/32	4-13/32	1-3/8	3-17/32	3/8	1/2	25/64	1-1/8	2-3/8	1-1/2
	5/8	@	F2B-SCED-010L	1.5										
	3/4	**076031**	F2B-SCED-012	1.4										
	20mm	***076239***	*F2B-SCED-20M*	*0.5*	*29.4*	*111.9*	*34.6*	*89.7*	*M10*	*12.7*	*9.6*	*28.6*	*60.3*	*38.1*
205	7/8	@	F2B-SCED-014	1.6	1-3/16	4-7/8	1-11/32	3-57/64	7/16	1/2	25/64	1-21/64	2-3/4	1-7/16
	15/16	@	F2B-SCED-015	1.5										
	1	**076032**	F2B-SCED-100	1.4										
	25mm	***076240***	*F2B-SCED-25M*	*0.6*	*30.2*	*123.8*	*34.1*	*98.8*	*M10*	*12.7*	*9.9*	*33.7*	*69.9*	*36.5*
206	1-1/16	@	F2B-SCED-101	2.3	1-25/64	5-9/16	1-17/32	4-19/32	7/16	1/2	15/32	1-37/64	3-1/8	1-9/16
	1-1/8	**076033**	F2B-SCED-102	2.2										
	1-3/16	**076034**	F2B-SCED-103	2.1										
	1-1/4	**076035**	F2B-SCED-104S	2.0										
	30mm	***076241***	*F2B-SCED-30M*	*1.0*	*35.3*	*141.3*	*38.8*	*116.7*	*M12*	*12.7*	*11.6*	*40.1*	*79.4*	*39.7*
207	1-1/4	**076036**	F2B-SCED-104	3.5	1-17/32	6-1/8	1-3/4	5-1/8	1/2	9/16	17/32	1-27/32	3-3/4	1-27/32
	1-5/16	@	F2B-SCED-105	3.4										
	1-3/8	**076037**	F2B-SCED-106	3.2										
	1-7/16	**076038**	F2B-SCED-107	3.1										
	35mm	***076242***	*F2B-SCED-35M*	*1.5*	*38.9*	*155.6*	*44.5*	*130.2*	*M12*	*14.3*	*13.4*	*46.8*	*95.3*	*46.8*

@Assembled to order

Extreme Duty Setscrew Ball Bearings

SCED NORMAL DUTY 2-BOLT FLANGE BEARINGS

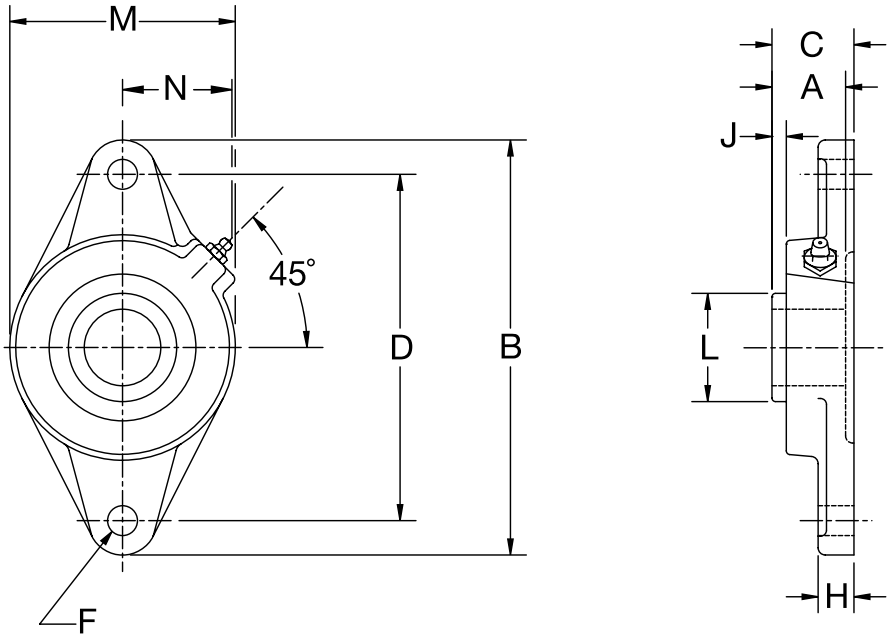

Series	Shaft Size	Standard Part No.	Description	Weight lbs kg	A	B	C	D	F Bolt Dia.	H	J	K	L	M
	1-1/2	**076039**	F2B-SCED-108	4.1	1-11/16	6-3/4	1-7/8	5-21/32	1/2	9/16	17/32	2-3/64	4-1/8	1-53/64
208	1-5/8	**@**	F2B-SCED-110	4.0										
	40mm	***076243***	*F2B-SCED-40M*	*1.8*	*42.9*	*171.5*	*47.5*	*143.7*	*M12*	*14.3*	*13.4*	*52.0*	*104.8*	*46.4*
	1-5/8	**@**	F2B-SCED-110L	5.2	1-23/32	7-1/16	1-15/16	5-27/32	1/2	5/8	17/32	2-7/32	4-3/8	1-29/32
	1-11/16	**076040**	F2B-SCED-111	5.0										
209	1-3/4	**076041**	F2B-SCED-112	4.9										
	1-13/16	**@**	F2B-SCED-113	4.7										
	45mm	***076244***	*F3B-SCED-45M*	*2.2*	*43.7*	*179.4*	*49.2*	*148.4*	*M14*	*15.9*	*13.4*	*56.4*	*111.1*	*48.4*
	1-15/16	**076042**	F2B-SCED-115	5.4	1-3/4	7-7/16	2	6-3/16	1/2	5/8	17/32	2-7/16	4-9/16	2-1/32
210	2	**076043**	F2B-SCED-200	5.2										
	50mm	***076245***	*F2B-SCED-50M*	*2.5*	*44.5*	*188.9*	*50.7*	*157.2*	*M16*	*15.9*	*13.4*	*61.9*	*115.9*	*51.6*
	2	**076148**	F2B-SCMED-200	6.7	1-27/32	8-5/8	2-5/32	7-1/4	5/8	11/16	9/16	2-23/32	5-1/4	2-17/64
211	2-3/16	**076044**	F2B-SCED-203	6.5										
	2-1/4	**@**	F2B-SCED-204	6.3										
	55mm	***@***	*F2B-SCED-55M*	*3.0*	*46.8*	*219.1*	*54.8*	*184.2*	*M16*	*17.5*	*14.3*	*69.1*	*133.4*	*57.5*
	2-1/4	**@**	F2B-SCMED-204	7.4	1-63/64	9-13/16	2-9/32	7-61/64	7/8	13/16	9/16	2-31/32	5-1/2	2-15/32
212	2-7/16	**076045**	F2B-SCED-207	7.0										
	60mm	***@***	*F2B-SCED-60M*	*3.4*	*50.4*	*249.2*	*57.9*	*202.0*	*M22*	*20.6*	*14.3*	*75.4*	*139.7*	*62.7*

@Assembled to order

Extreme Duty Setscrew Ball Bearings

SCMED MEDIUM DUTY 2-BOLT FLANGE BEARINGS

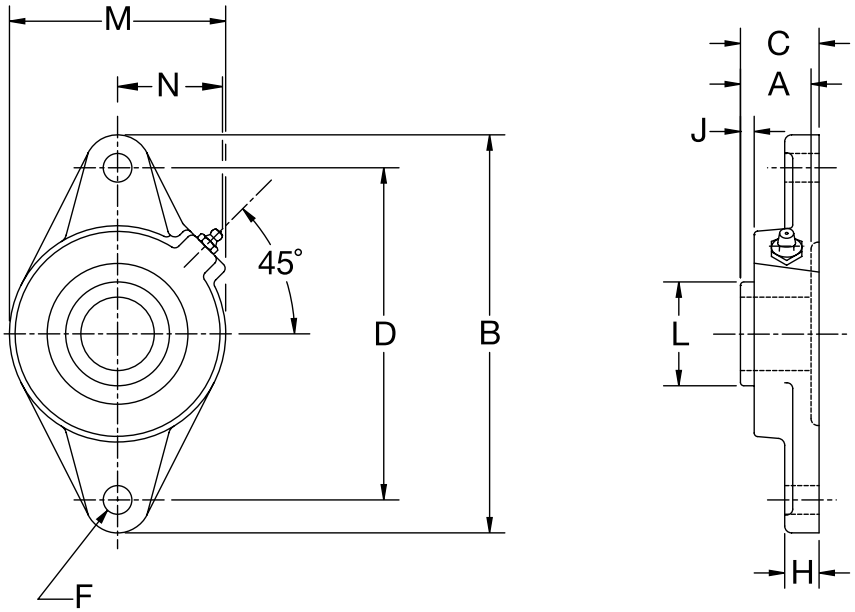

Series	Shaft Size	Standard Part No.	Description	Weight lbs. kgs.	A	B	C	D	F Bolt Dia.	J	K	L	M	N
206	1	**076141**	F2B-SCMED-100	2.4	1-25/64	5-9/16	1-17/32	4-19/32	7/16	1/2	15/32	1-37/64	3-1/8	1-9/16
	25mm	***076307***	*F2B-SCMED-25M*	*1.0*	*35.3*	*141.3*	*38.8*	*116.7*	*M12*	*12.7*	*11.6*	*40.1*	*79.4*	*39.7*
207	1-3/16	**076142**	F2B-SCMED-103	3.6	1-17/32	6-1/8	1-3/4	5-1/8	1/2	9/16	17/32	1-27/32	3-3/4	1-27/32
	1-1/4	**@**	F2B-SCED-104	3.5										
	30mm	***076308***	*F2B-SCMED-30M*	*1.6*	*38.9*	*155.6*	*44.5*	*130.2*	*M12*	*14.3*	*13.4*	*46.8*	*95.3*	*46.8*
208	1-7/16	**076143**	F2B-SCMED-107	4.1	1-11/16	6-3/4	1-7/8	5-21/32	1/2	9/16	17/32	2-3/64	4-1/8	1-53/64
	35mm	***076309***	*F2B-SCMED-35M*	*1.9*	*42.9*	*171.5*	*47.5*	*143.7*	*M12*	*14.3*	*13.4*	*52.0*	*104.8*	*46.4*
209	1-1/2	**076144**	F2B-SCMED-108	5.3	1-23/32	7-1/16	1-15/16	5-27/32	1/2	5/8	17/32	2-7/32	4-3/8	1-29/32
	1-5/8	**@**	F2B-SCED-110L	5.2										
	40mm	***076310***	*F2B-SCMED-40M*	*2.3*	*43.7*	*179.4*	*49.2*	*148.4*	*M14*	*15.9*	*13.4*	*56.4*	*111.1*	*48.4*
210	1-11/16	**076145**	F2B-SCMED-111	5.8	1-3/4	7-7/16	2	6-3/16	1/2	5/8	17/32	2-7/16	4-9/16	2-1/32
	1-3/4	**076146**	F2B-SCMED-112	5.6										
	45mm	***076311***	*F2B-SCMED-45M*	*2.6*	*44.5*	*188.9*	*50.7*	*157.2*	*M16*	*15.9*	*13.4*	*61.9*	*115.9*	*51.6*
211	1-15/16	**076147**	F2B-SCMED-115	6.7	1-27/32	8-5/8	2-5/32	7-1/4	5/8	11/16	9/16	2-23/32	5-1/4	2-17/64
	2	**076148**	F2B-SCMED-200	6.5										
	50mm	***076312***	*F2B-SCMED-50M*	*2.9*	*46.8*	*219.1*	*54.8*	*184.2*	*M16*	*17.5*	*14.3*	*69.1*	*133.4*	*57.5*
212	2-3/16	**076149**	F2B-SCMED-203	7.4	1-63/64	9-13/16	2-9/32	7-61/64	7/8	13/16	9/16	2-31/32	5-1/2	2-15/32
	2-1/4	**@**	F2B-SCMED-204	7.2										
	55mm	***@***	*F2B-SCMED-55M*	*3.2*	*50.4*	*249.2*	*57.9*	*202.0*	*M22*	*20.6*	*14.3*	*75.4*	*139.7*	*62.7*

@ Assembled to order

Extreme Duty Setscrew Ball Bearings

SCED NORMAL DUTY 4-BOLT FLANGE BEARINGS

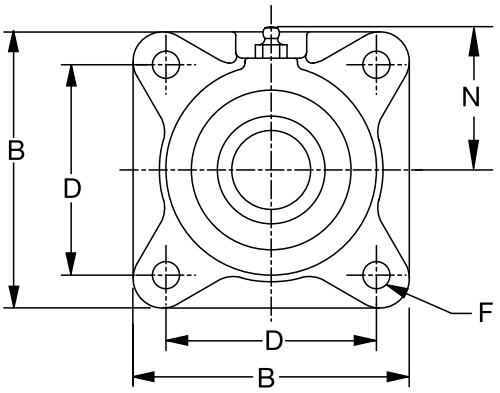

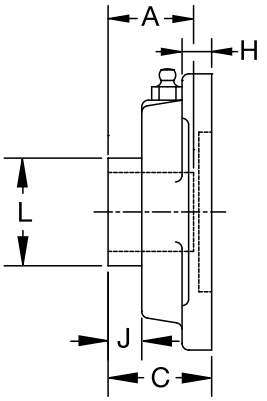

Series	Shaft Size	Standard Part No.	Description	Weights lbs kgs	A	B	C	D	F	H	J	L	N
204	1/2	@	F4B-SCED-008L	1.8	1-5/32	3-3/8	1-3/8	2-1/2	3/8	7/16	25/64	1-1/8	1-15/16
	5/8	@	F4B-SCED-010L	1.7									
	3/4	**076046**	F4B-SCED-012	1.6									
	13/16	@	F4B-SCED-013	1.5									
	20mm	***076246***	*F4B-SCED-20M*	*0.8*	*29.4*	*85.7*	*34.9*	*63.5*	*M10*	*11.1*	*9.9*	*28.6*	*49.2*
205	7/8	@	F4B-SCED-014	2.0	1-3/16	3-3/4	1-23/64	2-3/4	7/16	1/2	25/64	1-21/64	2-1/16
	15/16	@	F4B-SCED-015	1.9									
	1	**076047**	F4B-SCED-100	1.8									
	25mm	***076247***	*F4B-SCED-25M*	*0.9*	*30.2*	*95.3*	*34.5*	*69.9*	*M10*	*12.7*	*9.9*	*33.7*	*52.4*
206	1-1/16	@	F4B-SCED-101	2.9	1-25/64	4-1/4	1-17/32	3-1/4	7/16	1/2	15/32	1-37/64	2-3/16
	1-1/8	**076048**	F4B-SCED-102	2.8									
	1-3/16	**076049**	F4B-SCED-103	2.7									
	1-1/4	**076050**	F4B-SCED-104S	2.6									
	30mm	***076248***	*F4B-SCED-30M*	*1.3*	*35.3*	*108.0*	*38.9*	*82.6*	*M10*	*12.7*	*11.9*	*40.1*	*55.6*
207	1-1/4	**076051**	F4B-SCED-104	4.0	1-17/32	4-3/4	1-3/4	3-5/8	1/2	9/16	17/32	1-27/32	2-7/16
	1-5/16	@	F4B-SCED-105	3.9									
	1-3/8	**076052**	F4B-SCED-106	3.8									
	1-7/16	**076053**	F4B-SCED-107	3.7									
	35mm	***076249***	*F4B-SCED-35M*	*1.7*	*38.9*	*120.7*	*44.5*	*92.1*	*M12*	*14.3*	*13.5*	*46.8*	*61.9*

@ Assembled to order

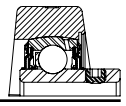

Extreme Duty Setscrew Ball Bearings

SCED NORMAL DUTY 4-BOLT FLANGE BEARINGS

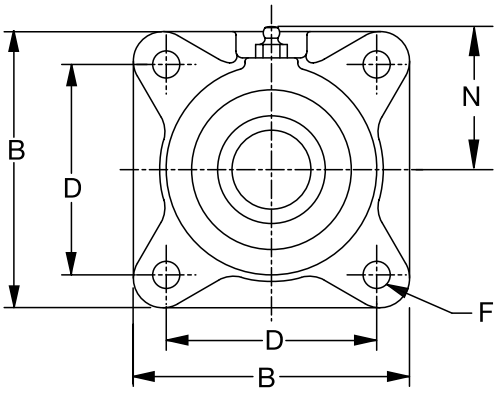

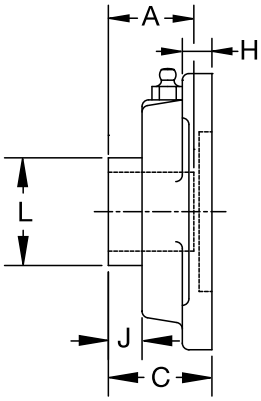

Series	Shaft Size	Standard Part No.	Description	Weight lbs. kg.	A	B	C	D	F	H	J	L	N
208	1-1/2	**076054**	F4B-SCED-108	4.8	1-11/16	5-1/8	1-7/8	4	1/2	9/16	17/32	2-3/64	2-3/8
	1-5/8	**@**	F4B-SCED-110	4.7									
	40mm	***076250***	*F4B-SCED-40M*	*2.1*	*42.9*	*130.2*	*47.6*	*101.6*	*M12*	*14.3*	*13.5*	*52.0*	*60.3*
209	1-5/8	**@**	F4B-SCED-110L	6.1	1-23/32	5-3/8	1-15/16	4-1/8	1/2	5/8	17/32	2-7/32	2-3/4
	1-11/16	**076055**	F4B-SCED-111	6.0									
	1-3/4	**076056**	F4B-SCED-112	5.9									
	45mm	***076251***	*F4B-SCED-45M*	*2.7*	*43.7*	*136.5*	*49.2*	*104.8*	*M14*	*15.9*	*13.5*	*56.4*	*69.9*
210	1-15/16	**076057**	F4B-SCED-115	6.7	1-3/4	5-5/8	2	4-3/8	1/2	5/8	17/32	2-7/16	2-7/8
	2	**076058**	F4B-SCED-200	6.6									
	50mm	***076252***	*F4B-SCED-50M*	*3.0*	*44.5*	*142.9*	*50.8*	*111.1*	*M16*	*15.9*	*13.5*	*61.9*	*73.0*
211	2	**076157**	F4B-SCMED-200	9.3	1-27/32	6-1/2	2-5/32	5-1/8	5/8	11/16	9/16	2-23/32	3-1/4
	2-3/16	**076059**	F4B-SCED-203	9.0									
	2-1/4	**@**	F4B-SCED-204	8.9									
	55mm	***076253***	*F4B-SCED-55M*	*4.1*	*46.8*	*165.1*	*54.8*	*130.2*	*M16*	*17.5*	*14.3*	*69.1*	*82.6*
212	2-1/4	**@**	F4B-SCMED-204	11.1	1-63/64	6-7/8	2-9/32	5-5/8	5/8	11/16	9/16	2-31/32	3-1/2
	2-7/16	**076060**	F4B-SCED-207	10.6									
	60mm	***076254***	*F4B-SCED-60M*	*6.0*	*50.4*	*174.6*	*57.9*	*142.9*	*M16*	*17.5*	*14.3*	*75.4*	*88.9*
214	2-1/2	**@**	F4B-SCMED-208	16.0	2-15/64	7-3/8	2-3/4	5-7/8	5/8	11/16	9/16	3-5/16	3-11/16
	2-11/16	**076061**	F4B-SCED-211	15.4									
	70mm	***076255***	*F4B-SCED-70M*	*6.9*	*56.8*	*187.3*	*69.9*	*149.2*	*M16*	*17.5*	*14.3*	*84.1*	*93.7*
215	2-15/16	**076062**	F4B-SCED-215	17.6	2-9/32	7-3/4	2-57/64	6	3/4	1	41/64	3-5/8	3-7/8
	75mm	***076256***	*F4B-SCED-75M*	*8.0*	*57.9*	*196.9*	*73.4*	*152.4*	*M18*	*25.4*	*16.3*	*92.1*	*98.4*

@ Assembled to order

Extreme Duty Setscrew Ball Bearings

SCMED MEDIUM DUTY 4-BOLT FLANGE BEARINGS

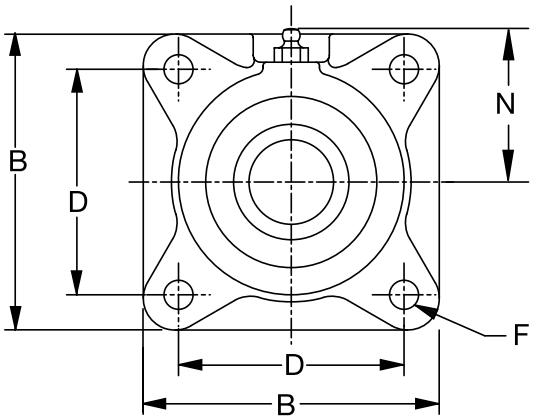

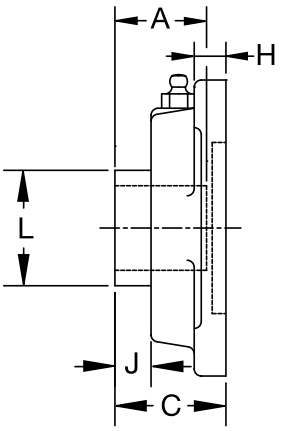

Series	Shaft Size	Standard Part No.	Description	Weight lbs kg	A	B	C	D	F	H	J	L	N
206	1	**076150**	F4B-SCMED-100	3.0	1-25/64	4-1/4	1-17/32	3-1/4	7/16	1/2	15/32	1-37/64	2-3/16
	25mm	***076313***	*F4B-SCMED-25M*	*1.3*	*35.3*	*108.0*	*38.9*	*82.6*	*M10*	*12.7*	*11.9*	*40.1*	*55.6*
207	1-3/16	**076151**	F4B-SCMED-103	4.1	1-17/32	4-3/4	1-3/4	3-5/8	1/2	9/16	17/32	1-27/32	2-7/16
	1-1/4	**@**	F4B-SCMED104	4.0									
	30mm	***076314***	*F4B-SCMED-30M*	*1.4*	*38.9*	*120.7*	*44.5*	*92.1*	*M12*	*14.3*	*13.5*	*46.8*	*61.9*
208	1-7/16	**076152**	F4B-SCMED-107	5.0	1-11/16	5-1/8	1-7/8	4	1/2	9/16	17/32	2-3/64	2-3/8
	35mm	***076315***	*F4B-SCMED-35M*	*2.1*	*42.9*	*130.2*	*47.6*	*101.6*	*M12*	*14.3*	*13.5*	*52.0*	*60.3*
209	1-1/2	**076153**	F4B-SCMED-108	6.1	1-23/32	5-3/8	1-15/16	4-1/8	1/2	5/8	17/32	2-7/32	2-3/4
	1-5/8	**@**	F4B-SCMED110L	6.1									
	40mm	***076316***	*F4B-SCMED-40M*	*2.7*	*43.7*	*136.5*	*49.2*	*104.8*	*M14*	*15.9*	*13.5*	*56.4*	*69.9*
210	1-11/16	**076154**	F4B-SCMED-111	7.1	1-3/4	5-5/8	2	4-3/8	1/2	5/8	17/32	2-7/16	2-7/8
	1-3/4	**076155**	F4B-SCMED-112	6.9									
	45mm	***076317***	*F4B-SCMED-45M*	*3.0*	*44.5*	*142.9*	*50.8*	*111.1*	*M16*	*15.9*	*13.5*	*61.9*	*73.0*
211	1-15/16	**076156**	F4B-SCMED-115	9.5	1-27/32	6-1/2	2-5/32	5-1/8	5/8	11/16	9/16	2-23/32	3-1/4
	2	**076157**	F4B-SCMED-200	9.3									
	50mm	***076318***	*F4B-SCMED-50M*	*4.1*	*46.8*	*165.1*	*54.8*	*130.2*	*M16*	*17.5*	*14.3*	*69.1*	*82.6*
212	2-3/16	**076158**	F4B-SCMED-203	11.3	1-63/64	6-7/8	2-9/32	5-5/8	5/8	11/16	9/16	2-31/32	3-1/2
	2-1/4	**@**	F4B-SCMED-204	11.1									
	55mm	***076319***	*F4B-SCMED-55M*	*6.0*	*50.4*	*174.6*	*57.9*	*142.9*	*M16*	*17.5*	*14.3*	*75.4*	*88.9*
214	2-7/16	**076159**	F4B-SCMED-207	16.2	2-15/64	7-3/8	2-3/4	5-7/8	5/8	11/16	9/16	3-5/16	3-11/16
	2-1/2	**076160**	F4B-SCMED-208	16.0									
	65mm	***076320***	*F4B-SCMED-65M*	*7.3*	*56.8*	*187.3*	*69.9*	*149.2*	*M16*	*17.5*	*14.3*	*84.1*	*93.7*
215	2-11/16	**076161**	F4B-SCMED-211	18.3	2-9/32	7-3/4	2-57/64	6.0	3/4	1	41/64	3-5/8	3-7/8
	70mm	***076321***	*F4B-SCMED-70M*	*8.0*	*57.9*	*196.9*	*73.4*	*152.4*	*M18*	*25.4*	*16.3*	*92.1*	*98.4*
216	2-15/16	**076162**	F4B-SCMED-215	21.5	2-11/32	7-3/4	3-3/32	6	3/4	7/8	19/32	3-53/64	4-3/32
	3	**076163**	F4B-SCMED-300	21.2									
	75mm	***076322***	*F4B-SCMED-75M*	*9.4*	*59.5*	*196.9*	*78.6*	*152.4*	*M18*	*22.2*	*15.1*	*97.2*	*104.0*
218	3-7/16	**076164**	F4B-SCMED-307	28.0	2-31/64	8-7/16	3-11/32	6-3/4	3/4	1	9/16	4-23/64	4-5/8
	3-1/2	**076165**	F4B-SCMED-308	27.4									
	85mm	***076323***	*F4B-SCMED-85M*	*12.2*	*63.1*	*214.3*	*84.9*	*171.5*	*M18*	*25.4*	*14.3*	*110.7*	*117.5*

@ Assembled to order

Extreme Duty Setscrew Ball Bearings

SCED NORMAL DUTY PILOTED FLANGE BEARINGS

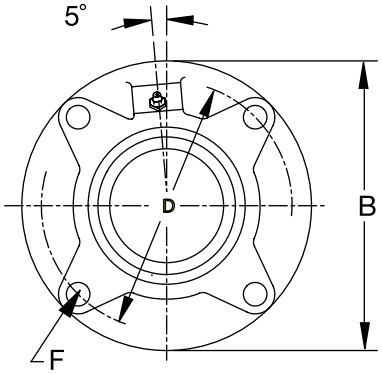

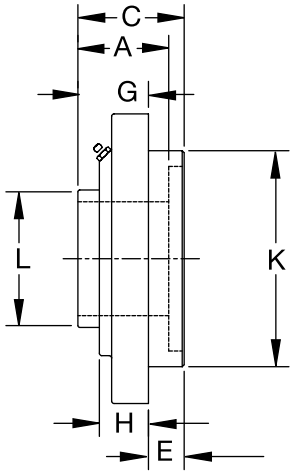

Series	Shaft Size	Part No.	Description	Weight lbs kg	A	B	C	D	E	F Bolt Dia.	G	H	K*	L
206	1-1/16	@	FC-SCED-101	3.2	1-25/64	4-3/8	1-1/2	3-5/8	1/4	3/8	1-1/4	13/16	3	1-37/64
	1-1/8	@	FC-SCED-102	3.1										
	1-3/16	**076063**	FC-SCED-103	3.0										
	1-1/4	**076064**	FC-SCED-104S	2.9										
	30mm	***076257***	*FC-SCED-30M*	*1.3*	*35.3*	*111.1*	*38.1*	*92.1*	*6.4*	*M10*	*31.8*	*20.6*	*76.2*	*40.1*
207	1-1/4	**076065**	FC-SCED-104	4.2	1-17/32	5	1-49/64	4-1/8	3/8	3/8	1-25/64	27/32	3-3/8	1-27/32
	1-5/16	@	FC-SCED-105	4.1										
	1-3/8	**076066**	FC-SCED-106	4.0										
	1-7/16	**076067**	FC-SCED-107	3.9										
	35mm	***076258***	*FC-SCED-35M*	*1.8*	*38.9*	*127.0*	*44.8*	*104.8*	*9.5*	*M10*	*35.3*	*21.4*	*85.7*	*46.8*
208	1-1/2	**076068**	FC-SCED-108	4.6	1-11/16	5-1/4	1-57/64	4-3/8	7/16	7/16	1-29/64	57/64	3-5/8	2-3/64
	1-5/8	@	FC-SCED-110	4.5										
	40mm	***076259***	*FC-SCED-40M*	*2.0*	*42.9*	*133.4*	*48.0*	*111.1*	*11.1*	*M12*	*36.9*	*22.6*	*92.1*	*52.0*
209	1-5/8	@	FC-SCED-110L	5.6	1-23/32	5-3/4	1-57/64	4-3/4	7/16	1/2	1-29/64	29/32	4	2-7/32
	1-11/16	**076069**	FC-SCED-111	5.5										
	1-3/4	**076070**	FC-SCED-112	5.4										
	45mm	***076260***	*FC-SCED-45M*	*2.4*	*43.7*	*146.1*	*48.0*	*120.7*	*11.1*	*M12*	*36.9*	*23.0*	*101.6*	*56.4*
210	1-15/16	**076071**	FC-SCED-115	6.4	1-3/4	6-1/8	1-61/64	5-1/8	15/32	1/2	1-31/64	59/64	4-1/4	2-7/16
	2	**076072**	FC-SCED-200	6.3										
	50mm	***076261***	*FC-SCED-50M*	*2.9*	*44.5*	*155.6*	*49.6*	*130.2*	*11.9*	*M12*	*37.7*	*23.5*	*108.0*	*61.9*
211	2	**076163**	FC-SCMED-200	7.3	1-27/32	6-3/8	2-7/32	5-3/8	5/8	1/2	1-19/32	1	4-1/2	2-23/32
	2-3/16	**076073**	FC-SCED-203	7.2										
	2-1/4	@	FC-SCED-204	7.1										
	55mm	***076262***	*FC-SCED-55M*	*3.3*	*46.8*	*161.9*	*56.4*	*136.5*	*15.9*	*M12*	*40.5*	*25.4*	*114.3*	*69.1*
212	2-1/4	@	FC-SCMED-204	9.6	1-63/64	7-1/8	2-29/64	6	7/8	1/2	1-37/64	1	5	2-31/32
	2-7/16	**076074**	FC-SCED-207	9.5										
	60mm	***076263***	*FC-SCED-60M*	*4.3*	*50.4*	*181.0*	*62.3*	*152.40*	*22.2*	*M12*	*40.1*	*25.4*	*127.0*	*75.4*
214	2-1/2	**076176**	FC-SCMED-208	13.0	2-15/64	7-5/8	2-49/64	6-1/2	1-1/8	1/2	1-41/64	1-1/16	5-1/2	3-5/16
	2-11/16	**076075**	FC-SCED-211	12.9										
	70mm	***076264***	*FC-SCED-70M*	*5.5*	*56.8*	*193.7*	*70.2*	*165.1*	*28.6*	*M12*	*41.7*	*27.0*	*139.7*	*84.1*

@ Assembled to order *+0.000, -0.002," * +0.00 -0.05mm

Extreme Duty Setscrew Ball Bearings

SCMED MEDIUM DUTY PILOTED FLANGE BEARINGS

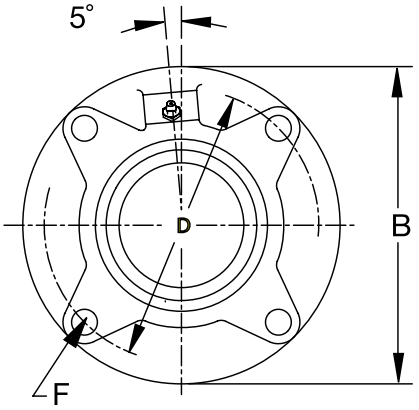

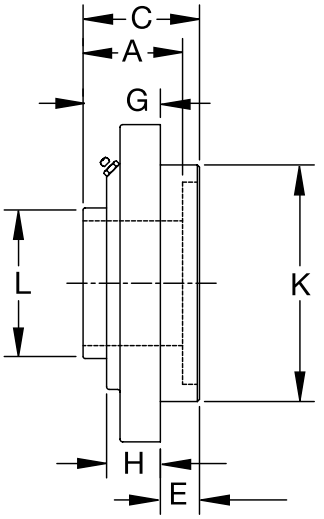

Series	Shaft Size	Part No.	Description	Weight lbs kg	A	B	C	D	E	F Bolt Dia.	G	H	K	L
206	1	**076166**	FC-SCMED-100	3.3	1-25/64	4-3/8	1-1/2	3-5/8	1/4	3/8	1-1/4	13/16	3	1-37/64
	25mm	***076324***	*FC-SCMED-25M*	*1.4*	*35.3*	*111.1*	*38.1*	*92.1*	*6.4*	*M10*	*31.8*	*20.6*	*76.2*	*40.1*
207	1-3/16	**076167**	FC-SCMED-103	4.2	1-17/32	5	1-49/64	4-1/8	3/8	3/8	1-25/64	27/32	3-3/8	1-27/32
	1-1/4	**076065**	FC-SCED-104	4.2										
	30mm	***076325***	*FC-SCMED-30M*	*1.9*	*38.9*	*127.0*	*44.8*	*104.8*	*9.5*	*M10*	*35.3*	*21.4*	*85.7*	*46.8*
208	1-7/16	**076168**	FC-SCMED-107	4.8	1-11/16	5-1/4	1-57/64	4-3/8	7/16	7/16	1-29/64	57/64	3-5/8	2-3/64
	35mm	***076326***	*FC-SCMED-35M*	*2.1*	*42.9*	*133.4*	*48.0*	*111.1*	*11.1*	*M12*	*36.9*	*22.6*	*92.1*	*52.0*
209	1-1/2	**076169**	FC-SCMED-108	5.6	1-23/32	5-3/4	1-57/64	4-3/4	7/16	1/2	1-29/64	29/32	4	2-7/32
	1-5/8	**@**	FC-SCED-110L	5.6										
	40mm	***076317***	*FC-SCMED-40M*	*2.5*	*43.7*	*146.1*	*48.0*	*120.7*	*11.1*	*M12*	*36.9*	*23.0*	*101.6*	*56.4*
210	1-11/16	**076170**	FC-SCMED-111	6.4	1-3/4	6-1/8	1-61/64	5-1/8	15/32	1/2	1-31/64	59/64	4-1/4	2-7/16
	1-3/4	**076171**	FC-SCMED-112	6.3										
	45mm	***076328***	*FC-SCMED-45M*	*2.9*	*44.5*	*155.6*	*49.6*	*130.2*	*11.9*	*M12*	*37.7*	*23.4*	*108.0*	*61.9*
211	1-15/16	**076172**	FC-SCMED-115	7.6	1-27/32	6-3/8	2-7/32	5-3/8	5/8	1/2	1-19/32	1	4-1/2	2-23/32
	2	**076173**	FC-SCMED-200	7.4										
	50mm	***076329***	*FC-SCMED-50M*	*3.4*	*46.8*	*161.9*	*56.4*	*136.5*	*15.9*	*M12*	*40.5*	*25.4*	*114.3*	*69.1*
212	2-3/16	**076174**	FC-SCMED-203	9.5	1-63/64	7-1/8	2-29/64	6	7/8	1/2	1-37/64	1	5	2-31/32
	2-1/4	**@**	FC-SCMED-204	9.8										
	55mm	***076330***	*FC-SCMED-55M*	*4.4*	*50.4*	*181.0*	*62.3*	*152.4*	*22.2*	*M12*	*40.1*	*25.4*	*127.0*	*75.4*
214	2-7/16	**076175**	FC-SCMED-207	13.2	2-15/64	7-5/8	2-49/64	6-1/2	1-1/8	1/2	1-41/64	1-1/16	5-1/2	3-5/16
	2-1/2	**076176**	FC-SCMED-208	13.0										
	65mm	***076331***	*FC-SCMED-65M*	*5.9*	*56.8*	*193.7*	*70.2*	*165.1*	*28.6*	*M12*	*41.7*	*27.0*	*139.7*	*84.1*
216	2-15/16	**076177**	FC-SCMED-215	18.8	2-11/64	8-3/4	3-1/32	7-1/2	1-1/4	5/8	1-25/32	1-3/16	6-3/8	3-53/64
	3	**076178**	FC-SCMED-300	18.6										
	75mm	***076332***	*FC-SCMED-75M*	*8.5*	*57.9*	*222.3*	*77.0*	*190.5*	*31.8*	*M16*	*45.2*	*30.2*	*161.9*	*92.1*
218	3-7/16	**076179**	FC-SCMED-307	28.7	2-31/64	10-1/4	3-19/64	8-5/8	1-1/8	3/4	2-11/64	1-5/8	7-3/8	4-23/64
	3-1/2	**076180**	FC-SCMED-308	28.5										
	85mm	***076333***	*FC-SCMED-85M*	*13.5*	*63.1*	*260.4*	*83.7*	*219.1*	*34.9*	*M18*	*55.2*	*41.3*	*187.3*	*110.7*

@ Assembled to order

Extreme Duty Setscrew Ball Bearings

SCED NORMAL DUTY NARROW SLOT TAKE-UP BEARINGS

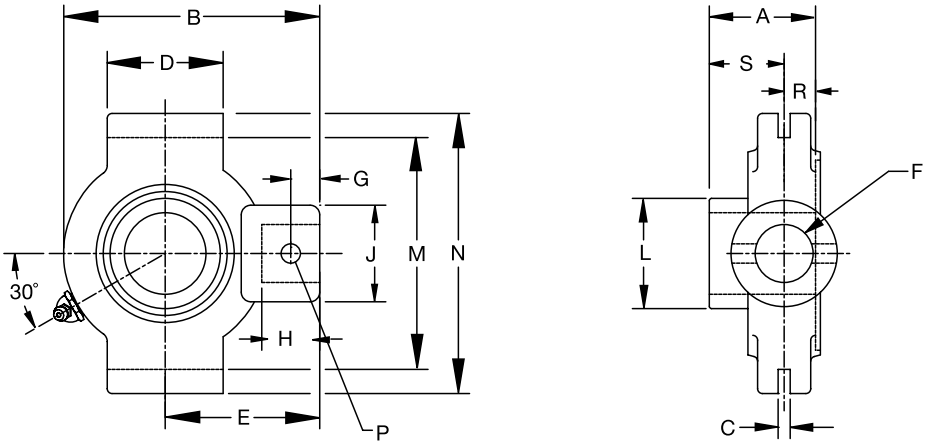

Series	Shaft Size	Part No.	Description	Weight lbs. kgs.	Take-Up Frame No. Ref.	A	B	C *	D	E	F Screw Dia	G
204	1/2	@	NSTU-SCED-008	1.6	NS210	1-5/32	3-1/2	1/4	1-1/2	2-3/16	3/4	7/16
	5/8	@	NSTU-SCED-010	1.5								
	3/4	**076076**	NSTU-SCED-012	1.4								
	20mm	***076265***	*NSTU-SCED-20M*	*0.8*		*29.4*	*88.9*	*6.4*	*38.1*	*55.6*	*19.1*	*11.1*
205	7/8	@	NSTU-SCED-014	1.7	NS210	1-3/16	3-9/16	1/4	1-1/2	2-3/16	3/4	7/16
	15/16	@	NSTU-SCED-015	1.6								
	1	**076077**	NSTU-SCED-100	1.5								
	25mm	***076266***	*NSTU-SCED-25M*	*0.7*		*30.2*	*90.5*	*6.4*	*38.1*	*55.6*	*19.1*	*11.1*
206	1-1/16	@	NSTU-SCED-101	2.9	NS308	1-25/64	4-5/16	1/4	2-1/2	2-11/16	3/4	1/2
	1-1/8	**076078**	NSTU-SCED-102	2.8								
	1-3/16	**076079**	NSTU-SCED-103	2.7								
	1-1/4	**076080**	NSTU-SCED-104S	2.6								
	30mm	***076267***	*NSTU-SCED-30M*	*1.2*		*35.3*	*109.5*	*6.4*	*63.5*	*68.3*	*19.1*	*12.7*
207	1-1/4	**076081**	NSTU-SCED-104	2.8	NS308	1-17/32	4-1/2	1/4	2-1/2	2-11/16	3/4	1/2
	1-5/16	@	NSTU-SCED-105	2.7								
	1-3/8	**076082**	NSTU-SCED-106	2.6								
	1-7/16	**076083**	NSTU-SCED-107	2.5								
	35mm	***076268***	*NSTU-SCED-35M*	*1.2*		*38.9*	*114.3*	*6.4*	*63.5*	*68.3*	*19.1*	*12.7*

@ Assembled to order See B15-9 for Take-Up Frames *+ or -.015". + pr -.38mm

Series	Shaft Size	H	J	L	M #	N	P Pin Dia	R	S
204	1/2	7/8	1-3/8	1-1/8	2-5/8	3-1/8	5/16	27/64	47/64
	5/8								
	3/4								
	20mm	*22.2*	*34.9*	*28.6*	*66.7*	*79.4*	*7.9*	*10.7*	*18.7*
205	7/8	7/8	1-3/8	1-21/64	2-5/8	3-1/8	5/16	27/64	49/64
	15/16								
	1								
	25mm	*22.2*	*34.9*	*33.7*	*66.7*	*79.4*	*7.9*	*10.7*	*19.4*
206	1-1/16	15/16	1-3/8	1-37/64	3-1/2	4-1/8	5/16	31/64	29/32
	1-1/8								
	1-3/16								
	1-1/4								
	30mm	*23.8*	*34.9*	*40.1*	*88.9*	*104.8*	*7.9*	*12.3*	*23*
207	1-1/4	15/16	1-3/8	1-27/32	3-1/2	4-1/8	5/16	1/2	1-1/32
	1-5/16								
	1-3/8								
	1-7/16								
	35mm	*23.8*	*34.9*	*46.8*	*88.9*	*104.8*	*7.9*	*12.7*	*26.2*

#+.010, -.020" +.25mm, -.50mm

Extreme Duty Setscrew Ball Bearings

SCED NORMAL DUTY NARROW SLOT TAKE-UP BEARINGS

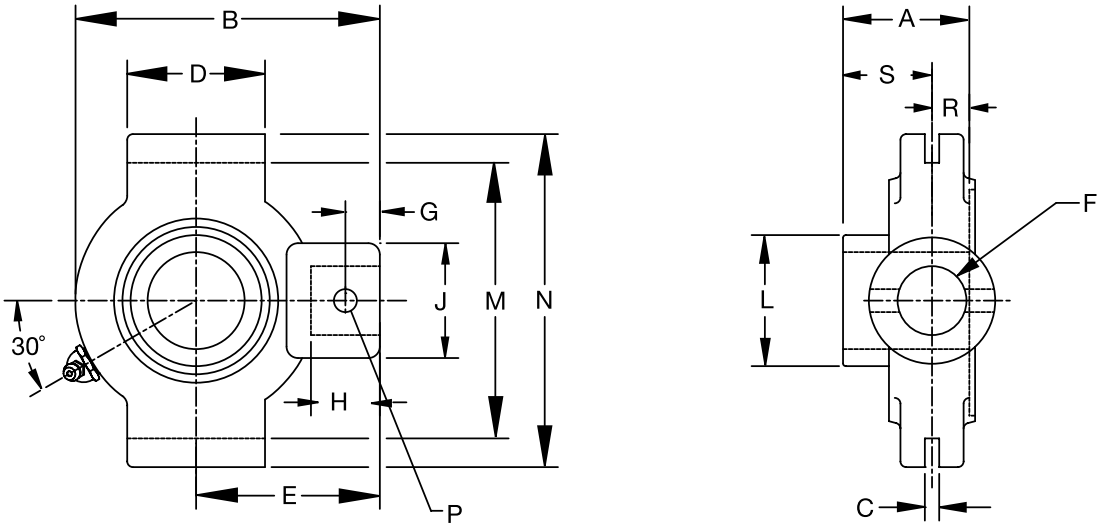

Series	Shaft Size	Standard Part No.	Description
208	1-1/2	**076084**	NSTU-SCED-108
	1-5/8	**@**	NSTU-SCED-110
	40mm	***076269***	*NSTU-SCED-40M*
209	1-5/8	**@**	NSTU-SCED-110L
	1-11/16	**076085**	NSTU-SCED-111
	1-3/4	**076086**	NSTU-SCED-112
	45mm	***076270***	*NSTU-SCED-45M*
210	1-15/16	**076087**	NSTU-SCED-115
	2	**076088**	NSTU-SCED-200
	50mm	***076271***	*NSTU-SCED-50M*
211	2	**076188**	NSTU-SCMED-200
	2-3/16	**076089**	NSTU-SCED-203
	2-1/4	**@**	NSTU-SCED-204
	55mm	***076272***	*NSTU-SCED-55M*
212	2-1/4	**@**	NSTU-SCMED-204
	2-7/16	**076090**	NSTU-SCED-207
	60mm	***076273***	*NSTU-SCED-60M*

@ Assembled to order

See B15-9 for Take-Up Frames

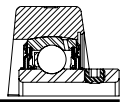

Extreme Duty Setscrew Ball Bearings

SCED NORMAL DUTY NARROW SLOT TAKE-UP BEARINGS

Series	Shaft Size	Weight lbs. kgs.	Take-Up Frame No. Ref.	A	B	C *	D	E	F Screw Dia	G
208	1-1/2 1-5/8 *40mm*	4.7 4.6 *2.1*	NS400	1-11/16 *42.9*	5-3/8 *136.5*	5/16 *7.9*	3 *76.2*	3-1/4 *82.6*	7/8 *22.2*	21/32 *16.7*
209	1-5/8 1-11/16 1-3/4 *45mm*	4.9 4.8 4.7 *2.1*	NS400	1-23/32 *43.7*	5-7/16 *138.1*	5/16 *7.9*	3 *76.2*	3-1/4 *82.6*	7/8 *22.2*	23/32 *18.3*
210	1-15/16 2 *50mm*	4.9 4.8 *2.2*	NS400	1-3/4 *44.5*	5-1/2 *139.7*	5/16 *7.9*	3 *76.2*	3-1/4 *82.6*	7/8 *22.2*	19/32 *15.1*
211	2 2-3/16 2-1/4 *55mm*	6.8 6.6 6.5 *3.0*	NS407	1-27/32 *46.8*	6-1/8 *155.6*	5/16 *7.9*	3-1/2 *88.9*	3-5/8 *92.1*	1 *25.4*	11/16 *17.5*
212	2-1/4 2-7/16 *60mm*	8.7 8.4 *4.9*	NS415	1-63/64 *50.4*	6-11/16 *169.9*	5/16 *7.9*	3-3/4 *95.3*	3-7/8 *98.4*	1 *25.4*	11/16 *17.5*

*+/- .015" +/- .38mm

Series	Shaft Size	H	J	L	M #	N	P Pin Dia	R	S
208	1-1/2 1-5/8 *40mm*	1-5/32 *29.4*	1-5/8 *41.3*	2-3/64 *52.0*	4 *101.6*	4-3/4 *120.7*	3/8 *9.5*	19/32 *15.1*	1-3/32 *27.8*
209	1-5/8 1-11/16 1-3/4 *45mm*	1-7/32 *31.0*	1-5/8 *41.3*	2-7/32 *56.4*	4 *101.6*	4-3/4 *120.7*	3/8 *9.5*	19/32 *15.1*	1-1/8 *28.6*
210	1-15/16 2 *50mm*	1-3/32 *27.8*	1-5/8 *41.3*	2-7/16 *61.9*	4 *101.6*	4-3/4 *120.7*	3/8 *9.5*	19/32 *15.1*	1-5/32 *29.4*
211	2 2-3/16 2-1/4 *55mm*	1-9/32 *32.5*	1-3/4 *44.5*	2-23/32 *69.1*	4-7/16 *112.7*	5-3/8 *136.5*	7/16 *11.1*	5/8 *15.9*	1-7/32 *31.0*
212	2-1/4 2-7/16 *60mm*	1-9/32 *32.5*	1-5/8 *41.3*	2-31/32 *75.4*	4-15/16 *125.4*	5-3/4 *146.1*	7/16 *11.1*	43/64 *17.1*	1-5/16 *33.3*

#+.010, -.020" +.25mm, -.50mm

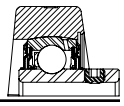

Extreme Duty Setscrew Ball Bearings

SCMED MEDIUM DUTY NARROW SLOT TAKE-UP BEARINGS

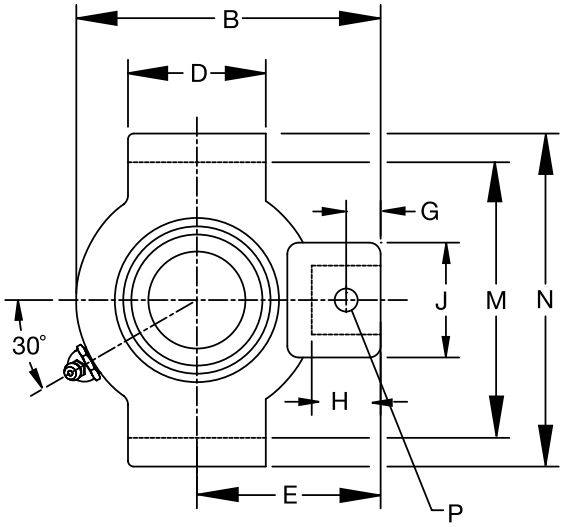

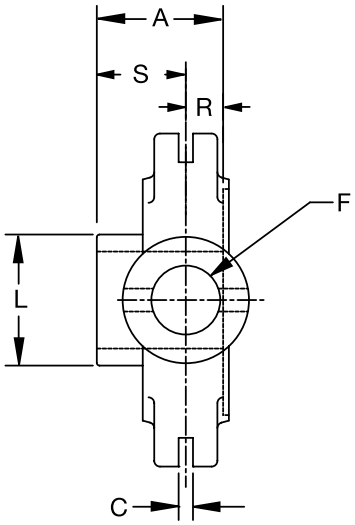

Series	Shaft Size	Part No.	Description
206	1	**076181**	NSTU-SCMED-100
	25mm	***076410***	*NSTU-SCMED-25M*
207	1-3/16	**076182**	NSTU-SCMED-103
	1-1/4	**076081**	NSTU-SCED-104
	30mm	***076411***	*NSTU-SCMED-30M*
208	1-7/16	**076183**	NSTU-SCMED-107
	35mm	***076412***	*NSTU-SCMED-35M*
209	1-1/2	**076184**	NSTU-SCMED-108
	1-5/8	**@**	NSTU-SCED-110L
	40mm	***076413***	*NSTU-SCMED-40M*
210	1-11/16	**076185**	NSTU-SCMED-111
	1-3/4	**076186**	NSTU-SCMED-112
	45mm	***076414***	*NSTU-SCMED-45M*
211	1-15/16	**076187**	NSTU-SCMED-115
	2	**076188**	NSTU-SCMED-200
	50mm	***076415***	*NSTU-SCMED-50M*
212	2-3/16	**076189**	NSTU-SCMED-203
	2-1/4	**@**	NSTU-SCMED-204
	55mm	***076416***	*NSTU-SCMED-55M*

@ Assembled to order

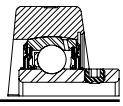

Extreme Duty Setscrew Ball Bearings

SCMED MEDIUM DUTY NARROW SLOT TAKE-UP BEARINGS

Series	Shaft Size	Weight lbs. kgs.	Take-Up Frame No. Ref.	A	B	C*	D	E	F Screw Dia.	G
206	1	3.0	NS308	1-25/64	4-5/16	1/4	2-1/2	2-11/16	3/4	1/2
	25mm	*1.2*		*35.3*	*109.5*	*6.4*	*63.5*	*68.3*	*19.1*	*12.7*
207	1-3/16	2.9	NS308	1-17/32	4-1/2	1/4	2-1/2	2-11/16	3/4	1/2
	1-1/4	2.8								
	30mm	*1.3*		*38.9*	*114.3*	*6.4*	*63.5*	*68.3*	*19.1*	*12.7*
208	1-7/16	4.7	NS400	1-11/16	5-3/8	5/16	3	3-1/4	7/8	21/32
	35mm	*2.2*		*42.9*	*136.5*	*7.9*	*76.2*	*82.6*	*22.2*	*16.7*
209	1-1/2	5.0	NS400	1-23/32	5-7/16	5/16	3	3-1/4	7/8	23/32
	1-5/8	4.9								
	40mm	*2.3*		*43.7*	*138.1*	*7.9*	*76.2*	*82.6*	*22.2*	*18.3*
210	1-11/16	5.3	NS400	1-3/4	5-1/2	5/16	3	3-1/4	7/8	19/32
	1-3/4	5.2								
	45mm	*2.4*		*44.5*	*139.7*	*7.9*	*76.2*	*82.6*	*22.2*	*15.1*
211	1-15/16	7.0	NS407	1-27/32	6-1/8	5/16	3-1/2	3-5/8	1	11/16
	2	6.8								
	50mm	*3.2*		*46.8*	*155.6*	*7.9*	*88.9*	*92.1*	*25.4*	*17.5*
212	2-3/16	8.9	NS415	1-63/64	6-11/16	5/16	3-3/4	3-7/8	1	11/16
	2-1/4	8.7								
	55mm	*4.0*		*50.4*	*169.9*	*7.9*	*95.3*	*98.4*	*25.4*	*17.5*

#+ or -.015", + or -.38mm"

Series	Shaft Size	H	J	L	M#	N	P Pin Dia.	R	S
206	1	15/16	1-3/8	1-37/64	3-1/2	4-1/8	5/16	31/64	29/32
	25mm	*23.8*	*34.9*	*40.1*	*88.9*	*104.8*	*7.9*	*12.3*	*23.0*
207	1-3/16	15/16	1-3/8	1-27/32	3-1/2	4-1/8	5/16	1/2	1-1/32
	1-1/4								
	30mm	*23.8*	*34.9*	*46.8*	*88.9*	*104.8*	*7.9*	*12.7*	*26.2*
208	1-7/16	1-5/32	1-5/8	2-3/64	4	4-3/4	3/8	19/32	1-3/32
	35mm	*29.4*	*41.3*	*52.0*	*101.60*	*120.7*	*9.5*	*15.1*	*27.8*
209	1-1/2	1-7/32	1-5/8	2-7/32	4	4-3/4	3/8	19/32	1-1/8
	1-5/8								
	40mm	*31.0*	*41.3*	*56.4*	*101.60*	*120.7*	*9.5*	*15.1*	*28.6*
210	1-11/16	1-3/32	1-5/8	2-7/16	4	4-3/4	3/8	19/32	1-5/32
	1-3/4								
	45mm	*27.8*	*41.3*	*61.9*	*101.60*	*120.7*	*9.5*	*15.1*	*29.4*
211	1-15/16	1-9/32	1-3/4	2-23/32	4-7/16	5-3/8	7/16	5/8	1-7/32
	2								
	50mm	*32.5*	*44.5*	*69.1*	*112.7*	*136.5*	*11.1*	*15.9*	*31.0*
212	2-3/16	1-9/32	1-5/8	2-31/32	4-15/16	5-3/4	7/16	43/64	1-5/16
	2-1/4								
	55mm	*32.5*	*41.3*	*75.4*	*125.4*	*146.1*	*11.1*	*17.1*	*33.3*

Extreme Duty Setscrew Ball Bearings

SCED NORMAL DUTY WIDE SLOT TAKE-UP BEARINGS

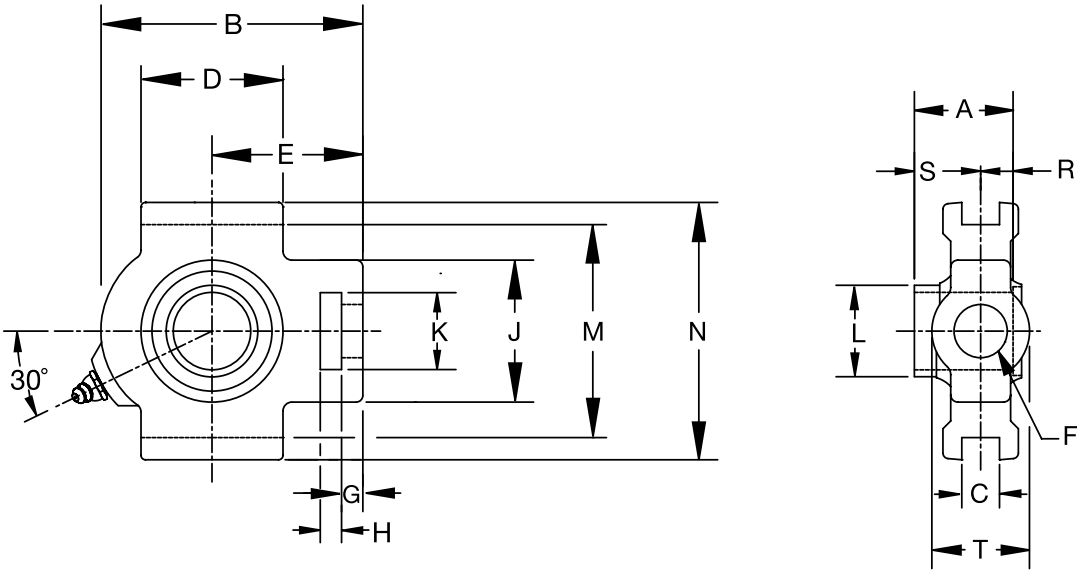

Series	Shaft Size	Standard Part No.	Description
204	1/2	@	WSTU-SC-008
	5/8	@	WSTU-SC-010
	3/4	**076091**	WSTU-SCED-012
	20mm	***076274***	*WSTU-SCED-20M*
205	7/8	@	WSTU-SC-014
	15/16	@	WSTU-SC-015
	1	**076092**	WSTU-SCED-100
	25mm	***076275***	*WSTU-SCED-25M*
206	1-1/16	@	WSTU-SC-101
	1-1/8	**076093**	WSTU-SCED-102
	1-3/16	**076094**	WSTU-SCED-103
	1-1/4	**076095**	WSTU-SCED-104S
	30mm	***076276***	*WSTU-SCED-30M*
207	1-1/4	**076096**	WSTU-SCED-104
	1-5/16	@	WSTU-SC-105
	1-3/8	**076097**	WSTU-SCED-106
	1-7/16	**076098**	WSTU-SCED-107
	35mm	***076277***	*WSTU-SCED-35M*
208	1-1/2	**076099**	WSTU-SCED-108
	1-5/8	@	WSTU-SC-110
	40mm	***076278***	*WSTU-SCED-40M*

@ Assembled to order

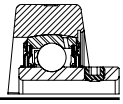

Extreme Duty Setscrew Ball Bearings

SCED NORMAL DUTY WIDE SLOT TAKE-UP BEARINGS

Series	Shaft Size	Weight lbs kg	Take-Up Frame Size	A	B	C*	D	E	F Screw Dia.	G
204	1/2	2.1	WS300	1-5/32	3-11/16	17/32	2	2-3/8	5/8	3/8
	5/8	2.0								
	3/4	1.9								
	20mm	*0.9*		*29.4*	*93.7*	*13.5*	*50.8*	*60.3*	*15.9*	*9.5*
205	7/8	2.2	WS300	1-3/16	3-13/16	17/32	2	2-7/16	5/8	3/8
	15/16	2.1								
	1	2.0								
	25mm	*1.0*		*30.2*	*96.8*	*13.5*	*50.8*	*61.9*	*15.9*	*9.5*
206	1-1/16	3.1	WS308	1-25/64	4-3/8	17/32	2-1/4	2-3/4	3/4	3/8
	1-1/8	3.0								
	1-3/16	2.9								
	1-1/4	2.8								
	30mm	*1.3*		*35.3*	*111.1*	*13.5*	*57.2*	*69.9*	*19.1*	*9.5*
207	1-1/4	3.8	WS308	1-17/32	4-7/8	17/32	2-1/2	3-1/16	3/4	1/2
	1-5/16	3.7								
	1-3/8	3.6								
	1-7/16	3.5								
	35mm	*1.6*		*38.9*	*123.8*	*13.5*	*63.5*	*77.8*	*19.1*	*12.7*
208	1-1/2	6.1	WS400	1-11/16	5-11/16	11/16	3-1/4	3-1/2	1	5/8
	1-5/8	6.0								
	40mm	*2.8*		*42.9*	*144.5*	*17.5*	*82.6*	*88.9*	*25.4*	*15.9*

Series	Shaft Size	H	J	K	L	M#	N	R	S	T
204	1/2	5/8	2	1-1/4	1-1/8	3	3-5/8	27/64	47/64	1-3/8
	5/8									
	3/4									
	20mm	*15.9*	*50.8*	*31.8*	*28.6*	*76.2*	*92.1*	*10.7*	*18.7*	*34.9*
205	7/8	5/8	2	1-5/16	1-21/64	3	3-5/8	27/64	49/64	1-3/8
	15/16									
	1									
	25mm	*15.9*	*50.8*	*33.3*	*33.7*	*76.2*	*92.1*	*10.7*	*19.4*	*34.9*
206	1-1/16	5/8	2-3/16	1-7/16	1-37/64	3-1/2	4-1/8	31/64	29/32	1-5/8
	1-1/8									
	1-3/16									
	1-1/4									
	30mm	*15.9*	*55.6*	*36.5*	*40.1*	*88.9*	*104.8*	*12.3*	*23.0*	*41.3*
207	1-1/4	5/8	2-1/2	1-7/16	1-27/32	3-1/2	4-1/8	1/2	1-1/32	1-5/8
	1-5/16									
	1-3/8									
	1-7/16									
	35mm	*15.9*	*63.5*	*36.5*	*46.8*	*88.9*	*104.8*	*12.7*	*26.2*	*41.3*
208	1-1/2	3/4	3-1/4	1-15/16	2-3/64	4	4-1/2	19/32	1-3/32	1-15/16
	1-5/8									
	40mm	*19.1*	*82.6*	*49.2*	*52.0*	*101.6*	*114.3*	*15.1*	*27.8*	*49.2*

*+ or -.015", + or -.38mm

+.010, -.020" +.25mm, -.50mm

Extreme Duty Setscrew Ball Bearings

SCED NORMAL DUTY WIDE SLOT TAKE-UP BEARINGS

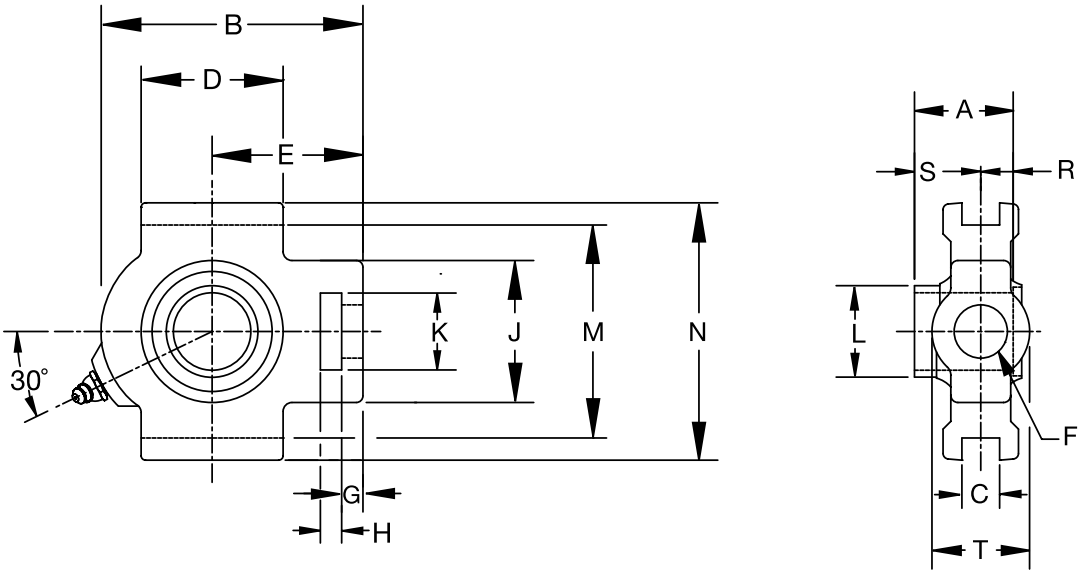

Series	Shaft Size	Standard Part No.	Description
209	1-5/8	@	WSTU-SCED-110L
	1-11/16	**076100**	WSTU-SCED-111
	1-3/4	**076101**	WSTU-SCED-112
	1-13/16	@	WSTU-SCED-113
	45mm	***076279***	*WSTU-SCED-45M*
210	1-15/16	**076102**	WSTU-SCED-115
	2	**076103**	WSTU-SCED-200
	50mm	***076280***	*WSTU-SCED-50M*
211	2	**076197**	WSTU-SCMED-200
	2-3/16	**076104**	WSTU-SCED-203
	2-1/4	@	WSTU-SCED-204
	55mm	***076281***	*WSTU-SCED-55M*
212	2-1/4	@	WSTU-SCMED-204
	2-7/16	**076105**	WSTU-SCED-207
	60mm	***076282***	*WSTU-SCED-60M*
214	2-1/2	**076200**	WSTU-SCMED-208
	2-11/16	**076106**	WSTU-SCED-211
	70mm	***076283***	*WSTU-SCED-70M*
215	2-15/16	**076107**	WSTU-SCED-215
	75mm	***076284***	*WSTU-SCED-75M*

@ Assembled to order

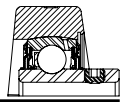

Extreme Duty Setscrew Ball Bearings

SCED NORMAL DUTY WIDE SLOT TAKE-UP BEARINGS

Series	Shaft Size	Weight lbs kg	Take-Up Frame Size	A	B	C*	D	E	F Screw Dia.	G
209	1-5/8	6.1	WS400	1-23/32	5-5/8	11/16	3-1/4	3-7/16	1	5/8
	1-11/16	6.0								
	1-3/4	5.9								
	1-13/16	5.8								
	45mm	*2.7*		*43.7*	*142.9*	*17.5*	*82.6*	*87.3*	*25.4*	*15.9*
210	1-15/16	6.4	WS400	1-3/4	5-13/16	11/16	3-3/8	3-9/16	1	5/8
	2	6.2								
	50mm	*2.9*		*44.5*	*147.6*	*17.5*	*85.7*	*90.5*	*25.4*	*15.9*
211	2	10.1	WS502	1-27/32	6-11/16	1-1/16	3-3/4	4-3/16	1-1/4	3/4
	2-3/16	10.0								
	2-1/4	9.8								
	55mm	*4.5*		*46.8*	*169.9*	*27.0*	*95.3*	*106.4*	*31.8*	*19.1*
212	2-1/4	11.2	WS502	1-63/64	7-1/2	1-1/16	4	4-11/16	1-1/4	3/4
	2-7/16	10.8								
	60mm	*4.9*		*50.4*	*190.5*	*27.0*	*101.6*	*119.1*	*31.8*	*19.1*
214	2-1/2	18.0	WS515	2-15/64	8 -9/16	1-1/16	4-3/4	5 -3/8	1-1/2	13/16
	2-11/16	17.8								
	70mm	*8.0*		*56.8*	*217.5*	*27.0*	*120.7*	*136.5*	*38.1*	*20.6*
215	2-15/16	18.9	WS515	2-9/32	9-1/8	1-1/16	4-3/4	5-1/2	1-1/2	13/16
	75mm	*8.6*		*57.9*	*231.8*	*27.0*	*120.7*	*139.7*	*38.1*	*20.6*

Series	Shaft Size	H	J	K	L	M#	N	R	S	T
209	1-5/8	3/4	3-1/4	1-15/16	2-7/32	4	4-3/4	19/32	1-1/8	1-15/16
	1-11/16									
	1-3/4									
	1-13/16									
	45mm	*19.1*	*82.6*	*49.2*	*56.4*	*101.6*	*120.7*	*15.1*	*28.6*	*49.2*
210	1-15/16	3/4	3-1/4	1-15/16	2-7/16	4	4-3/4	19/32	1-5/32	1-15/16
	2									
	50mm	*19.1*	*82.6*	*49.2*	*61.9*	*101.6*	*120.7*	*15.1*	*29.4*	*49.2*
211	2	1	4	2-1/2	2-23/32	5-1/8	5-7/8	5/8	1-7/32	2-1/2
	2-3/16									
	2-1/4									
	55mm	*25.4*	*101.6*	*63.5*	*69.1*	*130.2*	*149.2*	*15.9*	*31.0*	*63.5*
212	2-1/4	1-1/4	4	2-1/2	2-31/32	5-1/8	5-7/8	43/64	1-5/16	2-1/2
	2-7/16									
	60mm	*31.8*	*101.6*	*63.5*	*75.4*	*130.2*	*149.2*	*17.1*	*33.3*	*63.5*
214	2-1/2	1-1/4	4-3/8	2-3/4	3-5/16	5-15/16	6-9/16	51/64	1-7/16	2-3/4
	2-11/16									
	70mm	*31.8*	*111.1*	*69.9*	*84.1*	*150.8*	*166.7*	*20.2*	*36.5*	*69.9*
215	2-15/16	1-1/4	4-3/8	2-3/4	3-5/8	5-15/16	6-11/16	13/16	1-15/32	2-3/4
	75mm	*31.8*	*111.1*	*69.9*	*92.1*	*150.8*	*169.9*	*20.6*	*37.3*	*69.9*

*+ or -.015", + or -.38mm

+.010, -.020" +.25mm, -.50mm

Extreme Duty Setscrew Ball Bearings

SCMED MEDIUM DUTY WIDE SLOT TAKE-UP BEARINGS

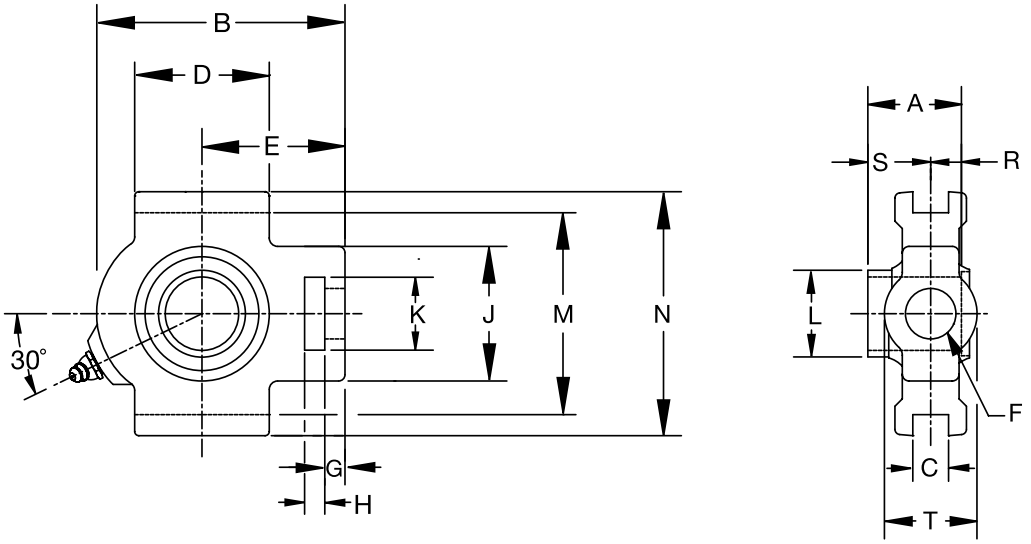

Series	Shaft Size	Part No.	Description
206	1	**076190**	WSTU-SCMED-100
	25mm	***076334***	*WSTU-SCMED-25M*
207	1-3/16	**076191**	WSTU-SCMED-103
	1-1/4	**076096**	WSTU-SCED-104
	30mm	***076335***	*WSTU-SCMED-30M*
208	1-7/16	**076192**	WSTU-SCMED-107
	35mm	***076336***	*WSTU-SCMED-35M*
209	1-1/2	**076193**	WSTU-SCMED-108
	40mm	***076337***	*WSTU-SCMED-40M*
210	1-11/16	**076194**	WSTU-SCMED-111
	1-3/4	**076195**	WSTU-SCMED-112
	45mm	***076338***	*WSTU-SCMED-45M*

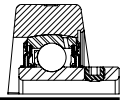

Extreme Duty Setscrew Ball Bearings

SCMED MEDIUM DUTY WIDE SLOT TAKE-UP BEARINGS

Series	Shaft Size	Weight lbs. kgs.	Take-Up Frame No. Ref.	A	B	C*	D	E	F Screw Dia.	G
206	1	2.9	WS308	1-25/64	4-3/8	17/32	2-1/4	2-3/4	3/4	3/8
	25mm	*1.4*		*35.3*	*111.1*	*13.5*	*57.2*	*69.9*	*19.1*	*9.5*
207	1-3/16	3.9	WS308	1-17/32	4-7/8	17/32	2-1/2	3-1/16	3/4	1/2
	1-1/4	3.8								
	30mm	*1.7*		*38.9*	*123.8*	*13.5*	*63.5*	*77.8*	*19.1*	*12.7*
208	1-7/16	6.1	WS400	1-11/16	5-11/16	11/16	3-1/4	3-1/2	1	5/8
	35mm	*2.9*		*42.9*	*144.5*	*17.5*	*82.6*	*88.9*	*25.40*	*15.9*
209	1-1/2	6.0	WS400	1-23/32	5-5/8	11/16	3-1/4	3-7/16	1	5/8
	40mm	*2.8*		*43.7*	*142.9*	*17.5*	*82.6*	*87.3*	*25.40*	*15.9*
210	1-11/16	6.5	WS400	1-3/4	5-13/16	11/16	3-3/8	3-9/16	1	5/8
	1-3/4	6.4								
	45mm	*3.0*		*44.5*	*147.6*	*17.5*	*85.7*	*90.5*	*25.40*	*15.9*

Series	Shaft Size	H	J	K	L	M#	N	R	S	T
206	1	5/8	2-3/16	1-7/16	1-37/64	3-1/2	4-1/8	31/64	29/32	1-5/8
	25mm	*15.9*	*55.6*	*36.5*	*40.1*	*88.9*	*104.8*	*12.3*	*23.0*	*41.3*
207	1-3/16	5/8	2-1/2	1-7/16	1-27/32	3-1/2	4-1/8	1/2	1-1/32	1-5/8
	1-1/4									
	30mm	*15.9*	*63.5*	*36.5*	*46.8*	*88.9*	*104.8*	*12.7*	*26.2*	*41.3*
208	1-7/16	3/4	3-1/4	1-15/16	2-3/64	4	4-1/2	19/32	1-3/32	1-15/16
	35mm	*19.1*	*82.6*	*49.2*	*52.0*	*101.6*	*114.3*	*15.1*	*27.8*	*49.2*
209	1-1/2	3/4	3-1/4	1-15/16	2-7/32	4	4-3/4	19/32	1-1/8	1-15/16
	40mm	*19.1*	*82.6*	*49.2*	*56.4*	*101.6*	*120.7*	*15.1*	*28.6*	*49.2*
210	1-11/16	3/4	3-1/4	1-15/16	2-7/16	4	4-3/41	19/32	1-5/32	1-15/16
	1-3/4									
	45mm	*19.1*	*82.6*	*49.2*	*61.9*	*101.6*	*20.7*	*15.1*	*29.4*	*49.2*

*+ or -.015, + or -.38mm

#+.010, -.020" +.25mm, -.50mm

Extreme Duty Setscrew Ball Bearings

SCMED MEDIUM DUTY WIDE SLOT TAKE-UP BEARINGS

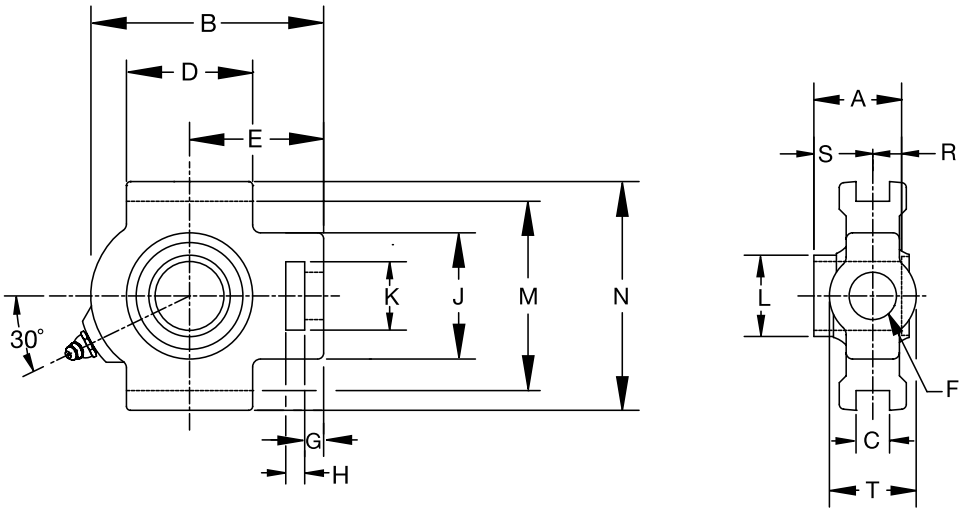

Series	Shaft Size	Part No.	Description
211	1-15/16	**076196**	WSTU-SCMED-115
	2	**076197**	WSTU-SCMED-200
	50mm	***076339***	*WSTU-SCMED-50M*
212	2-3/16	**076198**	WSTU-SCMED-203
	2-1/4	**@**	WSTU-SCMED-204
	55mm	***076340***	*WSTU-SCMED-55M*
214	2-7/16	**076199**	WSTU-SCMED-207
	2-1/2	**076200**	WSTU-SCMED-208
	65mm	***076341***	*WSTU-SCMED-65M*
215	2-11/16	**076201**	WSTU-SCMED-211
	70mm	***076342***	WSTU-SCMED-70M
216	2-15/16	**076202**	WSTU-SCMED-215
	3	**076203**	WSTU-SCMED-300
	75mm	***076343***	*WSTU-SCMED-75M*

@ Assembled to order

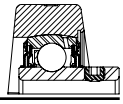

Extreme Duty Setscrew Ball Bearings

SCMED MEDIUM DUTY WIDE SLOT TAKE-UP BEARINGS

Series	Shaft Size	Weight lbs. kgs.	Take-Up Frame No. Ref.	A	B	C*	D	E	F Screw Dia.	G
211	1-15/16 2 *50mm*	10.1 10.2 *4.7*	WS502	1-27/32 *46.8*	6-11/16 *159.9*	1-1/16 *27.0*	3-3/4 *95.3*	4-3/16 *106.4*	1-1/4 *31.8*	3/4 *19.1*
212	2-3/16 2-1/4 *55mm*	11.4 11.2 *5.1*	WS502	1-63/64 *50.4*	7-1/2 *190.5*	1-1/16 *27.0*	4 *101.60*	4-11/16 *119.1*	1-1/4 *31.8*	3/4 *19.1*
214	2-7/16 2-1/2 *65mm*	18.2 18.0 *8.1*	WS515	2-15/64 *56.8*	8-9/16 *217.5*	1-1/16 *27.0*	4-3/4 *120.7*	5-3/8 *136.5*	1-1/2 *38.1*	13/16 *20.6*
215	2-11/16 *70mm*	19.0 *8.9*	WS515	2-9/32 *57.9*	9-1/8 *231.8*	1-1/16 *27.0*	4-3/4 *120.7*	5-1/2 *139.7*	1-1/2 *38.1*	13/16 *20.6*
216	2-15/16 3 *75mm*	21.7 21.5 *9.5*	WS608	2-11/64 *55.2*	9-1/8 *231.8*	1-1/16 *27.0*	4-3/4 *120.7*	5-1/2 *139.7*	1-1/2 *38.1*	13/16 *20.6*

Series	Shaft Size	H	J	K	L	M#	N	R	S	T
211	1-15/16 2 *50mm*	1 *25.4*	4 *101.6*	2-1/2 *63.5*	2-23/32 *69.1*	5-1/8 *130.2*	5-7/8 *149.2*	5/8 *15.9*	1-7/32 *31.0*	2-1/2 *63.5*
212	2-3/16 2-1/4 *55mm*	1-1/4 *31.8*	4 *101.60*	2-1/2 *63.5*	2-31/32 *75.4*	5-1/8 *130.2*	5-7/8 *149.2*	43/64 *17.1*	1-5/16 *33.3*	2-1/2 *63.5*
214	2-7/16 2-1/2 *65mm*	1-1/4 *31.8*	4-3/8 *111.1*	2-3/4 *69.9*	3-5/16 *84.1*	5-15/16 *150.8*	6-9/16 *166.7*	51/64 *20.2*	1-7/16 *36.5*	2-3/4 *69.9*
215	2-11/16 *70mm*	1-1/4 *31.8*	4-3/8 *111.1*	2-3/4 *69.9*	3-5/8 *92.1*	5-15/16 *150.8*	6-11/16 *169.9*	13/16 *20.6*	1-15/32 *37.3*	2-3/4 *69.9*
216	2-15/16 3 *75mm*	1-1/4 *31.8*	4-3/8 *111.1*	2-3/4 *69.9*	3-53/64 *97.2*	6-1/2 *165.1*	7-1/4 *184.2*	43/64 *17.1*	1-1/23 *38.1*	2-3/4 *69.9*

**+ or -.015, + or -.38mm* *#+.010, -.020" +.25mm, -.50mm*

Extreme Duty Setscrew Ball Bearings

SCED NORMAL DUTY BEARING INSERTS

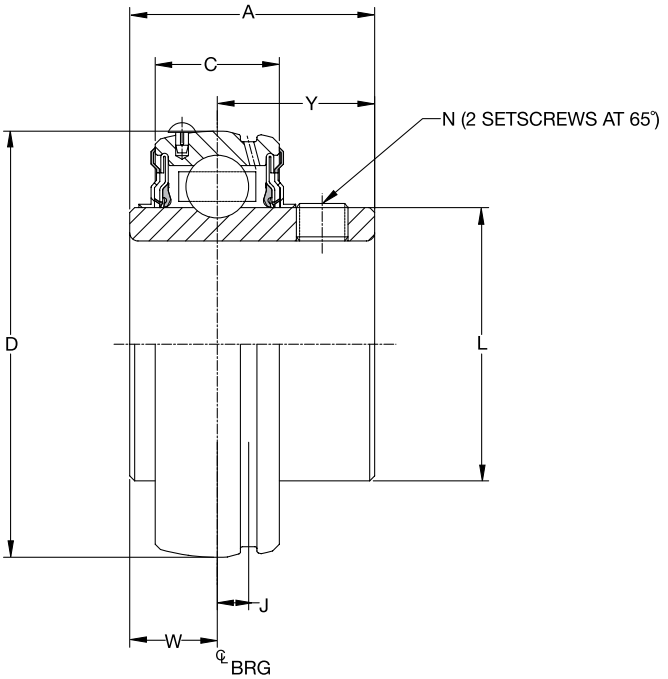

Series	Shaft Size	Standard Insert Part No.	Description	Weight Lbs kg	A	C	D	J	L	N	W	Y
204	1/2	@	INS-SCED-008L	.38	1-5/32	.5906	1.8504	0.152	1-1/8	10-32	27/64	47/64
	5/8	@	INS-SCED-010L	.35						10-32		
	3/4	**076108**	INS-SCED-012	.32						1/4-28		
	13/16	**076111**	INS-SCED-103	.29						1/4-28		
	20mm	*@*	*INS-SCED-20M*	*.16*	*29.4*	*15.0*	*47.0*	*3.9*	*28.6*	*M6x1*	*10.7*	*18.7*
205	7/8	@	INS-SCED-014	.43	1-3/16	.5906	2.0472	.152	1-21/64	1/4-28	27/64	49/64
	15/16	@	INS-SCED-015	.40								
	1	**076109**	INS-SCED-100	.37								
	25mm	***076286***	*INS-SCED-25M*	*.18*	*30.2*	*15.0*	*52.0*	*3.9*	*33.7*	*M6x1*	*10.7*	*19.4*
206	1-1/16	@	INS-SCED-101	.67	1-25/64	.7067	2.4409	.190	1-37/64	5/16-24	31/64	29/32
	1-1/8	**076110**	INS-SCED-102	.63						5/16-24		
	1-3/16	**076111**	INS-SCED-103	.60						5/16-24		
	1-1/4	**076112**	INS-SCED-104S	.58						1/4-28		
	30mm	***076287***	*INS-SCED-30M*	*.27*	*35.3*	*18.0*	*62.0*	*4.8*	*40.1*	*M8x1.25*	*12.3*	*23.0*
207	1-1/4	**076113**	INS-SCED-104	1.02	1-17/32	.7480	2.8346	.202	1-27/32	5/16-24	1/2	1-1/32
	1-5/16	@	INS-SCED-105	.97								
	1-3/8	**076114**	INS-SCED-106	.92								
	1-7/16	**076115**	INS-SCED-107	.86								
	35mm	***076288***	*INS-SCED-35M*	*.44*	*38.9*	*19.0*	*72.0*	*5.1*	*46.8*	*M8x1.25*	*12.7*	*26.2*

@ Assembled to order

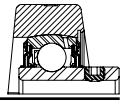

Extreme Duty Setscrew Ball Bearings

SCED NORMAL DUTY BEARING INSERTS

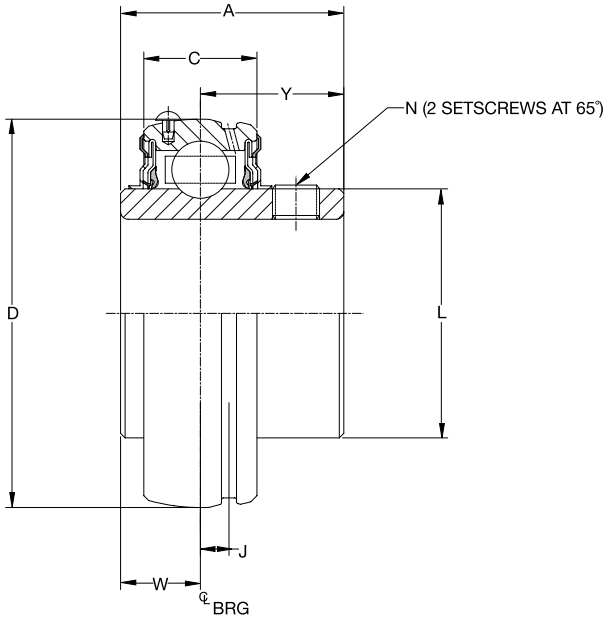

Series Size	Shaft	Standard Insert Part No.	Description	Weight Lbs kg	A	C	D	J	L	N	W	Y
208	1-1/2	**076116**	INS-SCED-108	1.27	1-11/16	.8661	3.149	.224	2-3/64	5/16-24	19/32	1-3/32
	1-5/8	**@**	INS-SCED-110	1.13								
	40mm	***076289***	*INS-SCED-40M*	*0.51*	*42.9*	*22.0*	*80.0*	*5.7*	*52.0*	*M8x1.25*	*15.1*	*27.8*
209	1-5/8	**@**	INS-SCED-110L	1.49	1-23/32	.8661	3.3465	.248	2-7/32	5/16-24	19/32	1-1/8
	1-11/16	**076117**	INS-SCED-111	1.43								
	1-3/4	**076118**	INS-SCED-112	1.36								
	1-13/16	**@**	INS-SCED-113	1.30								
	45mm	***076290***	*INS-SCED-45M*	*0.62*	*43.7*	*22.0*	*85.0*	*6.3*	*56.4*	*M8x1.25*	*15.1*	*28.6*
210	1-15/16	**076119**	INS-SCED-115	1.48	1-3/4	.8661	3.5433	.248	2-7/16	3/8-24	19/32	1-5/32
	2	**076120**	INS-SCED-200	1.39								
	50mm	***076291***	*INS-SCED-50M*	*0.67*	*44.5*	*22.0*	*90.0*	*6.3*	*61.9*	*M10x1.5*	*15.1*	*29.4*
211	2	**076211**	INS-SCMED-200	2.26	1-27/32	.9449	3.9370	.267	2-23/32	3/8-24	5/8	1-7/32
	2-3/16	**076121**	INS-SCED-203	1.97								
	2-1/4	**@**	INS-SCED-204	1.87								
	55mm	***076292***	*INS-SCED-55M*	*0.89*	*46.8*	*24.0*	*100.0*	*6.8*	*69.1*	*M10x1.5*	*15.9*	*31.0*
212	2-1/4	**@**	INS-SCMED-204	2.85	1-63/64	1.0240	4.3307	.250	2-31/32	3/8-24	43/64	1-5/16
	2-7/16	**076122**	INS-SCED-207	2.49								
	60mm	***076293***	*INS-SCED-60M*	*1.13*	*50.4*	*26.0*	*110.0*	*6.4*	*75.4*	*M10x1.5*	*17.1*	*33.3*
214	2-1/2	**076214**	INS-SCMED-208	4.25	2-15/64	1.1020	4.9213	.264	3-5/16	3/8-24	51/64	1-7/16
	2-11/16	**076123**	INS-SCED-211	3.60								
	70mm	***076294***	*INS-SCED-70M*	*1.63*	*56.8*	*28.0*	*125.0*	*6.7*	*84.1*	*M10x1.5*	*20.2*	*36.5*
215	2-15/16	**076124**	INS-SCED-215	3.86	2-9/32	1.1420	5.1181	.265	3-5/8	3/8-24	13/16	1-15/32
	75mm	***076295***	*INS-SCED-75M*	*1.75*	*57.9*	*29.0*	*130.0*	*6.7*	*92.1*	*M10x1.5*	*20.6*	*37.3*
218	*90mm*	*@*	*INS-SCED-90M*	*3.30*	*63.1*	*34.0*	*160.0*	*7.6*	*110.7*	*M10x1.5*	*23.4*	*39.7*

@ Assembled to order. * 20 piece minimum

Extreme Duty Setscrew Ball Bearings

SCMED MEDIUM DUTY BEARING INSERTS

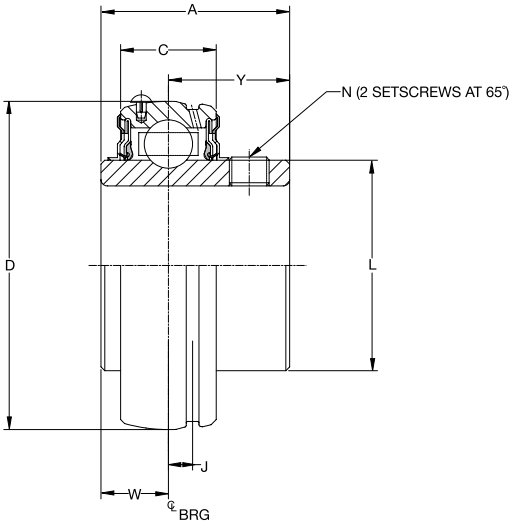

Series	Shaft Size	Standard Insert Part No.	Description	Weight Lbs. kg	A	C	D	J	L	N	W	Y
206	1	**076204**	INS-SCMED-100	0.71	1-25/64	.7067	2.4409	.190	1-37/64	5/16-24	31/64	29/32
	25mm	***076344***	*INS-SCMED-25M*	*0.32*	*35.3*	*18.0*	*62.0*	*4.8*	*40.1*	*M8x1.25*	*23.0*	*23.0*
207	1-3/16	**076205**	INS-SCMED-103	1.07	1-17/32	.7480	2.8346	.202	1-27/32	5/16-24	1/2	1-1/32
	1-1/4	**076113**	INS-SCED-104	1.02								
	30mm	***076287***	*INS-SCED-30M*	*0.53*	*38.9*	*19.0*	*72.0*	*5.1*	*46.8*	*M8x1.25*	*12.7*	*26.2*
208	1-7/16	**076206**	INS-SCMED-107	1.32	1-11/16	.8661	3.1496	.224	2-3/64	5/16-24	19/32	1-3/32
	1-1/2#	**076116**	INS-SCED-108	1.27								
	35mm	***076346***	*INS-SCMED-35M*	*0.60*	*42.9*	*22.0*	*80.0*	*5.7*	*52.0*	*M8x1.25*	*15.1*	*27.8*
209	1-1/2	**076207**	INS-SCMED-108	1.62	1-23/32	.8661	3.3465	.248	2-7/32	5/16-24	19/32	1-1/8
	1-5/8	**@**	INS-SCED-110L	1.49								
	40mm	***076347***	*INS-SCMED-40M*	*0.71*	*43.7*	*22.0*	*85.0*	*6.3*	*56.4*	*M8x1.25*	*15.1*	*28.6*
210	1-11/16	**076208**	INS-SCMED-111	1.82	1-3/4	.8661	3.5433	.248	2-7/16	3/8-24	19/32	1-5/32
	1-3/4	**076209**	INS-SCMED-112	1.74								
	45mm	***076348***	*INS-SCMED-45M*	*0.76*	*44.5*	*22.0*	*90.0*	*6.3*	*61.9*	*M10x1.5*	*15.1*	*29.4*
211	1-15/16	**076210**	INS-SCMED-115	2.36	1-27/32	.9449	3.9370	.267	2-23/32	3/8-24	5/8	1-7/32
	2	**076211**	INS-SCMED-200	2.26								
	50mm	***076349***	*INS-SCMED-50M*	*1.03*	*46.8*	*24.0*	*100.0*	*6.8*	*69.1*	*M10x1.5*	*15.9*	*31*
212	2-3/16	**076212**	INS-SCMED-203	2.97	1-63/64	1.0240	4.3307	.250	2-31/32	3/8-24	43/64	1-5/16
	2-1/4	**@**	INS-SCMED-204	2.85								
	55mm	***076350***	*INS-SCMED-55M*	*1.27*	*50.4*	*26.0*	*110.0*	*6.4*	*75.4*	*M10x1.5*	*17.1*	*33.3*
214	2-7/16	**076213**	INS-SCMED-207	4.39	2-15/64	1.1020	4.9213	.265	3-5/16	3/8-245	51/64	1-7/16
	2-1/2	**076214**	INS-SCMED-208	4.25								
	60mm	***076351***	*INS-SCMED-65M*	*1.86*	*56.8*	*28.0*	*110.0*	*6.7*	*84.1*	*M10x1.*	*20.2*	*36.5*
215	2-11/16	**076215**	INS-SCMED-211	4.49	2-9/32	1.1420	5.1181	.265	3-5/8	3/8-24	13/16	1-15/32
	70mm	***076352***	*INS-SCMED-70M*	*1.98*	*57.9*	*29.0*	*130.0*	*6.7*	*92.1*	*M10x1.5*	*20.6*	*37.3*
216	2-15/16	**076216**	INS-SCMED-215	5.54	2-11/32	1.1810	5.5118	.285	3-53/64	3/8-24	43/64	1-1/2
	3	**076217**	INS-SCMED-300	5.52								
	75mm	***076353***	*INS-SCMED-75M*	*2.51*	*59.5*	*30.0*	*140.0*	*7.2*	*97.2*	*M10x.15*	*17.1*	*38.1*
218	3-7/16	**076218**	INS-SCMED-307	7.35	2-31/64	1.3400	6.2992	.300	4-23/64	3/8-24	59/64	1-9/16
	3-1/2	**076219**	INS-SCMED-308	7.33								
	85mm	***076354***	*INS-SCMED-85M*	*3.33*	*63.1*	*34.0*	*160.0*	*7.6*	*110.7*	*M10x1.5*	*23.4*	*39.7*

@ Assembled to order

SCM Piloted Flange Only

Extreme Duty Ball Bearing
END CLOSURES

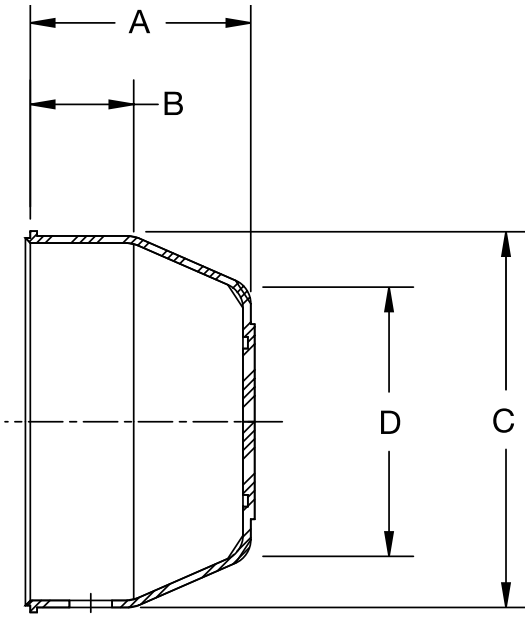

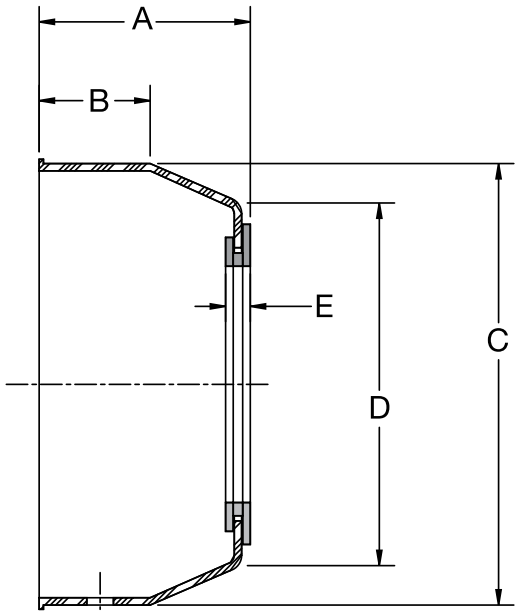

Series	Closed End Closure	
	Part Number	Description
204	**128280**	EC-204-Y
205	**128281**	EC-205-Y
206	**128282**	EC-206-Y
207	**128283**	EC-207-Y
208	**128284**	EC-208-Y
209	**128285**	EC-209-Y
210	**128286**	EC-210-Y
211	**128277**	EC-211-Y
212	**128278**	EC-212-Y

Open End Closure		
Shaft Size	Part Number	Description
3/4	**128350**	ECO-012-Y
20mm	**128363**	ECO-20M-Y
1	**128351**	ECO-100-Y
25mm	**128364**	ECO-25M-Y
1-3/16	**128352**	ECO-103-Y
1-1/4	**128353**	ECO-104S-Y
30mm	**128365**	ECO-30M-Y
1-1/4	**128355**	ECO-104-Y
1-7/16	**128354**	ECO-107-Y
35mm	**128366**	ECO-35M-Y
1-1/2	**128356**	ECO-108-Y
40mm	**128367**	ECO-40M-Y
1-11/16	**128357**	ECO-111-Y
45mm	**128368**	ECO-45M-Y
1-15/16	**128358**	ECO-115-Y
50mm	**128369**	ECO-50M-Y

Extreme Duty Polymer and Stainless Steel Housed Mounted Bearings

Open Cover Extreme Duty Dimensions

Series	Shaft Size	A	B	C	D	E
204	3/4 *20mm*	1-3/16 *30.2*	17/32 *13.5*	1-29/32 *48.4*	1-3/8 *35.1*	3/16 *4.9*
205	1 *25mm*	1-1/4 *31.8*	17/32 *13.5*	2-11/64 *55.1*	1-39/64 *40.9*	3/16 *4.9*
206	1-3/16 1-1/4 *30mm*	1-25/64 *35.3*	9/16 *14.2*	2-1/2 *63.5*	31/32 *50.0*	3/16 *4.9*
207	1-1/4 1-7/16 *35mm*	1-17/32 *38.9*	11/16 *17.5*	2-29/32 *73.9*	2-5/16 *58.9*	3/16 *4.9*
208	1-1/2 *40mm*	1-19/32 *40.6*	11/16 *17.5*	3-5/16 *84.1*	2-49/64 *70.1*	13/64 *5.1*
209	1-11/16 *45mm*	1-21/32 *41.9*	23/32 *18.3*	3-1/2 *88.9*	2-7/8 *72.9*	13/64 *5.1*
210	1-15/16 *50mm*	1-23/32 *43.7*	29/32 *23.1*	3-5/8 *91.4*	3 *76.2*	13/64 *5.1*

Closed Cover Extreme Duty Dimensions

Series	A	B	C	D
204	1-1/8 28.7	17/32 13.5	1-29/32 48.4	1-3/8 35.1
205	3/16 30.2	17/32 13.5	2-11/64 55.1	1-39/64 40.9
206	1-21/64 33.8	9/16 14.2	2-1/2 63.5	31/32 50.0
207	1-15/32 37.3	11/16 17.5	2-29/32 73.9	2-5/16 58.9
208	1-35/64 39.1	11/16 17.5	3-5/16 84.1	2-49/64 70.1
209	1-19/32 40.4	23/32 18.3	3-1/2 88.9	2-7/8 72.9
210	1-21/32 42.2	29/32 23.1	3-5/8 91.4	3 76.2
211	1-51/64 45.5	31/32 24.6	3-15/16 100.1	3-19/64 83.6
212	1-29/32 48.3	1 25.4	4-3/8 111.3	3-21/32 92.7

Dodge IMPERIAL-HD and S2000-HD

Dodge IMPERIAL-HD & S2000-HD mounted bearings feature proven Imperial & S2000 technology deployed in steel housings designed specifically for harsh applications that demand superior housing strength. Major features include choice of adapter or set screw mounting systems, high capacity cast steel housings with industry common dimensions, as well as high capacity, double row spherical inserts that are protected with either one of two effective sealing systems plus both closed & shaft through end covers.
In addition, IMPERIAL-HD & S2000-HD feature single piece, sealed inserts that can be easily replaced in the field, without the time & trouble of a bearing tear down & rebuild. Field conversion between Non-Expansion & Expansion (fixed & float) can also be accomplished in the field with the repositioning of a single snap ring.

Housing configurations include two and four bolt base pillow blocks, four bolt flanges, piloted flanges, and narrow piloted "Edger" flanges.

IMPERIAL-HD and S2000-HD

Patented Sealing Systems Maximize Bearing Life

TRIDENT™ seals for low to medium speed

- Face rubbing triple lip seal
- Flinger to shield seal and bearing from contamination/ damage
- Seal/land positive contact up to ±1 degree of misalignment
- Patented design

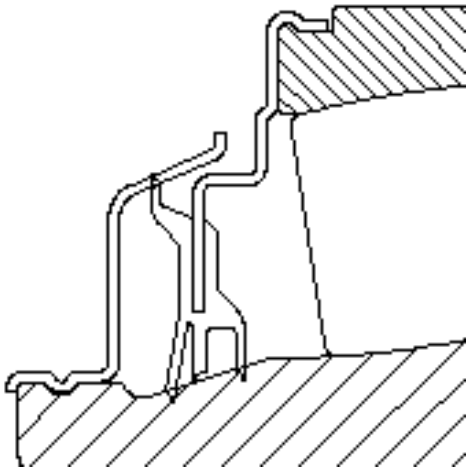

Labyrinth seals for higher speeds or high temperatures

- High speed for relatively clean or hot environments
- 15% increase in maximum speed over standard SAF adapter mounted sphericals of the same shaft size
- Flinger to shield seal and bearing from contamination/ damage
- Seal operates up to ±1 degree of misalignment
- Patented design

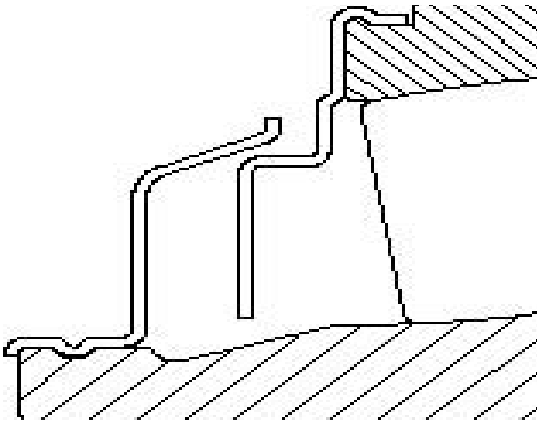

Dodge IMPERIAL-HD

Dodge IMPERIAL-HD mounted bearings feature proven Dodge Imperial bearing insert technology deployed in steel housings designed specifically for harsh applications that demand superior housing strength. Major features include…

- Imperial patented push-pull adapter mounting system
- High capacity cast steel housing
- Same dimensions as cast iron Imperial products
- Also available in popular “Type E” dimensioned housings
- Proven, high capacity spherical rollers
- Effective sealing systems for tough applications
- Closed & shaft through end covers
- Sealed inserts that can be easily replaced in the field
- Field convertible between Expansion & Non-Expansion

Two bolt pillow blocks – 1-1/8 to 4”
Four bolt pillow blocks – 2-3/8 to 5”
Four bolt square flange – 1-1/8 to 4”
Piloted flange – 1-1/8 to 5”
Narrow piloted “Edger” flange – 1-7/16 to 4-7/16”

“E” Dimensioned IMPERIAL-HD

Two bolt pillow blocks – 1-3/8 to 3-1/2”
Four bolt pillow blocks – 2-1/4 to 5”
Four bolt square flange – 1-3/8 to 4-1/2”

IMPERIAL-HD

Dodge IMPERIAL-HD

Patented Adapter System Offers Quick Installation And Removal

The DODGE IMPERIAL bearing uses a thin wall push-pull adapter system that achieves clearance setting without the use of feeler gauges. The IMPERIAL bearing is installed by turning the locknut clockwise and removed by a counterclockwise rotation.

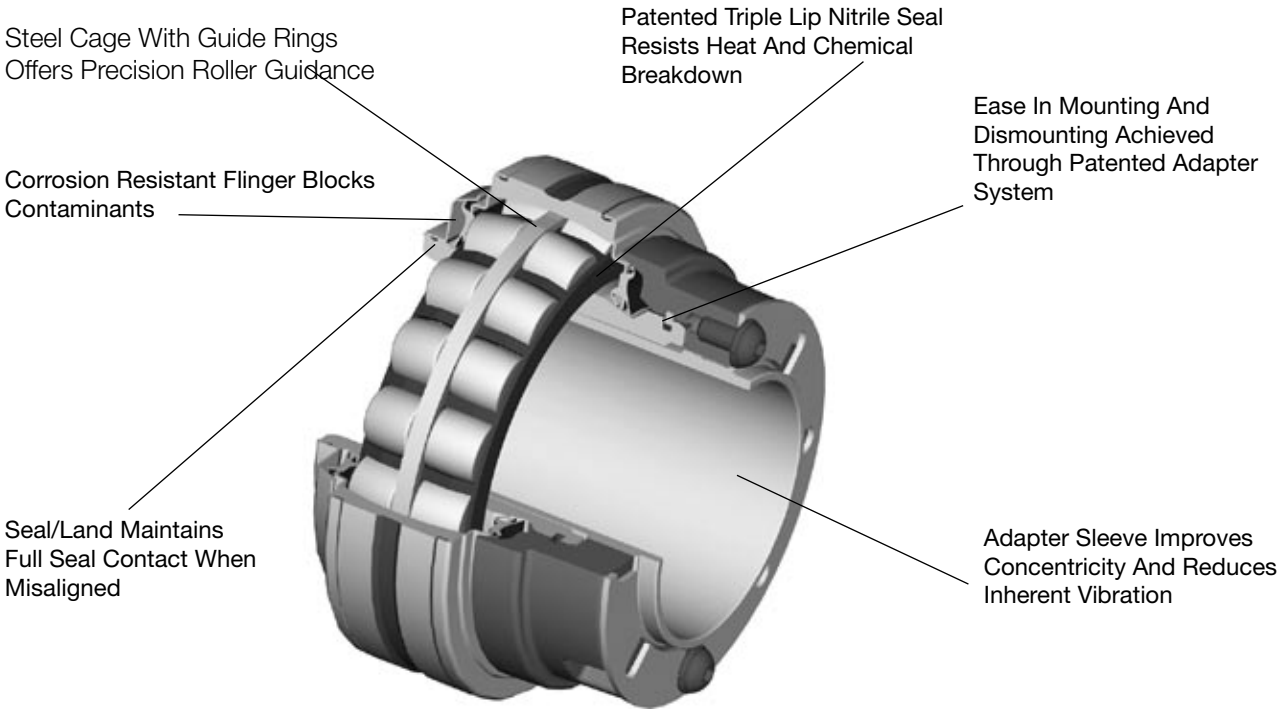

Installation And Removal Savings . . . . .

- Factory lubed, sealed and adjusted, ready to slip onto the shaft
- IMPERIAL adapter sleeve concentricity virtually eliminates fretting corrosion
- Field convertible from non-expansion to expansion and expansion to non-expansion
- Elongated pillow block bolt holes to facilitate mounting

How To Order

There are two ways to specify DODGE Bearings. Most of the product offerings have part numbers with listings shown throughout this catalog. Use of part numbers ensures accurate order processing.

When part numbers are not shown, the product may be specified by description or part name. This method is used when ordering units that include modifications or options. To order by description, use the nomenclature key shown on this page and add any special instructions to the end of the description for options not covered by the nomenclature.

DODGE Spherical Bearings are factory adjusted and pre-lubricated. For applications where extreme ambient temperatures, high speeds, or high loads are expected, a variety of specialty lubricants are available. Standard lubricant provided is a lithium complex based grease. High temperature greases available include Mobil HTS #2 and Mobilith SHC460. Other special lubricants are available upon request. Special lubricant options usually involve set-up charges, minimum quantities and list price premiums. To order, specify type of lubricant required at the end of the product name or after the standard part number.

Example: Grease — 071792 or 071650 except with Mobil HTS #2 grease

or

SP2BIP108R except with Mobil Grease HTS #2 grease

For applications requiring modifications not listed, we encourage you to contact our Application Engineering Department for Bearings at 864-284-5700.

Nomenclature

S E P2B - IP - 207 R E

HOUSING STYLE	BEARING TYPE	SIZE	SEAL	OTHER DATA

S — prefix denotes steel housing

E — prefix denotes Type E dimensioned housing with IMPERIAL spherical roller bearing insert*

HOUSING STYLE

- P2B = Pillow Block 2 Bolt Base
- P4B = Pillow Block 4 Bolt Base
- F4S = Flange Bearing 4 Bolt Base, Square
- FC = Piloted Flanged (Flanged Cartridge)
- FCN = Narrow Piloted Flange

BEARING TYPE

- IP = IMPERIAL
- S2 = S2000

SIZE

Inches and 16th
2 = 2”
07 = 7/16”
207 - 2-7/16”

SEAL

- R = TRIDENT Triple Lip Rubbing Seal
- L = Labyrinth Metallic Seal

OTHER DATA

- E = Expansion Type Bearing - If “E” Does Not Appear, Bearing Is Non-Expansion Type

IMPERIAL-HD
INCH

DODGE Spherical Bearings, including IMPERIAL bearings, are general-purpose, high-capacity, double-row spherical roller bearings. All IMPERIAL bearings are mounted in single-piece, precision-machined housings. Bearings are mounted to shafts by means of a patented adapter system that improves concentricity and reduces inherent vibration.

ASTMA A-27 Grade 70-36 Class 1 steel is the standard material used in steel IMPERIAL HD housings. Housing designs are available for survival in extremely harsh environments, through the use of special finishes and stainless hardware.

Housings are available in a variety of standard configurations, including pillow blocks, flanges, piloted flanges and take-up bearings. TRIDENT triple lip contact seals and Labyrinth seals are available on IMPERIAL bearings.

IMPERIAL-HD Spherical Roller Bearing

DODGE Spherical Roller Bearings have the capacity to carry heavy radial loads and combined radial and thrust loads. The maximum recommended load which can be applied is limited by various components in the system such as bearing, housing, shaft, shaft attachment, speed and life requirements as listed in this catalog. DODGE spherical roller bearings have been applied successfully even when these limits have been exceeded under controlled operating conditions. Contact DODGE Application Engineering (864-284-5700) for applications which exceed the recommendations of this catalog.

L_{10} Hours Life - The life which may be expected from at least 90% of a given group of bearings operating under identical conditions.

$$L_{10}\text{ Life, Hours} = \left(\frac{C}{P}\right)^{10/3} X \left(\frac{16667}{RPM}\right)$$

Where:

C = Dynamic Capacity (Table 1 on page B4-12 for IMPERIAL), lbs.

P = Equivalent Radial Load, lbs.

GENERAL

Heavy Service - For heavy shock loads, frequent shock loads, or severe vibrations, add up to 50% (according to severity of conditions) to the Equivalent Radial Load to obtain a Modified Equivalent Radial Load. Consult DODGE Application Engineering for additional selection assistance.

Thrust load values shown in the table below are recommended as a guide for general applications that will give adequate L_{10} life. Spherical bearings require a radial load at least equal to the thrust load for proper operation. If the thrust load exceeds this limit, consult Application Engineering. Where substantial radial load is also present, it is advisable to calculate actual L_{10} life to assure that it meets the requirements. The effectiveness of the shaft attachment to carry thrust load depends on proper tightening of the bearing to the shaft. Therefore, it is advisable to use auxiliary thrust carrying devices such as shaft shoulder, snap ring or a thrust collar to locate the bearing under thrust loads heavier than shown below, or where extreme reliability is desired.

RPM	20- 200	201-2000	Over 2000
RECOMMENDED THRUST LOAD	C/20	C/40	C/60

The shaft tolerances recommended below are adequate for normal radial and radial/thrust load applications. Since the allowable load, especially at a low speed, is very large, the shaft should be checked to assure adequate shaft strength.

The magnitude and direction of both the thrust and radial load must be taken into account when selecting a housing. **When pillow blocks are utilized, heavy loads should be directed through the base. Where cap loads are involved, see Table 3 on page B4-15 for maximum values.** Where a load pulls the housing away from the mounting base, both the hold-down bolts and housing must be of adequate strength. Auxiliary load carrying devices such as shear bars are advisable for side or end loading of pillow blocks and radial loads for flange units.

SHAFT TOLERANCES

	Tolerance, Inches
Up To 1-1/2”	+.000 -.002”
1-9/16 to 2-1/2”	+.000 -.003”
2-5/8 to 4”	+.000 -.004”
4-3/16 to 6”	+.000 -.005”
6-7/16” and above	+.000 -.006”

BEARING SUPPORTING RADIAL LOADS ONLY

1. Define L_{10} Life Hours desired.
2. Establish bearing radial load, F_R
   (F_R = P for Pure Radial Load Conditions). The DODGE program BEST★ can be used to find application loads.
3. Establish RPM.

Using the easy selection Table 2 on page B4-13 for IMPERIAL, find, under the RPM column, the equivalent radial load that equals or is slightly higher than the application radial load for the desired life. The shaft size on the far left will be the minimum shaft size that you can use for your application.

If the desired life is different than the values shown on the chart, use alternate Method A shown below.

Example:
1. L_{10} Life = 30,000 Hours
2. Radial load = 4000 lbs.
3. RPM = 1,000

At the intersection of the 1,000 RPM column and the 30,000 hours L_{10} life row, the equivalent radial load of 4116 lbs. exceeds the 4000 lbs. radial load for shaft size 2-3/8” to 2-1/2”. A bearing with bore ranging from 2-3/8” to 2-1/2”, or larger, may be used for this application.

IMPERIAL-HD Spherical Roller Bearing

ALTERNATE METHOD A - SELECTING A BEARING FOR AN L_{10} LIFE VALUE NOT SHOWN IN THE EASY SELECTION CHART.

The L_{10} life equation can be rearranged so that the bearing dynamic capacity C is identified in terms of L_{10}, RPM and P

$$C = \left(\frac{L_{10} \text{ X RPM}}{16667} \right)^{0.3} \text{ X P}$$

(P = FR for Pure Radial Load Conditions)

Since the L_{10}, RPM and P are known, solve for C. Select from the dynamic capacity column on Table 1 the C value equal to or greater than the C value just calculated. The bore size on the far left represents the proper bore size selection. Check that the application RPM does not exceed the MAX. RPM from Table 1. When selecting an L_{10} life of less than 30,000 hours, particular attention must be paid to shaft deflection and proper lubricant selection.

SELECTING BEARINGS SUPPORTING COMBINATION RADIAL AND THRUST LOADS

When a bearing supports both a radial load and a thrust load, the loading on the two rows is shared unequally depending on the ratio of thrust to radial load. The use of the X (radial factor) and Y (thrust factor) from Table 1 converts the applied thrust load and radial load to an equivalent radial load having the same effect on the life of the bearing as a radial load of this magnitude.

The equivalent radial load P = XFR + YFA

Where:

P = Equivalent radial load, lbs.
FR = Radial load, lbs. (see Table 1 for allowable slip fit maximum load)
FA = Thrust (axial) load, lbs.
e = Thrust load to radial load factor (Table 1)
X = Radial load factor (Table 1)
Y = Thrust load factor (Table 1)

To find X and Y, calculate F_A/F_R and compare to e for the selected bore size. Determine X and Y from Table 1 on page B4-12 depending on whether F_A/F_R is equal to or less than e, or F_A/F_R is greater than e. Substitute all known values into the equivalent radial load equation. P (equivalent radial load) can be used in the life formula to determine L_{10}, or it can be compared to the allowable equivalent radial load ratings for the speed and hours life desired in the easy selection.

SELECTING BEARINGS SUPPORTING ONLY THRUST LOADS

Spherical Roller Bearings generally are not recommended for pure thrust load applications. However, they will perform satisfactorily under very light pure thrust loads. Consult DODGE Application Engineering (864-284-5700).

SELECTING LUBRICATION

IMPERIAL spherical roller bearings are lubricated at the factory with Exxon Ronex MP grease for sizes up to 5”. Above 5”, Mobillux EP #2 is used. Exxon Ronex MP is a superior industrial grease with a lithium complex thickener and highly refined base oil. Mobilux EP#2 is a superior industrial grease using a lithium hydroxystearate thickener and highly refined base oil. This grease will adequately handle low and medium speeds with low and medium loads at normal temperatures on Table 3 on page B4-16. For very low and high speeds, for heavy loads, and for low and high temperatures, special greases may be used. Contact DODGE Application Engineering (864-284-5700), DODGE engineers will recommend bearings and lubricants for the above unusual conditions. DODGE also has the expertise to custom design and build special bearings for your needs. The only maintenance requirement for DODGE Spherical roller bearings is periodic relubrication at regular intervals as outlined in the appropriate instruction manuals.

MISALIGNMENT CONSIDERATIONS

In nearly all applications good design practice requires two bearings supporting the shaft. In cases where three or more bearings are installed, unless precautions are taken to line the bearings up, both vertically and horizontally, it is possible to induce heavy loads. In the case of two bearings, alignment is not as critical, especially with DODGE Unitized Spherical Roller Bearings. IMPERIAL bearings are designed to allow a maximum of ±1° of static and dynamic misalignment. To ensure good alignment, mounting surfaces must be checked for flatness and must lie in the same plane. When tightening base bolts, each bolt should be alternately tightened in incremental torque values until full torque is achieved to prevent the angular shifting of the pillow block that occurs when one bolt is tightened to its full torque. Shimming may be required to minimize misalignment.

★ The DODGE Bearing Evaluation and Selection Technique (BEST) is a menu driven computer program that calculates bearing loads, fatigue life and operating temperature for a two bearing shaft system based on user supplied input parameters. This interactive program is available at www.ptwizard.com under the Product Selection area.

IMPERIAL-HD Spherical Roller Bearing

To find X and Y, calculate F_A/F_R and compare to e for the selected bore size. Determine X and Y from Table 1 on page B4-12 depending on whether F_A/F_R is equal to or less than e, or F_A/F_R is greater than e. Substitute all known values into the equivalent radial load equation. P (equivalent radial load) can be used in the life formula to determine L_{10}, or it can be compared to the allowable equivalent radial load ratings for the speed and hours life desired in the easy selection on page B4-13.

SELECTING BEARINGS SUPPORTING ONLY THRUST LOADS

Spherical Roller Bearings generally are not recommended for pure thrust load applications. However, they will perform satisfactorily under very light pure thrust loads. Consult DODGE Application Engineering (864-284-5700).

SELECTING LUBRICATION

IMPERIAL spherical roller bearings are lubricated at the factory with Exxon Ronex MP grease for sizes up to 5”. Above 5”, Mobillux EP #2 is used. Exxon Ronex MP is a superior industrial grease with a lithium complex thickener and highly refined base oil. Mobilux EP#2 is a superior industrial grease using a lithium hydroxystearate thickener and highly refined base oil. This grease will adequately handle low and medium speeds with low and medium loads at normal temperatures on Table 3 on page B4-16. For very low and high speeds, for heavy loads, and for low and high temperatures, special greases may be used. Contact DODGE Application Engineering (864-284-5700), DODGE engineers will recommend bearings and lubricants for the above unusual conditions. DODGE also has the expertise to custom design and build special bearings for your needs. The only maintenance requirement for DODGE Spherical roller bearings is periodic relubrication at regular intervals as outlined in the appropriate instruction manuals.

MISALIGNMENT CONSIDERATIONS

In nearly all applications good design practice requires two bearings supporting the shaft. In cases where three or more bearings are installed, unless precautions are taken to line the bearings up, both vertically and horizontally, it is possible to induce heavy loads. In the case of two bearings, alignment is not as critical, especially with DODGE Unitized Spherical Roller Bearings. IMPERIAL bearings are designed to allow a maximum of ±1° of static and dynamic misalignment. To ensure good alignment, mounting surfaces must be checked for flatness and must lie in the same plane. When tightening base bolts, each bolt should be alternately tightened in incremental torque values until full torque is achieved to prevent the angular shifting of the pillow block that occurs when one bolt is tightened to its full torque. Shimming may be required to minimize misalignment.

IMPERIAL-HD Spherical Roller Bearing

Table 1: IMPERIAL Spherical Roller Bearing

Shaft Size Inches	Basic Bearing Description	e	FA/FR<e		FA/FR>e		Adapter Maximum Thrust Load Pounds	Dynamic Capacity (C) Pounds	Static Capacity (Co) Pounds	Maximum Speed*		Maximum ISAF Expansion Capability Inches
			X	Y	X	Y				Labyrinth RPM	TRIDENT RPM	
1-1/8 1-3/16 1-1/4 1-3/8 1-7/16 1-1/2	22208	0.28	1.0	2.4	0.67	3.6	620	20,800	21,000	6,000	3,975	7/32
1-1/2 ** 1-5/8 1-11/16 1-3/4	22209	0.26	1.0	2.6	0.67	3.9	700	20,800	22,000	5,600	3,725	7/32
1-3/4 ** 1-7/8 1-15/16 2	22210	0.24	1.0	2.8	0.67	4.2	775	22,000	24,000	5,300	3,520	17/64
2-3/16 2-1/4	22211	0.23	1.0	2.9	0.67	4.3	930	27,000	29,000	4,500	3,000	7/32
2-1/4 ** 2-3/8 2-7/16 2-1/2	22213	0.24	1.0	2.8	0.67	4.2	1,360	39,000	47,500	3,800	2,400	5/16
2-11/16 2-3/4 2-15/16 3	22215	0.22	1.0	3.1	0.67	4.6	1,570	41,500	53,000	3,400	2,250	15/64
3-3/16 3-1/4 3-7/16 3-1/2	22218	0.23	1.0	2.9	0.67	4.3	2,430	65,500	81,500	2,600	1,825	3/8
3-11/16 3-15/16 4	22220	0.24	1.0	2.8	0.67	4.2	3,100	83,000	104,000	2,200	1,530	3/8
4-7/16 4-1/2	22222	0.25	1.0	2.7	0.67	4.0	3,930	104,000	132,000	2,000	1,325	3/8
4-15/16 5	22226	0.26	1.0	2.6	0.67	3.9	5,610	146,000	196,000	1,800	1,175	3/8

* Maximum grease speed is dependent on load and ambient conditions, consult Dodge Engineering

** IMPERIAL - Type E Dimensional Housing

IMPERIAL-HD Spherical Roller Bearing

Table 2: Allowable Equivalent Radial Load Rating (lbs) at Various Revolutions per Minute

Size Inches	L_{10} Life Hours	Allowable Equivalent Radial Load Rating (lbs.) at Various Revolutions per Minute										
		50	100	150	250	500	750	1,000	1,300	1,500	1,700	1,800
1-1/8 to 1-1/2	10,000	7498	6090	5393	4626	3758	3327	3052	2821	2703	2603	2559
	30,000	5393	4380	3878	3327	2703	2393	2195	2029	1944	1872	1840
	40,000	4947	4018	3558	3052	2479	2195	2014	1861	1783	1717	1688
	60,000	4380	3558	3150	2703	2195	1944	1783	1648	1579	1521	1495
	100,000	3758	3052	2703	2319	1883	1668	1530	1414	1355	1305	1282
*1-1/2 1-5/8 1-11/16 1-3/4	10,000	7,498	6,090	5,393	4,626	3,758	3,327	3,052	2,821	2,703	2,603	2,559
	30,000	5,393	4,380	3,878	3,327	2,703	2,393	2,195	2,029	1,944	1,872	1,840
	40,000	4,947	4,018	3,558	3,052	2,479	2,195	2,014	1,861	1,783	1,717	1,688
	60,000	4,380	3,558	3,150	2,703	2,195	1,944	1,783	1,648	1,579	1,521	1,495
	100,000	3,758	3,052	2,703	2,319	1,883	1,668	1,530	1,414	1,355	1,305	1,282
*1-3/4 1-7/8 1-15/16 2	10,000	7,930	6,441	5,704	4,893	3,975	3,519	3,228	2,984	2,859	2,753	2,706
	30,000	5,704	4,633	4,102	3,519	2,859	2,531	2,322	2,146	2,056	1,980	1,947
	40,000	5,232	4,250	3,763	3,228	2,622	2,322	2,130	1,969	1,886	1,816	1,786
	60,000	4,633	3,763	3,332	2,859	2,322	2,056	1,886	1,743	1,670	1,608	1,581
	100,000	3,975	3,228	2,859	2,452	1,992	1,764	1,618	1,496	1,433	1,380	1,356
2-3/16 to 2-1/4	10,000	9,733	7,905	7,000	6,005	4,878	4,319	3,962	3,662	3,508	3,379	3,322
	30,000	7,000	5,686	5,035	4,319	3,508	3,106	2,850	2,634	2,523	2,430	2,389
	40,000	6,421	5,216	4,618	3,962	3,218	2,850	2,614	2,416	2,315	2,229	2,191
	60,000	5,686	4,618	4,089	3,508	2,850	2,523	2,315	2,139	2,050	1,974	1,940
	100,000	4,878	3,962	3,508	3,010	2,445	2,165	1,986	1,835	1,758	1,694	1,665
*2-1/4 2-3/8 2-7/16 2-1/2	10,000	14058	11419	10111	8674	7046	6239	5723	5290	5068	4881	4798
	30,000	10111	8213	7272	6239	5068	4487	4116	3805	3645	3510	3451
	40,000	9275	7534	6671	5723	4649	4116	3776	3490	3343	3220	3165
	60,000	8213	6671	5907	5068	4116	3645	3343	3090	2960	2851	2803
	100,000	7046	5723	5068	4348	3531	3127	2868	2651	2540	2446	2405
2-11/16 to 3	10,000	14,959	12,151	10,759	9,230	7,497	6,639	6,090	5,629	5,392	5,194	5,105
	30,000	10,759	8,739	7,738	6,639	5,392	4,775	4,380	4,048	3,878	3,735	3,672
	40,000	9,870	8,017	7,098	6,090	4,946	4,380	4,018	3,714	3,558	3,427	3,368
	60,000	8,739	7,098	6,285	5,392	4,380	3,878	3,558	3,288	3,150	3,034	2,982
	100,000	7,497	6,090	5,392	4,626	3,758	3,327	3,052	2,821	2,703	2,603	2,559
3-3/16 to 3-1/2	10,000	23,611	19,178	16,981	14,569	11,833	10,478	9,612	8,884	8,511	8,197	5,795
	30,000	16,981	13,793	12,213	10,478	8,511	7,536	6,913	6,390	6,121	5,896	5,795
	40,000	15,577	12,653	11,203	9,612	7,807	6,913	6,341	5,861	5,615	5,408	5,316
	60,000	13,793	11,203	9,920	8,511	6,913	6,121	5,615	5,190	4,972	4,789	4,707
	100,000	11,833	9,612	8,511	7,302	5,931	5,251	4,817	4,453	4,266	4,108	4,038

Only the labyrinth seal (L seal) may be used to the right of the heavy line.

For applications in the dark shaded area, the maximum load for the specific speed is shown. The load does not correspond to the L_{10} shown at the left.

Applications in the light shaded area may require a high temperature lubrication, consult Dodge Engineering at (864) 284-5700

* IMPERIAL - Type E Dimensional Housing

IMPERIAL-HD Spherical Roller Bearing

Table 2: Allowable Equivalent Radial Load Rating (lbs) at Various Revolutions per Minute

Size Inches	L_{10} Life Hours	Allowable Equivalent Radial Load Rating (lbs.) at Various Revolutions per Minute										
		2,000	2,200	2,600	2,750	3,000	3,400	3,800	4,500	5,300	5600	6000
1-1/8 to 1-1/2	10,000	2479	2409	2292	2253	2195	2114	2045	1944	1851	1820	1783
	30,000	1783	1733	1648	1621	1579	1521	1471	1398	1331	1309	1282
	40,000	1636	1590	1512	1487	1448	1395	1349	1282	1221	1201	1176
	60,000	1448	1408	1339	1316	1282	1235	1195	1136	1081	1064	1042
	100,000	1243	1208	1149	1129	1100	1060	1025	974	928	912	894
*1-1/2 1-5/8 1-11/16 1-3/4	10,000	2,479	2,409	2,292	2,253	2,195	1,521	2,045	1,944	1,331	1,820	
	30,000	1,783	1,733	1,648	1,621	1,579	1,521	1,471	1,398	1,331	1,309	
	40,000	1,636	1,590	1,512	1,487	1,448	1,395	1,349	1,282	1,221	1,201	
	60,000	1,448	1,407	1,339	1,316	1,282	1,235	1,195	1,136	1,081	1,063	
	100,000	1,243	1,208	1,148	1,129	1,100	1,060	1,025	974	928	912	
*1-3/4 1-7/8 1-15/16 2	10,000	2,622	2,548	2,424	2,383	2,322	1,608	2,163	2,056	1,957		
	30,000	1,886	1,833	1,743	1,714	1,670	1,608	1,556	1,479	1,408		
	40,000	1,730	1,681	1,599	1,572	1,532	1,475	1,427	1,356	1,291		
	60,000	1,532	1,489	1,416	1,392	1,356	1,306	1,264	1,201	1,144		
	100,000	1,314	1,277	1,215	1,194	1,164	1,121	1,084	1,030	981		
2-3/16 to 2-1/4	10,000	3,218	3,127	2,975	2,925	2,050	2,745	2,655	2,523			
	30,000	2,315	2,249	2,139	2,104	2,050	1,974	1,909	1,815			
	40,000	2,123	2,063	1,963	1,930	1,880	1,811	1,751	1,665			
	60,000	1,880	1,827	1,738	1,709	1,665	1,603	1,551	1,474			
	100,000	1,613	1,567	1,491	1,466	1,428	1,376	1,330	1,265			
*2-1/4 2-3/8 2-7/16 2-1/2	10,000	4649	4518	4297	4225	4116	3964	3834				
	30,000	3343	3249	3090	3039	2960	2851	2758				
	40,000	3067	2980	2835	2787	2716	2616	2530				
	60,000	2716	2639	2510	2468	2405	2316	2240				
	100,000	2330	2264	2153	2118	2063	1987	1922				
2-11/16 to 3	10,000	4,946	3,457	4,572	4,496	4,380	4,219					
	30,000	3,558	3,457	3,288	3,233	3,150	3,034					
	40,000	3,263	3,171	3,016	2,966	2,890	2,783					
	60,000	2,890	2,808	2,671	2,626	2,559	2,464					
	100,000	2,479	2,409	2,291	2,253	2,195	2,114					
3-3/16 to 3-1/2	10,000	7,807	7,587	7,216								
	30,000	5,615	5,457	5,190								
	40,000	5,151	5,006	4,761								
	60,000	4,561	4,432	4,216								
	100,000	3,913	3,803	3,617								

Only the labyrinth seal (L seal) may be used to the right of the heavy line.

For applications in the dark shaded area, the maximum load for the specific speed is shown. The load does not correspond to the L_{10} shown at the left.

Applications in the light shaded area may require a high temperature lubrication, consult Dodge Engineering at (864) 284-5700

* IMPERIAL - Type E Dimensional Housing

IMPERIAL-HD Spherical Roller Bearing

Table 2: Allowable Equivalent Radial Load Rating (lbs) at Various Revolutions per Minute (continued)

Size Inches	L_{10} Life Hours	Allowable Equivalent Radial Load Rating (lbs.) at Various Revolutions per Minute										
		50	100	150	250	500	750	1,000	1,300	1,500	1,700	1,800
3-11/16 to 4	10,000	29,919	24,302	21,518	18,461	14,995	13,278	12,180	11,258	7,757	10,387	10,211
	30,000	21,518	17,478	15,476	13,278	10,785	9,549	8,760	8,097	7,757	7,471	7,344
	40,000	19,739	16,033	14,197	12,180	9,893	8,760	8,036	7,427	7,115	6,853	6,737
	60,000	17,478	14,197	12,571	10,785	8,760	7,757	7,115	6,577	6,300	6,068	5,965
	100,000	14,995	12,180	10,785	9,252	7,515	6,655	6,104	5,642	5,405	5,206	5,117
4-7/16 to 4-1/2	10,000	37,489	30,450	26,963	23,132	18,789	16,637	15,261	10,145	13,513	13,015	12,794
	30,000	26,963	21,901	19,392	16,637	13,513	11,966	10,976	10,145	9,719	9,361	9,202
	40,000	24,733	20,090	17,789	15,261	12,396	10,976	10,069	9,307	8,915	8,587	8,441
	60,000	21,901	17,789	15,751	13,513	10,976	9,719	8,915	8,241	7,894	7,603	7,474
	100,000	18,789	15,261	13,513	11,593	9,417	8,338	7,649	7,070	6,773	6,523	6,412
4-15/16 to 5	10,000	52,628	42,747	37,851	32,473	26,377	23,356	15,409	19,803	18,971	18,272	17,961
	30,000	37,851	30,745	27,224	23,356	18,971	16,798	15,409	14,243	13,644	13,141	12,918
	40,000	34,722	28,203	24,973	21,424	17,402	15,409	14,135	13,065	12,516	12,055	11,850
	60,000	30,745	24,973	22,112	18,971	15,409	13,644	12,516	11,569	11,082	10,674	10,493
	100,000	26,377	21,424	18,971	16,275	13,220	11,706	10,738	9,925	9,508	9,157	9,002

Size Inches	L_{10} Life Hours	Allowable Equivalent Radial Load Rating (lbs.) at Various Revolutions per Minute										
		2,000	2,200	2,600	2,750	3,000	3,400	3,800	4,500	5,300	5600	6000
3-11/16 to 4	10,000	9,893	9,614									
	30,000	7,115	6,915									
	40,000	6,527	6,343									
	60,000	5,779	5,616									
	100,000	4,958	4,818									
4-7/16 to 4-1/2	10,000	12,396										
	30,000	8,915										
	40,000	8,178										
	60,000	7,242										
	100,000	6,213										
4-15/16 to 5	10,000											
	30,000											
	40,000											
	60,000											
	100,000											

Only the labyrinth seal (L seal) may be used to the right of the heavy line.
For applications in the dark shaded area, the maximum load for the specific speed is shown. The load does not correspond to the L_{10} shown at the left.
Applications in the light shaded area may require a high temperature lubrication, consult Dodge Engineering at (864) 284-5700.

Definition Of Operating Conditions For Unitized Spherical Roller Bearings

LOW SPEED	UP TO 20% OF MAX. RPM (TABLE 1)
MEDIUM SPEED	OVER 20% TO 80% OF MAX. RPM
HIGH SPEED	MOVER 80% OF MAX. RPM
LIGHT LOAD	UP TO 8% OF C (TABLE 1)
NORMAL LOAD	OVER 8% TO 18% OF C
HEAVY LOAD	OVER 18% OF C
	C = DYNAMIC CAPACITY
LOW TEMPERATURE	-20 to -100°F
MEDIUM TEMPERATURE	OVER 20°F TO 200°F
HIGH TEMPERATURE	OVER 200°F TO 250°F

IMPERIAL-HD Spherical Roller Bearings

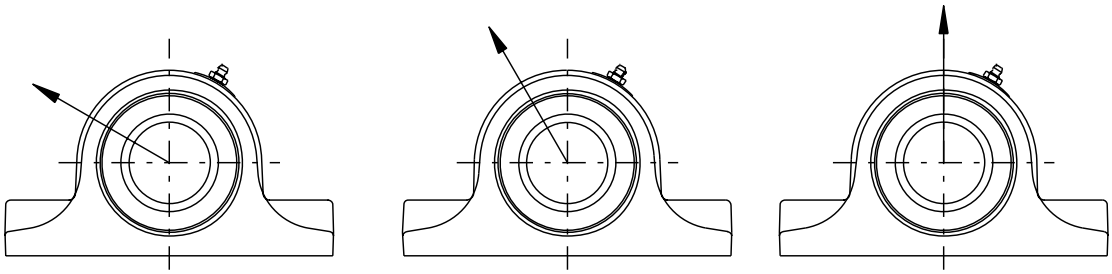

Table 3: Steel Housed S2000 & Imperial - Housing Ratings*

Shaft Sizes	Basic Bearing Description	Maximum Recommended Housing Loads, lb	
		P2B	P4B
1-1/8 1-3/16 1-1/4 1-3/8 1-7/16 1-1/2	22208	24400	
1-1/2** 1-5/8 1-11/16 1-3/4	22209	26400	
1-3/4** 1-15/16 2	22210	30200	
2-3/16 2-1/4	22211	35400	
2-1/4** 2-3/8 2-7/16 2-1/2	22213	51300	52800
2-11/16 2-3/4 2-15/16 3	22215	59700	60000
3-3/16 3-1/4 3-7/16 3-1/2	22218	90700	95500
3-11/16 3-15/16 4	22220		115000
4-7/16 4-1/2	22222		152100
4-15/16 5	22226		188200

* It is important to note that the values listed above are housing fracture loads from various applied directions. These loads may exceed bearing, mounting bolt and/or shaft capacities.
Applications subject to heavy housing loads, particularly shock loads, must adhere to the following procedure:
(1) The pillow block base bolts must be of high strength (Grade 8) bolts and properly tightened to mounting structure.
(2) Stop bars (shear strips) should be used against the plummer block where side loads are encountered.
(3) In all cases where loads are heave, the L_{10} life of the bearing should be checked for proper selection and life requirements.

** Imperial - Type E Dimensional Housing

DIMENSIONS

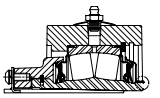

Steel IMPERIAL-HD Pillow Block 2 Bolt

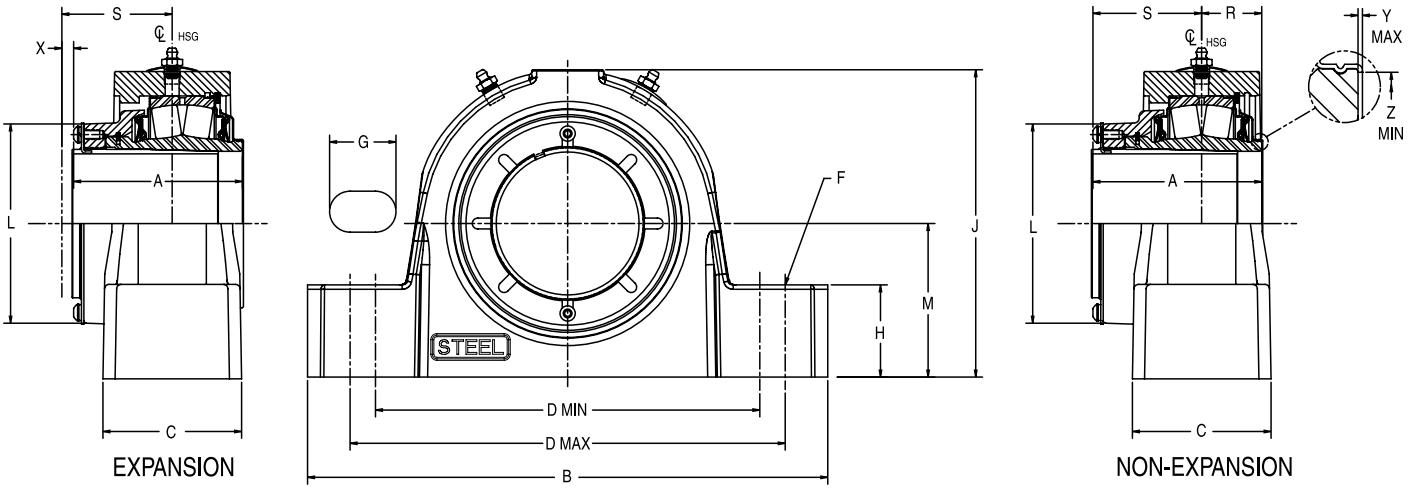

Shaft Size	Dodge Non-Expansion		Dodge Expansion	
	Part No.	Description	Part No.	Description
1-1/8	**071650**	SP2B-IP-102R	**071678**	SP2B-IP-102RE
1-3/16	**071651**	SP2B-IP-103R	**071679**	SP2B-IP-103RE
1-1/4	**071652**	SP2B-IP-104R	**071680**	SP2B-IP-104RE
1-3/8	**071653**	SP2B-IP-106R	**071681**	SP2B-IP-106RE
1-7/16	**071654**	SP2B-IP-107R	**071682**	SP2B-IP-107RE
1-1/2	**071655**	SP2B-IP-108R	**071683**	SP2B-IP-108RE
1-5/8	**071656**	SP2B-IP-110R	**071684**	SP2B-IP-110RE
1-11/16	**071657**	SP2B-IP-111R	**071685**	SP2B-IP-111RE
1-3/4	**071658**	SP2B-IP-112R	**071686**	SP2B-IP-112RE
1-7/8	**071659**	SP2B-IP-114R	**071687**	SP2B-IP-114RE
1-15/16	**071660**	SP2B-IP-115R	**071688**	SP2B-IP-115RE
2	**071661**	SP2B-IP-200R	**071689**	SP2B-IP-200RE
2-3/16	**071662**	SP2B-IP-203R	**071690**	SP2B-IP-203RE
2-1/4	**071663**	SP2B-IP-204R	**071691**	SP2B-IP-204RE
2-3/8	**071664**	SP2B-IP-206R	**071692**	SP2B-IP-206RE
2-7/16	**071665**	SP2B-IP-207R	**071693**	SP2B-IP-207RE
2-1/2	**071666**	SP2B-IP-208R	**071694**	SP2B-IP-208RE
2-11/16	**071667**	SP2B-IP-211R	**071695**	SP2B-IP-211RE
2-3/4	**071668**	SP2B-IP-212R	**071696**	SP2B-IP-212RE
2-15/16	**071669**	SP2B-IP-215R	**071697**	SP2B-IP-215RE
3	**071670**	SP2B-IP-300R	**071698**	SP2B-IP-300RE
3-3/16	**071671**	SP2B-IP-303R	**071699**	SP2B-IP-303RE
3-1/4	**071672**	SP2B-IP-304R	**071700**	SP2B-IP-304RE
3-7/16	**071673**	SP2B-IP-307R	**071701**	SP2B-IP-307RE
3-1/2	**071674**	SP2B-IP-308R	**071702**	SP2B-IP-308RE
3-11/16	**071675**	SP2B-IP-311R	**071703**	SP2B-IP-311RE
3-15/16	**071676**	SP2B-IP-315R	**071704**	SP2B-IP-315RE
4	**071677**	SP2B-IP-400R	**071705**	SP2B-IP-400RE

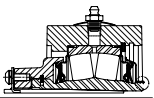

Steel IMPERIAL-HD Pillow Block 2 Bolt

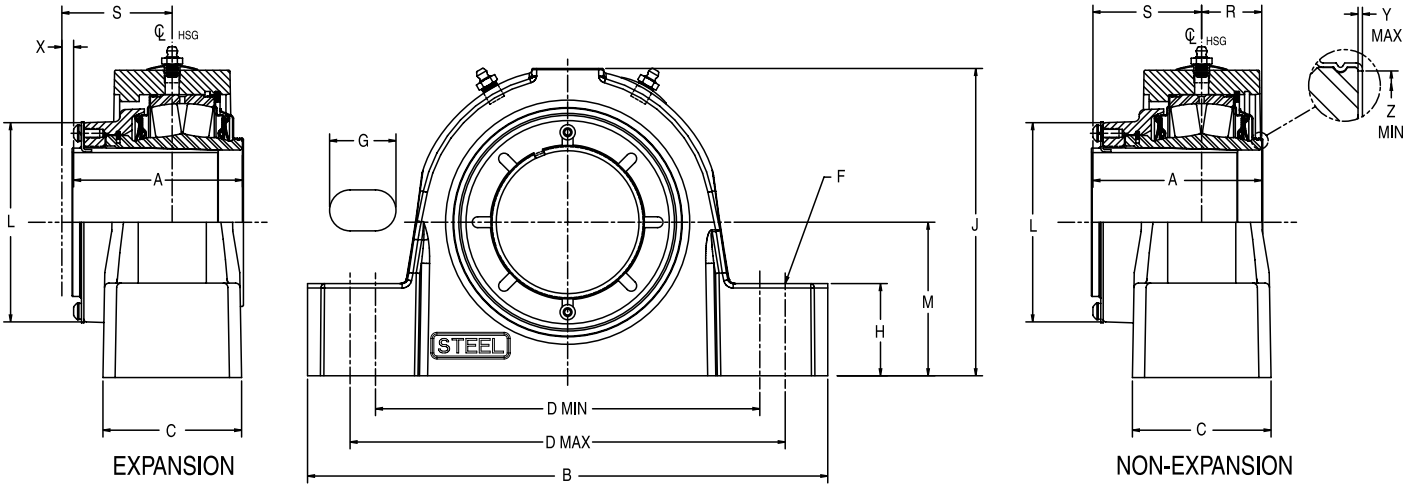

Shaft Size	A	B	C	D Min	D Max	F Bolt Dia.	G	H	J	L	M	R	S	X Total Exp	Y	Z
1-1/8 1-3/16 1-1/4 1-3/8 1-7/16 1-1/2	2.63	6.88	2.25	4.69	6.00	1/2	1.28	1.13	3.88	2.72	1.875	0.86	1.77	3/16	0.020	1.80
1-5/8 1-11/16 1-3/4	2.81	7.13	2.37	5.25	5.75	1/2	0.88	1.25	4.27	3.00	2.125	0.92	1.89	1/4	0.020	2.08
1-7/8 1-15/16 2	2.86	8.38	2.44	5.93	6.36	5/8	0.97	1.31	4.56	3.28	2.25	0.90	1.96	1/4	0.020	2.30
2-3/16 2-1/4	3.03	8.88	2.50	6.50	7.06	5/8	1.04	1.50	5.00	3.50	2.50	0.99	2.04	1/4	0.025	2.59
2-3/8 2-7/16 2-1/2	3.42	9.25	2.90	6.81	7.43	5/8	1.07	1.63	5.60	3.88	2.75	1.17	2.25	1/4	0.025	2.94
2-11/16 2-3/4 2-15/16 3	3.50	10.44	2.91	7.70	8.40	3/4	1.23	1.88	6.38	4.28	3.25	1.12	2.37	1/4	0.025	3.47
3-3/16 3-1/4 3-7/16 3-1/2	4.17	13.00	3.41	9.25	10.75	7/8	1.75	2.25	7.50	5.00	3.75	1.53	2.63	1/4	0.025	4.05
3-11/16 3-15/16 4	4.70	14.25	3.89	10.04	12.60	1	2.40	2.44	8.37	5.56	4.25	1.70	3.00	5/16	0.025	4.50

"A" & "R" Dimensions Do Not Include "Y" Dimension

Steel IMPERIAL-HD Pillow Block 2 Bolt with Type E Dimensions

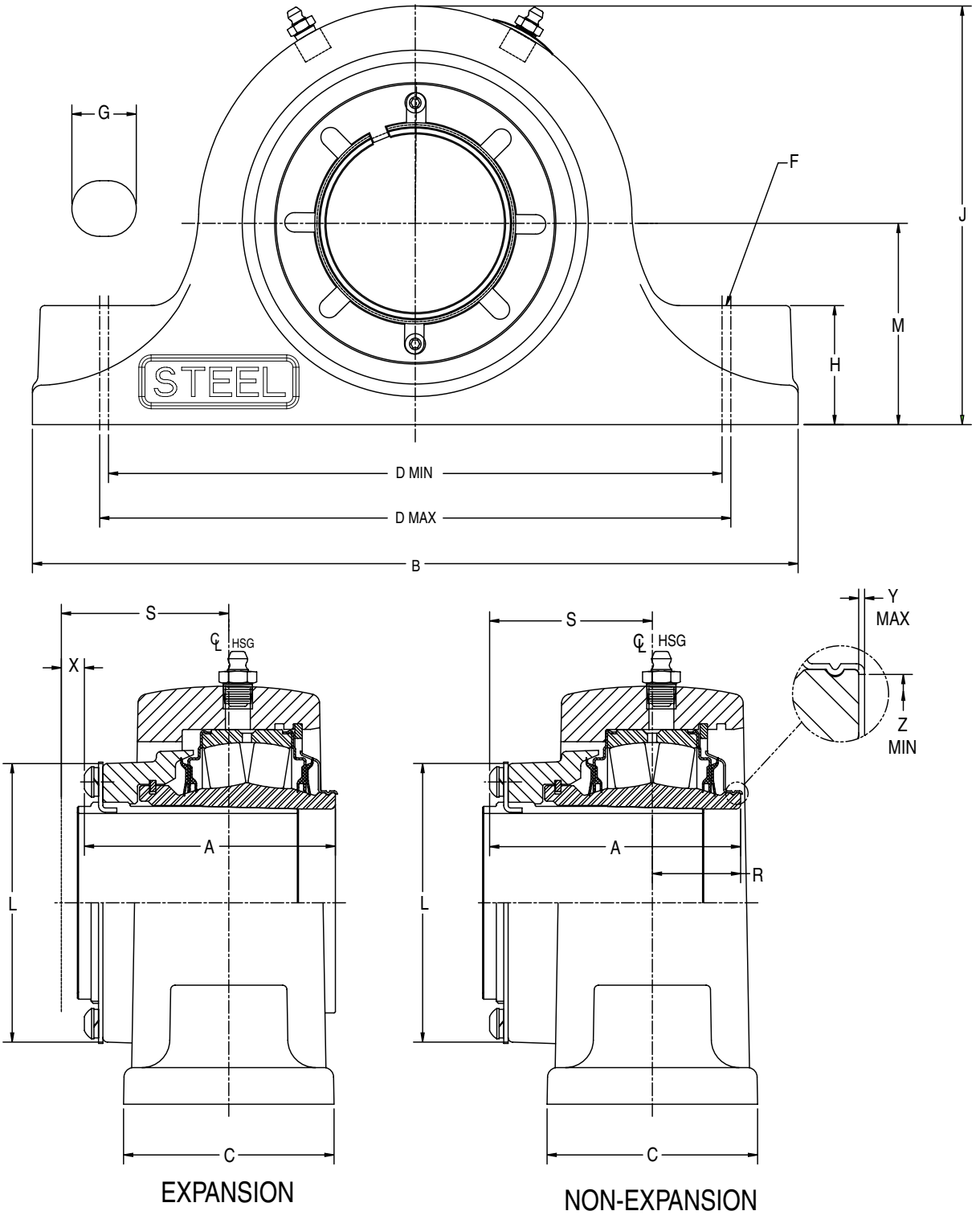

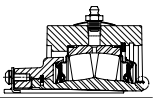

Steel IMPERIAL-HD Pillow Block 2 Bolt with Type E Dimensions

Shaft Size	Dodge Non-Expansion		Dodge Expansion	
	Part No.	Description	Part No.	Description
1-3/8	**071864**	SEP2B-IP-106R	**071885**	SEP2B-IP-106RE
1-7/16	**071865**	SEP2B-IP-107R	**071886**	SEP2B-IP-107RE
1-1/2	**071866**	SEP2B-IP-108R	**071887**	SEP2B-IP-108RE
1-5/8	**071867**	SEP2B-IP-110R	**071888**	SEP2B-IP-110RE
1-11/16	**071868**	SEP2B-IP-111R	**071889**	SEP2B-IP-111RE
1-3/4	**071869**	SEP2B-IP-112R	**071890**	SEP2B-IP-112RE
1-7/8	**071870**	SEP2B-IP-114R	**071891**	SEP2B-IP-114RE
1-15/16	**071871**	SEP2B-IP-115R	**071892**	SEP2B-IP-115RE
2	**071872**	SEP2B-IP-200R	**071893**	SEP2B-IP-200RE
2-3/16	**071873**	SEP2B-IP-203R	**071894**	SEP2B-IP-203RE
2-1/4	**071874**	SEP2B-IP-204R	**071895**	SEP2B-IP-204RE
2-7/16	**071875**	SEP2B-IP-207R	**071896**	SEP2B-IP-207RE
2-1/2	**071876**	SEP2B-IP-208R	**071897**	SEP2B-IP-208RE
2-11/16	**071877**	SEP2B-IP-211R	**071898**	SEP2B-IP-211RE
2-3/4	**071878**	SEP2B-IP-212R	**071899**	SEP2B-IP-212RE
2-15/16	**071879**	SEP2B-IP-215R	**071900**	SEP2B-IP-215RE
3	**071880**	SEP2B-IP-300R	**071901**	SEP2B-IP-300RE
3-3/16	**071881**	SEP2B-IP-303R	**071902**	SEP2B-IP-303RE
3-1/4	**071882**	SEP2B-IP-304R	**071903**	SEP2B-IP-304RE
3-7/16	**071883**	SEP2B-IP-307R	**071904**	SEP2B-IP-307RE
3-1/2	**071884**	SEP2B-IP-308R	**071905**	SEP2B-IP-308RE

Shaft Size	A	B	C	D		F Bolt Dia	G	H	J	L	M	R	S	X Total Exp	Y	Z
				Min	Max											
1-3/8 1-7/16	2.63	6.88	2.25	4.69	5.88	1/2	1.22	1.13	3.84	2.72	1.875	1.04	1.59	0.16	0.02	1.80
1-1/2 1-5/8 1-11/16	2.81	7.88	2.38	5.7	6.5	1/2	1.02	1.25	4.26	3	2.125	0.96	1.83	0.19	0.02	2.08
1-3/4 1-7/8 1-15/16 2	2.86	8.88	2.44	6	7.12	5/8	1.32	1.31	4.47	3.28	2.250	1.10	1.76	0.22	0.020	2.30
2-3/16	3.03	9.63	2.50	6.50	7.88	5/8	1.45	1.50	.00	3.50	2.500	1.06	1.97	0.25	0.025	2.60
2-1/4 2-7/16 2-1/2	3.42	10.25	2.9	6.88	8.62	5/8	1.63	1.63	5.71	3.88	2.75	1.2	2.22	0.25	0.025	2.95
2-11/16 2-3/4 2-15/16 3	3.50	11.63	2.91	7.88	9.62	3/4	1.75	1.88	6.32	4.28	3.125	1.35	2.15	0.25	0.025	3.47
3-3/16 3-1/4 3-7/16 3-1/2	4.17	13.5	3.41	9.38	11.25	7/8	1.94	2.25	7.69	5	3.75	1.51	2.66	0.25	0.025	4.05

"A" & "R" Dimensions Do Not Include 'Y' Dimension

Steel IMPERIAL-HD Pillow Block 4 Bolt

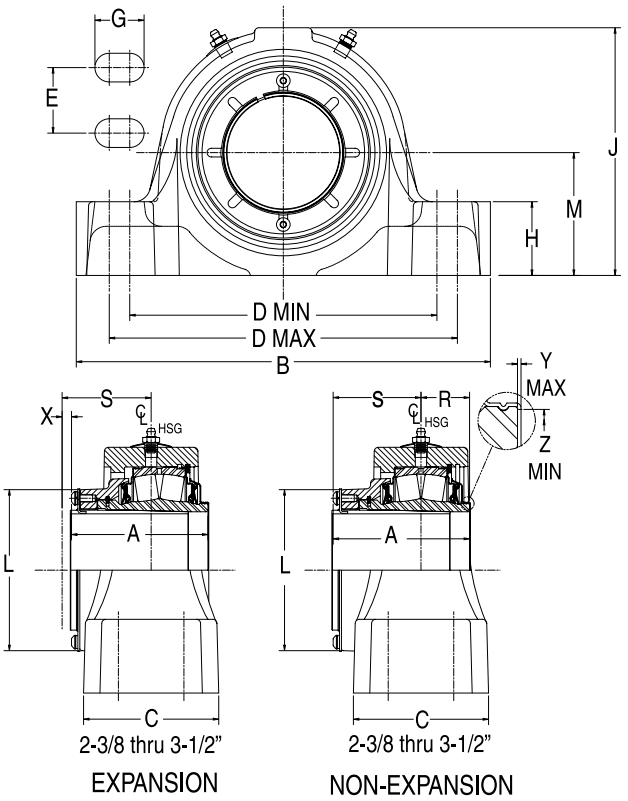

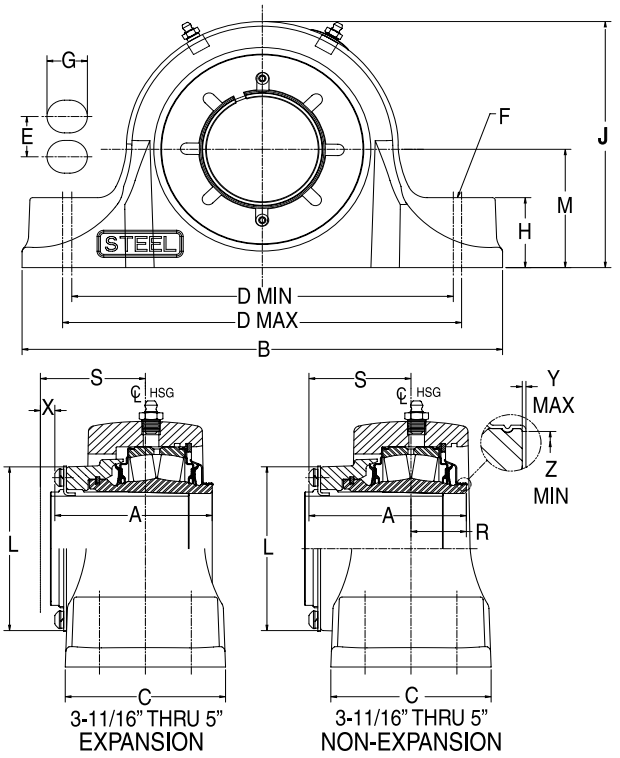

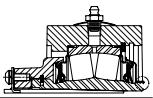

Steel IMPERIAL-HD Pillow Block 4 Bolt

Shaft Size	Dodge Non-Expansion		Dodge Expansion	
	Dodge Part No.	Description	Dodge Part No.	Description
2-3/8	**071706**	SP4B-IP-206R	**071724**	SP4B-IP-206RE
2-7/16	**071707**	SP4B-IP-207R	**071725**	SP4B-IP-207RE
2-1/2	**071708**	SP4B-IP-208R	**071726**	SP4B-IP-208RE
2-11/16	**071709**	SP4B-IP-211R	**071727**	SP4B-IP-211RE
2-3/4	**071710**	SP4B-IP-212R	**071728**	SP4B-IP-212RE
2-15/16	**071711**	SP4B-IP-215R	**071729**	SP4B-IP-215RE
3	**071712**	SP4B-IP-300R	**071730**	SP4B-IP-300RE
3-3/16	**071713**	SP4B-IP-303R	**071731**	SP4B-IP-303RE
3-1/4	**071714**	SP4B-IP-304R	**071732**	SP4B-IP-304RE
3-7/16	**071715**	SP4B-IP-307R	**071733**	SP4B-IP-307RE
3-1/2	**071716**	SP4B-IP-308R	**071734**	SP4B-IP-308RE
3-11/16	**071717**	SP4B-IP-311R	**071735**	SP4B-IP-311RE
3-15/16	**071718**	SP4B-IP-315R	**071736**	SP4B-IP-315RE
4	**071719**	SP4B-IP-400R	**071737**	SP4B-IP-400RE
4-7/16	**071720**	SP4B-IP-407R	**071738**	SP4B-IP-407RE
4-1/2	**071721**	SP4B-IP-408R	**071739**	SP4B-IP-408RE
4-15/16	**071722**	SP4B-IP-415R	**071740**	SP4B-IP-415RE
5	**071723**	SP4B-IP-500R	**071741**	SP4B-IP-500RE

Shaft Size	A	B	C	D		E	F Bolt Dia	G	H	J	L	M	R	S	X Total Exp	Y	Z
				Min	Max												
2-3/8 2-7/16 2-1/2	3.42	9.25	3.00	6.88	7.63	1.75	1/2	1.06	1.63	5.61	3.88	2.75	1.17	2.25	1/4	0.025	2.94
2-11/16 2-3/4 2-15/16 3	3. 50	10.44	3.13	7.60	9.10	1.88	5/8	1. 43	1.88	6. 44	4. 28	3. 25	1.12	2.37	1/4	0.025	3.47
3-3/16 3-1/4 3-7/16 3-1/2	4.17	12.30	3.75	8.88	10.88	2.00	3/4	1.88	2.25	7.56	5.00	3.75	1.53	2.63	1/4	0.025	4.05
3-11/16 3-15/16 4	4.70	14.88	4.31	10.88	13.38	2.25	3/4	2.13	2.44	8.70	5.56	4.25	1.70	3.00	5/16	0.025	4.50
4-7/16 4-1/2	5.23	16.13	4.75	11.88	14.50	2.50	3/4	2.19	2.75	9.67	6.44	4.75	1.53	3.70	3/8	0.036	5.00
4-15/16 5	5. 98	17.50	5.03	15.13	15. 88	2.75	7/8	1. 38	3.00	11. 12	7. 63	5. 50	2.22	3.77	3/8	0.036	5.84

"A" & "R" Dimensions Do Not Include "Y" Dimension

Steel IMPERIAL-HD Pillow Block 4 Bolt with Type E Dimensions

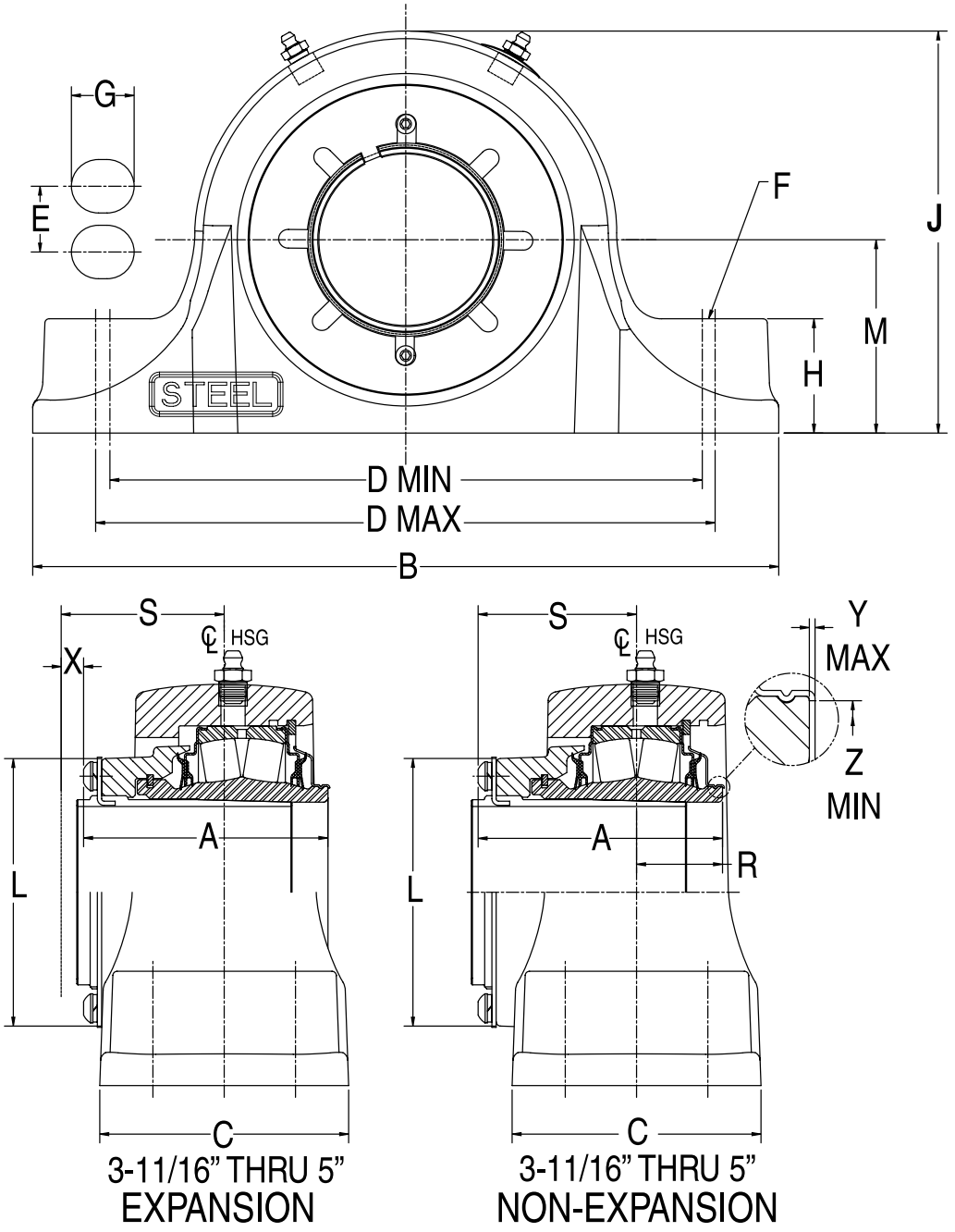

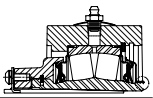

Steel IMPERIAL-HD Pillow Block 4 Bolt with Type E Dimensions

Shaft Size	Dodge Non-Expansion		Dodge Expansion	
	Dodge Part No.	Description	Dodge Part No.	Description
2-1/4	**071906**	SEP4B-IP-204R	**071923**	SEP4B-IP-204RE
2-7/16	**071907**	SEP4B-IP-207R	**071924**	SEP4B-IP-207RE
2-1/2	**071908**	SEP4B-IP-208R	**071925**	SEP4B-IP-208RE
2-11/16	**071909**	SEP4B-IP-211R	**071926**	SEP4B-IP-211RE
2-3/4	**071910**	SEP4B-IP-212R	**071927**	SEP4B-IP-212RE
2-15/16	**071911**	SEP4B-IP-215R	**071928**	SEP4B-IP-215RE
3	**071912**	SEP4B-IP-300R	**071929**	SEP4B-IP-300RE
3-3/16	**071913**	SEP4B-IP-303R	**071930**	SEP4B-IP-303RE
3-1/4	**071914**	SEP4B-IP-304R	**071931**	SEP4B-IP-304RE
3-7/16	**071915**	SEP4B-IP-307R	**071932**	SEP4B-IP-307RE
3-1/2	**071916**	SEP4B-IP-308R	**071933**	SEP4B-IP-308RE
3-15/16	**071917**	SEP4B-IP-315R	**071934**	SEP4B-IP-315RE
4	**071918**	SEP4B-IP-400R	**071935**	SEP4B-IP-400RE
4-7/16	**071919**	SEP4B-IP-407R	**071936**	SEP4B-IP-407RE
4-1/2	**071920**	CSEP4B-IP-408R	**071937**	SEP4B-IP-408RE
4-15/16	**071921**	SEP4B-IP-415R	**071938**	SEP4B-IP-415RE
5	**071922**	SEP4B-IP-500R	**071939**	SEP4B-IP-500RE

Shaft Size	A	B	C	D		E	F Bolt Dia.	G	H	J	L	M	R	S	X Total Exp	Y	Z
				Min	Max												
2-1/4 2-7/16 2-1/2	3.42	10.25	3.25	7.13	8.75	1.88	5/8	1.57	1.63	5.71	3.88	2.750	1.21	2.21	0.25	0.025	2.94
2-11/16 2-3/4 2-15/16 3	3.50	10.83	3.38	8.00	9.60	2.12	5/8	1.56	1.88	6.32	4.28	3.125	1.35	2.15	0.25	0.025	3.47
3-3/16 3-1/4 3-7/16 3-1/2	4.17	13.63	3.75	9.25	11.25	2.38	3/4	1.88	2.25	7.69	5.00	3.750	1.54	2.63	0.25	0.025	4.05
3-15/16 4	4.70	14.88	4.31	10.88	13.38	2.25	3/4	2.13	2.44	8.70	5.56	4.250	1.70	3.00	0.31	0.025	4.50
4-7/16 4-1/2	5.23	16.13	4.75	11.88	14.50	2.50	3/4	2.19	2.75	9.67	6.44	4.750	1.53	3.70	0.38	0.036	5.00
4-15/16 5	5.98	17.50	5.04	15.13	15.88	2.88	7/8	1.38	3.00	11.16	7.63	5.500	1.93	4.05	0.38	0.036	5.84

"A" & "R" Dimensions Do Not Include 'Y' Dimension

Steel IMPERIAL-HD Flange - 4 Bolt

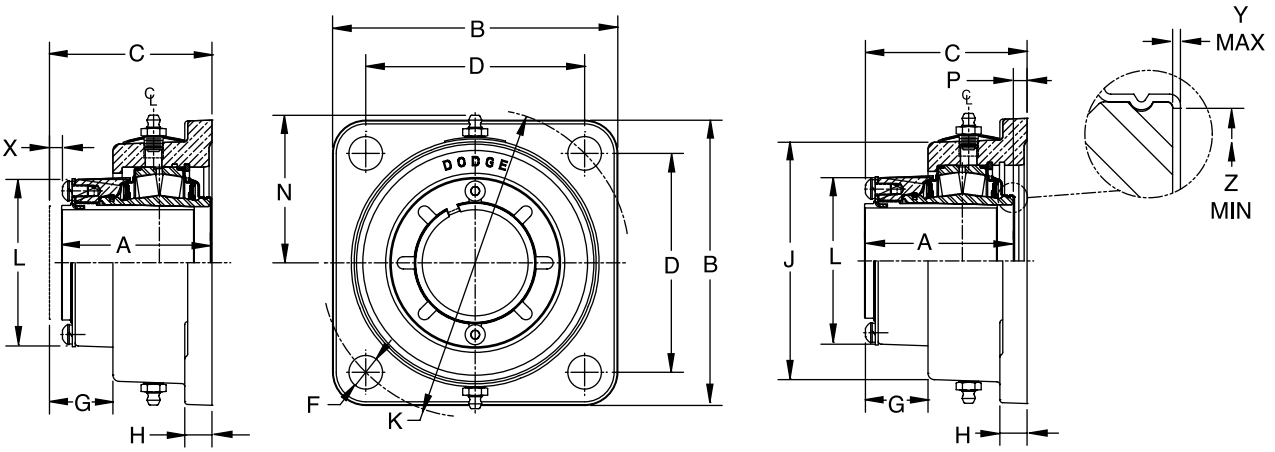

EXPANSION NON-EXPANSION

Shaft Size	Dodge Non-Expansion		Dodge Expansion	
	Dodge Part No.	Description	Dodge Part No.	Description
1-1/8	**072170**	SF4S-IP-102R	**072198**	SF4S-IP-102RE
1-3/16	**072171**	SF4S-IP-103R	**072199**	SF4S-IP-103RE
1-1/4	**072172**	SF4S-IP-104R	**072200**	SF4S-IP-104RE
1-3/8	**072173**	SF4S-IP-106R	**072201**	SF4S-IP-106RE
1-7/16	**072174**	SF4S-IP-107R	**072202**	SF4S-IP-107RE
1-1/2	**072175**	SF4S-IP-108R	**072203**	SF4S-IP-108RE
1-5/8	**072176**	SF4S-IP-110R	**072204**	SF4S-IP-110RE
1-11/16	**072177**	SF4S-IP-111R	**072205**	SF4S-IP-111RE
1-3/4	**072178**	SF4S-IP-112R	**072206**	SF4S-IP-112RE
1-7/8	**072179**	SF4S-IP-114R	**072207**	SF4S-IP-114RE
1-15/16	**072180**	SF4S-IP-115R	**072208**	SF4S-IP-115RE
2	**072181**	SF4S-IP-200R	**072209**	SF4S-IP-200RE
2-3/16	**072182**	SF4S-IP-203R	**072210**	SF4S-IP-203RE
2-1/4	**072183**	SF4S-IP-204R	**072211**	SF4S-IP-204RE

Shaft Size	A	B	C	D	F Bolt Dia.	G	H	J	K	L	N	P	X Total Exp	Y	Z
1-1/8 1-3/16 1-1/4 1-3/8 1-7/16 1-1/2	2.63	4.62	2.87	3.54	1/2	0.84	0.88	3.70	5.00	2.72	2.25	.24	0.19	0.02	1.80
1-5/8 1-11/16 1-3/4	2.81	5.37	3.01	3.89	1/2	0.91	0.88	4.41	5.50	3.00	2.62	.20	0.22	0.02	2.08
1-7/8 1-15/16 2	2.86	5.18	3.15	4.07	1/2	0.91	0.91	4.66	5.75	3.28	2.75	.29	0.22	0.02	2.30
2-3/16 2-1/4	3.03	5.87	3.26	4.51	5/8	0.93	0.75	5.03	6.38	3.50	2.93	.23	0.25	0.02	2.60

"P" Dimension Is For Non-Expansion Only

"A" & "P" Dimensions Do Not Include "Y" Dimension

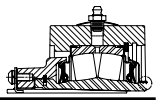

Steel IMPERIAL-HD Flange - 4 Bolt

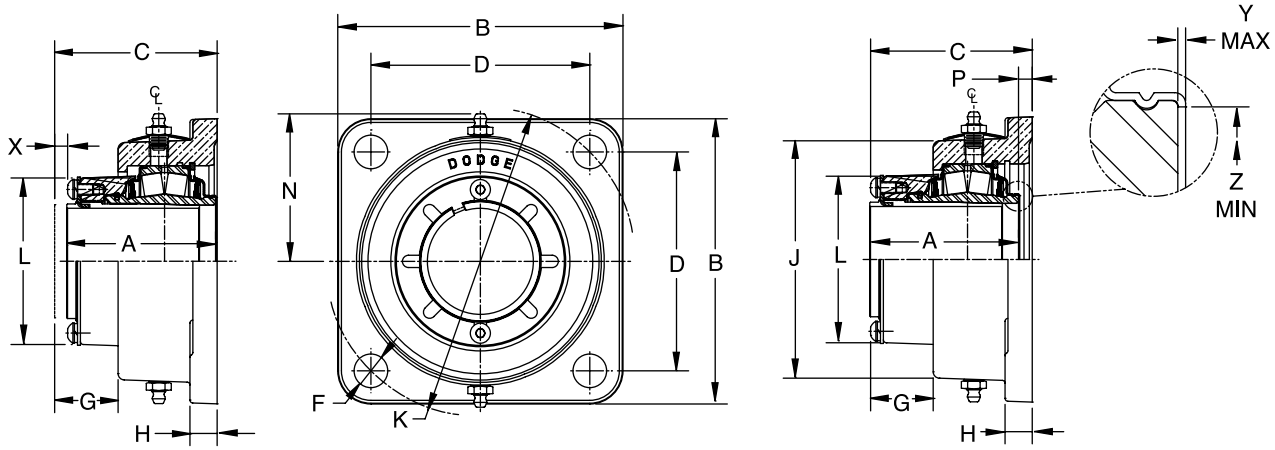

EXPANSION

NON-EXPANSION

Shaft Size	Dodge Non-Expansion		Dodge Expansion	
	Dodge Part No.	Description	Dodge Part No.	Description
2-3/8	**072184**	SF4S-IP-206R	**072212**	SF4S-IP-206RE
2-7/16	**072185**	SF4S-IP-207R	**072213**	SF4S-IP-207RE
2-1/2	**072186**	SF4S-IP-208R	**072214**	SF4S-IP-208RE
2-11/16	**072187**	SF4S-IP-211R	**072215**	SF4S-IP-211RE
2-3/4	**072188**	SF4S-IP-212R	**072216**	SF4S-IP-212RE
2-15/16	**072189**	SF4S-IP-215R	**072217**	SF4S-IP-215RE
3	**072190**	SF4S-IP-300R	**072218**	SF4S-IP-300RE
3-3/16	**072191**	SF4S-IP-303R	**072219**	SF4S-IP-303RE
3-1/4	**072192**	SF4S-IP-304R	**072220**	SF4S-IP-304RE
3-7/16	**072193**	SF4S-IP-307R	**072221**	SF4S-IP-307RE
3-1/2	**072194**	SF4S-IP-308R	**072222**	SF4S-IP-308RE
3-11/16	**072195**	SF4S-IP-311R	**072223**	SF4S-IP-311RE
3-15/16	**072196**	SF4S-IP-315R	**072224**	SF4S-IP-315RE
4	**072197**	SF4S-IP-400R	**072225**	SF4S-IP-400RE

Shaft Size	A	B	C	D	F Bolt Dia.	G	H	J	K	L	N	P	X Total Exp	Y	Z
2-3/8 2-7/16 2-1/2	3.42	6.18	3.57	4.77	5/8	0.95	1.00	5.63	6.75	3.80	3.24	0.15	1/4	0.025	2.94
2-11/16 2-3/4 2-15/16 3	3.50	7.18	3.77	5.57	3/4	0.94	1.06	6.51	7.88	4.20	3.67	0.27	1/4	0.025	3.47
3-3/16 3-1/4 3-7/16 3-1/2	4.17	8.37	4.27	6.72	3/4	0.94	1.28	7.49	9.50	5.00	4.16	0.10	1/4	0.025	4.50
3-11/16 3-15/16 4	4.70	9.49	5.07	7.60	1	1.06	1.50	8.22	10.75	5.46	4.55	0.37	5/16	0.025	4.50

'P' Dimension Is For Non-Expansion Only
A' And 'P' Dimensions Do Not Include 'Y' Dimension

Steel IMPERIAL-HD Flange 4 Bolt With Type E Dimensions

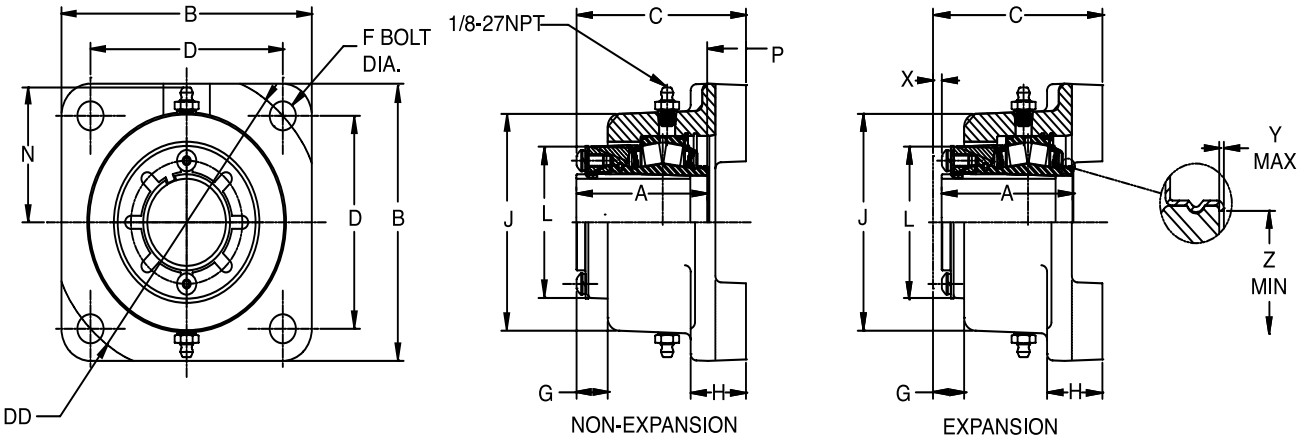

Shaft Size	Dodge Non-Expansion		Dodge Expansion	
	Dodge Part No.	Description	Dodge Part No.	Description
1-3/8	**072226**	SEF4B-IP-106R	**072251**	SEF4B-IP-106RE
1-716	**072227**	SEF4B-IP-107R	**072252**	SEF4B-IP-107RE
1-1/2	**072228**	SEF4B-IP-108R	**072253**	SEF4B-IP-108RE
1-5/8	**072229**	SEF4B-IP-110R	**072254**	SEF4B-IP-110RE
1-11/16	**072230**	SEF4B-IP-111R	**072255**	SEF4B-IP-111RE
1-3/4	**072231**	SEF4B-IP-112R	**072256**	SEF4B-IP-112RE
1-7/8	**072232**	SEF4B-IP-114R	**072257**	SEF4B-IP-114RE
1-15/16	**072233**	SEF4B-IP-115R	**072258**	SEF4B-IP-115RE
2	**072234**	SEF4B-IP-200R	**072259**	SEF4B-IP-200RE
2-3/16	**072235**	SEF4B-IP-203R	**072260**	SEF4B-IP-203RE
2-7/16	**072237**	SEF4B-IP-207R	**072262**	SEF4B-IP-207RE
2-1/2	**072238**	SEF4B-IP-208R	**072263**	SEF4B-IP-208RE
2-11/16	**072239**	SEF4B-IP-211R	**072264**	SEF4B-IP-211RE
2-3/4	**072240**	SEF4B-IP-212R	**072265**	SEF4B-IP-212RE
2-15/16	**072241**	SEF4B-IP-215R	**072266**	SEF4B-IP-215RE
3	**072242**	SEF4B-IP-300R	**072267**	SEF4B-IP-300RE
3-3/16	**072243**	SEF4B-IP-303R	**072268**	SEF4B-IP-303RE
3-1/4	**072244**	SEF4B-IP-304R	**072269**	SEF4B-IP-304RE
3-7/16	**072245**	SEF4B-IP-307R	**072270**	SEF4B-IP-307RE
3-1/2	**072246**	SEF4B-IP-308R	**072271**	SEF4B-IP-308RE
3-15/16	**072247**	SEF4B-IP-315R	**072272**	SEF4B-IP-315RE
4	**072248**	SEF4B-IP-400R	**072273**	SEF4B-IP-400RE
4-7/16	**072249**	SEF4B-IP-407R	**072274**	SEF4B-IP-407RE
4-1/2	**072250**	SEF4B-IP-408R	**072275**	SEF4B-IP-408RE

Steel IMPERIAL-HD Flange 4 Bolt With Type E Dimensions

Shaft Size	A	B	C	D	DD	F Bolt Dia.	G	H	J	L	N	P	X Total Exp	Y	Z
1-3/8 1-716	2.63	4.620	2.87	3.50	4.95	1/2	0.84	0.88	3.7	2.72	2.25	0.24	3/16	0.020	1.80
1-1/2 1-5/8 1-11/16	2.81	5.37	3.01	4.13	5.84	1/2	0.91	0.88	4.41	3.00	2.62	0.20	7/32	0.020	2.08
1-3/4 1-7/8 1-15/16 2	2.86	5.49	3.15	4.38	6.19	1/2	0.91	0.88	4.75	3.28	2.75	0.29	7/32	0.020	2.30
2-3/16	3.03	6.18	3.26	4.87	6.89	5/8	0.93	1.00	5.03	3.50	2.93	0.23	1/4	0.020	2.60
2-7/16 2-1/2	3.42	6.62	3.57	5.37	7.60	5/8	0.95	1.00	5.63	3.80	3.23	0.15	1/4	0.025	2.95
2-11/16 2-3/4 2-15/16 3	3.50	7.43	3.77	6.00	8.49	3/4	0.94	1.06	6.66	4.20	3.75	0.27	1/4	0.025	3.47
3-3/16 3-1/4 3-7/16 3-1/2	4.17	8.62	4.27	7.01	9.91	3/4	0.96	1.31	7.49	5.00	4.17	0.10	1/4	0.025	4.05
3-15/16 4	4.70	9.96	5.04	7.75	10.96	7/8	1.06	1.50	8.22	5.44	4.68	0.34	5/16	0.025	4.50
4-7/16 4-1/2	5.23	10.87	5.59	8.75	12.38	7/8	1.38	1.50	8.76	6.35	4.80	0.36	3/8	0.036	5.00

"P" Dimension Is For Non-Expansion Only
"A" & "P" Dimensions Do Not Include "Y" Dimension

Steel IMPERIAL-HD Piloted Flange

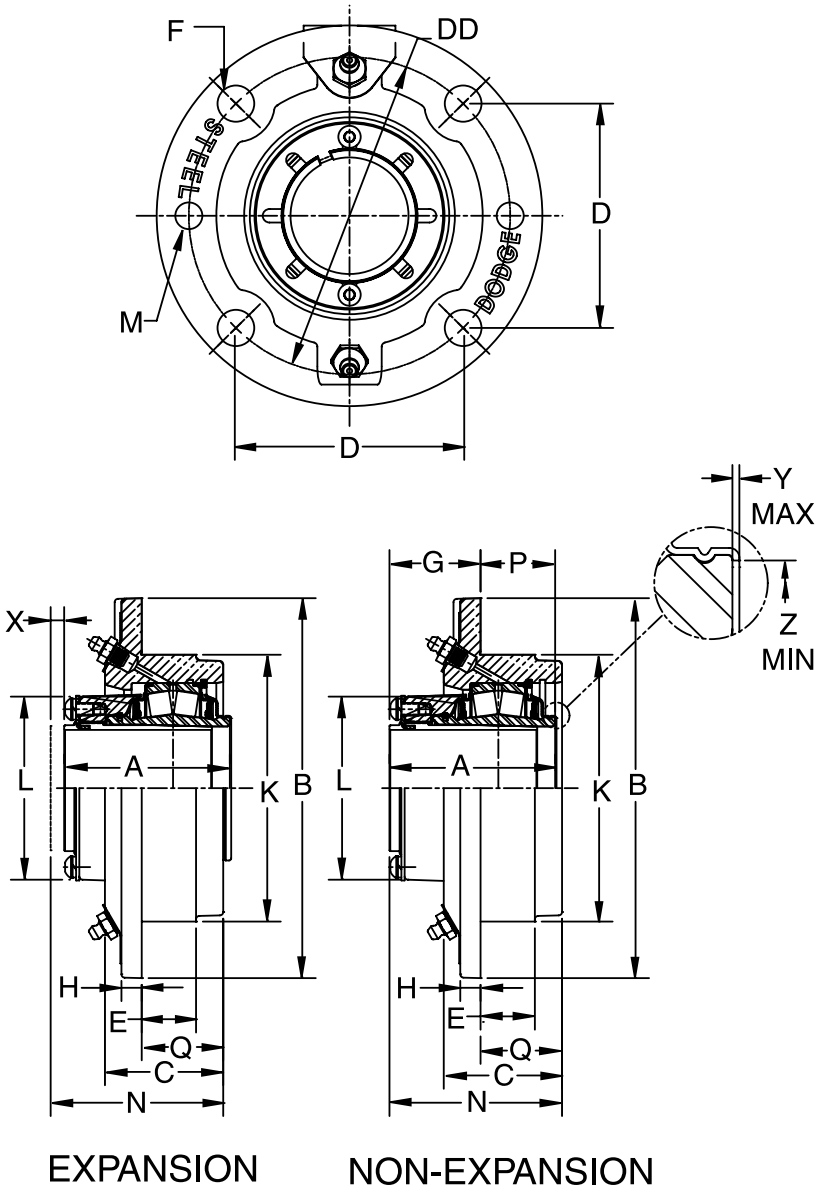

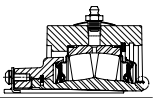

Steel IMPERIAL-HD Piloted Flange

Shaft Size	Dodge Non-Expansion		Dodge Expansion	
	Dodge Part No.	Description	Dodge Part No.	Description
1-1/8	**072276**	SFC-IP-102R	**072307**	SFC-IP-102RE
1-3/16	**072277**	SFC-IP-103R	**072308**	SFC-IP-103RE
1-1/4	**072278**	SFC-IP-104R	**072309**	SFC-IP-104RE
1-3/8	**072279**	SFC-IP-106R	**072310**	SFC-IP-106RE
1-7/16	**072280**	SFC-IP-107R	**072311**	SFC-IP-107RE
1-1/2	**072281**	SFC-IP-108R	**072312**	SFC-IP-108RE
1-5/8	**072282**	SFC-IP-110R	**072313**	SFC-IP-110RE
1-11/16	**072283**	SFC-IP-111R	**072314**	SFC-IP-111RE
1-3/4	**072284**	SFC-IP-112R	**072315**	SFC-IP-112RE
1-7/8	**077285**	SFC-IP-114R	**072316**	SFC-IP-114RE
1-15/16	**072286**	SFC-IP-115R	**072317**	SFC-IP-115RE
2	**072287**	SFC-IP-200R	**072318**	SFC-IP-200RE
2-3/16	**072288**	SFC-IP-203R	**072319**	SFC-IP-203RE
2-1/4	**072289**	SFC-IP-204R	**072320**	SFC-IP-204RE
2-7/16	**072290**	SFC-IP-207R	**072321**	SFC-IP-207RE
2-1/2	**072291**	SFC-IP-208R	**072322**	SFC-IP-208RE
2-11/16	**072292**	SFC-IP-211R	**072323**	SFC-IP-211RE
2-3/4	**072293**	SFC-IP-212R	**072324**	SFC-IP-212RE
2-15/16	**072294**	SFC-IP-215R	**072325**	SFC-IP-215RE
3	**072295**	SFC-IP-300R	**072326**	SFC-IP-300RE
3-3/16	**072296**	SFC-IP-303R	**072327**	SFC-IP-303RE
3-1/4	**072297**	SFC-IP-304R	**072328**	SFC-IP-304RE
3-7/16	**072298**	SFC-IP-307R	**072329**	SFC-IP-307RE
3-1/2	**072299**	SFC-IP-308R	**072330**	SFC-IP-308RE
3-11/16	**072300**	SFC-IP-311R	**072331**	SFC-IP-311RE
3-15/16	**072301**	SFC-IP-315R	**072332**	SFC-IP-315RE
4	**072302**	SFC-IP-400R	**072333**	SFC-IP-400RE
4-7/16	**072303**	SFC-IP-407R	**072334**	SFC-IP-407RE
4-1/2	**072304**	SFC-IP-408R	**072335**	SFC-IP-408RE
4-15/16	**072305**	SFC-IP-415R	**072336**	SFC-IP-415RE
5	**072306**	SFC-IP-500R	**072337**	SFC-IP-500RE

Steel IMPERIAL-HD Piloted Flange

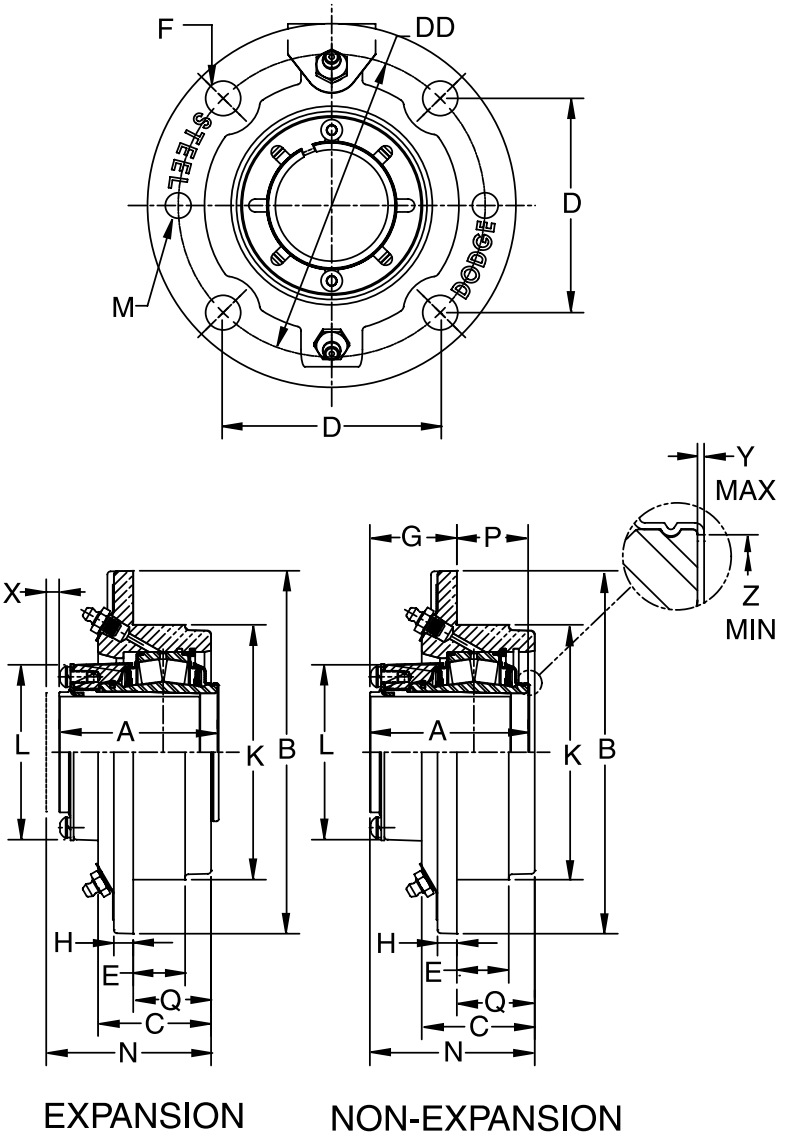

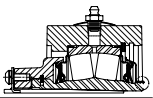

Steel IMPERIAL-HD Piloted Flange

Shaft Size	A	B	C	D	DD	E	F Bolt Dia	G	H	K *	L	M	N	P	Q	X Total Exp	Y	Z
1-1/8 1-3/16 1-1/4 1-3/8 1-7/16 1-1/2	2.63	5.25	1.94	3.09	4.38	_	7/16	1.61	.50	3.625	2.72	7/16-14	2.78	0.79	1.17	.19	0.020	1.80
1-5/8 1-11/16 1-3/4	2.81	6.13	2.19	3.63	5.13	1.33	7/16	1.44	.31	4.250	3.00	7/16-14	3.05	0.73	1.61	.25	0.020	2.08
1-7/8 1-15/16 2	2.86	6.38	2.15	3.80	5.38	1.03	7/16	1.63	.50	4.500	3.28	7/16-14	3.05	0.88	1.42	.25	0.020	2.30
2-3/16 2-1/4	3.03	7.13	2.42	4.25	6.00	1.02	1/2	1.80	.56	5.000	3.50	1/2-13	3.34	1	1.55	.25	0.025	2.59
2-3/8 2-7/16 2-1/2	3.43	7.63	2.66	4.60	6.50	1.25	1/2	1.86	0.50	5.500	3.80	1/2-13	3.61	1.04	1.75	0.25	0.025	2.94
2-11/16 2-3/4 2-15/16 3	3.50	8.75	2.83	5.30	7.50	1.44	5/8	1.89	0.63	6	4.20	5/8-11	3.77	1.15	1.88	0.25	0.025	3.47
3-3/16 3-1/4 3-7/16 3-1/2	4.17	10.25	3.31	6.10	8.63	1.34	3/4	2.46	0.88	7.375	5.00	3/4-10	4.34	1.30	1.88	0.25	0.025	4.05
3-11/16 3-15/16 4	4.70	10.88	3.73	6.63	9.375	2.25	3/4	2.58	1.00	8.125	5.44	3/4-10	4.83	2.14	2.25	0.31	0.025	4.50
4-7/16 4-1/2	5.23	13.50	4.31	5.86	11.75	1.90	3/4**	3.01	1.00	10.250	6.34	3/4-10	5.70	1.74	2.70	0.38	0.036	5.00
4-15/16 5	5.98	14.75	4.64	6.38	12.75	2.06	7/8**	2.98	1.03	11.000	7.54	7/8-9	6.08	2.88	3.10	0.38	0.036	5.84

"P" & "G" Are For Non-Expansion Only
"A" & "P" Dimensions Do Not Include "Y" Dimension
* +0.000 / -0.002

DIMENSIONS

Steel IMPERIAL-HD Narrow Piloted Flange

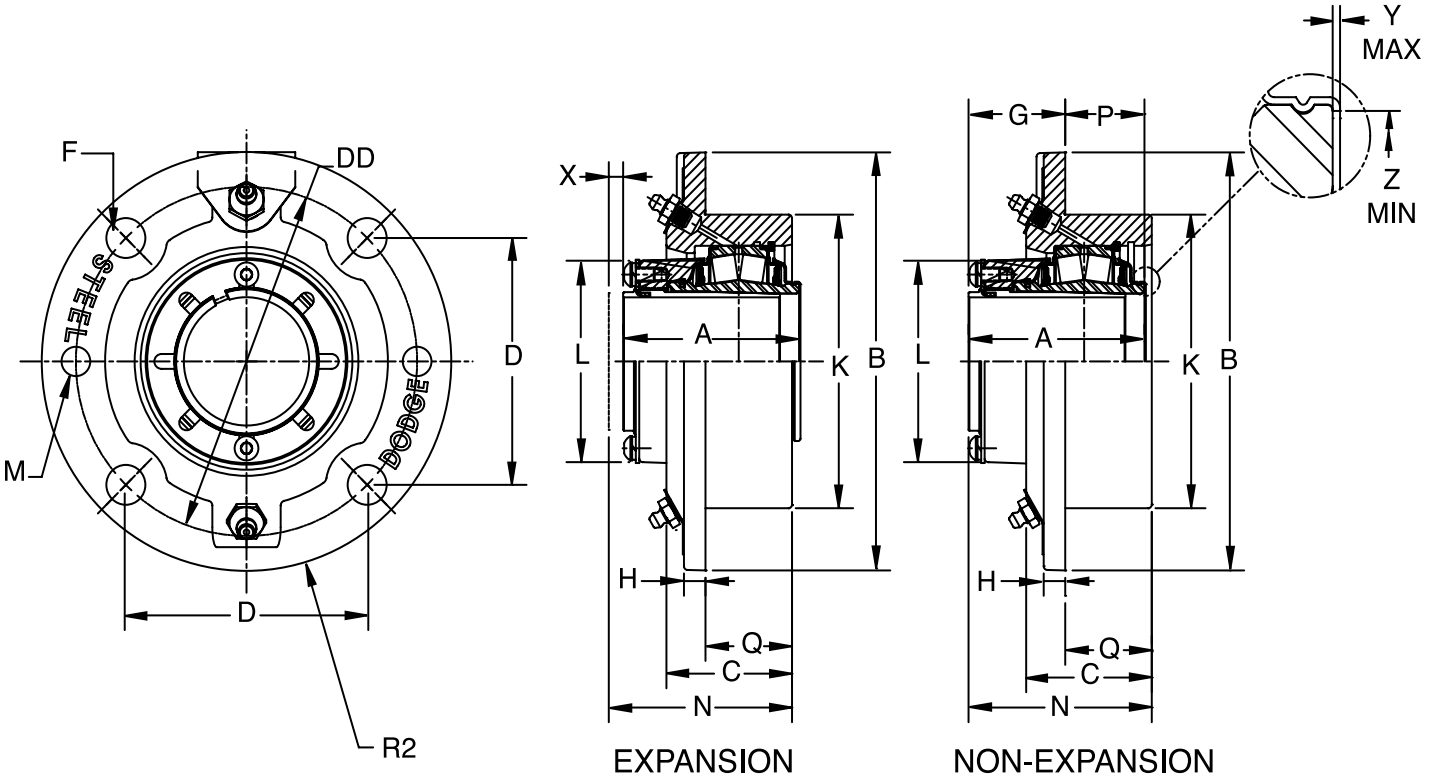

Shaft Size	Dodge Non-Expansion		Dodge Expansion	
	Dodge Part No.	Description	Dodge Part No.	Description
1-7/16	**072338**	SFCN-IP-107R	**072362**	SFCN-IP-107RE
1-1/2	**072339**	SFCN-IP-108R	**072363**	SFCN-IP-108RE
1-11/16	**072340**	SFCN-IP-111R	**072364**	SFCN-IP-111RE
1-3/4	**072341**	SFCN-IP-112R	**072365**	SFCN-IP-112RE
1-15/16	**072342**	SFCN-IP-115R	**072366**	SFCN-IP-115RE
2	**072343**	SFCN-IP-200R	**072367**	SFCN-IP-200RE
2-3/16	**072344**	SFCN-IP-203R	**072368**	SFCN-IP-203RE
2-1/4	**072345**	SFCN-IP-204R	**072369**	SFCN-IP-204RE
2-7/16	**072346**	SFCN-IP-207R	**072370**	SFCN-IP-207RE
2-1/2	**072347**	SFCN-IP-208R	**072371**	SFCN-IP-208RE
2-11/16	**072348**	SFCN-IP-211R	**072372**	SFCN-IP-211RE
2-3/4	**072349**	SFCN-IP-212R	**072373**	SFCN-IP-212RE
2-15/16	**072350**	SFCN-IP-215R	**072374**	SFCN-IP-215RE
3	**072351**	SFCN-IP-300R	**072375**	SFCN-IP-300RE
3-3/16	**072352**	SFCN-IP-303R	**072376**	SFCN-IP-303RE
3-1/4	**072353**	SFCN-IP-304R	**072377**	SFCN-IP-304RE
3-7/16	**072354**	SFCN-IP-307R	**072378**	SFCN-IP-307RE
3-1/2	**072355**	SFCN-IP-308R	**072379**	SFCN-IP-308RE
3-11/16	**072356**	SFCN-IP-311R	**072380**	SFCN-IP-311RE
3-15/16	**072358**	SFCN-IP-315R	**072382**	SFCN-IP-315RE
4	**072359**	SFCN-IP-400R	**072383**	SFCN-IP-400RE
4-7/16	**072360**	SFCN-IP-407R	**072384**	SFCN-IP-407RE
4-1/2	**072361**	SFCN-IP-408R	**072385**	SFCN-IP-408RE

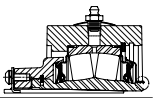

Steel IMPERIAL-HD Narrow Piloted Flange

Shaft Size	A	B	C	D	DD	F Bolt Dta.	G	H	K*	L	M	N	P	Q	X Total Exp	Y	Z
1-7/16 1 - 1/2	2.63	5.25	1.93	3.09	4.38	7/16	1.84	0.50	3.625	2.72	7/16 - 14	2.78	0.79	.94	3/16	0.020	1.80
1-11/16 1-3/4	2.81	6.13	1.95	3.62	5.13	7/16	2.09	0.50	4.250	3.00	7/16 - 14	2.97	0.73	.88	1/4	0.020	2.08
1-15/16 2	2.86	6.38	2.10	3.80	5.38	7/16	1.99	0.63	4.500	3.28	7/16 - 14	3.05	0.88	1.06	1/4	0.020	2.30
2-3/16 2-1/4	3.03	7.30	2.22	4.24	6.00	1/2	2.06	0.58	5.000	3.50	1/2 - 13	3.19	1.00	1.13	1/4	0.020	2.59
2-7/16 2-1/2	3.42	7.63	2.35	4.60	6.50	1/2	2.40	0.70	5.500	3.80	1/2 - 13	3.53	1.04	1.13	.25	0.025	2.94
2-11/16 2-3/4 2-15/16 3	3.50	8.75	2.47	5.30	7.50	5/8	2.35	0.81	6.375	4.20	5/8 - 11	3.60	1.15	1.25	.25	0.025	3.47
3-3/16 3-1/4 3-7/16 3-1/2	4.17	10.34	2.79	6.10	8.63	3/4	2.88	1.00	7.375	5.00	3/4 - 10	4.19	1.30	1.31	.25	0.025	4.05
3-11/16 3-15/16 4	4.70	10.88	3.61	6.63	9.38	3/4	2.82	1.01	8.125	5.45	3/4 - 10	4.95	1.88	2.13	.31	0.025	4.50
4-7/16 4-1/2	5.23	13.50	3.80	5.89	11.75	3/4 **	3.51	1.01	10.250	6.34	3/4 - 10	5.41	1.74	1.90	.38	0.036	5.00

'P' & 'G' ARE FOR NON-EXPANSION ONLY

'A' & 'P' DIMENSIONS DO NOT INCLUDE 'Y' DIMENSION

* +0.000 / -0.002

** 6 holes, equally spaced

IMPERIAL Bearing Insert

1-1/8 THRU 2-1/4 INCH

TRIDENT SEAL

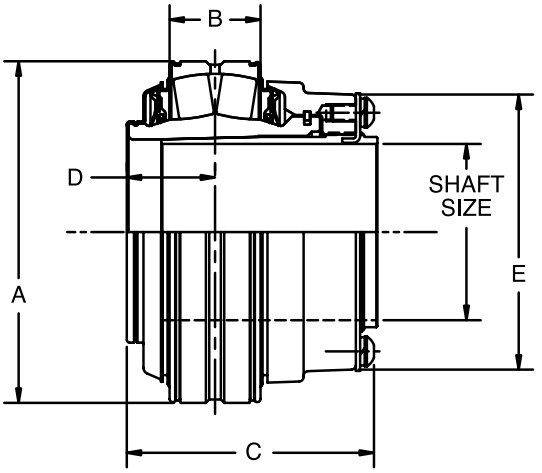

LABYRINTH SEAL

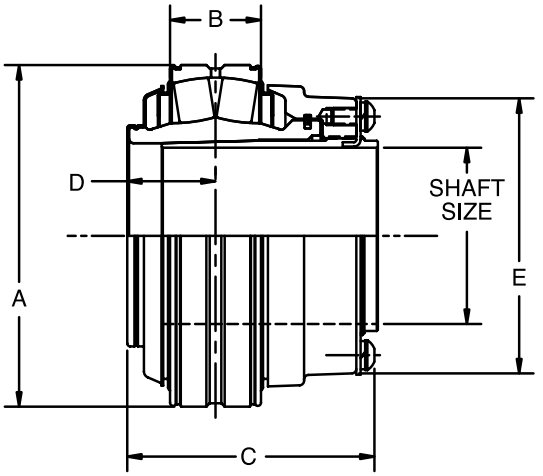

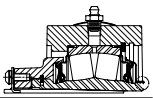

IMPERIAL Bearing Insert
1-1/8 THRU 2-1/4 INCH

Bearing Series	Shaft Size Inch	TRIDENT Seal		Labyrinth Seal	
		Part Number	Part Name	Part Number	Part Name
22208	1-1/8	**070880**	INS-IP-102R	**070912**	INS-IP-102L
	1-3/16	**070881**	INS-IP-103R	**070913**	INS-IP-103L
	1-1/4	**070882**	INS-IP-104R	**070914**	INS-IP-104L
	1-3/8	**070883**	INS-IP-106R	**070915**	INS-IP-106L
	1-7/16	**070884**	INS-IP-107R	**070916**	INS-IP-107L
	1-1/2	**070885**	INS-IP-108R	**070917**	INS-IP-108L
22209	1-1/2 *	**071590**	INS-IPE-108R	**071593**	INS-IPE-108L
	1-5/8	**070886**	INS-IP-110R	**070918**	INS-IP-110L
	1-11/16	**070887**	INS-IP-111R	**070919**	INS-IP-111L
	1-3/4	**070888**	INS-IP-112R	**070920**	INS-IP-112L
22210	1-3/4 *	**071591**	INS-IPE-112R	**071594**	INS-IPE-112L
	1-7/8	**070889**	INS-IP-114R	**070921**	INS-IP-114L
	1-15/16	**070890**	INS-IP-115R	**070922**	INS-IP-115L
	2	**070891**	INS-IP-200R	**070923**	INS-IP-200L
22211	2-3/16	**070892**	INS-IP-203R	**070924**	INS-IP-203L
	2-1/4	**070893**	INS-IP-204R	**070925**	INS-IP-204L

* Inserts for IMPERIAL-Type E dimensioned housings only

Metric shaft sizes available upon request

Shaft Size	A	B	C	D	E
1-1/8 1-3/16 1-1/4 1-3/8 1-7/16 1-1/2	3.1496	61/64	2-5/8	0.970	2-23/32
1-1/2 * 1-5/8 1-11/16 1-3/4	3.3465	61/64	2-13/16	0.954	3
1-3/4 * 1-7/8 1-15/16 2	3.5433	61/64	2-55/64	0.977	3-9/32
2-3/16 2-1/4	3.9370	1-3/64	3-1/32	1.050	3-1/2

* Inserts for IMPERIAL-Type E dimensioned housings only

IMPERIAL Bearing Insert

2-3/8 THRU 5 INCH

TRIDENT SEAL

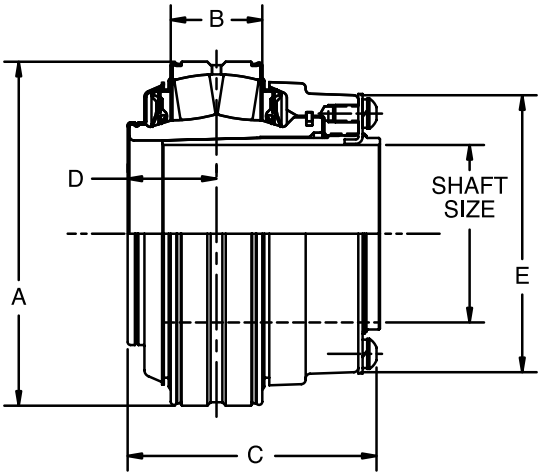

LABYRINTH SEAL

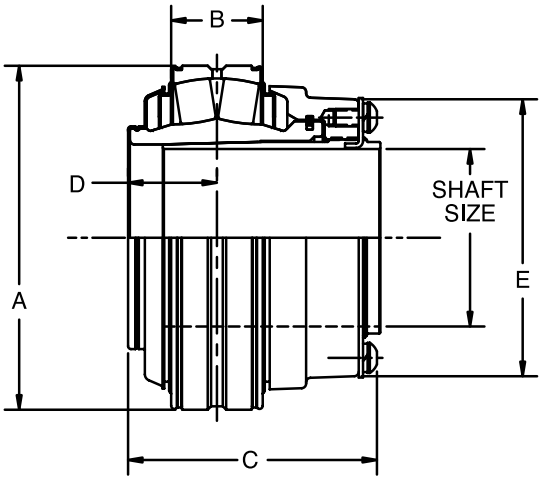

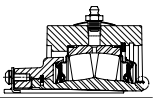

IMPERIAL Bearing Insert
2-3/8 THRU 5 INCH

Bearing Series	Shaft Size	TRIDENT Seal		Labyrinth Seal	
		Part Number	Part Name	Part Number	Part Name
22213	2-1/4 *	**071592**	INS-IPE-204R	**071595**	INS-IPE-204L
	2-3/8	**070894**	INS-IP-206R	**070926**	INS-IP-206L
	2-7/16	**070895**	INS-IP-207R	**070927**	INS-IP-207L
	2-1/2	**070896**	INS-IP-208R	**070928**	INS-IP-208L
22215	2-11/16	**070897**	INS-IP-211R	**070929**	INS-IP-211L
	2-3/4	**070898**	INS-IP-212R	**070930**	INS-IP-212L
	2-15/16	**070899**	INS-IP-215R	**070931**	INS-IP-215L
	3	**070900**	INS-IP-300R	**070932**	INS-IP-300L
22218	3-3/16	**070901**	INS-IP-303R	**070933**	INS-IP-303L
	3-1/4	**070902**	INS-IP-304R	**070934**	INS-IP-304L
	3-7/16	**070903**	INS-IP-307R	**070935**	INS-IP-307L
	3-1/2	**070904**	INS-IP-308R	**070936**	INS-IP-308L
22220	3-11/16	**070905**	INS-IP-311R	**070937**	INS-IP-311L
	3-15/16	**070906**	INS-IP-315R	**070938**	INS-IP-315L
	4	**070907**	INS-IP-400R	**070939**	INS-IP-400L
22222	4-7/16	**070908**	INS-IP-407R	**070940**	INS-IP-407L
	4-1/2	**070909**	INS-IP-408R	**070941**	INS-IP-408L
22226	4-15/16	**070910**	INS-IP-415R	**070942**	INS-IP-415L
	5	**070911**	INS-IP-500R	**070943**	INS-IP-500L

* Insert for IMPERIAL-Type E dimensioned housings only

Metric shaft sizes available upon request

Shaft Size	A	B	C	D	E
2-1/4 * 2-3/8 2-7/16 2-1/2	4.7241	1-9/32	3-27/64	1.208	3-7/8
2-11/16 2-3/4 2-15/16 3	5.1181	1-9/32	3-1/2	1.219	4-9/32
3-3/16 3-1/4 3-7/16 3-1/2	6.2992	1-5/8	4-11/64	1.483	5
3-11/16 3-15/16 4	7.0866	1-7/8	4-45/64	1.646	5-9/16
4-7/16 4-1/2	7.8740	2-5/32	5-15/64	1.935	6-7/16
4-15/16 5	9.0551	2-19/32	5-63/64	2.107	7-5/8

* Insert for IMPERIAL-Type E dimensioned housings only

Steel IMPERIAL Open End Covers

Shaft Size	Front End				Backside			
	IMPERIAL		E-IMPERIAL		IMPERIAL		E-IMPERIAL	
	Dodge Part No.	Description	Dodge Part No.	Description	Dodge Part No.	Description	Dodge Part No.	Description
1-1/8	**070160**	IPECO-08-102	**070160**	IPECO-08-102	**072500**	S2IPBECO-08-102	**072500**	S2IPBECO-08-102
1-3/16	**070161**	IPECO-08-103	**070161**	IPECO-08-103	**072501**	S2IPBECO-08-103	**072501**	S2IPBECO-08-103
1-1/4	**070162**	IPECO-08-104	**070162**	IPECO-08-104	**072502**	S2IPBECO-08-104	**072502**	S2IPBECO-08-104
1-3/8	**070163**	IPECO-08-106	**070163**	IPECO-08-106	**072503**	S2IPBECO-08-106	**072503**	S2IPBECO-08-106
1-7/16	**070164**	IPECO-08-107	**070164**	IPECO-08-107	**072504**	S2IPBECO-08-107	**072504**	S2IPBECO-08-107
1-1/2	**070165**	IPECO-08-108	**070166**	IPECO-09-108	**072505**	S2IPBECO-08-108	**072506**	S2IPBECO-09-108
1-5/8	**070167**	IPECO-09-110	**070167**	IPECO-09-110	**072507**	S2IPBECO-09-110	**072507**	S2IPBECO-09-110
1-11/16	**070168**	IPECO-09-111	**070168**	IPECO-09-111	**072508**	S2IPBECO-09-111	**072508**	S2IPBECO-09-111
1-3/4	**070169**	IPECO-09-112	**070170**	IPECO-10-112	**072509**	S2IPBECO-09-112	**072510**	S2IPBECO-10-112
1-7/8	**070171**	IPECO-10-114	**070171**	IPECO-10-114	**072511**	S2IPBECO-10-114	**072511**	S2IPBECO-10-114
1-15/16	**070172**	IPECO-10-115	**070172**	IPECO-10-115	**072512**	S2IPBECO-10-115	**072512**	S2IPBECO-10-115
2	**070173**	IPECO-10-200	**070173**	IPECO-10-200	**072513**	S2IPBECO-10-200	**072513**	S2IPBECO-10-200
2-3/16	**070174**	IPECO-11-203	**070174**	IPECO-11-203	**072514**	S2IPBECO-11-203	**072514**	S2IPBECO-11-203
2-1/4	**070175**	IPECO-11-204	**070176**	S2IPECO-13-204	**072515**	S2IPBECO-11-204	**072516**	S2IPBECO-13-204
2-3/8	**070177**	S2IPECO-13-206	**070177**	S2IPECO-13-206	**072517**	S2IPBECO-13-206	**072517**	S2IPBECO-13-206
2-7/16	**070178**	S2IPECO-13-207	**070178**	S2IPECO-13-207	**072518**	S2IPBECO-13-207	**072518**	S2IPBECO-13-207
2-1/2	**070179**	S2IPECO-13-208	**070179**	S2IPECO-13-208	**072519**	S2IPBECO-13-208	**072519**	S2IPBECO-13-208
2-11/16	**070180**	IPECO-15-211	**070180**	IPECO-15-211	**072520**	S2IPBECO-15-211	**072520**	S2IPBECO-15-211
2-3/4	**070181**	IPECO-15-212	**070181**	IPECO-15-212	**072521**	S2IPBECO-15-212	**072521**	S2IPBECO-15-212
2-15/16	**070182**	IPECO-15-215	**070182**	IPECO-15-215	**072522**	S2IPBECO-15-215	**072522**	S2IPBECO-15-215
3	**070183**	IPECO-15-300	**070183**	IPECO-15-300	**072523**	S2IPBECO-15-300	**072523**	S2IPBECO-15-300
3-3/16	**070184**	S2IPECO-18-303	**070184**	S2IPECO-18-303	**072524**	S2IPBECO-18-303	**072524**	S2IPBECO-18-303
3-1/4	**070185**	S2IPECO-18-304	**070185**	S2IPECO-18-304	**072525**	S2IPBECO-18-304	**072525**	S2IPBECO-18-304
3-7/16	**070186**	S2IPECO-18-307	**070186**	S2IPECO-18-307	**072526**	S2IPBECO-18-307	**072526**	S2IPBECO-18-307
3-1/2	**070187**	S2IPECO-18-308	**070187**	S2IPECO-18-308	**072527**	S2IPBECO-18-308	**072527**	S2IPBECO-18-308
3-11/16	**070188**	S2IPECO-20-311	**070188**	S2IPECO-20-311	**072528**	S2IPBECO-20-311	**072528**	S2IPBECO-20-311
3-15/16	**070189**	S2IPECO-20-315	**070189**	S2IPECO-20-315	**072529**	S2IPBECO-20-315	**072529**	S2IPBECO-20-315
4	**070190**	S2IPECO-20-400	**070190**	S2IPECO-20-400	**072530**	S2IPBECO-20-400	**072530**	S2IPBECO-20-400
4-7/16	**070191**	S2IPECO-22-407	**070191**	S2IPECO-22-407	**072531**	IPBECO-22-407	**072531**	IPBECO-22-407
4-1/2	**070192**	S2IPECO-22-408	**070192**	S2IPECO-22-408	**072533**	IPBECO-22-408	**072533**	IPBECO-22-408
4-15/16	**070193**	S2IPECO-26-415	**070193**	S2IPECO-26-415	**072534**	IPBECO-26-415	**072534**	IPBECO-26-415
5	**070194**	S2IPECO-26-500	**070194**	S2IPECO-26-500	**072536**	IPBECO-26-500	**072536**	IPBECO-26-500

Steel IMPERIAL Closed End Covers

Shaft Size	IMPERIAL		E-IMPERIAL	
	Dodge Part No.	Description	Dodge Part No.	Description
1-1/8 to 1-7/16	**069960**	IPEC08	**069960**	IPEC08
1-1/2	**069960**	IPEC08	**069961**	IPEC09
1-5/8 to 1-11/16	**069961**	IPEC09	**069961**	IPEC09
1-3/4	**069961**	IPEC09	**069962**	IPEC10
1-7/8 to 2	**069962**	IPEC10	**069962**	IPEC10
2-3/16	**069963**	IPEC11	**069963**	IPEC11
2-1/4	**069963**	IPEC11	**069964**	IPEC13
2-3/8 to 2-1/2	**069964**	IPEC13	**069964**	IPEC13
2-11/16 to 3	**069965**	IPEC15	**069965**	IPEC15
3-3/16 to 3-1/2	**069966**	IPEC18	**069966**	IPEC18
3-11/16 to 4	**069967**	S2IPEC20	**069967**	S2IPEC20
4-7/16 to 4-1/2	**069968**	S2IPEC22	**069968**	S2IPEC22
4-15/16 to 5	**069969**	S2IPEC26	**069969**	S2IPEC26

DIMENSIONS

IP End Cover

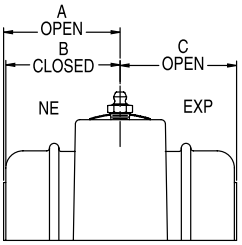

PILLOW BLOCK

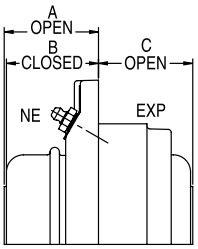

PILOTED FLANGE

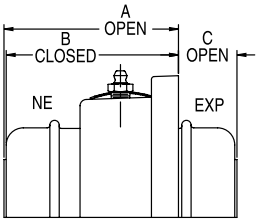

FLANGE

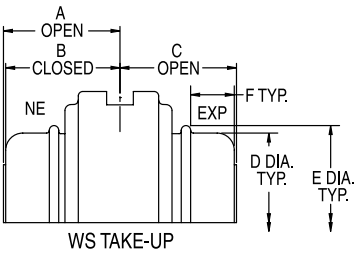

WS TAKE-UP

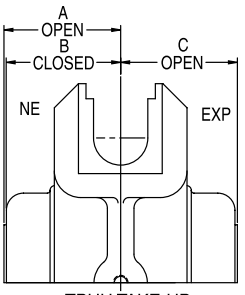

TPHU TAKE-UP

	Shaft Size	IP Pillow Block (2 Bolt)	IP Pillow Block (4 Bolt)	IP Piloted Flange	IP Round Flange	IP Square Flange	Wide Slot Take-Up
A Open	1-1/8	2.03		1.67	3.12	3.45	2.06
B Closed	Thru	1.97	N/A	1.61	3.06	3.39	2.00
C Open	1-1/2	2.10		2.46	0.99	0.99	2.10
A Open	1-5/8	2.22		1.83	3.33	4.07	2.19
B Closed	1-11/16	2.16	N/A	1.77	3.27	4.01	2.13
C Open	1-3/4	2.25		2.60	1.10	1.10	2.25
A Open	1-7/8	2.31		1.92	3.47	3.95	2.25
B Closed	1-15/16	2.25	N/A	1.86	3.41	3.89	2.19
C Open	2	2.45		2.83	1.28	1.28	2.45
A Open	2-3/16	2.47		2.00	3.69	4.53	2.42
B Closed	2-1/4	2.41	N/A	1.94	3.63	4.47	2.36
C Open		2.54		3.00	1.32	1.32	2.54
A Open	2-3/8	2.53	2.53	2.18	4.04	4.72	2.53
B Closed	2-7/16	2.44	2.44	2.09	3.95	4.63	2.44
C Open	2-1/2	2.77	2.77	3.24	1.37	1.37	2.77
A Open	2-11/16	2.65	2.65	2.29	4.18	5.06	2.70
B Closed	Thru	2.56	2.56	2.20	4.09	4.97	2.61
C Open	3	3.06	3.06	3.54	1.66	1.66	3.06
A Open	3-3/16	3.07	3.07	2.91		5.78	3.07
B Closed	Thru	2.94	2.94	2.78	N/A	5.65	2.94
C Open	3-1/2	3.31	3.31	3.59		1.63	3.31
A Open	3-11/16	3.49	3.49	3.32		7.17	3.52
B Closed	Thru	3.36	3.36	3.19	N/A	7.04	3.39
C Open	4	3.80	3.80	4.13		1.94	3.80
A Open	4-7/16		3.96	4.02			
B Closed	4-1/2	N/A	3.83	3.89	N/A	N/A	N/A
C Open			4.23	4.16			
A Open	4-15/16		4.49	4.24			
B Closed	5	N/A	4.36	4.11	N/A	N/A	N/A
C Open			4.69	4.91			

IP End Cover

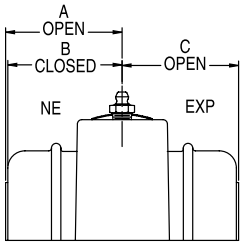

PILLOW BLOCK

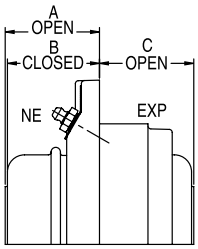

PILOTED FLANGE

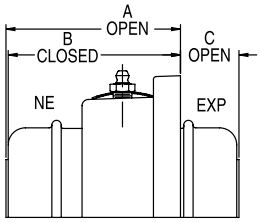

FLANGE

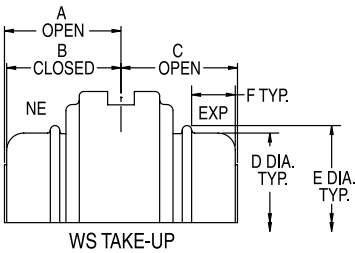

WS TAKE-UP

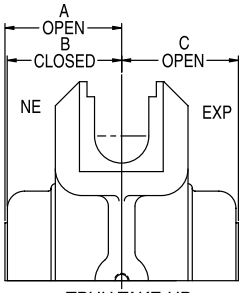

TPHU TAKE-UP

	Shaft Size	E-IP Pillow Block (2 Bolt)	E-IP Pillow Block (4 Bolt)	E-IP Piloted Flange	E-IP Square Flange	D	E	F		Shaft Size	ISAF Pillow Block (2 Bolt)	ISAF Pillow Block (4 Bolt)
A Open	1-3/8	2.03		1.67	3.45				A Open		2.04	
B Closed	Thru	1.97	N/A	1.61	3.39	2-15/16	3-3/16	3/4	B Closed	1-7/16	1.98	N/A
C Open	1-7/16	2.07		2.46	1.20				C Open		2.05	
A Open	1-1/2	2.22		1.83	4.07				A Open		2.20	
B Closed	1-5/8	2.16	N/A	1.77	4.01	3-17/64	3-25/64	7/8	B Closed	1-11/16	2.14	N/A
C Open	1-11/16	2.22		2.60	1.20				C Open		2.18	
A Open	1-3/4	2.31		1.92	3.95				A Open		2.35	
B Closed	Thru	2.25	N/A	1.86	3.89	3-33/64	3-39/64	1-1/64	B Closed	1-15/16	2.29	N/A
C Open	2	2.45		2.83	1.38				C Open		2.37	
A Open		2.47		2.00	4.53				A Open		2.46	
B Closed	2-3/16	2.41	N/A	1.94	4.47	3-49/64	3-61/64	1-1/32	B Closed	2-3/16	2.40	N/A
C Open		2.54		3.00	1.43				C Open		2.44	
A Open	2-1/4	2.53	2.53	2.18	4.72				A Open		2.74	2.74
B Closed	2-7/16	2.44	2.44	2.09	4.63	4-13/32	4-41/64	1	B Closed	2-7/16	2.65	2.65
C Open	2-1/2	2.77	2.77	3.24	1.69				C Open		2.69	2.69
A Open	2-11/16	2.65	2.63	2.29	5.06				A Open		2.83	2.83
B Closed	Thru	2.56	2.54	2.20	4.97	4-59/64	5-1/16	1-7/32	B Closed	2-11/16	2.74	2.74
C Open	3	3.06	3.06	3.54	1.62				C Open		2.94	2.94
A Open	3-3/16	3.07	3.04	2.91	5.78				A Open		2.83	2.83
B Closed	Thru	2.94	2.91	2.78	5.65	5-63/64	6-7/32	1-1/8	B Closed	2-15/16	2.74	2.74
C Open	3-1/2	3.31	3.31	3.59	1.38				C Open		2.98	2.98
A Open	3-15/16		3.80	3.31	7.17				A Open		3.31	3.31
B Closed	Thru	N/A	3.67	3.19	7.04	6-43/64	6-29/32	1-3/8	B Closed	3-7/16	3.18	3.18
C Open	4		3.80	4.13	2.06				C Open		3.26	3.26
A Open	4-7/16		3.91	3.85	7.62				A Open			3.70
B Closed	Thru	N/A	3.78	3.72	7.49	7-5/16	7-9/16	1-43/64	B Closed	3-15/16	N/A	3.57
C Open	4-1/2		4.23	4.68	4.23				C Open			3.68
A Open	4-15/16		4.46	4.08					A Open			4.05
B Closed	Thru	N/A	4.33	3.95	N/A	8-7/16	8-11/16	1-29/32	B Closed	4-7/16	N/A	3.92
C Open	5		4.69	5.37					C Open			4.02
									A Open			4.55
									B Closed	4-15/16	N/A	4.42
									C Open			4.49

IMPERIAL Spanner Wrench

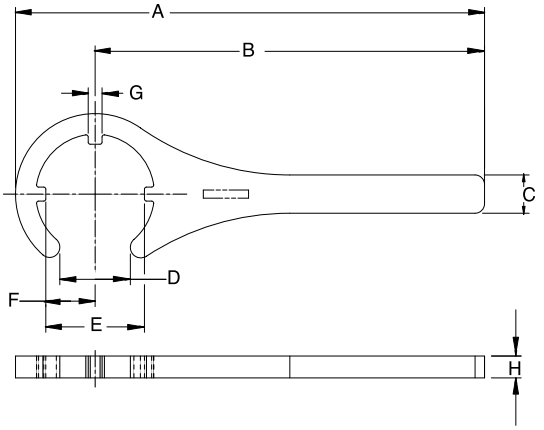

Shaft Size	Part Number	A	B	C	D	E	F	G	H
1-1/8 thru 1-1/2	**066629**	10.84	9.00	0.88	1.63	2.28	1.14	0.32	0.5
1-5/8 thru 1-3/4	**066630**	11.04	9.00	0.88	1.88	2.48	1.24	0.32	0.5
1-7/8 thru 2	**066631**	11.20	9.00	0.88	2.13	2.72	1.36	0.32	0.5
2-3/16 2-1/4	**066632**	12.38	10.00	0.88	2.38	2.98	1.49	0.44	0.5
2-3/8 thru 2-1/2	**066633**	12.63	10.00	1.31	2.63	3.40	1.70	0.44	0.5
2-11/16 thru 3	**066634**	16.90	14.00	1.31	3.13	3.80	1.90	0.44	0.5
3-3/16 thru 3-1/2	**066635**	17.39	14.00	1.31	3.63	4.36	2.18	0.44	0.5
3-11/16 thru 4	**066636**	17.75	14.00	1.75	4.13	4.91	2.46	0.44	0.5
4-7/16 4-1/2	**066637**	20.36	16.00	1.75	4.63	5.68	2.84	0.44	0.5
4-15/16 5	**066638**	25.17	20.00	2.00	5.13	6.88	3.44	0.44	0.5
5-7/16 5-1/2	**066642**	27.82	22.00	2.00	5.63	8.05	4.03	0.69	0.5
5-15/16 6	**066643**	28.75	22.00	2.00	6.13	9.13	4.57	0.75	0.5
6-7/16 thru 7	**066644**	31.54	24.00	2.00	7.13	10.08	5.04	0.75	0.5

IMPERIAL Lockplate Kit

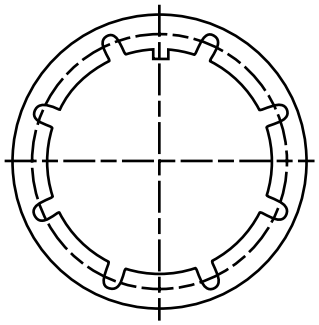

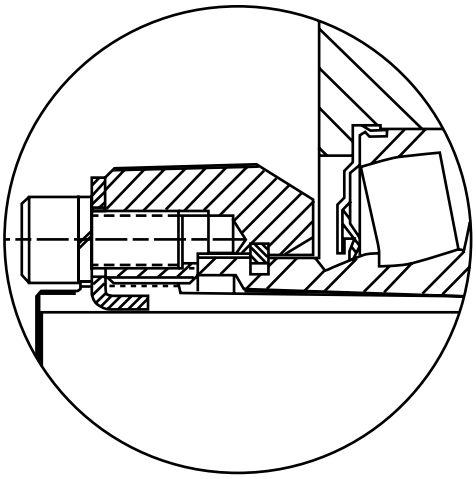

The Lockplate Kits consists of:
Lockplate
2 Socket Head Capscrews
2 Lockwashers

Shaft Size Inch	Part Number
1-7/16	**048925**
1-11/16	**048926**
1-15/16 2 SM	**048927**
2 LG 2-3/16	**048928**
2-3/8 2-7/16	**048929**
2-11/16 2-3/4 2-15/16	**048930**
3-7/16	**048931**
3-15/16	**048932**
4-7/16	**048933**
4-15/16	**048934**

DODGE S2000-HD

DODGE S2000-HD mounted bearings feature proven DODGE S2000 insert technology deployed in steel housings designed specifically for harsh applications that demand superior housing strength. Major features include…

- S2000 set screw mounting system
- Same dimensions as cast iron S2000 products
- Proven, high capacity spherical rollers
- Closed & shaft through end covers
- Field convertible between Expansion & Non-Expansion
- High capacity cast steel housing
- Also available in popular "Type E" dimensioned housings
- Effective sealing systems for tough applications
- Sealed inserts that can be easily replaced in the field

S2000-HD "E"

Two bolt pillow blocks – 1-3/8 to 3-7/16"
Four bolt pillow blocks – 2-7/16 to 4-15/16"
Four bolt square flange – 1-3/8 to 3-15/16"

Dimensioned S2000-HD

Two bolt pillow blocks – 1-3/8 to 3-7/16"
Four bolt pillow blocks – 2-7/16 to 4-15/16"

Longer Bearing Life By Design . . .

High capacity double row spherical rollers offer up to 250% more L_{10} life than competitive brands

- Larger rollers
- More contact area
- Case-carburized inner rings resist cracking
- Static or dynamic misalignment up to ± 1°
- Expansion capability up to 3/8" (9.5mm)

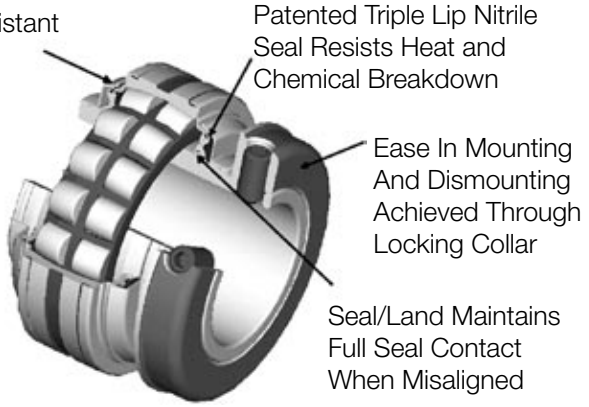

Installation Savings . . .

- Factory lubed, sealed and adjusted, ready to slip onto the shaft
- 65° Springlok collar mount for increased holding power versus 90° or 120°
- Field convertible from non-expansion to expansion and expansion to non-expansion
- Elongated pillow block bolt holes to facilitate mounting

Inch

DODGE Spherical Bearings, including S2000 bearings, are general purpose, high-capacity, double-row spherical roller bearings. All are mounted in single piece precision machined housings. Bearings are mounted to shafts by means of set screw collars, with 65 degree set screw spacing for maximum clamping force.

A-27 Grade 70-36 Class 1 Steel is the standard material used in Steel S2000 housings. Housing designs are available for survival in extreme harsh environments, through the use of special finishes and stainless hardware.

Housings are available in a variety of standard configurations, including pillow blocks, flanges, and piloted flanges. TRIDENT triple lip contact seal and Labyrinth seals are available on S2000 bearings.

S2000-HD
SPHERICAL ROLLER BEARINGS

DODGE Spherical Roller Bearings have the capacity to carry heavy radial loads and combined radial and thrust loads. The maximum recommended load which can be applied is limited by various components in the system such as bearing, housing, shaft, shaft attachment, speed and life requirements as listed in this catalog. DODGE spherical roller bearings have been applied successfully even when these limits have been exceeded under controlled operating conditions. Contact DODGE Application Engineering (864-284-5700) for applications which exceed the recommendations of this catalog.

L_{10} Hours Life - The life which may be expected from at least 90% of a given group of bearings operating under identical conditions.

$$L_{10}\text{ Life, Hours} = \left(\frac{C}{P}\right)^3 \times \left(\frac{16667}{RPM}\right)$$

Where: C = Dynamic Capacity (Table 1 on page B5-9) lbs.

P = Equivalent Radial Load, lbs.

GENERAL

Heavy Service - For heavy shock loads, frequent shock loads, or severe vibrations, add up to 50% (according to severity of conditions) to the Equivalent Radial Load to obtain a Modified Equivalent Radial Load. Consult DODGE Application Engineering for additional selection assistance.

Thrust load values shown in the table below are recommended as a guide for general applications that will give adequate L_{10} life. Spherical bearings require a radial load at least equal to the thrust load for proper operation. If the thrust load exceeds this limit, consult Application Engineering. Where substantial radial load is also present, it is advisable to calculate actual L_{10} life to assure that it meets the requirements. The effectiveness of the shaft attachment to carry thrust load depends on proper tightening of the set screws, shaft tolerance and shaft deflections. Therefore, it is advisable to use auxiliary thrust carrying devices such as shaft shoulder, snap ring or a thrust collar to locate the bearing under thrust loads heavier than shown below, or where extreme reliability is desired.

RPM	20-200	201 - 2000	Over 2000
RECOMMENDED THRUST LOAD	C/20	C/40	C/60

The shaft tolerances recommended below are adequate for normal radial and radial/thrust load applications. The radial load is limited by the attachment to the shaft (see Table 1 on page B5-9). Where the applied radial load (FR) exceeds this limit (maximum allowable slip fit radial load), a snug-to-light press fit of the shaft is required. Since the allowable load, especially at a low speed, is very large, the shaft should be checked to assure adequate shaft strength.

The magnitude and direction of both the thrust and radial load must be taken into account when selecting a housing. When pillow blocks are utilized, heavy loads should be directed through the base. Where uplift loads are involved, see Table 3 on page B5-14 and for maximum values. Where a load pulls the housing away from the mounting base, both the hold-down bolts and housing must be of adequate strength. Auxiliary load carrying devices such as shear bars are advisable for side or end loading of pillow blocks and radial loads for flange units.

SHAFT TOLERANCES	
SHAFT SIZE	S2000
UP TO 1-1/2”	+.0000 -.0005”
1-9/16 TO 4”	+.000 -.001”
4-7/16 TO 5”	+.000 -.0015”

S2000-HD
BEARING SUPPORTING RADIAL LOADS ONLY

1. Define L_{10} Life Hours desired.
2. Establish bearing radial load, F_R

   (F_R = P for Pure Radial Load Conditions). The DODGE program BEST★ can be used to find application loads.
3. Establish RPM.

Using the easy selection Table 2 on page B5-10, find, under the RPM column, the equivalent radial load that equals or is slightly higher than the application radial load for the desired life. The shaft size on the far left will be the minimum shaft size that you can use for your application.

If the desired life is different than the values shown on the chart, use alternate Method A shown below.

Example: 1. L_{10} Life = 30,000 Hours
2. Radial load = 4000 lbs.
3. RPM = 1,000

At the intersection of the 1,020 RPM column and the 30,000 hours L_{10} life row, the equivalent radial load of 4092 lbs. exceeds the 4000 lbs. radial load for shaft size 2-7/16". A bearing with bore 2-7/16", or larger, may be used for this application.

ALTERNATE METHOD A - SELECTING A BEARING FOR AN L_{10} LIFE VALUE NOT SHOWN IN THE EASY SELECTION CHART

The L_{10} life equation can be rearranged so that the bearing dynamic capacity **C** is identified in terms of L_{10}, RPM and P

$$C = \left(\frac{L_{10} \times RPM}{16667}\right)^{0.3} \times P$$

($P = F_R$ for Pure Radial Load Conditions)

Since the L_{10}, RPM and P are known, solve for C. Select from the dynamic capacity column on Table 1 on page B5-9 the **C** value equal to or greater than the **C** value just calculated. The bore size on the far left represents the proper bore size selection. Check that the application RPM does not exceed the MAX. RPM from Table 1. Also check that the radial load does not exceed the Maximum Allowable Slip Fit Radial Load shown on Table 1 on page B5-9. If it does, a line-to-line light press fit of shaft is required. When selecting an L_{10} life of less than 30,000 hours, particular attention must be paid to shaft deflection and proper lubricant selection.

SELECTING BEARINGS SUPPORTING COMBINATION RADIAL AND THRUST LOADS

When a bearing supports both a radial load and a thrust load, the loading on the two rows is shared unequally depending on the ratio of thrust to radial load. The use of the X (radial factor) and Y (thrust factor) from Table 1 converts the applied thrust load and radial load to an equivalent radial load having the same effect on the life of the bearing as a radial load of this magnitude.

The equivalent radial load $P = XF_R + YF_A$

Where:

P = Equivalent radial load, lbs.

F_R = Radial load, lbs. (See Table 1 for allowable slip fit maximum load)

F_A = Thrust (axial) load, lbs.

e = Thrust load to radial load factor (Table 1)

X = Radial load factor (Table 1)

Y = Thrust load factor (Table 1)

★ The DODGE Bearing Evaluation and Selection Technique (BEST) is a menu driven computer program that calculates bearing loads, fatigue life and operating temperature for a two bearing shaft system based on user supplied input parameters. This interactive program is available at www.ptwizard.com under the Product Selection area.

S2000-HD
BEARING SUPPORTING RADIAL LOADS ONLY

To find X and Y, calculate F_A/F_R and compare to **e** for the selected bore size. Determine X and Y from Table 1 on page B5-9 depending on whether F_A/F_R is equal to or less than **e**, or F_A/F_R is greater than **e**. Substitute all known values into the equivalent radial load equation. P (equivalent radial load) can be used in the life formula to determine L_{10}, or it can be compared to the allowable equivalent radial load ratings for the speed and hours life desired in the easy selection Table 2 on page B5-10.

SELECTING BEARINGS SUPPORTING ONLY THRUST LOADS

Spherical Roller Bearings generally are not recommended for pure thrust load applications. However, they will perform satisfactorily under very light pure thrust loads. Consult DODGE Application Engineering (864-284-5700).

SELECTING LUBRICATION

DODGE S2000 spherical roller bearings are lubricated at the factory with Exxon Ronex MP grease. Exxon Ronex MP grease is a superior industrial grease using a lithium complex thickener and highly refined base oil. This grease will adequately handle low and medium speeds with low and medium loads at normal temperatures as defined on Table 3 on page B5-14. For very low and high speeds, for heavy loads and for low and high temperatures, special greases must be used. Contact DODGE Application Engineering (864-284-5700). DODGE engineers will recommend bearings and lubricants for the above unusual conditions. DODGE also has the expertise to custom design and build special bearings for your needs. The only maintenance requirement for DODGE Unitized roller bearings is periodic relubrication at regular intervals as outlined in the appropriate instruction manuals.

MISALIGNMENT CONSIDERATIONS

In nearly all applications, good design practice requires two bearings supporting the shaft. In cases where three or more bearings are installed, unless precautions are taken to line the bearings up both vertically and horizontally, it is possible to induce heavy loads. In the case of two bearings, alignment is not as critical, especially with DODGE Unitized Spherical Roller Bearings. S2000 bearings are designed to allow a maximum of ±1° of static and dynamic misalignment. To ensure good alignment, mounting surfaces must be checked for flatness and must lie in the same plane. When tightening base bolts, each bolt should be alternately tightened in incremental torque values until full torque is achieved to prevent the angular shifting of the pillow block that occurs when one bolt is tightened to its full torque. Shimming may be required to minimize misalignment.

Table 1: S2000-HD Spherical Roller Bearings

Shaft Size Inches	Basic Bearing Description	e	FA/FR< e		FA/FR>e		Max. Allowable Slip Fit Radial Load FR* Pounds	Dynamic Capacity (C) Pounds	Static Capacity Co	Maximum Speed **	
			X	Y	X	Y				Labyrinth RPM	TRIDENT Triple Lip RPM
1-3/8 1-7/16 1-1/2	22208	0.28	1.0	2.4	0.67	3.6	3,750	20,800	21,000	3,600	2,900
1-11/16 1-3/4	22209	0.26	1.0	2.6	0.67	3.9	3,750	20,800	22,000	3,360	2,460
1-15/16 2	22210	0.24	1.0	2.8	0.67	4.2	4,000	22,000	24,000	3,180	2,200
2-3/16	22211	0.23	1.0	2.9	0.67	4.3	4,860	27,000	29,000	2,700	1,950
2-7/16	22213	0.24	1.0	2.8	0.67	4.2	6,840	39,000	47,500	2,250	1,740
2-11/16 2-15/16 3	22215	0.22	1.0	3.1	0.67	4.6	7,500	41,500	53,000	2,040	1,490
3-7/16	22218	0.23	1.0	2.9	0.67	4.3	11,500	65,500	81,500	1,560	1,280
3-15/16	22220	0.24	1.0	2.8	0.67	4.2	14,400	83,000	104,000	1,320	1,075
4-7/16	22222	0.25	1.0	2.7	0.67	4.1	18,400	104,000	132,000	1,200	990
4-15/16	22226	0.26	1.0	2.6	0.67	3.9	25,700	146,000	196,000	1,020	870

* If load exceeds the maximum allowable slip fit load, line- to-line to light press fit of shaft required. Maximum slip fit radial loads apply if recommended shaft sizes are used.

** Maximum speed is dependent on load and ambient conditions, consult DODGE Engineering.

S2000-HD

Table 2: Easy Selection Table for S2000-HD Double Row Spherical Roller Bearings

Shaft Size Inches	L_{10} Life Hours	Allowable Equivalent Radial Load Rating (lbs.) at Various Revolutions per Minute								
		50	100	150	250	500	870	1,020	1,200	1,320
1-3/8 to 1-1/2	10,000	7,498	6,090	5,393	4,626	3,758	3,182	3,034	2,890	2,808
	30,000	5,393	4,380	3,878	3,327	2,703	2,289	2,182	2,078	2,020
	40,000	4,947	4,018	3,558	3,052	2,479	2,100	2,002	1,907	1,853
	60,000	4,380	3,558	3,150	2,703	2,195	1,859	1,773	1,688	1,641
	100,000	3,758	3,052	2,703	2,319	1,883	1,595	1,521	1,448	1,407
1-11/16 to 1-3/4	10,000	7,498	6,090	5,393	4,626	3,758	3,182	3,034	2,890	2,808
	30,000	5,393	4,380	3,878	3,327	2,703	2,289	2,182	2,078	2,020
	40,000	4,947	4,018	3,558	3,052	2,479	2,100	2,002	1,907	1,853
	60,000	4,380	3,558	3,150	2,703	2,195	1,859	1,773	1,688	1,641
	100,000	3,758	3,052	2,703	2,319	1,883	1,595	1,521	1,448	1,407
1-15/16 to 2	10,000	7,930	6,441	5,704	4,893	3,975	3,366	3,209	3,057	2,970
	30,000	5,704	4,633	4,102	3,519	2,859	2,421	2,308	2,198	2,136
	40,000	5,232	4,250	3,763	3,228	2,622	2,221	2,117	2,017	1,960
	60,000	4,633	3,763	3,332	2,859	2,322	1,966	1,875	1,786	1,735
	100,000	3,975	3,228	2,859	2,452	1,992	1,687	1,608	1,532	1,489
2-3/16	10,000	9,733	7,905	7,000	6,005	4,878	4,131	3,939	3,751	3,645
	30,000	7,000	5,686	5,035	4,319	3,508	2,971	2,833	2,698	2,622
	40,000	6,421	5,216	4,618	3,962	3,218	2,726	2,599	2,475	2,405
	60,000	5,686	4,618	4,089	3,508	2,850	2,413	2,301	2,191	2,130
	100,000	4,878	3,962	3,508	3,010	2,445	2,070	1,974	1,880	1,827
2-7/16	10,000	14,058	11,419	10,111	8,674	7,046	5,967	5,689	5,418	5,266
	30,000	10,111	8,213	7,272	6,239	5,068	4,292	4,092	3,897	3,787
	40,000	9,275	7,534	6,671	5,723	4,649	3,937	3,753	3,575	3,474
	60,000	8,213	6,671	5,907	5,068	4,116	3,486	3,324	3,165	3,076
	100,000	7,046	5,723	5,068	4,348	3,531	2,991	2,851	2,716	2,639
2-11/16 to 3	10,000	14,959	12,151	10,759	9,230	7,497	6,350	6,054	5,766	3,697
	30,000	10,759	8,739	7,738	6,639	5,392	4,567	4,354	4,147	3,697
	40,000	9,870	8,017	7,098	6,090	4,946	4,189	3,994	3,804	3,697
	60,000	8,739	7,098	6,285	5,392	4,380	3,709	3,537	3,368	3,273
	100,000	7,497	6,090	5,392	4,626	3,758	3,182	3,034	2,890	2,808
3-7/16	10,000	23,611	19,178	16,981	14,569	11,833	10,022	9,555	6,004	8,844
	30,000	16,981	13,793	12,213	10,478	8,511	7,208	6,872	6,004	6,360
	40,000	15,577	12,653	11,203	9,612	7,807	6,612	6,304	6,004	5,835
	60,000	13,793	11,203	9,920	8,511	6,913	5,855	5,582	5,316	5,166
	100,000	11,833	9,612	8,511	7,302	5,931	5,023	4,789	4,561	4,432
3-15/16	10,000	29,919	24,302	21,518	18,461	14,995	12,699	7,988	11,531	11,206
	30,000	21,518	17,478	15,476	13,278	10,785	9,134	7,988	8,294	8,060
	40,000	19,739	16,033	14,197	12,180	9,893	8,378	7,988	7,608	7,393
	60,000	17,478	14,197	12,571	10,785	8,760	7,419	7,073	6,737	6,547
	100,000	14,995	12,180	10,785	9,252	7,515	6,365	6,068	5,779	5,616
4-7/16	10,000	37,489	30,450	26,963	23,132	18,789	10,498	15,171	14,449	
	30,000	26,963	21,901	19,392	16,637	13,513	10,498	10,911	10,392	
	40,000	24,733	20,090	17,789	15,261	12,396	10,498	10,009	9,533	
	60,000	21,901	17,789	15,751	13,513	10,976	9,296	8,863	8,441	
	100,000	18,789	15,261	13,513	11,593	9,417	7,975	7,603	7,242	
4-15/16	10,000	52,628	42,747	37,851	32,473	26,377	14,738	21,298		
	30,000	37,851	30,745	27,224	23,356	18,971	14,738	15,318		
	40,000	34,722	28,203	24,973	21,424	17,402	14,738	14,051		
	60,000	30,745	24,973	22,112	18,971	15,409	13,050	12,442		
	100,000	26,377	21,424	18,971	16,275	13,220	11,196	10,674		

Only the labyrinth seal (L seal) may be used to the right of the heavy line.

In the light shaded area, a line-to-line to light press fit on the shaft is required.

For applications in the dark shaded area, the maximum load for the specific speed is shown. The load does not correspond to the L_{10} shown at the left.

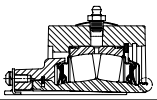

S2000-HD

Table 2: Easy Selection Table for S2000-HD Double Row Spherical Roller Bearings (cont)

Shaft Size Inches	L_{10} Life Hours	Allowable Equivalent Radial Load Rating (lbs.) at Various Revolutions per Minute							
		1,560	1,750	2,040	2,250	2,700	3180	3360	3600
1-3/8 to 1-1/2	10,000	2,671	2,581	2,465	2,393	1,495	2,157	2,122	2,078
	30,000	1,921	1,856	1,773	1,721	1,495	1,552	1,526	1,495
	40,000	1,762	1,703	1,626	1,579	1,495	1,423	1,400	1,371
	60,000	1,560	1,508	1,440	1,398	1,324	1,260	1,240	1,214
	100,000	1,339	1,293	1,235	1,199	1,136	1,081	1,063	1,042
1-11/16 to 1-3/4	10,000	2,671	2,581	2,465	1,579	2,266	2,157	2,122	
	30,000	1,921	1,856	1,773	1,579	1,630	1,552	1,526	
	40,000	1,762	1,703	1,626	1,579	1,495	1,423	1,400	
	60,000	1,560	1,508	1,440	1,398	1,324	1,260	1,240	
	100,000	1,339	1,293	1,235	1,199	1,136	1,081	1,063	
1-15/16 to 2	10,000	2,825	2,729	1,720	2,531	2,396	2,282		
	30,000	2,032	1,963	1,720	1,820	1,724	1,641		
	40,000	1,864	1,801	1,720	1,670	1,581	1,505		
	60,000	1,650	1,594	1,523	1,479	1,400	1,333		
	100,000	1,416	1,368	1,306	1,269	1,201	1,144		
2-3/16	10,000	3,467	2,210	3,199	3,106	2,941			
	30,000	2,494	2,210	2,301	2,234	2,115			
	40,000	2,288	2,210	2,111	2,050	1,940			
	60,000	2,026	1,957	1,869	1,815	1,718			
	100,000	1,738	1,679	1,603	1,557	1,474			
2-7/16	10,000	5,008	4,838	4,621	4,487				
	30,000	3,602	3,480	3,324	3,227				
	40,000	3,304	3,192	3,049	2,960				
	60,000	2,926	2,827	2,700	2,621				
	100,000	2,510	2,425	2,316	2,249				
2-11/16 to 3	10,000	5,329	5,149	4,917					
	30,000	3,833	3,703	3,537					
	40,000	3,516	3,397	3,244					
	60,000	3,113	3,008	2,873					
	100,000	2,671	2,580	2,464					
3-7/16	10,000	8,411							
	30,000	6,050							
	40,000	5,549							
	60,000	4,914							
	100,000	4,216							
3-15/16	10,000								
	30,000								
	40,000								
	60,000								
	100,000								
4-7/16	10,000								
	30,000								
	40,000								
	60,000								
	100,000								
4-15/16	10,000								
	30,000								
	40,000								
	60,000								
	100,000								

Only the labyrinth seal (L seal) may be used to the right of the heavy line.

In the light shaded area, a line-to-line to light press fit on the shaft is required.

For applications in the dark shaded area, the maximum load for the specific speed is shown. The load does not correspond to the L_{10} shown at the left.

S2000-HD

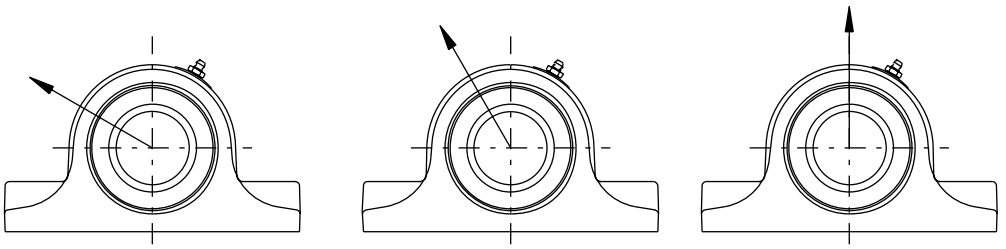

Table 3: Steel Housed S2000 & Imperial - Housing Ratings*

Shaft Sizes	Basic Bearing Description	Maximum Recommended Housing Loads, lb	
		P2B	P4B
1-1/8 1-3/16 1-1/4 1-3/8 1-7/16 1-1/2	22208	24400	
1-1/2** 1-5/8 1-11/16 1-3/4	22209	26400	
1-3/4** 1-15/16 2	22210	30200	
2-3/16 2-1/4	22211	35400	
2-1/4** 2-3/8 2-7/16 2-1/2	22213	51300	52800
2-11/16 2-3/4 2-15/16 3	22215	59700	60000
3-3/16 3-1/4 3-7/16 3-1/2	22218	90700	95500
3-11/16 3-15/16 4	22220		115000
4-7/16 4-1/2	22222		152100
4-15/16 5	22226		188200

* It is important to note that the values listed above are housing fracture loads from various …applied directions. These loads may exceed bearing, mounting bolt and/or shaft capacities. Applications subject to heavy housing loads, particularly shock loads, must adhere to the following procedures:

(1) The pillow block base bolts must be of high strength (Grade 8) bolts and properly tightened to mounting structure.

(2) Stop bars (shear strips) should be used against the plummer block where side loads are encountered.

(3) In all cases where loads are heavy, the L_{10} life of the bearing should be checked for proper selection and life requirements.,

** Imperial - Type E Dimensional Housing

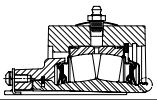

Steel S2000-HD Pillow Block 2 Bolt

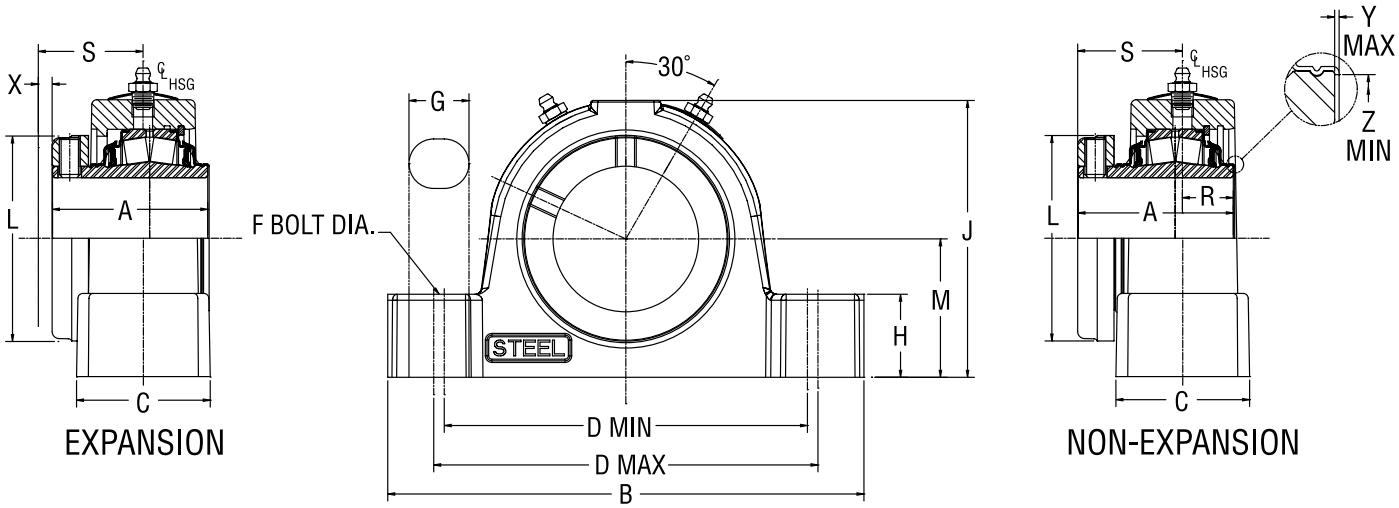

Shaft Size	Dodge Non-Expansion		Dodge Expansion	
	Part No.	Description	Part No.	Description
1-3/8	**071790**	SP2B-S2-106R	**071804**	SP2B-S2-106RE
1-7/16	**071791**	SP2B-S2-107R	**071805**	SP2B-S2-107RE
1-1/2	**071792**	SP2B-S2-108R	**071806**	SP2B-S2-108RE
1-11/16	**071793**	SP2B-S2-111R	**071807**	SP2B-S2-111RE
1-3/4	**071794**	SP2B-S2-112R	**071808**	SP2B-S2-112RE
1-15/16	**071795**	SP2B-S2-115R	**071809**	SP2B-S2-115RE
2	**071796**	SP2B-S2-200R	**071810**	SP2B-S2-200RE
2-3/16	**071797**	SP2B-S2-203R	**071811**	SP2B-S2-203RE
2-7/16	**071798**	SP2B-S2-207R	**071812**	SP2B-S2-207RE
2-11/16	**071799**	SP2B-S2-211R	**071813**	SP2B-S2-211RE
2-15/16	**071800**	SP2B-S2-215R	**071814**	SP2B-S2-215RE
3	**071801**	SP2B-S2-300R	**071815**	SP2B-S2-300RE
3-7/16	**071802**	SP2B-S2-307R	**071816**	SP2B-S2-307RE
3-15/16	**071803**	SP2B-S2-315R	**071817**	SP2B-S2-315RE

Shaft Size	A	B	C	D		F Bolt Dia.	G	H	J	L	M	R	S	"X Total Exp"	Y	Z
				Min	Max											
1-3/8 1-7/16 1-1/2	2.53	6.88	2.25	4.69	6.00	1/2	1.28	1.13	3.88	2.75	1.875	0.86	1.67	3/16	0.020	1.80
1-11/16 1-3/4	2.67	7.13	2.37	5.25	5.75	1/2	0.88	1.25	4.27	3.19	2.125	0.91	1.76	1/4	0.020	2.08
1-15/16 2	2.84	8.38	2.44	5.93	6.36	5/8	0.97	1.31	4.56	3.44	2.25	0.89	1.95	1/4	0.020	2.30
2-3/16	2.94	8.88	2.50	6.50	7.00	5/8	1.04	1.50	5.00	3.75	2.50	0.99	1.95	1/4	0.025	2.59
2-7/16	3.00	9.25	2.90	6.81	7.43	5/8	1.07	1.63	5.60	4.06	2.75	1.17	2.03	1/4	0.025	2.94
2-11/16 2-15/16 3	3.59	10.44	2.91	7.70	8.40	3/4	1.23	1.88	6.38	4.70	3.25	1.11	2.48	1/4	0.025	3.47
3-7/16	4.02	13.00	3.41	9.25	10.75	7/8	1.75	2.25	7.50	5.50	3.75	1.43	2.61	1/4	0.025	4.05
3-15/16	4.47	14.25	3.89	10.04	12.6	1	2.40	2.44	8.37	6.00	4.25	1.59	2.91	5/16	0.025	4.50

"A" & "R" Dimensions Do Not Include "Y" Dimension

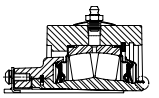

Steel S2000-HD Pillow Block 2 Bolt With Type E Dimensions

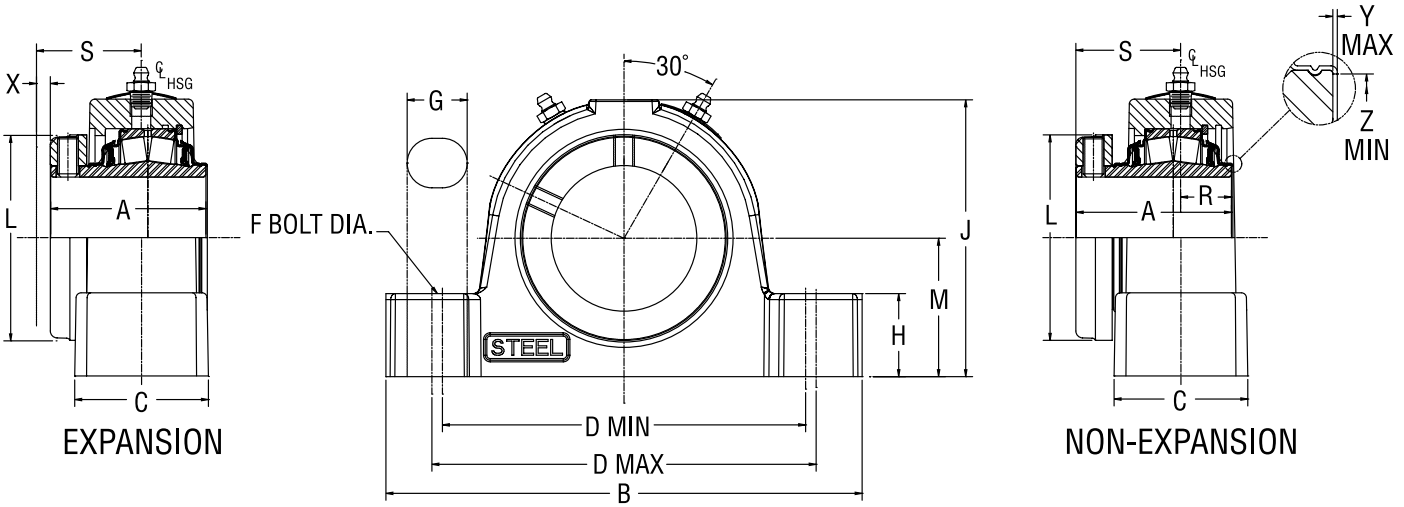

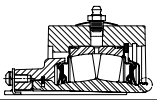

Steel S2000-HD Pillow Block 2 Bolt With Type E Dimensions

Shaft Size	Dodge Non-Expansion		Dodge Expansion	
	Part No.	Description	Part No.	Description
1-3/8	**071940**	SEP2B-S2-106R	**071951**	SEP2B-S2-106RE
1-7/16	**071941**	SEP2B-S2-107R	**071952**	SEP2B-S2-107RE
1-11/16	**071942**	SEP2B-S2-111R	**071953**	SEP2B-S2-111RE
1-15/16	**071943**	SEP2B-S2-115R	**071954**	SEP2B-S2-115RE
2	**071944**	SEP2B-S2-200R	**071955**	SEP2B-S2-200RE
2-3/16	**071945**	SEP2B-S2-203R	**071956**	SEP2B-S2-203RE
2-7/16	**071946**	SEP2B-S2-207R	**071957**	SEP2B-S2-207RE
2-11/16	**071947**	SEP2B-S2-211R	**071958**	SEP2B-S2-211RE
2-15/16	**071948**	SEP2B-S2-215R	**071959**	SEP2B-S2-215RE
3	**071949**	SEP2B-S2-300R	**071960**	SEP2B-S2-300RE
3-7/16	**071950**	SEP2B-S2-307R	**071961**	SEP2B-S2-307RE

Shaft Size	A	B	C	D		F Bolt Dia	G	H	J	L	M	R	S	X Total Exp	Y	Z	Set Screw Size	SS Torque In/lbs
				Min	Max													
1-3/8 1-7/16	2.53	6.88	2.25	4.69	5.88	1/2	1.22	1.13	3.84	2.55	1.875	1.03	1.50	0.16	0.020	1.80	5/16-18	165
1-11/16	2.67	7.88	2.38	5.70	6.50	1/2	1.02	1.25	4.26	3.01	2.125	0.98	1.69	0.19	0.020	2.08	5/16-18	165
1-15/16 2	2.84	8.88	2.44	6.00	7.12	5/8	1.32	1.31	4.47	3.26	2.250	1.08	1.76	0.22	0.020	2.30	3/8-16	290
2-3/16	2.94	9.63	2.50	6.50	7.88	5/8	1.45	1.50	5.00	3.50	2.500	1.06	1.88	0.25	0.025	2.60	3/8-16	290
2-7/16 2-11/16	3.20	10.25	2.90	6.88	8.62	5/8	1.63	1.63	5.71	3.86	2.750	1.20	2.00	0.25	0.025	2.95	3/8-16	290
2-15/16 3	3.59	11.63	2.91	7.88	9.62	3/4	1.75	1.88	6.32	4.61	3.125	1.34	2.25	0.25	0.025	3.47	1/2-13	620
3-7/16	4.01	13.50	3.41	9.38	11.25	7/8	1.94	2.25	7.69	5.50	3.750	1.51	2.50	0.25	0.025	4.05	1/2-13	620

"A" & "R" Dimensions Do Not Include "Y" Dimension

DIMENSIONS

Steel S2000-HD Pillow Block 4 Bolt

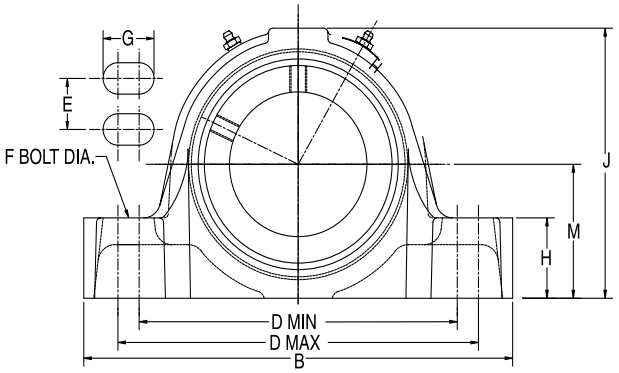

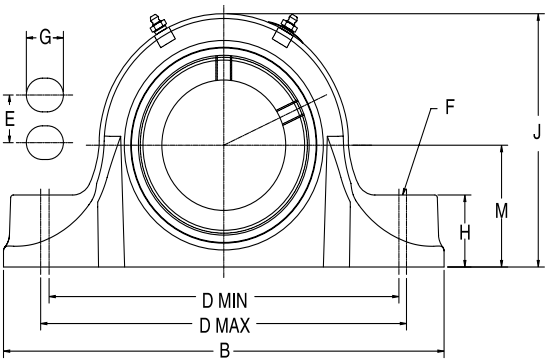

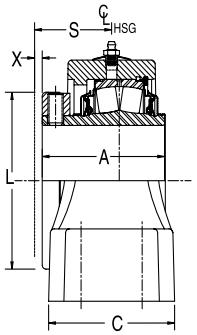

2-7/16 Thru 3-7/16
EXPANSION

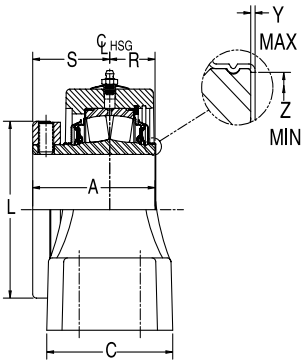

2-7/16 Thru 3-7/16
NON-EXPANSION

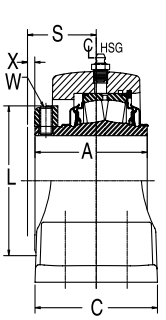

3-15/16
EXPANSION

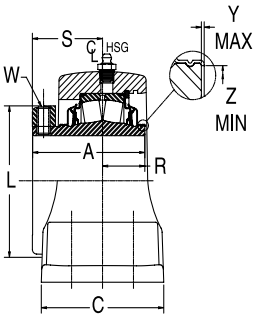

3-15/16
NON-EXPANSION

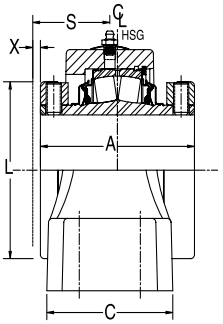

4-15/16
EXPANSION

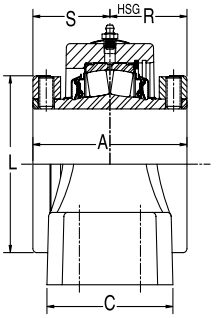

4-15/16
NON-EXPANSION

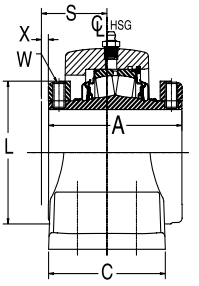

4-7/16
EXPANSION

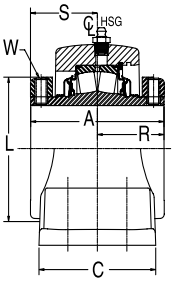

4-7/16
NON-EXPANSION

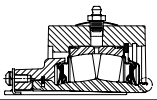

Steel S2000-HD Pillow Block 4 Bolt

Shaft Size	Dodge Non-Expansion		Dodge Expansion	
	Dodge Part No.	Description	Dodge Part No.	Description
2-7/16	**071821**	SP4B-S2-207R	**071832**	SP4B-S2-207RE
2-11/16	**071822**	SP4B-S2-211R	**071833**	SP4B-S2-211RE
2-15/16	**071823**	SP4B-S2-215R	**071834**	SP4B-S2-215RE
3	**071824**	SP4B-S2-300R	**071835**	SP4B-S2-300RE
3-7/16	**071825**	SP4B-S2-307R	**071836**	SP4B-S2-307RE
3-15/16	**071826**	SP4B-S2-315R	**071837**	SP4B-S2-315RE
4-7/16	**071827**	SP4B-S2-407R	**071838**	SP4B-S2-407RE
4-15/16	**071828**	SP4B-S2-415R	**071839**	SP4B-S2-415RE

Shaft Size	A	B	C	D		E	F Bolt Dia.	G	H	J	L	M	R	S	X Total Exp	Y	Z
				Min	Max												
2-7/16 2-11/16	3.20	9.25	3.00	6.88	7.63	1.75	1/2	1.06	1.63	5.61	4.06	2.75	1.19	2.90	1/4	0.025	2.94
2-15/16 3	3.59	10.44	3.13	7.60	9.10	1.88	5/8	1.43	1.88	6.44	4.70	3.00	1.14	2.46	1/4	0.025	3.47
3-7/16	4.02	12.30	3.75	8.88	10.88	2.00	3/4	1.88	2.25	7.56	5.50	3.75	1.48	2.54	1/4	0.025	4.05
3-15/16	4.47	14.88	4.31	10.88	13.38	2.25	3/4	2.13	2.44	8.70	6.00	4.25	1.25	3.22	5/16	0.025	4.50
4-7/16	6.53	16.13	4.75	11.88	14.5	2.50	3/4	2.19	2.75	9.67	6.45	4.75	2.87	3.66	3/8	0.036	5.00
4-15/16	6.91	17.50	5.03	15.13	15.88	2.75	7/8	1.37	3.00	11.12	7.45	5.50	3.35	3.56	3/8	0.036	5.84

"A" & "R" Dimensions Do Not Include "Y" Dimension

Steel S2000-HD Pillow Block 4 Bolt With Type E Dimensions

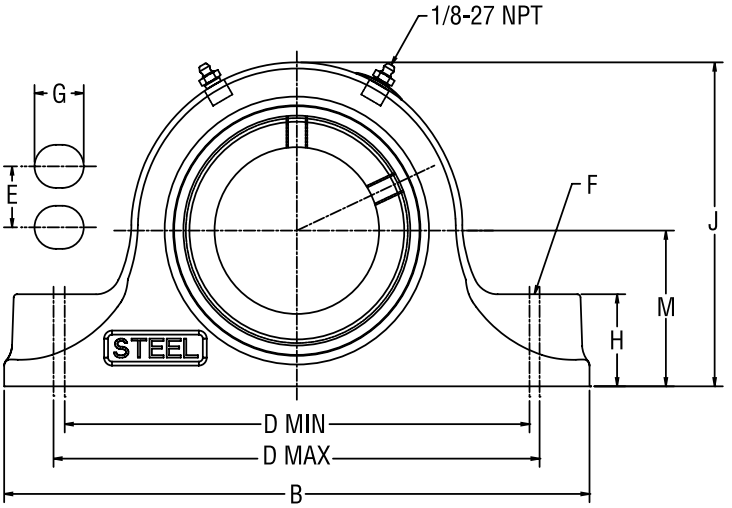

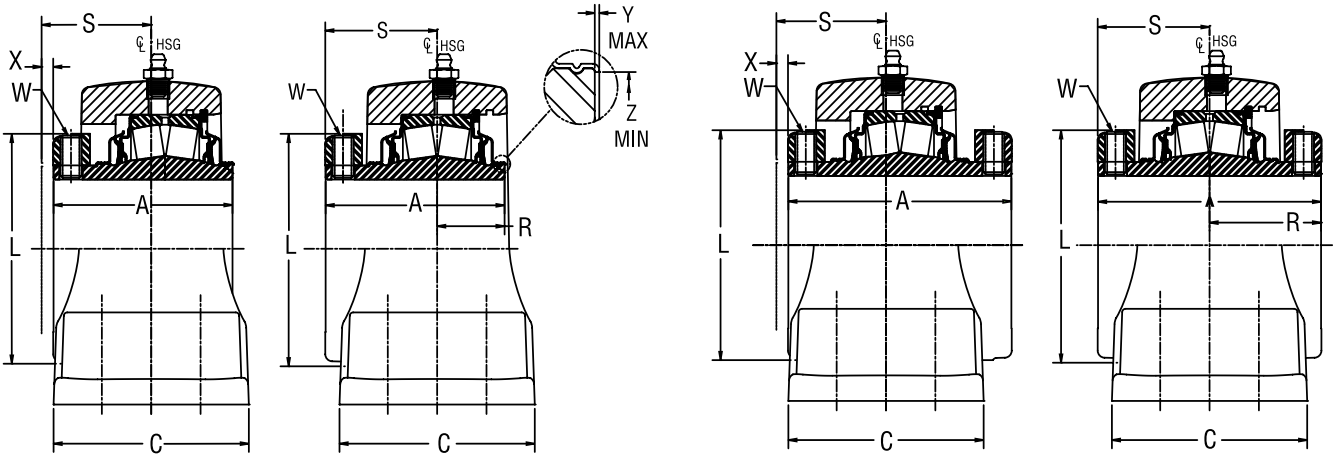

2-7/16 THRU 3-15/16 CONSTRUCTION
EXPANSION

2-7/16 THRU 3-15/16 CONSTRUCTION
NON-EXPANSION

4-7/16 THRU 4-15/16 CONSTRUSTION
EXPANSION

4-7/16 THRU 4-15/16 CONSTRUSTION
NON-EXPANSION

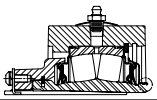

Steel S2000-HD Pillow Block 4 Bolt With Type E Dimensions

Shaft Size	Dodge Non-Expansion		Dodge Expansion	
	Dodge Part No.	Description	Dodge Part No.	Description
2-7/16	**071962**	SEP4B-S2-207R	**071970**	SEP4B-S2-207RE
2-11/16	**071963**	SEP4B-S2-211R	**071971**	SEP4B-S2-211RE
2-15/16	**071964**	SEP4B-S2-215R	**071972**	SEP4B-S2-215RE
3	**071965**	SEP4B-S2-300R	**071973**	SEP4B-S2-300RE
3-7/16	**071966**	SEP4B-S2-307R	**071974**	SEP4B-S2-307RE
3-15/16	**071967**	SEP4B-S2-315R	**071975**	SEP4B-S2-315RE
4-7/16	**071968**	SEP4B-S2-407R	**071976**	SEP4B-S2-407RE
4-15/16	**071969**	SEP4B-S2-415R	**071977**	SEP4B-S2-415RE

Shaft Size	A	B	C	D Min	D Max	E	F Bolt Dia	G	H
2-7/16	3.20	10.25	3.25	7.13	8.75	1.88	5/8	1.57	1.63
2-11/16 2-15/16 3	3.59	10.83	3.38	8.00	9.60	2.12	5/8	1.56	1.88
3-7/16	4.01	13.63	3.75	9.25	11.25	2.38	3/4	1.88	2.25
3-15/16	4.47	14.88	4.31	10.88	13.88	2.25	3/4	2.13	2.44
4-7/16	6.53	16.13	4.75	11.88	14.50	2.50	3/4	2.19	2.75
4-15/16	6.91	17.50	5.04	15.13	15.88	2.88	7/8	1.38	3.00

"A" & "R" Dimensions Do Not Include "Y" Dimension

Reference Dimension Only

Shaft Size	J	L	M	R	S	X Total Exp	Y	Z	Set Screw Size	Ss Torque In/Lbs
2-7/16	5.71	3.86	2.750	1.20	2.00	0.25	0.025	2.94	3/8	290
2-11/16 2-15/16 3	6.32	4.61	3.125	1.34	2.25	0.25	0.025	3.47	1/2	620
3-7/16	7.69	5.50	3.750	1.51	2.50	0.25	0.025	4.05	1/2	620
3-15/16	8.70	6.00	4.250	1.25	3.22	0.31	0.025	4.50	5/8	1325
4-7/16	9.67	6.45	4.750	2.87	3.66	0.38	0.036	5.00	5/8	1325
4-15/16	11.16	7.45	5.500	3.29	3.62	0.38	N/A	N/A	5/8	1325

"A" & "R" Dimensions Do Not Include "Y" Dimension

Steel S2000-HD Flange 4 Bolt

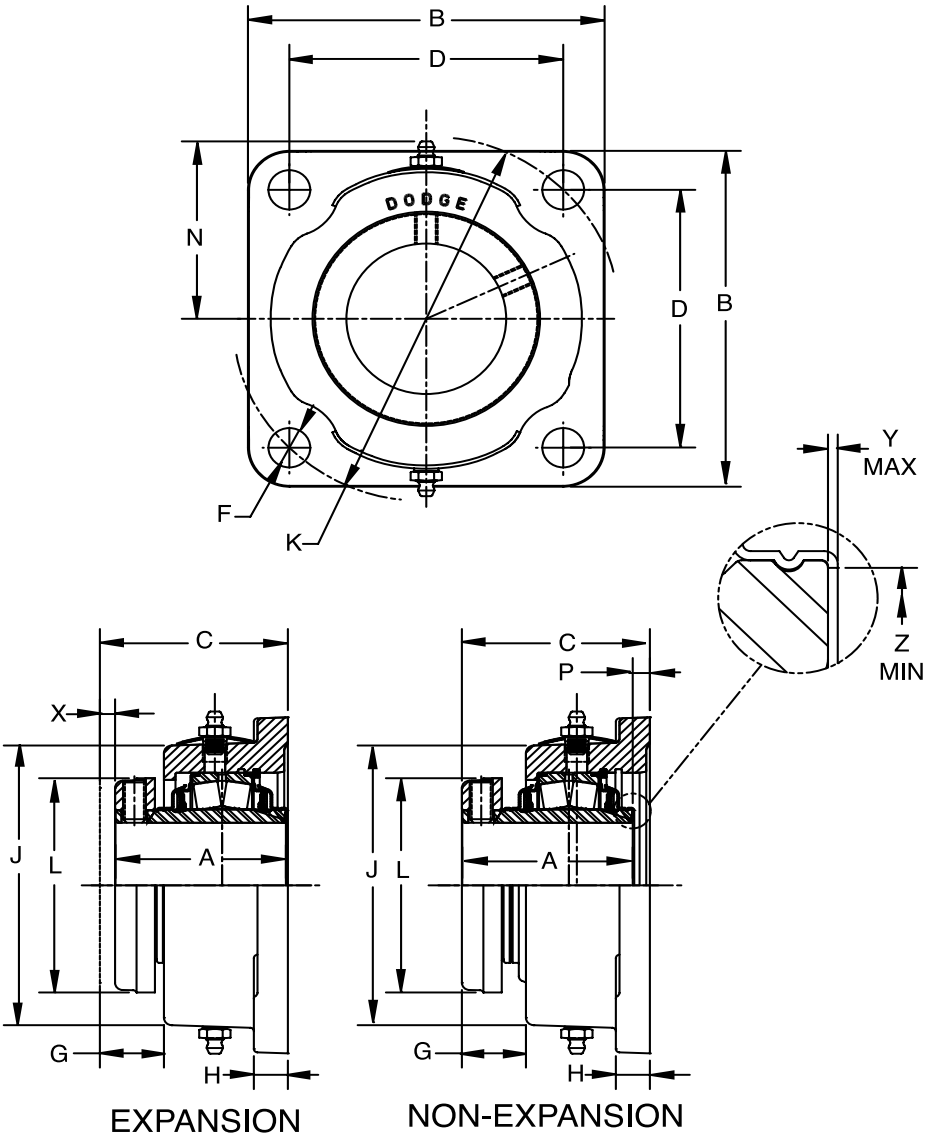

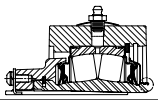

Steel S2000-HD Flange 4 Bolt

Shaft Size	Dodge Non-Expansion		Dodge Expansion	
	Dodge Part No.	Description	Dodge Part No.	Description
1-3/8	**072386**	SF4S-S2-106R	**072400**	SF4S-S2-106RE
1-7/16	**072387**	SF4S-S2-107R	**072401**	SF4S-S2-107RE
1-1/2	**072388**	SF4S-S2-108R	**072402**	SF4S-S2-108RE
1-11/16	**072389**	SF4S-S2-111R	**072403**	SF4S-S2-111RE
1-3/4	**072390**	SF4S-S2-112R	**072404**	SF4S-S2-112RE
1-15/16	**072391**	SF4S-S2-115R	**072405**	SF4S-S2-115RE
2	**072392**	SF4S-S2-200R	**072406**	SF4S-S2-200RE
2-3/16	**072393**	SF4S-S2-203R	**072407**	SF4S-S2-203RE
2-7/16	**072394**	SF4S-S2-207R	**072408**	SF4S-S2-207RE
2-11/16	**072395**	SF4S-S2-211R	**072409**	SF4S-S2-211RE
2-15/16	**072396**	SF4S-S2-215R	**072410**	SF4S-S2-215RE
3	**072397**	SF4S-S2-300R	**072411**	SF4S-S2-300RE
3-7/16	**072398**	SF4S-S2-307R	**072412**	SF4S-S2-307RE
3-15/16	**072399**	SF4S-S2-315R	**072413**	SF4S-S2-315RE

Shaft Size	A	B	C	D	F Bolt Dia.	G	H	J	K	L	N	P	X Total Exp	Y	Z
1-3/8 1-7/16 1-1/2	2.53	4.62	2.77	3.54	1/2	0.76	0.88	3.70	5.00	2.75	2.25	0.24	3/16	0.02	1.80
1-11/16 1-3/4	2.67	5.37	2.87	3.89	1/2	0.77	0.88	4.41	5.50	3.19	2.62	0.20	1/4	0.02	2.08
1-15/16 2	2.84	5.18	3.16	4.07	1/2	0.91	0.91	4.66	5.75	3.44	2.75	0.32	1/4	0.02	2.30
2-3/16	2.94	5.87	3.16	4.51	5/8	0.83	0.75	5.03	6.38	3.75	2.93	0.22	1/4	0.02	2.59
2-7/16	3.20	6.18	3.34	4.77	5/8	0.72	1.00	5.63	6.75	4.06	3.23	0.14	1/4	0.025	2.94
2-11/16 2-15/16 3	3.59	7.18	3.87	5.57	3/4	1.04	1.06	6.51	7.88	4.70	3.75	0.28	1/4	0.025	3.47
3-7/16	4.00	8.37	4.11	6.72	3/4	0.78	1.28	7.49	9.50	5.50	4.17	0.11	1/4	0.025	4.05
3-15/16	4.48	9.49	4.84	7.60	1	0.85	1.50	8.22	10.75	6.00	4.68	0.36	5/32	0.025	4.50

"P" Dimension Is For Non-Expansion Only

"A" & "P" Dimensions Do Not Include "Y" Dimension

S-2000 Bearing Insert

TRIDENT SEAL

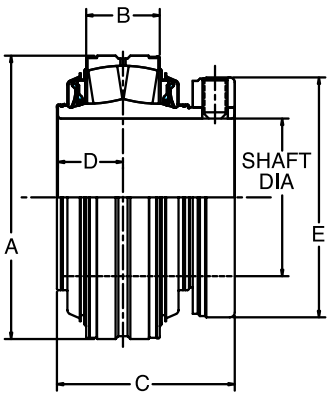

1-3/8 THRU 3-15/16" CONSTRUCTION

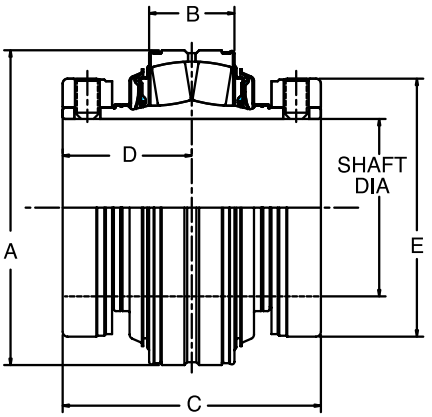

4-7/16 THRU 4-15/16" CONSTRUCTION

LABYRINTH SEAL

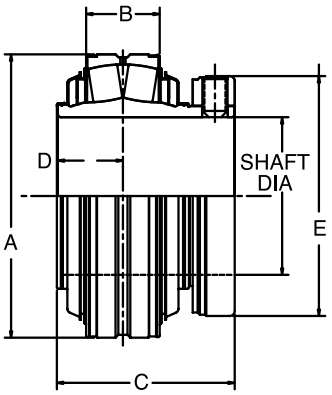

1-3/8 THRU 3-15/16" CONSTRUCTION

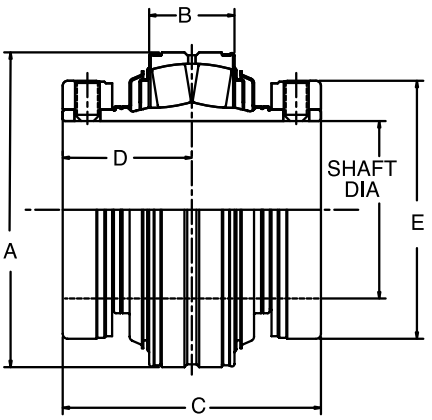

4-7/16 THRU 4-15/16" CONSTRUCTION

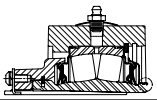

S-2000 Bearing Insert

Bearing	Shaft Size	Trident Seal		Labyrinth Seal	
		Part Number	Part Name	Part Number	Part Name
22208	1-3/8	**070000**	INS-S2-106R	**070016**	INS-S2-106L
	1-7/16	**070001**	INS-S2-107R	**070017**	INS-S2-107L
	1-1/2	**070002**	INS-S2-108R	**070018**	INS-S2-108L
22209	1-11/16	**070003**	INS-S2-111R	**070019**	INS-S2-111L
	1-3/4	**070004**	INS-S2-112R	**070020**	INS-S2-112L
22210	1-15/16	**070005**	INS-S2-115R	**070021**	INS-S2-115L
	2	**070006**	INS-S2-200R	**070022**	INS-S2-200L
22211	2-3/16	**070007**	INS-S2-203R	**070023**	INS-S2-203L
22213	2-7/16	**070008**	INS-S2-207R	**070024**	INS-S2-207L
22215	2-11/16	**070009**	INS-S2-211R	**070025**	INS-S2-211L
	2-15/16	**070010**	INS-S2-215R	**070026**	INS-S2-215L
	3	**070011**	INS-S2-300R	**070027**	INS-S2-300L
22218	3-7/16	**070012**	INS-S2-307R	**070028**	INS-S2-307L
22220	3-15/16	**070013**	INS-S2-315R	**070029**	INS-S2-315L
22222	4-7/16	**070014**	INS-S2-407R	**070030**	INS-S2-407L
22226	4-15/16	**070015**	INS-S2-415R	**070031**	INS-S2-415L

Shaft Size	A	B	C	D	E
1-3/8 1-7/16 1-1/2	3.150	61/64	2-17/32	0.970	2-21/32
1-11/16 1-3/4	3.346	61/64	2-21/32	0.954	3-3/32
1-15/16 2	3.543	61/64	2-27/32	0.977	3-11/32
2-3/16	3.937	1-3/64	2-15/16	1.050	3-21/32
2-7/16	4.724	1-9/32	3-13/64	1.208	3-31/32
2-11/16 2-15/16 3	5.118	1-9/32	3-19/32	1.219	4-5/8
3-7/16	6.299	1-5/8	4	1.483	5-1/2
3-15/16	7.087	1-7/8	4-31/64	1.646	6
4-7/16	7.874	2-5/32	6-17/32	3.266	6-29/64
4-15/16	9.055	2-19/32	6-29/32	3.453	7-29/64

Steel S2000-HD Open End Covers

Shaft Size	Front End				Backside			
	S2000		E-S2000		S2000		E-S2000	
	Dodge Part No.	Description	Dodge Part No.	Description	Dodge Part No.	Description	Dodge Part No.	Description
1-3/8	**070240**	S2ECO-08-106	**070240**	S2ECO-08-106	**072503**	S2IPBECO-08-106	**072503**	S2IPBECO-08-106
1-7/16	**070241**	S2ECO-08-107	**070241**	S2ECO-08-107	**072504**	S2IPBECO-08-107	**072504**	S2IPBECO-08-107
1-1/2	**070242**	S2ECO-08-108	**070242**	S2ECO-08-108	**072505**	S2IPBECO-08-108	**072506**	ES2IPBECO-09-108
1-11/16	**070243**	S2ECO-09-111	**070243**	S2ECO-09-111	**072508**	S2IPBECO-09-111	**072508**	S2IPBECO-09-111
1-3/4	**070244**	S2ECO-09-112	**070244**	S2ECO-09-112	**072509**	S2IPBECO-09-112	**072510**	ES2IPBECO-10-112
1-15/16	**070245**	S2ECO-10-115	**070245**	S2ECO-10-115	**072512**	S2IPBECO-10-115	**072512**	S2IPBECO-10-115
2	**070246**	S2ECO-10-200	**070246**	S2ECO-10-200	**072513**	S2IPBECO-10-200	**072513**	S2IPBECO-10-200
2-3/16	**070247**	S2ECO-11-203	**070247**	S2ECO-11-203	**072514**	S2IPBECO-11-203	**072514**	S2IPBECO-11-203
2-7/16	**070178**	S2IPECO-13-207	**070178**	S2IPECO-13-207	**072518**	S2IPBECO-13-207	**072518**	S2IPBECO-13-207
2-11/16	**070248**	S2ECO-15-211	**070248**	S2ECO-15-211	**072520**	S2IPBECO-15-211	**072520**	S2IPBECO-15-211
2-15/16	**070249**	S2ECO-15-215	**070249**	S2ECO-15-215	**072522**	S2IPBECO-15-215	**072522**	S2IPBECO-15-215
3	**070250**	S2ECO-15-300	**070250**	S2ECO-15-300	**072523**	S2IPBECO-15-300	**072523**	S2IPBECO-15-300
3-7/16	**070186**	S2IPECO-18-307	**070186**	S2IPECO-18-307	**072526**	S2IPBECO-18-307	**072526**	S2IPBECO-18-307
3-15/16	**070189**	S2IPECO-20-315	**070189**	S2IPECO-20-315	**072529**	S2IPBECO-20-315	**072529**	S2IPBECO-20-315
4-7/16	**070191**	S2IPECO-22-407	**070191**	S2IPECO-22-407	**072532**	S2BECO-22-407	**072532**	S2BECO-22-407
4-15/16	**070193**	S2IPECO-26-415	**070193**	S2IPECO-26-415	**072535**	S2BECO-26-415	**072535**	S2BECO-26-415

Steel S2000-HD Closed End Covers

Shaft Size	S2000		E-S2000	
	Dodge Part No.	Description	Dodge Part No.	Description
1-3/8 to 1-1/2	**069970**	S2EC08	**069960**	IPEC08
1-11/16 to 1-3/4	**069971**	S2EC09	**069961**	IPEC09
1-15/16 to 2	**069972**	S2EC10	**069962**	IPEC10
2-3/16	**069973**	S2EC11	**069963**	IPEC11
2-7/16	**069964**	S2EC13	**069964**	IPEC13
2-11/16 to 3	**069975**	S2EC15	**069965**	IPEC15
3-7/16	**069966**	S2IPEC18	**069966**	S2IPEC18
3-15/16	**069967**	S2IPEC20	**069967**	S2IPEC20
4-7/16	**069968**	S2IPEC22	**069968**	S2IPEC22
4-15/16	**069969**	S2IPEC26	**069969**	S2IPEC26

DIMENSIONS

S2000-HD End Cover

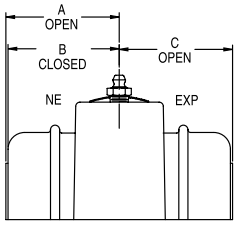

PILLOW BLOCK

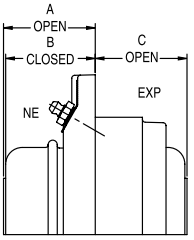

PILOTED FLANGE

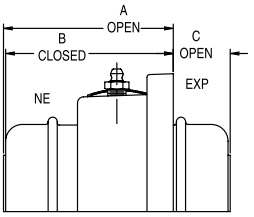

FLANGE

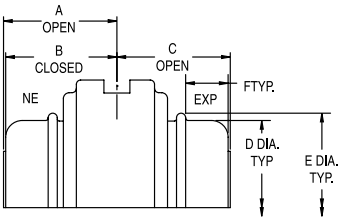

WS TAKE-UP

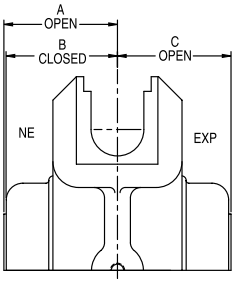

TPHU TAKE-UP

	Shaft Size	S2000 Pillow Block (2 Bolt)	S2000 Pillow Block (4 Bolt)	*E-S2000 Pillow Block (2 Bolt)	*E-S2000 Pillow Block (2 Bolt)	S2000 Piloted Flange	*E-S2000 Piloted Flange	S2000 Round Flange	S2000 Square Flange	*E-S2000 Square Flange	Wide Slot Take-Up	Top Angle Take-Up	D	E	F
A OPEN	1-3/8	2.03		2.03		1.67	1.67	3.12	3.45	3.45	2.06				
B CLOSED	1-7/16	1.97	N/A	1.97	N/A	1.61	1.61	3.06	3.39	3.39	2.00	N/A	2-15/16	3-3/16	3/4
C OPEN	1-1/2	2.11		2.11		2.46	2.46	0.99	0.99	1.20	2.10				
A OPEN		2.22		2.22		1.83	1.83	3.33	4.07	4.07	2.19				
B CLOSED	1-11/16	2.16	N/A	2.16	N/A	1.77	1.77	3.27	4.01	4.01	2.13	N/A	3-17/64	3-25/64	7/8
C OPEN		2.25		2.25		2.60	2.60	1.10	1.10	1.20	2.25				
A OPEN		2.22		2.22		1.83	1.83	3.33	4.07	4.07	2.19				
B CLOSED	1-3/4	2.16	N/A	2.16	N/A	1.77	1.77	3.27	4.01	4.01	2.13	N/A	3-17/64	3-25/64	7/8
C OPEN		2.25		2.25		2.60	2.60	1.10	1.10	1.20	2.25				
A OPEN	1-15/16	2.31	2.31	2.31		1.92	1.92	3.47	3.95	3.95	2.25	2.31			
B CLOSED	THRU	2.25	2.25	2.25	N/A	1.86	1.86	3.41	3.89	3.89	2.19	2.25	3-33/64	3-39/64	1-1/64
C OPEN	2	2.45	2.45	2.45		2.83	2.83	1.28	1.28	1.38	2.45	2.43			
A OPEN		2.47	2.47	2.47		2.00	2.00	3.69	4.53	4.53	2.42	2.47			
B CLOSED	2-3/16	2.41	2.41	2.41	N/A	1.94	1.94	3.63	4.47	4.47	2.36	2.40	3-49/64	3-61/64	1-1/32
C OPEN		2.54	2.54	2.54		3.00	3.00	1.32	1.32	1.40	2.54	2.54			
A OPEN		2.53	2.53	2.53	2.53	2.18	2.18	4.04	4.72	4.72	2.53	2.70			
B CLOSED	2-7/16	2.44	2.44	2.44	2.44	2.09	2.09	3.95	4.63	4.63	2.44	2.61	4-13/32	4-41/64	1
C OPEN		2.77	2.77	2.77	2.77	3.24	3.24	1.37	1.37	2.77	2.77	2.72			
A OPEN	2-11/16	2.65	2.65	2.65	2.65	2.29	2.29	4.18	5.06	5.06	2.70	2.73			
B CLOSED	2-15/16	2.56	2.56	2.56	2.56	2.20	2.20	4.09	4.97	4.97	2.61	2.64	4-59/64	5-1/16	1-7/32
C OPEN	3	3.06	3.06	3.06	3.06	3.54	3.54	1.66	1.66	1.69	3.06	3.06			
A OPEN		3.07	3.07	3.07	3.07	2.91	2.91		5.78	5.78	3.07	3.07			
B CLOSED	3-7/16	2.94	2.94	2.94	2.94	2.78	2.78	N/A	5.65	5.65	2.94	2.94	5-63/64	6-7/32	1-1/8
C OPEN		3.31	3.31	3.31	3.31	3.59	3.59		1.63	1.66	3.31	3.31			
A OPEN		3.49	3.49		3.49	3.32	3.32		7.17	7.17	3.52	3.61			
B CLOSED	3-15/16	3.36	3.36	N/A	3.36	3.19	3.19	N/A	7.04	7.04	3.39	3.48	6-43/64	6-29/32	1-3/8
C OPEN		3.80	3.80		3.80	4.13	4.13		1.94	1.38	3.80	3.83			
A OPEN			3.96		3.91	4.02	3.85			7.62	3.97	3.96			
B CLOSED	4-7/16	N/A	3.83	N/A	3.78	3.89	3.72	N/A	N/A	7.49	3.84	3.83	7-5/16	7-9/16	1-43/64
C OPEN			4.23		4.23	4.16	4.68			2.06	4.23	4.23			
A OPEN			4.49		4.46	4.24	4.08				4.49	4.49			
B CLOSED	5	N/A	4.36	N/A	4.33	4.11	3.95	N/A	N/A	N/A	4.36	4.36	8-7/16	8-11/16	1-29/32
C OPEN			4.69		4.69	4.91	5.37				4.69	4.68			

Type E, Type K, DOUBLE-INTERLOCK and TAF

Table 1 - E, K, DI, and TAF Tapered Roller Bearing Radial And Thrust Factors

Shaft Size	E	FA/FR<E		FA/FR>E		Dynamic Capacity C90	Static Capacity Co	Maximum RPM	Maximum RPM	Maximum Allowable Slip Fit Radial Load, FR **, LBS	
		X	Y	X	Y	Lbs.	Lbs.	R-Seal	E-TECT	E, DI,& TAF	K
1-3/16 1-1/4	0.49	0.87	1.77	0.70	2.14	2,980	15,760	4,490	3,100	3,100	2,100
1-3/8 1-7/16	0.46	0.87	1.89	0.70	2.28	4,760	26,000	3,820	2,675	5,000	3,300
1-1/2 1-5/8 1-11/16	0.44	0.87	1.96	0.70	2.37	6,140	33,000	3,320	2,325	6,400	4,300
1-3/4 1-7/8 1-15/16 2	0.33	0.87	2.64	0.70	3.18	8,070	43,000	3,050	2,135	8,400	5,600
2-3/16	0.36	0.87	2.38	0.70	2.87	8,550	48,200	2,730	1,900	8,900	5,900
2-1/4 2-7/16 2-1/2	0.40	0.87	2.17	0.70	2.63	9,090	54,000	2,420	1,700	9,500	6,300
2-11/16 2-3/4 2-15/16 3	0.46	0.87	1.87	0.70	2.26	9,600	61,200	2,060	1,440	10,000	6,700
3-3/16 3-1/4 3-7/16 3-1/2	0.50	0.87	1.71	0.70	2.07	15,300	108,600	1,640	1,145	16,000	10,500
3-15/16 4	0.49	0.87	1.77	0.70	2.14	21,000	154,000	1,530	1,070	22,000	14,600
4-7/16 4-1/2	0.53	0.87	1.63	0.70	1.97	25,800	188,400	1,360	950	27,000	----
4-15/16 5	0.47	0.87	1.83	0.70	2.21	35,500	266,000	1,200	840	35,000	----
5-7/16 5-15/16 6	0.49	0.87	1.76	0.70	2.12	40,700	354,000	915	640	42,400	----
6-7/16 6-1/2 6-15/16 7	0.54	0.87	1.61	0.70	1.95	69,200	574,000	790	550	72,000	----

Comparing Spherical To Taper Roller Bearings: The dynamic capacity C (spherical) and C90 (taper) are not to the same base. To compare basic dynamic capacities, multiply C x .259 and compare to C90.

* C90 - Dynamic capacity based on a rated life of 90 million revolutions or 3000 hours at 500 RPM.

** If load exceeds maximum allowable slip fit radial load, (FR), line-to-line, to light press fit of shaft required. Application up to maximum slip fit radial load may be applied if recommended shaft tolerances are used.

Type E, Type K, DOUBLE-INTERLOCK and TAF

Table 2 - Easy Selection Table Type E, K, DI and TAF

Shaft Size	L_{10} Hours Life	Allowable Equivalent Radial Load (Lbs.) at various Revolutions Per Minute									
		50	100	150	250	500	790	915	1,200	1,360	1,530
1-3/16 1-1/4	10,000	4,143	3,365	2,980	2,557	2,077	1,810	1,732	1,597	1,538	1,485
	30,000	2,980	2,421	2,143	1,839	1,494	1,302	1,246	1,149	1,106	1,068
	40,000	2,734	2,220	1,966	1,687	1,370	1,194	1,143	1,054	1,015	980
	60,000	2,421	1,966	1,741	1,494	1,213	1,058	1,012	933	899	867
	100,000	2,077	1,687	1,494	1,281	1,041	907	868	800	771	744
1-3/8 1-7/16	10,000	6,618	5,376	4,760	4,084	3,317	2,892	2,767	2,551	2,457	2,372
	30,000	4,760	3,866	3,424	2,937	2,386	2,080	1,990	1,835	1,767	1,706
	40,000	4,366	3,547	3,140	2,694	2,188	1,908	1,826	1,683	1,621	1,565
	60,000	3,866	3,140	2,781	2,386	1,938	1,689	1,616	1,490	1,435	1,385
	100,000	3,317	2,694	2,386	2,047	1,662	1,449	1,387	1,278	1,231	1,189
1-1/2 1-5/8 1-11/16	10,000	8,537	6,934	6,140	5,268	4,279	3,730	3,569	3,290	3,169	3,059
	30,000	6,140	4,987	4,416	3,789	3,077	2,683	2,567	2,366	2,279	2,200
	40,000	5,632	4,575	4,051	3,475	2,823	2,461	2,355	2,171	2,091	2,018
	60,000	4,987	4,051	3,587	3,077	2,500	2,179	2,085	1,922	1,851	1,787
	100,000	4,279	3,475	3,077	2,640	2,144	1,869	1,789	1,649	1,588	1,533
1-3/4 1-7/8 1-15/16 2	10,000	11,220	9,114	8,070	6,923	5,624	4,902	4,691	4,325	4,165	4,021
	30,000	8,070	6,555	5,804	4,979	4,045	3,526	3,374	3,110	2,996	2,892
	40,000	7,403	6,013	5,324	4,568	3,710	3,234	3,095	2,853	2,748	2,653
	60,000	6,555	5,324	4,714	4,045	3,285	2,864	2,740	2,526	2,433	2,349
	100,000	5,624	4,568	4,045	3,470	2,818	2,457	2,351	2,167	2,088	2,015
2-3/16	10,000	11,888	9,656	8,550	7,335	5,958	5,194	4,970	4,582	4,413	4,260
	30,000	8,550	6,945	6,149	5,276	4,285	3,736	3,575	3,295	3,174	3,064
	40,000	7,843	6,371	5,641	4,839	3,931	3,427	3,279	3,023	2,911	2,810
	60,000	6,945	5,641	4,995	4,285	3,481	3,034	2,903	2,677	2,578	2,489
	100,000	5,958	4,839	4,285	3,676	2,986	2,603	2,491	2,296	2,212	2,135
2-1/4 2-7/16 2-1/2	10,000	12,639	10,266	9,090	7,798	6,334	5,522	5,284	4,871	4,692	4,529
	30,000	9,090	7,383	6,538	5,609	4,556	3,972	3,800	3,503	3,374	3,257
	40,000	8,338	6,773	5,997	5,145	4,179	3,643	3,486	3,214	3,095	2,988
	60,000	7,383	5,997	5,310	4,556	3,700	3,226	3,087	2,846	2,741	2,646
	100,000	6,334	5,145	4,556	3,908	3,175	2,768	2,648	2,441	2,351	2,270
2-11/16 2-3/4 2-15/16 3	10,000	13,348	10,842	9,600	8,236	6,690	5,832	5,580	5,145	4,955	4,783
	30,000	9,600	7,798	6,905	5,924	4,811	4,194	4,014	3,700	3,564	3,440
	40,000	8,806	7,153	6,334	5,434	4,414	3,848	3,682	3,394	3,269	3,156
	60,000	7,798	6,334	5,608	4,811	3,908	3,407	3,260	3,005	2,895	2,794
	100,000	6,690	5,434	4,811	4,128	3,353	2,923	2,797	2,578	2,483	2,397

For maximum RPM see Table 1 on page B5-9.

In the shaded area, E, DI and TAF mounted units require a line-to-line to light press fit of shaft

In the boxed area, Type K mounted units require a line-to-line to light press fit of shaft

Type E, Type K, DOUBLE-INTERLOCK and TAF

Table 2 (Continued) - Easy Selection Table Type E, K, DI and TAF

Shaft Size	L_{10} Hours Life	Allowable Equivalent Radial Load (Lbs.) at various Revolutions Per Minute								
		1,640	1,750	2,060	2,420	2,730	3,050	3,320	3,820	4,490
1-3/16 1-1/4	10,000	1,454	1,426	1,358	1,294	1,248	1,207	1,177	1,128	1,075
	30,000	1,046	1,026	977	931	898	868	846	811	773
	40,000	959	941	896	854	823	796	776	744	709
	60,000	849	833	793	756	729	705	687	659	628
	100,000	729	715	681	648	625	605	590	565	539
1-3/8 1-7/16	10,000	2,323	2,278	2,169	2,067	1,993	1,928	1,880	1,802	
	30,000	1,670	1,638	1,560	1,486	1,434	1,387	1,352	1,296	
	40,000	1,532	1,503	1,431	1,364	1,315	1,272	1,240	1,189	
	60,000	1,357	1,331	1,267	1,207	1,165	1,126	1,098	1,053	
	100,000	1,164	1,142	1,087	1,036	999	966	942	903	
1-1/2 1-5/8 1-11/16	10,000	2,996	2938	2,798	2,666	2,571	2,487	2,425		
	30,000	2,155	2,113	2,012	1,917	1,849	1,789	1,744		
	40,000	1,977	1,939	1,846	1,759	1,696	1,641	1,600		
	60,000	1,750	1,716	1,635	1,557	1,502	1,453	1,416		
	100,000	1,502	1,473	1,402	1,336	1,289	1,247	1,215		
1-3/4 1-7/8 1-15/16 2	10,000	3,938	3,862	3,677	3,504	3,379	3,269			
	30,000	2,832	2,777	2,645	2,520	2,431	2,351			
	40,000	2,598	2,548	2,426	2,312	2,230	2,157			
	60,000	2,300	2,256	2,148	2,047	1,974	1,910			
	100,000	1,974	1,935	1,843	1,756	1,694	1,638			
2-3/16	10,000	4,172	4,091	3,896	3,712	3,581				
	30,000	3,001	2,943	2,802	2,670	2,575				
	40,000	2,752	2,699	2,570	2,449	2,362				
	60,000	2,437	2,390	2,276	2,169	2,092				
	100,000	2,091	2,051	1,953	1,861	1,795				
2-1/4 2-7/16 2-1/2	10,000	4,435	4,350	4,142	3,947					
	30,000	3,190	3,129	2,979	2,839					
	40,000	2,926	2,870	2,733	2,604					
	60,000	2,591	2,541	2,420	2,306					
	100,000	2,223	2,180	2,076	1,978					
2-11/16 2-3/4 2-15/16 3	10,000	4,684	4,594	4,375						
	30,000	3,369	3,304	3,146						
	40,000	3,090	3,031	2,886						
	60,000	2,737	2,684	2,556						
	100,000	2,348	2,302	2,192						

For maximum RPM see Table 1 on page B5-9.

In the shaded area, E, DI and TAF mounted units require a line-to-line to light press fit of shaft

In the boxed area, Type K mounted units require a line-to-line to light press fit of shaft

Type E, Type K, DOUBLE-INTERLOCK and TAF

Table 2 (Continued) - Easy Selection Table Type E, K, DI and TAF

Shaft Size	L_{10} Hours Life	Allowable Equivalent Radial Load (Lbs.) at various Revolutions Per Minute									
		50	100	150	250	500	790	915	1,200	1,360	1,530
3-3/16 3-1/4 3-7/16 3-1/2	10,000	21,273	17,279	15,300	13,126	10,662	9,295	8,894	8,199	7,897	7,623
	30,000	15,300	12,427	11,004	9,441	7,668	6,685	6,397	5,897	5,680	5,482
	40,000	14,035	11,400	10,094	8,660	7,034	6,132	5,868	5,409	5,210	5,029
	60,000	12,427	10,094	8,938	7,668	6,228	5,430	5,196	4,790	4,613	4,453
	100,000	10,662	8,660	7,668	6,579	5,344	4,658	4,458	4,109	3,958	3,820
3-15/16 4	10,000	29,198	23,716	21,000	18,016	14,634	12,757	12,207	11,254	10,839	10,463
	30,000	21,000	17,057	15,104	12,958	10,525	9,175	8,780	8,094	7,796	7,525
	40,000	19,264	15,647	13,855	11,886	9,655	8,417	8,054	7,425	7,151	6,903
	60,000	17,057	13,855	12,268	10,525	8,549	7,453	7,131	6,574	6,332	6,112
	100,000	14,634	11,886	10,525	9,030	7,334	6,394	6,118	5,640	5,432	5,244
4-7/16 4-1/2	10,000	35,872	29,137	25,800	22,134	17,979	15,673	14,998	13,826	13,316	
	30,000	25,800	20,956	18,556	15,919	12,931	11,273	10,787	9,944	9,577	
	40,000	23,667	19,223	17,022	14,603	11,861	10,340	9,895	9,122	8,786	
	60,000	20,956	17,022	15,072	12,931	10,503	9,156	8,761	8,077	7,779	
	100,000	17,979	14,603	12,931	11,093	9,011	7,855	7,517	6,929	6,674	
4-15/16 5	10,000	49,359	40,092	35,500	30,456	24,738	21,566	20,636	19,024		
	30,000	35,500	28,835	25,532	21,905	17,792	15,511	14,842	13,682		
	40,000	32,565	26,451	23,421	20,094	16,321	14,228	13,615	12,551		
	60,000	28,835	23,421	20,739	17,792	14,452	12,599	12,055	11,114		
	100,000	24,738	20,094	17,792	15,264	12,398	10,809	10,343	9,535		
5-7/16 5-15/16 6	10,000	56,589	45,964	40,700	34,917	28,362	24,725	23,659			
	30,000	40,700	33,059	29,272	25,113	20,398	17,783	17,016			
	40,000	37,335	30,325	26,852	23,037	18,712	16,312	15,609			
	60,000	33,059	26,852	23,777	20,398	16,569	14,444	13,821			
	100,000	28,362	23,037	20,398	17,500	14,214	12,392	11,858			
6-7/16 6-1/2 6-15/16 7	10,000	56,589	45,964	40,700	34,917	28,362	42,038				
	30,000	40,700	33,059	29,272	25,113	20,398	30,235				
	40,000	37,335	30,325	26,852	23,037	18,712	27,735				
	60,000	33,059	26,852	23,777	20,398	16,569	24,558				
	100,000	28,362	23,037	20,398	17,500	14,214	21,069				

For maximum RPM see Table 1 on page B5-9

In the shaded area, E, DI and TAF mounted units require a line-to-line to light press fit of shaft

In the boxed area, Type K mounted units require a line-to-line to light press fit of shaft

Type E, Type K, DOUBLE-INTERLOCK and TAF

Table 2 (Continued) - Easy Selection Table Type E, K, DI and TAF

Shaft Size	L_{10} Hours Life	Allowable Equivalent Radial Load (Lbs.) at various Revolutions Per Minute								
		1,640	1,750	2,060	2,420	2,730	3,050	3,320	3,820	4,490
3-3/16 3-1/4 3-7/16 3-1/2	10,000	7,466	7,322							
	30,000	5,369	5,266							
	40,000	4,925	4,830							
	60,000	4,361	4,277							
	100,000	3,742	3,670							
3-15/16 4	10,000									
	30,000									
	40,000									
	60,000									
	100,000									
4-7/16 4-1/2	10,000									
	30,000									
	40,000									
	60,000									
	100,000									
4-15/16 5	10,000									
	30,000									
	40,000									
	60,000									
	100,000									
5-7/16 5-15/16 6	10,000									
	30,000									
	40,000									
	60,000									
	100,000									
6-7/16 6-1/2 6-15/16 7	10,000									
	30,000									
	40,000									
	60,000									
	100,000									

For maximum RPM see Table 1 on page B5-9

In the shaded area, E, DI and TAF mounted units require a line-to-line to light press fit of shaft

In the boxed area, Type K mounted units require a line-to-line to light press fit of shaft

Steel Type E Pillow Block - Inch
2-BOLT BASE

NOTE: All sizes use a 1/8 - 27 NPT hydraulic grease fitting

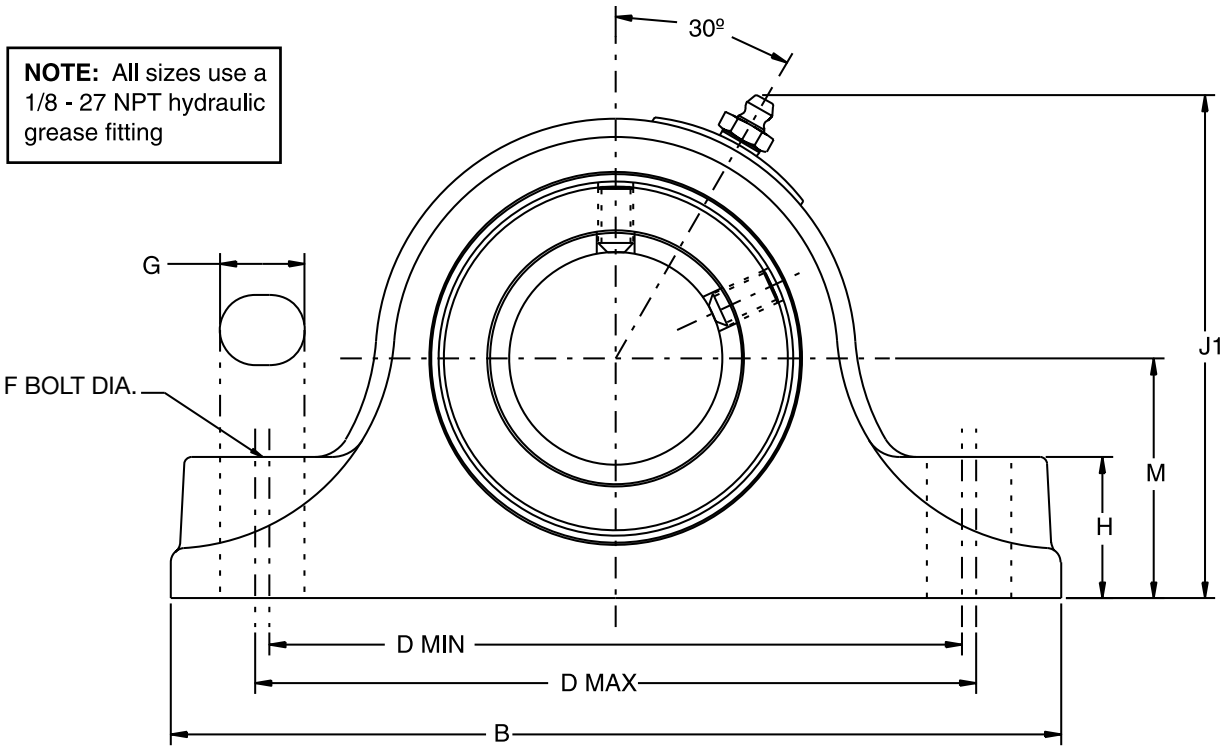

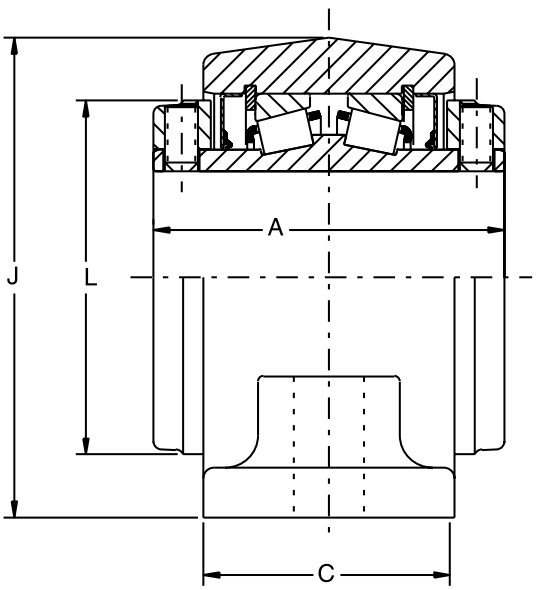

1-3/16" THRU 3" CONSTRUCTION

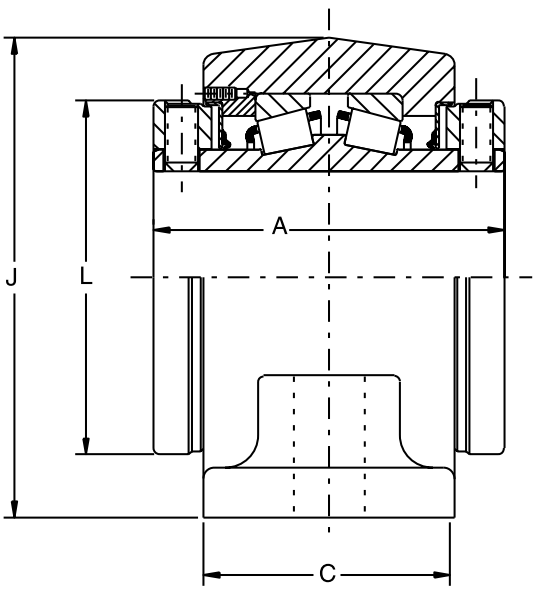

3-3/16" THRU 3-1/2" CONSTRUCTION

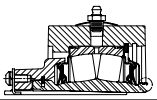

Steel Type E Pillow Block - Inch
2-BOLT BASE

Cast Steel			
Shaft Size Inches #	**Part Number**	**Part Name**	**Weight Lbs**
1-3/16	**023047**	SP2B-E-103R	4
1-1/4	**023048**	SP2B-E-104R	4
1-3/8	**023049**	SP2B-E-106R	7
1-7/16	**023050**	SP2B-E-107R	7
1-1/2	**023051**	SP2B-E-108R	10
1-5/8	**023052**	SP2B-E-110R	10
1-11/16	**023053**	SP2B-E-111R	10
1-3/4	**023054**	SP2B-E-112R	11
1-7/8	**023055**	SP2B-E-114R	11
1-15/16	**023056**	SP2B-E-115R	11
2	**023057**	SP2B-E-200R	11
2-3/16	**023058**	SP2B-E-203R	14
2-1/4	**023059**	SP2B-E-204R	19
2-7/16	**023060**	SP2B-E-207R	19
2-1/2	**023061**	SP2B-E-208R	19
2-11/16	**023062**	SP2B-E-211R	26
2-3/4	**023063**	SP2B-E-212R	26
2-15/16	**023064**	SP2B-E-215R	26
3	**023065**	SP2B-E-300R	26
3-3/16	**023066**	SP2B-E-303R	44
3-1/4	**023067**	SP2B-E-304R	44
3-7/16	**023068**	SP2B-E-307R	44
3-1/2	**023069**	SP2B-E-308R	44

Consult DODGE For Sizes Not Listed

Shaft Size (Inches)	A	B	C	D		F Bolt Dia	G	H	J	J1	L	M
				Min	Max							
1-3/16 1-1/4	2.75	6.00	1.88	4.75	4.81	1/2	0.59	0.88	3.00	3.28	2.25	1.50
1-3/8 1-7/16	3.00	7.38	2.12	5.62	5.88	1/2	0.75	1.12	3.75	4.00	2.75	1.88
1-1/2 1-5/8 1-11/16	3.38	7.88	2.38	6.12	6.38	1/2	0.75	1.25	4.25	4.47	3.38	2.12
1-3/4 1-7/8 1-15/16 2	3.50	8.88	2.50	6.88	7.12	5/8	0.88	1.31	4.50	4.69	3.44	2.25
2-3/16	3.75	9.62	2.62	7.62	7.88	5/8	0.88	1.50	5.00	5.17	3.75	2.50
2-1/4 2-7/16 2-1/2	4.00	10.50	2.88	8.38	8.62	5/8	0.88	1.62	5.50	5.62	4.06	2.75
2-11/16 2-3/4 2-15/16 3	4.50	12.00	3.00	9.31	9.69	3/4	1.00	1.88	6.25	60.34	4.72	3.12
3-3/16 3-1/4 3-7/16 3-1/2	5.00	14.00	3.50	10.81	11.38	7/8	1.38	2.25	7.50	7.50	5.50	3.75

All sizes use a 1/8-27 NPT hydraulic grease fitting

Steel Type E Pillow Block - Inch
4-BOLT BASE

NOTE: All sizes use a 1/8 - 27 NPT hydraulic grease fitting

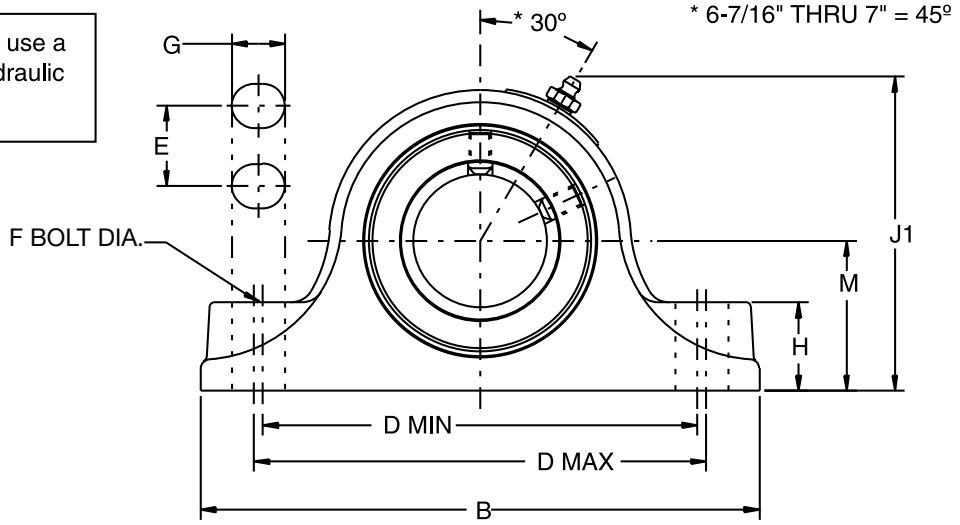

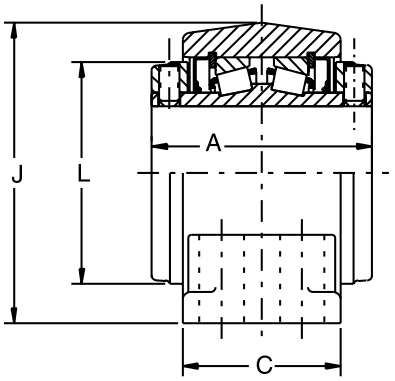

2-1/4" THRU 3" CONSTRUCTION

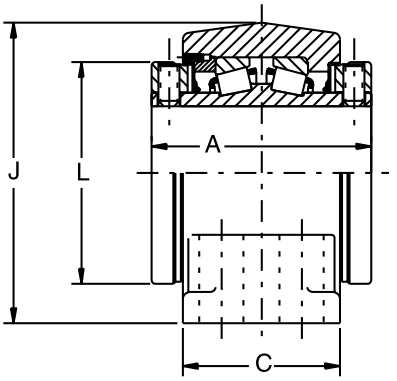

3-3/16" THRU 5" CONSTRUCTION

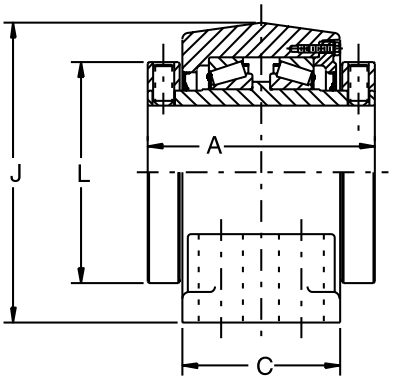

5-7/16" THRU 7" CONSTRUCTION

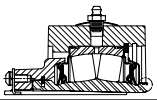

Steel Type E Pillow Block - Inch
4-BOLT BASE

Cast Steel			
Shaft Size Inches #	**Part Number**	**Part Name**	**Weight Lbs**
3-15/16	**023070**	SP4B-E-315R	65
4	**023071**	SP4B-E-400R	65
4-7/16	**023072**	SP4B-E-407R	81
4-1/2	**023073**	SP4B-E-408R	81
4-15/16	**023074**	SP4B-E-415R	132
5	**023075**	SP4B-E-500R	132

Consult DODGE For Sizes Not Listed

Shaft Size Inches	A	B	C*	D		E	F Bolt Dia	G	H	J1	J	L	M
				Min	Max								
3-15/16 4	6.25	15.25	4.50	12.25	12.75	2.25	3/4	1.12	2.44	8.50	8.44	6.00	4.25
4-7/16 4-1/2	6.75	16.62	4.62	13.25	13.75	2.50	3/4	1.12	2.75	9.38	9.28	6.45	4.75
4-15/16 5	7.25	18.50	5.12	15.25	15.75	2.88	7/8	1.25	3.00	10.88	10.69	7.45	5.50

All sizes use a 1/8-27 NPT hydraulic grease fitting

UNIFIED Pillow Block - Spherical Roller Bearings

Table 3: Selection Table for UNIFIED SAF Pillow Blocks

Shaft Size		Bearing Series	L_{10} Life Hours	Allowable Equivalent Radial Load Rating (Lbs.) at Various Revolutions Per Minute							
Adapter Mount (Inches)	Direct Mount (mm)			50	100	250	500	750	950	1,300	1,500
-	40	22308	10,000	12,797	10,394	7,896	6,413	5,679	5,290	4,815	4,613
			30,000	9,204	7,476	5,679	4,613	4,084	3,805	3,463	3,318
			60,000	7,476	6,072	4,613	3,747	3,318	3,090	2,813	2,695
1 -7/16	-	22209	**10,000**	**8,831**	**7,173**	**5,449**	**4,426**	**3,919**	**3,651**	**3,323**	**3,183**
			30,000	**6,352**	**5,159**	**3,919**	**3,183**	**2,819**	**2,626**	**2,390**	**2,290**
			60,000	**5,159**	**4,191**	**3,183**	**2,586**	**2,290**	**2,133**	**1,941**	**1,860**
	45	22309	10,000	15,320	12,444	9,453	7,678	6,799	6,333	5,765	5,522
			30,000	11,018	8,950	6,799	5,522	4,890	4,555	4,146	3,972
			60,000	8,950	7,269	5,522	4,485	3,972	3,700	3,368	3,226
1-11/16	-	22210	**10,000**	**9,372**	**7,613**	**5,783**	**4,697**	**4,159**	**3,874**	**3,527**	**3,378**
			30,000	**6,741**	**5,475**	**4,159**	**3,378**	**2,991**	**2,787**	**2,536**	**2,430**
			60,000	**5,475**	**4,447**	**3,378**	**2,744**	**2,430**	**2,263**	**2,060**	**1,974**
	50	22310	10,000	18,384	14,932	11,343	9,214	8,158	7,600	6,917	6,627
			30,000	13,222	10,740	8,158	6,627	5,868	5,466	4,975	4,766
			60,000	10,740	8,723	6,627	5,383	4,766	4,440	4,041	3,871
1-15/16	-	22211	**10,000**	**11,355**	**9,223**	**7,006**	**5,691**	**5,039**	**4,694**	**4,273**	**4,093**
			30,000	**8,167**	**6,633**	**5,039**	**4,093**	**3,624**	**3,376**	**3,073**	**2,944**
			60,000	**6,633**	**5,388**	**4,093**	**3,325**	**2,944**	**2,742**	**2,496**	**2,391**
	55	22311	10,000	21,628	17,567	13,345	10,840	9,598	8,941	8,138	7,796
			30,000	15,555	12,635	9,598	7,796	6,903	6,431	5,853	5,607
			60,000	12,635	10,263	7,796	6,332	5,607	5,223	4,754	4,554
-	60	22312	**10,000**	**25,052**	**20,349**	**15,458**	**12,556**	**11,118**	**10,357**	**9,427**	**9,031**
			30,000	**18,018**	**14,635**	**11,118**	**9,031**	**7,996**	**7,449**	**6,780**	**6,495**
			60,000	**14,635**	**11,888**	**9,031**	**7,335**	**6,495**	**6,050**	**5,507**	**5,276**
2 -3/16	-	22213	10,000	16,401	13,322	10,120	8,220	7,279	6,780	6,171	5,912
			30,000	11,796	9,581	7,279	5,912	5,235	4,877	4,439	4,252
			60,000	9,581	7,783	5,912	4,802	4,252	3,961	3,605	3,454
	65	22313	10,000	28,116	22,838	17,349	14,092	12,478	11,623	10,580	10,135
			30,000	20,222	16,425	12,478	10,135	8,974	8,360	7,609	7,289
			60,000	16,425	13,342	10,135	8,232	7,289	6,790	6,180	5,921
-	70	22314	10,000	31,180	25,326	19,239	15,627	13,837	12,890	11,732	11,239
			30,000	22,426	18,215	13,837	11,239	9,952	9,271	8,438	8,084
			60,000	18,215	14,795	11,239	9,129	8,084	7,530	6,854	6,566
2-7/16 2-1/2	75	22215	**10,000**	**17,302**	**14,054**	**10,676**	**8,672**	**7,679**	**7,153**	**6,511**	**6,237**
			30,000	**12,444**	**10,108**	**7,679**	**6,237**	**5,523**	**5,145**	**4,683**	**4,486**
			60,000	**10,108**	**8,210**	**6,237**	**5,066**	**4,486**	**4,179**	**3,803**	**3,644**
	75	22315	10,000	36,047	29,279	22,242	18,066	15,997	14,902	13,564	12,994
			30,000	25,926	21,058	15,997	12,994	11,505	10,718	9,755	9,345
			60,000	21,058	17,105	12,994	10,554	9,345	8,706	7,924	7,591
2- 11/16 2-3/4	80	22216	**10,000**	**20,186**	**16,396**	**12,456**	**10,117**	**8,958**	**8,345**	**7,596**	**7,276**
			30,000	**14,518**	**11,793**	**8,958**	**7,276**	**6,443**	**6,002**	**5,463**	**5,233**
			60,000	**11,793**	**9,579**	**7,276**	**5,910**	**5,233**	**4,875**	**4,437**	**4,251**
	80	22316	10,000	40,372	32,793	24,911	20,234	17,917	16,690	15,191	14,553
			30,000	29,037	23,585	17,917	14,553	12,886	12,004	10,926	10,467
			60,000	23,585	19,157	14,553	11,821	10,467	9,750	8,875	8,502

Dark Shaded Areas Require Circulating Oil
Light Shaded Areas Require Static Oil

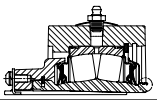

UNIFIED Pillow Block - Spherical Roller Bearings

Table 3: Selection Table for UNIFIED SAF Pillow Blocks

Shaft Size		Bearing Series	L_{10} Life Hours	Allowable Equivalent Radial Load Rating (Lbs.) at Various Revolutions Per Minute							
Adapter Mount (Inches)	Direct Mount (mm)			1,800	2,000	2,600	3,000	3,200	3,400	4500	5,600
-	40	22308	10,000	4,367	4,231	3,911	3,747	3,675	3,609	3,318	
			30,000	3,141	3,043	2,813	2,695	2,643	2,595	2,386	
			60,000	2,551	2,472	2,285	2,189	2,147	2,108	1,938	
1 -7/16	-	22209	**10,000**	**3,014**	**2,920**	**2,699**	**2,586**	**2,536**	**2,490**	**2,290**	**2,144**
			30,000	**2,168**	**2,100**	**1,941**	**1,860**	**1,824**	**1,791**	**1,647**	**1,542**
			60,000	**1,761**	**1,706**	**1,577**	**1,511**	**1,482**	**1,455**	**1,338**	**1,253**
	45	22309	10,000	5,228	5,066	4,682	4,485	4,399	4,320	3,972	
			30,000	3,760	3,643	3,368	3,226	3,164	3,107	2,857	
			60,000	3,054	2,959	2,735	2,620	2,570	2,524	2,320	
1-11/16	-	22210	**10,000**	**3,199**	**3,099**	**2,864**	**2,744**	**2,691**	**2,643**	**2,430**	**2,275**
			30,000	**2,300**	**2,229**	**2,060**	**1,974**	**1,936**	**1,901**	**1,748**	**1,637**
			60,000	**1,869**	**1,810**	**1,673**	**1,603**	**1,572**	**1,544**	**1,419**	**1,329**
	50	22310	10,000	6,274	6,079	5,619	5,383	5,279	5,184		
			30,000	4,512	4,372	4,041	3,871	3,797	3,729		
			60,000	3,665	3,551	3,282	3,144	3,084	3,029		
1-15/16	-	22211	**10,000**	**3,875**	**3,755**	**3,470**	**3,325**	**3,261**	**3,202**	**2,944**	**2,757**
			30,000	**2,787**	**2,700**	**2,496**	**2,391**	**2,345**	**2,303**	**2,117**	**1,983**
			60,000	**2,264**	**2,193**	**2,027**	**1,942**	**1,905**	**1,871**	**1,720**	**1,611**
	55	22311	10,000	7,381	7,152	6,610	6,332	6,211	6,099		
			30,000	5,309	5,144	4,754	4,554	4,467	4,387		
			60,000	4,312	4,178	3,862	3,699	3,628	3,563		
-	60	22312	**10,000**	**8,550**	**8,284**	**7,657**	**7,335**	**7,194**	**7,065**		
			30,000	**6,149**	**5,958**	**5,507**	**5,276**	**5,174**	**5,081**		
			60,000	**4,995**	**4,839**	**4,473**	**4,285**	**4,203**	**4,127**		
2 -3/16	-	22213	10,000	5,597	5,423	5,013	4,802	4,710	4,625	4,252	
			30,000	4,026	3,901	3,605	3,454	3,388	3,327	3,058	
			60,000	3,270	3,168	2,928	2,805	2,752	2,702	2,484	
	65	22313	10,000	9,596	9,297	8,593	8,232	8,074	7,929		
			30,000	6,901	6,687	6,180	5,921	5,807	5,703		
			60,000	5,606	5,431	5,020	4,809	4,717	4,632		
-	70	22314	10,000	10,641	10,310	9,530	9,129	8,954			
			30,000	7,653	7,415	6,854	6,566	6,440			
			60,000	6,217	6,023	5,567	5,333	5,231			
2-7/16 2-1/2	75	22215	**10,000**	**5,905**	**5,721**	**5,288**	**5,066**	**4,969**	**4,879**		
			30,000	**4,247**	**4,115**	**3,803**	**3,644**	**3,574**	**3,509**		
			60,000	**3,450**	**3,342**	**3,089**	**2,959**	**2,903**	**2,850**		
	75	22315	10,000	12,302	11,919	11,017	10,554				
			30,000	8,848	8,573	7,924	7,591				
			60,000	7,187	6,963	6,436	6,166				
2- 11/16 2-3/4	80	22216	**10,000**	**6,889**	**6,675**	**6,170**	**5,910**	**5,797**	**5,692**		
			30,000	**4,955**	**4,801**	**4,437**	**4,251**	**4,169**	**4,094**		
			60,000	**4,025**	**3,899**	**3,604**	**3,453**	**3,387**	**3,325**		
	80	22316	10,000	13,778	13,350	12,339	11,821				
			30,000	9,910	9,601	8,875	8,502				
			60,000	8,049	7,799	7,208	6,905				

Dark Shaded Areas Require Circulating Oil
Light Shaded Areas Require Static Oil

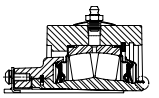

UNIFIED Pillow Block - Spherical Roller Bearings

Table 3: Selection Table for UNIFIED SAF Pillow Blocks (cont)

Shaft Size		Bearing Series	L_{10} Life Hours	Allowable Equivalent Radial Load Rating (Lbs.) at Various Revolutions Per Minute							
Adapter Mount (Inches)	Direct Mount (mm)			50	100	250	500	750	950	1,300	1,500
2 -15/16 3	85	22217	**10,000**	**24,512**	**19,910**	**15,125**	**12,285**	**10,878**	**10,133**	**9,223**	**8,836**
			30,000	**17,629**	**14,320**	**10,878**	**8,836**	**7,824**	**7,288**	**6,634**	**6,355**
			60,000	**14,320**	**11,631**	**8,836**	**7,177**	**6,355**	**5,920**	**5,388**	**5,162**
	85	22317	10,000	43,977	35,720	27,135	22,041	19,516	18,180	16,548	15,852
			30,000	31,629	25,691	19,516	15,852	14,037	13,076	11,901	11,401
			60,000	25,691	20,868	15,852	12,876	11,401	10,621	9,667	9,261
3-3/16	90	22218	**10,000**	**28,116**	**22,838**	**17,349**	**14,092**	**12,478**	**11,623**	**10,580**	**10,135**
			30,000	**20,222**	**16,425**	**12,478**	**10,135**	**8,974**	**8,360**	**7,609**	**7,289**
			60,000	**16,425**	**13,342**	**10,135**	**8,232**	**7,289**	**6,790**	**6,180**	**5,921**
3 -7/16 3-1/2	100	22220	**10,000**	**34,785**	**28,254**	**21,464**	**17,434**	**15,437**	**14,380**	**13,089**	**12,539**
			30,000	**25,018**	**20,321**	**15,437**	**12,539**	**11,103**	**10,343**	**9,414**	**9,018**
			60,000	**20,321**	**16,506**	**12,539**	**10,185**	**9,018**	**8,401**	**7,646**	**7,325**
	100	22320	10,000	65,966	53,581	40,703	33,061	29,275	27,270	24,821	23,778
			30,000	47,444	38,536	29,275	23,778	21,055	19,613	17,852	17,102
			60,000	38,536	31,301	23,778	19,314	17,102	15,931	14,500	13,891
3 -15/16 4	110	22222	**10,000**	**43,977**	**35,720**	**27,135**	**22,041**	**19,516**	**18,180**	**16,548**	**15,852**
			30,000	**31,629**	**25,691**	**19,516**	**15,852**	**14,037**	**13,076**	**11,901**	**11,401**
			60,000	**25,691**	**20,868**	**15,852**	**12,876**	**11,401**	**10,621**	**9,667**	**9,261**
	110	22322	10,000	76,419	62,072	47,153	38,300	33,914	31,592	28,755	27,546
			30,000	54,962	44,643	33,914	27,546	24,391	22,722	20,681	19,812
			60,000	44,643	36,262	27,546	22,375	19,812	18,456	16,798	16,092
4 -3/16	120	22224	**10,000**	**51,547**	**41,869**	**31,806**	**25,835**	**22,876**	**21,310**	**19,396**	**18,581**
			30,000	**37,074**	**30,113**	**22,876**	**18,581**	**16,453**	**15,326**	**13,950**	**13,364**
			60,000	**30,113**	**24,460**	**18,581**	**15,092**	**13,364**	**12,449**	**11,331**	**10,855**
	120	22324	10,000	86,512	70,270	53,381	43,359	38,393	35,764	32,553	31,185
			30,000	62,222	50,540	38,393	31,185	27,613	25,723	23,413	22,429
			60,000	50,540	41,051	31,185	25,330	22,429	20,893	19,017	18,218
4 -7/16 4-1/2	130	22226	**10,000**	**61,279**	**49,774**	**37,812**	**30,712**	**27,195**	**25,333**	**23,058**	**22,089**
			30,000	**44,074**	**35,799**	**27,195**	**22,089**	**19,559**	**18,220**	**16,584**	**15,887**
			60,000	**35,799**	**29,078**	**22,089**	**17,942**	**15,887**	**14,799**	**13,470**	**12,904**
	130	22326	10,000	100,931	81,981	62,278	50,585	44,792	41,725	37,978	36,382
			30,000	72,592	58,963	44,792	36,382	32,215	30,010	27,315	26,167
			60,000	58,963	47,893	36,382	29,551	26,167	24,375	22,186	21,254
4 -15/16 5	140	22228	**10,000**	**70,652**	**57,387**	**43,594**	**35,410**	**31,354**	**29,208**	**26,585**	**25,467**
			30,000	**50,814**	**41,274**	**31,354**	**25,467**	**22,551**	**21,007**	**19,120**	**18,317**
			60,000	**41,274**	**33,525**	**25,467**	**20,686**	**18,317**	**17,063**	**15,530**	**14,878**
	140	22328	10,000	117,152	95,157	72,287	58,715	51,990	48,431	44,082	42,229
			30,000	84,258	68,439	51,990	42,229	37,393	34,833	31,705	30,372
			60,000	68,439	55,590	42,229	34,301	30,372	28,293	25,752	24,670
5 -3/16	150	22230	**10,000**	**82,187**	**66,756**	**50,712**	**41,191**	**36,473**	**33,976**	**30,925**	**29,625**
			30,000	**59,111**	**48,013**	**36,473**	**29,625**	**26,232**	**24,436**	**22,242**	**21,307**
			60,000	**48,013**	**38,998**	**29,625**	**24,063**	**21,307**	**19,849**	**18,066**	**17,307**
	150	22330	10,000	131,571	106,869	81,184	65,942	58,389	54,392	49,507	
			30,000	94,629	76,862	58,389	47,427	41,995	39,120	35,607	
			60,000	76,862	62,432	47,427	38,522	34,110	31,775	28,922	

Dark Shaded Areas Require Circulating Oil
Light Shaded Areas Require Static Oil

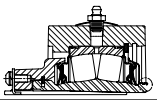

UNIFIED Pillow Block - Spherical Roller Bearings

Table 3: Selection Table for UNIFIED SAF Pillow Blocks (cont)

Shaft Size		Bearing Series	L_{10} Life Hours	Allowable Equivalent Radial Load Rating (Lbs.) at Various Revolutions Per Minute							
Adapter Mount (Inches)	Direct Mount (mm)			1,800	2,000	2,600	3,000	3,200	3,400	4500	5,600
2 -15/16 3	85	22217	**10,000**	**8,365**	**8,105**	**7,492**	**7,177**	**7,039**	**6,912**		
			30,000	**6,017**	**5,829**	**5,388**	**5,162**	**5,063**	**4,971**		
			60,000	**4,887**	**4,735**	**4,377**	**4,193**	**4,112**	**4,038**		
	85	22317	10,000	15,008	14,541	13,441					
			30,000	10,794	10,459	9,667					
			60,000	8,768	8,495	7,852					
3-3/16	90	22218	**10,000**	**9,596**	**9,297**	**8,593**	**8,232**	**8,074**	**7,929**		
			30,000	**6,901**	**6,687**	**6,180**	**5,921**	**5,807**	**5,703**		
			60,000	**5,606**	**5,431**	**5,020**	**4,809**	**4,717**	**4,632**		
3 -7/16 3-1/2	100	22220	**10,000**	**11,871**	**11,502**	**10,631**	**10,185**				
			30,000	**8,538**	**8,273**	**7,646**	**7,325**				
			60,000	**6,935**	**6,719**	**6,211**	**5,950**				
	100	22320	10,000	22,513	21,812						
			30,000	16,192	15,688						
			60,000	13,152	12,742						
3 -15/16 4	110	22222	**10,000**	**15,008**	**14,541**	**13,441**					
			30,000	**10,794**	**10,459**	**9,667**					
			60,000	**8,768**	**8,495**	**7,852**					
	110	22322	10,000	26,080							
			30,000	18,758							
			60,000	15,236							
4 -3/16	120	22224	**10,000**	**17,592**	**17,045**						
			30,000	**12,652**	**12,259**						
			60,000	**10,277**	**9,957**						
	120	22324	10,000	29,525							
			30,000	21,235							
			60,000	17,248							
4 -7/16 4-1/2	130	22226	**10,000**	**20,913**	**20,263**						
			30,000	**15,041**	**14,573**						
			60,000	**12,217**	**11,837**						
	130	22326	10,000								
			30,000								
			60,000								
4 -15/16 5	140	22228	**10,000**	**24,112**	**23,362**						
			30,000	**17,342**	**16,802**						
			60,000	**14,086**	**13,648**						
	140	22328	10,000								
			30,000								
			60,000								
5 -3/16	150	22230	**10,000**	**28,049**	**27,176**						
			30,000	**20,173**	**19,545**						
			60,000	**16,386**	**15,876**						
	150	22330	10,000								
			30,000								
			60,000								

Dark Shaded Areas Require Circulating Oil
Light Shaded Areas Require Static Oil

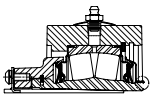

UNIFIED Pillow Block - Spherical Roller Bearings

Table 3: Selection Table for UNIFIED SAF Pillow Blocks (cont)

Shaft Size		Bearing Series	L_{10} Life Hours	Allowable Equivalent Radial Load Rating (Lbs.) at Various Revolutions Per Minute							
Adapter Mount (Inches)	Direct Mount (mm)			50	100	250	500	750	950	1,300	1,500
5- 7/16 5-1/2	160	22232	**10,000**	**93,722**	**76,126**	**57,829**	**46,972**	**41,592**	**38,745**	**35,265**	**33,783**
			30,000	**67,407**	**54,751**	**41,592**	**33,783**	**29,914**	**27,866**	**25,364**	**24,298**
			60,000	**54,751**	**44,472**	**33,783**	**27,441**	**24,298**	**22,634**	**20,602**	**19,736**
	160	22332	10,000	117,152	95,157	72,287	58,715	51,990	48,431	44,082	
			30,000	84,258	68,439	51,990	42,229	37,393	34,833	31,705	
			60,000	68,439	55,590	42,229	34,301	30,372	28,293	25,752	
5- 15/16 6	170	22234	**10,000**	**108,140**	**87,837**	**66,726**	**54,199**	**47,991**	**44,706**	**40,691**	**38,981**
			30,000	**77,777**	**63,175**	**47,991**	**38,981**	**34,516**	**32,153**	**29,266**	**28,036**
			60,000	**63,175**	**51,314**	**38,981**	**31,662**	**28,036**	**26,117**	**23,771**	**22,772**
	170	22334	10,000	129,768	105,405	80,071	65,038	57,589	53,647	48,829	
			30,000	93,332	75,809	57,589	46,777	41,420	38,584	35,119	
			60,000	75,809	61,576	46,777	37,995	33,643	31,340	28,525	
6 -7/16 6-1/2	180	22236	**10,000**	**109,943**	**89,301**	**67,838**	**55,102**	**48,791**	**45,451**	**41,369**	**39,631**
			30,000	**79,073**	**64,227**	**48,791**	**39,631**	**35,092**	**32,689**	**29,753**	**28,503**
			60,000	**64,227**	**52,169**	**39,631**	**32,190**	**28,503**	**26,552**	**24,167**	**23,152**
6 -15/16 7	190	22238	**10,000**	**97,326**	**79,053**	**60,054**	**48,779**	**43,192**	**40,235**	**36,622**	
			30,000	**69,999**	**56,857**	**43,192**	**35,083**	**31,065**	**28,938**	**26,339**	
			60,000	**56,857**	**46,182**	**35,083**	**28,496**	**25,232**	**23,505**	**21,394**	
	190	22338	10,000	149,594	121,508	92,305	74,975	66,388	61,843		
			30,000	107,591	87,391	66,388	53,923	47,747	44,479		
			60,000	87,391	70,984	53,923	43,799	38,783	36,128		
7-3/16	200	22240	**10,000**	**108,140**	**87,837**	**66,726**	**54,199**	**47,991**	**44,706**		
			30,000	**77,777**	**63,175**	**47,991**	**38,981**	**34,516**	**32,153**		
			60,000	**63,175**	**51,314**	**38,981**	**31,662**	**28,036**	**26,117**		
7 -1/2 7 -15/16 8	220	22244	**10,000**	**131,571**	**106,869**	**81,184**	**65,942**	**58,389**	**54,392**		
			30,000	**94,629**	**76,862**	**58,389**	**47,427**	**41,995**	**39,120**		
			60,000	**76,862**	**62,432**	**47,427**	**38,522**	**34,110**	**31,775**		
8 -7/16 8 -1/2 8-15/16, 9		23048	**10,000**	**93,722**	**76,126**	**57,829**	**46,972**	**41,592**	**38,745**		
			30,000	**67,407**	**54,751**	**41,592**	**33,783**	**29,914**	**27,866**		
			60,000	**54,751**	**44,472**	**33,783**	**27,441**	**24,298**	**22,634**		
9- 7/16 9-1/2		23052	**10,000**	**122,559**	**99,549**	**75,623**	**61,425**	**54,390**	**50,666**		
			30,000	**88,147**	**71,598**	**54,390**	**44,178**	**39,118**	**36,440**		
			60,000	**71,598**	**58,155**	**44,178**	**35,884**	**31,774**	**29,599**		
9 -15/16 10 10- 7/16 10-1/2		23056	**10,000**	**124,361**	**101,013**	**76,735**	**62,328**	**55,190**			
			30,000	**89,444**	**72,651**	**55,190**	**44,828**	**39,694**			
			60,000	**72,651**	**59,011**	**44,828**	**36,412**	**32,241**			

Dark Shaded Areas Require Circulating Oil
Light Shaded Areas Require Static Oil

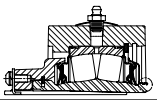

UNIFIED Pillow Block - Spherical Roller Bearings

Table 3: Selection Table for UNIFIED SAF Pillow Blocks (cont)

Shaft Size		Bearing Series	L10 Life Hours	Allowable Equivalent Radial Load Rating (Lbs.) at Various Revolutions Per Minute							
Adapter Mount (Inches)	Direct Mount (mm)			1,800	2,000	2,600	3,000	3,200	3,400	4500	5,600
5- 7/16 5-1/2	160	22232	**10,000**	**31,985**							
			30,000	**23,004**							
			60,000	**18,685**							
	160	22332	10,000								
			30,000								
			60,000								
5- 15/16 6	170	22234	**10,000**								
			30,000								
			60,000								
	170	22334	10,000								
			30,000								
			60,000								
6 -7/16 6-1/2	180	22236	**10,000**								
			30,000								
			60,000								
6 -15/16 7	190	22238	**10,000**								
			30,000								
			60,000								
	190	22338	10,000								
			30,000								
			60,000								
7-3/16	200	22240	**10,000**								
			30,000								
			60,000								
7 -1/2 7 -15/16 8	220	22244	**10,000**								
			30,000								
			60,000								
8 -7/16 8 -1/2 8-15/16, 9		23048	**10,000**								
			30,000								
			60,000								
9- 7/16 9-1/2		23052	**10,000**								
			30,000								
			60,000								
9 -15/16 10 10- 7/16 10-1/2		23056	**10,000**								
			30,000								
			60,000								

Dark Shaded Areas Require Circulating Oil
Light Shaded Areas Require Static Oil

DIMENSIONS

SAFS Steel Housing Pillow Blocks
(22200K/22300K ADAPTER MOUNT BEARING)

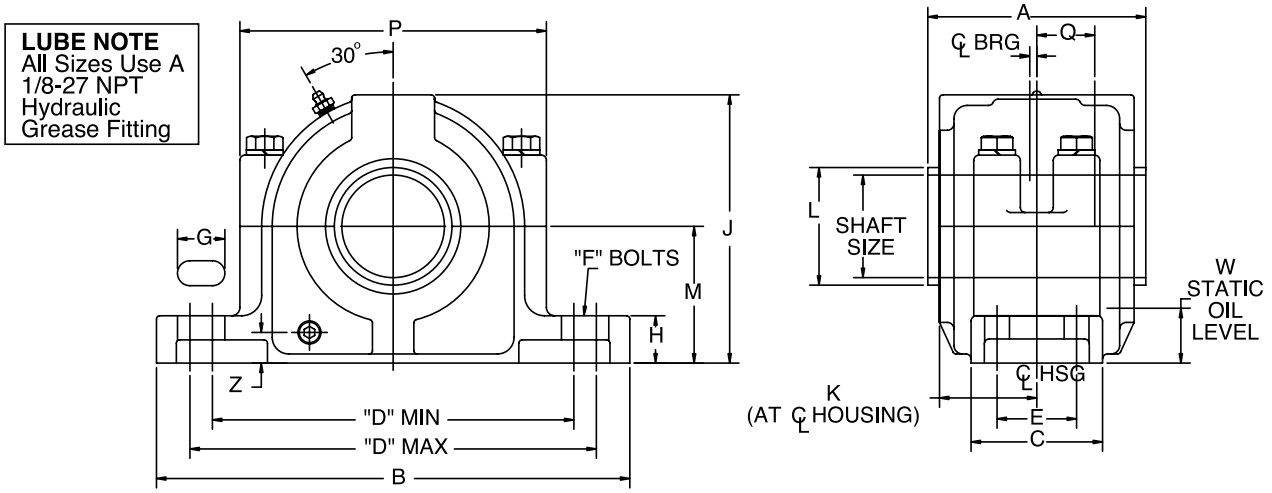

Shaft Size Inch ▲	Housing No.	Part Numbers				Approx. Wt. lbs.	A with Seals			B	C
		SAFS 2-Bolt		SAFS 4-Bolt			Std.	Optional			
		Complete Pillow Block ★	Housing Only	Complete Pillow Block ★	Housing Only		TRIPLE-TECT	LER/ER	Aux.		
2-7/16	515	**042400**	**042425**	**042410**	**042428**	24	5.16	4-43/64	7.44	11.25	3.12
2-1/2	515	**042401**	**042425**	**042411**	**042428**						
2-11/16	516	**042407†**	**044231**	**042408†**	**044232**	32	5.42	4-51/64	7.62	13.00	3.50
2-3/4	516	**042420†**	**044231**	**042421†**	**044232**						
2-15/16	517	**042402**	**042433**	**042412**	**042436**	35	5-39/64	4-63/64	7.88	13.00	3.50
3	517	**042403**	**042433**	**042413**	**042436**						
3-3/16	518	**042424†**	**044233**	**042430†**	**044234**	44	6.14	5.62	8.00	13.75	3.88
3-7/16	520	**042404**	**042440**	**042414**	**042443**	74	6.41	5-13/16	8.50	15.25	4.38
3-1/2	520	**042405**	**042440**	**042415**	**042443**						
3-15/16	522	-	-	**042416**	**042450**	97	6.86	6.38	8.64	16.50	4.75
4	522			**042417**	**042450**						
4-3/16	524	-	-	**042432†**	**044235**	120	8.08	7.44	8.89	16.50	4.75
4-7/16	526	-	-	**042568**	**042455**	160	8.47	7.88	9.45	18.38	5.12
4-1/2	526			**042575**	**042455**						
4-15/16	528	-	-	**042569**	**042460**	175	8.09	7.50	10.33	20.12	5.88
5	528			**042576**	**042460**						
5-3/16	530	-	-	**042439†**	**044236**	220	8.75	8.16	10.64	21.25	6.25
5-7/16	532	-	-	**042570**	**042465**	245	9.22	8.62	10.45	22	6.25
5-1/2	532			**042577**	**042465**						
5-15/16	534	-	-	**042571**	**042469**	310	9.91	9.12	11.88	24.75	6.75
6	534			**042578**	**042469**						
6-7/16	536	-	-	**042572**	**042468**	345	10.34	9.62	11.39	26.75	7.12
6-1/2	536			**042579**	**042468**						
6-15/16	538	-	-	**042573**	**042472**	400	10.84	10.12	11.16	28.00	7.50
7	538			**042580**	**042472**						
7-1/2	544	-	-	**042446†**	**044277**	640	12.84	11.62	13.20	32.75	8.75
7-15/16	544			**042581**	**042477**						
8	544			**042574**	**042477**						

★ Includes: (1) housing with Spacers, (1) Standard Spherical Bearing, (1) SNW Assembly (SNP above 8") and (2) TRIPLE-TECT Seals unless otherwise noted.

† Sizes not listed will be quoted on application

SAFS 2-Bolt Pillow Block (P2B-SAFS - - -)

SAFS 4-Bolt Pillow Block (P4B-SAFS - - -)

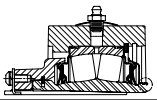

SAFS Steel Housing Pillow Blocks
(22200K/22300K ADAPTER MOUNT BEARING)

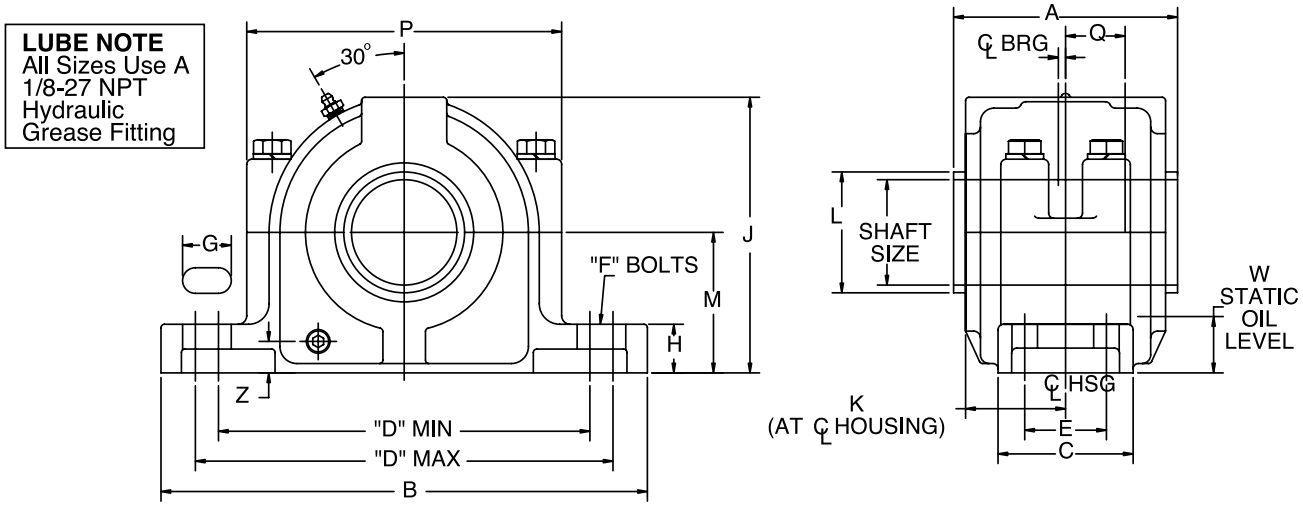

Shaft Size Inch	Dimension D 2-Bolt Min.	Dimension D 2-Bolt Max.	Dimension D 4-Bolt Min.	Dimension D 4-Bolt Max.	E	Bolt Dia. F 2B	Bolt Dia. F 4B	G	H	J	K	L ■	M	P	Q ✦	S ★	W	Z
2-7/16 2-1/2	8.75	9.50	8.62	9.62	1.88	5/8	1/2	1.12	1.25	6.44	2.31	2.80	3.25	7.06	1.34	0.12	1.16	0.62
2-11/16 2-3/4	10.12	10.62	9.88	10.88	2.12	3/4	5/8	1.25	1.50	6.88	2.38	3.17	3.50	8.00	1.47	0.19	1.25	0.62
2-15/16 3	10.25	10.75	10.00	11.00	2.12	3/4	5/8	1.12, 2B 1.25, 4B	1.50	7.38	2.47	3.42	3.75	8.25	1.56	0.19	1.38	0.75
3-3/16	10.75	11.25	10.50	11.50	2.12	3/4	5/8	1.25	1.62	7.75	2.75	3.69	4.00	8.25	1.70	0.19	1.47	0.69
3-7/16 3-1/2	11.88	12.62	11.75	12.75	2.38	7/8	3/4	1.38	1.75	8.75	2.91	3.83	4.50	9.81	1.89	0.19	1.64	0.94
3-15/16 4	-	-	12.88	14.12	2.75	-	3/4	1.50	2.00	9.62	3.12	4.33	4.94	10.62	2.08	0.19	1.80	1.12
4-3/16	-	-	13.25	14.50	2.75	-	3/4	1.50	1.75	10.25	3.91	4.59	5.25	11.50	2.22	0.19	1.84	1.00
4-7/16 4-1/2	-	-	14.50	16.00	3.25	-	7/8	1.75	2.50	11.56	3.88	4.94	6.00	12.81	2.41	0.19	2.34	1.28
4-15/16 5	-	-	15.62	17.38	3.38	-	1	2.00	2.50	12.00	3.69	5.36	6.00	13.56	2.53	0.19	2.03	1.81
5-3/16	-	-	16.75	18.50	3.75	-	1	2.00	2.50	12.81	4.06	5.77	6.31	14.50	2.69	0.19	2.03	1.81
5-7/16 5-1/2	-	-	17.38	19.12	3.75	-	1	2.00	2.75	13.69	4.25	5.88	6.69	15.12	2.89	0.19	2.09	1.22
5-15/16 6	-	-	19.38	21.62	4.25	-	1	2.00	2.88	14.56	4.62	6.44	7.06	16.81	3.12	0.19	2.81	1.56
6-7/16 6-1/2	-	-	21.38	23.12	4.62	-	1	2.00	3.00	15.25	4.81	6.80	7.50	17.81	3.08	0.19	2.42	1.09
6-15/16 7	-	-	22.12	23.88	4.50	-	1-1/4	2.25	3.12	16.12	5.12	7.38	7.88	17.88	3.23	0.19	2.53	1.31
7-1/2 7-15/16 8	-	-	25.12	27.88	5.25	-	1-1/2	3.00	3.88	19.25	5.75	7.94 8.33	9.50	20.75	3.64	0.19	3.25	1.88

✦ Distance shaft should extend beyond housing centerline of pillow block in closed end style.
★ Non-expansion bearing offset from centerline. For Expansion Bearing S = 0.
■ Based on TRIPLE-TECT seals.

PART NUMBER INDEX

DODGE®

Part Number	Page
023047	199
023048	199
023049	199
023050	199
023051	199
023052	199
023053	199
023054	199
023055	199
023056	199
023057	199
023058	199
023059	199
023060	199
023061	199
023062	199
023063	199
023064	199
023065	199
023066	199
023067	199
023068	199
023069	199
023070	201
023071	201
023072	201
023073	201
023074	201
023075	201
042400	208
042401	208
042402	208
042403	208
042404	208
042405	208
042407	208
042408	208
042410	208
042411	208
042412	208
042413	208
042414	208
042415	208
042416	208
042417	208
042420	208
042421	208
042424	208
042425	208
042428	208
042430	208
042432	208
042433	208
042436	208
042439	208
042440	208
042443	208
042446	208
042450	208
042455	208
042460	208
042465	208
042468	208
042469	208
042472	208
042477	208
042568	208
042569	208
042570	208
042571	208
042572	208
042573	208
042574	208
042575	208
042576	208
042577	208
042578	208
042579	208
042580	208
042581	208
044231	208
044232	208
044233	208
044234	208
044235	208
044236	208
044277	208
045338	88
045412	88
045600	88
045601	88
045602	88
045603	88
045604	88
045605	88
045606	88
045677	88
048925	171
048926	171
048927	171
048928	171
048929	171
048930	171
048931	171
048932	171
048933	171
048934	171
049380	65
049469	58
049477	78
049686	66
049835	65
049996	54
050524	88
050580	88
050653	88
050654	88
050656	88
052093	89
052620	88
052621	88
052622	88
052623	88
052981	88
053986	89
054145	88
056440	77
056497	52
056525	55
056526	65
056548	54
056552	66
056553	54
056565	55
056577	60
056580	65
056593	78
056611	66
056612	66
056633	78
056734	66
056796	54
056797	54
056800	55
056801	66
056802	66
056803	66
056804	66
056805	66
056806	78

Part Number	Page
056807	78
056808	78
056809	78
056810	78
056893	65
056964	66
056971	66
057102	88
057442	56
057524	65
057594	65
057687	65
057898	52
057899	77
057907	77
057908	71
058294	77
058311	71
058336	71
058345	88
058404	65
058470	65
058514	79
058515	67
058516	56
058593	65
058594	77
058595	77
058596	52
058597	52
058632	60
058648	71
058665	88
058792	65
058910	77
058931	52
058940	83
058941	65
058944	52
058965	88
058975	52
058989	88
059722	52
059798	55
059799	55
059823	65
059869	89
059870	54
062317	71
062340	78
062542	78
062837	52
062874	55
062875	56
062879	55
062901	76
062913	66
062994	66
064064	52
064147	62
064503	62
064572	52
064584	74
064839	52
064993	76
064994	50
065600	78
065655	52
065694	64
065780	77
065786	65
065945	78
066629	170
066630	170
066631	170
066632	170
066633	170
066634	170
066635	170
066636	170
066637	170
066638	170
066642	170
066643	170
066644	170
067630	54
067678	50
067839	54
067919	52
067996	52
068236	54
068283	66
068322	52
068424	77
068495	52
068687	74
069960	167, 191
069961	167, 191
069962	167, 191
069963	167, 191
069964	167, 191
069965	167, 191
069966	167, 191
069967	167, 191
069968	167, 191
069969	167, 191
069970	191
069971	191
069972	191
069973	191
069975	191
070000	189
070001	189
070002	189
070003	189
070004	189
070005	189
070006	189
070007	189
070008	189
070009	189
070010	189
070011	189
070012	189
070013	189
070014	189
070015	189
070016	189
070017	189
070018	189
070019	189
070020	189
070021	189
070022	189
070023	189
070024	189
070025	189
070026	189
070027	189
070028	189
070029	189
070030	189
070031	189
070160	166
070161	166
070162	166
070163	166
070164	166
070165	166
070166	166

PART NUMBER INDEX

Part Number	Page
070167	166
070168	166
070169	166
070170	166
070171	166
070172	166
070173	166
070174	166
070175	166
070176	166
070177	166
070178	166, 190
070179	166
070180	166
070181	166
070182	166
070183	166
070184	166
070185	166
070186	166, 190
070187	166
070188	166
070189	166, 190
070190	166
070191	166, 190
070192	166
070193	166, 190
070194	166
070240	190
070241	190
070242	190
070243	190
070244	190
070245	190
070246	190
070247	190
070248	190
070249	190
070250	190
070880	163
070881	163
070882	163
070883	163
070884	163
070885	163
070886	163
070887	163
070888	163
070889	163
070890	163
070891	163
070892	163
070893	163
070894	165
070895	165
070896	165
070897	165
070898	165
070899	165
070900	165
070901	165
070902	165
070903	165
070904	165
070905	165
070906	165
070907	165
070908	165
070909	165
070910	165
070911	165
070912	163
070913	163
070914	163
070915	163
070916	163
070917	163
070918	163
070919	163
070920	163
070921	163
070922	163
070923	163
070924	163
070925	163
070926	165
070927	165
070928	165
070929	165
070930	165
070931	165
070932	165
070933	165
070934	165
070935	165
070936	165
070937	165
070938	165
070939	165
070940	165
070941	165
070942	165
070943	165
071590	163
071591	163
071592	165
071593	163
071594	163
071595	165
071650	144
071651	144
071652	144
071653	144
071654	144
071655	144
071656	144
071657	144
071658	144
071659	144
071660	144
071661	144
071662	144
071663	144
071664	144
071665	144
071666	144
071667	144
071668	144
071669	144
071670	144
071671	144
071672	144
071673	144
071674	144
071675	144
071676	144
071677	144
071678	144
071679	144
071680	144
071681	144
071682	144
071683	144
071684	144
071685	144
071686	144
071687	144
071688	144
071689	144
071690	144
071691	144

Part Number	Page
071692	144
071693	144
071694	144
071695	144
071696	144
071697	144
071698	144
071699	144
071700	144
071701	144
071702	144
071703	144
071704	144
071705	144
071706	149
071707	149
071708	149
071709	149
071710	149
071711	149
071712	149
071713	149
071714	149
071715	149
071716	149
071717	149
071718	149
071719	149
071720	149
071721	149
071722	149
071723	149
071724	149
071725	149
071726	149
071727	149
071728	149
071729	149
071730	149
071731	149
071732	149
071733	149
071734	149
071735	149
071736	149
071737	149
071738	149
071739	149
071740	149
071741	149
071790	179
071791	179
071792	179
071793	179
071794	179
071795	179
071796	179
071797	179
071798	179
071799	179
071800	179
071801	179
071802	179
071803	179
071804	179
071805	179
071806	179
071807	179
071808	179
071809	179
071810	179
071811	179
071812	179
071813	179
071814	179
071815	179
071816	179
071817	179
071821	183
071822	183
071823	183
071824	183
071825	183
071826	183
071827	183
071828	183
071832	183
071833	183
071834	183
071835	183
071836	183
071837	183
071838	183
071839	183
071864	147
071865	147
071866	147
071867	147
071868	147
071869	147
071870	147
071871	147
071872	147
071873	147
071874	147
071875	147
071876	147
071877	147
071878	147
071879	147
071880	147
071881	147
071882	147
071883	147
071884	147
071885	147
071886	147
071887	147
071888	147
071889	147
071890	147
071891	147
071892	147
071893	147
071894	147
071895	147
071896	147
071897	147
071898	147
071899	147
071900	147
071901	147
071902	147
071903	147
071904	147
071905	147
071906	151
071907	151
071908	151
071909	151
071910	151
071911	151
071912	151
071913	151
071914	151
071915	151
071916	151
071917	151
071918	151
071919	151

PART NUMBER INDEX

DODGE®

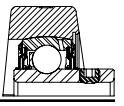

Part Number	Page
071920	151
071921	151
071922	151
071923	151
071924	151
071925	151
071926	151
071927	151
071928	151
071929	151
071930	151
071931	151
071932	151
071933	151
071934	151
071935	151
071936	151
071937	151
071938	151
071939	151
071940	181
071941	181
071942	181
071943	181
071944	181
071945	181
071946	181
071947	181
071948	181
071949	181
071950	181
071951	181
071952	181
071953	181
071954	181
071955	181
071956	181
071957	181
071958	181
071959	181
071960	181
071961	181
071962	185
071963	185
071964	185
071965	185
071966	185
071967	185
071968	185
071969	185
071970	185
071971	185
071972	185
071973	185
071974	185
071975	185
071976	185
071977	185
072170	152
072171	152
072172	152
072173	152
072174	152
072175	152
072176	152
072177	152
072178	152
072179	152
072180	152
072181	152
072182	152
072183	152
072184	153
072185	153
072186	153
072187	153
072188	153
072189	153
072190	153
072191	153
072192	153
072193	153
072194	153
072195	153
072196	153
072197	153
072198	152
072199	152
072200	152
072201	152
072202	152
072203	152
072204	152
072205	152
072206	152
072207	152
072208	152
072209	152
072210	152
072211	152
072212	153
072213	153
072214	153
072215	153
072216	153
072217	153
072218	153
072219	153
072220	153
072221	153
072222	153
072223	153
072224	153
072225	153
072226	154
072227	154
072228	154
072229	154
072230	154
072231	154
072232	154
072233	154
072234	154
072235	154
072237	154
072238	154
072239	154
072240	154
072241	154
072242	154
072243	154
072244	154
072245	154
072246	154
072247	154
072248	154
072249	154
072250	154
072251	154
072252	154
072253	154
072254	154
072255	154
072256	154
072257	154
072258	154
072259	154
072260	154
072262	154
072263	154

Part Number	Page
072264	154
072265	154
072266	154
072267	154
072268	154
072269	154
072270	154
072271	154
072272	154
072273	154
072274	154
072275	154
072276	157
072277	157
072278	157
072279	157
072280	157
072281	157
072282	157
072283	157
072284	157
072286	157
072287	157
072288	157
072289	157
072290	157
072291	157
072292	157
072293	157
072294	157
072295	157
072296	157
072297	157
072298	157
072299	157
072300	157
072301	157
072302	157
072303	157
072304	157
072305	157
072306	157
072307	157
072308	157
072309	157
072310	157
072311	157
072312	157
072313	157
072314	157
072315	157
072316	157
072317	157
072318	157
072319	157
072320	157
072321	157
072322	157
072323	157
072324	157
072325	157
072326	157
072327	157
072328	157
072329	157
072330	157
072331	157
072332	157
072333	157
072334	157
072335	157
072336	157
072337	157
072338	160
072339	160
072340	160
072341	160
072342	160
072343	160
072344	160
072345	160
072346	160
072347	160
072348	160
072349	160
072350	160
072351	160
072352	160
072353	160
072354	160
072355	160
072356	160
072358	160
072359	160
072360	160
072361	160
072362	160
072363	160
072364	160
072365	160
072366	160
072367	160
072368	160
072369	160
072370	160
072371	160
072372	160
072373	160
072374	160
072375	160
072376	160
072377	160
072378	160
072379	160
072380	160
072382	160
072383	160
072384	160
072385	160
072386	187
072387	187
072388	187
072389	187
072390	187
072391	187
072392	187
072393	187
072394	187
072395	187
072396	187
072397	187
072398	187
072399	187
072400	187
072401	187
072402	187
072403	187
072404	187
072405	187
072406	187
072407	187
072408	187
072409	187
072410	187
072411	187
072412	187
072413	187
072500	166
072501	166
072502	166

PART NUMBER INDEX

Part Number	Page
072503	166, 190
072504	166, 190
072505	166, 190
072506	166, 190
072507	166
072508	166, 190
072509	166, 190
072510	166, 190
072511	166
072512	166, 190
072513	166, 190
072514	166, 190
072515	166
072516	166
072517	166
072518	166, 190
072519	166
072520	166, 190
072521	166
072522	166, 190
072523	166, 190
072524	166
072525	166
072526	166, 190
072527	166
072528	166
072529	166, 190
072530	166
072531	166
072532	190
072533	166
072534	166
072535	190
072536	166
076000	96
076001	96
076002	96
076003	96
076004	96
076005	96, 102
076006	96
076007	96
076008	98
076009	98
076010	98
076011	98
076012	98
076014	98
076015	98
076016	98
076017	104
076018	104
076019	104
076020	104
076021	104
076022	104
076023	104
076024	104
076025	104
076026	104
076027	104
076028	104
076029	104
076030	104
076031	105
076032	105
076033	105
076034	105
076035	105
076036	105
076037	105
076038	105
076039	106
076040	106
076041	106
076042	106
076043	106
076044	106
076045	106
076046	108
076047	108
076048	108
076049	108
076050	108
076051	108
076052	108
076053	108
076054	109
076055	109
076056	109
076057	109
076058	109
076059	109
076060	109
076061	109
076062	109
076063	111
076064	111
076065	111, 112
076066	111
076067	111
076068	111
076069	111
076070	111
076071	111
076072	111
076073	111
076074	111
076075	111
076076	113
076077	113
076078	113
076079	113
076080	113
076081	113, 116
076082	113
076083	113
076084	114
076085	114
076086	114
076087	114
076088	114
076089	114
076090	114
076091	118
076092	118
076093	118
076094	118
076095	118
076096	118, 122
076097	118
076098	118
076099	118
076100	120
076101	120
076102	120
076103	120
076104	120
076105	120
076106	120
076107	120
076108	126
076109	126
076110	126
076111	126
076112	126
076113	126, 128
076114	126
076115	126
076116	127, 128

Part Number	Page
076117	127
076118	127
076119	127
076120	127
076121	127
076122	127
076123	127
076124	127
076125	102
076126	102
076127	102
076128	102
076129	102
076130	102
076131	102
076132	98, 102
076133	98, 102
076134	102
076135	98, 102
076136	102
076137	102
076138	102
076139	102
076140	102
076141	107
076142	107
076143	107
076144	107
076145	107
076146	107
076147	107
076148	106, 107
076149	107
076150	110
076151	110
076152	110
076153	110
076154	110
076155	110
076156	110
076157	109, 110
076158	110
076159	110
076160	110
076161	110
076162	110
076163	110, 111
076164	110
076165	110
076166	112
076167	112
076168	112
076169	112
076170	112
076171	112
076172	112
076173	112
076174	112
076175	112
076176	111, 112
076177	112
076178	112
076179	112
076180	112
076181	116
076182	116
076183	116
076184	116
076185	116
076186	116
076187	116
076188	114, 116
076189	116
076190	122
076191	122
076192	122
076193	122
076194	122
076195	122
076196	124
076197	120, 124
076198	124
076199	124
076200	120, 124
076201	124
076202	124
076203	124
076204	128
076205	128
076206	128
076207	128
076208	128
076209	128
076210	128
076211	127, 128
076212	128
076213	128
076214	127, 128
076215	128
076216	128
076217	128
076218	128
076219	128
076220	96
076221	96
076222	96
076223	96
076224	98
076225	98
076226	98
076227	98
076228	98
076229	98
076230	98
076231	104
076232	104
076233	104
076234	104
076235	104
076236	104
076237	104
076238	104
076239	105
076240	105
076241	105
076242	105
076243	106
076244	106
076245	106
076246	108
076247	108
076248	108
076249	108
076250	109
076251	109
076252	109
076253	109
076254	109
076255	109
076256	109
076257	111
076258	111
076259	111
076260	111
076261	111
076262	111
076263	111
076264	111
076265	113
076266	113

PART NUMBER INDEX

DODGE®

Part Number	Page
076267	113
076268	113
076269	114
076270	114
076271	114
076272	114
076273	114
076274	118
076275	118
076276	118
076277	118
076278	118
076279	120
076280	120
076281	120
076282	120
076283	120
076284	120
076286	126
076287	126, 128
076288	126
076289	127
076290	127
076291	127
076292	127
076293	127
076294	127
076295	127
076296	102
076297	102
076298	102
076299	102
076300	102
076301	102
076302	102
076303	102
076304	102
076305	102
076306	102
076307	107
076308	107
076309	107
076310	107
076311	107
076312	107
076313	110
076314	110
076315	110
076316	110
076317	110, 112
076318	110
076319	110
076320	110
076321	110
076322	110
076323	110
076324	112
076325	112
076326	112
076329	112
076330	112
076331	112
076332	112
076333	112
076334	122
076335	122
076336	122
076337	122
076338	122
076339	124
076340	124
076341	124
076342	124
076343	124
076344	128
076346	128
076347	128
076348	128
076349	128
076350	128
076351	128
076352	128
076353	128
076354	128
076410	116
076411	116
076412	116
076413	116
076414	116
076415	116
076416	116
077285	157
123069	88
123070	88
123071	88
123072	88
123073	88
123074	88
123075	88
123076	88
123077	88
123234	88
123409	88
123413	88
123460	88
124931	88
124932	88
125004	88
125005	88
125873	88
125874	88
126629	89
126630	89
126631	89
126632	89
126633	89
126634	89
126635	89
126685	89
126686	89
126687	89
126688	89
126689	89
126690	89
126691	89
126692	89
126693	89
126694	89
126695	89
126696	89
126697	89
126698	89
126699	89
127073	88
127500	52
127501	52
127502	52
127503	52
127504	52
127505	52
127506	52
127507	52
127508	52
127509	60
127510	60
127511	60
127512	60
127513	60
127514	60
127515	77

Part Number	Page
127516	77
127517	77
127518	77
127519	77
127520	77
127521	71, 77
127522	71, 77
127523	71, 77
127524	65
127525	65
127526	65
127527	65
127528	65
127529	65
127530	65
127531	65
127532	65
127533	71
127534	71
127535	71
127536	71
127537	71
127538	71
127539	83
127540	83
127541	83
127542	83
127543	83
127544	83
127545	52
127546	52
127547	52
127548	52
127549	52
127550	52
127551	52
127552	60
127553	60
127554	60
127555	60
127556	77
127557	77
127558	77
127559	77
127560	77
127561	77
127562	77
127563	65
127564	65
127565	65
127566	65
127567	65
127568	65
127569	65
127570	71
127574	83
127575	83
127576	83
127577	83
127578	56
127579	56
127580	56
127581	56
127582	56
127583	56
127584	56
127585	56
127586	56
127587	61
127588	61
127589	61
127590	61
127591	61
127592	61
127593	79
127594	79
127595	79
127596	79
127597	79
127598	79
127599	79
127600	79
127601	79
127602	67
127603	67
127604	67
127605	67
127606	67
127607	67
127608	18, 67
127609	22, 67
127610	67
127611	73
127612	73
127613	73
127614	73
127615	73
127616	73
127617	85
127618	85
127619	85
127620	85
127621	85
127622	85
127623	56
127624	56
127625	56
127626	56
127627	56
127628	56
127629	56
127630	61
127631	61
127632	61
127633	61
127634	79
127635	79
127636	79
127637	79
127638	79
127639	79
127640	79
127641	67
127642	67
127643	67
127644	67
127645	67
127646	67
127647	67
127648	73
127649	73
127650	73
127651	73
127652	85
127653	85
127654	85
127655	85
127670	54
127671	54
127672	54
127673	54
127674	54
127675	54
127676	55
127677	55
127678	55
127679	55
127680	55
127681	66
127682	66

PART NUMBER INDEX

DODGE®

Part Number	Page
127683	66
127684	66
127685	66
127686	66
127687	66
127688	66
127689	78
127690	78
127691	78
127692	78
127693	78
127694	14, 78
127695	78
127696	78
127697	54
127698	54
127699	54
127700	55
127701	55
127702	55
127703	66
127704	66
127705	66
127706	66
127707	66
127708	66
127709	78
127710	78
127711	78
127712	78
127713	78
127714	78
127715	58
127716	58
127717	58
127718	58
127719	58
127720	58
127721	58
127722	58
127723	68
127724	68
127725	68
127726	68
127727	68
127728	68
127729	68
127730	68
127731	80
127732	80
127733	80
127734	80
127735	80
127736	80
127737	80
127738	80
127739	58
127740	58
127741	58
127742	58
127743	58
127744	58
127745	68
127746	68
127747	68
127748	68
127749	68
127750	68
127751	80
127752	80
127753	80
127754	80
127755	80
127756	80
127804	28
127808	28
127818	28
127819	28
127820	28
127821	28
127822	28
127823	28
127824	28
127825	28
127826	28
127861	28
127862	28
127863	28
127864	28
127865	28
127866	28
127867	28
128646	89
128647	89
128648	89
128649	89
128650	89
128651	89
128652	89
128653	89
128654	89
128655	89
128656	89
128657	89
128658	89
128659	89
128660	89
128672	89
128684	89
128960	29, 90
128961	29, 90
128962	29, 90
128963	29, 90
128964	29, 90
128965	29, 90
128966	29, 90
128974	29, 90
128975	29, 90
128976	29, 90
128977	29, 90
128978	29, 90
128980	29, 90
128989	29, 90
128990	29, 90
128991	29, 90
128992	29, 90
128993	29, 90
128994	29, 90
128996	29, 90
128997	29, 90
129244	48
129245	48
129246	48
129247	48
129248	48
129249	48
129250	48
129251	48
129252	48
129253	48
129254	48
129255	48
129256	48
129257	48
129258	48
129259	48
129260	50
129261	50
129262	50
129263	50
129264	50

Part Number	Page
129265	50
129266	50
129267	50
129268	50
129269	50
129270	50
129271	50
129272	50
129273	50
129274	50
129275	50
129291	59
129292	59
129293	59
129294	59
129295	59
129296	59
129297	59
129298	59
129299	59
129300	59
129339	62
129340	62
129341	62
129342	62
129343	62
129344	62
129345	62
129346	62
129347	62
129348	62
129349	62
129350	62
129351	62
129352	62
129353	62
129354	62
129355	64
129356	64
129357	64
129358	64
129359	64
129360	64
129361	64
129362	64
129363	64
129364	64
129365	64
129366	64
129367	64
129368	64
129392	48
129393	48
129395	74
129396	48
129530	48
129531	48
129532	48
129533	48
129534	48
129535	48
129536	48
129537	59
129538	59
129539	59
129540	59
129541	74
129542	74
129543	74
129544	74
129545	74
129546	74
129547	74
129548	62
129549	62
129550	62
129551	62
129552	62
129553	62
129554	62
129555	70
129556	70
129557	70
129558	70
129559	50
129560	50
129561	50
129562	50
129563	50
129564	50
129565	50
129566	50
129567	76
129568	76
129569	76
129570	76
129571	76
129572	76
129573	64
129574	64
129575	64
129576	64
129577	64
129578	64
129579	86
129580	86
129581	86
129582	86
129583	86
129584	86
129585	86
129602	48, 50
129603	48
129605	50
129606	48, 50
129611	48
129612	50
129613	48, 50
129627	70
129629	70
129631	70
129632	70
129634	70
129635	70
129705	74
129706	74
129707	74
129708	74
129709	74
129710	74
129711	74
129712	74
129713	74
129714	74
129715	74
129716	74
129717	74
129718	74
129719	74
129720	74
129721	76
129722	76
129723	76
129724	76
129725	76
129726	76
129727	76
129728	76
129729	76
129730	76

PART NUMBER INDEX

DODGE®

Part Number	Page
129731	76
129732	76
129733	76
129734	76
129825	86
129826	86
129827	86
129828	86
129829	86
129830	86
129831	86
129832	86
129833	86
129834	86
129835	86
129836	86
129837	86
129838	86
129839	86
129840	86
129967	48, 50, 59, 62, 64, 70, 74, 76, 82, 86
129968	48, 50, 59, 62, 64, 70, 74, 76, 82, 86
129969	48, 50, 59, 62, 64, 70, 74, 76, 82, 86
129970	50, 59, 62, 64, 70, 74, 76, 82, 86
129971	50, 59, 62, 64, 70, 74, 76, 82, 86
129972	48, 50, 59, 62, 64, 70, 74, 76, 82, 86
129973	48, 50, 59, 62, 64, 70, 74, 76, 82, 86
129974	48, 50, 59, 62, 64, 70, 74, 76, 82, 86
129975	50, 62, 64, 74, 76, 86
129976	48, 62, 74, 86
129977	48, 62, 74, 86
129978	48, 50, 62, 64, 74, 76, 86
129979	48, 50, 62, 64, 74, 76, 86
129980	48, 50, 59, 62, 64, 74, 76, 82, 86
129981	48, 50, 59, 62, 64, 74, 76, 82, 86
129982	50, 59, 62, 64, 74, 76, 82, 86
129983	48, 50, 59, 62, 64, 74, 76, 82, 86
129984	50, 62, 64, 74, 76, 86
129985	48, 62, 74, 86
129986	48, 50, 62, 64, 74, 76, 86
129988	59
129989	59
129990	59
129991	59
136315	82
136316	82
136317	82
136318	82
136319	82
136320	82
136321	82
136322	82
136323	82
136324	82
136325	82
136326	82
136327	82
136328	82
136329	82
136330	82
136695	14
136696	14
136697	14
136698	14
136699	14
136700	14
136701	14
136702	14
136703	14
136704	16
136705	16
136706	16
136707	16
136708	16
136709	16
136710	18
136711	18
136712	18
136713	18
136714	18
136715	18
136716	18
136717	18
136718	18
136719	20
136720	20
136721	20
136722	20
136723	20
136724	20
136725	22
136726	22
136727	22
136728	22
136729	22
136730	22
136731	22
136732	22
136733	22
136734	24
136735	24
136736	24
136737	24
136738	24
136739	24
136740	14
136741	14
136742	14
136743	14
136744	14
136745	14
136746	14
136747	16
136748	16
136749	16
136750	16
136751	18
136752	18
136753	18
136754	18
136755	18
136756	18
136757	18
136758	20
136759	20
136760	20
136761	20
136762	22
136763	22
136764	22
136765	22
136766	22
136767	22
136768	22
136769	24
136770	24
136771	24
136772	24

Part Number	Page
136773	15
136774	15
136775	15
136776	15
136777	15
136778	15
136779	15
136780	15
136781	15
136782	15
136783	15
136784	17
136785	17
136786	17
136787	17
136788	17
136789	17
136792	17
136793	19
136794	19
136795	19
136796	19
136797	19
136798	19
136799	19
136800	19
136801	21
136802	21
136803	21
136804	21
136805	21
136806	21
136808	21
136809	27
136810	27
136811	27
136812	27
136813	27
136814	27
136817	27
136818	27
136819	27
136820	27
136821	27
136822	27
136825	23
136826	23
136827	23
136828	23
136829	23
136830	23
136831	23
136832	23
136833	26
136834	26
136835	26
136836	26
136837	26
136838	26
136839	26
136840	26
136841	25
136842	25
136843	25
136844	25
136845	25
136846	25
136847	25
136848	25
136849	15
136850	15
136851	15
136852	15
136853	15
136854	15
136855	17
136856	17
136857	17
136858	17
136859	17
136860	17
136861	19
136862	19
136863	19
136864	19
136865	19
136866	19
136867	21
136868	21
136869	21
136870	21
136872	21
136873	27
136874	27
136875	27
136876	27
136879	27
136880	27
136881	27
136882	27
136885	23
136886	23
136887	23
136888	23
136889	23
136890	23
136891	26
136892	26
136893	26
136894	26
136895	26
136896	26
136897	25
136898	25
136899	25
136900	25
136901	25
136902	25
136912	60
136913	60
136914	60
136915	60
136916	60
136917	60
136918	60
136919	60
136920	72
136921	72
136922	72
136923	72
136924	72
136925	72
136926	72
136927	69
136928	69
136929	69
136930	69
136931	69
136932	69
136933	69
136934	69
136935	69
136936	69
136937	69
136938	69
136939	81
136940	81
136941	81
136942	81
136943	81

PART NUMBER INDEX

Part Number	Page
136944	81
136945	81
136946	81
136947	84
136948	84
136949	84
136950	84
136951	84
136952	84
136953	84
136954	84
136955	60
136956	60
136957	60
136958	60
136959	60
136960	60
136961	72
136962	72
136963	72
136964	72
136965	72
136966	69
136967	69
136968	69
136969	69
136970	69
136971	69
136972	69
136973	69
136974	81
136975	81
136976	81
136977	81
136978	81
136979	81
136980	84
136981	84
136982	84
136983	84
136984	84
136985	84
136986	14
136987	18
136988	22
136989	15
136990	17
136991	19
136992	21
136993	23
136994	26
136995	25

For Additional information about DODGE Bearing Products, DODGE Gearing Products or DODGE PT Components:

> contact your local authorized DODGE Distributor

> contact us at **864.297.4800**

> visit us on the web at

www.dodge-pt.com

www.PTplace.com

World Headquarters
P.O. Box 2400, Fort Smith, AR 72902-2400 U.S.A., Ph: (1) 479.646.4711, Fax (1) 479.648.5792, International Fax (1) 479.648.5895
Baldor - Dodge
6040 Ponders Court, Greenville, SC 29615-4617 U.S.A., Ph: (1) 864.297.4800, Fax: (1) 864.281.2433
www.baldor.com

© Baldor Electric Company
All Rights Reserved. Printed in USA.

CA3000SUP
8/09 CJK 50M