Rod Ends and Spherical Plain Bearings

TÜV CERT
DIN EN ISO 9001:2000
Z.-Reg.-Nr. 12 100 19654 TMS

FLURO-Gelenklager GmbH

Introduction

Rod Ends and Spherical Plain Bearings are assembled machine parts to DIN ISO 12240 (formerly DIN 648), ready for installation. They are used to guarantee the unproblematic movement between shaft and housing, especially where the movement is not directly linear.

The ***FLURO*** production program consists of Spherical Plain Bearings in all Series (DIN ISO 12240-1) and Rod Ends Series K and E (DIN ISO 12240-4), as well as Hydraulic Rod Ends with weld-on surface or female thread fixable with hexagon socket head cap screws. As new products in this catalogue are Thrust Bearings and Angular Contact Spherical Plain Bearings. To supplement the product range Angle Joints, Fork Heads, Locking Nuts and Rubber Seals have been added.

Where bearings with standard dimensions cannot be used, parts to customer designs are manufactured. Alternatively we can develop solutions for special applications. A small selection of these parts may be seen on the last pages of this catalogue. Our premium trained engineering and quality guarantee staff is pleased to offer advise on any application demand.

With high standard machinery we are able to turn, grind and mill parts with the highest precision. A list of our machining capabilities is available on request.

We have been approved for quality assurance to DIN EN ISO 9001 since June 1997.

Our sales staff is happy to assist you with any inquiry.

Just recently our industrial unit was enlarged and modernized. This meant advanced improvements to our logistics and an enlarged stock of products for faster delivery response.

FLURO-Gelenklager GmbH

Contents

General
Introduction 2
Contents 3
Production Program 4
Motor Sport Series 8
Ordering Details 9

Technical Data
Thread, Pivoting Angle 10
Fit, Installation 11
Internal Clearance 12
Lubrication, Temperature, Material 13
Technical Information 14
Calculation Examples 18

Rod Ends Series K
Standard GI/GA 20
Heavy Duty GIS/GAS 22
Extra Heavy Duty GIXS/GAXS 24
Heavy Duty Stainless Steel GIRS/GARS 26
Heavy Duty Maintenance Free GISW/GASW 28
ditto Extra Heavy Duty GIXSW/GAXSW 30
Heavy Duty Stainless Steel GIRSW/GARSW 32
Steel on Steel GIO/GAO 34
Steel/PTFE GIOW/GAOW 36
Rod Ends with Seals 38
ditto with Threaded Bolt 39
ditto for Pneumatic Cylinders 40

Spherical Plain Bearings Series K
Standard GL 41
Heavy Duty GLXS 42
ditto Stainless Steel GLRS 43
Maintenance Free GLXSW 44
ditto Stainless Steel GLRSW 45
without Outer Ring, regreasable GXS 46
without Outer Ring, Maintenance Free GXSW 47

Rod Ends Series E
Steel on Steel EI/EA 50
Maintenance Free EI..D/EA..D 52
ditto Stainless Steel EI..D-NIRO/EA..D-NIRO 54

Spherical Plain Bearings Series E
Maintenance Free GE...EC (2RS) 48
ditto Stainless Steel GE...EC-NIRO 49
Steel on Steel GE...E (-2RS) 56
Steel on Steel GE...HO-2RS 57

Spherical Plain Bearings Series W
Steel on Steel GE...LO 58

Spherical Plain Bearings Series G
Steel on Steel GE...FO (-2RS) 59
Maintenance Free GE...FW (-2RS) 60

Angular Contact Spherical Plain Bearings
Steel on Steel GE...SX 61
Maintenance Free GE...SW 62

Spherical Plain Thrust Bearings
Steel on Steel GE...AX 63
Maintenance Free GE...AW 64

Rod Ends - Hydraulic
with Locking Device FPR...S 65
ditto for Pneumatic Cylinder FPR...CE 66
short thread FPR...N 67
ditto with Locking Device FPR...U 68
Heavy Duty with Locking Device FMA...D 69
with Weld-on Surface FS...C 70
with Weld-on Surface FS...N 71

Angle Joints
Angle Joints to DIN 71802 72

Fork Heads
Fork Heads to DIN 71751 and DIN 71752 73

Rubber Seals
Rubber Protector Cap RERS 74
Washer Seals RELS 74

Locking Nuts
Locking Nuts to DIN 934 / ISO 4032 75
Locking Nuts to DIN 439 / 936 75

Specials
Parts for Marine / Food Processing and Chemical application 76
Precision Parts Martin Höhn GmbH 77
Inquiry Template Special Parts 78
Specialties 79
How you can find us 80

TÜV CERT
DIN EN ISO 9001:2000
Z.-Reg.-Nr. 12 100 19654 TMS

Catalogue Edition 2008

Every care has been taken to ensure the accuracy of the information in this catalogue.

However no liability can be accepted for any errors or omissions.

Due to continuing technical advances we reserve the right to alter our products without notice.

www.fluro.de

FLURO-Gelenklager GmbH

Production Range Series K

Rod Ends DIN ISO 12240-4 Series K Female Thread			Rod Ends DIN ISO 12240-4 Series K Male Thread			Spherical Plain Bearings DIN ISO 12240-1 Series K with / without outer ring		
GI..	Standard regreasable	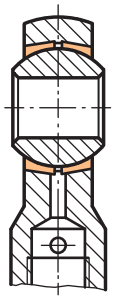	GA..	Standard regreasable	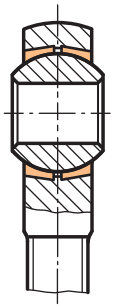	GL..	Standard regreasable	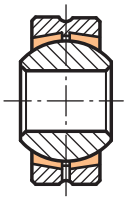
GIS.. GIXS.. GIRS..	Heavy Duty regreasable	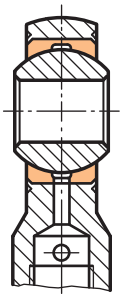	GAS.. GAXS.. GARS..	Heavy Duty regreasable	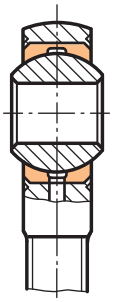	GLXS.. GLRS..	Heavy Duty regreasable	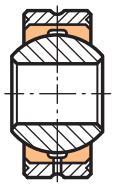
GISW.. GIXSW.. GIRSW..	Heavy Duty maintenance free	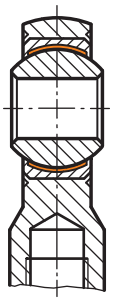	GASW.. GAXSW.. GARSW..	Heavy Duty maintenance free	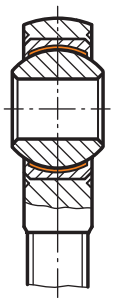	GLXSW.. GLRSW..	Heavy Duty maintenance free	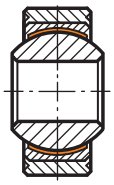
GIO..	Steel on Steel	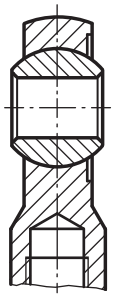	GAO..	Steel on Steel	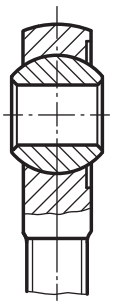	GXS..	Heavy Duty without Outer Ring regreasable	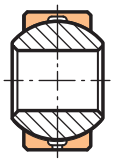
GIOW..	maintenance free	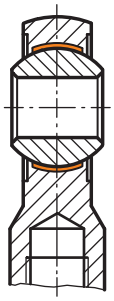	GAOW..	maintenance free	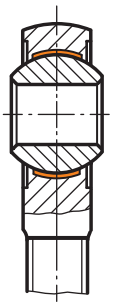	GXSW..	Heavy Duty without Outer Ring maintenance free	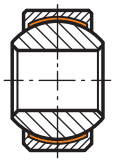

Production Range Series E

Rod Ends DIN ISO 12240-4 Series E Female Thread			Rod Ends DIN ISO 12240-4 Series E Male Thread			Spherical Plain Bearings DIN ISO 12240-1 Series E		
EI..	Steel on Steel	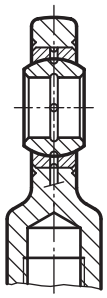	EA..	Steel on Steel	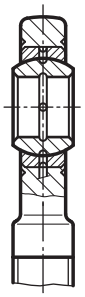	GE..E	Steel on Steel	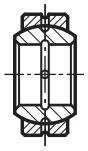
EI..D	maintenance free	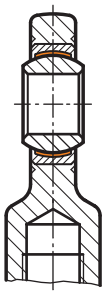	EA..D	maintenance free	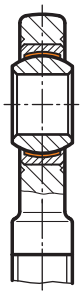	GE..EC	maintenance free	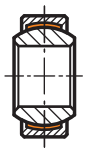
EI..D-NIRO	Stainless Steel	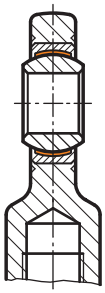	EA..D-NIRO	Stainless Steel	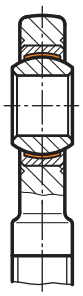	GE..EC-NIRO	Stainless Steel	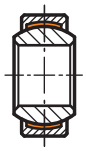

Eccentric Rod End with self-aligning roller bearing

Production Range

Hydraulic Rod Ends Steel on Steel			Hydraulic Rod Ends + Spherical Plain Bearings Steel on Steel			Spherical Plain Bearings		
FPR..U	Rod End with Locking Device Bearing with Snap Ring	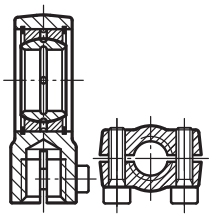	FS..N	rectangular Weld-on Surface Bearing with Snap Ring	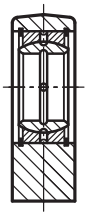	GE..FW (-2RS)	maintenance free, Heavy Duty, higher Pivoting Angle	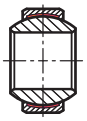
FPR..S	Rod End with Locking Device Bearing fixed through caulking	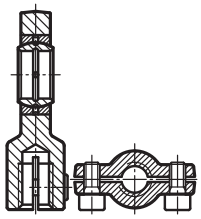	FS..C	circular Weld-on Surface Bearing fixed through caulking	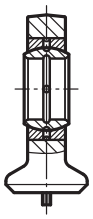	GE...SX	Steel on Steel Angular Contact Bearing	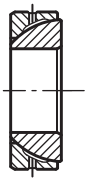
FPR..CE	Rod End with Locking Device Bearing with Snap Ring	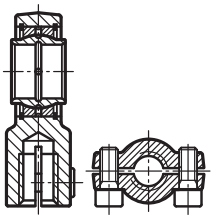	GE..HO -2RS	Steel on Steel Ball with Shoulder	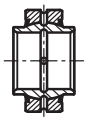	GE..SW	maintenance free Angular Contact Bearing	
FMA..D	Rod End with Locking Device Bearing with Snap Ring	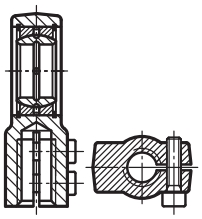	GE..LO	Steel on Steel Ball with Shoulder	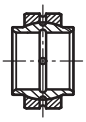	GE..AX	Steel on Steel Thrust Bearing	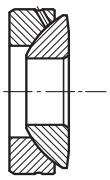
FPR..N	Rod End with shorter thread Bearing with Snap Ring	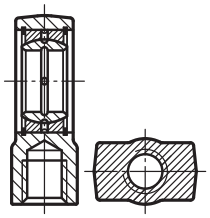	GE..FO (-2RS)	Steel on Steel, Heavy Duty, higher Pivtoing angle		GE..AW	maintenance free Thrust Bearing	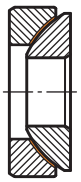

Custom made products

Hydraulic Rod Ends designed and intended for marine, harbor and river engineering or lock gates. Completely stainless steel to customer design with maintenance free or regreasable Spherical Plain Bearing. Design and development according to customer requirements.

Connecting rod for highest pressure and tension loads, employed in automotive applications. These parts are supplied completely mounted with required axial distance and torque.

FLURO Motor Sport Series

FLURO developed a series for Motor Sport applications:

Motor Sport - MS Series GAXSW..MS / GIXSW..MS
from size 6mm to 25mm, with male or female thread and in fine thread versions. Maintenance free with a tight fit around the Ball.

Design:
- Housing: Heat-treated steel to 42CrMo4, AISI 4140, nickel plated high polish finish
- Insert: Stainless steel to 1.4571, AISI 316Ti with PTFE liner bonded to the inner surface
- Ball: Bearing steel to 100Cr6, AISI 52100 hardened and hard chrome plated
- Zero tolerance through preloaded bearing

Exclusive Motor Sport Catalogue on request !

Motor Sport - MS Series GXSW..MS / GLRSW..MS
from size 6mm to 25mm. Maintenance free with a tight fit around the Ball.

Design:
- Outer Ring (Series GLRSW..MS): Stainless steel to 1.4305, AISI 303
- Insert: Stainless steel to 1.4571, AISI 316Ti with PTFE liner bonded to the inner surface
- Ball: Bearing steel to 100Cr6, AISI 52100, hardened and hard chrome plated
- Zero tolerance through preloaded bearing

Imperial measurements

Rod Ends and Spherical Plain Bearings in imperial measurements
- maintenance free
- with lubrication fittings
- specials on request

Ordering Details

On pages 4 to 6 we have given full details of our standard range of products. Additional notes to make sure details are correct when placing orders are listed below; additions to and deviations from our standard program are listed, as well.

Female Thread:	The letter **I** is situated in the second place in the reference e.g. G**I** or E**I**
Male Thread:	The letter **A** is situated in the second place in the reference e.g. G**A** or E**A**
Left Hand Thread:	The letter **L** is situated in the third place in the reference e.g. GA**L** or EA**L**
Non-Standard Thread:	Bearing reference with additional thread specification e.g. GISW 30, **M 27x2**
Stainless Steel Ball:	The letter **R** will be added after size reference e.g. GIRSW 10 **R,** GXSW 10 **R**, stainless version (stainless type see pages 26, 27, 32, 33, 43, 45)
Completely Stainless (Series K):	The letters **RR** will be added after size reference e.g. GARSW 16 **RR,** GXSW 16 **RR** (all items in stainless steel)
Completely Stainless (Series E):	The letters **NIRO** will be added after size reference e.g. GE 10 EC-**NIRO** or EI 16 D-**NIRO**
Ball Hard Chrome Plated:	**ICR** will be added after size reference e.g. GASW 10 **ICR**
Seal:	**-2RS** will be added after size reference e.g. GISW 10-**2RS** (see pages 38)
Threaded Bolt:	**Bo** will be added after size reference e.g. GISW 10 **Bo** (for right angle use, see page 39)
Nickel Plated Housing:	**NI** will be added after size reference e.g. GISW 14 **NI** (improved corrosion resistance for the housing) for series on pages 22 to 25, 28 to 31
Special Grease Nipples:	**SN** will be added after size reference e.g. GAS 16 **SN** DIN 71412 H1/A **M6x1** (exact name of grease nipple has to be specified)
Left Hand Thread for Hydraulic Rod Ends:	The letter **L** will be added at the third place replacing the letter R e.g. **FPL...N**, except for series FMA...D = **FMAL...D**

For sizes deviating from the standard or for specials, please send us your drawing or sketch – see template on page 78.

The maintenance instructions, selection criteria, tolerances and calculations as shown in the following technical section are intended to be an important guideline for the choice of the correct bearing to suit the particular application of our Rod Ends and Spherical Plain Bearings.

Thread, Pivoting Angle

Threads

Manufactured to standard metric ISO DIN 13 threads. To increase the stability for all standard Rod Ends with male threads, the threads are rolled.

Maximum Pivoting Angle

The permissible maximum Pivoting Angle (see picture 3, page 15) ranges between 6° and 35° depending on the series and constructional design.

Rod Ends and Spherical Plain Bearings K

Size	Pivoting angle
2	16°
3-4	14°
5-6	13°
8	14°
10-12	13°
14	16°
16	15°

Size	Pivoting angle
18	15°
20	14°
22-25	15°
30	17°
35	19°
40	16°
50	14°

These figures are standard values as indicated in situation 2. Other constructional designs and its calculation examples are indicated in situations 1 and 3.

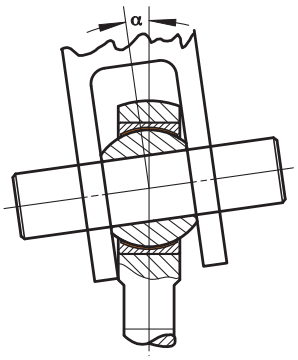

Situation 1

$$\alpha = \sin^{-1}\frac{B}{A} - \sin^{-1}\frac{M}{A}$$

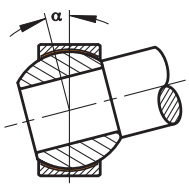

Situation 2

$$\alpha = \sin^{-1}\frac{B}{dK} - \sin^{-1}\frac{M}{dK}$$

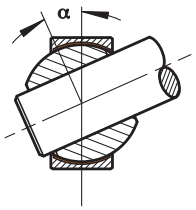

Situation 3

$$\alpha = \cos^{-1}\frac{D}{dK} - \sin^{-1}\frac{M}{dK}$$

A = Outside diameter Rod End/Spherical Plain Bearing
B = Width Ball
dK = diameter Ball
M = Width Rod End/Spherical Plain Bearing
D = diameter Bore Ball

Fit, Installation

Recommended fits for the bore housings to incorporate Spherical Plain Bearings

		Design	Steel Housing Series K	Light Alloy Housing Series K	Steel Series E	Light Alloy Housing Series E
Load	normal	maintenance free	K7	M7	K7	M7
		regreasable	J7/H7	K7	K7	M7
	high	maintenance free	M7	N7	M7	N7
		regreasable	K7	M7	M7	N7

The outside diameter of the Spherical Plain Bearings, Series K is tolerated to h6. For Series E, please refer to each individual product page.

Recommended fit for the shaft

		Design	Series K	Series E GE..E (-2RS) GE..EC (-2RS) GE..EC-Niro GE..HO-2RS	Series G GE::FO (-2RS) GE..FW (-2RS)	Series W GE..LO
Load	normal		h6	g6	g6	h6
	high		k6	j6/h6	j6/h6	j6

The bore diameter of the ball of Spherical Plain Bearings, Series K is tolerated to H7. For Series E, G and W, please refer to each individual product page.

Installation instructions:

Attention: No tolerance or play can be allowed for the shaft when incorporated in the Ball or the Outer Ring when incorporated in a housing. Through this it is guaranteed that the glide movement arises on the nodular gliding surface only.

When mounting extra precaution has to be taken that the press force does not damage the bearing. The press force should not be initiated via the bearing itself. Thermal installation will reduce the necessary press force.

Axial locking of Spherical Plain Bearings:

When under high static or dynamic axial load, vibration, impacting load changes or high pivoting angles Spherical Plain Bearings have to be locked axially.

Possible locking methods:
- locking through several puncher points
- caulking of bearing on the housing through a flanging groove
- with locking snap rings
- clamped with bushings on the facing surface of the Insert

Internal Clearance

Internal Clearance is defined as the radial and axial movement of the ball in the housing or outer ring. Internal Clearance is measured in the non-lubricated state.
The radial clearances listed in the table below have been established with a load of 100N.

Series K Type	Size	Radial Internal Clearance in mm (min./max.)
GI/GA; GIS/GAS; GIXS/GAXS; GIRS/GARS	02 - 10 12 - 20 22 - 40	0,005 - 0,035 0,010 - 0,040 0,010 - 0,050
GISW/GASW; GIXSW/GAXSW; GIRSW/GARSW	05 - 10 12 - 18 20 - 25 30 - 40	0,005 - 0,030 0,005 - 0,035 0,005 - 0,045 0,005 - 0,055
GIOW/GAOW	04 - 10 12 - 20	0,005 - 0,040 0,005 - 0,050
GIO/GAO	05 - 10 12 - 20	0,010 - 0,050 0,010 - 0,060
GL; GLXS; GLRS; GXS	02 - 10 12 - 18 20 - 25 30 - 40 40 - 50	0,005 - 0,040 0,005 - 0,050 0,010 - 0,060 0,010 - 0,075 0,015 - 0,095
GLXSW; GXSW; GLRSW	03 - 10 12 - 18 20 - 25 30 - 40 40 - 50	0,005 - 0,035 0,005 - 0,040 0,005 - 0,050 0,010 - 0,060 0,010 - 0,075

Series E Type	Size	Radial Internal Clearance in mm (min./max.)
EI/EA	06 - 12 15 - 20 25 - 35 40 - 60 70 - 80	0,015 - 0,050 0,020 - 0,065 0,030 - 0,085 0,035 - 0,100 0,045 - 0,120
EI..D/EA..D EI..D-NIRO EA..D-NIRO	06 - 12 15 - 20 25 - 35 40 - 60 70 - 80	0,000 - 0,030 0,000 - 0,040 0,000 - 0,050 0,000 - 0,055 0,000 - 0,060
GE...EC-NIRO	06 - 12 15 - 20 25 - 35 40 - 60 70 - 90 100 - 120 140 - 160	0,000 - 0,032 0,000 - 0,040 0,000 - 0,050 0,000 - 0,060 0,000 - 0,072 0,000 - 0,085 0,000 - 0,100

Series E, G, W Type	Size	Radial Internal Clearance in mm (min./max.)
GE...E (-2RS) GE...HO-2RS GE...LO	04 - 12 15 - 20 25 - 35 40 - 60 70 - 90 100 - 140 160 - 240 260 - 300 320 - 320	0,032 - 0,068 0,040 - 0,082 0,050 - 0,100 0,060 - 0,120 0,072 - 0,142 0,085 - 0,165 0,100 - 0,192 0,110 - 0,214 0,135 - 0,261
GE...EC (-2RS)	04 - 20 25 - 35 40 - 60 70 - 90 100 - 140 160 - 180 200 - 300	0,000 - 0,040 0,000 - 0,050 0,000 - 0,060 0,000 - 0,072 0,050 - 0,130 0,050 - 0,140 0,080 - 0,190
GE...FO (-2RS)	04 - 10 12 - 17 20 - 30 35 - 50 60 - 80 90 - 120 140 - 160 180 - 220 240 - 280	0,032 - 0,068 0,040 - 0,082 0,050 - 0,100 0,060 - 0,120 0,072 - 0,142 0,085 - 0,165 0,100 - 0,192 0,100 - 0,192 0,110 - 0,214
GE...FW (-2RS)	04 - 30 35 - 50 60 - 80 90 - 120 140 - 160 260 - 280	0,000 - 0,050 0,000 - 0,060 0,000 - 0,072 0,050 - 0,130 0,050 - 0,140 0,080 - 0,190

Series Hydraulic	Size	Radial Internal Clearance in mm (min./max.)
FPR...S FPR...CE FPR...N FPR...U FMA...D FS...C FS...N	10 - 12 15 - 20 25 - 35 40 - 60 63 - 90 100 - 125 160 - 200	0,023 - 0,068 0,030 - 0,082 0,037 - 0,100 0,043 - 0,120 0,055 - 0,142 0,065 - 0,165 0,065 - 0,192

For special applications Rod Ends and Spherical Plain Bearings are manufactured with smaller or higher internal clearance. **C2** is smaller (tighter fit) than given above and **C3** is higher (increased internal clearance) than given above.

Lubrication

Maintenance Free Rod Ends and Spherical Plain Bearings must not be lubricated. The ball revolves on a PTFE liner incorporated in the housing.

Rod Ends with Steel running on special Brass, or with Steel running on Bronze, and Steel on Steel require regular lubrication. The first time lubrication has to be carried out when the part is mounted. The regreasing interval depends on the impacting influences, such as ambient conditions (temperature, dust, etc.) and the mechanical impacts given through the application (surface pressure, number of alternation stress, pivoting angle, gliding speed, etc.).

For the lubrication of Spherical Plain Bearings up to a temperature of +110° Celsius, +230° Fahrenheit white paste with graphite components, such as Gleitmo 805k, is recommended. For higher temperatures from +110° to +220° Celsius, +230° to +428° Fahrenheit we recommend high temperature grease, such as Notropeen EHT2.

Regreaseable Rod Ends Series K are lubricated by means of a grease nipple to DIN 3405.

For Steel on Steel Rod Ends Series E from size 20 hydraulic grease nipples to DIN 71412 are incorporated.

Temperature range

FLURO Rod Ends and Spherical Plain Bearings can be operated within the operating temperatures listed below:

Mating surface	Temperature Celsius	Temperature Fahrenheit
Steel/Special Brass	–50° to +200°	–58° to +392°
Steel/Bronze	–50° to +250°	–58° to +480°
Steel/PTFE liner	–150° to +250°	–238° to +480°
Steel/PTFE Glass fibre liner	–75° to +150°	–103° to +302°
Steel/Steel	–50° to +200°	–103° to +392°
GE...EC, FW, AW, SW	–50° to +150°	–58° to +302°
GE...-2RS	–30° to +130°	–22° to +266°
GE...EC-NIRO	–150° to +250°	–238° to +480°

On request stainless steel Spherical Plain Bearings, type: Steel on Steel, with an operating temperature of up to +500° Celsius or +932° Fahrenheit are available.

The permissible operating temperature for sealed Rod Ends and Spherical Plain Bearings, type: -2RS is up to +130° Celsius or +266° Fahrenheit.

Material Conversion Table

Material	DIN German	France	Italy	Sweden	UK	USA
1.0402	C22	XC25	C21	1450	070M20	M1023
1.0503	C45	1C45	C45	1650	080M46	Aisi 1045
2.1030	CuSn8					
2.0561	CuZn40Al1					
1.3505	100Cr6	100Cr6	100Cr6	2258	2S135	Aisi 52100
1.7225	42CrMo4	42CrMo4	42CrMo4	2244	708M40	Aisi 4140
1.0718	9SMnPb28K	S250Pb	CF9SMnPb28	1912	230M07	12L13
1.4006	X10Cr13	Z10C13	X12Cn13	2302	410C21	Aisi 410
1.4034	X46Cr13	Z44C14	X40Cr14		420S45	Aisi 420C
1.4057	X20CrNi172	Z15CN16-02	X16CrNi16	2321	431S29	Aisi 431
1.4112	X90CrMoV18					Aisi 440B
1.4125	X105CrMo17	Z100CD17				Aisi 440C
1.4301	X5CrNi1810	Z4CN19-10FF	X5CrNi1810	2332	304S17	Aisi 304
1.4305	X10CrNiS189	Z8CNF18-09	X10CrNiS1809	2346	303S22	Aisi 303
1.4401	X5CrNiMo17122	Z7CND17-12-02	X5CrNiMo1712	2347	316S17	Aisi 316
1.4542	X5CrNiCuNb174	Z7CNU15-05				Aisi 630 (174Ph)
1.4571	X6CrNiMoTi17-12-2	Z6CNDT17-12	X6CrNiMoTi1712	2350	320S18	Aisi 316Ti

Bearing Load ratings

Bearing Load ratings are bearing specific data, derived from the characteristics of the materials used. They are used when selecting Spherical Plain Bearings or Rod Ends for a particular load, but may have to be reduced in adverse operating conditions.

Static Load ratings C_o [kN]

C_o indicates the maximum permissible static load which a Rod End at its weakest cross section can withstand without developing permanent distortion. The C_o values listed in the tables of this brochure have been calculated by using the appropiate material specifications and have been tested on a number of Rod Ends during tensile tests carried out at ambient temperature. 80% of the yield strength resulting from the tests have been used so that a safety factor of 1.25 is included.
The static load C_o is also used for establishing the maximum axial load which is limited by an additional bending stress principally due to the method of fastening of the insert. Following are maximum axial values (deformation) which have been established by pressure testing:

(1) $F_a = F_{a,\,max} = a \cdot C_o$ [kN]

a = ≲ 0,4 for GI/GA + GIO/GAO + GXO
a = ≲ 0,2 for GXSW, GXS, GL mounted in a FLURO rod end housing
a = ≲ 0,1 for EI/EA, EI/EA...D-NIRO

For Spherical Plain Bearings C_o indicates the radial load, which does not deform the mating surface permanently. Precondition is the stable configuration of the housing.

Dynamic Load ratings C [kN]

This rating is used to establish the working life of Spherical Plain Bearings or Rod Ends when under dynamic load conditions. That is to say when they oscillate, rotate or pivot under load. The values listed in the table result from multiplying the maximum surface pressure p_{max} admissible in gliding movements by the projected bearing surface. A_{proj}, whereby a specific load rating is established for each type of Rod End. The established standard values for maximum surface load for various combinations of anti friction material have been listed in table 1 which allows for movement when oscillating.
Information: Depending on the material strength of the Rod End housing (eg. pages 28 and 29) the static load might be lower than the dynamic load. For this the procedure stated on page 19 has to be observed.

p_{zul} [N/mm²]	St/Ms	St/Bz	St/St soft	St/St hard	St/TBz	St/TNy
	50	50	50	100	150	50

Table 1: Maximum surface pressure

Abbreviations: St = Steel, Ms = Brass, Bz = Bronze, TBz = Woven Bronze Fabric, TNy = Woven Nylon

Forces affecting a Bearing

The loads affecting a Spherical Plain Bearing can vary. They can be:
- intermittent, constant or variable (illustration 1)
- static or dynamic

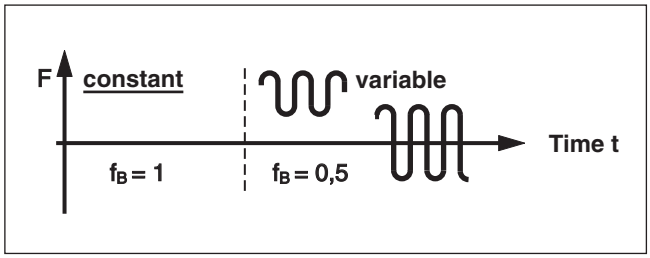

Picture 1: Load factors - check f_B

Forces when under static load

Radial only (F_r) or radial and axial (F_a) forces arise and there is no movement between the ball and the insert (Picture 2).

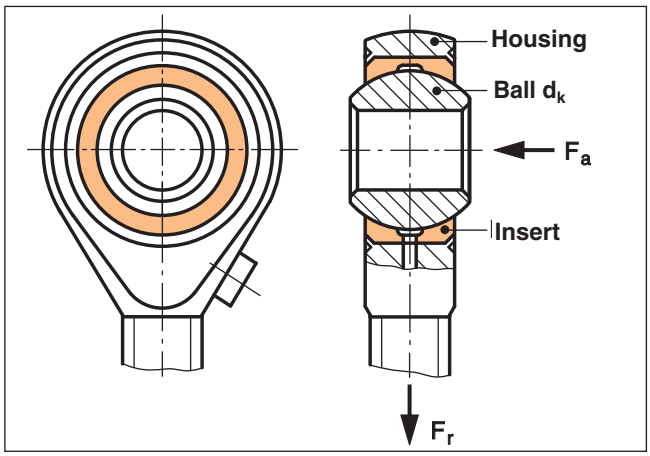

Picture 2: Radial and axial forces

Forces when under dynamic load

Radial or radial and axial forces arise, when the Ball pivots at angle a, oscillates at angle ß or rotates relative to the Insert.

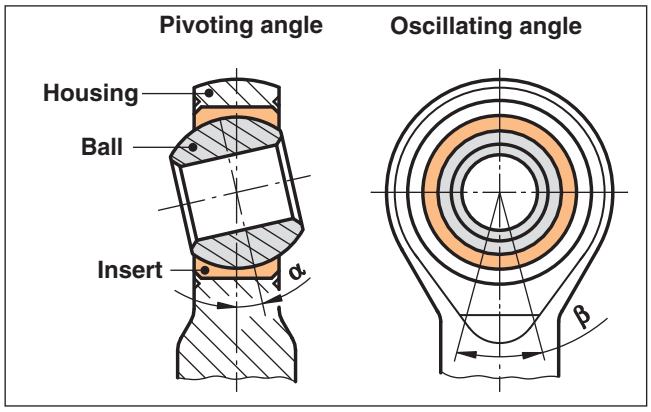

Picture 3: Pivoting and oscillating angle

In the case of a **constant load F_r, F_a** a dynamically equivalent bearing load $F_ä$ can be established in accordance with formula (2).

(2) $F_ä = F_r + Y \cdot F_a$ [kN]

therefore: $F_ä \leq F_{r,\,max}$ according to formula (6);
$F_a \leq F_{a,\,max}$ (6a)

The axial factor Y in table 2 is dependent on the load ratio.

Load ratio $F_a : F_r$	0,1	0,2	0,3	0,4	0,5
Axial factor Y	0,8	1	1,5	2,5	3

Table 2: Axial factor Y

In the case of a **variable load** (picture 4), formula (4) can be used to calculate a mean dynamic bearing load F_m from the individual load levels F_i and the appropriate time factor t_i.

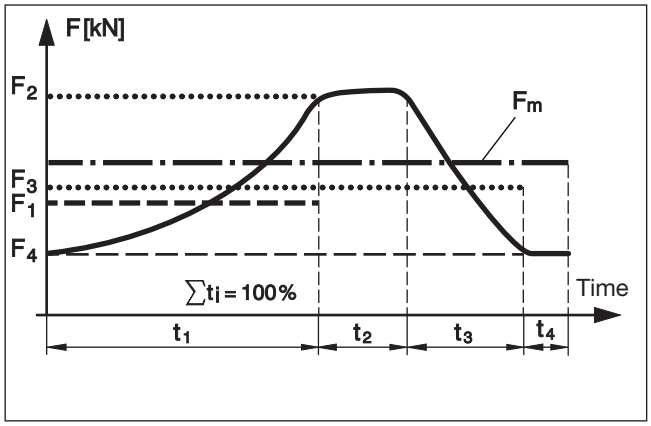

Picture 4: Variable load against time

(3) $F_m = 0{,}1\sqrt{F_1^2 \cdot t_1 + F_2^2 \cdot t_2 + ...)}$ [kN]

Force F [kN] : time component t [%]
therefore the following must be valid: $F_{i,\,max} \leq F_{r,\,max}$ according to (6)

In case of an additional axial load the equivalent bearing load is calculated according to formula (4).

(4) $F_ä = F_m + Y \cdot F_a)$ [kN]

Axial factor Y according to table 2
$F_a \leq F_{a,\,max}$ according to (6a)

Selection of the bearing size

The selection is usually made step by step, repeated if necessary, by comparing -

1. the load ratio involved with the normal minimum values for that ratio;
2. the forces affecting the bearing and the maximum permitted load of the bearing proposed;
3. the maximum surface pressure and the surface pressure on the proposed bearings;
4. the maximum glide speed and the glide speed involved of the bearing proposed;
5. the specific performance of the bearing involved with the published catalogue limits.

Re 1:
The load ratio (C/F) is a value for a specific use of a bearing according to formula (5).

(5) $(C/F)_{exist} \geq (C/F)_{min}$

The common minimum values for (C/F) for different antifriction surfaces as listed in table 3, can be used to establish the required dynamic load rating C in accordance with formula (5a) by changing formula (5). By this means a suitable bearing size can be selected from the tables of this catalogue.

$(C/F)_{min}$	St/Ms	St/Bz	St/St	St/TBz	St/TNy
	2	2	2	1,75	1,5

Table 3: Typical load ratios

(5a) $C_{reg} \geq (C/F)_{min} \cdot F_{exist}$ [kN]

Re 2:
When the existing force affecting the bearing is a static load, it can be used as is for a comparison. When it is a dynamic load, it can be calculated by using formula (2), (3) or (4).

When a Rod End is mounted with a locking nut or retransfer with two nuts, the additional tensile stress at the male thread or the connecting rod has to be taken into consideration.

However the static or dynamic load must always be smaller than the maximum permitted load, which is calculated from the static load rating C_o using formula (6).This might have to be further reduced by the load factor f_B (picture1) and the temperature factor f_T (table4).

Temperature C	80°	100°	150°	200°	250°
Temperature F	176°	212°	302°	392°	480°
greased	1	1	1	0,8	0,5
maintenance free	1	1	0,8	0,5	0,3

Table 4: Temperature factor F_T

(6) $$F_{r,\,max} = C_o \cdot f_B \cdot f_T \quad [kN]$$

(6a) $$F_{a,\,max} = a \cdot F_{r,\,max} \quad [kN]$$

If no bearing size is given in the application the required static load rating can be established by changing formula (6) and a Rod End can be selected from the tables accordingly.

(7) $$C_{o,reg} \geq \frac{F_{exist}}{f_B \cdot f_T} \quad [kN]$$

Re 3:
The load on a mating surface can be worked out by using formula (8). It must be less than the standard value for surface load according to the antifriction combination of materials, selected as listed in table (1).

(8) $$p_{exist} = p_{max} / (C/F)_{exist} \quad [N/mm^2]$$

p_{max} acc. to table1, F acc. to formula (2), (3) or (4)

Re 4:
The existing average glide speed v_m is calculated according to formula (9) using the frequency of rotation of the crank K and the glide distance of the Spherical Plain Bearing G. (At one rotation of K it corresponds to the double arc b between the centres 1 and 2 in Picture 5 and thus to the double maximum oscillating angle *ß)*.

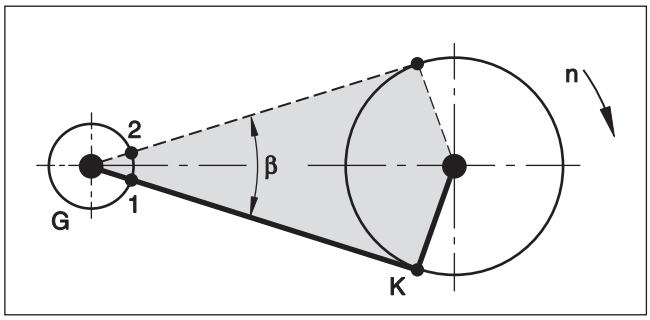

Picture 5: Oscillating angle *ß* relative to crank rotation

(9) $$v_{m,\,exist} = 2 \cdot b \cdot f = \frac{d_k \cdot ß \cdot f}{1000 \cdot 57{,}3 \cdot 60} \quad [m/s]$$

Diameter of ball d_k [mm] (page 17) and f [1/min]

In case where the bearing rotates fully ß needs to be substituted by 180°. The slip speed has to be less than the speed permissible listed in table 5.

V_{max} [m/s]	Oscillation	Revolution
Steel/Steel	0,15	0,10
Steel/Bronze (Brass)	0,25	1,00
Maintenance free	0,25	0,35 short temporary intervals only

Table 5: Maximum slip speed

Re 5:
The product p·v can be defined as a specific bearing performance P_L (see formula 10). Thus, an estimated value for the heat build-up per mm² of the Spherical Plain Bearing surface ist available, mainly dependent on the antifriction material combination, the lubrication/cooling applied and the surface pressure and glide speed. By increasing temperate the allowable surface pressure of maintenance free bearings is decreasing (picture 1 and 4).

(10) $$P_{L,\,exist} = p_{exist} \cdot v_{exist} \quad \left[\frac{N \cdot m}{mm^2 \cdot s} = \frac{W}{mm^2}\right]$$

Slip speed v according to (9)
Surface pressure p according to (8)

After the selection of the bearing the following is valid:
$P_{L,\,exist} \leq P_{L,\,max}$

$P_{L,\,max}$ [W/mm²]	Steel/Bz, (Brass), (Steel)	Maintenance free
	0,5	1,3

Table 6: Maximum specific bearing performance

Bearing life calculations

In the case of a static load it is not necessary to calculate the working life. The permissible limit set at 80% of the breaking point allows the forces to act indefinitely.

In the case of dynamic loads calculating the bearing life is problematic. There are many, sometimes interdependent influences, that cannot always be taken into consideration.Therefore, a calculation of the bearing life can only be approximate. As an approximation the bearing has an increased life proportional to its load rating and also when used at a moderate speed.

Additional influences can be taken into account by making use of the factors in formula (11).

(11) $$G_h \approx 3 \cdot f_L \cdot f_T \cdot f_G \cdot f_N \left(\frac{C/F}{v_m}\right)_{exist} \quad [h]$$

f_L = Direction of load to table 7
f_T = Temperature factor to table 4
f_G = Glide factor to table 8
f_N = Relubrication factor to table 9
C/F = Load ratio
v_m = Mean glide speed [m/s]

The direction of load factor indicates whether the direction of load is uni-directional, constant, variable or oscillating.

Direction of load	Steel/Steel	Steel/Bz	Steel/PTFE
unidirectional	1	1	1
varying	2,5	2	1

Table 7: Directional load factors f_L

The slip factor f_G takes into account the materials used on the mating surfaces of a bearing. As a result the only distinction that can be made is between being maintenance-free (not lubricated) and where lubrication is necessary.

$(C/F)_{exist}$	1,5	2	3	4	6	8	10	15	20
maint. free	1,5	2,0	2,5	3,0	3,5	4,0	4,3	4,7	5,0
greased	1,1	1,2	1,3	1,4	1,6	1,8	2,1	2,4	2,5

Table 8: Glide factors f_G

The relubrication factor f_N takes into account the extension of the bearing life G_h when regularly lubricated. The greater the surface pressure p_{exist} the more often the bearing has to be relubricated. If the bearing is only lubricated on commissioning as in the case of bearings with PTFE liners, f_N = 1 has be inserted.

p_{exist} [N/mm^2]	5	10	25	40
Regular regreasing regreasable bearing	6	4	3	2
Initial greasing + PTFE	1	1	1	1

Table 9: Relubrication factors f_N

Lubrication intervals are dependent on load conditions and therefore have to be set by the operator.

Ball diameter for Rod Ends and Spherical Plain Bearings

Series K		Series E	
Size	∅ dk	Size	∅ dk
2	5,20	6	10,0
3	7,94	8	13,0
4	9,52	10	16,0
5	11,11	12	18,0
6	12,70	15	22,0
8	15,87	17	25,0
10	19,05	20	29,0
12	22,22	25	35,5
14	25,40	30	40,7
16	28,57	35	47,0
18	31,75	40	53,0
20	34,92	45	60,0
22	38,10	50	66,0
25	42,86	60	80,0
30	50,80	70	92,0
35	57,15	80	105,0
40	65,96	90	115,0
50	82,00	100	130,0

Calculation Examples

1. Example:

In a paper machine used for manufacturing writing pads a rod end with female thread is used.
The dimensions of the components in the machine require size 16, and the following values are also given:

Variable radial load through $F_r = \pm 2$ kN; No axial load
Max. angle of misalignment ß = 20°; Oscillating interval f = 150/min.; operating temperature T = +50° Celsius, +122° Fahrenheit
Regular lubrication

1. Initial selection of Rod End

a) Type of Bearing

Rod Ends Series GI, GIS, GIXS, GIRS, GIO could be used.
However, the following have to be excluded
- GIO, because it cannot be lubricated and only moderate movements are possible.
- GIRS, a stainless steel type is unneccessary as the working environment is not corrosive.
So we can choose from female rod end types GI, GIS, GIXS.

b) Size

The required diameter of the ball is 16 mm and the following values for GIS can be ascertained from the brochure on pages 17 and 22.

$d_k = 28{,}6$ mm; $C_o = 32{,}0$ kN; $C = 21{,}5$ kN

b_1) required static load rating C_o [formula 7 + picture 1 + table 4]

$$C_{o,\,req} \geq \frac{F_{exist}}{f_B \cdot f_T} = \frac{2}{0{,}5 \cdot 1} = \underline{\underline{4\ \text{kN}}}$$

b_2) required dynamic load rating C [formula 5a + table 3]

$$C_{req} \geq (C/F)_{min} \cdot F_{exist} = 2 \cdot 2 = \underline{\underline{4\ \text{kN}}}$$

Check

$C_{o,\,exist} = 32{,}0\ \text{kN} > C_{o,\,req} = 4\ \text{kN}$
$C_{exist} = 21{,}5\ \text{kN} > C_{req} = 4\ \text{kN}$
$F_r = 2\ \text{kN} \leq F_{r,\,max} = C_o \cdot f_B \cdot f_T = 32{,}0 \cdot 0{,}5 \cdot 1 = 16{,}0\ \text{kN}$

2. Checking the surface pressure [formula 8 + table 1]

$$p_{exist} = \frac{p_{max}}{(C/F)_{exist}} = \frac{50}{21{,}5/2} = \frac{50}{10{,}75} = \underline{\underline{4{,}65\ \text{N/mm}^2}} < p_{max} = 50\ \text{N/mm}^2$$

3. Checking the slip speed [formula 9 + table 5]

$$v_{m,\,exist} = \frac{d_k \cdot ß \cdot f}{1000 \cdot 57{,}3 \cdot 60} = \frac{28{,}6 \cdot 20 \cdot 150}{1000 \cdot 57{,}3 \cdot 60} = \underline{\underline{0{,}025\ \text{m/s}}} < v_{max} = 0{,}25\ \text{m/s}$$

4. Checking the specific bearing performance [formula 10 + table 6]

$$P_{L,\,exist} = p_{exist} \cdot v_{m,\,exist} = 4{,}65 \cdot 0{,}025 = \underline{\underline{0{,}12\ \text{W/mm}^2}} < P_{L,\,max} = 0{,}5\ \text{W/mm}^2$$

5. Calculation of bearing life [formula 11 + table 7 + 4 + 8 + 9]

$$G_h \approx 3 \cdot f_L \cdot f_T \cdot f_G \cdot f_V \cdot \left(\frac{C/F}{v_m}\right)_{exist} = 3 \cdot 2 \cdot 1 \cdot 2{,}1 \cdot 6 \cdot \frac{10{,}75}{0{,}025} = \underline{\underline{32.500\ \text{hrs.}}}$$

6. Final selection

Following steps 1b to 5. - the calulations for rod ends GI 16 and GIXS 16 can be checked.
When making a decision on the bearing to use, design, application and price have to be taken into consideration for each type.

2. Example:

In a mechanical handling facility multi-directional radial loads are applied to the rod end. These loads are the same as shown in illustration 4, page 15. Four separate loads $F_{r,i}$ with the four appropriate time components have been substituted as shown below:

F_{r1} = 2 kN, t_1 = 50%; F_{r2} = 4 kN, t_2 = 16%; F_{r3} = 2,4 kN, t_3 = 24%; F_{r4} = 1 kN, t_4 = 10%;
Additionally the rod end is subjected to a constant axial load F_a = 0,65 kN
Further operating conditions: max. angle ß = 30°; oscillation frequency f = 60/min.; max. temperature 70°C

1. Initial selection of Rod End

a) Type of bearing

As regular lubrication is not possible due to poor accessibility a maintenance free type must be used. Rod Ends GASW, GAXSW, GARSW, GAOW could be suitable, but the following series have to be ruled out.
- GAOW - these Rod Ends are only suitable for restricted movement.
- GARSW - because the working environment is not corrosive.

This leaves the size of the male thread version of type GASW, GAXS to be established.

b) Size

b_0) mean and equivalent bearing load [formula 3 + 4 + table 2]

$$F_m = 0{,}1\sqrt{\sum F_i^2 \cdot t_i} = 0{,}1\sqrt{2^2 \cdot 50 + 4^2 \cdot 16 + 2{,}4^2 \cdot 24 + 1^2 \cdot 10} = \underline{\underline{2{,}46\ \text{kN}}}$$

$$F_{ä} = F_m + Y \cdot F_a = 2{,}46 + 1{,}26 \cdot 0{,}65 = \underline{\underline{3{,}28\ \text{kN}}} \qquad Y = 1{,}26 \text{ für } F_a/F_m = 0{,}65/2{,}46 = 0{,}26$$

b_1) required static load rating C_o [formula 7 + picture 1 + table 4]

$$C_{o,\,req} \geq \frac{F_{exist,\,ä}}{f_B \cdot f_T} = \frac{3{,}28}{0{,}5 \cdot 1} = \underline{\underline{6{,}56\ \text{kN}}}$$

b_2) required dynamic load rating C [formula 5a + table 3]

$$C_{req} \geq (C/F)_{min} \cdot F_{exist} = 1{,}75 \cdot 3{,}28 = \underline{\underline{5{,}75\ \text{kN}}}$$

c) Bearing selected GASW 12 with d_k = 22,2 mm (page 17) and C_o = 23, 5 kN C = 32,0 kN (page 29)

Check [formula 6 + 6a]

$C_{o,\,exist}$ = 23,5 kN > $C_{o,\,req}$ = 6,56 kN F_{r2} = 4,00 kN ≤ $F_{r,\,max} = C_o \cdot f_B \cdot f_T$ = 23,5 · 0,5 · 1 = 11,75 kN
C_{exist} = 32,0 kN > C_{req} = 5,75 kN F_a = 0,65 kN ≤ $F_{a,\,max} = a \cdot F_{r,\,max}$ = 0,2 · 11,75 = 2,35 kN
[a = 0,2 see formula 1]

Note: When selecting the size the dynamic load C_{req} should not exceed the static load $C_{o,\,exist}$

2. Checking the surface pressure [formula 8 + table 1]

$$p_{exist} = \frac{p_{max}}{(C/F)_{exist}} = \frac{150}{32{,}0/3{,}28} = \frac{150}{9{,}75} = \underline{\underline{15{,}38\ \text{N/mm}^2}} < p_{max} = 150\ \text{N/mm}^2$$

3. Checking the slip speed [formula 9 + table 5]

$$v_{m,\,exist} = \frac{d_k \cdot ß \cdot f}{1000 \cdot 57{,}3 \cdot 60} = \frac{22{,}2 \cdot 30 \cdot 60}{1000 \cdot 57{,}3 \cdot 60} = \underline{\underline{0{,}011\ \text{m/s}}} < v_{max} = 0{,}25\ \text{m/s}$$

4. Checking the specific bearing performance [formula 10 + table 6]

$$P_{L,\,exist} = p_{exist} \cdot v_{m,\,exist} = 15{,}38 \cdot 0{,}011 = 0{,}17\ \text{W/mm}^2 < P_{L,\,max} = 1{,}3\ \text{W/mm}^2$$

5. Calculation of bearing life [formula 11 + table 7 + 4 + 8 + 9]

$$G_h \approx 3 \cdot f_L \cdot f_T \cdot f_G \cdot f_V \cdot \left(\frac{C/F}{v_m}\right)_{exist} = 3 \cdot 1 \cdot 1 \cdot 4{,}2 \cdot 1\ \frac{9{,}75}{0{,}011} = \underline{\underline{11.100\ \text{hrs.}}}$$

6. Final selection

Steps 1c to 5 can then be repeated for series GAXSW so that after comparing the required material strength, price etc. of each type, a final decision can be taken.

Rod Ends Series K - Standard

Series GI

Rod Ends with female thread made from free-cutting or heat-treated steel, zinc plated and fitted with a grease nipple

Especially suited for axial loads

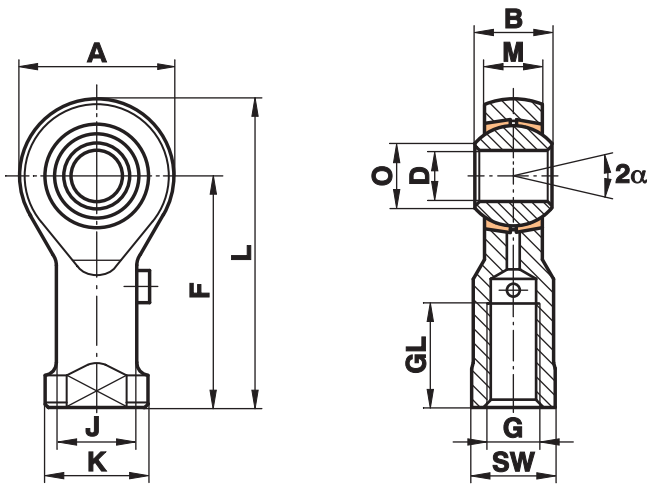

Size (D)	B	M	A	F	L	K	J	O	SW	G	GL	Static load C_0 kN	Dynamic load C kN	Limiting speed rev/min	Weight g
5	8	6,00	18	27	36	11	9,0	7,7	9	M 5	10	9,9	2,5	900	18
6	9	6,75	20	30	40	13	10,0	8,9	11	M 6	12	11,9	3,2	760	27
8	12	9,00	24	36	48	16	12,5	10,4	13	M 8	16	17,1	5,4	620	46
10	14	10,50	28	43	57	19	15,0	12,9	17	M 10	20	21,4	7,5	500	76
12	16	12,00	32	50	66	22	17,5	15,4	19	M 12	22	27,0	10,0	450	115
14	19	13,50	36	57	75	25	20,0	16,8	22	M 14	25	24,5	13,0	360	170
16	21	15,00	42	64	85	27	22,0	19,3	22	M 16	28	37,0	16,0	350	230
18	23	16,50	46	71	94	31	25,0	21,8	27	M 18x1,5	32	43,0	19,5	320	320
20	25	18,00	50	77	102	34	27,5	24,3	32	M 20x1,5	33	49,5	23,5	280	415
22	28	20,00	54	84	111	37	30,0	25,8	32	M 22x1,5	37	57,0	29,0	250	540
25	31	22,00	60	94	124	42	33,5	29,6	36	M 24x2	42	68,0	35,0	230	750

Materials:

Housing: up to size 12 turned from free-cutting steel to 9SMnPb28K, 12L13
from size 14 forged from heat-treated steel to C22, M1023

Insert: Special brass to CuZn40Al1

Ball: Bearing steel to 100Cr6, Aisi 52100, hardened, ground, polished

Cetop connections see page 40.

Rod Ends Series K - Standard

Series GA

Rod Ends with male thread made from free-cutting or heat-treated steel, zinc plated and fitted with a grease nipple

Especially suited for axial loads

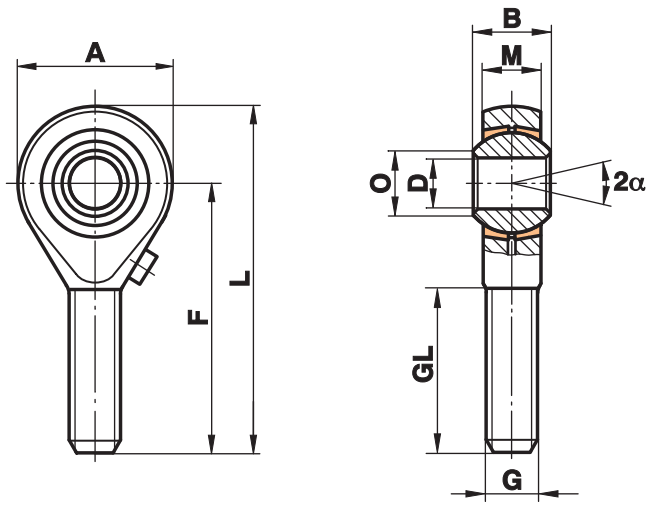

Size (D)	B	M	A	F	L	O	G	GL	Static load C_0 kN	Dynamic load C kN	Limiting speed rev/min	Weight g
5[1]	8	6,00	18	33	42	7,7	M 5	20	4,3	2,5	900	13
6	9	6,75	20	36	46	8,9	M 6	22	6,0	3,2	760	20
8	12	9,00	24	42	54	10,4	M 8	25	11,0	5,4	620	33
10	14	10,50	28	48	62	12,9	M 10	29	17,4	7,5	500	56
12	16	12,00	32	54	70	15,4	M 12	33	25,5	10,0	450	87
14	19	13,50	36	60	78	16,8	M 14	36	24,5	13,0	360	129
16	21	15,00	42	66	87	19,3	M 16	40	36,5	16,0	350	189
18	23	16,50	46	72	95	21,8	M 18x1,5	44	43,0	19,5	320	267
20	25	18,00	50	78	103	24,3	M 20x1,5	47	49,5	23,5	280	348
22	28	20,00	54	84	111	25,8	M 22x1,5	51	57,0	29,0	250	443
25	31	22,00	60	94	124	29,6	M 24x2	57	68,0	35,0	230	600

Materials:

Housing: up to size 12 turned from free-cutting steel to 9SMnPb28K, 12L13
from size 14 forged from heat-treated steel to C22, M1023

Insert: Special brass to CuZn40Al1

Ball: Bearing steel to 100Cr6, Aisi 52100, hardened, ground, polished

[1] without lubrication fitting

Rod Ends Series K - Heavy Duty

Series GIS

Rod Ends with female thread made from free-cutting or heat-treated steel, zinc plated and fitted with a grease nipple

Especially suited for high speed applications

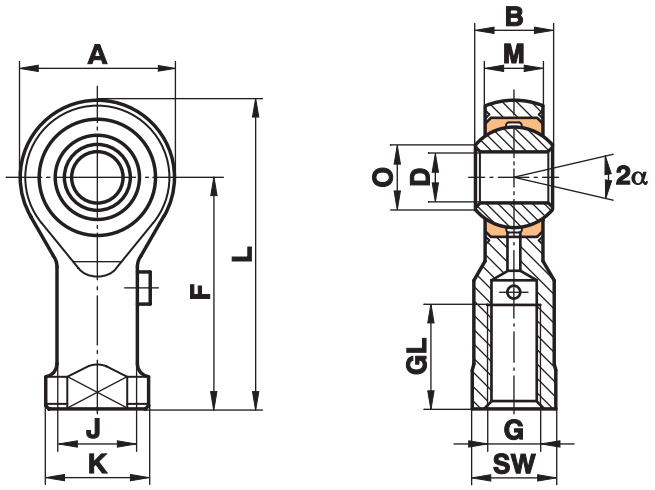

Size (D)	B	M	A	F	L	K	J	O	SW	G	GL	Static load C_0 kN	Dynamic load C kN	Limiting speed rev/min	Weight g
2[1]	4,5	3,60	9	16	20,5	4,5	3,8	2,6	4,0	M 2	7	3,0	1,1		3
3	6,0	4,50	14	21	27,0	6,5	5,0	5,1	5,5	M 3	10	4,1	1,8		6
5	8,0	6,00	18	27	36,0	11,0	9,0	7,7	9,0	M 5	10	8,0	3,3		18
6	9,0	6,75	20	30	40,0	13,0	10,0	8,9	11,0	M 6	12	8,9	4,3	1500	27
8	12,0	9,00	24	36	48,0	16,0	12,5	10,4	13,0	M 8	16	14,1	7,1	1200	46
10	14,0	10,50	28	43	57,0	19,0	15,0	12,9	17,0	M 10	20	19,3	10,0	1000	76
12	16,0	12,00	32	50	66,0	22,0	17,5	15,4	19,0	M 12	22	23,5	13,5	860	115
14	19,0	13,50	36	57	75,0	25,0	20,0	16,8	22,0	M 14	25	21,0	17,0	750	170
16	21,0	15,00	42	64	85,0	27,0	22,0	19,3	22,0	M 16	28	32,0	21,5	660	230
18	23,0	16,50	46	71	94,0	31,0	25,0	21,8	27,0	M 18x1,5	32	38,5	26,0	600	320
20	25,0	18,00	50	77	102,0	34,0	27,5	24,3	32,0	M 20x1,5	33	44,0	31,5	540	415
22	28,0	20,00	54	84	111,0	37,0	30,0	25,8	32,0	M 22x1,5	37	53,0	38,0	500	540
25	31,0	22,00	60	94	124,0	42,0	33,5	29,6	36,0	M 24x2	42	62,0	47,0	440	750
30	37,0	25,00	70	110	145,0	51,0	40,0	34,8	41,0	M 30x2	51	82,0	64,0	370	1130
35	43,0	28,00	80	125	165,0	58,0	46,0	37,7	50,0	M 36x2	56	101,0	80,0	330	1600
40	49,0	35,00	90	142	187,0	69,0	57,0	44,2	60,0	M 42x2	60	124,0	116,0	290	2770
50	60,0	45,00	116	160	218,0	78,0	65,0	55,9	65,0	M 48x2	65	308,0	185,0	230	5000

Materials:

Housing: up to size 12 turned from free-cutting steel to 9SMnPb28K, 12L13
from size 14 forged from heat-treated steel to C22, M1023
Size 50 turned from heat-treated steel to C45, Aisi 1045

Insert: Special high strength bronze to CuSn8

Ball: Bearing steel to 100Cr6, Aisi 52100, hardened, ground, polished

This series is also available sealed (see page 38) or with threaded bolt (see page 39).

Cetop connections see page 40.

[1] without lubrication fitting

Rod Ends Series K - Heavy Duty

Series GAS

Rod Ends with male thread made from free-cutting or heat-treated steel, zinc plated and fitted with a grease nipple

Especially suited for high speed applications

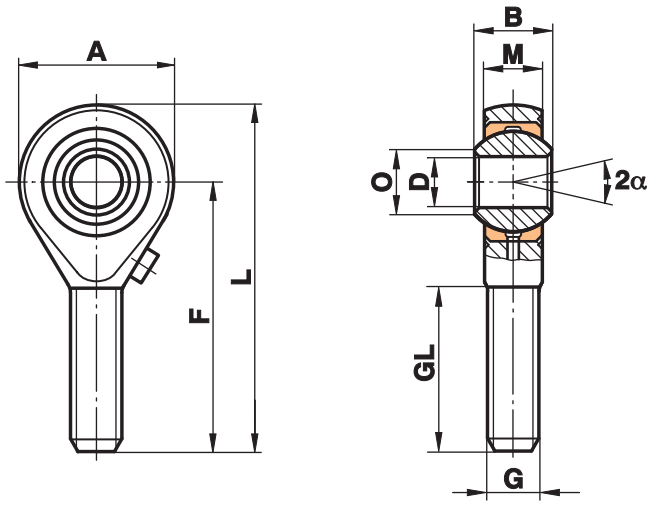

Size (D)	B	M	A	F	L	O	G	GL	Static load C_0 kN	Dynamic load C kN	Limiting speed rev/min	Weight g
2[1]	4,5	3,60	9	20	24,5	2,6	M 2	12	0,6	1,1		3
3[1]	6,0	4,50	14	26	33,0	5,1	M 3	15	1,5	1,8		6
5[1]	8,0	6,00	18	33	42,0	7,7	M 5	20	4,3	3,3		13
6	9,0	6,75	20	36	46,0	8,9	M 6	22	6,0	4,3	1500	20
8	12,0	9,00	24	42	54,0	10,4	M 8	25	11,0	7,1	1200	33
10	14,0	10,50	28	48	62,0	12,9	M 10	29	17,4	10,0	1000	56
12	16,0	12,00	32	54	70,0	15,4	M 12	33	23,5	13,5	860	87
14	19,0	13,50	36	60	78,0	16,8	M 14	38	21,0	17,0	750	129
16	21,0	15,00	42	66	87,0	19,3	M 16	40	32,0	21,5	660	189
18	23,0	16,50	46	72	95,0	21,8	M 18x1,5	44	38,5	26,0	600	267
20	25,0	18,00	50	78	103,0	24,3	M 20x1,5	47	44,0	31,5	540	348
22	28,0	20,00	54	84	111,0	25,8	M 22x1,5	51	53,0	38,0	500	443
25	31,0	22,00	60	94	124,0	29,6	M 24x2	58	62,0	47,0	440	600
30	37,0	25,00	70	110	145,0	34,8	M 30x2	71	82,0	64,0	370	1030
35	43,0	28,00	80	125	165,0	37,7	M 36x2	73	101,0	80,0	330	1600
40	49,0	35,00	90	142	187,0	44,2	M 42x2	78	124,0	116,0	290	2550
50	60,0	45,00	116	185	243,0	55,9	M 48x2	105	308,0	185,0	230	4800

Materials:

Housing: up to size 12 turned from free-cutting steel to 9SMnPb28K, 12L13
from size 14 forged from heat-treated steel to C22, M1023
size 50 turned from heat-treated steel to C45, Aisi 1045

Insert: Special high strength bronze to CuSn8

Ball: Bearing steel to 100Cr6, Aisi 52100, hardened, ground, polished

This series is also available sealed (see page 38) or with threaded bolt (see page 39).

[1] without lubrication fitting

Rod Ends Series K - Extra Heavy Duty

Series GIXS

Rod Ends with female thread made from heat-treated steel, zinc plated and regreasable through a grease nipple in housing

Especially suitable for high pressure and tension loads

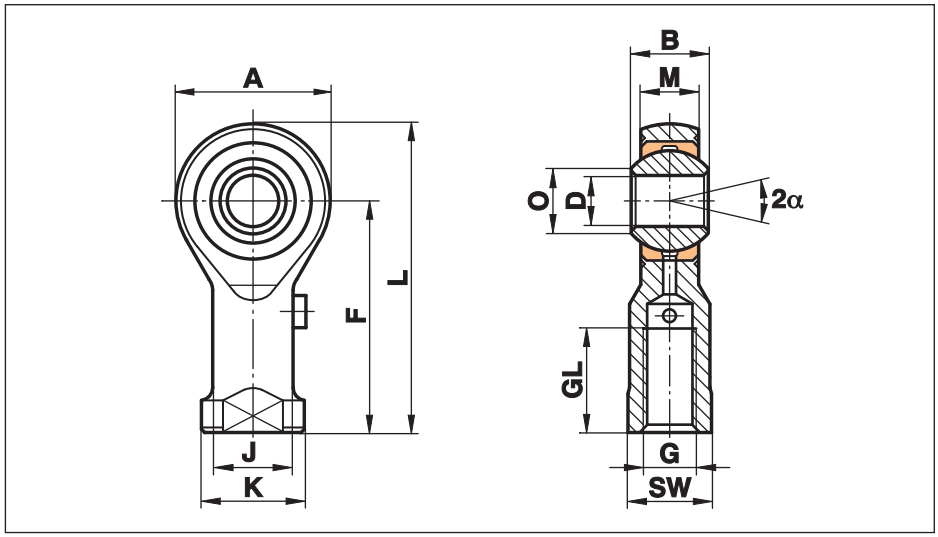

Size (D)	B	M	A	F	L	K	J	O	SW	G	GL	Static load C_0 kN	Dynamic load C kN	Limiting speed rev/min	Weight g
6	9	6,75	20	30	40	13	10,0	8,9	11	M 6	12	16,7	4,3	1500	27
8	12	9,00	24	36	48	16	12,5	10,4	13	M 8	16	25,5	7,1	1200	46
10	14	10,50	28	43	57	19	15,0	12,9	17	M 10	20	34,8	10,0	1000	76
12	16	12,00	32	50	66	22	17,5	15,4	19	M 12	22	42,0	13,3	860	115
14	19	13,50	36	57	75	25	20,0	16,8	22	M 14	25	57,0	17,0	750	170
16	21	15,00	42	64	85	27	22,0	19,3	22	M 16	28	67,5	21,5	660	230
18	23	16,50	46	71	94	31	25,0	21,8	27	M 18x1,5	32	81,5	26,0	600	320
20	25	18,00	50	77	102	34	27,5	24,3	32	M 20x1,5	33	93,5	31,5	540	415
22	28	20,00	54	84	111	37	30,0	25,8	32	M 22x1,5	37	114,0	38,0	500	540
25	31	22,00	60	94	124	42	33,5	29,6	36	M 24x2	42	135,0	47,0	440	750
30	37	25,00	70	110	145	51	40,0	34,8	41	M 30x2	51	184,0	64,0	370	1130

Materials:

Housing: Heat-treated steel to 42CrMo4, Aisi 4140, forged

Insert: Special high strength bronze to CuSn8

Ball: Bearing steel to 100Cr6, Aisi 52100, hardened, ground, polished

This series is also available sealed (see page 38) or with threaded bolt (see page 39).

Cetop connections see page 40.

Rod Ends Series K - Extra Heavy Duty

Series GAXS

Rod Ends with male thread made from heat-treated steel, zinc plated and regreasable through a grease nipple in housing

Especially suitable for high pressure and tension loads

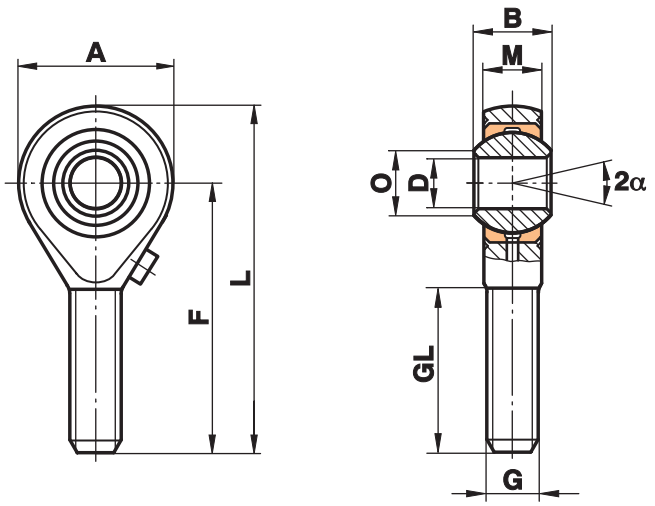

Size (D)	B	M	A	F	L	O	G	GL	Static load C_0 kN	Dynamic load C kN	Limiting speed rev/min	Weight g
6	9	6,75	20	36	46	8,9	M 6	22	9,8	4,3	1500	20
8	12	9,00	24	42	54	10,4	M 8	25	19,5	7,1	1200	33
10	14	10,50	28	48	62	12,9	M 10	29	31,4	10,0	1000	56
12	16	12,00	32	54	70	15,4	M 12	33	42,0	13,5	860	87
14	19	13,50	36	60	78	16,8	M 14	38	57,0	17,0	750	129
16	21	15,00	42	66	87	19,3	M 16	40	67,5	21,5	660	189
18	23	16,50	46	72	95	21,8	M 18x1,5	44	81,5	26,0	600	267
20	25	18,00	50	78	103	24,3	M 20x1,5	47	93,5	31,5	540	348
22	28	20,00	54	84	111	25,8	M 22x1,5	51	114,0	38,0	500	443
25	31	22,00	60	94	124	29,6	M 24x2	58	135,0	47,0	440	600
30	37	25,00	70	110	145	34,8	M 30x2	71	184,0	64,0	370	1030

Materials:

Housing: Heat-treated steel to 42CrMo4, Aisi 4140, forged

Insert: Special high strength bronze to CuSn8

Ball: Bearing steel to 100Cr6, Aisi 52100, hardened, ground, polished

This series is also available sealed (see page 38) or with threaded bolt (see page 39).

Rod Ends Series K - Stainless

Series GIRS

Rod Ends with female thread made from stainless steel, regreasable through grease nipple in housing

For use in corrosive environments

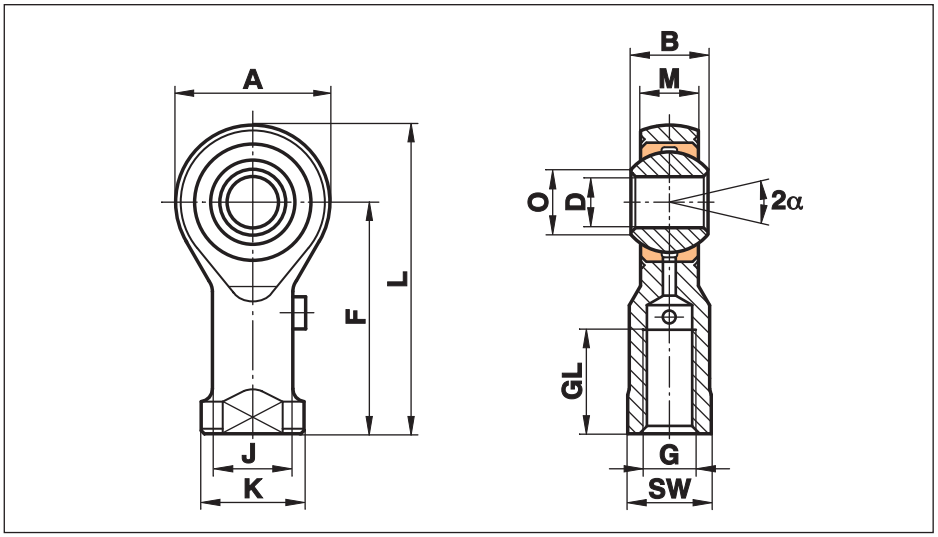

Size (D)	B	M	A	F	L	K	J	O	SW	G	GL	Static load C_0 kN	Dynamic load C kN	Limiting speed rev/min	Weight g
3[1]	6	4,50	14	21	27	6,5	5,0	5,1	5,5	M 3	10	8,0	1,8		6
5	8	6,00	18	27	36	11,0	9,0	7,7	9,0	M 5	10	11,8	3,3	1200	18
6	9	6,75	20	30	40	13,0	10,0	8,9	11,0	M 6	12	13,1	4,3	1500	27
8	12	9,00	24	36	48	16,0	12,5	10,4	13,0	M 8	16	20,7	7,1	1200	46
10	14	10,50	28	43	57	19,0	15,0	12,9	17,0	M 10	20	28,3	10,0	1000	76
12	16	12,00	32	50	66	22,0	17,5	15,4	19,0	M 12	22	34,5	13,5	860	115
14	19	13,50	36	57	75	25,0	20,0	16,8	22,0	M 14	25	39,5	17,0	750	170
16	21	15,00	42	64	85	27,0	22,0	19,3	22,0	M 16	28	60,5	21,5	660	230
18	23	16,50	46	71	94	31,0	25,0	21,8	27,0	M 18x1,5	32	73,0	26,0	600	320
20	25	18,00	50	77	102	34,0	27,5	24,3	32,0	M 20x1,5	33	83,0	31,5	540	415
22	28	20,00	54	84	111	37,0	30,0	25,8	32,0	M 22x1,5	37	100,0	38,0	500	540
25	31	22,00	60	94	124	42,0	33,5	29,6	36,0	M 24x2	42	118,0	47,1	440	750
30	37	25,00	70	110	145	51,0	40,0	34,8	41,0	M 30x2	51	155,0	64,0	370	1130
35	43	28,00	80	125	165	58,0	46,0	37,7	50,0	M 36x2	56	191,0	80,0	330	1600
40	49	35,00	90	142	187	69,0	57,0	44,2	60,0	M 42x2	60	235,0	116,0	290	2770

Materials:

Housing: Stainless steel to 1.4057, Aisi 431, forged, polished
size 40 made from stainless steel to 1.4057, Aisi 431, turned

Insert: Special high strength bronze to CuSn8

Ball: Bearing steel to 100Cr6, Aisi 52100, hardened, ground, polished, hard chrome plated

On request: The ball can be made from stainless steel to 1.4034, Aisi 420C, hardened, ground, polished

On request: The insert can be made to stainless steel 1.4301, Aisi 304, or 17-4PH (1.4542) etc.

This series is also available sealed (see page 38) or with threaded bolt (see page 39).

Cetop connections see page 40.

[1] without lubrication fitting

Rod Ends Series K - Stainless

Series GARS

Rod Ends with male thread made from stainless steel, regreasable through grease nipple in housing

For use in corrosive environments

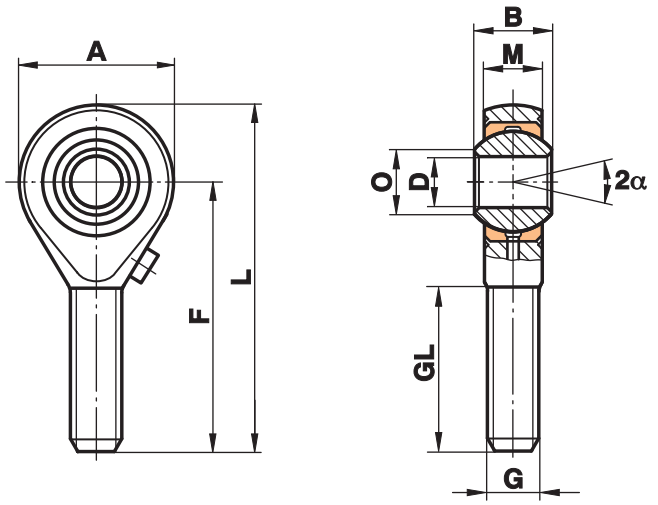

Size (D)	B	M	A	F	L	O	G	GL	Static load C_0 kN	Dynamic load C kN	Limiting speed rev/min	Weight g
3[1]	6	4,50	14	26	33	5,1	M 3	15	7,0	1,8		6
5[1]	8	6,00	18	33	42	7,7	M 5	20	6,2	3,3		13
6	9	6,75	20	36	46	8,9	M 6	22	8,8	4,3	1500	20
8	12	9,00	24	42	54	10,4	M 8	25	16,1	7,1	1200	33
10	14	10,50	28	48	62	12,9	M 10	29	25,5	10,0	1000	56
12	16	12,00	32	54	70	15,4	M 12	33	34,5	13,5	860	87
14	19	13,50	36	60	78	16,8	M 14	38	39,5	17,0	750	129
16	21	15,00	42	66	87	19,3	M 16	40	60,5	21,5	660	189
18	23	16,50	46	72	95	21,8	M 18x1,5	44	73,0	26,0	600	267
20	25	18,00	50	78	103	24,3	M 20x1,5	47	83,0	31,5	540	348
22	28	20,00	54	84	111	25,8	M 22x1,5	51	100,0	38,0	500	443
25	31	22,00	60	94	124	29,6	M 24x2	58	118,0	47,0	440	600
30	37	25,00	70	110	145	34,8	M 30x2	71	155,0	64,0	370	1030
35	43	28,00	80	125	165	37,7	M 36x2	73	191,0	80,0	330	1600
40	49	35,00	90	142	187	44,2	M 42x2	78	235,0	116,0	290	2570

Materials:

Housing: Stainless steel to 1.4057, Aisi 431, forged, polished
size 40 made from stainless steel to 1.4057, Aisi 431, turned

Insert: Special high strength bronze to CuSn8

Ball: Bearing steel to 100Cr6, Aisi 52100, hardened, ground, polished, hard chrome plated

On request: The ball can be made from stainless steel to 1.4034, Aisi 420C, hardened, ground, polished

On request: The insert can be made to stainless steel 1.4301, Aisi 304, or 17-4PH (1.4542) etc.

This series is also available sealed (see page 38) or with threaded bolt (see page 39).

[1] without lubrication fitting

Rod Ends Series K - Maintenance Free

Series GISW

Rod Ends with female thread made from free-cutting or heat-treated steel, zinc plated with PTFE liner, maintenance free

For use at dynamic loads

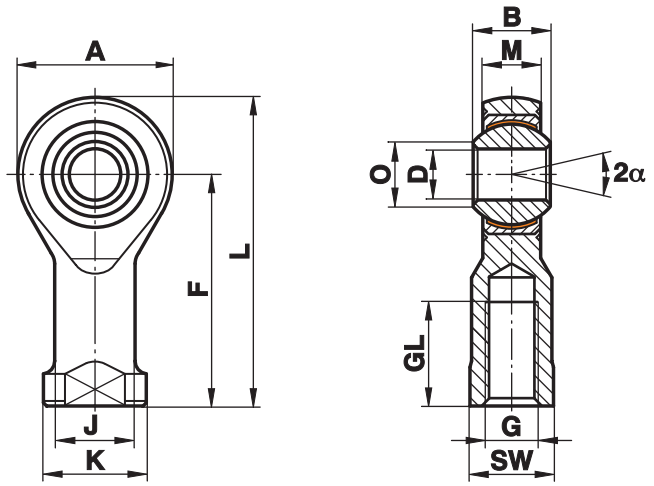

Size (D)	B	M	A	F	L	K	J	O	SW	G	GL	Static load C_0 kN	Dynamic load C kN	Limiting speed rev/min		Weight g
5	8	6,00	18	27	36	11	9,0	7,7	9	M 5	10	8,0	7,5	600	only for short-term revolutions recommended	18
6	9	6,75	20	30	40	13	10,0	8,9	11	M 6	12	8,9	9,3	530		27
8	12	9,00	24	36	48	16	12,5	10,4	13	M 8	16	14,1	16,7	420		46
10	14	10,50	28	43	57	19	15,0	12,9	17	M 10	20	19,3	23,4	350		76
12	16	12,00	32	50	66	22	17,5	15,4	19	M 12	22	23,5	32,0	300		115
14	19	13,50	36	57	75	25	20,0	16,8	22	M 14	25	21,0	42,0	260		170
16	21	15,00	42	64	85	27	22,0	19,3	22	M 16	28	32,0	52,5	230		230
18	23	16,50	46	71	94	31	25,0	21,8	27	M 18x1,5	32	38,5	64,0	210		320
20	25	18,00	50	77	102	34	27,5	24,3	32	M 20x1,5	33	44,0	78,0	190		415
22	28	20,00	54	84	111	37	30,0	25,8	32	M 22x1,5	37	53,0	97,0	170		540
25	31	22,00	60	94	124	42	33,5	29,6	36	M 24x2	42	62,0	122,0	150		750
30	37	25,00	70	110	145	51	40,0	34,8	41	M 30x2	51	82,0	168,0	130		1130
35	43	28,00	80	125	165	58	46,0	37,7	50	M 36x2	56	101,0	206,0	110		1600
40	49	35,00	90	142	187	69	57,0	44,2	60	M 42x2	60	124,0	286,0	100		2770
50	60	45,00	116	160	218	78	65,0	55,9	65	M 48x2	65	308,0	485,0	80		5000

Materials:

Housing: up to size 12 turned, from free-cutting steel to 9SMnPb28K, 12L13
from size 14 forged, from heat-treated steel to C22, M1023
size 50 turned from heat-treated steel to C45, Aisi 1045

Insert: Free-cutting steel to 9SMnPb28K, 12L13, with PTFE liner bonded to the inner surface

Ball: Bearing steel to 100Cr6, Aisi 52100, hardened, ground, polished

This series is also available sealed (see page 38) or with threaded bolt (see page 39).

Cetop connections see page 40.

Rod Ends Series K - Maintenance Free

Series GASW

Rod Ends with male thread made from free-cutting or heat-treated steel, zinc plated with PTFE liner, maintenance free

For use at dynamic loads

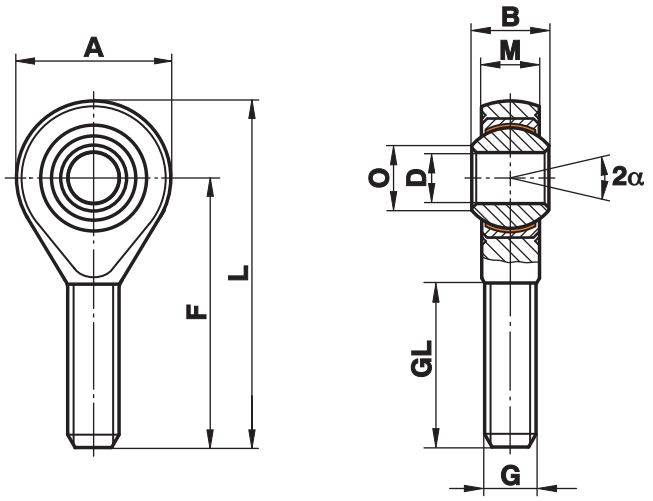

Size (D)	B	M	A	F	L	O	G	GL	Static load C_0 kN	Dynamic load C kN	Limiting speed rev/min		Weight g
5	8	6,00	18	33	42	7,7	M 5	20	4,3	7,5	600	only for short-term revolutions recommended	13
6	9	6,75	20	36	46	8,9	M 6	22	6,0	9,3	530		20
8	12	9,00	24	42	54	10,4	M 8	25	11,0	16,7	420		33
10	14	10,50	28	48	62	12,9	M 10	29	17,4	23,4	350		56
12	16	12,00	32	54	70	15,4	M 12	33	23,5	32,0	300		87
14	19	13,50	36	60	78	16,8	M 14	38	21,0	42,0	260		129
16	21	15,00	42	66	87	19,3	M 16	40	32,0	52,5	230		189
18	23	16,50	46	72	95	21,8	M 18x1,5	44	38,5	64,0	210		267
20	25	18,00	50	78	103	24,3	M 20x1,5	47	44,0	78,0	190		348
22	28	20,00	54	84	111	25,8	M 22x1,5	51	53,0	97,0	170		443
25	31	22,00	60	94	124	29,6	M 24x2	58	61,0	122,0	150		600
30	37	25,00	70	110	145	34,8	M 30x2	71	82,0	168,0	130		1030
35	43	28,00	80	125	165	37,7	M 36x2	73	101,0	206,0	110		1600
40	49	35,00	90	142	187	44,2	M 42x2	78	124,0	286,0	100		2570
50	60	45,00	116	185	243	55,9	M 48x2	105	308,0	485,0	80		4800

Materials:

Housing: up to size 12 turned, from free-cutting steel to 9SMnPb28K, 12L13
from size 14 forged, from heat-treated steel to C22, M1023
size 50 turned from heat-treated steel to C45, Aisi 1045

Insert: Free-cutting steel to 9SMnPb28K, 12L13, with PTFE liner bonded to the inner surface

Ball: Bearing steel to 100Cr6, Aisi 52100, hardened, ground, polished

This series is also available sealed (see page 38) or with threaded bolt (see page 39).

Rod Ends Series K - Maintenance Free

Series GIXSW

Rod Ends with female thread made from heat-treated steel, zinc plated with PTFE liner, maintenance free

For use at high pressure and tension loads

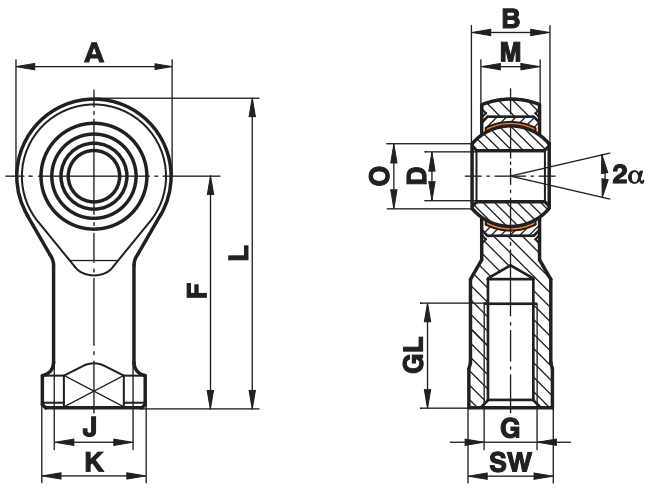

Size (D)	B	M	A	F	L	K	J	O	SW	G	GL	Static load C_0 kN	Dynamic load C kN	Limiting speed rev/min		Weight g
6	9	6,75	20	30	40	13	10,0	8,9	11	M 6	12	16,7	9,3	530	only for short-term revolutions recommended	27
8	12	9,00	24	36	48	16	12,5	10,4	13	M 8	16	25,5	16,7	420		46
10	14	10,50	28	43	57	19	15,0	12,9	17	M 10	20	34,8	23,4	350		76
12	16	12,00	32	50	66	22	17,5	15,4	19	M 12	22	42,0	32,0	300		115
14	19	13,50	36	57	75	25	20,0	16,8	22	M 14	25	57,0	42,0	260		170
16	21	15,00	42	64	85	27	22,0	19,3	22	M 16	28	67,5	52,5	230		230
18	23	16,50	46	71	94	31	25,0	21,8	27	M 18x1,5	32	81,5	64,0	210		320
20	25	18,00	50	77	102	34	27,5	24,3	32	M 20x1,5	33	93,5	78,0	190		415
22	28	20,00	54	84	111	37	30,0	25,8	32	M 22x1,5	37	114,0	97,0	170		540
25	31	22,00	60	94	124	42	33,5	29,6	36	M 24x2	42	135,0	122,0	150		750
30	37	25,00	70	110	145	51	40,0	34,8	41	M 30x2	51	184,0	168,0	130		1130
35	43	28,00	80	125	165	58	46,0	37,7	50	M 36,2	56	230,0	205,0	110		1600

Materials:

Housing: Heat-treated steel to 42CrMo4, Aisi 4140, forged

Insert: Free-cutting steel to 9SMnPb28K, 12L13, with PTFE liner bonded to the inner surface

Ball: Bearing steel to 100Cr6, Aisi 52100, hardened, ground, polished

This series is also available sealed (see page 38) or with threaded bolt (see page 39).

Cetop connections see page 40.

Rod Ends Series K - Maintenance Free

Series GAXSW

Rod Ends with male thread made from heat-treated steel, zinc plated with PTFE liner, maintenance free

For use at high pressure and tension loads

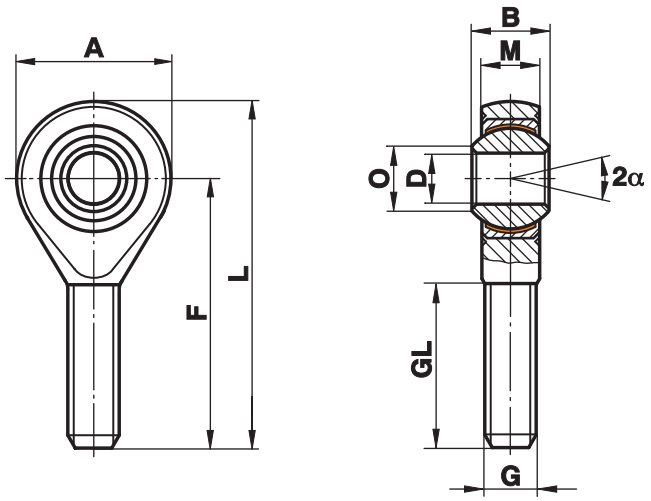

Size (D)	B	M	A	F	L	O	G	GL	Static load C_0 kN	Dynamic load C kN	Limiting speed rev/min		Weight g
6	9	6,75	20	36	46	8,9	M 6	22	9,8	9,3	530	only for short-term revolutions recommended	20
8	12	9,00	24	42	54	10,4	M 8	25	19,5	16,7	420		33
10	14	10,50	28	48	62	12,9	M 10	29	31,4	23,4	350		56
12	16	12,00	32	54	70	15,4	M 12	33	42,0	32,0	300		87
14	19	13,50	36	60	78	16,8	M 14	38	57,0	42,0	260		129
16	21	15,00	42	66	87	19,3	M 16	40	67,0	52,5	230		189
18	23	16,50	46	72	95	21,8	M 18x1,5	44	81,5	64,0	210		267
20	25	18,00	50	78	103	24,3	M 20x1,5	47	93,5	78,0	190		348
22	28	20,00	54	84	111	25,8	M 22x1,5	51	114,0	97,0	170		443
25	31	22,00	60	94	124	29,6	M 24x2	58	135,0	122,0	150		600
30	37	25,00	70	110	145	34,8	M 30x2	71	184,0	168,0	130		1030
35	43	28,00	80	125	165	37,7	M 36x2	73	230,0	205,0	110		1600

Materials:

Housing: Heat-treated steel to 42CrMo4, Aisi 4140, forged

Insert: Free-cutting steel to 9SMnPb28K, 12L13, with PTFE liner bonded to the inner surface

Ball: Bearing steel to 100Cr6, Aisi 52100, hardened, ground, polished

This series is also available sealed (see page 38) or with threaded bolt (see page 39).

Rod Ends Series K - Stainless, Maintenance Free

Series GIRSW

Rod Ends with female thread made from stainless steel with PTFE liner, maintenance free

For use at high dynamic pressure and tension loads in corrosive environments

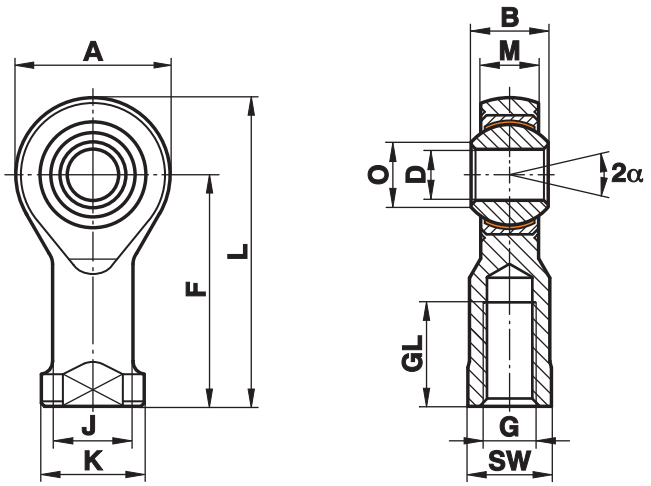

Size (D)	B	M	A	F	L	K	J	O	SW	G	GL	Static load C_0 kN	Dynamic load C kN	Limiting speed rev/min	Weight g
4[1]	7	5,25	14	24	31	9,5	7,8	6,5	8	M 4	12	2,7	0,8	—— only for short-term revolutions recommended	11
5	8	6,00	18	27	36	11,0	9,0	7,7	9	M 5	10	11,8	7,5	600	18
6	9	6,75	20	30	40	13,0	10,0	8,9	11	M 6	12	13,1	9,3	530	27
8	12	9,00	24	36	48	16,0	12,5	10,4	13	M 8	16	20,7	16,7	420	46
10	14	10,50	28	43	57	19,0	15,0	12,9	17	M 10	20	28,3	23,4	350	76
12	16	12,00	32	50	66	22,0	17,5	15,4	19	M 12	22	34,5	32,0	300	115
14	19	13,50	36	57	75	25,0	20,0	16,8	22	M 14	25	39,5	42,0	260	170
16	21	15,00	42	64	85	27,0	22,0	19,3	22	M 16	28	60,5	52,5	230	230
18	23	16,50	46	71	94	31,0	25,0	21,8	27	M 18x1,5	32	73,0	64,0	210	320
20	25	18,00	50	77	102	34,0	27,5	24,3	32	M 20x1,5	33	83,0	78,0	190	415
22	28	20,00	54	84	111	37,0	30,0	25,8	32	M 22x1,5	37	100,0	97,0	170	540
25	31	22,00	60	94	124	42,0	33,5	29,6	36	M 24x2	42	118,0	122,0	150	750
30	37	25,00	70	110	145	50,0	40,0	34,8	41	M 30x2	51	155,0	168,0	130	1130
35	43	28,00	80	125	165	58,0	46,0	37,7	50	M 36x2	56	191,0	206,0	110	1600
40	49	35,00	90	142	187	69,0	57,0	44,2	60	M 42x2	60	235,0	286,0	100	2770

Materials:

Housing: Stainless steel to 1.4057, Aisi 431, forged, polished
size 40 turned from stainless steel to 1.4057, Aisi 431

Insert: Special high strength bronze to CuSn8 with PTFE liner bonded to the inner surface

Ball: Bearing steel to 100Cr6, Aisi 52100, hardened, ground, polished, hard chrome plated

On request: Insert: Stainless steel to 1.4571, Aisi 316Ti
Ball: Stainless steel to 1.4034, Aisi 420C hardened, ground, polished
or in stainless steel to 1.4401, Aisi 316 ground, polished

This series is also available sealed (see page 38) or with threaded bolt (see page 39).

Cetop connections see page 40.

[1] Size 4 on request. Housing turned from stainless steel to 1.4305, Aisi 303

Rod Ends Series K - Stainless, Maintenance Free

Series GARSW

Rod Ends with male thread made from stainless steel with PTFE liner, maintenance free

For use at high dynamic pressure and tension loads in corrosive environments

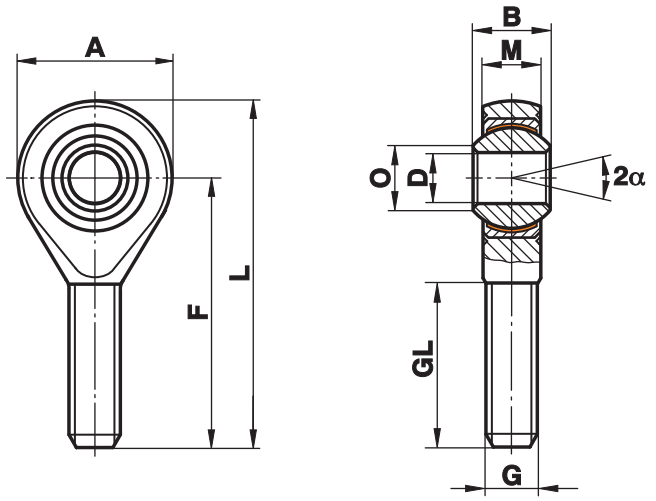

Size (D)	B	M	A	F	L	O	G	GL	Static load C_0 kN	Dynamic load C kN	Limiting speed rev/min	Weight g
4[1]	7	5,25	14	30	37	6,5	M 4	19	1,3	0,8	——	9
5	8	6,00	18	33	42	7,7	M 5	20	6,2	7,5	600	13
6	9	6,75	20	36	46	8,9	M 6	22	8,8	9,3	530	20
8	12	9,00	24	42	54	10,4	M 8	25	16,1	16,7	420	33
10	14	10,50	28	48	62	12,9	M 10	29	25,5	23,4	350	56
12	16	12,00	32	54	70	15,4	M 12	33	34,5	32,0	300	87
14	19	13,50	36	60	78	16,8	M 14	38	39,5	42,0	260	129
16	21	15,00	42	66	87	19,3	M 16	40	60,5	52,5	230	189
18	23	16,50	46	72	95	21,8	M 18x1,5	44	73,0	64,0	210	267
20	25	18,00	50	78	103	24,3	M 20x1,5	47	83,0	78,0	190	348
22	28	20,00	54	84	111	25,8	M 22x1,5	51	100,0	97,0	170	443
25	31	22,00	60	94	124	29,6	M 24x2	58	118,0	122,0	150	600
30	37	25,00	70	110	145	34,8	M 30x2	71	155,0	168,0	130	1030
35	43	28,00	80	125	165	37,7	M 36x2	77	191,0	206,0	110	1600
40	49	35,00	90	142	187	44,2	M 42x2	78	235,0	286,0	100	2570

only for short-term revolutions recommended

Materials:

Housing: Stainless steel to 1.4057, Aisi 431, forged, polished
size 40 turned from stainless steel to 1.4057, Aisi 431

Insert: Special high strength bronze to CuSn8 with PTFE liner bonded to the inner surface

Ball: Bearing steel to 100Cr6, Aisi 52100, hardened, ground, polished, hard chrome plated

On request: Insert: Stainless steel to 1.4571, Aisi 316Ti
Ball: Stainless steel to 1.4034, Aisi 420C hardened, ground, polished
or in stainless steel to 1.4401, Aisi 316 ground, polished

This series is also available sealed (see page 38) or with threaded bolt (see page 39).

[1] Size 4 on request. Housing turned from stainless steel to 1.4305, Aisi 303

Rod Ends Series K - Steel on Steel

Series GIO

Rod Ends with female thread made from free-cutting or heat-treated steel, zinc plated without the insert, running surface steel on steel

High axial load in one direction only. To be used only with limited oscillating movements

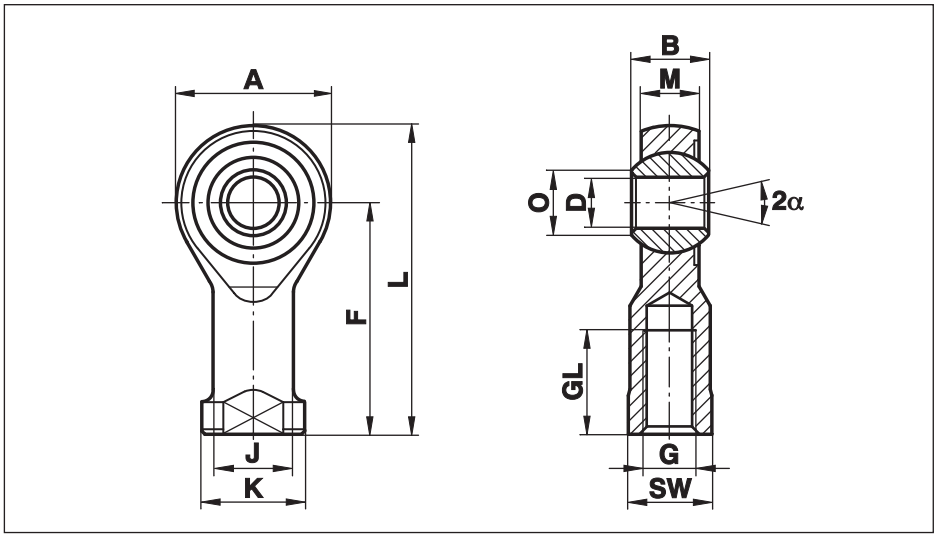

Size (D)	B	M	A	F	L	K	J	O	SW	G	GL	Static load C_0 kN	Dynamic load C kN	Limiting speed rev/min	Weight g
5	8	6,00	18	27	36	11	9,0	7,7	9	M 5	10	12,0	2,2		18
6	9	6,75	20	30	40	13	10,0	8,9	11	M 6	12	14,3	2,8		27
8	12	9,00	24	36	48	16	12,5	10,4	13	M 8	16	21,7	4,6	not to be	46
10	14	10,50	28	43	57	19	15,0	12,9	17	M 10	20	27,8	6,5	used for	76
12	16	12,00	32	50	66	22	17,5	15,4	19	M 12	22	35,0	8,5	complete	115
14	19	13,50	36	57	75	25	20,0	16,8	22	M 14	25	32,5	11,0	revolutions	170
16	21	15,00	42	64	85	27	22,0	19,3	22	M 16	28	46,0	14,0		230
20	25	18,00	50	77	102	34	27,5	24,3	32	M 20x1,5	33	63,0	20,0		415

Materials:

Housing: up to size 12 turned, from free-cutting steel to 9SMnPb28K, 12L13
from size 14 forged, from heat-treated steel to C22, M1023

Ball: Bearing steel to 100Cr6, Aisi 52100, hardened, ground, polished

Cetop connections see page 40.

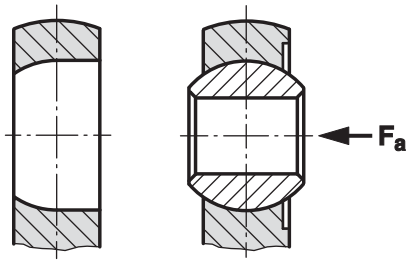

The base in the steel housing is cylindrically turned from one side and, starting from the centre line, it runs to suit the ball's contour (see drawing).
Hence a high axial load towards the turned radius is possible.

Rod Ends Series K - Steel on Steel

Series GAO

Rod Ends with male thread made from free-cutting or heat-treated steel, zinc plated without the insert, running surface steel on steel

High axial load in one direction only. To be used only with limited oscillating movements

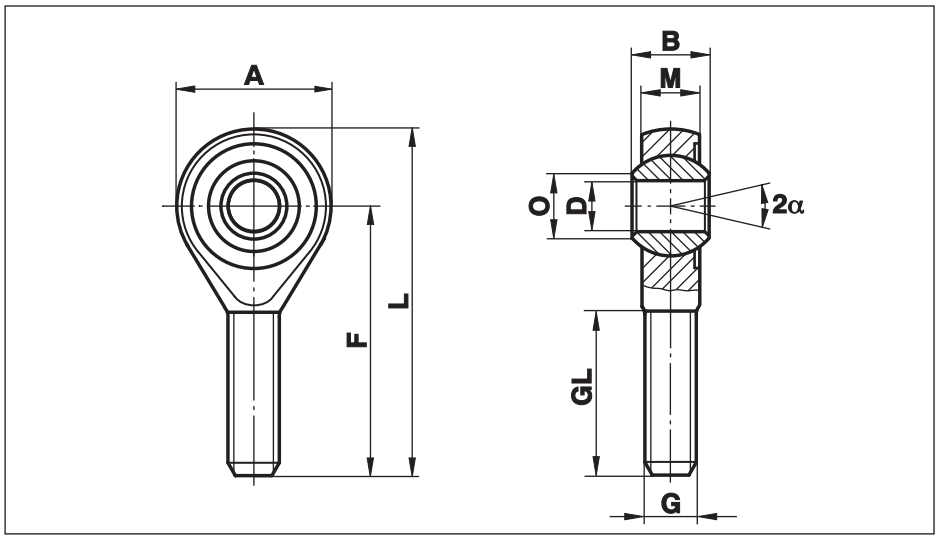

Size (D)	B	M	A	F	L	O	G	GL	Static load C_0 kN	Dynamic load C kN	Limiting speed rev/min	Weight g
5	8	6,00	18	33	42	7,7	M 5	20	4,3	2,2		13
6	9	6,75	20	36	46	8,9	M 6	22	6,0	2,8		20
8	12	9,00	24	42	54	10,4	M 8	25	11,0	4,6	not to be	33
10	14	10,50	28	48	62	12,9	M 10	29	17,4	6,5	used for	56
12	16	12,00	32	54	70	15,4	M 12	33	25,5	8,5	complete	87
14	19	13,50	36	60	78	16,8	M 14	38	26,5	11,0	revolutions	129
16	21	15,00	42	66	87	19,3	M 16	40	36,5	14,0		189
20	25	18,00	50	78	103	24,3	M 20x1,5	47	63,0	20,5		348

Materials:

Housing: up to size 12 turned, from free-cutting steel to 9SMnPb28K, 12L13
from size 14 forged, from heat-treated steel to C22, M1023

Ball: Bearing steel to 100Cr6, Aisi 52100, hardened, ground, polished

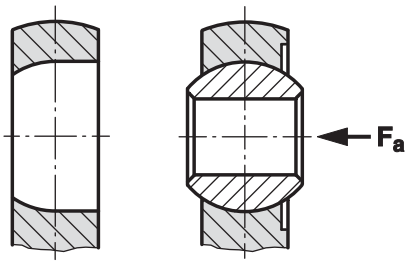

The base in the steel housing is cylindrically turned from one side and, starting from the centre line, it runs to suit the ball's contour (see drawing).
Hence a high axial load towards the turned radius is possible.

Rod Ends Series K - Maintenance Free

Series GIOW

Rod Ends with female thread made from free-cutting or heat-treated steel, zinc plated, maintenance free

For use in applications involving minimum axial loads and limited oscillating movements

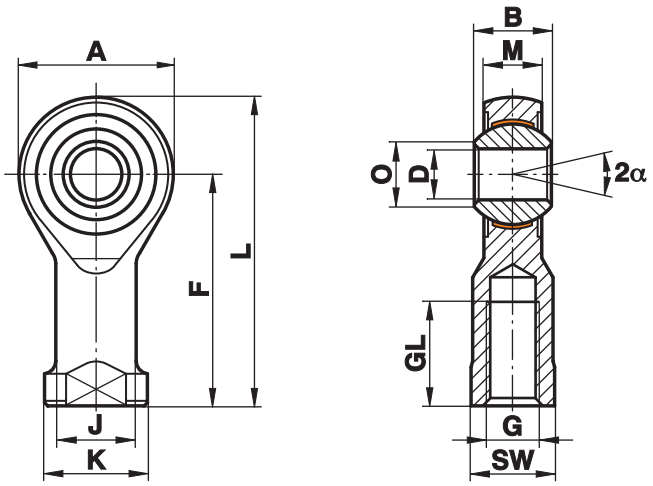

Size (D)	B	M	A	F	L	K	J	O	SW	G	GL	Static load C 0 kN	Dynamic load C kN	Limiting speed rev/min	Weight g
4	7	5,25	14	24	31	9,5	7,8	6,5	8	M 4	12	5,2	0,8		11
5	8	6,00	18	27	36	11,0	9,0	7,7	9	M 5	10	9,8	1,1		18
6	9	6,75	20	30	40	13,0	10,0	8,9	11	M 6	12	11,8	1,4	not to be	27
8	12	9,00	24	36	48	16,0	12,5	10,4	13	M 8	16	17,3	2,2	used for	46
10	14	10,50	28	43	57	19,0	15,0	12,9	17	M 10	20	22,3	3,1	complete	76
12	16	12,00	32	50	66	22,0	17,5	15,4	19	M 12	22	28,5	4,0	revolutions	115
14	19	13,50	36	57	75	25,0	20,0	16,8	22	M 14	25	26,0	5,0		170
16	21	15,00	42	64	85	27,0	22,0	19,3	22	M 16	28	39,0	7,0		230
20	25	18,00	50	77	102	34,0	27,5	24,3	32	M 20x1,5	33	53,0	9,5		415

Materials:

Housing: up to size 12 turned from free-cutting steel to 9SMnPb28K, 12L13
from size 14 forged from heat-treated steel to C22, M1023
PTFE glass fibre fabric on the running surface

Ball: Bearing steel to 100Cr6, Aisi 52100, hardened, ground, polished

Cetop connection see page 40.

Rod Ends Series K - Maintenance Free

Series GAOW

Rod Ends with male thread made from free-cutting or heat-treated steel, zinc plated, maintenance free

For use in applications involving minimum axial loads and limited oscillating movements

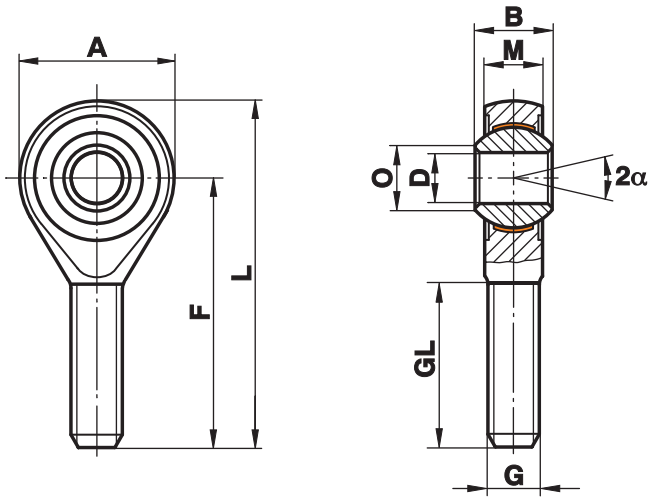

Size (D)	B	M	A	F	L	O	G	GL	Static load C_0 kN	Dynamic load C kN	Limiting speed rev/min	Weight g
4	7	5,25	14	30	37	6,5	M 4	19	2,6	0,8		9
5	8	6,00	18	33	42	7,7	M 5	20	4,3	1,1		13
6	9	6,75	20	36	46	8,9	M 6	22	6,0	1,4	not to be	20
8	12	9,00	24	42	54	10,4	M 8	25	11,0	2,2	used for	33
10	14	10,50	28	48	62	12,9	M 10	29	17,4	3,1	complete	56
12	16	12,00	32	54	70	15,4	M 12	33	25,5	4,0	revolutions	87
14	19	13,50	36	60	78	16,8	M 14	38	26,0	5,0		129
16	21	15,00	42	66	87	19,3	M 16	40	36,5	7,0		189
20	25	18,00	50	78	103	24,3	M 20x1,5	47	53,0	9,5		348

Materials:

Housing: up to size 12 turned from free-cutting steel to 9SMnPb28K, 12L13
from size 14 forged from heat-treated steel to C22, M1023
PTFE glass fibre fabric on the running surface

Ball: Bearing steel to 100Cr6, Aisi 52100, hardened, ground, polished

Rod Ends Series K - Sealed Version

Series G...-2RS

Sealed Rod Ends Series K in the following versions:

- G.S
- G.XS
- G.RS
- G.SW
- G.XSW
- G.RSW

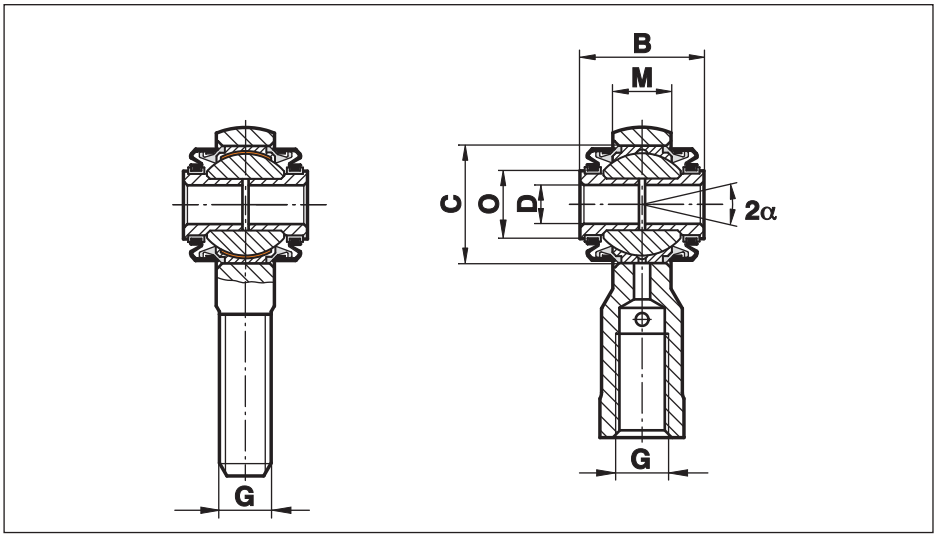

Size	D	B	M	C	O	G	Pivoting Angle α
8	6	19	9,0	18,0	10,5	M 8	10°
10	8	21	10,5	21,0	12,5	M 10	10°
12	10	23	12,0	25,5	15,5	M 12	10°
14	12	26	13,5	29,0	17,0	M 14	12°
16	14	28	15,0	32,0	18,5	M 16	12°
20	18	32	18,0	38,0	22,0	M 20x1,5	12°

Materials:

Rod Ends and Spherical Plain Bearings: See description of respective version

2RS seals: NBR-Elastomer, temperature resistance -30° to +120° Celsius, or -22° to +248° Fahrenheit, resistant to mineral oils, grease and petrol

Retainers: Brass

Spacers: Stainless steel to 1.4305, Aisi 303

Rod Ends Series K - With Threaded Bolt

Series G.....-BO

Rod Ends and Spherical Plain Bearings with threaded bolt.
For use as a right angle connector:

- G.S
- G.XS
- G.RS
- G.SW
- G.XSW
- G.RSW

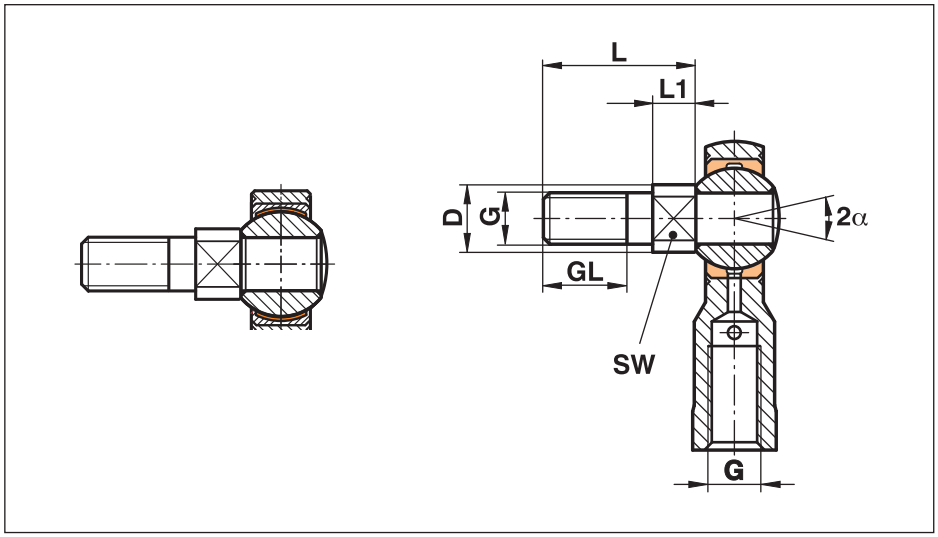

Size	L	L1	GL	G	D	SW	Weight of bolt g
5	16,0	5,0	9	M 5	7,8	7	5
6	18,5	5,5	10	M 6	9,0	8	10
8	23,5	6,5	13	M 8	10,5	8	12
10	28,0	7,0	17	M 10	13,0	12	25
12	32,5	7,5	20	M 12	15,0	14	40
14	37,5	8,5	22	M 14	17,0	14	65
16	42,5	9,5	24	M 16	19,0	17	90
20	57,0	12,0	35	M 20	24,0	22	200

Materials:

Rod Ends and Sphericals: See description of respective version

Threaded bolt: Free-cutting steel to 9SMnPb28K, 12L13, zinc plated or stainless steel to 1.4305, Aisi 303

Rod Ends Series K - CETOP

Rod Ends for pneumatic cylinders
to CETOP RP 103 P

All female Rod Ends series are available with CETOP dimensions for pneumatic cylinders

Connections to ISO 8139

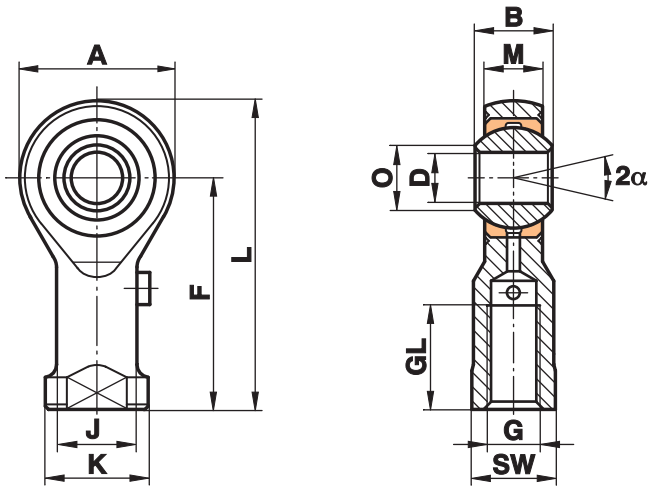

Size (D)	B	M	A	F	L	K	J	O	SW	G	GL	Static load C 0 kN	Dynamic load C kN	Limiting speed rev/min	for cylinder Ø
5	8	6,00	18	27	36	11	9,0	7,7	9	M 4	10				8 + 10
6	9	6,75	20	30	40	13	10,0	8,9	11	M 6	12				12 +16
8	12	9,00	24	36	48	16	12,5	10,4	13	M 8	16				20
10	14	10,50	28	43	57	19	15,0	12,9	17	M 10x1,25	20				25 + 32
12	16	12,00	32	50	66	22	17,5	15,4	19	M 12x1,25	22	For load details see previous pages			40 + 50
16	21	15,00	42	64	85	27	22,0	19,3	22	M 16x1,5	28				50 + 63
20	25	18,00	50	77	102	34	27,5	24,3	32	M 20x1,5	33				80 +100
25	31	22,00	60	94	124	42	33,5	29,6	36	M 24x2	42				125
30	37	25,00	70	110	145	51	40,0	34,8	41	M 27x2	51				125
35	43	28,00	80	125	165	56	46,0	37,7	50	M 36x2	56				160 + 200
40	49	35,00	90	142	187	69	57,0	44,2	60	M 42x2	60				250
50	60	45,00	116	160	218	78	65,0	55,9	65	M 48x2	65				320

Materials:

See previous pages

Ordering Details:

When ordering please specify Rod Ends series and thread, for example:
GI 10x1,25
GISW 16x1,5
GIRSW 30 M27x2

Spherical Plain Bearings Series K - Standard

Series GL

Spherical Plain Bearings with outer ring, from free-cutting steel, zinc plated and regreasable

Especially suited for axial loads

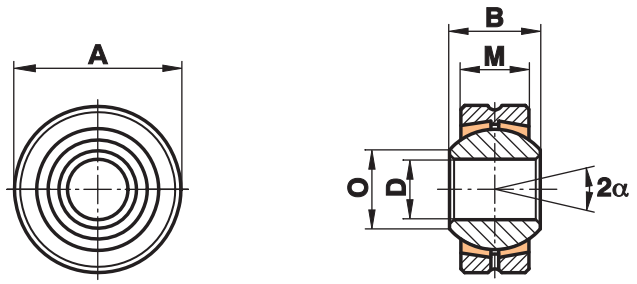

Size (D)	B	M	A	O	Static load C_0 kN	Dynamic load C kN	Limiting speed rev/min	Weight g
5	8	6,00	16	7,7	10,0	2,5	900	8
6	9	6,75	18	8,9	12,8	3,2	760	12
8	12	9,00	22	10,4	21,6	5,4	620	23
10	14	10,50	26	12,9	30,0	7,5	500	38
12	16	12,00	30	15,4	40,0	10,0	450	58
14	19	13,50	34	16,8	51,5	13,0	360	83
16	21	15,00	38	19,3	64,5	16,0	350	115
18	23	16,50	42	21,8	78,5	19,5	320	150
20	25	18,00	46	24,3	94,5	23,5	280	200
22	28	20,00	50	25,8	114,0	29,0	250	270
25	31	22,00	56	29,6	142,0	35,0	230	375

Materials:

Outer ring: Free-cutting steel to 9SMnPb28K, 12L13, turned

Insert: Special brass to CuZn40Al1

Ball: Bearing steel to 100Cr6, Aisi 52100, hardened, ground, polished

Spherical Plain Bearings Series K - Heavy Duty

Series GLXS

Spherical Plain Bearings with outer ring, from free-cutting steel, zinc plated and regreasable

For use at high revs

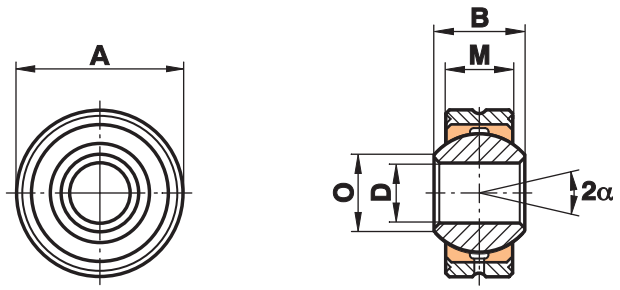

Size (D)	B	M	A	O	Static load C₀ kN	Dynamic load C kN	Limiting speed rev/min	Weight g
3[1) 2)]	6	4,50	12	5,1	10,8	1,8		4
4[1) 2)]	7	5,25	14	6,5	14,5	2,5		6
5	8	6,00	16	7,7	19,8	3,3	1200	8
6	9	6,75	18	8,9	25,8	4,3	1500	12
8	12	9,00	22	10,4	42,6	7,1	1200	23
10	14	10,50	26	12,9	60,0	10,0	1000	38
12	16	12,00	30	15,4	80,0	13,5	860	58
14	19	13,50	34	16,8	102,5	17,0	750	83
16	21	15,00	38	19,3	128,5	21,5	660	115
18	23	16,50	42	21,8	157,0	26,0	600	150
20	25	18,00	46	24,3	188,5	31,5	540	200
22	28	20,00	50	25,8	229,0	38,0	500	270
25	31	22,00	56	29,6	293,0	47,0	440	375
30	37	25,00	66	34,8	381,0	64,0	370	540
35	43	28,00	78	37,7	480,0	80,0	330	850
40	49	35,00	87	44,2	693,0	116,0	290	1400

Materials:

Outer ring: Free-cutting steel to 9SMnPb28K, 12L13, turned

Insert: Special high strength bronze to CuSn8

Ball: Bearing steel to 100Cr6, Aisi 52100, hardened, ground, polished

This series is also available with threaded bolt (see page 39).

[1)] without lubrication hole
[2)] Outer Ring as one piece to CuSn8

Spherical Plain Bearings Series K - Stainless

Series GLRS

Spherical Plain Bearings with outer ring made from stainless steel and regreasable

For use at high revs in corrosive environments

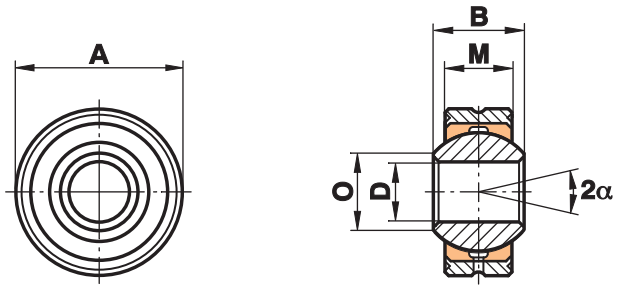

Size (D)	B	M	A	O	Static load C_0 kN	Dynamic load C kN	Limiting speed rev/min	Weight g
3[1) 2)]	6	4,50	12	5,1	10,8	1,8		5
5	8	6,00	16	7,7	19,8	3,3	1200	8
6	9	6,75	18	8,9	25,8	4,3	1500	12
8	12	9,00	22	10,4	42,6	7,1	1200	23
10	14	10,50	26	12,9	60,0	10,0	1000	38
12	16	12,00	30	15,4	80,0	13,5	860	58
14	19	13,50	34	16,8	102,5	17,0	750	83
16	21	15,00	38	19,3	128,5	21,5	660	115
18	23	16,50	42	21,8	157,0	26,0	600	150
20	25	18,00	46	24,3	188,5	31,5	540	200
22	28	20,00	50	25,8	229,0	38,0	500	270
25	31	22,00	56	29,6	293,0	47,0	440	375
30	37	25,00	66	34,8	381,0	64,0	370	540
35	43	28,00	78	37,7	480,0	80,0	330	850
40	49	35,00	87	44,2	693,0	116,0	290	1400

Materials:

Outer ring: Stainless steel to 1.4305, Aisi 303, turned

Insert: Special high strength bronze to CuSn8

Ball: Bearing steel to 100Cr6, Aisi 52100, hardened, ground, polished, hard chrome plated

On request: Ball made from stainless steel to 1.4034, Aisi 420 C, hardened, ground, polished

This series is also available with threaded bolt (see page 39).

[1)] without lubrication hole
[2)] Outer Ring as one piece to CuSn8

Series GLXSW

Spherical Plain Bearings with outer ring made from free-cutting steel, zinc plated and maintenance free

For use at higher dynamic pressure and tension loads.

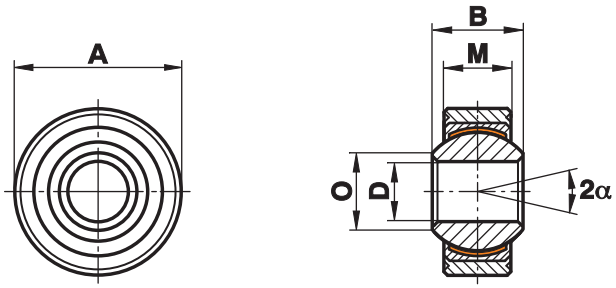

Size (D)	B	M	A	O	Static load C_0 kN	Dynamic load C kN	Limiting speed rev/min	Weight g
4[1]	7	5,25	14	6,5	9,5	5,7	700	5
5	8	6,00	16	7,7	12,5	7,5	600	8
6	9	6,75	18	8,9	15,5	9,3	530	12
8	12	9,00	22	10,4	27,8	16,7	420	23
10	14	10,50	26	12,9	39,0	23,4	350	38
12	16	12,00	30	15,4	53,5	32,0	300	58
14	19	13,50	34	16,8	70,0	42,0	260	83
16	21	15,00	38	19,3	88,0	52,5	230	115
18	23	16,50	42	21,8	106,5	64,0	210	150
20	25	18,00	46	24,3	130,0	78,0	190	200
22	28	20,00	50	25,8	162,0	97,0	170	270
25	31	22,00	56	29,6	204,0	122,0	150	375
30	37	25,00	66	34,8	281,0	168,0	130	540
35	43	28,00	78	37,7	343,0	206,0	110	850
40	49	35,00	87	44,2	495,0	286,0	100	1400

only for short-term revolutions recommended

Materials:

Outer ring: Free-cutting steel to 9SMnPb28K, 12L13, turned

Insert: Free-cutting steel to 9SMnPb28K, 12L13, zinc plated with PTFE liner bonded to the inner surface

Ball: Bearing steel to 100Cr6, Aisi 52100, hardened, ground, polished

This series is also available with threaded bolt (see page 39).

[1] Outer Ring as one piece to 45S20

Series GLRSW

Spherical Plain Bearings with outer ring made from stainless steel, maintenance free

For use at higher dynamic pressure and tension loads in corrosive environments

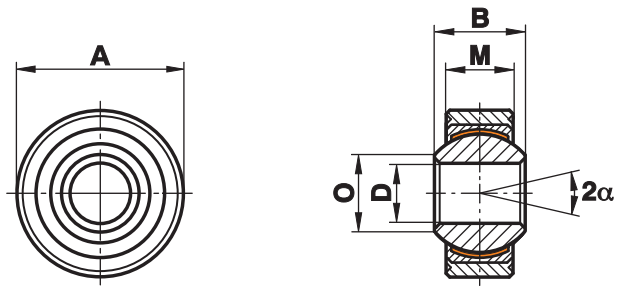

Size (D)	B	M	A	O	Static load C_0 kN	Dynamic load C kN	Limiting speed rev/min	Weight g
4[1]	7	5,25	14	6,5	9,5	5,7	700	5
5	8	6,00	16	7,7	12,5	7,5	600	8
6	9	6,75	18	8,9	15,5	9,3	530	12
8	12	9,00	22	10,4	27,8	16,7	420	23
10	14	10,50	26	12,9	39,0	23,4	350	38
12	16	12,00	30	15,4	53,5	32,0	300	58
14	19	13,50	34	16,8	70,0	42,0	260	83
16	21	15,00	38	19,3	88,0	52,5	230	115
18	23	16,50	42	21,8	106,5	64,0	210	150
20	25	18,00	46	24,3	130,0	78,0	190	200
22	28	20,00	50	25,8	162,0	97,0	170	270
25	31	22,00	56	29,6	204,0	122,0	150	375
30	37	25,00	66	34,8	281,0	168,0	130	540
35	43	28,00	78	37,7	343,0	206,0	110	850
40	49	35,00	87	44,2	495,0	286,0	100	1400

only for short-term revolutions recommended

Materials:

Outer ring: Stainless steel to 1.4305, Aisi 303, turned

Insert: Special high strenght bronze to CuSn8 with PTFE liner bonded to the inner surface

Ball: Bearing steel to 100Cr6, Aisi 52100, hardened, ground, polished, hard chrome plated

On request: Insert: Stainless steel to 1.4571, Aisi 316Ti
Ball: Stainless steel to 1.4034, Aisi 420C, hardened, ground, polished
or from stainless steel to 1.4401, Aisi 316, ground, polished

This series is also available with threaded bolt (see page 39).

[1] Outer Ring stainless steel as one piece to 1.4305, Aisi303

Spherical Plain Bearings Series K - Heavy Duty

Series GXS

Spherical Plain Bearings, without outer ring, regreasable

For use at high revs

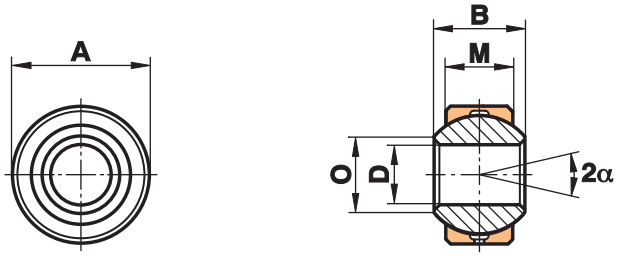

Size	D	B	M	A	O	Static load C_0 kN	Dynamic load C kN	Limiting speed rev/min	Weight g
2[1]	2	4,5	3,60	6,5	2,6	6,6	1,1		3
3[1]	3	6,0	4,50	9,0	5,1	10,8	1,8		4
4[1]	4	7,0	5,25	12,0	6,5	14,5	2,5		4
5[1]	5	8,0	6,00	13,0	7,7	19,8	3,3		5
6	6	9,0	6,75	15,0	8,9	25,8	4,3	1500	8
6.16	6	9,0	6,75	16,0	8,9	25,8	4,3	1500	9
8	8	12,0	9,00	18,0	10,4	42,6	7,1	1200	14
8.19	8	12,0	9,00	19,0	10,4	42,6	7,1	1200	16
10	10	14,0	10,50	21,0	12,9	60,0	10,0	1000	22
10.22	10	14,0	10,50	22,0	12,9	60,0	10,0	1000	25
12	12	16,0	12,00	24,5	15,4	80,0	13,5	860	35
12.26	12	16,0	12,00	26,0	15,4	80,0	13,5	860	40
14	14	19,0	13,50	28,0	16,8	102,5	17,0	750	51
14.29	14	19,0	13,50	29,0	16,8	102,5	17,0	750	56
16	16	21,0	15,00	31,5	19,3	128,5	21,5	660	72
16.32	16	21,0	15,00	32,0	19,3	128,5	21,5	660	76
18	18	23,0	16,50	34,5	21,8	157,0	26,0	600	94
18.35	18	23,0	16,50	35,0	21,8	157,0	26,0	600	97
20	20	25,0	18,00	38,0	24,3	188,5	31,5	540	124
20.40	20	25,0	18,00	40,0	24,3	188,5	31,5	540	141
22	22	28,0	20,00	41,0	25,8	229,0	38,0	500	158
22.42	22	28,0	20,00	42,0	25,8	229,0	38,0	500	168
25	25	31,0	22,00	46,0	29,6	293,0	47,0	440	218
25.47	25	31,0	22,00	47,0	29,6	293,0	47,0	440	231
30	30	37,0	25,00	54,0	34,8	381,0	64,0	370	349
30.55	30	37,0	25,00	55,0	34,8	381,0	64,0	370	362
35	35	43,0	28,00	62,0	37,7	480,0	80,0	330	502
35.65	35	43,0	28,00	65,0	37,7	480,0	80,0	330	518
40	40	49,0	35,00	72,0	44,2	693,0	116,0	290	832
40.75	40	49,0	35,00	75,0	44,2	693,0	116,0	290	850
50	50	60,0	45,00	90,0	55,9	1100,0	185,0	230	1600

Materials:

Insert: Special high strength bronze to CuSn8
Ball: Bearing steel to 100Cr6, Aisi 52100, hardened, ground, polished

This series is also available with threaded bolt (see page 39) and as stainless steel version.

[1] without lubrication hole

Spherical Plain Bearings Series K - Maintenance Free

Series GXSW

Spherical Plain Bearings, without outer ring, maintenance free

For use at high pressure and dynamic loads

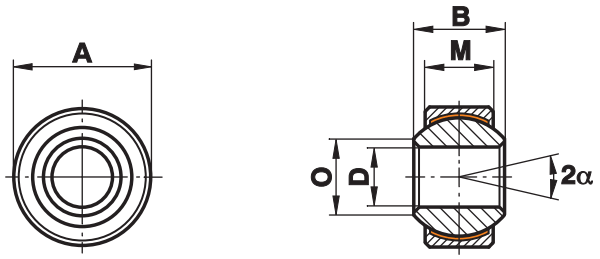

Size	D	B	M	A	O	Static load C_0 kN	Dynamic load C kN	Limiting speed rev/min	Weight g
4	4	7	5,25	12,0	6,5	9,5	5,7	700	4
5	5	8	6,00	13,0	7,7	12,5	7,5	600	6
6	6	9	6,75	15,0	8,9	15,5	9,3	530	8
6.16	6	9	6,75	16,0	8,9	15,5	9,3	530	9
8	8	12	9,00	18,0	10,4	27,8	16,7	420	15
8.19	8	12	9,00	19,0	10,4	27,8	16,7	420	17
10	10	14	10,50	21,0	12,9	39,0	23,4	350	23
10.22	10	14	10,50	22,0	12,9	39,0	23,4	350	26
12	12	16	12,00	24,5	15,4	53,5	32,0	300	35
12.26	12	16	12,00	26,0	15,4	53,5	32,0	300	41
14	14	19	13,50	28,0	16,8	70,0	42,0	260	52
14.29	14	19	13,50	29,0	16,8	70,0	42,0	260	56
16	16	21	15,00	31,5	19,3	88,0	52,5	230	72
16.32	16	21	15,00	32,0	19,3	88,0	52,5	230	75
18	18	23	16,50	34,5	21,8	106,5	64,0	210	95
18.35	18	23	16,50	35,0	21,8	106,5	64,0	210	97
20	20	25	18,00	38,0	24,3	130,0	78,0	190	127
20.40	20	25	18,00	40,0	24,3	130,0	78,0	190	142
22	22	28	20,00	41,0	25,8	162,0	97,0	170	159
22.42	22	28	20,00	42,0	25,8	162,0	97,0	170	169
25	25	31	22,00	46,0	29,6	204,0	122,0	150	222
25.47	25	31	22,00	47,0	29,6	204,0	122,0	150	230
30	30	37	25,00	54,0	34,8	281,0	168,0	130	350
30.55	30	37	25,00	55,0	34,8	281,0	168,0	130	369
35	35	43	28,00	62,0	37,7	343,0	206,0	110	505
35.65	35	43	28,00	65,0	37,7	343,0	206,0	110	545
40	40	49	35,00	72,0	44,2	495,0	286,0	100	832
40.75	40	49	35,00	75,0	44,2	495,0	286,0	100	894
50	50	60	45,00	90,0	55,9	800,0	485,0	80	1640

only for short-term revolutions recommended

Materials:

Insert: Free-cutting steel to 9SMnPb28K, 12L13, with PTFE liner bonded to inner surface
Ball: Bearing steel to 100Cr6, Aisi 52100, hardened, ground, polished

This series is also available with threaded bolt (see page 39) and as stainless steel version.

Spherical Plain Bearings Series E - Maintenance Free

Series GE...EC (-2RS)

Spherical Plain Bearings, steel running on PTFE, maintenance free

For use at high uni-directional loads

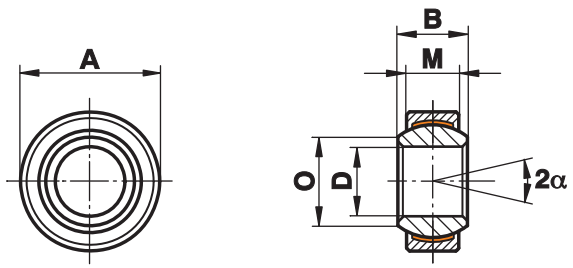

Size (D)	B	M	A	O	dK	Static load C_0 kN	Static load C_0 kN -2RS	Dynamic load C kN	Dynamic load C kN -2RS	Pivoting angle α	Weight g
4 $^{0}_{-0,008}$	5	3	12 $^{0}_{-0,008}$	6,0	8,0	5,4	-	2,1	-	16	3
5 $^{0}_{-0,008}$	6	4	14 $^{0}_{-0,008}$	8,0	10,0	9,1	-	3,6	-	13	4
6 $^{0}_{-0,008}$	6	4	14 $^{0}_{-0,008}$	8,0	10,0	9,1	-	3,6	-	13	4
8 $^{0}_{-0,008}$	8	5	16 $^{0}_{-0,008}$	10,2	13,0	14,0	-	5,8	-	15	7
10 $^{0}_{-0,008}$	9	6	19 $^{0}_{-0,009}$	13,2	16,0	21,0	-	8,6	-	12	11
12 $^{0}_{-0,008}$	10	7	22 $^{0}_{-0,009}$	14,9	18,0	28,0	-	11,0	-	11	17
15 $^{0}_{-0,008}$	12	9	26 $^{0}_{-0,009}$	18,4	22,0	45,0	59,0	18,0	17,5	8	26
16 $^{0}_{-0,008}$	14	10	30 $^{0}_{-0,009}$	20,7	25,0	56,0	56,0	22,0	22,5	10	40
17 $^{0}_{-0,008}$	14	10	30 $^{0}_{-0,009}$	20,7	25,0	56,0	75,0	22,0	22,5	10	40
20 $^{0}_{-0,010}$	16	12	35 $^{0}_{-0,011}$	24,1	29,0	78,0	104,0	31,0	31,5	9	64
25 $^{0}_{-0,010}$	20	16	42 $^{0}_{-0,011}$	29,3	35,5	127,0	204,0	51,0	51,0	7	115
30 $^{0}_{-0,010}$	22	18	47 $^{0}_{-0,011}$	34,2	40,7	166,0	263,0	65,0	66,0	6	149
35 $^{0}_{-0,012}$	25	20	55 $^{0}_{-0,013}$	39,7	47,0	211,0	338,0	84,0	140,0	6	228
40 $^{0}_{-0,012}$	28	22	62 $^{0}_{-0,013}$	45,0	53,0	262,0	419,0	104,0	185,0	7	318
45 $^{0}_{-0,012}$	32	25	68 $^{0}_{-0,013}$	50,7	60,0	337,0	540,0	135,0	240,0	7	421
50 $^{0}_{-0,012}$	35	28	75 $^{0}_{-0,013}$	55,9	66,0	415,0	665,0	166,0	295,0	6	562
55 $^{0}_{-0,015}$	40	32	85 $^{0}_{-0,015}$	62,3	74,0	-	852,0	-	355,0	7	864
60 $^{0}_{-0,015}$	44	36	90 $^{0}_{-0,015}$	66,8	80,0	-	1030,0	-	460,0	6	1030
70 $^{0}_{-0,015}$	49	40	105 $^{0}_{-0,015}$	77,8	92,0	-	1320,0	-	590,0	6	1570
80 $^{0}_{-0,015}$	55	45	120 $^{0}_{-0,015}$	89,4	105,0	-	1700,0	-	750,0	6	2320
90 $^{0}_{-0,020}$	60	50	130 $^{0}_{-0,018}$	98,1	115,0	-	2070,0	-	920,0	5	2790
100 $^{0}_{-0,020}$	70	55	150 $^{0}_{-0,018}$	109,5	130,0	-	2570,0	-	1145,0	7	4440
110 $^{0}_{-0,020}$	70	55	160 $^{0}_{-0,025}$	121,2	140,0	-	2770,0	-	1230,0	6	4830
120 $^{0}_{-0,020}$	85	70	180 $^{0}_{-0,025}$	135,5	160,0	-	4030,0	-	1790,0	6	8110
140[1] $^{0}_{-0,025}$	90	70	210 $^{0}_{-0,030}$	155,8	180,0	-	4530,0	-	2010,0	7	11200
160[1] $^{0}_{-0,025}$	105	80	230 $^{0}_{-0,030}$	170,2	200,0	-	5760,0	-	2560,0	8	14100
180[1] $^{0}_{-0,025}$	105	80	260 $^{0}_{-0,035}$	198,9	225,0	-	6480,0	-	2880,0	6	18500
200[1] $^{0}_{-0,030}$	130	100	290 $^{0}_{-0,035}$	213,5	250,0	-	9000,0	-	4000,0	7	28400
220[1] $^{0}_{-0,030}$	135	100	320 $^{0}_{-0,040}$	239,5	275,0	-	9900,0	-	4400,0	8	35700
240[1] $^{0}_{-0,030}$	140	100	340 $^{0}_{-0,040}$	265,3	300,0	-	10800,0	-	4800,0	8	39700
260[1] $^{0}_{-0,035}$	150	110	370 $^{0}_{-0,040}$	288,3	325,0	-	12870,0	-	5700,0	7	51500
280[1] $^{0}_{-0,035}$	155	120	400 $^{0}_{-0,040}$	313,8	350,0	-	15120,0	-	6700,0	6	64900
300[1] $^{0}_{-0,035}$	165	120	430 $^{0}_{-0,045}$	336,7	375,0	-	16200,0	-	7200,0	7	77600

Materials:

Insert: Bearing steel to 100Cr6, Aisi 52100, with PTFE liner, bonded to the inner surface
from size 15 available sealed from both sides (-2RS)
from size 55 only sealed from both sides (-2RS)

Ball: Bearing steel to 100Cr6, Aisi 52100, hardened, ground, polished, hard chrome plated

[1] from size 140 the hardened inserts are two pieced and secured with tension spring

Series GE...EC-NIRO

Spherical Plain Bearings stainless steel running on PTFE, maintenance free

For use at high uni-directional loads in corrosive environments

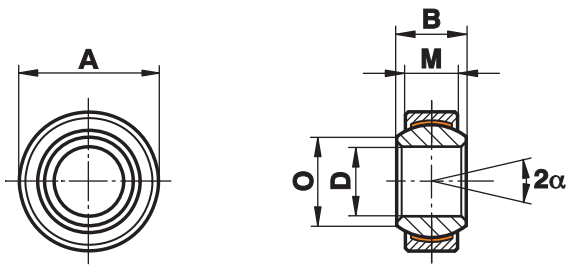

Size (D)	B	M	A	O	dK	Static load C 0 kN	Dynamic load C kN	Pivoting angle α	Weight g
6 $^{0}_{-0,008}$	6	4	14 $^{0}_{-0,008}$	8,0	10,0	9,0	4	13	4
8 $^{0}_{-0,008}$	8	5	16 $^{0}_{-0,008}$	10,2	13,0	15,6	7	15	7
10 $^{0}_{-0,008}$	9	6	19 $^{0}_{-0,009}$	13,2	16,0	23,4	10	12	11
12 $^{0}_{-0,008}$	10	7	22 $^{0}_{-0,009}$	14,9	18,0	32,0	14	11	16
15 $^{0}_{-0,008}$	12	9	26 $^{0}_{-0,009}$	18,4	22,0	50,0	30	8	26
16 $^{0}_{-0,008}$	14	10	30 $^{0}_{-0,009}$	20,7	25,0	65,0	39	10	49
17 $^{0}_{-0,008}$	14	10	30 $^{0}_{-0,009}$	20,7	25,0	65,0	39	10	38
20 $^{0}_{-0,010}$	16	12	35 $^{0}_{-0,011}$	24,2	29,0	90,5	54	9	61
25 $^{0}_{-0,010}$	20	16	42 $^{0}_{-0,011}$	29,3	35,5	159,0	96	7	110
30 $^{0}_{-0,010}$	22	18	47 $^{0}_{-0,011}$	34,2	40,7	197,0	118	6	140
35 $^{0}_{-0,012}$	25	20	55 $^{0}_{-0,013}$	39,8	47,0	298,0	153	6	220
40 $^{0}_{-0,012}$	28	22	62 $^{0}_{-0,013}$	45,0	53,0	370,6	190	7	300
45 $^{0}_{-0,012}$	32	25	68 $^{0}_{-0,013}$	50,8	60,0	481,0	247	7	400
50 $^{0}_{-0,012}$	35	28	75 $^{0}_{-0,013}$	56,0	66,0	598,0	308	6	540
60 $^{0}_{-0,015}$	44	36	90 $^{0}_{-0,015}$	66,8	80,0	935,0	481	6	1000
70 $^{0}_{-0,015}$	49	40	105 $^{0}_{-0,015}$	77,9	92,0	1204,0	619	6	1500
80 $^{0}_{-0,015}$	55	45	120 $^{0}_{-0,015}$	89,4	105,0	1540,0	792	6	2200
90 $^{0}_{-0,020}$	60	50	130 $^{0}_{-0,018}$	98,1	115,0	1892,0	1080	5	2700
100 $^{0}_{-0,020}$	70	55	150 $^{0}_{-0,018}$	109,5	130,0	2366,0	1350	7	4400
110 $^{0}_{-0,020}$	70	55	160 $^{0}_{-0,025}$	121,2	140,0	2548,0	1460	6	4700
120 $^{0}_{-0,020}$	85	70	180 $^{0}_{-0,025}$	135,5	160,0	3752,0	2140	6	8000

Materials:

Insert: Stainless steel to 1.4571, Aisi 316Ti, with PTFE liner bonded to the inner surface from size 90 with high performance PTFE compound

Ball: up to size 40, stainless steel to 1.4125, Aisi 440C, hardened, ground, polished
from size 45, stainless steel to 1.4112, Aisi 440B, hardened, ground, polished

On request: size 140 and 160
from size 40 with -2RS seals

Rod Ends Series E - Steel on Steel

Series EI (-2RS)

Rod Ends with female thread made from free-cutting or heat-treated steel, zinc plated, with steel on steel Spherical Plain Bearings which require lubrication

For use at high multi-directional loads and limited fitting dimensions

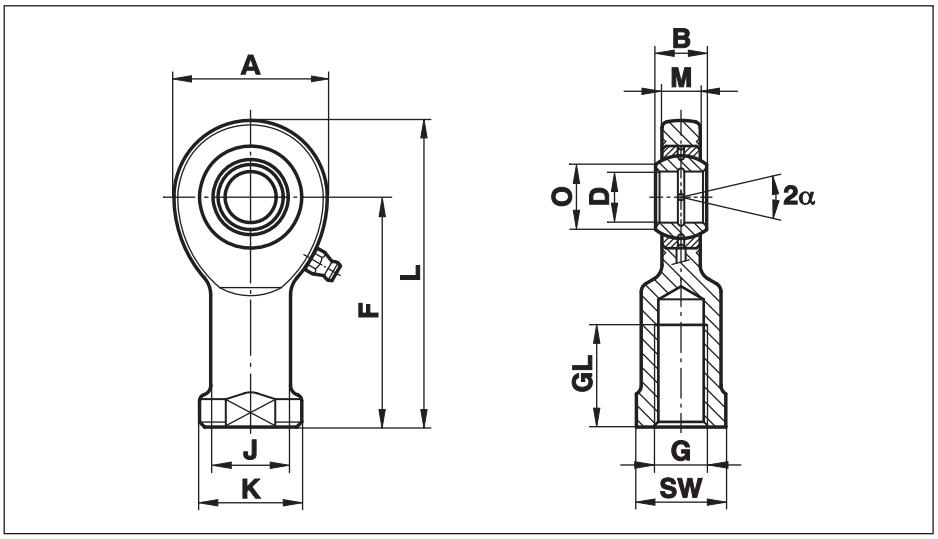

Size (D)	B	M	A	F	L	K	J	O	SW	G	GL	Static load C 0 kN	Dynamic load C kN	Pivoting angle α	Weight g
6	6	4,4	20	30	40,0	13	10,0	8,0	11	M 6	12	10,3	3,4	13	21
8	8	6,0	24	36	48,0	16	12,5	10,2	14	M 8	16	15,8	5,5	15	38
10	9	7,0	28	43	57,0	19	15,0	13,2	17	M 10	20	23,4	8,1	12	60
12	10	8,0	34	50	67,0	22	17,5	14,9	19	M 12	23	31,0	10,8	11	96
15	12	10,0	40	61	81,0	26	21,0	18,4	22	M 14	29	42,5	17,0	8	180
16	14	11,0	46	67	90,0	30	24,0	20,7	27	M 16	33	54,5	21,2	10	220
17	14	11,0	46	67	90,0	30	24,0	20,7	27	M 16	33	54,5	21,2	10	220
20	16	13,0	53	77	103,5	35	27,5	24,2	32	M 20x1,5	40	62,5	30,0	9	350
25	20	17,0	64	94	126,0	42	33,5	29,3	36	M 24x2	48	92,0	48,0	7	640
30	22	19,0	73	110	146,5	50	40,0	34,2	41	M 30x2	56	124,0	62,0	6	930
35	25	21,0	82	125	166,0	58	47,0	39,8	50	M 36x3	60	144,0	80,0	6	1300
40	28	23,0	92	142	188,0	65	52,0	45,0	55	M 39x3	65	178,0	100,0	7	2000
45	32	27,0	102	145	196,0	70	58,0	50,8	60	M 42x3	65	263,0	127,0	7	2500
50	35	30,0	112	160	216,0	75	62,0	56,0	65	M 45x3	68	320,0	156,0	6	3500
60	44	38,0	135	175	242,5	88	70,0	66,8	75	M 52x3	70	497,0	245,0	6	5550
70	49	42,0	160	200	280,0	98	80,0	77,9	85	M 56x4	80	606,0	315,0	6	8600
80	55	47,0	180	230	320,0	110	95,0	89,4	100	M 64x4	85	752,0	400,0	6	12000

Materials:

Housing: up to size 10 turned, from free-cutting steel to 9SMnPb28K, 12L13
from size 12 forged from heat-treated steel to C45, Aisi 1045

Bearing: Steel on steel bearing GE...E, requiring lubrication (see page 56)
from size 20 available sealed from both sides (-2RS)

Greasing: up to size 17 without lubrication fitting
from size 20 fitted with hydraulic grease nipples to DIN 71412

Rod Ends Series E - Steel on Steel

Series EA (-2RS)

Rod Ends with male thread made from free-cutting or heat-treated steel, zinc plated, with steel on steel Spherical Plain Bearings which require lubrication

For use at high multi-directional loads and limited fitting dimensions

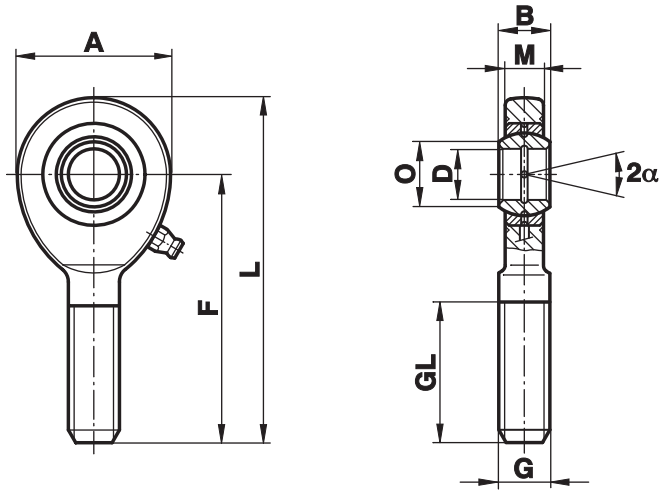

Size (D)	B	M	A	F	L	O	G	GL	Static load C_0 kN	Dynamic load C kN	Pivoting angle α	Weight g
6	6	4,4	20	36	46,0	8,0	M 6	18	6,9	3,4	13	16
8	8	6,0	24	42	54,0	10,2	M 8	22	12,7	5,5	15	28
10	9	7,0	28	48	62,0	13,2	M 10	26	19,9	8,1	12	50
12	10	8,0	34	54	71,0	14,9	M 12	28	29,0	10,8	11	86
15	12	10,0	40	63	83,0	18,4	M 14	34	39,5	17,0	8	140
16	14	11,0	46	69	92,0	20,7	M 16	36	54,0	21,2	10	190
17	14	11,0	46	69	92,0	20,7	M 16	36	54,0	21,2	10	190
20	16	13,0	53	78	104,5	24,2	M 20x1,5	43	62,5	30,0	9	320
25	20	17,0	64	94	126,0	29,3	M 24x2	53	92,0	48,0	7	560
30	22	19,0	73	110	146,5	34,2	M 30x2	65	124,0	62,0	6	890
35	25	21,0	82	140	181,0	39,8	M 36x3	82	144,0	80,0	6	1400
40	28	23,0	92	150	196,0	45,0	M 39x3	86	178,0	100,0	7	1800
45	32	27,0	102	163	214,0	50,8	M 42x3	94	263,0	127,0	7	2610
50	35	30,0	112	185	241,0	56,0	M 45x3	107	320,0	156,0	6	3450
60	44	38,0	135	210	277,5	66,8	M 52x3	115	497,0	245,0	6	5900
70	49	42,0	160	235	315,0	77,9	M 56x4	125	566,0	315,0	6	8200
80	55	47,0	180	270	360,0	89,4	M 64x4	140	752,0	400,0	6	12000

Materials:

Housing: up to size 10 turned, from free-cutting steel to 9SMnPb28K, 12L13
from size 12 forged from heat-treated steel to C45, Aisi 1045

Bearing: Steel on steel bearing GE...E, requiring lubrication (see page 56)
from size 20 available sealed from both sides (-2RS)

Greasing: up to size 17 without lubrication fitting
from size 20 fitted with hydraulic grease nipples to DIN 71412

Rod Ends Series E - Maintenance Free

Series EI..D (-2RS)

Rod Ends with female thread made from free-cutting or heat-treated steel, zinc plated with maintenance free Spherical Plain Bearings

For use at high uni-directional loads and limited fitting dimensions

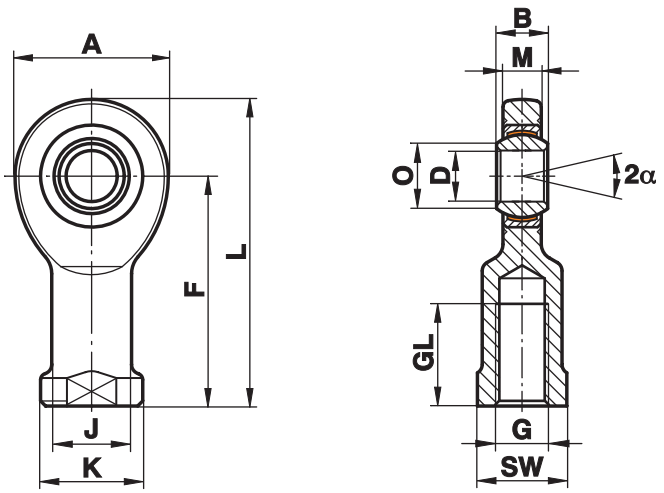

Size (D)	B	M	A	F	L	K	J	O	SW	G	GL	Static load C_0 kN	Dynamic load C kN	Pivoting angle α	Weight g
6	6	4,4	20	30	40,0	13	10,0	8,0	11	M 6	12	10,3	3,6	13	21
8	8	6,0	24	36	48,0	16	12,5	10,2	14	M 8	16	15,8	5,8	15	38
10	9	7,0	28	43	57,0	19	15,0	13,2	17	M 10	20	23,4	8,6	12	60
12	10	8,0	34	50	67,0	22	17,5	14,9	19	M 12	23	31,0	11,5	11	96
15	12	10,0	40	61	81,0	26	21,0	18,4	22	M 14	29	42,5	17,5	8	180
16	14	11,0	46	67	90,0	30	24,0	20,7	27	M 16	33	54,5	22,5	10	220
17	14	11,0	46	67	90,0	30	24,0	20,7	27	M 16	33	54,5	22,5	10	220
20	16	13,0	53	77	103,5	35	27,5	24,2	32	M 20x1,5	40	62,5	31,5	9	350
25	20	17,0	64	94	126,0	42	33,5	29,3	36	M 24x2	48	92,0	51,0	7	640
30	22	19,0	73	110	146,5	50	40,0	34,2	41	M 30x2	56	124,0	66,0	6	930
35	25	21,0	82	125	166,0	58	47,0	39,8	50	M 36x3	60	144,0	140,0	6	1300
40	28	23,0	92	142	188,0	65	52,0	45,0	55	M 39x3	65	178,0	185,0	7	2000
45	32	27,0	102	145	196,0	70	58,0	50,8	60	M 42x3	65	263,0	240,0	7	2500
50	35	30,0	112	160	216,0	75	62,0	56,0	65	M 45x3	68	320,0	295,0	6	3500
60	44	38,0	135	175	242,5	88	70,0	66,8	75	M 52x3	70	497,0	460,0	6	5550
70	49	42,0	160	200	280,0	98	80,0	77,9	85	M 56x4	80	606,0	590,0	6	8600
80	55	47,0	180	230	320,0	110	95,0	89,4	100	M 64x4	85	752,0	750,0	6	12000

Materials:

Housing: up to size 10 turned, from free-cutting steel to 9SMnPb28K, 12L13
from size 12 forged, from heat-treated steel to C45, Aisi 1045

Bearing: maintenance free steel/PTFE bearing GE...EC (see page 48)
from size 20 available sealed from both sides (-2RS)
from size 35 only available sealed from both sides (-2RS)

Rod Ends Series E - Maintenance Free

Series EA..D (-2RS)

Rod Ends with male thread made from free-cutting or heat-treated steel, zinc plated with maintenance free Spherical Plain Bearings

For use at high uni-directional loads and limited fitting dimensions

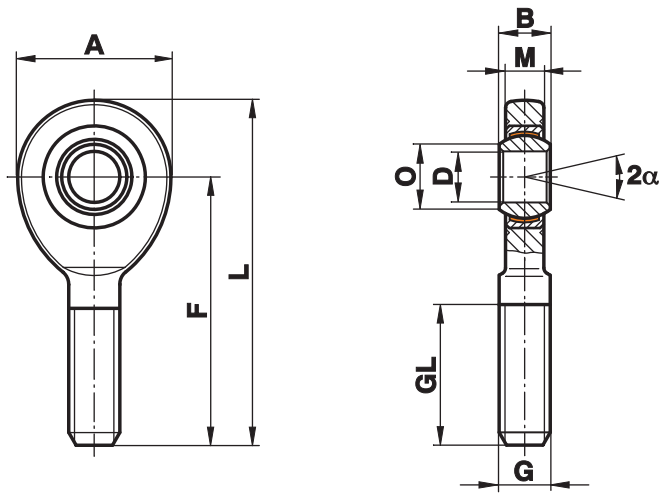

Size (D)	B	M	A	F	L	O	G	GL	Static load C_0 kN	Dynamic load C kN	Pivoting angle α	Weight g
6	6	4,4	20	36	46,0	8,0	M 6	18	6,9	3,6	13	16
8	8	6,0	24	42	54,0	10,2	M 8	22	12,7	5,8	15	28
10	9	7,0	28	48	62,0	13,2	M 10	26	19,9	8,6	12	50
12	10	8,0	34	54	71,0	14,9	M 12	28	29,0	11,5	11	86
15	12	10,0	40	63	83,0	18,4	M 14	34	39,5	17,5	8	140
16	14	11,0	46	69	92,0	20,7	M 16	36	54,0	22,5	10	190
17	14	11,0	46	69	92,0	20,7	M 16	36	54,0	22,5	10	190
20	16	13,0	53	78	104,5	24,2	M 20x1,5	43	62,5	31,5	9	320
25	20	17,0	64	94	126,0	29,3	M 24x2	53	92,0	51,0	7	560
30	22	19,0	73	110	146,5	34,2	M 30x2	65	124,0	66,0	6	890
35	25	21,0	82	140	181,0	39,8	M 36x3	82	144,0	140,0	6	1400
40	28	23,0	92	150	196,0	45,0	M 39x3	86	178,0	185,0	7	1800
45	32	27,0	102	163	214,0	50,8	M 42x3	94	263,0	240,0	7	2610
50	35	30,0	112	185	241,0	56,0	M 45x3	107	320,0	295,0	6	3450
60	44	38,0	135	210	277,5	66,8	M 52x3	115	497,0	460,0	6	5900
70	49	42,0	160	235	315,0	77,9	M 56x4	125	566,0	590,0	6	8200
80	55	47,0	180	270	360,0	89,4	M 64x4	140	752,0	750,0	6	12000

Materials:

Housing: up to size 10 turned, from free-cutting steel to 9SMnPb28K, 12L13
from size 12 forged, from heat-treated steel to C45, Aisi 1045

Bearing: maintenance free steel/PTFE bearing GE...EC (see page 48)
from size 20 available sealed from both sides (-2RS)
from size 35 only available sealed from both sides (-2RS)

Rod Ends Series E - Stainless, Maintenance Free

Series EI..D-NIRO

Rod Ends with female thread, maintenance free, made from stainless steel with maintenance free Spherical Plain Bearings GE..EC-NIRO

For use at high unidirectional loads, in corrosive environments and limited fitting dimensions

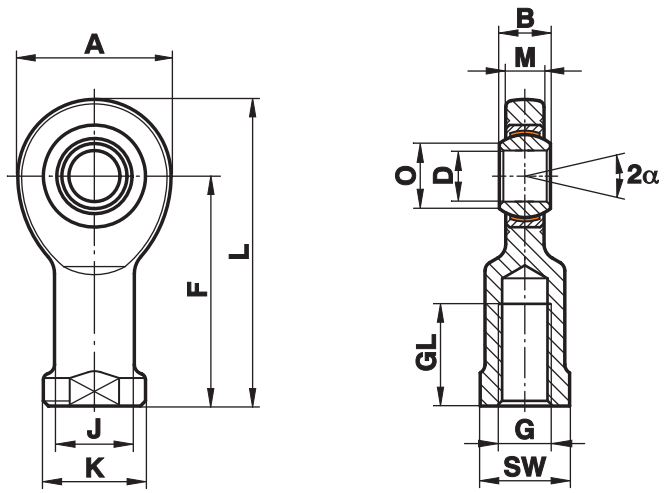

Size (D)	B	M	A	F	L	K	J	O	SW	G	GL	Static load C_0 kN	Dynamic load C kN	Pivoting angle α	Weight g
6	6	4,4	20	30	40,0	13	10,0	8,0	11	M 6	12	6,0	4	13	21
8	8	6,0	24	36	48,0	16	12,5	10,2	14	M 8	16	9,2	7	15	38
10	9	7,0	28	43	57,0	19	15,0	13,2	17	M 10	20	13,6	10	12	60
12	10	8,0	34	50	67,0	22	17,5	14,9	19	M 12	23	18,0	14	11	96
15	12	10,0	40	61	81,0	26	21,0	18,4	22	M 14	29	26,5	30	8	180
16	14	11,0	46	67	90,0	30	24,0	20,7	27	M 16	33	34,0	39	10	220
17	14	11,0	46	67	90,0	30	24,0	20,7	27	M 16	33	34,0	39	10	220
20	16	13,0	53	77	103,5	35	27,5	24,2	32	M 20x1,5	40	45,0	54	9	350
25	20	17,0	64	94	126,0	42	33,5	29,3	36	M 24x2	48	73,0	96	7	640
30	22	19,0	73	110	146,5	50	40,0	34,2	41	M 30x2	56	97,0	118	6	930
35	25	21,0	82	125	166,0	58	47,0	39,8	50	M 36x3	60	111,0	153	6	1300
40	28	23,0	92	142	188,0	65	52,0	45,0	55	M 39x3	65	135,0	190	7	2000
45[1]	32	27,0	102	145	196,0	70	58,0	50,8	60	M 42x3	65	178,0	247	7	2500
50	35	30,0	112	160	216,0	75	62,0	56,0	65	M 45x3	68	216,0	308	6	3500
60[1]	44	38,0	135	175	242,5	88	70,0	66,8	75	M 52x3	70	336,0	481	6	5550
70[1]	49	42,0	160	200	280,0	98	80,0	77,9	85	M 56x4	80	459,0	619	6	8600
80[1]	55	47,0	180	230	320,0	110	95,0	89,4	100	M 64x4	85	570,0	792	6	12000

Materials:

Housing: from size 6 to 40 stainless steel to 1.4301, Aisi 304, forged, polished
from size 45 stainless steel to 1.4301, Aisi 304, turned
from size 50 stainless steel to 1.4571, Aisi 316Ti, turned

Bearing: Maintenance free stainless steel Spherical Plain Bearing GE...EC-NIRO (see page 49)

[1] availability and price on request

Rod Ends Series E - Stainless, Maintenance Free

Series EA..D-NIRO

Rod Ends with male thread, maintenance free, made from stainless steel with maintenance free Spherical Plain Bearings GE..EC-NIRO

For use at high unidirectional loads, in corrosive environments and limited fitting dimensions

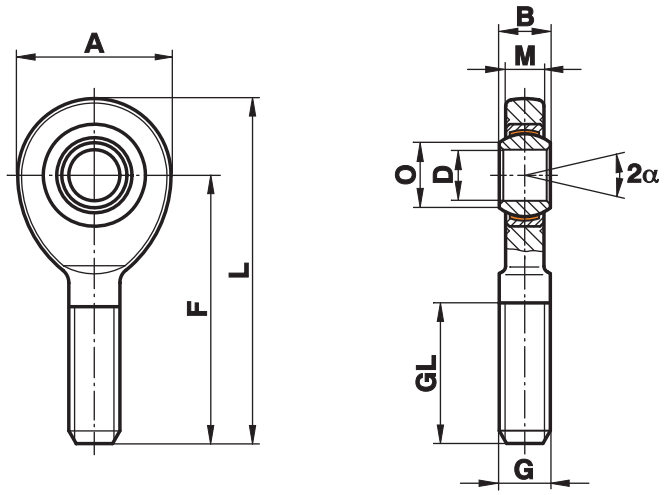

Size (D)	B	M	A	F	L	O	G	GL	Static load C_0 kN	Dynamic load C kN	Pivoting angle α	Weight g
6	6	4,4	20	36	46,0	8,0	M 6	18	4,0	4	13	16
8	8	6,0	24	42	54,0	10,2	M 8	22	7,4	7	15	28
10	9	7,0	28	48	62,0	13,2	M 10	26	11,6	10	12	50
12	10	8,0	34	54	71,0	14,9	M 12	28	17,0	14	11	86
15	12	10,0	40	63	83,0	18,4	M 14	34	23,0	30	8	140
16	14	11,0	46	69	92,0	20,7	M 16	36	31,5	39	10	190
17	14	11,0	46	69	92,0	20,7	M 16	36	31,5	39	10	190
20	16	13,0	53	78	104,5	24,2	M 20x1,5	43	45,0	54	9	320
25	20	17,0	64	94	126,0	29,3	M 24x2	53	73,0	96	7	570
30	22	19,0	73	110	146,5	34,2	M 30x2	65	97,0	118	6	890
35	25	21,0	82	140	181,0	39,8	M 36x3	82	111,0	153	6	1400
40	28	23,0	92	150	196,0	45,0	M 39x3	86	135,0	190	7	1800
45[1)]	32	27,0	102	163	214,0	50,8	M 42x3	94	178,0	247	7	2610
50	35	30,0	112	185	241,0	56,0	M 45x3	107	216,0	308	6	3450
60[1)]	44	38,0	135	210	277,5	66,8	M 52x3	115	336,0	481	6	5900
70[1)]	49	42,0	160	235	315,0	77,9	M 56x4	125	429,0	619	6	8200
80[1)]	55	47,0	180	270	360,0	89,4	M 64x4	140	570,0	792	6	12000

Materials:

Housing: from size 6 to 40 stainless steel to 1.4301, Aisi 304, forged, polished
from size 45 stainless steel to 1.4301, Aisi 304, turned
from size 50 stainless steel to 1.4571, Aisi 316Ti, turned

Bearing: Maintenance free stainless steel Spherical Plain Bearing GE...EC-NIRO (see page 49)

[1)] availability and price on request

Spherical Plain Bearings Series E - Steel on Steel

Series GE...E (-2RS)

Spherical Plain Bearings steel on steel, treated with molybdenum disulphide MoS_2

For use with high multi-directional loads

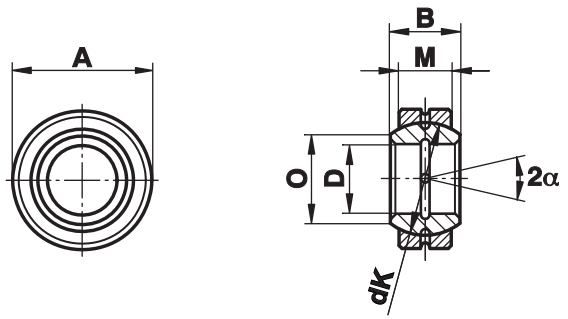

Size (D)	B	M	A	O	dK	Static load C_0 kN	Dynamic load C kN	Pivoting angle α	Weight g
4[1] $^{0}_{-0,008}$	5	3	12 $^{0}_{-0,008}$	6,0	8,0	10,0	2,0	16	3
5[1] $^{0}_{-0,008}$	6	4	14 $^{0}_{-0,008}$	8,0	10,0	17,0	3,4	13	4
6[1] $^{0}_{-0,008}$	6	4	14 $^{0}_{-0,008}$	8,0	10,0	17,0	3,4	13	4
8[1] $^{0}_{-0,008}$	8	5	16 $^{0}_{-0,008}$	10,2	13,0	27,5	5,5	15	7
10[1] $^{0}_{-0,008}$	9	6	19 $^{0}_{-0,009}$	13,2	16,0	40,5	8,1	12	11
12[1] $^{0}_{-0,008}$	10	7	22 $^{0}_{-0,009}$	14,9	18,0	54,0	10,8	11	17
15 $^{0}_{-0,008}$	12	9	26 $^{0}_{-0,009}$	18,4	22,0	85,0	17,0	8	26
16[2] $^{0}_{-0,008}$	14	10	30 $^{0}_{-0,009}$	20,7	25,0	106,0	21,2	10	40
17 $^{0}_{-0,008}$	14	10	30 $^{0}_{-0,009}$	20,7	25,0	106,0	21,2	10	40
20 $^{0}_{-0,010}$	16	12	35 $^{0}_{-0,011}$	24,1	29,0	146,0	30,0	9	64
25 $^{0}_{-0,010}$	20	16	42 $^{0}_{-0,011}$	29,3	35,5	240,0	48,0	7	115
30 $^{0}_{-0,010}$	22	18	47 $^{0}_{-0,011}$	34,2	40,7	310,0	62,0	6	149
35 $^{0}_{-0,012}$	25	20	55 $^{0}_{-0,013}$	39,7	47,0	400,0	80,0	6	228
40 $^{0}_{-0,012}$	28	22	62 $^{0}_{-0,013}$	45,0	53,0	500,0	100,0	7	318
45 $^{0}_{-0,012}$	32	25	68 $^{0}_{-0,013}$	50,7	60,0	640,0	127,0	7	421
50 $^{0}_{-0,012}$	35	28	75 $^{0}_{-0,013}$	55,9	66,0	780,0	156,0	6	562
55 $^{0}_{-0,015}$	40	32	85 $^{0}_{-0,015}$	62,3	74,0	1000,0	200,0	7	864
60 $^{0}_{-0,015}$	44	36	90 $^{0}_{-0,015}$	66,8	80,0	1220,0	245,0	6	1030
70 $^{0}_{-0,015}$	49	40	105 $^{0}_{-0,015}$	77,8	92,0	1560,0	315,0	6	1570
80 $^{0}_{-0,015}$	55	45	120 $^{0}_{-0,015}$	89,4	105,0	2000,0	400,0	6	2320
90 $^{0}_{-0,020}$	60	50	130 $^{0}_{-0,018}$	98,1	115,0	2450,0	490,0	5	2790
100 $^{0}_{-0,020}$	70	55	150 $^{0}_{-0,018}$	109,5	130,0	3050,0	610,0	7	4440
110 $^{0}_{-0,020}$	70	55	160 $^{0}_{-0,025}$	121,2	140,0	3250,0	655,0	6	4830
120 $^{0}_{-0,020}$	85	70	180 $^{0}_{-0,025}$	135,5	160,0	4750,0	950,0	6	8110
140 $^{0}_{-0,025}$	90	70	210 $^{0}_{-0,030}$	155,8	180,0	5400,0	1080,0	7	11200
160 $^{0}_{-0,025}$	105	80	230 $^{0}_{-0,030}$	170,2	200,0	6800,0	1370,0	8	14100
180 $^{0}_{-0,025}$	105	80	260 $^{0}_{-0,035}$	198,9	225,0	7650,0	1530,0	6	18500
200 $^{0}_{-0,030}$	130	100	290 $^{0}_{-0,035}$	213,5	250,0	10600,0	2120,0	7	28400
220 $^{0}_{-0,030}$	135	100	320 $^{0}_{-0,040}$	239,5	275,0	11600,0	2320,0	8	35700
240 $^{0}_{-0,030}$	140	100	340 $^{0}_{-0,040}$	265,3	300,0	12700,0	2550,0	8	39700
260 $^{0}_{-0,035}$	150	110	370 $^{0}_{-0,040}$	288,3	325,0	15300,0	3050,0	7	51500
280 $^{0}_{-0,035}$	155	120	400 $^{0}_{-0,040}$	313,8	350,0	18000,0	3550,0	6	64900
300 $^{0}_{-0,035}$	165	120	430 $^{0}_{-0,045}$	336,7	375,0	19000,0	3800,0	7	77600

Materials:

Insert: Bearing steel to 100Cr6, Aisi 52100, hardened, ground, phosphated, treated with molybdenum disulphide
from size 15 available sealed from both sides (-2RS)
from size 220 only available sealed from both sides (-2RS)

Ball: Bearing steel to 100Cr6, Aisi 52100, hardened, ground, phosphated, treated with molybdenum disulphide

[1] without lubrication hole
[2] also available with outside diameter 28 mm

Spherical Plain Bearings - Steel on Steel

Series GE...HO-2RS

Spherical Plain Bearings steel on steel, regreasable with lip seal on both sides.
Dimensions identical to series GE...E (-2RS) but ball with shoulder

Through the ball with shoulder no distance rings are required

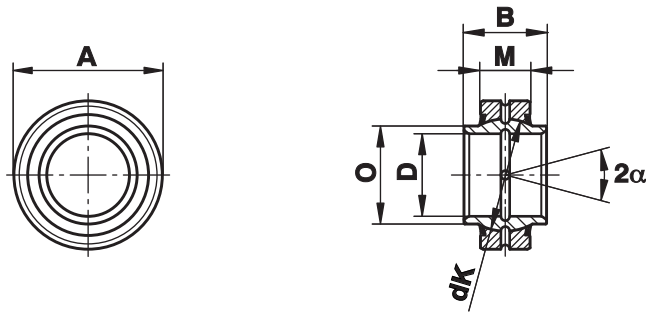

Size (D)	B	M	A	O	dK	Static load C_0 kN	Dynamic load C kN	Pivoting angle α	Weight g
16[2] $^{0}_{-0,008}$	21	10	30 $^{0}_{-0,009}$	21,0	25,0	106	21,2	3	44
17 $^{0}_{-0,008}$	21	10	30 $^{0}_{-0,009}$	21,0	25,0	106	21,2	3	44
20 $^{0}_{-0,010}$	24	12	35 $^{0}_{-0,011}$	24,0	29,0	146	30,0	6	72
25 $^{0}_{-0,010}$	29	16	42 $^{0}_{-0,011}$	29,0	35,5	240	48,0	4	130
30 $^{0}_{-0,010}$	30	18	47 $^{0}_{-0,011}$	34,2	40,7	310	62,0	4	160
35 $^{0}_{-0,012}$	35	20	55 $^{0}_{-0,013}$	40,0	47,0	400	80,0	4	250
40 $^{0}_{-0,012}$	38	22	62 $^{0}_{-0,013}$	45,0	53,0	500	100,0	4	340
45 $^{0}_{-0,012}$	40	25	68 $^{0}_{-0,013}$	51,5	60,0	640	127,0	4	450
50 $^{0}_{-0,012}$	43	28	75 $^{0}_{-0,013}$	56,5	66,0	780	156,0	4	590
60 $^{0}_{-0,015}$	54	36	90 $^{0}_{-0,015}$	67,7	80,0	1220	245,0	3	1060
70 $^{0}_{-0,015}$	65	40	105 $^{0}_{-0,015}$	78,0	92,0	1560	315,0	4	1660
80 $^{0}_{-0,015}$	74	45	120 $^{0}_{-0,015}$	90,0	105,0	2000	400,0	4	2470
90[1] $^{0}_{-0,020}$	80	50	130 $^{0}_{-0,018}$	99,0	115,0	2440	488,0	4	2880
100[1] $^{0}_{-0,020}$	90	55	150 $^{0}_{-0,018}$	113,0	130,0	3030	607,0	4	4650
120[1] $^{0}_{-0,020}$	108	70	180 $^{0}_{-0,025}$	133,0	160,0	4750	950,0	4	8440

Materials:

Insert: Bearing steel to 100Cr6, Aisi 52100, hardened, ground, phosphated treated with molybdenum disulphide

Ball: Bearing steel to 100Cr6, Aisi 52100, hardened, ground, phosphated treated with molybdenum disulphide

[1] Price and availability on request

[2] without -2RS seals

Spherical Plain Bearings Series W - Steel on Steel

Series GE...LO

Spherical Plain Bearings steel on steel series W to DIN ISO 12240-1, treated with molyb-denum disulphide mos2, regreasable

For use on standard Hydraulic Cylinders to DIN 24333 and to DIN 24336 with floor piece or piston rod relays

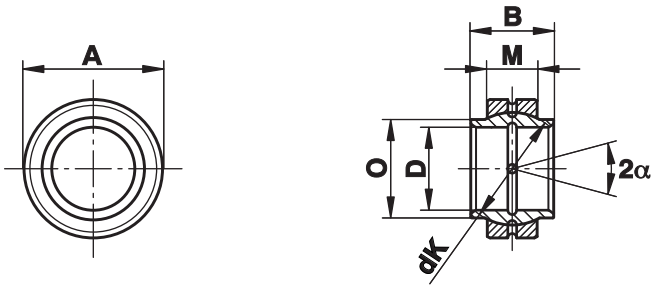

Size (D)	B	M	A	O	dK	Static load C_0 kN	Dynamic load C kN	Pivoting angle α	Weight g
12[1] $^{0}_{+0,018}$	12	7	22 $^{0}_{-0,009}$	15,5	18,0	54	10,8	4	17
15 $^{0}_{+0,018}$	15	9	26 $^{0}_{-0,009}$	18,5	22,0	84	16,0	5	28
16 $^{0}_{+0,018}$	16	9	28 $^{0}_{-0,009}$	20,0	23,0	88	17,6	4	34
17 $^{0}_{+0,018}$	17	10	30 $^{0}_{-0,011}$	21,0	25,0	106	21,0	7	43
20 $^{0}_{+0,021}$	20	12	35 $^{0}_{-0,011}$	25,0	29,0	146	30,0	4	69
25 $^{0}_{+0,021}$	25	16	42 $^{0}_{-0,011}$	30,5	35,5	240	48,0	4	124
30 $^{0}_{+0,021}$	30	18	47 $^{0}_{-0,011}$	34,0	40,7	310	62,0	4	159
32 $^{0}_{+0,025}$	32	18	52 $^{0}_{-0,013}$	37,0	43,0	335	67,0	4	207
35 $^{0}_{+0,025}$	35	20	55 $^{0}_{-0,013}$	40,0	47,0	399	79,0	4	248
40 $^{0}_{+0,025}$	40	22	62 $^{0}_{-0,013}$	46,0	53,0	500	100,0	4	349
45 $^{0}_{+0,025}$	45	25	68 $^{0}_{-0,013}$	52,0	60,0	637	127,0	4	468
50 $^{0}_{+0,025}$	50	28	75 $^{0}_{-0,013}$	57,0	66,0	780	156,0	4	620
60 $^{0}_{+0,030}$	60	36	90 $^{0}_{-0,015}$	68,0	80,0	1220	245,0	4	1110
63 $^{0}_{+0,030}$	63	36	95 $^{0}_{-0,015}$	71,5	83,0	1270	255,0	4	1270
70 $^{0}_{+0,030}$	70	40	105 $^{0}_{-0,015}$	79,0	92,0	1560	315,0	4	1690
80 $^{0}_{+0,030}$	80	45	120 $^{0}_{-0,015}$	91,0	105,0	2000	400,0	4	2550
90 $^{0}_{+0,035}$	90	50	130 $^{0}_{-0,018}$	99,0	115,0	2450	490,0	4	3040
100 $^{0}_{+0,035}$	100	55	150 $^{0}_{-0,018}$	113,0	130,0	3050	610,0	4	4870
110 $^{0}_{+0,035}$	110	55	160 $^{0}_{-0,025}$	124,0	140,0	3250	655,0	4	5530
125 $^{0}_{+0,040}$	125	70	180 $^{0}_{-0,025}$	138,0	160,0	4750	950,0	4	8190
160 $^{0}_{+0,040}$	160	80	230 $^{0}_{-0,030}$	177,0	200,0	6800	1370,0	4	15800
200 $^{0}_{+0,046}$	200	100	290 $^{0}_{-0,035}$	221,0	250,0	10600	2120,0	4	31700
250 $^{0}_{+0,046}$	250	120	400 $^{0}_{-0,040}$	317,0	350,0	18000	3550,0	4	10100
320 $^{0}_{+0,057}$	320	160	520 $^{0}_{-0,050}$	405,0	450,0	30500	6100,0	4	22500

Materials:

Insert: Bearing steel to 100Cr6, Aisi 52100, hardened, ground, phosphated treated with molybdenum disulphide

Ball: Bearing steel to 100Cr6, Aisi 52100, hardened, ground, phosphated treated with molybdenum disulphide

[1] lubrication groove in the insert only

Spherical Plain Bearings Series G - Steel on Steel

Series GE...FO (-2RS)

Spherical Plain Bearings steel on steel series G to DIN ISO 12240-1. Treated with molybdenum disulphide mos2, regreasable

For use with higher pivoting angle

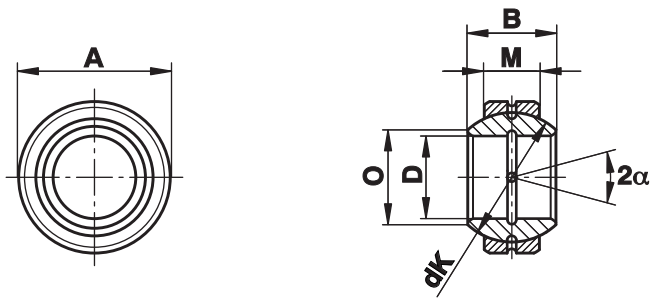

Size (D)	B	M	A	O	dK	Static load C₀ kN	Dynamic load C kN	Pivoting angle α	Weight g
4[1] $^{0}_{-0,008}$	7	4	14 $^{0}_{-0,008}$	7,1	10,0	17,0	3,4	20	5
5[1] $^{0}_{-0,008}$	9	5	16 $^{0}_{-0,008}$	9,3	13,0	27,0	5,5	21	8
6[1] $^{0}_{-0,008}$	9	5	16 $^{0}_{-0,008}$	9,3	13,0	27,5	5,5	21	8
8[1] $^{0}_{-0,008}$	11	6	19 $^{0}_{-0,009}$	11,6	16,0	40,5	8,1	21	14
10[1] $^{0}_{-0,008}$	12	7	22 $^{0}_{-0,009}$	13,4	18,0	54,0	10,8	18	21
12[1] $^{0}_{-0,008}$	15	9	26 $^{0}_{-0,009}$	16,0	22,0	85,0	17,0	18	36
15 $^{0}_{-0,008}$	16	10	30 $^{0}_{-0,009}$	19,2	25,0	106,0	21,2	16	48
17 $^{0}_{-0,008}$	20	12	35 $^{0}_{-0,011}$	21,0	29,0	146,0	30,0	19	80
20 $^{0}_{-0,010}$	25	16	42 $^{0}_{-0,011}$	25,2	35,5	240,0	48,0	17	152
25 $^{0}_{-0,010}$	28	18	47 $^{0}_{-0,011}$	29,5	40,7	310,0	62,0	17	199
30 $^{0}_{-0,010}$	32	20	55 $^{0}_{-0,013}$	34,4	47,0	400,0	80,0	17	296
35 $^{0}_{-0,012}$	35	22	62 $^{0}_{-0,013}$	39,7	53,0	500,0	100,0	16	402
40 $^{0}_{-0,012}$	40	25	68 $^{0}_{-0,013}$	44,7	60,0	640,0	127,0	17	535
45 $^{0}_{-0,012}$	43	28	75 $^{0}_{-0,013}$	50,0	66,0	780,0	156,0	15	698
50 $^{0}_{-0,012}$	56	36	90 $^{0}_{-0,015}$	57,1	80,0	1220,0	245,0	17	1420
60 $^{0}_{-0,015}$	63	40	105 $^{0}_{-0,015}$	67,0	92,0	1560,0	315,0	17	2090
70 $^{0}_{-0,015}$	70	45	120 $^{0}_{-0,015}$	78,2	105,0	2000,0	400,0	16	3010
80 $^{0}_{-0,015}$	75	50	130 $^{0}_{-0,018}$	87,1	115,0	2450,0	490,0	14	3610
90 $^{0}_{-0,020}$	85	55	150 $^{0}_{-0,018}$	98,3	130,0	3050,0	610,0	15	5500
100 $^{0}_{-0,020}$	85	55	160 $^{0}_{-0,025}$	111,2	140,0	3250,0	655,0	14	6040
110 $^{0}_{-0,020}$	100	70	180 $^{0}_{-0,025}$	124,8	160,0	4750,0	950,0	12	9740
120 $^{0}_{-0,020}$	115	70	210 $^{0}_{-0,030}$	138,4	180,0	5400,0	1080,0	16	15100
140 $^{0}_{-0,025}$	130	80	230 $^{0}_{-0,030}$	151,9	200,0	6800,0	1370,0	16	18900
160 $^{0}_{-0,025}$	135	80	260 $^{0}_{-0,035}$	180,0	225,0	7650,0	1530,0	16	24800
180 $^{0}_{-0,025}$	155	100	290 $^{0}_{-0,035}$	196,1	250,0	10600,0	2120,0	14	35900
200 $^{0}_{-0,030}$	165	100	320 $^{0}_{-0,040}$	220,0	275,0	11600,0	2320,0	15	44900
220 $^{0}_{-0,030}$	175	100	340 $^{0}_{-0,040}$	243,6	300,0	12700,0	2550,0	16	50900
240 $^{0}_{-0,030}$	190	110	370 $^{0}_{-0,040}$	263,6	325,0	15300,0	3050,0	15	65300
260 $^{0}_{-0,035}$	205	120	400 $^{0}_{-0,040}$	283,6	350,0	18000,0	3550,0	15	82000
280 $^{0}_{-0,035}$	210	120	430 $^{0}_{-0,045}$	310,6	375,0	19000,0	3800,0	15	96600

Materials:

Insert: Bearing steel to 100Cr6, Aisi 52100, hardened, ground, phosphated treated with molybdenum disulphide
from size 15 available sealed from both sides (-2RS)

Ball: Bearing steel to 100Cr6, Aisi 52100, hardened, ground, phosphated treated with molybdenum disulphide

[1] without lubrication hole

Spherical Plain Bearings Series G - Maintenance Free

Series GE...FW (-2RS)

Spherical Plain Bearings series G to DIN ISO 12240-1.
Mating surface hard chromium/PTFE, maintenance free

Higher pivoting angle through wider ball

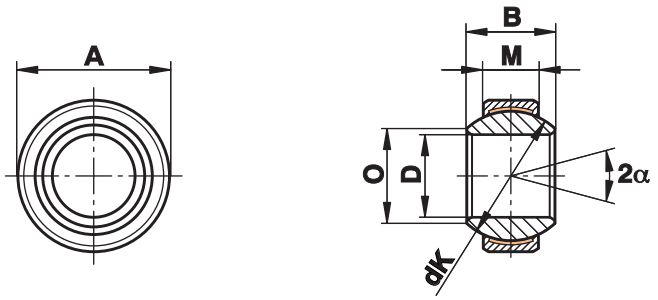

Size (D)	B	M	A	O	dK	Static load C_0 kN	Static load C_0 kN -2RS	Dynamic load C kN	Dynamic load C kN -2RS	Pivoting angle α	Weight g
4 $^{0}_{-0,008}$	4	4	14 $^{0}_{-0,008}$	7,1	10,0	9,1	-	3,6	-	20	5
5 $^{0}_{-0,008}$	5	5	16 $^{0}_{-0,008}$	9,3	13,0	14,0	-	5,8	-	21	8
6 $^{0}_{-0,008}$	9	5	16 $^{0}_{-0,008}$	9,3	13,0	14,0	-	5,8	-	21	9
8 $^{0}_{-0,008}$	11	6	19 $^{0}_{-0,009}$	11,6	16,0	21,0	-	8,6	-	21	14
10 $^{0}_{-0,008}$	12	7	22 $^{0}_{-0,009}$	13,4	18,0	28,0	-	11,0	-	18	21
12 $^{0}_{-0,008}$	15	9	26 $^{0}_{-0,009}$	16,0	22,0	45,0	-	18,0	-	18	33
15 $^{0}_{-0,008}$	16	10	30 $^{0}_{-0,009}$	19,2	25,0	56,0	75,0	22,0	32,0	16	49
17 $^{0}_{-0,008}$	20	12	35 $^{0}_{-0,011}$	21,0	29,0	78,0	104,0	31,0	45,0	19	83
20 $^{0}_{-0,010}$	25	16	42 $^{0}_{-0,011}$	25,2	35,5	127,0	204,0	51,0	85,0	17	153
25 $^{0}_{-0,010}$	28	18	47 $^{0}_{-0,011}$	29,5	40,7	166,0	263,0	65,0	110,0	17	203
30 $^{0}_{-0,010}$	32	20	55 $^{0}_{-0,013}$	34,4	47,0	211,0	338,0	84,0	140,0	17	304
35 $^{0}_{-0,012}$	35	22	62 $^{0}_{-0,013}$	39,7	53,0	262,0	419,0	104,0	175,0	16	408
40 $^{0}_{-0,012}$	40	25	68 $^{0}_{-0,013}$	44,7	60,0	337,0	540,0	135,0	225,0	17	542
45 $^{0}_{-0,012}$	43	28	75 $^{0}_{-0,013}$	50,0	66,0	415,0	665,0	166,0	275,0	15	713
50 $^{0}_{-0,012}$	56	36	90 $^{0}_{-0,013}$	57,1	80,0	-	1030,0	-	430,0	17	1420
60 $^{0}_{-0,015}$	63	40	105 $^{0}_{-0,015}$	67,0	92,0	-	1320,0	-	550,0	17	2090
70 $^{0}_{-0,015}$	70	45	120 $^{0}_{-0,015}$	78,2	105,0	-	1700,0	-	705,0	16	3010
80 $^{0}_{-0,015}$	75	50	130 $^{0}_{-0,015}$	87,1	115,0	-	2070,0	-	860,0	14	3610
90 $^{0}_{-0,020}$	85	55	150 $^{0}_{-0,018}$	98,3	130,0	-	2570,0	-	1070,0	15	5500
100 $^{0}_{-0,020}$	85	55	160 $^{0}_{-0,018}$	111,2	140,0	-	2770,0	-	1150,0	14	6040
110 $^{0}_{-0,020}$	100	70	180 $^{0}_{-0,025}$	124,8	160,0	-	4030,0	-	1680,0	12	9740
120 $^{0}_{-0,020}$	115	70	210 $^{0}_{-0,025}$	138,4	180,0	-	4530,0	-	1890,0	16	15100
140[1] $^{0}_{-0,025}$	130	80	230 $^{0}_{-0,030}$	151,9	200,0	-	5760,0	-	2400,0	16	18900
160[1] $^{0}_{-0,025}$	135	80	260 $^{0}_{-0,030}$	180,0	225,0	-	6480,0	-	2700,0	16	24800
180[1] $^{0}_{-0,025}$	155	100	290 $^{0}_{-0,035}$	196,1	250,0	-	9000,0	-	3750,0	14	35900
200[1] $^{0}_{-0,030}$	165	100	320 $^{0}_{-0,035}$	220,0	275,0	-	9900,0	-	4120,0	15	44900
220[1] $^{0}_{-0,030}$	175	100	340 $^{0}_{-0,040}$	243,6	300,0	-	10800,0	-	4500,0	16	50900
240[1] $^{0}_{-0,030}$	190	110	370 $^{0}_{-0,040}$	263,6	325,0	-	12870,0	-	5360,0	15	65300
260[1] $^{0}_{-0,035}$	205	120	400 $^{0}_{-0,040}$	283,6	350,0	-	15120,0	-	6300,0	15	82000
280[1] $^{0}_{-0,035}$	210	120	430 $^{0}_{-0,045}$	310,6	375,0	-	16200,0	-	6750,0	15	96600

Materials:

Insert: Bearing steel with PTFE liner bonded to the inner surface
from size 15 available sealed (-2RS) on both sides
from size 50 only available sealed (-2RS) on both sides

Ball: Bearing steel to 100Cr6, Aisi 52100, hardened, ground, polished, hard chrome plated

On request available in stainless steel.

[1] from size 140 the hardened inserts are two pieced and secured with tension spring

Angular Contact Spherical Plain Bearings - Steel on Steel

Series GE...SX

Angular Contact Spherical Plain Bearings steel on steel.
Treated with molybdenum disulphide mos2, regreasable

For use at uni-directional, dynamic radial and additional axial loads

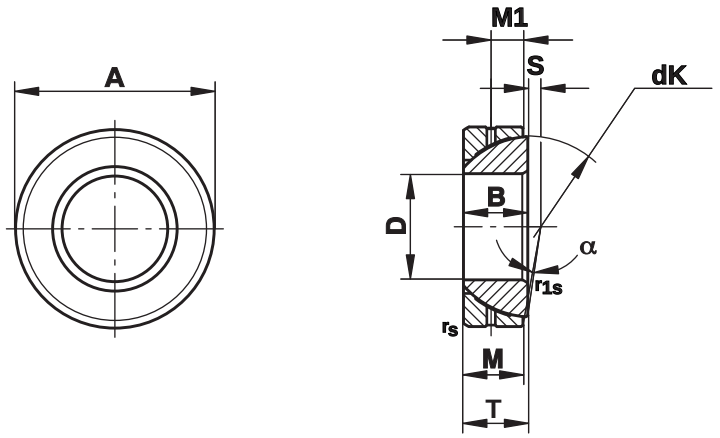

Size (D)	B	M	A	T	S	M1	r_s, r_{1s} min	d_k	Static load C_o kN	Dynamic load C kN	Pivoting angle $\alpha \approx$	Weight g
25 $^{0}_{-0,012}$	15	14,0	47 $^{0}_{-0,014}$	15 $^{+0,25}_{-0,40}$	0,6	7,5	1,0	42,0	250	50	2,5	148
28 $^{0}_{-0,012}$	15	15,0	52 $^{0}_{-0,016}$	16 $^{+0,25}_{-0,40}$	1,0	8,0	1,0	47,0	300	60	2,0	186
30 $^{0}_{-0,012}$	17	15,0	55 $^{0}_{-0,016}$	17 $^{+0,25}_{-0,40}$	1,3	8,5	1,0	49,5	315	63	4,5	208
32 $^{0}_{-0,012}$	17	16,0	58 $^{0}_{-0,016}$	17 $^{+0,25}_{-0,40}$	2,0	8,5	1,0	52,0	354	71	2,0	241
35 $^{0}_{-0,012}$	18	16,0	62 $^{0}_{-0,016}$	18 $^{+0,25}_{-0,40}$	2,1	9,0	1,0	55,5	390	78	4,0	268
40 $^{0}_{-0,012}$	19	17,0	68 $^{0}_{-0,016}$	19 $^{+0,25}_{-0,40}$	2,8	9,5	1,0	62,0	463	92	3,5	327
45 $^{0}_{-0,012}$	20	18,0	75 $^{0}_{-0,016}$	20 $^{+0,25}_{-0,40}$	3,5	10,0	1,0	68,5	540	108	3,0	416
50 $^{0}_{-0,012}$	20	19,0	80 $^{0}_{-0,016}$	20 $^{+0,25}_{-0,40}$	4,3	10,0	1,0	74,0	618	123	1,5	455
55 $^{0}_{-0,015}$	23	20,0	90 $^{0}_{-0,018}$	23 $^{+0,25}_{-0,50}$	5,0	11,5	1,1	82,0	721	144	4,0	645
60 $^{0}_{-0,015}$	23	21,0	95 $^{0}_{-0,018}$	23 $^{+0,25}_{-0,50}$	5,7	11,5	1,1	88,5	817	163	2,5	714
65 $^{0}_{-0,015}$	23	22,0	100 $^{0}_{-0,018}$	23 $^{+0,25}_{-0,50}$	6,5	11,5	1,1	93,5	905	180	1,0	759
70 $^{0}_{-0,015}$	25	23,0	110 $^{0}_{-0,018}$	25 $^{+0,25}_{-0,50}$	7,2	12,5	1,1	102,0	1030	206	2,0	1040
75 $^{0}_{-0,015}$	25	24,0	115 $^{0}_{-0,018}$	25 $^{+0,25}_{-0,50}$	7,9	12,5	1,1	107,0	1129	220	1,0	1120
80 $^{0}_{-0,015}$	29	25,5	125 $^{0}_{-0,020}$	29 $^{+0,25}_{-0,50}$	8,6	14,5	1,1	115,0	1290	258	3,5	1540
85 $^{0}_{-0,020}$	29	26,5	130 $^{0}_{-0,020}$	29 $^{+0,25}_{-0,60}$	9,4	14,5	1,1	122,0	1422	284	2,0	1610
90 $^{0}_{-0,020}$	32	28,0	140 $^{0}_{-0,020}$	32 $^{+0,25}_{-0,60}$	10,1	16,0	1,5	128,5	1580	316	3,5	2090
95 $^{0}_{-0,020}$	32	29,5	145 $^{0}_{-0,020}$	32 $^{+0,25}_{-0,60}$	10,8	16,0	1,5	135,0	1750	350	2,0	2220
100 $^{0}_{-0,020}$	32	31,0	150 $^{0}_{-0,020}$	32 $^{+0,25}_{-0,60}$	11,6	16,0	1,5	141,0	1923	384	0,5	2340
105 [1] $^{0}_{-0,020}$	35	32,5	160 $^{0}_{-0,025}$	35 $^{+0,25}_{-0,60}$	12,3	17,5	2,0	148,0	2116	423	2,0	2930
110 [1] $^{0}_{-0,020}$	38	34,0	170 $^{0}_{-0,025}$	38 $^{+0,25}_{-0,60}$	13,0	19,0	2,0	155,0	2318	463	3,0	3680
120 [1] $^{0}_{-0,020}$	38	37,0	180 $^{0}_{-0,025}$	38 $^{+0,25}_{-0,60}$	14,5	19,0	2,0	168,0	2735	547	0,5	3970
130 [1] $^{0}_{-0,025}$	45	43,0	200 $^{0}_{-0,030}$	45 $^{+0,35}_{-0,70}$	18,0	19,0	2,5	188,0	3550	710	1,0	5920
140 [1] $^{0}_{-0,025}$	45	43,0	210 $^{0}_{-0,030}$	45 $^{+0,35}_{-0,70}$	19,0	19,0	2,5	198,0	3740	740	1,0	6330
150 [1] $^{0}_{-0,025}$	48	46,0	225 $^{0}_{-0,030}$	48 $^{+0,35}_{-0,70}$	20,0	20,5	3,0	211,0	4270	850	1,0	8010
160 [1] $^{0}_{-0,025}$	51	49,0	240 $^{0}_{-0,030}$	51 $^{+0,35}_{-0,70}$	20,0	22,0	3,0	225,0	4850	970	1,0	9790
170 [1] $^{0}_{-0,025}$	57	55,0	260 $^{0}_{-0,035}$	57 $^{+0,35}_{-0,70}$	21,0	27,0	3,0	246,0	5950	1190	1,0	12300
180 [1] $^{0}_{-0,025}$	64	61,0	280 $^{0}_{-0,035}$	64 $^{+0,35}_{-0,70}$	21,0	28,0	3,0	260,0	6970	1395	1,0	17400
190 [1] $^{0}_{-0,030}$	64	62,0	290 $^{0}_{-0,035}$	64 $^{+0,35}_{-0,80}$	26,0	30,0	3,0	275,0	7500	1500	0,5	18200
200 [1] $^{0}_{-0,030}$	70	66,0	310 $^{0}_{-0,035}$	70 $^{+0,35}_{-0,80}$	26,0	30,0	3,0	290,0	8420	1680	1,5	23800

Materials:

Housing disk: Bearing steel to 100Cr6, Aisi 52100, hardened, ground, phosphated treated with molybdenum disulphide

Inner disk: Bearing steel to 100Cr6, Aisi 52100, hardened, ground, phosphated treated with molybdenum disulphide

[1] Price and availability on request

Angular Contact Spherical Plain Bearings - Maintenance Free

Series GE...SW

Angular Contact Spherical Plain Bearings. Mating surface hard chromium/PTFE, maintenance free

For use at uni-directional, dynamic radial and additional axial loads

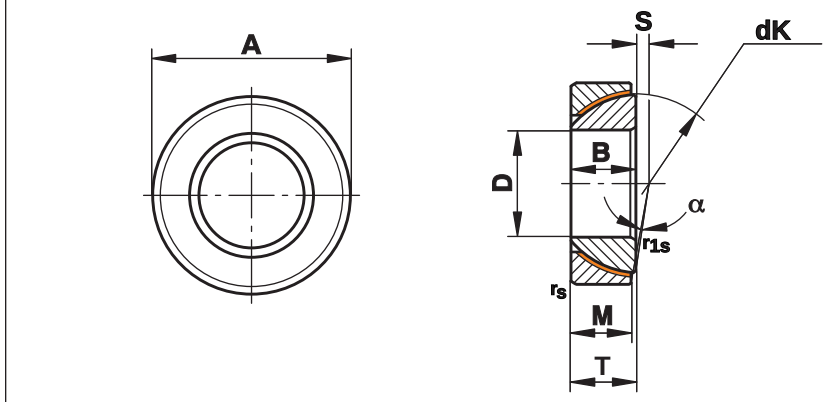

Size (D)	B	M	A	T	S	r_s, r_{1s} min	d_k	Static load C_o kN	Dynamic load C kN	Pivoting angle $\alpha \approx$	Weight g
25 $^{0}_{-0,012}$	15	14,0	47 $^{0}_{-0,014}$	15 $^{+0,25}_{-0,40}$	0,6	1,0	42,0	225	89	2,5	148
28 $^{0}_{-0,012}$	15	15,0	52 $^{0}_{-0,016}$	16 $^{+0,25}_{-0,40}$	1,0	1,0	47,0	270	100	2,0	186
30 $^{0}_{-0,012}$	17	15,0	55 $^{0}_{-0,016}$	17 $^{+0,25}_{-0,40}$	1,3	1,0	49,5	285	110	4,5	208
32 $^{0}_{-0,012}$	17	16,0	58 $^{0}_{-0,016}$	17 $^{+0,25}_{-0,40}$	2,0	1,0	52,0	320	125	2,0	241
35 $^{0}_{-0,012}$	18	16,0	62 $^{0}_{-0,016}$	18 $^{+0,25}_{-0,40}$	2,1	1,0	55,5	340	135	4,0	268
40 $^{0}_{-0,012}$	19	17,0	68 $^{0}_{-0,016}$	19 $^{+0,25}_{-0,40}$	2,8	1,0	62,0	400	160	3,5	327
45 $^{0}_{-0,012}$	20	18,0	75 $^{0}_{-0,016}$	20 $^{+0,25}_{-0,40}$	3,5	1,0	68,5	470	190	3,0	416
50 $^{0}_{-0,012}$	20	19,0	80 $^{0}_{-0,016}$	20 $^{+0,25}_{-0,40}$	4,3	1,0	74,0	540	215	1,5	455
55 $^{0}_{-0,015}$	23	20,0	90 $^{0}_{-0,018}$	23 $^{+0,25}_{-0,50}$	5,0	1,1	82,0	630	250	4,0	645
60 $^{0}_{-0,015}$	23	21,0	95 $^{0}_{-0,018}$	23 $^{+0,25}_{-0,50}$	5,7	1,1	88,5	710	285	2,5	714
65 $^{0}_{-0,015}$	23	22,0	100 $^{0}_{-0,018}$	23 $^{+0,25}_{-0,50}$	6,5	1,1	93,5	790	315	1,0	759
70 $^{0}_{-0,015}$	25	23,0	110 $^{0}_{-0,018}$	25 $^{+0,25}_{-0,50}$	7,2	1,1	102,0	900	360	2,0	1040
75 $^{0}_{-0,015}$	25	24,0	115 $^{0}_{-0,018}$	25 $^{+0,25}_{-0,50}$	7,9	1,1	107,0	980	395	1,0	1120
80 $^{0}_{-0,015}$	29	25,5	125 $^{0}_{-0,020}$	29 $^{+0,25}_{-0,50}$	8,6	1,1	115,0	1120	450	3,5	1540
85 $^{0}_{-0,020}$	29	26,5	130 $^{0}_{-0,020}$	29 $^{+0,25}_{-0,60}$	9,4	1,1	122,0	1240	495	2,0	1610
90 $^{0}_{-0,020}$	32	28,0	140 $^{0}_{-0,020}$	32 $^{+0,25}_{-0,60}$	10,1	1,5	128,5	1380	550	3,5	2090
95 $^{0}_{-0,020}$	32	29,5	145 $^{0}_{-0,020}$	32 $^{+0,25}_{-0,60}$	10,8	1,5	135,0	1530	610	2,0	2220
100 $^{0}_{-0,020}$	32	31,0	150 $^{0}_{-0,020}$	32 $^{+0,25}_{-0,60}$	11,6	1,5	141,0	1680	670	0,5	2340
105[1] $^{0}_{-0,020}$	35	32,5	160 $^{0}_{-0,020}$	35 $^{+0,25}_{-0,60}$	12,3	2,0	148,0	1850	740	2,0	2930
110[1] $^{0}_{-0,020}$	38	34,0	170 $^{0}_{-0,020}$	38 $^{+0,25}_{-0,60}$	13,0	2,0	155,0	2020	810	3,0	3680
120[1] $^{0}_{-0,020}$	38	37,0	180 $^{0}_{-0,025}$	38 $^{+0,25}_{-0,60}$	14,5	2,0	168,0	2390	955	0,5	3970
130[1] $^{0}_{-0,020}$	45	43,0	200 $^{0}_{-0,025}$	45 $^{+0,35}_{-0,70}$	18,0	2,5	188,0	3110	1240	1,0	5920
140[1] $^{0}_{-0,020}$	45	43,0	210 $^{0}_{-0,025}$	45 $^{+0,35}_{-0,70}$	19,0	2,5	198,0	3270	1310	1,0	6330
150[1] $^{0}_{-0,025}$	48	46,0	225 $^{0}_{-0,030}$	48 $^{+0,35}_{-0,70}$	20,0	3,0	211,0	3730	1490	1,0	8010
160[1] $^{0}_{-0,025}$	51	49,0	240 $^{0}_{-0,030}$	51 $^{+0,35}_{-0,70}$	20,0	3,0	225,0	4240	1690	1,0	9790
170[1] $^{0}_{-0,025}$	57	55,0	260 $^{0}_{-0,035}$	57 $^{+0,35}_{-0,70}$	21,0	3,0	246,0	5200	2080	1,0	12300
180[1] $^{0}_{-0,025}$	64	61,0	280 $^{0}_{-0,035}$	64 $^{+0,35}_{-0,70}$	21,0	3,0	260,0	6100	2440	1,0	17400
190[1] $^{0}_{-0,030}$	64	62,0	290 $^{0}_{-0,035}$	64 $^{+0,35}_{-0,80}$	26,0	3,0	275,0	6560	2620	0,5	18200
200[1] $^{0}_{-0,030}$	70	66,0	310 $^{0}_{-0,035}$	70 $^{+0,35}_{-0,80}$	26,0	3,0	290,0	7360	2940	1,5	23800

Materials:

Housing disk: Bearing steel to 100Cr6, Aisi 52100, hardened with PTFE liner bonded to the inner surface

Inner disk: Bearing steel to 100Cr6, Aisi 52100, hardened, ground, polished, hard chrome plated

On request: stainless steel version

[1] Price and availability on request

Spherical Plain Thrust Bearings - Steel on Steel

Series GE...AX

Spherical Plain Thrust Bearings steel on steel. Treated with molybdenum disulphide mos2, regreasable

For use at axial loads

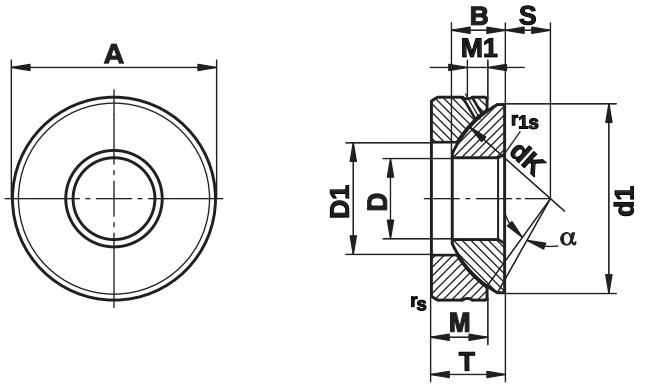

Size (D)	B	M	A	T	S	M1	r_s, r_{1s} min	d_1 max	d_1 min	d_k	Axial load kN Static C_o	Axial load kN Dynamic C	Pivoting angle $\alpha \approx$	Weight g
10 $^{0}_{-0,008}$	7,5	7,0	30 $^{0}_{-0,009}$	9,5 $^{+0,25}_{-0,40}$	7,0	3,0	0,6	27,5	15,5	32	136	27	5	36
12 $^{0}_{-0,008}$	9,5	9,3	35 $^{0}_{-0,011}$	13,0 $^{+0,25}_{-0,40}$	8,0	4,0	0,6	32,0	18,0	38	188	37	5	72
15 $^{0}_{-0,008}$	11,0	10,8	42 $^{0}_{-0,011}$	15,0 $^{+0,25}_{-0,40}$	10,0	5,0	0,6	39,0	22,5	46	267	53	6	108
17 $^{0}_{-0,008}$	11,8	11,2	47 $^{0}_{-0,011}$	16,0 $^{+0,25}_{-0,40}$	11,0	5,0	0,6	43,5	27,0	52	311	61	4	137
20 $^{0}_{-0,010}$	14,5	13,8	55 $^{0}_{-0,013}$	20,0 $^{+0,25}_{-0,40}$	12,5	6,0	1,0	50,0	31,0	60	425	84	5	246
25 $^{0}_{-0,010}$	16,5	16,7	62 $^{0}_{-0,013}$	22,5 $^{+0,25}_{-0,40}$	14,0	6,0	1,0	58,5	34,5	68	672	134	5	415
30 $^{0}_{-0,010}$	19,0	19,0	75 $^{0}_{-0,013}$	26,0 $^{+0,25}_{-0,40}$	17,5	8,0	1,0	70,0	42,0	82	909	182	5	614
35 $^{0}_{-0,012}$	22,0	20,7	90 $^{0}_{-0,015}$	28,0 $^{+0,25}_{-0,40}$	22,0	8,0	1,0	84,0	50,5	98	1330	266	5	973
40 $^{0}_{-0,012}$	27,0	21,5	105 $^{0}_{-0,015}$	32,0 $^{+0,25}_{-0,40}$	24,5	9,0	1,0	97,0	59,0	114	1810	357	6	1590
45 $^{0}_{-0,012}$	31,0	25,5	120 $^{0}_{-0,015}$	36,5 $^{+0,25}_{-0,40}$	27,5	11,0	1,0	110,0	67,0	128	2470	486	6	2240
50 $^{0}_{-0,012}$	33,0	30,5	130 $^{0}_{-0,018}$	42,5 $^{+0,25}_{-0,40}$	30,0	10,0	1,0	120,0	70,0	139	2810	554	6	3140
60 $^{0}_{-0,015}$	37,0	34,0	150 $^{0}_{-0,018}$	45,0 $^{+0,25}_{-0,50}$	35,0	12,5	1,0	140,0	84,0	160	3820	748	6	4630
70 $^{0}_{-0,015}$	42,0	36,5	160 $^{0}_{-0,025}$	50,0 $^{+0,25}_{-0,50}$	35,0	13,5	1,0	153,0	94,5	176	4610	902	3	5370
80 $^{0}_{-0,015}$	43,5	38,0	180 $^{0}_{-0,025}$	50,0 $^{+0,25}_{-0,50}$	42,5	14,5	1,0	172,0	107,5	197	5700	1110	4	6910
100 $^{0}_{-0,020}$	51,0	46,0	210 $^{0}_{-0,030}$	59,0 $^{+0,25}_{-0,60}$	45,0	15,0	1,1	198,0	127,0	222	6470	1300	4	11000
120 [1] $^{0}_{-0,020}$	53,5	50,0	230 $^{0}_{-0,030}$	64,0 $^{+0,25}_{-0,60}$	52,5	16,5	1,1	220,0	145,0	250	7580	1530	3	14000
140 [1] $^{0}_{-0,025}$	61,0	54,0	260 $^{0}_{-0,035}$	72,0 $^{+0,35}_{-0,70}$	52,5	23,0	1,5	243,0	177,0	274	9040	1820	3	19100
160 [1] $^{0}_{-0,025}$	66,0	58,0	290 $^{0}_{-0,035}$	77,0 $^{+0,35}_{-0,70}$	65,0	23,0	1,5	271,0	200,0	313	10440	2100	2	25000
180 [1] $^{0}_{-0,025}$	74,0	62,0	320 $^{0}_{-0,040}$	86,0 $^{+0,35}_{-0,70}$	67,5	26,0	1,5	299,0	225,0	340	12070	2430	4	32800
200 [1] $^{0}_{-0,030}$	80,0	66,0	340 $^{0}_{-0,045}$	87,0 $^{+0,35}_{-0,80}$	70,0	27,0	1,5	320,0	247,0	365	15280	3070	1	35400

Materials:

Housing disk: Bearing steel to 100Cr6, Aisi 52100, hardened, ground, phosphated treated with molybdenum disulphide

Inner disk: Bearing steel to 100Cr6, Aisi 52100, hardened, ground, phosphated treated with molybdenum disulphide

[1] Price and availability on request

Spherical Plain Thrust Bearings - Maintenance Free

Series GE...AW

Spherical Plain Thrust Bearings.
Mating surface hard chromium/PTFE, maintenance free

For use with axial loads

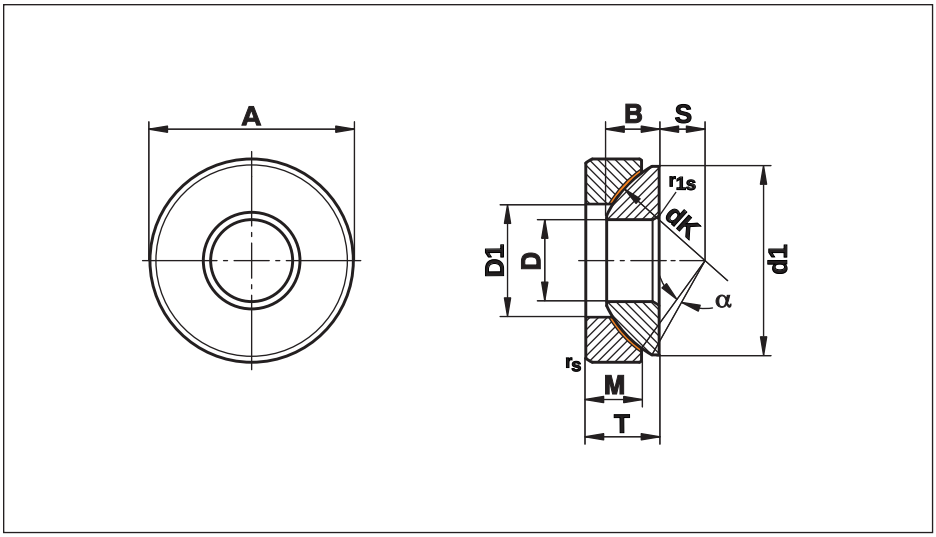

Size (D)	B	M	A	T	S	r_s, r_{1s} min	d_1 max	d_1 min	d_k	Axial load kN Static C_o	Axial load kN Dynamic C	Pivoting angle $\alpha \approx$	Weight g
10 $^{0}_{-0,008}$	7,5	7,0	30 $^{0}_{-0,009}$	9,5 $^{+0,25}_{-0,40}$	7,0	0,6	27,5	15,5	32	120	45	5	36
12 $^{0}_{-0,008}$	9,5	9,3	35 $^{0}_{-0,011}$	13,0 $^{+0,25}_{-0,40}$	8,0	0,6	32,0	18,0	38	165	65	5	72
15 $^{0}_{-0,008}$	11,0	10,8	42 $^{0}_{-0,011}$	15,0 $^{+0,25}_{-0,40}$	10,0	0,6	39,0	22,5	46	235	95	6	108
17 $^{0}_{-0,008}$	11,8	11,2	47 $^{0}_{-0,011}$	16,0 $^{+0,25}_{-0,40}$	11,0	0,6	43,5	27,0	52	275	110	4	137
20 $^{0}_{-0,010}$	14,5	13,8	55 $^{0}_{-0,013}$	20,0 $^{+0,25}_{-0,40}$	12,5	1,0	50,0	31,0	60	380	150	5	246
25 $^{0}_{-0,010}$	16,5	16,7	62 $^{0}_{-0,013}$	22,5 $^{+0,25}_{-0,40}$	14,0	1,0	58,5	34,5	68	600	245	5	415
30 $^{0}_{-0,010}$	19,0	19,0	75 $^{0}_{-0,013}$	26,0 $^{+0,25}_{-0,40}$	17,5	1,0	70,0	42,0	82	820	335	5	614
35 $^{0}_{-0,012}$	22,0	20,7	90 $^{0}_{-0,015}$	28,0 $^{+0,25}_{-0,40}$	22,0	1,0	84,0	50,5	98	1200	490	5	973
40 $^{0}_{-0,012}$	27,0	21,5	105 $^{0}_{-0,015}$	32,0 $^{+0,25}_{-0,40}$	24,5	1,0	97,0	59,0	114	1640	675	6	1590
45 $^{0}_{-0,012}$	31,0	25,5	120 $^{0}_{-0,015}$	36,5 $^{+0,25}_{-0,40}$	27,5	1,0	110,0	67,0	128	2240	915	6	2240
50 $^{0}_{-0,012}$	33,0	30,5	130 $^{0}_{-0,018}$	42,5 $^{+0,25}_{-0,40}$	30,0	1,0	120,0	70,0	139	2550	1040	6	3140
60 $^{0}_{-0,015}$	37,0	34,0	150 $^{0}_{-0,018}$	45,0 $^{+0,25}_{-0,50}$	35,0	1,0	140,0	84,0	160	3470	1360	6	4630
70 $^{0}_{-0,015}$	42,0	36,5	160 $^{0}_{-0,025}$	50,0 $^{+0,25}_{-0,50}$	35,0	1,0	153,0	94,5	176	4180	1640	3	5370
80 $^{0}_{-0,015}$	43,5	38,0	180 $^{0}_{-0,025}$	50,0 $^{+0,25}_{-0,50}$	42,5	1,0	172,0	107,5	197	5180	2030	4	6910
100 $^{0}_{-0,020}$	51,0	46,0	210 $^{0}_{-0,030}$	59,0 $^{+0,25}_{-0,60}$	45,0	1,1	198,0	127,0	222	5940	2230	4	11000
120 [1] $^{0}_{-0,020}$	53,5	50,0	230 $^{0}_{-0,030}$	64,0 $^{+0,25}_{-0,60}$	52,5	1,1	220,0	145,0	250	6960	2610	3	14000
140 [1] $^{0}_{-0,025}$	61,0	54,0	260 $^{0}_{-0,035}$	72,0 $^{+0,35}_{-0,70}$	52,5	1,5	243,0	177,0	274	8300	3120	3	19100
160 [1] $^{0}_{-0,025}$	66,0	58,0	290 $^{0}_{-0,035}$	77,0 $^{+0,35}_{-0,70}$	65,0	1,5	271,0	200,0	313	9560	3380	2	25000
180 [1] $^{0}_{-0,025}$	74,0	62,0	320 $^{0}_{-0,040}$	86,0 $^{+0,35}_{-0,70}$	67,5	1,5	299,0	225,0	340	11050	3910	4	32800
200 [1] $^{0}_{-0,030}$	80,0	66,0	340 $^{0}_{-0,040}$	87,0 $^{+0,35}_{-0,80}$	70,0	1,5	320,0	247,0	365	13990	4950	1	35400
220 [1] $^{0}_{-0,030}$	82,0	67,0	370 $^{0}_{-0,040}$	97,0 $^{+0,35}_{-0,80}$	75,0	1,5	350,0	265,5	388	13110	4640	7,0	44700
240 [1] $^{0}_{-0,030}$	87,0	73,0	400 $^{0}_{-0,040}$	103,0 $^{+0,35}_{-0,80}$	77,5	1,5	382,0	294,0	420	15560	5500	6,0	56900
260 [1] $^{0}_{-0,035}$	95,0	80,0	430 $^{0}_{-0,045}$	115,0 $^{+0,35}_{-0,80}$	82,5	1,5	409,0	317,0	449	17510	6190	7,0	71300
280 [1] $^{0}_{-0,035}$	100,0	85,0	460 $^{0}_{-0,045}$	110,0 $^{+0,35}_{-0,80}$	80,0	3,0	445,0	337,0	480	23400	8280	4,0	84700
300 [1] $^{0}_{-0,035}$	100,0	90,0	480 $^{0}_{-0,045}$	110,0 $^{+0,35}_{-0,80}$	80,0	3,0	460,0	356,0	490	25480	9010	3,5	88900
320 [1] $^{0}_{-0,040}$	105,0	91,0	520 $^{0}_{-0,050}$	116,0 $^{+0,35}_{-0,80}$	95,0	4,0	500,0	380,0	540	33260	11360	4,0	111000
340 [1] $^{0}_{-0,040}$	105,0	91,0	540 $^{0}_{-0,050}$	116,0 $^{+0,35}_{-0,80}$	95,0	4,0	510,0	380,0	550	33880	11570	4,0	117000
360 [1] $^{0}_{-0,040}$	115,0	95,0	560 $^{0}_{-0,050}$	125,0 $^{+0,35}_{-0,80}$	95,0	4,0	535,0	400,0	575	37630	12850	4,0	132000

Materials:

Housing disk: Bearing steel to 100Cr6, Aisi 52100, hardened with PTFE liner bonded to the inner surface
Inner disk: Bearing steel to 100Cr6, Aisi 52100, hardened, ground, polished, hard chrome plated
On request: stainless steel version

[1] Price and availability on request

Hydraulic Rod Ends to DIN 24555/ISO 8133

Series FPR...S

Rod Ends, fastened by hexagon socket head cap screw to DIN 912-8.8.
Spherical Plain Bearings, regreasable, fixed through caulking on both sides

For use in standard Hydraulic Cylinders 160 bar to ISO 6020/2

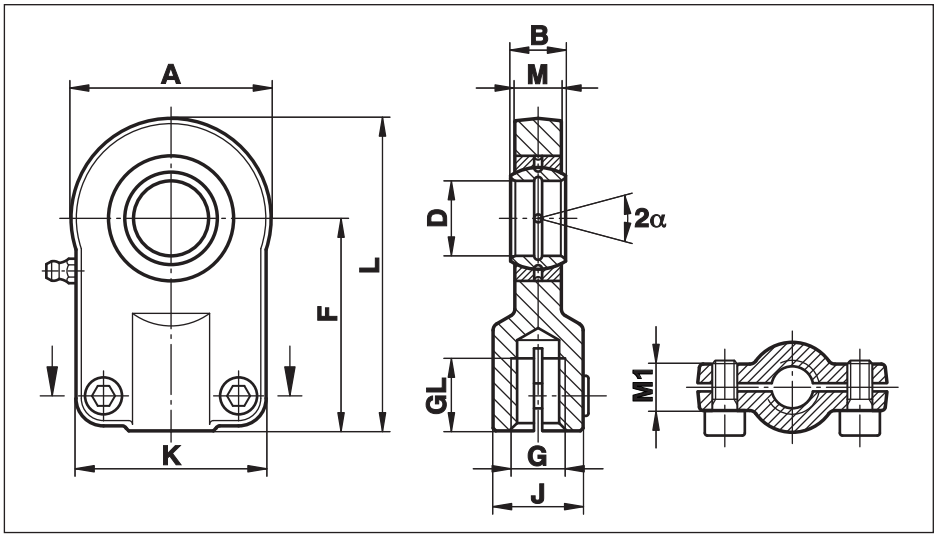

Size (D)	B	M	M1	A	F	L	K	J	G	GL	Torque Nm	Static load C 0 kN	Dynamic load C kN	Pivoting angle α	Weight g
12	10	8	13	35	42	59,5	40	17	M 10x1,25	15	10	17,0	10,8	11	150
16	14	11	13	45	48	70,5	45	21	M 12x1,25	17	10	28,5	21,1	10	250
20	16	13	17	55	58	85,5	55	25	M 14x1,5	19	25	42,5	30,0	9	430
25	20	17	17	65	68	100,5	62	30	M 16x1,5	23	25	67,0	48,0	7	730
30	22	19	19	80	85	125,0	77	36	M 20x1,5	29	49	108,0	62,0	6	1300
40	28	23	23	100	105	155,0	90	45	M 27x2	37	49	156,0	100,0	7	2300
50	35	30	30	120	130	190,0	105	55	M 33x2	46	86	245,0	156,0	6	4400
60	44	38	38	160	150	230,0	134	68	M 42x2	57	210	380,0	245,0	6	8400
80	55	47	47	205	185	287,5	156	90	M 48x2	64	410	585,0	400,0	6	15600
100	70	57	55	240	240	360,0	190	110	M 64x3	86	710	865,0	610,0	6	28000

Materials:

Housing: up to size 50 forged from heat-treated steel to C45, Aisi 1045
from size 60 made from nodular cast iron GS 400

Bearing: Steel on steel bearing GE...E, requiring lubrication

Greasing: Size 12 is not regreasable
from size 16 - 20 fitted with grease hole in housing
from size 25 fitted with hydraulic grease nipples to DIN 71412

On request: with left hand thread (FPL...S)

Hydraulic Rod Ends to DIN 24338/ISO 6982

Series FPR...CE

Rod Ends Cetop, recommendation RP 58H for standard Hydraulic Cylinders, fastened by hexagon socket head cap screws to DIN 912-8.8. Spherical Plain Bearings, regreasable, fixed with snap rings

Mounting dimensions to DIN 24333-24336 and ISO 6020/1, ISO 6022

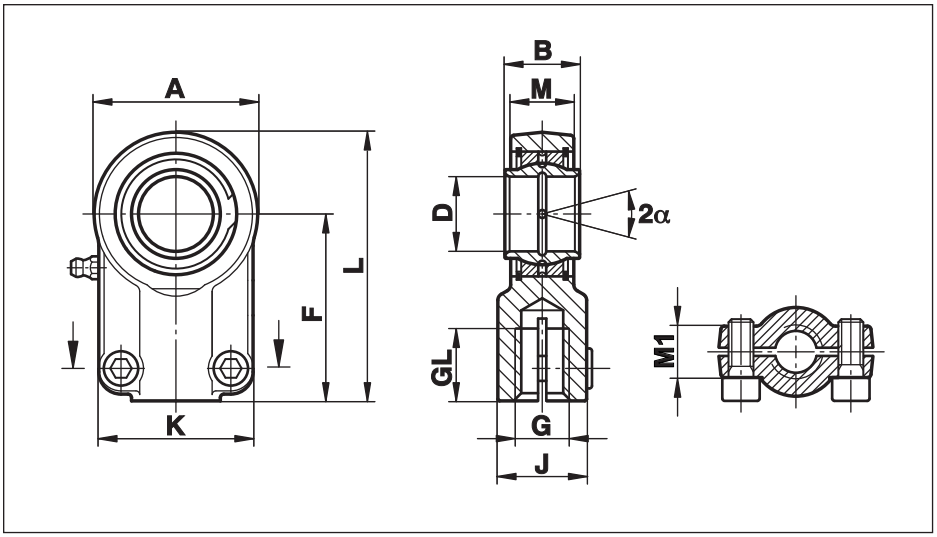

Size (D)	B	M	M1	A	F	L	K	J	G	GL	Torque Nm	Static load C 0 kN	Dynamic load C kN	Pivoting angle α	Weight g
12	12	11,0	15,0	32,0	38	54,0	32	16	M 12x1,25	17	6	24,5	10,8	4	100
16	16	13,0	15,0	40,0	44	64,0	40	21	M 14x1,5	19	10	36,5	17,6	4	210
20	20	17,0	19,0	47,0	52	75,0	47	25	M 16x1,5	23	25	48,0	30,0	4	350
25	25	22,0	19,0	58,0	65	96,0	54	30	M 20x1,5	29	25	78,0	48,0	4	620
32	32	28,0	22,0	71,0	80	118,0	66	38	M 27x2	37	49	114,0	67,0	4	1170
40	40	33,0	26,0	90,0	97	146,0	80	47	M 33x2	46	49	204,0	100,0	4	2150
50	50	41,0	32,0	109,0	120	179,0	96	58	M 42x2	57	86	310,0	156,0	4	4400
63	63	53,0	38,0	132,0	140	211,0	114	70	M 48x2	64	210	430,0	255,0	4	7600
70	70	57,0	42,0	155,0	160	245,0	135	80	M 56x2	76	210	540,0	315,0	4	10100
80	80	67,0	48,0	170,0	180	270,0	148	90	M 64x3	86	410	695,0	400,0	4	14500
90	90	72,0	52,0	185,0	195	296,0	160	100	M 72x3	91	410	750,0	490,0	4	17500
100	100	85,0	62,0	211,0	210	322,0	178	110	M 80x3	96	710	1060,0	610,0	4	28000
110	110	88,0	62,0	235,0	235	364,0	190	125	M 90x3	106	710	1200,0	655,0	4	32000
125	125	103,0	72,0	265,0	260	405,0	200	135	M 100x3	113	710	1430,0	950,0	4	46400
160	160	130,0	82,0	326,0	310	488,0	250	165	M 125x4	126	710	2200,0	1370,0	4	81000
200	200	162,0	102,0	418,0	390	620,0	320	215	M 160x4	161	1500	3650,0	2120,0	4	174000

Materials:

Housing: up to size 63 forged from heat-treated steel to C45, Aisi 1045
from size 70 made from nodular cast iron GS 400

Bearing: Steel on steel bearing GE...LO, requiring lubrication

Greasing: size 12 is not regreasable
from size 16 fitted with hydraulic grease nipples to DIN 71412

On request: with left hand thread (FPL...CE)

Hydraulic Rod Ends

Series FPR...N

Rod Ends with short thread, particular suited for Hydraulic Cylinders. Spherical Plain Bearings, regreasable, fixed with snap rings

For use with shortest relay distances and maximum stroke utilization

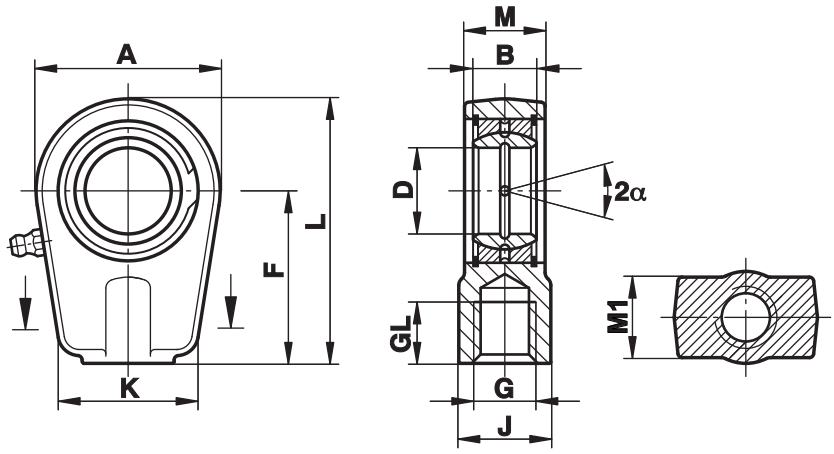

Size (D)	B	M	M1	A	F	L	K	J	G	GL	Static load C 0 kN	Dynamic load C kN	Pivoting angle α	Weight g
20	16	19	17	56	50	80,0	46	25	M 16x1,5	17	81,1	30	9	400
25	20	23	21	56	50	80,0	46	25	M 16x1,5	17	72,0	48	7	475
30	22	28	26	64	60	94,0	50	32	M 22x1,5	23	106,0	62	6	700
35	25	30	28	78	70	112,0	66	40	M 28x1,5	29	153,0	80	6	1150
40	28	35	33	94	85	135,0	76	49	M 35x1,5	36	250,0	100	7	2075
50	35	40	37	116	105	168,0	90	61	M 45x1,5	46	365,0	156	6	3575
60	44	50	46	130	130	200,0	120	75	M 58x1,5	59	400,0	245	6	6200
70	49	55	51	154	150	232,0	130	86	M 65x1,5	66	540,0	315	6	9200
80	55	60	55	176	170	265,0	160	105	M 80x2	81	670,0	400	6	13200
90	60	65	60	206	210	322,0	180	124	M 100x2	101	980,0	490	5	19600
100	70	70	65	231	235	360,0	200	138	M 110x2	111	1120,0	610	7	26310
110	70	80	74	266	265	407,0	220	152	M 120x3	125	1700,0	655	6	39200
120	85	90	84	340	310	490,0	257	172	M 130x3	135	2900,0	950	6	78000

Materials:

Housing: up to size 80 forged from heat-treated steel to C45, Aisi 1045
from size 90 made from nodular cast iron GS 400

Bearing: Steel on steel bearing GE...E, requiring lubrication

Greasing: fitted with hydraulic grease nipples to DIN 71412

On request: with left hand thread (FPL...N)

Series FPR...U

Rod Ends identical with FPR...N, in addition fastened by hexagon socket head cap screws to DIN 912-8.8. Spherical Plain Bearings, regreasable, fixed with snap rings

For use with shortest relay distances and maximum stroke utilization

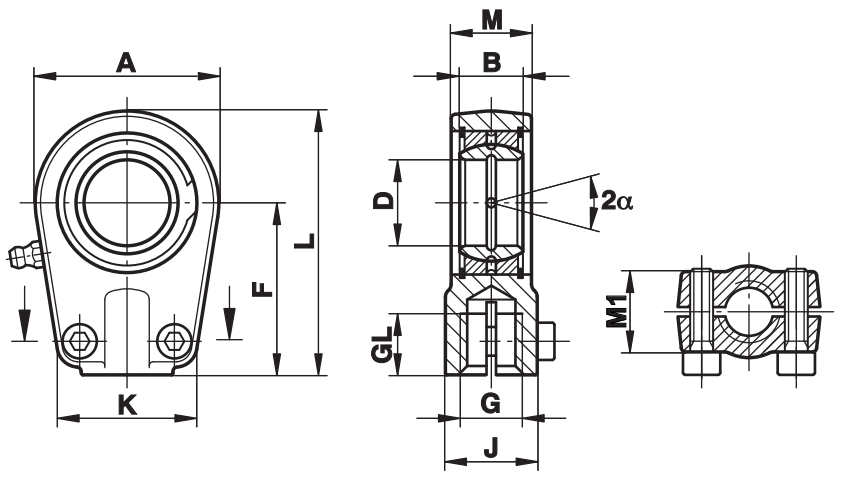

Size (D)	B	M	M1	A	F	L	K	J	G	GL	Torque Nm	Static load C 0 kN	Dynamic load C kN	Pivoting angle α	Weight g
20	16	19	17	56	50	80,0	46	25	M 16x1,5	17	25	81,1	30	9	400
25	20	23	21	56	50	80,0	46	25	M 16x1,5	17	25	72,0	48	7	475
30	22	28	26	64	60	94,0	50	32	M 22x1,5	23	25	106,0	62	6	700
35	25	30	28	78	70	112,0	66	40	M 28x1,5	29	49	153,0	80	6	1150
40	28	35	33	94	85	135,0	76	49	M 35x1,5	36	49	250,0	100	7	2075
50	35	40	37	116	105	168,0	90	61	M 45x1,5	46	86	365,0	156	6	3575
60	44	50	46	130	130	200,0	120	75	M 58x1,5	59	210	400,0	245	6	6200
70	49	55	51	154	150	232,0	130	86	M 65x1,5	66	210	540,0	315	6	9200
80	55	60	55	176	170	265,0	160	105	M 80x2	81	410	670,0	400	6	13200
90	60	65	60	206	210	322,0	180	124	M 100x2	101	410	980,0	490	5	19600
100	70	70	65	231	235	360,0	200	138	M 110x2	111	710	1120,0	610	7	26310
110	70	80	74	266	265	407,5	220	152	M 120x3	125	710	1700,0	655	6	39200
120	85	90	84	340	310	490,0	257	172	M 130x3	135	710	2900,0	950	6	78000

Materials:

Housing: up to size 80 forged from heat-treated steel to C45, Aisi 1045
from size 90 made from nodular cast iron GS 400

Bearing: Steel on steel bearing GE...E, requiring lubrication
on request also available with Spherical Plain Bearing GE...LO

Greasing: fitted with hydraulic grease nipples to DIN 71412

On request: with left hand thread (FPL...U)

Hydraulic Rod Ends

Series FMA...D

Rod Ends fastened by hexagon socket head cap screws to DIN 912-8.8.
Spherical Plain Bearings, regreasable, fixed with snap rings

For use with double action Hydraulic Cylinders

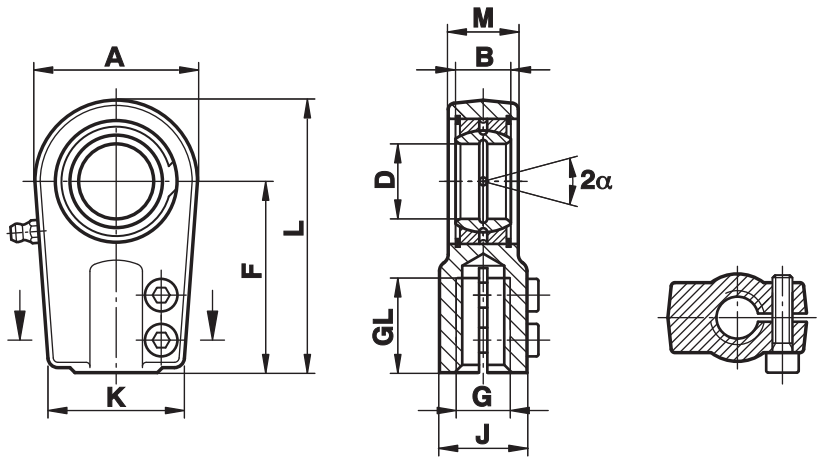

Size (D)	B	M	A	F	L	K	J	G	GL	Torque Nm	Static load C_0 kN	Dynamic load C kN	Pivoting angle α	Weight g
25	20	23	56	65	95	48	28	M 18x2	30	20	76	48	8	650
30	22	28	64	75	109	56	34	M 24x2	35	20	112	62	7	1000
35	25	30	78	90	132	70	44	M 30x2	45	40	180	80	7	1300
40	28	35	94	105	155	78	55	M 39x3	55	80	295	100	7	2400
50	35	40	116	135	198	88	70	M 50x3	75	80	445	156	7	4100
60	44	50	130	170	240	118	87	M 64x3	95	160	530	245	7	6500
70	49	55	154	195	278	138	105	M 80x3	110	160	720	315	6	9500
80	55	60	176	210	305	168	125	M 90x3	120	300	890	400	6	16000
90	60	65	206	250	363	180	150	M 100x3	140	300	1300	490	5	28000
100	70	70	230	275	400	188	170	M 110x4	150	300	1490	610	7	34000

Materials:

Housing: Nodular cast iron GS400

Bearing: Steel on steel bearing GE...E, requiring lubrication

Greasing: size 25 without lubrication fitting, but fitted with grease hole in housing
from size 30 fitted with hydraulic grease nipples to DIN 71412

On request: with left hand thread (FMAL...D)

Hydraulic Rod Ends - Weld-On Base

Series FS...C

Rod Ends series E to DIN ISO 12240-4, type S with circular surface for weld-on. Spherical Plain Bearings, regreasable, fixed through caulking on both sides

For Weld-on to piston Rod Ends

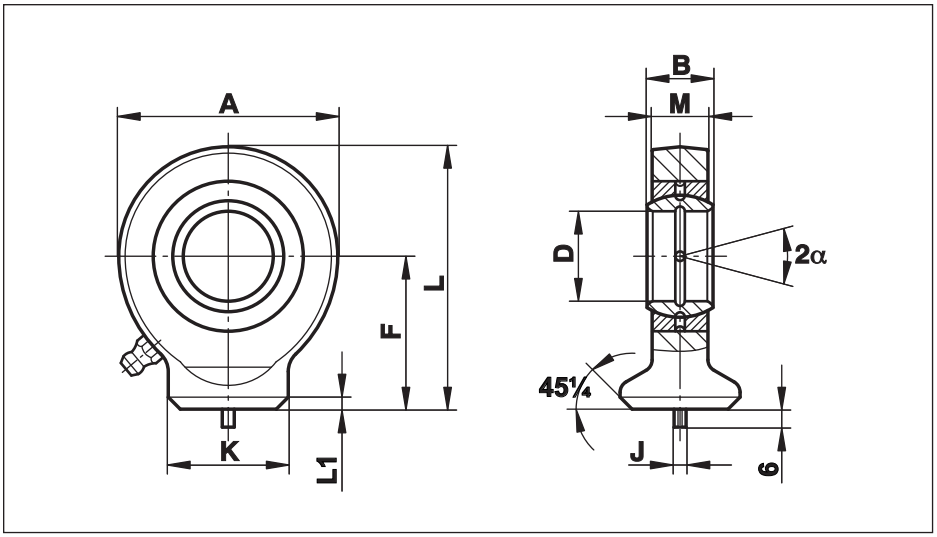

Size (D)	B	M	A	F	L	L1	K	J	Static load C₀ kN	Dynamic load C kN	Pivoting angle α	Weight g
10	9	7	29	24	38,5	2,0	15,0	3	15,6	8,15	12	40
12	10	8	34	27	44,0	2,0	17,5	3	21,6	10,80	11	65
15	12	10	40	31	51,0	2,5	21,0	4	32,0	17,00	8	120
17	14	11	46	35	58,0	3,0	24,0	4	40,0	21,20	10	180
20	16	13	53	38	64,5	3,0	27,5	4	54,0	30,00	9	250
25	20	17	64	45	77,0	4,0	33,5	4	72,0	48,00	7	450
30	22	19	73	51	87,5	4,0	40,0	4	95,0	62,00	6	675
35	25	21	82	61	102,0	4,0	47,0	4	125,0	80,00	6	950
40	28	23	92	69	115,0	5,0	52,0	4	156,0	100,00	7	1400
45	32	27	102	77	128,0	5,0	58,0	6	208,0	127,00	7	1910
50	35	30	112	88	144,0	6,0	62,0	6	250,0	156,00	6	2650
60	44	38	135	100	167,5	8,0	70,0	6	390,0	245,00	6	4600
70	49	42	160	115	195,0	10,0	80,0	6	510,0	315,00	6	7000
80	55	47	180	141	231,0	10,0	95,0	6	620,0	400,00	6	10800

Materials:

Housing: St 52-3, forged

Bearing: Steel on steel bearing GE...E, requiring lubrication
On request: available with maintenance free Spherical Plain Bearing GE...EC (see page 48) or in sizes 12, 20, 25, 40, 50, 70, 80, with Spherical Plain Bearing GE...LO (see page 58), requiring lubrication

Greasing: up to size 12 without lubrication fitting
from size 15 - 20 fitted with grease hole in housing
from size 25 fitted with hydraulic grease nipples to DIN 71412

On request: Housing: Stainless steel to 1.4401, Aisi 316, forged, from size 45 turned
Bearing: available with maintenance free stainless steel Spherical Plain Bearing GE...EC-NIRO (see page 49) in sizes 12, 15, 17, 20, 25, 30, 35, 40

Hydraulic Rod Ends - Weld-On Base

Series FS...N

Rod Ends with rectangular surface for Weld-on. Spherical Plain Bearings, regreasable, fixed with snap rings

For Weld-On to cylinder bottoms

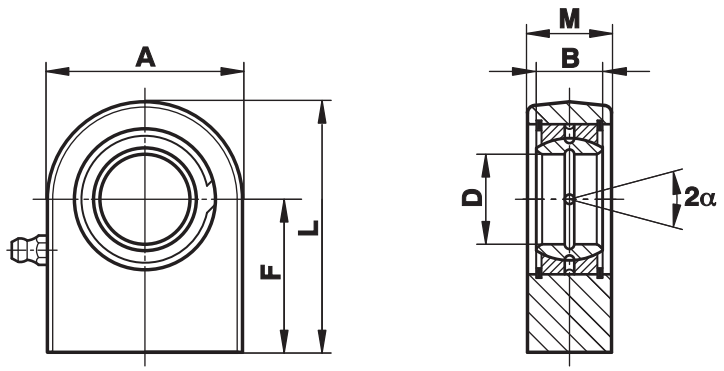

Size (D)	B	M	A	F	L	Static load C 0 kN	Dynamic load C kN	Pivoting angle α	Weight g
15	12	16,0	45	31	53,5	53,0	17,0	8	220
16	14	17,5	48	35	59,0	59,0	21,2	10	290
17	14	17,5	48	35	59,0	65,0	21,2	10	290
20	16	19,0	50	38	63,0	67,0	30,0	9	325
25	20	23,0	55	45	72,5	69,5	48,0	7	500
30	22	28,0	65	51	83,5	118,0	62,0	6	825
35	25	30,0	83	61	102,5	196,0	80,0	6	1475
40	28	35,0	100	69	119,0	305,0	100,0	7	2480
45	32	40,0	110	77	132,0	386,0	127,0	7	3450
50	35	40,0	123	88	149,5	441,0	156,0	6	4450
60	44	50,0	140	100	170,0	570,0	245,0	6	7130
70	49	55,0	164	115	197,0	724,0	315,0	6	10700
80	55	60,0	180	141	231,0	804,0	400,0	6	15100
90	60	65,0	226	150	263,0	1340,0	490,0	5	23400
100	70	70,0	250	170	295,0	1516,0	610,0	7	33100
110	70	80,0	295	185	332,5	2340,0	655,0	6	48500
120	85	90,0	360	210	390,0	3210,0	950,0	6	79500

Materials:

Housing: St 52-3, forged

Bearing: Steel on steel bearing GE...E, requiring lubrication

Greasing: fitted with hydraulic grease nipple to DIN 71412

On request: Housing: Stainless steel to 1.4401, Aisi 316
with maintenance free stainless steel Spherical Plain Bearing GE...EC-NIRO (see page 49)

Angle Joints to DIN 71802

consisting of ball stud to DIN 71803 and ball journal to DIN 71805

Form C with threaded stud and hexagon nut.
Form CS with threaded stud, hexagon nut and external clip

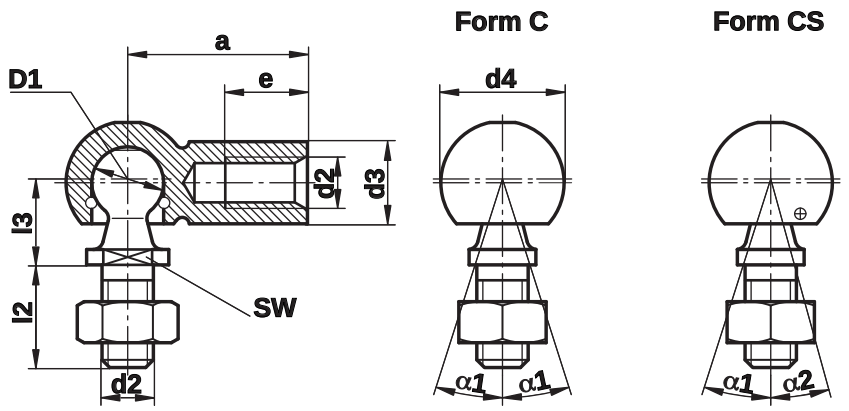

Size (D1)	a ±0,3	d2	d3 ±0,5	d4 ±0,5	e min	l2 ±0,3	l3 ±0,3	SW h14	α1 ≈	α2 ≈	Weight g
8	22	M 5	8	12,8	10,2	10,2	9	7	18	10	15,2
10	25	M 6	10	14,8	11,5	12,5	11	8	18	15	25,2
13	30	M 8	13	19,3	14,0	16,5	13	11	18	15	53,1
16	35	M 10	16	24,0	15,5	20,0	16	13	18	15	104,0
16	35	M 12	16	24,0	15,5	20,0	16	13	18	15	104,0
19	45	M 14x1,5	22	30,0	21,5	28,0	20	16	18	15	221,0
19	45	M 14x2	22	30,0	21,5	28,0	20	16	18	15	221,0

Materials:

Ball Journal: Steel, minimum strength Rm= 500N/mm²
Ball Stud: Steel, minimum strength Rm= 600N/mm²

Surface: blanc, zinc plated white, on request: yellow or black chromated

Alternative: stainless steel to 1.4305, Aisi 303

Ordering Details:

e.g. Angle Joint with external clip, Form CS with ball diameter D1 = 10 mm:
Angle Joint DIN 71802 - CS 10

Left Hand Thread: Left hand thread only at the ball journal available:
Angle Joint DIN 71802 - CS 10 LH

Loose Fit: increased internal clearance available:
Angle Joint DIN 71802 - CSL 10

Fork Heads
to
DIN 71752
Fork Ball Joints
to
DIN 71751

With ES-Bolt (clevis spring pin) or cotter bolt

For use to transmit linear movements

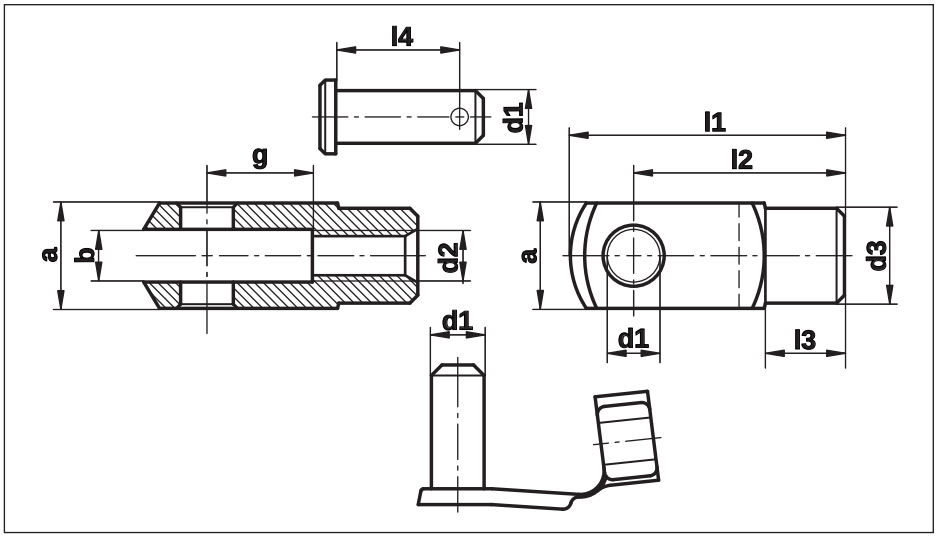

Size	g	a	b B13	d_1 H9/h11	d_2	d_3	l_1	l_2	l_3	l_4	Weight g ES-Bolt	Weight g Cotter Bolt	Weight g Fork Head DIN 71752
4x8	8	8	4	4	M4	8	21	16	6,0	9,2	1,5	1,4	5
4x16	16						29	24					7
5x10	10	10	5	5	M5	9	26	20	7,5	12,0	2,7	2,4	9
5x20	20						36	30			2,9		13
6x12	12	12	6	6	M6	10	31	24	9,0	14,5	4,6	4,4	15
6x24	24						43	36			5,0		22
8x16	16	16	8	8	M8	14	42	32	12,0	18,7	10,4	9,4	37
8x32	32						58	48			11,5		54
10x20	20	20	10	10	M10	18	52	40	15,0	23,2	19,0	17,8	74
10x40	40						72	60			20,3		116
12x24	24	24	12	12	M12	20	62	48	18,0	28,2	33,5	33,6	121
12x48	48						86	72			34,5		175
14x28	28	27	14	14	M14	24	72	56	22,5	31,2	45,0	50,7	178
14x56	56						101	85			50,0		258
16x32	32	32	16	16	M16	26	83	64	24,0	36,2	70,0	74,7	282
16x64	64						115	96			71,5		410
20x40	40	40	20	20	M20	34	105	80	30,0	47,0	132,0	130,0	520

Materials:

Standard Series: free-cutting steel to 9SMnPb28K, 12L13, tensile strength 550 to 700 N/mm²
Surface: zinc plated and chromated, on request: blanc, oiled or phosphated and oiled

On request: stainless series, stainless steel to 1.4305, Aisi 303
ES-Bolt not in stainless steel available

Ordering Details:

Fork Head: e.g. Form G with bore size **d1** = 12mm, split length **g** = 24mm:
Fork Head DIN 71752-G12x24

Fork Ball Joint: e.g. Fork Ball Joint with Cotter Bolt, with bore size **d1** = 12mm, split length **g** = 24mm:
Fork Ball Joint DIN 71751-A12x24

e.g. **Left Hand Thread: DIN 71752-G12x24LH** and **DIN 71751-A12x24LH**

RERS

Rubber Protector Caps made from Neoprene

Protects against dust, chemical substances and aggressive environment. Resistant to oil, grease, saltwater, chemical components and other substances. Temperature range from -20° till +120° Celsius or -4° till +248° Fahrenheit.
Can be completely filled with grease. Mounted easily with Seeger retaining pliers

* **Spacers separately on request**

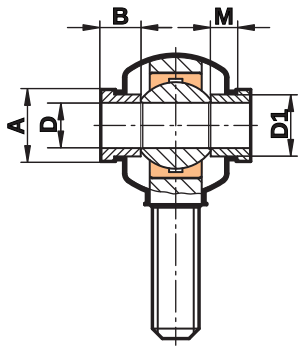

Rod End Size	Rubber Protector Cap Type	Spacers Type*	D	D1	B	M	A
6	RERS 1	DR 6	6	8,7	6	4	11
8	RERS 1	DR 8	8	10,3	6	4	12
10	RERS 2	DR 10	10	12,5	6	4	14
12	RERS 2	DR 12	12	15,0	8	6	17
14	RERS 3	DR 14	14	16,8	8	6	19
16	RERS 3	DR 16	16	19,0	8	6	21
18	RERS 3	DR 18	18	21,8	8	6	25
20	RERS 4	DR 20	20	24,3	10	8	28
22	RERS 4	DR 22	22	25,7	10	8	29
25	RERS 4	DR 25	25	29,7	10	8	33
30	RERS 5						
35	RERS 5						

RELS

Washer Seals
Rubber Seals vulcanized to stainless steel washer rings

Prevents dirt entering the mating surface. Easily mounted. Temperature resistant up to +110° Celsius or +230° Fahrenheit

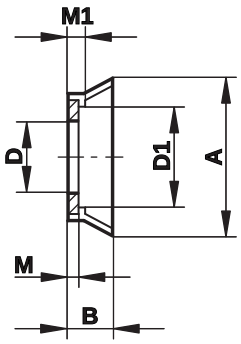

Rod End / Spherical Plain Bearing size	Washer Seal Type	D	D1	B	M	M1	A
5	RELS 5	5,25	8,3	2,4	0,50	0,8	11,2
6	RELS 6	6,25	9,5	3,1	0,69	0,9	12,7
8	RELS 8	8,25	12,4	5,1	1,20	1,4	17,8
10	RELS 10	10,25	13,5	5,6	1,20	1,4	20,3
12	RELS 12	12,25	18,5	6,4	1,20	1,7	28,6
14	RELS 14	14,25	18,5	6,4	1,20	1,7	28,6
16	RELS 16	16,25	22,4	6,8	1,20	1,7	31,7
18	RELS 18	18,25	22,6	8,3	1,20	1,7	32,7
20	RELS 20	20,25	25,2	10,2	1,20	1,7	38,1
25	RELS 25	25,25	33,8	12,7	1,50	2,3	53,3
30	RELS 30	30,25	55,9	14,0	1,50	2,3	56,7

Locking Nuts to DIN 934 / 439

Normal Form
DIN 934 / ISO 4032

Narrow Form
DIN 439 / 936

Locking Nuts with right or left hand thread. Steel zinc plated or stainless Steel A2

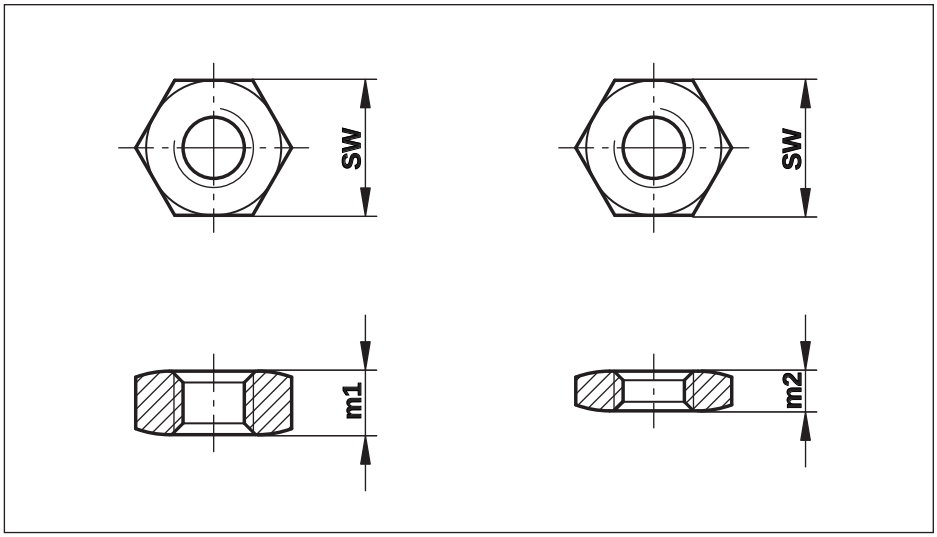

Nominal Size	Standard Thread Pitch	SW	Thread Pitch M ...												ISO 4032/DIN934		ISO 4036/DIN439	
			x0,4	x0,5	x0,7	x0,8	x1,0	x1,25	x1,5	x1,75	x2,0	x2,5	x3,0	x4,0	m_1	Weight g	m_2	Weight g
M 3	(M 3x0,5)	5,5		X											2,4	0,4	1,8	0,3
M 4	(M 4x0,7)	7,0			X										3,2	0,8	2,2	0,6
M 5	(M 5x0,8)	8,0				X									4,0	1,2	2,7	0,8
M 6	(M 6x1)	10,0					X								5,0	2,4	3,2	1,5
M 8	(M 8x1,25)	13,0					X	X							6,5	5,1	4,0	3,1
M 10	(M10x1,5)	17,0					X	X	X						8,0	11,1	5,0	6,9
M 12	(M 12x1,75)	19,0						X	X	X					10,0	16,3	6,0	9,8
M 14	(M 14x2)	22,0									X				11,0	24,0	7,0	15,0
M 16	(M 16x2)	24,0							X		X				13,0	32,0	8,0	19,5
M 18	(M 18x2,5)	27,0							X						15,0	47,0	9,0	28,0
M 20	(M 20x2,5)	30,0							X			X			16,0	61,0	10,0	38,0
M 22	(M22x2,5)	32,0							X						18,0	75,0	11,0	46,0
M 24	(M 24x3)	36,0									X				19,0	104,0	12,0	66,0
M 27	(M 27x3)	41,0									X				22,0	158,0	13,5	96,0
M 30	(M 30x3,5)	46,0									X				24,0	219,0	15,0	137,0
M 36	(M 36x4)	55,0									X		X		29,0	370,0	18,0	230,0
M 39	(M 39x4)	60,0											X		31,0	470,0	19,5	300,0
M 42	(M 42x4,5)	65,0									X		X		34,0	610,0	21,0	380,0
M 45	(M 45x4,5	70,0											X		36,0	750,0	22,5	470,0
M 48	(M 48x5)	75,0									X				38,0	910,0	24,0	580,0
M 52	(M 52x5)	80,0											X		42,0	1130,0	26,0	700,0
M 56	(M 56x5,5)	85,0												X	45,0	1350,0	28,0	840,0
M 64	(M 64x6)	95,0												X	51,0	1850,0	32,0	1160,0

X) available ex stock, Standard Form only with standard thread in stock

Materials: Steel zinc plated, strength grade: 04 or better
A2 is equivalent to stainless steel 1.4301, Aisi 304 and 1.4303, Aisi 305 or alternative material

Thread: Right hand or left hand threads

Remarks: Across-flats dimension SW, Weight, Width m1/m2 and Chamfer can differ from the table above and the DIN, because of different manufacturing methods
Locking Nuts DIN 439 according to **ISO 4036** (without chamfer) or **ISO 4035** (with chamfer).
Locking Nuts DIN 439 Fine Thread according to **ISO 8675** (with chamfer).

Ordering: e.g. **Locking Nut M 10 Left Hand** (Normal Form with standard thread) in stainless steel A2:

Details: **Locking Nut DIN 934-M10-A2-Left Hand**
e.g. **Locking Nut M 39x3 Right Hand** (Narrow Form) in Steel, zinc plated:
Locking Nut DIN 439-M39x3-04

Rod Ends / Spherical Plain Bearings

with high corrosion resistance

For use in marine applications and high corrosive environments

Standard Series in sizes 6 to 35mm:

Version: maintenance free, female or male thread, right or left hand thread
dimensions identical with data sheets on pages 32, 33 and 47

Materials:

Housing: stainless steel to 1.4057, Aisi 431 forged, polished

Insert: stainless steel to 1.4571, Aisi 316Ti with PTFE liner with stainless steel fabric

Ball: stainless steel to 1.4401, Aisi 316 ground, polished

Explanation: The high strength housing combined with high corrosion resistance enables the usage for a variety of applications.
Likewise with other stainless steel material, depending on the substances causing corrosion the danger of corrosion still exists, e.g. galvanic corrosion (bimetallic or contact corrosion), crack corrossion, opening corossion, stress crack corrosion etc.
To achieve a higher corrosion protection the following constructional measures are to be observed:
- protection against substances causing corrosion: RERS or RELS seals, FLURO catalogue page 74
- uncontrollable current, e.g. leakage current
- cathodic corrosion protection, e.g. sacrificial anode
- avoid cracks (crack corrosion)
- connecting components and material of corresponding material, no potential difference

On request: For applications with highest corrosion protection and on request FLURO can offer Rod Ends and Spherical Plain Bearings to DIN or to customer specifications to all common materials e.g. stainless steel to 1.4542 (17-4Ph), 1.4462, 1.4539, 2.4856 (INCONEL Alloy 625), bronze, Alu bronze, Titanium, just to list a few.

Höhn Precision Parts - this name represents quality production. Thirty years of experience guarantee the companies reliable capability. The continuously modernized machine park enables a flexible and economic production of turned and machined parts.
Variety for Höhn does mean that besides the turning, machining and grinding of parts, also complete components and assemblies are manufactured.
In agreement with the TÜV Southwest, Höhn received stamp authorization for continued re-stamping of material specification 3.1.B. since 1981. Höhn achieved also the DIN EN ISO 9001:2000 certification.

This connecting rod with bearing for carriages shows a constructive solution through the close cooperation between Höhn and FLURO.

5-axial
symmetric machining
(3-D measuring machine)

Production of all sorts of shafts, Ø 20 to Ø 120 x 1000 mm length.
Surface finish according to customer requirements.

Machining of the rod from Ø 10 to Ø 80 mm, chucking parts from Ø 10 to Ø 300 mm.

Höhn processes all sorts of steel e.g.: Titan, Hasteloy, 17-4Ph, non-iron and non-ferrous heavy metal. Though constant stock of stainless steel material such as 1.4104, Aisi 430F, 1.4301, Aisi 304, 1.4305, Aisi 303, 1.4571, Aisi 316Ti, 1.4541, Aisi 321 a prompt delivery response is guaranteed.

Inquiry Template Special Parts

Fax to: +49 (0) 74 28 / 93 85-25

Company: _____ Contact: _____ Phone: _____

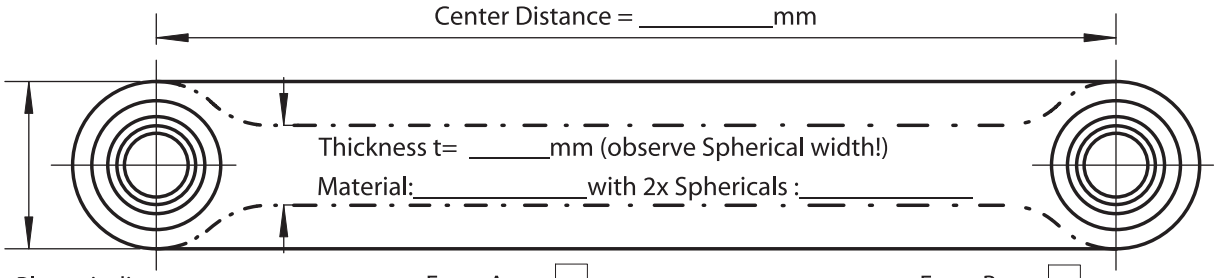

Please indicate: Form A ☐ Form B ☐

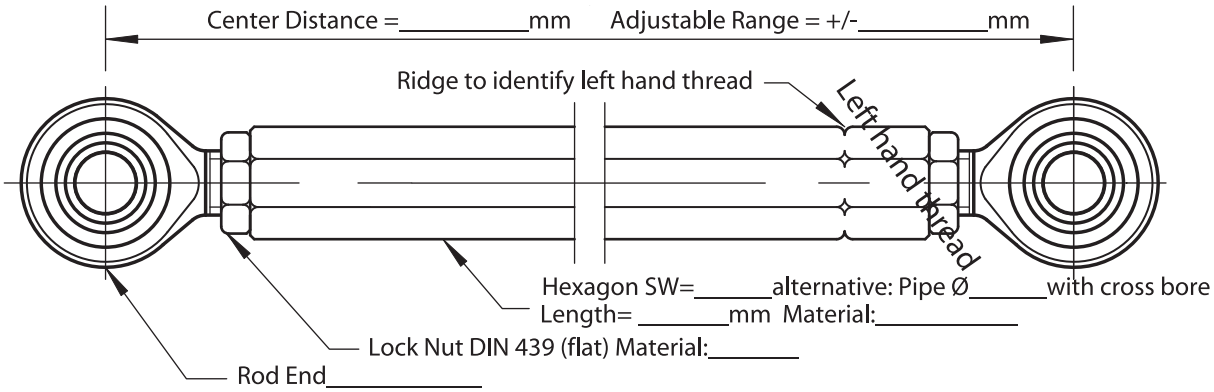

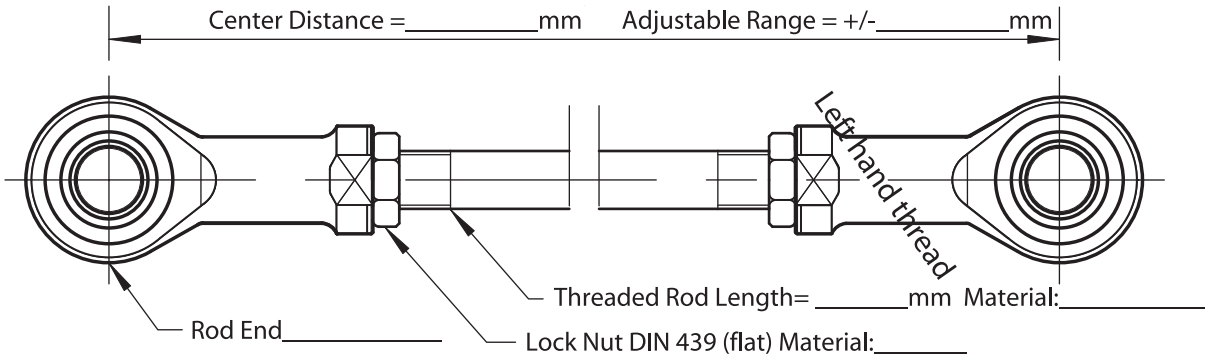

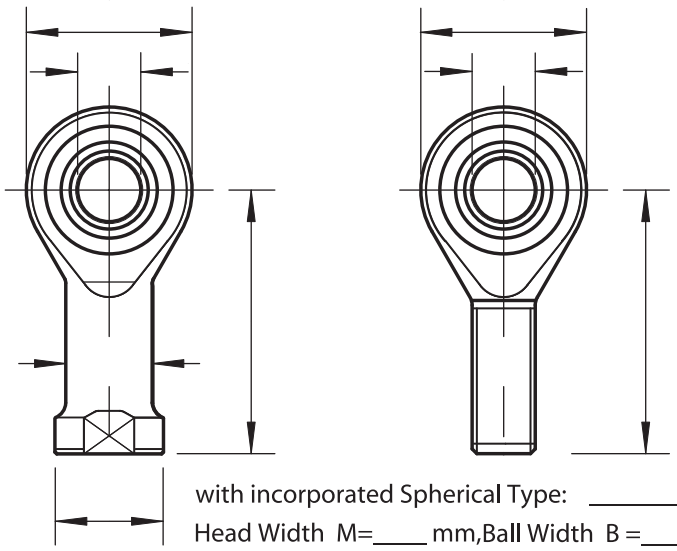

with incorporated Spherical Type: _____

Head Width M=____ mm,Ball Width B =____ mm

Thread Length GL=_____ mm, Thread G=_____

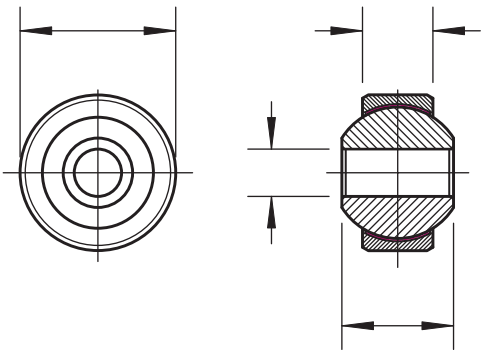

Material Ball: _____

Material Outer Ring: _____

Maintenance free: Yes ☐ No ☐

FLURO-Gelenklager GmbH

Custom-Made Products

Rosenfeld is situated between the city of Stuttgart and the lake Bodensee, in southern Germany. You can get to us easily from the international airport of Stuttgart by car. Drive Highway A81 south (towards Singen), exit at Oberndorf and follow the road to Rosenfeld. Our company's plant is situated in the midst of an industrial area on the right hand side behind the town's entrance. We invite you to pay a visit at our manufacturing plant to see our capability.

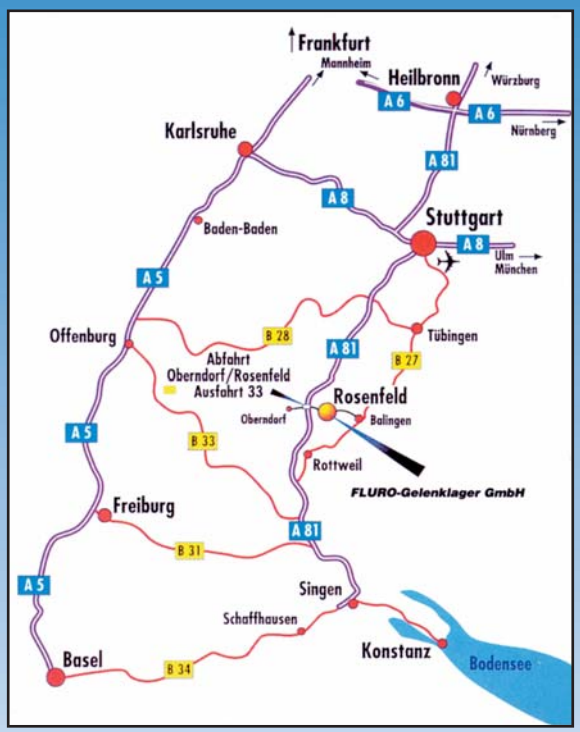

TÜV CERT
DIN EN ISO 9001:2000
Z.-Reg.-Nr. 12 100 19654 TMS

This is how you can get to us.

FLURO-Gelenklager GmbH

Siemensstrasse 13
D-72348 Rosenfeld / Germany
Phone +49 (0) 74 28 93 85-0
Fax +49 (0) 74 28 93 85-25
www.fluro.de
E-Mail: info@fluro.de