GEBR. REINFURT GMBH & CO. KG
HIGH-PRECISION BALL BEARINGS

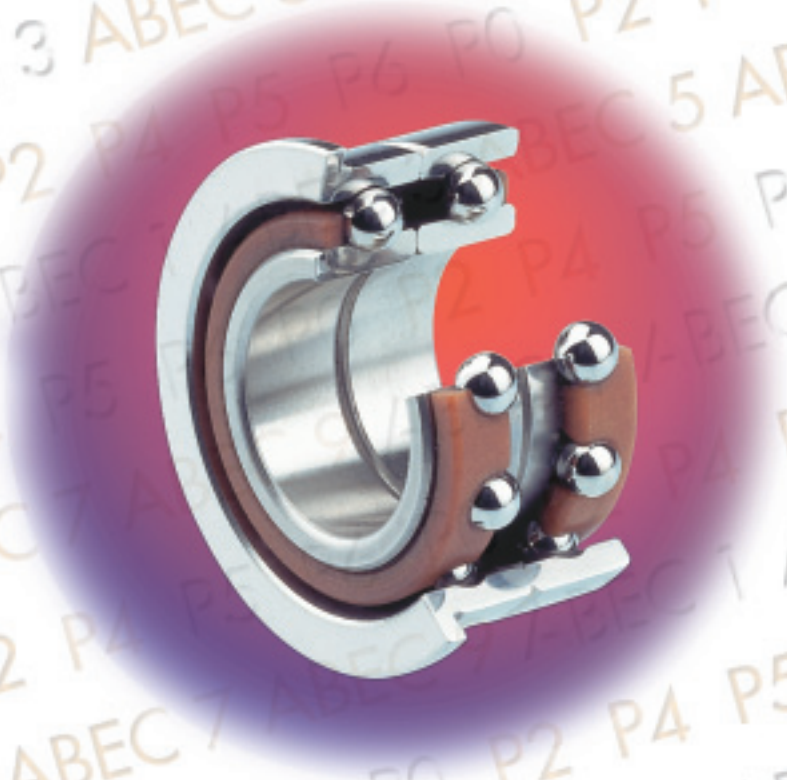

Small and Miniature Ball Bearings

Information given in earlier catalogues, which does not correspond with information contained in this issue, is obsolete.
We reserve the right to make alterations which may become necessary due to technical improvements.

Contents

Page	
2	The Company
3	Foreword
4	Product Range
6	The GRW Numbering System
8	Deep Groove Ball Bearings — metric, unshielded
14	Deep Groove Ball Bearings — metric, with non-contact shield
20	Deep Groove Ball Bearings — metric, with seal
26	Deep Groove Ball Bearings — inch, unshielded
28	Deep Groove Ball Bearings — inch, with non-contact shield
32	Deep Groove Ball Bearings — inch, with seal
34	Tolerance Table
36	Special Bearings
37	Spindle/Angular Contact Ball Bearings
38	Accessories
40	Retainers for Miniature Ball Bearings
42	Closures
43	Materials for Rings and Balls
44	Lubrications
46	Functional Tests
48	Limiting Speeds
50	Bearing Capacities
51	Fatigue Life
52	Mounting of Bearings
53	Shaft and Housing Shoulders
54	Fitting
56	Reduction in Radial Clearance
58	Calibration of Bore and Outside Diameter
59	Elastic Behaviour of Deep Groove Ball Bearings
60	Relationship between Radial Clearance, Axial Clearance and Contact Angle
62	Duplex Bearings
63	The Three Types of Duplex Assembly for Radial Ball Bearings
64	Misalignment
65	High-precision Ball Bearing Handling and Failure Analysis
66	Packaging
67	GRW Quality — Internationally Certified According to DIN EN ISO 9001
68	Explanation of Basic Terms
70	A Glance at the GRW Production Plant
72	Index

The Company

Administration and production facilities in Würzburg

The company headquarters in Würzburg, administration and production facilities, and the modern production facilities seven kilometres to the north in Rimpar.

More than 400 employees work on the development and manufacture of the high-precision ball bearings.

Rimpar production facilities

Foreword

Perfection in Miniature

The results of more than 50 years experience in our chosen field guarantees the precision and finish of our miniature ball bearings that can only be seen with the aid of a magnifying glass. However, these features are even more apparent when the bearings are fitted into instruments in the microelectronics, aviation and aerospace engineering, instrument, and dental fields because of their accuracy, reliability and smooth performance.

If required, GRW engineers and technicians will also develop individual system solutions in addition to the standard range shown in this catalogue, for example, complete ready-to-fit units. Short development periods and short lead-times thanks to modern production methods mean we are able to solve a wide variety of problems, supplying units to suit every application.

Contact our application engineers to discuss your technical requirements and problems. We look forward to hearing from you.

Technical application support: + 49 (0)931 79 52-4 40

Deep Groove Radial Bearings Single Row, without Filling Slot		Unshielded	Bore from	Bore to	Outer diameter from	Outer diameter to
without flange	metric	Page 8 to 13	1	17	3	40
	inch	Page 26 to 27	.0400″	.3750″	.1250″	.8750″
with flange	metric	Page 8 to 13 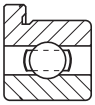	1,5	10	4	22
	inch	Page 26 to 27	.0469″	.3125″	.1562″	.5000″
with extended inner ring without flange	metric	Page 8 to 13 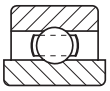	1,5	10	4	22
	inch	Page 26 to 27	.0469″	.3125″	.1562″	.5000″
with extended inner ring with flange	metric	Page 8 to 13 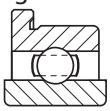	1,5	10	4	19
	inch	Page 26 to 27	.0469″	.3125″	.1562″	.5000″

Special Bearings

Groove in outer ring

'V' Groove in outer ring

Angular Contact

with non-contact shield					with seals				
	Bore		Outside Ø		TS –2TS or RS –2RS	Bore		Outside Ø	
Z or –2Z	from	to	from	to		from	to	from	to
Page 14 to 19 Page 28 to 31	1,5 .0469″	17 .3750″	4 .1562″	40 .8750″	Page 20 to 25 Page 32 to 33	2 .0781″	17 .3750″	6 .2500″	40 .8750″
Page 14 to 19 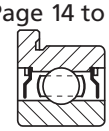 Page 28 to 31	1,5 .0469″	10 .3750″	4 .1562″	22 .8750″	Page 20 to 25 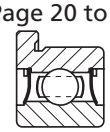 Page 32 to 33	2 .0781″	10 .3750″	6 .2500″	22 .8750″
Page 14 to 19 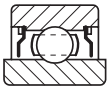 Page 28 to 31	2 .0469″	10 .3125″	5 .1562″	22 .5000″	Page 20 to 25 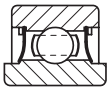 Page 32 to 33	2 .1875″	10 .2500″	6 .3125″	22 .6250″
Page 14 to 19 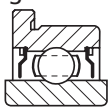 Page 28 to 31	2 .0469″	10 .3125″	5 .1562″	19 .5000″	Page 20 to 25 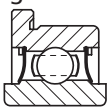 Page 32 to 33	2 .1875″	10 .2500″	6 .3125″	19 .6250″

Spherical outer ring

Square groove in outer ring

The GRW Numbering System

Material	Type	Basic Number	Closure	Quality	Radial Play
		625			**C2**
		1/8 B	**-2Z**	**ABEC 5**	**K35**
		608		**P4**	**D15**
SS	**FE**	**624**	**-2Z**	**P4**	**2**
– SAE 52100 Chrome Steel SS Stainless Steel X65Cr13 HY Hybrid bearing Ceramic balls Si_3N_4 Rings made of SAE 52100 Chrome Steel HYSS Hybrid bearing Ceramic balls Si_3N_4 Rings made of X65Cr13 SV X30CrMoN15-1 (upon request) SAE AMS 5898 Page 43	F Flanged outer ring E Extended inner ring Page 52	Pages 8 to 33	– Open bearing Z Single shield -2Z Double shield Z1 Single shield on flange side Z2 Single shield on side opposite to flange TS Single Teflon seal -2TS Double Teflon seal TS1 Single Teflon seal on flange side TS2 Single Teflon seal on opposite to flange side RS Single Perbunan rubber contact seal -2RS Double Perbunan rubber contact seal RZ Single Perbunan rubber seal non-contact -2RZ Double Perbunan rubber seal non-contact VS Single Viton seal -2VS Double Viton seal Page 42	Quality grade 0 is not shown See pages 34 & 35 for quality information	d 1 to 6 mm C2 0 to 6 µm normal 4 to 11 µm C3 10 to 20 µm C4 14 to 20 µm C5 18 to 28 µm d over 6 to 10 mm C2 0 to 6 µm normal 4 to 11 µm C3 10 to 20 µm C4 14 to 29 µm C5 20 to 37 µm d over 10 to 18 mm C2 0 to 9 µm normal 3 to 18 µm C3 11 to 25 µm C4 18 to 33 µm Normal radial play will not appear in the bearing number. C1/5 1 to 5 µm C4/8 4 to 8 µm C7/11 7 to 11 µm C10/15 10 to 15 µm C14/20 14 to 20 µm C18/28 18 to 28 µm K02 0 to .0002″ K13 .0001″ to .0003″ K24 .0002″ to .0004″ K35 .0003″ to .0005″ K46 .0004″ to .0006″ K58 .0005″ to .0008″ D15 contact angle 15° Page 60

Functional Tests	Bore and O.D. Calibration	Duplex Bearings	Retainer Type	Lubricant Quantity	Lubricant
GPR			**Y**		
GPR			**J**	**20%**	**G310**
GPR	**X**	**–1L**	**AC1 TA**		**L001**
GPR	**X**	**–1**	**J**	**140 MG**	**G340**
GPR Noise tested NG Not noise tested GPA Axial vibration tested R Followed by a figure indicates the starting torque at standard load e.g. R16 starting torque max. 16 µNm Pages 46, 47	X bore and O.D. in 2 Groups XB bore in 2 Groups XD O.D. in 2 Groups X4 bore and O.D. in 4 Groups X4B bore in 4 Groups X4D O.D. in 4 Groups Page 58	–1 Back to back –2 Face to face –3 Tandem Pages 62, 63 Preloading for spindle ball bearing L Light M Medium S Heavy Page 37	Y Brass ribbon retainer J Stainless steel ribbon retainer E Steel ribbon retainer JH Stainless steel snap retainer THB Phenolic snap retainer TNH Synthetic (polyamide) snap retainer TN9H Glassfibre reinforced synthetic snap retainer AC1 One outer ring land relieved AC2 One inner ring land relieved AC-version only in combination with one piece solid retainer or full ball complement. Pages 37, 40, 41	– Standard fill 20% Grease volume in percent of void space 140 MG Lubrication quantity in miligrams	L… Oil code G… Grease code B… Special treatment Pages 44, 45

# Deep Groove Ball Bearings – metric
unshielded(1)

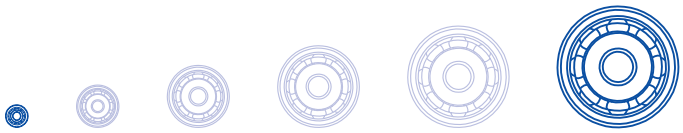

Dimensions mm / inch d	D	B	B_1	r_s min (2)	Types				Basic Type according to DIN (German Standard)
1 .0394	**3** .1181	**1** .0394		**0,05** .002	**681**				**618/1**
1 .0394	**4** .1575	**1,6** .0630		**0,1** .004	**691**				**619/1**
1,5 .0591	**4** .1575	**1,2** .0472	**2** .0787	**0,05** .002	**68/1,5**	**F68/1,5**	**E68/1,5**	**FE68/1,5**	**618/1,5**
1,5 .0591	**5** .1969	**2** .0787		**0,15** .006	**69/1,5**	F69/1,5			**619/1,5**
2 .0787	**5** .1969	**1,5** .0591	**2,3** .0906	**0,08** .003	**682**	**F682**	**E682**	**FE682**	**618/2**
2 .0787	**6** .2362	**2,3** .0906	**3,1** .1221	**0,15** .006	**692**	**F692**	**E692**	**FE692**	**619/2**
2,35(7) .0925	**5** .1969	**1,5** .0590		**0,08** .003	**67/2,35**				
2,35(7) .0925	**5,5** .2165	**2** .0787		**0,08** .003	**68/2,35**				
2,5 .0984	**6** .2362	**1,8** .0709	**2,6** .1024	**0,08** .003	**68/2,5**	**F68/2,5**	**E68/2,5**	**FE68/2,5**	**618/2,5**
2,5 .0984	**7** .2756	**2,5** .0984	**3,3** .1299	**0,15** .006	**69/2,5**	**F69/2,5**	E69/2,5	FE69/2,5	**619/2,5**
2,5 .0984	**8** .3150	**2,8** .1102	**3,6** .1417	**0,15** .006	**60/2,5**		E60/2,5		**60/2,5**
3 .1181	**6** .2362	**2** .0787		**0,08** .003	**673**	F673			**617/3**
3 .1181	**7** .2756	**2** .0787	**2,8** .1102	**0,1** .004	**683**	**F683**	**E683**	**FE683**	**618/3**
3 .1181	**8** .3150	**2,5** .0984		**0,15** .006	**693/003**				
3 .1181	**8** .3150	**3** .1181	**3,8** .1496	**0,15** .006	**693**	**F693**	**E693**	**FE693**	**619/3**
3 .1181	**10** .3937	**4** .1575	**4,8** .1890	**0,15** .006	**623**	**F623**	**E623**	**FE623**	**623**
4 .1575	**7** .2756	**2** .0787		**0,08** .003	**674**	F674			**617/4**
4 .1575	**9** .3543	**2,5** .0984	**3,3** .1299	**0,1** .004	**684**	**F684**	**E684**	**FE684**	**618/4**
4 .1575	**11** .4331	**4** .1575	**4,8** .1890	**0,15** .006	**694**	**F694**	E694	FE694	**619/4**
4 .1575	**12** .4724	**4** .1575	**4,8** .1890	**0,15** .006	**604**	**F604**	E604	FE604	**604**
4 .1575	**13** .5118	**5** .1969	**5,8** .2284	**0,2** .008	**624**	**F624**	**E624**	**FE624**	**624**
4 .1575	**16** .6299	**5** .1969	**5,8** .2284	**0,3** .012	**634**	**F634**	E634	FE634	**634**
4 .1575	**16** .6299	**5** .1969		**0,3** .012	**634D**				**634**

(1) Ball bearings without closure may be supplied with recesses.
Please indicate clearly on your order if you require bearings without recesses.

(2) $r_{s\,min}$ = minimum single bearing chamfer or maximum shaft or housing fillet radius.

Types indicated in darker print are readily available. Other types can only be supplied upon special request.

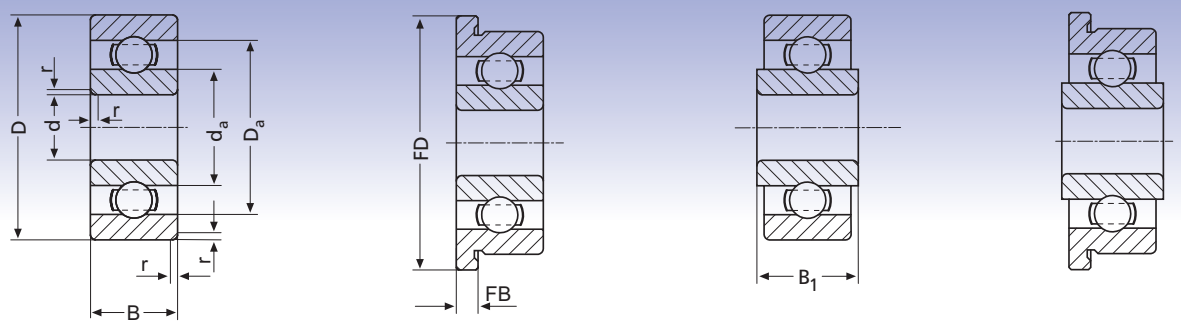

Flange Dimensions		Shaft & Housing Shoulders Diameters according to DIN 5418 Shaft Dia.		Housing Dia.	Number of Balls (5)	Ball Dia.	Load Ratings according to DIN ISO		Limiting Speed (6)
FD	**FB**	**d_a** min	**d_a** max (3)	**D_a** max (4)	Z	D_w	C_r [N]	C_{or} [N]	$n_{\upsilon r}$ [rpm]
		1,40 .055	2,30 .091	2,60 .102	7	0,5 0.1969	82	22	140.000
		1,60 .063	2,90 .141	3,40 .134	6	0,794 .03125	160	43	126.000
5 .197	**0,4** .016	1,90 .075	3,10 .122	3,60 .142	6	0,794 .03125	163	44	113.000
6,5 .256	**0,6** .024	2,30 .091	3,90 .154	4,20 .165	7	0,794 .03125	192	59	93.000
6,1 .240	**0,5** .020	2,50 .098	3,90 .154	4,50 .177	7	0,794 .03125	192	59	90.000
7,5 .295	**0,6** .024	2,80 .110	4,30 .169	5,20 .205	7	1 .0394	286	90	91.000
		2,50 .098	3,90 .154	4,50 .177	7	0,794 .03125	192	59	93.000
		2,90 .114	4,30 .169	5,00 .197	7	1 .0394	286	90	91.000
7,1 .280	**0,5** .020	3,00 .118	4,80 .189	5,50 .217	7	1 .0394	289	92	81.000
8,5 .335	**0,7** .028	3,30 .130	5,60 .220	6,30 .248	8	1,191 .0469	432	149	71.000
		3,30 .130	5,60 .220	7,20 .283	8	1,191 .0469	432	149	81.000
7,2 .283	**0,6** .024	3,50 .137	5,00 .198	5,40 .216	8	1 .0394	195	60	81.000
8,1 .319	**0,5** .020	3,60 .142	5,70 .224	6,40 .252	8	1,191 .0469	432	149	71.000
		3,80 .149	6,50 .256	7,20 .283	7	1,588 .0625	644	215	60.000
9,5 .375	**0,7** .028	3,80 .149	6,50 .256	7,20 .283	7	1,588 .0625	644	215	67.000
11,5 .453	**1** .039	4,40 .173	7,60 .299	8,60 .339	8	1,588 .0625	725	265	62.000
8,2 .322	**0,6** .024	4,50 .177	6,00 .236	6,50 .256	9	1 .0394	345	130	63.000
10,3 .406	**0,6** .024	4,60 .181	7,30 .287	8,40 .331	7	1,588 .0625	658	226	62.000
12,5 .492	**1** .039	4,80 .183	7,90 .311	10,20 .402	8	1,588 .0625	730	271	66.000
13,5 .532	**1** .039	5,40 .213	8,90 .350	10,60 .417	8	1,588 .0625	734	282	56.000
15 .591	**1** .039	5,80 .228	10,10 .398	11,20 .441	7	2,381 .0938	1.339	488	52.000
18 .709	**1** .039	6,40 .252	12,40 .488	13,60 .535	8	2,5 .0984	1.646	663	39.000
18 .709	**1** .039	6,40 .252	12,40 .488	13,60 .535	6	3,175 .1250	1.935	677	44.000

(3) Not applicable to bearings with extended inner ring.
(4) Not applicable to flanged bearings.
(5) The number of balls may vary due to different types of retainer.
(6) See chapter "Limiting Speeds", pages 48, 49.
(7) Tolerance of bore +12 µm to +3 µm.
Subject to change due to technical improvements.

# Deep Groove Ball Bearings – metric
unshielded(1)

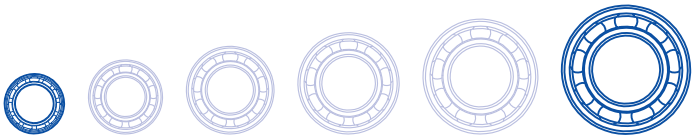

Dimensions mm / inch d	D	B	B_1	r_s min (2)	Types				Basic Type according to DIN (German Standard)
5 .1969	**8** .3150	**2** .0787		**0,08** .003	**675**	F675			**617/5**
5 .1969	**11** .4331	**3** .1181	**3,8** .1496	**0,15** .006	**685**	**F685**	E685	FE685	**618/5**
5 .1969	**13** .5118	**4** .1575	**4,8** .1890	**0,2** .008	**695**	**F695**	E695	FE695	**619/5**
5 .1969	**14** .5512	**5** .1969	**5,8** .2284	**0,2** .008	**605**	**F605**	E605	FE605	**605**
5 .1969	**16** .6299	**5** .1969	**5,8** .2284	**0,3** .012	**625**	**F625**	**E625**	**FE625**	**625**
5 .1969	**16** .6299	**5** .1969		**0,3** .012	**625D**				**625**
5 .1969	**19** .7480	**6** .2362	**6,8** .2677	**0,3** .012	**635**	**F635**	E635	FE635	**635**
6 .2362	**10** .3937	**2,5** .0984		**0,15** .006	**676**(8)				**617/6**
6 .2362	**13** .5118	**3,5** .1378	**4,3** .1693	**0,15** .006	**686**	**F686**	**E686**	**FE686**	**618/6**
6 .2362	**15** .5906	**5** .1969	**5,8** .2284	**0,2** .008	**696**	**F696**	E696	FE696	**619/6**
6 .2362	**16** .6299	**5** .1969		**0,3** .012	**625/0002**				
6 .2362	**19** .7480	**6** .2362	**6,8** .2677	**0,3** .012	**626**	**F626**	E626	FE626	**626**
7 .2756	**11** .4331	**2,5** .0984		**0,15** .006	**677**(8)				**617/7**
7 .2756	**14** .5512	**3,5** .1378	**4,3** .1693	**0,15** .006	**687**	**F687**	E687	FE687	**618/7**
7 .2756	**17** .6693	**5** .1969	**5,8** .2284	**0,3** .012	**697**	**F697**	E697	FE697	**619/7**
7 .2756	**19** .7480	**6** .2362	**6,8** .2677	**0,3** .012	**607**	**F607**	E607	FE607	**607**
7 .2756	**22** .8661	**7** .2756		**0,3** .012	**627**	**F627**			**627**
8 .3150	**12** .4724	**2,5** .0984		**0,15** .006	**678**(8)				**617/8**
8 .3150	**16** .6299	**4** .1575	**4,8** .1890	**0,2** .008	**688**	**F688**	E688	FE688	**618/8**
8 .3150	**19** .7480	**6** .2362	**6,8** .2677	**0,3** .012	**698**	**F698**	E698	FE698	**619/8**
8 .3150	**22** .8661	**6** .2362		**0,3** .012	**608/003**				
8 .3150	**22** .8661	**7** .2756		**0,3** .012	**608**	**F608**	E608	FE608	**608**
9 .3543	**14** .5512	**3** .1181		**0,15** .006	**679**				**617/9**
9 .3543	**17** .6693	**4** .1575	**4,8** .1890	**0,2** .008	**689**	**F689**	E689	FE689	**618/9**

(1) Ball bearings without closure may be supplied with recesses.
Please indicate clearly on your order if you require bearings without recesses.

(2) $r_{s\,min}$ = minimum single bearing chamfer or maximum shaft or housing fillet radius.

Types indicated in darker print are readily available. Other types can only be supplied upon special request.

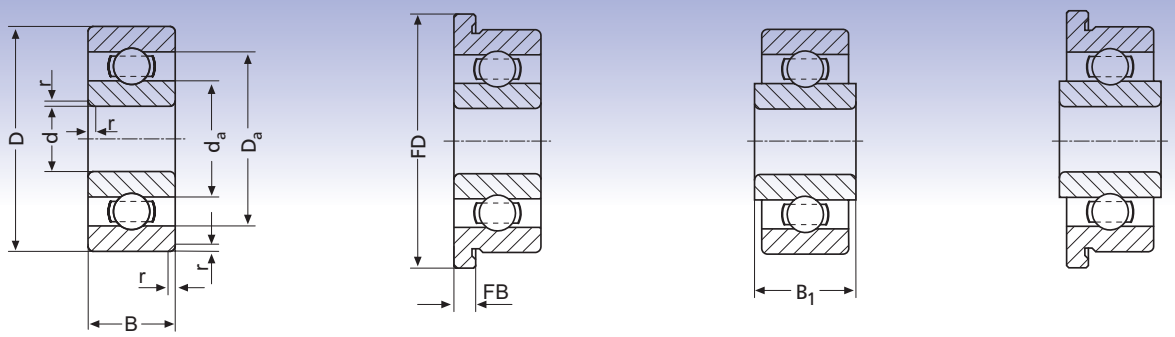

Flange Dimensions		Shaft & Housing Shoulders Diameters according to DIN 5418			Number of Balls (5)	Ball Dia.	Load Ratings according to DIN ISO		Limiting Speed (6)
		Shaft Dia.		Housing Dia.					
FD	**FB**	**d_a** min	**d_a** max (3)	**D_a** max (4)	Z	D_w	C_r [N]	C_{or} [N]	$n_{\upsilon r}$ [rpm]
9,2 .362	**0,6** .024	5,50 .217	7,00 .276	7,50 .295	11	1 .0394	390	160	52.000
12,5 .492	**0,8** .032	5,80 .228	6,70 .264	10,70 .421	8	1,588 .0625	734	282	52.000
15 .591	**1** .039	6,40 .252	9,70 .382	11,60 .457	10	1,588 .0625	851	366	49.000
16 .630	**1** .039	6,40 .252	10,80 .425	12,60 .496	8	1,984 .0781	1.096	437	50.000
18 .709	**1** .039	7,40 .291	12,40 .488	13,60 .357	8	2,5 .0984	1.646	663	40.000
18 .709	**1** .039	7,40 .291	12,40 .488	13,60 .357	6	3,175 .1250	1.935	677	45.000
22 .868	**1,5** .059	7,40 .291	15,10 .594	16,60 .654	8	3,175 .1250	2.522	1.057	33.000
		6,50 .256	8,00 .315	8,50 .335	10	1,191 .0469	503	215	46.000
15 .591	**1** .039	6,80 .268	10,80 .425	12,20 .480	8	1,984 .0781	1.096	437	44.000
17 .669	**1,2** .047	7,40 .291	11,50 .453	13,60 .535	9	1,984 .0781	1.186	505	46.000
		8,40 .331	12,40 .488	13,60 .535	8	2,5 .0984	1.646	663	41.000
22 .866	**1,5** .059	8,40 .331	15,10 .594	16,60 .654	8	3,175 .1250	2.522	1.057	34.000
		7,50 .295	9,00 .354	9,50 .374	9	1,191 .0469	462	199	40.000
16 .630	**1** .039	7,80 .307	11,60 .457	13,20 .520	9	1,984 .0781	1.186	505	41.000
19 .748	**1,2** .047	9,00 .354	13,60 .535	15,00 .591	9	2,5 .0984	1.795	776	39.000
22 .866	**1,5** .059	9,00 .354	15,10 .594	17,00 .669	8	3,175 .1250	2.522	1.057	38.000
25 .984	**1,5** .059	9,40 .370	17,30 .681	19,60 .772	7	3,969 .15625	3.369	1.363	35.000
		8,50 .335	10,00 .394	10,50 .413	12	1,191 .0469	551	270	35.000
18 .709	**1** .039	9,40 .370	13,50 .531	14,60 .575	9	2,5 .0984	1.795	776	38.000
22 .866	**1,5** .059	10,00 .394	14,60 .574	17,00 .669	9	2,5 .0984	1.798	797	40.000
		10,00 .394	17,30 .681	20,00 .787	7	3,969 .15625	3.369	1.363	34.000
25 .984	**1,5** .059	10,00 .394	17,30 .681	20,00 .787	7	3,969 .15625	3.369	1.363	38.000
		9,50 .374	11,00 .433	12,50 .492	12	1,191 .0469	536	276	33.000
19 .748	**1** .039	10,40 .409	14,50 .571	15,60 .614	9	2,5 .0984	1.798	797	34.000

(3) Not applicable to bearings with extended inner ring.
(4) Not applicable to flanged bearings.
(5) The number of balls may vary due to different types of retainer.
(6) See chapter "Limiting Speeds", pages 48, 49.
(8) Available in different width with closure.
Subject to change due to technical improvements.

# Deep Groove Ball Bearings – metric
unshielded(1)

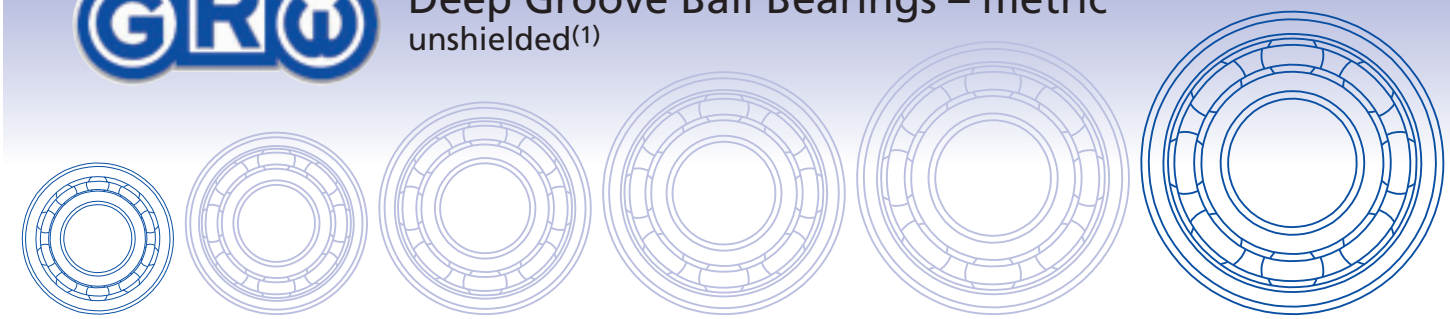

Dimensions mm / inch					Types				Basic Type according to DIN (German Standard)
d	D	B	B_1	r_s min (2)					
9 .3543	20 .7874	6 .2362		0,3 .012	699				619/9
9 .3543	24 .9449	7 .2756		0,3 .012	609				609
9 .3543	24 .9449	7 .2756		0,3 .012	609D				609
9 .3543	26 1.0236	8 .3150		0,3 .012	629				629
10 .3937	15 .5906	3 .1181		0,15 .006	6700(8)				61700
10 .3937	19 .7488	5 .1969	5,8 .2284	0,3 .012	6800	F6800	E6800	FE6800	61800
10 .3937	22 .8661	6 .2362		0,3 .012	6900				61900
10 .3937	26 1.0236	8 .3150		0,3 .012	6000				6000
10 .3937	30 1.181	9 .3543		0,6 .024	6200				6200
10 .3937	30 1.0236	9 .3543		0,6 .024	6200D				6200
12 .4724	21 .8267	5 .1969		0,3 .012	6801				61801
12 .4724	24 .9449	6 .2362		0,3 .012	6901				61901
12 .4724	28 1.1024	8 .3150		0,3 .012	6001				6001
12 .4724	32 1.2598	10 .3937		0,6 .024	6201				6201
15 .5906	24 .9449	5 .1969		0,3 .012	6802				61802
15 .5906	28 1.1024	7 .2756		0,3 .012	6902				61902
15 .5906	32 1.2598	9 .3543		0,3 .012	6002				6002
15 .5906	35 1.3780	11 .4331		0,6 .024	6202				6202
17 .6693	26 1.0236	5 .1969		0,3 .012	6803				61803
17 .6693	30 1.1811	7 .2756		0,3 .012	6903				61903
17 .6693	35 1.3780	10 .3937		0,3 .012	6003				6003
17 .6693	40 1.5748	12 .4724		0,6 .024	6203				6203

(1) Ball bearings without closure may be supplied with recesses.
Please indicate clearly on your order if you require bearings without recesses.

(2) $r_{s\,min}$ = minimum single bearing chamfer or maximum shaft or housing fillet radius.

Types indicated in darker print are readily available. Other types can only be supplied upon special request.

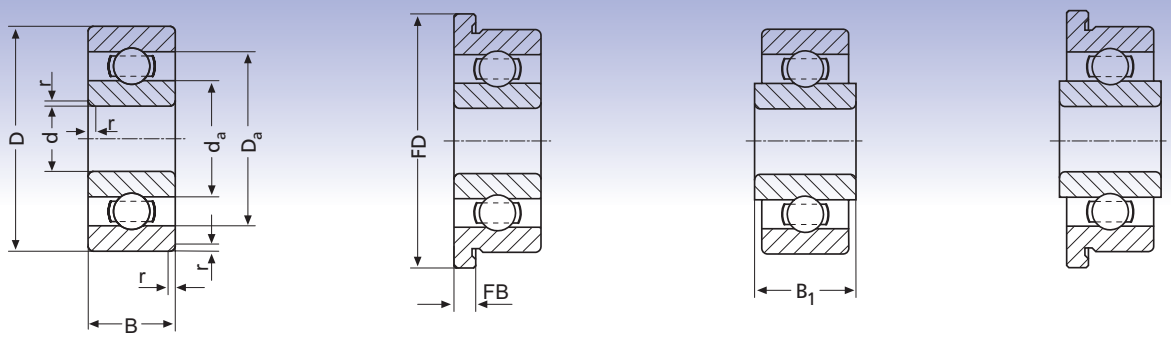

Flange Dimensions		Shaft & Housing Shoulders Diameters according to DIN 5418 Shaft Dia.		Housing Dia.	Number of Balls (5)	Ball Dia.	Load Ratings according to DIN ISO		Limiting Speed (6)
FD	**FB**	**d_a** min	**d_a** max (3)	**D_a** max (4)	Z	D_w	C_r [N]	C_{or} [N]	$n_{\upsilon r}$ [rpm]
		11,00 .433	15,80 .622	18,00 .709	10	2,5 .0984	1.922	915	35.000
		11,00 .433	18,90 .744	22,00 .866	7	3,969 .15625	3.435	1.430	33.000
		11,00 .433	18,90 .744	22,00 .866	8	3,969 .15625	3.758	1.632	32.000
		11,40 .499	20,70 .815	23,60 .929	7	4,763 .1875	4.698	1.982	29.000
		10,50 .413	12,00 .472	13,50 .532	11	1,588 .0625	881	435	30.000
21 .827	**1** .039	12,00 .472	15,80 .622	17,00 .669	10	2,5 .0984	1.922	915	34.000
		12,00 .472	17,80 .701	20,00 .787	8	3,175 .1250	2.555	1.129	31.000
		12,40 .488	20,70 .815	23,60 .929	7	4,763 .1875	4.698	1.982	32.000
		14,20 .559	23,20 .913	25,80 1.016	7	5,556 .2188	6.100	2.600	29.000
		14,20 .559	23,20 .913	25,80 1.016	8	4,763 .1875	5.236	2.374	27.000
		14,00 .551	17,90 .705	19,00 .748	12	2,381 .09375	1.930	900	30.000
		14,00 .551	16,30 .641	22,00 .866	10	3,175 .1250	2.971	1.452	34.000
		14,00 .559	24,10 .945	26,00 1.024	9	3,969 .15625	5.237	2.359	31.000
		16,22 .639	27,00 1.063	27,80 1.095	7	6 .2363	7.073	3.100	26.000
		17,00 .669	20,90 .823	22,00 .866	14	2,381 .09375	2.080	1.100	24.000
		17,00 .669	19,00 .748	26,00 1.024	11	3,175 .1250	4.445	2.268	32.000
		17,00 .669	27,90 1.098	30,00 1.181	9	4,763 .1875	5.676	2.819	26.000
		19,20 .756	30,20 1.189	30,90 .819	8	6 .2362	7.939	3.744	23.000
		19,00 .748	22,90 .902	24,00 .945	16	2,381 .09375	2.240	1.270	22.000
		19,00 .748	20,90 .823	28,00 1.102	11	3,969 .15625	4.723	2.547	30.000
		19,00 .748	30,40 1.197	33,00 1.299	10	4,763 .1875	6.172	3.267	23.000
		21,20 .835	34,00 1.339	35,80 1.409	8	6,747 .2656	9.811	4.734	20.000

(3) Not applicable to bearings with extended inner ring.
(4) Not applicable to flanged bearings.
(5) The number of balls may vary due to different types of retainer.
(6) See chapter "Limiting Speeds", pages 48, 49.
(8) Available in different width with closure.
Subject to change due to technical improvements.

Deep Groove Ball Bearings – metric
with non-contact shield

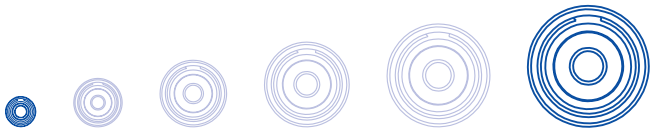

Dimensions mm / inch					Types				Basic Type according to DIN (German Standard)
d	**D**	**B**	**B_1**	**r_s** min (2)		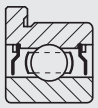	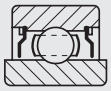	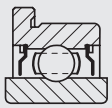	
1,5 .0591	**4** .1575	**2** .0787		**0,05** .002	**68/1,5-2Z**	**F68/1,5-2Z**			**638/1,5**
1,5 .0591	**5** .1969	**2** .0787		**0,15** .006	**69/1,5/002-2Z**				**619/1,5**
1,5 .0591	**5** .1969	**2,6** .1924		**0,15** .006	**69/1,5-2Z**	**F69/1,5-2Z**			**639/1,5**
2 .0787	**5** .1969	**2,3** .0906	**3,1** .1221	**0,08** .003	**682-2Z**	**F682-2Z**	**E682-2Z**	**FE682-2Z**	**638/2**
2 .0787	**6** .2362	**2,3** .0906	**3,1** .1221	**0,15** .006	**692-2Z**	**F692-2Z**	**E692-2Z**	**FE692-2Z**	**619/2**
2,35(7) .0925	**5** .1969	**2,3** .0906		**0,08** .003	**67/2,35-2Z**				
2,5 .0984	**6** .2362	**2,6** .1024	**3,4** .1339	**0,08** .003	**68/2,5-2Z**	**F68/2,5-2Z**	E68/2,5-2Z	FE68/2,5-2Z	**638/2,5**
2,5 .0984	**7** .2756	**3** .1181		**0,1** .004	**683/0001-2Z**	**F683/0001-2Z**			
2,5 .0984	**7** .2756	**3,5** .1378	**4,3** .1693	**0,15** .006	**69/2,5-2Z**	**F69/2,5-2Z**	E69/2,5-2Z	FE69/2,5-2Z	**639/2,5**
2,5 .0984	**8** .3150	**2,8** .1102	**3,6** .1417	**0,15** .006	**60/2,5-2Z**		E60/2,5-2Z		**60/2,5**
3 .1181	**6** .2362	**2** .0787		**0,08** .003	**673-2Z**				**617/3**
3 .1181	**7** .2756	**3** .1181	**3,8** .1496	**0,1** .004	**683-2Z**	**F683-2Z**	**E683-2Z**	**FE683-2Z**	**638/3**
3 .1181	**8** .3150	**3** .1181	**3,8** .1496	**0,15** .006	**693/002-2Z**	**F693/002-2Z**	**E693/002-2Z**	**FE693/002-2Z**	**619/3**
3 .1181	**8** .3150	**4** .1575	**4,8** .1890	**0,15** .006	**693-2Z**	**F693-2Z**	**E693-2Z**	**FE693-2Z**	**639/3**
3 .1181	**10** .3997	**4** .1575	**4,8** .1890	**0,15** .006	**623-2Z**	**F623-2Z**	**E623-2Z**	**FE623-2Z**	**623**
4 .1575	**7** .2756	**2** .0787		**0,08** .003	**674-2Z**				**617/4**
4 .1575	**9** .3543	**4** .1575	**4,8** .1890	**0,1** .004	**684-2Z**	**F684-2Z**	**E684-2Z**	**FE684-2Z**	**638/4**
4 .1575	**10** .3997	**4** .1575	**4,8** .1890	**0,1** .004	**684/10-2Z**	**F684/10-2Z**	**E684/10-2Z**	**FE684/10-2Z**	
4 .1575	**11** .4331	**4** .1575	**4,8** .1890	**0,15** .006	**694-2Z**	**F694-2Z**	E694-2Z	FE694-2Z	**619/4**
4 .1575	**12** .4724	**4** .1575	**4,8** .1890	**0,15** .006	**604-2Z**	**F604-2Z**	E604-2Z	FE604-2Z	**604**
4 .1575	**13** .5118	**5** .1969	**5,8** .2284	**0,2** .008	**624-2Z**	**F624-2Z**	**E624-2Z**	**FE624-2Z**	**624**
4 .1575	**16** .6299	**5** .1969	**5,8** .2284	**0,3** .012	**634-2Z**	**F634-2Z**	E634-2Z	FE634-2Z	**634**
4 .1575	**16** .6299	**5** .1969		**0,3** .012	**634D-2Z**				**634**

(2) $r_{s\,min}$ = minimum single bearing chamfer or maximum shaft or housing fillet radius.

Types indicated in darker print are readily available. Other types can only be supplied upon special request.

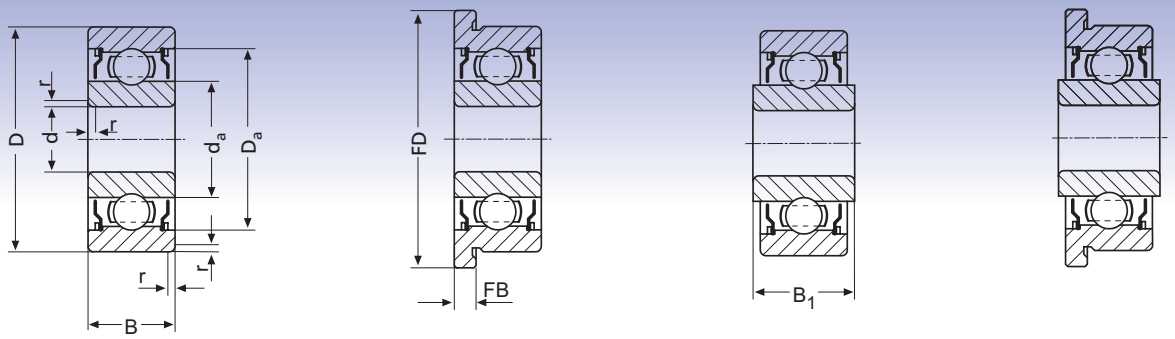

Flange Dimensions		Shaft & Housing Shoulders Diameters according to DIN 5418 Shaft Dia.		Housing Dia.	Number of Balls (5)	Ball Dia.	Load Ratings according to DIN ISO		Limiting Speed (6)
FD	**FB**	**d_a** min	**d_a** max (3)	**D_a** max (4)	Z	D_w	C_r [N]	C_{or} [N]	$n_{\upsilon r}$ [rpm]
5 .197	**0,6** .024	1,90 .075	2,35 .093	3,60 .142	6	0,794 .03125	163	44	153.000
		2,30 .091	2,95 .116	4,20 .165	7	0,794 .03125	192	59	93.000
6,5 .256	**0,8** .032	2,30 .091	2,95 .116	4,20 .165	7	0,794 .03125	192	59	109.000
6,1 .240	**0,6** .024	2,50 .098	2,95 .116	4,50 .177	7	0,794 .03125	192	59	116.000
7,5 .295	**0,6** .024	2,80 .110	3,25 .128	5,20 .205	7	1 .0394	286	90	91.000
		2,50 .098	3,90 .154	4,50 .177	7	0,794 .03125	192	59	120.000
7,1 .280	**0,8** .032	3,00 .118	3,50 .138	5,50 .217	7	1 .0394	289	92	101.000
8,1 .319	**0,8** .032	3,10 .142	4,10 .161	6,40 .252	8	1,191 .0469	432	149	88.000
8,5 .335	**0,9** .035	3,30 .130	4,10 .161	6,30 .248	8	1,191 .0469	432	149	87.000
		3,30 .130	4,10 .161	7,20 .283	8	1,191 .0469	432	149	81.000
		3,50 .137	5,00 .198	5,40 .216	8	1 .0394	195	60	81.000
8,1 .319	**0,8** .032	3,60 .142	4,10 .161	6,40 .252	8	1,191 .0469	432	149	90.000
9,5 .375	**0,7** .028	3,80 .149	4,55 .179	7,20 .283	7	1,588 .0625	644	215	67.000
9,5 .375	**0,9** .035	3,80 .149	4,55 .179	7,20 .283	7	1,588 .0625	644	215	80.000
11,5 .453	**1** .039	4,40 .173	5,50 .217	8,60 .339	8	1,588 .0625	725	265	65.000
		4,50 .177	4,75 .187	6,50 .256	9	1 .0394	345	130	63.000
10,3 .406	**1** .039	4,60 .181	5,15 .203	8,40 .331	7	1,588 .0625	658	226	82.000
11,5 .453	**1** .039	4,60 .181	5,15 .203	9,40 .370	7	1,588 .0625	658	226	86.000
12,5 .492	**1** .039	4,80 .189	5,95 .234	10,20 .402	8	1,588 .0625	730	271	66.000
13,5 .532	**1** .039	5,40 .213	6,70 .264	10,60 .417	8	1,588 .0625	734	282	56.000
15 .591	**1** .039	5,80 .228	6,90 .272	11,20 .441	7	2,381 .0938	1.339	488	52.000
18 .709	**1** .039	6,40 .252	9,00 .354	13,60 .535	8	2,5 .0984	1.646	663	44.000
18 .709	**1** .039	6,40 .252	9,00 .354	13,60 .535	6	3,175 .1250	1.935	677	45.000

(3) Not applicable to bearings with extended inner ring.
(4) Not applicable to flanged bearings.
(5) The number of balls may vary due to different types of retainer.

(6) See chapter "Limiting Speeds", pages 48, 49.
(7) Tolerance of bore +12 µm to +3 µm.
Subject to change due to technical improvements.

Deep Groove Ball Bearings – metric
with non-contact shield

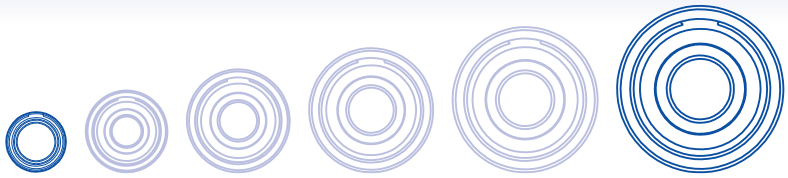

Dimensions mm / inch					Types				Basic Type according to DIN (German Standard)
d	**D**	**B**	**B_1**	**r_s** min (2)		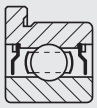	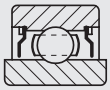	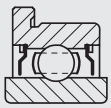	
5 .1969	**8** .3150	**2** .0787		**0,08** .003	**675-2Z**				**617/5**
5 .1969	**10** .3997	**4** .1575		**0,08** .003	**694/1002-2Z**				
5 .1969	**11** .4331	**4** .1575		**0,15** .006	**685/003-2Z**	**F685/003-2Z**			**628/5**
5 .1969	**11** .4331	**5** .1969	**5,8** .2284	**0,15** .006	**685-2Z**	**F685-2Z**	E685-2Z	FE685-2Z	**638/5**
5 .1969	**13** .5118	**4** .1575	**4,8** .1890	**0,2** .008	**695-2Z**	**F695-2Z**	E695-2Z	FE695-2Z	**619/5**
5 .1969	**13** .5118	**5** .1969		**0,2** .008	**624/0003-2Z**				
5 .1969	**14** .5512	**5** .1969	**5,8** .2284	**0,2** .008	**605-2Z**	**F605-2Z**	E605-2Z	FE605-2Z	**605**
5 .1969	**16** .6299	**5** .1969	**5,8** .2284	**0,3** .012	**625-2Z**	**F625-2Z**	**E625-2Z**	**FE625-2Z**	**625**
5 .1969	**16** .6299	**5** .1969		**0,3** .012	**625D-2Z**				**625**
5 .1969	**19** .7480	**6** .2362	**6,8** .2677	**0,3** .012	**635-2Z**	**F635-2Z**	E635-2Z	FE635-2Z	**635**
6 .2362	**12** .4724	**4** .1575		**0,15** .006	**695/1202-2Z**				
6 .2362	**13** .5118	**5** .1969	**5,8** .2284	**0,15** .006	**686-2Z**	**F686-2Z**	**E686-2Z**	**FE686-2Z**	**628/6**
6 .2362	**15** .5906	**5** .1969	**5,8** .2284	**0,2** .008	**696-2Z**	**F696-2Z**	E696-2Z	FE696-2Z	**619/6**
6 .2362	**16** .6299	**5** .1969		**0,3** .012	**625/0002-2Z**				
6 .2362	**19** .7480	**6** .2362	**6,8** .2677	**0,3** .012	**626-2Z**	**F626-2Z**	E626-2Z	FE626-2Z	**626**
7 .2756	**14** .5512	**5** .1969	**5,8** .2284	**0,15** .006	**687-2Z**	**F687-2Z**	E687-2Z	FE687-2Z	**628/7**
7 .2756	**17** .6693	**5** .1969	**5,8** .2284	**0,3** .012	**697-2Z**	**F697-2Z**	E697-2Z	FE697-2Z	**619/7**
7 .2756	**19** .7480	**6** .2362	**6,8** .2677	**0,3** .012	**607-2Z**	**F607-2Z**	E607-2Z	FE607-2Z	**607**
7 .2756	**22** .8661	**7** .2756		**0,3** .012	**627-2Z**	**F627-2Z**			**627**
8 .3150	**14** .5512	**4** .1575		**0,2** .008	**688A/142-2Z**				
8 .3150	**16** .6299	**5** .1969		**0,2** .012	**688/003-2Z**	**F688/003-2Z**			**628/8**
8 .3150	**16** .6299	**6** .2362	**6,8** .2677	**0,2** .008	**688-2Z**	**F688-2Z**	E688-2Z	FE688-2Z	**638/8**
8 .3150	**19** .7480	**6** .2362	**6,8** .2677	**0,3** .012	**698-2Z**	**F698-2Z**	E698-2Z	FE698-2Z	**619/8**
8 .3150	**22** .8661	**7** .2756		**0,3** .012	**608-2Z**	**F608-2Z**			**608**

(2) $r_{s\,min}$ = minimum single bearing chamfer or maximum shaft or housing fillet radius.

Types indicated in darker print are readily available. Other types can only be supplied upon special request.

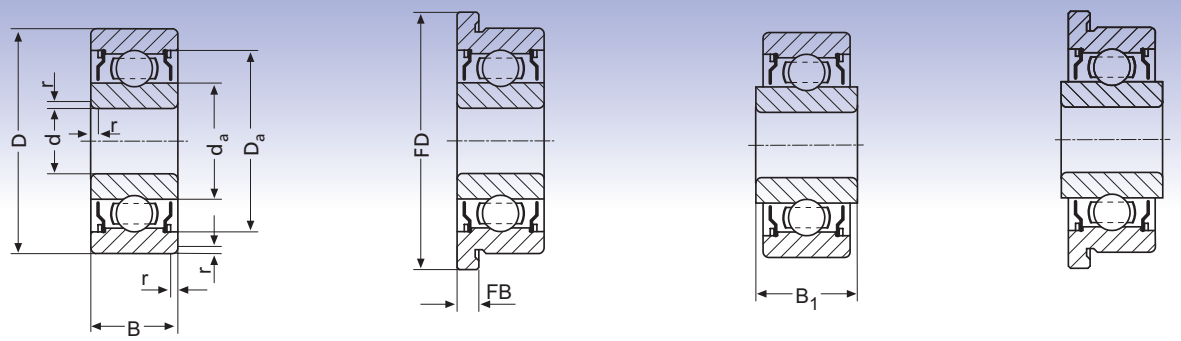

Flange Dimensions		Shaft & Housing Shoulders Diameters according to DIN 5418 Shaft Dia.		Housing Dia.	Number of Balls (5)	Ball Dia.	Load Ratings according to DIN ISO		Limiting Speed (6)
FD	**FB**	**d_a** min	**d_a** max (3)	**D_a** max (4)	Z	D_w	C_r [N]	C_{or} [N]	$n_{\upsilon r}$ [rpm]
		5,50 .217	5,75 .226	7,50 .295	11	1 .0394	390	160	52.000
		5,50 .216	8,10 .319	8,80 .347	8	1,588 .0625	730	271	66.000
12,5 .492	**1** .039	5,80 .228	6,70 .264	10,70 .421	8	1,588 .0625	734	282	62.000
12,5 .492	**1** .039	5,80 .228	6,70 .264	10,70 .421	8	1,588 .0625	734	282	71.000
15 .591	**1** .039	6,40 .252	7,75 .305	11,60 .457	10	1,588 .0625	851	366	49.000
		5,80 .228	6,90 .272	11,20 .441	7	2,381 .0938	1.339	488	53.000
16 .630	**1** .039	6,40 .252	8,20 .323	12,60 .496	8	1,984 .0781	1.096	437	50.000
18 .709	**1** .039	7,40 .291	9,00 .354	13,60 .535	8	2,5 .0984	1.646	663	50.000
18 .709	**1** .039	7,40 .291	9,00 .354	13,60 .535	6	3,175 .1250	1.935	677	42.000
22 .866	**1,5** .059	7,40 .291	10,80 .425	16,60 .654	8	3,175 .1250	2.522	1.057	35.000
		6,80 .268	7,75 .305	11,20 .441	10	1,588 .0625	851	366	49.000
15 .591	**1,1** .043	6,80 .268	8,20 .323	12,20 .480	8	1,984 .0781	1.096	437	55.000
17 .669	**1,2** .047	7,40 .291	9,00 .354	13,60 .535	9	1,984 .0781	1.186	505	46.000
		8,40 .331	9,00 .354	13,60 .535	8	2,5 .0984	1.646	663	41.000
22 .866	**1,5** .059	8,40 .331	10,80 .425	16,60 .654	8	3,175 .1250	2.522	1.057	34.000
16 .630	**1,1** .043	7,80 .307	9,00 .354	13,20 .520	9	1,984 .0781	1.186	505	50.000
19 .748	**1,2** .047	9,00 .354	10,10 .398	15,00 .591	9	2,5 .0984	1.795	776	39.000
22 .866	**1,5** .059	9,00 .354	10,80 .425	17,00 .669	8	3,175 .1250	2.522	1.057	38.000
25 .984	**1,5** .059	9,40 .370	11,60 .457	19,60 .772	7	3,969 .15625	3.369	1.363	35.000
		9,40 .370	9,40 .370	12,60 .496	12	1,191 .0469	335	152	47.000
18 .709	**1,1** .043	9,40 .370	10,10 .398	14,60 .575	9	2,5 .0984	1.795	776	43.000
18 .709	**1,3** .051	9,40 .370	10,10 .398	14,60 .575	9	2,5 .0984	1.795	776	48.000
22 .866	**1,5** .059	10,00 .394	11,10 .437	17,00 .669	9	2,5 .0984	1.798	797	40.000
25 .984	**1,5** .059	10,00 .394	11,60 .457	20,00 .787	7	3,969 .15625	3.369	1.363	38.000

(3) Not applicable to bearings with extended inner ring.
(4) Not applicable to flanged bearings.
(5) The number of balls may vary due to different types of retainer.

(6) See chapter "Limiting Speeds", pages 48, 49.

Subject to change due to technical improvements.

Deep Groove Ball Bearings – metric
with non-contact shield

Dimensions mm / inch					Types				Basic Type according to DIN (German Standard)
d	**D**	**B**	**B_1**	**r_s** min (2)		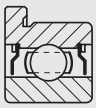	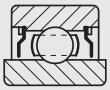	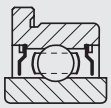	
9 .3543	**17** .6693	**6** .2362	**6,8** .2677	**0,2** .008	**689-2Z**	**F689-2Z**	E689-2Z	FE689-2Z	**638/9**
9 .3543	**20** .7874	**6** .2362		**0,3** .012	**699-2Z**				**619/9**
9 .3543	**24** .9449	**7** .2756		**0,3** .012	**609-2Z**				**609**
9 .3543	**24** .9449	**7** .2756		**0,3** .012	**609D-2Z**				**609**
9 .3543	**26** 1.0236	**8** .3150		**0,3** .012	**629-2Z**				**629**
10 .3937	**19** .7480	**5** .1969		**0,3** .012	**6800/002-2Z**	**F6800/002-2Z**			**61800**
10 .3937	**19** .7480	**7** .2756	**7,8** .3071	**0,3** .012	**6800-2Z**	**F6800-2Z**	E6800-2Z	FE6800-2Z	**63800**
10 .3937	**22** .8661	**6** .2362		**0,3** .012	**6900-2Z**				**61900**
10 .3937	**26** 1.0236	**8** .3150		**0,3** .012	**6000-2Z**				**6000**
10 .3937	**30** 1.181	**9** .3543		**0,6** .024	**6200-2Z**				**6200**
10 .3937	**30** 1.181	**9** .3543		**0,6** .024	**6200D-2Z**				**6200**
12 .4724	**21** .8267	**5** .1969		**0,3** .012	**6801-2Z** **6801-2RZ**				**61801**
12 .4724	**24** .9449	**6** .2362		**0,3** .012	**6901-2Z** **6901-2RZ**				**61901**
12 .4724	**28** 1.1024	**8** .3150		**0,3** .012	**6001-2Z**				**6001**
12 .4724	**32** 1.2598	**10** .3937		**0,6** .024	**6201-2Z**				**6201**
15 .5906	**24** .9449	**5** .1969		**0,3** .012	**6802-2Z** **6802-2RZ**				**61802**
15 .5906	**28** 1.1024	**7** .2756		**0,3** .012	**6902-2Z** **6902-2RZ**				**61902**
15 .5906	**32** 1.2598	**9** .3543		**0,3** .012	**6002-2Z**				**6002**
15 .5906	**35** 1.3780	**11** .4331		**0,6** .024	**6202-2Z**				**6202**
17 .6693	**26** 1.0236	**5** .1969		**0,3** .012	**6803-2Z** **6803-2RZ**				**61803**
17 .6693	**30** 1.1811	**7** .2756		**0,3** .012	**6903-2Z** **6903-2RZ**				**61903**
17 .6693	**35** 1.3780	**10** .3937		**0,3** .012	**6003-2Z**				**6003**
17 .6693	**40** 1.5748	**12** .4724		**0,6** .024	**6203-2Z**				**6203**

(2) $r_{s\,min}$ = minimum single bearing chamfer or maximum shaft or housing fillet radius.

Types indicated in darker print are readily available. Other types can only be supplied upon special request.

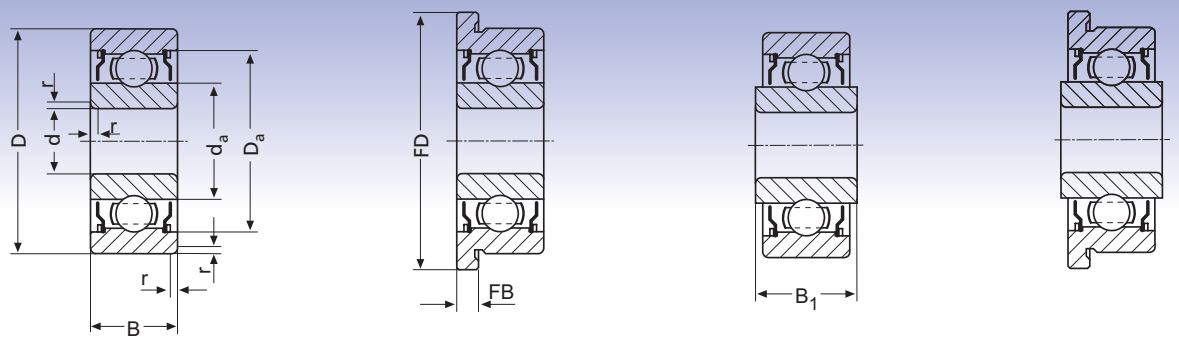

Flange Dimensions		Shaft & Housing Shoulders Diameters according to DIN 5418 Shaft Dia.		Housing Dia.	Number of Balls (5)	Ball Dia.	Load Ratings according to DIN ISO		Limiting Speed (6)
FD	**FB**	**d_a** min	**d_a** max (3)	**D_a** max (4)	Z	D_w	C_r [N]	C_{or} [N]	$n_{\upsilon r}$ [rpm]
19 .748	**1,3** .051	10,40 .409	11,10 .437	15,60 .614	9	2,5 .0984	1.798	797	44.000
		11,00 .433	12,60 .496	18,00 .709	10	2,5 .0984	1.922	915	35.000
		11,00 .433	13,45 .530	22,00 .866	7	3,969 .15625	3.435	1.430	33.000
		11,90 .433	18,90 .744	22,00 .866	8	3,969 .15625	3.758	1.632	32.000
		11,40 .449	14,60 .575	23,60 .929	7	4,763 .1875	4.698	1.982	34.000
21 .827	**1** .039	12,00 .472	12,60 .496	17,00 .669	10	2,5 .0984	1.922	915	34.000
21 .827	**1,5** .059	12,00 .472	12,60 .496	17,00 .669	10	2,5 .0984	1.922	915	42.000
		12,00 .472	13,45 .530	20,00 .787	8	3,175 .1250	2.555	1.129	31.000
		12,40 .488	14,60 .575	23,60 .929	7	4,763 .1875	4.698	1.982	35.000
		14,20 .559	16,00 .623	25,80 1.016	7	5,556 .2188	6.100	2.600	27.000
		14,20 .559	16,00 .623	25,80 1.016	8	4,763 .1875	5.236	2.374	27.000
		14,00 .551	14,50 .571	19,00 .748	12	2,381 .09375	1.930	900	30.000
		14,00 .559	15,60 .614	22,00 .866	10	3,175 .1250	2.971	1.452	27.000
		14,00 .559	16,10 .634	26,00 1.024	9	3,969 .15625	5.237	2.359	28.000
		16,22 .639	17,70 .697	27,80 1.095	7	6 .2362	7.073	3.100	26.000
		17,00 .669	17,50 .689	22,00 .866	14	2,381 .09375	2.080	1.100	25.000
		17,00 .669	18,25 .719	26,00 1.024	11	3,969 .15625	4.445	2.268	24.000
		17,00 .669	19,60 .772	30,00 1.181	9	4,763 .1865	5.676	2.819	25.000
		19,20 .726	20,50 .807	30,80 .819	8	6 .2362	7.939	3.744	24.000
		19,00 .748	19,50 .768	24,00 .945	16	2,381 .09375	2.240	1.270	22.000
		19,00 .748	20,15 .793	28,00 1.102	11	3,969 .15625	4.723	2.547	21.000
		19,00 .748	22,10 .870	33,00 1.299	10	4,763 .1875	6.172	3.267	23.000
		21,20 .835	23,50 .925	35,80 1.409	8	6,747 .2656	9.811	4.734	20.000

(3) Not applicable to bearings with extended inner ring.
(4) Not applicable to flanged bearings.
(5) The number of balls may vary due to different types of retainer.

(6) See chapter "Limiting Speeds", pages 48, 49.

Subject to change due to technical improvements.

Deep Groove Ball Bearings – metric
with seal

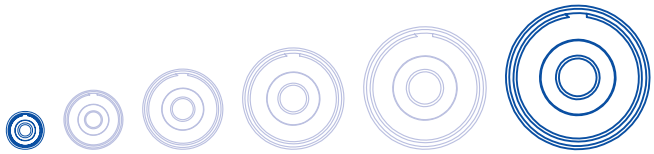

Dimensions mm / inch d	D	B	B_1	r_s min (2)	Types				Basic Type according to DIN (German Standard)
1,5 .0591	**5** .1969	**2,6** .1024		**0,15** .006	69/1,5-2TS	F69/1,5-2TS			**639/1,5**
2 .0787	**5** .1969	**2,3** .0906	**3,1** .1221	**0,08** .003	**682-2TS**	**F682-2TS**	E682-2TS	FE682-2TS	**638/2**
2 .0787	**6** .2362	**2,3** .0906	**3,1** .1221	**0,15** .006	**692-2TS**	**F692-2TS**	E692-2TS	FE692-2TS	**619/2**
2,5 .0984	**6** .2362	**2,6** .1024	**3,4** .1339	**0,08** .003	**68/2,5-2TS**	**F68/2,5-2TS**	E68/2,5-2TS	FE68/2,5-2TS	**638/2,5**
2,5 .0984	**7** .2756	**3,5** .1378	**4,3** .1693	**0,15** .006	**69/2,5-2TS**	**F69/2,5-2TS**	E69/2,5-2TS	FE69/2,5-2TS	**639/2,5**
2,5 .0984	**8** .3150	**2,8** .1102	**3,6** .1417	**0,15** .006	**60/2,5-2TS**		E60/2,5-2TS		**60/2,5**
3 .1181	**7** .2756	**3** .1181	**3,8** .1496	**0,1** .004	**683-2TS**	**F683-2TS**	E683-2TS	FE683-2TS	**638/3**
3 .1181	**8** .3150	**4** .1575	**4,8** .1890	**0,15** .006	**693-2TS**	**F693-2TS**	E693-2TS	FE693-2TS	**639/3**
3 .1181	**10** .3937	**4** .1575	**4,8** .1890	**0,15** .006	**623-2TS**	**F623-2TS**	E623-2TS	FE623-2TS	**623**
4 .1575	**9** .3543	**4** .1575	**4,8** .1890	**0,1** .004	**684-2TS**	**F684-2TS**	E684-2TS	FE684-2TS	**638/4**
4 .1575	**10** .3937	**4** .1575	**4,8** .1890	**0,1** .004	**684/10-2TS**	**F684/10-2TS**	E684/10-2TS	FE684/10-2TS	
4 .1575	**11** .4331	**4** .1575	**4,8** .1890	**0,15** .006	**694-2TS**	**F694-2TS**	E694-2TS	FE694-2TS	**619/4**
4 .1575	**12** .4724	**4** .1575	**4,8** .1890	**0,15** .006	**604-2TS**	**F604-2TS**	E604-2TS	FE604-2TS	**604**
4 .1575	**13** .5118	**5** .1969	**5,8** .2284	**0,2** .008	**624-2TS** **624-2RS**	**F624-2TS** **F624-2RS**	E624-2TS E624-2RS	FE624-2TS FE624-2RS	**624**
4 .1575	**16** .6299	**5** .1969	**5,8** .2284	**0,3** .012	**634-2TS**	**F634-2TS**	E634-2TS	FE634-2TS	**634**
4 .1575	**16** .6299	**5** .1969	**5,8** .2284	**0,3** .012	**634D-2RS**				**634**
5 .1969	**11** .4331	**5** .1969	**5,8** .2284	**0,15** .006	**685-2TS**	**F685-2TS**	E685-2TS	FE685-2TS	**638/5**
5 .1969	**13** .5118	**4** .1575	**4,8** .1890	**0,2** .008	**695-2TS**	**F695-2TS**	E695-2TS	FE695-2TS	**619/5**
5 .1969	**14** .5512	**5** .1969	**5,8** .2284	**0,2** .008	**605-2TS**	**F605-2TS**	E605-2TS	FE605-2TS	**605**
5 .1969	**16** .6299	**5** .1969	**5,8** .2284	**0,3** .012	**625-2TS**	**F625-2TS**	E625-2TS	FE625-2TS	**625**
5 .1969	**16** .5118	**5** .1969		**0,2** .008	**625D-2RS**				
5 .1969	**19** .7480	**6** .2362	**6,8** .2677	**0,3** .012	**635-2TS** **635-2RS**	**F635-2TS**	E635-2TS	FE635-2TS	**635**

(2) $r_{s\,min}$ = minimum single bearing chamfer or maximum shaft or housing fillet radius.

Types indicated in darker print are readily available. Other types can only be supplied upon special request.

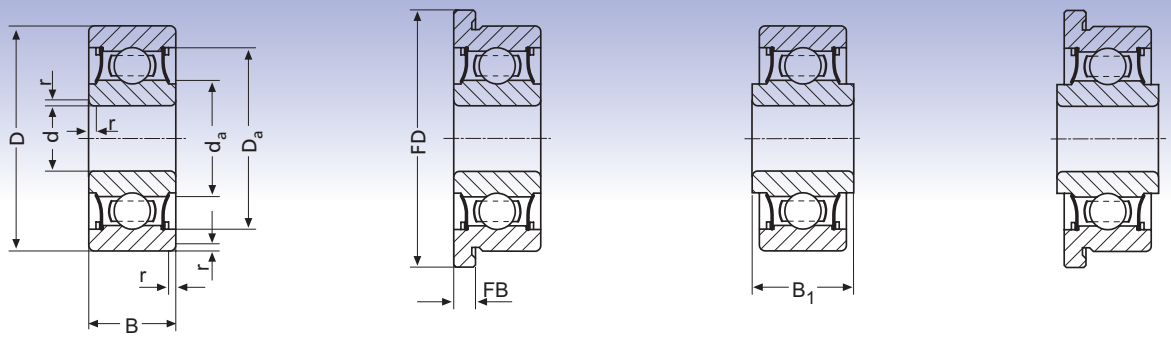

Flange Dimensions		Shaft & Housing Shoulders Diameters according to DIN 5418 Shaft Dia.		Housing Dia.	Number of Balls (5)	Ball Dia.	Load Ratings according to DIN ISO		Limiting Speed (6)
FD	**FB**	d_a min	d_a max (3)	D_a max (4)	Z	D_w	C_r [N]	C_{or} [N]	$n_{\upsilon r}$ [rpm]
6,5 .256	**0,8** .032	2,50 .098	2,60 .116	4,20 .177	7	0,794 .03125	192	59	71.000
6,1 .240	**0,6** .024	2,50 .098	2,60 .102	4,50 .177	7	0,794 .03125	192	59	71.000
7,5 .295	**0,6** .024	2,80 .110	2,90 .114	5,20 .205	7	1 .0394	286	90	65.000
7,1 .280	**0,8** .032	3,00 .118	3,15 .124	5,50 .217	7	1 .0394	289	92	61.000
8,5 .335	**0,8** .032	3,30 .130	3,75 .148	6,30 .248	8	1,191 .0469	432	149	53.000
		3,30 .130	3,75 .148	7,20 .283	8	1,191 .0469	432	149	53.000
8,1 .319	**0,8** .032	3,60 .142	3,75 .148	6,40 .252	8	1,191 .0469	432	149	53.000
9,5 .375	**0,9** .035	3,80 .149	3,95 .156	7,20 .283	7	1,588 .0625	644	215	51.000
11,5 .453	**1** .039	4,40 .173	4,85 .191	8,60 .339	8	1,588 .0625	725	265	44.000
10,3 .406	**1** .039	4,60 .181	4,70 .185	8,40 .331	7	1,588 .0625	658	226	45.000
11,5 .453	**1** .039	4,60 .181	4,70 .185	9,40 .370	7	1,588 .0625	658	226	45.000
12,5 .492	**1** .039	4,80 .189	5,45 .215	10,2 .402	8	1,588 .0625	730	271	41.000
13,5 .532	**1** .039	5,40 .213	6,15 .242	10,6 .417	8	1,588 .0625	734	282	37.000
15 .591	**1** .039	5,80 .228	6,25 .246	11,2 .441	7	2,381 .0938	1.339	488	37.000 28.000
18 .709	**1** .039	6,40 .252	8,25 .325	13,60 .535	8	2,5 .0984	1.646	663	31.000
18 .709	**1** .039	6,40 .252	8,25 .325	13,60 .535	6	3,175 .1250	1.935	677	26.000
12,5 .492	**1** .039	5,80 .228	6,15 .242	10,7 .421	8	1,588 .0625	734	282	37.000
15 .591	**1** .039	6,40 .252	7,10 .280	11,6 .457	10	1,588 .0625	851	366	34.000
16 .630	**1** .039	6,40 .252	7,60 .299	12,60 .496	8	1,984 .0781	1.096	437	33.000
18 .709	**1** .039	7,40 .291	8,25 .325	13,60 .535	8	2,5 .0984	1.646	663	31.000
		7,40 .291	12,40 .488	13,60 .357	6	3,175 .1250	1.935	677	26.000
22 .866	**1,5** .059	7,40 .291	9,75 .384	16,60 .654	8	3,175 .1250	2.522	1.057	28.000 22.000

(3) Not applicable to bearings with extended inner ring.
(4) Not applicable to flanged bearings.
(5) The number of balls may vary due to different types of retainer.

(6) See chapter "Limiting Speeds", pages 48, 49.

Subject to change due to technical improvements.

Deep Groove Ball Bearings – metric
with seal

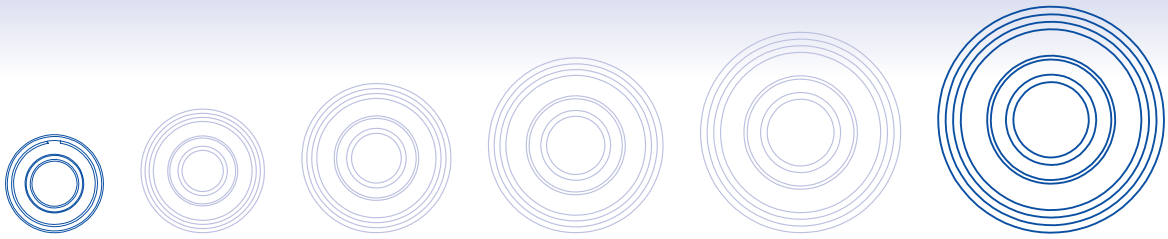

Dimensions mm / inch					Types				Basic Type according to DIN (German Standard)
d	**D**	**B**	**B_1**	**r_s** min (2)					
6 .2362	**13** .5118	**5** .1969	**5,8** .2284	**0,15** .006	**686-2TS**	**F686-2TS**	E686-2TS	FE686-2TS	**628/6**
6 .2362	**15** .5906	**5** .1969	**5,8** .2284	**0,2** .008	**696-2TS**	**F696-2TS**	E696-2TS	FE696-2TS	**619/6**
6 .2362	**19** .7480	**6** .2362	**6,8** .2677	**0,3** .012	**626-2TS** **626-2RS**	**F626-2TS**	E626-2TS	FE626-2TS	**626**
7 .2756	**14** .5512	**5** .1969	**5,8** .2284	**0,15** .006	**687-2TS**	**F687-2TS**	E687-2TS	FE687-2TS	**628/7**
7 .2756	**17** .6693	**5** .1969	**5,8** .2284	**0,3** .012	**697-2TS**	**F697-2TS**	E697-2TS	FE697-2TS	**619/7**
7 .2756	**19** .7480	**6** .2362	**6,8** .2677	**0,3** .012	**607-2TS** **607-2RS**	**F607-2TS**	E607-2TS	FE607-2TS	**607**
7 .2756	**22** .8661	**7** .2756		**0,3** .012	**627-2TS** **627-2RS**	**F627-2TS** **F627-2RS**	E627-2TS E627-2RS	FE627-2TS FE627-2RS	**627**
8 .3150	**16** .6229	**5** .1969		**0,2** .008	**688/003-2TS**				
8 .3150	**16** .6299	**6** .2362	**6,8** .2677	**0,2** .008	**688-2TS**	**F688-2TS**	E688-2TS	FE688-2TS	**638/8**
8 .3150	**19** .7480	**6** .2362	**6,8** .2677	**0,3** .012	**698-2TS**	**F698-2TS**	E698-2TS	FE698-2TS	**619/8**
8 .3150	**22** .8661	**7** .2756		**0,3** .012	**608-2TS** **608-2RS**	**F608-2TS** **F608-2RS**	E608-2TS E608-2RS	FE608-2TS FE608-2RS	**608**
9 .3543	**17** .6693	**6** .2362	**6,8** .2677	**0,2** .008	**689-2TS**	**F689-2TS**	E689-2TS	FE689-2TS	**638/9**
9 .3543	**20** .7874	**6** .3262		**0,3** .012	**699-2TS**				**619/9**
9 .3543	**24** .9449	**7** .2756		**0,3** .012	**609-2TS** **609-2RS**				**609**
9 .3543	**24** .9449	**7** .2756		**0,3** .012	**609D-2RS**				**609**
9 .3543	**26** 1.0236	**8** .3150		**0,3** .012	**629-2TS** **629-2RS**				**629**
10 .3937	**19** 7480	**7** .2756	**7,8** .3071	**0,3** .012	**6800-2TS**	**F6800-2TS**	E6800-2TS	FE6800-2TS	**63800**
10 .3937	**22** .8661	**6** .2362		**0,3** .012	**6900-2TS**				**61900**
10 .3937	**26** 1.0236	**8** .3150		**0,3** .012	**6000-2TS** **6000-2RS**				**6000**
10 .3937	**30** 1.181	**9** .3543		**0,6** .024	**6200-2RS**				**6200**
10 .3937	**30** 1.181	**9** .3543		**0,6** .024	**6200D-2RS**				**6200**

(2) $r_{s\,min}$ = minimum single bearing chamfer or maximum shaft or housing fillet radius.

Types indicated in darker print are readily available. Other types can only be supplied upon special request.

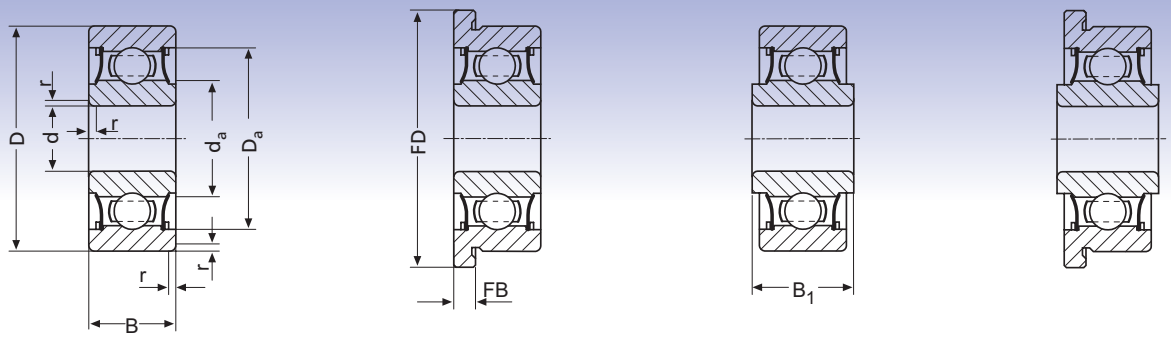

Flange Dimensions		Shaft & Housing Shoulders Diameters according to DIN 5418 Shaft Dia.		Housing Dia.	Number of Balls (5)	Ball Dia.	Load Ratings according to DIN ISO		Limiting Speed (6)
FD	**FB**	**d_a** min	**d_a** max (3)	**D_a** max (4)	Z	D_w	C_r [N]	C_{or} [N]	$n_{\upsilon r}$ [rpm]
15 .591	**1,1** .043	6,80 .268	7,60 .299	12,20 .480	8	1,984 .0781	1.096	437	33.000
17 .669	**1,2** .047	7,40 .291	8,40 .331	13,60 .535	9	1,984 .0781	1.186	505	31.000
22 .866	**1,5** .059	8,40 .331	9,75 .384	16,60 .654	8	3,175 .1250	2.522	1.057	28.000 22.000
16 .630	**1,1** .043	7,80 .307	8,40 .331	13,20 .520	9	1,984 .0781	1.186	505	31.000
19 .748	**1,2** .047	9,00 .354	9,55 .376	15,00 .591	9	2,5 .0984	1.795	776	28.000
22 .866	**1,5** .059	9,00 .354	9,75 .384	17,00 .669	8	3,175 .1250	2.522	1.057	28.000 22.000
25 .984	**1,5** .059	9,40 .370	10,55 .415	19,60 .772	7	3,969 .15625	3.369	1.363	27.000 21.000
		9,40 .370	9,55 .376	14,60 .575	9	2,5 .0984	1.795	776	28.000
18 .709	**1,3** .051	9,40 .370	9,55 .376	14,60 .575	9	2,5 .0984	1.795	776	28.000
22 .866	**1,5** .059	10,00 .394	10,55 .415	17,00 .669	9	2,5 .0984	1.798	797	27.000
25 .984	**1,5** .059	10,00 .394	10,55 .415	20,00 .787	7	3,969 .15625	3.369	1.363	27.000 21.000
19 .748	**1,3** .051	10,40 .409	10,55 .415	15,60 .614	9	2,5 .0984	1.798	797	27.000
		11,00 .433	11,95 .470	18,00 .709	10	2,5 .0984	1.922	915	25.000
		11,00 .433	12,40 .488	22,00 .866	7	3,969 .15625	3.435	1.430	25.000 20.000
		11,00 .433	18,50 .744	22,00 .866	8	3,969 .15625	3.758	1.632	20.000
		11,40 .449	13,45 .529	23,60 .929	7	4,763 .1875	4.698	1.982	24.000 19.000
21 .827	**1,5** .059	11,90 .4685	11,95 .470	17,00 .669	10	2,5 .0984	1.922	915	25.000
		12,00 .472	12,35 .486	20,00 .787	8	3,175 .1250	2.555	1.129	24.000
		12,40 .488	13,45 .530	23,60 .929	7	4,763 .1875	4.698	1.982	24.000 19.000
		14,20 .559	16,00 .623	25,80 1.016	7	5,556 .2188	6.100	2.600	18.000
		14,20 .559	16,00 .623	25,80 1.016	8	4,763 .1875	5.636	2.374	18.000

(3) Not applicable to bearings with extended inner ring.
(4) Not applicable to flanged bearings.
(5) The number of balls may vary due to different types of retainer.

(6) See chapter "Limiting Speeds", pages 48, 49.

Subject to change due to technical improvements.

Deep Groove Ball Bearings – metric
with seal

Dimensions mm / inch					Types				Basic Type according to DIN (German Standard)
d	**D**	**B**	**B_1**	**r_s** min (2)		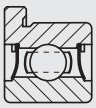	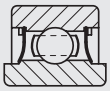	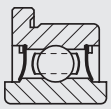	
12 .4724	**21** .8267	**5** .1969		**0,3** .012	**6801-2RS**				**61801**
12 .4724	**24** .9449	**6** .2362		**0,3** .012	**6901-2RS**				**61901**
12 .4724	**28** 1.1024	**8** .3150		**0,3** .012	**6001-2RS**				**6001**
12 .4724	**32** 1.2598	**10** .3937		**0,6** .024	**6201-2RS**				**6201**
15 .5906	**24** .9449	**5** .1969		**0,3** .012	**6802-2RS**				**61802**
15 .5906	**28** 1.1024	**7** .2756		**0,3** .012	**6902-2RS**				**61902**
15 .5906	**32** 1.2598	**9** .3543		**0,3** .012	**6002-2RS**				**6002**
15 .5906	**35** 1.3780	**11** .4331		**0,6** .024	**6202-2RS**				**6202**
17 .6693	**26** 1.0236	**5** .1969		**0,3** .012	**6803-2RS**				**61803**
17 .6693	**30** 1.1811	**7** .2756		**0,3** .012	**6903-2RS**				**61903**
17 .6693	**35** 1.3780	**10** .3937		**0,3** .012	**6003-2RS**				**6003**
17 .6693	**40** 1.5748	**12** .4724		**0,6** .024	**6203-2RS**				**6203**

(2) $r_{s\,min}$ = minimum single bearing chamfer or maximum shaft or housing fillet radius.

Types indicated in darker print are readily available. Other types can only be supplied upon special request.

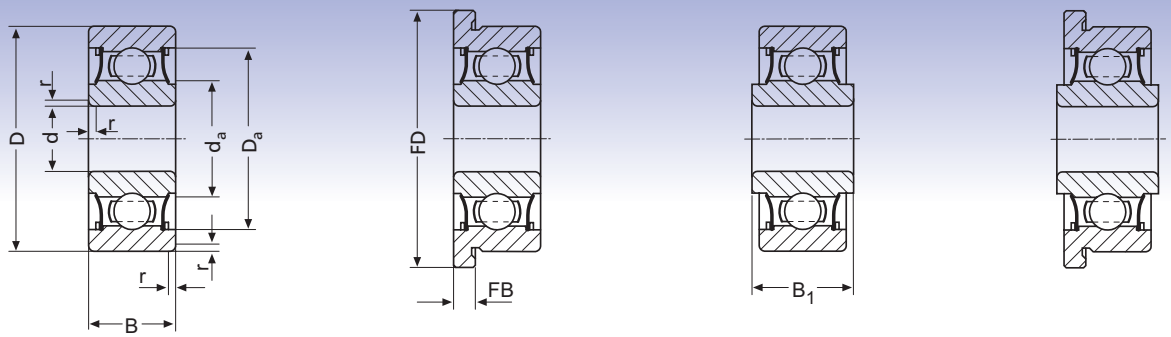

Flange Dimensions		Shaft & Housing Shoulders Diameters according to DIN 5418 Shaft Dia.		Housing Dia.	Number of Balls (5)	Ball Dia.	Load Ratings according to DIN ISO		Limiting Speed (6)
FD	**FB**	d_a min	d_a max (3)	D_a max (4)	Z	D_w	C_r [N]	C_{or} [N]	$n_{\upsilon r}$ [rpm]
		14,00 .551	14,50 .571	19,00 .748	12	2,381 .09375	1.930	900	19.000
		14,00 .559	15,30 .602	22,00 .866	10	3,175 .1250	2.971	1.452	19.000
		14,00 .559	16,10 .634	26,00 1.024	8	4,762 .1875	5.237	2.359	18.000
		16,22 .639	17,70 .697	27,80 1.095	7	6 .2362	7.073	3.100	18.000
		17,00 .669	17,50 .689	22,00 .866	14	2,381 .09375	2.080	1.100	18.000
		17,00 .669	18,00 .708	26,00 1.024	10	3,969 .15625	4.445	2.268	18.000
		17,00 .669	19,60 .772	30,00 1.181	9	4,763 .1865	5.676	2.819	17.000
		19,20 .756	20,50 .807	30,80 .819	8	6 .2362	7.939	3.744	17.000
		19,00 .748	19,50 .768	24,00 .945	16	2,381 .09375	2.240	1.270	17.000
		19,00 .748	19,90 .783	28,00 1.102	11	3,969 .15625	4.723	2.547	17.000
		19,00 .748	22,10 .870	30,00 1.299	10	4,763 .1875	6.172	3.267	17.000
		21,20 .835	23,50 .925	35,80 1.409	8	6,747 .2656	9.811	4.734	16.000

(3) Not applicable to bearings with extended inner ring.
(4) Not applicable to flanged bearings.
(5) The number of balls may vary due to different types of retainer.

(6) See chapter "Limiting Speeds", pages 48, 49.

Subject to change due to technical improvements.

Deep Groove Ball Bearings – inch
unshielded (1)

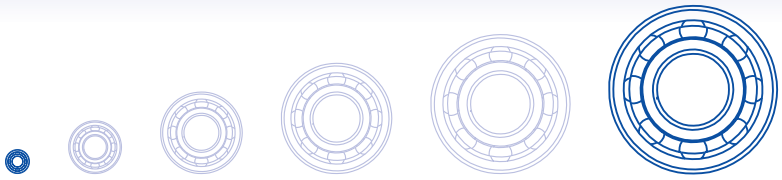

Dimensions mm / inch d	D	B	B_1	r_s min (2)	Types				Basic Type USA
1,016 .0400	3,175 .1250	1,191 .0469		0,08 .003	1016	F1016			R09
1,191 .0469	3,967 .1562	1,588 .0625	2,38 .0937	0,08 .003	1191	F1191	E1191	FE1191	R0
1,397 .0550	4,763 .1875	1,984 .0781	2,779 .1094	0,08 .003	1397	F1397	E1397	FE1397	R1
1,984 .0781	6,35 .2500	2,38 .0937	3,175 .1250	0,08 .003	5/64	F5/64	E5/64	FE5/64	R1-4
2,38 .0937	4,763 .1875	1,588 .0625	2,38 .0937	0,08 .003	2380	F2380	E2380	FE2380	R133
2,38 .0937	7,938 .3125	2,779 .1094	3,571 .1406	0,13 .005	3/32	F3/32	E3/32	FE3/32	R1-5
3,175 .1250	6,35 .2500	2,38 .0937	3,175 .1250	0,08 .003	3175	F3175	E3175	FE3175	R144
3,175 .1250	7,938 .3125	2,779 .1094	3,571 .1406	0,08 .003	1/8A	F1/8A	E1/8A	FE1/8A	R2-5
3,175 .1250	9,525 .3750	3,967 .1562	4,763 .1875	0,3 .012	1/8B	F1/8B	E1/8B	FE1/8B	R2
3,175 .1250	12,7 .5000	4,366 .1719		0,3 .012	1/8B/083				R2A
3,967 .1562	7,938 .3125	2,779 .1094	3,571 .1406	0,08 .003	3967	F3967	E3967	FE3967	R155
3,967 .1562	12,7 .5000	2,779 .1094	3,571 .1406	0,08 .003	3967/8		E3967/8		
4,763 .1875	7,938 .3125	2,779 .1094	3,571 .1406	0,08 .003	4763A	F4763A	E4763A	FE4763A	R156
4,763 .1875	9,525 .3750	3,175 .1250	3,967 .1562	0,08 .003	4763B	F4763B	E4763B	FE4763B	R166
4,763 .1875	12,7 .5000	2,779 .1094	3,571 .1406	0,08 .003	4763A/8		E4763A/8		
4,763 .1875	12,7 .5000	3,967 .1562		0,3 .012	3/16				R3
6,35 .2500	9,525 .3750	3,175 .1250	3,967 .1562	0,08 .003	6350A	F6350A	E6350A	FE6350A	R168
6,35 .2500	12,7 .5000	3,175 .1250	3,967 .1562	0,13 .005	6350B	F6350B	E6350B	FE6350B	R188
6,35 .2500	15,875 .6250	4,978 .1960	5,771 .2272	0,3 .012	1/4A	F1/4A	E1/4A	FE1/4A	R4
6,35 .2500	19,05 .7500	5,558 .2188		0,4 .016	1/4				R4A
7,938 .3125	12,7 .5000	3,967 .1562	4,763 .1875	0,13 .005	7938	F7938	E7938	FE7938	R1810
9,525 .3750	22,225 .8750	5,558 .2188		0,04 .016	3/8				R6

(1) Ball bearings without closure may be supplied with recesses.
Please indicate clearly on your order if you require bearings without recesses.

(2) $r_{s\,min}$ = minimum single bearing chamfer or maximum shaft or housing fillet radius.

Types indicated in darker print are readily available. Other types can only be supplied upon special request.

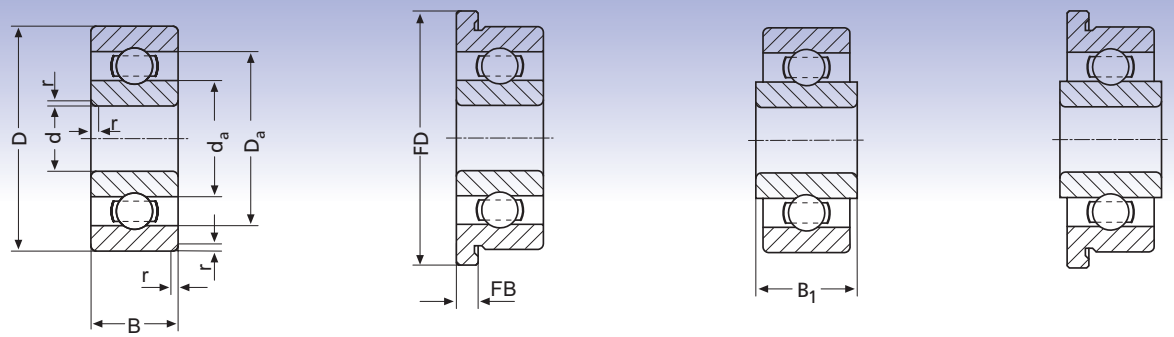

Flange Dimensions		Shaft & Housing Shoulders Diameters according to ANSI/AFBMA Std. 12.2			Number of Balls (5)	Ball Dia.	Load Ratings according to DIN ISO		Limiting Speed (6)
		Shaft Dia.		Housing Dia.					
FD	**FB**	**d_a** min	**d_a** max (3)	**D_a** max (4)	Z	D_w	C_r [N]	C_{or} [N]	$n_{\upsilon r}$ [rpm]
4,343 **.17098**	**0,33** **.01299**	1,50 .060	2,40 .094	2,65 .105	5	0,635 .025	51	11	148.000
5,156 **.203**	0,33 **.013**	1,80 .071	3,10 .122	3,35 .132	6	0,794 .03125	163	44	129.000
5,944 **.234**	0,584 **.023**	2,00 .079	3,60 .142	4,15 .164	6	1 .0394	239	67	114.000
7,518 **.296**	0,584 **.023**	2,60 .102	4,50 .177	5,75 .226	7	1 .0394	286	90	95.000
5,944 **.234**	0,457 **.018**	2,90 .114	3,90 .154	4,25 .168	7	0,794 .03125	192	59	94.000
9,119 **.359**	0,584 **.023**	3,10 .122	6,60 .260	7,25 .284	7	1,588 .0625	644	215	62.000
7,518 **.296**	0,584 **.023**	3,75 .148	5,30 .209	5,75 .226	7	1 .0394	292	97	80.000
9,119 **.359**	0,584 **.023**	3,90 .153	6,60 .260	7,20 .284	7	1,588 .0625	644	215	65.000
11,176 **.440**	0,762 **.030**	4,55 .179	7,30 .287	8,25 .325	8	1,588 .0625	720	260	61.000
		4,55 .179	7,30 .287	11,35 .446	8	1,588 .0625	720	260	74.000
9,119 **.359**	0,584 **.023**	4,55 .179	6,90 .272	7,30 .288	11	1 .0394	391	165	62.000
		4,55 .179	6,90 .272	8,80 .347	11	1 .0394	391	165	69.000
9,119 **.359**	0,584 **.023**	5,35 .210	6,90 .272	7,30 .288	11	1 .0394	391	165	65.000
10,719 **.422**	0,584 **.023**	5,50 .216	8,10 .319	8,80 .347	8	1,588 .0625	730	271	56.000
		5,35 .210	6,90 .272	8,80 .347	11	1 .0394	391	165	70.000
		6,20 .244	9,90 .390	11,35 .446	7	2,381 .0938	1.339	488	50.000
10,719 **.422**	0,584 **.023**	6,90 .272	8,50 .335	8,95 .352	11	1 .0394	391	165	54.000
13,894 **.547**	0,584 **.023**	7,20 .284	10,90 .429	11,85 .466	8	1,984 .0781	730	271	38.000
17,526 **.690**	1,067 **.042**	7,85 .310	12,50 .492	14,35 .565	8	2,50 .0984	1.651	670	43.000
		8,20 .322	14,90 .587	17,20 .678	8	3,175 .1250	2.522	1.057	35.000
13,894 **.547**	0,787 **.031**	8,80 .347	10,90 .429	11,85 .466	12	1,191 .0469	539	279	45.000
		11,45 .451	17,50 .689	20,30 .799	8	3,175 .1250	2.555	1.129	30.000

(3) Not applicable to bearings with extended inner ring.
(4) Not applicable to flanged bearings.
(5) The number of balls may vary due to different types of retainer.

(6) See chapter "Limiting Speeds", pages 48, 49.

Subject to change due to technical improvements.

Deep Groove Ball Bearings – inch
with non-contact shield

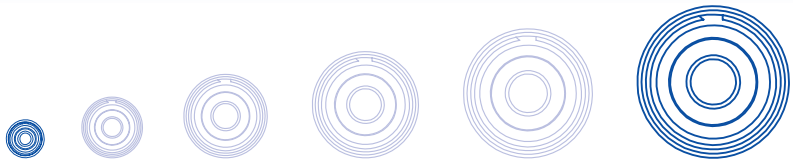

Dimensions mm / inch					Types				Basic Type USA
d	**D**	**B**	**B_1**	**r_s** min (2)					
1,191 **.0469**	3,967 **.1562**	2,38 **.0937**	3,175 **.1250**	0,08 **.003**	**1191-2Z**	F1191-2Z	E1191-2Z	FE1191-2Z	**R0**
1,397 **.0550**	4,763 **.1875**	2,779 **.1094**	3,571 **.1406**	0,08 **.003**	**1397-2Z**	**F1397-2Z**	E1397-2Z	FE1397-2Z	**R1**
1,984 **.0781**	6,35 **.2500**	3,571 **.1406**	4,366 **.1719**	0,08 **.003**	**5/64-2Z**	**F5/64-2Z**	**E5/64-2Z**	**FE5/64-2Z**	**R1-4**
2,38 **.0937**	4,763 **.1875**	2,38 **.0937**	3,175 **.1250**	0,08 **.003**	**2380-2Z**	**F2380-2Z**	**E2380-2Z**	**FE2380-2Z**	**R133**
2,38 **.0937**	7,938 **.3125**	3,571 **.1406**	4,366 **.1719**	0,13 **.005**	**3/32-2Z**	**F3/32-2Z**	**E3/32-2Z**	**FE3/32-2Z**	**R1-5**
3,175 **.1250**	6,35 **.2500**	2,38 **.0937**	3,175 **.1250**	0,08 **.003**	**3175/002-2Z**		**E3175/002-2Z**		**R144A**
3,175 **.1250**	6,35 **.2500**	2,779 **.1094**	3,571 **.1406**	0,08 **.003**	**3175-2Z**	**F3175-2Z**	**E3175-2Z**	**FE3175-2Z**	**R144**
3,175 **.1250**	7,938 **.3125**	3,571 **.1406**	4,366 **.1719**	0,08 **.003**	**1/8A-2Z**	**F1/8A-2Z**	**E1/8A-2Z**	**FE1/8A-2Z**	**R2-5**
3,175 **.1250**	9,525 **.3750**	3,571 **.1406**	4,366 **.1719**	0,08 **.003**	**1/8A/6-2Z**	**F1/8A/6-2Z**	**E1/8A/6-2Z**	**FE1/8A/6-2Z**	**R2-6**
3,175 **.1250**	9,525 **.3750**	3,967 **.1562**	4,763 **.1875**	0,3 **.012**	**1/8B-2Z**	**F1/8B-2Z**	**E1/8B-2Z**	**FE1/8B-2Z**	**R2**
3,175 **.1250**	12,7 **.5000**	4,366 **.1719**		0,3 **.012**	**1/8B/083-2Z**				**R2A**
3,967 **.1562**	7,938 **.3125**	2,779 **.1094**	3,571 **.1406**	0,08 **.003**	**3967/002-2Z**		**E3967/002-2Z**		
3,967 **.1562**	7,938 **.3125**	3,175 **.1250**	3,967 **.1562**	0,08 **.003**	**3967-2Z**	**F3967-2Z**	**E3967-2Z**	**FE3967-2Z**	**R155**
3,967 **.1562**	12,7 **.5000**	2,779 **.1094**	3,571 **.1406**	0,08 **.003**	**3967/082-2Z**		**E3967/082-2Z**		
4,763 **.1875**	7,938 **.3125**	2,779 **.1094**	3,571 **.1406**	0,08 **.003**	**4763A/002-2Z**		**E4763A/002-2Z**		
4,763 **.1875**	7,938 **.3125**	3,175 **.1250**	3,967 **.1562**	0,08 **.003**	**4763A-2Z**	**F4763A-2Z**	**E4763A-2Z**	**FE4763A-2Z**	**R156**
4,763 **.1875**	9,525 **.3750**	3,175 **.1250**	3,967 **.1562**	0,08 **.003**	**4763B-2Z**	**F4763B-2Z**	**E4763B-2Z**	**FE4763B-2Z**	**R166**
4,763 **.1875**	12,7 **.5000**	2,779 **.1094**	3,578 **.1406**	0,08 **.003**	**4763A/082-2Z**		**E4763A/082-2Z**		
4,763 **.1875**	12,7 **.5000**	3,967 **.1562**		0,3 **.012**	**3/16/002-2Z**				
4,763 **.1875**	12,7 **.5000**	4,978 **.1960**	5,771 **.2272**	0,3 **.012**	**3/16-2Z**	**F3/16-2Z**	**E3/16-2Z**	**FE3/16-2Z**	**R3**
4,763 **.1875**	15,875 **.6250**	4,978 **.1960**		0,3 **.012**	**1/4A/0001-2Z**	**F1/4A/0001-2Z**			

(2) $r_{s\,min}$ = minimum single bearing chamfer or maximum shaft or housing fillet radius.

Types indicated in darker print are readily available. Other types can only be supplied upon special request.

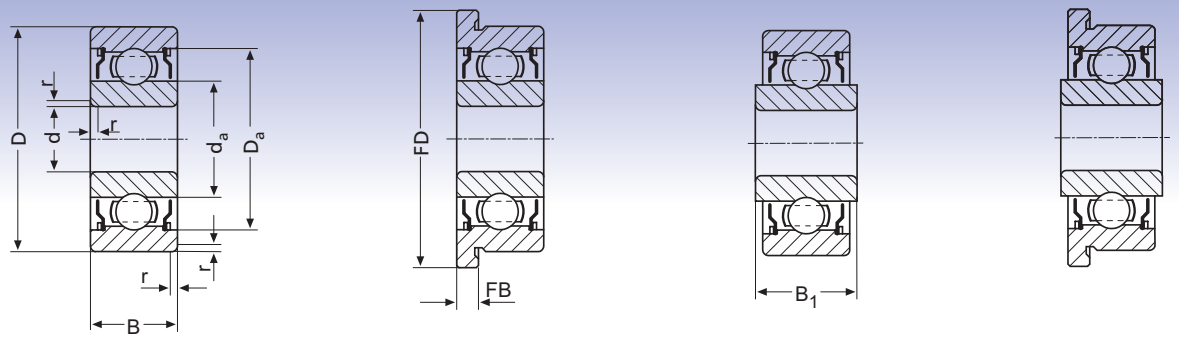

Flange Dimensions		Shaft & Housing Shoulders Diameters according to ANSI/AFBMA Std. 12.2			Number of Balls (5)	Ball Dia.	Load Ratings according to DIN ISO		Limiting Speed (6)
		Shaft Dia.		Housing Dia.					
FD	**FB**	**d_a** min	**d_a** max (3)	**D_a** max (4)	Z	D_w	C_r [N]	C_{or} [N]	$n_{\upsilon r}$ [rpm]
5,156 **.203**	0,787 **.031**	1,80 .071	2,10 .083	3,35 .132	6	0,794 .03125	163	44	164.000
5,944 **.234**	0,787 **.031**	2,00 .079	2,35 .093	4,15 .164	6	1 .0394	239	67	140.000
7,518 **.296**	0,787 **.031**	2,60 .102	3,25 .128	5,75 .226	7	1 .0394	286	90	117.000
5,944 **.234**	0,787 **.031**	2,90 .114	2,95 .116	4,25 .168	7	0,794 .03125	192	59	120.000
9,119 **.359**	0,787 **.031**	3,10 .122	4,50 .177	7,20 .284	7	1,588 .0625	644	215	72.000
		3,75 .148	4,15 .162	5,75 .226	7	1 .0394	292	97	80.000
7,518 **.296**	0,787 **.031**	3,75 .148	4,15 .162	5,75 .226	7	1 .0394	292	97	87.000
9,119 **.359**	0,787 **.031**	3,90 .153	4,55 .179	7,20 .284	7	1,588 .0625	644	215	75.000
10,719 **.422**	0,787 **.031**	3,90 .153	4,55 .179	8,80 .347	7	1,588 .0625	644	215	82.000
11,176 **.440**	0,762 **.030**	4,55 .179	5,50 .217	8,25 .325	8	1,588 .0625	720	260	61.000
		4,55 .179	5,50 .217	11,35 .446	8	1,588 .0625	720	260	74.000
		4,55 .179	5,60 .220	7,30 .288	11	1 .0394	391	165	62.000
9,119 **.359**	0,914 **.036**	4,55 .179	5,60 .220	7,30 .288	11	1 .0394	391	165	68.000
		4,55 .179	5,60 .220	8,80 .347	11	1 .0394	391	165	69.000
		5,35 .210	5,60 .220	7,30 .288	11	1 .0394	391	165	65.000
9,119 **.359**	0,914 **.036**	5,35 .210	5,60 .220	7,30 .288	11	1 0394	391	165	70.000
10,719 **.422**	0,787 **.031**	5,50 .216	5,95 .234	8,80 .347	8	1,588 .0625	730	271	56.000
		5,35 .210	5,60 .220	8,80 .347	11	1 .0394	391	165	70.000
		6,20 .244	6,90 .272	11,35 .446	7	2,381 .0938	1.339	488	50.000
14,351 **.565**	1,067 **.042**	6,20 .244	6,90 .272	11,35 .446	7	2,381 .0938	1.339	488	57.000
17,526 **.690**	1,067 **.042**	6,20 .244	9,00 .354	14,35 .565	8	2,5 .0984	1.651	670	41.000

(3) Not applicable to bearings with extended inner ring.
(4) Not applicable to flanged bearings.
(5) The number of balls may vary due to different types of retainer.

(6) See chapter "Limiting Speeds", pages 48, 49.

Subject to change due to technical improvements.

Deep Groove Ball Bearings – inch

with non-contact shield

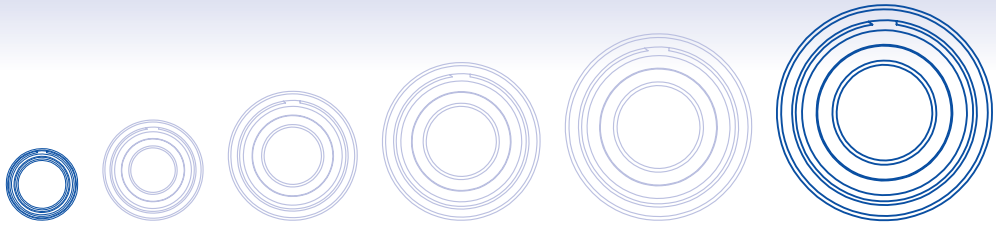

Dimensions mm / **inch**					**Types**				**Basic Type USA**
d	**D**	**B**	**B_1**	**r_s** min (2)		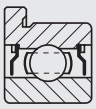	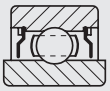	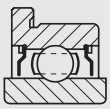	
6,35 **.2500**	9,525 **.3750**	3,175 **.1250**	3,967 **.1562**	0,08 **.003**	**6350A-2Z**	**F6350A-2Z**	**E6350A-2Z**	**FE6350A-2Z**	**R168**
6,35 **.2500**	12,7 **.5000**	4,763 **.1875**	5,558 **.2188**	0,13 **.005**	**6350B-2Z**	**F6350B-2Z**	**E6350B-2Z**	**FE6350B-2Z**	**R188**
6,35 **.2500**	15,875 **.6250**	4.978 **.1960**	5,771 **.2272**	0,3 **.012**	**1/4A-2Z**	**F1/4A-2Z**	**E1/4A-2Z**	**FE1/4A-2Z**	**R4**
6,35 **.2500**	19,05 **.7500**	5,558 **.2188**		0,4 **.016**	**1/4/002-2Z**				
6,35 **.2500**	19,05 **.7500**	7,142 **.2812**		0,4 **.016**	**1/4-2Z**				**R4A**
7,938 **.3125**	12,7 **.5000**	3,967 **.1562**	4,763 **.1875**	0,13 **.005**	**7938-2Z**	**F7938-2Z**	**E7938-2Z**	**FE7938-2Z**	**R1810**
9,525 **.3750**	22,225 **.8750**	5,558 **.2188**		0,4 **.016**	**3/8/002-2Z**				
9,525 **.3750**	22,225 **.8750**	7,142 **.2812**		0,4 **.016**	**3/8-2Z**	**F3/8-2Z**			**R6**
12,700 **.5000**	28,575 **1.125**	7,938 **.3125**		0,4 **.016**	**1/2-2Z**	**F1/2-2Z**			**R8**

(2) $r_{s\,min}$ = minimum single bearing chamfer or maximum shaft or housing fillet radius.

Types indicated in darker print are readily available. Other types can only be supplied upon special request.

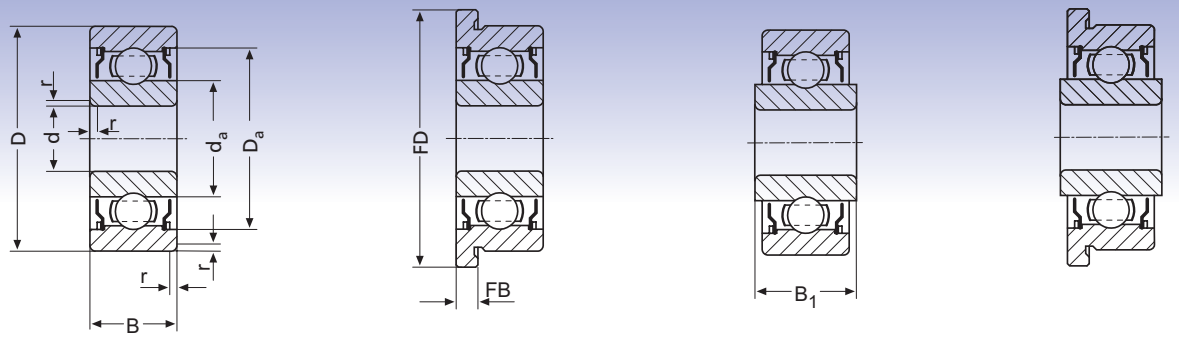

Flange Dimensions		Shaft & Housing Shoulders Diameters according to ANSI/AFBMA Std. 12.2			Number of Balls (5)	Ball Dia.	Load Ratings according to DIN ISO		Limiting Speed (6)
		Shaft Dia.		Housing Dia.					
FD	**FB**	**d_a** min	**d_a** max (3)	**D_a** max (4)	Z	D_w	C_r [N]	C_{or} [N]	$n_{\upsilon r}$ [rpm]
10,719 **.422**	0,914 **.036**	6,90 .272	7,20 .283	8,95 .352	11	1 .0394	391	165	54.000
13,894 **.547**	1,143 **.045**	7,20 .284	8,20 .322	11,85 .466	8	1,984 .0781	730	271	49.000
17,526 **.690**	1,067 **.042**	7,85 .309	9,00 .354	14,35 .565	8	2,5 .0984	1.651	670	43.000
		8,20 .322	10,80 .425	17,20 .678	8	3,175 .1250	2.522	1.057	35.000
		8,20 .322	10,80 .425	17,20 .678	8	3,175 .1250	2.522	1.057	41.000
13,894 **.547**	0,787 **.031**	8,80 .347	9,40 .374	11,85 .466	12	1,191 .0469	539	279	45.000
		11,45 .451	13,45 .530	20,30 .799	8	3,175 .1250	2.555	1.129	30.000
24,613 **.969**	1,575 **.062**	11,45 .451	13,45 .530	20,30 .799	8	3,175 .1250	2.555	1.129	35.000
31,115 **1.225**	**1,575** **.062**	15,90 .6250	17,80 .700	26,05 1.025	9	3,969 .15625	4.120	2.010	32.000

(3) Not applicable to bearings with extended inner ring.
(4) Not applicable to flanged bearings.
(5) The number of balls may vary due to different types of retainer.

(6) See chapter "Limiting Speeds", pages 48, 49.

Subject to change due to technical improvements.

Deep Groove Ball Bearings – inch
with seal

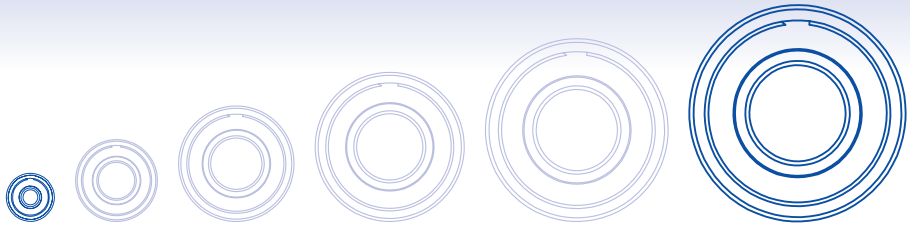

Dimensions mm / inch					Types				Basic Type USA
d	**D**	**B**	**B_1**	**r_s** min (2)		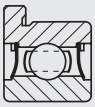	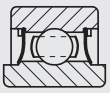	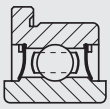	
1,984 **.0781**	6,35 **.2500**	3,571 **.1406**	4,366 **.1719**	0,08 **.003**	**5/64-2TS**	**F5/64-2TS**	E5/64-2TS	FE5/64-2TS	**R1-4**
2,38 **.0937**	7,938 **.3125**	3,571 **.1406**	4,366 **.1719**	0,13 **.005**	**3/32-2TS**	**F3/32-2TS**	E3/32-2TS	FE3/32-2TS	**R1-5**
3,175 **.1250**	6,35 **.2500**	2,779 **.1094**	3,571 **.1406**	0,08 **.003**	**3175-2TS**	**F3175-2TS**	E3175-2TS	FE3175-2TS	**R144**
3,175 **.1250**	7,938 **.3125**	3,571 **.1406**	4,366 **.1719**	0,08 **.003**	**1/8A-2TS**	**F1/8A-2TS**	E1/8A-2TS	FE1/8A-2TS	**R2-5**
3,175 **.1250**	9,525 **.3750**	3,571 **.1406**	4,366 **.1719**	0,08 **.003**	**1/8A/6-2TS**	**F1/8A/6-2TS**	E1/8A/6-2TS	FE1/8A/6-2TS	**R2-6**
3,175 **.1250**	9,525 **.3750**	3,967 **.1562**	4,763 **.1875**	0,3 **.012**	**1/8B-2TS**	**F1/8B-2TS**	E1/8B-2TS	FE1/8B-2TS	**R2**
3,967 **.1562**	7,938 **.3125**	3,175 **.1250**	3,967 **.1562**	0,08 **.003**	**3967-2TS**	**F3967-2TS**	E3967-2TS	FE3967-2TS	**R155**
4,763 **.1875**	7,938 **.3125**	3,175 **.1250**	3,571 **.1562**	0,08 **.003**	**4763A-2TS**	**F4763A-2TS**	**E4763A-2TS**	**FE4763A-2TS**	**R156**
4,763 **.1875**	9,525 **.3750**	3,175 **.1250**	3,967 **.1562**	0,08 **.003**	**4763B-2TS**	**F4763B-2TS**	E4763B-2TS	FE4763B-2TS	**R166**
4,763 **.1875**	12,7 **.5000**	4,978 **.1960**	5,771 **.2272**	0,3 **.012**	**3/16-2TS** **3/16-2RS**	**F3/16-2TS** **F3/16-2RS**	E3/16-2TS E3/16-2RS	FE3/16-2TS FE3/16-2RS	**R3**
4,763 **.1875**	15,875 **.6250**	4,978 **.1960**		0,3 **.012**	**1/4A/0001-2TS**	**F1/4A/0001-2TS**			
6,35 **.2500**	9,525 **.3750**	3,175 **.1250**	3,967 **.1562**	0,08 **.003**	**6350A-2TS**	**F6350A-2TS**	**E6350A-2TS**	**FE6350A-2TS**	**R168**
6,35 **.2500**	12,7 **.5000**	4,763 **.1875**	5,558 **.2188**	0,13 **.005**	**6350B-2TS**	**F6350B-2TS**	E6350B-2TS	FE6350B-2TS	**R188**
6,35 **.2500**	15,875 **.6250**	4,978 **.1960**	5,771 **.2272**	0,3 **.012**	**1/4A-2TS** **1/4A-2RS**	**F1/4A-2TS**	**E1/4A-2TS**	**FE1/4A-2TS**	**R4**
6,35 **.2500**	19,05 **.7500**	7,142 **.2812**		0,4 **.016**	**1/4-2TS** **1/4-2RS**				**R4A**
7,938 **.3125**	12,7 **.5000**	3,967 **.1562**	4,763 **.1875**	0,13 **.005**	**7938-2TS**	**F7938-2TS**	E7938-2TS	FE7938-2TS	**R1810**
9,525 **.3750**	22,225 **.8750**	7,142 **.2812**		0,4 **.016**	**3/8-2TS** **3/8-2RS**	**F3/8-2TS**			**R6**
12,700 **.500**	28,575 **1.125**	7,938 **.3125**		0,4 **.016**	**1/2-2TS**	**F1/2-2TS**			**R8**

(2) $r_{s\,min}$ = minimum single bearing chamfer or maximum shaft or housing fillet radius.

Types indicated in darker print are readily available. Other types can only be supplied upon special request.

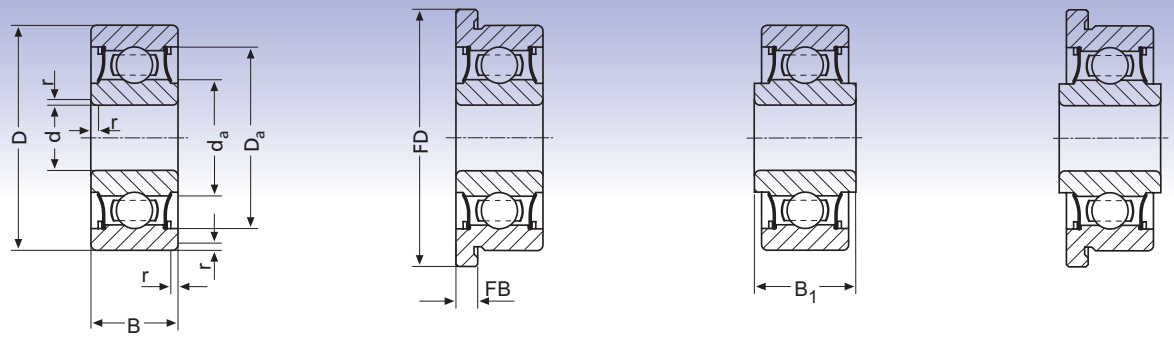

Flange Dimensions		Shaft & Housing Shoulders Diameters according to ANSI/AFBMA Std. 12.2			Number of Balls (5)	Ball Dia.	Load Ratings according to DIN ISO		Limiting Speed (6)
		Shaft Dia.		Housing Dia.					
FD	**FB**	**d_a** min	**d_a** max (3)	**D_a** max (4)	Z	D_w	C_r [N]	C_{or} [N]	$n_{\upsilon r}$ [rpm]
7,518 **.296**	0,787 **.031**	2,60 .102	2,90 .114	5,75 .226	7	1 .0394	286	90	65.000
9,119 **.359**	0,787 **.031**	3,10 .122	3,95 .156	7,20 .284	7	1,588 .0625	644	215	51.000
7,518 **.296**	0,787 **.031**	3,75 .148	3,80 .150	5,75 .226	7	1 .0394	292	97	53.000
9,119 **.359**	0,787 **.031**	3,90 .153	3,95 .156	7,20 .284	7	1,588 .0625	644	215	51.000
10,719 **.422**	0,787 **031**	3,90 .153	3,95 .156	8,80 .347	7	1,588 .0625	644	215	51.000
11,176 **.440**	0,762 **.030**	4,55 .179	4,85 .189	8,25 .325	8	1,588 .0625	720	260	44.000
9,119 **.359**	0,914 **.036**	4,55 .179	5,25 .207	7,30 .288	11	1 .0394	391	165	42.000
9,119 **.359**	0,914 **.036**	5,35 .210	5,35 .210	7,30 .288	11	1 .0394	391	165	42.000
10,719 **.422**	0,787 **.031**	5,50 .216	5,50 .216	8,80 .347	8	1,588 .0625	730	271	41.000
14,351 **.565**	1,067 **.042**	6,20 .244	6,25 .246	11,35 .446	7	2,381 .0938	1.339	488	37.000 28.000
17,526 **.690**	1,067 **.042**	6,20 .244	8,25 .325	14,35 .565	8	2,5 .0984	1.651	670	31.000
10,719 **.422**	0,914 **.036**	6,85 .270	6,90 .272	8,95 .352	11	1 .0394	391	165	35.000
13,894 **.547**	1,143 **.045**	7,20 .284	7,60 .299	11,85 .466	8	1,984 .0781	730	271	33.000
17,526 **.690**	1,067 **.042**	7,85 .310	8,25 .325	14,35 .565	8	2,5 .0984	1.651	670	31.000 24.000
		8,20 .322	9,75 .384	17,20 .678	8	3,175 .1250	2.522	1.057	28.000 22.000
13,894 **.547**	0,787 **.031**	8,80 .347	8,95 .352	11,85 .466	12	1,191 .0469	539	279	30.000
24,613 **.969**	1,575 **.062**	11,45 .451	12,35 .486	20,30 .799	8	3,175 .1250	2.555	1.129	24.000 21.000
31,115 **1.225**	**1,575** **.062**	15,88 .6250	17,80 .700	26,04 1.025	9	3,969 .1563	4.120	2.010	21.000

(3) Not applicable to bearings with extended inner ring.
(4) Not applicable to flanged bearings.
(5) The number of balls may vary due to different types of retainer.

(6) See chapter "Limiting Speeds", pages 48, 49.

Subject to change due to technical improvements.

Tolerance Table

	Definition		Dimension series	d mm over	to	P0 µm max.	min.	P6 µm max.	min.	P5 µm max.	min.	P4 µm max.	min.
Inner Ring	Single plane mean bore diameter deviation	Δ_{dmp}		0,6	18	0	–8	0	–7	0	–5	0	–4
	Deviation of a single bore diameter	Δ_{ds}		0,6	18							0	–4
	Bore diameter deviation in a single radial plane	V_{dp}	7 / 8 / 9	0,6	18	10		9		5		4	
			0	0,6	18	8		7		4		3	
			2 / 3	0,6	18	6		5		4		3	
	Mean bore diameter variation	V_{dmp}		0,6	18	6		5		3		2	
	Deviation of a single ring width	Δ_{Bs} 1)		0,6	2,5	0	–40	0	–40	0	–40	0	–40
				0,6	10								
				2,5	10	0	–120	0	–120	0	–40	0	–40
				10	18	0	–120	0	–120	0	–80	0	–80
	Variation in the width of the rings	V_{Bs}		0,6	2,5	12		12		5		2,5	
				0,6	10								
				2,5	10	15		15		5		2,5	
				10	18	20		20		5		2,5	
	Radial runout of assembled bearing inner ring	K_{ia}		0,6	2,5	10		5		4		2,5	
				2,5	10	10		6		4		2,5	
				10	18	10		7		4		2,5	
	Face runout with bore	S_d		0,6	18					7		3	
	Assembled bearing inner ring face runout with raceway	S_{ia}		0,6	18					7		3	

	Definition		Dimension series	D mm over	to	P0 µm max.	min.	P6 µm max.	min.	P5 µm max.	min.	P4 µm max.	min.
Außenring	Single plane mean outside diameter deviation	Δ_{Dmp}		2,5	18	0	–8	0	–7	0	–5	0	–4
				18	30	0	–9	0	–8	0	–6	0	–5
	Deviation of a single outside diameter	Δ_{Ds} 2)		2,5	18							0	–4
				18	30							0	–5
	Outside diameter variation in a single radial plane	V_{Dp} 2)	7 / 8 / 9	2,5	18	10		9		5		4	
				18	30	12		10		6		5	
			0	2,5	18	8		7		4		3	
				18	30	9		8		5		4	
			2 / 3	2,5	18	6		5		4		3	
				18	30	7		6		5		4	
	Mean outside diameter variation	V_{Dmp} 2)		2,5	18	6		5		3		2	
				18	30	7		6		3		2,5	
	Deviation of a single ring width	Δ_{Cs} 1)		2,5	18	identical with Δ_{Bs} for the inner ring of the same bearing							
				18	30	0	–120	0	–120	0	–120	0	–120
	Variation in the width of the rings	V_{Cs}		2,5	18	identical with V_{Bs} for the inner ring of the same bearing							
				18	30	20		20		5		2,5	
	Radial runout of assembled bearing outer ring	K_{ea}		2,5	18	15		8		5		3	
				18	30	15		9		6		4	
	Variation of outside surface generatrix inclination with face	S_D		2,5	30					8		4	
	Assembled bearing outer ring face runout with raceway	S_{ea}		2,5	18					8		5	
				18	30					8		5	
	Assembled bearing outer ring flange back face runout with raceway	S_{ea1}		2,5	18					11		7	
				18	30					11		7	
	Deviation of a single outside diameter of the outer ring flange	ΔFD		2,5	30	+50	–50	+50	–50	+50	–50	+50	–50
	Deviation of a single width outer ring flange	ΔFB		2,5	10	0	–120	0	–120	0	–40	0	–40
				10	18	0	–120	0	–120	0	–80	0	–80
				18	30	0	–120	0	–120	0	–120	0	–120

1) The tolerance for the total width of the matched pair is 0/–200 µm.
2) Is valid before the bearing has been assembled and after the inner and/or outer circlips have been removed.
3) For flanged bearings the flange back side.

P2 µm max.	P2 µm min.	P5A µm max.	P5A µm min.	P4A µm max.	P4A µm min.	ABEC1 .0001 inch max.	ABEC1 .0001 inch min.	ABEC5 .0001 inch max.	ABEC5 .0001 inch min.	ABEC7 .0001 inch max.	ABEC7 .0001 inch min.	ABEC9 .0001 inch max.	ABEC9 .0001 inch min.	ABEC3P .0001 inch max.	ABEC3P .0001 inch min.	ABEC5P .0001 inch max.	ABEC5P .0001 inch min.	ABEC7P .0001 inch max.	ABEC7P .0001 inch min.	ABEC9P .0001 inch max.	ABEC9P .0001 inch min.
0	−2,5	0	−5	0	−5	0	−3	0	−2	0	−1.5			0	−2	0	−2	0	−2	0	−1
0	−2,5	0	−5	0	−5	+1	−4	0	−2	0	−1.5	0	−1	+1	−3	0	−2	0	−2	0	−1
2,5		3		2,5												1		1		.5	
2,5		3		2,5												1		1		.5	
2,5		3		2,5												1		1		.5	
1,5		3		2,5												1		1		.5	
0	−40	0	−25	0	−25																
						0	−50	0	−16	0	−16	0	−16	0	−50	0	−10	0	−10	0	−10
0	−40	0	−25	0	−25																
0	−80	0	−25	0	−25	0	−50	0	−32	0	−32	0	−32	0	−50	0	−10	0	−10	0	−10
1,5		5		2,5																	
								2		1		.5				2		1		.5	
1,5		5		2,5																	
1,5		5		2,5				2		1		.5				2		1		.5	
1,5		3,5		2,5		3		1.5		1		.5		2		1.5		1		.5	
1,5		3,5		2,5		3		1.5		1		.5		2		1.5		1		.5	
1,5		3,5		2,5		4		1.5		1		.5		2		1.5		1		.5	
1,5		7		3				3		1		.5				3		1		.5	
1,5		7		3				3		1		.5				3		1		.5	
P2 µm max.	P2 µm min.	P5A µm max.	P5A µm min.	P4A µm max.	P4A µm min.	ABEC1 .0001 inch max.	ABEC1 .0001 inch min.	ABEC5 .0001 inch max.	ABEC5 .0001 inch min.	ABEC7 .0001 inch max.	ABEC7 .0001 inch min.	ABEC9 .0001 inch max.	ABEC9 .0001 inch min.	ABEC3P .0001 inch max.	ABEC3P .0001 inch min.	ABEC5P .0001 inch max.	ABEC5P .0001 inch min.	ABEC7P .0001 inch max.	ABEC7P .0001 inch min.	ABEC9P .0001 inch max.	ABEC9P .0001 inch min.
0	−2,5	0	−5	0	−5	0	−3	0	−2	0	−2			0	−3	0	−2	0	−2	0	−1
0	−4	0	−6	0	−5	0	−4	0	−2	0	−2			0	−3	0	−2	0	−2	0	−1.5
0	−2,5	0	−5	0	−5	+1	−4	0	−2	0	−2	0	−1	+1	−4	0	−2	0	−2	0	−1
0	−4	0	−6	0	−5	+1	−5	0	−2	0	−2	0	−1.5	+1	−4	0	−2	0	−2	0	−1.5
2,5		3		2,5												1		1		.5	
4		3		2,5												1		1		.8	
2,5		3		2,5												1		1		.5	
4		3		2,5												1		1		.8	
2,5		3		2,5												1		1		.5	
4		3		2,5												1		1		.8	
1,5		3		2,5												1		1		.5	
2		3		2,5												1		1		.8	
0	−120	0	−25	0	−25	0	−50	0	−50	0	−50	0	−50	0	−50	0	−10	0	−10	0	−10
1,5		5		2,5				2		1		.5				2		1		.5	
1,5		5		3,5		6		2		1.5		.5		4		2		1.5		.5	
2,5		6		4		6		2		1.5		1		4		2		1.5		1	
1,5		8		4				3		1.5		.5				3		1.5		.5	
1,5		8		5				3		2		.5				3		2		.5	
2,5		8		5				3		2		1				3		2		1	
3		10		8												3		3			
4		10		8												3		3			
+50	−50	0	−25	0	−25									+50	−20	0	−10	0	−10		
0	−40	0	−50	0	−50									0	−20	0	−20	0	−20		
0	−80	0	−50	0	−50									0	−20	0	−20	0	−20		
0	−120	0	−50	0	−50									0	−20	0	−20	0	−20		

Special Bearings

Thanks to its flexible manufacturing facilities GRW can provide a wide range of special ball bearings in addition to standard and high-precision ball bearings made of chrome and stainless steel.

The special characteristics are:

- special shapes
- special lubricants
- special treatments

Furthermore we also manufacture rotationally symmetrical turned parts.

Special Shapes

Two-row ball bearing
with step in outer ring

Crowned
outer ring

Linear guide

'V' Groove and
inner shaft

Rotationally symmetrical turned part

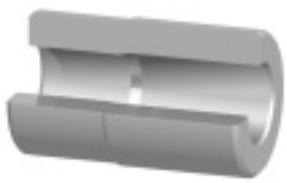

Rotationally symmetrical turned part

Rotationally symmetrical turned part

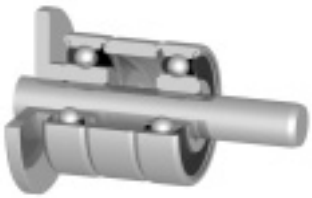

Bearing unit for incremental shaft encoder

Bearing unit in read/sort unit for banking documents

Spindle/Angular Contact Ball Bearings

Spindle ball bearings are angular contact ball bearings which, depending on the type, have a relieved land on the inner ring (AC2) or the outer ring (AC1). Axial forces can thus only be accepted in one direction. Spindle ball bearings can be used as single ball bearings or as ball bearing pairs in back to back, face to face or tandem arrangement.

GRW spindle ball bearings have the following characteristics:

- Production in high-precision quality (grade P5, P4, P2 or ABEC5, ABEC7, ABEC9)
- One-part solid phenolic retainer (TA, TB, see page 41)
- Larger number of balls than in standard ball bearings
- Contact angle 15° (other angles available upon request)
- Available with steel balls or ceramic balls
- The preload for ball bearing pairs is selected according to the applied load (light, medium or heavy preload)
- Spindle ball bearings are generally lubricated with oil

These characteristics allow the ball bearings to run very accurately at high speeds. At the same time these ball bearings are very rigid and have minimum vibration levels.

The standard type is:

AC1 TA
Relieved on outer ring shoulder, ball bearing cannot be disassembled, solid phenolic retainer guided on outer ring.

Other types including ball bearings with removable inner rings are available upon request.

Accessories

Type: stainless steel sheet AISI 420, heat-treated, without burrs, finest surface quality

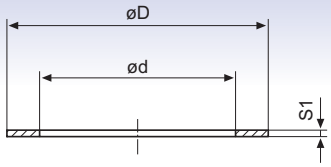

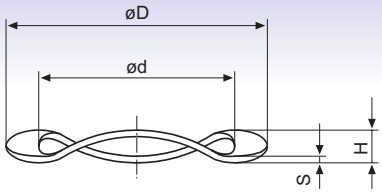

Shims and Spring Washers

* Material SAE 1074

Dimensions (mm)					Used for	
Shims		Spring Washers				
d x D	S1	d x D	H	S	Shaft Types	Housing Types
AS 2,25 x 3,20	0,08 0,10	WF 2,15 x 3,10	0,50	0,08	682; 692; 5/64	1016
AS 2,80 x 3,90	0,08 0,10	WF 2,70 x 3,80	0,50	0,08	60/2,5; 68/2,5; 69/2,5; 3/32	68/1,5; 691; 1191
AS 3,30 x 4,40	0,08 0,10 0,12	WF 3,20 x 4,30	0,50	0,10	623; 683; 693; 1/8A; 1/8B; 3175; 1/8A/6; 1/8B/083	
AS 3,80 x 4,90	0,08 0,10 0,12	WF 3,70 x 4,80	0,55	0,10		682; 69/1,5
AS 4,30 x 5,85	0,10 0,12 0,15	WF 4,20 x 5,75	0,65	0,12	604; 624; 634; 684; 694; 3967	68/2,5; 692
AS 4,90 x 6,20	0,10 0,12 0,15	WF 4,80 x 6,10	0,60	0,12	3/16; 4763A; 4763B	5/64; 3175
AS 5,30 x 6,85	0,10 0,12 0,15	WF 5,20 x 6,75	0,65	0,12	625; 635; 685; 695	683; 69/2,5
AS 6,30 x 7,85	0,12 0,15 0,18	WF 6,20 x 7,75	0,70	0,15	626; 686; 696	60/2,5; 693; 3/32; 1/8A; 3967; 4763A
AS 7,30 x 8,80	0,12 0,15 0,18	WF 7,20 x 8,70	0,90	0,15	607; 627; 687; 697	684
		WF 7,20 x 12,00 *	1,40	0,125	607; 627	6350B; 7938; 1/8B/083
AS 8,30 x 9,80	0,15 0,18 0,20	WF 8,20 x 9,70	0,85	0,18	608; 688; 698; 7938	623
AS 9,30 x 10,80	0,15 0,18 0,20	WF 9,20 x 10,70	1,15	0,18	609; 629; 689; 699	685; 694
AS 10,30 x 11,80	0,18 0,20 0,22	WF 10,20 x 11,70	1,05	0,20	6000; 6800; 6900; 3/8	604
		WF 10,50 x 15,80 *	1,70	0,20	6000	625; 634
AS 11,30 x 12,80	0,18 0,20 0,22	WF 11,20 x 12,70	1,30	0,20		624; 686; 695
AS 12,30 x 13,80	0,20 0,22 0,25	WF 12,20 x 13,70	1,30	0,22		687
AS 13,30 x 14,80	0,20 0,22 0,25	WF 13,20 x 14,70	1,30	0,22		696
		WF 13,20 x 18,80 *	1,60	0,20		607; 626; 635; 1/4
AS 14,35 x 15,80	0,22 0,25 0,30	WF 14,20 x 15,65	1,55	0,25		625; 634; 688; 1/4A
AS 15,35 x 16,80	0,22 0,25 0,30	WF 15,20 x 16,65	1,55	0,25		689; 697
		WF 15,80 x 21,80 *	1,60	0,20		608; 627; 6900; 3/8
AS 16,40 x 18,80	0,25 0,30 0,35	WF 16,20 x 18,55	2,15	0,30		607; 626; 635; 6800; 698; 1/4
		WF 17,30 x 23,80 *	1,50	0,25 0,30		609
		WF 19,30 x 25,80 *	1,90 1,80	0,35 0,30		6000; 629

Subject to alterations

Please inquire about availability before using the shims and spring washers
Minimum quantity 1000 pieces

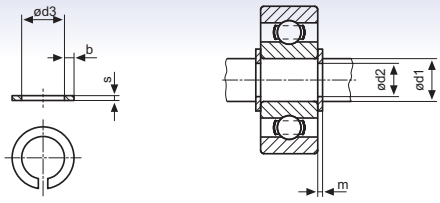

Shaft Retaining Rings

Material AISI 301

Type	Dimensions (mm)					
	Shaft	Retaining Ring			Groove	
	d 1 ø	d 3 max.	b ± 0,10	s ± 0,02	d 2 – 0,05	m + 0,03
WSR 3	3	2,60	0,50	0,30	2,70	0,33
WSR 4	4	3,60	0,50	0,30	3,70	0,33
WSR 5	5	4,50	0,70	0,40	4,60	0,44
WSR 6	6	5,45	0,70	0,40	5,60	0,44
WSR 7	7	6,45	0,70	0,40	6,60	0,44
WSR 8	8	7,35	0,90	0,50	7,50	0,55
WSR 9	9	8,30	0,90	0,50	8,50	0,55
WSR 10	10	9,25	0,90	0,50	9,50	0,55

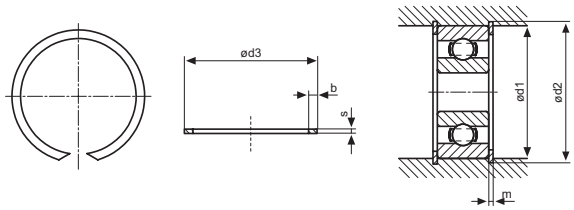

Bore Retaining Rings

Material AISI 301

Type	Dimensions (mm)					
	Bore	Retaining Ring			Groove	
	d 1 ø	d 3 max.	b ± 0,10	s ± 0,02	d 2 + 0,05	m + 0,03
BSR 4	4	4,4	0,50	0,30	4,30	0,33
BSR 5	5	5,45	0,50	0,30	5,30	0,33
BSR 6	6	6,45	0,50	0,30	6,30	0,33
BSR 7	7	7,50	0,50	0,30	7,30	0,33
BSR 8	8	8,60	0,70	0,40	8,40	0,44
BSR 9	9	9,60	0,70	0,40	9,40	0,44
BSR 10	10	10,65	0,70	0,40	10,40	0,44
BSR 11	11	11,65	0,70	0,40	11,40	0,44
BSR 12	12	12,75	0,90	0,50	12,50	0,55
BSR 13	13	13,75	0,90	0,50	13,50	0,55
BSR 14	14	14,80	0,90	0,50	14,50	0,55
BSR 15	15	15,80	0,90	0,50	15,50	0,55
BSR 16	16	16,85	0,90	0,50	16,50	0,55
BSR 17	17	17,85	0,90	0,50	17,50	0,55
BSR 19	19	20	1,10	0,60	19,60	0,66

Retainers for Miniature Ball Bearings

Designs and materials used for the retainers are suited to the task. Our two-piece ribbon retainer is sufficient in the majority of cases.

The following table shows the different types:

GRW Retainer Code	Picture	Description/ Material	Application Range/ Purpose
E **J** **Y**		Two-piece ribbon retainer made of – Steel sheet (E) – Stainless steel sheet (J) – Brass sheet (Y)	For deep groove ball bearings. For stainless steel ball bearings: retainer from stainless steel sheet. This retainer can also be clinched loosely to reduce torque. See catalogue information pages 8 to 33.
JH		One-piece stainless steel snap type retainer.	For deep groove ball bearings. Mainly used for small ball bearings at low and medium speeds.
TNH		One-piece molded synthetic snap type retainer.	For deep groove ball bearings. Good running and torque characteristics for medium speed range. Working temperature -30 °C to 80 °C (short term 100 °C).
TN9H		One-piece glass-fibre reinforced molded synthetic snap type retainer.	For deep groove ball bearings. Speed range higher than TNH retainer. Working temperature -30 °C to 120 °C (short term 180 °C).
THA **THB**		Machined one-piece snap type retainer made from reinforced phenolic resin. A = outer ring guided. B = inner ring guided.	For high-speed deep groove ball bearings. High rigidity and emergency running characteristics. Working temperature -50 °C to 140 °C. Can be vacuum impregnated with oil.
TXHA **TX**HB		Machined one-piece snap type retainer made from special materials. X stands for a number indicating the material. A = outer ring guided. B = inner ring guided.	For high-speed deep groove ball bearings. High rigidity and emergency running characteristics. Working temperature -50 °C to 260 °C depending on material.

GRW Retainer Code	Picture	Description / Material	Application Range / Purpose
TA **TB**		Machined one-piece, solid retainer made from fabric reinforced phenolic resin. A = outer ring guided. B = inner ring guided. Only for AC types.	For high-speed angular contact/ spindle ball bearings. High rigidity and emergency running characteristics. Working temperature -50 °C to 140 °C. Can be vacuum impregnated.
TXA **TXB**		Machined one-piece, solid retainer made from special material. X stands for a number indicating the material. A = outer ring guided. B = inner ring guided. Only for AC types.	For high speed angular/spindle ball bearings. High rigidity and emergency running characteristics. Working temperature -50 °C to 260 °C.
VAC1 **VAC2**		Full complement ball bearing, without retainer, cannot be disassembled. VAC1 = one shoulder relieved on outer ring. VAC2 = one shoulder relieved on inner ring.	Used for medium speeds and high axial loads in one direction only.

Not all retainers are available for all ball bearing sizes. Please call our technical support.

Other ball bearing and retainer designs and also retainer materials for special requirements are available upon request.

Closures

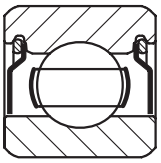

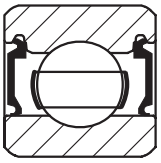

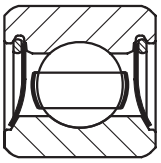

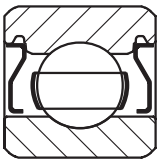

Ball bearing closures fulfil two tasks at the same time: firstly they prevent contamination and secondly they contain lubricants.

Non-contact Closures

Because of the proximity with the inner ring land the ball bearing closure forms an effective gap seal. It neither increases the torque nor influences the maximum speed compared with open ball bearings as the shields do not touch the inner ring. This is sufficient for most applications.

Metal Shields

The shields are stamped from stainless steel on the majority of ball bearings. They are fastened to the outer ring with a circlip and can thus be removed. Ball bearings can also be fitted with pressed-in shields made from deep drawing steel sheet.

Rubber Closures

The RZ closure is made of molded rubber with metal stiffener and can be used at temperatures from –30 °C to 120 °C. This closure is fastened in the outer ring by the rubber border.

Seal with Inner Ring Contact

This ball bearing seal touches the inner ring land. This causes an increase in torque.

Teflon Seal

The TS seal is made from glass-fibre reinforced Teflon which is fastened in the outer ring by a circlip.

Teflon seals can be used at working temperatures of -240 °C to 300 °C. They prevent contamination. However an hermetic sealing cannot be achieved. The torque is lower than for rubber seals due to the favourable low friction combination (PTFE/Steel) and the low contact force of the sealing lip.

TS seals are universally resistant to chemicals. The ball bearings are normally made from stainless steel, chrome steel can also be provided in appropriately large quantities.

Rubber Seal

The RS seal is made of molded rubber with metal stiffener and can be used at temperatures of -30 °C to 120 °C.

The VS seal is made of molded viton with metal stiffener and is suitable for temperatures of -20 °C to 230 °C.

Both seals are fastened in the outer ring by the rubber border.

We would like to remind you that certain lubricants cannot be used with rubber. Please consult our technical support about difficult operating conditions.

Special Closures

In addition to the standard closures we also manufacture special closures and combinations of different closures. Please call our technical support.

Materials for Rings and Balls

Our ball bearings are made from chrome steel (SAE 52100) or from stainless steel (X65Cr13). Ceramic balls can be used in both versions if required (hybrid ball bearings).

Hybrid Ball Bearings (steel rings and ceramic balls) are above all used in dental technology, in spindle bearings and vacuum technology.

The chrome steel (1.3505/SAE 52100) used is very good heat treatable and maintains a high level of strength when hardened. Ball bearings made from this kind of steel have an excellent service life at working temperatures up to 170 °C (338 °F).

The stainless steel (1.4037) is a martensitic steel which can be used at a working temperature of up to 200 °C (392 °F) without noticeable hardness loss.

Improvements in steel production and heat treatment allow the load ratings of both steels to be the same.

Prefix	–	SS
DIN	100Cr6	X65Cr13
DIN	1.3505	1.4037
SAE	52100	
AFNOR	100Cr6	
C %	0,95 - 1,10	0,60 - 0,75
Si %	0,15 - 0,35	1 max.
Mn %	0,25 - 0,45	1 max.
P %	0,03 max.	0,04 max.
S %	0,025 max.	0,03 max.
Cr %	1,35 - 1,65	12 - 14
Mo %	–	0,75 max.

Table 1: Chemical analysis

Our technical support will be pleased to provide you with information on the chemical resistance of above mentioned materials.

Selecting the right lubricant and lubricating method is just as decisive for the bearing function as selecting the bearing itself and designing the mating parts.

The decision on a specific lubricant is made according to the operating conditions and the torque demands.

Lubricating Oils

Lubricating oil is mainly used where minimum torque is required.

Our ball bearings, either open or with one closure, are preserved with oil ex works if no special lubrication is specified.

Lubricating Greases

Our ball bearings with closures on both sides and also our ball bearings with one closure together with a snap retainer are greased ex works if no special lubrication is specified.

Regarding this we would mention that lubricating greases with EP additives are not suitable for low-noise ball bearings.

The ball bearings can be lubricated with oils and greases other than those listed in the tables upon request and in quantities agreed upon. We have around 250 lubricants to choose from. Please ask our technical support for specific details.

Special Treatment

Special operating conditions go beyond the limits of application even for the special lubricants which we use. In such cases it is possible to specify suitable ball bearings by using different coatings. Galvanically applied precious metal layers, graphite, MoS_2 etc. are used here. This treatment is used for ball bearings to work in vacuum systems up to ultra-high vacuums (UHV), in aviation and aerospace technology and at extreme temperatures.

Hard coatings, for example, TiC, TiN or highest grade chromium are also applied for special applications.

Please contact our technical support for further information.

Code	Brand Name	Manu-facturer	Basic Oil	Operating Temperature Range	Viscosity at 40 °C/100 °C [mm²/s]	Specification
L001	Aero Shell Fluid 12	Shell	Ester	–40 to 100 °C	15 / 3,7	MIL-L-6085 C
L010	Isoflex PDP 38	Klüber	Ester	–65 to 100 °C	12 / 3,2	Following MIL-L-6085
L014	Krytox 143 AC	Du Pont	PFPE	–34 to 288 °C	200 / 30	–
L020	Shell Ensis L	Shell	Mineral	–10 to 100 °C	32 / 5,5	–
L085	Nyosil M 25	Nye	Chlorphenyl-silikon	–70 to 200 °C	56 / 20	–
L027	Synthetic Oil 200 A (Winsor Lube L 245 X)	Nye	Ester	–54 to 200 °C	13 / 3,4	MIL-L-6085 C
L065	Gargoyle Arctic SHC 224	Mobil Oil	Polyalphaolefin	–45 to 140 °C	29 / 5,6	USDA-H1

Table 2: Lubricating oils

Code	Brand Name	Manu-facturer	Composition	Operating Temperature Range	Viscosity at 40 °C/100 °C [mm²/s]	Speed factor	Specification
G305	ASG 7	Shell	Diester / microgel	–73 to 149 °C	15 / 3,1	Not known	MIL-G-23827 B
G310	Asonic GLY 32	Klüber	Ester + polyalpha-olefin / lithium	–50 to 140 °C	25 / 5	1.000.000	–
G315	Barrierta L 55/2	Klüber	PFPE / PTFE	–40 to 260 °C	400 / 38	300.000	–
G316	Nye Instrument Grease 704 B	Nye	Diester / lithium	–65 to 150 °C	11,8 / 3,25	300.000	–
G331	Isoflex Super LDS 18	Klüber	Mineral oil + ester / lithium	–50 to 120 °C	15 / 3,7	1.000.000	–
G332	Isoflex Topas NB 52	Klüber	Polyalphaolefin / barium complex	–50 to 150 °C	30 / 5,5	1.000.000	Following MIL-G-81322
G338	Krytox 240 AC	Du Pont	PFPE / PTFE	–34 to 288 °C	200 / 30	400.000	MIL-G-27617 Type III MIL-G-27616
G340	Longtime PD2	Optimol	Mineral oil/ lithium	–35 to 140 °C	95 / 9,0	1.000.000	–
G366	Nyogel 781 D (Versilube G300)	Nye	Chlorophenyl-silicon / lithium	–70 to 200 °C	53 / 18,9	200.000	–
G462	Unisilkon L50/2	Klüber	Silicon / PTFE	–50 to 200 °C	112 / 27	200.000	–
G463	Mobilgrease FM 102	Mobil Oil	White oil / aluminium complex	–20 to 120 °C	108 / 10,5	400.000	FDA 178.3570 USDA-H1

Table 3: Lubricating greases

Functional Tests

Functional tests on the assembled bearing include noise or vibration and torque tests. The realization of these tests is necessary to ensure uniformity of the production run or to guarantee compliance with customer requirements. The basis for attaining this goal is constant monitoring of the parts for roundness and surface finish.

The testing method should be selected according to the nature of the later use.

Noise Test

The abbreviation GPR given in our numbering system stands for 100 % noise-tested ball bearings. We test the amplitude of the vibrations generated by the ball bearings at set speeds and frequencies.

Torque Test

Torque-tested ball bearings are tested and packaged in rooms with a controlled atmosphere in laminar cabinets.

We recommend instrument oils with a viscosity of ≤14 mm^2/s at 40 °C for low torque bearings.

The starting torque is the torque required to start the rotation of one ring, with the other stationary. The torque is tested on a vertical shaft with axial loading.

The measurements made with the tester according to MIL-STD-206A provide very exact and reliable values. During the test the outer ring is driven and the inner ring loaded with the standard load according to the bearing size.

Due to the lack of a generally accepted standard torque comparisons of bearings of the same type can only be made in identical measuring conditions on the same measuring equipment.

Table 4 gives reference values for the maximum starting torque in µNm. These values apply for instrument ball bearings without seals P5 or ABEC5 and better, which are lubricated with instrument oil with viscosity ≤14 mm^2/s at 40 °C. The value can be 10 to 40 times greater for ball bearings with grease lubrication.

In this test the axial loading of the inner ring is 75 g for ball bearings with an outside diameter up to 10 mm. Ball bearings with a greater outside diameter are loaded with 400 g.

The running torque is the torque which is required to keep a ball bearing in rotation. In this case together with the user we agree upon a suitable measuring method for the test.

Basic Type	Torque µNm	Load g	Basic Type	Torque µNm	Load g	Basic Type	Torque µNm	Load g
681	15	75	**695**	69	400	**1016**	15	75
691	15	75	**605**	69	400	**1191**	15	75
68/1,5	15	75	**625**	69	400	**1397**	15	75
69/1,5	15	75	**635**	76	400	**5/64**	15	75
682	15	75	**686**	69	400	**2380**	15	75
692	15	75	**696**	69	400	**3/32**	15	75
67/2,35	15	75	**626**	76	400	**3175**	15	75
68/2,35	15	75	**687**	69	400	**1/8A**	15	75
68/2,5	15	75	**697**	76	400	**1/8B**	16	75
69/2,5	15	75	**607**	76	400	**3967**	15	75
60/2,5	16	75	**627**	80	400	**4763A**	15	75
673	16	75	**688A**	52	400	**4763B**	16	75
683	16	75	**688**	76	400	**3/16**	52	400
693	16	75	**698**	76	400	**6350A**	15	75
623	16	75	**608**	80	400	**6350B**	52	400
674	16	75	**689**	76	400	**1/4A**	60	400
684	16	75	**699**	80	400	**1/4**	70	400
694	65	400	**609**	80	400	**7938**	52	400
604	65	400	**629**	100	400	**3/8**	95	400
624	69	400	**6800**	80	400			
634	69	400	**6900**	95	400			
675	65	400	**6000**	100	400			
685	65	400						

Table 4: Maximum starting torque in µNm

We use µNm as a measuring unit. Please do not use the other measuring units given in the following table. They are only given for comparison.

	1 µNm =	1 cmp =	1 oz.in. =	1 cNcm =
µNm	1	100	7200	100
cmp	0,01	1	72	1
oz.in.	0,000139	0,0139	1	0,0139
cNcm	0,01	1	72	1

Table 5: Comparison of measuring units

Assembly of Low Torque Bearings

For low torque bearings in particular, great care must be taken in the choice of fits and tolerances. Shaft and housing tolerances have to be selected so that a sliding fit results. Please refer to the chapter on "Fits" and "Reduction in Radial Clearance" on pages 54, 55 and 56, 57.

Even small misalignment of the inner or outer ring can result in greater torque of the bearing. Therefore particular attention must be paid to the alignment between shaft and housing bore, as well as, to the parallelism of the mating faces.

Extreme cleanliness of the assembly area and parts is essential, in order to achieve a perfect low torque bearing. Even minute contamination causes torque peaks, which can be many times higher than the average torque level.

Limiting Speeds

The maximum speed for a ball bearing in operation is limited by various mechanical and kinematic criteria. Narrow tolerances of bearings and surrounding parts, special measures regarding lubrication and type of lubricant as well as special retainer materials and designs generally have a beneficial effect on the speed limit. The characteristical values for speed given in the tables only apply to specially set reference conditions. They therefore only give an indication of the relative speed suitability of the ball bearing. Ask our technical support for more information if operating conditions are different.

The Kinematically Permissable Speed n_{zul}

The "kinematically permissable speed n_{zul}" applies to ball bearings with contact seals which do not have a thermal reference speed $n_{\upsilon r}$ defined in the standard. It takes into consideration the special conditions resulting from the wiping contact between ball bearing inner ring and seals. In principle the same conditions as for the thermal reference speed $n_{\upsilon r}$ otherwise apply.

The Thermal Reference Speed $n_{\upsilon r}$

The reference conditions have been selected in DIN 732-1 so that the "thermal reference speed $n_{\upsilon r}$" is identical for both types of lubrication: oil and grease. The essential operating conditions are:

- Reference temperature of the ball bearing on stationary outer ring 70 °C
- Reference temperature of the ball bearing environment 20 °C
- Reference loading P_r of the ball bearing 5% of the static radial load rating C_{or}
- Oil lubrication as oil bath lubrication with a conventional mineral oil without EP additives, with a kinematic viscosity of 12 mm^2/s at 70°C
- Grease lubrication with a standard lithium soap grease with a mineral base oil without EP additives. The kinematic viscosity of the base oil is 22 mm^2/s at 70 °C. The grease quantity is approx. 30% of the free space in the ball bearing.
- Ball bearings with standard designs, i.e. with standard accuracy, with standard radial play, with non-contact closures.
- Ball bearing installed on a horizontal shaft with a stationary outer ring and installation dimensions and tolerances which do not reduce bearing radial clearance.

The Permissable Thermal Operating Speed n_υ

The speed at which the average ball bearing temperature reaches the permissable value in real operating conditions is called the "permissable thermal operating speed n_υ". It is calculated from the thermal reference speed by multiplying it with the factor "speed ratio f_n" according to DIN 732-2: $\mathbf{n_\upsilon = f_n \cdot n_{\upsilon r}}$

Following the standard we use diagrams which make calculating this factor far easier. The different torque effects of oil and grease lubrication are taken into consideration.

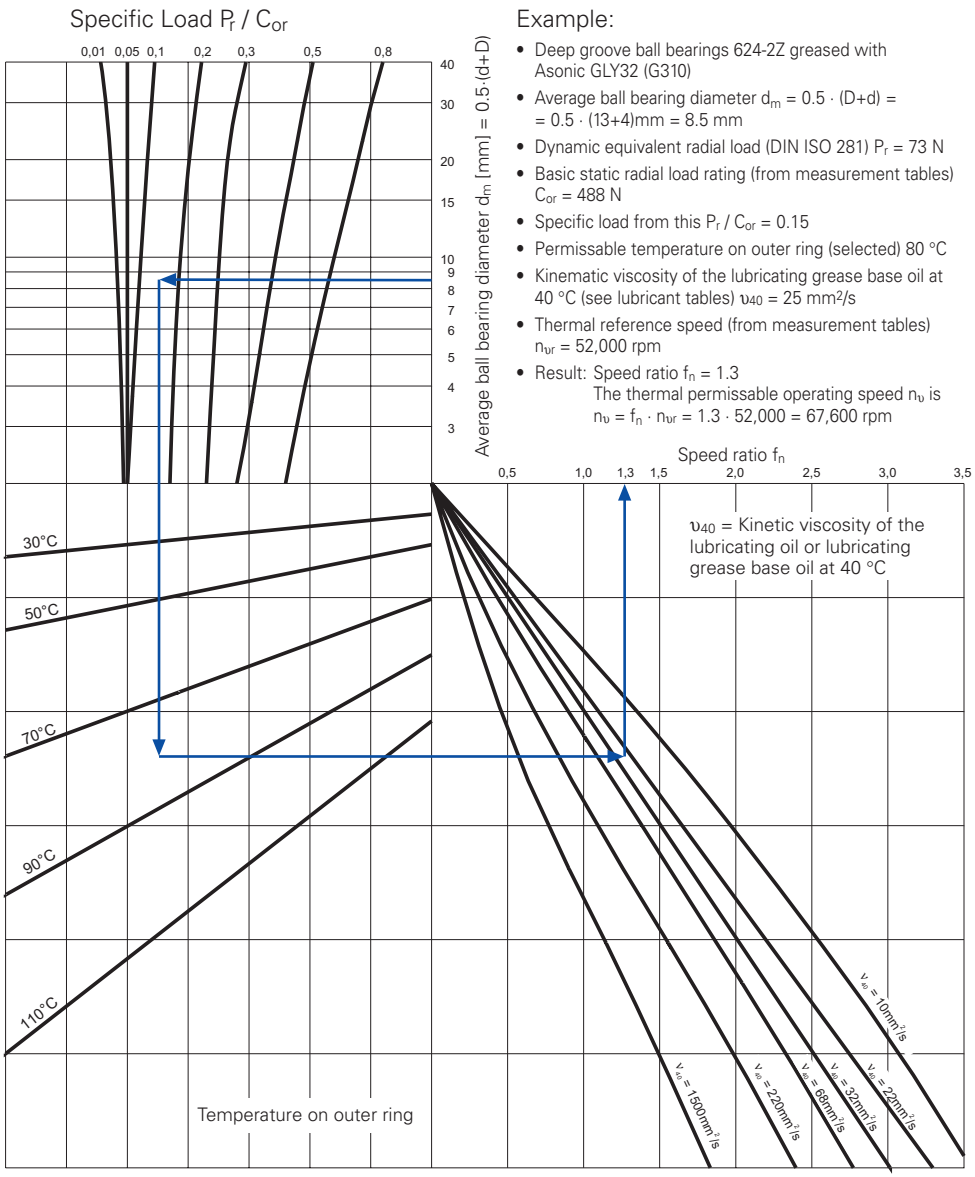

Example:

- Deep groove ball bearings 624-2Z greased with Asonic GLY32 (G310)
- Average ball bearing diameter $d_m = 0.5 \cdot (D+d) =$ $= 0.5 \cdot (13+4)$mm = 8.5 mm
- Dynamic equivalent radial load (DIN ISO 281) P_r = 73 N
- Basic static radial load rating (from measurement tables) C_{or} = 488 N
- Specific load from this P_r / C_{or} = 0.15
- Permissable temperature on outer ring (selected) 80 °C
- Kinematic viscosity of the lubricating grease base oil at 40 °C (see lubricant tables) υ_{40} = 25 mm²/s
- Thermal reference speed (from measurement tables) $n_{\upsilon r}$ = 52,000 rpm
- Result: Speed ratio f_n = 1.3
  The thermal permissable operating speed n_υ is
  $n_\upsilon = f_n \cdot n_{\upsilon r} = 1.3 \cdot 52{,}000 = 67{,}600$ rpm

Figure 6: Calculation of the permissable thermal operating speed n_υ

Bearing Capacities

Static Bearing Capacity

In rolling bearing technology we talk about the static bearing capacity when the ball bearing is loaded while stationary or during slow swinging movements. The calculations are made according to DIN ISO 76.

Basic Static Radial Load Rating C_{or}

The basic static radial load rating is the static radial load which corresponds to a calculated contact stress of 4200 MPa at the centre of the most heavily loaded rolling element / raceway contact.

Static Equivalent Radial Load P_{or}

The static equivalent radial load is the static radial load which would cause the same contact stress at the centre of the most heavily loaded rolling element / raceway contact that occurs under the actual load conditions.

Calculating the static equivalent radial load:

$P_{or} = X_o \cdot F_r + Y_o \cdot F_a$
$X_o = 0.6$
$Y_o = 0.5$
F_r = greatest radial load occurring [N]
F_a = greatest axial load occurring [N]

If the calculation gives a value, $P_{or} < F_r$, $P_{or} = F_r$ should be set.

Permanent Deformation

Permanent deformation on raceways and rolling elements even occurs when a stationary ball bearing is only loaded moderately.

Experience shows that a deformation of 0.0001 x rolling element diameter on the most highly loaded point of contact between raceway and rolling element will not noticeably effect the function of the ball bearing.

Even greater deformation is justifiable if the ball bearing is running at low speed and the requirements for noise are not high. On the other hand only slight permanent deformation is allowed if the noise and friction requirements are particularly stringent.

Dynamic Bearing Capacity

The dynamic bearing capacity is the stress on a rotating ball bearing. The additional term "dynamic" indicates the operating condition of the bearing not the effect of the load. The calculations are made according to DIN ISO 281.

Basic Dynamic Radial Load Rating C_r

The basic dynamic radial load rating for radial ball bearings is that constant radial load which a sufficiently large number of apparently identical ball bearings could theoretically endure for a basic rating life of one million revolutions.

Dynamic Equivalent Radial Load P_r

The dynamic equivalent radial load for radial ball bearings is that constant radial load under the influence of which a rolling bearing would have the same life as it will attain under the actual load conditions.

The DIN load ratings are given in the ball bearing tables. The actual load ratings can deviate depending on the ball bearing type. The load ratings are approx. 30% lower for hybrid ball bearings than for comparable steel ball bearings.

Please ask our technical support for the exact load ratings.

Fatigue Life

The fatigue life (basic rating life) is the number of revolutions (or number of hours at constant speed) which 90% of a sufficiently large quantity of apparently identical ball bearings will complete or exceed before the first evidence of fatigue develops. The calculations are made according to DIN ISO 281.

Basic rating life in hours is calculated as follows:

$$L_h = \frac{10^6}{60 \cdot n} \cdot \left(\frac{C_r}{P_r}\right)^3$$

L_h = basic rating life [h]
n = speed of inner ring [rpm]
C_r = basic dynamic radial load rating [N]
P_r = dynamic equivalent radial load [N]

Calculation of the **dynamic equivalent radial load P_r:**

$$P_r = X \cdot F_r + Y \cdot F_a$$

P_r = dynamic equivalent radial load [N]
F_r = radial load of bearing [N]
F_a = axial load of bearing [N]
X = dynamic radial load factor
Y = dynamic axial load factor

The influence of load on the life is only to be taken into consideration in the above life equation. If the ball bearings listed in this catalogue are used for conventional bearing purposes, this life calculation will be sufficient.

As the life calculation only takes material fatigue as a cause of failure the calculated life will only correspond with the actual life of the ball bearing if the following requirements are fulfilled:

1. Sufficient lubrication is guaranteed during the whole running time.
2. The loads and speeds used in the calculation correspond with the actual operating conditions.
3. Contamination of ball bearing and lubricant is avoided.

Flanged Ball Bearings

There are many advantages in using miniature and instrument ball bearings which have a flange on the outer ring. Stepped housing bores, which make it impossible or very difficult to maintain accurate alignment of both bearing fits, are not necessary. There is also no need for the use of circlips, which create difficulties in small housing bores or thin walled housings (Fig. 7).

Furthermore the assembly of flanged bearings in relatively narrow housings (i.e. gearboxes) has proved effective (Fig. 8).

If duplex bearings are used, the use of a flanged bearing simplifies the design of the locating bearing. The axial position of the Duplex bearing pair can be determined precisely for this arrangement (Fig. 9).

Ball Bearings with Extended Inner Rings

Ball bearings with an extended inner ring can simplify the design of various assemblies. Shims, washers and other spacers are unnecessary. Stepped shafts are also redundant (Fig. 10).

Ball Bearings with Heavy Outer Rings

Ball bearings with their outer rings supported by fitting in a housing can take highest loads. To increase the load capacity of ball bearings which are not built into housings different types such as "special ball bearings with heavy outer rings" were developed and are used as so-called rollers (Fig. 11).

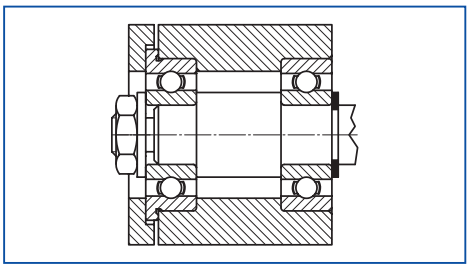

Fig. 7: General assembly example

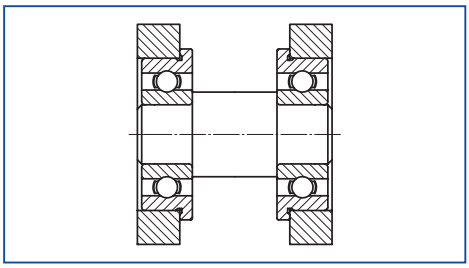

Fig. 8: Assembly in narrow housing

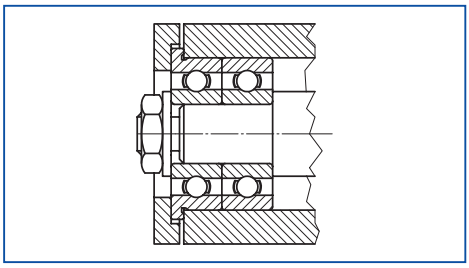

Fig. 9: Use of a duplex ball bearing

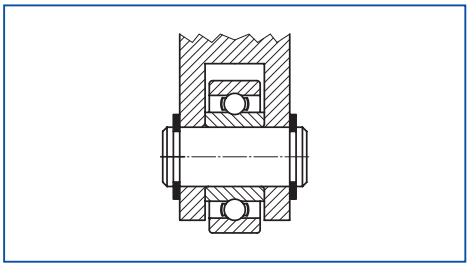

Fig. 10: Ball bearing with extended inner ring

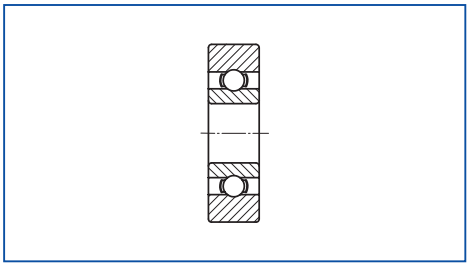

Fig. 11: Ball bearing with heavy outer ring

Shaft and Housing Shoulders

The assembly conditions are very important for ball bearings to function correctly. The shoulders for the inner and outer ring should allow the axial load to be transferred safely without allowing the rings to tilt against each other.

The values for the largest ($d_{a\ max}$) and for the smallest ($d_{a\ min}$) permissable shoulder diameter for the shaft and the values for the largest permissable shoulder diameter for the housing ($D_{a\ max}$) are given in the dimension tables.

The following specifications should be taken into consideration:

- The shoulder diameter of the housing must in any case be smaller than $D_{a\ max}$, the shoulder diameter of the shaft must not be smaller than $d_{a\ min}$.
- The radius on the shaft and housing must not be larger than the corner radius $r_{s\ min}$ of the ball bearing. An undercut is preferable here. The edge radii of the ball bearings are not suitable for locating the ball bearing in any way.
- The axial runout of the mating surfaces should not be greater than the maximum axial runout of the ball bearing used. The performance of the ball bearing could otherwise be influenced.

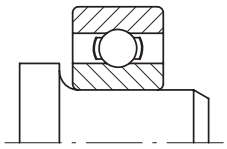

Wrong, shaft radius greater than $r_{s\ min}$

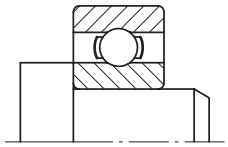

Correct, shaft radius smaller than $r_{s\ min}$

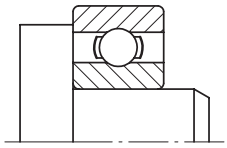

Wrong, shaft shoulder dia. greater than $d_{a\ max}$

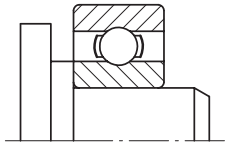

Correct, shaft shoulder dia. relieved

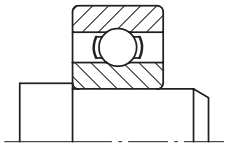

Wrong, shaft shoulder dia. smaller than $d_{a\ min}$

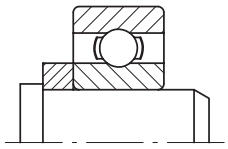

Correct, back-up ring added

The examples apply analogously to the ball bearing housing.

The fits of the ball bearing on the shaft and in the housing essentially determine the operational behaviour of miniature ball bearings. When selecting fitting tolerances, the following criteria should therefore be considered:

Rotation Conditions

Rings with circumferential loading should have a tighter fit than rings with point loading.

Circumferential loading occurs in the case of rotating ring and stationary load or stationary ring and rotating load. Point loading occurs in the case of a stationary ring and stationary load or rotating ring and rotating load.

Running Accuracy

The same high standard of accuracy and surface quality expected of the bearing must be applied to shaft and housing.

Loading

Higher loads demand tighter fits.

Temperature

There may be temperature differences between the ball bearing and mating components while the ball bearing is in operation. The dimensional changes caused by differential expansion should be taken into consideration.

In the case of miniature bearings great importance is placed on simple mounting and high running accuracy, hence only a close sliding or transition fit is usually possible. Furthermore it must be remembered that irregularities on the shaft or in the housing bore are transferred to the relatively thin-walled bearing rings. In order to improve the fit, it is possible to calibrate the bore and outside diameter into groups (see page 58).

The values shown in tables 12 and 13 are only valid for materials with similar thermal expansion coefficients ($11 \cdot 10^{-6} \cdot K^{-1}$).

If the expansion coefficient varies or if there are temperature variations between the outer ring and housing or between the inner ring and shaft, tolerances which ensure the appropriate fit at operating temperatures should be selected.

Shaft tolerances in µm
.0001″

Ball bearing bore Grade → **Tolerance in µm** Tolerance in .0001 inch → Operating Conditions		P0 **0/-8** 0/-3	P5 **0/-5** 0/-2	Calibration (page 58) **0/-2,5** 0/-1	 **-2,5/-5** -1/-2	Type of Fit
Low loading Medium speed No vibration		**-5/-13** -2/-5	**-5/-11** -2/-4	**-5/-8** -2/-3	**-8/-11** -3/-4	Sliding fit
Low to medium loading Medium speed Low vibration		**0/-8** 0/-3	**0/-6** 0/-2.5	**0/-3** 0/-1.2	**-3/-6** -1.2/-2.5	Transition fit
Heavy loading High speed High frequency vibrations		**+4/-4** +1.6/-1.6	**+4/-2** +1.6/-1	**+4/+1** +1.6/+.4	**+1/-2** +.4/-1	Press fit

Table 12: Shaft tolerances

Housing tolerances in µm
.0001″

Ball bearing outside diameter Grade → **Tolerance in µm** Tolerance in .0001 inch → Operating Conditions		P0 **0/-8** 0/-3	P5 **0/-5** 0/-2	Calibration (page 58) **0/-2,5** 0/-1	 **-2,5/-5** -1/-2	Type of Fit
Low loading Medium speed No vibration		**+5/-3** +2/-1.2	**+5/-1** +2/-.4	**+5/+2** +2/+1	**+2/-1** +1/-.4	Sliding fit
Low to medium loading Medium speed Low vibration		**0/-8** 0/-3	**0/-6** 0/-2.5	**0/-3** 0/-1.2	**-3/-6** -1.2/-2.5	Transition fit
Heavy loading High speed High frequency vibrations		**-4/-12** -1.6/-5	**-3/-9** +1.2/-3.5	**-3/-6** +1.2/-2.5	**-6/-9** -2.5/-3.5	Press fit

Table 13: Housing tolerances

The information on this page applies to steel shafts and housings. The linear thermal expansion coefficient of other materials (e.g. aluminium housing) must be taken into consideration at operating temperatures other than ambient (20 °C).

Reduction in Radial Clearance due to Heat

The ball bearing radial clearance relates to an ambient temperature of 20 °C and excludes external loads with exception of the measuring load. Frictional heat to be dissipated or a temperature difference between rotor and stator have the effect of a temperature difference between the inner and outer ring.
The differential expansion between inner ring and outer ring may lead to a reduction in radial clearance which should be taken into consideration in the set-up of the ball bearing:

$$RV = \Delta_{da} - \Delta_{di}$$

RV = Radial clearance reduction [µm]
Δ_{da} = Diameter change on outer ring between the temperature t and the ambient temperature of 20 °C [µm]
Δ_{di} = Diameter change on inner ring between the temperature t and the ambient temperature of 20 °C [µm]

The diameter change caused by the temperature difference is calculated

for the outer ring: $\Delta_{da} = d_{0a} \cdot \alpha \cdot \Delta_t$
and
for the inner ring: $\Delta_{di} = d_{0i} \cdot \alpha \cdot \Delta_t$

d_{0a} = Raceway diameter on outer ring at 20 °C [µm]
d_{0i} = Raceway diameter on inner ring at 20 °C [µm]
α = Length expansion coefficient [K^{-1}],
for 100Cr6 ... $11.0 \cdot 10^{-6}\ K^{-1}$
for X65Cr13 ... $10.5 \cdot 10^{-6}\ K^{-1}$
Δ_t = Temperature difference between the temperature t and the ambient temperature 20 °C [K]

Example:

Bearing SS6000 GPR J (d = 10 mm, D = 26 mm, D_W = 4,763 mm) reaches an inner ring temperature of 60 °C and an outer ring temperature of 30 °C during operation. The following raceway diameters are set due to heat expansion:

Outer ring:
$d_{0a} \approx (d+D)/2 + D_W \approx (10+26)mm/2 + 4{,}763\ mm$
$\approx 22{,}763\ mm$
$\Delta_{da} = d_{0a} \cdot \alpha \cdot \Delta_t$
$\Delta_{da} = (22{,}763 \cdot 10^3)\ \mu m \cdot 10{,}5 \times 10^{-6}\ K^{-1} \cdot 10\ K$
$= 2{,}4\ \mu m$

Inner ring:
$d_{0i} \approx (d+D)/2 - D_W \approx (10+26)mm/2 - 4{,}763\ mm$
$\approx 13{,}237\ mm$
$\Delta_{di} = d_{0i} \cdot \alpha \cdot \Delta_t$
$\Delta_{di} = (13{,}237 \cdot 10^3)\ \mu m \cdot 10{,}5 \times 10^{-6} K^{-1} \cdot 40\ K$
$= 5{,}6\ \mu m$

Reduction in Radial Clearance:
$RV = \Delta_{da} - \Delta_{di}$
$RV = 2{,}4\ \mu m - 5{,}6\ \mu m = -3{,}2\ \mu m$

This gives a radial clearance reduction of 3.2 µm. Our rough estimation does not take into consideration the influence of the balls which would only effect the result slightly.
If the result is positive, an increase in radial clearance should be considered.

Reduction in Radial Clearance due to Interference Fit

When selecting the fitting tolerances, you should note that an interference fit causes a reduction in radial clearance. This depends on the effective interference fit and also on the ring thickness ratio and may be calculated very simply.

$$RV = k \cdot ü$$

RV = Radial clearance reduction [µm]
ü = Largest fitting size [µm]
k = Factor from table 14 whereby it is presumed that the inner ring is pressed onto a complete shaft or the outer ring is pressed into a stable, practically non-deformable housing.

If there is an interference fit on both the shaft and housing, both values should be added to give the complete radial clearance reduction.

Example:

Ball bearing 623 P5 GPR Y is fitted on the shaft with a press fit and with a transition fit in the housing. This results in the following interference fit:

Bore: ±0 / -5 µm
Shaft: +4 / -2 µm } = 9 µm

Outer diameter: ±0 / -5 µm
Housing diameter: ±0 / -6 µm } = 6 µm

Taking the relevant k value for 623 from table 14 the following radial clearance reduction is achieved:

for the inner ring
$RV = k \cdot ü = 0{,}5 \cdot 9\ \mu m = 4.5\ \mu m$
and
for the outer ring
$RV = k \cdot ü = 0{,}8 \cdot 6\ \mu m = 4.8\ \mu m$

Thus a total maximum radial clearance reduction of 9.3 µm results. This must be taken into consideration when selecting the radial clearance of a bearing.

Basic Type	IR	OR
681	0,6	0,8
691	0,5	0,8
68/1,5	0,6	0,8
69/1,5	0,5	0,8
682	0,7	0,8
692	0,6	0,8
67/2,35	0,8	0,8
68/2,35	0,8	0,9
68/2,5	0,7	0,8
69/2,5	0,6	0,8
60/2,5	0,6	0,7
673	0,8	0,9
683	0,7	0,8
693	0,7	0,9
623	0,5	0,8
674	0,8	0,9
684	0,8	0,8
694	0,7	0,7
604	0,6	0,8
624	0,6	0,8
634	0,5	0,8
675	0,9	0,9
685	0,8	0,8

Basic Type	IR	OR
695	0,6	0,8
605	0,6	0,8
625	0,6	0,8
635	0,5	0,8
686	0,7	0,8
696	0,7	0,8
626	0,6	0,8
687	0,8	0,8
697	0,7	0,8
607	0,7	0,8
627	0,6	0,8
688A	0,9	0,8
688	0,8	0,9
698	0,7	0,8
608	0,7	0,8
689	0,8	0,9
699	0,7	0,8
609	0,6	0,8
629	0,6	0,8
6800	0,8	0,9
6900	0,7	0,8
6000	0,7	0,8

Basic Type	IR	OR
1016	0,6	0,8
1191	0,6	0,8
1397	0,6	0,8
5/64	0,6	0,7
2380	0,8	0,9
3/32	0,5	0,9
3175	0,8	0,9
1/8A	0,7	0,9
1/8B	0,6	0,8
3967	0,7	0,9
4763A	0,9	0,9
4763B	0,8	0,9
3/16	0,6	0,8
6350A	0,9	0,9
6350B	0,8	0,9
1/4A	0,7	0,8
1/4	0,6	0,8
7938	0,8	0,9
3/8	0,7	0,8

Table 14: k-factor for inner ring (IR) and outer ring (OR)

Calibration of Bore and Outside Diameter

In order to achieve a uniform fit of the bearing on the shaft and in the housing it is necessary to limit the diameter tolerances of the bearings. As it is very difficult to control very small tolerances in series production, selective grading may be necessary. Only bearings in the quality grades P5 or ABEC5 or better can be graded into groups of 2.5 µm (.0001 inch) or 1.25 µm (.00005 inch). The diameter of the shaft and housings must also be graded to allow matching.

Due to technical reasons, it is not possible to supply bearings in only one specific tolerance group.

The following symbols are used for the classification of calibrated bearings:

Calibration	In groups of 2.5 µm or .0001 inch	In groups of 1.25 µm or .00005 inch
Bore d and outside diameter D	X	X4
Bore d only	XB	X4B
Outside diameter D only	XD	X4D

Table 15: Classification of calibrated ball bearings

Example:
623 P5 GPR X4B Y
X4B = bore calibrated in groups of 1.25 µm.
The outside diameter is not calibrated.

Several tolerance groups result due to calibration.

The relevant group is indicated on the packaging of the bearing, according to the following code:

			Outside Diameter D						
	Tolerance field in **0.001 mm** .0001 inch		**0/ –2.5** 0/ –1	**–2.5/–5** –1/–2	**0/ –1.25** 0/–.5	**–1.25/–2.5** –.5/–1	**–2.5/–3.75** –1/–1.5	**–3.75/–5** –1.5/–2	not calibrated
		Code	1	2	A	B	C	D	
Bore d	**0/ –2.5** 0/ –1	1	11	12					10
			X						XB
	–2.5/–5 –1/–2	2	21	22					20
	0/ –1.25 0/–.5	A			AA	AB	AC	AD	A0
	–1.25/–2.5 –.5/–1	B			BA	BB	BC	BD	B0
						X4			X4B
	–2.5/–3.75 –1/–1.5	C			CA	CB	CC	CD	C0
	–3.75/–5 –1.5/–2	D			DA	DB	DC	DD	D0
	not calibrated		01	XD 02	0A	0B	X4D 0C	0D	no symbol

Table 16: Key to tolerance groups

Examples:

Code 21:
Bore –2.5/–5 µm
O.D. 0/–2.5 µm

Code BC:
Bore –1.25/–2.5 µm
O.D. –2.5/–3.75 µm

Code A0:
Bore 0/–1.25 µm
O.D. not calibrated

Code 02:
Bore not calibrated
O.D. –2.5/–5 µm

Method of group classification:
Bore diameter: the smallest measured diameter determines the class
Outside diameter: the largest measured diameter determines the class

Two types of elastic yield should be distinguished with ball bearings: axial and radial yield.

Axial Elastic Yield

The axial elastic yield of a ball bearing is the distance which the inner ring moves axially compared with the outer ring when the axial clearance of the bearing has been removed, and the bearing is axially loaded. It does not increase linearly with the applied load as the contact areas between balls and raceways become larger with increasing load.

Radial Elastic Yield

The radial elastic yield is caused by a radial force component after radial play has been removed. Given similar conditions, with small contact angles the radial yield is considerably less than the axial yield. With increasing contact angle, the radial yield increases while the axial yield decreases, up to a contact angle of approx. 35°, when values become practically the same.

Both types of yield depend on the internal construction of the bearing, the radial clearance and applied load.

The relatively large amount of yield can be reduced by using preloaded bearing pairs (see "Duplex Bearings", pages 62 and 63). Preloading will result not only in a reduction of the elastic yield, resulting in increased rigidity, but also in a near to linear relationship between loading and yield for a considerably wide range of applied load. For instance, a ball bearing pair with 10 N preload will maintain linearity up to approximately 30 N external axial load.

To estimate this, the following formula can be used:

$$F_v \approx F_a / 3$$

F_v = axial preload [N]
F_a = axial bearing loading [N]

Please ask our technical support for further information.

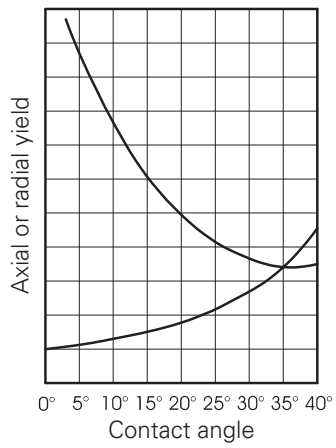

Figure 17: Yield depending on contact angle

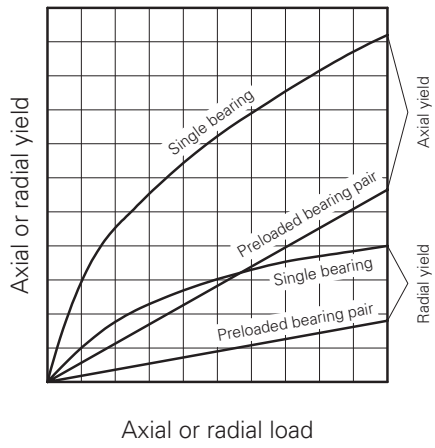

Figure 18: Yield depending on load

Relationship between Radial Clearance, Axial Clearance and Contact Angle

Radial Clearance

Radial clearance is the measured value of the total movement of one ring relative to the other in a plane perpendicular to the bearing axis. Although radial clearance has no effect on the quality of the bearing, it has a significant effect on its performance.

Basically the selection of radial clearance depends on the fit of the bearing on the shaft and in the housing (see pages 56 and 57 for radial clearance reduction). Greater radial clearance than standard should be specified if the bearing is running under axial load conditions, operates at high speed, or when low torque is required.

Less than normal radial clearance should be specified if only radial load is applied or minimum noise is required. Small radial clearance is often recommended in order to reduce the axial clearance of an instrument. However, where low axial clearance is required, we advise to use matched bearings (see Duplex Bearings pages 62 and 63). Radial clearance and references are shown in tables on page 6.

Axial Clearance

The axial clearance is the measured value in which one bearing ring can move axially in relation to the other. In bearings of the same type, axial clearance depends on radial clearance.

Contact Angle

The contact angle is formed between the connecting line of the contact points ball/raceways and a plane perpendicular to the axis. It is formed when the axial clearance is removed by the opposite axial movement of the bearing rings. The contact angle is influenced by radial clearance, curvature and axial load of the bearing.

The average values for the axial clearance and the contact angle in relation to the radial clearance and curvature of the ball bearing, can be taken from figure 20 on page 61.

Table 19 lists the bearing basic types and graphs to be used.

Basic Type	Graph	Graph	Basic Type	Graph	Graph	Basic Type	Graph	Graph
681	1	A	695	6	B	1016	2	A
691	3	A	605	7	B	1191	3	A
68/1,5	3	A	625	9	C	1397	4	A
69/1,5	3	A	635	10	C	5/64	4	A
682	3	A	686	7	B	2380	3	A
692	4	A	696	7	B	3/32	6	A
67/2,35	5	B	626	10	C	3175	4	A
68/2,35	4	A	687	7	B	1/8A	6	A
68/2,5	4	A	697	9	B	1/8B	6	A
69/2,5	5	A	607	10	C	3967	4	A
60/2,5	5	A	627	11	C	4763A	4	A
673	10	C	688A	5	A	4763B	4	A
683	5	A	688	9	B	3/16	8	A
693	6	B	698	9	B	6350A	4	A
623	6	B	608	11	C	6350B	7	A
674	4	A	689	9	B	1/4A	9	A
684	6	B	699	9	B	1/4	10	B
694	6	B	609	11	C	7938	5	A
604	6	B	629	12	C	3/8	10	B
624	8	B	6800	9	B			
634	9	C	6900	10	C			
675	4	A	6000	12	C			
685	6	B						

Table 19: Assignment of graphs for figure 20

Example:
Ball bearing 623, radial clearance 0.015 mm
from table 19: graph 6, graph B
from figure 20: contact angle 17°30′, axial clearance 0.097 mm

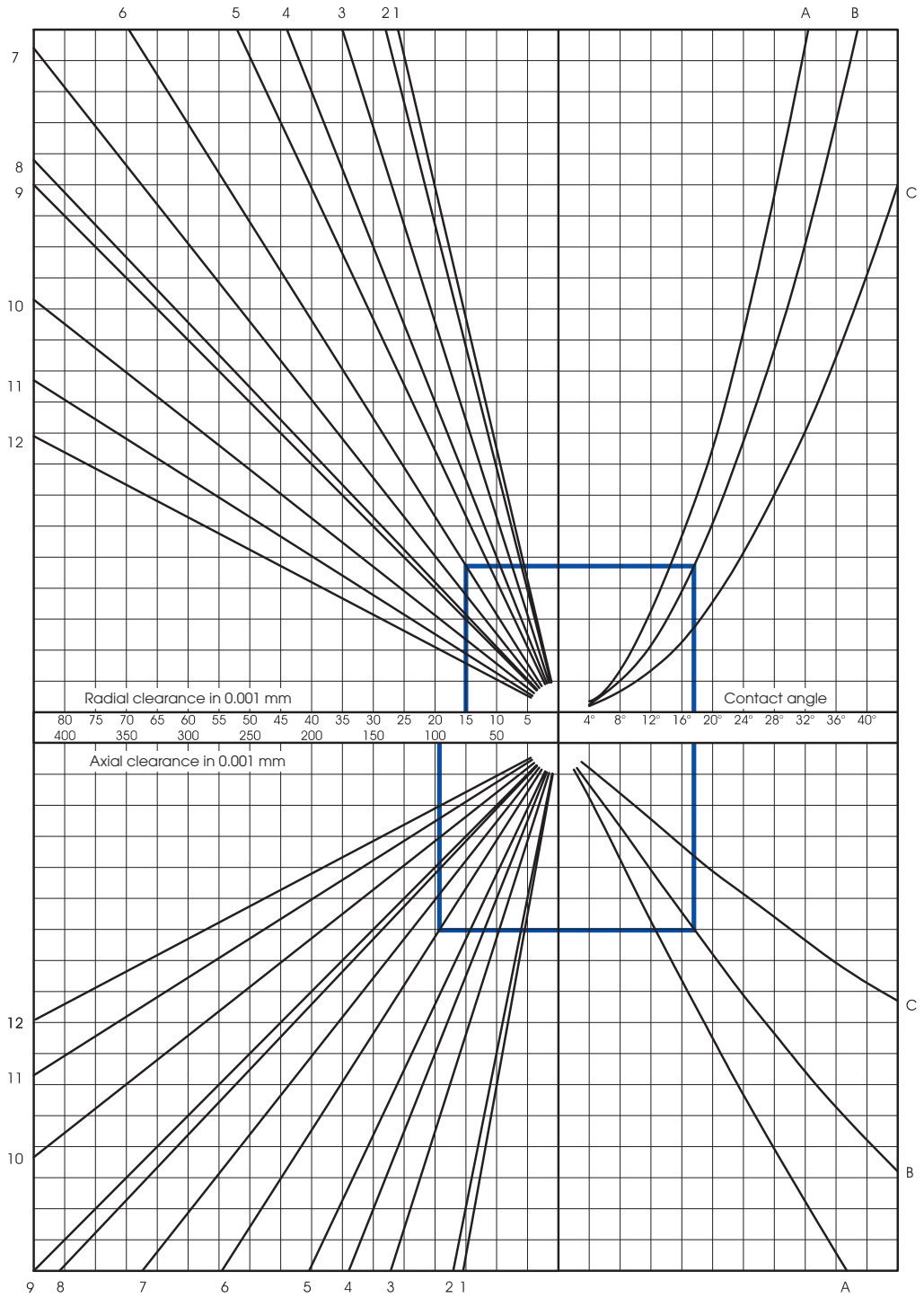

Figure 20: Contact angle and axial clearance

Duplex Bearings

Duplex bearings are two matched bearings which, depending on the requirements, provide the following characteristics:

- accurate bearing positioning in radial and axial directions, which can vary from defined clearance to controlled rigidity.
- limitation of the system's yield.
- higher load capacity compared to single bearings.

The matching of the bearings is achieved by loading each single bearing with the desired preload and then grinding the inner or outer rings until the surfaces of both rings are flush with each other.

Two of the bearings treated in this manner are assembled according to the instructions on the package and loaded axially until the ground faces meet, this repeats the preload previously set in manufacture. Depending on the matching used either the inner rings or the outer rings or possibly both are preloaded against each other.

The ball bearings must be mounted according to the instructions on the packaging labels. If there are no special customer requirements, our ball bearings are paired with a preload of 5 N and a nominal contact angle of 15°. In principle this can, however, be altered to suit the operating conditions and requirements. The preload should not, however, be set higher than necessary as it will unnecessarily increase the torque. This has a direct influence on the life of the ball bearing.

The radial clearance should be set higher than usual for Duplex bearings so that the contact angle, the rigidity and the axial loading become greater.

In order to achieve optimum fits duplex bearings are always calibrated into two groups on the bore and outside diameter and supplied packaged with the same code. They should also, if possible, be fitted with calibrated shafts and housings (see page 58).

The ball bearing fits should therefore be selected carefully as an interference fit on the inner or outer ring would change the preload.

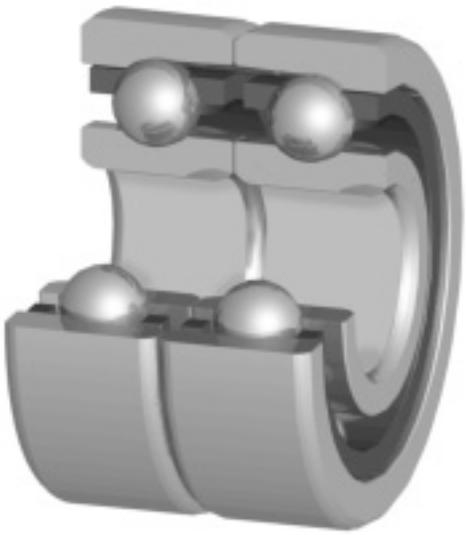

The Three Types of Duplex Assembly for Radial Ball Bearings

Back to Back

O arrangement (DB)
(reference 1)

With the "back to back" bearing pair the inner rings are clamped together. The contact angle lines between the outer ring raceway, ball and inner raceway diverge. This results in a maximum spread giving high rigidity. This is the reason why this type of duplex bearing is most commonly used.

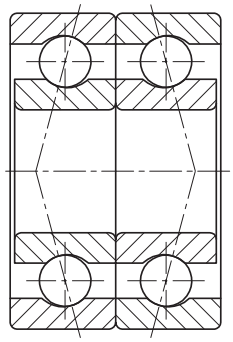

Figure 21: Back to back

Face to Face

X arrangement (DF)
(reference 2)

With the "face to face" bearing pair the outer rings are clamped together. The contact lines converge resulting in a smaller spread and more elasticity.

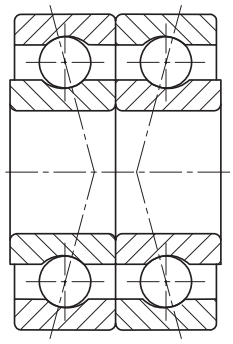

Figure 22: Face to face

Tandem (DT)

(reference 3)

While duplex bearings mounted "back to back" or "face to face" are suitable to accommodate axial loading in both directions, a tandem mounted bearing pair is capable of accepting a very high axial load in one direction only. With this type of bearing pair, preloading and reduction of play can only be achieved, by preloading against another bearing or bearing pair.

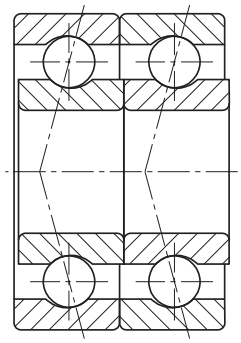

Figure 23: Tandem

The misalignment of a bearing is the degree to which both rings can be tilted relatively to each other. The misalignment angle depends on the radial clearance and the internal geometry of the bearing.

Too much misalignment of the rings should always be avoided, as even a small angle of 2' to 3' increases the noise level noticeably. Attention must be paid to accurate alignment when designing bearing seats and adjacent surfaces.

Figure 25 shows the free misalignment (without load) depending on radial clearance, for the complete bearing range.

Basic Type	Graphs	Basic Type	Graphs	Basic Type	Graphs
681	1	685	7	6000	10
691	2	695	8	1016	1
68/1,5	1	605	5	1191	1
69/1,5	3	625	9	1397	1
682	3	635	10	5/64	3
692	3	686	5	2380	3
67/2,35	3	696	6	3/32	4
68/2,35	3	626	10	3175	4
68/2,5	3	687	6	1/8A	4
69/2,5	4	697	8	1/8B	6
60/2,5	4	607	10	3967	6
673	4	627	10	4763A	6
683	4	688A	8	4763B	5
693	4	688	8	3/16	5
623	6	698	8	6350A	7
674	5	608	10	6350B	5
684	6	689	8	1/4A	7
694	7	699	9	1/4	10
604	7	609	10	7938	8
624	6	629	10	3/8	9
634	9	6800	9		
675	6	6900	9		

Table 24: Assignment of the graphs for calculating the misalignment

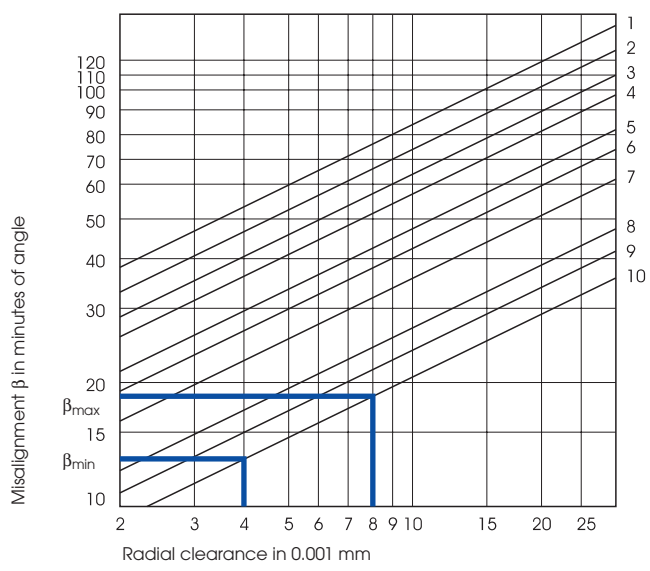

Figure 25: Misalignment calculation

Example:

The minimum and maximum possible free misalignment is to be calculated for the ball bearing SS608 C4/8 GPR J:

The basic type 608 is assigned to graph 10 according to table 24. Vertical projection of the radial clearance limits 4 or 8 mm gives 2 points on the corresponding graphs (10) which can be transferred to the left on the misalignment scale.

Thus:

the minimum possible free misalignment:
$\beta_{min} \approx 13$ minutes of angle

the maximum possible free misalignment:
$\beta_{max} \approx 18$ minutes of angle

High-precision Ball Bearing Handling and Failure Analysis

High-precision Ball Bearing Handling

Our ball bearings are manufactured with extreme care and then packaged in order to avoid contamination and corrosion. During mounting of the bearings, the following advice should be heeded:

- Bearings should be stored in their original package in clean, dry rooms, under constant temperature conditions.
- Bearings should only be removed from their original package shortly before installation if possible using tweezers or finger stalls.
- Care should be taken that the place of assembly is clean and well lit and that all other parts are equally clean.
- The bearings should not be subjected to shock and assembly force should only be applied to the ring being fitted, never transferred through the balls.
- If glued connections are used care should be taken to ensure that excess glue does not enter the bearing.
- Relubrication should only be carried out with the identical lubricant with identical purity. We recommend having the bearings lubricated by the manufacturer.

Failure Analysis

Special examinations are essential in order to establish the cause of failure or to estimate the life expectancy of bearings. We will be pleased to assist you in this matter.

Valuable information is obtained if bearings are disassembled and examined after a certain time of operation and not only after failure.

If you dismount bearings, mark the bearing rings so you can reproduce the original position.

The packaging protects the bearing from contamination, corrosion and damage during transport and storage. Bearings from opened packages should be used as soon as possible.

Each individual package is labelled with bearing specifications, factory order number and packaging date.

We mainly use the following forms of packaging:

- Strip Packaging (CP)

  The standard packaging contains 5 or 10 ball bearings sealed separately in transparent plastic envelopes.

- Vacuum Packaging (LL)

  Usually 50 or 100 ball bearings placed side by side are sealed in a transparent plastic envelope under vacuum.

- Special Packaging

  Special packages are prepared according to customer requirements as far as possible and are available on request.

Fig. 26: Strip packaging (CP)

Fig. 27: Vacuum packaging (LL)

GRW Quality –
Internationally Certified According to DIN EN ISO 9001

GRW products have always met the highest quality standards across the world as numerous awards from renowned customers prove.

We of course acknowledge that a certain amount of trust has developed among our customers over the many years of business relations. At the same time we are fully committed to providing our customers and future partners with the highest possible level of confidence by means of a modern and proven quality management system based on DIN EN ISO 9001.

In order to assure high quality standards to these requirements we have had our quality management system assessed and certified to DIN EN ISO 9001 by independent and internationally recognised institutions:

We are able to provide cost effective quality products and services due to the flawless and economic implementation of all company procedures, not just in manufacture but in all areas.

Our engineers develop ball bearings for applications with high standards such as medical and dental technology, vacuum, aeronautical and aerospace applications together with complete subassemblies.

All of our products, both the high-precision and standard ball bearings, are produced on the same highly accurate production systems millions of times over.

Are you looking for a solution for your ball bearing problem? Then contact us.

We will be pleased to help you – all over the world!

Closure – Protects the interior of the ball bearing against contamination and the components surrounding the ball bearing against escaping lubricant. The protection grade depends on the type of closure chosen and on the operating conditions. You will find more information on this in the chapter "Closures".

Alignment – Mounting configuration where the axes of the two bearings are identical.

Retainer – A ring with equally spaced ball pockets, which seperates the balls from each other in the bearing raceway.

Combined Load – A force which is neither purely radial nor axial in nature, but simultaneously perpendicular and parallel to the axis.

Ball Pockets – The inner surfaces of a retainer which touch the ball surfaces.

Raceway Profile – The form of the raceway as seen in cross section.

Roundness – The roundness deviation is calculated by measuring the radius deviation using scanning equipment. You will find detailed information on this among other places in DIN ISO 4291 and DIN ISO 6318.

Curvature – The proportion of the radius of the raceway profile to the diameter of the ball.

$$\text{Curvature [\%]} = \frac{100 \times \text{radius of raceway profile}}{\text{ball diameter}}$$

Angular Contact Bearing, non-separable (AC ball bearing) – Bearings with inner or outer ring lands relieved to facilitate snap-in assembly. This bearing, similar to a magneto bearing, can take axial loads in one direction only.

Angular Contact Bearing, separable (L2T ball bearing) – Bearings with inner ring land relieved to facilitate removal of inner ring. The ball set is held in the outer ring by a special retainer. This bearing, similar to a magneto bearing, can take axial loads in one direction only.

Quality Grade – Term for the tolerances of a ball bearing. The individual tolerance values are defined in various standards such as DIN 620 T1, ISO 492, ISO 1224, AFBMA Std. 12 and 20. The definitions of the terms are defined among other places in DIN ISO 1132 and the measuring method in DIN 620 T1 and ISO TR 9274.

Full Complement Bearing – A bearing with a maximum number of balls. These bearings have no retainer. See the chapter "Retainer Types" about the different types.

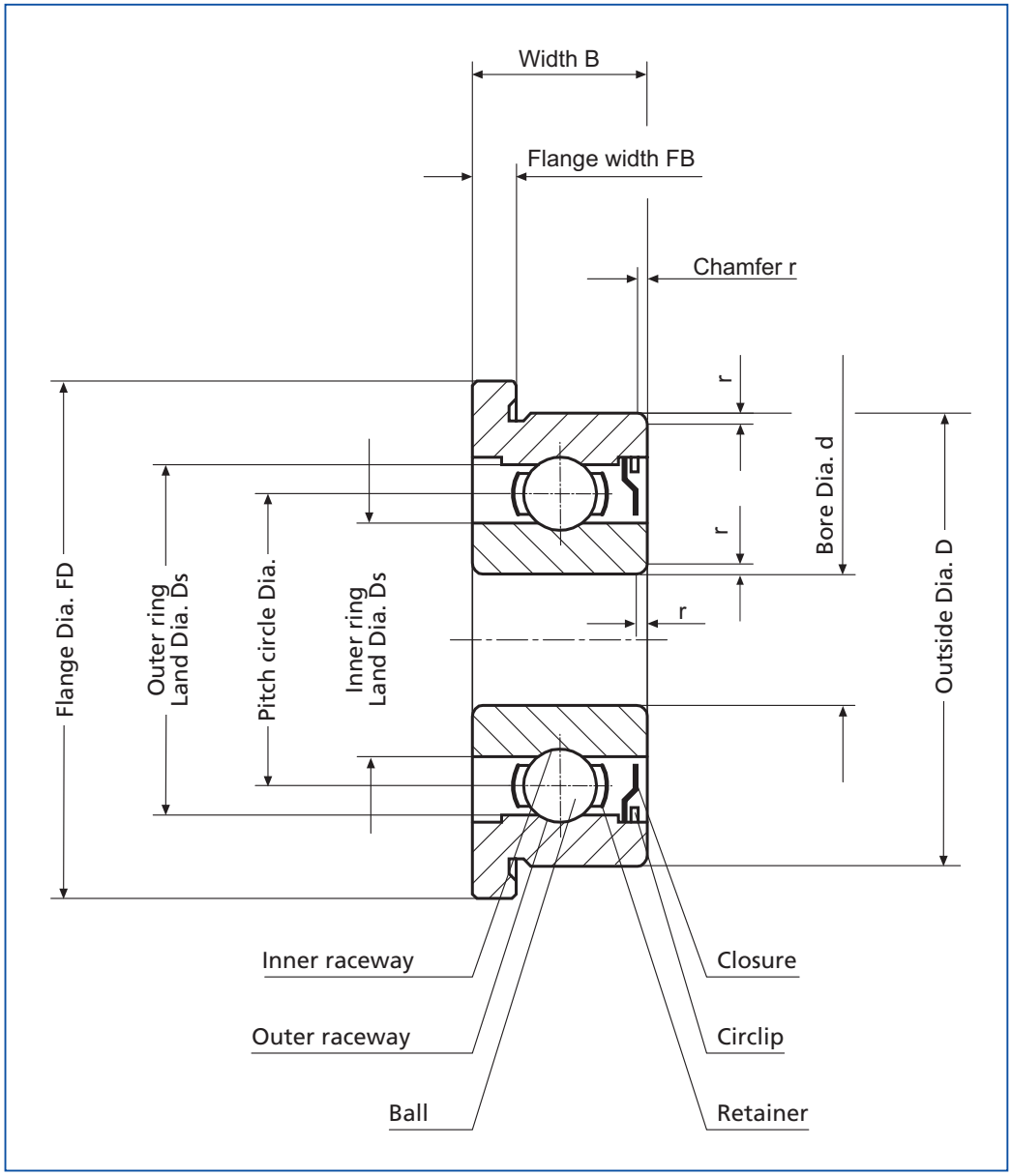

Fig. 28: Ball bearing parts

A Glance at the GRW Production Plant

Turning

Hardening

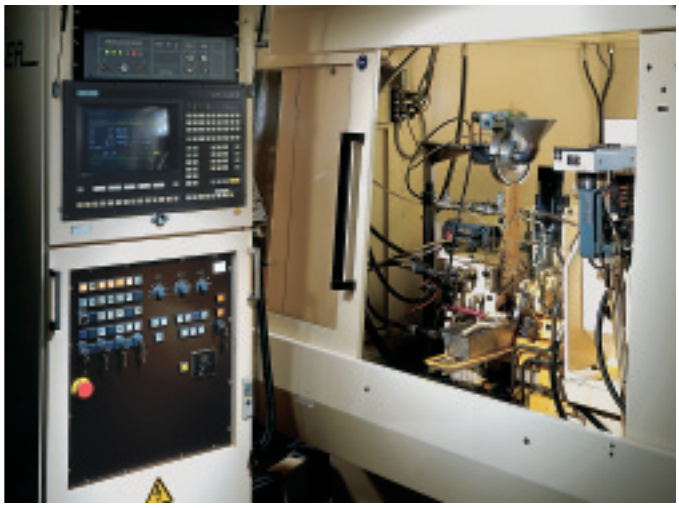

Grinding

Quality assurance

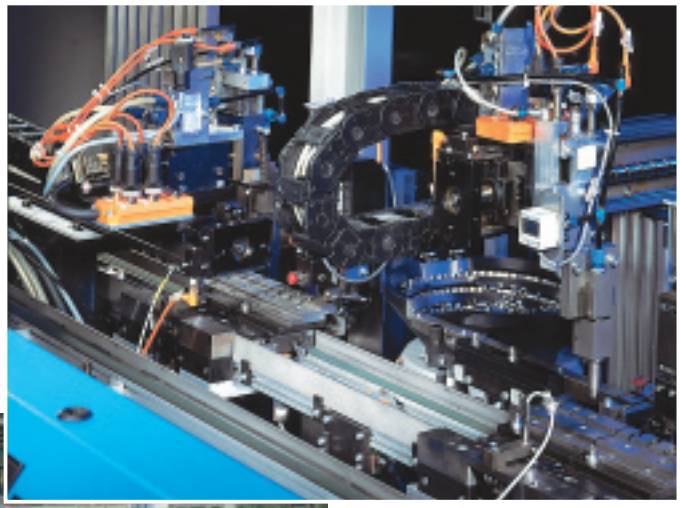

Assembly

Assembly

Index

	Page
AC Bearings	41
Accessories	38, 39
Angular Contact Bearings	37, 41
Axial Clearance	60
Axial Runout	34, 35
Axial Yield	59
Basic Dynamic Radial Load Rating	50
Basic Static Radial Load Rating	50
Bearing Types	8 - 33
Bearings, Analysis	65
Bearings, Numbers	6, 7
Bearings, Terms	67
Calibration of Bore and Outside Diameter	58
Certification	67
Coating	44
Contact Angle	60
Corner Width	8 - 33
Curvature	68
DB-Arrangement (back to back)	62, 63
Deformation	50
DF-Arrangement (face to face)	62, 63
Dimension Tolerance	34, 35
Duplex Bearings	62, 63
Dynamic Equivalent Radial Load	50
Elastic Behaviour of Deep Groove Ball Bearings	59
Equivalent Load, Radial Load	50
Fits	54, 55
Flange Bearings, Mounting	52
Flange Bearings, Types	8 - 33
Full Complement Bearings	41, 68
Functional Tests	46, 47
Greases	44, 45
Handling Instructions	65
High-precision Bearings Handling	65
Hybrid Bearings	43
Life	51
Limiting Speeds	48, 49
Load Capacities	50
Lubrication	44, 45
Matched Bearings	62, 63
Materials for Rings and Balls	43
Mating Surfaces	53
Misalignment	64
Mounting of Bearings	53, 54, 55
Noise Testing	46
Numbering System	6, 7
Oils	44, 45
Open Bearings	8 - 13, 26, 27
Operating Speed	48, 49
Packaging	66
Prefix Code	6, 7
Product Range	4, 5

	Page
Quality	34, 35, 67
Radial Clearance	60, 61
Radial Clearance Reduction	56, 57
Radial Runout	34, 35
Radial Yield	59
Reference Speed	48, 49
Retainer Types	40, 41
Roundness	68
Running Accuracy	34, 35
Running Torque	46, 47
Sealed Bearings	20 - 25, 32, 33, 42
Seals	42
Shape Accuracy	34, 35
Shielded Bearings	14 - 19, 28 - 31, 42
Shields	42
Snap Retainer	40
Solid Retainer	41
Special Design	36
Special Treatment	44
Spindle Ball Bearings	37
Standard Radial Clearance	6, 7
Starting Torque	46, 47
Static Equivalent Radial Load	50
Suffix Code	6, 7
Tandem Arrangement (DT)	62, 63
Tolerances for Bearings	34, 35
Tolerances for Shaft and Housing	55
Torque	46, 47
Unshielded Bearings	8 - 13, 26, 27
Vibration Test	46
Yield, Axial, Radial	59

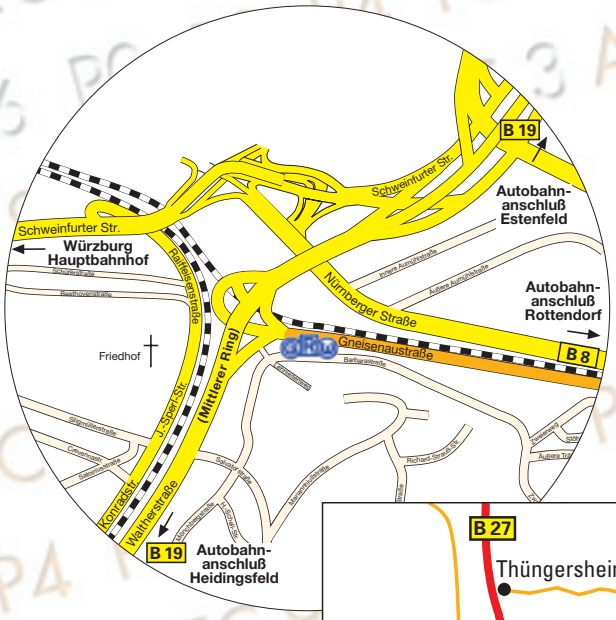

How to find us:

Motorway exit "Würzburg-Heidingsfeld":
B19 direction "Würzburg-Stadtmitte"
After the third traffic light junction, turn right after approx. 50 m
Exit "Heimgarten"
Right again into Gneisenaustraße at the T-junction
GRW is approx. 150 m on the right-hand side

Motorway exit "Würzburg-Rottendorf":
B8 direction "Würzburg-Stadtmitte"
Turn left along Am Greinberg (sign Motorway Frankfurt/Stuttgart, B13 Ansbach…)
Exit "Heimgarten" into Gneisenaustrasse
GRW is approx. 150 m on the right-hand side

Motorway exit "Würzburg-Estenfeld":
B19 direction "Würzburg"
Use left-hand lane on Am Greinberg (sign Motorway Frankfurt/Stuttgart, B13 Ansbach…)
Exit "Heimgarten" into Gneisenaustrasse
GRW is approx. 150 m on the right-hand side

GEBR. REINFURT GmbH & Co. KG
High-Precision Ball Bearings

Gneisenaustraße 10/11
D-97074 Würzburg (Germany)

Postfach 9442
D-97094 Würzburg (Germany)

phone: +49 931 79 52-0
fax: +49 931 79 52-300
e-mail: info@grw.de
www.grw.de

Prod. 06054E