A Subsidiary of Deans Group

TECH. SURMOUNT — QUALITY LEAD

LTM BALLSCREWS

THE DEVELOPMENT OF **LTM** TECHNOLOGY IS AS THE EVOLUTION OF BALLSCREW INDUSTRY IN TAIWAN. FROM PLANNING. DEVELOPING. SETTING UP FACTORY AND MASS PRODUCTION IN THE PAST OF 28 YEARS.

▲ 1979-MR.SHAI SUCCESSFULLY INVENTED THE FIRST B'S IN TAIWAN , AWARDED THE PRIZES BY THE CHIEF OF FOREIGN TRADE BUREAU. (EVER BEEN PRIME MINISTER) , TO SHARE GLORY WITH OUR CUSTOMERS.

History of company mark

1 HBC HO FONG BALLSCREWS

2 CBC BALLSCREWS

3 LEADTEAM BALLSCREWS 律廷滾珠螺桿

MEMO

TECHNOLOGY REFORM

THE **LEADTEAM** BALLSCREWS COMPANY IS ESTABLISHED AS A LOT OF WORKING EXPERIENCES, IT HAS BEEN JOINED TO OPERATE OTHER COMPANIES SUCH AS **YANG**, **HO-FONG** AND **SPURT** COMPANIES, IT ALSO CONSULTS. THE EXPERIENCES OF OVERSEA COMPANIES SUCH AS JAPAN, AMERICAN, GERMAN,AND UNITED KINGDOM.

PRODUCT REFORM

1979 THE FRIST OF GROUND PRECISION GRADE B/S IS MADE BY THIS COMPANY IN TAIWAN.

1982 THIS COMPANY IS THE FIRST TO INTRODUCE THE TECH-NOIOGY OF EXTERNAL TYPE B/S FROM U.K.

1987 THE FIRST OF INTERNAL TYPE B/S IS MADE BY THIS COMPANY IN TAIWAN.

1990 THE FIRST OF HIGH LEAD B/S IS MADE BY THIS COMPANY IN TAIWAN.

1999 THE 7 METER OF ONE-PASS HEAT TREATMENT OF B/S IS FIRST TIME TO BE MADE.

RELATIVE COMPANY

THE LEADTEAM BALLSCREWS COMPANY IS PART OF SUBSIDIARY OF DEAN'S GROUP. THIS GROUP INCLUDES **LEADERTEK**, **ROTOTEK** AND **LEADCHIN** COMPANY. OUR COMPANY HAS MANY EXPERIENCE AND GOOD ON THE CENTRIFUGAL, FORGING AND EXTRA WORKS ON STAINLESS PRODUCTSI:OUR COMPANY COMBINES THE TECHNOLOGY OF BALLSCREWS WITH THE CENTRIFUGAL, FORGING AND EXTRA WORKS ON STAINLESS PRODUCT：AND TRY TO EXTENT OPERATE INTO MG-ALLOY AND OTHER SUPER-ALLOY OUR COMPANY ALSO TRIES TO EXTENT OUR PROFESSIONAL. FILED INTO THE ELECTRONICS AND MEDICAL FILED.

THE QUALITY OF PRODUCT

THE USERS OF B/S KNOW THAT GOOD PRODUCT CAN DIVIDE INTO TWO LEVELS TO JUDGE. THE FIRST LEVEL IS THE PRECISION OF PRODUCT; IT IS DIFFICULT TO JUDGE IMMEDIATELY. BECAUSE THE MANUFACTURER PROVIDES THE METALURGE OF PRODUCT. THE REPORT OF QUALITY OF HEAT TREATMENT IS STILL, DIFFICULT TO FIND THE INTERNAL QUALITY OF SCREW AND ITS NUT. IT ALSO CANNOT PROVE THE RIGIDITY OF PRODUCT, DURABLE GOODS AND LIFE SPAN OF PRODUCT. THE QUALITY OF BALLSCREWS DEPENDS ON THE FOLLOWING THINGS FIRST, IT IS THE COMPOSITION OF MATERIAL, SECOND, THE MATERIAL DIVIDES EQUALLY OR NOT, THIRD, THIS IS THE DEFORMED STRESS AND HEAT STRESS OF SCREW AND ITS NUT RIEN IT IS HEAT-TREATED AND IT HAS TO BE GROUND.

LTM TECHNOLOGE BALLSCREWS

TECH. SURMOUNT — QUALITY LEAD

▼ CNC MF. INDUCTION M/C (JAPAN)

▲ CENTER HOLE GRINDER (SWISS)

▼ EXTERNAL THREAD GRINDER (U.K.)

4-METER EXTERNAL THREAD GRINDER (JAPAN)

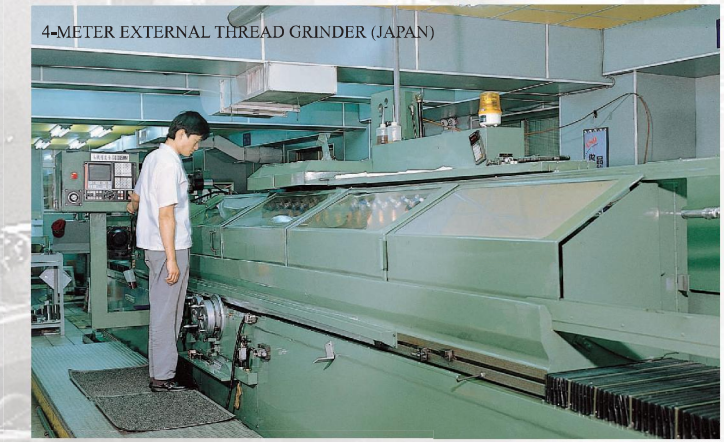

◀ INTERNAL THREAD GRINDER (U.K.)

LTM BALLSCREWS

LTM PRECISION MEASURING AND TESTING BALLSCREWS

TECH. SURMOUNT — QUALITY LEAD

▼ LASER DYNAMIC LEAD ERROR TESTER (U.K.)

▲ MAGNETIC CRACK TESTER (GERMANY)

▼ LASER STATIC LEAD ERROR TESTER (USA)

▲ DEPTH HARDNESS TESTER (JAPAN)

▲ PROFILE PROJECTOR (U.K.)

▲ SPECTROMETER (FRANCE)

▲ ROUGHNESS TESTER (JAPAN)

▲ UNIVERSAL TESTING M/C (TAIWAN)

MODEL NUMBER CODING

EXTERNAL TYPE NOMENCLATURE

$$\frac{R80}{1} \times \frac{20B3}{2} \times \frac{FDW}{3} \times \frac{6000}{4} \times \frac{7000}{5} \times \frac{C5}{6}$$

1 SCREW DENOTE	A : DIRECTION OF TURN R : RIGHT HAND L : LEFT HAND B : SCREW SHAFT OD: 16. 20. 25. 28. 32. 36. 40. 45. 50. 55. 63. 80. 100
2 LEAD AND TURNS	A : LEAD METRIC : 4. 5. 6. 8. 10. 12. 16. 20 ... INCH : 5.08/5TPI ; 6.35/4TPI ; 12.7/2TPI... B : CIRCUITS : A. PER CIRCULATE HAS 1.5 TURNS OF BALLS B. PER CIRCULATE HAS 2.5 TURNS OF BALLS C. PER CIRCULATE HAS 3.5 TURNS OF BALLS C : NO OF TUBES EXPRESSED BY 1, 2, 3
3 NUT SHAPE	A : F : FLANGE TYPE R : ROUND TYPE S : SQUARE TYPE G : NUT WITH GEAR B : S : SINGLE NUT D : DOUBLE NUT C : W: TUBES WITHIN NUT BODY V : TUBES ABOVE NUT BODY
4 THREAD LENGTH	UNIT : mm
5 OVERALL LENGTH	UNIT : mm
6 ACCURACY GRADE	EXPRESSED BY e_{300} C1 : 0.005 C2 : 0.007 C3 : 0.008 C4 : 0.012 C5 : 0.018 C6 : 0.023 C7 : 0.50 C10 : 0.120
7 SUITABLE FOR USE	LOW COST MASS PRODUCTION HIGH LEAD TWO STARTS

INTERNAL TYPE NOMENCLATURE

$$\frac{R80}{1} \times \frac{20T4}{2} \times \frac{FDI}{3} \times \frac{6000}{4} \times \frac{7000}{5} \times \frac{C5}{6}$$

1 SCREW DENOTE	A : DIRECTION OF TURN R : RIGHT HAND L : LEFT HAND B : SCREW SHAFT OD: 16. 20. 25. 28. 32. 36. 40. 45. 50. 55. 63. 80. 100
2 LEAD AND TURNS	A : LEAD METRIC : 4. 5. 6. 8. 10. 12. 16. 20 ... INCH : 5.08/5TPI ; 6.35/4TPI ; 12.7/2TPI B : CIRCUITS : T3 3TURNS OF BALLS PER NUT T4 4TURNS OF BALLS PER NUT T5 5TURNS OF BALLS PER NUT T6 6TURNS OF BALLS PER NUT
3 NUT SHAPE	A : F : FLANGE TYPE R : ROUND TYPE S : SQUARE TYPE G : NUT WITH GEAR B : S : SINGLE NUT D : DOUBLE NUT C : I : INTERNAL DEFLECTOR NUT
4 THREAD LENGTH	UNIT : mm
5 OVERALL LENGTH	UNIT : mm
6 ACCURACY GRADE	EXPRESSED BY e_{300} C1 : 0.005 C2 : 0.007 C3 : 0.008 C4 : 0.012 C5 : 0.018 C6 : 0.023 C7 : 0.50 C10 : 0.120
7 SUITABLE FOR USE	COMPACT MINIATURE SCREW

TECHNICAL DATA SHEET

Customer		M/C Model	Part no.	Delivery

1. Load condition

(a) Working thrust load Loading time ratio %

Max._____kgf , at_____ rpm_____
Normal_____kgf , at_____ rpm_____
Min._____kgf , at_____ rpm_____

} Total of loading time ratio should be 100%

2.Supporting method

Supported length_____mm Method_____Position_____

3.Operating condition

(a) Stroke_____mm
(b) Life expectancy_____km , _____x10^6rev , _____hours
(c) Rotating part Screw_____rpm. Nut_____rpm. Max.revolution_____rpm.
(d) Smooth running_____. Running with impact_____. with Impact and vibration. _____

4.Dimensions required

(a) Screw shaft OD._____mm
(b) Lead_____mm (Pitch_____ mm)
(c) Overall length_____mm. Thread length _____mm
(d) Nut type_____
(e) Wiper seal_____

5.Lead accuracy

(a) Target point of accumulated lead T : _____μm
(b) Grade _____

6.Axial (clearance) play

Required_____Max._____μm , Non_____

7.Preload and stiffness

Preload_____kgf , Drag torque_____ kgf·cm

8.Environment

(a) Lubricant Grease_____ Oil _____
(b) Environment temperature normally_____
(c) Atmosphere condition_____

9.Other Conditions

a _____
b _____

BALLSCREW MOUNTING METHODS

THE TYPICAL FOUR KINDS MOUNTING METHODS IN MACHINE TOOL APPLICATIONS ARE SHOWN BELOW.

MOUNTING METHODS	APPLICATION
A 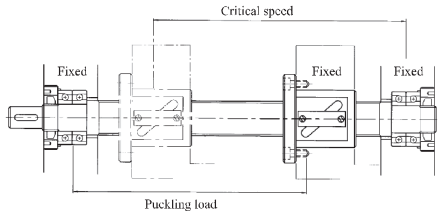	HIGH ROTATION HIGH RIGIDITY **F-F**
B 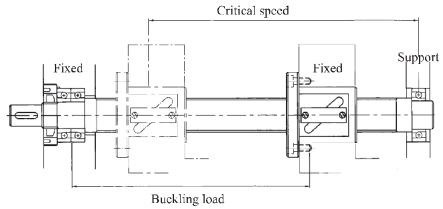	MEDIUM ROTATION MEDIUM RIGIDITY **F-S**
C 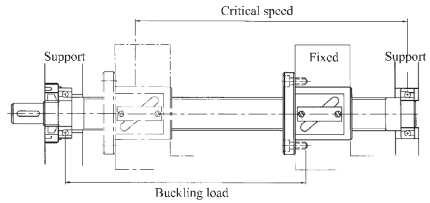	GENERAL MOUNTING MEDIUM ROTATION **S-S**
D 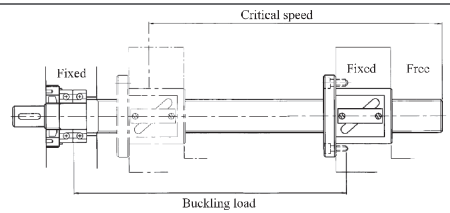	LOW ROTATION SHORTER SHAFT **F-O**

LASER, LEAD ACCURACY CHART

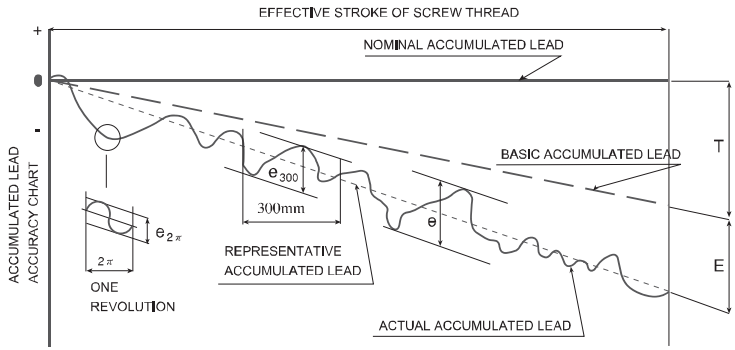

Defination

T±E	REPRESENTATIVE ACCUMULATED LEAD	THIS IS THE STRAIGHT LINE REPRESENT THE ACTUAL ACCUMULATED LEAD. DERIVED By MIN. SQUARE ROOT METHOD FROM THE ACTUAL LASER MEASURED DATUM.
a	ACTUAL ACCUMULATED LEAD	THIS IS THE ACTUAL LEAD ERROR RECORD MEASURED BY LASER.
T	BASIC ACCUMULATED LEAD (T)	WITHIN EFFECTIVE STROKE OF SCREW THREAD, THE DESIGNER SHOULD CONSIDER THE HEAT GENERATION, THE ELASTIC DEFORMATION DURIUG ROTATION IN ADVANCE. MONDIFY THE NOMINAL ACCUMLATED LEAD, PASS THE MODIFICATION VALUE (T) TO THE BALLSCREW MAKER. THE EXPERIMENTAL, T VALUE(mm/m) CNC LATHE X AXIS (-0.10~-0.20) CNC MACHINING X. Y AXIS (-0.10~-0.20) Z AXIS (-0.10~-0.15) CENTER Z AXIS (-0.15~-0.25)
E	REPRESENTATIVE ACCUMULATED LEAD ERROR (E)	THE ALLOWABLE TOLERANCE BETWEEN REPRESENTATIVE ACCUMULATED LEAD AND BASIC ACCUMULATED LEAD.
e	LEAD VARIATION (e)	THE MAX. VARIATON WITHIN THE EFFECTIVE STROKE OF SCREW THREAD.
e_{300}	300mm VARIATION < e_{300} >	THE MAX. LEAD VARIATION OF RANDOM 300mm WITHIN EFFECTIVE STROKE.
$e_{2\pi}$	SINGLE PITCH VARIATION < $e_{2\pi}$ >	THE MAX. LEAD VARIATION OF RANDOM ONE REVOLUTION

Variation per300mm of Thread Length and per Turn of the Screw Shaft

Unit : μm

Accuracy	C0	C1	C2	C3	C4	C5
e_{300}	3.5	5	7	8	12	18
$e_{2\pi}$	2.5	4	5	6	7	8

Lead Accuracy of Screw Shaft

Unit : μm

Accuracy		C0		C1		C2		C3		C4		C5	
Thread Length / item		±E	e	±E	e	±E	e	±E	e	±E	e	±E	e
over	to(incl.)												
-	315	4	3.5	6	5	8	7	12	8	16	12	23	18
315	400	5	3.5	7	5	9	7	13	10	18	14	25	20
400	500	6	4	8	5	10	7	15	10	20	14	27	20
500	630	6	4	9	6	11	8	16	12	22	16	30	23
630	800	7	5	10	7	13	9	18	13	25	18	35	25
800	1000	8	6	11	8	15	10	21	15	29	20	40	27
1000	1250	9	6	13	9	18	11	24	16	34	22	46	30
1250	1600	11	7	15	10	21	13	29	18	40	25	54	35
1600	2000			18	11	25	15	35	21	48	29	65	40
2000	2500			22	13	30	18	41	24	57	34	77	46
2500	3150			26	15	36	21	50	29	69	40	93	54
3150	4000			30	18	44	25	60	35	85	48	115	65
4000	5000					52	30	72	41	76	49	140	77
5000	6300					65	36	90	50	100	60	170	93
6300	8000							110	60	125	75	210	115

SINCE 1979

LEADTEAM BALLSCREWS CO.

INSPECTION CERTIFICATE

CUSTOMER: Leadertek Precision INC.

PURCHASE ORDER: 566586

I.D. NUMBER: 99175- 1- 1

DRAWING NUMBER: 11600900

SPECIFICATION: R40×10B2×FDV×1329×1617.50×0.018/C5

WE HEREBY CERTIFY THAT ACCURACY HEREIN DESCRIBED IS SATISFACTORY AND IN ACCORDANCE WITH THE SPECIFICATION

Eric Yang

DATE: 1999/05/29

ERIC C.M. YANG / Q.C. MANAGER

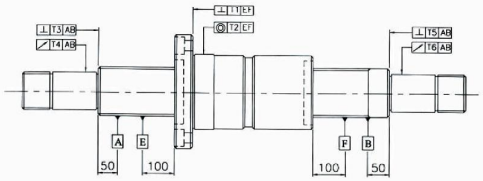

GEOMETRICAL	STANDARD	ACTUAL	DIMENSIONAL	STANDARD	ACTUAL
T1	0.013	0.008	1.	$\phi 30^{0}_{-0.011}$	$\phi 30-0.008$
T2	0.019	0.012	2.	$\phi 30^{0}_{-0.011}$	$\phi 30-0.010$
T3	0.010	0.002	3.	$\phi 25^{0}_{-0.013}$	$\phi 25-0.005$
T4	0.015	0.009	4.		
T5	0.010	0.003	5.		
T6	0.015	0.007	6.	$\phi 65^{-0.010}_{-0.029}$	$\phi 65-0.018$

INSPECTED BY RENISHAW U.K. LASER SYSTEM	ALLOWABLE	ACTUAL
REPRESENTATIVE ACCUMULATED LEAD T±E (μm)	-26±54	-28
LEAD VARIATION WITHIN EFFECTIVE STROKE e (μm)	35	9
THE LEAD VARIATION IN RANDOM 300 mm e_{300} (μm)	18	5
PRELOAD TORQUE (WITHOUT WIPER) Tp (kgf-cm)	5.95~11.05	5.9~8.0
ACCURACY GRADE PER RELEASED ORDER	C5	C2

Doc. Form：10-40-07

SINCE 1979

LEADTEAM BALLSCREWS CO.

STRUCTURE & HARDNESS CERTIFICATE

CUSTOMER: Leadertek Precision INC.

PURCHASE ORDER: 566586

I.D. NUMBER: 99175-1-1

DRAWING NUMBER: 11600900

SPECIFICATION: R40×10B2×FDV×1329×1617.50×0.018/C5

WE HEREBY CERTIFY THAT STRUCTURE PICTURE AND HARDNESS READINGS HEREIN DESCRIBED ARE SATISFACTORY AND IN ACCORDANCE WITH THE SPECIFICATION

Eric Yang

DATE: 1999/05/29

ERIC C.M.YANG / Q.C.MANAGER

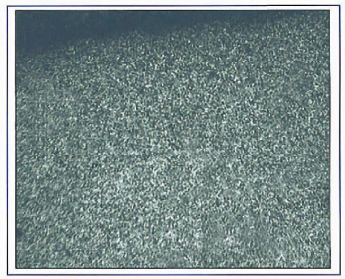

THE LEFT PICTURE SHOWN THE MICRO-STRUCTURE OF THE PORTION THOSE ARE M-F INDUCTION HARDENED AND TEMPERED.

THE CORE OF THE SCREW BARS ARE PREHEATED (QUENCHED+TEMPERED).

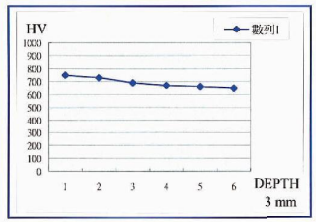

HARDNESS / DEPTH DISTRIBUTION

POINT	READINGS	POINT	READINGS
1.	750	4.	670
2.	730	5.	660
3.	690	6.	650

SINCE 1979

Doc. Form：10-40-07

FDI TYPE (DOUBLE · INTERNAL NUT)

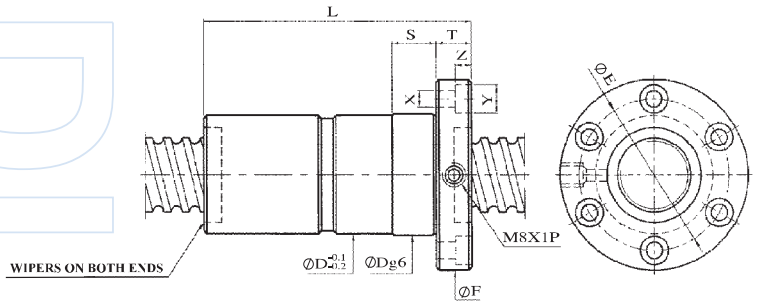

Unit : mm

Dimension		Ball Dia	Turns	Dynamic Load C 10^6 Revs. Kgf	Static Load Co Kgf	Stiffness Kgf/um	Nut		Flange				Bolt		
Nominal Dia.	Lead						Dg6	L	F	T	E	S	X	Y	Z
20	5	3.175	4	1320	3000	52	34	92	57	12	45	12	5.5	9.5	5.5
	6	3.969	4	1640	3500	51	34	109	57	12	45	12	5.5	9.5	5.5
25	5	3.175	3	1210	2340	49	40	82	64	12	51	15	5.5	9.5	5.5
			4	1550	4100	64		92							
	6	3.969	3	1540	2790	48	40	93	64	12	51	15	5.5	9.5	5.5
			4	1970	4800	64		109							
	10	4.763	3	1650	3270	49	40	140	64	12	51	15	5.5	9.5	5.5
32	5	3.175	3	1410	4100	61	48	82	74	12	60	15	6.6	11	6.5
			4	1810	5500	80		92							
			6	2570	8300	118		112							
	6	3.969	4	2390	6700	82	48	109	74	12	60	15	6.6	11	6.5
	8	4.763	4	2880	7400	79	50	134	84	15	66	15	9	14	8.5
	10	6.350	3	3000	6700	60	56	138	88	16	72	15	9	14	8.5
			4	3850	9000	88		158							
40	5	3.175	4	2060	7100	98	55	96	90	16	72	20	9	14	8.5
			6	2920	10700	144		116							
	6	3.969	4	2700	8600	99	56	113	90	16	72	20	9	14	8.5
			6	3840	13000	146		137							

LTM
BALLSCREWS

FDI TYPE (DOUBLE · INTERNAL NUT)

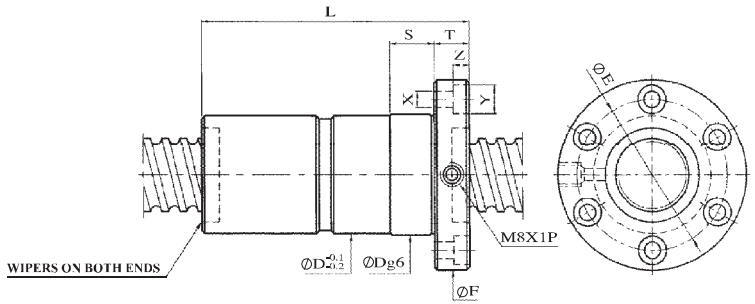

Unit : mm

Dimension		Ball Dia	Turns	Dynamic Load C 10^6 Revs. Kgf	Static Load Co Kgf	Stiffness Kgf/um	Nut		Flange				Bolt		
Nominal Dia.	Lead						Dg6	L	F	T	E	S	X	Y	Z
40	10	6.350	3	3600	9200	75	65	140	106	18	84	20	11	17.5	11
			4	4610	12300	99		160							
50	5	3.175	4	2320	9200	119	75	96	110	16	92	15	9	14	8.5
	10	6.350	4	5400	16400	122	75	160	116	18	94	20	11	17.5	11
			6	7660	24600	180		202							
	12	7.938	4	6890	19200	122	75	195	121	22	97	20	14	20	13
	20	7.938	3	4570	11200	92	75	253	121	28	97	20	14	20	13
63	10	6.350	4	6330	22200	154	88	162	134	20	110	20	14	20	13
			6	8970	33300	226		204							
	12	7.938	4	8060	25700	151	90	195	136	22	112	20	14	20	13
			6	11430	38500	222		248							
	20	9.525	3	8540	23700	147	95	253	153	28	123	25	18	26	17.5
80	10	6.350	4	7180	28700	187	105	164	152	22	127	20	14	20	13
			6	10170	43100	275		206							
	12	7.938	4	7550	25900	189	110	195	156	22	132	20	14	20	13
			6	13380	52000	278		206							
	20	9.525	3	9360	30500	187	115	253	173	28	143	25	18	26	17.5
			4	11980	40700	246		297							

RSI TYPE (SINGLE · INTERNAL NUT)

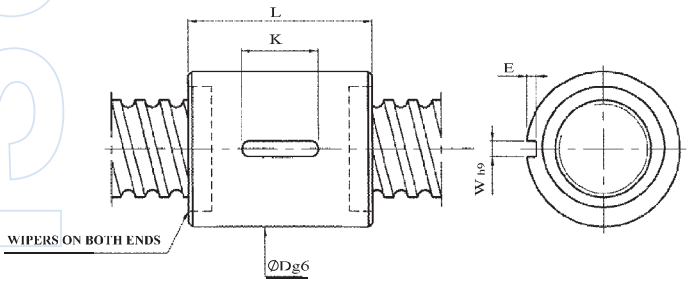

Unit : mm

Dimension		Ball Dia	Turns	Dynamic Load C 10^6 Revs. Kgf	Static Load Co Kgf	Stiffness Kgf/um	Nut		Keyway		
Nominal Dia.	Lead						Dg6	L	K	W	E
20	5	3.175	4	1320	3000	26	34	48	20	4	2.5
	6	3.969	4	1640	3500	26	34	56	25	4	2.5
25	5	3.175	3	1210	2340	25	40	41	20	4	2.5
			4	1550	4100	33		48	20		
	6	3.969	3	1540	2790	26	40	48	20	4	2.5
			4	1970	4800	32		56	25		
32	5	3.175	4	1810	5500	41	48	48	20	4	2.5
			6	2570	8300	60		61	25		
	6	3.969	4	2390	6700	42	48	56	25	4	2.5
	8	4.763	4	2880	7400	40	50	70	25	5	3.0
	10	6.350	3	3000	6700	30	56	68	25	6	3.5
			4	3850	9000	40		79	32		
40	5	3.175	4	2060	7100	50	55	48	20	4	2.5
			6	2920	10700	74		61	25		
	6	3.969	4	2700	8600	50	56	56	25	5	3.0
	8	4.763	4	3430	10100	51	60	70	25	5	3.0
	10	6.350	3	3600	10100	38	65	68	25	6	3.5
			4	4610	12300	50		79	32		

RSI TYPE (SINGLE · INTERNAL NUT)

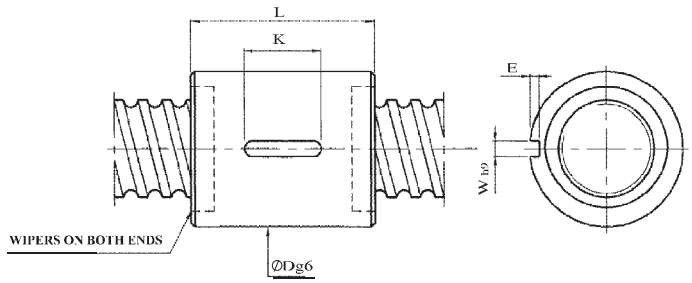

Unit : mm

Dimension		Ball Dia	Turns	Dynamic Load C 10^6 Revs. Kgf	Static Load Co Kgf	Stiffness Kgf/um	Nut		Keyway		
Nominal Dia.	Lead						Dg6	L	K	W	E
50	5	3.175	4	2320	9200	61	75	48	20	6	3.5
			6	3290	13800	89		61	25		
	10	6.350	4	5400	16400	62	75	79	32	6	3.5
			6	7660	24600	92		102	40		
	12	7.938	3	5380	14400	47	75	82	32	6	3.5
			4	6890	19200	62		95	40		
63	10	6.350	4	6330	22200	75	88	79	32	8	4.5
			6	8970	33300	110		102	40		
	12	7.938	4	8060	25700	77	90	95	40	8	4.5
			6	11430	38500	113		123	50		
80	10	6.350	4	13380	52000	95	105	79	32	8	4.5
			6	10170	43100	140		102	40		
	12	7.938	4	9440	34600	96	110	95	40	8	4.5
			6	13380	52000	142		123	50		
	16	9.525	3	9360	30500	87	115	106	40	10	5.5
			4	11980	40700	110		124	50		
	20	9.525	3	9360	30500	95	115	126	50	10	5.5
			4	11980	40700	125		149	63		

FSW TYPE (SINGLE · EXTERNAL NUT)

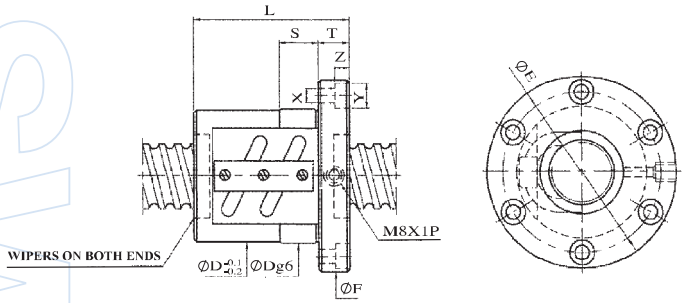

Unit : mm

Dimension		Ball Dia	Turns	Dynamic Load C 10^6 Revs. Kgf	Static Load Co Kgf	Stiffness Kgf/um	Nut		Flange				Bolt		
Nominal Dia.	Lead						Dg6	L	F	T	E	S	X	Y	Z
16	5	3.175	2.5x2	1750	2190	31	40	58	63	10	51	12	4.5	8	4.5
20	4	2.381	2.5x2	1140	2070	31	40	48	63	11	51	12	5.5	9.5	5.5
	5	3.175	2.5x1	1045	2140	19	44	41	67	11	55	12	5.5	9.5	5.5
			2.5x2	1900	3890	38		58							
	6	3.969	2.5x1	1365	2680	20	48	48	72	12	59	12	5.5	9.5	5.5
25	4	2.381	2.5x2	1290	2350	38	46	49	69	12	57	15	5.5	9.5	5.5
	5	3.175	2.5x2	2150	4860	46	50	58	73	12	61	15	5.5	9.5	5.5
	6	3.969	2.5x2	2680	5740	46	53	66	76	12	64	15	5.5	9.5	5.5
	10	4.763	2.5x1	2030	4355	25	58	67	85	15	71	15	6.6	11	6.5
28	5	3.175	2.5x2	2290	5500	50	55	58	85	12	69	15	6.6	11	6.5
	6	3.175	2.5x2	2290	5500	50	55	66	85	12	69	15	6.6	11	6.5
32	5	3.175	2.5x1	1040	2860	28	58	42	85	12	71	15	6.6	11	6.5
			2.5x2	2435	6230	55		58							
	6	3.969	2.5x2	3250	7780	57	62	66	89	12	75	15	6.6	11	6.5
	8	4.763	2.5x2	4090	9340	58	66	82	100	15	82	15	9	14	8.5
	10	6.350	2.5x1	2600	5510	31	74	70	108	15	90	15	9	14	8.5
			2.5x2	5780	12450	60		100							
	12	6.350	2.5x1	2600	5510	31	74	81	108	18	90	20	9	14	8.5

FSW TYPE (SINGLE · EXTERNAL NUT)

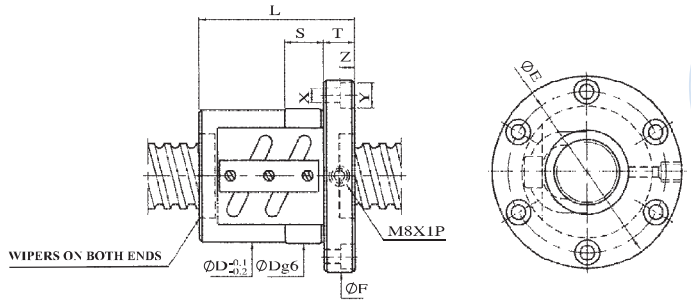

Unit : mm

Dimension		Ball Dia	Turns	Dynamic Load C 10^6 Revs. Kgf	Static Load Co Kgf	Stiffness Kgf/um	Nut		Flange				Bolt		
Nominal Dia.	Lead						Dg6	L	F	T	E	S	X	Y	Z
36	5	3.175	2.5x2	2530	7010	61	65	62	100	15	82	18	9	14	8.5
	6	3.969	2.5x2	3440	8700	63	65	70	100	15	82	18	9	14	8.5
	8	4.763	2.5x2	4350	10510	65	70	82	110	15	92	18	9	14	8.5
	10	6.350	2.5x2	6190	14050	66	70	103	120	18	98	20	11	17.5	11
40	5	3.175	2.5x1	1140	3600	34	67	45	101	15	83	20	9	14	8.5
			2.5x2	2715	7780	66		62							
	6	3.969	2.5x2	3645	9730	68	70	70	104	15	86	20	9	14	8.5
	8	4.763	2.5x2	4610	11680	69	74	82	108	15	90	20	9	14	8.5
	10	6.350	2.5x1	2920	6990	37	82	73	124	18	102	20	11	17.5	11
			2.5x2	6615	15570	72		103							
	12	7.938	2.5x1	3430	7910	38	86	83	128	18	106	20	11	17.5	11
			2.5x2	8750	20500	74		119							
45	10	6.350	2.5x2	5530	15800	78	88	103	132	18	110	20	11	17.5	11
	12	7.938	2.5x2	6540	18100	81	90	119	132	18	110	20	11	17.5	11
50	6	3.969	2.5x2	4055	12160	81	84	70	118	15	100	16	9	14	8.5
	8	4.763	2.5x2	5160	14590	83	87	85	128	18	107	20	11	17.5	11
	10	6.350	2.5x2	7480	19460	87	93	103	135	18	113	20	11	17.5	11
			2.5x3	10570	27510	128		133							

FSV TYPE (SINGLE · EXTERNAL NUT)

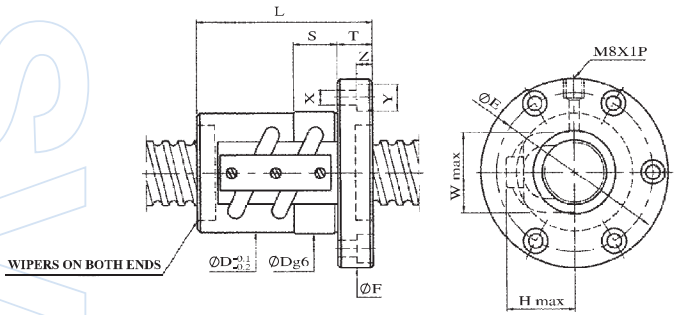

Unit : mm

Dimension		Ball Dia	Turns	Dynamic Load C 10^6 Revs. Kgf	Static Load Co Kgf	Stiffness Kgf/um	Nut				Flange				Bolt		
Nominal Dia.	Lead						Dg6	L	W	H	F	T	E	S	X	Y	Z
50	8	4.763	2.5x2	5160	14590	83	75	85	58	45	116	18	95	20	11	17.5	11
	10	6.350	2.5x2	7480	19460	87	78	103	62	48	119	18	98	20	11	17.5	11
			2.5x3	10570	27510	128		133									
	12	7.938	2.5x1	5445	13400	46	82	87	64	52	130	22	105	20	14	20	13
			2.5x2	9885	24330	89		123									
63	10	6.350	2.5x2	8425	24520	104	90	108	74	53	132	22	110	20	11	17.5	11
			2.5x3	11900	34660	153		138									
	12	7.938	2.5x2	11230	30650	107	94	123	76	57	142	22	117	20	14	20	13
	16	9.525	2.5x2	14070	36680	141	100	158	78	62	150	28	123	25	14	20	13
	20	9.525	2.5x2	14070	36680	141	100	187	78	62	150	28	123	25	14	20	13
80	10	6.350	2.5x2	9420	31060	126	115	108	90	64	163	22	137	20	14	20	13
			2.5x3	13350	44010	186		138									
	12	7.938	2.5x2	12650	38820	130	120	123	92	67	169	22	143	20	14	20	13
			2.5x3	17930	55020	192		159									
	16	9.525	2.5x2	16020	46580	171	125	158	94	70	186	28	154	25	18	26	17.5
			2.5x3	22700	66020	252		206									
	20	9.525	2.5x2	16020	46580	171	125	187	94	70	186	28	154	25	18	26	17.5
			2.5x3	22700	66020	252		247									

DFW TYPE (DOUBLE · EXTERNAL NUT)

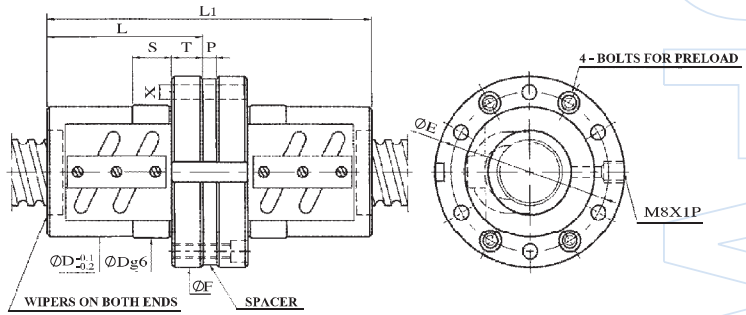

Unit : mm

Dimension		Ball Dia	Turns	Dynamic Load C 10^6 Revs. Kgf	Static Load Co Kgf	Stiffness Kgf/um	Nut				Flange				Bolt
Nominal Dia.	Lead						Dg6	L	P	L1	F	T	E	S	X
20	4	2.381	2.5x2	875	2190	62	40	48	3	99	63	11	51	12	5.5
	5	3.175	2.5x1	840	1750	38	44	41	5	87	67	11	55	12	5.5
			2.5x2	1520	3500	74		58		121					
	6	3.969	2.5x1	1120	2150	39	48	48	7	103	72	12	59	12	5.5
25	4	2.381	2.5x2	975	2780	75	46	49	4	102	69	12	57	15	5.5
	5	3.175	2.5x2	1690	4460	89	50	58	6	122	73	12	61	15	5.5
	6	3.969	2.5x2	2280	5460	91	53	66	7	139	76	12	64	15	5.5
	10	4.763	2.5x1	1610	3260	48	58	67	11	145	85	15	71	15	6.6
28	5	3.175	2.5x2	1810	5100	91	55	58	6	122	85	12	69	15	6.6
	6	3.175	2.5x2	1810	5100	93	55	66	7	139	85	12	69	15	6.6
32	5	3.175	2.5x2	1880	5720	108	58	58	4	120	85	12	71	15	6.6
	6	3.969	2.5x2	2520	7080	111	62	66	5	137	89	12	75	15	6.6
	8	4.763	2.5x2	3230	8360	113	66	82	9	173	100	15	82	15	9
	10	6.350	2.5x2	4720	11000	117	74	100	8	208	108	15	90	15	9
40	5	3.175	2.5x2	2060	7200	130	67	62	8	132	101	15	83	20	9
	6	3.969	2.5x2	2810	8930	134	70	70	5	145	104	15	86	20	9
	8	4.763	2.5x2	3550	10500	135	74	82	9	173	108	15	90	20	9
	10	6.350	2.5x2	5300	1400	141	82	103	12	218	124	18	102	20	11

FDW TYPE (DOUBLE · EXTERNAL NUT)

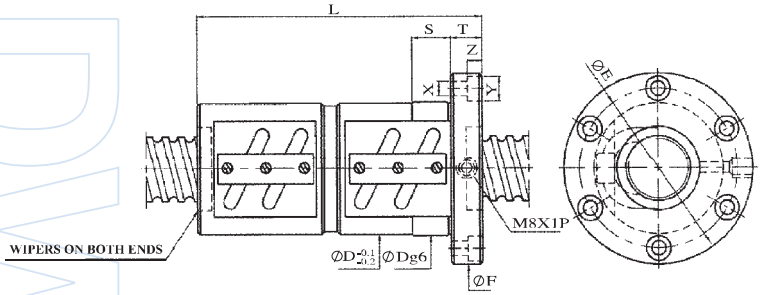

Unit : mm

Dimension		Ball Dia	Turns	Dynamic Load C 10^6 Revs. Kgf	Static Load Co Kgf	Stiffness Kgf/um	Nut		Flange				Bolt		
Nominal Dia.	Lead						Dg6	L	F	T	E	S	X	Y	Z
32	10	6.350	2.5x1	3215	6860	60	74	130	108	15	90	15	9	14	8.5
			2.5x2	5780	12450	117		190							
	12	6.350	2.5x1	2600	5510	60	74	153	108	18	90	20	9	14	8.5
36	5	3.175	2.5x2	2530	7010	119	65	110	100	15	82	18	9	14	8.5
	6	3.969	2.5x2	3440	8700	123	65	126	100	15	82	18	9	14	8.5
	8	4.763	2.5x2	4350	10510	126	70	154	110	15	92	18	9	14	8.5
	10	6.350	2.5x2	6190	14050	129	75	193	120	18	98	20	11	17.5	11
40	5	3.175	2.5x1	1495	4290	67	67	84	101	15	83	20	9	14	8.5
			2.5x2	2715	7780	130		110							
	6	3.969	2.5x2	3645	9730	134	70	128	104	15	86	20	9	14	8.5
	8	4.763	2.5x1	2540	6430	70	74	107	108	15	90	20	9	14	8.5
			2.5x2	4610	11680	135		155							
	10	6.350	2.5x1	3645	8580	73	82	133	124	18	102	20	11	17.5	11
			2.5x2	6615	15570	141		193							
	12	7.938	2.5x1	3430	7910	75	86	153	128	18	106	20	11	17.5	11
			2.5x2	8750	20500	144		227							
50	6	3.969	2.5x2	4055	12160	159	84	128	118	15	100	16	9	14	8.5
			2.5x2	5730	17190	234		164							

FDW TYPE (DOUBLE · EXTERNAL NUT)

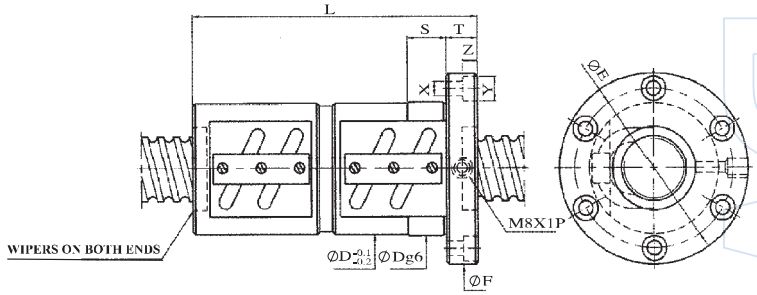

Unit : mm

Dimension		Ball Dia	Turns	Dynamic Load C 10^6 Revs. Kgf	Static Load Co Kgf	Stiffness Kgf/um	Nut		Flange				Bolt		
Nominal Dia.	Lead						Dg6	L	F	T	E	S	X	Y	Z
50	8	4.763	2.5x2	5160	14590	163	87	158	128	18	107	20	11	17.5	11
	10	6.350	2.5x2	7480	19460	171	93	193	135	18	113	20	11	17.5	11
			2.5x3	8340	20700	251		253							
	12	7.938	2.5x2	9885	24330	174	100	232	146	22	122	20	14	20	13
63	10	6.350	2.5x2	8425	24520	204	108	198	154	22	130	20	14	20	13
			2.5x3	9130	33900	301		258							
	12	7.938	2.5x1	4830	13900	108	115	160	161	22	137	20	14	20	13
			2.5x2	11230	30650	210		232							
	16	9.525	2.5x2	14070	36680	276	122	302	180	28	150	25	18	26	17.5
	20	9.525	2.5x2	14070	36680	276	122	347	180	28	150	25	18	26	17.5
80	10	6.350	2.5x2	9420	31060	248	130	198	176	22	152	20	14	20	13
			2.5x3	13350	44010	266		258							
	12	7.938	2.5x2	12650	38820	255	136	232	182	22	158	20	14	20	13
			2.5x3	17930	55020	376		304							
	16	9.525	2.5x2	16020	46580	336	143	302	204	28	172	25	18	26	17.5
			2.5x3	22700	66020	494		398							
	20	9.525	2.5x2	16020	46580	336	143	347	204	28	172	25	18	26	17.5
			2.5x3	22700	66020	494		467							

FSI TYPE (STANDARD IN STOCK, SINGLE, INTERNAL NUT)

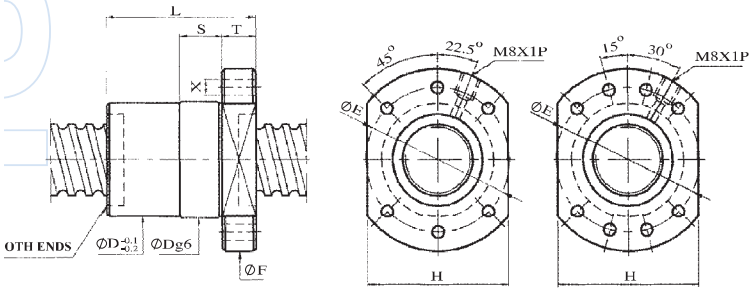

Unit : mm

ainal ia.	Lead	Ball Dia	Turns	Dynamic Load C 10^6 Revs. Kgf	Static Load Co Kgf	Stiffness Kgf/um	Nut		Flange					Bolt
							Dg6	L	F	T	E	H	S	X
0	5	3.175	4	1320	3000	26	34	53	57	12	45	44	12	5.5
5	5	3.175	4	1550	4100	33	40	53	64	12	51	48	15	5.5
	10	4.763	3	1650	3270	25	40	64	64	12	51	48	15	5.5
2	5	3.175	4	1810	5500	41	48	53	74	12	60	62	15	6.6
	10	6.350	3	3000	6700	30	56	80	88	16	72	62	15	9
			4	3850	9000	40		90						
0	5	3.175	4	2060	7100	50	55	56	90	16	72	70	20	9
	10	6.350	3	3600	9200	38	65	83	106	18	84	70	20	11
			4	4610	12300	50		93						
0	10	6.350	4	5400	16400	62	75	93	116	18	94	85	20	11
			6	7660	24600	92		112						

FDI TYPE (STANDARD IN STOCK, DOUBLE, INTERNAL NUT)

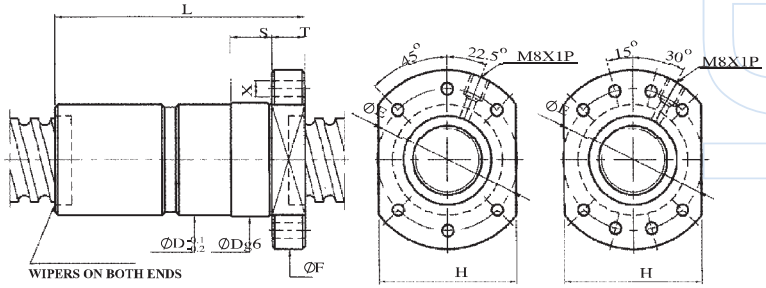

Unit : mm

Nominal Dia.	Lead	Ball Dia	Turns	Dynamic Load C 10^6 Revs. Kgf	Static Load Co Kgf	Stiffness Kgf/um	Nut		Flange					Bolt
							Dg6	L	F	T	E	H	S	X
20	5	3.175	4	1320	3000	52	34	92	57	12	45	44	12	5.5
25	5	3.175	4	1550	4100	64	40	92	64	12	51	48	15	5.5
	10	4.763	3	1650	3270	49	40	140	64	12	51	48	15	5.5
32	5	3.175	4	1810	5500	80	48	92	74	12	60	62	15	6.6
	10	6.350	3	3000	6700	60	56	138	88	16	72	62	15	9
			4	3850	9000	79		158						
40	5	3.175	4	2060	7100	98	55	96	90	16	72	70	20	9
	10	6.350	3	3600	9200	75	65	140	106	18	84	70	20	11
			4	4610	12300	99		160						
50	10	6.350	4	5400	16400	122	75	160	116	18	94	85	20	11
			6	7660	24600	180		202						

BRIDGEPORT BALLSCREW SET (ϕ32mm)

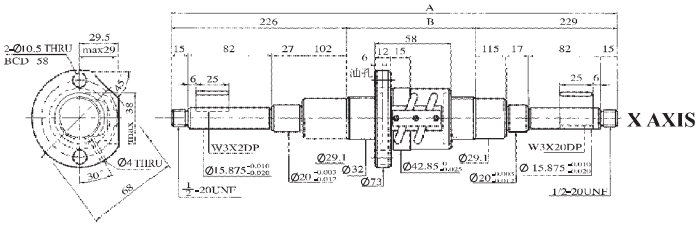

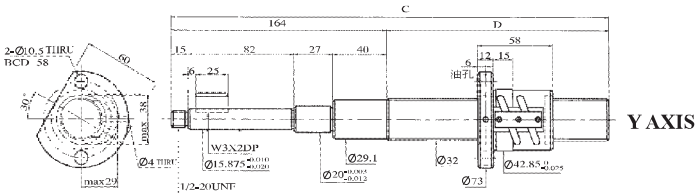

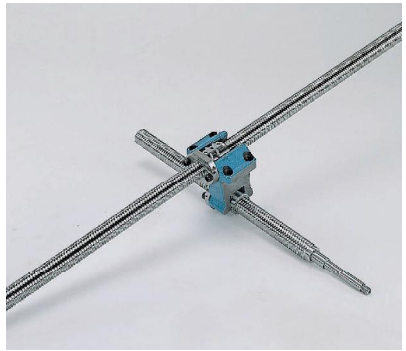

SHAFT OD.	32
LEAD	5 : 5.08 (5TPI)
DIRECTION	X: (RH.) Y: (LH.)
BALL DIA	3.175
TURNS	2.5x2
PRELOAD	125 kgf : 280 lbs
DRAG TORQUE	4 kgf-cm : 3.5 in-lb
DYNAMIC LOAD	2345 : 5270 lbs
STATIC LOAD	6230 kgf : 14000 lbs
ACCURACY GRADE	0.012/e300 : .0005 /ft

X AXIS Unit : mm

TABLE SIZE	A	B	ORDER NO.
42	1326	871	B3205X-42
48	1478	1023	B3205X-48
50	1630	1175	B3205X-50

Y AXIS Unit : mm

TABLE SIZE	C	D	ORDER NO.
12	592	428	B3205Y-12
16	694	530	B3205Y-16

BRIDGEPORT BALLSCREW SET (ϕ 25mm)

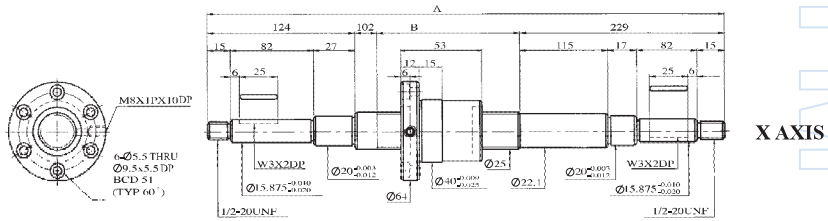

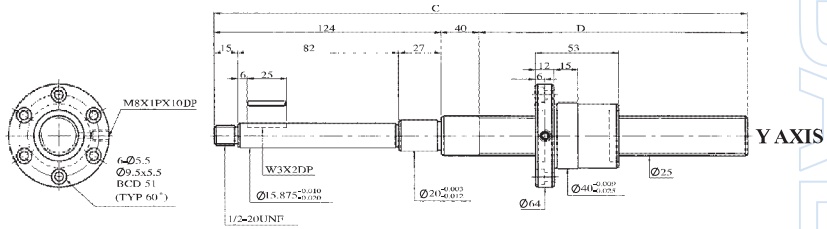

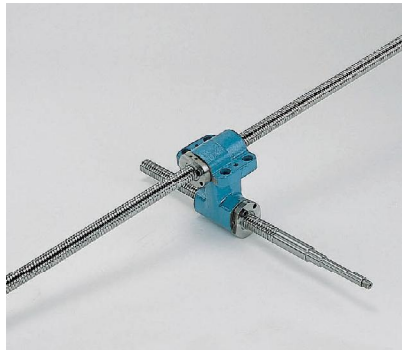

SHAFT OD.	25
LEAD	5 : 5.08 (5TPI)
DIRECTION	X: (RH.) Y: (LH.)
BALL DIA	3.175
TURNS	4
PRELOAD	125 kgf : 280 lbs
DRAG TORQUE	4 kgf-cm : 3.5 in-lb
DYNAMIC LOAD	1320 kgf : 2970lbs
STATIC LOAD	4100 kgf : 9225 lbs
ACCURACY GRADE	0.012/e300 : .0005 /ft

X AXIS Unit : mm

TABLE SIZE	A	B	ORDER NO.
42	1326	871	B2505X-42
48	1478	1023	B2505X-48
50	1630	1175	B2505X-50

Y AXIS Unit : mm

TABLE SIZE	C	D	ORDER NO.
12	592	428	B2505Y-12
16	694	530	B2505Y-16

HOUSING HOLE DIM. TOLERANCE

Unit : μ m

OD (mm)		E		F			G		H								Js		J		K		M		N		P		R		OD. (mm)	
OVER (OVER)		E10	E11	F6	F7	F8	G6	G7	H5	H6	H7	H8	H9	H10	Js6	Js7	J6	J7	K6	K7	M6	M7	N6	N7	P6	P7	R6	R7	OVER	TO (INCL.)
3	6	+68 +20	+95 +20	+18 +10	+22 +10	+28 +10	+12 +4	+16 +4	+5 0	+8 0	+12 0	+18 0	+30 0	+48 0	±4	±6	+5 -3	+6 -6	+2 -6	+3 -9	-1 -9	-1 -12	-5 -13	-4 -16	-9 -17	-8 -20	-12 -20	-11 -23	3	6
6	10	+83 +25	+115 +25	+22 +13	+28 +13	+35 +13	+14 +5	+20 +5	+6 0	+9 0	+15 0	+22 0	+36 0	+58 0	±4.5	±7.5	+5 -4	+8 -7	+2 -7	+5 -10	-3 -9	-3 -12	-7 -16	-4 -19	-12 -24	-9 -24	-16 -25	-13 -28	6	10
10	14	+102 +32	+142 +32	+27 +16	+34 +16	+43 +16	+17 +6	+24 +6	+8 0	+11 0	+18 0	+27 0	+43 0	+70 0	±5.5	±9	+6 -5	+10 -8	+2 -9	+6 -12	-4 -15	-4 -15	-9 -20	-5 -23	-15 -26	-11 -29	-20 -31	-16 -34	10	14
18	24	+124 +40	+170 +40	+33 +20	+41 +20	+53 +20	+20 +7	+28 +7	+9 0	+13 0	+21 0	+33 0	+52 0	+84 0	±6.5	±10.5	+8 -5	+12 -9	+2 -11	+6 -15	-4 -17	-4 -17	-11 -24	-7 -28	-18 -31	-14 -35	-24 -37	-20 -41	14	18
30	40	+150 +50	+210 +50	+41 +25	+50 +25	+64 +25	+25 +9	+34 +9	+11 0	+16 0	+25 0	+39 0	+62 0	+100 0	±8	±12.5	+10 -6	+14 -11	+3 -11	+7 -18	-4 -20	-4 -20	-12 -28	-8 -33	-21 -37	-17 -42	-29 -45	-25 -50	18	24
40	50	+180 +60	+250 +60	+49 +30	+60 +30	+76 +30	+29 +10	+40 +10	+13 0	+19 0	+30 0	+46 0	+74 0	+120 0	±9.5	±15	+13 -6	+18 -12	+4 -15	+9 -21	-5 -24	0 -30	-14 -33	-9 -39	-26 -45	-21 -51	-35 -54	-30 -60	30	40
50	65	+212 +72	+292 +72	+58 +36	+71 +36	+90 +36	+34 +12	+47 +12	+15 0	+22 0	+35 0	+54 0	+87 0	+140 0	±11	±17.5	+16 -6	+22 -13	+4 -18	+10 -25	-6 -28	0 -35	-16 -38	-10 -45	-30 -52	-24 -59	-44 -66	-38 -73	40	50
65	80	+245 +85	+335 +85	+68 +43	+83 +43	+106 +43	+39 +14	+54 +14	+18 0	+25 0	+40 0	+63 0	+100 0	+160 0	±12.5	±20	+18 -7	+26 -14	+4 -21	+12 -28	-8 -33	0 -40	-20 -45	-12 -52	-36 -61	-28 -68	-56 -83	-50 -90	50	65
80	100	+285 +100	+390 +100	+79 +50	+96 +50	+122 +50	+44 +15	+61 +15	+20 0	+29 0	+46 0	+72 0	+115 0	+185 0	±14.5	±23	+22 -7	+30 -16	+5 -24	+13 -33	-8 -37	0 -46	-22 -51	-14 -60	-41 -70	-33 -79	-71 -100	-63 -109	65	80

BALLSCREW APPLICATIONS

POWER STEERING

MEDICAL CHAIR

MACHINING CENTER

PAPER CUTTING M / C

ROBOT WELDING

EDM

CNC LATHE

MILLING M / C

CNC PLANNER

LATHE

ROBOT ASSEMBLY

GRINDING M / C

LANUCH PLATFORM

ANTENNA ACTUATOR

MEMO

LTM BALLSCREWS