NEW

COMTOP TECHNOLOGY

TBI TAIWAN BALL SCREW

www.comtop.com.tw

ISO 9001:2008 SGS

UKAS QUALITY MANAGEMENT 005

Come to the top in

LINEAR MOTION TECHNOLOGY

Index

Company & Facility ---- 01
About Ball Screw ---- 05
1.Features of COMTOP Ball Screws ---- 06
2.Ball Screw Selection Procedure ---- 08
3.Technological Description of Ball Screws ---- 11
3.1 Accuracy ---- 11
3.1.1 Lead/Travel Accuracy ---- 11
3.1.2 Axial Play ---- 12
3.1.3 Definition of Mounting Accuracy and Tolerances on Ball Screw ---- 14
3.1.4 Preload Torque ---- 15
3.2 Screw Shaft Design ---- 17
3.2.1 Mounting Methods ---- 17
3.2.2 Buckling Load ---- 19
3.2.3 Critical Speed ---- 20
3.3 Driving Torque ---- 21
3.4 Nut Design ---- 22
3.4.1 Selection of Nut ---- 22
3.4.2 Nut Types ---- 23
3.5 Regidity ---- 25
3.6 Positioning Accuracy ---- 27
3.6.1 Accuracy Selection ---- 27
3.6.2 Countermeasure Against Thermal Displacement ---- 28
3.7 Life Design ---- 28
3.7.1 Life of Ball Screws ---- 28
3.7.2 Basic Static Load Rating Coa ---- 28
3.7.3 Basic Dynamic Load Rating Ca ---- 28
3.7.4 Fatigue Life ---- 29
4.Key Points for Ball Screws Selection and Calculation ---- 30
5.Cautions About Use of Ball Screws ---- 34
5.1 Lubricatuon ---- 34
5.2 Contaminate Prevention ---- 34
5.3 Offset Load ---- 34
Ball Screw ---- 35
6.Specification Number ---- 36
7.Dimension Table of COMTOP Ball Screws ---- 37
- SCI Type ---- 37
- S Type (DIN) ---- 38
- V Type ---- 40
- I Type ---- 42
- U Type (DIN) ---- 44
- T Type ---- 46
- E Type ---- 48
- M Type ---- 49
- K Type ---- 50
- BSH Type ---- 51
- XSV Type ---- 52

Linear Guide ---- 57
- Accuracy Standard ---- 58
- Specification Number ---- 59
- BGX Series (Non-caged Type) ---- 60
- BGC Series (Caged Type) ---- 61

Coupling ---- 63
Support Unit of Ball Screw ---- 65
- Recommend Shaft End Shape (BK.FK.EK) ---- 66
- Recommend Shaft End Shape (FF.EF.BF) ---- 67
- FK Support Unit Dimensions ---- 68
- FF Support Unit Dimensions ---- 68
- BK Support Unit Dimensions ---- 69
- BF Support Unit Dimensions ---- 69
- EK Support Unit Dimensions ---- 70
- EF Support Unit Dimensions ---- 70

Linear Ball Bearing Series ---- 71
- Standard Type Dimensions (LM) ---- 72
- Flange Type Dimensions (LF) ---- 74
- Housing Type Dimensions (LU/LP) ---- 76
- Slide Shaft Dimensions (SF/WV) ---- 77
- Slide Shaft Dimensions (SS) ---- 78
- European Type Dimensions(LME/LFE) ---- 79

COMTOP Technology

Company

COMTOP TECHNOLOGY

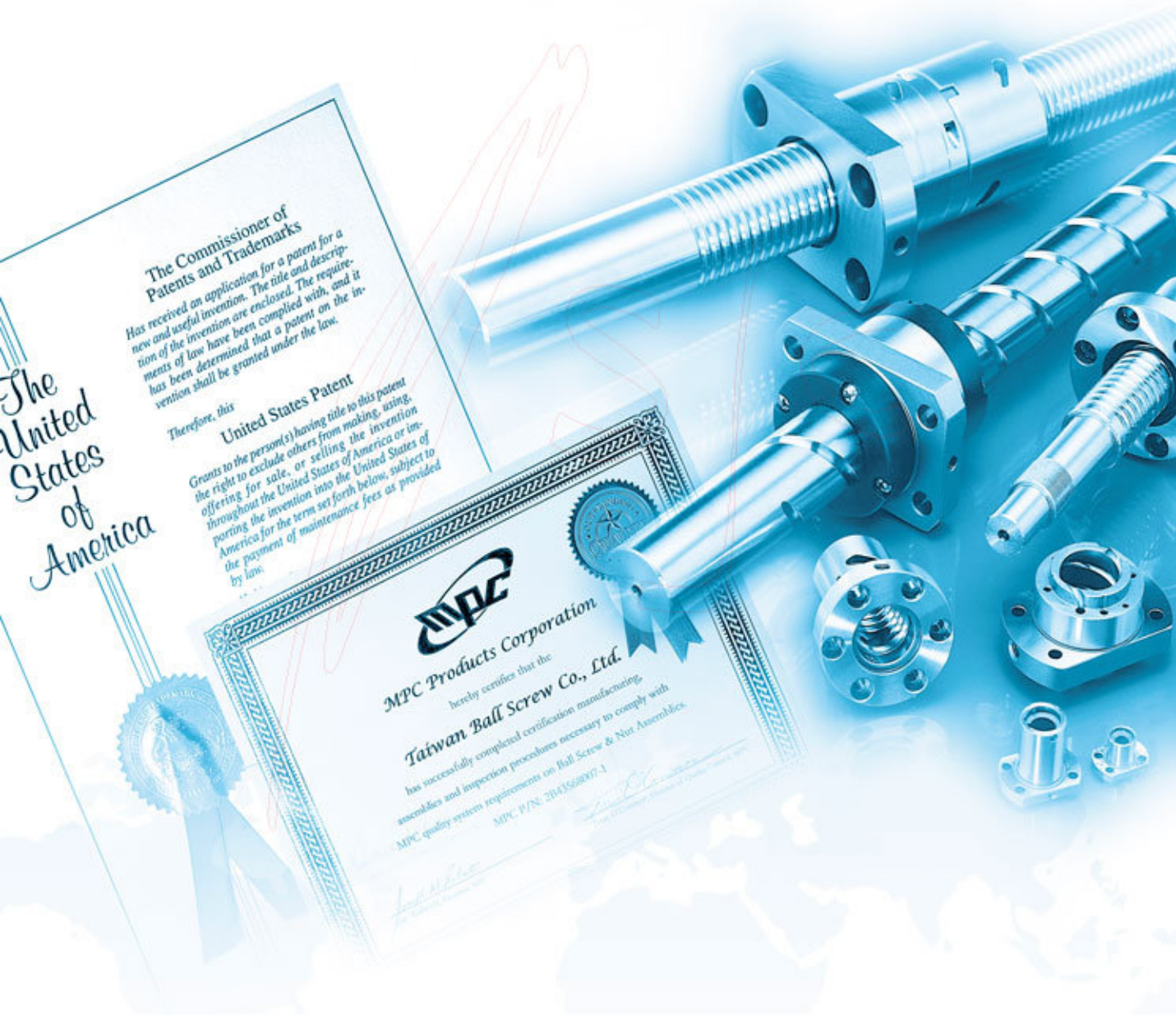

Facility

COMTOP TECHNOLOGY

Facility

COMTOP TECHNOLOGY

Facility

COMTOP TECHNOLOGY

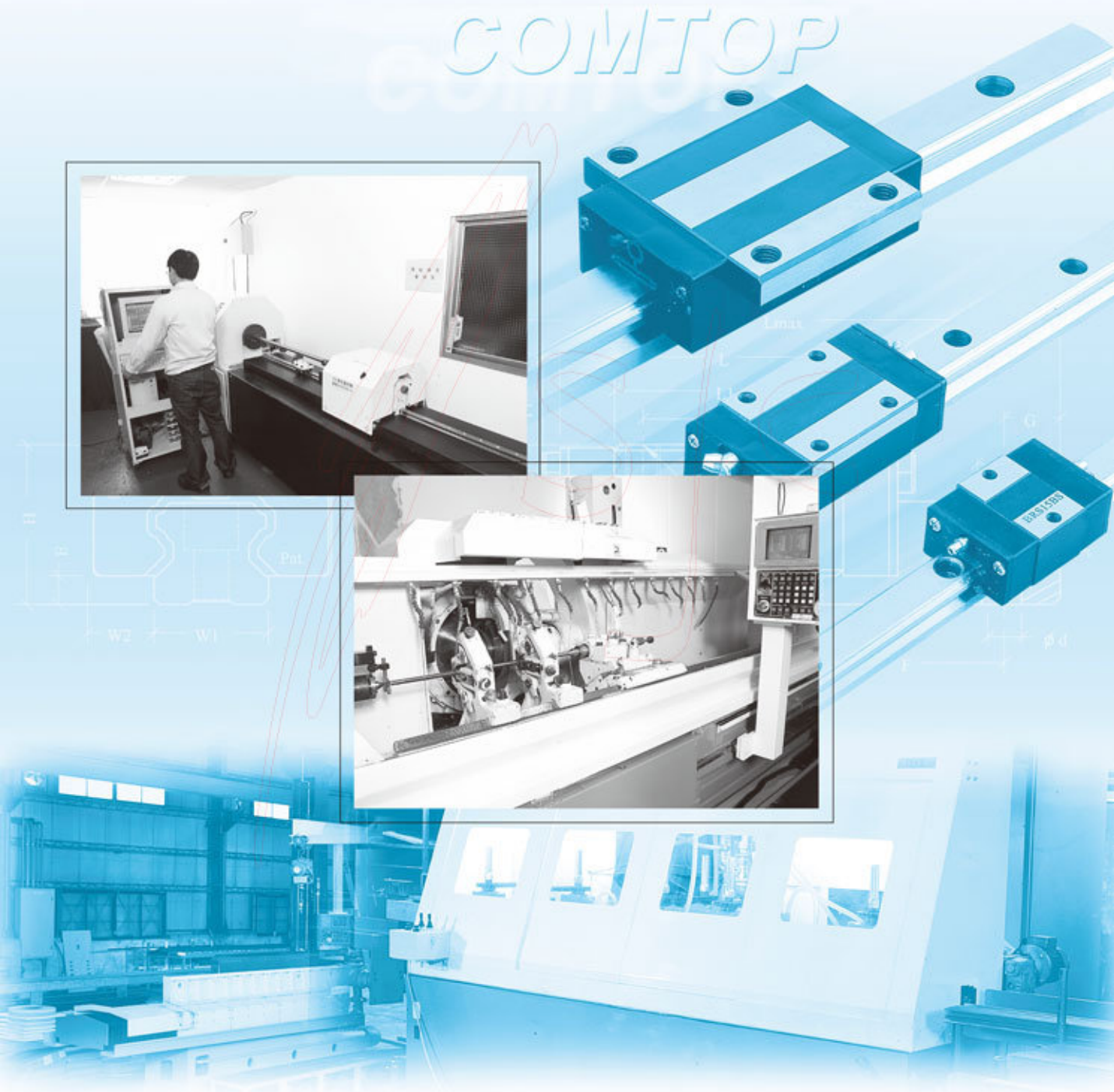

About Ball Screw

Feature of COMTOP Ball Screws

(1) High Reliability

COMTOP has very stringent quality control standards covering every production process. With proper lubrication and use, trouble-free operation for an extended period of time is possible.

(2) Smooth Operation

The high efficiency of ball screws is vastly superior to conventional screws as shown in Fig. 1.1. The torque required is less than 30%. Linear motion can be easily changed from rotary motion.

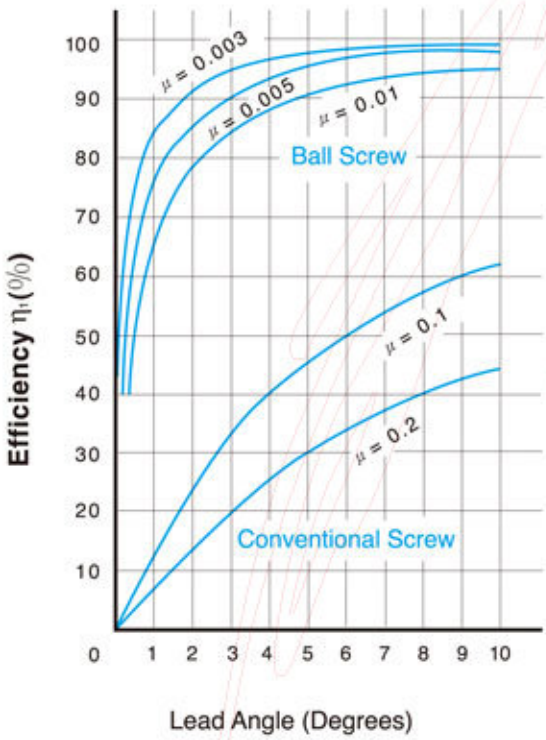

Normal usage (to convert rotary motion to linear motion)

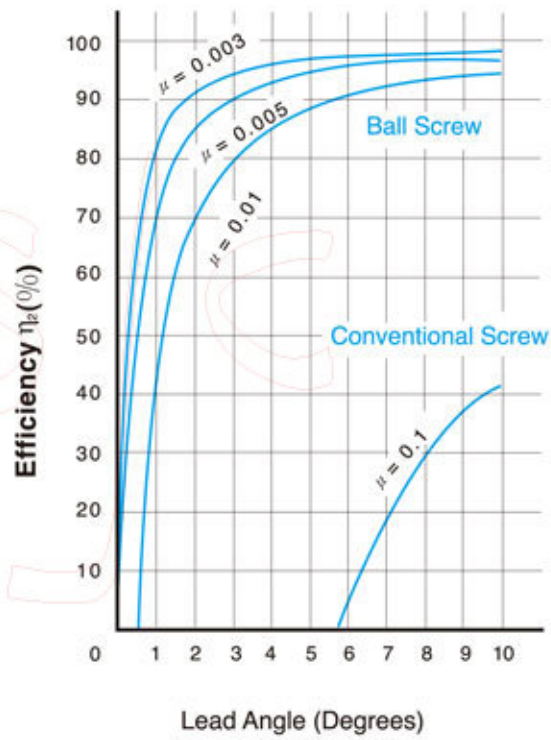

Special usage(to convert linear motion to rotary motion)

μ : friction coefficient

$$T = \frac{P \cdot \ell}{2\pi\eta_1}$$

T = Torque kgf • cm
P = Force kgf
ℓ = Lead cm
η_1 = Efficiency

$$T = \frac{P \cdot \ell}{2\pi\eta_2}$$

T = Torque kgf • cm
P = Force kgf
ℓ = Lead cm
η_2 = Efficiency

Fig. 1.1 Mechanical Efficiency of Ball Screws

(3) High Rigidity and Preload

When axial play is minimized in conventional screw-nut assemblies, the actuating torque becomes excessive and the operation is not smooth. The axial play in **COMTOP** precision ball screws may be reduced to zero by preloading and a light smooth operation is still possible. Therefore, both low torque and high rigidity can be obtained simultaneously.

COMTOP ball screws have gothic arch groove profiles (Fig. 1.2) which allow these conditions to be achieved.

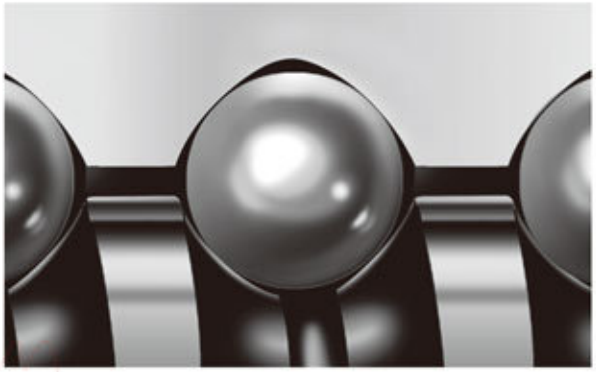

Fig. 1.2 Groove Shape of **COMTOP** Precision Ball Screw

(4)Circulation Method

Fig. 1.3 is ball return tube method.(T type、E type)

Fig. 1.4 is ball defelector method.(I type、K Type)

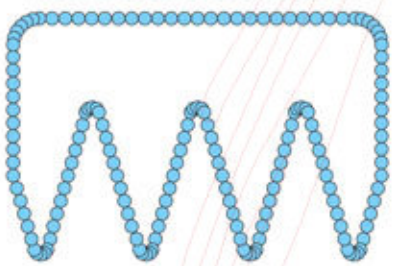

Fig. 1.3 Ball Return Tube method.

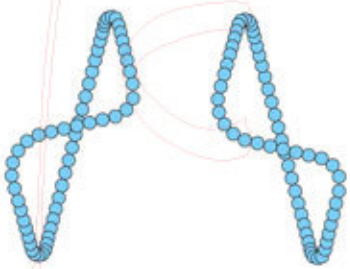

Fig. 1.4 Ball Deflector method

(5) High Durability

Rigidly selected materials, intensive heat treating and processing techniques, backed by years of experience, have resulted in the most durable ball screws manufactured. (As show Table 1.1and Fig. 1.5)

Table 1.1 Material and Heat Treatment

ITEM	MATERIAL	HEAT TREATMENT	HARDNESS
SCREW	SCM450 S55C CF53	INDUCTION HEATING HARDENING	HRC58 ~ 62
NUT	SCM415	CARBONIZING HARDENING	HRC58 ~ 62
STELL BALL	SUJ2		HRC60° UP

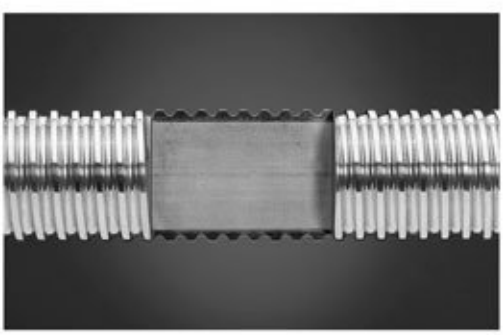

Fig. 1.5 Heat Treatment

Ball Screw Selection Procedure

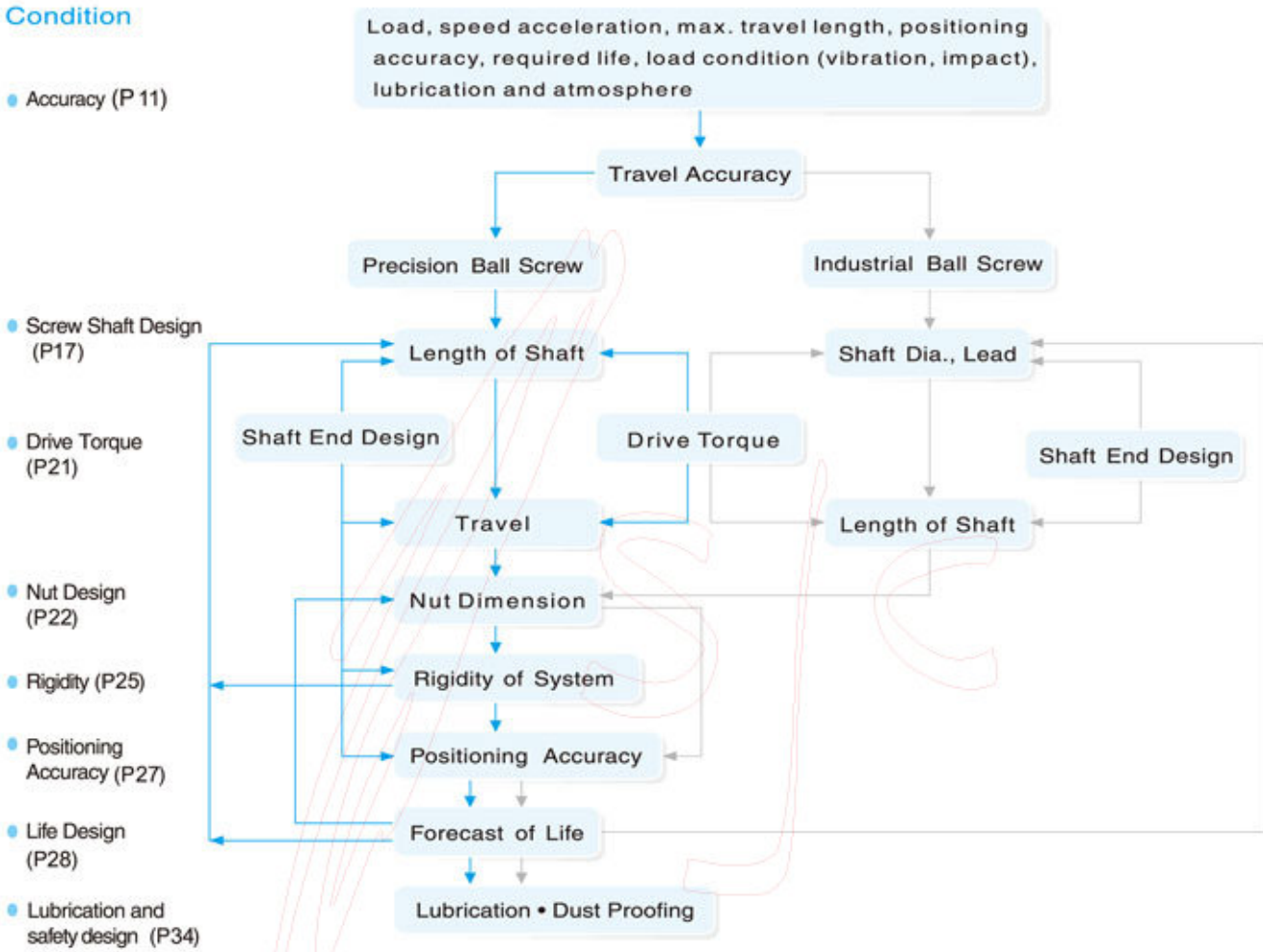

COMTOP

Ball Screw Selection Procedure

COMTOP's Ground and Rolled Ball Screw

Produce Code : F-Rolled ; G-Ground
Direction of helix : R-Right ; L-Left

TYPE	SFS				DFS				SFV				DFV				SFI				DFI				SCI			
SIZE	F-R	F-L	G-R	G-L	F-R	F-L	G-R	G-L	F-R	F-L	G-R	G-L	F-R	F-L	G-R	G-L	F-R	F-L	G-R	G-L	F-R	F-L	G-R	G-L	F-R	F-L	G-R	G-L
0401																												
0601																												
0801																												
0802																												
082.5																												
1002																												
1004																												
1202																												
1204																												
1205	◆		◆						☆		☆																	
1210			◆						◆		◆																	
1402																												
1404																												
1510											◆				☆													
1602																												
1604									☆		☆		☆		☆		◆		◆		◆		◆		◆		◆	
1605	◆		◆		◆		◆		◆		◆		☆		☆		◆	◆	◆	◆	◆		◆		◆	◆	◆	◆
1610	◆		◆		◆		◆		☆		☆		☆		☆		◆		◆	◆								
1616-1.8	◆		◆																									
1616-2.8	◆		◆																									
1616-3																												
1616-6																												
1620	◆		◆																									
1632-3																												
1632-6																												
2004									◆		◆		☆		☆		◆		◆		◆		◆		◆		◆	
2005	◆		◆		◆		◆		◆		◆		◆		◆		◆	◆	◆	◆	◆	◆	◆	◆	◆	◆	◆	◆
205T																			◆	◆								
2006			☆				☆																					
2008			☆				☆																					
2010	◆		◆		◆		◆				◆				☆													
2020-3																												
2020-6																												
2020-1.8	◆		◆						☆		☆																	
2020-2.8	◆		◆																									
2040-3																												
2040-6																												
2504																	◆		◆	◆	◆		◆		◆		◆	
2505	◆		◆		◆		◆		◆		◆		◆		◆		◆	◆	◆	◆	◆	◆	◆	◆	◆		◆	◆
2506			☆				☆		☆		☆		☆		☆													
2508			☆				☆		☆		☆		☆		☆													
2510	◆		◆		◆		◆		◆		◆		◆		◆		◆		◆		◆		◆		◆		◆	
2525-1.8	◆		◆						◆		☆																	
2525-2.8	◆		◆																									
2525-3																												
2525-6																												
2550-3																												
2550-6																												
3204									☆		☆		◆		◆		◆		◆		◆		◆		◆		◆	
3205	◆		◆		◆		◆		◆		◆		◆		◆		◆	◆	◆	◆	◆	◆	◆	◆	◆	◆	◆	◆
325T																												
3206			☆				☆		☆		☆				☆													
3208			☆				☆				◆				◆													
3210	◆		◆		◆		◆		◆		◆		◆		◆		◆	◆	◆	◆	◆		◆		◆	◆	◆	
3220	◆		◆		◆		◆				◆				◆													
3232-1.8	◆		◆																									
3232-2.8	◆		◆																									
3232-3																												
3232-6																												
3264-3																												
3264-6																												
4005	◆		◆		◆		◆		◆		◆		◆		◆		◆	◆	◆	◆	◆	◆	◆	◆	◆	◆	◆	◆
4006			☆				☆																					
4008			☆				☆																					
4010	◆		◆		◆		◆		◆		◆		◆		◆		◆	◆	◆	◆	◆		◆		◆	◆	◆	◆
4020	◆		◆		◆		◆		◆		◆		◆		◆													
4040-1.8	◆		◆																									
4040-2.8	◆		◆																									
4040-3																												
4040-6																												
5005	◆		◆		◆		◆		◆		◆		◆		◆													
5010	◆		◆		◆		◆		◆		◆		◆		◆		◆	◆	◆	◆	◆		◆		◆		◆	
5012																												
5020	◆		◆		◆		◆		◆		◆		◆		◆													
5050-1.8	◆		◆																									
5050-2.8	◆		◆																									
5050-3																												
5050-6																												
6310	☆		☆		◆		◆		◆		◆		◆		◆		◆		◆	◆	◆		◆	◆	◆		◆	◆
6316																												
6320	☆		☆		◆		◆		◆		◆		◆		◆													
8010	☆		☆		☆		☆		◆		◆		◆		◆		◆		◆		◆		◆	◆	◆		◆	◆
8020	◆																											
8020-4.8									◆		◆		◆		◆													
8020-7.6									◆		◆		◆		◆													
10020																												

◆ available products ☆ please consult the sales before placing the order Please contact Comtop If you cannot find your specification on the table

Ball Screw Selection Procedure

COMTOP's Ground and Rolled Ball Screw

Produce Code : F-Rolled ; G-Ground
Direction of helix : R-Right ; L-Left

TYPE	SFU				DFU				SFE				SFK				SFM				DFM				BSH			
SIZE	F-R	F-L	G-R	G-L	F-R	F-L	G-R	G-L	F-R	F-L	G-R	G-L	F-R	F-L	G-R	G-L	F-R	F-L	G-R	G-L	F-R	F-L	G-R	G-L	F-R	F-L	G-R	G-L
0401															◆	☆												
0601													◆		◆	☆												
0801													◆		◆	◆												
0802													◆		◆	◆												
082.5													◆		◆	☆									◆		◆	
1002													◆		◆	◆									◆		◆	
1004													◆		◆	☆									◆		◆	
1202													◆		◆	◆												
1204	◆		◆				☆																		◆		◆	
1205																									◆		◆	
1210																												
1402													◆		◆	☆												
1404																											◆	
1510																												
1602															◆	☆												
1604	◆		◆	◆	◆		◆																		◆		◆	
1605	◆	◆	◆	◆	◆	◆	◆	◆																	◆		◆	
1610	◆		◆	◆	◆		◆	◆																				
1616-1.8																												
1616-2.8																												
1616-3									◆		◆																	
1616-6									◆																			
1620																												
1632-3																												
1632-6																												
2004	◆		◆		◆		◆																					
2005	◆	◆	◆	◆	◆	◆	◆	◆																	◆		◆	
205T																												
2006																												
2008																												
2010																												
2020-3									◆		◆																	
2020-6									◆																			
2020-1.8																												
2020-2.8																												
2040-3									◆		◆																	
2040-6									◆																			
2504	◆		◆		◆		◆																					
2505	◆	◆	◆	◆	◆	◆	◆	◆																	◆		◆	
2506			◆				◆																					
2508			◆				◆																					
2510	◆		◆	◆	◆		◆	◆																				
2525-1.8																												
2525-2.8																												
2525-3									◆		◆																	
2525-6									◆																			
2550-3											◆																	
2550-6																												
3204	◆		◆		◆		◆																					
3205	◆	◆	◆	◆	◆	◆	◆	◆									◆	◆	◆	◆	◆	◆	◆	◆				
325T																			◆				◆	◆				
3206			◆				◆																					
3208			◆				◆																					
3210	◆	◆	◆	◆	◆	◆	◆	◆																				
3220																												
3232-1.8																												
3232-2.8																												
3232-3									◆		◆																	
3232-6									◆																			
3264-3											◆																	
3264-6																												
4005	◆	◆	◆	◆	◆	◆	◆	◆																				
4006			◆				◆																					
4008			◆				◆																					
4010	◆	◆	◆	◆	◆	◆	◆	◆																				
4020																												
4040-1.8																												
4040-2.8																												
4040-3									◆		◆																	
4040-6									◆																			
5005																												
5010	◆	◆	◆	◆	◆	◆	◆	◆																				
5012																												
5020			◆	◆			◆	◆																				
5050-1.8																												
5050-2.8																												
5050-3									◆		◆																	
5050-6									◆																			
6310	◆		◆	☆	◆		◆	◆																				
6316																												
6320	◆		◆		◆		◆																					
8010	◆		◆	◆	◆		◆	◆																				
8020	◆		◆		◆		◆																					
8020-4.8																												
8020-7.6																												
10020			◆				◆																					

◆ available products ☆ please consult the sales before placing the order Please contact Comtop If you cannot find your specification on the table

3.1 Accuracy

3.1.1 Lead/Travel Accuracy

- Lead accuracy of **COMTOP** ball screws (grade C0~C5) is specified in 4 basic terms (E,e,e_{300}, $e_{2\pi}$). There are defined in Fig. 3.1 Tolerance of deviation (±E) and variation (e) of accumulated reference travel are shown in Table 3.2 and 3.3.
- Accumulated travel deviations for grade C7 and C10 are specified only by the allowable value per 300mm measured within any portion of the thread length. They are 0.05mm for C7 and 0.21mm for C10.

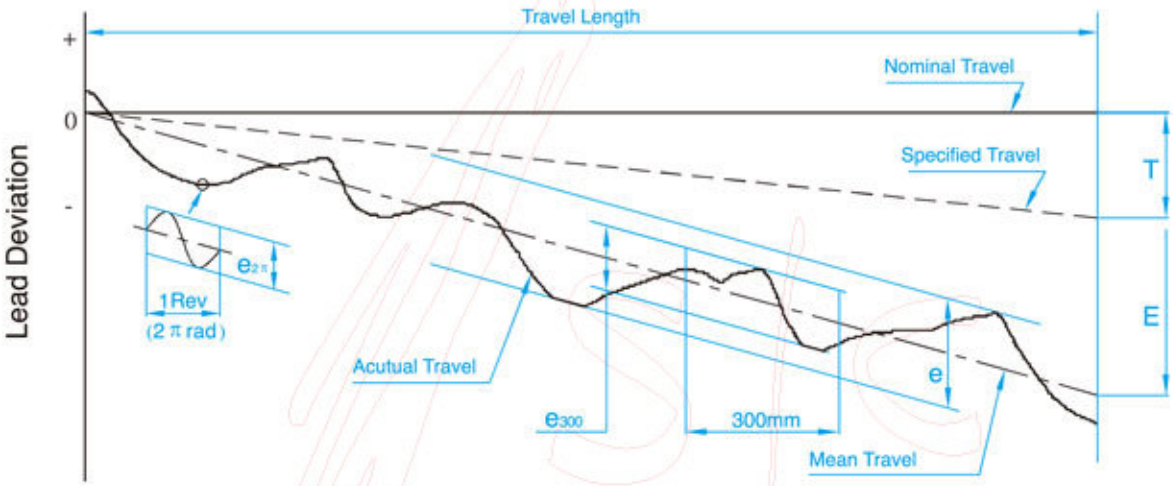

Fig. 3.1 Diagram of Lead Accuracy

Table 3.1 Definition of Terms for Lead Accuracy

Terms	Reference	Definition	Allowable
Travel Compensation	T	Travel compensation is the difference between specified and nominal travel within the useful travel. A slightly smaller value compared to the nominal travel is often selected by the customer to compensate for an expected elongation caused by temperature rise or external load. Therefore "T" is usually a negative value. Note : if no compensation is needed , specified travel is the same as nominal travel.	
Actual Travel		Actual travel is the axial displacement of the nut relative to the screw shaft.	
Mean Travel		Mean travel is the linear best fit line of actual. This could be obtained by the least squares method. This line represents the tendency of actual travel.	
Mean Travel Deviation	E	Mean travel deviation is the difference between mean travel and specified travel within travel length.	Table 3.2
Travel Variations	e e_{300} $e_{2\pi}$	Travel variations is the band of 2 lines drawn parallel to the mean travel , on the plus and minus side. Maximum width of variation over the travel length. Actual width of variation for the length of 300mm taken anywhere within the travel length. Wobble error , actual width of variation for one revolution (2 π radian)	 Table 3.2 Table 3.3 Table 3.3

Table 3.2 Mean Travel Deviation(±E)and Travel Variation(e) (JIS B 1192)

Unit : μm

Grade			C0		C1		C2		C3		C5		C7	C10
Travel Length(mm)	Over	Incl.	±E	e	±E	e	±E	e	±E	e	±E	e	±e	e
		100	3	3	3.5	5	5	7	8	8	18	18		
	100	200	3.5	3	4.5	5	7	7	10	8	20	18		
	200	315	4	3.5	6	5	8	7	12	8	23	18		
	315	400	5	3.5	7	5	9	7	13	10	25	20		
	400	500	6	4	8	5	10	7	15	10	27	20		
	500	630	6	4	9	6	11	8	16	12	60	23		
	630	800	7	5	10	7	13	9	18	13	35	25		
	800	1000	8	6	11	8	15	10	21	15	40	27		
	1000	1250	9	6	13	9	18	11	24	16	46	30		
	1250	1600	11	7	15	10	21	13	29	18	54	35	±50/300mm	±210/300mm
	1600	2000			18	11	25	15	35	21	65	40		
	2000	2500			22	13	30	18	41	24	77	46		
	2500	3150			26	15	36	21	50	29	93	54		
	3150	4000			30	18	44	25	60	35	115	65		
	4000	5000					52	30	72	41	140	77		
	5000	6300					65	36	90	50	170	93		
	6300	8000							110	60	210	115		
	8000	10000									260	140		
	10000	12500									320	170		

Table 3.3 Variation per 300mm(e_{300})and Wobble Error($e_{2\pi}$) (JIS B 1192)

Unit : μm

Grade	C0	C1	C2	C3	C5	C7	C10
e_{300}	3.5	5	7	8	18	50	210
$e_{2\pi}$	2.5	4	5	6	8		

3.1.2 Axial Play

Accuracy grade and axial play of **COMTOP** 's precision ball screws is shown in Table 3.4.

Table 3.4 Combination of Accuracy Grade and Axial Play

Grade	P0	P1	P2	P3	P4
Axial Play	Yes	No	No	No	No
Preload	No	No	Light	Medium	Heavy

∗Guidelines for selecting Accuracy, Preload, Axial Play, Nut and Screw shaft.

Accuracy	Preload and Axial Play	Nut Type	Screw shaft Type
C10	P0(With Axial Play)	Single Nut	Rolled screw shaft
C7	P1 or P0 COMTOP standrd is P1	According to the demand of customers	Rolled or Ground (COMTOP standard is Ground)
C5	According to the demand of customers. If no idea, COMTOP standard is P2	According to the demand of customers	Ground screw shaft with lead error inspection certificate
C3	According to the demand of customers. If no idea, COMTOP standard is P2	According to the demand of customers	Ground screw shaft with lead error inspection certificate

∗Guidelines for Preload ranges of assemble

Rolled							
Preload	I-Type	U-Type	E-Type	T-Type	V-Type	S-Type	K-Type
P0	√	√	√	√	√	√	√

Ground							
Preload	I-Type	U-Type	E-Type	T-Type	V-Type	S-Type	K-Type
P0	√	√	√	√	√	√	√
P1	√	√	√	√	√	√	√
P2	√	√	√	√	√	√	
P3	√	√		√	√	√	
P4				√	√		

∗ Axial Play (P0)

Clearance in the Axial Direction of the Rolled and Ground Ball Screw

Unit: mm

Screw Shaft OD	Rolled Ball Screw Clearance in the Axial Direction (max.)	Ground Ball Screw Clearance in the Axial Direction (max.)
04 - 14 miniature ball screw	0.05	0.015
15 - 40 middle size of ball screw	0.08	0.025
50 - 100 big size of ball screw	0.12	0.05

∗ No Backlash (Axial Play) and No Preload (P1)

∗ Spring Force of Light Preload (P2)

Model No.	Spring Force (Kg) Single Nut	Spring Force(Kg) Double Nut
1605	0.1～0.3	0.3～0.6
2005	0.1～0.3	0.3～0.6
2505	0.2～0.5	0.3～0.6
3205	0.2～0.5	0.5～0.8
4005	0.2～0.5	0.5～0.8
2510	0.2～0.5	0.5～0.8
3210	0.3～0.6	0.5～0.8
4010	0.3～0.6	0.5～0.8
5010	0.3～0.6	0.8～1.2
6310	0.6～1.0	0.8～1.2
8010	0.6～1.0	0.8～1.2

3.1.3 Definition of Mounting Accuracy and Tolerances on Ball Screw

To use a ball screw properly dimensional accuracy and tolerances are most important.

COMTOP will help you determine the tolerance factors as they are subject to change according to accuracy grade.

(1)Periphery run-out of the supporting part of the screw shaft to the screw groove.

(2)Concentricity of a mounting portion of the shaft to the adjacent ground portion of the screw shaft.

(3)Perpendicularity of the shoulders to the adjacent ground portion of the screw shaft.

(4)Perpendicularity of the nut flange to the axis of the screw shaft.

(5)Concentricity of the ball nut diameter to the screw groove.

(6)Parallelism of the mounting surface of a ball nut to the screw groove.

(7)Total run-out of the screw shaft to the axis of the screw shaft.

All **COMTOP** ball screws are manufactured, inspected and guaranteed to be within specifications.

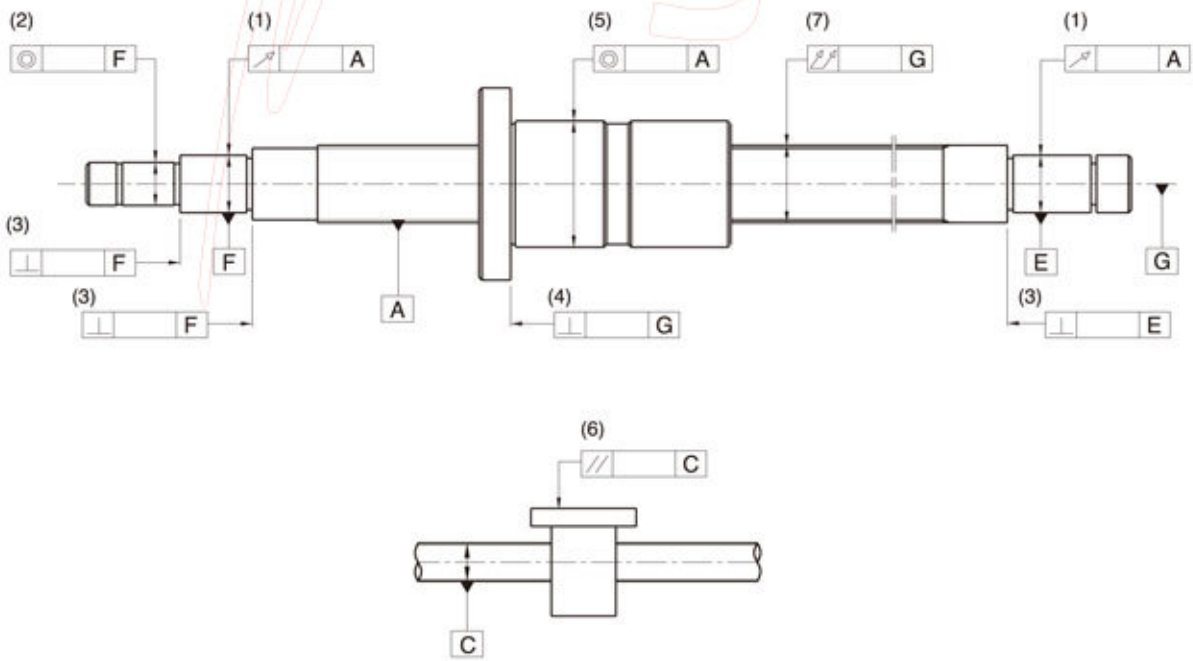

Fig. 3.2 Mounting Accuracy and Tolerances

3.1.4 Preload Torque

- Terms in relation to the preload torque generated during the rotation of the preload ball screws are shown in Fig. 3.3
- Permissible ranges of torque variation rates is shown in Table 3.5

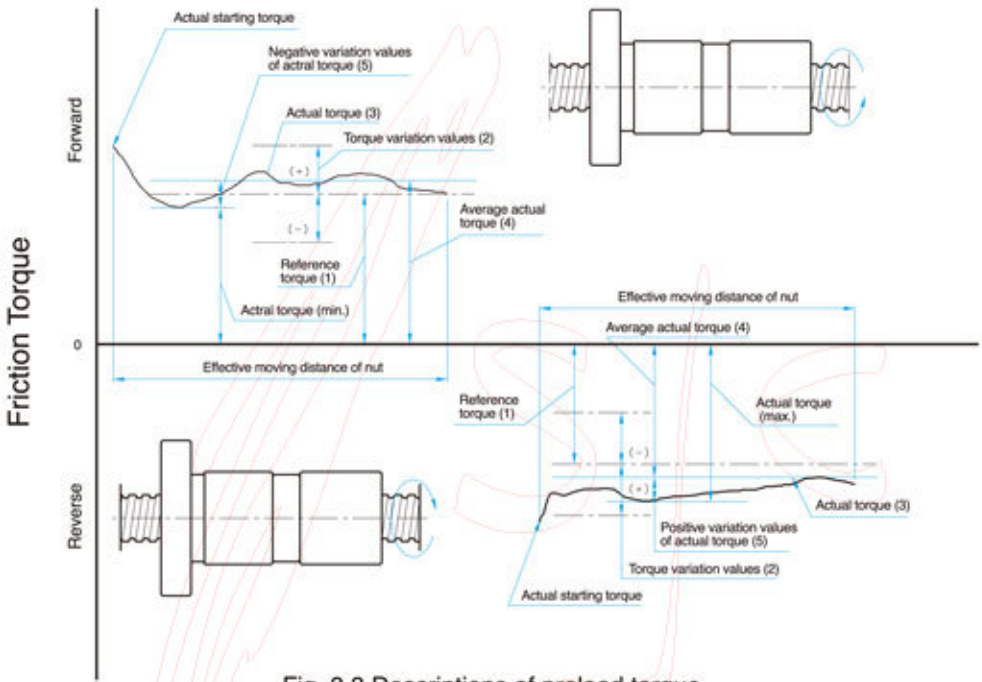

Fig. 3.3 Descriptions of preload torque

Glossary

(1) Preload

The stress generated inside the screws when inserting a set of steel balls of one gage (approximately 2 μ) larger into the nut or using them on the 2 nuts which exercise mutual displacements along the screws axis in order to eliminate the gaps of the screw or upgrade the rigidity of the screw.

(2) Preload dynamic torque

The dynamic torque required for continuously rotating the screws shaft or the nuts under unload condition after the specified preload has been applied upon the ball screws.

(3) Reference

The targeted preload dynamic torque【Fig. 3.3】-(1)

(4) Torque variation values

The variation values of the targeted preload torque variation rates are specified generally based on JIS Standards as indicated in Table 3.5.

(5) Torque variation rate

The rate of variation values in relation to the reference torque.

(6) Actual torque

The actually measured preload dynamic torque of the ball screws.

(7) Average actual torque

The arithmetic average of the maximal and minimal actual torque values measured when the nuts are exercising reciprocating movements.

(8) Actual torque variation values

The maximal variation values measured within the effective length of the threads when the nuts are exercising reciprocating movements, the positive or negative values relative to the actual torque are adopted.

(9) Actual torque variation rate

The rate of actual torque variation values in relation to the average actual torque.

Table 3.5 Permissible ranges of torque variation rates

Reference torque kgf • cm		Effective threading length (mm)										
		Below 4000								4000~10000		
		Slenderness 1 : below 40				Slenderness 1:40 ~ 1:60				–		
		Grade				Grade				Grade		
Over	Incl.	C0	C1	C2、C3	C5	C0	C1	C2、C3	C5	C1	C2、C3	C5
2	4	±35 %	±40 %	±45 %	±55 %	±45 %	±45 %	±55 %	±65 %	–	–	–
4	6	±25 %	±30 %	±35 %	±45 %	±38 %	±38 %	±45 %	±50 %	–	–	–
6	10	±20 %	±25 %	±30 %	±35 %	±30 %	±30 %	±35 %	±40 %	–	±40 %	±45 %
10	25	±15 %	±20 %	±25 %	±30 %	±25 %	±25 %	±30 %	±35 %	–	±35 %	±40 %
25	63	±10 %	±15 %	±20 %	±25 %	±20 %	±20 %	±25 %	±30 %	–	±30 %	±35 %
63	100	–	–	±15 %	±20 %	–	–	±20 %	±25 %	–	±25 %	±30 %

Remarks 1.Slenderness is the value of dividing the screws shaft outside diameter with the screws shaft threading length.
2.For reference torque less than 2 kgf • cm, **COMTOP** specifications will apply.

Calculation of reference torque Tp

The formula for computing reference torque of the ball screws is given in following:

$$Tp = 0.05\,(\tan\beta)^{-0.5} \cdot \frac{Fao \cdot \ell}{2\pi}$$

Where • Fao : Preload (k f)
β : Lead angle
ℓ : Lead (cm)

Measurement conditions

The preload dynamic torque Tp is determined first by adopting the following measurement conditions together with the method illustrated in Fig. 3.4 for measuring the force F needed to rotate the screws shaft without bringing the nuts to rotate along with the shaft after the screws shaft has started rotating, then multiplying the measured value of F with the arm of force L, the product is Tp.

$$Tp = F \cdot L$$

Measure conditions
(1) Measurement is executed under the condition of not attaching with scraper.
(2) The rotating speed during measurement maintains at 100 rpm.
(3) According to JSK 2001 (industrial lubrication oil viscosity classification standards), the lubrication oil used should be in compliance with ISO VG68.

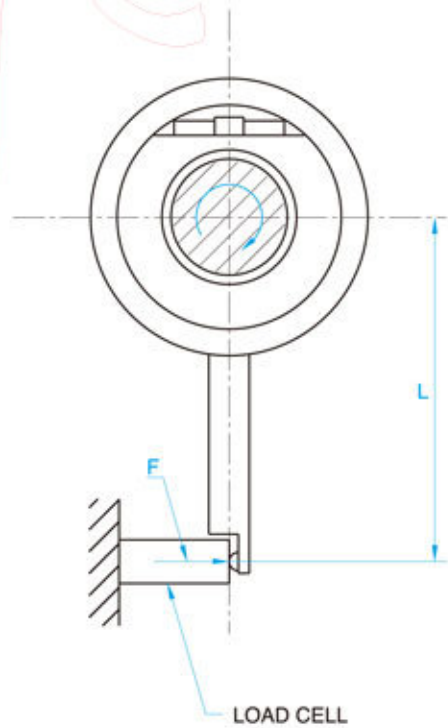

Fig. 3.4 Preload dynamic torque measuring method

3.2 Screw Shaft Design

3.2.1 Mounting Methods

- Both the critical speed and column bucking load depend upon the method of mounting and the unsupported length of the shaft,the most common mounting methods for ball screws are shown in Fig. 3.5~3.19.

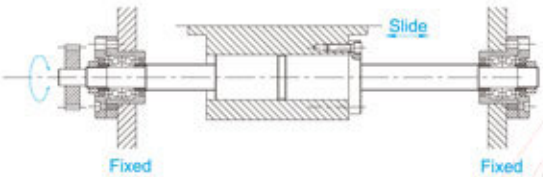

Fig. 3.5

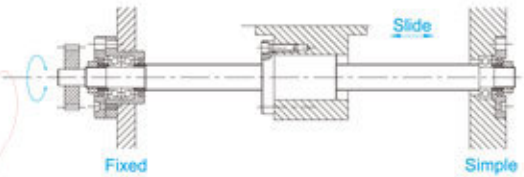

Fig. 3.9

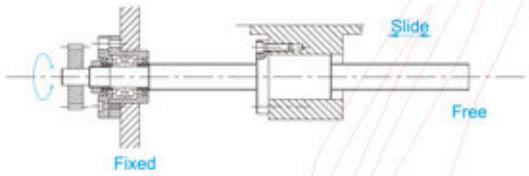

Fig. 3.6

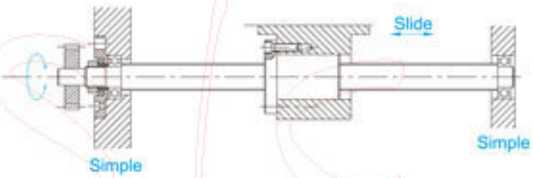

Fig. 3.10

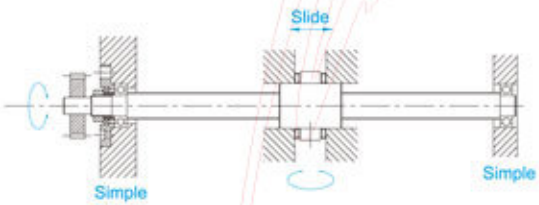

Fig. 3.7

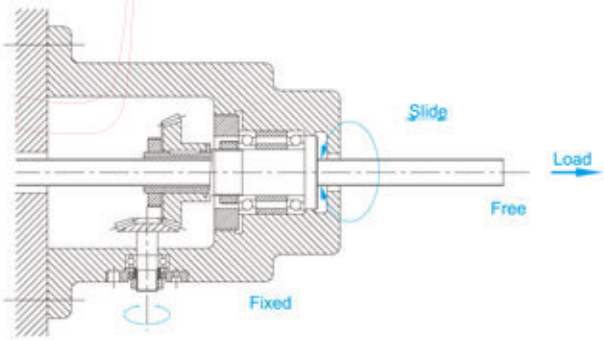

Fig. 3.11

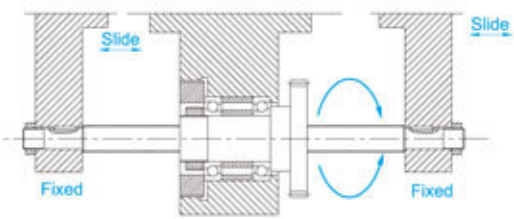

Fig. 3.8

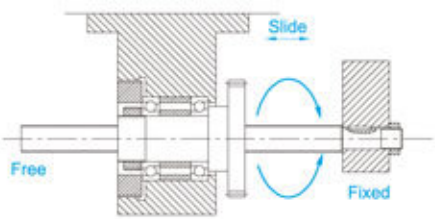

Fig. 3.12

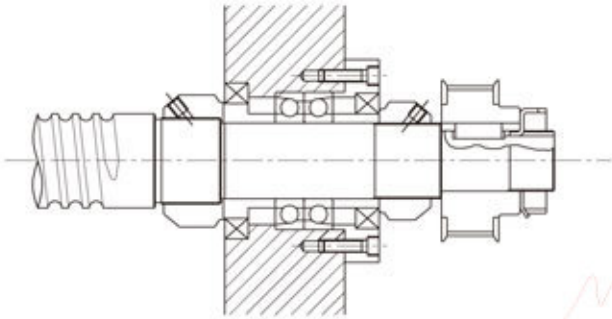

Fig. 3.13

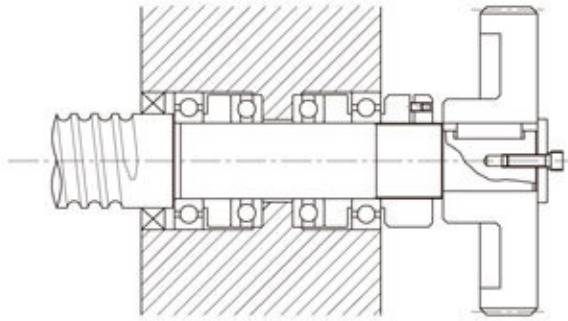

Fig. 3.15

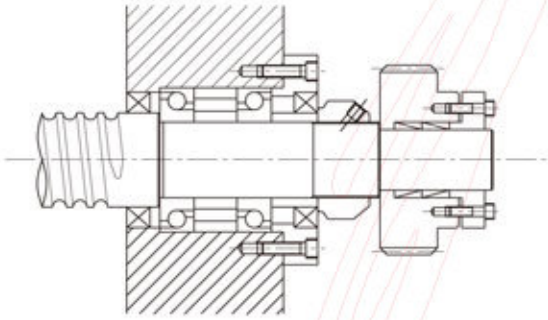

Fig. 3.14

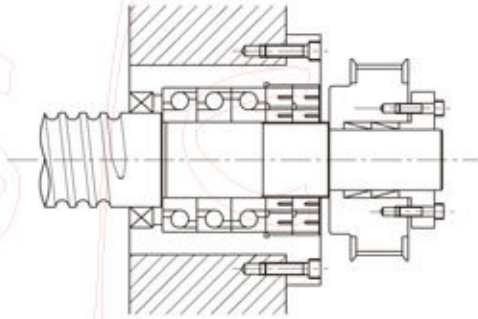

Fig. 3.16

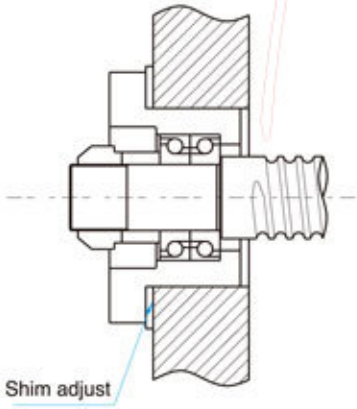

Fig. 3.17

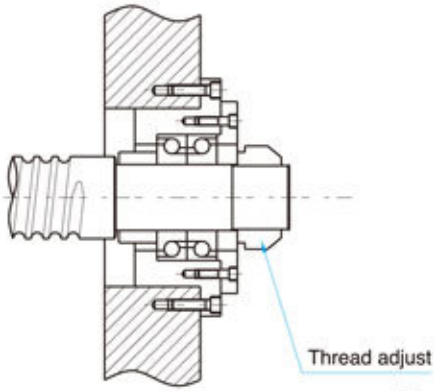

Fig. 3.18

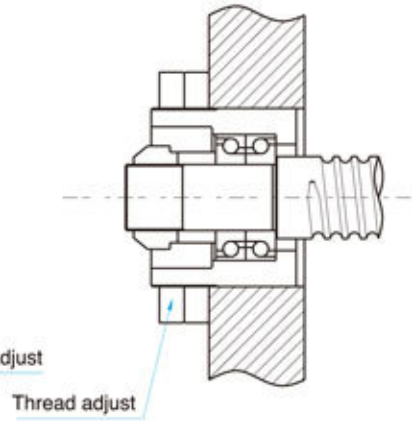

Fig. 3.19

Most Common Mounting Methods for ball Screws

3.2.2 Buckling Load

The safety of the screw shaft against buckling needs to be checked when the shaft is expected to receive buckling loads. Fig. 3.20 shows a diagram which summarizes the allowable compressive load for buckling for each nominal outside diameter of screw shaft. (Calculate with the equation shown right when the nominal outside diameter of the screw shaft exceeds 125mm.)
Select the graduation of allowable axial load according to the method of ball screw support.
Remark: Allowable tensile / buckling load
Check the allowable tensile / buckling load (the formula shown below) and allowable load of the ball groove regardless of the mounting method when the mounting distance is short.

$$P = \sigma A = 11.8 dr^2 \ (kgf)$$

Where,

σ : Allowable tensile compressive stress (kgf/mm^2)
A : Sectional area (mm^2) of screw shaft root bottom diameter
dr : Screw shaft root diameter (mm)

$$P = \alpha \times \frac{N\pi^2 E}{L^2} = m \frac{dr^4}{L^2} \times 10^3$$

Where,

α : Safety Factor (0.5)
E : Vertical elastic modules ($E = 2.1 \times 10^4 kgf/mm^2$)
I : Min. secondary moment of screw shaft sectional area

$$I = \frac{\pi}{64} dr^4 \ (mm^4)$$

dr : Screw shaft root diameter (mm)
L : Mounting distance (mm)
m • N : Coefficient determined from mounting method of ball screw:

Simple－Simple m = 5.1 (N=1)
Fixed－Simple m = 10.2 (N=2)
Fixed－Fixed m = 20.3 (N=4)
Fixed－Free m = 1.3 (N=1/4)

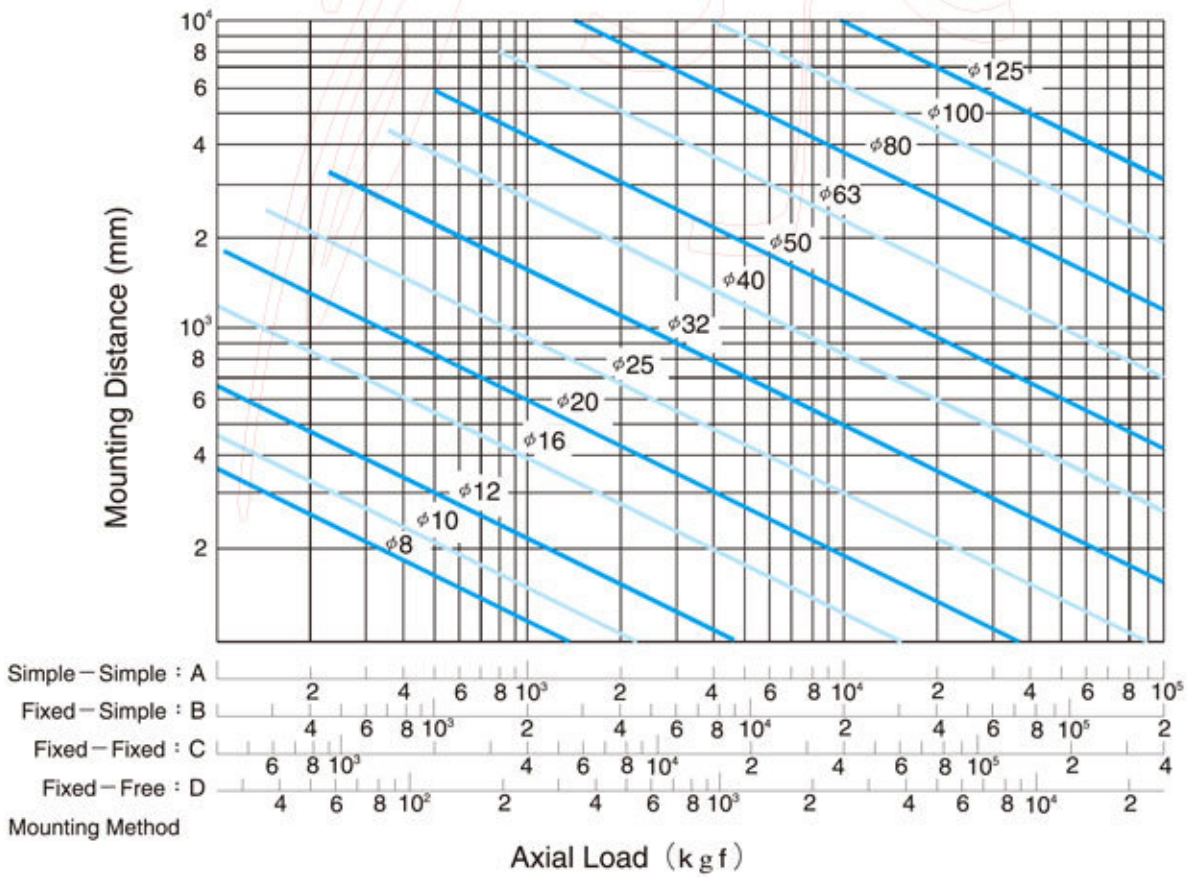

Fig. 3.20 Buckling Load vs. Shaft Dia. and Length

3.2.3 Critical Speed

It is necessary to check if the ball screw rotation speed is resonant with the natural frequency of the screw shaft. **COMTOP** has determined 80% or less of this critical speed as an allowable rotation speed. Fig. 3.21 shows a diagram which summarizes the allowable rotation speed for shaft nominal diameters up to outside diameter of the screw shaft exceeds 125mm.) Select the graduation of allowable rotation speed according to the method of supporting the ball screw. Where the working rotation speed presents a problem in terms of critical speed, it would be best to provide an intermediate support to increase the natural frequency of the screw shaft.

dm.n value

The allowable rotation speed is regulated also by the dm · n value (dm:diameter of central circle of steel ball , n:Revolution speed , rpm) which expresses the peripheral speed.

Generally;

For precision (accuracy grade C7 to C0)

dm · n ≦ 70,000

For general industry (C10)

dm · n ≦ 50,000

Product exceeding the above limits can be produced, contact **COMTOP**.

$$n = \alpha \times \frac{60\lambda^2}{2\pi L^2}\sqrt{\frac{EI_g}{\gamma A}} = f\,\frac{dr}{L^2}\times 10^7 \ (\text{rpm})$$

Where,

α : Safety factor ($\alpha = 0.8$)

E : Vertical elastic modules ($E = 2.1\times 10^4$ kgf / mm^2)

I : Min. secondary moment of screw shaft sectional area

$$I = \frac{\pi}{64}\,dr^4 \ (\text{mm}^4)$$

dr : Screw shaft root diameter (mm)

: Acceleration of gravity ($= 9.8\times 10^3$ mm / s^2)

γ : Density ($\gamma = 7.8\times 10^{-6}$ kgf / mm^3)

A : Screw shaft sectional area ($A = \pi\, dr^2/4$ mm^2)

L : Mounting distance (mm)

f 、λ : Coefficient determined from the ball screw mountung method

Simple − Simple	$f = 9.7$	($\lambda = \pi$)
Fixed − Simple	$f = 15.1$	($\pi = 3.927$)
Fixed − Fixed	$f = 21.9$	($\pi = 4.730$)
Fixed − Free	$f = 3.4$	($\pi = 1.875$)

(* Particular consideration is necessary for manufacturing when the screw length/shaft dia. Ratio is $\varepsilon > 70$. In such an event, contact **COMTOP**.)

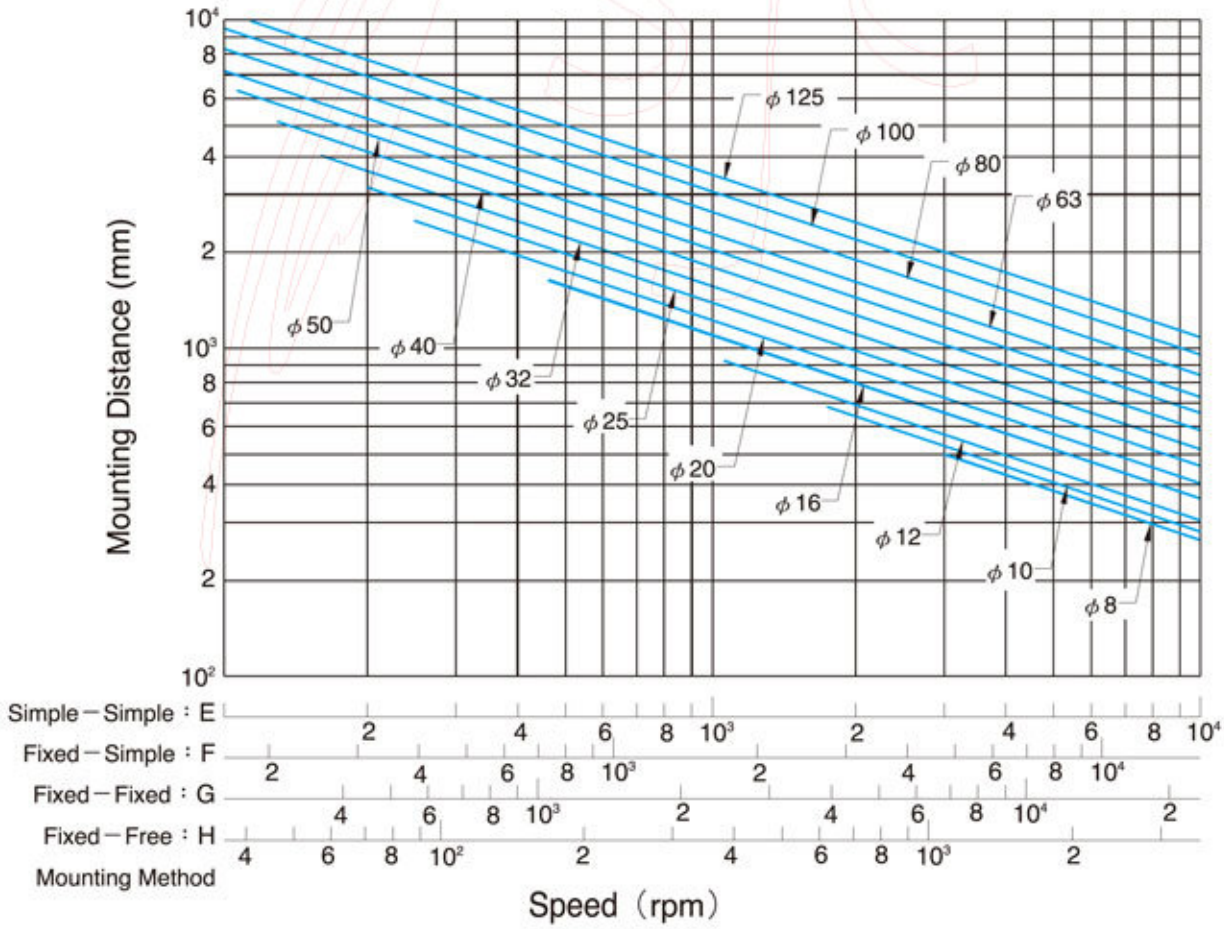

Fig. 3.21 Critical Speed vs. Shaft Dia

3.3 Driving Torque

Driving torque T_S of the transmission shaft

$T_S = T_P + T_D + T_F$ (in fixed speed)

$T_S = T_G + T_P + T_D + T_F$ (when accelerating)

T_G : Acceleration torque (1)

T_P : Load torque (2)

T_D : Preload torque (3)

T_F : Friction torque (4)

(1) Acceleration T_G

$T_G = J\alpha$ (kgf • cm)

$\alpha = \frac{2\pi n}{60\Delta t}$ (rad/s^2)

J : Moment of inertia (kgf • cm • s^2)

α : Angular acceleration (rad/s^2)

n : Revolutions (min^{-1})

Δt : Starting time (sec)

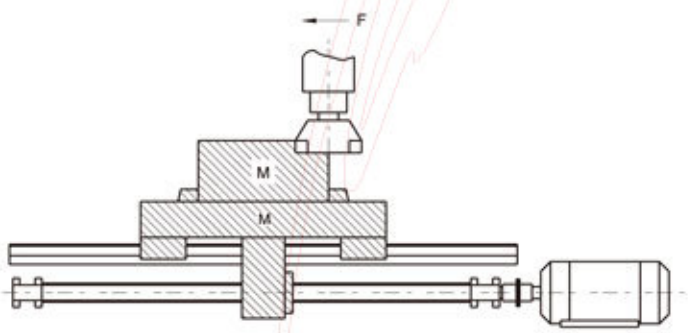

Fig. 3.22 Moment of inertia of load

【For reference】 Moment of inertia of load (Table 3.6)

$J = J_{BS} + J_{CU} + J_W + J_M$

J_{BS} : Moment of inertia Ball screws shaft

J_{CU} : Moment of inertia Coupler

J_W : Moment of inertia Linear motion part

J_M : Moment of inertia Roller shaft part of motor shaft

(2) Load torque T_P

$T_P = \frac{P \cdot \ell}{2\pi\eta_1}$ (kgf • cm)

$P = F + \mu M$

P : Axial load (kgf)

ℓ : Lead (cm)

η_1 : Positive efficiency

The efficiency when rotating motion is altered to linear motion

F : Cutting force (kgf)

μ : Friction coefficient

M : Mass of moving object (kg)

g : Acceleration of gravity (9.8 m/s^2)

$T_P = \frac{P \cdot \ell \cdot \eta_2}{2\pi}$

η_2 : Reverse efficiency

The efficiency when linear motion returns to rotating motion

(3) Preload torque T_D

$T_D = \frac{K \cdot P_{PL} \cdot \ell}{\sqrt{\tan\alpha} \cdot 2\pi}$ (kgf • cm)

K : Internal coefficient (0.05 is usually adopted)

P_{PL} : Preload kgf)

ℓ : Lead (cm)

α : Lead angle

(4) Friction torque T_F

$T_F = T_B + T_O + T_J$ (kgf • cm)

T_B : Friction torque of bracing shaft

T_O : Friction torque of free shaft

T_J : Friction torque motor shaft

The friction torque of the bracing shaft would be affected by the lubrication oil. Or special attention has to be paid to unexpected excessive friction torque which may be generated when oil seal is overly tight, or may result in temperature rise.

Table 3.6 Conversion formula for moment of inertia of load

Formula / Moment of inertia converted from motor shaft	J
Cylinder load	$\frac{\pi \rho L D^4}{32}$
Linearly moving object	$\frac{M}{4}\left(\frac{V\ell}{\pi \cdot N_M}\right)^2 = \frac{M}{4}\left(\frac{P}{\pi}\right)^2$
Unit	$kg \cdot m^2$
Moment of inertia during deceleration	$J_M = \left(\frac{J\ell}{N_M}\right)^2 \cdot J\ell$

ρ : Density (kg / m^3) $\rho = 7.8 \times 10^3$
L : Cylinder length (m)
D : Cylinder diameter (m)
M : Mass of the linear motion part (kg)
$V\ell$: Velocity of the linearly moving object (m / min)
N_M : Motor shaft revolutions (min^{-1})

P : The moving magnitude of the linearly moving object per every rotation of the motor (m)
$N\ell$: Rotations in longitudinal moving direction (min^{-1})
$J\ell$: Moment of inertia in load direction
J_M : Moment of inertia in motor direction

3.4 Nut Design

3.4.1 Selection of Nut

(1) Series

When making selection of series, please take into consideration of demanded accuracy, intended delivery time, dimensions(the outside diameter of the screw, ratio of lead / the outside diameter of the screw), preload load, etc.

(2) Circulation type

Selection of circulation type : Please focus on the economy of space for the nut installation portion.

(a)External circulation type

- Economy
- Suitable for mass production
- Applicable to those with larger lead / the outside diameter of the screw

(b) Internal circulation type

- With nuts of finely crafted outside diameter (occupying small space)
- Applicable to those with smaller lead / the outside diameter of the screw

(c)End-caps circulation type

- Suitable for high speed positioning
- Suitable for high basic rating load (COMTOP proprietary nut)

(3) Number of loop circuits

Performance and life of service should be considered when selecting number of loop circuits

(4) Shape of flanges

Please make selection based on the available space for the installation of nuts.

(5) Oil hole

Oil holes are provided for the precision ball screws, please use them during machine assembling and regular furnishing.

3.4.2 Nut Types

S - type nut

The steel balls of this type of nut forward along the groove between the screw and nut, and recycle through the circulators on both sides. The circulation way is similar with E type. Hence, this way is the design of the circulation of the steel ball along the direction of tangent of helix, and there are sound-insulated and dust-free apparatuses on both sides of nut so the noise volume will be diminished. In addition, the assembly space is small so the S type nut is suitable for the high-speed and light-load situations specially. (as per Fig. 3.23).

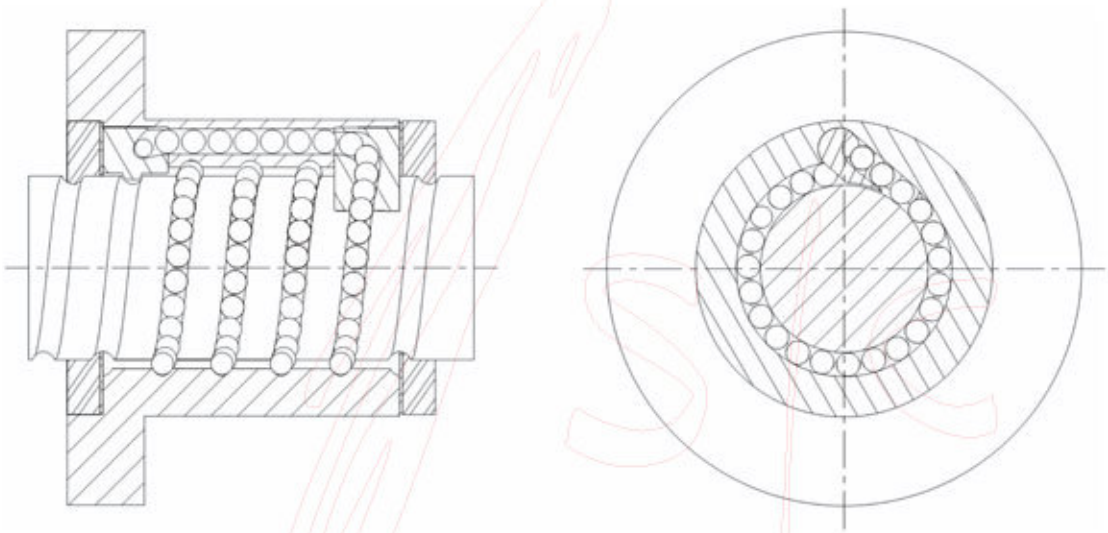

Fig. 3.23 S-type nut

V- type nut

The recycle way of V-type is similar with T-type. Besides maintaining the advantages of T-type, the design of circulation of the steel ball is also along the direction of tangent of helix and can decrease the sound caused from the hitting between steel ball and the part of guided part and increase the smooth of recycle. V-type nut is suitable for the high-speed and heavy-load situations specially. (as per Fig. 3.24).

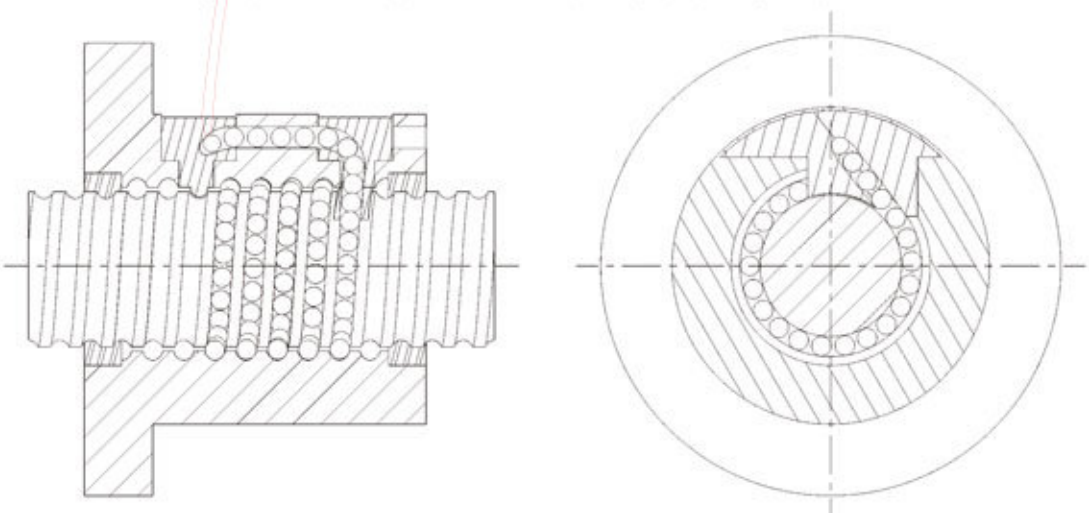

Fig. 3.24 V-type nut

T - type nut

For the circulation of this type, the steel balls roll forward along the grooves between the screws and the nut, then are picked up at the front end of the external circulation tube, which further pass through the circulation tube and circle around to the other end of the circulation tube, finally return to the origin point (as per Fig. 3.25).
It is generally provided with several rolls of steel balls and a single pass circulation tube, both round type and projecting tube type of profile may be adopted.

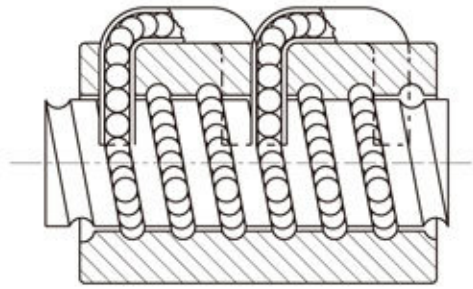

Fig. 3.25 T- type nut

U.I - type nut

In this type, the steel balls move along the grooves of the internal circulator, diagonally pass over the tooth tops of the screws, then return to the origin point. It generally possesses one roll of steel balls and one single pass circulation (as per Diagram 3.26)
This type of screws has at least one end with completely through threading, suitable for screws of smaller diameters, it is equipped with metal circulator.

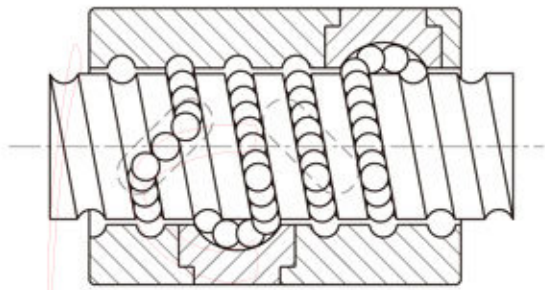

Fig. 3.26 U.I - type nut

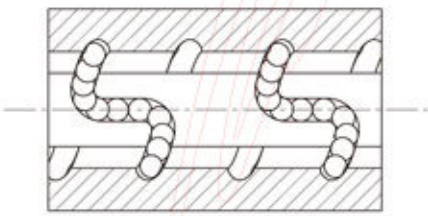

Fig. 3.27 K- type nut

K - type nut

It applies the similar circulation as that of I-type,but circulation takes place in key slots of identical angle for different circulation (as per Fig. 3.27)

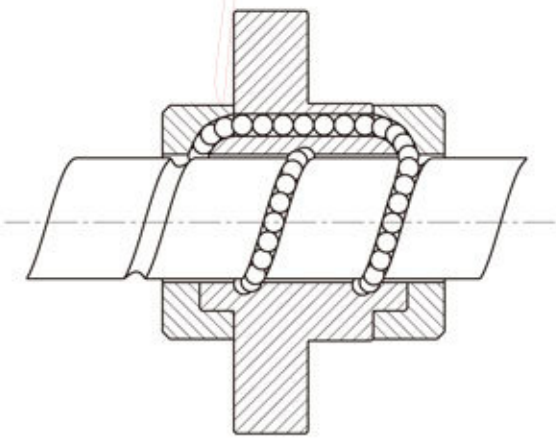

Fig. 3.28 E- type nut

E - type nut

This type has the features of both the external circulation type and the internal circulation type; the steel balls roll forward in the grooves between the screw and the nut, and are further guided by the end cap circulator at the nut end to the circulating hole in the nut body. It is generally similar to the external circulation type featuring multiple rolls of steel balls and single pass of circulation, but is not provided with external tubes (as per Fig. 3.28).

3.5 Rigidity

Excessively weak rigidity of the screw's peripheral structure is one of the primary causes that result in lost motion. Therefore in order to achieve excellent positioning accuracy for the precision machines such as NC working machines, etc., axial rigidity balance as well as torsional rigidity for the parts at various portions of the transmission screw have to be taken into consideration at time of designing.

Static Rigidity K

The axial elastic deformation and rigidity of the transmission screw system can be determined from the formula below.

$$K = \frac{P}{e} \quad (kgf/mm)$$

P : Axial load (kgf) borne by the transmission screw system

e : Axial flexural displacement (mm)

$$\frac{1}{K} = \frac{1}{K_S} + \frac{1}{K_N} + \frac{1}{K_B} + \frac{1}{K_H} \quad (mm/kgf)$$

K_S : Axial rigidity of screw shaft (1)

K_N : Axial rigidity of nut (2)

K_B : Axial rigidity of bracing shaft (3)

K_H : Axial rigidity of installation portions of nuts and bearings (4)

(1) Axial rigidity K_S and displacement δ_S of screw shaft

$$K_S = \frac{P}{\delta_S} \quad (kgf/mm)$$

P : Axial load (kgf)

For places of Fixed – Fixed installation

$$\delta_{SF} = \frac{PL}{4AE} \quad (mm)$$

For places other than Fixed – Fixed installation

$$\delta_{SS} = \frac{PL_o}{4AE} \quad (mm)$$

$$\delta_{SS} = 4\delta_{SF}$$

δ_{SF} : Directional displacement at places of fixed-fixed installation

δ_{SS} : Directional displacement at places other than fixed-fixed installation

A : Cross-sectional area of the screw shaft tooth root diameter (mm^2)

E : Longitudinal elastic modulus ($2.1\times10^4 kgf/mm^2$)

L : Distance between installations (mm)

L_o : Distance between load applying points (mm)

(2) Axial rigidity K_N and displacement δ_N of nut

$$K_N = \frac{P}{\delta_S} \quad (kgf/mm)$$

(a) In case of single nut

$$\delta_{NS} = \frac{K}{\sin\beta}\left(\frac{Q^2}{d}\right)^{1/3} \times \frac{1}{\xi} \quad (mm)$$

$$Q = \frac{P}{n\cdot\sin\beta} \quad (kgf)$$

$$n = \frac{D_o\pi m}{d} \quad (each)$$

Q : Load of one steel ball (kgf)

n : Number of steel ball

k : Constant determined based on material, shape, dimensions $k \fallingdotseq 5.7\times10^{-4}$

β : Angle of contact (45°)

P : Axial load (kgf)

d : Steel ball diameter (mm)

ξ : Accuracy, internal structure coefficient

m : Effective number of balls

D_o : Steel ball center diameter (mm)

$$D_o = \frac{\ell}{\tan\alpha\cdot\pi}$$

ℓ : Lead (mm)

α : Lead angle

(b) In case of double nuts

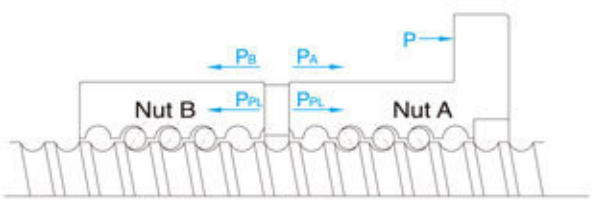

Fig. 3.29 Preloaded for the double nuts

When an axial load P of approximately 3 times of the preload load P_{PL} is exerted, for the purpose of eliminating the preload P_{PL} on nut B, please set the preload load P_{PL} at no more than 1/3 of the maximal axial load (0.25Ca should be taken as the standard maximal preload load). With respect to the displacement value, it should be of 1/2 of the single nut displacement when axial load is 3 times of the preload.

$$K_N = \frac{P}{\delta_{NW}} = \frac{3P_{PL}}{\delta_{NS}/2} = \frac{6P_{PL}}{\delta_{NS}} \text{ (kgf / mm)}$$

δ_{NS} : Displacement of single nut (mm)

δ_{NW} : Displacement of double nuts (mm)

(Explanation of the rigidity of double nuts)

As shown in Diagram 3.29 and 3.30, when a preload P_{PL} is applied on the 2 nuts A,B, both nuts A & B would produce flexural deformations that will reach point X. If an external force P is exerted from here, nut A would move from point X to point X1, while nut B would move from X to X2.

Then, based on the computing formula for displacement δ_{NS} of the single nut, we can obtain:

$$\delta_0 = aP_{PL}^{2/3}$$

while displacements of nuts A & B are

$$\delta_A = aP_{PL}^{2/3}$$

since displacements of nuts A & B generated due to exertion of external force P are equal, therefore

$$\delta_A - \delta_0 = \delta_0 - \delta_B$$

or if P is the only external force P that exerts on nuts A,B, if P_A increases

$$P_A - P_B = P$$

$$\delta_B = 0$$

for preventing the external force applied on nut B being absorbed by nut A thus decreasing, so

when $\delta_B = 0$

$$aP_A^{2/3} - aP_{PL}^{2/3} = aP_{PL}^{2/3}$$

$$P_A^{2/3} = 2P_{PL}^{2/3}$$

$$P_A = \sqrt{8}\,P_{PL} \fallingdotseq 3P_{PL}$$

or based on $\delta_A - \delta_0 = \delta_0$

$$\delta_0 = \frac{\delta_A}{2}$$

thus it can also be judged from Fig. 3.31 that, when axial load is 3 times of preload load , for a single nut with 1/2 displacement, the rigidity is 2 times as high.

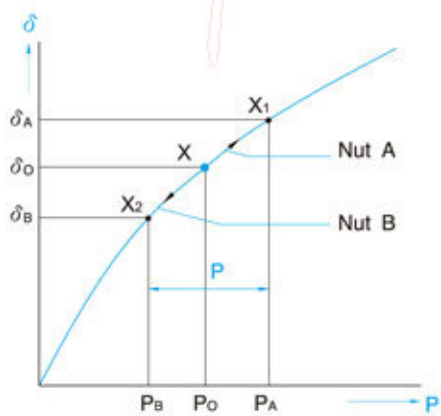

Fig. 3.30

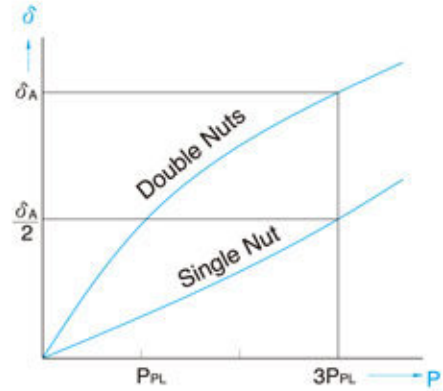

Fig. 3.31

(3) Axial rigidity K_B and displacement δ_B of bracing shaft

$$K_B = \frac{P}{\delta_B} \text{ (kgf / mm)}$$

The rigidity of the assembled diagonal thrust ball bearing that is used as the bracing bearing for the ball screw and is widely utilized in the field of precision machines can be found from the following formula.

$$\delta_B = \frac{2}{\sin\beta}\left(\frac{Q^2}{d}\right)^{1/3}$$

$$Q = \frac{P}{n \cdot \sin\beta} \text{ (kgf)}$$

Q : Load of one steel ball (kgf)

β : Angle of contact (45°)

d : Steel ball diameter (mm)

P : Axial load (kgf)

n : Number of steel balls

(4) Axial rigidity K_H and displacement δ_H of installation portions of nuts and bearings.

In early stage of machine development, special attentions should be paid to the requirement of high rigidity for the installation portion.

$$K_H = \frac{P}{\delta_H} \text{ (kgf / mm)}$$

3.6 Positioning Accuracy

Among the factors that cause feed accuracy errors, lead stroke accuracy and feed system rigidity are the key points for review, while other factors such as heat deformation due to temperature rise as well as assembly accuracy for the guiding surface, etc. should also be taken into consideration.

3.6.1 Accuracy Selection

Table 3.7 shows the recommended application ranges for various ball screws accuracy classes based on different.

Table 3.7 Examples of ball screws accuracy classes for different uses

Application		shaft	Accuracy Grade						
			C0	C1	C2	C3	C5	C7	C10
NC Machine Tools	Lathe	X	○	○	○	○	○	○	
		Z				○	○	○	
	Milling Machine Boring Machine	XY		○	○	○	○	○	
		Z			○	○	○	○	
	Machining Center	XY		○	○	○	○		
		Z			○	○	○		
	Jig Borer	XY	○	○					
		Z	○	○					
	Drilling Machine	XY				○	○	○	
		Z					○	○	
	Grinding Machine	X	○	○	○	○	○	○	
		Z		○	○	○	○	○	
	Electro-discharge Machine (EDM)	XY		○	○	○	○	○	
		(Z)			○	○	○	○	
	Wire Cut(EDM)	XY		○	○	○			
		UV		○	○	○	○	○	
	Punching Press	XY				○	○	○	
	Laser Cutting Machine	XY				○	○		
		Z				○	○		
	Wood Working Machine					○	○	○	○
Machines of General Use and special Use					○	○	○	○	○
Semiconductor Machines	Explosure Equipments		○	○					
	Chemical Treatment					○	○	○	○
	Wire Bonder			○	○	○			
	Prober		○	○	○	○			
	Inserter				○	○	○	○	
	PCB Driller			○	○	○	○	○	
Industrial Robots	Orthogonal Type	As'sy		○	○	○	○	○	
		Others					○	○	○
	Multi-joints Type	As'sy			○	○	○		
		Others				○	○	○	
	SCARA Type				○	○	○	○	
Machines for Steel molding							○	○	○
Injection Molding Machines							○	○	○
Three-Dimensonal Measuring Machines			○	○	○				
Business Machines							○	○	○
Pattern Image Macines			○	○					
Nuclear	Rod Control					○	○	○	
	Mechnaical Snubber							○	○
Aircrafts						○	○		

3.6.2 Countermeasure Against Thermal Displacement

Thermal displacement of the screw shaft results in deterioration of the positioning accuracy. The magnitude of the thermal displacement is calculated as follows:

$\Delta \ell = \alpha \cdot t \cdot L$ (mm)

$\Delta \ell$: Thermal displacement (mm)

t : Temperature rise (deg) at screw shaft

L : Screw shaft length (mm)

α : Coefficient of thermal expansion (11.7×10^{-6} deg^{-1})

Namely, the screw shaft develops elongation of 12 μm per 1m when the temperature rises by 1℃. The ball screw, which lead has been machined to high accuracy, may fail to meet highlevel requirements because of the thermal displacement due to temperature rise. As the ball screw is operated at higher speeds, the heat generation grows to increase the influence of temperature rise.

The thermal displacement countermeasures for ball screws include the following:

(1) Control of heat generation

- Optimization of preload
- Correct selection and supply of lubricant
- Increase in ball screw lead, with reduced rotation speed

(2) Forced cooling

- Hollow screw shaft to allow cooling fluid to flow through
- Cooling of screw shaft exterior with cooling oil or air

(3) Avoid influence of temperature rise

- High-speed warming up for use in a temperature stabilized size
- Pre-tension of screw shaft
- Negative travel compensation of cumulative lead
- Use of closed loop

3.7 Life Design

3.7.1 Life of Ball Screws

Even the ball screw is used under correct conditions, it would still fail after a period of time due to deterioration. The elapse of time until it is out of service is called the service life of the screw, which is generally classified into the fatigue life when delamination phenomenon occurs and the accuracy deterioration life caused by wear-out, etc.

3.7.2 Basic Static Load Rating Coa

The basic load rating is an axial static load which will produce a permanent combines deformation at contact points of the balls to ball grooves equal to 0.01% of the ball diameter.

3.7.3 Basic Dynamic Load Rating Ca

The basic dynamic load rating is an axial load which allows 90% of a group of identical ball screws (rotated under the same condition) to rotate without flaking for 1 million revolutions. This basic dynamic load rating is shown in the table of dimensions

Relation between load and service life

$$L \propto \left(\frac{1}{P}\right)^3$$

L : Service life

P : Load

3.7.4 Fatigue Life

Table 3.8

Usage	Life in hours (h)
Working machines	20000
General industrial machines	10000
Automatic control machines	15000
Measurement machines	15000

Average load P_e

(1) When axial load keeps changing from time to time, please calculate in order to find out the average load for the equivalent fatigue life under different load condition changes (as Diagram 3.32).

$$P_e = \left(\frac{P_1^3 n_1 t_1 + P_2^3 n_2 t_2 + \cdots + P_n^3 n_n t_n}{n_1 t_1 + n_2 t_2 + \cdots + n_n t_n} \right)^{1/3} \quad (kgf)$$

Axial Load (kgf)	Rotating Speed (min^{-1})	Time (%)
P_1	n_1	t_1
P_2	n_2	t_2
⋮	⋮	⋮
⋮	⋮	⋮
P_n	n_n	t_n

But, $t_1 + t_2 + t_3 + \ldots + t_n = 100$

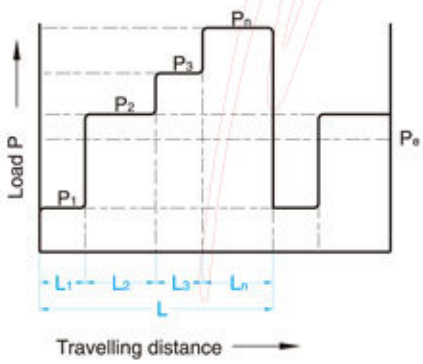

Fig. 3.32

$$P_e = \frac{2P_{max} + P_{min}}{3} \quad (kgf)$$

P_{max} : Maximal axial load (kgf)

P_{min} : Minimal axial load (kgf)

(2) When load changes according to sine curve (Fig. 3.33)

$P_e \fallingdotseq 0.65\ P_{max}$ (Fig. A)

$P_e \fallingdotseq 0.75\ P_{min}$ (Fig. B)

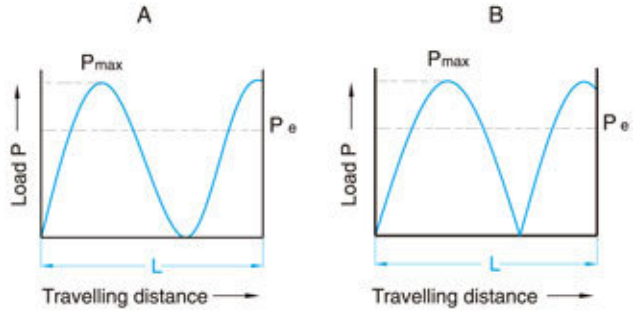

Fig. 3.33

Calculation of Life

The fatigue life is generally expressed by the total number of revolutions. The total rotation hours or total travel distance may also be used to express life. The fatigue life is calculated as follows:

$$L = \left(\frac{Ca}{Pa \cdot fw} \right)^3 \cdot 10^6$$

$$L_t = \frac{L}{60n}$$

$$L_s = \frac{L \cdot \ell}{10^6}$$

Where

L : Rated fatigue life (rev)

L_t : Life in hours (h)

L_s : Life in travel distance (Km)

C_a : Basic dynamic load rating (kgf)

P_a : Axia (kgf)

f_w : Load factor (Factor depending on operation conditions)

n : Rotating speed (rpm)

ℓ : Lead (mm)

Smooth operation without impact.....1.0~1.2

Normal operation.....1.2~1.5

Operation with impact and vibration.....1.5~3.0

Basic Dynamic Load Rating Ca

$$C_a = P_e \cdot f_s$$

Basic Static Load Rating Coa

$$C_{oa} = P_{max} \cdot f_s$$

Table 3.9 Factor of safety (fs)

Usage	Operation	fs
Industrial machines	Normal operation	1.0~1.3
	Operation with impact and vibration	2.0~3.0
Working machines	Normal operation	1.0~1.5
	Operation with impact and vibration	2.5~7.0

Key Points for Ball Screws Selection and Calculation

Key points for ball screws selection

When ball screws are subjected to selection, it is a most fundamental rule that you must first clearly find out what the operation conditions are before going ahead with the final design. Moreover, the elements of your selection include load weight, stroke, torque, position determination accuracy, tracking motion, hardness, lead stroke, nut inside diameter, etc., all elements are mutually related, any change to one of the elements will lead to the changes of other elements, special attention should always be paid to the balance among the elements.

1.Setting of operation conditions

(a) Machine service life time reckonig of H (hr)

H = [ ] × [ ] × [ ] × [ ]

hours/day days/ year life years Running

(b) Mechanical conditions

Calculation Date / Difference Operations	Speed/rotations	Cutting resistance	Sliding resistance	Time used
Fast feed	m / min / min^{-1}	kgf	kgf	%
Light cutting	/			
Medium cutting	/			
Heavy cutting	/			

(c) Position determination accuracy

Feed accuracy error factor includes load accuracy and system rigidity.Thermal displacement due to heat generation and positional error of the guide system is also important factors.

Calculation for ball screws selection

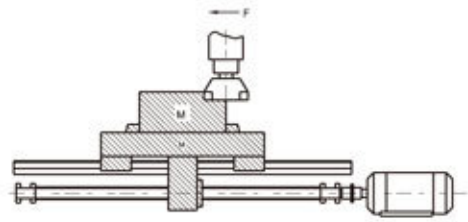

Design conditions

1. Working table weight 300 Kg
2. Working object weight 400 Kg
3. Maxima 700 mm
4. Fast feed speed 10 m/min
5. Minimal disassembly ability 10 μm/stroke
6. Driving motor DC motor (MAX 1000 min^{-1})
7. Guiding surface friction coefficient (μ= 0.05~0.1)
8. Running rate 60 %
9. Accuracy review items
10. Inertia generated during acceleration/deceleration can be neglected because the time periods involved are comparatively small.

1.Setting of operation conditions

(a) Machine service life time reckonig of H (hr)

H = 12 hrs × 250 days × 10 years × 0.6 Running

=18000hr

(b) Mechanical conditions

Calculation Date / Difference Operations	Speed/rotations	Cutting resistance	Sliding resistance	Time used
Fast feed	10m/min/1000min^{-1}	0 kgf	70 kgf	10 %
Light cutting	6 / 600	100	70	50
Medium cutting	2 / 200	200	70	30
Heavy cutting	1 / 100	300	70	10

Sliding resistance = (300+400) × 0.1=70 kgf

Key points for ball screws selection	Calculation for ball screws selection
2. Ball screws lead stroke ℓ (mm) $\ell = \frac{\text{Fast feed stroke (m/min)} \times 1000}{\text{Max. Rotating speed (min}^{-1}\text{) of motor}}$ (mm)	2. Ball screws lead stroke ℓ (mm) $\ell = \frac{10000}{1000} = 10$ (mm) Minimal disassembly $= \frac{10\text{mm}}{1000 \text{ stroke}} = 0.01$ mm/stroke
3. Computation of average load Pe (kgf) $Pe = \left(\frac{P_1^3 n_1 t_1 + P_2^3 n_2 t_2 + \cdots + P_n^3 n_n t_n}{n_1 t_1 + n_2 t_2 + \cdots + n_n t_n} \right)^{1/3}$ $Pe = \frac{2Pmax + Pmin}{3}$ pe ≒ 0.65 Pmax pe ≒ 0.75 Pmin	3. Computation of average load Pe (kgf) Pe = $\left(\frac{70^3 \times 1000 \times 10 + 170^3 \times 600 \times 50 + 270^3 \times 200 \times 30 + 370^3 \times 100 \times 10}{1000 \times 10 + 600 \times 50 + 200 \times 30 + 100 \times 10} \right)^{1/3}$ ≒ 189 kgf
4. Average number of rotations n_m $n_m = \frac{n_1 t_1 + n_2 t_2 + \cdots + n_n t_n}{100}$	4. Average number of rotations n_m $n_m = \frac{1000 \times 10 + 600 \times 50 + 200 \times 30 + 100 \times 10}{100}$ $= \frac{4.7 \times 10^4}{100}$ $= 470 \text{ min}^{-1}$
5. Calculation of required dynamic rated load Ca Ca = Pe • fs	5. Calculation of required dynamic rated load Ca Ca = 189 × 5 = 945 (kgf)
6. Calculation of required static rated load Coa Coa = Pmax • fs	6. Calculation of required static rated load Coa Coa = 369 × 5 = 1845 (kgf)
7. Selection of nut type Ca > 945 Coa > 1845 Select the nut types with basic dynamic rated load and basic static rated load as specified above.	7. Selection of nut type Choose SF I 4010 on the catalogue Ca = 3178 kgf Coa = 9480 kgf

Key points for ball screws selection	Calculation for ball screws selection
8. Calculation of life confirmation Lt (h) $L_t = \left(\frac{Ca}{Pe \cdot fw}\right)^3 \cdot \frac{1}{60n_m} \cdot 10^6$	8. Calculation of life confirmation Lt (h) $L_t = \left(\frac{3178}{189 \cdot 2}\right)^3 \cdot \frac{1}{60 \cdot 470} \cdot 10^6$ $= 20479$ (h)
9. Determination of screw length Screw length = Maximal stroke + Nut length + 2 × reserved length at shaft end	9. Determination of screw length Screw length = 700+93+2×81 = 874 mm
10. Mounting distance of screw length	10. Mounting distance of screw length(F-F support) 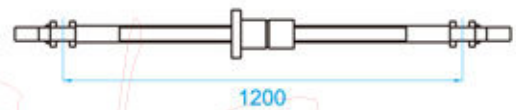
11. Permissible axial load	11. Permissible axial load Omitted because of F-F support
12. Permissible revolution speed n and dm $n = \alpha \times \frac{60\lambda^2}{2\pi L^2}\sqrt{\frac{EIg}{\gamma A}} = f\frac{dr}{L^2} \times 10^7$ (rpm) dm = Shaft dia. × Maximal speed	12. Permissible revolution speed n and dm $n = \frac{21.9 \times 35.2 \times 10^7}{1200^2}$ $= 5353 min^{-1} > n_{max}$ dm = 40×1000 = 40000 < 50000
13. Countermeasure against thermal displacement and rigidity	13. Countermeasure against thermal displacement and rigidity (a) It is estimated there would be a temperature rise of 2~5°C with the ball screws of the general machinery, take temperature rise of 2°C to computer the extension of ball screw. $\Delta \ell = \alpha \cdot t \cdot L$ $= 11.7 \times 10^{-6} \times 2 \times 700$ mm ≒ 0.016 mm $F_P = \frac{EA\Delta\ell}{L}$ $= \frac{2.06 \times 10^4 \times \frac{\pi \times 35.2^2}{4} \times 0.016}{700}$ ≒ 458 kgf

Key points for ball screws selection

(Reference) Force exerted on ball screw when inertia is considered

◎ When used horizontally

1. During acceleration

$$P_{ACC} = M g \times \mu + \frac{M \times V}{60 \times \Delta t}$$

2. During deceleration

$$P_{DEC} = M g \times \mu - \frac{M \times V}{60 \times \Delta t}$$

◎ When used vertically

1. During acceleration while descending, during deceleration while ascending

$$P_U = M g - \frac{M \times V}{60 \times \Delta t}$$

2. During acceleration while ascending, during deceleration while descending

$$P_D = M g + \frac{M \times V}{60 \times \Delta t}$$

M : Mass of moving object (kg)

g : Acceleration of gravity ($9.8 m/s^2$)

V : Velocity (m/min)

Δt : Acceleration /deceleration time (s)

μ : Friction coefficient

14. Confirmation of the ball screw life

Calculation for ball screws selection

Deviation can be corrected by estimating the temperature rise per extension of 0.016mm, and taking into consideration of the pre-tension of 458 kgf .

(b) Rigidity

(1) Directional rigidity

$$\delta_{SF} = \frac{PL}{4AE} = \frac{27 \times 1200}{4 \times \frac{\pi \times 35.2^2}{4} \times 2.06 \times 10^4}$$

$$= 0.00036 \text{ mm}$$

$$Ks = \frac{370}{0.00036} = 10.3 \times 10^5 \text{ kgf / mm}$$

(2) Rigidity of steel ball and nut groove

$$n = \frac{41.8 \times \pi \times 2.5}{6.35} = 52$$

$$Q = \frac{370}{52 \sin 45^\circ} = 10$$

$$\delta_{NS} = \frac{0.00057}{\sin 45^\circ} \left(\frac{10^2}{6.35} \right)^{1/3} \times \frac{1}{0.7}$$

$$= 2.9 \times 10^{-3} \text{mm}$$

$$K_N = \frac{370}{2.9 \times 10^{-3}} = 1.28 \times 10^5 \text{kgf/mm}$$

(3) Rigidity of bracing bearings

Where, nut rigidity 50 kgf / mm

$$\delta_B = \frac{370}{50 \times 2} = 3.7 \mu m$$

$$K_B = \frac{370}{0.0037} = 1 \times 10^5 \text{kgf/mm}$$

◎ $\delta_{TOTAL} = 0.36 + 2.9 + 3.7 = 6.96 \mu m$

14. Confirmation of the ball screw life

L = 20479(h) > 18000 (h)

Cautions About Use of Ball Screws

5.1 Lubrication

Adequate lubrication must be provided when ball screw is used, insufficient lubrication will result in contact of metal, which in turn leads to increase of friction and friction loss, thus cause failure or shortening of service life.
Lubricants applied to ball screws can be divided into 2 types,namely lubricating oil and consistent grease. In general speaking, in respect of maintenance, consistent grease will lead to increase of dynamic friction torque linearly along with increase of rotating speed, hence oil lubrication is deemed the better way when speed exceeds 3-5 m/min; however, don't forget the fact that there have been examples that using grease has been capable of achieving speed of 10 m/min, with respect to the equipment.

Table 5.1 Inspection of lubrication and interval of refill

Method	Interval	Check Item	Replenish or Change Interval
Auto. Intermittent oil supply	Weekly	Oil level, contamination	Add at each check, as required depending on tank level
Grease	nitially 2-3 months	Contamination on entry of chip	Replenish yearly or according to the inspection results
Oil bath	Daily	Oil level	To be determined according to consumption

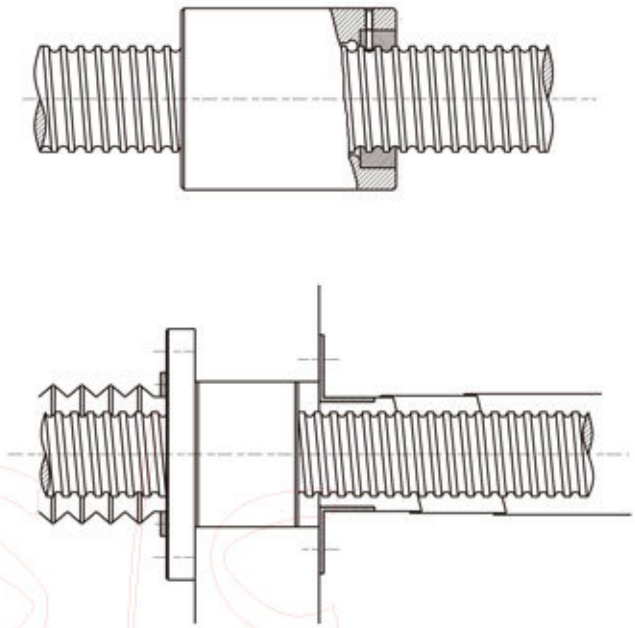

Fig. 5.1 Dust proof Method by Telescopic Cover andBellows

5.2 Contaminant Prevention

Any foreign matter or water, if allowed to enter the ball screw, may increase friction and cause damage.
For example, the entry of chips or cutting oil may be expected with machine tools depending on the work environment. Where entry of foreign matter is anticipated, use a bellows or telescopic cover as shown in Fig. 5.1, to cover the screw shaft completely.

5.3 Offset load

When offset load phenomenon occurs, screw life and noise tend to be directly affected, which would usually be accompanied with hand feel of rough running. In the event unload running and running right after assembling demonstrate different degree of cases, this should be ascribed to the poor assembly accuracy which will produce offset load phenomenon as shown in Fig. 5.2

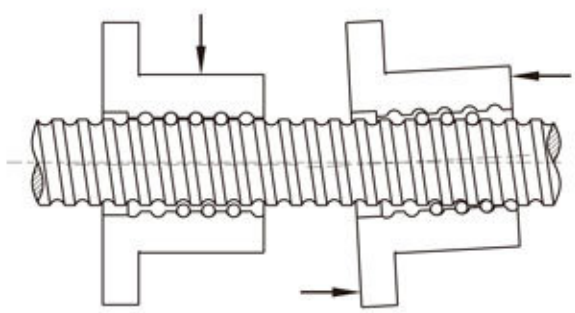

Fig. 5.2 Offset load

Ball Screw

Specification Number

Model-number coding

EX. SFS R 025 05 C 1 D G C5 – 600 – P0

(1) SFS
(2) R
(3) 025
(4) 05
(5) C 1
(6) D
(7) G
(8) C5
(9) 600
(10) P0

(1) Nut type codes

S
- S : Single nut
- D : Double nut

F
- F : With flange
- C : Without flange

S
- S : DIN nut
- U : DIN nut
- I : I type nut
- E : E type nut
- K : K type nut
- V : V type nut
- T : T type nut
- M : M type nut

(SFS、DFS、SFU、DFU、SFI、DFI、SFT、DFT、SFV、DFV、SFE、SFK、BSH、SCI、SFM、DFM)

(2) Direction of helix

R : Right L : Left

(3) Shaft dia. (mm)

(4) Lead(mm)

(5) No. of Turn (Circuits) or Turn x Row

Turn : T:1 A:1.5(or 1.7/1.8) B:2.5/2.8 C:3.5 D : 4.8 ex : (2.5x2 = B2)

(6) Flange type

N : Not cutting S : Single cutting D : Double cutting

(7) Produce code

G : Ground F : Rolled

(8) Accuracy grade code

C0、C1、C2、C3、C5、C7、C10

(9) Overall length of shaft(mm)

(10) Axial clearance and preload code

P0、P1、P2、P3、P4

Dimension Table of COMTOP Ball Screws

(TYPE) : SCI

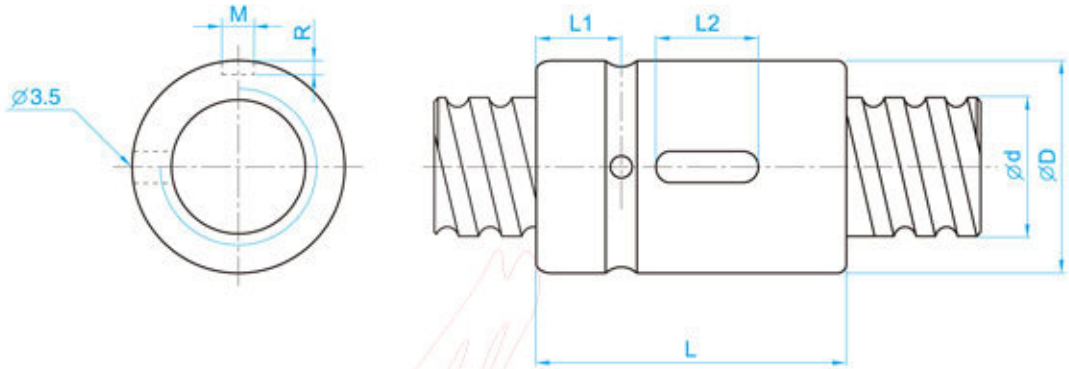

Unit : mm

I: Lead Da: Ball Dia. n: Number of Circuits K: Stiffness (Kgf/μm)
Ca: Basic Dynamic Rating Load (Kgf) Coa: Basic Static Rating Load(Kgf)

	Model No.	Dimensions												
		d	l	Da	D	L	L1	L2	M	R	n	Ca	Coa	K
	SCI01604-4	16	4	2.381	30	40	9	15	3	1.5	1x4	973	2406	32
★	SCI01605-4		5	3.175	30	45	9	20	5	3	1x4	1380	3052	33
	SCI02004-4	20	4	2.381	34	40	9	15	3	1.5	1x4	1066	2987	37
★	SCI02005-4		5	3.175	34	45	9	20	5	3	1x4	1551	3875	39
	SCI02504-4	25	4	2.381	40	40	9	15	3	1.5	1x4	1180	3795	43
★	SCI02505-4		5	3.175	40	45	9	20	5	3	1x4	1724	4904	45
	SCI02510-4		10	4.762	46	85	13	30	5	3	1x4	2954	7295	51
	SCI03204-4	32	4	2.381	46	40	9	15	3	1.5	1x4	1296	4838	49
★	SCI03205-4		5	3.175	46	45	9	20	5	3	1x4	1922	6343	52
★	SCI03210-4		10	6.35	54	85	13	30	5	3	1x4	4805	12208	62
★	SCI04005-4	40	5	3.175	56	45	9	20	5	3	1x4	2110	7988	59
★	SCI04010-4		10	6.35	62	85	13	30	5	3	1x4	5399	15500	72
	SCI05010-4	50	10	6.35	72	85	13	30	5	3	1x4	6004	19614	83
★	SCI06310-4	63	10	6.35	85	85	13	30	6	3.5	1x4	6719	25358	95
★	SCI08010-4	80	10	6.35	105	85	13	30	8	4.5	1x4	7346	31953	109

Note: with sign ★ can be produced in left helix

Dimension Table of COMTOP Ball Screws

(TYPE) : SFS (DIN 69051 FORM B)

High-Speed Ball Screw

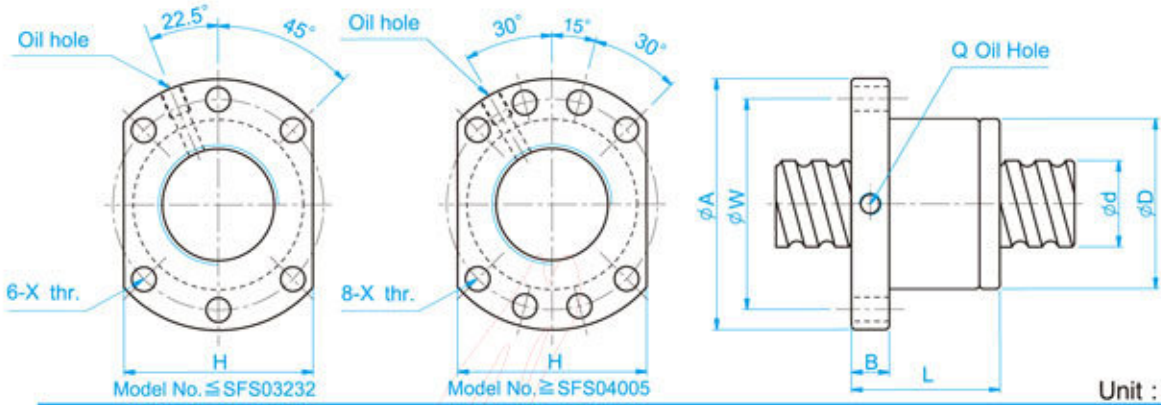

Unit : mm

I: Lead Da: Ball Dia. n: Number of Circuits K: Stiffness (Kgf/μm)
Ca: Basic Dynamic Rating Load (Kgf) Coa: Basic Static Rating Load(Kgf)

Model No.	Dimensions														
	d	l	Da	D	A	B	L	W	H	X	Q	n	Ca	Coa	K
SFS01205-2.8	12	5	2.5	24	40	10	31	32	30	4.5		2.8x1	661	1316	19
SFS01210-2.8		10	2.5	24	40	10	48.5	32	30	4.5		2.8x1	642	1287	19
SFS01605-3.8	15	5	2.778	28	48	10	38	38	40	5.5	M6	3.8x1	1112	2507	30
SFS01610-2.8		10	2.778	28	48	10	47	38	40	5.5	M6	2.8x1	839	1821	23
SFS01616-1.8		16	2.778	28	48	10	45	38	40	5.5	M6	1.8x1	552	1137	14
SFS01616-2.8		16	2.778	28	48	10	61	38	40	5.5	M6	2.8x1	808	1769	22
SFS01620-1.8		20	2.778	28	48	10	57	38	40	5.5	M6	1.8x1	554	1170	14
SFS02005-3.8	20	5	3.175	36	58	10	40	47	44	6.6	M6	3.8x1	1484	3681	37
SFS02006-4.8		6	3.175	36	58	10	50	47	44	6.6	M6	4.8x1	1811	4644	47
SFS02008-4.8		8	3.175	36	58	10	60	47	44	6.6	M6	4.8x1	1863	4861	50
SFS02010-3.8		10	3.175	36	58	10	60	47	44	6.6	M6	3.8x1	1516	3833	40
SFS02020-1.8		20	3.175	36	58	10	57	47	44	6.6	M6	1.8x1	764	1758	19
SFS02020-2.8		20	3.175	36	58	10	77	47	44	6.6	M6	2.8x1	1118	2734	29
SFS02505-3.8	25	5	3.175	40	62	10	40	51	48	6.6	M6	3.8x1	1650	4658	43
SFS02506-4.8		6	3.175	40	62	10	50	51	48	6.6	M6	4.8x1	2015	5879	55
SFS02508-4.8		8	3.175	40	62	10	60	51	48	6.6	M6	4.8x1	2009	5867	56
SFS02510-3.8		10	3.175	40	62	12	62	51	48	6.6	M6	3.8x1	1638	4633	45
SFS02525-1.8		25	3.175	40	62	12	70	51	48	6.6	M6	1.8x1	843	2199	22
SFS02525-2.8		25	3.175	40	62	12	95	51	48	6.6	M6	2.8x1	1232	3421	34
SFS03205-3.8	32	5	3.175	50	80	12	42	65	62	9	M6	3.8x1	1839	6026	51
SFS03206-4.8		6	3.175	50	80	12	51	65	62	9	M6	4.8x1	2247	7608	65
SFS03208-4.8		8	3.969	50	80	12	62	65	62	9	M6	4.8x1	3015	9181	68
SFS03210-3.8	31	10	3.969	50	80	13	62	65	62	9	M6	3.8x1	2460	7255	55
SFS03220-2.8		20	3.969	50	80	12	80	65	62	9	M6	2.8x1	1907	5482	43
SFS03232-1.8		32	3.969	50	80	13	84	65	62	9	M6	1.8x1	1257	3426	27
SFS03232-2.8		32	3.969	50	80	13	116	65	62	9	M6	2.8x1	1838	5329	42
SFS04005-3.8	40	5	3.175	63	93	15	45	78	70	9	M8	3.8x1	2018	7589	60
SFS04006-4.8		6	3.175	63	93	14	50	78	70	9	M6	4.8x1	2467	9583	77
SFS04008-4.8	38	8	3.969	63	93	14	61	78	70	9	M6	4.8x1	3327	11491	81
SFS04010-3.8		10	6.35	63	93	14	63	78	70	9	M8	3.8x1	5035	13943	67
SFS04020-2.8		20	6.35	63	93	14	82	78	70	9	M8	2.8x1	3959	10715	54
SFS04040-1.8		40	6.35	63	93	15	105	78	70	9	M8	1.8x1	2585	6648	34
SFS04040-2.8		40	6.35	63	93	15	145	78	70	9	M8	2.8x1	3780	10341	52
SFS05005-3.8	50	5	3.175	75	110	15	45	93	85	11	M8	3.8x1	2207	9542	68
SFS05010-3.8	48	10	6.35	75	110	18	68	93	85	11	M8	3.8x1	5638	17852	79
SFS05012-3.8		12	6.35	75	110	18	75	93	85	11	M8	3.8x1	5632	17836	81
SFS05020-3.8		20	6.35	75	110	18	108	93	85	11	M8	3.8x1	5749	18485	87
SFS05050-1.8		50	6.35	75	110	18	125	93	85	11	M8	1.8x1	2946	8749	42
SFS05050-2.8		50	6.35	75	110	18	175	93	85	11	M8	2.8x1	4308	13610	65
SFS06310-3.8	61	10	6.35	90	125	18	70	108	95	11	M8	3.8x1	6343	23308	94
SFS06316-3.8		16	6.35	90	125	18	95	108	95	11	M8	3.8x1	6327	23262	100
SFS06320-3.8		20	7.144	95	135	20	116	115	100	13.5	M8	3.8x1	7493	26424	105
SFS08010-3.8	77	10	6.35	105	145	20	70	125	110	13.5	M8	3.8x1	6980	29563	105
SFS08020-3.8		20	9.525	125	165	25	120	145	130	13.5	M8	3.8x1	12145	43598	128
SFS10020-3.8	96	20	12.7	150	202	30	124	176	155	17.5	M8	3.8x1	19633	71408	152

Note: with sign ★ can be produced in left helix

Dimension Table of COMTOP Ball Screws

(TYPE) : DFS (DIN 69051 FORM B)

High-Speed Ball Screw

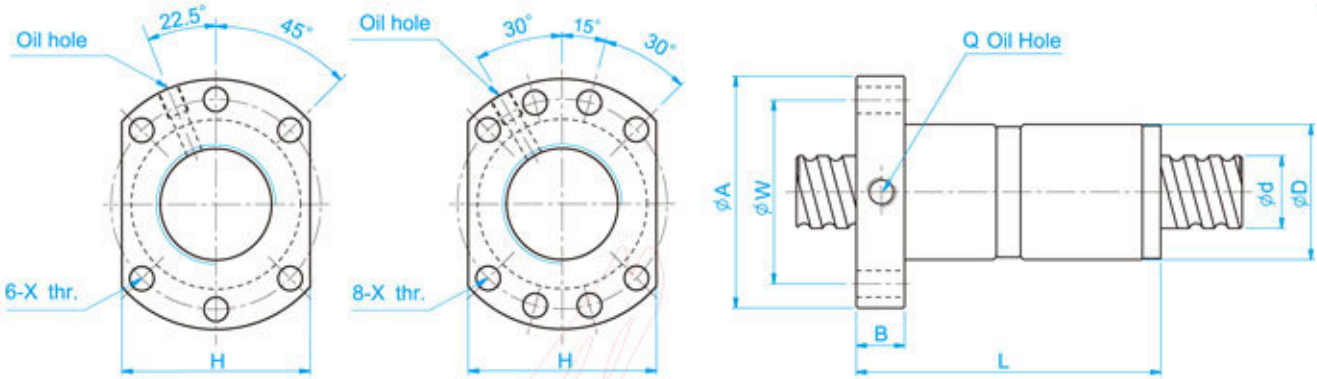

Unit : mm

I: Lead Da: Ball Dia. n: Number of Circuits K: Stiffness (Kgf/μm)
Ca: Basic Dynamic Rating Load (Kgf) Coa: Basic Static Rating Load(Kgf)

Model No.	Dimensions														
	d	l	Da	D	A	B	L	W	H	X	Q	n	Ca	Coa	K
DFS01605-3.8	15	5	2.778	28	48	10	73	38	40	5.5	M6	3.8x1	1112	2507	41
DFS01610-2.8		10	2.778	28	48	10	97	38	40	5.5	M6	2.8x1	839	1821	31
DFS02005-3.8	20	5	3.175	36	58	10	75	47	44	6.6	M6	3.8x1	1484	3681	50
DFS02006-4.8		6	3.175	36	58	10	98	47	44	6.6	M6	4.8x1	1811	4644	63
DFS02008-4.8		8	3.175	36	58	10	116	47	44	6.6	M6	4.8x1	1863	4861	66
DFS02010-3.8		10	3.175	36	58	10	120	47	44	6.6	M6	3.8x1	1516	3833	53
DFS02505-3.8	25	5	3.175	40	62	10	75	51	48	6.6	M6	3.8x1	1650	4658	59
DFS02506-4.8		6	3.175	40	62	10	98	51	48	6.6	M6	4.8x1	2015	5879	75
DFS02508-4.8		8	3.175	40	62	10	116	51	48	6.6	M6	4.8x1	2009	5867	76
DFS02510-3.8		10	3.175	40	62	12	122	51	48	6.6	M6	3.8x1	1638	4633	61
DFS03205-3.8	32	5	3.175	50	80	12	82	65	62	9	M6	3.8x1	1839	6026	71
DFS03206-4.8		6	3.175	50	80	12	99	65	62	9	M6	4.8x1	2247	7608	90
DFS03208-4.8		8	3.969	50	80	12	126	65	62	9	M6	4.8x1	3015	9181	92
DFS03210-3.8	31	10	3.969	50	80	13	122	65	62	9	M6	3.8x1	2460	7255	75
DFS03220-2.8		20	3.969	50	80	12	160	65	62	9	M6	2.8x1	1907	5482	58
DFS04005-3.8	40	5	3.175	63	93	15	85	78	70	9	M8	3.8x1	2018	7589	83
DFS04006-4.8		6	3.175	63	93	14	98	78	70	9	M6	4.8x1	2467	9583	106
DFS04008-4.8	38	8	3.969	63	93	14	125	78	70	9	M6	4.8x1	3327	11491	110
DFS04010-3.8		10	6.35	63	93	14	123	78	70	9	M8	3.8x1	5035	13943	91
DFS04020-2.8		20	6.35	63	93	14	162	78	70	9	M8	2.8x1	3959	10715	73
DFS05005-3.8	50	5	3.175	75	110	15	85	93	85	11	M8	3.8x1	2207	9542	96
DFS05010-3.8	48	10	6.35	75	110	18	138	93	85	11	M8	3.8x1	5638	17852	109
DFS05012-3.8		12	6.35	75	110	18	147	93	85	11	M8	3.8x1	5632	17836	110
DFS05020-3.8		20	6.35	75	110	18	218	93	85	11	M8	3.8x1	5749	18485	116
DFS06310-3.8	61	10	6.35	90	125	18	140	108	95	11	M8	3.8x1	6343	23308	130
DFS06316-3.8		16	6.35	90	125	18	191	108	95	13.5	M8	3.8x1	6327	23262	136
DFS06320-3.8		20	7.144	95	135	20	226	115	100	13.5	M8	3.8x1	7493	26424	142
DFS08010-3.8	77	10	6.35	105	145	20	140	125	110	13.5	M8	3.8x1	6980	29563	149
DFS08020-3.8		20	9.525	125	165	25	230	145	130	13.5	M8	3.8x1	12145	43598	174
DFS10020-3.8	96	20	12.7	150	202	30	244	176	155	17.5	M8	3.8x1	19633	71408	208

Note: with sign ★ can be produced in left helix

Dimension Table of COMTOP Ball Screws

(TYPE) : SFV

High-Speed Ball Screw

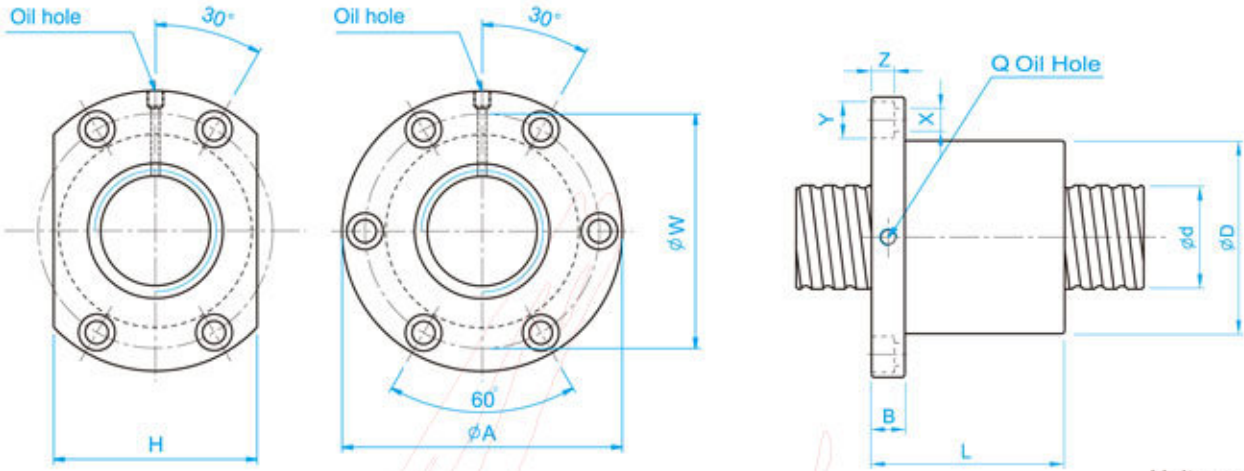

Unit : mm

l: Lead Da: Ball Dia. n: Number of Circuits K: Stiffness (Kgf/μm)
Ca: Basic Dynamic Rating Load (Kgf) Coa: Basic Static Rating Load(Kgf)

Model No.	Dimensions																
	d	l	Da	D	A	B	L	W	H	X	Y	Z	Q	n	Ca	Coa	K
SFV01205-2.8	12	5	2.5	30	50	10	42	40	32	4.5	8	4.5	M6	2.8x1	661	1316	19
SFV01210-2.7		10	2.5	30	50	10	53	40	32	4.5	8	4.5	M6	2.7x1	623	1241	18
SFV01510-2.7	15	10	3.175	34	58	10	57	45	34	5.5	9.5	5.5	M6	2.7x1	972	2020	23
SFV01604-3.8	16	4	2.381	34	57	11	45	45	34	5.5	9.5	5.5	M6	3.8x1	931	2285	31
SFV01605-4.8		5	3.175	40	63	11	58	51	42	5.5	9.5	5.5	M6	4.8x1	1614	3662	40
SFV01610-2.7		10	3.175	40	63	11	56	51	42	5.5	9.5	5.5	M6	2.7x1	1008	2161	24
SFV02004-4.8	20	4	2.381	40	60	10	50	50	40	4.5	8	4	M6	4.8x1	1247	3584	45
SFV02005-4.8		5	3.175	44	67	11	57	55	52	5.5	9.5	5.5	M6	4.8x1	1814	4650	47
SFV02010-2.7		10	3.969	46	74	13	57	59	46	6.6	11	6.5	M6	2.7x1	1518	3398	30
SFV02020-1.8		20	3.175	46	74	13	70	59	46	6.6	11	6.5	M6	1.8x1	764	1758	19
SFV02505-4.8	25	5	3.175	50	73	11	55	61	52	5.5	9.5	5.5	M8	4.8x1	2017	5884	56
SFV02506-4.8		6	3.969	53	76	11	62	64	58	5.5	9.5	5.5	M6	4.8x1	2711	7268	58
SFV02508-4.8		8	4.762	56	85	13	70	71	64	6.5	11	6.5	M6	4.8x1	3466	8776	61
SFV02510-2.7		10	6.35	68	102	15	70	84	82	9	14	8.5	M8	2.7x1	3040	6547	37
SFV02525-1.8		25	3.175	50	73	13	83	61	52	5.5	9.5	5.5	M8	1.8x1	843	2199	22
SFV03204-4.8	32	4	2.381	54	81	12	50	67	64	6.6	11	6.5	M6	4.8x1	1517	5806	62
SFV03205-4.8		5	3.175	58	85	12	56	71	64	6.6	11	6.5	M8	4.8x1	2249	7612	66
SFV03206-4.8		6	3.969	62	89	12	60	75	68	6.6	11	6.5	M8	4.8x1	3079	9575	70
SFV03208-4.8		8	4.762	66	100	15	75	82	76	9	14	8.5	M8	4.8x1	3962	11547	74
SFV03210-4.8		10	6.35	74	108	15	96	90	82	9	14	9	M8	4.8x1	5620	14649	76
SFV03220-2.7		20	6.35	74	108	16	100	90	82	9	14	8.5	M8	2.7x1	3509	8644	46
SFV04005-4.8	40	5	3.175	67	101	15	59	83	72	9	14	8.5	M8	4.8x1	2468	9586	76
SFV04010-4.8		10	6.35	82	124	18	100	102	94	11	17.5	11	M8	4.8x1	6316	18600	90
SFV04020-2.7		20	6.35	82	124	18	100	102	90	11	17.5	11	M8	2.7x1	3935	10893	56
SFV05005-4.8	50	5	3.175	80	114	15	60	96	82	9	14	8.5	M8	4.8x1	2698	12053	87
SFV05010-4.8		10	6.35	93	135	16	93	113	98	11	17.5	11	M8	4.8x1	7023	23537	106
SFV05020-2.7		20	9.525	105	152	28	121	128	110	14	20	13	M8	2.7x1	7336	19700	68
SFV06310-4.8	63	10	6.35	108	154	22	105	130	110	14	20	13	M8	4.8x1	7860	30430	126
SFV06320-2.7		20	9.525	122	180	28	120	150	130	18	26	17.5	M8	2.7x1	8162	24741	80
SFV08010-4.8	80	10	6.35	130	176	22	105	152	132	14	20	13	M8	4.8x1	8593	38344	145
SFV08020-4.8		20	9.525	143	204	28	180	172	148	18	26	18	M8	4.8x1	15103	57296	168
SFV08020-7.6		20	9.525	143	204	28	240	172	148	18	26	18	M8	3.8x2	22423	90719	260

Note: with sign ★ can be produced in left helix

Dimension Table of COMTOP Ball Screws

(TYPE) : DFV

High-Speed Ball Screw

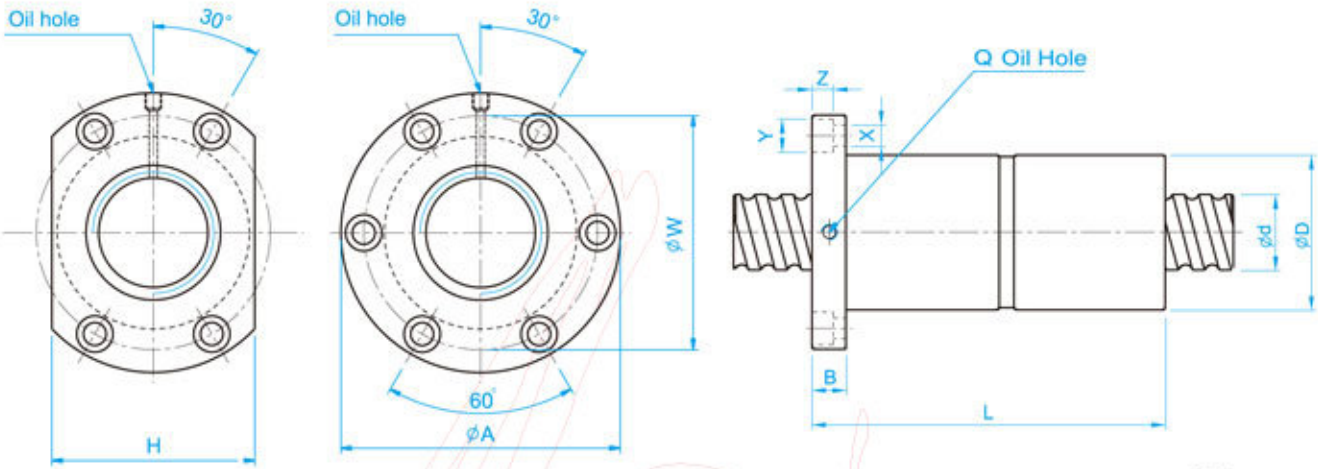

Unit : mm

l: Lead Da: Ball Dia. n: Number of Circuits K: Stiffness (Kgf/μm)
Ca: Basic Dynamic Rating Load (Kgf) Coa: Basic Static Rating Load(Kgf)

Model No.	Dimensions																
	d	l	Da	D	A	B	L	W	H	X	Y	Z	Q	n	Ca	Coa	K
DFV01510-2.7	15	10	3.175	34	58	10	107	45	34	5.5	9.5	5.5	M6	2.7x1	972	2020	30
DFV01604-3.8	16	4	2.381	34	57	11	89	45	34	5.5	9.5	5.5	M6	3.8x1	931	2285	42
DFV01605-4.8		5	3.175	40	63	11	113	51	42	5.5	9.5	5.5	M6	4.8x1	1614	3662	53
DFV01610-2.7		10	3.175	40	63	11	106	51	42	5.5	9.5	5.5	M6	2.7x1	1008	2161	32
DFV02004-4.8	20	4	2.381	40	60	10	94	50	40	4.5	8	4	M6	4.8x1	1247	3584	61
DFV02005-4.8		5	3.175	44	67	11	112	55	52	5.5	9.5	5.5	M6	4.8x1	1814	4650	63
DFV02010-2.7		10	3.969	46	74	13	117	59	46	6.6	11	6.5	M6	2.7x1	1518	3398	40
DFV02505-4.8	25	5	3.175	50	73	11	105	61	52	5.5	9.5	5.5	M8	4.8x1	2017	5884	75
DFV02506-4.8		6	3.969	53	76	11	116	64	58	5.5	9.5	5.5	M6	4.8x1	2711	7268	78
DFV02508-4.8		8	4.762	56	85	13	134	71	64	6.5	11	6.5	M6	4.8x1	3466	8776	82
DFV02510-2.7		10	6.35	68	102	15	130	84	82	9	14	8.5	M8	2.7x1	3040	6547	49
DFV03204-4.8	32	4	2.381	54	81	12	94	67	64	6.6	11	6.5	M6	4.8x1	1517	5806	85
DFV03205-4.8		5	3.175	58	85	12	106	71	64	6.6	11	6.5	M8	4.8x1	2249	7612	90
DFV03206-4.8		6	3.969	62	89	12	114	75	68	6.6	11	6.5	M8	4.8x1	3079	9575	95
DFV03208-4.8		8	4.762	66	100	15	139	82	76	9	14	8.5	M8	4.8x1	3962	11547	100
DFV03210-4.8		10	6.35	74	108	15	186	90	82	9	14	9	M8	4.8x1	5620	14649	101
DFV03220-2.7		20	6.35	74	108	16	200	90	82	9	14	8.5	M8	2.7x1	3509	8644	61
DFV04005-4.8	40	5	3.175	67	101	15	109	83	72	9	14	8.5	M8	4.8x1	2468	9586	105
DFV04010-4.8		10	6.35	82	124	18	188	102	94	11	17.5	11	M8	4.8x1	6316	18600	121
DFV04020-2.7		20	6.35	82	124	18	200	102	90	11	17.5	11	M8	2.7x1	3935	10893	74
DFV05005-4.8	50	5	3.175	80	114	15	115	96	82	9	14	8.5	M8	4.8x1	2698	12053	122
DFV05010-4.8		10	6.35	93	135	16	173	113	98	11	17.5	11	M8	4.8x1	7023	23537	144
DFV05020-2.7		20	9.525	105	152	28	221	128	110	14	20	13	M8	2.7x1	7336	19700	90
DFV06310-4.8	63	10	6.35	108	154	22	195	130	110	14	20	13	M8	4.8x1	7860	30430	172
DFV06320-2.7		20	9.525	122	180	28	220	150	130	18	26	17.5	M8	2.7x1	8162	24741	107
DFV08010-4.8	80	10	6.35	130	176	22	195	152	132	14	20	13	M8	4.8x1	8593	38344	201
DFV08020-4.8		20	9.525	143	204	28	340	172	148	18	26	18	M8	4.8x1	15103	57296	226
DFV08020-7.6		20	9.525	143	204	28	460	172	148	18	26	18	M8	3.8x2	22423	90719	351

Note: with sign ★ can be produced in left helix

Dimension Table of COMTOP Ball Screws

(TYPE) : SFI

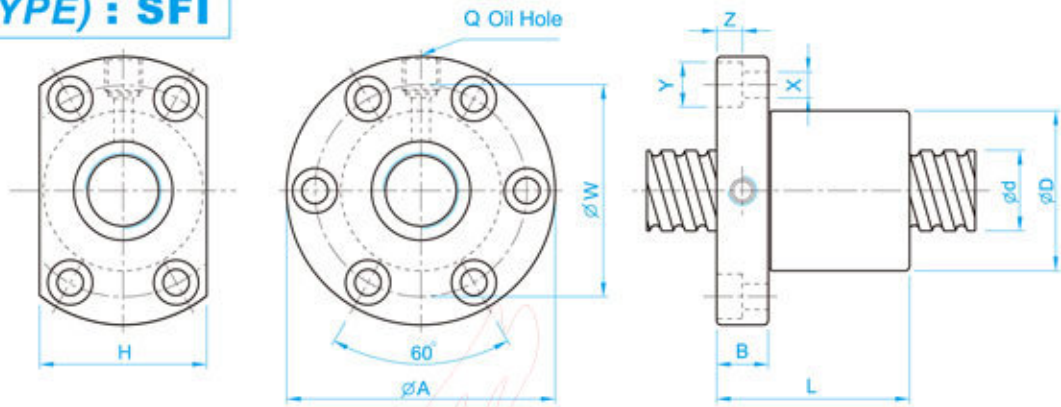

Unit : mm

I: Lead Da: Ball Dia. n: Number of Circuits K: Stiffness (Kgf/μm)
Ca: Basic Dynamic Rating Load (Kgf) Coa: Basic Static Rating Load(Kgf)

Model No.	Dimensions																
	d	l	Da	D	A	B	L	W	H	X	Y	Z	Q	n	Ca	Coa	K
SFI01604-4	16	4	2.381	30	49	10	45	39	34	4.5	8	4.5	M6	1x4	973	2406	32
★ SFI01605-4		5	3.175	30	49	10	50	39	34	4.5	8	4.5	M6	1x4	1380	3052	33
★ SFI01610-3		10	3.175	34	58	10	57	45	34	5.5	9.5	5.5	M6	1x3	1103	2401	27
SFI02004-4	20	4	2.381	34	57	11	46	45	40	5.5	9.5	5.5	M6	1x4	1066	2987	37
★ SFI02005-4		5	3.175	34	57	11	51	45	40	5.5	9.5	5.5	M6	1x4	1551	3875	39
★ SFI0205T-4		5.08	3.175	34	57	11	51	45	40	5.5	9.5	5.5	M6	1x4	1550	3875	39
★ SFI02504-4	25	4	2.381	40	63	11	46	51	46	5.5	9.5	5.5	M6	1x4	1180	3795	43
★ SFI02505-4		5	3.175	40	63	11	51	51	46	5.5	9.5	5.5	M8	1x4	1724	4904	45
SFI02510-4		10	4.762	46	72	12	85	58	52	6.5	11	6.5	M6	1x4	2954	7295	51
SFI03204-4	32	4	2.381	46	72	12	47	58	52	6.5	11	6.5	M6	1x4	1296	4838	49
★ SFI03205-4		5	3.175	46	72	12	52	58	52	6.5	11	6.5	M8	1x4	1922	6343	52
★ SFI03210-4		10	6.35	54	88	15	90	70	62	9	14	8.5	M8	1x4	4805	12208	62
★ SFI04005-4	40	5	3.175	56	90	15	55	72	64	9	14	8.5	M8	1x4	2110	7988	59
★ SFI04010-4		10	6.35	62	104	18	93	82	70	11	17.5	11	M8	1x4	5399	15500	72
★ SFI05010-4	50	10	6.35	72	114	18	93	92	82	11	17.5	11	M8	1x4	6004	19614	83
★ SFI06310-4	63	10	6.35	85	131	22	98	107	95	14	20	13	M8	1x4	6719	25358	95
SFI08010-4	80	10	6.35	105	150	22	98	127	115	14	20	13	M8	1x4	7346	31953	109

Note: with sign ★ can be produced in left helix

Dimension Table of COMTOP Ball Screws

(TYPE) : DFI

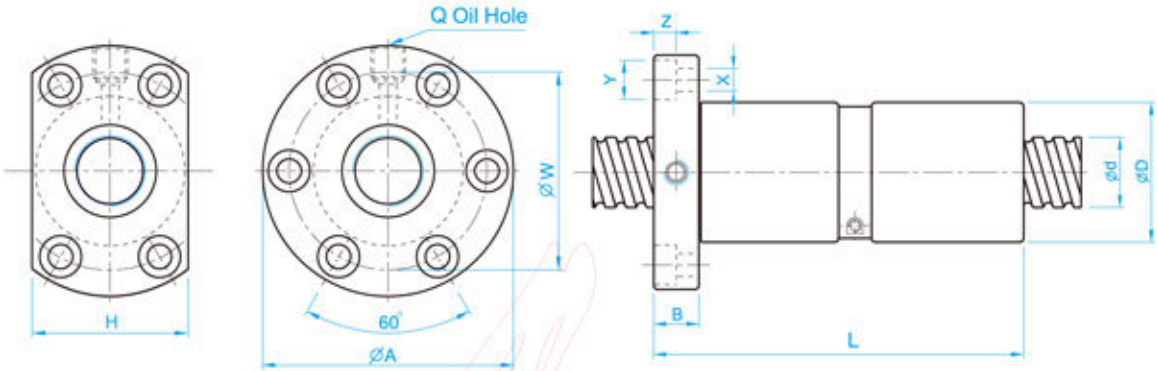

Unit : mm

I: Lead Da: Ball Dia. n: Number of Circuits K: Stiffness (Kgf/μm)
Ca: Basic Dynamic Rating Load (Kgf) Coa: Basic Static Rating Load(Kgf)

Model No.	Dimensions																
	d	l	Da	D	A	B	L	W	H	X	Y	Z	Q	n	Ca	Coa	K
DFI01604-4	16	4	2.381	30	49	10	80	39	34	4.5	8	4.5	M6	1x4	973	2406	44
DFI01605-4		5	3.175	30	49	10	100	39	34	4.5	8	4.5	M6	1x4	1380	3052	44
DFI02004-4	20	4	2.381	34	57	11	80	45	40	5.5	9.5	5.5	M6	1x4	1066	2987	51
★ DFI02005-4		5	3.175	34	57	11	101	45	40	5.5	9.5	5.5	M6	1x4	1551	3875	52
DFI02504-4	25	4	2.381	40	63	11	80	51	46	5.5	9.5	5.5	M6	1x4	1180	3795	60
★ DFI02505-4		5	3.175	40	63	11	101	51	46	5.5	9.5	5.5	M8	1x4	1724	4904	62
DFI02510-4		10	4.762	46	72	12	145	58	52	6.5	11	6.5	M6	1x4	2954	7295	68
DFI03204-4	32	4	2.381	46	72	12	80	58	52	6.5	11	6.5	M6	1x4	1296	4838	69
★ DFI03205-4		5	3.175	46	72	12	102	58	52	6.5	11	6.5	M8	1x4	1922	6343	72
DFI03210-4		10	6.35	54	88	15	162	70	62	9	14	8.5	M8	1x4	4805	12208	83
★ DFI04005-4	40	5	3.175	56	90	15	105	72	64	9	14	8.5	M8	1x4	2110	7988	84
DFI04010-4		10	6.35	62	104	18	165	82	70	11	17.5	11	M8	1x4	5399	15500	99
DFI05010-4	50	10	6.35	72	114	18	171	92	82	11	17.5	11	M8	1x4	6004	19614	115
★ DFI06310-4	63	10	6.35	85	131	22	182	107	95	14	20	13	M8	1x4	6719	25358	135
★ DFI08010-4	80	10	6.35	105	150	22	182	127	115	14	20	13	M8	1x4	7346	31953	156

Note: with sign ★ can be produced in left helix

Dimension Table of COMTOP Ball Screws

(TYPE) : SFU(DIN 69051 FORM B)

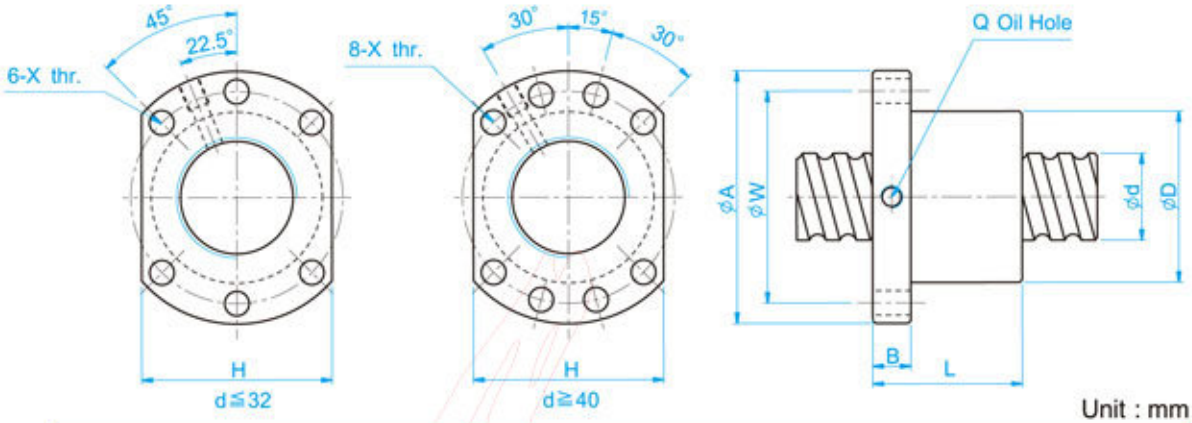

Unit : mm

l: Lead Da: Ball Dia. n: Number of Circuits K: Stiffness (Kgf/μm)
Ca: Basic Dynamic Rating Load (Kgf) Coa: Basic Static Rating Load(Kgf)

	Model No.	Dimensions														
		d	l	Da	D	A	B	L	W	X	H	Q	n	Ca	Coa	K
	SFU01204-4	12	4	2.5	24	40	10	40	32	4.5	30		1x4	902	1884	26
★	SFU01604-4	16	4	2.381	28	48	10	40	38	5.5	40	M6	1x4	973	2406	32
★	SFU01605-4		5	3.175	28	48	10	50	38	5.5	40	M6	1x4	1380	3052	32
★	SFU01610-3		10	3.175	28	48	10	57	38	5.5	40	M6	1x3	1103	2401	26
	SFU02004-4	20	4	2.381	36	58	10	42	47	6.6	44	M6	1x4	1066	2987	38
★	SFU02005-4		5	3.175	36	58	10	51	47	6.6	44	M6	1x4	1551	3875	39
	SFU02504-4	25	4	2.381	40	62	10	42	51	6.6	48	M6	1x4	1180	3795	43
★	SFU02505-4		5	3.175	40	62	10	51	51	6.6	48	M6	1x4	1724	4904	45
	SFU02506-4		6	3.969	40	62	10	54	51	6.6	48	M6	1x4	2318	6057	47
	SFU02508-4		8	4.762	40	62	10	63	51	6.6	48	M6	1x4	2963	7313	49
★	SFU02510-4		10	4.762	40	62	12	85	51	6.6	48	M6	1x4	2954	7295	50
	SFU03204-4	32	4	2.381	50	80	12	44	65	9	62	M6	1x4	1296	4838	51
★	SFU03205-4		5	3.175	50	80	12	52	65	9	62	M6	1x4	1922	6343	54
	SFU03206-4		6	3.969	50	80	12	57	65	9	62	M6	1x4	2632	7979	57
	SFU03208-4		8	4.762	50	80	12	65	65	9	62	M6	1x4	3387	9622	60
★	SFU03210-4		10	6.35	50	80	12	90	65	9	62	M6	1x4	4805	12208	61
★	SFU04005-4	40	5	3.175	63	93	14	55	78	9	70	M8	1x4	2110	7988	63
	SFU04006-4		6	3.969	63	93	14	60	78	9	70	M6	1x4	2873	9913	66
	SFU04008-4		8	4.762	63	93	14	67	78	9	70	M6	1x4	3712	11947	70
★	SFU04010-4		10	6.35	63	93	14	93	78	9	70	M8	1x4	5399	15500	73
★	SFU05010-4	50	10	6.35	75	110	16	93	93	11	85	M8	1x4	6004	19614	85
★	SFU05020-4		20	7.144	75	110	16	138	93	11	85	M8	1x4	7142	22588	94
	SFU06310-4	63	10	6.35	90	125	18	98	108	11	95	M8	1x4	6719	25358	99
	SFU06320-4		20	9.525	95	135	20	149	115	13.5	100	M8	1x4	11444	36653	112
★	SFU08010-4	80	10	6.35	105	145	20	98	125	13.5	110	M8	1x4	7346	31953	109
	SFU08020-4		20	9.525	125	165	25	154	145	13.5	130	M8	1x4	12911	47747	138
	SFU10020-4	100	20	9.525	150	202	30	180	170	17.5	155	M8	1x4	14303	60698	162

Note: with sign ★ can be produced in left helix

Dimension Table of COMTOP Ball Screws

(TYPE) : DFU(DIN 69051 FORM B)

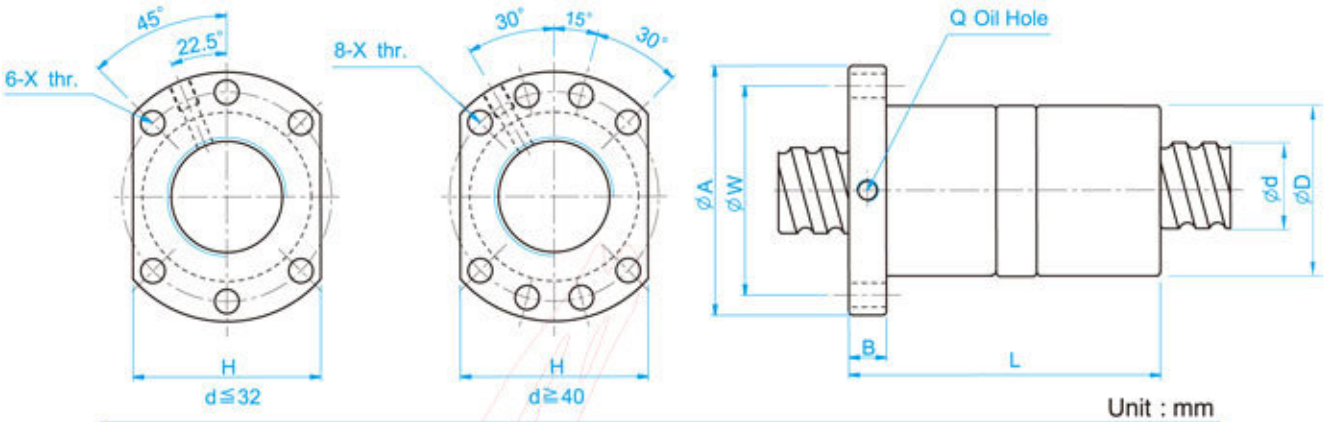

Unit : mm

l: Lead Da: Ball Dia. n: Number of Circuits K: Stiffness (Kgf/μm)
Ca: Basic Dynamic Rating Load (Kgf) Coa: Basic Static Rating Load(Kgf)

Model No.	Dimensions														
	d	l	Da	D	A	B	L	W	X	H	Q	n	Ca	Coa	K
DFU01604-4	16	4	2.381	28	48	10	80	38	5.5	40	M6	1x4	973	2406	43
★ DFU01605-4		5	3.175	28	48	10	100	38	5.5	40	M6	1x4	1380	3052	44
★ DFU01610-3		10	3.175	28	48	10	118	38	5.5	40	M6	1x3	1103	2401	35
DFU02004-4	20	4	2.381	36	58	10	80	47	6.6	44	M6	1x4	1066	2987	51
★ DFU02005-4		5	3.175	36	58	10	101	47	6.6	44	M6	1x4	1551	3875	53
DFU02504-4	25	4	2.381	40	62	10	80	51	6.6	48	M6	1x4	1180	3795	60
★ DFU02505-4		5	3.175	40	62	10	101	51	6.6	48	M6	1x4	1724	4904	62
DFU02506-4		6	3.969	40	62	10	105	51	6.6	48	M6	1x4	2318	6057	64
DFU02508-4		8	4.762	40	62	10	120	51	6.6	48	M6	1x4	2963	7313	67
★ DFU02510-4		10	4.762	40	62	12	145	51	6.6	48	M6	1x4	2954	7295	67
DFU03204-4	32	4	2.381	50	80	12	80	65	9	62	M6	1x4	1296	4838	71
★ DFU03205-4		5	3.175	50	80	12	102	65	9	62	M6	1x4	1922	6343	74
DFU03206-4		6	3.969	50	80	12	105	65	9	62	M6	1x4	2632	7979	78
DFU03208-4		8	4.762	50	80	12	122	65	9	62	M6	1x4	3387	9622	82
★ DFU03210-4		10	6.35	50	80	12	162	65	9	62	M6	1x4	4805	12208	82
★ DFU04005-4	40	5	3.175	63	93	14	105	78	9	70	M8	1x4	2110	7988	87
DFU04006-4		6	3.969	63	93	14	108	78	9	70	M6	1x4	2873	9913	91
DFU04008-4		8	4.762	63	93	14	132	78	9	70	M6	1x4	3712	11947	96
★ DFU04010-4		10	6.35	63	93	14	165	78	9	70	M8	1x4	5399	15500	99
★ DFU05010-4	50	10	6.35	75	110	16	171	93	11	85	M8	1x4	6004	19614	117
★ DFU05020-4		20	7.144	75	110	16	280	93	11	85	M8	1x4	7142	22588	126
★ DFU06310-4	63	10	6.35	90	125	18	182	108	11	95	M8	1x4	6719	25358	139
DFU06320-4		20	9.525	95	135	20	290	115	13.5	100	M8	1x4	11444	36653	152
★ DFU08010-4	80	10	6.35	105	145	20	182	125	13.5	110	M8	1x4	7346	31953	156
DFU08020-4		20	9.525	125	165	25	295	145	13.5	130	M8	1x4	12911	47747	187
DFU10020-4	100	20	9.525	150	202	30	340	170	17.5	155	M8	1x4	14303	60698	222

Note: with sign ★ can be produced in left helix

COMTOP 滾珠螺桿規格表 Dimension Table of COMTOP Ball Screws

型式 (TYPE) : SFK

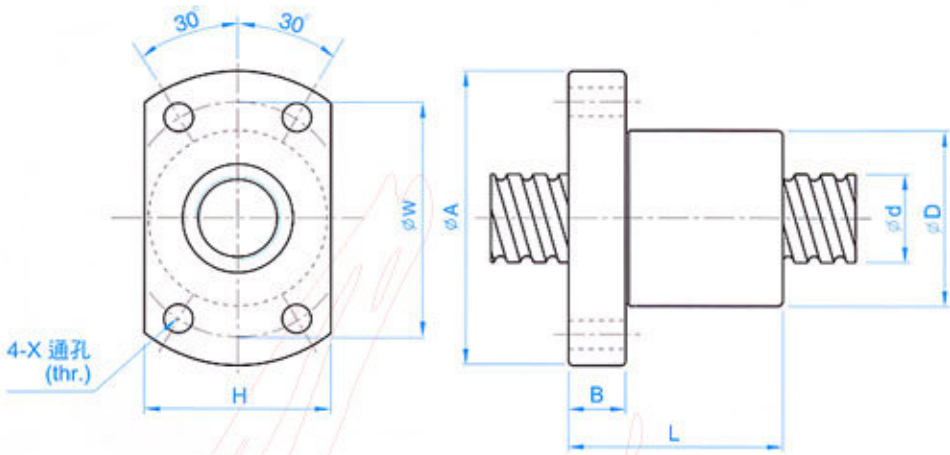

單位(Unit) : mm

I: 導程 Lead Da: 珠徑 Ball Dia. n: 珠圈數 Number of Circuits K: 剛性 Stiffness (Kgf/μm)
Ca: 動額定負荷 Basic Dynamic Rating Load (Kgf) Coa: 靜額定負荷 Basic Static Rating Load(Kgf)

型號 Model No.	滾珠螺桿、螺帽之基準數據 Dimensions																
	d	l	Da	D	A	B	L	W	H	X	Y	Z	Q	n	Ca	Coa	K
★ SFK00401	4	1	0.8	10	20	3	12	15	14	2.9	–	–	–	2	40	51	2.8
★ SFK00601	6	1	0.8	12	24	3.5	15	18	16	3.4	–	–	–	3	73	121	6.8
★ SFK00801	8	1	0.8	14	27	4	16	21	18	3.4	–	–	–	4	93	173	10.7
★ SFK00802		2	1.2	14	27	4	16	21	18	3.4	–	–	–	3	135	225	8.2
★ SFK0082.5		2.5	1.2	16	29	4	26	23	20	3.4	–	–	–	3	177	278	8.2
★ SFK01002	10	2	1.2	18	35	5	28	27	22	4.5	–	–	–	3	185	305	10.1
★ SFK01004		4	2	26	46	10	34	36	28	4.5	8	4.5	M6	3	395	590	10.4
★ SFK01202		2	1.2	20	37	5	28	29	24	4.5	–	–	–	4	173	317	16.1
★ SFK01402	14	2	1.2	21	40	6	23	31	26	5.5	–	–	–	4	287	633	18.6
SFK01602	16	2	1.2	25	43	10	40	35	29	5.5	–	–	–	4	253	670	21.2

註: 1. ø4 ~ ø6 螺帽無刮刷器。
2. 螺帽標準品無刮刷器，如需刮刷器，請告知業務人員。

備註:有標註★記號者可製作左螺紋
Note: with sign★ can produce left helix

Note : 1. Nuts do not have seals from ø4 to ø6.
Note : 2. TBI Standard nuts are no seals, if required, please advise.

Dimension Table of COMTOP Ball Screws

(TYPE) : DFT

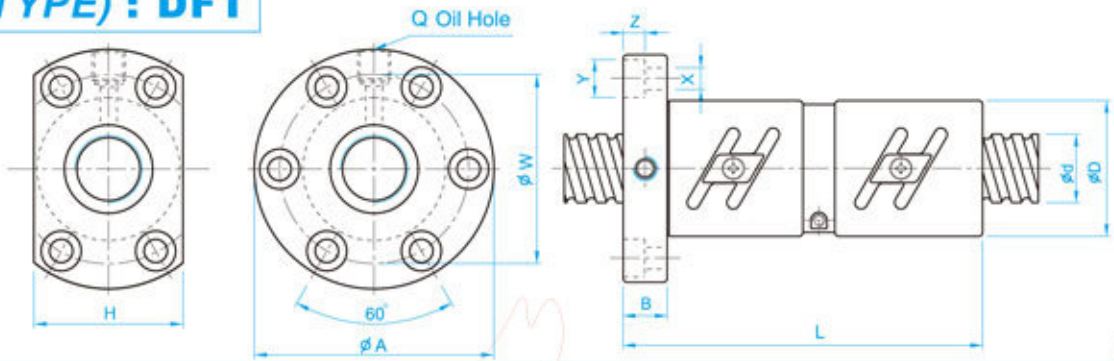

Unit : mm

I: Lead Da: Ball Dia. n: Number of Circuits K: Stiffness (Kgf/µm)
Ca: Basic Dynamic Rating Load (Kgf) Coa: Basic Static Rating Load(Kgf)

Model No.	Dimensions																
	d	l	Da	D	A	B	L	W	H	X	Y	Z	Q	n	Ca	Coa	K
DFT02005-5	20	5	3.175	44	67	11	105	55	52	5.5	9.5	5.5	M6	2.5x2	1879	4844	66
DFT02505-5	25	5	3.175	50	73	11	105	61	52	5.5	9.5	5.5	M8	2.5x2	2089	6129	78
DFT02510-2.5		10	6.35	68	102	15	130	84	82	9	14	8.5	M8	2.5x1	2845	6062	46
DFT03205-5	32	5	3.175	58	85	12	106	71	64	6.6	11	6.5	M8	2.5x2	2329	7929	94
DFT03206-5		6	3.969	62	89	12	123	75	68	6.6	11	6.5	M8	2.5x2	3189	9974	99
DFT03208-5		8	4.762	66	100	15	154	82	76	9	14	8.5	M8	2.5x2	4103	12028	104
DFT03210-5		10	6.35	74	108	16	187	90	82	9	14	8.5	M8	2.5x2	5821	15259	105
DFT03220-2.5		20	6.35	74	108	16	198	90	82	9	14	8.5	M8	2.5x1	3284	8004	57
DFT04005-5	40	5	3.175	67	101	15	109	83	72	9	14	8.5	M8	2.5x2	2556	9985	110
DFT04010-5		10	6.35	82	124	18	188	102	94	11	17.5	11	M8	2.5x2	6541	19375	126
DFT04020-2.5		20	6.35	82	124	18	200	102	90	11	17.5	11	M8	2.5x1	3683	10086	69
DFT05010-5	50	10	6.35	93	135	18	193	113	98	11	17.5	11	M8	2.5x2	7274	24518	149
DFT05020-2.5		20	9.525	105	152	28	225	128	110	14	20	13	M8	2.5x1	6867	18241	84
DFT06310-5	63	10	6.35	108	154	22	197	130	110	14	20	13	M8	2.5x2	8141	31697	179
DFT06320-2.5		20	9.525	122	180	28	227	150	130	18	26	17.5	M8	2.5x1	7639	22908	100
DFT08010-5	80	10	6.35	130	176	22	195	152	132	14	20	13	M8	2.5x2	8900	39942	209
DFT08020-5		20	9.525	143	204	28	340	172	148	18	26	18	M8	2.5x2	15642	59684	235

Dimension Table of COMTOP Ball Screws

(TYPE) : SFE

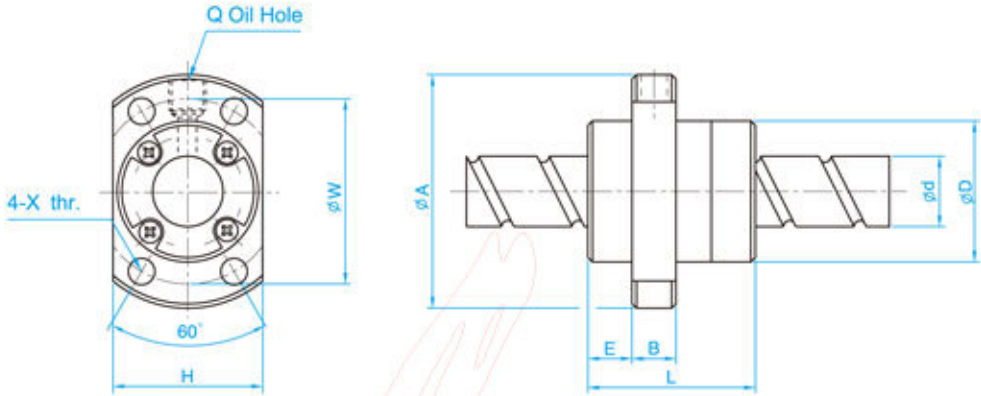

Unit : mm

l: Lead Da: Ball Dia. n: Number of Circuits K: Stiffness (Kgf/μm)
Ca: Basic Dynamic Rating Load (Kgf) Coa: Basic Static Rating Load(Kgf)

Model No.	Dimensions															
	d	l	Da	D	A	E	B	L	X	W	H	Q	n	Ca	Coa	K
SFE01616-3	16	16	2.778	32	53	10.1	10	38	4.5	42	34	M6	1.7x2	1021	2409	29
SFE01616-6		16	2.778	32	53	10.1	10	38	4.5	42	34	M6	1.7x4	1853	4818	57
SFE01632-3	16	32	3.175	34	55	10.5	10	34	5.5	45	36	M6	0.7x2	518	1094	11
SFE01632-6		32	3.175	34	55	10.5	10	34	5.5	45	36	M6	0.7x4	939	2188	21
SFE02020-3	20	20	3.175	39	62	12	10	47	5.5	50	41	M6	1.7x2	1321	3320	35
SFE02020-6		20	3.175	39	62	12	10	47	5.5	50	41	M6	1.7x4	2397	6640	67
SFE02040-3	20	40	3.175	38	58	11	10	41	5.5	48	40	M6	0.7x2	582	1397	13
SFE02040-6		40	3.175	38	58	11	10	41	5.5	48	40	M6	0.7x4	1056	2794	26
SFE02525-3	25	25	3.969	47	74	14	12	57	6.6	60	49	M6	1.7x2	1974	5188	43
SFE02525-6		25	3.969	47	74	14	12	57	6.6	60	49	M6	1.7x4	3583	10377	83
SFE02550-3	25	50	3.969	46	70	13	12	50	6.6	58	48	M6	0.7x2	870	2183	16
SFE02550-6		50	3.969	46	70	13	12	50	6.6	58	48	M6	0.7x4	1579	4366	32
SFE03232-3	32	32	4.762	58	92	17	12	71	9	74	60	M6	1.7x2	2876	8207	54
SFE03232-6		32	4.762	58	92	17	12	71	9	74	60	M6	1.7x4	5220	16414	106
SFE03264-3	32	64	4.762	58	92	15.5	12	62	9	74	60	M6	0.7x2	1225	3282	20
SFE03264-6		64	4.762	58	92	15.5	12	62	9	74	60	M6	0.7x4	2223	6565	39
SFE04040-3	40	40	6.35	73	114	19.5	15	89	11	93	75	M6	1.7x2	4600	13281	66
SFE04040-6		40	6.35	73	114	19.5	15	89	11	93	75	M6	1.7x4	8348	26561	128
SFE05050-3	50	50	7.938	90	135	21.5	20	107	14	112	92	M6	1.7x2	6512	19430	80
SFE05050-6		50	7.938	90	135	21.5	20	107	14	112	92	M6	1.7x4	11820	38859	155

Note: 1. "-3" means 2 starts, "-6" means 4 starts.
Note: 2. COMTOP Standard nuts are without seals, if required, please advise.

Dimension Table of COMTOP Ball Screws

Used for Milling Machine Only

TYPE: SFM

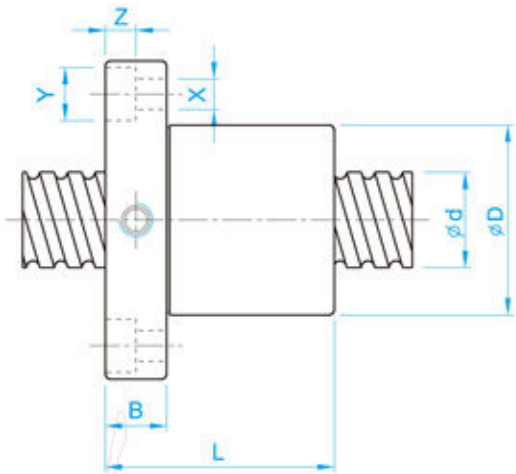

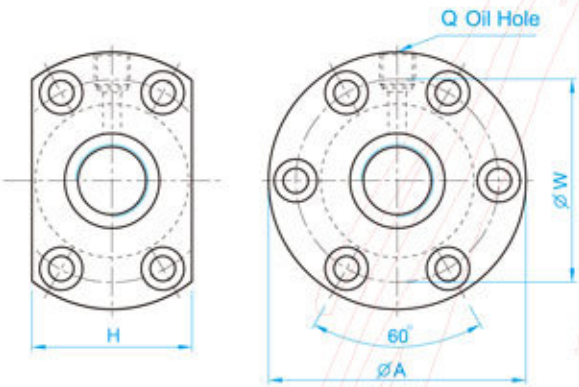

TYPE: DFM

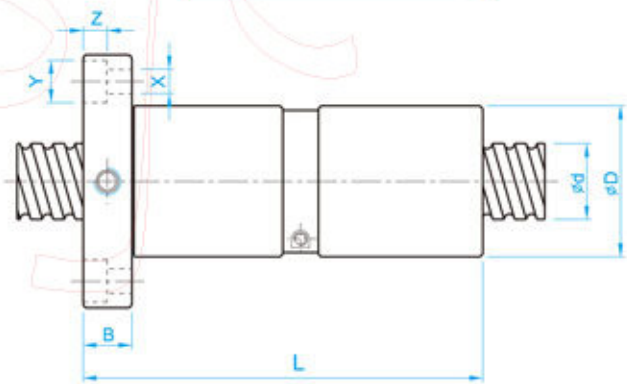

Unit : mm

l: Lead Da: Ball Dia. n: Number of Circuits K: Stiffness (Kgf/µm)
Ca: Basic Dynamic Rating Load (Kgf) Coa: Basic Static Rating Load(Kgf)

Model No.	Dimensions																
	d	l	Da	D	A	B	L	W	H	X	Y	Z	Q	n	Ca	Coa	K
★ SFM03205-4	32	5	3.175	48	74	12	52	60	60	6.5	11	6.5	M8	1x4	1922	6343	53
★ SFM0325T-4		5.08	3.175	48	74	12	53	60	60	6.5	11	6.5	M8	1x4	1922	6343	53
★ DFM03205-4	32	5	3.175	48	74	12	102	60	60	6.5	11	6.5	M8	1x4	1922	6343	73
★ DFM0325T-4		5.08	3.175	48	74	12	104	60	60	6.5	11	6.5	M8	1x4	1922	6343	73

Note: with sign ★ can be produced in left helix

Dimension Table of COMTOP Ball Screws

(TYPE) : SFK

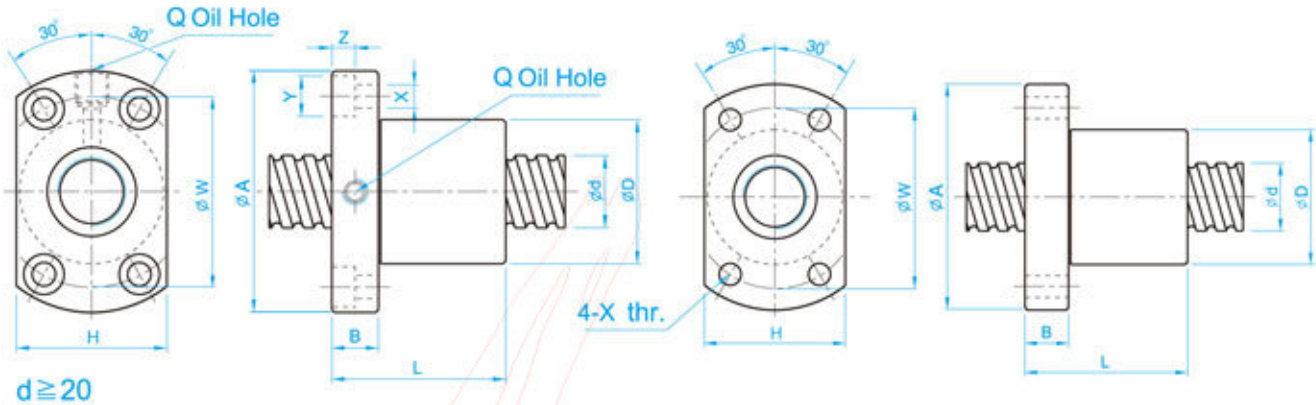

(SFK01004)

Unit : mm

I: Lead Da: Ball Dia. n: Number of Circuits K: Stiffness (Kgf/μm)
Ca: Basic Dynamic Rating Load (Kgf) Coa: Basic Static Rating Load(Kgf)

Model No.	Dimensions																
	d	l	Da	D	A	B	L	W	H	X	Y	Z	Q	n	Ca	Coa	K
SFK00401	4	1	0.8	10	20	3	12	15	14	2.9	–	–	–	1x2	64	97	5
SFK00601	6	1	0.8	12	24	3.5	15	18	16	3.4	–	–	–	1x3	111	224	9
★ SFK00801	8	1	0.8	14	27	4	16	21	18	3.4	–	–	–	1x4	161	403	14
★ SFK00802		2	1.2	14	27	4	16	21	18	3.4	–	–	–	1x3	222	458	13
SFK0082.5		2.5	1.2	16	29	4	26	23	20	3.4	–	–	–	1x3	221	457	13
★ SFK01002	10	2	1.2	18	35	5	28	27	22	4.5	–	–	–	1x3	243	569	15
SFK01004		4	2	26	46	10	34	36	28	4.5	8	4.5	M6	1x3	468	905	17
★ SFK01202	12	2	1.2	20	37	5	28	29	24	4.5	–	–	–	1x4	334	906	22
SFK01402	14	2	1.2	21	40	6	23	31	26	5.5	–	–	–	1x4	354	1053	24
SFK01602	16	2	1.2	25	43	10	40	35	29	5.5	–	–	M6	1x4	373	1200	26

Note: 1. COMTOP Standard nuts are without seals, if required, please advise.

Note: with sign ★ can be produced in left helix

Dimension Table of COMTOP Ball Screws

(TYPE) : BSH

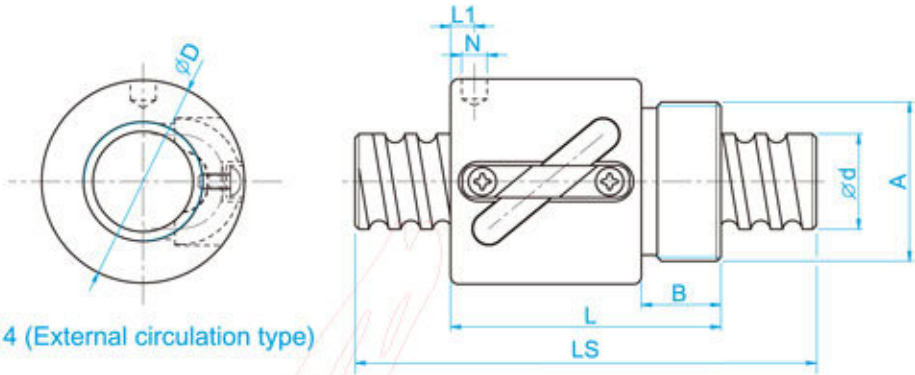

d≦14 (External circulation type)

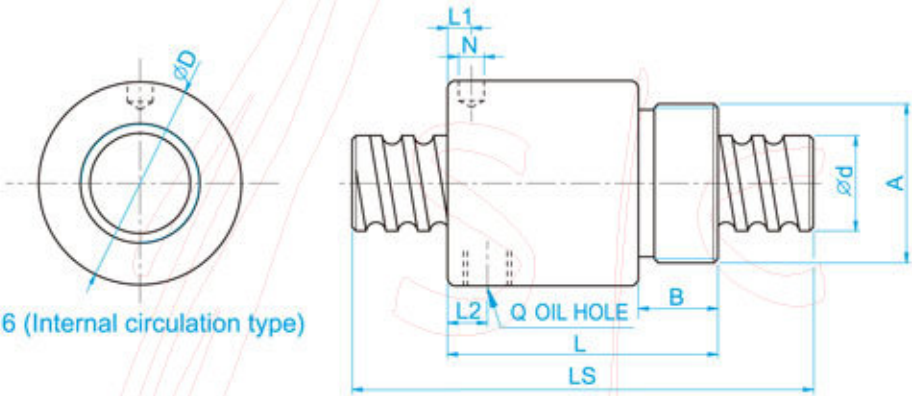

d≧16 (Internal circulation type)

Unit : mm

d:Screw O.D. l: Lead Da: Ball Dia. n: Number of Circuits Ls: Screw Length
Ca: Basic Dynamic Rating Load (Kgf) Coa: Basic Static Rating Load(Kgf)

Model No.	Dimensions														
	d	l	Da	D	A	B	L	L1	N	L2	Q	n	Ca	Coa	K
BSHR0082.5-2.5	8	2.5	1.2	17.5	M15x1P	7.5	23.5	10	3	-	-	2.5x1	189	381	11
BSHR01002-3.5	10	2	1.2	19.5	M17x1P	7.5	22	3	3.2	-	-	3.5x1	277	664	17
BSHR01004-2.5		4	2	25	M20x1P	10	34	3	3	-	-	2.5x1	400	754	14
BSHR01204-3.5	12	4	2.5	25.5	M20x1P	10	34	13	3	-	-	3.5x1	804	1649	23
BSHR01205-3.5		5	2.5	25.5	M20x1P	10	39	16.25	3	-	-	3.5x1	801	1644	24
BSHR01404-3.5	14	4	2.381	32.1	M25x1.5P	10	35	13	3	-	-	3.5x1	804	1803	26
BSHR01604-3	16	4	2.381	29	M22x1.5P	8	32	4	3.2	-	-	1x3	759	1804	24
BSHR01605-3		5	3.175	32.5	M26x1.5P	12	42	19.25	3	-	-	1x3	1077	2289	25
BSHR02005-3	20	5	3.175	38	M35x1.5P	15	45	20.3	3	-	-	1x3	1211	2906	30
BSHR02505-4	25	5	3.175	43	M40x1.5P	19	69	32.11	3	8	M6	1x4	1724	4904	37

Note : Nuts do not attach seals from ∅ 8 to ∅16.

Dimension Table of COMTOP Ball Screws

(TYPE) : XSVR01210

Ground Ball Screw with end machining

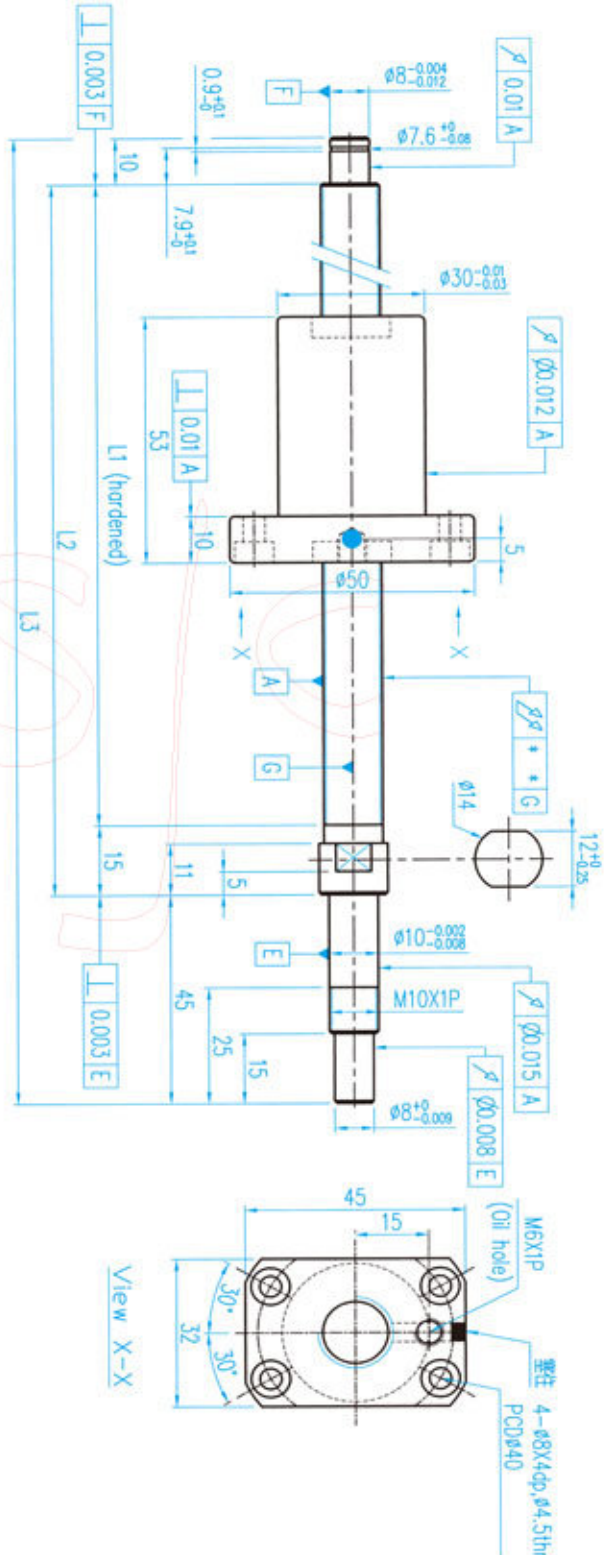

Ball center dia.	12.85
Ball dia.	2.5
Pitch	10
Number of turns	2.7X1
Lead angle	13.91°
Helix dir.	R
Spring force	0.1~0.2Kg
Preload	25Kgf
Dynamic (Ca)	513
Static (Coa)	1004
Grade	0.018

Unit : mm

Lead (mm)	Model No.	Shaft Length (mm)			Slant of Axle Center
		L1	L2	L3	L1
100	XSVR01210B1DGC5-230-P2	160	175	230	0.035
150	XSVR01210B1DGC5-280-P2	210	225	280	0.035
250	XSVR01210B1DGC5-380-P2	310	325	380	0.050
350	XSVR01210B1DGC5-480-P2	410	425	480	0.060
450	XSVR01210B1DGC5-580-P2	510	525	580	0.075

COMTOP

Dimension Table of COMTOP Ball Screws

(TYPE) : XSVR01510

Ground Ball Screw with end machining

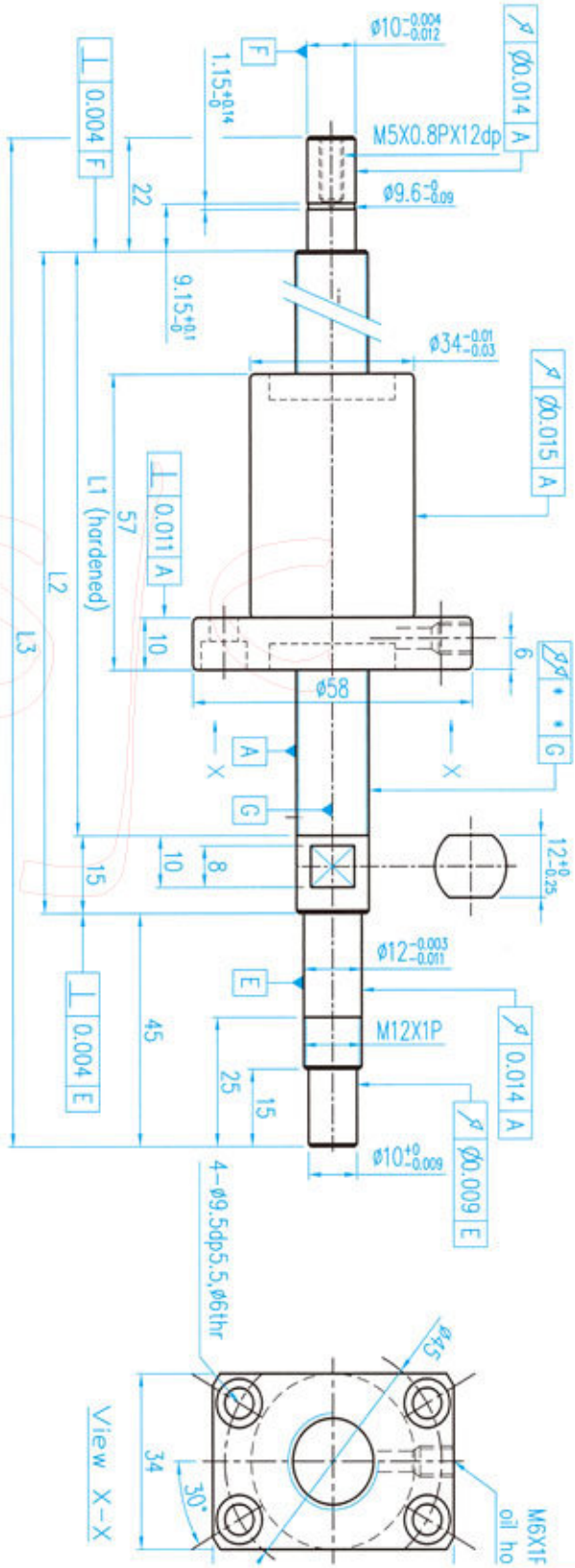

Ball center dia.	15.5
Ball dia.	3.175
Pitch	10
Number of turns	2.7X1
Lead angle	11.6°
Helix dir.	R
Spring force	0.1~0.3Kg
Preload	38Kgf
Dynamic (Ca)	802
Static (Coa)	1634
Grade	0.018

Unit : mm

Lead (mm)	Model No.	Shaft Length (mm)			Slant of Axle Center
		L1	L2	L3	L'
100	XSVR01510B1DGC5-271-P2	189	204	271	0.025
150	XSVR01510B1DGC5-321-P2	239	254	321	0.035
200	XSVR01510B1DGC5-371-P2	289	304	371	0.035
250	XSVR01510B1DGC5-421-P2	339	354	421	0.040
300	XSVR01510B1DGC5-471-P2	389	404	471	0.040
350	XSVR01510B1DGC5-521-P2	439	454	521	0.050
400	XSVR01510B1DGC5-571-P2	489	504	571	0.050
450	XSVR01510B1DGC5-621-P2	539	554	621	0.050
500	XSVR01510B1DGC5-671-P2	589	604	671	0.065
550	XSVR01510B1DGC5-721-P2	639	654	721	0.065
600	XSVR01510B1DGC5-771-P2	689	704	771	0.065
700	XSVR01510B1DGC5-871-P2	789	804	871	0.085
800	XSVR01510B1DGC5-971-P2	889	904	971	0.085

Dimension Table of COMTOP Ball Screws

(TYPE) : XSVR01520

Ground Ball Screw with end machining

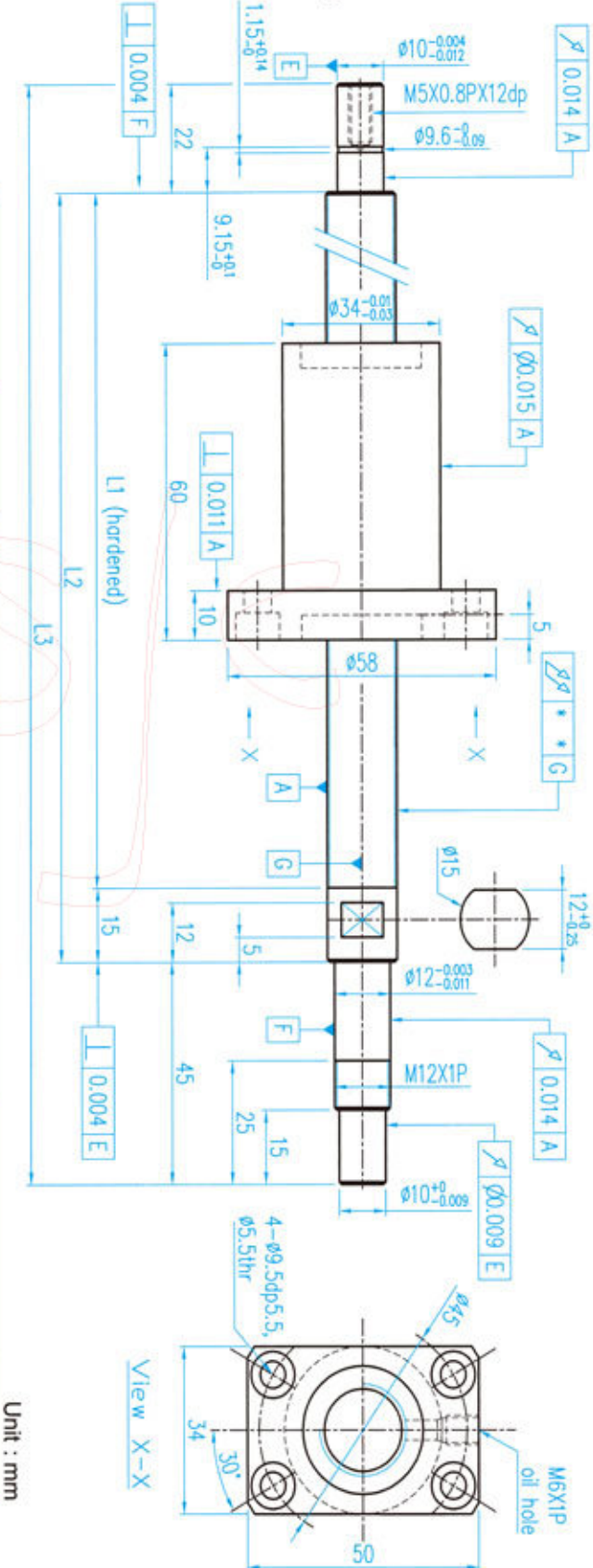

Ball center dia.	15.5
Ball dia.	3.175
Pitch	20
Number of turns	1.8X1
Lead angle	22.33°
Helix dir.	R
Spring force	0.1~0.3Kg
Preload	38Kgf
Dynamic (Ca)	549
Static (Coa)	1097
Grade	0.018

Unit : mm

Lead (mm)	Model No.	Shaft Length (mm)			Slant of Axle Center
		L1	L2	L3	L/
100	XSVR01520A1DGC5-271-P2	189	204	271	0.025
150	XSVR01520A1DGC5-321-P2	239	254	321	0.035
200	XSVR01520A1DGC5-371-P2	289	304	371	0.035
250	XSVR01520A1DGC5-421-P2	339	354	421	0.040
300	XSVR01520A1DGC5-471-P2	389	404	471	0.040
350	XSVR01520A1DGC5-521-P2	439	454	521	0.050
400	XSVR01520A1DGC5-571-P2	489	504	571	0.050
450	XSVR01520A1DGC5-621-P2	539	554	621	0.050
500	XSVR01520A1DGC5-671-P2	589	604	671	0.065
550	XSVR01520A1DGC5-721-P2	639	654	721	0.065
600	XSVR01520A1DGC5-771-P2	689	704	771	0.065
700	XSVR01520A1DGC5-871-P2	789	804	871	0.085
800	XSVR01520A1DGC5-971-P2	889	904	971	0.085

COMTOP

Dimension Table of COMTOP Ball Screws

(TYPE) : XSVR02010

Ground Ball Screw with end machining

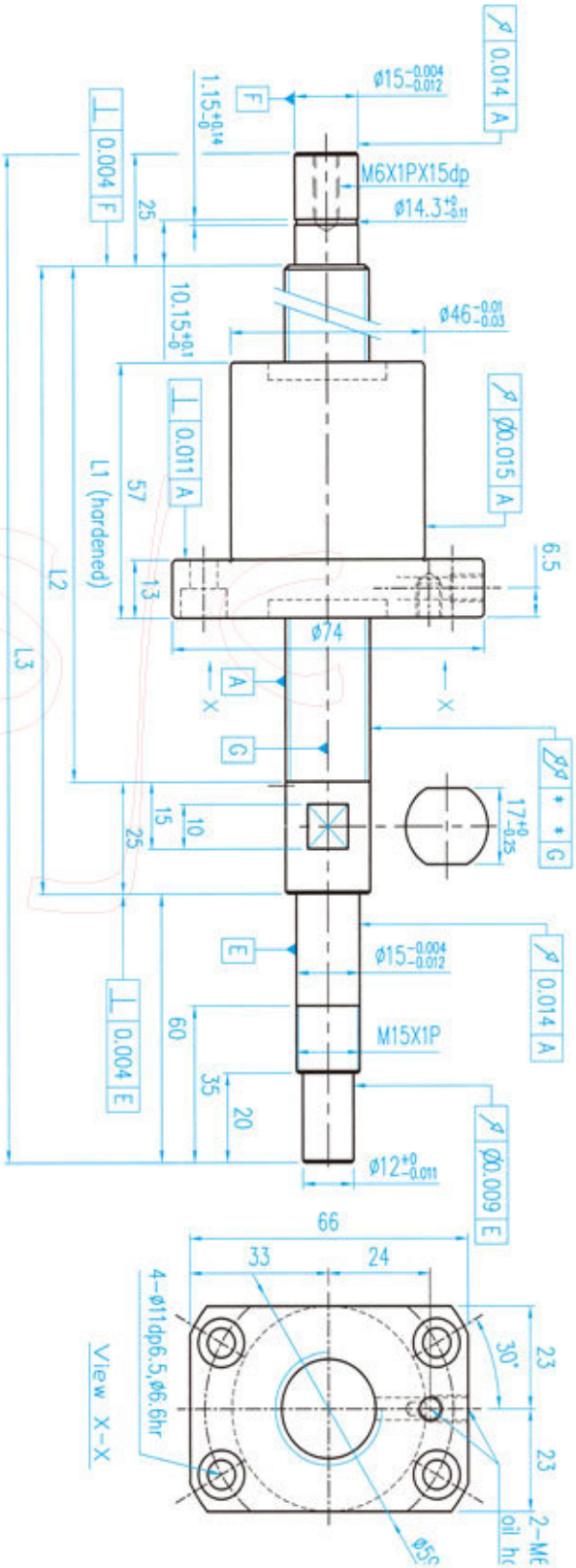

Ball center dia.	21.35
Ball dia.	3.969
Pitch	10
Number of turns	2.7X1
Lead angle	8.48°
Helix dir.	R
Spring force	0.1~0.3Kg
Preload	43kgf
Dynamic (Ca)	1252
Static (Coa)	2748
Grade	0.018

Unit : mm

Lead (mm)	Model No.	Shaft Length (mm)			Slant of Axle Center
		L1	L2	L3	U
200	XSVR02010B1DGC5-399-P2	289	314	399	0.035
300	XSVR02010B1DGC5-499-P2	389	414	499	0.040
400	XSVR02010B1DGC5-599-P2	489	514	599	0.050
500	XSVR02010B1DGC5-699-P2	589	614	699	0.065
600	XSVR02010B1DGC5-799-P2	689	714	799	0.065
700	XSVR02010B1DGC5-899-P2	789	814	899	0.085
800	XSVR02010B1DGC5-999-P2	889	914	999	0.085
900	XSVR02010B1DGC5-1099-P2	989	1014	1099	0.110
1000	XSVR02010B1DGC5-1199-P2	1089	1114	1199	0.110

Dimension Table of COMTOP Ball Screws

(TYPE) : XSVR02020

Ground Ball Screw with end machining

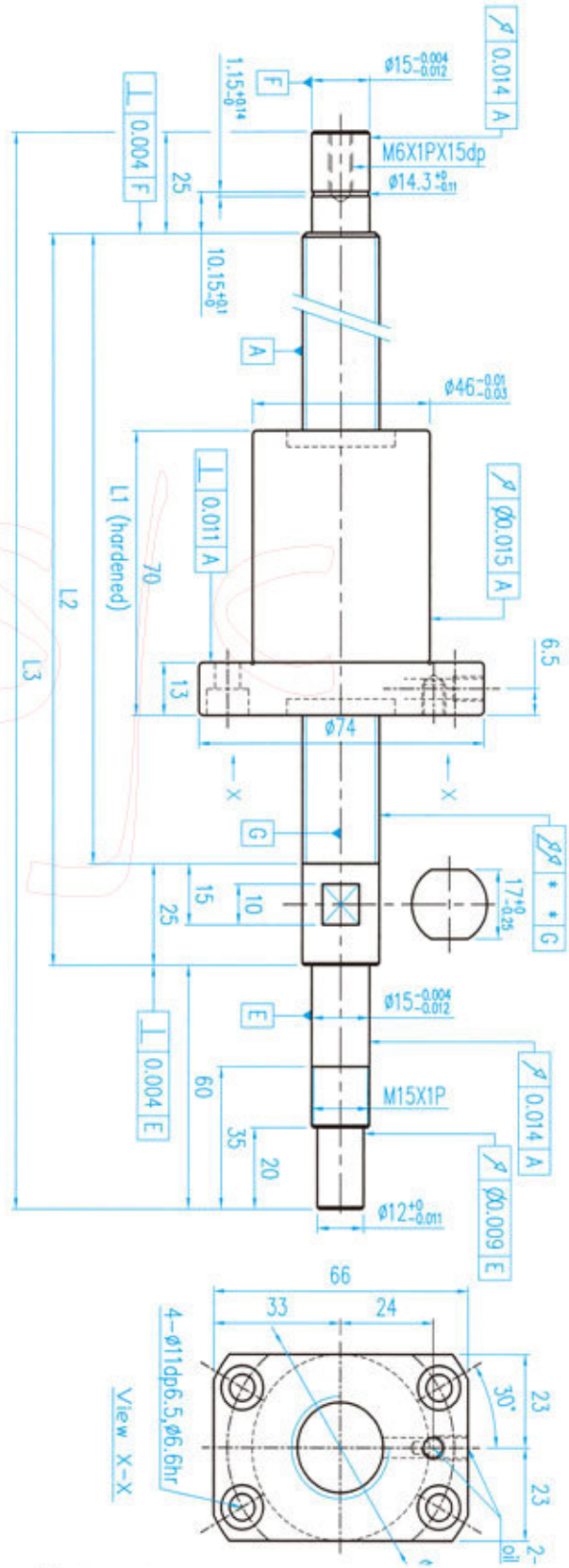

Ball center dia.	20.75
Ball dia.	3.175
Pitch	20
Number of turns	1.8X1
Lead angle	17.05°
Helix dir.	R
Spring force	0.1~0.3Kg
Preload	31 Kgf
Dynamic (Ca)	630
Static (Coa)	1422
Grade	0.018

Unit : mm

Lead (mm)	Model No.	Shaft Length (mm)			Slant of Axle Center
		L1	L2	L3	U
200	XSVR02020A1DGC5-399-P2	289	314	399	0.035
300	XSVR02020A1DGC5-499-P2	389	414	499	0.040
400	XSVR02020A1DGC5-599-P2	489	514	599	0.050
500	XSVR02020A1DGC5-699-P2	589	614	699	0.065
600	XSVR02020A1DGC5-799-P2	689	714	799	0.065
700	XSVR02020A1DGC5-899-P2	789	814	899	0.085
800	XSVR02020A1DGC5-999-P2	889	914	999	0.085
900	XSVR02020A1DGC5-1099-P2	989	1014	1099	0.110
1000	XSVR02020A1DGC5-1199-P2	1089	1114	1199	0.110

Linear Guide

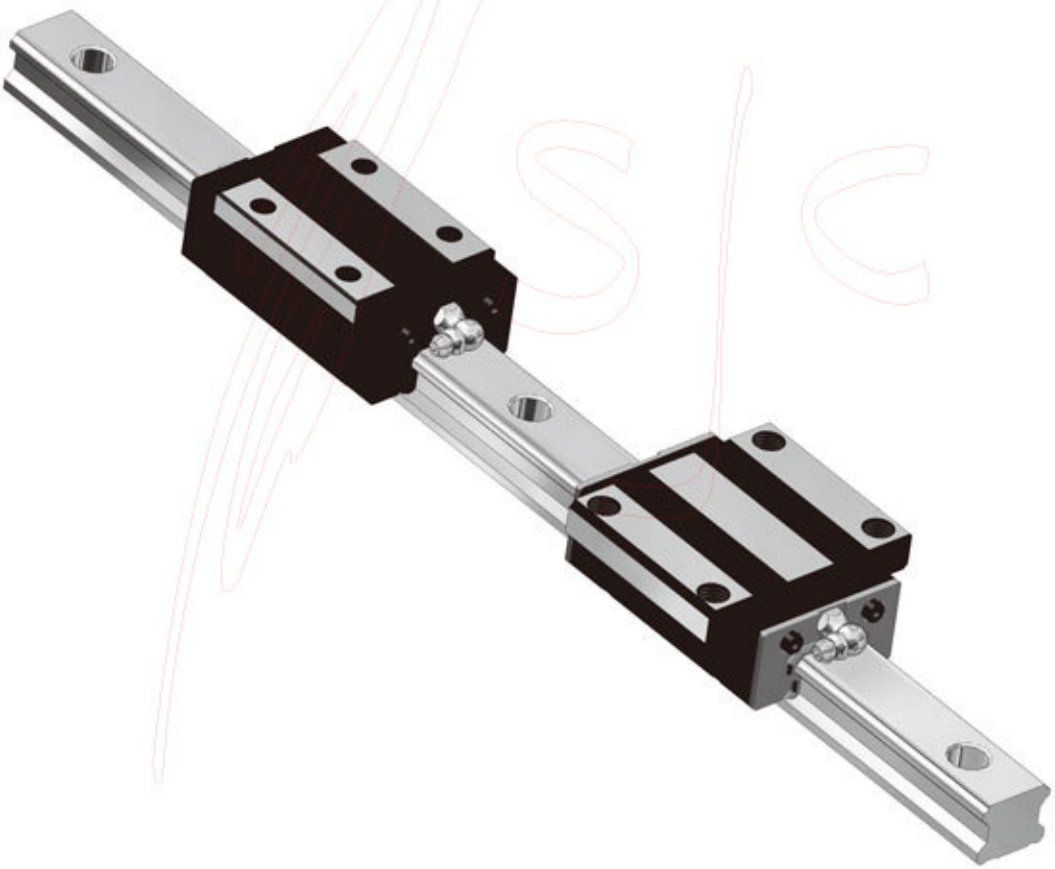

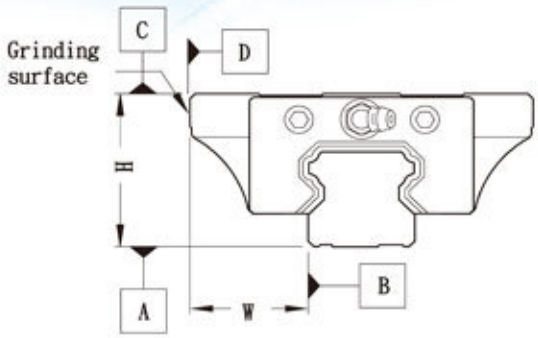

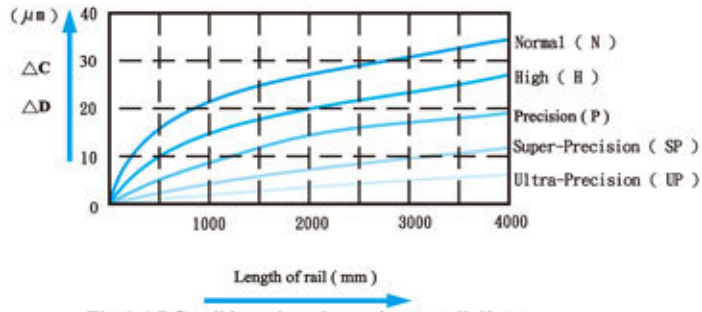

Fig.1-1 BG rail length and running parallelism

Unit : mm

ITEM \ GRADE	Normal (N)	High (H)	Precision (P)	Super-Precision (SP)	Ultra-Precision (UP)
Tolerance of height (H)	±0.1	±0.04	0 -0.04	0 -0.02	0 -0.01
Tolerance of width (W)	±0.1	±0.04	0 -0.04	0 -0.02	0 -0.01
Difference of heights (△H)	0.03	0.02	0.01	0.005	0.003
Difference of widths (△W)	0.03	0.02	0.01	0.005	0.003
Running parallelism of BG Block surface C with respect to surface A	△ C Refer to Fig. 1-1				
Running parallelism of BG Block surface D with respect to surface B	△ D Refer to Fig. 1-1				

High accuracy

Low noise

Low friction

Low vibration

- **Equal load capacities in four directions**
  High rigidity 4-row angular contact
  Integral all-round double sealing

- **High speed - low noises**
  Interchangeability
  No ball Drop

- **Cage & Non Cage blocks on the Same profile rail**

Only 1/6~1/10 Fluctuation range for caged block

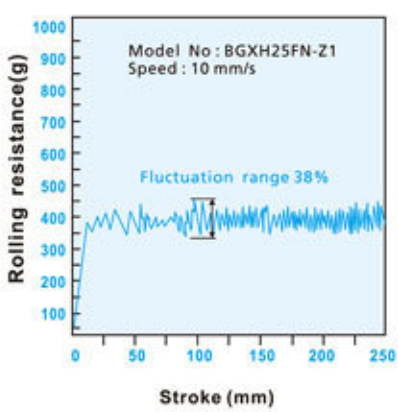

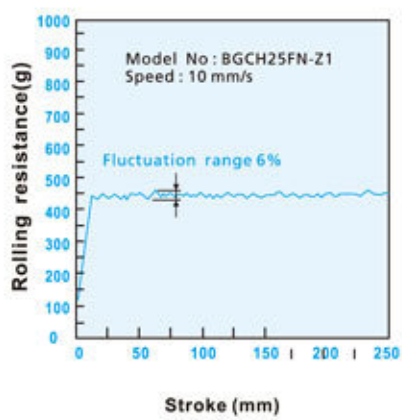

Specification Number

EX. BGC H 25 BN - 2 - ■ - L 500 - P - Z1 - II

(1) (2) (3) (4) (5) (6) (7) (8) (9) (10) (11)

(1) **BGC**

Type Code :
BGX : Without Cage
BGC : With Cage

(2) **H**

Height Type :
H : high assembly
S : low assembly
X : custom assembly

(3) **25**

Size / mm

(4) **BN**

Flange & length type :
BN : Normal Length without Flange
BS : Short Length without Flange
BL : Long Length without Flange
BE : Extra-Long Length without Flange
FN : Normal Length with Flange
FS : Short Length without Flange
FL : Long Length without Flange
FE : Extra-Long Length without Flange

(5) **2**

Two blocks per rail

(6)

Seal Type :
□ : with end & side seals
UU : just with end seals
ZZ : with end scrapers
DD : with double end & side seals
KK : with double end , side seals & end scrapers

(7) **L**

L : with screw hole
C : with tapped hole

(8) **500**

Rail length

(9) **P**

Precision :
N : Normal
H : High
P : Precision
SP : Super-precision
UP : Ultra-precision

(10) **Z1**

Preload type :
ZF : Clearance
Z0 : No preload
Z1 : Light preload
Z2 : Middle preload
Z3 : heavy preload

(11) **II**

Two sets per axis

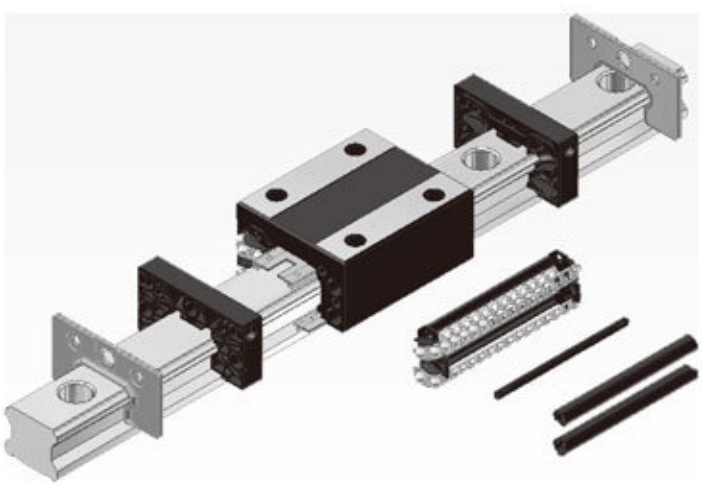

BGX SERIES BGX(H-B)Standard type

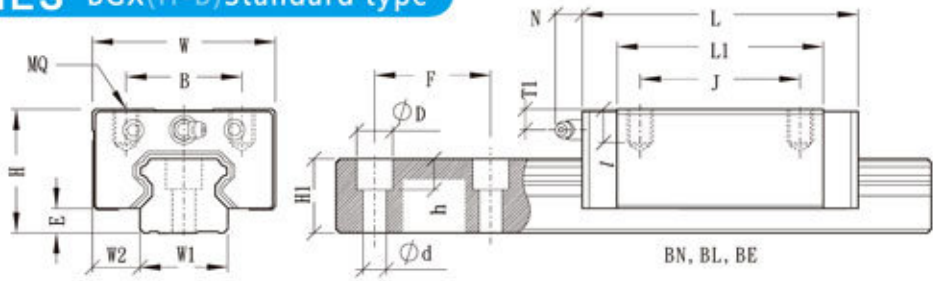

Spec. / Model	Assembly-mm				Block-mm									Rail-mm						Rating load-Kgf		Block	Rail
	H	W	W2	E	L	B	J	MQ	l	L1	Oil H	T1	N	W1	H1	F	d	D	h	C	C0	Kgf	Kgf/M
BGXH15BN	28	34	9.5	3.0	58.6	26	26	M4	6.0	40.2	M4X0.7	9.5	(5)	15	13.0	60	4.5	7.5	6.0	951	2001	0.19	1.28
BGXH20BN	30	44	12.0	4.5	69.3	32	36	M5	6.5	48.5	M6X1	7.1	(15.6)	20	16.3	60	6.0	9.5	8.5	1463	3110	0.31	2.15
BGXH20BL	30	44	12.0	4.5	82.1	32	50	M5	6.5	61.3	M6X1	7.1	(15.6)	20	16.3	60	6.0	9.5	8.5	1896	4030	0.36	2.15
BGXH25BN	40	48	12.5	5.8	79.7	35	35	M6	9.0	57.5	M6X1	14.2	(15.6)	23	19.2	60	7.0	11.0	9.0	2052	4188	0.45	2.88
BGXH25BL	40	48	12.5	5.8	94.4	35	50	M6	9.0	72.2	M6X1	14.2	(15.6)	23	19.2	60	7.0	11.0	9.0	2638	5383	0.66	2.88
BGXH25BE	40	48	12.5	5.8	109.1	35	50	M6	9.0	86.9	M6X1	14.2	(15.6)	23	19.2	60	7.0	11.0	9.0	2974	6454	0.80	2.88
BGXH30BN	45	60	16.0	7.0	94.8	40	40	M8	12.0	67.8	M6X1	11.0	(15.6)	28	22.8	80	9.0	14.0	12.0	3032	5565	0.91	4.45
BGXH30BL	45	60	16.0	7.0	105.0	40	60	M8	12.0	78.0	M6X1	11.0	(15.6)	28	22.8	80	9.0	14.0	12.0	3927	7207	1.04	4.45
BGXH30BE	45	60	16.0	7.0	130.5	40	60	M8	12.0	103.5	M6X1	11.0	(15.6)	28	22.8	80	9.0	14.0	12.0	4372	8842	1.36	4.45
BGXH35BN	55	70	18.0	7.5	111.5	50	50	M8	12.0	80.5	M6X1	15.0	(15.6)	34	26.0	80	9.0	14.0	12.0	4321	8272	1.50	6.25
BGXH35BL	55	70	18.0	7.5	123.5	50	72	M8	12.0	92.5	M6X1	15.0	(15.6)	34	26.0	80	9.0	14.0	12.0	5399	10336	1.80	6.25
BGXH35BE	55	70	18.0	7.5	153.5	50	72	M8	12.0	122.5	M6X1	15.0	(15.6)	34	26.0	80	9.0	14.0	12.0	5941	12777	2.34	6.25
BGXH45BN	70	86	20.5	8.9	129.0	60	60	M10	18.0	94.0	M8X1.25	24.4	(16)	45	31.1	105	14.0	20.0	17.0	5911	11105	2.28	9.60
BGXH45BL	70	86	20.5	8.9	145.0	60	80	M10	18.0	110.0	M8X1.25	24.4	(16)	45	31.1	105	14.0	20.0	17.0	7031	13209	2.67	9.60
BGXH45BE	70	86	20.5	8.9	174.0	60	80	M10	18.0	139.0	M8X1.25	24.4	(16)	45	31.1	105	14.0	20.0	17.0	8124	16650	3.35	9.60

BGX SERIES BGX(H-F)Standard type

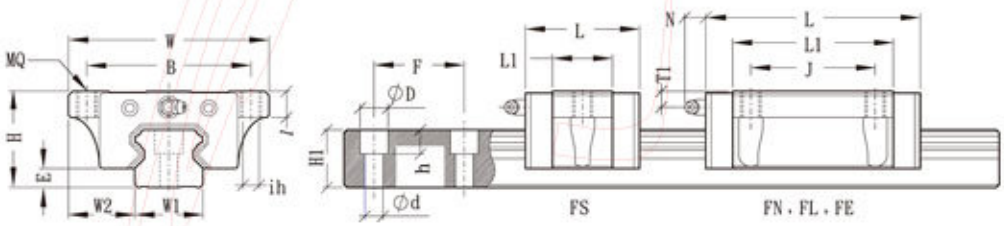

Spec. / Model	Assembly-mm				Block-mm										Rail-mm						Rating load-Kgf		Block	Rail
	H	W	W2	E	L	B	J	MQ	ih	l	L1	Oil H	T1	N	W1	H1	F	d	D	h	C	C0	Kgf	Kgf/M
BGXH15FN	24	47	16.0	3.0	58.6	38	30	M5	4.4	8.0	40.2	M4X0.7	5.5	(5)	15	13.0	60	4.5	7.5	6.0	951	2001	0.21	1.28
BGXH15FL	24	47	16.0	3.0	66.1	38	30	M5	4.4	8.0	47.7	M4X0.7	5.5	(5)	15	13.0	60	4.5	7.5	6.0	1150	2419	0.23	1.28
BGXH20FN	30	63	21.5	4.5	69.3	53	40	M6	5.4	9.0	48.5	M6X1	7.1	(15.6)	20	16.3	60	6.0	9.5	8.5	1463	3110	0.40	2.15
BGXH20FL	30	63	21.5	4.5	82.1	53	40	M6	5.4	9.0	61.3	M6X1	7.1	(15.6)	20	16.3	60	6.0	9.5	8.5	1896	4030	0.46	2.15
BGXH25FN	36	70	23.5	5.8	79.7	57	45	M8	7.0	10.0	57.5	M6X1	10.2	(15.6)	23	19.2	60	7.0	11.0	9.0	2052	4188	0.57	2.88
BGXH25FL	36	70	23.5	5.8	94.4	57	45	M8	7.0	10.0	72.2	M6X1	10.2	(15.6)	23	19.2	60	7.0	11.0	9.0	2638	5383	0.72	2.88
BGXH25FE	36	70	23.5	5.8	109.1	57	45	M8	7.0	10.0	86.9	M6X1	10.2	(15.6)	23	19.2	60	7.0	11.0	9.0	2974	6454	0.89	2.88
BGXH30FN	42	90	31.0	7.0	94.8	72	52	M10	8.6	11.0	67.8	M6X1	8.0	(15.6)	28	22.8	80	9.0	14.0	12.0	3032	5565	1.10	4.45
BGXH30FL	42	90	31.0	7.0	105.0	72	52	M10	8.6	11.0	78.0	M6X1	8.0	(15.6)	28	22.8	80	9.0	14.0	12.0	3927	7207	1.34	4.45
BGXH30FE	42	90	31.0	7.0	130.5	72	52	M10	8.6	11.0	103.5	M6X1	8.0	(15.6)	28	22.8	80	9.0	14.0	12.0	4372	8842	1.66	4.45
BGXH35FN	48	100	33.0	7.5	111.5	82	62	M10	8.6	12.0	80.5	M6X1	8.0	(16)	34	26.0	80	9.0	14.0	12.0	4321	8272	1.50	6.25
BGXH35FL	48	100	33.0	7.5	123.5	82	62	M10	8.6	12.0	92.5	M6X1	8.0	(16)	34	26.0	80	9.0	14.0	12.0	5399	10336	1.90	6.25
BGXH35FE	48	100	33.0	7.5	153.5	82	62	M10	8.6	12.0	122.5	M6X1	8.0	(16)	34	26.0	80	9.0	14.0	12.0	5941	12777	2.54	6.25
BGXH45FN	60	120	37.5	8.9	129.0	100	80	M12	10.6	15.5	94.0	M8X1.25	14.4	(16)	45	31.1	105	14.0	20.0	17.0	5911	11105	2.27	9.60
BGXH45FL	60	120	37.5	8.9	145.0	100	80	M12	10.6	15.5	110.0	M8X1.25	14.4	(16)	45	31.1	105	14.0	20.0	17.0	7031	13209	2.68	9.60
BGXH45FE	60	120	37.5	8.9	174.0	100	80	M12	10.6	15.5	139.0	M8X1.25	14.4	(16)	45	31.1	105	14.0	20.0	17.0	8124	16650	3.42	9.60

BGX SERIES BGX(S-B)Standard type

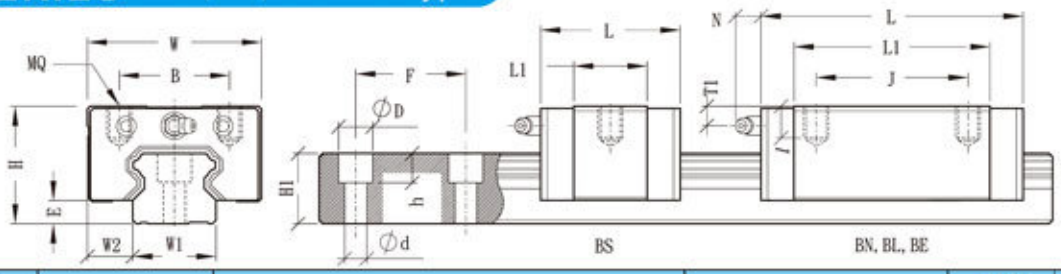

Spec. / Model	Assembly-mm				Block-mm									Rail-mm						Rating load-Kgf		Block	Rail
	H	W	W2	E	L	B	J	MQ	l	L1	Oil H	T1	N	W1	H1	F	d	D	h	C	C0	Kgf	Kgf/M
BGXS15BS	24	34	9.5	3.0	40.6	26		M4	4.8	22.2	M4X0.7	5.5	(5)	15	13.0	60	4.5	7.5	6.0	473	996	0.10	1.28
BGXS15BN	24	34	9.5	3.0	58.6	26	26	M4	4.8	40.2	M4X0.7	5.5	(5)	15	13.0	60	4.5	7.5	6.0	951	2001	0.17	1.28
BGXS15BL	24	34	9.5	3.0	66.1	26	26	M4	4.8	47.7	M4X0.7	5.5	(5)	15	13.0	60	4.5	7.5	6.0	1150	2419	0.18	1.28
BGXS20BS	28	42	11.0	4.5	48.3	32		M5	5.5	27.5	M6X1	5.1	(15.6)	20	16.3	60	6.0	9.5	8.5	753	1600	0.17	2.15
BGXS20BN	28	42	11.0	4.5	69.3	32	32	M5	5.5	48.5	M6X1	5.1	(15.6)	20	16.3	60	6.0	9.5	8.5	1463	3110	0.26	2.15
BGXS25BS	33	48	12.5	5.8	54.5	35		M6	6.8	32.3	M6X1	7.2	(15.6)	23	19.2	60	7.0	11.0	9.0	1049	2141	0.21	2.88
BGXS25BN	33	48	12.5	5.8	79.7	35	35	M6	6.8	57.5	M6X1	7.2	(15.6)	23	19.2	60	7.0	11.0	9.0	2052	4188	0.38	2.88
BGXX25BN	36	48	12.5	5.8	79.7	35	35	M6	9.0	57.5	M6X1	10.2	(15.6)	23	19.2	60	7.0	11.0	9.0	2052	4188	0.40	2.88
BGXX25BL	36	48	12.5	5.8	94.4	35	35	M6	9.0	72.2	M6X1	10.2	(15.6)	23	19.2	60	7.0	11.0	9.0	2638	5383	0.54	2.88
BGXX25BE	36	48	12.5	5.8	109.1	35	50	M6	9.0	86.9	M6X1	10.2	(15.6)	23	19.2	60	7.0	11.0	9.0	2974	6454	0.67	2.88
BGXS30BS	42	60	16.0	7.0	64.2	40		M8	10.0	37.2	M6X1	8.0	(15.6)	28	22.8	80	9.0	14.0	12.0	1503	2758	0.50	4.45
BGXS30BN	42	60	16.0	7.0	94.8	40	40	M8	10.0	67.8	M6X1	8.0	(15.6)	28	22.8	80	9.0	14.0	12.0	3032	5565	0.80	4.45
BGXS30BL	42	60	16.0	7.0	105.0	40	40	M8	10.0	78.0	M6X1	8.0	(15.6)	28	22.8	80	9.0	14.0	12.0	3927	7207	0.94	4.45
BGXS30BE	42	60	16.0	7.0	130.5	40	60	M8	10.0	103.5	M6X1	8.0	(15.6)	28	22.8	80	9.0	14.0	12.0	4372	8842	1.16	4.45
BGXS35BS	48	70	18.0	7.5	75.5	50		M8	10.0	44.5	M6X1	8.0	(15.6)	34	26.0	80	9.0	14.0	12.0	2166	4146	0.80	6.25
BGXS35BN	48	70	18.0	7.5	111.5	50	50	M8	10.0	80.5	M6X1	8.0	(15.6)	34	26.0	80	9.0	14.0	12.0	4321	8272	1.20	6.25
BGXS35BL	48	70	18.0	7.5	123.5	50	50	M8	10.0	92.5	M6X1	8.0	(15.6)	34	26.0	80	9.0	14.0	12.0	5399	10336	1.40	6.25
BGXS35BE	48	70	18.0	7.5	153.5	50	72	M8	10.0	122.5	M6X1	8.0	(15.6)	34	26.0	80	9.0	14.0	12.0	5941	12777	1.84	6.25
BGXS45BN	60	86	20.5	8.9	129.0	60	60	M10	15.5	94.0	M8X1.25	14.4	(16)	45	31.1	105	14.0	20.0	17.0	5911	11105	1.64	9.60
BGXS45BL	60	86	20.5	8.9	145.0	60	60	M10	15.5	110.0	M8X1.25	14.4	(16)	45	31.1	105	14.0	20.0	17.0	7031	13209	1.93	9.60
BGXS45BE	60	86	20.5	8.9	174.0	60	80	M10	15.5	139.0	M8X1.25	14.4	(16)	45	31.1	105	14.0	20.0	17.0	8124	16650	2.42	9.60

BGC SERIES BGC(H-B)Caged type

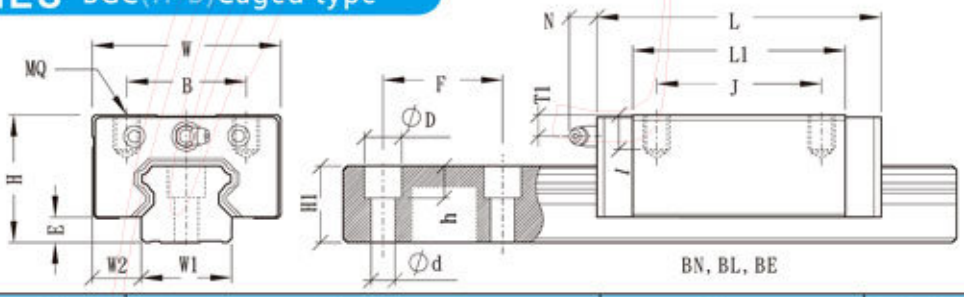

Spec. / Model	Assembly-mm				Block-mm									Rail-mm						Rating load-Kgf		Block	Rail
	H	W	W2	E	L	B	J	MQ	l	L1	Oil H	T1	N	W1	H1	F	d	D	h	C	C0	Kgf	Kgf/M
BGCH15BN	28	34	9.5	3.0	58.6	26	26	M4	6.0	40.2	M4X0.7	9.5	(5)	15	13.0	60	4.5	7.5	6.0	1174	2001	0.19	1.28
BGCH20BN	30	44	12.0	4.5	69.3	32	36	M5	6.5	48.5	M6X1	7.1	(15.6)	20	16.3	60	6.0	9.5	8.5	1806	3110	0.31	2.15
BGCH20BL	30	44	12.0	4.5	82.1	32	36	M5	6.5	61.3	M6X1	7.1	(15.6)	20	16.3	60	6.0	9.5	8.5	2341	4030	0.36	2.15
BGCH25BN	40	48	12.5	5.8	79.7	35	35	M6	9.0	57.5	M6X1	14.2	(15.6)	23	19.2	60	7.0	11.0	9.0	2534	4188	0.45	2.88
BGCH25BL	40	48	12.5	5.8	94.4	35	35	M6	9.0	72.2	M6X1	14.2	(15.6)	23	19.2	60	7.0	11.0	9.0	3256	5383	0.66	2.88
BGCH25BE	40	48	12.5	5.8	109.1	35	50	M6	9.0	86.9	M6X1	14.2	(15.6)	23	19.2	60	7.0	11.0	9.0	3671	6454	0.80	2.88
BGCH30BN	45	60	16.0	7.0	94.8	40	40	M8	12.0	67.8	M6X1	11.0	(15.6)	28	22.8	80	9.0	14.0	12.0	3743	5565	0.91	4.45
BGCH30BL	45	60	16.0	7.0	105.0	40	40	M8	12.0	78.0	M6X1	11.0	(15.6)	28	22.8	80	9.0	14.0	12.0	4848	7207	1.04	4.45
BGCH30BE	45	60	16.0	7.0	130.5	40	60	M8	12.0	103.5	M6X1	11.0	(15.6)	28	22.8	80	9.0	14.0	12.0	5397	8842	1.36	4.45
BGCH35BN	55	70	18.0	7.5	111.5	50	50	M8	12.0	80.5	M6X1	15.0	(15.6)	34	26.0	80	9.0	14.0	12.0	5335	8272	1.50	6.25
BGCH35BL	55	70	18.0	7.5	123.5	50	50	M8	12.0	92.5	M6X1	15.0	(15.6)	34	26.0	80	9.0	14.0	12.0	6666	10336	1.80	6.25
BGCH35BE	55	70	18.0	7.5	153.5	50	72	M8	12.0	122.5	M6X1	15.0	(15.6)	34	26.0	80	9.0	14.0	12.0	7334	12777	2.34	6.25
BGCH45BN	70	86	20.5	8.9	129.0	60	60	M10	18.0	94.0	M8X1.25	24.4	(16)	45	31.1	105	14.0	20.0	17.0	7298	11105	2.28	9.60
BGCH45BL	70	86	20.5	8.9	145.0	60	60	M10	18.0	110.0	M8X1.25	24.4	(16)	45	31.1	105	14.0	20.0	17.0	8680	13209	2.67	9.60
BGCH45BE	70	86	20.5	8.9	174.0	60	80	M10	18.0	139.0	M8X1.25	24.4	(16)	45	31.1	105	14.0	20.0	17.0	10030	16650	3.35	9.60

BGC SERIES BGC(H-F)Caged type

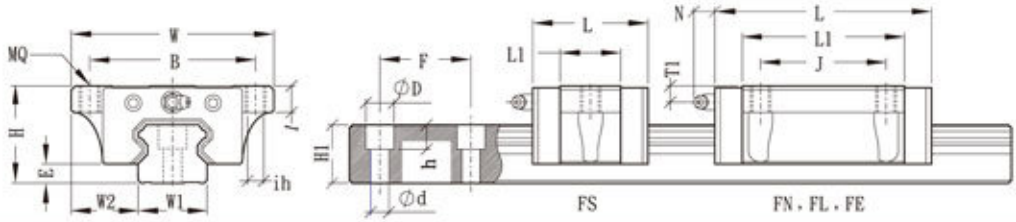

Spec. / Model	Assembly-mm				Block-mm										Rail-mm						Rating load-Kgf		Block	Rail
	H	W	W2	E	L	B	J	MQ	ih	l	L1	Oil H	T1	N	W1	H1	F	d	D	h	C-BGC	C0	Kgf	Kgf/M
BGCH15FN	24	47	16.0	3.0	58.6	38	30	M5	4.4	8.0	40.2	M4X0.7	5.5	(5)	15	13.0	60	4.5	7.5	6.0	1174	2001	0.21	1.28
BGCH15FL	24	47	16.0	3.0	66.1	38	30	M5	4.4	8.0	47.7	M4X0.7	5.5	(5)	15	13.0	60	4.5	7.5	6.0	1420	2419	0.23	1.28
BGCH20FN	30	63	21.5	4.5	69.3	53	40	M6	5.4	9.0	48.5	M6X1	7.1	(15.6)	20	16.3	60	6.0	9.5	8.5	1806	3110	0.40	2.15
BGCH20FL	30	63	21.5	4.5	82.1	53	40	M6	5.4	9.0	61.3	M6X1	7.1	(15.6)	20	16.3	60	6.0	9.5	8.5	2341	4030	0.46	2.15
BGCH25FN	36	70	23.5	5.8	79.7	57	45	M8	7.0	10.0	57.5	M6X1	10.2	(15.6)	23	19.2	60	7.0	11.0	9.0	2534	4188	0.57	2.88
BGCH25FL	36	70	23.5	5.8	94.4	57	45	M8	7.0	10.0	72.2	M6X1	10.2	(15.6)	23	19.2	60	7.0	11.0	9.0	3256	5383	0.72	2.88
BGCH25FE	36	70	23.5	5.8	109.1	57	45	M8	7.0	10.0	86.9	M6X1	10.2	(15.6)	23	19.2	60	7.0	11.0	9.0	3671	6454	0.89	2.88
BGCH30FN	42	90	31.0	7.0	94.8	72	52	M10	8.6	11.0	67.8	M6X1	8.0	(15.6)	28	22.8	80	9.0	14.0	12.0	3743	5565	1.10	4.45
BGCH30FL	42	90	31.0	7.0	105.0	72	52	M10	8.6	11.0	78.0	M6X1	8.0	(15.6)	28	22.8	80	9.0	14.0	12.0	4848	7207	1.34	4.45
BGCH30FE	42	90	31.0	7.0	130.5	72	52	M10	8.6	11.0	103.5	M6X1	8.0	(15.6)	28	22.8	80	9.0	14.0	12.0	5397	8842	1.66	4.45
BGCH35FN	48	100	33.0	7.5	111.5	82	62	M10	8.6	12.0	80.5	M6X1	8.0	(16)	34	26.0	80	9.0	14.0	12.0	5335	8272	1.50	6.25
BGCH35FL	48	100	33.0	7.5	123.5	82	62	M10	8.6	12.0	92.5	M6X1	8.0	(16)	34	26.0	80	9.0	14.0	12.0	6666	10336	1.90	6.25
BGCH35FE	48	100	33.0	7.5	153.5	82	62	M10	8.6	12.0	122.5	M6X1	8.0	(16)	34	26.0	80	9.0	14.0	12.0	7334	12777	2.54	6.25
BGCH45FN	60	120	37.5	8.9	129.0	100	80	M12	10.6	15.5	94.0	M8X1.25	14.4	(16)	45	31.1	105	14.0	20.0	17.0	7298	11105	2.27	9.60
BGCH45FL	60	120	37.5	8.9	145.0	100	80	M12	10.6	15.5	110.0	M8X1.25	14.4	(16)	45	31.1	105	14.0	20.0	17.0	8680	13209	2.68	9.60
BGCH45FE	60	120	37.5	8.9	174.0	100	80	M12	10.6	15.5	139.0	M8X1.25	14.4	(16)	45	31.1	105	14.0	20.0	17.0	10030	16650	3.42	9.60

BGC SERIES BGC(S-B)Caged type

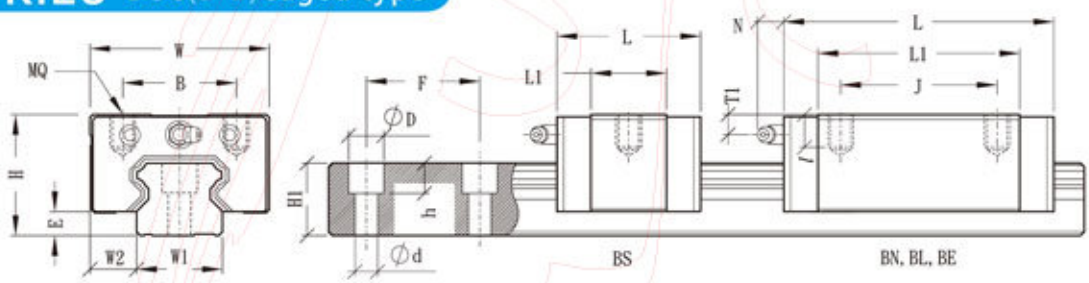

Spec. / Model	Assembly-mm				Block-mm										Rail-mm						Rating load-Kgf		Block	Rail
	H	W	W2	E	L	B	J	MQ	l	L1	Oil H	T1	N	W1	H1	F	d	D	h	C	C0	Kgf	Kgf/M
BGCS15BS	24	34	9.5	3.0	40.6	26		M4	4.8	22.2	M4X0.7	5.5	(5)	15	13.0	60	4.5	7.5	6.0	584	996	0.10	1.28
BGCS15BN	24	34	9.5	3.0	58.6	26	26	M4	4.8	40.2	M4X0.7	5.5	(5)	15	13.0	60	4.5	7.5	6.0	1174	2001	0.17	1.28
BGCS15BL	24	34	9.5	3.0	66.1	26	26	M4	4.8	47.7	M4X0.7	5.5	(5)	15	13.0	60	4.5	7.5	6.0	1420	2419	0.18	1.28
BGCS20BS	28	42	11.0	4.5	48.3	32		M5	5.5	27.5	M6X1	5.1	(15.6)	20	16.3	60	6.0	9.5	8.5	929	1600	0.17	2.15
BGCS20BN	28	42	11.0	4.5	69.3	32	32	M5	5.5	48.5	M6X1	5.1	(15.6)	20	16.3	60	6.0	9.5	8.5	1806	3110	0.26	2.15
BGCS25BS	33	48	12.5	5.8	54.5	35		M6	6.8	32.3	M6X1	7.2	(15.6)	23	19.2	60	7.0	11.0	9.0	1295	2141	0.21	2.88
BGCS25BN	33	48	12.5	5.8	79.7	35	35	M6	6.8	57.5	M6X1	7.2	(15.6)	23	19.2	60	7.0	11.0	9.0	2534	4188	0.38	2.88
BGCX25BN	36	48	12.5	5.8	79.7	35	35	M6	9.0	57.5	M6X1	10.2	(15.6)	23	19.2	60	7.0	11.0	9.0	2534	4188	0.40	2.88
BGCX25BL	36	48	12.5	5.8	94.4	35	35	M6	9.0	72.2	M6X1	10.2	(15.6)	23	19.2	60	7.0	11.0	9.0	3256	5383	0.54	2.88
BGCX25BE	36	48	12.5	5.8	109.1	35	50	M6	9.0	86.9	M6X1	10.2	(15.6)	23	19.2	60	7.0	11.0	9.0	3671	6454	0.67	2.88
BGCS30BS	42	60	16.0	7.0	64.2	40		M8	10.0	37.2	M6X1	8.0	(15.6)	28	22.8	80	9.0	14.0	12.0	1855	2758	0.50	4.45
BGCS30BN	42	60	16.0	7.0	94.8	40	40	M8	10.0	67.8	M6X1	8.0	(15.6)	28	22.8	80	9.0	14.0	12.0	3743	5565	0.80	4.45
BGCS30BL	42	60	16.0	7.0	105.0	40	40	M8	10.0	78.0	M6X1	8.0	(15.6)	28	22.8	80	9.0	14.0	12.0	4848	7207	0.94	4.45
BGCS30BE	42	60	16.0	7.0	130.5	40	60	M8	10.0	103.5	M6X1	8.0	(15.6)	28	22.8	80	9.0	14.0	12.0	5397	8842	1.16	4.45
BGCS35BS	48	70	18.0	7.5	75.5	50		M8	10.0	44.5	M6X1	8.0	(15.6)	34	26.0	80	9.0	14.0	12.0	2674	4146	0.80	6.25
BGCS35BN	48	70	18.0	7.5	111.5	50	50	M8	10.0	80.5	M6X1	8.0	(15.6)	34	26.0	80	9.0	14.0	12.0	5335	8272	1.20	6.25
BGCS35BL	48	70	18.0	7.5	123.5	50	50	M8	10.0	92.5	M6X1	8.0	(15.6)	34	26.0	80	9.0	14.0	12.0	6666	10336	1.40	6.25
BGCS35BE	48	70	18.0	7.5	153.5	50	72	M8	10.0	122.5	M6X1	8.0	(15.6)	34	26.0	80	9.0	14.0	12.0	7334	12777	1.84	6.25
BGCS45BN	60	86	20.5	8.9	129.0	60	60	M10	15.5	94.0	M8X1.25	14.4	(16)	45	31.1	105	14.0	20.0	17.0	7298	11105	1.64	9.60
BGCS45BL	60	86	20.5	8.9	145.0	60	60	M10	15.5	110.0	M8X1.25	14.4	(16)	45	31.1	105	14.0	20.0	17.0	8680	13209	1.93	9.60
BGCS45BE	60	86	20.5	8.9	174.0	60	80	M10	15.5	139.0	M8X1.25	14.4	(16)	45	31.1	105	14.0	20.0	17.0	10030	16650	2.42	9.60

Coupling

Coupling
(SRJ)

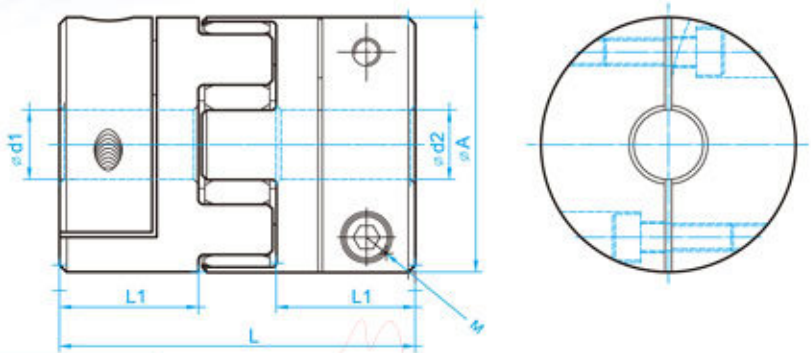

Dimension

Unit : mm

Model No.	A	L	L1	dmax	(H8) d1Xd2		M
					d1	d2	
SRJ-20C	20	30	10	10	4、5、6、6.35、7、8、10		M3
SRJ-30C	30	35	11	16	5、6、6.35、8、9、9.5、10、11、12、14、15		M4
SRJ-40C	40	66	25	22	8、9.5、10、11、12、14、15、16、18、19、20		M5
SRJ-55C	55	78	30	28	12、15、16、18、19、20、22、24、25		M6
SRJ-65C	65	90	35	38	20、22、24、25、28、30、32、35、38		M8

- Buffer Material : Engineering Class Plastic
- Material : Aluminum Alloy
- Specification Number : SRJ-AC-d1xd2 ex:SRJ-30C-6x8

Function

Model No.	Rated Torque (N.m)	Max Torque (N.m)	Max Rotational Frequency (min^{-1})	Static torsion spring stiffness (N.m/rad)	Dynamic torsion spring stiffness (N.m/rad)
SRJ-20C	5	10	15200	51.0	151
SRJ-30C	12.5	25	10200	170.9	505
SRJ-40C	17	34	7600	857.5	2571
SRJ-55C	60	120	5600	2060	6163
SRJ-65C	160	320	4700	3430	10291

Model No.	Weight (kg)		Mass moment of inerita J (kgm^2)		Radial (mm)	Angular (°)	Axial (mm)
	each hub	spider	each hub	spider			
SRJ-20C	8.5 $x10^{-3}$	1.7 $x10^{-3}$	0.46 $x10^{-6}$	0.073 $x10^{-6}$	0.10	1.0	0.8
SRJ-30C	18 $x10^{-3}$	4.2 $x10^{-3}$	2.5 $x10^{-6}$	0.45 $x10^{-6}$	0.15	1.0	1
SRJ-40C	64 $x10^{-3}$	6.5 $x10^{-3}$	20.1 $x10^{-6}$	1.44 $x10^{-6}$	0.15	1.0	1.2
SRJ-55C	130 $x10^{-3}$	17.4 $x10^{-3}$	50.5 $x10^{-6}$	7.3 $x10^{-6}$	0.2	1.0	1.4
SRJ-65C	250 $x10^{-3}$	28.6 $x10^{-3}$	200.1 $x10^{-6}$	16.3 $x10^{-6}$	0.2	1.0	1.5

Support Unit of Ball Screw

Recommended Shaft End Shape

For Support Unit Type BK and FK and EK
Fixed Side

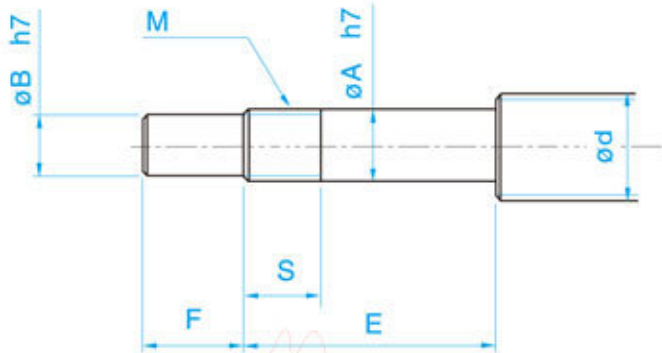

Unit:mm

Support Unit model No.	Ball Screw shaft OD	Shaft Support Portion OD				Metric screw thread	
Type BK	d	A	B	E	F	M	S
BK 10	12/14/15	10	8	36	15	M10X1	16
BK 12	14/15/16	12	10	36	15	M12X1	14
BK 15	18/20	15	12	40	20	M15X1	12
BK 17	20/25	17	15	53	23	M17X1	17
BK 20	25/28	20	17	53	25	M20X1	15
BK 25	32/36	25	20	65	30	M25X1.5	18
BK 30	36/40	30	25	72	38	M30X1.5	25
BK 35	45	35	30	81	45	M35X1.5	28
BK 40	50	40	35	93	50	M40X1.5	35

Unit:mm

Support Unit model No.		Ball Screw shaft OD	Shaft Support Portion OD				Metric screw thread	
Type FK	Type EK	d	A	B	E	F	M	S
FK 6	EK 6	8	6	4	28	8	M6X0.75	8
FK 8	EK 8	10/12	8	6	32	9	M8X1	10
FK 10	EK 10	12/14/15	10	8	36	15	M10X1	11
FK 12	EK 12	14/15/16	12	10	36	15	M12X1	11
FK 15	EK 15	18/20	15	12	47	20	M15X1	13
FK 20	EK 20	25/28/30	20	17	62	25	M20X1	17
FK 25	–	30/32/36	25	20	76	30	M25X1.5	20
FK 30	–	36/40	30	25	72	38	M30X1.5	25

Recommended Shaft End Shape

For Support Unit Types FF and EF and BF Floated Side

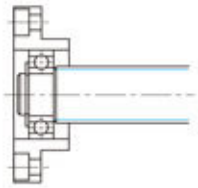

Type FF

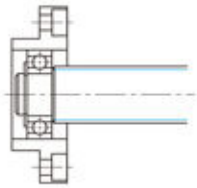

Type FF

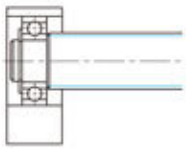

Type EF
Type BF

Unit:mm

Support Unit model No.			Ball Screw shaft OD	Shaft Support Portion OD
Type FF	Type EF	Type BF	d	A
FF 10	EF 10	BF 10	12/14/15	8
FF 12	EF 12	BF 12	14/15/16	10
FF 15	EF 15	BF 15	18/20	15
FF 17	–	BF 17	20/25	17
FF 20	EF 20	BF20 (NOTE)	25/28/30	20
FF 25	–	BF 25	30/32/36	25
FF 30	–	BF 30	36/40	30
–	–	BF 35	40/45	35
–	–	BF 40	50	40

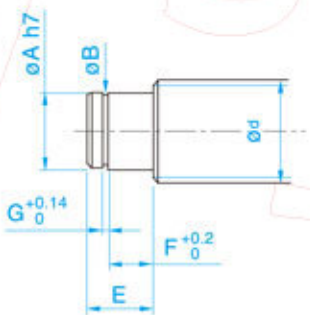

Note:
In this table,dimensions in parentheses are those of type BF20. These dimensions differ from those of type FF20 and EF20.When placing an order,always specify the model number of the Support Unit to be used.

Unit:mm

	Snap-ring Groove		
E	B	F	G
10	7.6	7	0.9
11	9.6	8	1.15
13	14.3	9	1.15
16	16.2	12	1.15
19(16)	19	14(12)	1.35
20	23.9	15	1.35
21	28.6	16	1.75
22	33	17	1.75
23	38	18	1.75

FK
Fixed Side

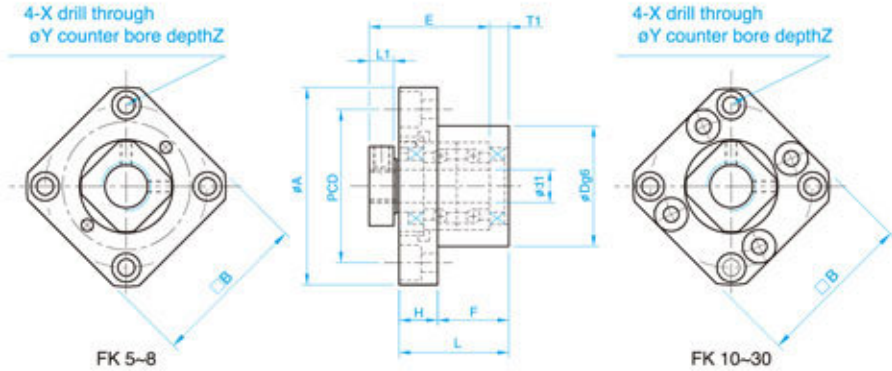

Unit : mm

Model No.	d1	L	H	F	E	Dg6	A	PCD	B	L1	T1	X	Y	Z
FK 5	5	16.5	6	10.5	18.5	20	34	26	26	5.5	3.5	3.4	6.5	4
FK 6	6	20	7	13	22	22	36	28	28	5.5	3.5	3.4	6.5	4
FK 8	8	23	9	14	26	28	43	35	35	7	4	3.4	6.5	4
FK 10	10	27	10	17	29.5	34	52	42	42	7.5	5	4.5	8	4
FK 12	12	27	10	17	29.5	36	54	44	44	7.5	5	4.5	8	4
FK 15	15	32	15	17	36	40	63	50	52	10	6	5.5	9.5	6
FK 20	20	52	22	30	50	57	85	70	68	8	10	6.6	11	10
FK 25	25	57	27	30	60	63	98	80	79	13	10	9	15	13
FK 30	30	62	30	32	61	75	117	95	93	11	12	11	17.5	15

FF
Floated Side

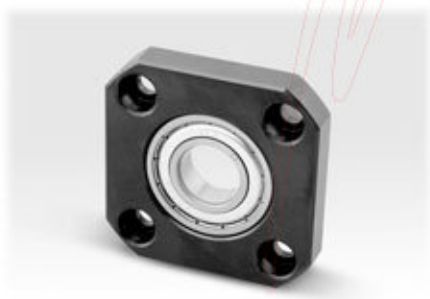

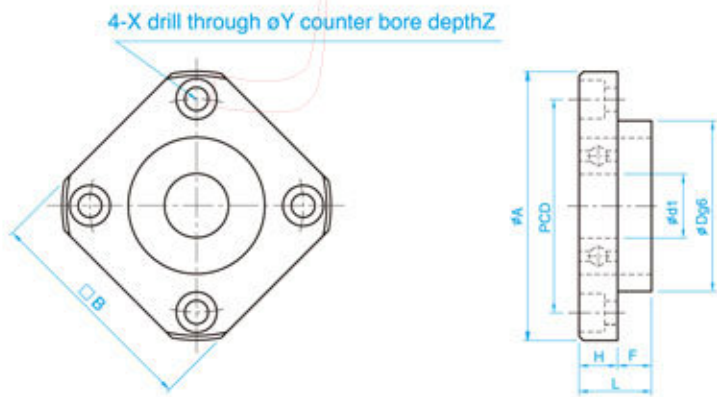

Unit : mm

Model No.	d1	L	H	F	Dg6	A	PCD	B	X	Y	Z
FF 6	6	10	6	4	22	36	28	28	3.4	6.5	4
FF 10	8	12	7	5	28	43	35	35	3.4	6.5	4
FF 12	10	15	7	8	34	52	42	42	4.5	8	4
FF 15	15	17	9	8	40	63	50	52	5.5	9.5	5.5
FF 20	20	20	11	9	57	85	70	68	6.6	11	6.5
FF 25	25	24	14	10	63	98	80	79	9	14	8.5
FF 30	30	27	18	9	75	117	95	93	11	17.5	11

BK
Fixed Side

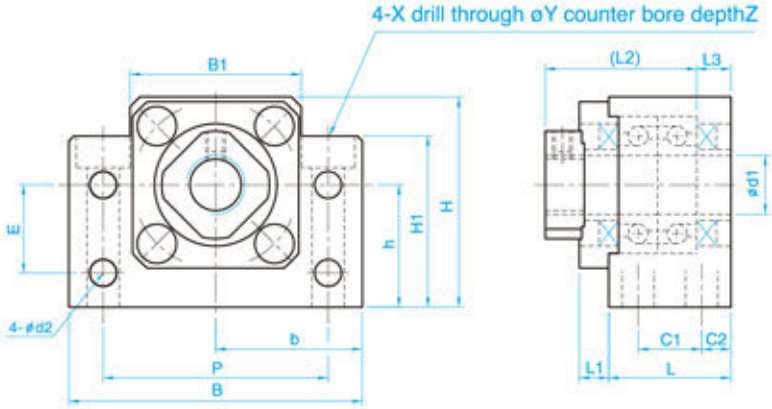

Unit : mm

Model No.	d1	L	L1	L2	L3	C1	C2	B	H	$b^{\pm0.02}$	$h^{\pm0.02}$	B1	H1	E	P	d2	X	Y	Z
BK 10	10	25	5	29	5	13	6	60	39	30	22	34	32.5	15	46	5.5	6.6	10.8	5
BK 12	12	25	5	29	5	13	6	60	43	30	25	34	32.5	18	46	5.5	6.6	10.8	1.5
BK 15	15	27	6	32	6	15	6	70	48	35	28	40	38	18	54	5.5	6.6	11	6.5
BK 17	17	35	9	44	7	19	8	86	64	43	39	50	55	28	68	6.6	9	14	8.5
BK 20	20	35	8	43	8	19	8	88	60	44	34	52	50	22	70	6.6	9	14	8.5
BK 25	25	42	12	54	9	22	10	106	80	53	48	64	70	33	85	9	11	17.5	11
BK 30	30	45	14	61	9	23	11	128	89	64	51	76	78	33	102	11	14	20	13
BK 35	35	50	14	67	12	26	12	140	96	70	52	88	79	35	114	11	14	20	13
BK 40	40	61	18	76	15	33	14	160	110	80	60	100	90	37	130	14	18	26	17.5

BF
Floated Side

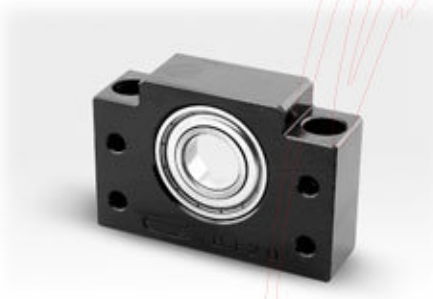

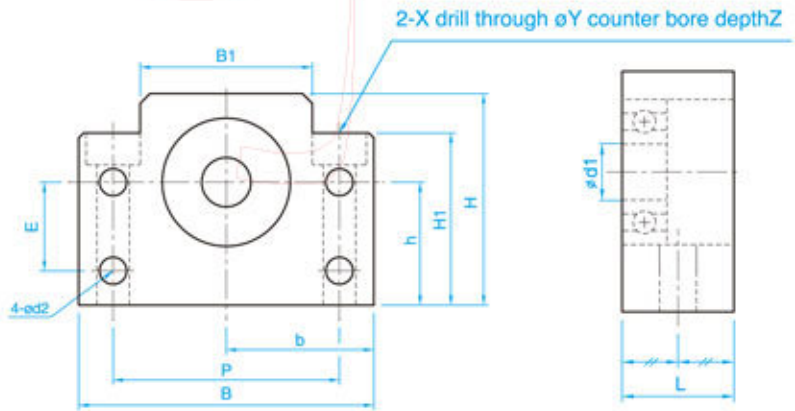

Unit : mm

Model No.	d1	L	B	H	$b^{\pm0.02}$	$h^{\pm0.02}$	B1	H1	E	P	d2	X	Y	Z
BF 10	8	20	60	39	30	22	34	32.5	15	46	5.5	6.6	10.8	5
BF 12	10	20	60	43	30	25	34	32.5	18	46	5.5	6.6	10.8	1.5
BF 15	15	20	70	48	35	28	40	38	18	54	5.5	6.6	11	6.5
BF 17	17	23	86	64	43	39	50	55	28	68	6.6	9	14	8.5
BF 20	20	26	88	60	44	34	52	50	22	70	6.6	9	14	8.5
BF 25	25	30	106	80	53	48	64	70	33	85	9	11	17.5	11
BF 30	30	32	128	89	64	51	76	78	33	102	11	14	20	13
BF 35	35	32	140	96	70	52	88	79	35	114	11	14	20	13
BF 40	40	37	160	110	80	60	100	90	37	130	14	18	26	17.5

EK
Fixed Side

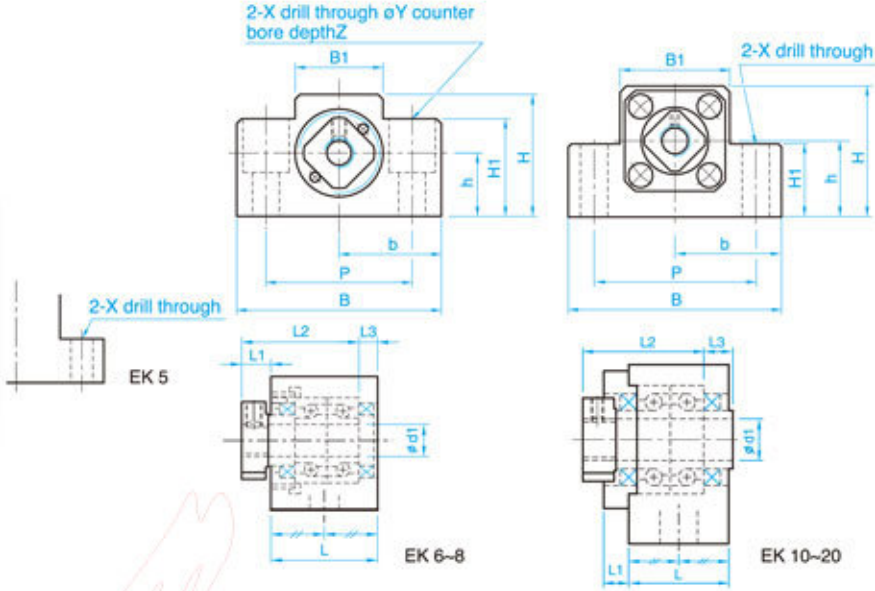

Unit : mm

Model No.	d1	L	L1	L2	L3	B	H	$b^{\pm0.02}$	$h^{\pm0.02}$	B1	H1	P	X	Y	Z
EK 5	5	16.5	5.5	18.5	3.5	36	21	18	11	20	8	28	4.5	–	–
EK 6	6	20	5.5	22	3.5	42	25	21	13	18	20	30	5.5	9.5	11
EK 8	8	23	7	26	4	52	32	26	17	25	26	38	6.6	11	12
EK 10	10	24	6	29.5	6	70	43	35	25	36	24	52	9	–	–
EK 12	12	24	6	29.5	6	70	43	35	25	36	24	52	9	–	–
EK 15	15	25	6	36	5	80	49	40	30	41	25	60	11	–	–
EK 20	20	42	10	50	10	95	58	47.5	30	56	25	75	11	–	–

EF
Floated Side

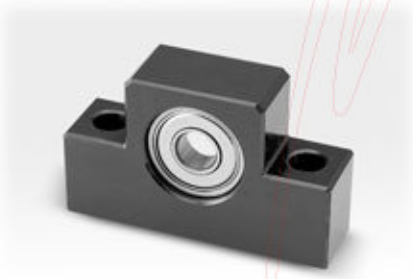

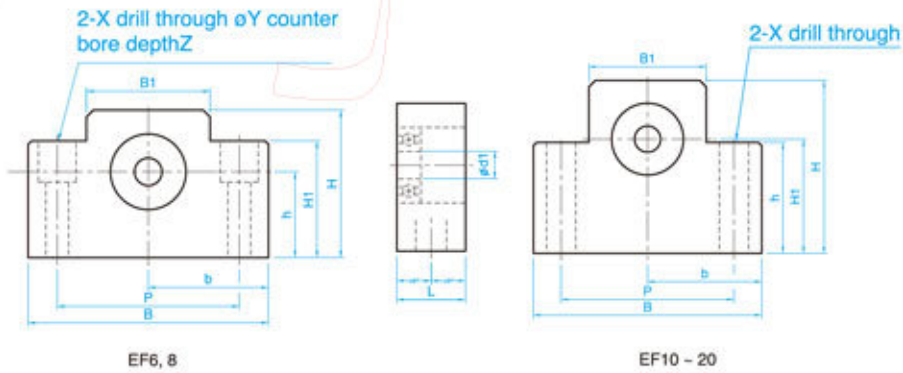

Unit : mm

Model No.	d1	L	B	H	$b^{\pm0.02}$	$h^{\pm0.02}$	B1	H1	P	X	Y	Z
EF 6	6	12	42	25	21	13	18	20	30	5.5	9.5	11
EF 8	6	14	52	32	26	17	25	26	38	6.6	11	12
EF 10	8	20	70	43	35	25	36	24	52	9	–	–
EF 12	10	20	70	43	35	25	36	24	52	9	–	–
EF 15	15	20	80	49	40	30	41	25	60	9	–	–
EF 20	20	26	95	58	47.5	30	56	25	75	11	–	–

Linear Ball Bearing Series

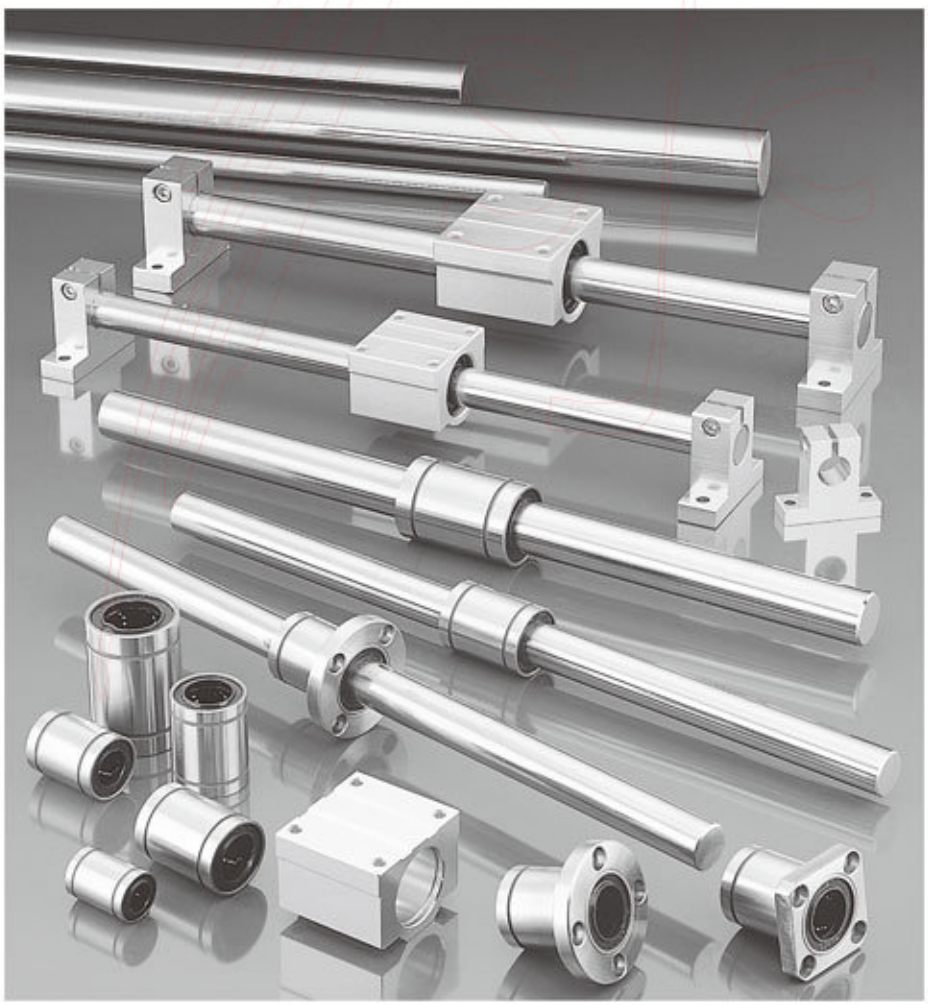

COMTOP Linear Ball Bearing and Accessory

LM series

Standard Type

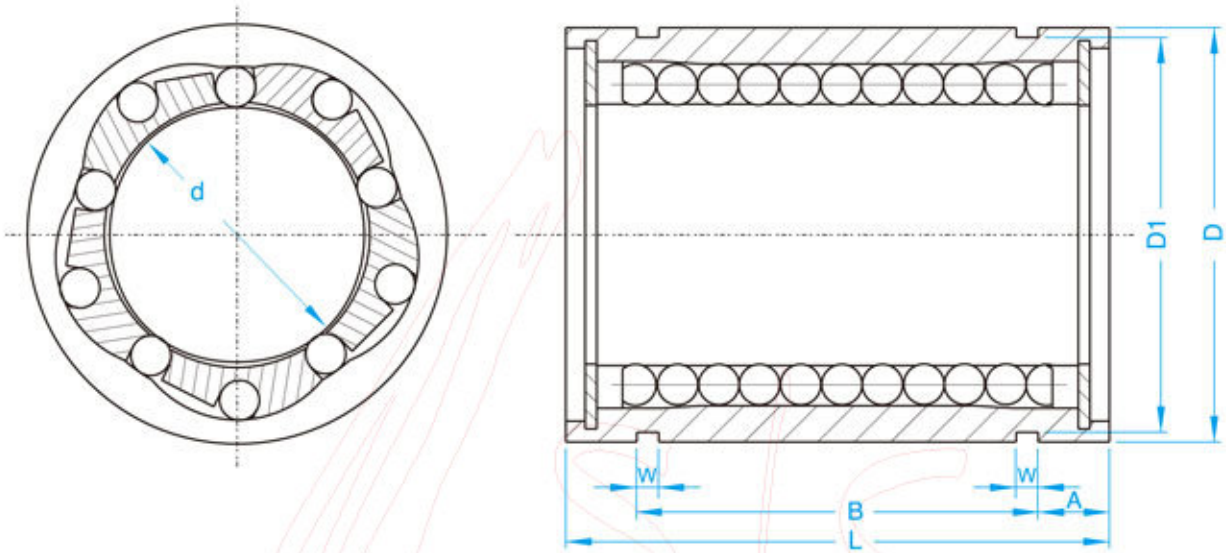

Unit : mm

Model No.	Basic Dimension									Load (Kgf)		Weight(g)
	d	D	D tolerance (μm)	L	L tolerance (μm)	W	D1	B	A	Dynamic load rating(Ca)	Static load rating(Coa)	
LM4UU	4	8	0 -11	12	0 -20	–	–	–	–	9	13	2
LM6UU	6	12		19		1.1	11.5	13.5	2.75	20	27	8
LM8UU	8	15		24		1.1	14.3	17.5	3.25	27	41	16
LM10UU	10	19	0 -13	29		1.3	18	22	3.5	38	55	30
LM12UU	12	21		30		1.3	20	23	3.5	42	60	31.5
LM16UU	16	28	0 -16	37		1.6	27	26.5	5.25	78	119	69
LM20UU	20	32		42		1.6	30.5	30.5	5.75	83	140	87
LM25UU	25	40		59	0 -30	1.85	38	41	9	100	159	220
LM30UU	30	45		64		1.85	43	44.5	9.75	159	279	250
LM40UU	40	60	0 -19	80		2.1	57	60.5	9.75	219	409	585
LM50UU	50	80		100		2.6	76.5	74	13	389	808	1580

Note : UU with oil seals in ends

COMTOP Linear Ball Bearing and Accessory

LM-L series

Standard Type

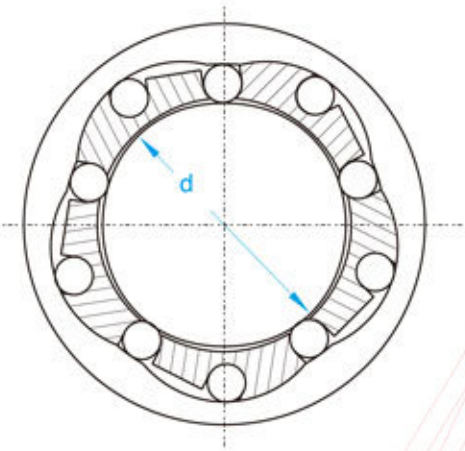

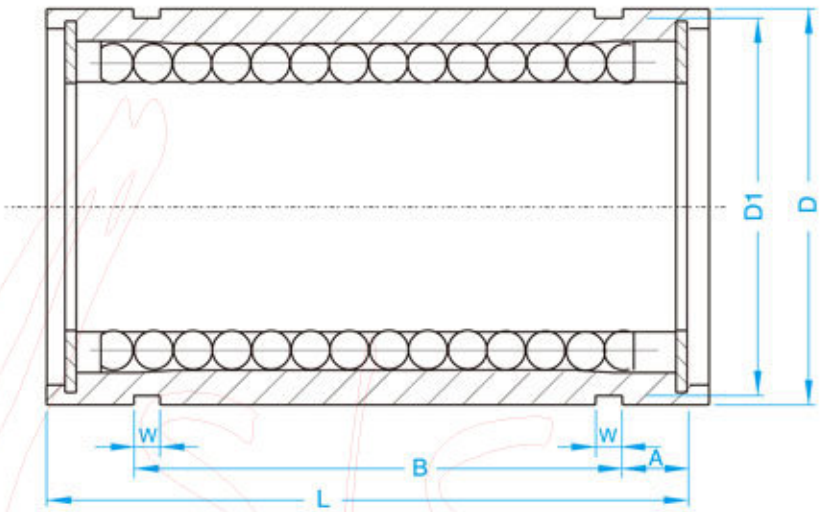

Unit : mm

Model No.	Basic Dimension									Load (Kgf)		Weight(g)
	d	D	D tolerance (μm)	L	L tolerance (μm)	W	D1	B	A	Dynamic load rating(Ca)	Static load rating(Coa)	
LM6LUU	6	12	0	35	0 -30	1.1	11.5	27	4	32	53	16
LM8LUU	8	15	-13	45		1.1	14.3	35	5	44	80	31
LM10LUU	10	19	0 -16	55		1.3	18	44	5.5	59	112	62
LM12LUU	12	21		57		1.3	20	46	5.5	66	122	80
LM16LUU	16	28		70		1.6	27	53	8.5	125	240	145
LM20LUU	20	32	0 -19	80	0 -40	1.6	30.5	61	9.5	143	280	180
LM25LUU	25	40		112		1.85	38	82	15	159	320	440
LM30LUU	30	45		123		1.85	43	89	17	254	560	580
LM40LUU	40	60	0 -22	151		2.1	57	121	15	350	820	1170
LM50LUU	50	80		192		2.6	76.5	148	22	620	1622	3100

Note : UU with oil seals in ends

LF series

Flange Type

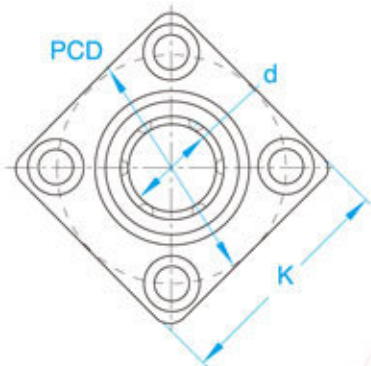

Type : D

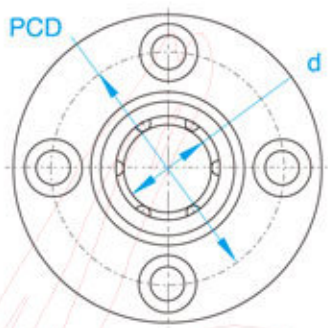

Type : N

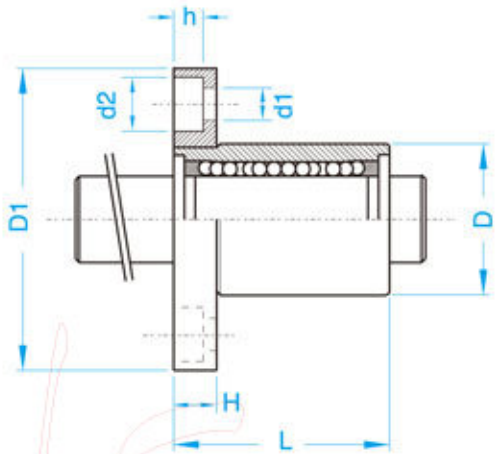

Unit : mm

Model No.	Basic Dimension													Load (Kgf)		Weight(g)
	d	D	D tolerance (μm)	L	L tolerance (μm)	D1	D1 tolerance (μm)	H	PCD	K	d1	d2	h	Dynamic load rating(Ca)	Static load rating (Coa)	
LF6UU	6	12	0-11	19		28		5	20	22	3.4	6.5	3.3	200	206	26.5
LF8UU	8	15	0	24		32		5	24	25	3.4	6.5	3.3	260	400	40
LF10UU	10	19	-13	29		40		6	29	30	4.5	8	4.4	370	540	78
LF12UU	12	21		30	0	42	0	6	32	32	4.5	8	4.4	410	290	76
LF16UU	16	28		37	-20	48	-20	6	38	37	4.5	8	4.4	770	1170	134
LF20UU	20	32	0	42		54		8	43	42	5.5	9.5	5.4	860	1370	180
LF25UU	25	40	-16	59		62		8	51	50	5.5	9.5	5.4	980	1560	340
LF30UU	30	45		64		74		10	60	58	6.6	11	6.5	1560	2740	460
LF40UU	40	60	0	80	0	96	0	13	78	75	9	14	8.6	2150	4010	1054
LF50UU	50	80	-19	100	-30	116	-30	13	98	92	9	14	8.6	3820	7830	2200

Note : UU with oil seals in ends

LF-L series

Flange Type

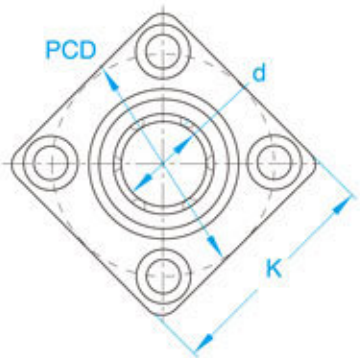

Type : D

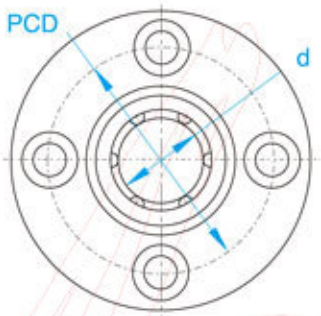

Type : N

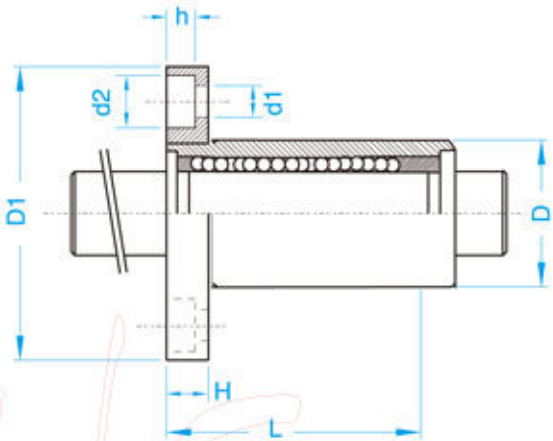

Unit : mm

Model No.	Basic Dimension													Load (Kgf)		Weight(g)
	d	D	D tolerance (μm)	L	L tolerance (μm)	D1	D1 tolerance (μm)	H	PCD	K	d1	d2	h	Dynamic load rating(Ca)	Static load rating(Coa)	
LF6LUU	6	12	0	35		28		5	20	22	3.4	6.5	3.3	200	206	26.5
LF8LUU	8	15	-13	45		32		5	24	25	3.4	6.5	3.3	260	400	40
LF10LUU	10	19	0	55		40		6	29	30	4.5	8	4.4	370	540	78
LF12LUU	12	21	-16	57	0	42	0	6	32	32	4.5	8	4.4	410	290	76
LF16LUU	16	28		70	-30	48	-20	6	38	37	4.5	8	4.4	770	1170	134
LF20LUU	20	32	0	80		54		8	43	42	5.5	9.5	5.4	860	1370	180
LF25LUU	25	40	-19	112		62		8	51	50	5.5	9.5	5.4	980	1560	340
LF30LUU	30	45		123		74		10	60	58	6.6	11	6.5	1560	2740	460
LF40LUU	40	60	0	151	0	96	0	13	78	75	9	14	8.6	2150	4010	1054
LF50LUU	50	80	-22	192	-40	116	-30	13	98	92	9	14	8.6	3820	7830	2200

Note : UU with oil seals in ends

LU/LP series

Housing Type

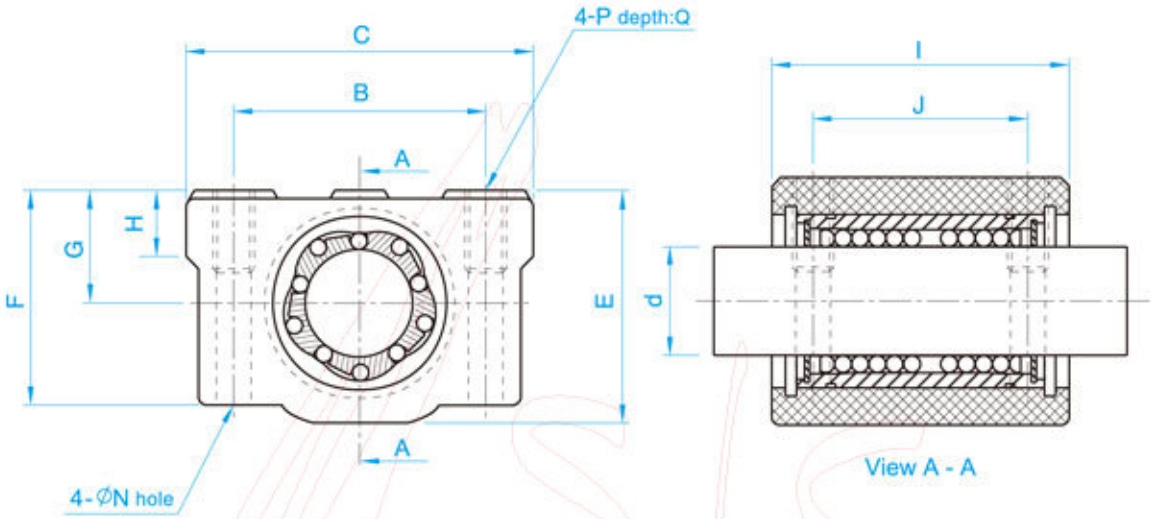

Material:Aluminum Alloy

Unit : mm

Model No.	Basic Dimension												Weight (g)
	d	B	C	E	F	G±0.02	H	I	J	N	P	Q	
LU8UU LP8	8	24	34	22	18	11	6	30	18	3	M4	8	56
LU10UU LP10	10	28	40	26	21	13	8	35	21	4	M5	12	90
LU12UU LP12	12	30.5	42	29	25	15	8	36	26	4	M5	12	112
LU16UU LP16	16	36	50	38.5	35	19	9	44	34	4	M5	12	189
LU20UU LP20	20	40	54	42	36	21	11	50	40	5	M6	12	237
LU25UU LP25	25	54	76	51.5	41	26	12	67	50	6	M8	18	555
LU30UU LP30	30	58	78	59.5	49	30	15	72	58	6	M8	18	685
LU40UU LP40	40	80	102	78	62	40	20	90	60	8	M10	25	1600
LU50UU LP50	50	100	122	102	80	52	25	110	80	8	M10	25	3350

Note : LP-No Linear ball bearing is included

SF/WV series

Slide Shaft

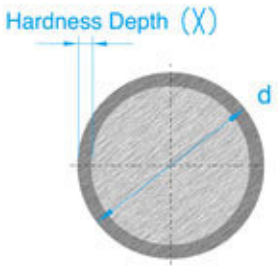

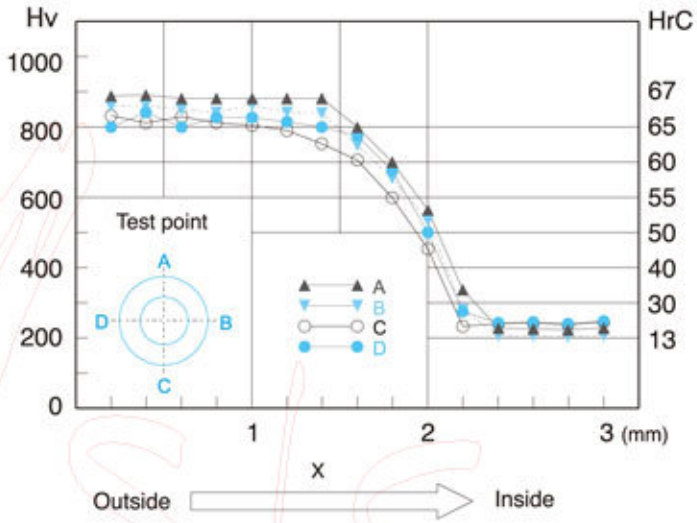

Material : CF53/S55C/SUJ2
Hardness : HrC60Up
Surface finish : Ra 0.15 - 0.35 μ m
Shaft straightness : approx. 0.1 mm/m

Unit : mm

	Model No.	d	Length											Hardness Depth (X)
			1500	2000	2500	3000	3500	4000	4500	5000	5500	6000	6500	
★	SF4	4												1.0
★	SF6	6												1.0
★	SF8	8												1.0
★	SF10	10												1.0
★	SF12	12												1.6
★	SF16	16												1.6
★	SF20	20												2.2
★	SF25	25												2.2
★	SF30	30												2.2
★	SF32	32												2.2
★	SF40	40												3.5
★	SF50	50												3.5

Note:With sign ★ can supply Chromium plated slide shaft (Model No:WV)

SS series

Slide Shaft Support

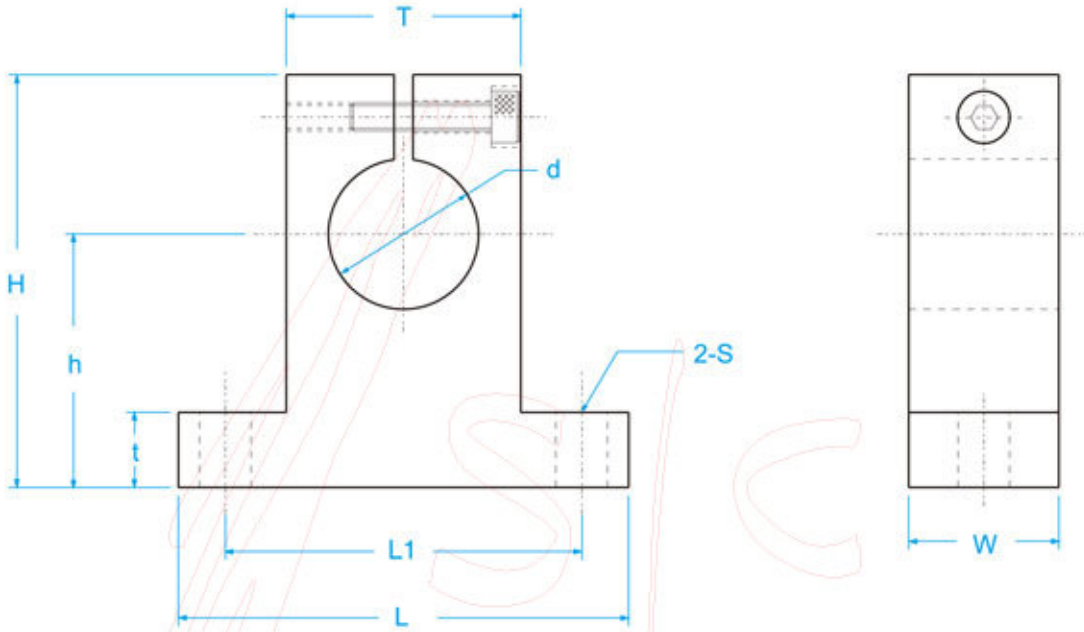

Material:Aluminum Alloy

Unit : mm

Model No.	Basic Dimension									Weight (g)
	d	h	L	W	H	t	T	L1	S	
SS4	4	20	42	14	32.8	6	18	32	5.5	24
SS6	6	20	42	14	32.8	6	18	32	5.5	24
SS8	8	20	42	14	32.8	6	18	32	5.5	24
SS10	10	20	42	14	32.8	6	18	32	5.5	24
SS12	12	23	42	14	37.5	6	20	32	5.5	30
SS16	16	27	48	16	44	8	25	38	5.5	40
SS20	20	31	60	20	51	10	30	45	6.6	70
SS25	25	35	70	24	60	12	38	56	6.6	130
SS30	30	42	84	28	70	12	44	64	9	180
SS40	40	60	114	36	96	15	60	90	11	420
SS50	50	70	126	40	120	18	74	100	14	750

LME series

European Type

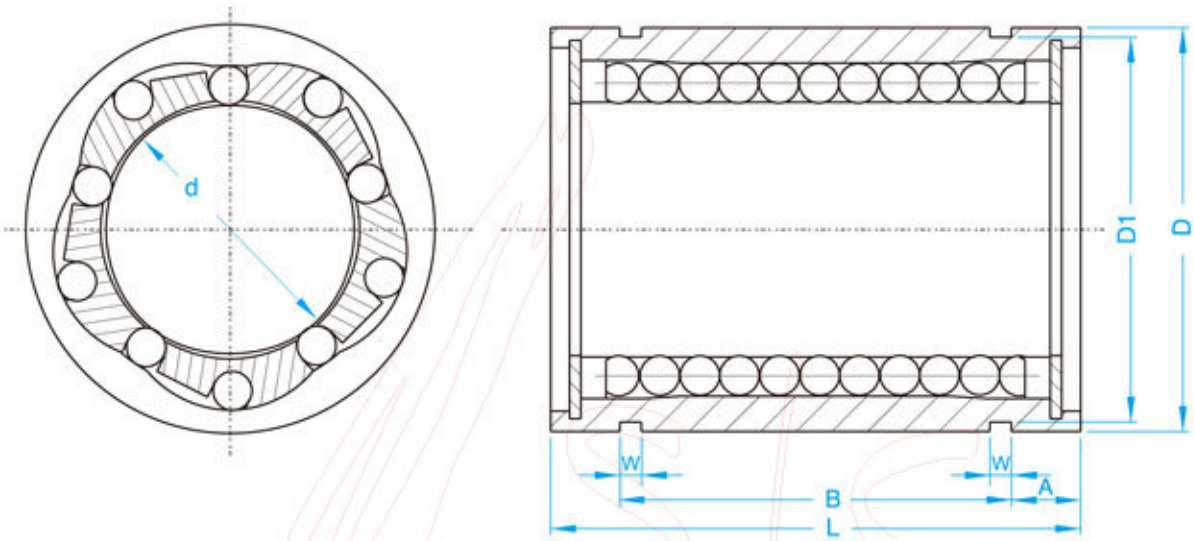

Unit : mm

Model No.	Basic Dimension									Load (Kgf)		Weight(g)
	d	D	D tolerance (μm)	L	L tolerance (μm)	W	D1	B	A	Dynamic load rating(Ca)	Static load rating(Coa)	
LME8UU	8	16	0/-8	25		1.1	15.2	16.5	4.25	27	41	20
LME12UU	12	22	0	32	0	1.3	21	22.9	4.55	51	78	41
LME16UU	16	26	-9	36	-22	1.3	24.9	24.9	5.55	58	91	57
LME20UU	20	32	0	45		1.6	30.3	31.5	6.75	88	139	91
LME25UU	25	40	-11	58		1.85	37.5	44.1	6.95	100	159	215
LME30UU	30	47		68	0	1.85	44.5	52.1	7.95	159	279	325
LME40UU	40	62	0	80	-30	2.12	59	60.6	9.7	219	409	705
LME50UU	50	75	-13	100		2.65	72	77.6	11.2	389	808	1130

Note : UU with oil seals in ends

LFE series

European Flange Type

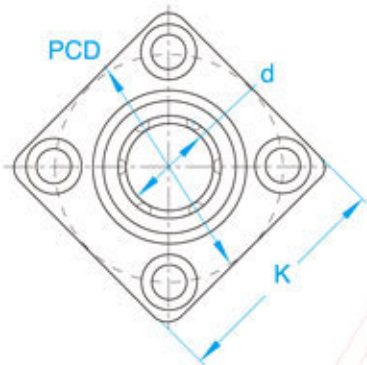

Type : D

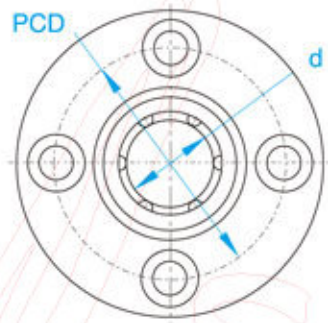

Type : N

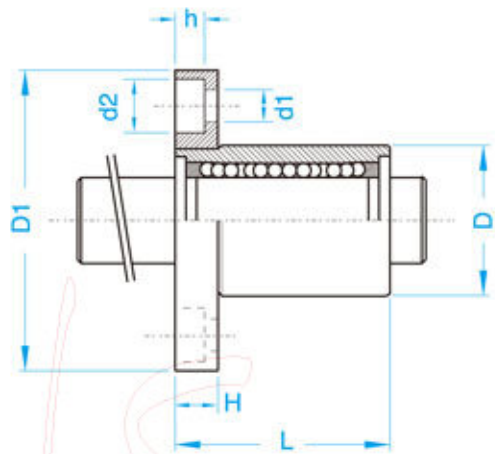

Unit : mm

Model No.	Basic Dimension													Load (Kgf)		Weight(g)
	d	D	D tolerance (μm)	L	L tolerance (μm)	D1	D1 tolerance (μm)	H	PCD	K	d1	d2	h	Dynamic load rating(Ca)	Static load rating(Coa)	
LFE8UU	8	16	0/-8	25		32		5	24	25	3.4	6.5	3.3	260	400	44
LFE12UU	12	22	0	32		42		6	32	32	4.5	8	4.4	500	770	86
LFE16UU	16	26	-9	36	0	46	0	6	36	35	4.5	8	4.4	570	890	120
LFE20UU	20	32	0	45	-20	54	-0.2	8	43	42	5.5	9.5	5.4	860	1370	184
LFE25UU	25	40	-11	58		62		8	51	50	5.5	9.5	5.4	980	1560	335
LFE30UU	30	47		68		76		10	62	60	6.6	11	6.5	1560	2740	545
LFE40UU	40	62	0	80	0	98	0	13	80	75	9	14	8.6	2150	4010	1185
LFE50UU	50	75	-13	100	-30	112	-0.3	13	94	88	9	14	8.6	3820	7830	1730

Note : UU with oil seals in ends

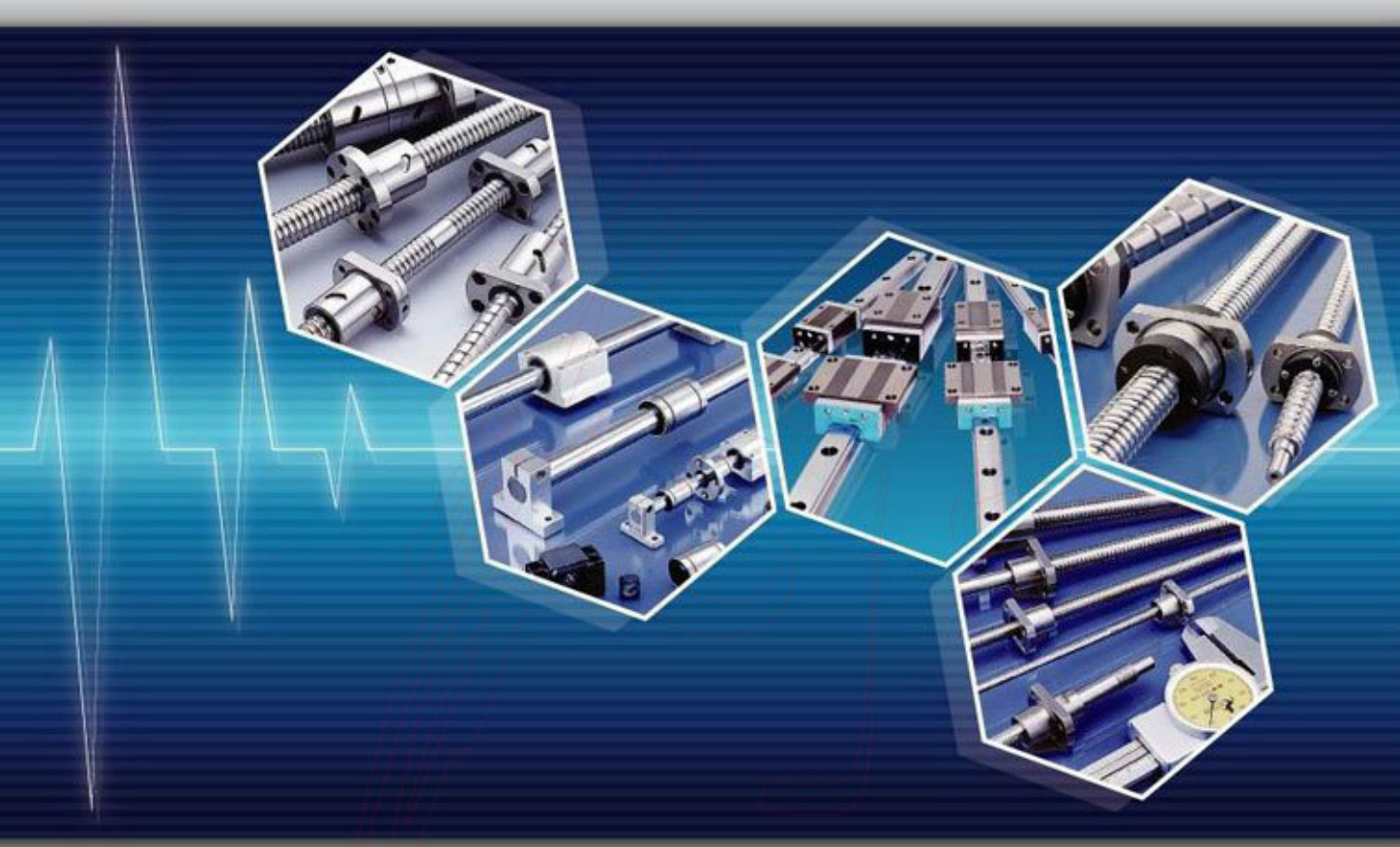

COMTOP TECHNOLOGY

No.91, Chung-Shan Rd., Tu-Cheng Industrial District, Taipei 23606, Taiwan
TEL: 886-2-22687211-4 FAX: 886-2-22687210
http://www.comtop.com.tw/
E-mail: tbi.tbi@msa.hinet.net

Note: The appearance and specification may be changed without prior notice if required to improve performance.

COMTOP-2009-11-5000-A