Permaglide®

Catalogue 2010

KOLBENSCHMIDT PIERBURG

Kolbenschmidt Pierburg

Kolbenschmidt Pierburg AG is the parent company of the Rheinmetall Automotive division. As a globally successful supplier to the automotive industry, Kolbenschmidt Pierburg's expertise in air supply systems, emission control and pumps and in the development, manufacture and spare-parts supply of pistons, engine blocks and engine bearings puts it right at the top of the markets.

GLEITLAGER

KS Gleitlager

Within the Kolbenschmidt Pierburg Group, KS Gleitlager GmbH is the specialist for high-precision gliding elements. The introduction of new technologies in production and surface finishing, innovative developments and a clear customer focus have made KS Gleitlager into one of the world's leading suppliers of engine plain bearings and dry plain bearings (Permaglide®).

MOTOR SERVICE

The Motor Service Group is the sales organisation for the worldwide aftermarket activities of Kolbenschmidt Pierburg AG. As a sales and logistics specialist, it offers quality and service from a single source.

Permaglide® is a registered trademark of KS Gleitlager GmbH

2nd edition 09.2010
Article No. 50 003 863-01

Layout and production:
Motor Service Marketing

This document must not be reprinted, duplicated or translated in full or in part without our prior written consent and without reference to the source of the material.

All content including pictures and diagrams is subject to alteration. No liability accepted.

Published by:
© MS Motor Service International GmbH

Liability
All information in this brochure has been carefully researched and compiled. Nevertheless, it is possible that errors have occurred, information has been translated incorrectly, information is missing or the details provided have changed in the intervening time. As a result, we are unable to provide any guarantee nor to accept any legal liability for the accuracy, completeness, currency or quality of the information provided. We hereby waive all liability for any damages, whether direct or indirect in nature and whether tangible or intangible, resulting from the use or misuse of information or from incomplete or incorrect information in this brochure, unless proven to be the result of deliberate intent or negligence on our part.
Names, descriptions and numbers of products, manufacturers, etc. are included for the purpose of comparison only.

Contents

		Page
1	Introduction	4
2	Descriptions and units	6
3	Permaglide® plain bearings	7
3.1	Maintenance-free, dry-running plain bearings	8
3.2	Low-maintenance plain bearings	13
4	Material selection, material information	17
4.1	P1 plain bearings	18
4.2	P2 plain bearings	24
5	Nominal service life calculation	28
6	Typical damage to plain bearings	40
7	Design and layout of bearing assembly	43
8	Plain bearing installation	52
9	Versions and dimension tables	56
9.1	Permaglide® bushes, maintenance-free	58
9.2	Permaglide® collar bushes, maintenance-free	64
9.3	Permaglide® thrust washers, maintenance-free	66
9.4	Permaglide® strips, maintenance-free	67
9.5	Permaglide® bushes, low-maintenance	68
9.6	Permaglide® thrust washers, low-maintenance	70
9.7	Permaglide® strips, low-maintenance	71
10	Test methods	72

Permaglide® P1 plain bearings

- Maintenance-free
- Suitable for dry running

Characteristics & properties	Unit	P10 P10Bz*	P14	P147*
lead-free	-	no	yes	yes
pvmax	MPa · m/s	1.8	1.6	1.4
pmax.stat.	MPa	250	250	250
pmax.dyn.	MPa	56	56	56
vmax.	m/s	2	1	0.8
T	°C	-200 to +280	-200 to +280	-200 to +280

Versions of the Permaglide® P1

PAP bushes
P10, P10Bz, P14, P147**

PAF collar bushes
P10, P10Bz, P14, P147**

PAW thrust washers
P10, P10Bz, P14, P147**

PAS strips
P10, P10Bz, P14, P147**

Materials in the Permaglide® P1

Standard material P10
- Contains lead
- Very low stick-slip tendency
- Low wear
- Good chemical resistance
- Low friction coefficient
- No tendency to fuse with metal
- Largely resistant to swelling
- Does not absorb water

Special material P10Bz* (formerly P11)
- Contains lead
- Improved corrosion resistance
- Very good thermal conductivity and therefore greater reliability
- Anti-magnetic
- All other properties as P10

Standard material P14
- Lead-free
- Very low stick-slip tendency
- Low wear
- Low friction coefficient
- No tendency to fuse with metal
- Largely resistant to swelling

Special material P147*
- Lead-free
- Very good corrosion resistance
- All other properties as P14

* On request

Permaglide® P2 plain bearings

- Low-maintenance
- For grease or liquid-lubricated applications

Characteristics & properties	Unit	P20 P22*, P23*	P200 P202*, P203*
lead-free	-	no	yes
pvmax	MPa · m/s	3	3.3
pmax.stat.	MPa	250	250
pmax.dyn.	MPa	70	70
vmax.	m/s	3	3.3
T	°C	-40 to +110	-40 to +110

Versions of the Permaglide® P2

PAP bushes
P20, P22, P23*,*
P200, P202, P203**

PAW thrust washers
P20, P22, P23*,*
P200, P202, P203**

PAS strips
P20, P22, P23*,*
P200, P202, P203**

Materials in the Permaglide® P2

Standard material P20
- Contains lead
- With oil distributing pockets, ready to install
- Lifetime lubrication possible
- Low wear
- Low sensitivity to edge loading
- Good damping characteristic
- Insensitive to impact
- Good chemical resistance

Special material P22*
- Contains lead
- Smooth sliding surface, with machining allowance
- All other properties as P20

Special material P23*
- Contains lead
- Smooth sliding surface, ready to install
- All other properties as P20

* On request

Standard material P200
- Lead-free
- With oil distributing pockets, ready to install
- Lifetime lubrication
- Low wear
- Very good dry-running properties
- Insensitive to edge loading and impact
- Good damping characteristic
- Good chemical resistance

Special material P202*
- Lead-free
- Smooth sliding surface, with machining allowance
- All other properties as P20

Special material P203*
- Lead-free
- Smooth sliding surface, ready to install
- All other properties as P20

2 | Descriptions and units

Unless otherwise expressly noted in the text, the descriptions, units and meaning of the values used in this catalogue are as follows.

Symbol	Unit	Description
B	mm	Bush width, total strip width
B_1	mm	Usable strip width
C_i	mm	Inside bevel of bush (bevelled edge)
C_o	mm	Outside bevel of bush
D_{FL}	mm	Collar diameter
D_i	mm	Bush inside diameter Inside diameter of thrust washer
D_{iE}	mm	Bush inside diameter in pressed-in state
D_O	mm	Outside diameter of bush Outside diameter of thrust washer
d_{ch}	mm	Diameter of test holder (adjusting mandrel)
d_G	mm	Diameter of housing bore
d_H	mm	Inside diameter of auxiliary ring
d_K	mm	Diameter of calibrating mandrel
d_L	mm	Oil hole diameter
d_W	mm	Shaft diameter
d_1	mm	Diameter of mounting hole in thrust washer
d_{6a}	mm	Diameter of housing recess for thrust washer
F	N	Bearing load, press-in force
F_{ch}	N	Test force
F_E	N	Press-in force per mm of bush width
F_{tot}	N	Total press-in force
f_G	mm	Chamfer width on housing
f_A	-	Load type correction factor
f_L	-	Linear movement correction factor
f_p	-	Load correction factor
f_R	-	Roughness depth correction factor
f_T	-	Temperature correction factor
f_v	-	Sliding speed correction factor
f_W	-	Material correction factor

Symbol	Unit	Description (continued)
H	mm	Stroke on linear movement
J	mm	Pitch circle diameter of thrust washer
L	mm	Strip length
L_N	h	Nominal service life
m	g	Weight
n	rpm	Speed
n_{OSZ}	rpm	Oscillating frequency of oscillating movement
p	MPa	Specific bearing load
pv	MPa · m/s	pv value, product of specific bearing load and sliding speed
R, r	mm	Radius
R_z	µm	Roughness depth
s_1	mm	Thickness of steel or bronze back
s_3	mm	Wall thickness of bush
s_{FL}	mm	Collar thickness
T	°C	Temperature
ta	mm	Depth of housing recess
v	m/s	Sliding speed
x	mm	Measuring line distance
z	mm	Distance btwn. test holder halves
α_{Bz}	K^{-1}	Thermal expansion coefficient of bronze
α_{St}	K^{-1}	Thermal expansion coefficient of steel
Δs	mm	Theoretical bearing clearance
Δz	mm	Measured value in test holder
λ_{Bz}	$W(mK)^{-1}$	Coeff. of thermal conductivity, bronze
λ_{St}	$W(mK)^{-1}$	Coeff. of thermal conductivity, steel
µ	-	Coefficient of friction
τ_S	N/mm^2	Shear strength
φ	°	Swivel angle

Plain bearings are used to absorb and convey forces between parts that move relative to one another. They determine the position of the moved components in relation to one another and ensure accuracy of the movement.

Plain bearings must satisfy a great many requirements. They must be capable of tolerating high mechanical loads to the greatest possible extent, while suffering only minimal wear throughout their service life. Likewise, they must withstand high sliding speeds and be insensitive to disturbances from the bearing environment.

Figure 1 shows just how complex a tribological system can be, at the centre of which a plain bearing is working.

Influences in a tribological system

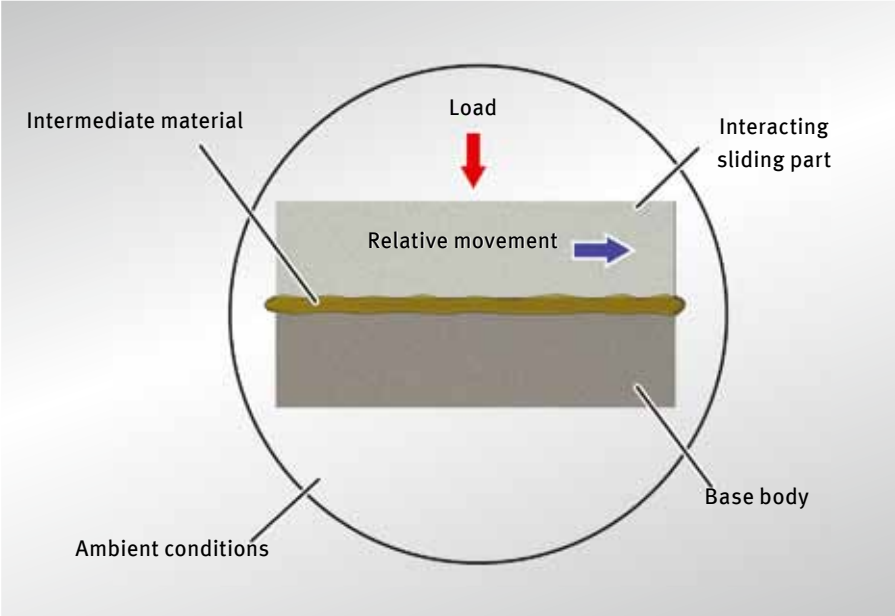

Fig. 1: Tribological system

Ambient conditions
- Temperature, medium, dirt

Load
- Amount and type of load (static, dynamic)
- Load time (constant, with intervals), circumferential load, concentrated load

Interacting sliding part
- Material, hardness, surface roughness, thermal conductivity

Relative movement
- Rotating, oscillating, linear
- Sliding speed, duration of movement

Intermediate material
- Solid lubricant, grease, liquid, viscosity
- Ageing resistance

Base body
- Material, hardness, surface roughness, wear resistance, limp-home capability
- Chemical resistance

In terms of the method of operation, we distinguish between three different functional systems:
- Dry-running, maintenance-free plain bearings
- Grease-lubricated, low-maintenance plain bearings
- Hydrodynamically operated plain bearings

Plain bearings that work on the principles of hydrodynamics can satisfy the various requirements comparatively well.
In this way, oil-lubricated plain bearings, in particular, can be designed for optimum, reliable operation with the aid of modern calculation methods.

Low-maintenance plain bearings are generally lubricated with grease.

The quantity of grease applied during installation is normally sufficient for the entire service life.
If a grease-lubricated plain bearing is used in difficult conditions, subsequent lubrication is recommended. Correctly timed relubricating intervals can considerably lengthen service life.

Due to the many influencing factors, however, calculating the expected service life of grease-lubricated plain bearings is fraught with uncertainty and can only be used as a guide.
But in many cases, lubrication using oil or grease is not possible or not permitted. In cases like this, maintenance-free, dry-running plain bearings are employed.
Here, too, calculating the service life is not sufficiently precise.

The common practice of calculating service life using simple methods and taking into account influencing factors such as specific load, sliding speed, temperature, etc.) can provide only approximate values. It is therefore recommended to verify the design and layout of both maintenance-free, a dry-running plain bearings and low-maintenance ones through field-oriented tests.

The sections that follow discuss the special functional models of maintenance-free and low-maintenance plain bearings.

3.1.1 General

The P1 material group includes the materials P10, P10Bz, P14 and P147. P10 and P10Bz contain lead in the bronze sliding layer and the lubricant mass.
P14 and P147 are lead-free.

3.1.2 Material composition

Materials in the P1 group consist of a steel or bronze back, a sintered sliding layer of special bronze with a layer thickness of 0.2 mm to 0.35 mm and a solid lubricant mass. The bronze sliding layer is sintered in such a way as to achieve a porosity volume of approx. 30 %. A solid lubricant mixture – usually PTFE with bulking agents – is rolled in and sintered through the gaps in the porous sliding layer. The solid lubricant mixture completely fills the cavities and forms a running-in layer up to 0.03 mm thick above the bronze sliding layer (Fig. 2).

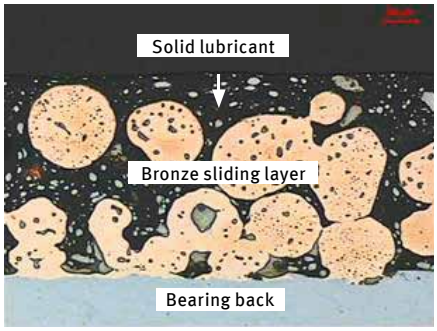

Fig. 2: P1 layer system

3.1.3 Functional description

Maintenance-free, dry-running P1 plain bearings go through four phases during their overall service life (Fig. 3).

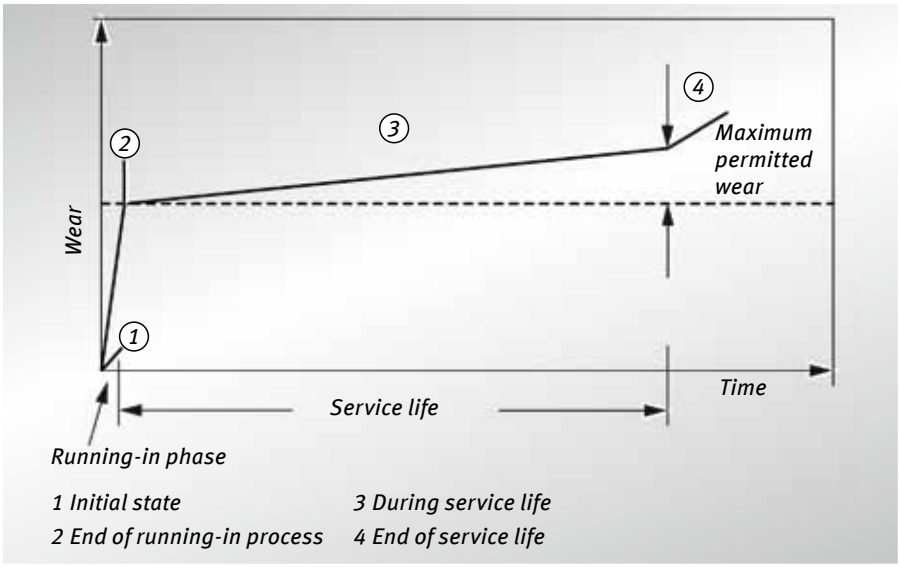

Fig. 3: Wear curve of P1 plain bearing (schematic) /1/

Initial state
The cavities in the bronze sliding layer are completely filled with solid lubricant, and the running-in layer above the bronze sliding layer is still in perfect condition (Fig. 4).

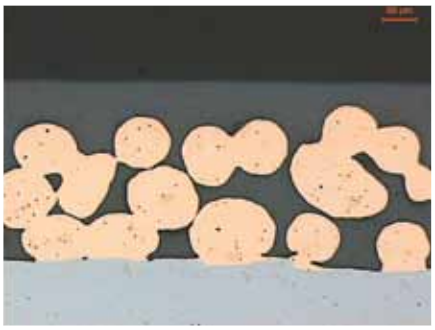

Fig. 4: Condition of sliding surface in the initial state

Running-in process
As the sliding movement commences, parts of the running-in layer are transferred to the moving interacting sliding part (Fig. 6). During this process, a sealed film of solid lubricant forms on the interacting sliding part, which considerably reduces the friction. This running-in process causes up to 0.005 and 0.030 mm of material to be removed from the sliding layer of the bearing. The condition of the sliding surface at the end of the running-in period can be seen in Fig. 5.

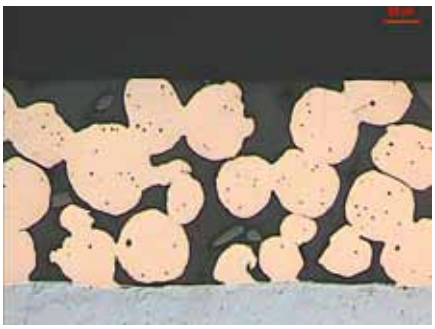

Fig. 5: Condition of sliding surface at end of running-in process

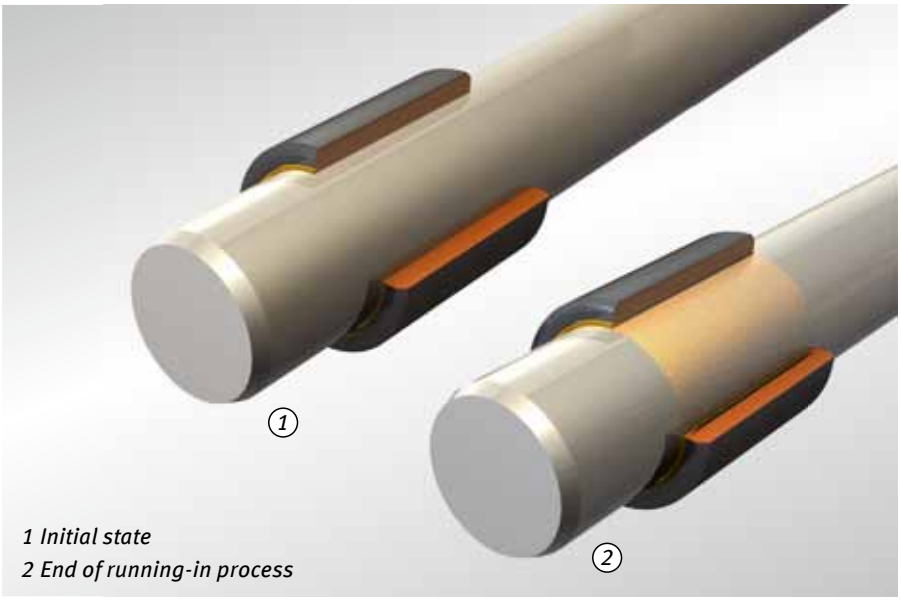

Fig. 6: Material transfer

Continuous operation
Once the running-in process is complete, the plain bearing commences its actual useful life. This is determined by the load collective and ambient conditions, but also by the ratio of the bronze sliding layer volume to the solid lubricant volume. During the period of operation, new solid lubricant is constantly entering the contact zone, replacing the used bits of solid lubricant. This process is triggered, above all, by the different expansion coefficients of the bronze sliding layer and the solid lubricant (ratio ~1:5.5). When the sliding layer heats up due to the friction work in the contact zone, the solid lubricant expands to a greater extent, lubricating the moving interacting sliding part. This lowers the friction coefficient and the bearing temperature.
When the lubricant is used up, a new cycle commences. Fig. 7 shows a typical curve of this development. Fig. 8 illustrates the condition of the sliding surface during service life.

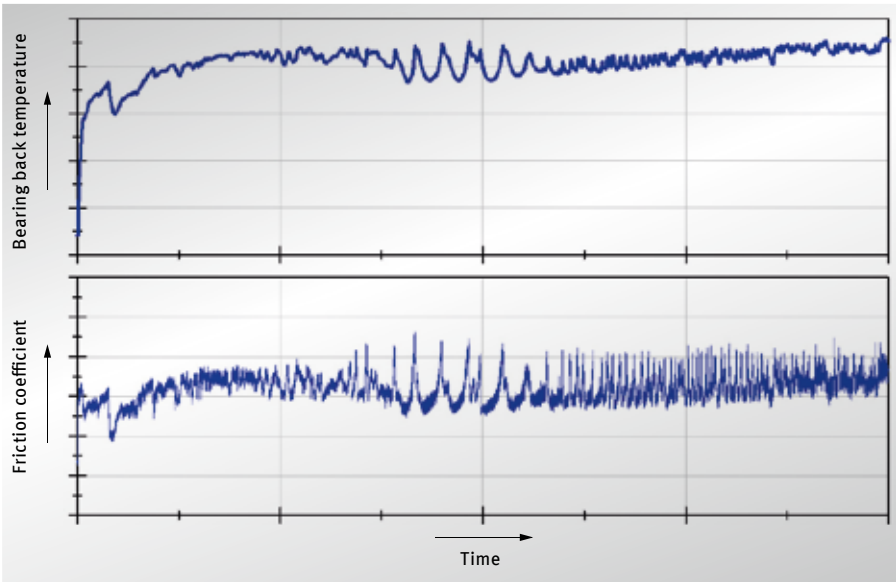

Fig. 7: Oscillation characteristic of friction coefficient and temperature

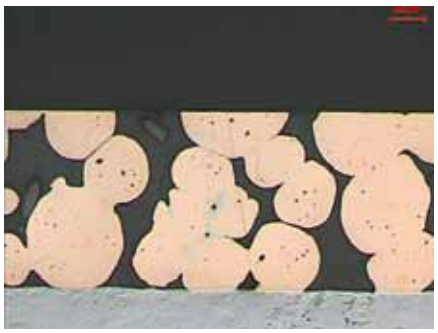

Fig. 8: Condition of sliding surface during service life

End of service life
The solid lubricant in the plain bearing system is only available to a limited extent (determined by the pore volume of the porous, sintered bronze sliding layer).
If the lubricant volume is used up due to a longer period of use, the friction coefficient rises and wear intensity increases. In most cases, this also causes the permitted wear limit to be exceeded. In P1 plain bearings, this is normally › 0.05 mm. At high sliding speeds, in particular, this may also result in overheating of the bearing and shaft seizure. The condition of the sliding surface at the end of the service life can be seen in Fig. 9.

Fig. 9: Condition of sliding surface at end of service life

3.1.4 Limit values and influencing factors

Service life and operational reliability are determined by many different influences, which also interact with one another. The most important influencing factors and limit values are explained below.

Maximum permitted pv value
The pv value is the product of specific bearing load p[MPa] and sliding speed v [m/s].
These two variables interact with one another. Fig. 10 shows the maximum permitted pv value for P1 plain bearings in the form of a limit curve. If the specific bearing load and sliding speed lie within this limit curve, it is basically safe to assume that the P1 plain bearing is suitable for use.

Range of application of service life calculation:

P10, P10Bz		
0.03 m/s	‹ v ≤	2 m/s
0.1 MPa	‹ p ≤	56 MPa

P14		
0.03 m/s	‹ v ≤	1 m/s
0.1 MPa	‹ p ≤	56 MPa

P147		
0.03 m/s	‹ v ≤	0.8 m/s
0.1 MPa	‹ p ≤	56 MPa

Here, the limit curve indicates that at the respective specific bearing load $p_{max.}$ [MPa] and associated sliding speed v [m/s], thermal equilibrium is reached during operation, i.e. the plain bearing system still works reliably and safely. If the load or sliding speed increases beyond the limit curve, there is no thermal equilibrium. The wear intensity and temperature increase, and the bearing may fail within a short time.

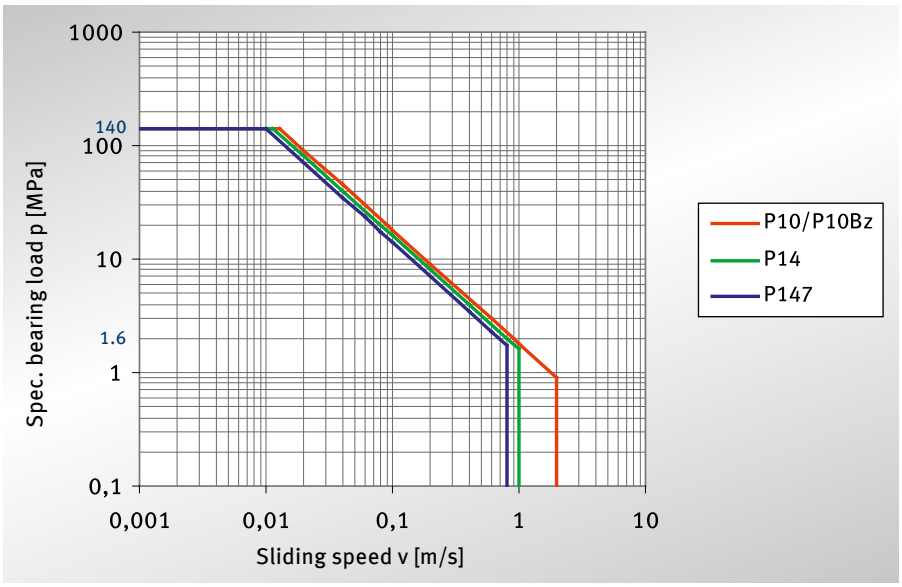

Fig. 10: pv value [MPa·m/s], limit curve (values apply at room temperature)

Specific bearing load
At the maximum permitted specific bearing load and the respective maximum permitted sliding speed, the following threshold values apply to a maintenance-free, dry-running P1 plain bearing:

Maximum specific bearing load p[MPa]		Sliding speed v [m/s]		
		P10, P10Bz	P14	P147
Static	250 MPa	-	-	
Concentrated load at rest, uniform movement	140 MPa	≤ 0.013 m/s	≤ 0.011 m/s	≤ 0.010 m/s
Concentrated load at rest, rotating, oscillating	56 MPa	≤ 0.032 m/s	≤ 0.029 m/s	≤ 0.025 m/s
Concentrated load, circumferential load, increasing, rotating, oscillating	28 MPa	≤ 0.064 m/s	≤ 0.057 m/s	≤ 0.050 m/s

Tab. 1: Threshold values of specific bearing load

Sliding speed
For maintenance-free, plumbiferous P1 plain bearings, the sliding speed v during dry running is limited to max. 2 m/s.
For lead-free P1 plain bearings, the maximum sliding speed $v_{max.}$ is 1m/s for P14 and 0.8 m/s for P147. In a plain bearing assembly, the sliding speed is understood as the relative speed in m/s between the bearing and the shaft. It is of paramount importance in a tribological system, and in combination with the specific bearing load is a determining factor for the area of application of a plain bearing assembly. Also see Fig. 10: pv value limit curve. A high sliding speed exerts a particular influence on bearing wear. The long sliding distance during the operating period gives rise to correspondingly high wear. However, the bearing temperature is also dependent upon the sliding speed. If the tribological system no longer enjoys a state of thermal equilibrium as the result of an excessive sliding speed, the permitted load limit is exceeded.

Friction, bearing load, sliding speed
These three variables interact with one another. This relationship tends to manifest as follows:

Specific bearing load		Sliding speed		Coefficient of friction	
p [MPa]		v [m/s]		μ [1]	
250 to 140	high	up to 0.001	low	0.03	low
140 to 60	↑	0.001 to 0.005	↓	0.04 to 0.07	↓
60 to 10	↑	0.005 to 0.05	↓	0.07 to 0.1	↓
10 to 1	↑	0.050 to 0.5	↓	0.10 to 0.15	↓
to 1	low	0.500 to 2	high	0.15 to 0.25	high

Tab. 2: Friction coefficient (all values apply at 20°C, interacting sliding surface steel, roughness depth Rz 0.8 to Rz 1.5)

Friction and interacting sliding parts (material and surface)
The operational reliability and service life of a maintenance-free bearing assembly depend not only on the load collective, but also on the material and surface of the interacting sliding part. The materials of the interacting sliding parts may exert a considerable influence on the wear behaviour and thus the service life of a maintenance-free, dry-running P1 plain bearing. It is basically advantageous in terms of service life to employ interacting sliding parts with a hardened sliding surface, or one featuring a special coating. This is particularly the case under higher loads or at higher sliding speeds.
The surface roughness of the interacting sliding part is also extremely important in respect of the reliability and service life of the tribological pairing.
The most favourable friction conditions are achieved with a surface roughness of R_z0.8 to R_z1.5. If the surface is excessively smooth, insufficient solid lubricant is deposited on the interacting sliding part. Adhesion repeatedly occurs during the sliding movement, resulting in stick-slip effects, squeaking noises and problems during operation.
If the surface of the interacting sliding part is too rough, on the other hand, the available solid lubricant in the plain bearing is no longer adequate for producing a sealed film of lubricant on the interacting part. The consequence is abrasion, together with increased friction, a rise in temperature and increased wear.

Friction and temperature (ambient temperature)
The operating temperature range within which a maintenance-free plain bearing system works is important for reliability and service life. This is particularly the case because the mechanical properties of the solid lubricant so vital to the performance of a plain bearing change with variations in temperature. Thus, the friction coefficient is slightly lower at an operating temperature of approx. 100 °C than at room temperature. If the operating temperature rises much over 100 °C, this effect is reversed. The friction coefficient rises and can be up to 50 % greater than the value at room temperature. This causes a change in the bearing temperature, and consequently the mechanical properties of the solid lubricant. The element of solid lubricant important for friction is the polymer PTFE. The shear strength of PTFE, above all, is responsible for forming and maintaining the lubricating film on the interacting sliding part. However, the shear strength of PTFE is temperature-dependent (Fig. 11). If the operating temperature rises, the shear strength diminishes proportionately. /2/
If the shear stress occurring in the contact zone due to the friction process is greater than the shear strength of PTFE, the lubricating film in the contact zone shears off, which can lead to rapid failure.

Sliding movement and type of load
The type of load – concentrated or circumferential – is also a factor in combination with rotating or swivelling motion. Concentrated load is the result of a moving shaft and stationary housing and bearing bush. With circumferential load, the housing and bearing bush move around the stationary shaft or axle. Rotating or swivelling movements under uniform load principally produce wear, whereby the wear rate for bearing assemblies with circumferential load can be much lower than for bearing assemblies subject to concentrated load. If the bearing assembly is subject to high-frequency load changes or vibrations, this effect can be intensified by material fatigue.

Where movements are linear, the bearing generally slides against a longer area of the interacting part. This causes more friction heat to be dissipated via the interacting sliding part. Therefore, higher sliding speeds are possible here than with rotating or swivelling movements.

Hydrodynamic operation
P1 plain bearings may also run under hydrodynamic conditions.
Motor Service offers the relevant calculations as a service.

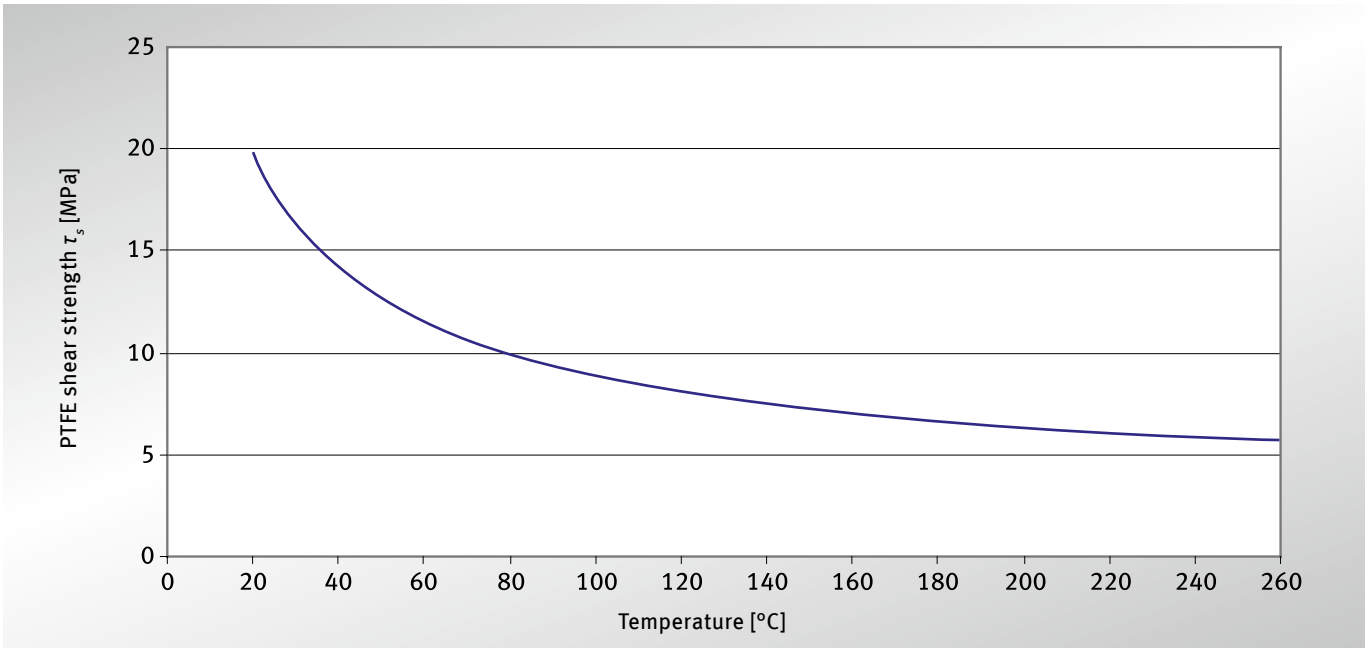

Fig. 11: PTFE shear strength τ_s versus temperature

3.2.1 Material composition

The material in P2 plain bearings consists of a steel back, a 0.2 mm to 0.35 mm thick bronze compound layer and a thermoplastic resin with bulking agents as a sliding layer. The resin sliding layer is embedded in the cavities (pore volume ~ 50 %) of the bronze compound layer, and forms a sliding surface 0.08 mm to 0.2 mm thick above the compound layer, depending on the intended purpose.
Two different sliding layer compositions exist within the P2 material group:

- P20, P22, P23 with lead
- P200, P202, P203 lead-free

The thickness and contours of the sliding layer may also vary. Details on this subject can be found in the material data sheets of this catalogue.

3.2.2 Functional description

Low-maintenance P2 plain bearings are generally used in applications with lifetime lubrication. For this purpose, the oil distributing pockets in the sliding surface are completely filled with lubricant (grease) during assembly.

Running-in process
At the beginning of the sliding movement, the grease in the sliding surface is transferred onto the interacting sliding part (shaft). The two sliding surfaces are therefore separated by a thin layer of lubricant. The friction coefficient decreases during the sliding movement, assuming values of between 0.02 and 0.15.
The sliding surfaces of the bearing and interacting sliding part simultaneously adapt accordingly, i.e. unevenness in the material is worked off. This rubbed off material is largely deposited in the oil distributing pockets, and is initially no longer relevant to wear.

Continuous operation
Due to the design of the oil distributing pockets (in conformity with DIN ISO 3547), sufficient lubricant is available for the expected period of operation. The friction coefficient and temperature remain virtually constant for a longer period. The wear rate is minimal. This applies to low to medium loads.
At higher loads or in difficult operating conditions, however, regular relubrication of the bearing assembly is recommended. Correctly timed relubricating intervals reduce the wear rate, and increase operational reliability and service life accordingly.

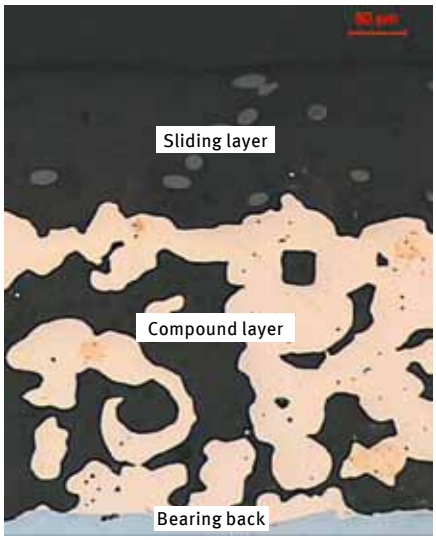

Fig. 12: P2 layer system

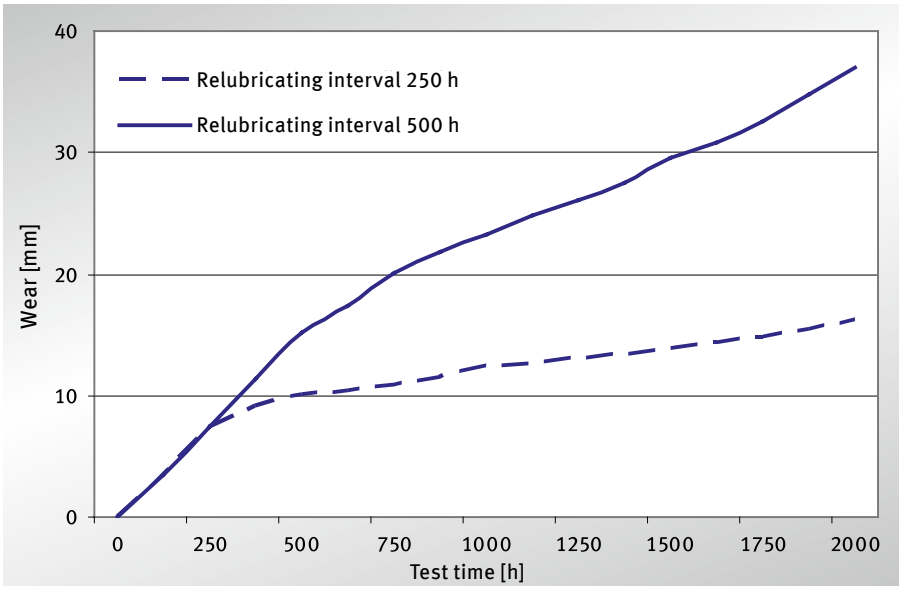

Fig. 13: Service life = f (lubricating interval)

End of service life
After a longer period of operation and corresponding depth of wear, the lubricant volume of plain bearing applications with lifetime lubrication is used up. The type of lubricating grease and ambient conditions may also adversely affect the performance of the lubricant (ageing). Consequently, the friction coefficient, bearing temperature and wear all rise disproportionately. The bearing overheats and fails. Similar behaviour can also be expected in bearing assemblies requiring relubrication. Relubrication may considerably extend the service life of the bearing assembly, but even here, the depth of wear drastically reduces the capacity of the oil distributing pockets. Sufficient lubricant can no longer be deposited. The effect is worsened by rubbed off material, which enters the oil distributing pockets and further limits their volume. Failure symptoms similar to those of lifetime lubricated plain bearings then occur.

3.2.3 Limit values and influencing factors

The service life and reliability of a low-maintenance plain bearing assembly are influenced not only by operating and ambient conditions, but also the lubricating conditions (grease, oil). As a rule, several influencing factors occur simultaneously and are also interdependent. The most important influencing factors and limit values are explained below.

Maximum permitted pv value
The pv value is the product of the specific bearing load p[MPa] and the sliding speed v [m/s]. These two variables interact with one another. Fig. 14 shows the maximum permitted pv value for P2 plain bearings in the form of a limit curve. If the specific bearing load and sliding speed lie within this limit curve, it is basically safe to assume that the P2 plain bearing is suitable for use.

Range of application of service life calculation:

P20		
0.04 m/s	‹ v ≤	3 m/s
0.1 MPa	‹ p ≤	70 MPa

P200		
0.04 m/s	‹ v ≤	3.3 m/s
0.1 MPa	‹ p ≤	70 MPa

The limit curve indicates that at the respective specific bearing load p [MPa] and associated sliding speed v [m/s], thermal equilibrium is reached during operation, i.e. the plain bearing system still works reliably and safely. If the load or sliding speed increases beyond the limit curve, no thermal equilibrium can be reached. The wear intensity and temperature increase and the bearing may fail within a short time.
P2 plain bearings must be lubricated. Depending on the lubricant, service life may be lengthened. The limit curve shown here applies to lithium-soap grease, mineral oil-based grease and a temperature of 20 °C.

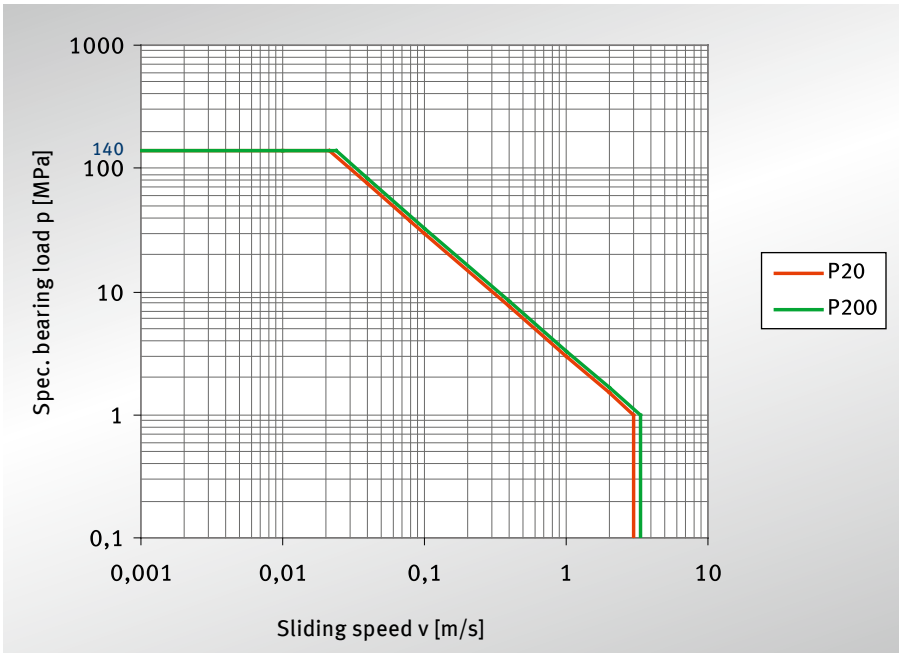

*Fig. 14: pv values, limit curves for P20, P200 *, grease-lubricated at 20 °C*

Specific bearing load
At the maximum permitted specific bearing load and the respective maximum permitted sliding speed, the following threshold values apply to a low-maintenance P2 plain bearing:

Maximum specific bearing load p[MPa]		Sliding speed v [m/s]	
		P20, P22*,P23*	P200, P202*, P203*
Static	250 MPa	-	-
Concentrated load at rest, uniform movement	140 MPa	≤ 0.021 m/s	≤ 0.024 m/s
Concentrated load at rest, rotating, oscillating	70 MPa	≤ 0.043 m/s	≤ 0.047 m/s
Concentrated load, circumferential load, increasing, rotating, oscillating	35 MPa	≤ 0.086 m/s	≤ 0.094 m/s
Load limit (Fig. 14)	1.0 MPa	max. 3.0 m/s	max. 3.3 m/s

Tab. 3: Threshold values of spec. bearing load

Sliding speed
For low-maintenance, plumbiferous P2 plain bearings, the maximum permitted sliding speed v with grease lubrication is limited to 3.0 m/s. For low-maintenance, lead-free P2 plain bearings, the maximum permitted sliding speed is 3.3 m/s. Here, the sliding speed is understood as the relative speed between the bearing and the interacting sliding part. It is of paramount importance in a tribological system, and in combination with the specific bearing load p is a determining factor for the area of application of a plain bearing. A high sliding speed exerts a particular influence on bearing wear. The long sliding distance during the operating period gives rise to correspondingly high wear. If the sliding speed rises above the permitted value, the plain bearing system is no longer in a state of thermal equilibrium. Operational problems and even failure can arise.

Grease lubrication
The service life of a P2 plain bearing is also influenced by the type of grease used. The friction coefficient, load carrying capacity and permitted operating temperature, in particular, are dependent upon the lubricating grease. Ageing resistance is also an important factor for problem-free function.
Types of grease that are basically suitable are:

- Lithium-soap grease (ageing-resistant)
- Barium-soap grease (good adhesion)
- Aluminium-soap grease (good wettability)

Correctly timed relubricating intervals extend service life and improve operational reliability (Fig. 13).

Friction and interacting sliding parts (material and surface)
The operational reliability and service life of a low-maintenance bearing assembly depend not only on the load collective and lubricant, but also on the material and surface of the interacting sliding part. The materials of the interacting sliding part may exert a considerable influence on service life (see Tab. 21). The surface roughness of the interacting sliding part is also extremely important in respect of the reliability and service life of the tribological pairing. The most favourable conditions are created by a surface roughness of R_z 0.8 to R_z 1.5. If surface roughness exceeds this, abrasion and increased wear result, despite the presence of grease as a lubricant.

* On request

Temperature
P2 plain bearings are extremely insensitive to operating temperatures up to approx. 70 °C. If temperatures rise considerably above this level, however, the bearing's performance drops abruptly. The practical operating limit is reached at a temperature of 110 °C. An operating temperature of 140 °C is possible for brief periods, but only if bearing load is very low. The thermal resistance of the lubricant used (e.g. type of grease) must also be taken into consideration.

Sliding movement and load
The type of load – concentrated or circumferential – is an important factor in combination with rotating or swivelling motion. Concentrated load is the result of a moving shaft and stationary housing and bearing bush. With circumferential load, the housing and bearing bush move around the stationary shaft.
Rotating or swivelling movements under uniform load principally produce wear. If the bearing assembly is subject to high-frequency load changes or vibrations, this effect can be intensified by material fatigue.
Where movements are linear, the bearing generally slides against a longer area of the interacting part. This causes more friction heat to be dissipated via the interacting sliding part. Therefore, higher sliding speeds are possible here than with rotating or swivelling movements.

Hydrodynamic operation
P2 plain bearings may also run under hydrodynamic conditions. To this aim, a sliding layer without oil distributing pockets is required.
Plain bearings without oil distributing pockets can be supplied ready to install or, on request, the inside diameter of bearings can be machined accordingly.
As calculation of hydrodynamic plain bearings is a complex task, Motor Service offers this service.

Material selection plan. Applies to dry-running and grease-lubricated plain bearings. For hydrodynamic operation, Motor Service offers calculation and material selection as a service.

Input variables	
The adjacent input variables are normally set out in the specification or are calculated (shaft). As an initial approximation, the bearing width must be provisionally determined as a function of the shaft in this plan.	• Bearing load [MPa] • Shaft diameter [mm] • Speed [rpm] • Swivel angle [°] • Oscillating frequency [rpm] • Bearing width [mm]

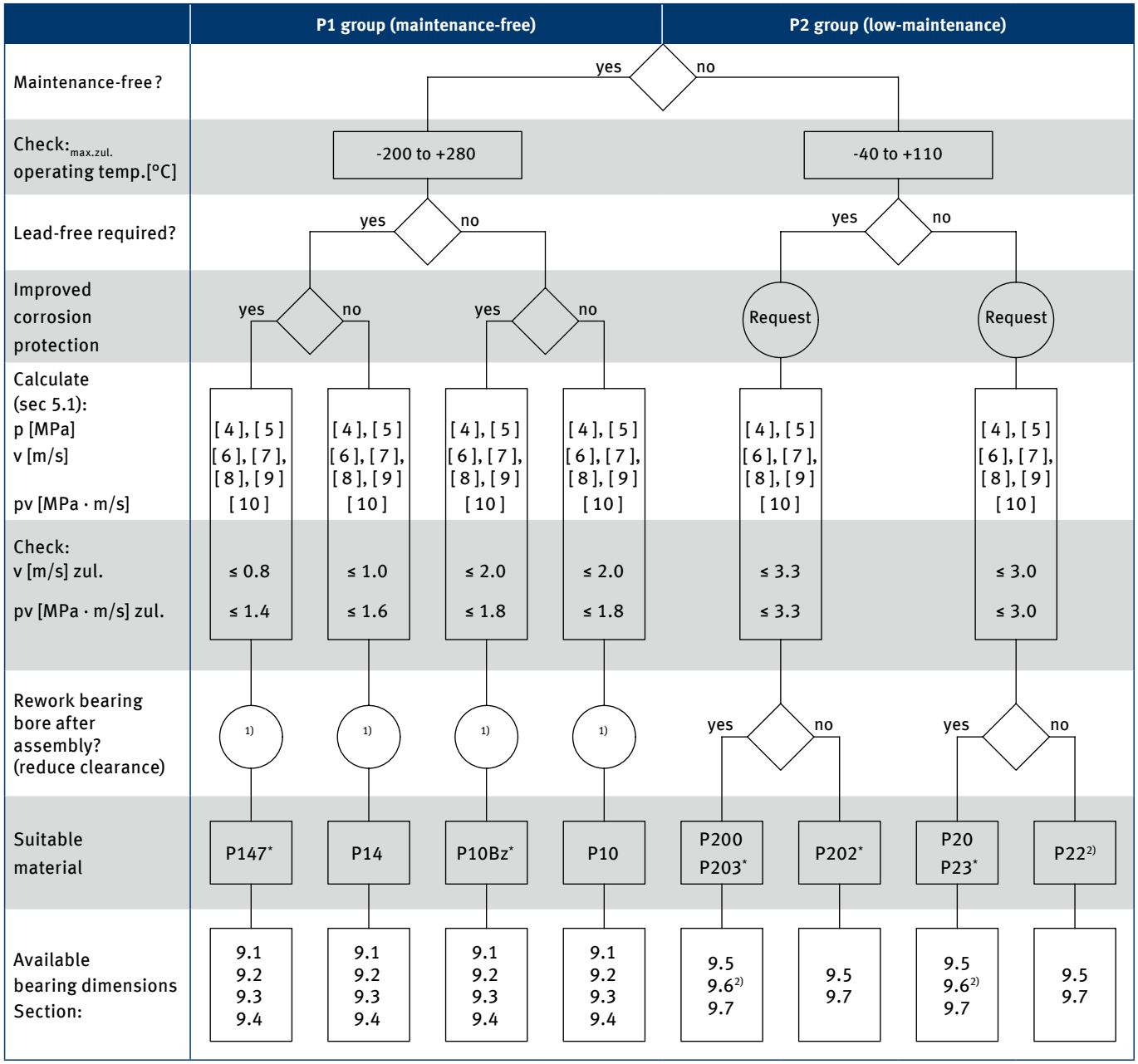

1) P1 group bushes cannot be reworked.
They can be calibrated without cutting, but this reduces service life (Tab. 33)
2) Applies to P20/P200 material only
* On request

4.1.1

P10, P10Bz ... Sturdy and maintenance-free

Brief description
P10 and P10Bz (formerly P11) are sturdy, plumbiferous sliding materials with superior tribological performance. They are designed for maintenance-free, dry-running applications, but can also be employed in systems with liquid lubrication. The use of grease as a lubricant with P10, P10Bz is only possible to a limited extent, and is not recommended.

Material manufacture
The solid lubricant mass is produced in a specially adapted mixing process. In a parallel, continuous sintering operation, bronze powder is sintered onto the steel or bronze back as a sliding layer. This produces a sliding layer with a thickness from 0.2 mm to 0.35 mm and a pore volume of approx. 30 %. Next,the cavities are filled with solid lubricant by means of impregnating rollers. This process step is controlled in such a way that a running-in layer of solid lubricant up to max. 0.03 mm thick is produced above the sliding layer. In further thermal treatments, the characteristic properties of the material system are adjusted, and the required thickness tolerances of the composite material are produced using controlled roller pairs.

Plain bearing production
Sliding elements in a great variety of designs are produced from P10 and P10Bz in cutting, stamping and shaping processes.
Standard designs are:
- Cylindrical bushes
- Collar bushes
- Thrust washers
- Strips

In a final step, plain bearings manufactured from P10 undergo anti-corrosion treatment on the bearing back, end faces and striking faces.
Standard version: Tin
Layer thickness: approx. 0.002 mm

Additionally, P10 plain bearings can be supplied with improved corrosion-protection coating “Zinc, transparent passivated”, on request.
P10Bz does not require any additional corrosion protection.

Important note:
Tin is used as temporary corrosion protection and an assembly aid.

Properties of P10
- Very low stick-slip tendency
- Low wear
- Good chemical resistance
- Low friction coefficient
- No tendency to fuse with metal
- Largely resistant to swelling
- Does not absorb water

Preferred areas of application
- Maintenance-free operation under dry-running conditions
- Rotating or oscillating movements up to a speed of 2 m/s
- Linear movements
- Temperature range -200 °C to 280 °C

The materials P10 and P10Bz contain lead and must therefore not be used in the food sector.

Properties of P10Bz
Material P10Bz is recommended for more stringent requirements in terms of corrosion resistance or for use in aggressive media. It has some advantages over P10 in this respect:
- Very good thermal conductivity and therefore increased reliability
- Anti-magnetic

Important note:
The material P10Bz is available on request.

Hydrodynamic operation
Use in hydrodynamic conditions is possible without problem up to a sliding speed of 3 m/s.
In continuous operation above 3 m/s, there is a risk of flow erosion or cavitation. Motor Service offers the calculation of hydrodynamic operating states as a service.

Material composition of P10, P10Bz (formerly P11)

1	**Running-in layer**	
	PTFE matrix with bulking agent [1] Layer thickness [mm]:	 max. 0.03
2	**Sliding layer**	
	Tin-lead-bronze Layer thickness [mm]: Pore volume [%]:	 0.20 – 0.35 approx. 30
3	**Bearing back**	
	Steel Steel thickness [mm]: Steel hardness [HB]:	 Variable 100 – 180
	Alternative Bronze Bronze thickness [mm]: Bronze hardness [HB]:	 Variable 80 – 160

Tab. 4: System composition

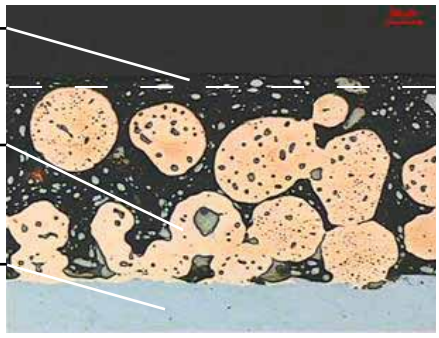

Fig. 15: Layer system

Chemical composition

Running-in layer	
Components	% weight
PTFE	44
Pb	56
Sliding layer	
Components	% weight
Sn	9 to 11
Pb	9 to 11
Cu	Remainder
Bearing back	
Material	Material information
Steel	DC04
	DIN EN 10130
	DIN EN 10139
Alternative: Bronze	CuSn 6
	DIN 17662

Tab. 5: Chemical composition

Material characteristics

Characteristics, load limit	Symbol	Unit	Value
Permitted pv value	$pv_{zul.}$	MPa·m/s	1.8
Permitted specific bearing load			
• Static	$p_{zul.}$	MPa	250
• Concentrated load, circumferential load at sliding speed ≤0.013 m/s	$p_{zul.}$	MPa	140
• Concentrated load, circumferential load at sliding speed ≤0.032 m/s	$p_{zul.}$	MPa	56
• Concentrated load, circumferential load, increasing at sliding speed ≤0.064 m/s	$p_{zul.}$	MPa	28
Permitted sliding speed			
• Dry running	$v_{zul.}$	m/s	2
• Hydrodynamic operation	$v_{zul.}$	m/s	3
Permitted temperature	$T_{zul.}$	°C	-200 to +280
Thermal expansion coefficient			
• Steel back	α_{St}	K^{-1}	$11*10^{-6}$
• Bronze back	α_{Bz}	K^{-1}	$17*10^{-6}$
Coeff. of thermal conductivity			
• Steel back	λ_{St}	$W(mK)^{-1}$	› 40
• Bronze back	λ_{Bz}	$W(mK)^{-1}$	› 70

Tab. 6: Material characteristics

[1] The pores of the sliding layer are also filled with this lubricant mass.

4.1.2

P14 ... Maintenance-free and environmentally friendly

Brief description
P14 is a lead-free standard sliding material with a high tribological performance.
It is designed for maintenance-free, dry-running applications, particularly in the food sector. It may also be employed in systems with liquid lubrication, however. The use of grease as a lubricant with P14 is only possible to a limited extent, and is not recommended.

Material manufacture
The solid lubricant mass is produced in a specially adapted mixing process.
In a parallel, continuous sintering operation, bronze powder is sintered onto the steel back as a sliding layer. This produces a sliding layer with a thickness from 0.2 mm to 0.35 mm and a pore volume of approx. 30 %. Next, the cavities are filled with solid lubricant by means of impregnating rollers. This process step is controlled in such a way that a running-in layer of solid lubricant up to max. 0.03 mm thick is produced above the sliding layer. In further thermal treatments, the characteristic properties of the material system are adjusted, and the required thickness tolerances of the composite material produced using controlled roller pairs.

Plain bearing production
Sliding elements in a great variety of designs are produced from P14 in cutting, stamping and shaping processes.
Standard designs are:
- Cylindrical bushes
- Collar bushes
- Thrust washers
- Strips

In a final step, plain bearings manufactured from P14 undergo anti-corrosion treatment on the bearing back, end faces and striking faces.
Standard version: Tin
Layer thickness: approx. 0.002 mm

Properties of P14
- Lead-free
- Very low stick-slip tendency
- Low wear
- Low friction coefficient
- No tendency to fuse with metal
- Very low tendency to swell

Preferred areas of application
- Maintenance-free operation in dry-running conditions where lead-free parts are required
- Rotating or oscillating movements up to a speed of 1 m/s
- Linear movements
- Temperature range -200 °C to 280 °C

Hydrodynamic operation
Use in hydrodynamic conditions is possible without problem up to a sliding speed of 3 m/s.
In continuous operation above 3 m/s, there is a risk of flow erosion or cavitation. Motor Service offers the calculation of hydrodynamic operating states as a service.

Important note:
Tin is used as temporary corrosion protection and an assembly aid.

P14 cannot be used in water (Alternative: P10, P147)

Material composition of P14

1	**Running-in layer**	
	PTFE matrix with bulking agent[1)] Layer thickness [mm]:	 max. 0.03
2	**Sliding layer**	
	Tin-bronze Layer thickness [mm]: Pore volume [%]:	 0.20 – 0.35 approx. 30
3	**Bearing back**	
	Steel Steel thickness [mm]: Steel hardness [HB]:	 Variable 100 – 180

Tab. 7: System composition

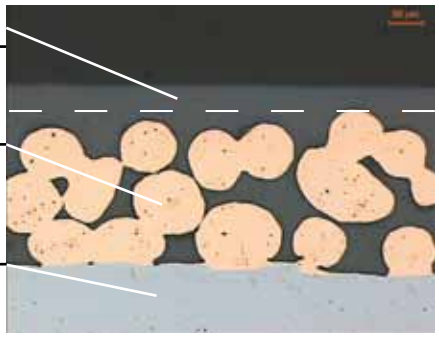

Fig. 16: Layer system

Chemical composition

Running-in layer	
Components	% weight
PTFE	62
ZnS	38
Sliding layer	
Components	% weight
Sn	9 to 11
Cu	Remainder
Bearing back	
Material	Material information
Steel	DC04
	DIN EN 10130
	DIN EN 10139

Tab. 8: Chemical composition

Material characteristics

Characteristics, load limit	Symbol	Unit	Value
Permitted pv value	$pv_{zul.}$	MPa·m/s	1.6
Permitted specific bearing load			
• Static	$p_{zul.}$	MPa	250
• Concentrated load, circumferential load at sliding speed ≤0.011 m/s	$p_{zul.}$	MPa	140
• Concentrated load, circumferential load at sliding speed ≤0.029 m/s	$p_{zul.}$	MPa	56
• Concentrated load, circumferential load, increasing at sliding speed ≤0.057 m/s	$p_{zul.}$	MPa	28
Permitted sliding speed			
• Dry running	$v_{zul.}$	m/s	1
• Hydrodynamic operation	$v_{zul.}$	m/s	3
Permitted temperature	$T_{zul.}$	°C	-200 to +280
Thermal expansion coefficient			
• Steel back	α_{St}	K^{-1}	$11*10^{-6}$
Coeff. of thermal conductivity			
• Steel back	λ_{St}	$W(mK)^{-1}$	› 40

Tab. 9: Material characteristics

[1)] The pores of the sliding layer are also filled with this lubricant mass.

4.1.2
P14 ... Maintenance-free and corrosion-resistant

Brief description
P14 is a lead-free special sliding material with a high tribological performance.
It is designed for maintenance-free, dry-running applications, particularly in areas subject to increased corrosion. It may also be used in systems with liquid lubrication.
The use of grease as a lubricant with P147 is only possible to a limited extent, and is not recommended.

Material manufacture
The solid lubricant mass is produced in a specially adapted mixing process.
In a parallel, continuous sintering operation, bronze powder is sintered onto the steel back as a sliding layer. This produces a sliding layer with a thickness from 0.2 mm to 0.35 mm and a pore volume of approx. 30 %. Next, the cavities are filled with solid lubricant by means of impregnating rollers. This process step is controlled in such a way that a running-in layer of solid lubricant up to max. 0.03 mm thick is produced above the sliding layer.
In further thermal treatments, the characteristic properties of the material system are adjusted, and the required thickness tolerances of the composite material produced using controlled roller pairs.

Plain bearing production
Sliding elements in a great variety of designs are produced from P147 in cutting, stamping and shaping processes.
Standard designs are:
- Cylindrical bushes
- Collar bushes
- Thrust washers
- Strips

In a final step, plain bearings manufactured from P147 undergo special anti-corrosion treatment on the bearing back, end faces and striking faces.

Version:	Zinc, transparent passivated
Layer thickness:	0.008 mm to 0.012 mm

Greater layer thickness on request.

Properties of P147
- Lead-free
- Very low stick-slip tendency
- Low wear
- Good chemical resistance
- Low friction coefficient
- No tendency to fuse with metal
- Very low tendency to swell
- Does not absorb water
- Very good corrosion resistance

Preferred areas of application
- In aggressive media[1)]
- Outside machines and systems[1)]
- Maintenance-free operation in dry-running conditions where lead-free parts are required
- Rotating or oscillating movements up to a speed of 0.8 m/s
- Linear movements
- Temperature range -200 °C to 280 °C

Hydrodynamic operation
Use in hydrodynamic conditions is possible without problem up to a sliding speed of 3 m/s.
In continuous operation above 3 m/s, there is a risk of flow erosion or cavitation.
Motor Service offers the calculation of hydrodynamic operating states as a service.

Important note:
Transparent passivated zinc is an especially effective anti-corrosion agent.
An inclined position of the bush must be avoided during installation (force-fitting) of the bearing bushes. as this carries a risk of damaging the zinc coating.

Important note:
The material P147 is available on request.

[1)] P147 satisfies the requirements of the salt spray test to DIN 50021

Material composition of P147

1	**Running-in layer**	
	PTFE matrix with bulking agent[1)] Layer thickness [mm]:	max. 0.03
2	**Sliding layer**	
	Tin-bronze Layer thickness [mm]: Pore volume [%]:	0.20 – 0.35 approx. 30
3	**Bearing back**	
	Steel Steel thickness [mm]: Steel hardness [HB]:	Variable 100 – 180

Tab. 10: System composition

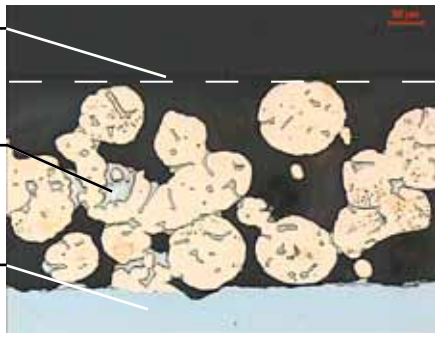

Fig. 17: Layer system

Chemical composition

Running-in layer	
Components	% weight
PTFE	82
$BaSO_4$	18
Sliding layer	
Components	% weight
Sn	9 to 11
Cu	Remainder
Bearing back	
Material	Material information
Steel	DC04
	DIN EN 10130
	DIN EN 10139

Tab. 11: Chemical composition

Material characteristics

Characteristics, load limit	Symbol	Unit	Value
Permitted pv value	$pv_{zul.}$	MPa·m/s	1.4
Permitted specific bearing load			
• Static	$p_{zul.}$	MPa	250
• Concentrated load, circumferential load at sliding speed ≤0.010 m/s	$p_{zul.}$	MPa	140
• Concentrated load, circumferential load at sliding speed ≤0.025 m/s	$p_{zul.}$	MPa	56
• Concentrated load, circumferential load, increasing at sliding speed ≤0.050 m/s	$p_{zul.}$	MPa	28
Permitted sliding speed			
• Dry running	$v_{zul.}$	m/s	0.8
Permitted temperature	$T_{zul.}$	°C	-200 to +280
Thermal expansion coefficient			
• Steel back	α_{St}	K^{-1}	$11*10^{-6}$
Coeff. of thermal conductivity			
• Steel back	λ_{St}	$W(mK)^{-1}$	› 40

Tab. 12: Material characteristics

[1)] The pores of the sliding layer are also filled with this lubricant mass.

4.2.1

P20, P22, P23 ... Low-maintenance standard solutions

Brief description

P20, P22 and P23 are plumbiferous standard sliding materials with a high performance. They are designed for low-maintenance grease or liquid-lubricated applications. The standard P20 version features oil distributing pockets to DIN ISO 3547 in the sliding surface and a pre-finished wall thickness. The P22 versions (smooth sliding surface, suitable for reworking) and P23 (smooth sliding surface, ready to install) are also available on request.

Material manufacture

The bronze compound layer is sintered onto a prepared steel surface (strip) in a continuous sintering process in such a way as to produce a pore volume of around 50 % at a layer thickness of approx. 0.3 mm. Next, the sliding layer is applied in powder form and rolled into the cavities in the compound layer under a high temperature. The result is a sliding layer thickness of approx. 0.08 mm or approx. 0.2 mm above the compound layer, depending on the intended purpose. At the same time, the oil distributing pockets are produced, if required. A further rolling calibration process ensures the necessary thickness tolerance of the composite.

Plain bearing production

Sliding elements in a great variety of designs are produced from the composite material in cutting, stamping and shaping processes.

Standard designs are:

- Cylindrical bushes
- Thrust washers
- Strips

In a final step, plain bearings manufactured from P20, P22 or P23 undergo anti-corrosion treatment on the bearing back, end faces and striking faces.

Standard version: Tin

Layer thickness [mm]: approx. 0.002

Important note:

Tin is used as temporary corrosion protection and an assembly aid.

Properties

- Lifetime lubrication possible
- Low wear
- Low sensitivity to edge loading
- Good damping characteristic
- Insensitive to impact
- Good chemical resistance

Preferred areas of application

- Low-maintenance operation with lubrication
- Rotating and oscillating movements up to a speed of 3 m/s
- Linear movements up to 6 m/s
- Temperature range -40 °C to 110 °C

The materials P20, P22 and P23 contain lead and must therefore not be used in the food sector.

Fig. 18: P20 plain bearing with oil distributing pockets and oil hole

P22 and P23 feature smooth sliding surfaces and can be used under hydrodynamic conditions. The bearing bore of P22 is suitable for reworking.

Motor Service offers the calculation of hydrodynamic operating states as a service.

Important note:

Materials P22 and P23 are available on request.

Material	Versions		
	Ready to install	Oil distributing pockets	Machining allowance
P20	•	•	
P22			•
P23	•		

Tab. 13: Material versions P22 and P23 available on request

Material composition of P20, P22, P23

1	**Sliding layer**	
	PVDF matrix with bulking agents[1)] Layer thickness [mm]:	 0.08 – 0.20
2	**Intermediate layer**	
	Tin-bronze Layer thickness [mm]: Pore volume [%]:	 0.20 – 0.35 approx. 50
3	**Bearing back**	
	Steel Steel thickness [mm]: Steel hardness [HB]:	 Variable 100 – 180

Tab. 14: System composition

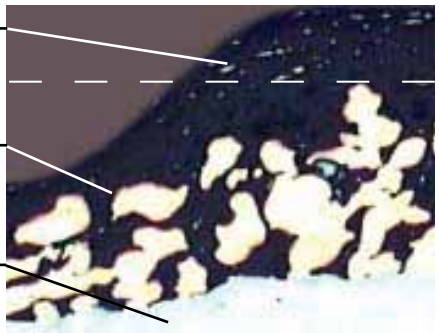

Fig. 19: Layer system

Chemical composition

Sliding layer	
Components	% weight
PVDF	51
PTFE	8
Pb	41
Intermediate layer	
Components	% weight
Sn	9 to 11
Cu	Remainder
Bearing back	
Material	Material information
Steel	DC04
	DIN EN 10130
	DIN EN 10139

Tab. 15: Chemical composition

Material characteristics

Characteristics, load limit	Symbol	Unit	Value
Permitted pv value	$pv_{zul.}$	MPa·m/s	3
Permitted specific bearing load			
• Static	$p_{zul.}$	MPa	250
• Concentrated load, circumferential load at sliding speed ≤0.021 m/s	$p_{zul.}$	MPa	140
• Concentrated load, circumferential load at sliding speed ≤0.043 m/s	$p_{zul.}$	MPa	70
• Concentrated load, circumferential load, increasing at sliding speed ≤0.086 m/s	$p_{zul.}$	MPa	35
Permitted sliding speed			
• Grease-lubricated, rotating, oscillating	$v_{zul.}$	m/s	3
• Grease-lubricated, linear	$v_{zul.}$	m/s	6
• Hydrodynamic operation	$v_{zul.}$	m/s	6
Permitted temperature	$T_{zul.}$	°C	-40 to +110
Thermal expansion coefficient			
• Steel back	α_{St}	K^{-1}	$11*10^{-6}$
Coeff. of thermal conductivity			
• Steel back	λ_{St}	$W(mK)^{-1}$	< 4

Tab. 16: Material characteristics

[1)] The cavities of the intermediate sliding layer are also filled with this mass.

4.2.2

P200, P202, P203 ... Low-maintenance, universal

Brief description

P200, P202 and P203 are lead-free, environmentally friendly sliding materials with a very high performance. Thanks to a special combination of bulking agents, high resistance is achieved with simultaneously very good dry-running behaviour. They are therefore ideally suited to low-maintenance grease or liquid-lubricated applications subject to more stringent requirements. The standard P200 version features oil distributing pockets to DIN ISO 3547 in the sliding surface and a pre-finished wall thickness. The P202 versions (smooth sliding surface, suitable for reworking) and P203 (smooth sliding surface, ready to install) are also available on request.

Material manufacture

The bronze compound layer is sintered onto a prepared steel surface (strip) in a continuous sintering process in such a way as to produce a pore volume of around 50 % at a layer thickness of approx. 0.3 mm. Next, the sliding layer is applied in powder form and rolled into the cavities in the compound layer under a high temperature. The result is a sliding layer thickness of approx. 0.08 mm or approx. 0.2 mm above the compound layer, depending on the intended purpose. At the same time, the oil distributing pockets are produced, if required. A further rolling calibration process ensures the necessary thickness tolerance of the composite.

Plain bearing production

Sliding elements in a great variety of designs are produced from the composite material in cutting, stamping and shaping processes.

Standard designs are:

- Cylindrical bushes
- Thrust washers
- Strips

In a final step, plain bearings manufactured from P200, P202 or P203 undergo anti-corrosion treatment on the bearing back, end faces and striking faces.

Standard version: Tin

Layer thickness [mm]: approx. 0.002

Additionally, the plain bearings can be supplied with improved corrosion-protection coating “Zinc, transparent passivated”, on request.

Important note:

Tin is used as temporary corrosion protection and an assembly aid.

Properties

- Lifetime lubrication
- Low wear
- Very good dry-running properties
- Insensitive to edge loading and impacts
- Good damping characteristic
- Good chemical resistance

Preferred areas of application

- Food sector
- Special requirements for environmental protection
- Low-maintenance operation with lubrication, more stringent requirements
- Rotating and oscillating movements up to a sliding speed of 3.3 m/s
- Linear movements up to 6 m/s
- Temperature range -40 °C to 110 °C

Fig. 20: P200 plain bearing with oil distributing pocket and oil hole

P202 and P203 feature smooth sliding surfaces and can be used under hydrodynamic conditions. P202 is suitable for reworking.

Motor Service offers the calculation of hydrodynamic operating states as a service.

Important note:

Materials P202 and P203 are available on request.

Material	Versions		
	Ready to install	Oil distributing pockets	Machining allowance
P200	•	•	
P202			•
P203	•		

Tab. 17: Material versions P202 and P203 available on request

Material composition of P200, P202, P203

1	**Sliding layer**	
	PVDF matrix with bulking agents[1)] Layer thickness [mm]:	 0.08 – 0.20
2	**Intermediate layer**	
	Tin-bronze Layer thickness [mm]: Pore volume [%]:	 0.20 – 0.35 approx. 50
3	**Bearing back**	
	Steel Steel thickness [mm]: Steel hardness [HB]:	 Variable 100 – 180

Tab. 18: System composition

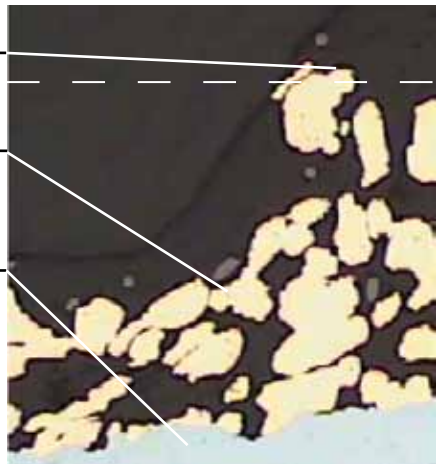

Fig. 19: Layer system

Chemical composition

Sliding layer	
Components	% weight
PTFE	9 to 12
Wear and friction-reducing bulking agents	22 to 26
PVDF	Remainder
Intermediate layer	
Components	% weight
Sn	9 to 11
P	max. 0.05
Other	max. 0.05
Cu	Remainder
Bearing back	
Material	Material information
Steel	DC04
	DIN EN 10130
	DIN EN 10139

Tab. 19: Chemical composition

Material characteristics

Characteristics, load limit	Symbol	Unit	Value
Permitted pv value	$pv_{zul.}$	MPa·m/s	3.3
Permitted specific bearing load			
• Static	$p_{zul.}$	MPa	250
• Concentrated load, circumferential load at sliding speed ≤0.024 m/s	$p_{zul.}$	MPa	140
• Concentrated load, circumferential load at sliding speed ≤0.047 m/s	$p_{zul.}$	MPa	70
• Concentrated load, circumferential load, increasing at sliding speed ≤0.094 m/s	$p_{zul.}$	MPa	35
Permitted sliding speed			
• Grease-lubricated, rotating, oscillating	$v_{zul.}$	m/s	3.3
• Grease-lubricated, linear	$v_{zul.}$	m/s	6
• Hydrodynamic operation	$v_{zul.}$	m/s	6
Permitted temperature	$T_{zul.}$	°C	-40 to +110
Thermal expansion coefficient			
• Steel back	α_{St}	K^{-1}	$11*10^{-6}$
Coeff. of thermal conductivity			
• Steel back	λ_{St}	$W(mK)^{-1}$	< 4

Tab. 20: Material characteristics

[1)] The cavities of the intermediate sliding layer are also filled with this mass.

5.1 Service life calculation formulae

Based on the above information about the influences on the service life and reliability of Permaglide® plain bearings, the equations below can be used to achieve an estimate of expected service life.

Nominal service life L_N for maintenance-free P1 plain bearings

[1] Movement: rotating, oscillating

$$L_N = \frac{400}{(pv)^{1.2}} f_A \cdot f_p \cdot f_v \cdot f_T \cdot f_w \cdot f_R \quad [h]$$

[2] Movement: linear

$$L_N = \frac{400}{(pv)^{1.2}} f_A \cdot f_p \cdot f_v \cdot f_T \cdot f_w \cdot f_R \cdot f_L \quad [h]$$

Nominal service life L_N for low-maintenance, grease-lubricated P2 plain bearings

[3] Movement: rotating, oscillating

$$L_N = \frac{2000}{(pv)^{1.5}} f_A \cdot f_p \cdot f_v \cdot f_T \cdot f_w \cdot f_R \quad [h]$$

Movement: linear

Since the effect of influences (e.g. dirt, lubricant ageing, etc.) cannot be ascertained with precision, a calculation of service life where linear movement and grease lubrication are involved is not feasible. Motor Service offers an advisory service here, based on practical experience.

[4] Specific bearing load, bush

$$p = \frac{F}{D_i \cdot B} \quad [MPa]$$

[5] Specific bearing load, thrust washer

$$p = \frac{4 \cdot F}{(D_o^2 - D_i^2) \cdot \pi} \quad [MPa]$$

[6] Sliding speed, bush, rotating

$$v = \frac{D_i \cdot \Pi \cdot n}{60 \cdot 10^3} \quad [m/s]$$

[7] Sliding speed, thrust washer, rotating

$$v = \frac{D_o \cdot \Pi \cdot n}{60 \cdot 10^3} \quad [m/s]$$

[8] Sliding speed, bush, oscillating

$$v = \frac{D_i \cdot \pi}{60 \cdot 10^3} \cdot \frac{2\varphi \cdot n_{osz}}{360^\circ} \quad [m/s]$$

[9] Sliding speed, thrust washer, oscillating

$$v = \frac{D_o \cdot \pi}{60 \cdot 10^3} \cdot \frac{2\varphi \cdot n_{osz}}{360^\circ} \quad [m/s]$$

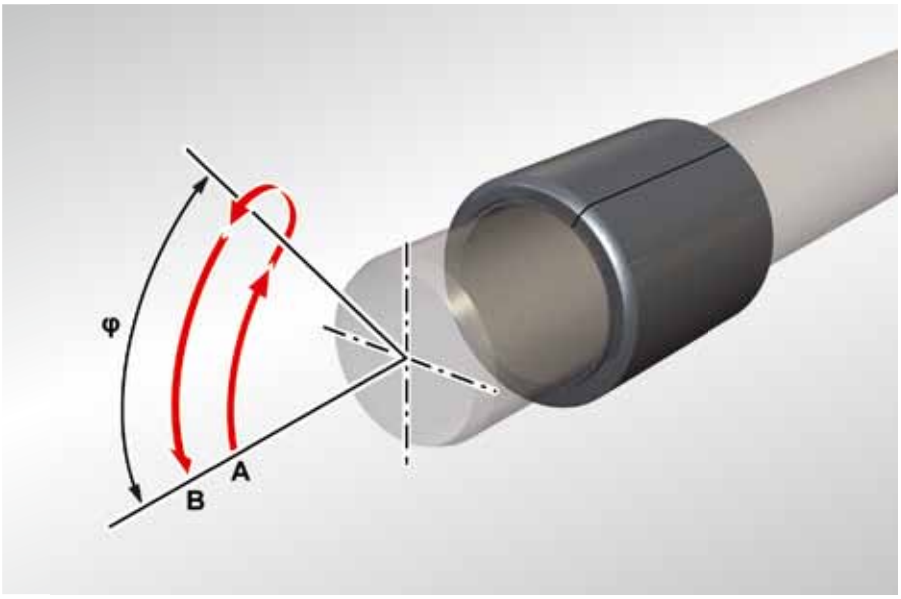

Fig. 22: Swivel angle φ
The oscillating frequency n_{osz} is the number of movements from A to B per minute.

[10] Calculation of pv value

$$pv = p\,[MPa] \cdot v\,[m/s] \quad [MPa \cdot m/s]$$

$pv_{zul.}$ for	P10, P10Bz	..... ≤ 1.8 MPa · m/s
	P14	..... ≤ 1.6 MPa · m/s
	P147	..... ≤ 1.4 MPa · m/s
	P 20	..... ≤ 3.0 MPa · m/s
	P200	..... ≤ 3.3 MPa · m/s

Correction factors	P1	P2
f_p = specific bearing load	Fig. 23	Fig. 27
f_t = temperature	Fig. 24	Fig. 28
f_v = sliding speed	Fig. 25	Fig. 29
f_R = roughness depth	Fig. 26	Fig. 30
f_A = type of load	Fig. 31	Fig. 31
f_w = material	Tab. 21	Tab. 21
f_L = linear movement [11]	Fig. 32	---

Correction factors for P10 P10Bz*, P14 and P147*

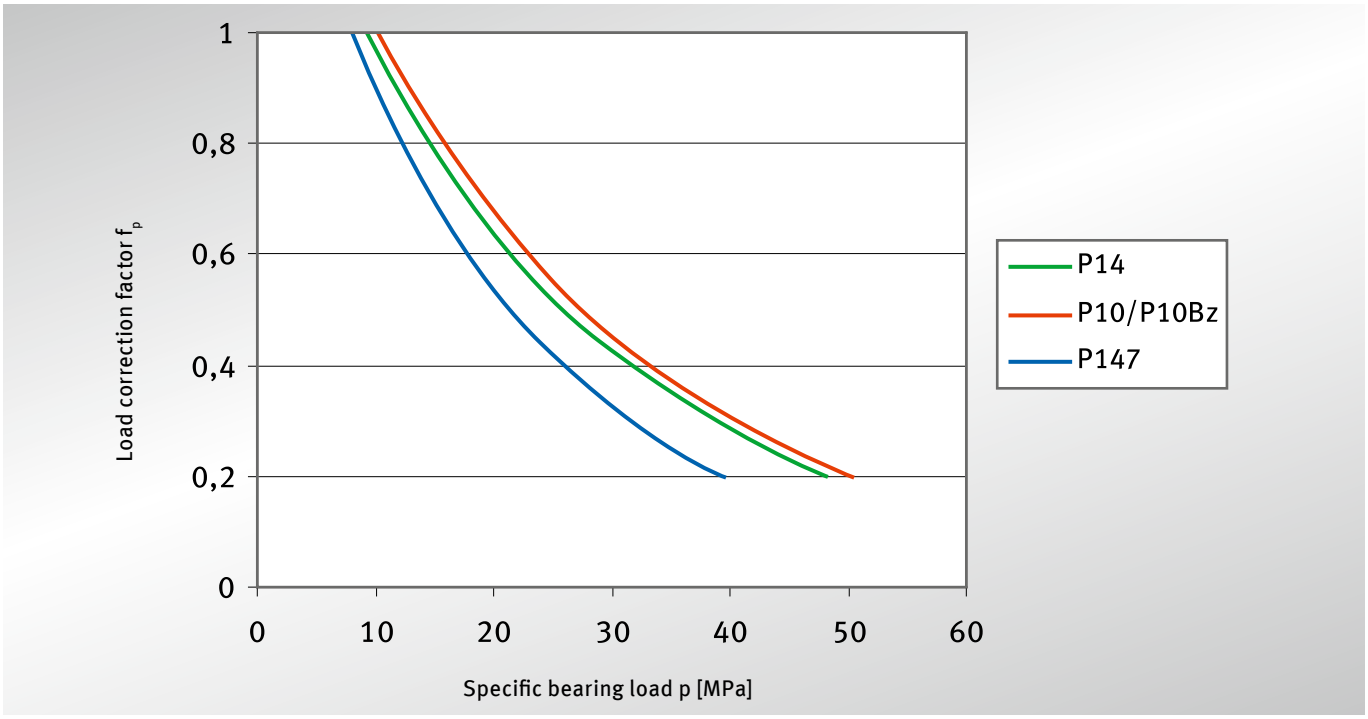

Fig. 23: Load correction factor f_p

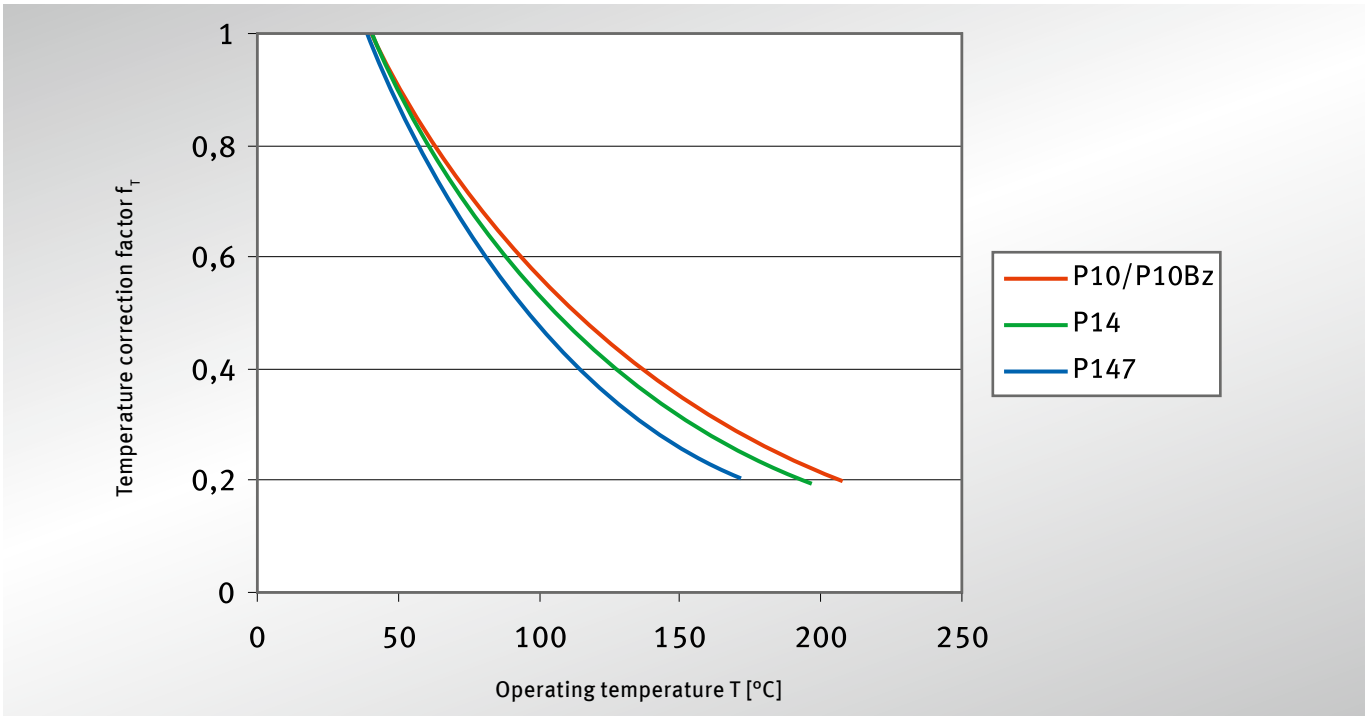

Fig. 24: Temperature correction factor f_T

* On request

Correction factors for P10 P10Bz*, P14 and P147*

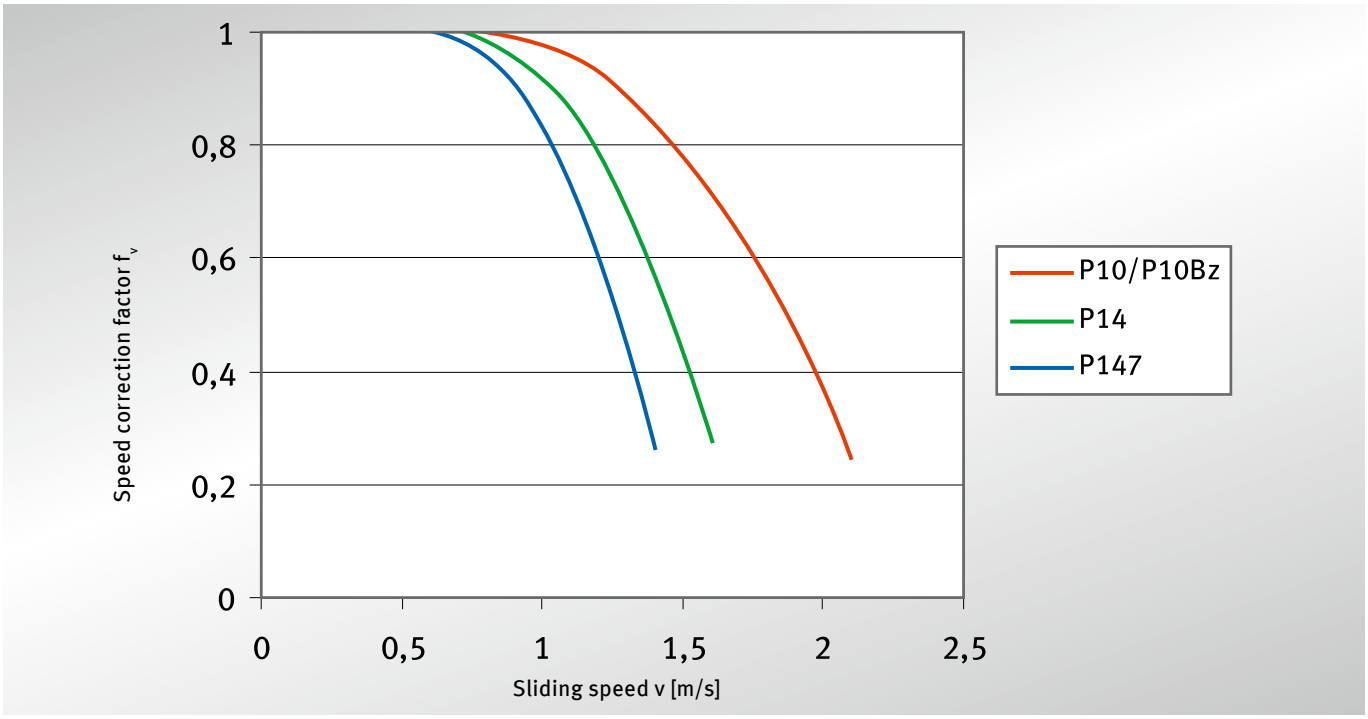

Fig. 25: Sliding speed correction factor f_v

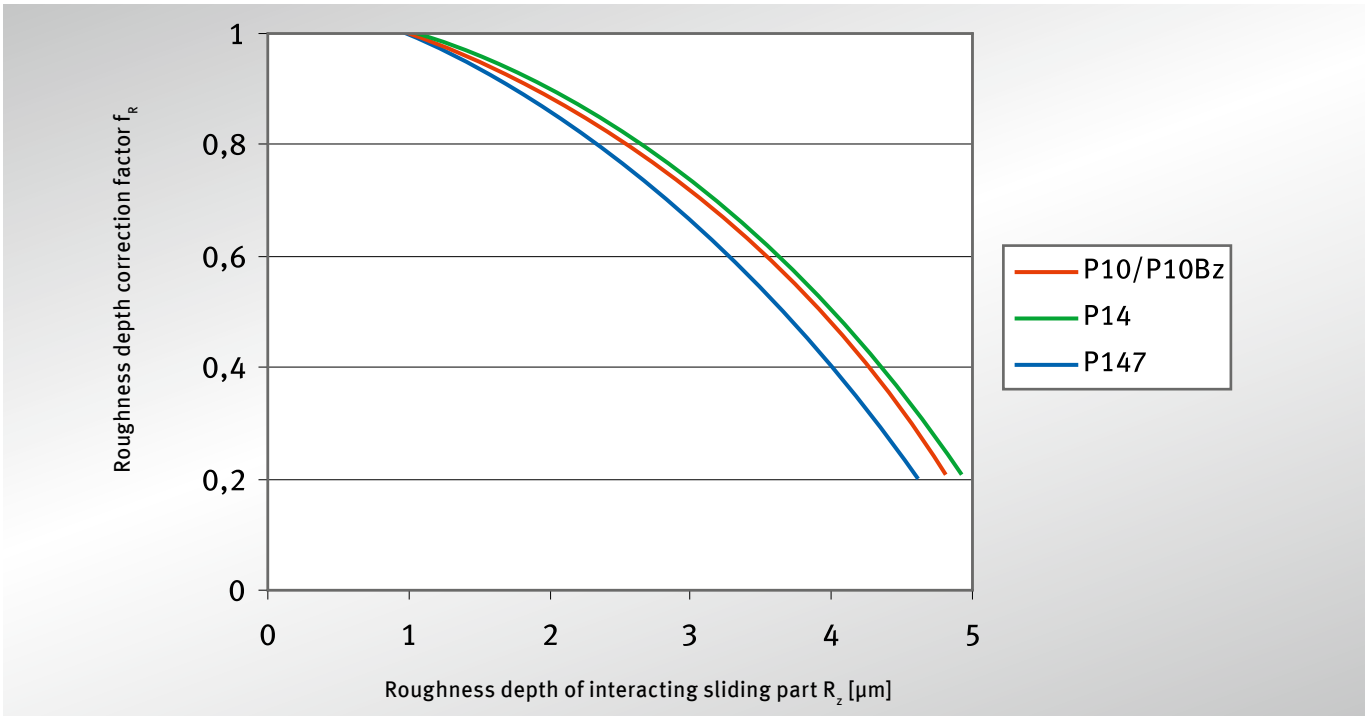

Fig. 26: Roughness depth correction factor f_R

Correction factors for P20
P22*, P23* and P200, P202*, P203*

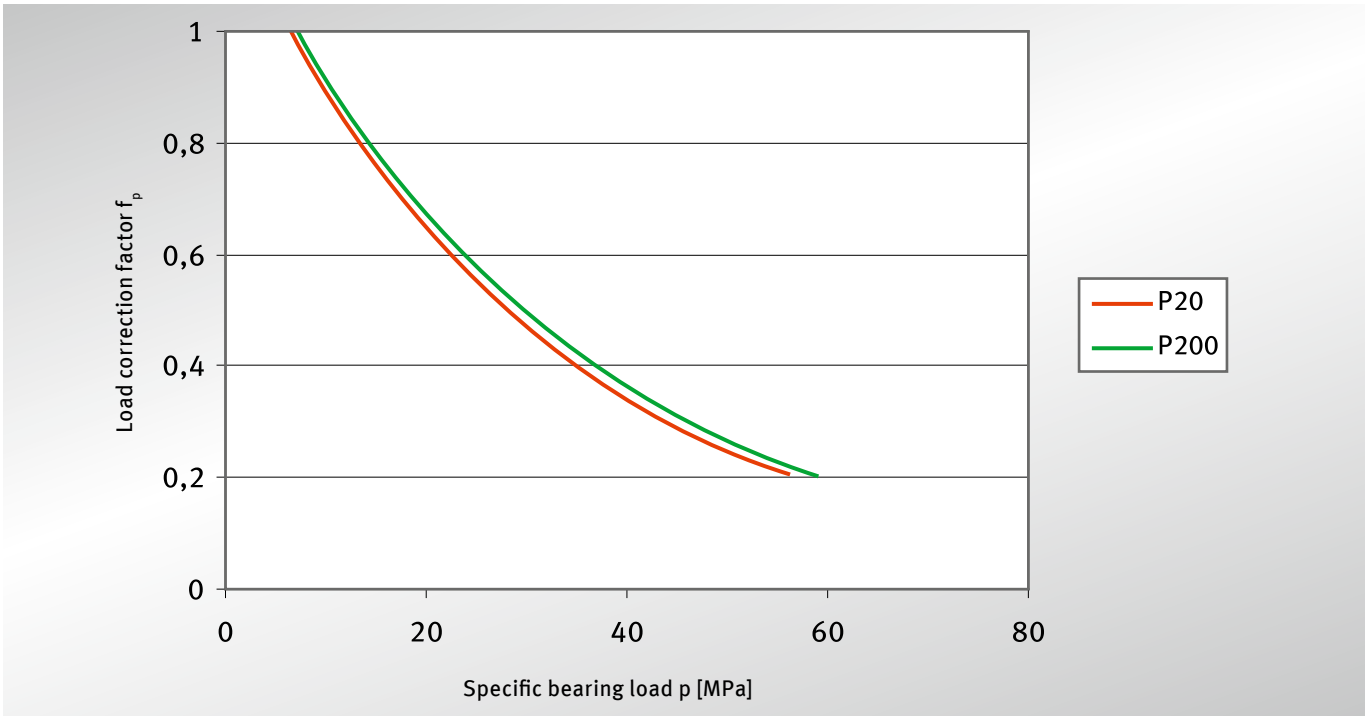

Fig. 27: Load correction factor f_p

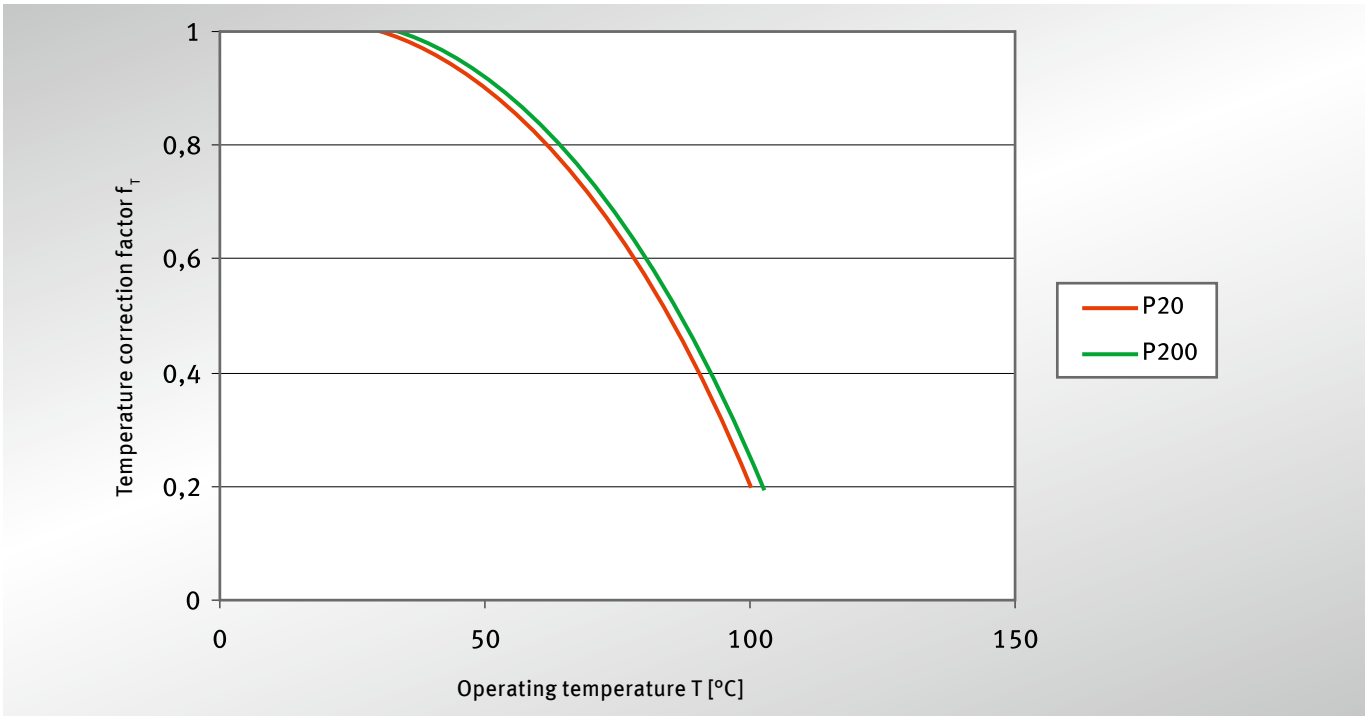

Fig. 28: Temperature correction factor f_T

* On request

Correction factors for P20
P22*, P23* and P200, P202*, P203*

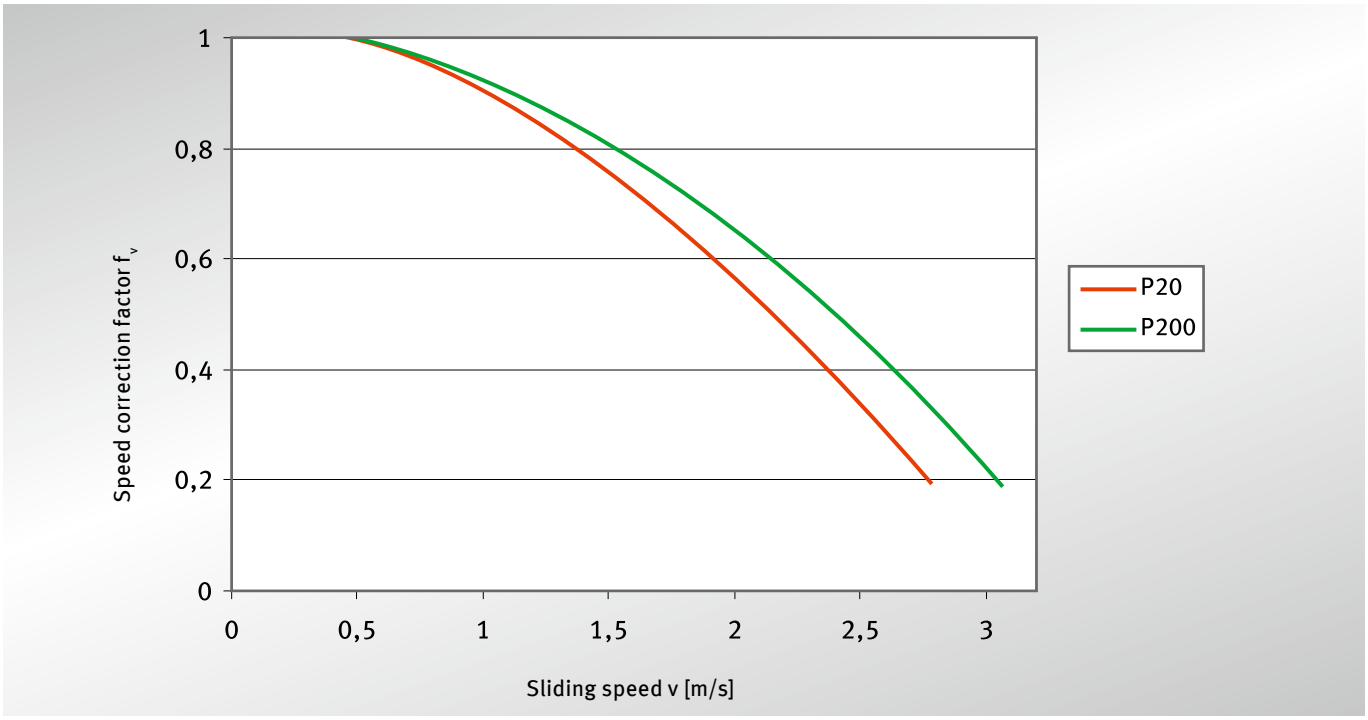

Fig. 29: Sliding speed correction factor f_v

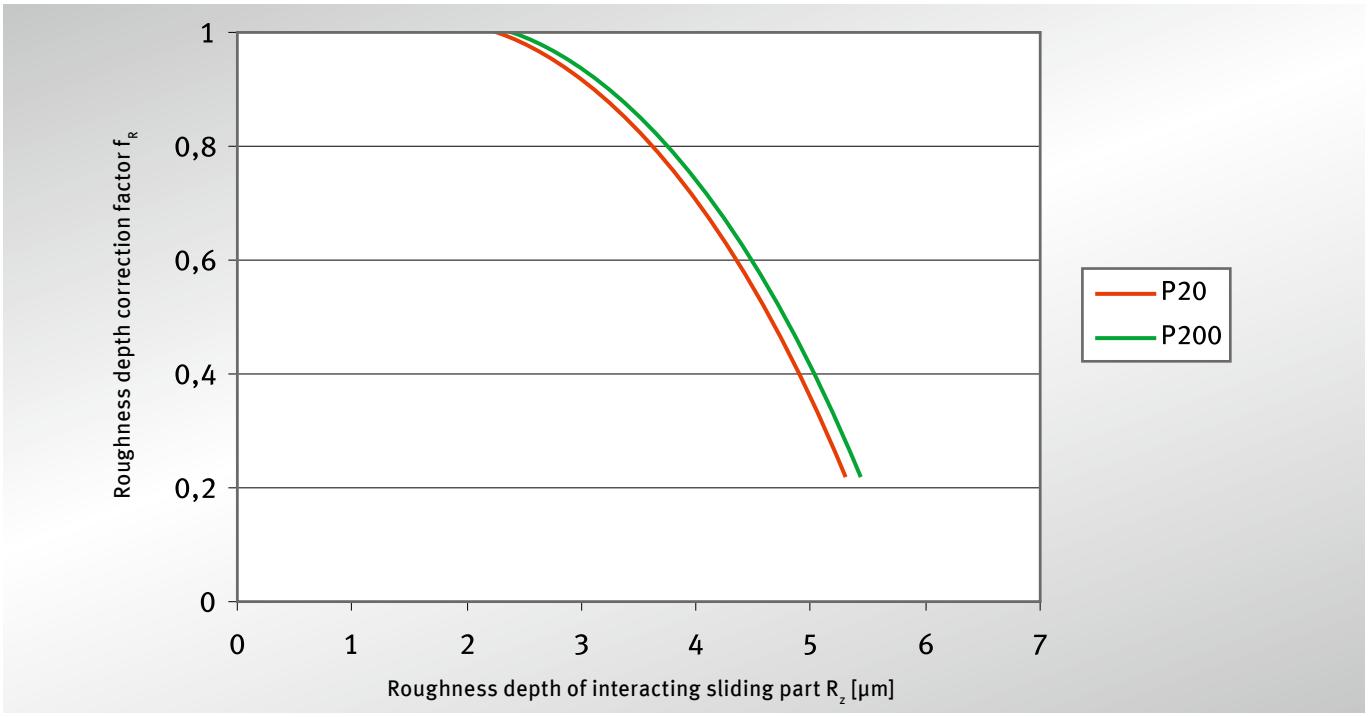

Fig. 30: Roughness depth correction factor f_R

Load type correction factor

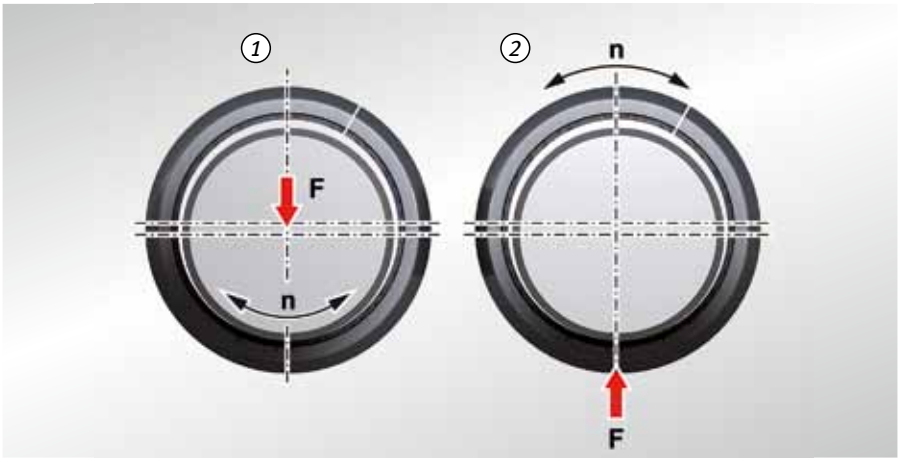

Fig. 31: Load correction factor f_A

No. (see Fig. 31)	Type of load	f_A
1	*Concentrated load*	1
2	*Circumferential load*	2
-	*Axial load*	1
-	*Linear movement*	1

Linear movement correction factor

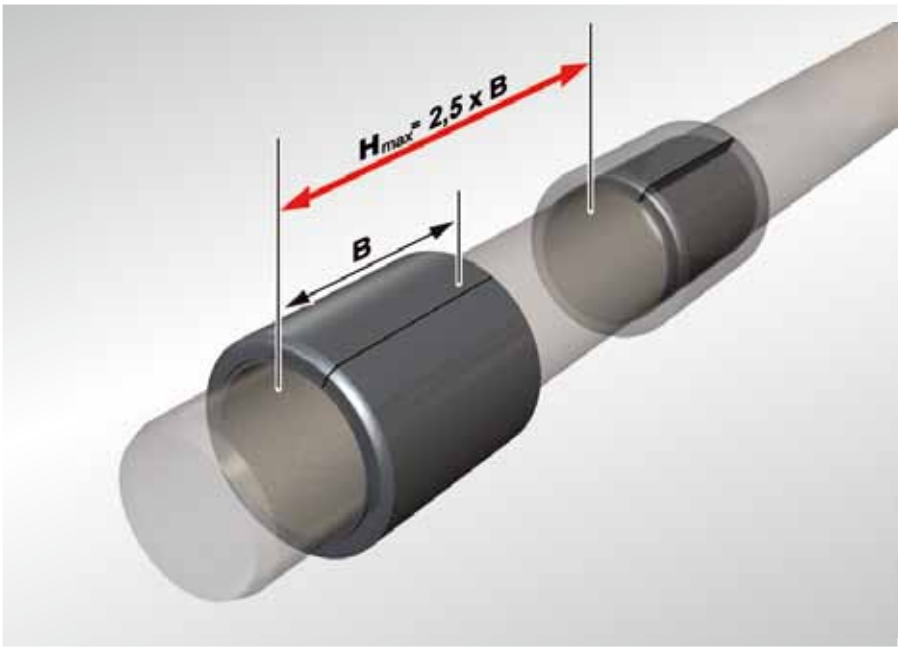

Fig. 32: Linear movement, stroke $H_{max.}$

Correction factor for material of interacting sliding part

Material of interacting sliding surface	f_W
Steel	1
Nitrided steel	1
Corrosion-resistant steel	2
Hard chrome-plated steel (min. layer thickness 0.013 mm)	2
Galvanised steel (min. layer thickness 0.013 mm)	0.2
Phosphated steel (min. layer thickness 0.013 mm)	0.2
Grey cast iron R_z2	1
Anodised aluminium	0.4
Hard anodised aluminium (hardness 450 +50 HV; 0.025 mm thick)	2
Copper-based alloys	0.1 to 0.4
Nickel	0.2

Tab. 21: Material correction factor f_w (with roughness depth R_z 0.8 to R_z 1.5)

[11] Calculating the linear movement correction factor f_L:

$$f_L = 0.65 \frac{B}{H + B} \qquad [1]$$

B = Bush width [mm]
H = Stroke [mm]

Special operating conditions
Special operating conditions can both lengthen and shorten the calculated service life. The impact of such influences can often only be estimated. Table 22 shows some typical values based on experience.

Evaluating calculated service life
As already discussed in the section on Basics, the calculation of the service life of P1/P2 plain bearings is still subject to uncertainty. On the one hand, it depends on numerous influencing factors and the interactions between them. On the other hand, the influence of corrosion, lubricant ageing, the action of chemicals, dirt, etc. on expected service life cannot be mathematically calculated with precision.

Important note:
The calculated service life can therefore only be a rough guide. We recommend verifying the use of Permaglide® plain bearings through field-oriented tests.

Operating conditions	Influence on service life	Reason
Dry running, sometimes interrupted	Lengthens service life	The bearing assembly occasionally has time to cool down. This has a positive effect on expected service life.
Alternately dry running and running in water	Reduces service life	Hydrodynamic conditions can only be achieved to a limited extent in water. This and the changeover to dry running increases wear.
Continuous operation in liquid lubricants	Greatly lengthens service life	Here, mixed friction or hydrodynamic conditions predominate. The lubricant conveys the frictional heat out of the contact zone. In the hydrodynamic state, the plain bearing runs practically without wear.
Continuous operation in lubricating grease	Reduces or lengthens service life	Solid additives such as MoS_2 or ZnS encourage the formation of paste, and can shorten service life. Nominal service life can be increased through design measures (bore/grooves in the run-out zone) and through regular relubrication (also see “Lubrication” in section 6).

Tab. 22: Special operating conditions

5.2 Example calculations

Estimate of service life
Example calculation: P14 bush with a required service life of >1200 h

Given:

Operating data		Design data		Other conditions
Rotating shaft (continuous operation)				
Dry running		Bearing diameter	$D_i = 20$ mm	Lead-free
Concentrated load	F = 270 N	Bearing width	W = 15 mm	
Speed	n = 325 rpm	Shaft material	Steel	
Temperature	T = 70 °C	Shaft roughness depth	$R_z = 2$ µm	

Wanted: Nominal service life L_N

1. Specific bearing load p

[4] $p = \frac{F}{D_i \cdot B} = \frac{270\ \text{N}}{20\ \text{mm} \cdot 15\ \text{mm}} = 0.9\ \text{N/mm}^2 \rightarrow \text{MPa}$

2. Sliding speed v

[6] $v = \frac{D_i \cdot \pi \cdot n}{60 \cdot 10^3} = \frac{20\ \text{mm} \cdot \pi \cdot 325\ \text{rpm}}{60 \cdot 10^3} = 0.34\ \text{m/s}$

3. pv value

[10] $pv = p\ [\text{MPa}] \cdot v\ [\text{m/s}] = 0.9\ \text{MPa} \cdot 0.34\ \text{m/s} \approx 0.31\ \text{MPa} \cdot \text{m/s}$

4. Check: pv value acceptable? Fig. 10 pv 0.31 MPa · m/s < $pv_{zul.}$ 1.6 MPa · m/s

5. Determine correction factors

• Load type for concentrated load	Fig. 31	$f_A = 1$
• Load	Fig. 23	$f_p = 1$
• Sliding speed	Fig. 25	$f_v = 1$
• Temperature (70 °C)	Fig. 24	$f_T = 0.65$
• Roughness depth (Rz 2 µm)	Fig. 26	$f_R = 0.9$
• Shaft material (steel)	Tab. 21	$f_w = 1$

6. Nominal service life L_N

[1] $L_N = \frac{400}{(pv)^{1.2}} f_A \cdot f_p \cdot f_v \cdot f_T \cdot f_w \cdot f_R = \frac{400}{0.31^{1.2}} \cdot 1 \cdot 1 \cdot 1 \cdot 0.65 \cdot 0.9 \cdot 1 = 954\ \text{h}$

Result: **With $L_N = 954$ h, the requirement L_N > 1200 h is not met.**

New calculation with bearing width enlarged to 20 mm

1. Specific bearing load p

[4]	$p = \frac{F}{D_i \cdot B}$	$= \frac{270\ N}{20\ mm \cdot 20\ mm}$	$= 0.675\ N/mm^2 \rightarrow MPa$

2. Sliding speed v

[6]	$v = \frac{D_i \cdot \pi \cdot n}{60 \cdot 10^3}$	$= \frac{20mm \cdot \pi \cdot 325\ rpm}{60 \cdot 10^3}$	$= 0.34\ m/s$

3. pv value

[10]	$pv = p\ [MPa] \cdot v\ [m/s]$	$= 675\ MPa \cdot 0.34\ m/s$	$\approx 0.23\ MPa \cdot m/s$

4. Check: pv value acceptable?	Fig. 10	pv 0.23 MPa · m/s < $pv_{zul.}$ 1.6 MPa · m/s

5. Determine correction factors

• Load type for concentrated load	Fig. 31	$f_A = 1$
• Load	Fig. 23	$f_p = 1$
• Sliding speed	Fig. 25	$f_v = 1$
• Temperature (70 °C)	Fig. 24	$f_T = 0.65$
• Roughness depth (R_z 2 µm)	Fig. 26	$f_R = 0.9$
• Shaft material (steel)	Tab. 21	$f_w = 1$

6. Nominal service life L_N

[1]	$L_N = \frac{400}{(pv)^{1.2}} f_A \cdot f_p \cdot f_v \cdot f_T \cdot f_w \cdot f_R$	$= \frac{400}{0.23^{1.2}} \cdot 1 \cdot 1 \cdot 1 \cdot 0.65 \cdot 0.95 \cdot 1$	$= 1365\ h$

Result: **With L_N = 1365 h, the requirement L_N > 1200 h is met.**

Selected: Bush PAP 2020 P14

Estimate of service life
Example calculation: P200 thrust washer
PAW 32 P200 with a required service life
of >1500 h

Given:

Operating data		Design data		Other conditions
Rotating shaft (continuous operation)				
Axial load	F = 2000 N	Thrust washer	D_i = 32 mm	Lead-free, therefore selected material P200 (with oil distributing pockets)
Speed	n = 300 rpm	Outside diameter	D_o = 54 mm	
Temperature	T = 50 °C	Shaft material	Steel	
Dry running		Shaft roughness depth	R_z = 3 µm	

Wanted: Nominal service life L_N

1. Specific bearing load p

[4] $p = \frac{4 \cdot F}{(D_O^2 - D_I^2) \cdot \pi} = \frac{4 \cdot 2000\ N}{(54^2 - 32^2) \cdot \pi} \approx 1.35\ N/mm^2 \rightarrow MPa$

2. Sliding speed v

[6] $v = \frac{D_O \cdot \pi \cdot n}{60 \cdot 10^3} = \frac{54\ mm\ \pi \cdot 300\ rpm}{60 \cdot 10^3} \approx 0.85\ m/s$

3. pv value

[10] $pv = p\ [MPa] \cdot v\ [m/s] = 1.35\ MPa \cdot 0.85\ m/s \approx 1.15\ MPa \cdot m/s$

4. Check: pv value acceptable? Fig. 14 pv 1.15 MPa · m/s < $pv_{zul.}$ 3.3 MPa · m/s

5. Determine correction factors

• Load type for axial load	Fig. 31	$f_A = 1$
• Load	Fig. 27	$f_p = 1$
• Sliding speed	Fig. 29	$f_v = 1$
• Temperature (50 °C)	Fig. 28	$f_T = 0.92$
• Roughness depth (R_z 3 µm)	Fig. 30	$f_R = 0.9$
• Shaft material (steel)	Tab. 21	$f_w = 1$

6. Nominal service life L_N:

[1] $L_N = \frac{2000}{(pv)^{1.5}} f_A \cdot f_p \cdot f_v \cdot f_T \cdot f_w \cdot f_R = \frac{2000}{1.15^{1.5}} \cdot 1 \cdot 1 \cdot 1 \cdot 0.92 \cdot 0.9 \cdot 1 = 1343\ h$

Result: **With L_N = 1343 h, the requirement L_N > 1500 h is not met.**

New calculation with larger thrust washer PAW 38 P200

1. Specific bearing load p

[4]	$p = \frac{4 \cdot F}{(D_O^2 - D_I^2) \cdot \pi}$	$= \frac{4 \cdot 2000\ N}{(62^2 - 38^2) \cdot \pi}$	$\approx 1.06\ N/mm^2 \rightarrow MPa$

2. Sliding speed v

[6]	$v = \frac{D_O \cdot \pi \cdot n}{60 \cdot 10^3}$	$= \frac{62\ mm\ \pi \cdot 300\ rpm}{60 \cdot 10^3}$	$\approx 0.97\ m/s$

3. pv value

[10]	$pv = p\ [MPa] \cdot v\ [m/s]$	$= 1.06\ MPa \cdot 0.97\ m/s$	$\approx 1.03\ MPa \cdot m/s$

4. Check: pv value acceptable?	Fig. 14	pv 1.03 MPa · m/s < $pv_{zul.}$ 3.3 MPa · m/s

5. Determine correction factors

• Load type for axial load	Fig. 31	$f_A = 1$
• Load	Fig. 27	$f_p = 1$
• Sliding speed	Fig. 29	$f_v = 1$
• Temperature (50 °C)	Fig. 28	$f_T = 0.92$
• Roughness depth (R_z 3 µm)	Fig. 30	$f_R = 0.9$
• Shaft material (steel)	Tab. 21	$f_w = 1$

6. Nominal service life L_N:

[1]	$L_N = \frac{2000}{(pv)^{1.5}} f_A \cdot f_p \cdot f_v \cdot f_T \cdot f_w \cdot f_R$	$= \frac{2000}{1.03^{1.5}} \cdot 1 \cdot 1 \cdot 1 \cdot 0.92 \cdot 0.9 \cdot 1$	$= 1584\ h$

Result: **With L_N = 1584 h, the requirement L_N > 1500 h is met.**

Selected: Thrust washer PAW 38 P200

In addition to the wear factors of bearing load, sliding speed, temperature, shaft material and shaft surface, plain bearings are subject to further stresses arising from the operating conditions, which may have a considerable impact on reliability and service life.

Tribochemical reaction, corrosion
Permaglide® plain bearings are basically resistant to water (except P14), alcohol, glycol and many mineral oils. However, some media have an aggressive effect on the composite, particularly the bronze parts. This risk mainly comes into play at operating temperatures in excess of 100 °C. This can have adverse effects on function.

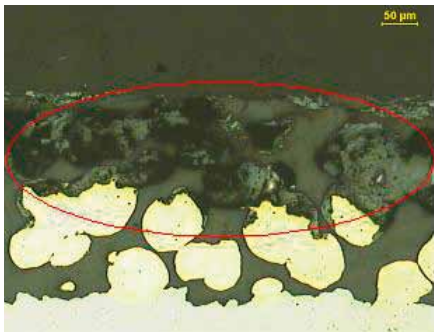

Fig. 33: Damage due to the action of chemicals

The P1 material group is not resistant to acidic media (PH ‹ 3) and alkaline media (pH › 12).
Oxidising acids and gases such as free halides, ammonia or hydrogen sulphide damage the bronze back of P10Bz.
If corrosion would pose a risk to the sliding surface of the interacting sliding part (shaft), the following materials are recommended:

- Corrosion-resistant steel
- Hard chrome-plated steel
- Hard anodised aluminium

These corrosion-resistant materials also lower the wear rate.

Tendency to swell
In the P1 material group, the running-in layer (solid lubricant) can swell in the presence of certain media and at operating temperatures › 100 °C. Depending on the medium, the wall thickness of the plain bearing may increase by up to 0.03 mm.

Remedy:

- Increase bearing clearance
- Use plain bearings made of P14/P147. Here, the tendency to swell is much lower, at ‹ 0.01 mm.

Please note that P14 should only be used at sliding speeds of up to 1 m/s and P147 up to sliding speeds of 0.8 m/s.

Electrochemical contact corrosion
Local elements may form under unfavourable conditions, reducing operational reliability.

Remedy:
Select appropriate material pairings

Micro-sliding movements
If very small sliding distances take place during swivelling or linear movements, a film of lubricant is unable to form on P1 bearings. Consequently, after the running-in process, metal contact zones are produced between the bronze sliding layer and the surface of the shaft.
This results in increased wear, with a risk of shaft seizure.

Remedy:
Lubricate the bearing assembly
Please note the following section, “Lubrication”.

Lubrication
In certain applications, it may be necessary to provide grease or oil lubrication for the contact surface between the P1 plain bearing and the interacting sliding part. This may result in considerable deviations from the expected service life.
The use of grease or oil can both lengthen and shorten service life (Tab. 22: Special operating conditions).
Firstly, service life is shortened by the transfer of solid lubricant during the running-in process. Secondly, the presence of grease or oil gives rise to the formation of a so-called paste. This paste consists of an accumulation of grease or smaller quantities of oil together with material removed from the contact zone. This paste deposits itself on the run-out zone in the direction of rotation, hampering the dissipation of heat. Some of the paste is carried back into the contact zone, where it encourages wear. Solid lubricants with zinc sulphide or molybdenum disulphide additives increase the tendency towards paste formation. In cases where lubrication of P1 plain bearings with grease cannot be avoided, the following steps can be taken to counter paste formation:

- Regular relubrication (e.g. with lithium-soap grease)
- Insert bores or grooves in the run-out zone, so that the paste can deposit itself there.

Caution:
Bores or grooves reduce the cross sectional area of the bush wall. If they amount to › 10 %, this must be taken into account in the calculation (secure fit, press-fit).

P2 plain bearings must be lubricated. For suitable types of grease, see section 3.2 “Low-maintenance Permaglide® P2 plain bearings”, “Grease lubrication” section.

Cavitation, erosion
Permaglide® plain bearings can run in hydrodynamic conditions.

Advantages:
- Higher sliding speeds are possible than with dry running or grease lubrication.
- Virtually wear-free operation, as above the transition speed the two sliding surfaces are separated by the lubricating fluid. Conditions of pure liquid friction prevail.
- Plain bearings have a self-lubricating effect during mixed friction (below transition speed).

Despite this, the sliding surface of the plain bearing can suffer particular damage under hydrodynamic conditions, caused above all by cavitation and erosion.

Cavitation and erosion mostly occur simultaneously. These damage symptoms are particularly evident at a high sliding speed.

Remedy:
- Lower the sliding speed (if possible)
- Use a different lubricant (viscosity, load carrying capacity in relation to temperature)
- Avoid flow disruptions in the lubricating gap provoked by oil grooves, oil bores, oil pockets, etc.).

Motor Service offers the calculation of hydrodynamically operated Permaglide® plain bearings as a service.

Cavitation damage
Cavitation damage is local destruction of the sliding surface due to pressure. In plain bearings that run hydrodynamically, vapour bubbles may be produced in the fast moving lubricating film as the result of a drop in pressure. When pressure increases in the fluid, the vapour bubbles break down. The released energy aggressively attacks the sliding surface and hollows out the sliding material in places.

Fig. 34: Local damage caused by cavitation

Erosion damage
Erosion is mechanical damage to the sliding surface due to the rinsing action of a liquid, which may also contain solid particles. The distribution of pressure in the lubricating film of a hydrodynamic bearing assembly is disturbed by turbulence and narrowing of the cross section, resulting in mechanical damage to the sliding surface.

Fig. 35: Damage due to erosion in the running-in layer of a P1 plain bearing

Damaged caused by dirt
If dirt particles enter the contact zone between the bearing and the shaft, the sliding surface of the bearing is damaged by the formation of grooves. This has negative effects on service life and reliability.

Remedy:
- Seal the bearing
- Place a filter upstream if using liquid lubrication

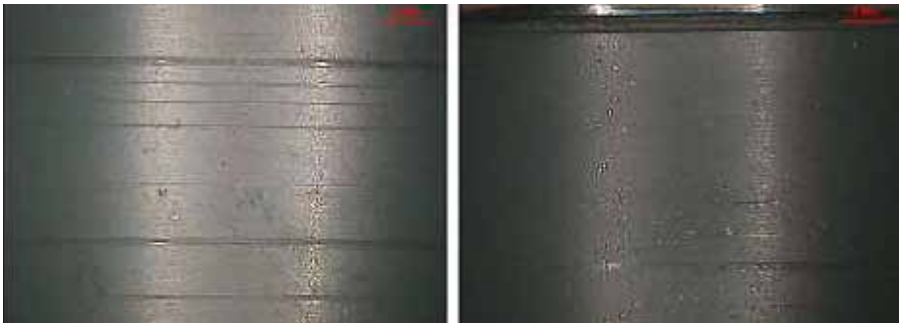

Fig. 36: P2 plain bearing, grooves in the sliding surface

Damage due to installation errors
The sliding surface may be damaged when the plain bearing bush is being press fit. In addition, seizures frequently occur between the surface of the bearing jacket and the housing bore. This leads to local bulges in the sliding surface of the bearing. Both the above types of damage can considerably shorten service life.

Remedy:
- Force-fitting device with pre-centring (auxiliary ring)
- Optimised press-fit between housing bore and bearing outside diameter
- Avoid dirt
- Make sure bush is not inclined when force-fitting
- Use suitable lubricant

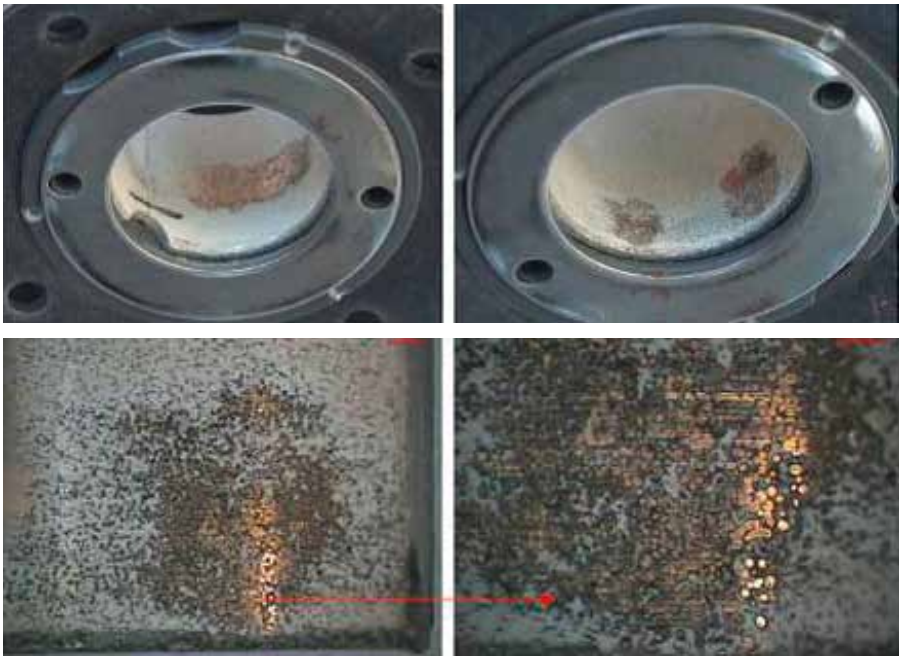

Fig. 37: Local extreme wear due to installation errors

7.1 Housing

Bushes

Permaglide® bushes are pressed into the housing and fixed radially and axially. No further measures are required.

For the housing bore, we recommend:

- Roughness depth R_z10
- Chamfer f_G 20° ±5°
  This chamfer facilitates force-fitting.

Bore diameter d_G	Chamfer width f_G
$d_G \leq$ 30	0.8 ± 0.3
30 < $d_G \leq$ 80	1.2 ± 0.4
80 < $d_G \leq$ 180	1.8 ± 0.8
180 < d_G	2.5 ± 1.0

Tab. 23: Chamfer width f_G in the housing bore for bushes (Fig. 38)

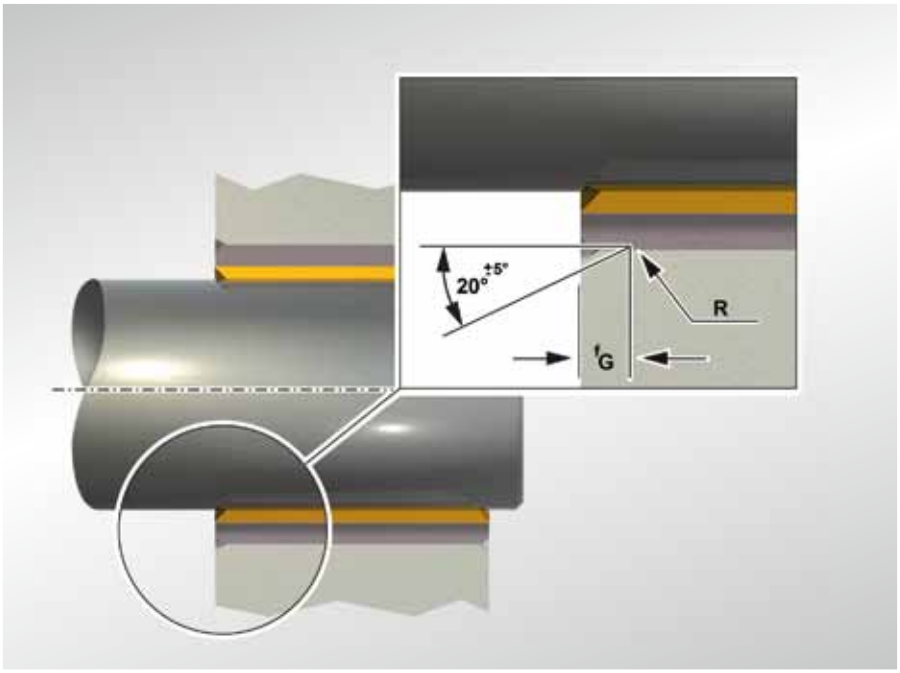

Fig. 38: Chamfer in housing for PAP bush

Collar bushes

In the case of collar bushes, the radius on the transition from the radial to the axial part must be borne in mind.

- Collar bushes must not be in contact in the radius area.
- The collar must have sufficient support when under axial loads.

Bore diameter d_G	Chamfer width f_G
$d_G \leq$ 10	1.2 ± 0.2
10 < d_G	1.7 ± 0.2

Tab. 24: Chamfer width f_G in the housing bore for collar bushes (Fig. 39)

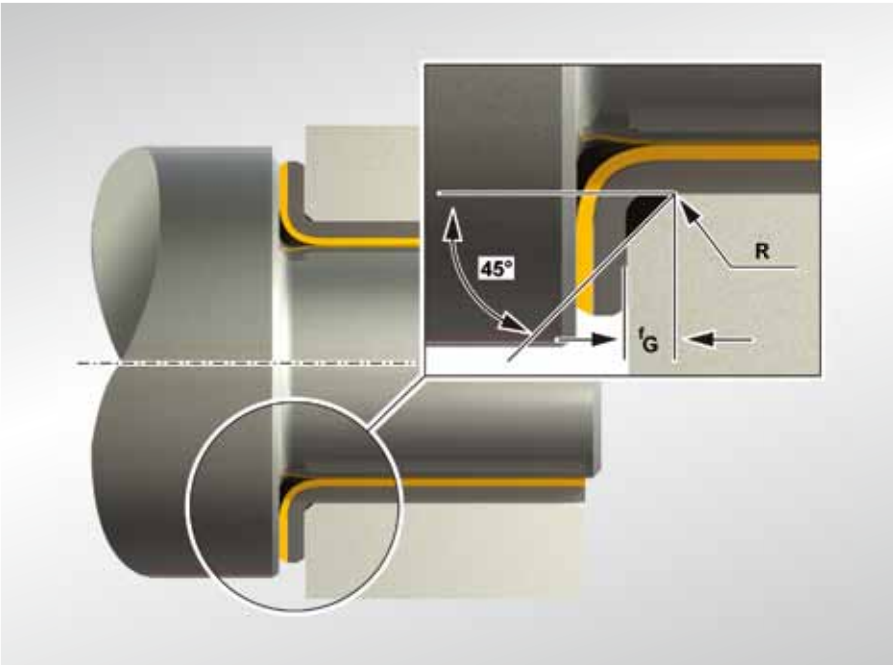

Fig. 39: Chamfer in housing for PAF bush

Securing thrust washers
Recommendation:

- A concentric fit is ensured by the recess in the housing (Fig. 40)
  - See dimension tables for the diameter and depth of free cuts
- Unwanted rotation with the shaft is prevented by means of a dowel pin or countersunk screw (Figs. 40 and 41)
  - The screw head or dowel pin must be recessed by min. 0.25 mm from the sliding surface (Figs. 40 and 41)
  - See dimension tables for size and position of drill holes.
- If no recess can be made in the housing:
- Secure with several dowel pins or screws (Fig. 41)
- Use other methods for fastening.

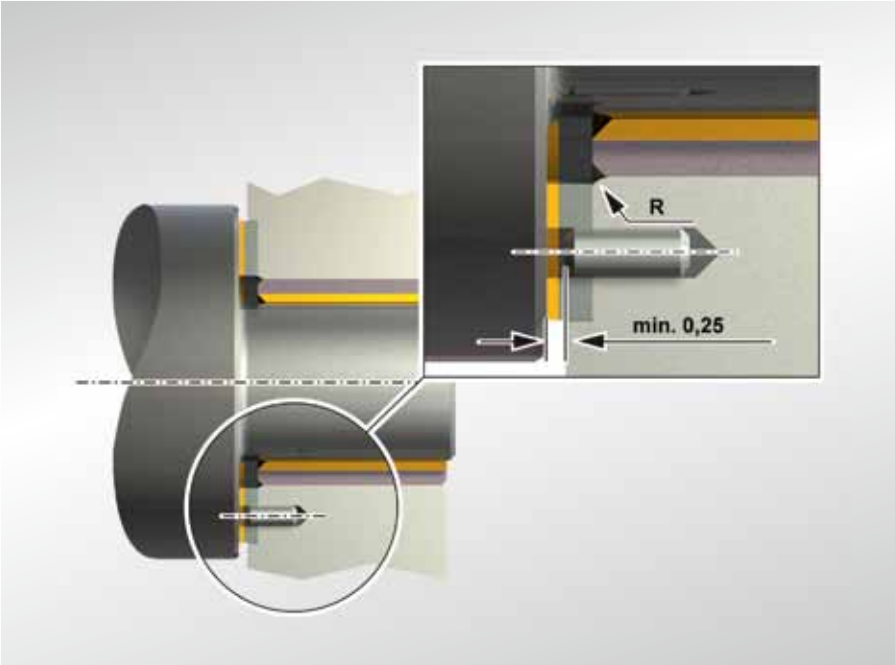

Fig. 40: Securing a PAW thrust washer in a recess in the housing

Rotation prevention is not always required. In various cases, the static friction between the back of the washer and the housing is sufficient.

Other fastening methods
If the press fit of the bush is insufficient or pinning or screwing is uneconomical, low-cost fastening methods can be used as an alternative:

- Laser welding
- Soft-soldering
- Sticking, see “Further information”.

Caution:
The temperature of the running-in or sliding layer must not exceed +280 °C for the Permaglide® P1 and +140 °C for the Permaglide® P2. Adhesive must not reach the running-in or sliding layer.
Recommendation: Obtain information from adhesive manufacturers, particularly concerning the choice of adhesive, preparing the surface, setting, strength, temperature range and strain characteristic.

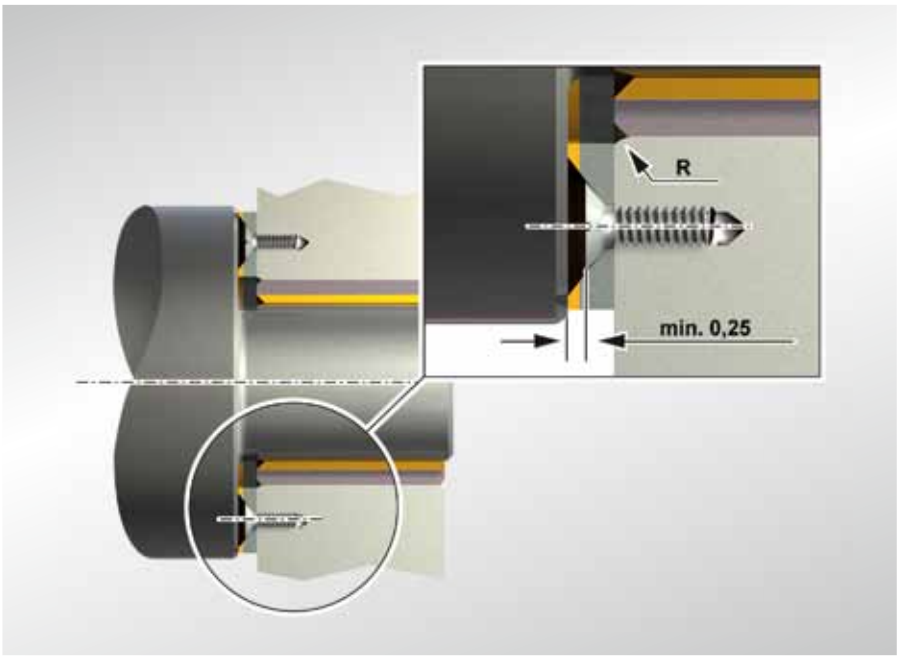

Fig. 41: Securing a PAW thrust washer without a recess in the housing

7.2 Design of the interacting sliding part

The following generally applies:
In a tribological system, with a radial bearing the shaft must project beyond the plain bearing, with an axial bearing the contact surface must project, to avoid offsets in the sliding layer.

Shaft
Shafts must be chamfered and all sharp edges rounded, which:
- Simplifies assembly
- Prevents damage to the bush sliding layer

Shafts must never have grooves or pricks in the area of the sliding zone.

Interacting sliding surface
Optimum service life thanks to correct roughness depth
- Optimum service life is achieved when the interacting sliding surface has a roughness depth of R_z0.8 to R_z1.5:
  - with dry-running Permaglide® P1
  - with lubricated Permaglide® P2

Caution:
Smaller roughness depths do not increase service life. Larger roughness depths considerably reduce it.

- With Permaglide® P1 and P2, corrosion of the interacting sliding surface is prevented by:
  - Sealing
  - The use of corrosion-resistant steel
  - Suitable surface treatment.

With Permaglide® P2, the lubricant is also effective against corrosion.
- The interacting sliding surface should be wider than the bearing, in order to prevent offsets forming in the sliding layer.

Surface quality
- Ground or drawn surfaces are preferable
- Precision-turned or precision-turned and roller burnished surfaces, even with R_z0.8 to R_z1.5, can cause greater wear (precision turning produces spiral scores)
- Sphero cast (GGG) has an open surface structure, and can therefore be ground to R_z2 or better.
  Figure 42 shows the direction of rotation of cast shafts in use. This should be the same as the direction of rotation of the grinding disc, as more wear will occur in the opposite direction.

Hydrodynamic operation
For hydrodynamic operation, the roughness depth R_z of the interacting sliding surface should be less than the smallest thickness of the lubricating film under liquid friction.
Motor Service offers hydrodynamic calculation as a service.

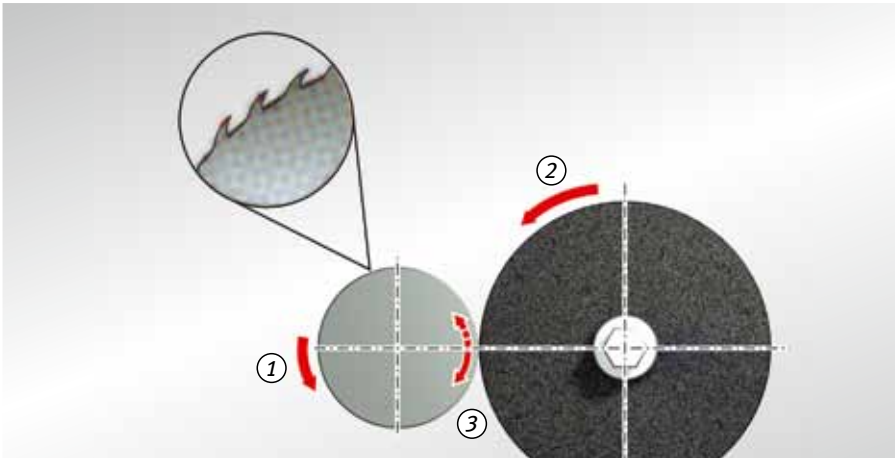

1 Direction of rotation of shaft during use
2 Direction of rotation of grinding disc
3 Direction of rotation of shaft during grinding optional

Fig. 42: Grinding a cast shaft

Seals
Protecting the bearing assembly is recommended in the event of greater exposure to dirt in an aggressive environment.
Figure 43 shows recommended seal types:
- The surrounding seal (1)
- A gap seal (2)
- A shaft seal (3)
- A ring of grease

Heat dissipation
Thorough heat dissipation must be assured.
- In hydrodynamic operation, heat is overwhelmingly conveyed away by the lubricating liquid.
- In dry and grease-lubricated plain bearings, the heat is also dissipated by the housing and shaft.

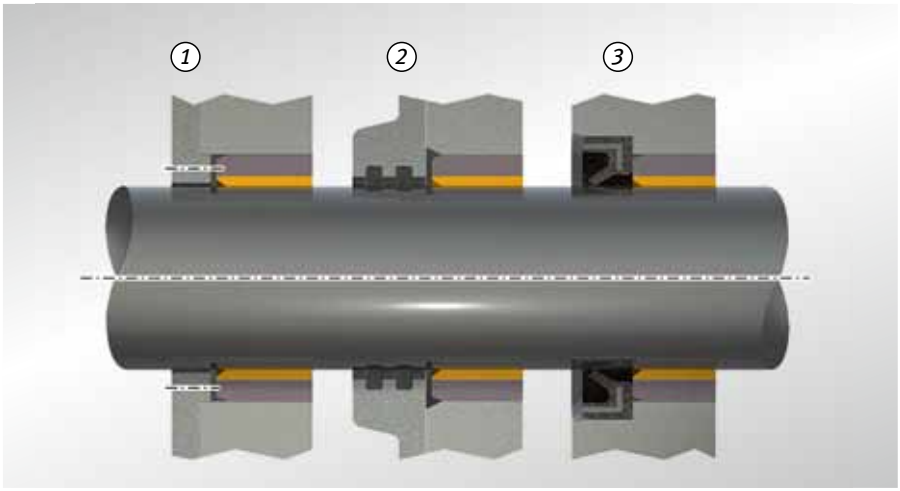

Fig. 43: Seals

Machining the bearing elements
- Permaglide® plain bearings can be cut and machined in other ways (e.g. shortening, bending or drilling)
- Permaglide® plain bearings should preferably be cut from the PTFE side. The burrs produced during cutting would impair the sliding surface
- Bearing elements must be cleaned after machining
- Bare steel surfaces (cut edges) must be protected against corrosion with:
  - Oil, or
  - Galvanic protective layers At higher flow densities or with longer coating times, the sliding layers must be covered to prevent deposits.

Caution:
Machining temperatures that exceed the following limits are hazardous to health:
+280 °C with the Permaglide® P1
+140 °C with the Permaglide® P2
Burrs may contain lead.

Axial orientation (precise alignment)
Precise alignment is important for all radial and axial plain bearings. This is particularly the case for dry-running plain bearings, in which the load cannot be distributed via the lubricating film. Misalignment over the entire width of the bush must not exceed 0.02 mm (see Fig. 44). This figure also applies to the overall width of bushes arranged in pairs, and of thrust washers.
Bushes arranged one behind the other may need to have the same width. The joints must be flush on assembly.

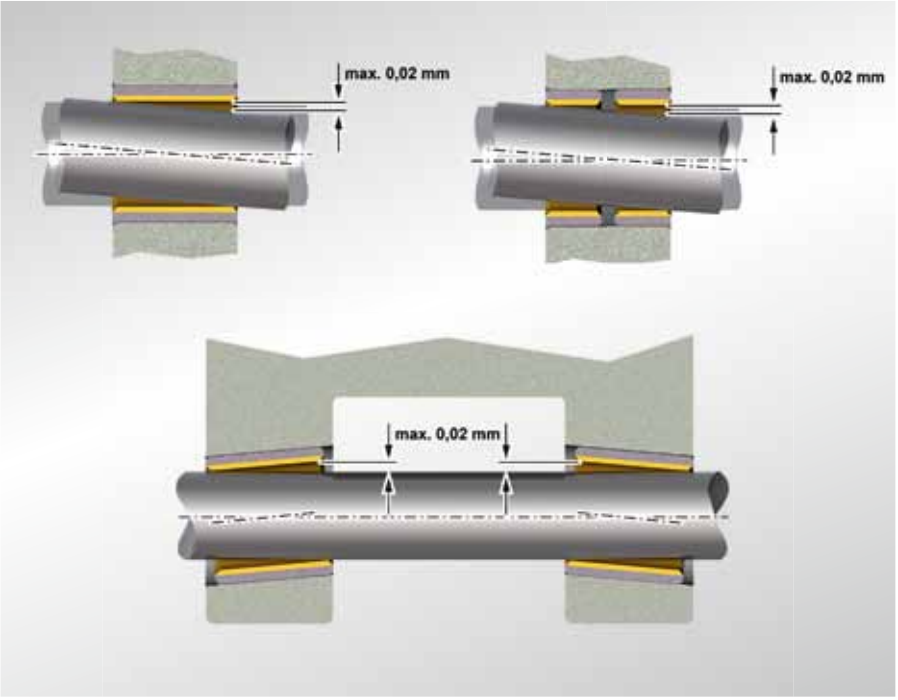

Fig. 44: Permitted misalignment

Edge load on the installed plain bearing
Excessively high load around the edges of the plain bearing may occur as the result of geometric inaccuracies or under special operating conditions. This load can be reduced through design measures (Fig. 45).

- Enlarged chamfers on housing
- Enlarged bore diameter in edge region of housing bore
- Allow width of bush to project beyond width of housing.

In addition, edge loading can be relieved by housing with an elastic design.

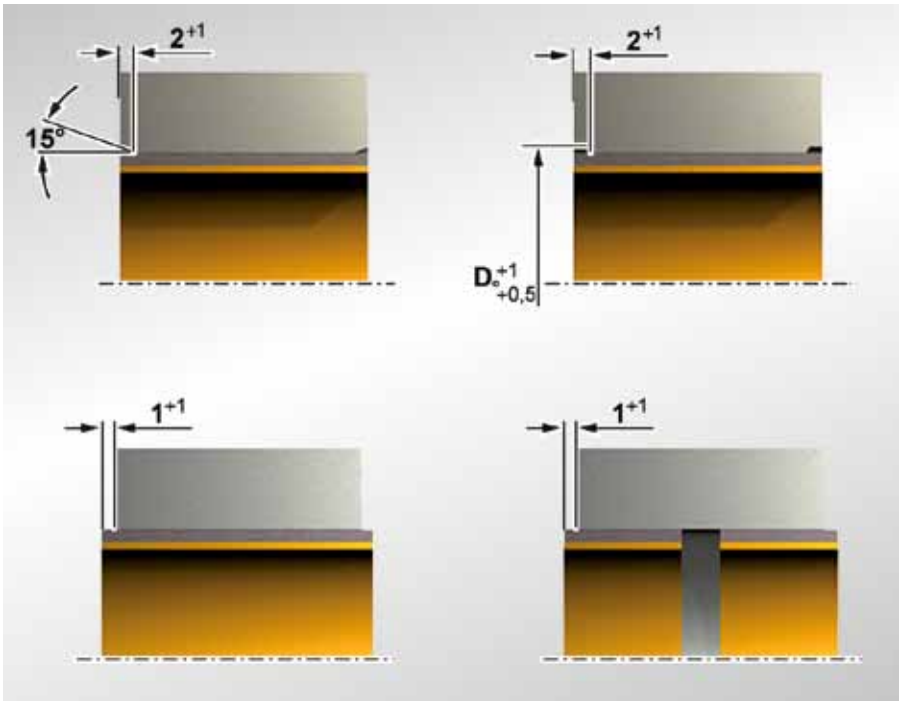

Fig. 45: Reducing excessive stress on edges

7.3 Bearing clearance, press fit

Theoretical bearing clearance
Bushes of Permaglide® P1 and P2 are pressed into the housing and fixed in place radially and axially.
No further measures are required. With the fitting tolerances from Table 25 and rigid housings and shafts, the following are achieved:

- A press-fit bearing
- Bearing clearance as per Table 30

The theoretical bearing clearance is calculated as follows:

[12] $\Delta s_{max} = d_{Gmax} - 2 \cdot s_{3min} - d_{Wmin}$

[13] $\Delta s_{min} = d_{Gmin} - 2 \cdot s_{3max} - d_{Wmax}$

Δs_{max}	[mm]	Maximum bearing clearance
Δs_{min}	[mm]	Minimum bearing clearance
d_{Gmax}	[mm]	Maximum diameter of housing bore
d_{Gmin}	[mm]	Minimum diameter of housing bore
d_{Wmax}	[mm]	Maximum shaft diameter
d_{Wmin}	[mm]	Minimum shaft diameter
s_{3max}	[mm]	Maximum wall thickness
s_{3min}	[mm]	Minimum wall thickness (see Tab. 28)

Caution:
Widening the housing bore is not taken into consideration in the bearing clearance calculation.

For calculating the press fit U, the tolerances of the housing bore are stated in Table 25 and the dimensions of the bush outside diameter D_o in Table 26.

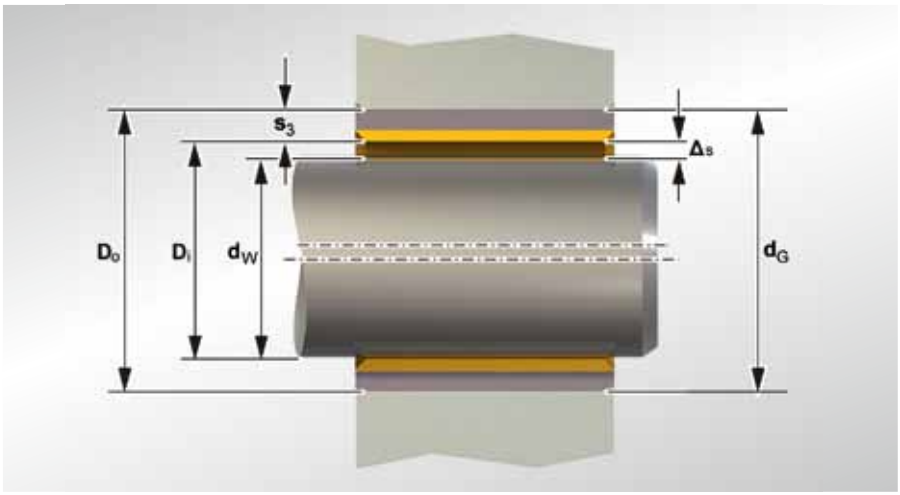

Fig. 46: Theoretical bearing clearance Δs

Press fit and bearing clearance
The bearing clearance and press fit can be influenced by the measures shown in Tab. 31:

- At high ambient temperatures
- Depending on the housing material
- Depending on the housing wall thickness.

Smaller clearance tolerances require narrower tolerances for the shaft and bore.

Diameter range	®Permaglide		
	P10, P14, P147*	P10Bz*	P20, P200
Shaft			
d_W <5	h6	f7	h8
5≤ d_W <80	f7	f7	h8
80≤ d_W	h8	h8	h8
Housing bore			
d_G ≤5.5	H6	-	-
5.5< d_G	H7	H7	H7

Tab. 25: Recommended fitting tolerances

Caution:
When using shafts with tolerance zone position h, the bearing play for $5 \leq d_W < 80$ (P10, P14, P147) and $d_W < 80$ (P10Bz) must be verified using equations [12] for Δs_{max} and [13] for Δs_{min}.

* On request

Outside diameter of bush D_o	Dimensions (test A to DIN ISO 3547-2)			
	P10, P14, P147*, P20, P200		P10Bz*	
	Upper	Lower	Upper	Lower
D_{os} 10	+0.055	+0.025	+0.075	+0.045
10 < D_{os} 18	+0.065	+0.030	+0.080	+0.050
18 < D_{os} 30	+0.075	+0.035	+0.095	+0.055
30 < D_{os} 50	+0.085	+0.045	+0.110	+0.065
50 < D_{os} 80	+0.100	+0.055	+0.125	+0.075
80 < D_{os} 120	+0.120	+0.070	+0.140	+0.090
120 < D_{os} 180	+0.170	+0.100	+0.190	+0.120
180 < D_{os} 250	+0.210	+0.130	+0.230	+0.150
250 < D_{os} 305	+0.260	+0.170	+0.280	+0.190

Tab. 26: Dimensions for outside diameter D_o

Bush inside diameter D_i	Wall thick-ness s_3	Dimensions to DIN ISO 3 547-1, Table 3, row B			
		P10, P14, P147*		P10Bz*	
		Upper	Lower	Upper	Lower
D_i < 5	0.75	0	-0.020	-	-
	1	-	-	+0.005	-0.020
5 ≤ D_i < 20	1	+0.005	-0.020	+0.005	-0.020
20 ≤ D_i < 28	1.5	+0.005	-0.025	+0.005	-0.025
28 ≤ D_i < 45	2	+0.005	-0.030	+0.005	-0.030
45 ≤ D_i < 80	2.5	+0.005	-0.040	+0.005	-0.040
80 ≤ D_i < 120	2.5	-0.010	-0.060	-0.010	-0.060
120 ≤ D_i	2.5	-0.035	-0.085	-0.035	-0.085

Tab. 27: Wall thickness s_3 for P1 bushes and collar bushes

Inside diameter D_i	Wall thickness s_3	Dimensions to DIN ISO 3 547-1, Table 3, row D, P20, P200	
		Upper	Lower
8 ≤ D_i < 20	1	−0.020	−0.045
20 ≤ D_i < 28	1.5	−0.025	−0.055
28 ≤ D_i < 45	2	−0.030	−0.065
45 ≤ D_i < 80	2.5	−0.040	−0.085
80 ≤ D_i	2.5	−0.050	−0.115

Tab. 28: Wall thickness s_3 for bushes of Permaglide® P20/P200

Wall thickness s_3	Outside bevel, without cutting C_o	Inside bevel C_i	
		min.	max.
0.75	0.5±0.3	0.1	0.4
1	0.6±0.4	0.1	0.5
1.5	0.6±0.4	0.1	0.7
2	1.0±0.4	0.1	0.7
2.5	1.2±0.4	0.2	1.0

Tab. 29: Outside bevel C_o and inside bevel C_i (Fig. 47) for bushes with metric dimensions to DIN ISO 3 547-1, Table 2

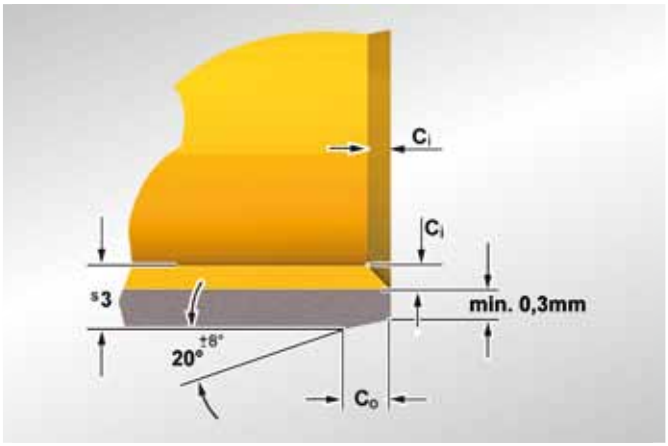

Fig. 47: Outside bevel C_o and inside bevel C_i with metric dimensions

* On request

Theoretical bearing clearance

Bush diameter		Bearing clearance Δs			
		P10, P10Bz*, P14, P147*		P20, P200	
D_i (mm)	D_o (mm)	Δsmin (mm)	Δsmax (mm)	Δsmin (mm)	Δsmax (mm)
2	3.5	0	0.054	-	-
3	4.5	0	0.054	-	-
4	5.5	0	0.056	-	-
5	7	0	0.077	-	-
6	8	0	0.077	-	-
7	9	0.003	0.083	-	-
8	10	0.003	0.083	0.040	0.127
10	12	0.003	0.086	0.040	0.130
12	14	0.006	0.092	0.040	0.135
13	15	0.006	0.092	-	-
14	16	0.006	0.092	0.040	0.135
15	17	0.006	0.092	0.040	0.135
16	18	0.006	0.092	0.040	0.135
18	20	0.006	0.095	0.040	0.138
20	23	0.010	0.112	0.050	0.164
22	25	0.010	0.112	0.050	0.164
24	27	0.010	0.112	0.050	0.164
25	28	0.010	0.112	0.050	0.164
28	32	0.010	0.126	0.060	0.188
30	34	0.010	0.126	0.060	0.188
32	36	0.015	0.135	0.060	0.194
35	39	0.015	0.135	0.060	0.194
40	44	0.015	0.135	0.060	0.194
45	50	0.015	0.155	0.080	0.234
50	55	0.015	0.160	0.080	0.239
55	60	0.020	0.170	0.080	0.246
60	65	0.020	0.170	0.080	0.246
65	70	0.020	0.170	-	-
70	75	0.020	0.170	0.080	0.246
75	80	0.020	0.170	0.080	0.246
80	85	0.020	0.201	0.100	0.311
85	90	0.020	0.209	-	-
90	95	0.020	0.209	0.100	0.319
95	100	0.020	0.209	-	-
100	105	0.020	0.209	0.100	0.319
105	110	0.020	0.209	-	-
110	115	0.020	0.209	-	-
115	120	0.020	0.209	-	-

Bush diameter		Bearing clearance Δs			
		P10, P10Bz*, P14, P147*		P20, P200	
D_i (mm)	D_o (mm)	Δsmin (mm)	Δsmax (mm)	Δsmin (mm)	Δsmax (mm)
120	125	0.070	0.264	-	-
125	130	0.070	0.273	-	-
130	135	0.070	0.273	-	-
135	140	0.070	0.273	-	-
140	145	0.070	0.273	-	-
150	155	0.070	0.273	-	-
160	165	0.070	0.273	-	-
180	185	0.070	0.279	-	-
200	205	0.070	0.288	-	-
220	225	0.070	0.288	-	-
250	255	0.070	0.294	-	-
300	305	0.070	0.303	-	-

Tab. 30: Theoretical bearing clearance after press-fitting bushes or collar bushes with metric dimensions, without consideration of possible widening of the bore

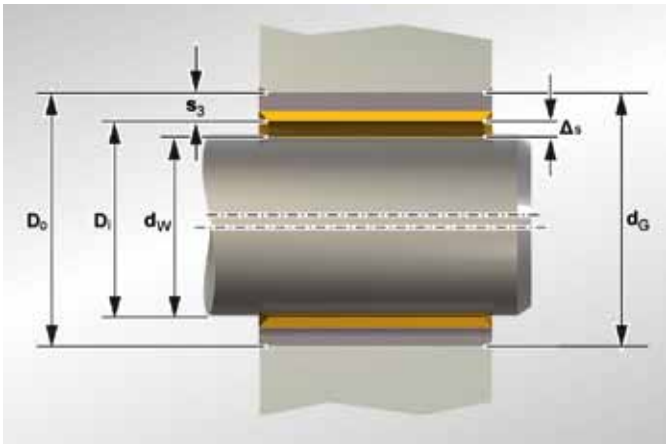

Fig. 48: Theoretical bearing clearance Δs

* On request

Press fit and bearing clearance

Design and environmental influences	Consequence	Measure	Note
Alloy or thin-walled housing	Extensive widening Excessive clearance	Reduce housing bore d_G	The housing is under greater stress; the permitted housing tension must not be exceeded
Steel or cast iron housing at high ambient temperatures	Smaller clearance	Reduce shaft diameter d_W by 0.008 mm per 100 °C above room temperature	
Bronze or copper alloy housing at high ambient temperatures	Poor press fit	Reduce housing bore d_G, recommended change to diameter per 100 °C above room temperature: d_G -0.05 %	Reduce shaft diameter d_W by the same value, in order to retain the same bearing clearance.
Aluminium alloy housing at high ambient temperatures	Poor press fit	Reduce housing bore d_G, recommended change to diameter per 100 °C above room temperature: d_G -0.1 %	Reduce shaft diameter d_W by the same value, in order to retain the same bearing clearance. The housing is under greater stress at temperatures below 0 °C; the permitted housing tension must not be exceeded.
Bushes with thicker layer of corrosion protection	Outside diameter D_o too large Insufficient clearance	Enlarge housing bore d_G Example: Layer thickness 0.015±0.003 mm producing d_G +0.03 mm	The bush and housing are subject to greater stress unless appropriate measures are taken.

Tab. 31: Errors, consequences and measures in relation to press fit and bearing clearance at high ambient temperatures, with special housing materials or housing wall thicknesses

Permaglide® bushes can simply be pressed into the housing bore. Applying a little oil to the back of the bush or the housing bore facilitates the press-fitting operation.

Avoid an inclined position or axis offset

Recommended press-fitting methods

For outside diameters D_0 up to around 55 mm:

- Flush press-fitting with mandrel, without auxiliary ring, as per Fig. 50
- Recessed press-fitting with mandrel, without auxiliary ring, as per Fig. 51

For outside diameters D_0 from around 55 mm and over:

- Press-fitting with mandrel and auxiliary ring as per Fig. 52.

Caution:

Ensure cleanliness during installation.
Dirt reduces the service life of the bearing assembly.
Take care not to damage the sliding layer.
Note the installation position, if given.
Do not position the joint in the main load zone.

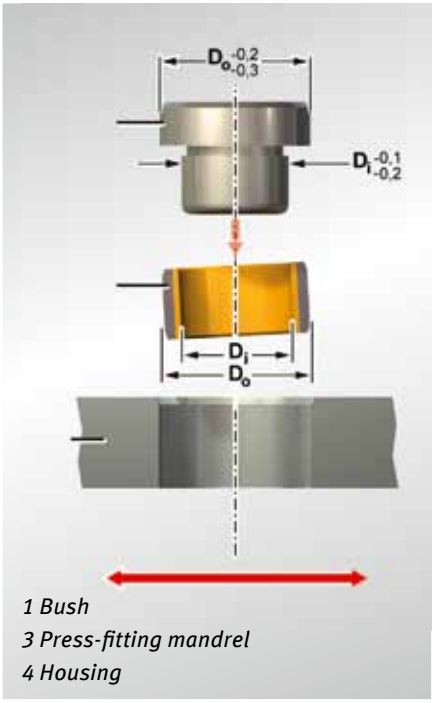

Fig. 49: Press-fitting with moving housing

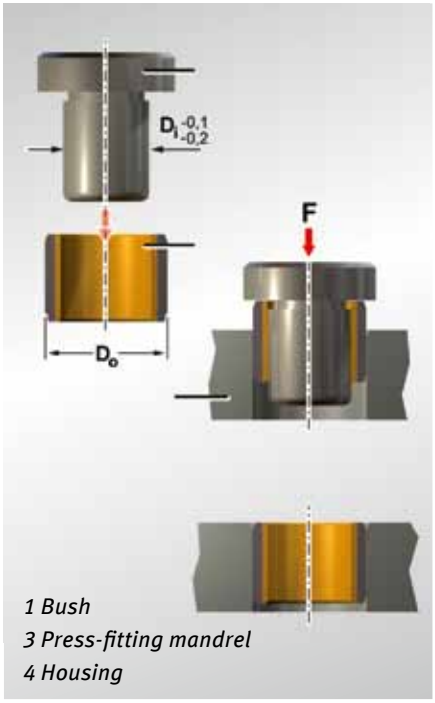

Fig. 50: Flush press-fitting D_0 ‹ 55 mm

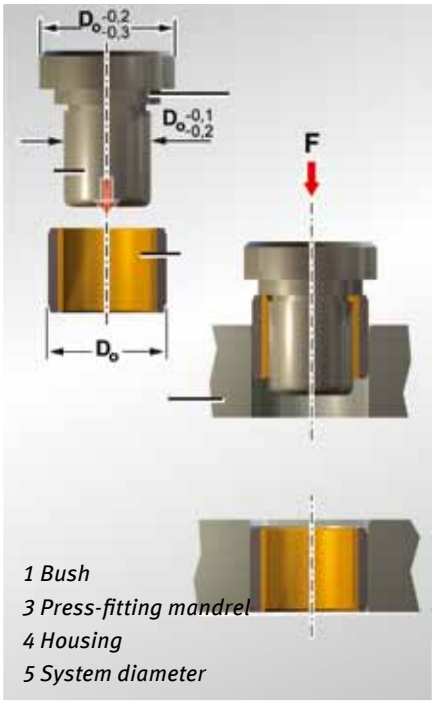

Fig. 51: Recessed press-fitting D_0 ≥ 55 mm

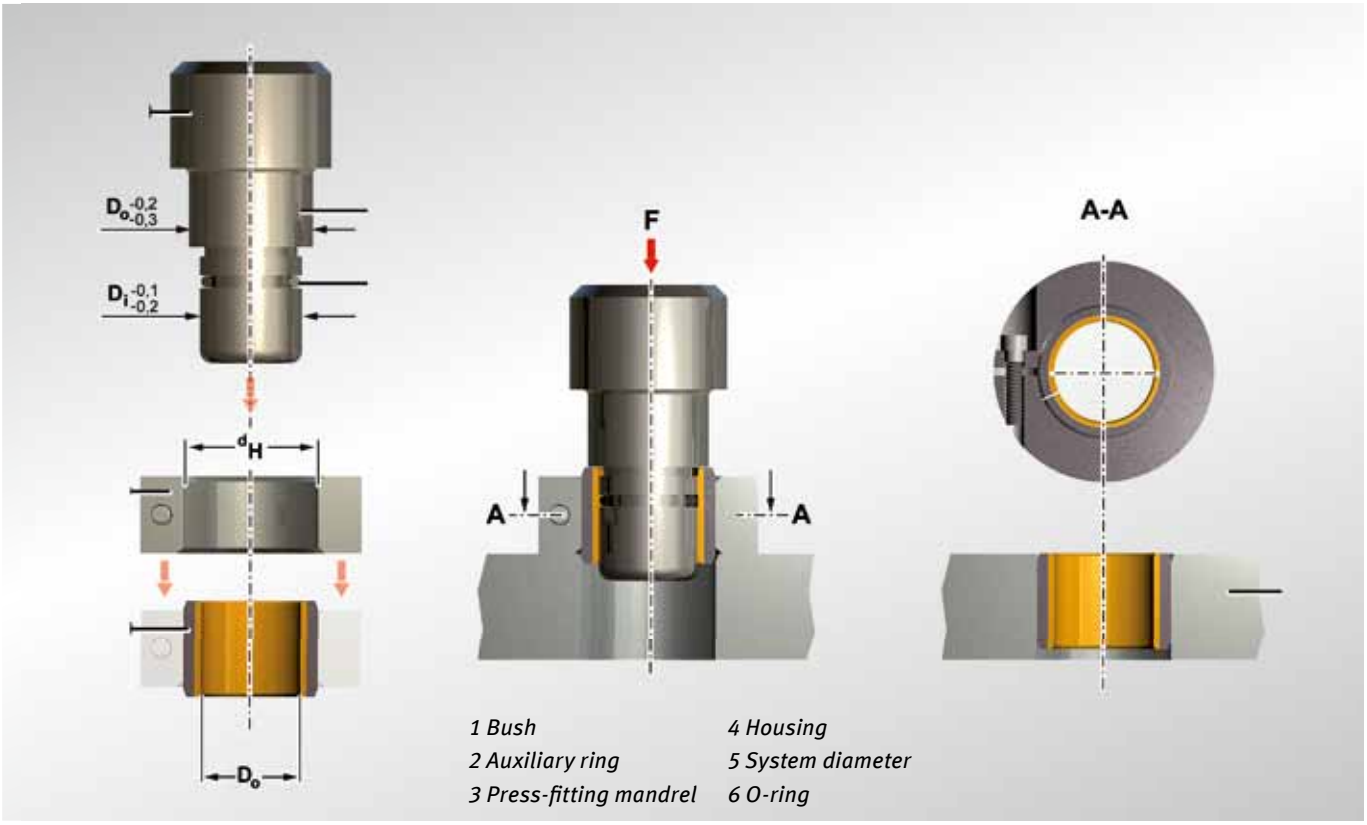

Fig. 52: Press-fitting bushes, $D_o \geq 55$ mm, with auxiliary ring

Table 32 allows you to calculate the required inside diameter d_H of the auxiliary ring on the basis of the stated outside diameter D_O of the bush.

D_o (mm)	d_H (mm)
$55 \leq D_o \leq 100$	D_o +0.28 +0.25
$100 < D_o \leq 200$	D_o +0.40 +0.36
$200 < D_o \leq 305$	D_o +0.50 +0.46

Tab. 32: Inside diameter d_H of auxiliary ring

Calibration of bearing bore after installation
(applies to P1 plain bearings only)

Calibration
Permaglide® plain bearings are ready to install on delivery, and should only be calibrated if a bearing clearance with a narrower tolerance cannot otherwise be reached.

Caution:
Calibration considerably shortens the service life of P1 Permaglide® bushes (see Tab. 33).

Figure 53 shows calibration using a mandrel.
Table 33 contains approximate values for the diameter of the calibrating mandrel d_K. Precise values can only be ascertained through tests.

Better possibilities
The bearing clearance tolerance can be reduced through the following measures, which do not adversely affect service life:
- Narrower tolerances for housing bore
- Narrower shaft tolerances.

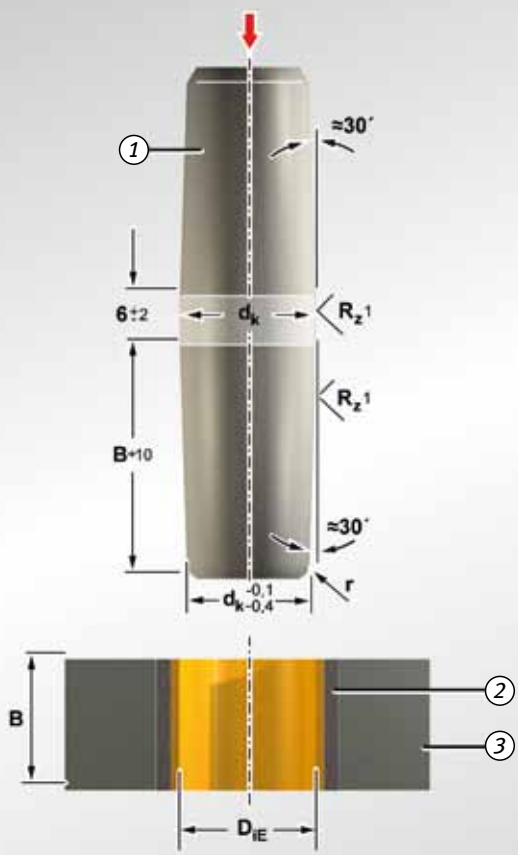

1 Calibrating mandrel, case hardening depth Eht›0.6, HRC 56 to 64
2 P10 Permaglide® bush
3 Housing
B Bush width
D_{iE} Bush diameter in press-fit state
d_K Diameter of calibrating mandrel
r Rounded edge

Fig. 53: Calibration

Desired inside diameter of bush	Diameter of calibrating mandrel[1] d_K	Service life[2]
D_{iE}	-	100% L_N
D_{iE} +0.02	D_{iE} +0.06	80% L_N
D_{iE} +0.03	D_{iE} +0.08	60% L_N
D_{iE} +0.04	D_{iE} +0.10	30% L_N

Tab. 33: Approximate values for the calibration mandrel diameter and the reduction in service life

D_{iE} Inside diameter of bush in press-fit state.
[1] Approximate value, based on steel housing.
[2] Approximate value for dry running.

Press-in force and joint pressure

Press-in force and joint pressure are interdependent. The joint pressure occurs between the housing bore and the surface of the bush jacket. It can be understood as a measure of how securely the bush fits in the housing. Together with other factors, the joint pressure influences the amount of press-in force.

Calculating the press-in force

The press-in force depends upon many factors, which can only be estimated, for example:

- Actual press-fit
- Coefficient of friction
- Scoring
- Press-in speed.

Motor Service offers the calculation of the press-in force as a service. In most cases, the estimate of press-in force as per Fig. 54 is sufficient.

Determining the bush press-in force

Figure 54 below shows the maximum required press-in force per mm of bush width. The curves represent the bush outside diameter D_0 and the bush wall thickness $_3$ to DIN ISO 3547.

This calculation assumes a steel housing, with a diameter D_G that has been adapted in relation to the bush outside diameter D_0. The selected ratio is $D_G : D_0 \approx 1.5...2$.

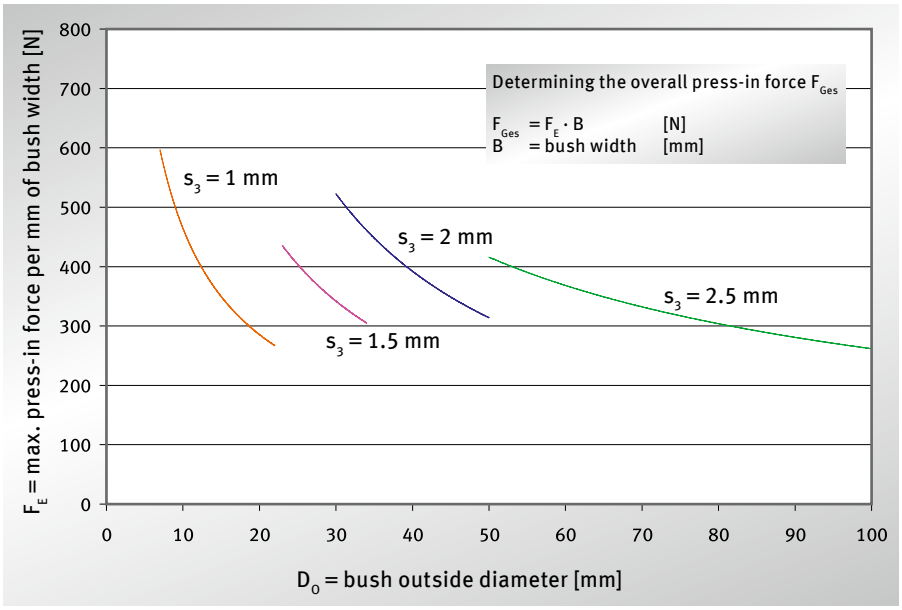

Fig. 54: Press-in force FE

Example of estimate of press-in force F_{Ges}

Given:	Bush			PAP 4030 P14
	Bush outside diameter	D_0	=	44 mm
	Bush width	B	=	30 mm
	Bush wall thickness	s_3	=	2 mm

[14] $F_{Ges} = F_E \cdot B = 340\ N/mm \cdot 30\ mm = 10200\ N$

$F_E = 340$ N/mm (from Fig. 54, $D_0 = 44$ mm, $s_3 = 2$mm)

Bushes

Fig. 55: Bushes

P10, P14, P147*

- For shafts from 2 mm to 300 mm

P10Bz*

- For shafts from 4 mm to 100 mm

P20, P22*, P23*, P200, P202*, P203*

- For shafts from 8 mm to 100 mm

Maintenance-free Permaglide® plain bearings
P10, P10Bz*, P14, P147*

Technical data		P10, P10Bz*	P14	P147*
Symbol	Unit			
pvmax.	[MPa · m/s]	1.8	1.6	1.4
pstat.	[MPa]	250	250	250
pdyn.	[MPa]	56	56	56
vmax.	[m/s]	2	1	0.8
T	[°C]	-200 to +280	-200 to +280	-200 to +280

Permaglide® P10 with steel back, Permaglide® P10Bz with bronze back

Low-maintenance Permaglide® plain bearings
P20, P22*, P23*, P200, P202*, P203*

Technical data		P20, P22*, P23*	P200, P202*, P203*
Symbol	Unit		
pvmax.	[MPa · m/s]	3	3.3
pstat.	[MPa]	250	250
pdyn.	[MPa]	70	70
vmax.	[m/s]	3	3.3
T	[°C]	-40 to +110	-40 to +110

Collar bushes

Fig. 56: Collar bushes

P10, P10Bz*, P14, P147*

- For shafts from 6 mm to 40 mm

Thrust washers

Fig. 57: Thrust washers

P10, P10Bz*, P14, P147*

- With inside diameter from 10 mm to 62 mm

P20, P22*, P23*, P200, P202*, P203*

- With inside diameter from 12 mm to 52 mm

Strips

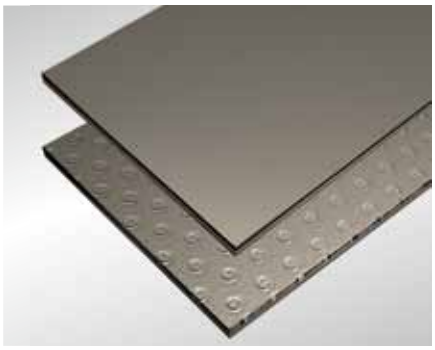

Fig. 58: Strips

P10, P10Bz*, P14, P147*

- Length 500 mm
- For widths see dimension tables
- For wall thicknesses see dimension tables

P20, P22*, P23*, P200, P202*, P203*

- Length 500 mm
- Width 250 mm
- For wall thicknesses see dimension tables

* On request

Example order and example designation

Bush of Permaglide® P10 with steel back:

Inside diameter (D_i)	16 mm
Width (B)	25 mm
Order designation:	PAP 1625 P10

Fig. 59: Example order, P10 bush

Strips of Permaglide® P20:

Width (B)	250 mm
Wall thickness (s_3)	1 mm
(Order code: $s_3 \cdot 10$)	
Order designation:	PAS 10250 P20

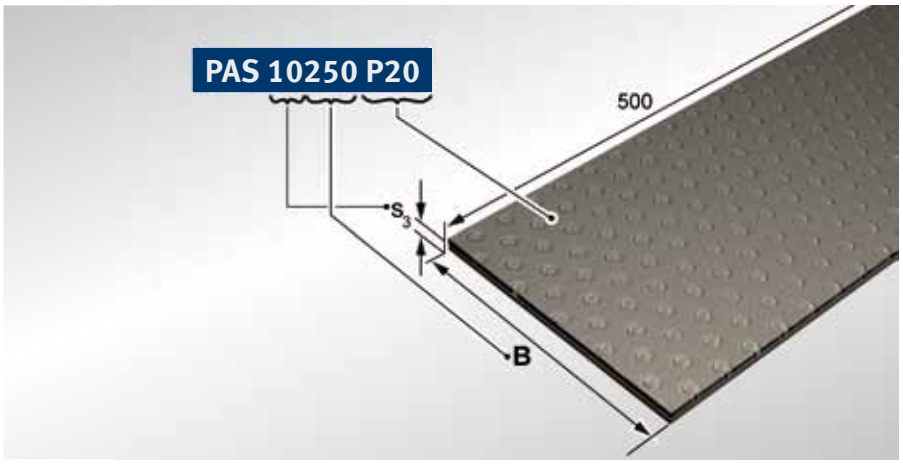

Fig. 60: Example order, P20 strip

Thrust washers of Permaglide® P20:

Inside diameter (D_i)	12 mm
Order designation:	PAW 12 P20

Fig. 61: Example order, P20 thrust washer

9.1.1

Series P10, P14, P147* with steel back

Recommended fitting tolerance:

Shaft	
$d_W < 5$	h6
$5 \leq d_W < 80$	f7
$80 \leq d_W$	h8

Housing bore	
$d_G \leq 5.5$	H6
$5.5 < d_G$	H7

For bearing clearances, wall thicknesses and chamfer tolerances, see section 7, “Design and layout of bearing assembly”, “Theoretical bearing clearance”.

Bushes in special dimensions available on request.

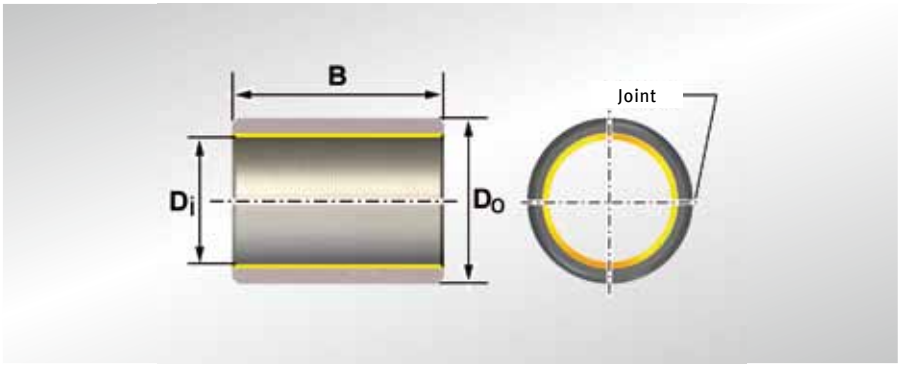

Dimension table (dimensions in mm)

Shaft diameter	Order designation ……P10, P14, P147*	Weight g	Dimensions		
			D_i	D_o	B ±0.25
2	PAP 0203 ….	0.15	2	3.5	3
	PAP 0205 ….	0.25	2	3.5	5
3	PAP 0303 ….	0.2	3	4.5	3
	PAP 0304 ….	0.26	3	4.5	4
	PAP 0305 ….	0.33	3	4.5	5
	PAP 0306 ….	0.4	3	4.5	6
4	PAP 0403 ….	0.25	4	5.5	3
	PAP 0404 ….	0.33	4	5.5	4
	PAP 0406 ….	0.5	4	5.5	6
	PAP 0410 ….	0.84	4	5.5	10
5	PAP 0505 ….	0.72	5	7	5
	PAP 0508 ….	1.1	5	7	8
	PAP 0510 ….	1.4	5	7	10
6	PAP 0606 ….	1	6	8	6
	PAP 0608 ….	1.3	6	8	8
	PAP 0610 ….	1.7	6	8	10
7	PAP 0710 ….	1.9	7	9	10
8	PAP 0808 ….	1.7	8	10	8
	PAP 0810 ….	2.1	8	10	10
	PAP 0812 ….	2.6	8	10	12
10	PAP 1008 ….	2.1	10	12	8
	PAP 1010 ….	2.6	10	12	10
	PAP 1012 ….	3.1	10	12	12
	PAP 1015 ….	3.9	10	12	15
	PAP 1020 ….	5.3	10	12	20
12	PAP 1208 ….	2.5	12	14	8
	PAP 1210 ….	3.1	12	14	10
	PAP 1212 ….	3.7	12	14	12
	PAP 1215 ….	4.7	12	14	15
	PAP 1220 ….	6.2	12	14	20
	PAP 1225 ….	7.8	12	14	25
13	PAP 1310 ….	3.3	13	15	10

* On request

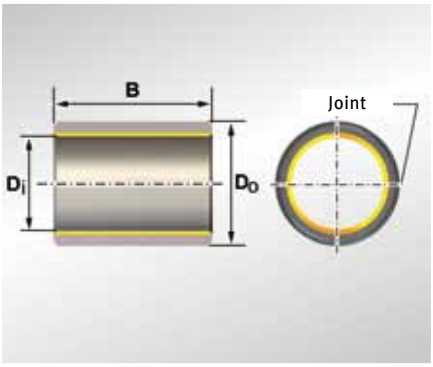

Dimension table · continued (dimensions in mm)

Shaft diameter	Order designation ……P10, P14, P147*	Weight g	Dimensions		
			D_i	D_o	B ±0.25
14	PAP 1410 ….	3.6	14	16	10
	PAP 1412 ….	4.3	14	16	12
	PAP 1415 ….	5.4	14	16	15
	PAP 1420 ….	7.1	14	16	20
	PAP 1425 ….	9	14	16	25
15	PAP 1510 ….	3.8	15	17	10
	PAP 1512 ….	4.6	15	17	12
	PAP 1515 ….	5.7	15	17	15
	PAP 1520 ….	7.6	15	17	20
	PAP 1525 ….	9.5	15	17	25
16	PAP 1610 ….	4	16	18	10
	PAP 1612 ….	4.9	16	18	12
	PAP 1615 ….	6.1	16	18	15
	PAP 1620 ….	8.1	16	18	20
	PAP 1625 ….	10.1	16	18	25
18	PAP 1810 ….	4.5	18	20	10
	PAP 1815 ….	6.8	18	20	15
	PAP 1820 ….	9.1	18	20	20
	PAP 1825 ….	11.3	18	20	25
20	PAP 2010 ….	7.8	20	23	10
	PAP 2015 ….	11.7	20	23	15
	PAP 2020 ….	15.6	20	23	20
	PAP 2025 ….	19.5	20	23	25
	PAP 2030 ….	23.4	20	23	30
	PAP 2040 ….	31.2	20	23	40
22	PAP 2215 ….	12.7	22	25	15
	PAP 2220 ….	17	22	25	20
	PAP 2225 ….	21.3	22	25	25
	PAP 2230 ….	25.5	22	25	30
24	PAP 2415 ….	13.8	24	27	15
	PAP 2420 ….	18.5	24	27	20
	PAP 2425 ….	23.1	24	27	25
	PAP 2430 ….	27.7	24	27	30
25	PAP 2510 ….	9.6	25	28	10
	PAP 2515 ….	14.4	25	28	15
	PAP 2520 ….	19.2	25	28	20
	PAP 2525 ….	24	25	28	25
	PAP 2530 ….	28.8	25	28	30
	PAP 2540 ….	38.4	25	28	40
	PAP 2550 ….	48	25	28	50
28	PAP 2820 ….	29.1	28	32	20
	PAP 2830 ….	43.7	28	32	30

* On request

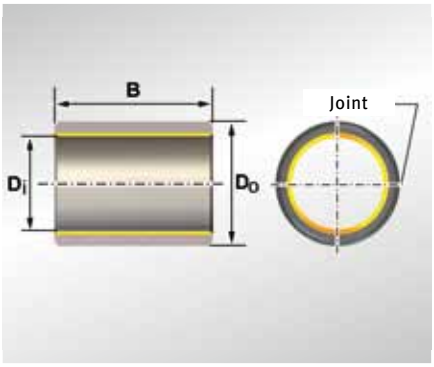

Dimension table · continued (dimensions in mm)

Shaft diameter	Order designation P10, P14, P147*	Weight g	Dimensions		
			D_i	D_o	B ±0.25
30	PAP 3015	23.3	30	34	15
	PAP 3020	31.1	30	34	20
	PAP 3025	38.8	30	34	25
	PAP 3030	46.6	30	34	30
	PAP 3040	62.1	30	34	40
32	PAP 3230	49.5	32	36	30
	PAP 3240	66	32	36	40
35	PAP 3520	35.9	35	39	20
	PAP 3530	53.9	35	39	30
	PAP 3540	71.8	35	39	40
	PAP 3550	89.8	35	39	50
40	PAP 4020	40.8	40	44	20
	PAP 4030	61.2	40	44	30
	PAP 4040	81.5	40	44	40
	PAP 4050	102	40	44	50
45	PAP 4530	87	45	50	30
	PAP 4540	116	45	50	40
	PAP 4550	145	45	50	50
50	PAP 5020	64	50	55	20
	PAP 5030	96	50	55	30
	PAP 5040	128	50	55	40
	PAP 5060	192	50	55	60
55	PAP 5540	140	55	60	40
	PAP 5560	210	55	60	60
60	PAP 6030	114	60	65	30
	PAP 6040	152	60	65	40
	PAP 6060	228	60	65	60
	PAP 6070	266	60	65	70
65	PAP 6530	123	65	70	30
	PAP 6540	164	65	70	40
	PAP 6550	205	65	70	50
	PAP 6560	246	65	70	60
	PAP 6570	288	65	70	70
70	PAP 7040	176	70	75	40
	PAP 7050	221	70	75	50
	PAP 7070	309	70	75	70
75	PAP 7540	189	75	80	40
	PAP 7550	236	75	80	50
	PAP 7560	283	75	80	60
	PAP 7580	377	75	80	80

* On request

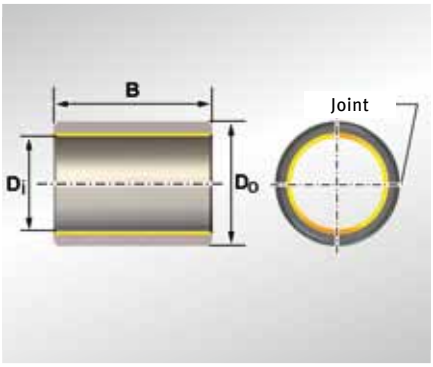

Dimension table · continued (dimensions in mm)

Shaft diameter	Order designation ……P10, P14, P147*	Weight g	Dimensions		
			D_i	D_o	B ±0.25
80	PAP 8040 ….	201	80	85	40
	PAP 8060 ….	301	80	85	60
	PAP 8080 ….	402	80	85	80
	PAP 80100 ….	502	80	85	100
85	PAP 8560 ….	319	85	90	60
	PAP 85100 ….	532	85	90	100
90	PAP 9050 ….	281	90	95	50
	PAP 9060 ….	338	90	95	60
	PAP 90100 ….	563	90	95	100
95	PAP 9560 ….	356	95	100	60
	PAP 95100 ….	593	95	100	100
100	PAP 10050 ….	312	100	105	50
	PAP 10060 ….	374	100	105	60
	PAP 100115 ….	717	100	105	115
105	PAP 10560 ….	392	105	110	60
	PAP 105115 ….	752	105	110	115
110	PAP 11060 ….	411	110	115	60
	PAP 110115 ….	787	110	115	115
115	PAP 11550 ….	357	115	120	50
	PAP 11560 ….	429	115	120	60
	PAP 11570 ….	500	115	120	70
120	PAP 12060 ….	447	120	125	60
	PAP 120100 ….	745	120	125	100
125	PAP 125100 ….	776	125	130	100
130	PAP 13060 ….	484	130	135	60
	PAP 130100 ….	806	130	135	100
135	PAP 13560 ….	502	135	140	60
	PAP 13580 ….	669	135	140	80
140	PAP 14060 ….	520	140	145	60
	PAP 140100 ….	867	140	145	100
150	PAP 15060 ….	557	150	155	60
	PAP 15080 ….	742	150	155	80
	PAP 150100 ….	928	150	155	100
160	PAP 16080 ….	791	160	165	80
	PAP 160100 ….	989	160	165	100
180	PAP 180100 ….	1110	180	185	100
200	PAP 200100 ….	1232	200	205	100
220	PAP 220100 ….	1354	220	225	100
250	PAP 250100 ….	1536	250	255	100
300	PAP 300100 ….	1840	300	305	100

* On request

9.1.2

Series P10Bz* with bronze back (formerly P11)

Recommended fitting tolerance:

Shaft	
$5 \leq d_w < 80$	f7
$80 \leq d_w$	h8

Housing bore
H7

For bearing clearances, wall thicknesses and chamfer tolerances, see section 7, “Design and layout of bearing assembly”, “Theoretical bearing clearance”.

Bushes in special dimensions available on request.

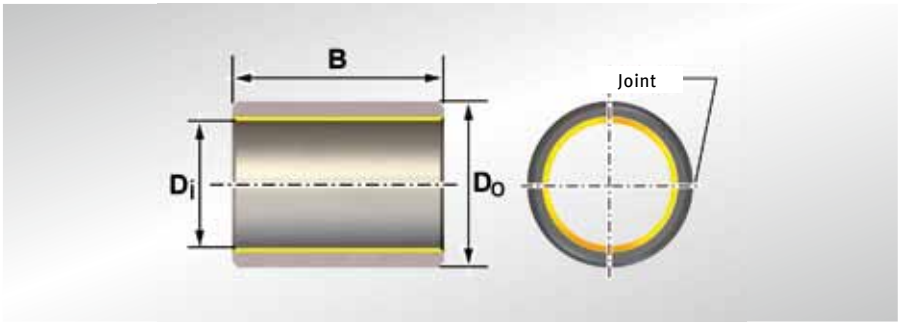

Dimension table (dimensions in mm)

Shaft diameter	Order designation P10Bz*	Weight g	Dimensions		
			D_i	D_o	B ±0.25
4	PAP 0406	0.8	4	6	6
5	PAP 0505	0.8	5	7	5
6	PAP 0606	1.1	6	8	6
	PAP 0610	1.8	6	8	10
8	PAP 0808	1.9	8	10	8
	PAP 0810	2.3	8	10	10
	PAP 0812	2.8	8	10	12
10	PAP 1005	1.4	10	12	5
	PAP 1010	2.8	10	12	10
	PAP 1015	4.2	10	12	15
	PAP 1020	5.7	10	12	20
12	PAP 1210	3.3	12	14	10
	PAP 1212	4	12	14	12
	PAP 1215	5.1	12	14	15
	PAP 1220	6.7	12	14	20
	PAP 1225	8.4	12	14	25
14	PAP 1415	5.8	14	16	15
15	PAP 1515	6.2	15	17	15
	PAP 1525	10.3	15	17	25
16	PAP 1615	6.6	16	18	15
	PAP 1625	11	16	18	25
18	PAP 1815	7.4	18	20	15
	PAP 1825	12.3	18	20	25
20	PAP 2015	12.8	20	23	15
	PAP 2020	17	20	23	20
	PAP 2025	21.3	20	23	25
	PAP 2030	25.5	20	23	30
22	PAP 2215	14	22	25	15
	PAP 2220	18.6	22	25	20
	PAP 2225	23.3	22	25	25
24	PAP2430	30.3	24	27	30
25	PAP 2525	26.2	25	28	25
	PAP 2530	31.5	25	28	30
28	PAP 2830	47.9	28	32	30

* On request

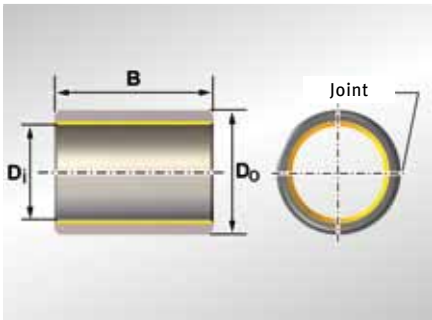

Dimension table · continued (dimensions in mm)

Shaft diameter	Order designation P10Bz*	Weight g	Dimensions		
			D_i	D_o	B ±0.25
30	PAP 3020	34.1	30	34	20
	PAP 3030	51.1	30	34	30
	PAP 3040	68.2	30	34	40
35	PAP 3520	39.4	35	39	20
	PAP 3530	59.1	35	39	30
40	PAP 4050	112	40	44	50
45	PAP 4550	159	45	50	50
50	PAP 5030	105	50	55	30
	PAP 5040	140	50	55	40
	PAP 5060	211	50	55	60
55	PAP 5540	154	55	60	40
60	PAP 6040	167	60	65	40
	PAP 6050	209	60	65	50
	PAP 6060	251	60	65	60
	PAP 6070	293	60	65	70
70	PAP 7050	242	70	75	50
	PAP 7070	339	70	75	70
80	PAP 8060	331	80	85	60
	PAP 80100	552	80	85	100
90	PAP 9060	371	90	95	60
	PAP 90100	619	90	95	100
95	PAP 9560	391	95	100	60
100	PAP 10060	411	100	105	60
	PAP 100115	788	100	105	115

* On request

9.2.1

Series P10, P14, P147* with steel back

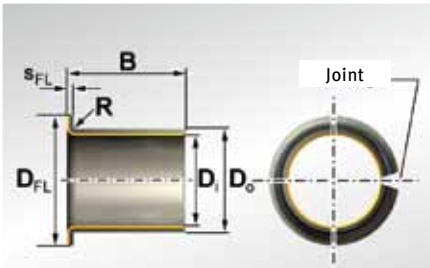

Inside diameter D_i	Radius R
≤ 8 mm	- 0.5 mm
› 8 mm	± 0.5 mm

Collar bushes in special dimensions available on request.

Dimension table (dimensions in mm)

Shaft diameter	Order designation P10, P14, P147*	Weight g	Dimensions				
			D_i	D_o	D_{FL} ±0.5	B ±0.25	s_{FL} -0.2
6	PAF 06040	0.9	6	8	12	4	1
	PAF 06070	1.4	6	8	12	7	1
	PAF 06080	1.6	6	8	12	8	1
8	PAF 08055	1.7	8	10	15	5.5	1
	PAF 08075	2.1	8	10	15	7.5	1
	PAF 08095	2.5	8	10	15	9.5	1
10	PAF 10070	2.5	10	12	18	7	1
	PAF 10090	3	10	12	18	9	1
	PAF 10120	3.8	10	12	18	12	1
	PAF 10170	5	10	12	18	17	1
12	PAF 12070	3	12	14	20	7	1
	PAF 12090	3.6	12	14	20	9	1
	PAF 12120	4.5	12	14	20	12	1
	PAF 12170	5.9	12	14	20	17	1
14	PAF 14120	5.1	14	16	22	12	1
	PAF 14170	6.9	14	16	22	17	1
15	PAF 15090	4.4	15	17	23	9	1
	PAF 15120	5.5	15	17	23	12	1
	PAF 15170	7.3	15	17	23	17	1
16	PAF 16120	5.8	16	18	24	12	1
	PAF 16170	7.8	16	18	24	17	1
18	PAF 18120	6.5	18	20	26	12	1
	PAF 18170	8.7	18	20	26	17	1
	PAF 18220	10.9	18	20	26	22	1
20	PAF 20115	11.4	20	23	30	11.5	1.5
	PAF 20165	15.1	20	23	30	16.5	1.5
	PAF 20215	18.9	20	23	30	21.5	1.5
25	PAF 25115	14	25	28	35	11.5	1.5
	PAF 25165	18.6	25	28	35	16.5	1.5
	PAF 25215	23.5	25	28	35	21.5	1.5
30	PAF 30160	30.5	30	34	42	16	2
	PAF 30260	45.5	30	34	42	26	2
35	PAF 35160	35	35	39	47	16	2
	PAF 35260	53	35	39	47	26	2
40	PAF 40260	61	40	44	53	26	2

* On request

9.2.2

Series P10Bz* with bronze back

Recommended fitting tolerance:

Shaft	Housing bore
f7	H7

For bearing clearances, wall thicknesses and chamfer tolerances, see section 7, “Design and layout of bearing assembly”, “Theoretical bearing clearance”.

Collar bushes in special dimensions available on request.

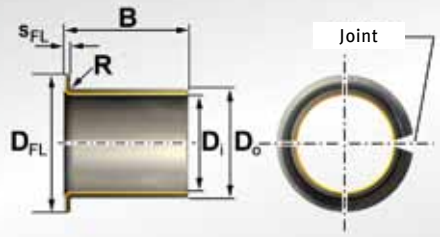

Inside diameter D_i	Radius R
≤ 8 mm	- 0.5 mm
› 8 mm	± 0.5 mm

Dimension table (dimensions in mm)

Shaft diameter	Order designation P10Bz*	Weight g	Dimensions				
			D_i	D_o	D_{FL} ±0.5	B ±0.25	s_{FL} -0.2
6	PAF 06080	1.8	6	8	12	8	1
8	PAF 08055	1.8	8	10	15	5.5	1
	PAF 08095	2.7	8	10	15	9.5	1
10	PAF 10070	2.7	10	12	18	7	1
	PAF 10120	4.1	10	12	18	12	1
	PAF 10170	5.5	10	12	18	17	1
12	PAF 12070	3.2	12	14	20	7	1
	PAF 12090	3.9	12	14	20	9	1
	PAF 12120	4.9	12	14	20	12	1
15	PAF 15120	6	15	17	23	12	1
	PAF 15170	8	15	17	23	17	1
16	PAF 16120	6.3	16	18	14	12	1
18	PAF 18100	6.1	18	20	16	10	1
	PAF 18220	11.8	18	20	26	22	1
20	PAF 20115	12.4	20	23	30	11.5	1.5
	PAF 20165	16.6	20	23	30	16.5	1.5
25	PAF 25215	25.5	25	28	35	21.5	1.5
30	PAF 30160	33.5	30	34	42	16	2
	PAF 30260	50	30	34	42	26	2
35	PAF 35260	58	35	39	47	26	2
40	PAF 40260	67	40	44	53	26	2

* On request

9.3.1

Series P10, P14, P147* with steel back

Series P10Bz* with bronze back

Thrust washers in special dimensions available on request.

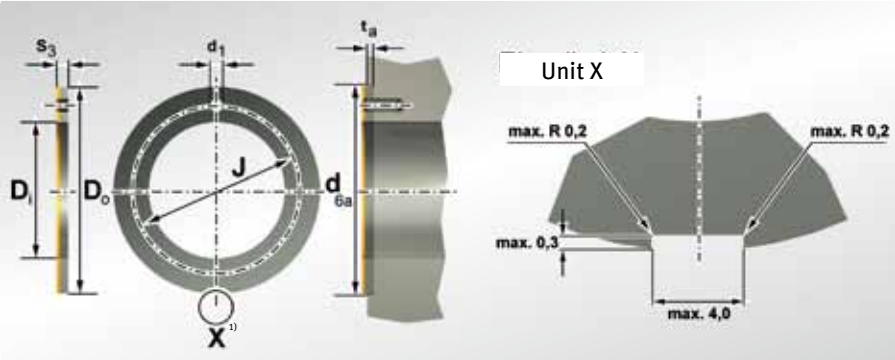

1) Maximum 4 free cuts on outside diameter, location optional

Dimension table (dimensions in mm)								
Order designation --- -- P10, P10Bz*, P14, P147*	Weight g	Dimensions					Connection dimensions	
		D_i +0.25	D_o -0.25	s_3 -0.05	J ±0.12	d_1 +0.4 +0.1	ta ±0.2	d_{6a} +0.12
PAW 10	2.7	10	20	1.5	15	1.5	1	20
PAW 12	3.9	12	24	1.5	18	1.5	1	24
PAW 14	4.3	14	26	1.5	20	2	1	26
PAW 16	5.8	16	30	1.5	22	2	1	30
PAW 18	6.3	18	32	1.5	25	2	1	32
PAW 20	8.1	20	36	1.5	28	3	1	36
PAW 22	8.7	22	38	1.5	30	3	1	38
PAW 26	11.4	26	44	1.5	35	3	1	44
PAW 28	13.7	28	48	1.5	38	4	1	48
PAW 32	17.1	32	54	1.5	43	4	1	54
PAW 38	21.5	38	62	1.5	50	4	1	62
PAW 42	23.5	42	66	1.5	54	4	1	66
PAW 48	38.5	48	74	2	61	4	1.5	74
PAW 52	41	52	78	2	65	4	1.5	78
PAW 62	52	62	90	2	76	4	1.5	90

* On request

9.4.1

Series P10, P14, P147* with steel back

Series P10Bz* with bronze back (formerly P11)

Strips in special dimensions available on request.

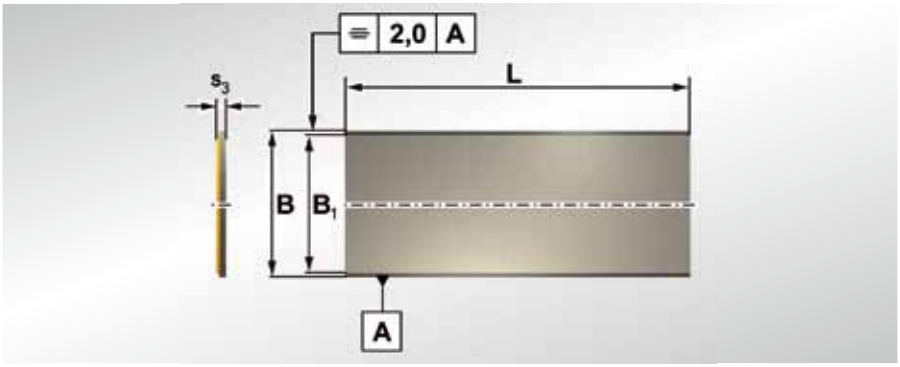

Dimension table (dimensions in mm)					
Order designation P10, P14, P147*	Weight g	Dimensions			
		s_3 -0.04	B +1.5	B_1	L +3
PAS 07250	703	0.75	250	238	500
PAS 10250	948	1	250	238	500
PAS 15250	1439	1.5	250	238	500
PAS 20250	1930	2	250	238	500
PAS 25250	2420	2.5	250	238	500
PAS 30250	2970	3.06	250	238	500

Dimension table (dimensions in mm)					
Order designation P10Bz*	Weight g	Dimensions			
		s_3 -0.04	B +1.5	B_1	L +3
PAS 10160	658	1	160	148	500
PAS 15180	1132	1.5	180	168	500
PAS 20180	1523	2	180	168	500
PAS 25180	1915	2.5	180	168	500

B = overall width

B_1 = useful width

* On request

9.5

Series P20, P200

Recommended fitting tolerance:

Shaft	Housing bore
h8	H7

For bearing clearances, wall thicknesses and chamfer tolerances, see section 7, “Design and layout of bearing assembly,” “Theoretical bearing clearance”.

Shaping the lubricating bore by roll bending is permitted.

Bushes P22, P23, P202 and P203 available on request.

Bushes in special dimensions available on request.

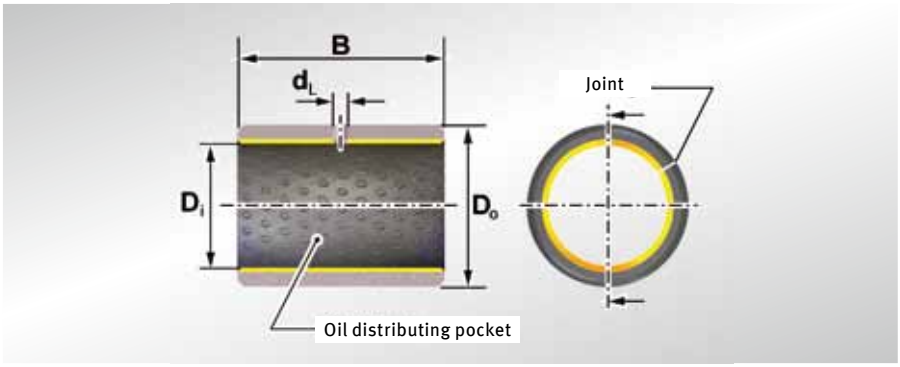

Dimension table (dimensions in mm)

Shaft diameter	Order designation P20, P200	Weight g	Dimensions			
			D_i	D_o	B ±0.25	d_L
8	PAP 0808	1.6	8	10	8	- [1]
	PAP 0810	2	8	10	10	- [1]
	PAP 0812	2.4	8	10	12	- [1]
10	PAP 1008	2	10	12	8	- [1]
	PAP 1010	2.4	10	12	10	3
	PAP 1015	3.7	10	12	15	3
12	PAP 1210	2.9	12	14	10	3
	PAP 1212	3.5	12	14	12	3
	PAP 1215	4.4	12	14	15	3
	PAP 1220	5.9	12	14	20	3
14	PAP 1420	6.8	14	16	20	3
15	PAP 1510	3.6	15	17	10	3
	PAP 1515	5.4	15	17	15	3
	PAP 1525	9	15	17	25	3
16	PAP 1612	4.6	16	18	12	3
	PAP 1615	5.7	16	18	15	3
	PAP 1620	7.7	16	18	20	3
18	PAP 1815	6.4	18	20	15	3
	PAP 1820	8.6	18	20	20	3
20	PAP 2015	11.2	20	23	15	3
	PAP 2020	15	20	23	20	3
	PAP 2025	18.8	20	23	25	3
	PAP 2030	23.1	20	23	30	3

[1] No lubricating hole

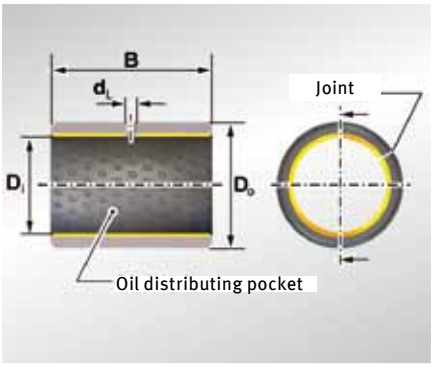

Dimension table · continued (dimensions in mm)

Shaft diameter	Order designation P20, P200	Weight g	Dimensions			
			D_i	D_o	B ±0.25	d_L
22	PAP 2220	16.4	22	25	20	3
25	PAP 2515	13.9	25	28	15	4
	PAP 2520	18.5	25	28	20	4
	PAP 2525	23.1	25	28	25	4
	PAP 2530	27.8	25	28	30	4
28	PAP 2830	42.6	28	32	30	4
30	PAP 3020	30.3	30	34	20	4
	PAP 3025	37.8	30	34	25	4
	PAP 3030	45.4	30	34	30	4
	PAP 3040	60.6	30	34	40	4
32	PAP 3230	48.2	32	36	30	4
35	PAP 3520	35	35	39	20	4
	PAP 3530	52.5	35	39	30	4
	PAP 3550	87.5	35	39	50	4
40	PAP 4020	39.7	40	44	20	4
	PAP 4030	59.6	40	44	30	4
	PAP 4040	79.5	40	44	40	4
	PAP 4050	99.3	40	44	50	4
45	PAP 4540	113	45	50	40	5
	PAP 4550	142	45	50	50	5
50	PAP 5025	78	50	55	25	5
	PAP 5040	125	50	55	40	5
	PAP 5060	188	50	55	60	5
55	PAP 5540	137	55	60	40	5
60	PAP 6030	112	60	65	30	6
	PAP 6040	142	60	65	40	6
	PAP 6060	224	60	65	60	6
70	PAP 7040	173	70	75	40	6
	PAP 7050	216	70	75	50	6
	PAP 7070	303	70	75	70	6
75	PAP 7540	185	75	80	40	6
	PAP 7580	370	75	80	80	6
80	PAP 8040	197	80	85	40	6
	PAP 8055	271	80	85	55	6
	PAP 8060	295	80	85	60	6
	PAP 8080	394	80	85	80	6
90	PAP 9060	331	90	95	60	6
100	PAP 10050	305	100	105	50	8
	PAP 10060	366	100	105	60	8

9.6

Series P20, P200

Thrust washers of P22, P23, P202 and P203 available on request.

Thrust washers in special dimensions available on request.

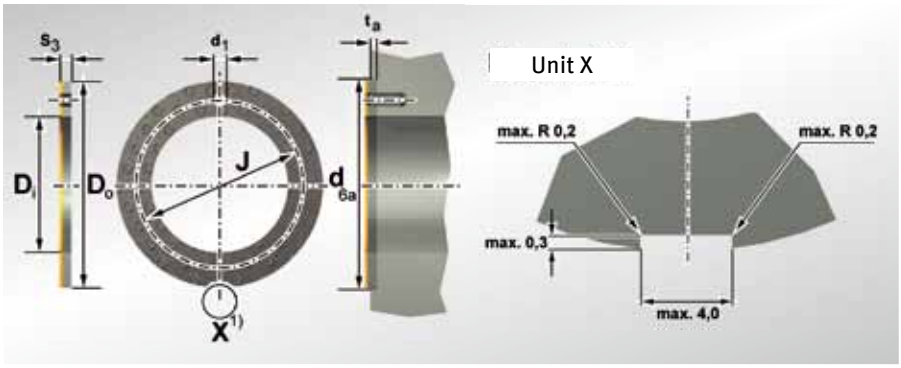

Dimension table (dimensions in mm)								
Order designation P20, P200	Weight g	Dimensions					Connection dimensions	
		D_i +0.25	D_o -0.25	s_3 -0.05	J ±0.12	d_1 +0.4 +0.1	ta ±0.2	d_{6a} +0.12
PAW 12	3.8	12	24	1.5	18	1.5	1	24
PAW 14	4.2	14	26	1.5	20	2	1	26
PAW 18	6.1	18	32	1.5	25	2	1	32
PAW 20	7.8	20	36	1.5	28	3	1	36
PAW 22	8.4	22	38	1.5	30	3	1	38
PAW 26	11	26	44	1.5	35	3	1	44
PAW 28	13.3	28	48	1.5	38	4	1	48
PAW 32	16.5	32	54	1.5	43	4	1	54
PAW 38	21	38	62	1.5	50	4	1	62
PAW 42	22.5	42	66	1.5	54	4	1	66
PAW 48	37.5	48	74	2	61	4	1.5	74
PAW 52	40	52	78	2	65	4	1.5	78

[1] Maximum 4 free cuts on outside diameter, location optional

9.7

Series P20, P200

P20 With oil distributing pocket, ready to install
P22 Without oil distributing pocket, with machining allowance
P23 Without oil distributing pocket, ready to install
P200 With oil distributing pocket, ready to install
P202 Without oil distributing pocket, with machining allowance
P203 Without oil distributing pocket, ready to install

Strips P22, P23, P202 and P203 available on request.

Strips in special dimensions available on request.

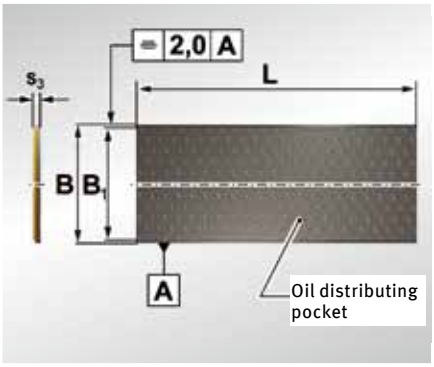

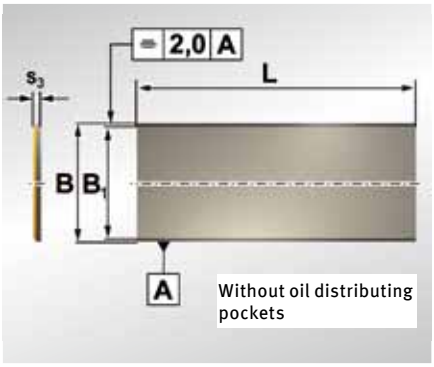

Dimension table (dimensions in mm)					
Order designation P20, P200	Weight g	Dimensions			
		s_3 -0.04	B +1.5	B_1	L +3
PAS 10250	889	0.99	250	238	500
PAS 15250	1321	1.48	250	238	500
PAS 20250	1779	1.97	250	238	500
PAS 25250	2225	2.46	250	168	500

B = overall width
B_1 = useful width

Dimension table (dimensions in mm)					
Order designation P22, P202	Weight g	Dimensions			
		s_3 [1] -0.04	B +1.5	B_1	L +3
PAS 10250	988	1.11	250	238	500
PAS 15250	1375	1.61	250	238	500
PAS 20250	1833	2.11	250	238	500
PAS 25250	2279	2.63	250	238	500

Supplied on request.

[1] Machining allowance: 0.15 mm.

10.1 Testing wrapped bushes

Unlike a cylindrical pipe section, wrapped bushes are produced from a level section of material through shaping. They therefore feature a joint that may be open when free. The wrapped bush only has a closed joint and the required dimensional and contouring accuracy after it has been pressed into the bearing housing. Before installation, the outside diameter D_o and inside diameter D_i of wrapped bushes can only be measured using special test methods and test equipment.

Bush outside diameter D_o
Test A, DIN ISO 3547 Part 2
Here, the wrapped bush is placed in a two-piece test holder with defined test diameter d_{ch}, with the joint facing upwards. The test holder is subjected to a test force F_{ch}. The distance z between the dies changes under the test force. The bush diameter D_o is then calculated from this measured value Δz.

Test D, DIN ISO 3547 Part 2
Wrapped bushes with an outside diameter D_o › 180 mm are tested using a precision tape measure. Here, the tape measure is placed around the centre of the bush, and sufficient tension applied to close the joint. The measured circumference Δz indicates the difference between the adjusting mandrel and the bush. From this value, the bush outside diameter D_o is calculated.

Bush inside diameter D_i
Test C with gauge, DIN ISO 3547 Part 2
The wrapped bush is pressed into a gauge ring with a test diameter defined according to DIN ISO 3547 Part 1, Tab. 5. The bush inside diameter D_i is checked using a go/no go plug gauge or a 3-point touch probe.

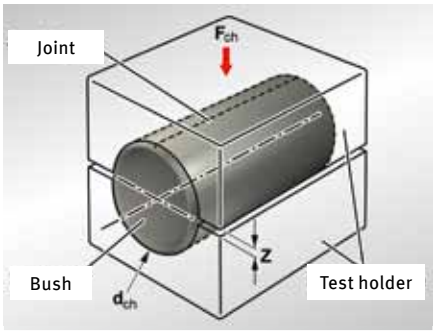

Fig. 62: Test of bush outside diameter D_o

Wall thickness test of wrapped bush (following agreement)
The wall thickness test is set out in DIN ISO 12036.
The bush wall thickness s_3 is tested on one, two or three measuring lines, depending on the bush width B.
Following agreement, the test can be performed in accordance with the aforementioned standard:

Caution:
The wall thickness s_3 and bush inside diameter must not be given simultaneously as a test dimension.

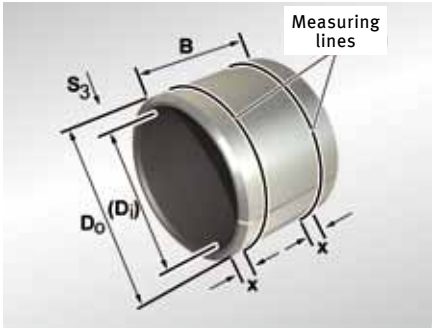

Fig. 63: Measuring lines for the wall thickness test (example)

Important note:
The section on the testing of wrapped bushes describes the most important processes in a generalised fashion. It is to be used purely for the purpose of information. The exact procedure is set out in the respective current standards. These standards alone must be used to determine the dimensional and functional quality of wrapped bushes.

10.2
Machining the sliding layer

The sliding layer of Permaglide® P22 and P202 has a machining allowance of around 0.15 mm. This can be machined by turning, drilling or reaming to:

- Achieve smaller clearance tolerances
- Compensate for misalignment.

Tried and tested methods are turning and drilling with:

- Dry cutting
- Cutting speeds from 100 to 150 m/min
- Feed from 0.05 mm/rev
- Cutting depth max. 0.1 mm
- Carbide tools (Fig. 64)

Machining temperatures above 140 °C constitute a health hazard.

P22 chips contain lead. Lead is hazardous to health.

Caution:
Removing more material reduces service life.

Caution:
Inexpert machining will have a negative impact on service life and load carrying capacity.

Caution:
Parts must be cleaned after machining.

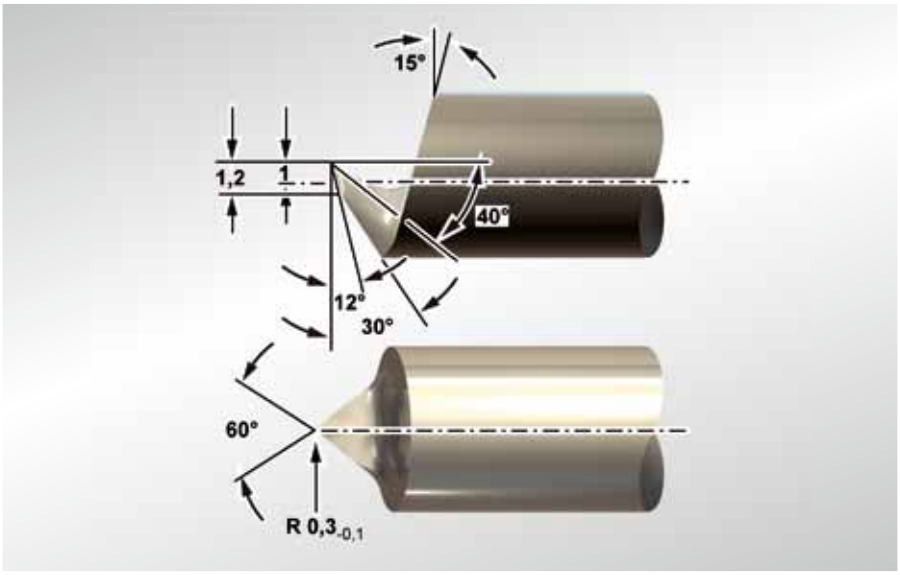

Fig. 64: Cutting tool for Permaglide® P22 and P202

Delivery condition – Storage

Delivery condition

- Packed in a bag in a cardboard box, or
- Packed in a cardboard box.

Storage

Permaglide® plain bearings should be stored:

- In a dry, clean place
- At a constant temperature, as far as possible
- At a relative humidity of max. 65 %.

Caution:

Keep packaging closed, where possible. Only remove Permaglide® plain bearings from their original packaging immediately before installation.

Environmental issues, health & safety
In your own interests, please observe legislation and other regulations concerning

- protection of the environment
- occupational health & safety

and similar issues.

References

/1/ Damm, Höne, Reinicke, Skiadas:
Gleitlager im Automobil.
Moderne Industrie publishing house, Volume 322, 2009

/2/ Berger:
Untersuchungen an wartungsfreien Verbundgleitlagern.
Shaker publishing house, Aachen, 2000

Further reading:

Broichhausen:
Schadenskunde, Analyse und Vermeidung von Schäden.
Hanser publishing house, Munich, Vienna, 1985

Stork:
Lebensdauervorhersage wartungsfreier, dynamisch belasteter Verbundgleitlager mit Hilfe neuronaler Netze
Shaker publishing house, Aachen, 2003

ORIGINAL
PERMAGLIDE®

www.permaglide.de

Permaglide® Partner:

International Sales:
MS Motor Service International GmbH
Wilhelm-Maybach-Straße 14-18
74196 Neuenstadt, Germany
www.ms-motor-service.com

Production:
KS Gleitlager GmbH
Am Bahnhof 14
68789 St. Leon-Rot, Germany
Telefon: +49 6227 56-0
Telefax: +49 6227 56-302
www.kspg-ag.de

Kolbenschmidt Pierburg Group

4 028977 672460

© MS Motor Service International GmbH – 50 003 863-02 – 06/10 EN

MOTOR SERVICE