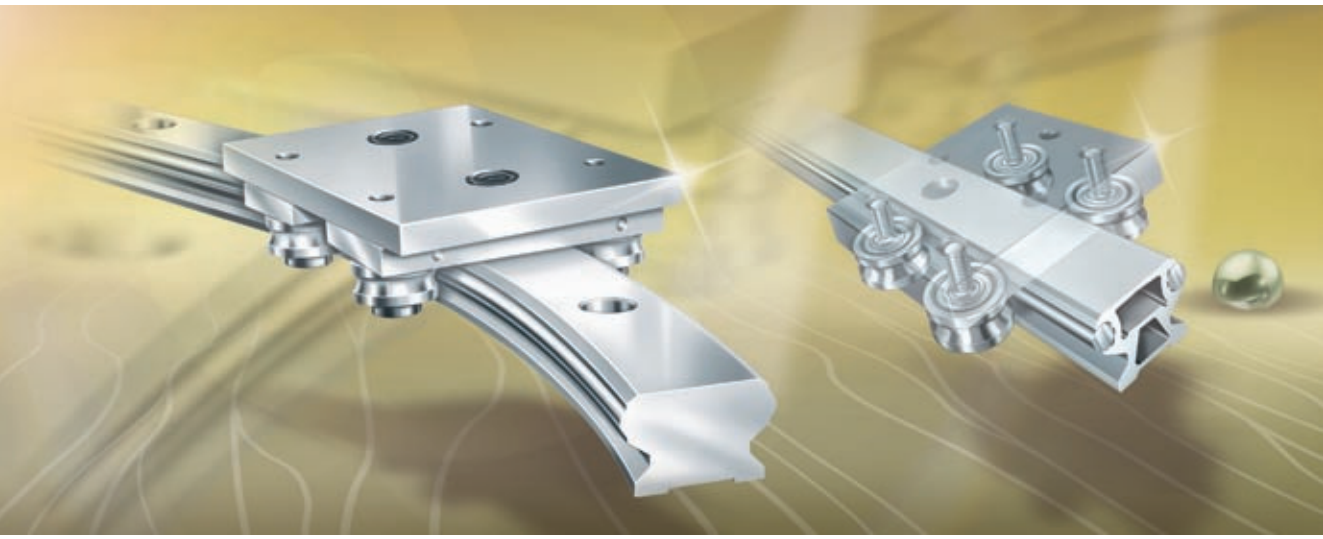

Track Roller Guidance Systems

Track roller guidance systems
Track rollers, bolts, guideways
Accessories

SCHAEFFLER GROUP
INDUSTRIAL

Track roller guidance systems

Track Roller Guidance Systems
Track rollers, bolts, guideways
Accessories

All data have been prepared with a great deal of care and checked for their accuracy. However, no liability can be assumed for any errors or omissions.
We reserve the right to make technical modifications.

© Schaeffler KG · 2008, March

Reproduction in whole or in part without our authorisation is prohibited.

Foreword

Track roller guidance systems LF are preferably used, due to their lightweight construction, for tasks in handling systems, where quiet running, high speeds and long travel distances are required together with uniformly low displacement resistance.

Economical due to modular concept

In order to cover a wide range of requirements using standard components, the guidance systems are structured according to a modular concept. The system elements, namely carriages, composite guideways, track rollers and a precisely matched range of accessories can be combined to achieve designs that are precisely matched to the application.

Carriages

Carriages of the LF family are supplied as:

- economical, lightweight hollow section carriages
- robust open carriages for high performance guidance systems of a simple construction
- closed compact carriages for use where guidance systems must operate in contaminated environments
- non-locating carriages for locating and non-locating bearing applications with two guidance systems in a parallel arrangement
- bogie carriages for curved tracks or closed oval and circular guidance systems.

Guideways

Composite guideways are available as solid and hollow section guideways, with a support rail of high bending rigidity, as a half guideway, a curved guideway element or a flat type. Guideways with slots for toothed racks or toothed belts are also available.

Profiled track rollers

Profiled track rollers without filling slots are used to guide the carriages and support the forces. These double row angular contact ball bearings have an outer ring with a gothic arch profile raceway, are sealed on both sides and are greased for life. They can support axial loads from both sides and high radial forces due to the thick-walled outer ring.

Accessories

The spectrum of positive characteristics of our track roller guidance systems is completed by a comprehensive, precisely matched range of accessories for the system components.

Replacement for ...

The new catalogue replaces the section on track roller guidance systems in Schaeffler Group Catalogue 801. The data represent the state of current technology and manufacture as at March 2008. They take account of the progress in rolling bearing technology as well as the experience gained through practical application.

Data in earlier catalogues as well as in Product and Market Information publications that do not correspond to the data in this catalogue are therefore invalid.

Safety guidelines and symbols

High product safety

Our products correspond to the current level of research and technology. If the bearing arrangement is designed correctly, the products are handled and fitted correctly and as agreed and if they are maintained as instructed, they do not give rise to any direct hazards.

Follow instructions

This publication describes standard products. Since these are used in numerous applications, we cannot make a judgement as to whether any malfunctions will cause harm to persons or property.

It is always and fundamentally the responsibility of the designer and user to ensure that all specifications are observed and that all necessary safety information is communicated to the end user. This applies in particular to applications in which product failure and malfunction may constitute a hazard to human beings.

Definition of guidelines and symbols

The warning and hazard symbols are defined along the lines of ANSI Z535.6–2006.

The meaning of the guidelines and symbols is as follows.

Caution ⚠ If they are not observed, minor or slight injury will occur.

Attention! If they are not observed, damage or malfunctions in the product or the adjacent construction will occur.

Note! There follows additional or more detailed information that must be observed.

① Numbers within a circle are item numbers.

Contents

Page

Safety guidelines and symbols 4

Product index 6

Product overview 8

Track roller guidance systems 10

- Technical principles 10
- Track roller guidance systems
  - With hollow section carriage 42
  - With compact carriage 43
  - With open carriage 44
  - With non-locating carriage 45
  - With bogie carriage 46
- Track rollers, bolts, guideways 58
- Accessories 90

Addresses 109

Product index

		Page
AB	Lubrication and wiper unit for LFL	102
AB.LFL	Lubrication and wiper unit for LFL20	103
AB.LFR	Lubrication and wiper unit for LFCL	103
AB.W	Lubrication and wiper unit for guideways	101
ABAL	Side plate for LFL	104
ANS.LFS	End plate for solid profile guideway	100
ANS.LFS..-C	End plate for hollow section guideway	100
ANS.LFS..-F	End plate for flat guideway	100
ANS.LFS..-FH	End plate for flat half guideway	100
ANS.LFS..-N	End plate for guideway with slots	100
ANS.LFS..-NZZ	End plate for guideway with slots	100
KA.LFS..-C	End cover for hollow section guideway	107
KA.LFS..-M	End cover for profiled section guideway	107
LEIS	T-strip	98
LFCL	Hollow section carriage, clearance-free	48
LFDL..-B	Bogie carriage, adjustable clearance	56
LFDL..-SF	Bogie carriage, clearance-free	56
LFE	Eccentric bolt	76
LFE..-A1	Eccentric bolt with relubrication hole	76
LFKL..-SF	Compact carriage, clearance-free	50
LFKL..-E-SF	Compact carriage, clearance-free, with heavy duty track rollers	50
LFKL..-EE-SF	Compact carriage, clearance-free, with heavy duty track rollers	50
LFL..-SF	Open carriage, clearance-free	52
LFL..-E-SF	Open carriage, clearance-free, with heavy duty track rollers	52
LFLL..-SF	Non-locating carriage, clearance-free	54
LFR..-2Z	Locating profiled track roller	74
LFR..-2RSR-NA	Non-locating track roller	78
LFS	Guideway, solid profile	80
LFS..-E	Guideway, solid profile	80
LFS..-EE	Guideway, solid profile	80
LFS..-C	Guideway, hollow section profile	80
LFS..-CE	Guideway, hollow section profile	80
LFS..-CEE	Guideway, hollow section profile	80
LFS..-CH	Guideway, hollow section profile half guideway	82
LFS..-CHE	Guideway, hollow section profile half guideway	82
LFS..-CHEE	Guideway, hollow section profile half guideway	82

		Page
LFS..-F	Guideway, flat guideway	80
LFS..-FE	Guideway, flat guideway	80
LFS..-FH	Guideway, flat half guideway	82
LFS..-FHE	Guideway, flat guideway	82
LFS..-FHEE	Guideway, flat guideway	82
LFS..-M	Guideway, profiled section guideway	84
LFS..-N	Guideway with slots	84
LFS..-NZZ	Guideway with slots	84
LFS..-RB	Guideway, corrosion-resistant design	80
LFSR..-St	Guideway, curved guideway element	86
LFS..-OV../180-VBS	Closed oval track with 180° arcs and guideway connector	88
LFS..-OV../90-VBS	Closed oval track with 90° arcs and guideway connector	88
LFZ	Concentric bolt	76
LFZ..-A1	Concentric bolt with relubrication hole	76
MU	T-nut	98
MU..POS	Positionable T-nut	98
NAD	Slot closing strip for LFS..-M	108
PAH	Stop for guideways	106
PASTP	Stop for guideways	105
SHR	T-bolts	98
SPPR	Fixing lug	98
VBS	Guideway connector for guideways	99

121 654

121 671

121 669

121 673

Technical principles

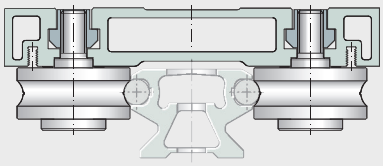

121 653

Track roller guidance systems

- With hollow section carriage
- With compact carriage
- With open carriage
- With non-locating carriage
- With bogie carriage

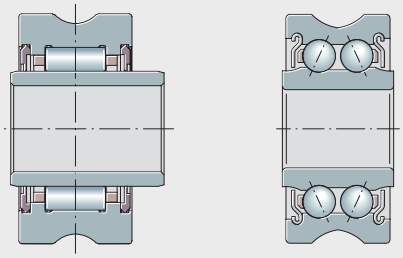

121 670

Track rollers

- Locating track roller
- Non-locating track roller

Bolts

- Concentric
- Eccentric

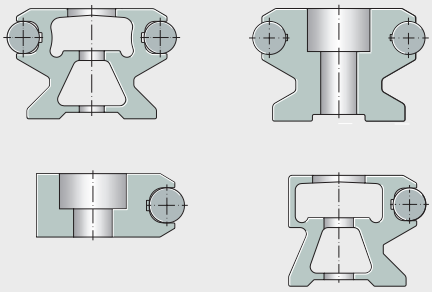

121 668

Guideways

- With solid or hollow section profile
- Flat design
- With support rail
- With slots
- Half guideway
- Curved guideway element

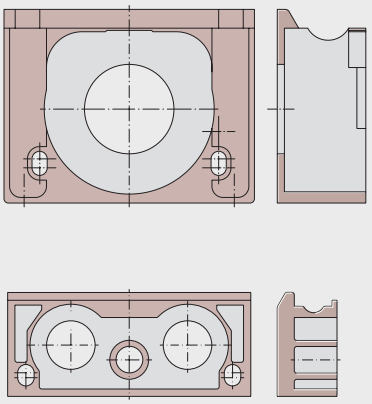

121 672

Accessories

Appendix

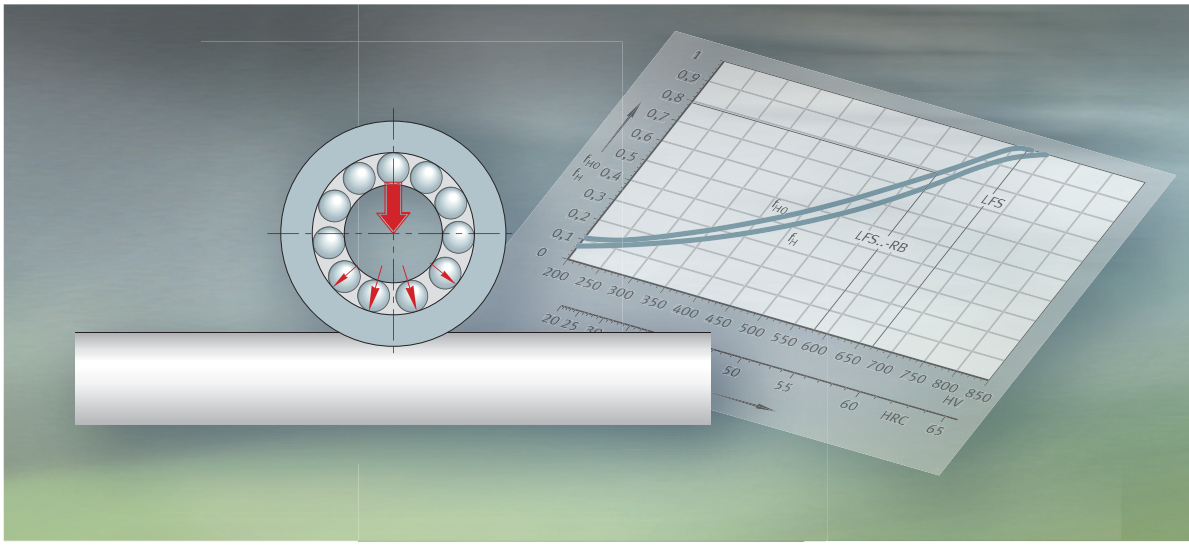

Technical principles

Load carrying capacity and life
Lubrication
Design of bearing arrangements
Fitting
Accuracy
Ordering designations
Operating limits

Technical principles

		Page
Load carrying capacity and life	Permissible radial loads	12
	Permissible radial load under dynamic loading	12
	Permissible radial load under static loading	12
	Fatigue limit load	12
	Life calculation	13
	Life values for track rollers	13
	Operating life	15
	Static load safety factor	16
	Minimum load	16
	Differences in raceway hardness	17
Lubrication	Lubrication of guideway raceways	18
	Lubrication intervals	18
	Lubrication of track rollers	18
Design of bearing arrangements	Requirements for the adjacent construction	19
	Shaft creep	19
	Displacement force	19
	Location of carriages and guideways	19
	Track roller guidance systems in accordance with customer specifications	20
Fitting	Delivered condition	24
	Fitting of guidance system with one guideway	24
	Fitting of guidance system with two guideways	24
	Fitting of bogie carriages	25
Accuracy	Accuracy of guideways LFS	27
Ordering example, ordering designation	Ready-to-fit systems	31
	Closed oval tracks	32
	Oval track with 2×180° arcs	32
	Oval track with 4×90° arcs	33
	Individual components	34
Operating limits	Operating temperature	35
	Speeds	35
	Acceleration	35

Permissible radial loads

The thick-walled outer rings of the track rollers can support high radial loads. If these track rollers are used against a shaft as a raceway, the outer rings undergo elastic deformation, *Figure 1*.

Compared to rolling bearings supported in a housing bore, track rollers have the following characteristics:

- modified load distribution in the bearing.
  This is taken into consideration by the basic load ratings $C_{r\,w}$ and $C_{0r\,w}$ that are decisive for life calculation.
- bending stress in the outer ring.
  This is taken into consideration by the permissible radial loads $F_{r\,per}$ and $F_{0r\,per}$. The bending stresses must not exceed the permissible strength values of the material (due to the risk of fracture).

Permissible radial load under dynamic loading

For bearings under dynamic circumferential load, the effective dynamic load rating $C_{r\,w}$ is used.
$C_{r\,w}$ is used to calculate the basic rating life.

Attention! The permissible dynamic radial load $F_{r\,per}$ must not be exceeded.

If the basic static load rating $C_{0r\,w}$ is lower than the basic dynamic load rating $C_{r\,w}$, $C_{0r\,w}$ is used.

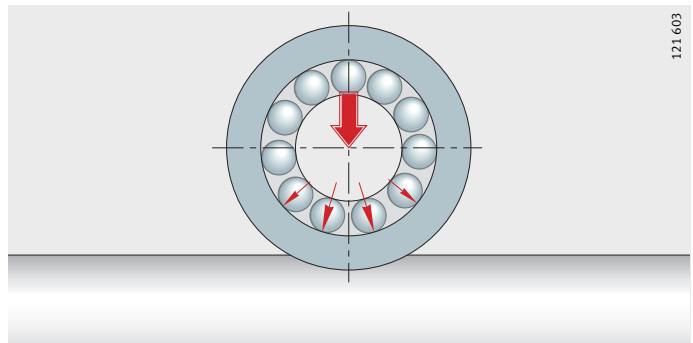

Figure 1
Deformation of the outer ring when used against a flat raceway

Permissible static radial load

For bearings under static load, when stationary or with only infrequent motion, the effective static load rating $C_{0r\,w}$ is used.
$C_{0r\,w}$ is used to calculate the static load safety factor S_0.

Attention! The permissible static radial load $F_{0r\,per}$ must not be exceeded.

In addition to the permissible radial load of the bearing, the permissible radial load of the mating track must also be taken into consideration.

The basic load ratings stated are valid only in conjunction with a shaft as a mating track that is hardened (at least 670 HV) and ground (R_a 0,3).

Fatigue limit load

The fatigue limit load $C_{ur\,w}$ is defined as the load below which – under laboratory conditions – no fatigue occurs in the material.

Calculation of the rating life

The general methods for calculating the rating life are:

- the basic rating life to DIN ISO 281
- the adjusted rating life to DIN ISO 281
- the expanded calculation of the adjusted reference life to DIN ISO 281-4.

These methods are described in Catalogue HR1, Rolling Bearings, in the section Technical Principles, Load carrying capacity and life.

Life values for track rollers

In comparison with Catalogue HR1, Rolling Bearings, the following values must be exchanged:

- $C_r = C_{r\,w}$
- $C_{0r} = C_{0r\,w}$
- $C_{ur} = C_{ur\,w}$.

The carriages LFCL, LFL..-SF, LFLL, LFKL and the bogie carriage LFDL contain four track rollers LFR.

The equivalent principle applies here.
The corresponding parameters are taken into consideration in the basic load ratings C_y, C_{0y}, C_z, C_{0z} and the permissible moment ratings M_{0x}, M_{0y} and M_{0z}.

C_y N
Basic dynamic load rating in y direction

C_{0y} N
Basic static load rating in y direction

C_z N
Basic dynamic load rating in z direction

C_{0z} N
Basic static load rating in z direction

M_{0x} Nm
Static moment rating about X axis

M_{0y} Nm
Static moment rating about Y axis

M_{0z} Nm
Static moment rating about Z axis.

In the case of track rollers with a profiled outer ring, calculation is carried out exclusively by means of the basic rating life to DIN ISO 281.

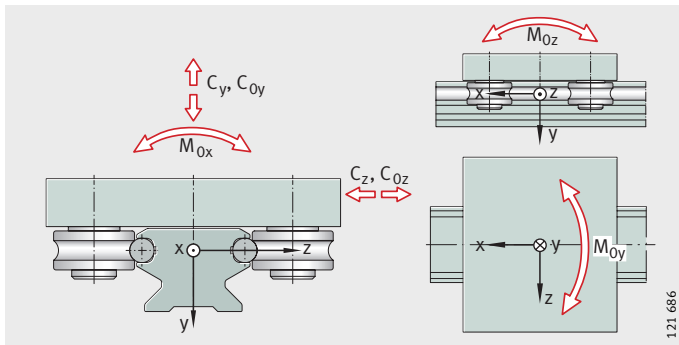

Figure 2
Load carrying capacity and load directions

Other formulae for calculating the basic rating life

$$L_s = 0{,}0314 \cdot D_a \left(\frac{C_{rw}}{P_r} \right)^p$$

$$L_h = 26{,}18 \cdot \frac{D_a}{H \cdot n_{osc}} \left(\frac{C_{rw}}{P_r} \right)^p$$

$$L_h = 52{,}36 \cdot \frac{D_a}{\bar{v}} \left(\frac{C_{rw}}{P_r} \right)^p$$

Rating life for carriages with four track rollers

$$L_s = \left(\frac{C_y, C_z}{P} \right)^p$$

$$L_h = \frac{1666}{\bar{v}} \cdot \left(\frac{C_y, C_z}{P} \right)^p$$

$$L_h = \frac{833}{H \cdot n_{osc}} \cdot \left(\frac{C_y, C_z}{P} \right)^p$$

L_s — 10^5
Basic rating life in 10^5 metres

L_h — h
Basic rating life in operating hours

C_{rw}, C_y, C_z — N
Effective dynamic load rating

P_r — N
Equivalent dynamic load (radial load)

P — N
Equivalent dynamic load in corresponding load direction
(for applications with combined loads, please contact us)

n — min^{-1}
Operating speed

D_a — mm
Rolling contact diameter of track roller, see dimension table

H — m
Single stroke length for reciprocating motion

n_{osc} — min^{-1}
Number of return strokes per minute

$\bar{v}$ — m/min
Mean travel velocity

p — –
Ball: p = 3;
needle roller (non-locating track roller or carriage): p = $^{10}/_{3}$.

Operating life

The operating life is the life actually achieved by a rolling bearing. It may differ significantly from the calculated rating life.

This may be due to wear or fatigue as a result of:

- deviations in the operating data
- insufficient or excessive operating clearance (roller, guideway)
- contamination
- inadequate lubrication
- operating temperature too high or too low
- reciprocating motion with very small stroke length, which can lead to false brinelling
- vibration – false brinelling
- very high shock loads (static overloading)
- prior damage during installation.

Due to the variety of installation and operating conditions, it is not possible to precisely determine the operating life in advance. The most reliable way of arriving at a close estimate is by comparison with similar applications.

Static load safety factor

The parameter for static loading is the static load safety factor S_0. This indicates the security against impermissible permanent deformations in the bearing and is determined by means of the following formula:

$$S_0 = \frac{C_{0r\,w}}{F_{0r}}$$

Static load safety factor for carriages with four track rollers

$$S_0 = \frac{C_{0r}}{F_0}$$

$$S_0 = \frac{M_0}{M}$$

S_0 N
Static load safety factor

$C_{0r\,w}$ N
Effective static load rating according to dimension table

F_{0r} N
Maximum radial load on track roller

C_{0r} N
Basic static load rating according to dimension table

F_0 N
Maximum load in x, y, z direction

M_0 Nm
Permissible static moment in x, y, z direction

M Nm
Equivalent static moment rating in load direction (M_x, M_y, M_z).

Track rollers are regarded as heavily loaded at a static load safety factor of $S_0 < 4$.

For applications with normal operating conditions, a value $S_0 > 4$ is required.

When using individual track rollers, for example in conjunction with guideways, the permissible load of the guideway should be taken as decisive where necessary.

Attention! Static load safety factors $S_0 < 1$ lead to plastic deformations of the rolling elements and raceway, which can impair smooth running. This is only permissible for bearings with small rotary motions or in secondary applications.

Minimum load

In order to ensure that the outer ring is driven and to prevent slippage or lifting of the track roller from the mating track, the track rollers must be subjected to a minimum load in dynamic operation.

Attention! In general, the minimum load is determined by the ratio $C_{0r\,w}/F_r < 60$.

Differences in raceway hardness

If shafts with a lower surface hardness are used (such as X46, X90), a hardness factor must be applied, see formula and *Figure 3*.

$$C_H = f_H \cdot C$$

$$C_{0H} = f_{0H} \cdot C_0$$

C	N
Basic dynamic load rating	
C_0	N
Basic static load rating	
C_H	N
Effective dynamic load rating	
C_{0H}	N
Effective static load rating	
f_H	–
Dynamic hardness factor	
f_{0H}	–
Static hardness factor.	

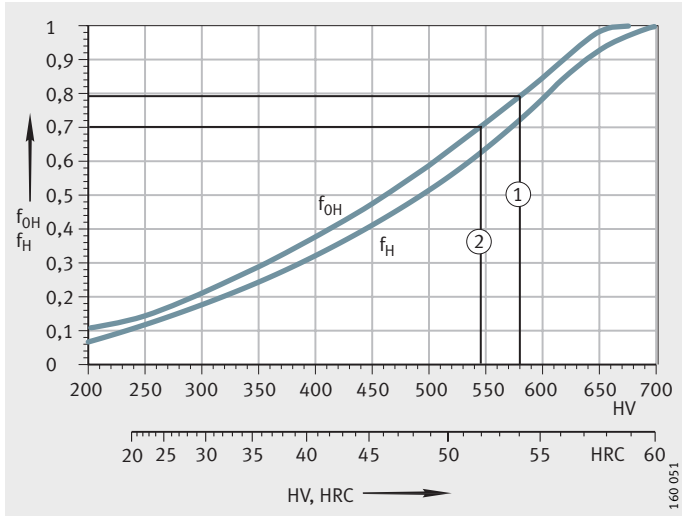

① LFS..-RB, W..-X90
② W..-X46
f_{0H}, f_H = hardness factor
HV, HRC = surface hardness

Figure 3
Static and dynamic hardness factors for lower hardness of raceways

Lubrication

Lubrication of guideway raceways

The guideway raceways must be lubricated (even before first use). Lubrication can be carried out by means of lubrication and wiper units.

These units are already integrated in the compact carriage LFKL. For carriages LFL and LFCL, the lubrication and wiper unit AB is available as an accessory, page 94.

The guideway raceway is lubricated by an oil-soaked felt insert. Oil can be fed to the felt inserts via lubrication nipples in the end faces. At delivery, the felt inserts are already soaked with oil (H1 approval for the food industry), where relubrication is to be carried out an oil of vicosity 460 mm^2/s is recommended.

Lubrication intervals

The lubrication intervals for guideway raceways are dependent on the environmental influences. The cleaner the environment, the smaller the quantity of lubricant required. The time and quantity can only be determined precisely under operating conditions since it is not possible to calculate all the influences in advance. A sufficiently long observation period must be allowed.

Attention!

Fretting corrosion is a consequence of inadequate lubrication and is visible as a reddish discolouration of the mating track or outer ring. Inadequate lubrication can lead to permanent system damage and therefore to failure. It must be ensured that the lubrication intervals are reduced accordingly in order to prevent fretting corrosion.

In general, a thin film of oil should always be present on the shaft.

Lubrication of track rollers

At delivery, track rollers LFR have an initial greasing of a high quality lithium soap grease.

From LFR5204-16, the inner ring has a relubrication hole. The smaller track roller diameters are lubricated for life.

Further information on lubrication

Further information can be found in Catalogue HR1, Rolling Bearings, in the section Lubrication.

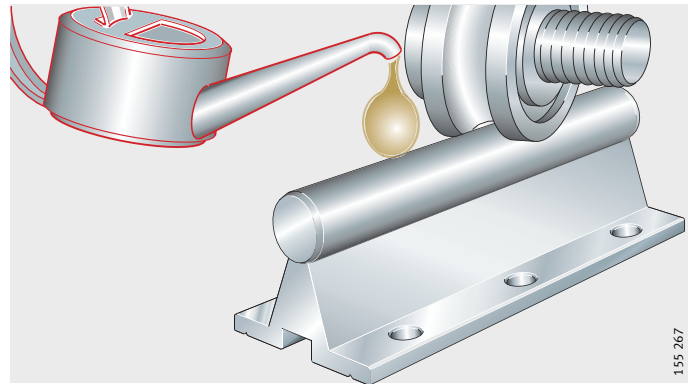

Figure 1
Lubrication of guideway raceways

Requirements for the adjacent construction

The running accuracy of the linear guidance system is essentially dependent on the straightness, accuracy and rigidity of the mounting surfaces.

The higher the requirements for accuracy and smooth running of a track roller guidance system, the more attention must be paid to the geometrical and positional accuracy of the adjacent construction. The adjacent surfaces should be flat and have parallel faces.

For two guideways, we recommend parallelism to *Figure 1*.

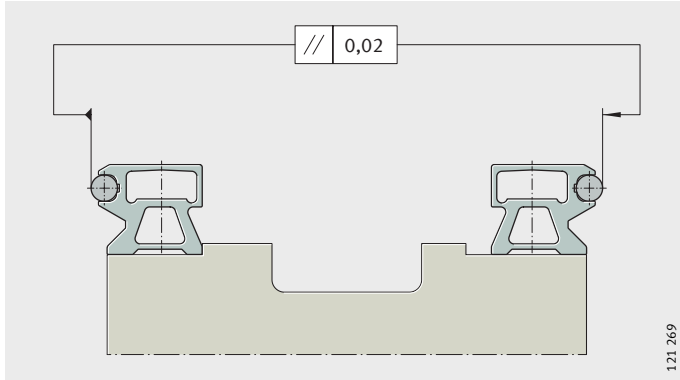

Figure 1
Parallelism of guideways

Shaft creep

Under unfavourable conditions, shaft creep of a few millimetres may occur in isolated cases. This creep may occur mainly in applications with high accelerations in conjunction with high alternating loads and guideways that are not completely supported. It may also be caused by an adjacent construction that is too soft.

In such cases, shaft creep can be prevented by the use of end plates ANS.LFS; for information on end plates, see page 100. They can be supplied already mounted.

Displacement force

The displacement force is dependent on the preload, the lubrication and the particular application. It is therefore not possible to make generally valid statements.

Location of carriages and guideways

If lateral loads are present, it is recommended that the guideways and carriages should be located against locating surfaces. In the case of guideways comprising multiple sections joined together, it is recommended that the guideways should be aligned by means of the shaft. If necessary, the shafts should be located on the adjacent construction by means of dowels.

If two guideways are arranged in parallel, the first guideway should be clamped against a stop, *Figure 1*. The second guideway should then be aligned accordingly. Any gaps between the guideway and the adjacent construction should be filled with resin.

Track roller guidance systems in accordance with customer specifications

The INA track roller guidance systems with curved guideway elements can be used to achieve an extremely wide variety of applications, *Figure 2* and *Figure 3*.

If the arrangement required cannot be represented using the standard ordering designation, a customer drawing must be submitted with the enquiry.

For arrangements with curved guideway elements, it is recommended that the guideway connector VBS should be used at the joints, see page *99*. This gives considerably easier mounting.

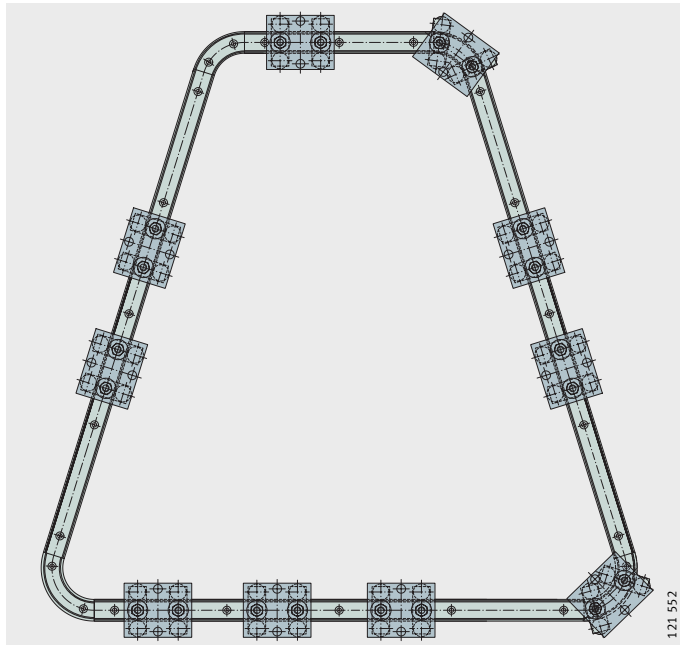

Figure 2
Arrangement according to customer requirements

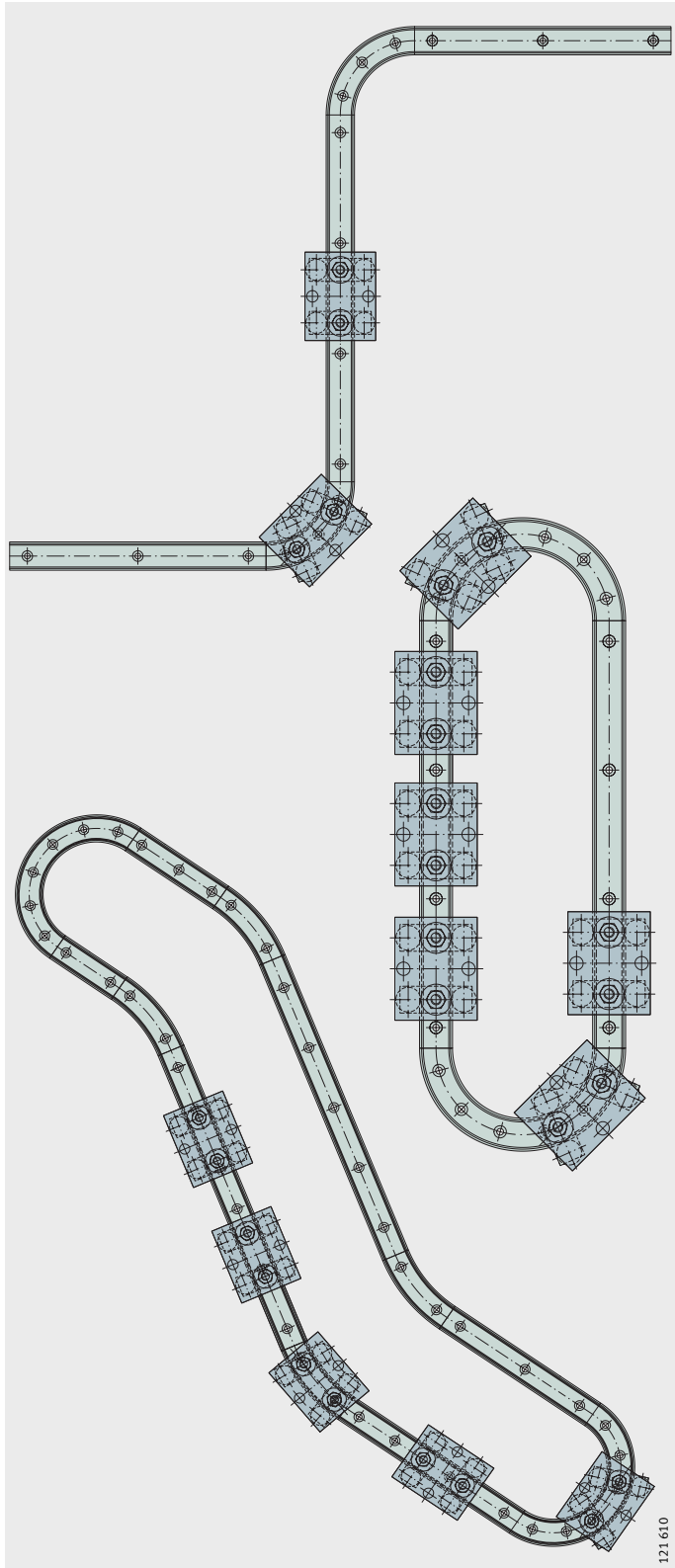

Figure 3

Closed and open applications with guidance systems including curved guideway elements

Possible combinations of profiled track rollers with shaft and support rail units

	Shaft and support rail units			
	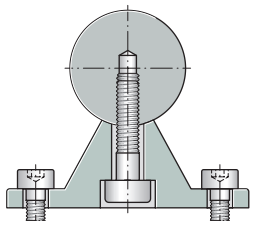			
Shaft diameter mm	TSNW, TSNW..-G4, -G5			
	Fixing screws	Load case, *Figure 4*		
		I	II	III
12	DIN ISO 4762	■	–	–
	DIN 7984	■	■	■
16	DIN ISO 4762	■	–	–
	DIN 7984	■	–	–
20	DIN ISO 4762	■	–	–
	DIN 7984	■	–	–
25	DIN ISO 4762	■	■	■
	DIN 7984	■	■	■
30	DIN ISO 4762	■	–	–
	DIN 7984	■	■	■
40	DIN ISO 4762	■	■	■
	DIN 7984	■	■	■
50	DIN ISO 4762	■	■	■
	DIN 7984	■	■	■

■ Combination possible if the rail is located using the stated screw.
● Combination possible.
❍ Combination possible if $t \leqq t_{max}$ and $b \leqq b_{max}$.
– Please contact us.

1) With AB.W: $t_{max} = 2,5$.

	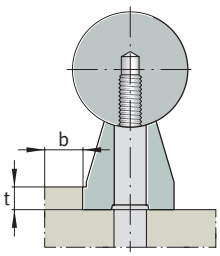				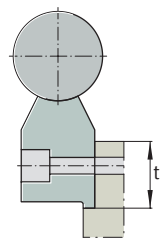				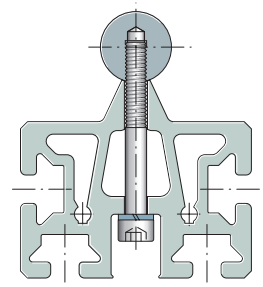		
	TSUW				TSSW				TSMW		
	t_{max}	b_{max}	Load case, *Figure 4*		t_{max}	Load case, *Figure 4*			Load case, *Figure 4*		
			I	II	III		I	II	III	I	II	III
	mm	mm				mm[1)]						
	5	5	●		❍[1)]	–	–	–	–	–	–	–
	–	–	●	–	–	–	–	–	–	–	–	–
	–	–	●	–	–	–	●	–	–	●	–	–
	10	12	●	●	❍	36	●	●	●	●	●	●
	12	16	●	●	❍	42	●	●	●	●	●	●
	10	–	●	●	❍	50	●	●	●	–	–	–
	13	–	●	●	❍	70	●	●	●	–	–	–

Attention! When combining these components, the following factors must be taken into consideration:

- the static load safety factor S_0, page 16
- the load cases according to *Figure 4*
- a shaft hardness of 670 HV.

$S_0 = C_{0w}/P_0$

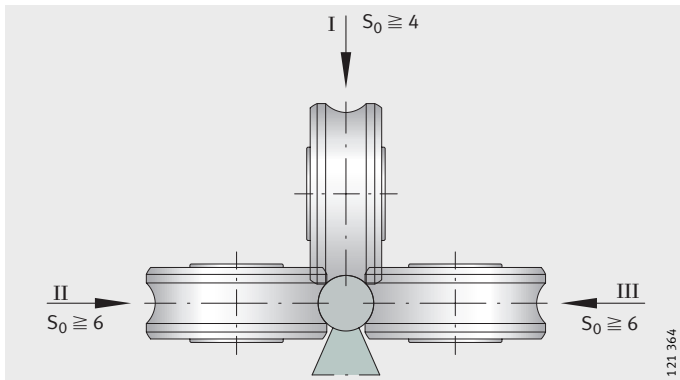

Figure 4
Load cases I, II and III

Fitting

Delivered condition

Carriages are delivered with the track rollers fitted. All the bolts are tightened to the required tightening torque.

Carriages

For carriages, this gives the following characteristics:

- hollow section carriage LFCL;
  clearance-free, with mounting of accessories as necessary.
- compact carriage LFKL..-SF;
  clearance-free, with mounting of lubrication and wiper unit as necessary.
- non-locating carriage LFLL..-SF;
  clearance-free, with mounting of accessories as necessary.
- open carriage LFL..-SF;
  clearance-free, with mounting of accessories as necessary.
- bogie carriage LFDL..-SF, LFDL..-B;
  LFDL..-SF clearance-free, with mounting of accessories as necessary.
  In the case of LFDL..-B, the clearance must be set by means of the eccentric bolts.

Fitting of guidance system with one guideway

- Place the guideway on the adjacent construction and screw mount finger tight.
- Align the guideway; if necessary, clamp the shaft against the locating edge and screw mount firmly, observing the tightening torques.
- Clearance-free carriages: slide the carriage onto the guideway.
- Carriages with adjustable clearance:
  if lateral load is present, ensure that the principal load is supported by the concentric bolts.
- Position and screw mount the adjacent construction.

Fitting of guidance system with two guideways

- Position the first guideway, clamp it against the locating edge and tighten the screws.
- Position the second guideway and tighten the screws finger tight.
- Slide the carriage onto the guideway, set the clearance if necessary, *Figure 2*, page 25.
- Position the adjacent construction, align the carriage and screw mount firmly; observe the tightening torques M_A, table page 26.
- Align the second guideway with the aid of the table, move the table several times during this operation.
- Tighten the fixing screws in the guideway;
  tightening torques M_A, table page 26.

Where necessary, physical locking can be achieved between the guideways and adjacent construction by means of resin or strips.

Fitting of bogie carriages

Slide the clearance-free carriage LFDL..-SF onto the guideway. No setting of clearance is required, *Figure 1*.

Carriages with adjustable clearance

Slide the carriage LFDL..-B onto the guideway and set in position without load. Rotate the eccentric bolts using an open-end wrench or ring wrench so that the track rollers are set against the raceway, observing the direction of rotation, *Figure 2*.

Tighten the hexagonal nut to the tightening torque M_A; tightening torques, table Tightening torques for track roller bolts, page 26.

Attention! The track rollers must be easily movable and clearance-free. If they are set in place too firmly, this will generate preload that reduces the life of the guidance system.

Inspection

Check the adjustment. The guidance system is correctly adjusted if, when the carriages are moved, all the track rollers rotate and the carriages can be moved easily.

The concentric bolts are tightened to the necessary tightening torque, the eccentric bolts are tightened finger tight. When setting the preload, these must be tightened to the tightening torque M_A, table page 26.

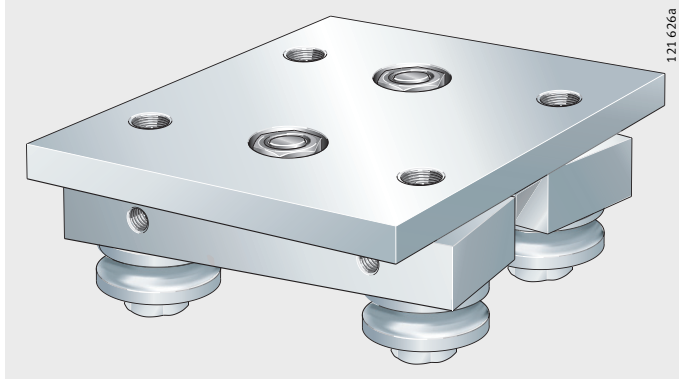

Figure 1
Clearance-free carriage LFDL..-SF

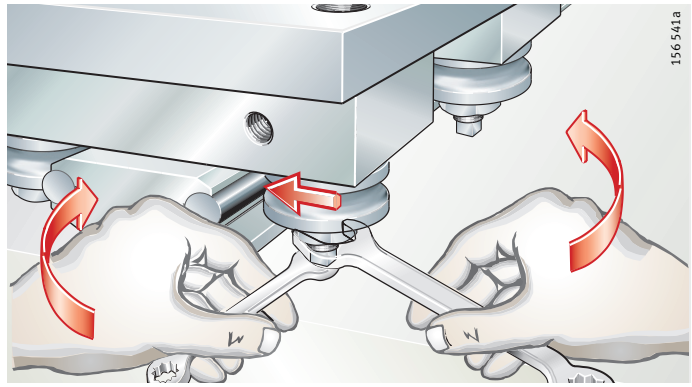

Figure 2
Carriage with adjustable clearance LFDL..-B

Fitting

Tightening torques for track roller bolts

Track roller, profiled track roller	Bolt	Tightening torque M_A	
		Standard (-2Z) Nm	RB (-2RSR) Nm
LFR50/5-4	M4	2,5	2,5
LFR50/5-6	M4	2,5	2,5
LFR50/8-6	M8	15	12
LFR5201-10	M10	40	23
LFR5301-10	M10	40	23
LFR5302-10	M12	70	39
LFR5201-12	M10	40	23
LFR5204-16	M16X1,5	100	75
LFR5206-20	M20X1,5	200	100
LFR5206-25	M20X1,5	200	100
LFR5207-30	M24X1,5	300	150
LFR5208-40	M30X1,5	600	310
LFR5308-50	M30X1,5	800	410

Tightening torques for screws in carriage to DIN ISO 4 762-8.8

Screw	Tightening torque M_A Nm
M5	5,8
M6	9,9
M8	24
M10	48
M12	83

Tightening torques for screws in guideways LFS to DIN ISO 4 762-8.8 or DIN 7 984-8.8

Screw	Tightening torque M_A Nm
M5	5,8
M6	9,9
M8	24
M10	48
M12	83

Accuracy

Accuracy of guideways LFS

Data on the straightness, parallelism (differential measurement), length and positional tolerances of guideways are given in the following tables and figures, *Figure 1* to *Figure 5*.

The guideways are precision straightened and the tolerances are better than DIN EN 12 020.

Length tolerance

L mm		Tolerance mm
Single-piece guideways	L < 1 000	±2
	1 000 ≦ L < 2 000	±3
	2 000 ≦ L < 4 000	±4
	4 000 ≦ L	±5
Multi-piece guideways	Total length L	±0,1%

Straightness tolerance of guideways

Length of guideway	t_1 (contact face) mm	t_2 (lateral) mm
L < 1 000	0,5	0,2
1 000 ≦ L < 2 000	1	0,3
2 000 ≦ L < 3 000	1,5	0,4
3 000 ≦ L < 4 000	2	0,5
4 000 ≦ L < 5 000	2,5	0,6
5 000 ≦ L < 6 000	3	0,7
6 000 ≦ L < 7 000	3,5	0,8
7 000 ≦ L < 8 000	4	0,9

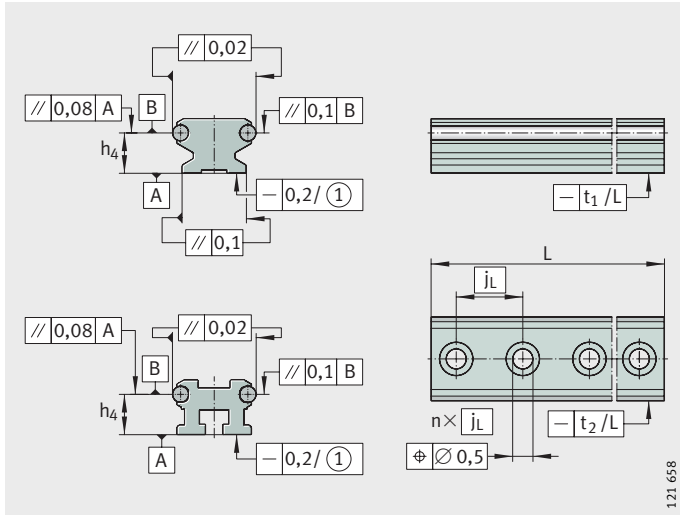

① Concave

Figure 1
Tolerances for guideways LFS, LFS..-C, LFS..-R, LFS..-N, LFS..-NZZ

Accuracy

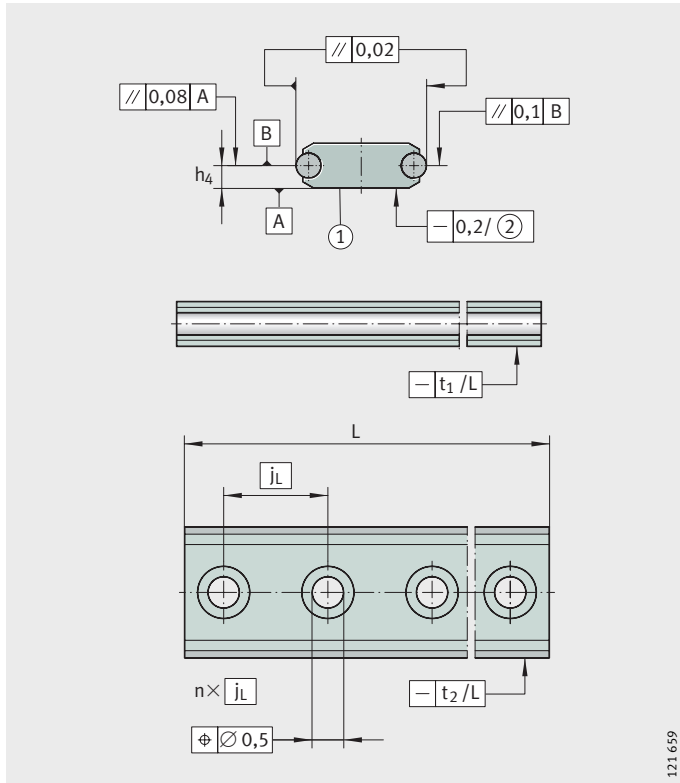

① Contact face indicated by slot
② Concave

Figure 2
Guideway LFS..-F

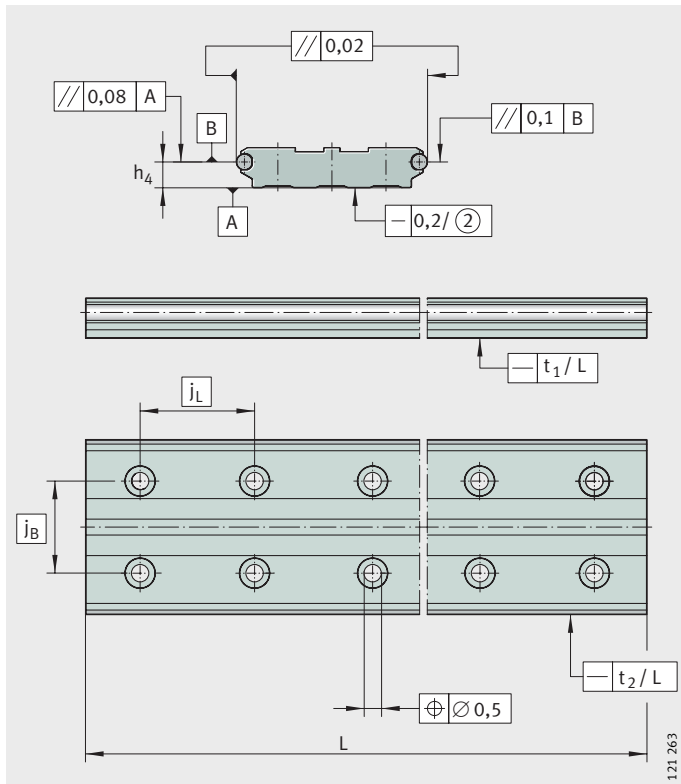

Parallelism determined
by differential measurement
② Concave

Figure 3
Guideway LFS120

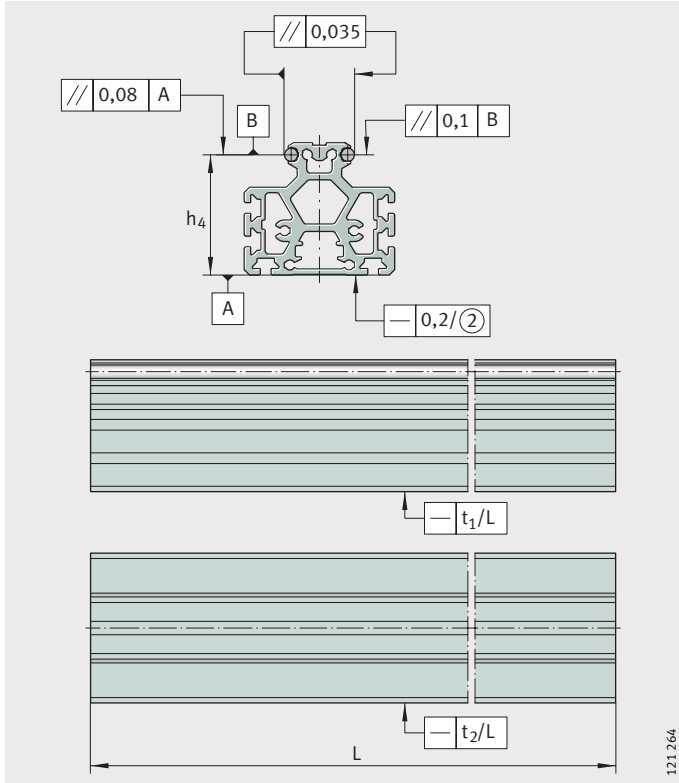

Parallelism determined
by differential measurement
② Concave

Figure 4
Guideway LFS..-M

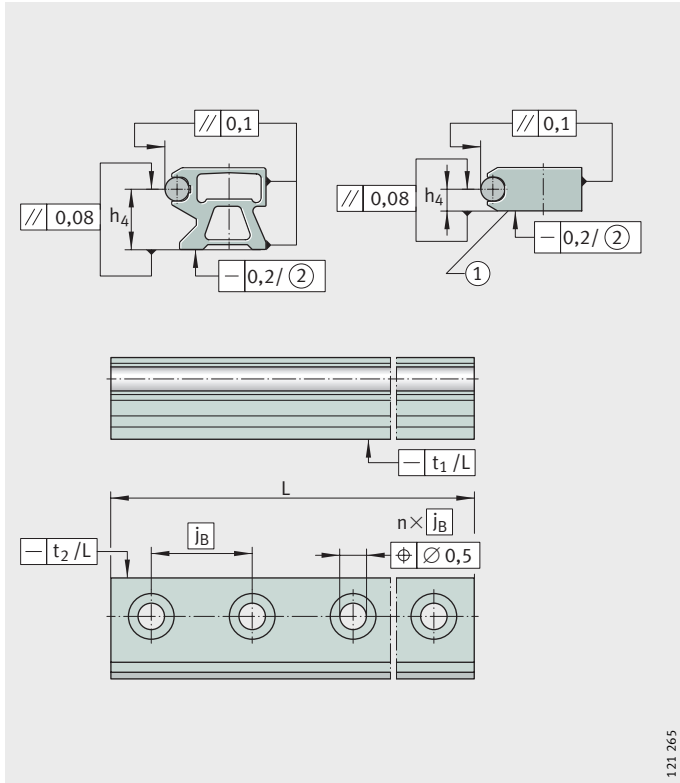

① Contact face indicated by slot
② Concave

Figure 5
Guideways
LFS..-FH and LFS..-CH

Accuracy

Tolerances for H_2 and h_4 are shown in the table, *Figure 6* and *Figure 7*.

Tolerance for h_4

Guideway	H_2 mm	h_4 mm
LFS20	+0,3	−0,1
LFS25		−0,1
LFS25-N		−0,1
LFS25-M		±0,25
LFS32		+0,2
LFS32-C		+0,2
LFS32-N		+0,2
LFS32-F		+0,1
LFS32-M		±0,25
LFS32-CH		+0,2
LFS32-FH		+0,1
LFS42-C		+0,2
LFS42-FH		+0,1
LFS52		+0,2
LFS52-C		+0,2
LFS52-NZZ		+0,2
LFS52-F		+0,1
LFS52-M		+0,5
LFS52-CH		+0,2
LFS52-FH		+0,1
LFS86-C		+0,25
LFS120		+0,2

Tolerance for H_2 = +0,3 mm

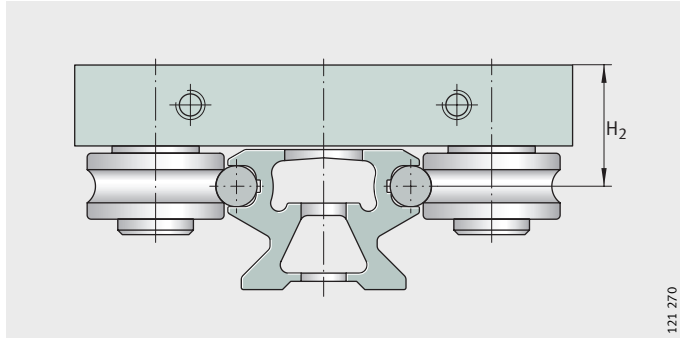

Figure 6

Reference dimension for accuracy, dimension H_2

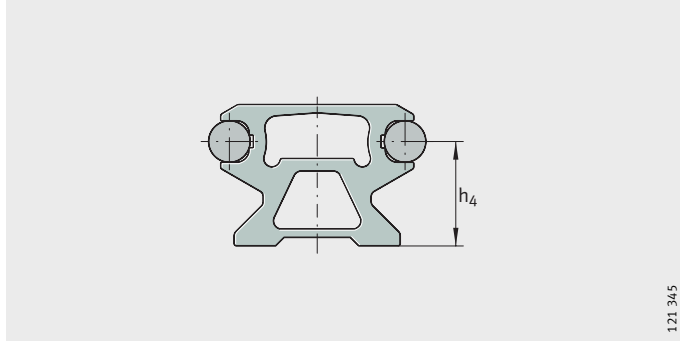

Figure 7

Reference dimension for accuracy, dimension h_4

Ordering example
Ordering designation

Ready-to-fit systems

The elements of the track roller guidance systems (such as the carriage, guideway) must be ordered separately.

Carriages should be regarded as a unit, including the track rollers and bolts.

Carriages and guideways can be used in any combination and can be ordered independently of each other.

Ordering example

Track roller guidance system, corrosion-resistant design, with open carriage LFL52-E-SF, *Figure 1* and *Figure 2*.

Carriage

Carriage	LFL
Size	52-E
Clearance-free	SF
Corrosion-resistant	RB

Ordering designation **LFL52-E-SF-RB**

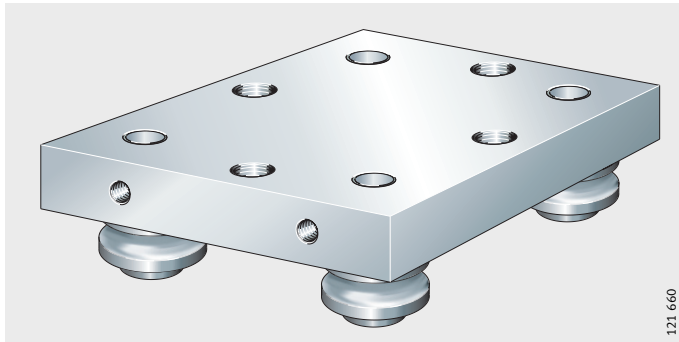

Figure 1
Open carriage LFL52-E-SF

Guideway

Hollow section guideway LFS52-CE, length 1 500 mm, a_L = 50 mm, a_R = 75 mm, in corrosion-resistant design, *Figure 2*:

Guideways	LFS
Width of guideway	52
Type	CE
Length of guideway l	1 500
Spacing a_L	50
Spacing a_R	75
Corrosion-resistant	RB

Ordering designation **LFS52-CE/1500-50/75-RB**

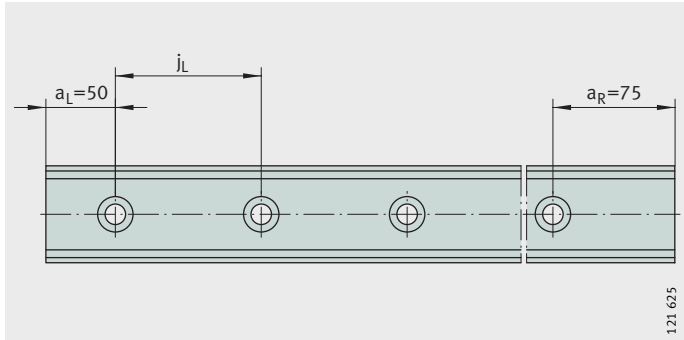

Figure 2
Guideway LFS52-CE

Ordering example
Ordering designation

Closed oval tracks

Oval track with 2×180° arcs

Guideways	LFS
Width of guideways a	52
Closed oval track	OV
Radius of arc	300 mm
Arc angle	180°
Length of straight guideways	2 000 mm, *Figure 3*

Ordering designation

Without guideway connectors VBS
1×LFS52-OV-300/180–2 000

With guideway connectors VBS
1×LFS52-OV-300/180–2 000.VBS

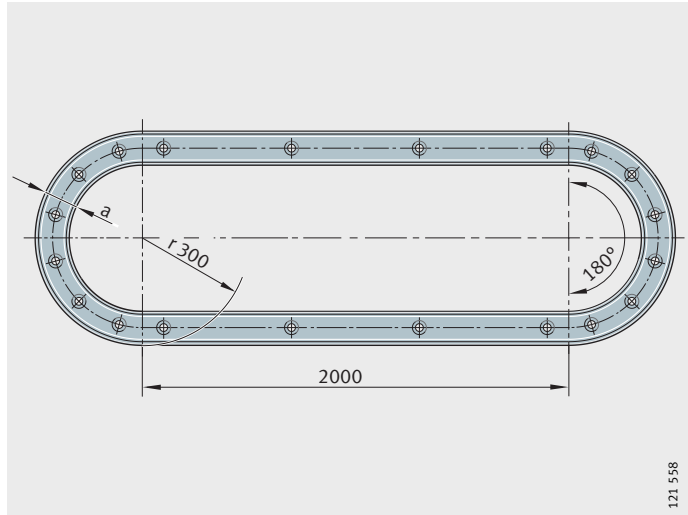

a = width of guideways

Figure 3

Closed oval track
with 180° arcs
LFS52-OV-300/180–2 000

Oval track with 4×90° arcs	Guideways	LFS
	Width of guideways a	52 mm
	Closed oval track	OV
	Radius of arc	300 mm
	Arc angle	90°
	Length of	
	– 1. straight guideway pair	2 000 mm
	– 2. straight guideway pair	3 000 mm, *Figure 4*
Ordering designation	Without guideway connectors VBS **1×LFS52-OV-300/90–2 000/3 000**	
	With guideway connectors VBS **1×LFS52-OV-300/90–2 000/3 000.VBS**	

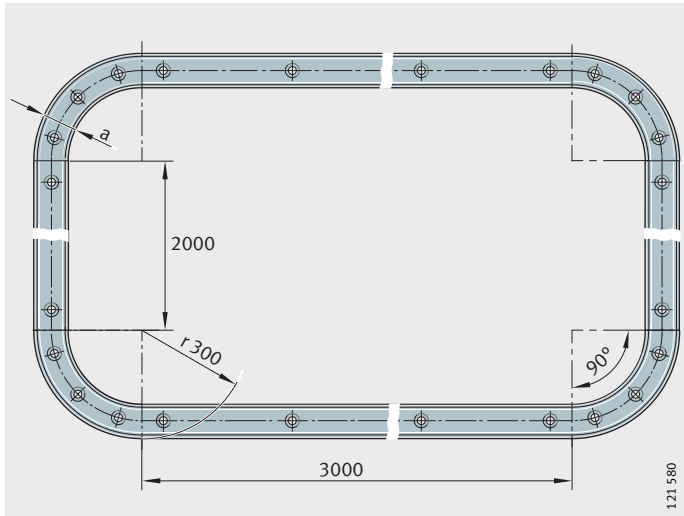

a = width of guideways

Figure 4
Closed oval track
with 90° arcs
LFS52-OV-300/90–2 000/3 000

Ordering example
Ordering designation

Individual components

In order to achieve versatile user designs, it is also possible to order individual components of the ready-to-fit systems, for example see *Figure 5*.

Track roller	Series	LFR
	Size	50/8-6
	Seals	2RSR
	Corrosion-resistant	RB, *Figure 5*
Ordering designation	**LFR50/8-6-2RSR-RB**	
Bolts	Series	LF
	Concentric	Z
	Size	8
	Corrosion-resistant	RB, *Figure 5*
Ordering designation	**LFZ8-RB**	
Cap wiper	Series	AB.LFR
	Size	50/8, *Figure 5*
Ordering designation	**AB.LFR50/8**	

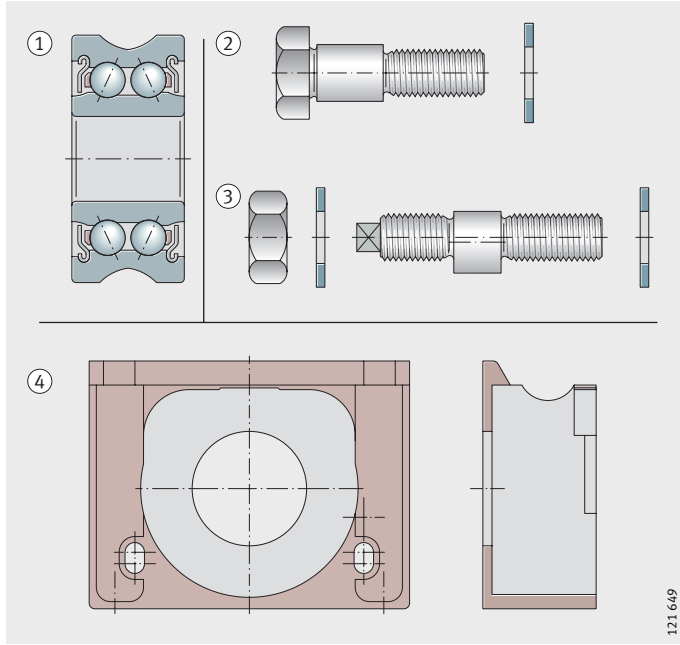

① Track roller
② Bolt, concentric
③ Bolt, eccentric
④ Cap wiper

Figure 5
Track roller, bolts, wiper

Operating limits

Operating temperature

Track roller guidance systems can be used at temperatures from –20 °C to +80 °C. For applications below –20 °C or above +80 °C, please contact us.

The area of application is restricted by the lubricant, the plastics used and the composite materials.

Speeds

The maximum possible speed of track roller guidance systems is 10 m/s. Higher speeds may be possible by agreement.

Acceleration

When using track roller guidance systems, accelerations of up to 50 m/s^2 can be achieved.

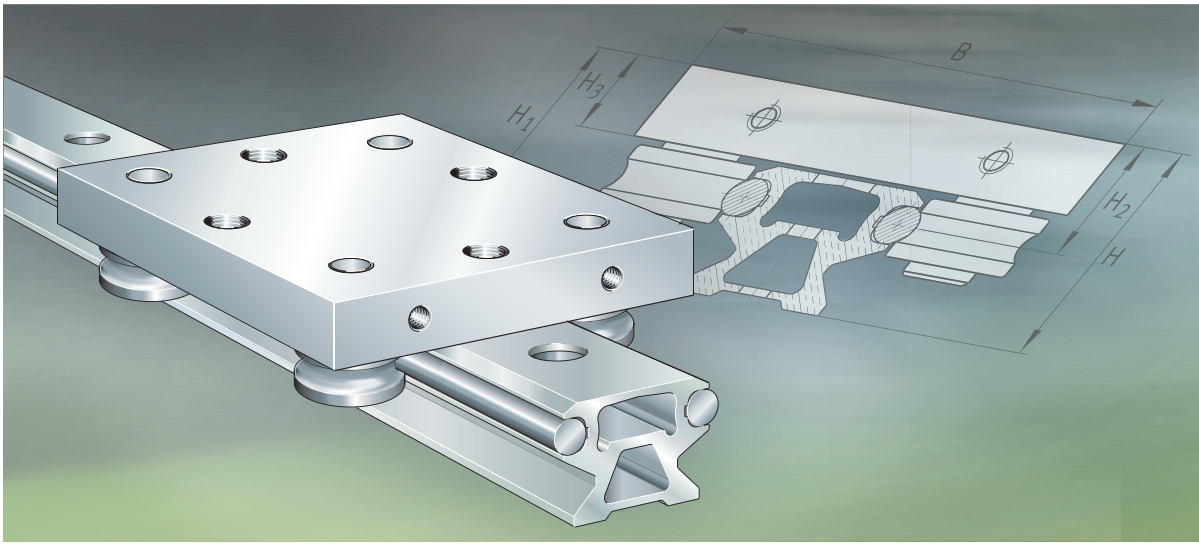

Track roller guidance systems

With hollow section carriage
With compact carriage
With open carriage
With non-locating carriage
With bogie carriage

Track roller guidance systems

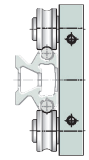

		Page
Matrix	Matrix for preselection of track roller guidance systems	38
Product overview	Track roller guidance systems	40
Features	Track roller guidance system with hollow section carriage	42
	Track roller guidance system with compact carriage	43
	Track roller guidance system with open carriage	44
	Track roller guidance system with non-locating carriage	45
	Track roller guidance system with bogie carriage	46
Dimension tables	Track roller guidance system with hollow section carriage	48
	Track roller guidance system with compact carriage	50
	Track roller guidance system with open carriage	52
	Track roller guidance system with non-locating carriage	54
	Track roller guidance system with bogie carriage	56

Matrix for preselection of track roller guidance systems

Track roller guidance systems with	Width of guideways						Corrosion-resistant
	20	25	32	42	52	86	
Hollow section carriage LFCL 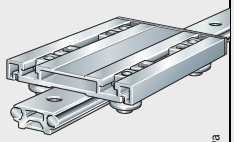 121 469a	–	●	–	●	–	●	■
Compact carriage LFKL..-SF 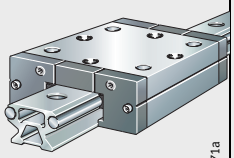 121 471a	●	●	●	–	●	–	■
Open carriage LFL..-SF 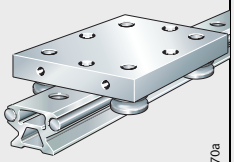 121 470a	●	–	●	–	●	–	■
Non-locating carriage LFLL..-SF 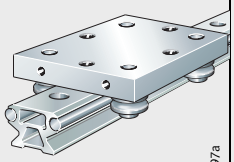 121 597a	–	–	●	–	●	–	■
Bogie carriage LFDL..-SF LFDL..-B 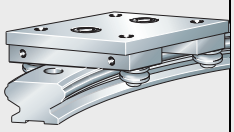 121 661	–	–	●	–	●	–	■

● Available sizes.

■ Possible.

[1] The guideway LFS..-M can only be combined with carriages with adjustable clearance. If SF and LFCL carriages are to be used, please contact us first.

Particular features of guidance systems	Sizes	Basic dimensions of guidance systems, for dimensioning see *Figure 1*									Description
		LFS, -C, -CE, -CEE, -E, -EE, -N, -NZZ			LFS..-F, -FE			LFS..-M[1)]			
		H	B	L	H	B	L	H	B	L	See page
– Economical – Low mass – High moment load carrying capacity M_x	25 42 86	32,1 39 59	80 116 190	110 150 235	– 33,9 –	80 116 190	110 150 235	63,1 – –	80 116 190	110 150 235	42
– Closed series – Protected track rollers – Integated lubrication unit	20 25 32 52 52-E 52-EE	22 25 35,5 54,3 60,4 60,4	56 65 86 13 145 155	69 85 112 136 186 205	– – 25,5 38,2 44,3 44,3	56 65 86 13 145 155	69 85 112 136 186 205	– 56 – 118,9 125 125	56 65 86 13 145 155	69 85 112 136 186 205	43
– Very robust – Simple construction	20 32 52 52-E	22 35,5 54,3 60,4	55 80 120 135	50 90 100 150	– 25,5 38,2 44,3	55 80 120 135	50 90 100 150	– 81,5 118,9 125	55 80 120 135	50 90 100 150	44
– Locating/non-locating bearing arrangement – Compensation of parallelism deviations up to ±1 mm	32 52	35,5 54,3	80 120	90 100	25,5 38,2	80 120	90 100	81,5 118,9	80 120	90 100	45
– Oval track guidance systems for unlimited stroke length	32-B 32-SF 52-B 52-SF	44,2 44,2 66,1 60,1	80 80 120 120	100 100 150 150	34,2 34,2 50 50	80 80 120 120	100 100 150 150	90,2 90,2 130,7 130,7	80 80 120 120	100 100 150 150	46

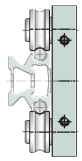

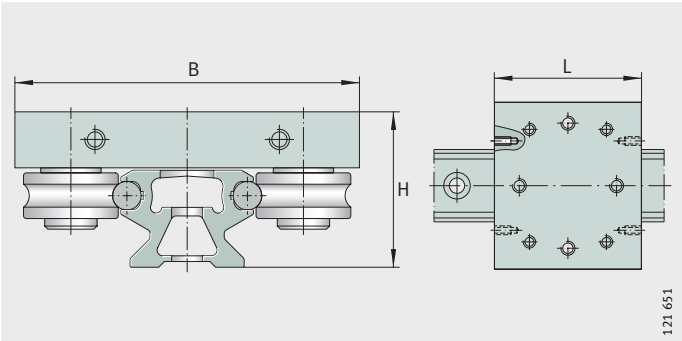

Figure 1
Dimensions H, B, L

With hollow section carriage
Clearance-free

LFCL

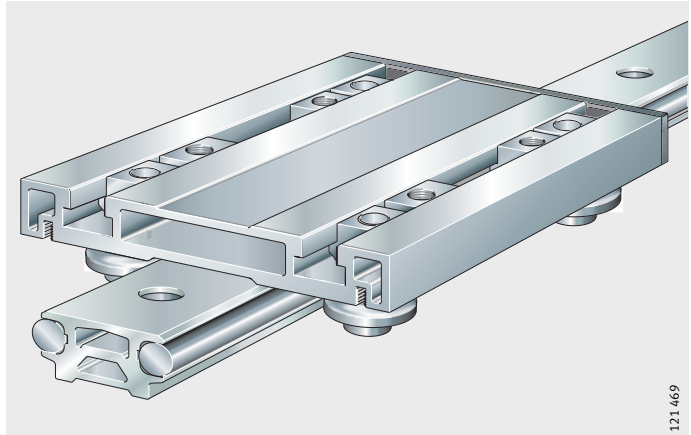

With compact carriage
Clearance-free

LFKL..-SF

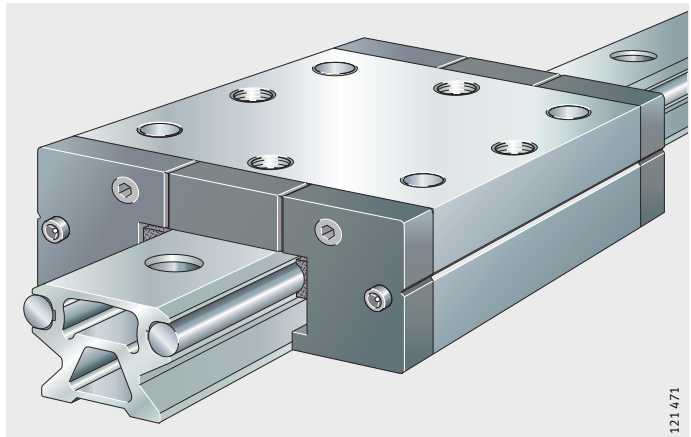

With open carriage
Clearance-free

LFL..-SF

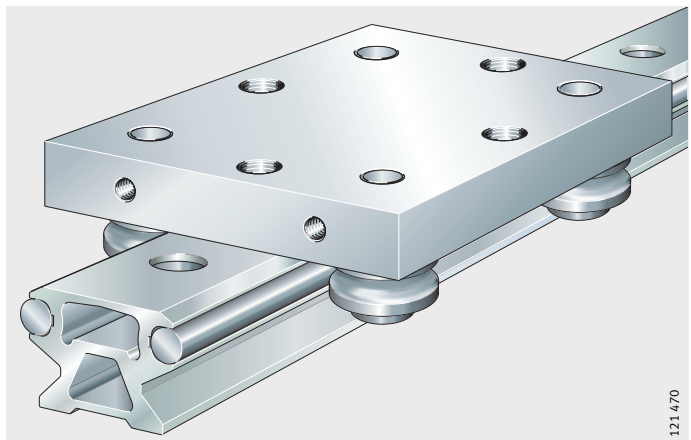

With non-locating carriage

Clearance-free

LFLL..-SF

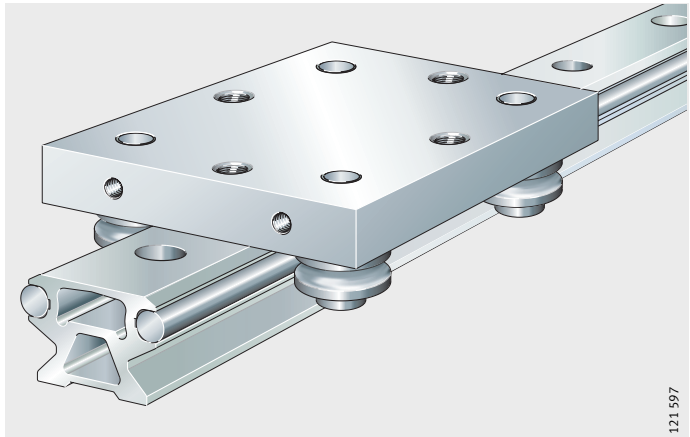

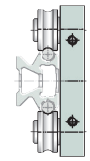

With bogie carriage

Concentric and eccentric bolts, adjustable clearance

LFDL..-B

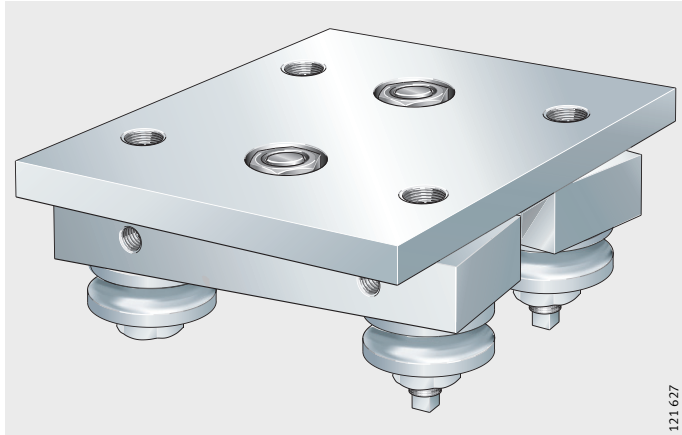

Concentric bolts
Clearance-free

LFDL..-SF

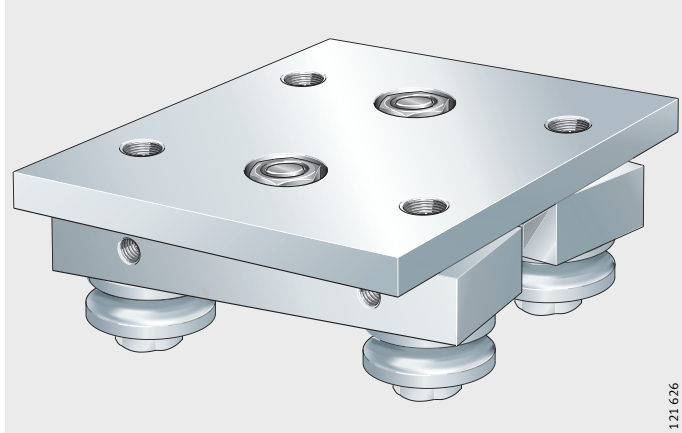

Track roller guidance systems

Features

Track roller guidance systems are available with a hollow section carriage, compact carriage, open carriage, non-locating carriage or bogie carriage.

Track roller guidance system with hollow section carriage

The economical series LFCL is characterised in particular by its low mass and high moment load carrying capacity M_x. In addition, more individual design of the adjacent construction is possible since the T-bolts can be moved longitudinally in the carriage plate.

A carriage comprises a carriage plate made from anodised aluminium, four concentric bolts, four track rollers, two end covers for the hollow sections and eight T-nuts, *Figure 1*. The track rollers and end covers are already fitted.

Preload and clearance

The carriages run clearance-free on all INA guideways, see page 38, and can be combined with all guideways of the relevant size, but not with the curved guideway elements LFSR.
Due to the highly accurate guideways, it is not necessary to set the clearance.

Sealing and lubrication

The track rollers have gap seals on both sides, are greased for life and are therefore maintenance-free.

The raceways can be lubricated using cap wipers AB..-LFR.
Their fixing screws pass into the screw mounting channels of the carriage plate.

Corrosion-resistant design

All steel parts, the inner and outer rings of the track rollers and the bolts, washers and nuts are made from corrosion-resistant steel. The rolling elements are protected against corrosion by the grease.

Corrosion-resistant designs have the suffix RB.

Further information

Further information is given on the following pages:

- dimension table see page 48
- track rollers and bolts see page 60, 64
- guideways see page 66
- accessories see page 92.

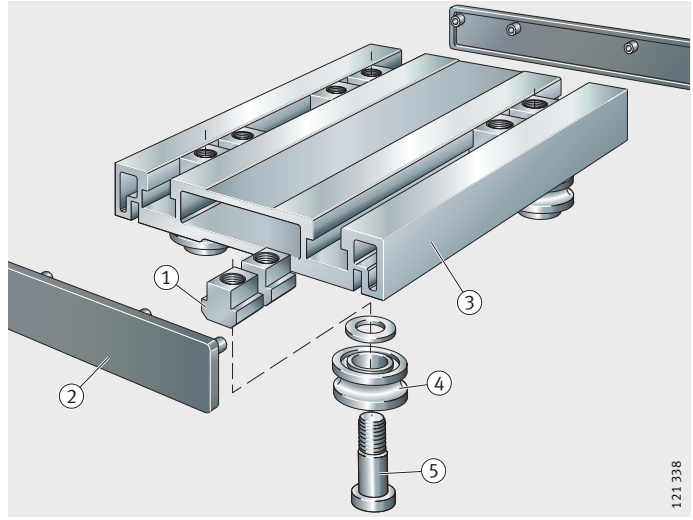

① T-nut
② End cover
③ Carriage plate
④ Track roller
⑤ Concentric bolt

Figure 1
Hollow section carriage

Track roller guidance system with compact carriage

The closed compact carriage LFKL..-SF gives a simple means of achieving track roller guidance systems for operation in contaminated environments. The track rollers are protected against contamination by the closed design. It has two integrated lubrication units for lubrication of the raceways.

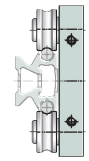

A compact carriage comprises a saddle plate made from anodised, profiled aluminium, four concentric bolts, four track rollers, two sealing strips and two lubrication and wiper units, *Figure 2*. The track rollers are already fitted, the sealing strips as well as the lubrication and wiper units are included loose in the delivery.

Preload and clearance

The carriages run clearance-free on all INA guideways, see page 38, and can be combined with all guideways of the relevant size, but not with the curved guideway elements LFSR. Due to the highly accurate guideways, it is not necessary to set the clearance.

Sealing and lubrication

The track rollers have gap seals on both sides, are greased for life and are therefore maintenance-free.

For lubrication of the raceways, the lubrication and wiper units have oil-soaked felt insert that can be replenished with oil via lubrication nipples. In combination with the sealing strips (gap seals), these units protect the compact carriage on all sides against contamination.

Corrosion-resistant design

All steel parts, the inner and outer rings of the track rollers and the bolts, washers and nuts are made from corrosion-resistant steel. The rolling elements are protected against corrosion by the grease.

Corrosion-resistant designs have the suffix RB.

Further information

Further information is given on the following pages:

- dimension table see page 50
- track rollers and bolts see page 60, 64
- guideways see page 66
- accessories see page 92.

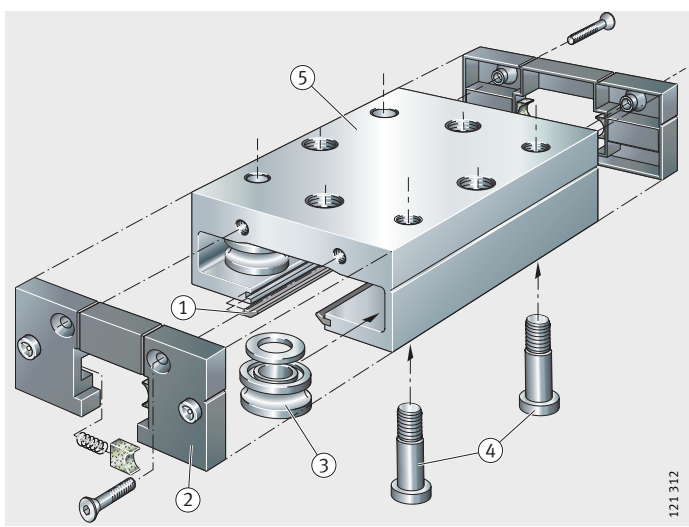

① Sealing strip
② Lubrication and wiper unit
③ Track roller
④ Concentric bolt
⑤ Saddle plate

Figure 2
Compact carriage

Track roller guidance system with open carriage

The robust open carriage LFL..-SF is suitable where efficient linear guidance systems of a simple construction are required.

A carriage comprises a carriage plate made from anodised aluminium, four screws and four track rollers, *Figure 3*.
The track rollers are already fitted.

Preload and clearance

The carriages run clearance-free on all INA guideways, see page 38, and can be combined with all guideways of the relevant size, but not with the curved guideway elements LFSR. Due to the highly accurate guideways, it is not necessary to set the clearance.

Sealing and lubrication

The track rollers have gap seals on both sides, are greased for life and are therefore maintenance-free.

The raceways can be lubricated by means of lubrication and wiper units AB, page 92. Their oil-soaked felt inserts can be replenished with oil via lubrication nipples. In combination with side plates ABAL, these units seal the end faces and longitudinal sides of the open carriage, page 93.

Corrosion-resistant design

All steel parts, the inner and outer rings of the track rollers and the screws, washers and nuts are made from corrosion-resistant steel. The rolling elements are protected against corrosion by the grease.

Corrosion-resistant designs have the suffix RB.

Further information

Further information is given on the following pages:

- dimension table see page 52
- track rollers and screws see page 60, 64
- guideways see page 66
- accessories see page 92.

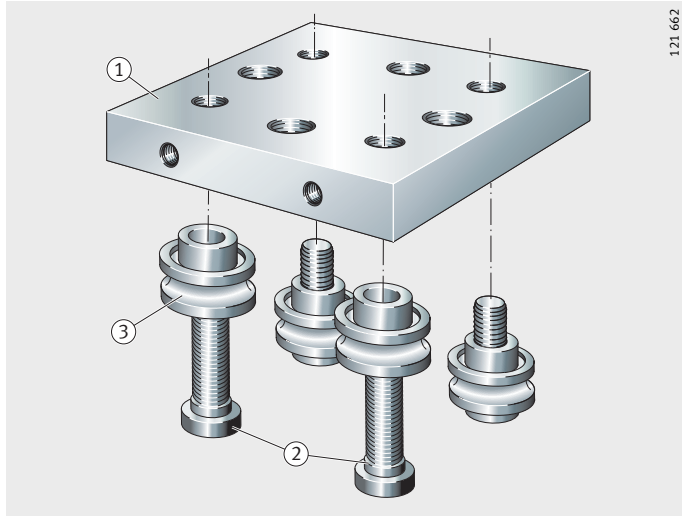

① Carriage plate
② Screws
③ Track roller

Figure 3
Open carriage

Track roller guidance system with non-locating carriage

Non-locating carriages LFLL..-SF are robust, ready-to-fit linear guidance systems that are used exclusively in locating or non-locating bearing applications with two parallel guideway systems. The track rollers can be axially displaced. In this way, it is possible to compensate for inaccuracies of ±1 mm in relation to the spacing of the guideways.

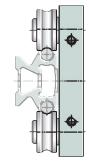

A carriage comprises a carriage plate made from anodised aluminium, four screws and four non-locating track rollers, *Figure 4*. The track rollers are already fitted.

Preload and clearance

The carriages run clearance-free on all INA guideways, see page 38, and can be combined with all guideways of the relevant size, but not with the curved guideway elements LFSR. Due to the highly accurate guideways, it is not necessary to set the clearance.

Sealing and lubrication

The track rollers have gap seals on both sides, are greased for life and are therefore maintenance-free.

The contact zone between the raceways and track rollers must be lubricated via the shaft.

Corrosion-resistant design

All steel parts, the inner and outer rings of the track rollers and the screws, washers and nuts are made from corrosion-resistant steel.

The rolling elements are protected against corrosion by the grease.

Corrosion-resistant designs have the suffix RB (available by agreement only).

Attention!

Non-locating carriages must never be used on their own but only ever in combination with locating carriages.

The track rollers can support loads in a radial direction only.

Further information

Further information is given on the following pages:

- dimension table see page 54
- track rollers and screws see page 60, 64
- guideways see page 66
- accessories see page 92.

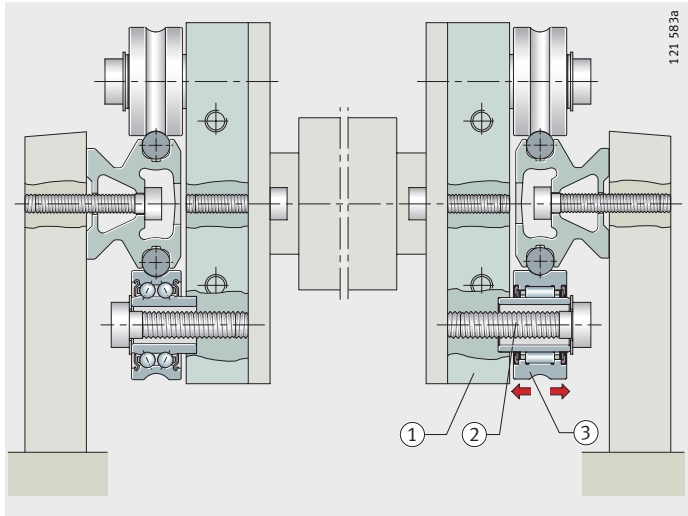

① Carriage plate
② Screw
③ Non-locating track roller

Figure 4
Non-locating carriage

Track roller guidance system with bogie carriage

Bogie carriages LFDL can be used in combination with curved guideway elements LFSR to achieve almost any variant of oval and circular track guidance systems. The straight guideway elements are precisely matched to the arc. The carriages are available in the design LFDL..-SF (with four concentric bolts) and design LFDL..-B (two concentric and two eccentric bolts).

A carriage comprises a steel carriage plate, two aluminium swivel brackets (supported axially and radially by rolling bearings), four concentric bolts or two concentric and two eccentric bolts, *Figure 5*. The track rollers are already fitted.

Preload and clearance

The carriage LFDL..-B is set clearance-free in relation to the guideway by means of the eccentric bolts.

Carriage LFDL..-SF cannot be adjusted, since the carriage is already optimally adjusted to the INA guideways, see page 38.

Sealing and lubrication

The track rollers have gap seals on both sides, are greased for life and are therefore maintenance-free.

The contact zone between the raceways and track rollers must be lubricated via the shaft.

Corrosion-resistant design

All steel parts, the inner and outer rings of the track rollers and the bolts, washers and nuts are made from corrosion-resistant steel. The rolling elements are protected against corrosion by the grease.

Corrosion-resistant designs have the suffix RB (available by agreement only).

Attention! The adjustable carriage LFDL..-B must be used in combination with a 360° guideway.

Further information

Further information is given on the following pages:

- dimension table see page 56
- track rollers and bolts see page 60, 64
- guideways see page 66
- accessories see page 92.

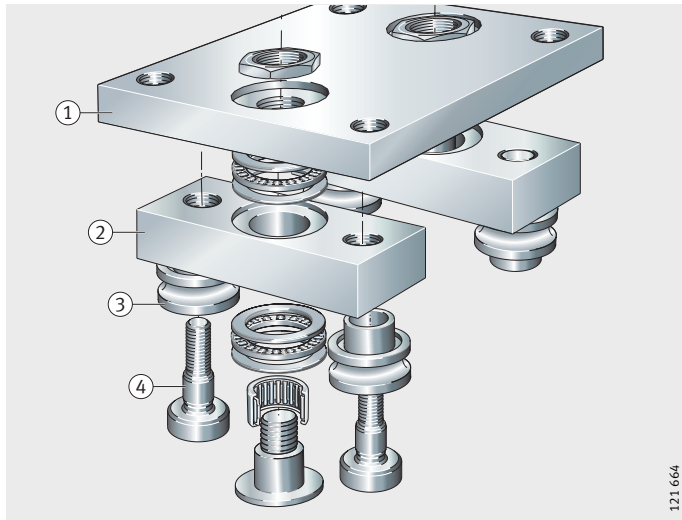

① Carriage plate
② Bracket
③ Track roller
④ Concentric bolt

Figure 5
Bogie carriage

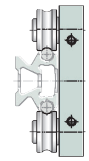

Track roller guidance systems with hollow section carriage

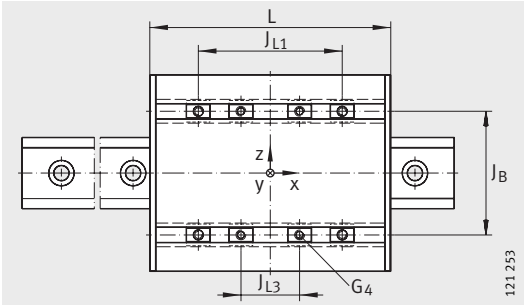

LFCL with LFS, -C, -CE, -CEE, -E, -EE, -N, -NZZ, -M, -F
View rotated 90°

Dimension table · Dimensions in mm

Carriage[1]	Mass m ≈kg	Track roller[3]	For shaft diameter	Dimensions			Mounting dimensions			
				H_1	B	L	J_B	J_{B1}	J_{B2}	J_{L1}
LFCL25	0,44	**LFR50/8-6-2Z**	**6**	30,5	80	110	47	47	69	52
LFCL42	1	**LFR5201-10-2Z**	**10**	38,1	116	150	73	73	98,5	85
LFCL86[2]	2,2	**LFR5301-10-2Z**	**10**	48,4	190	235	124	124	151,5	155

Ordering designations
Corrosion-resistant design: LFCL..-RB, LFS..-RB with LFR..-2RSR-RB
Guideways without holes: LFS..-OL.

1) The design of the hollow sections is dependent on the size.
2) Additional T-slot in the centre of the carriage.
3) For ordering of replacement parts, please contact us.
4) The guideway LFS..-M can only be combined with carriages with adjustable clearance.
If SF and LFCL carriages are to be used, please contact us first.

Basic load ratings[1]

Carriage	Guide-way	Track roller[2]	Basic load ratings						
			C_y N	C_{0y} N	C_z N	C_{0z} N	M_{0x} Nm	M_{0y} Nm	M_{0z} Nm
LFCL25	**LFS25**	**LFR50/8-6-2Z**	4 600	2 400	7 320	4 500	25	120	65
LFCL42	**LFS42**	**LFR5201-10-2Z**	10 200	5 480	16 900	10 000	85	425	230
LFCL86	**LFS86**	**LFR5301-10-2Z**	17 800	8 850	28 400	15 500	335	1 190	680

1) For basic load ratings in combination with LFS..-RB, see page 17.
2) For ordering of replacement parts, please contact us.

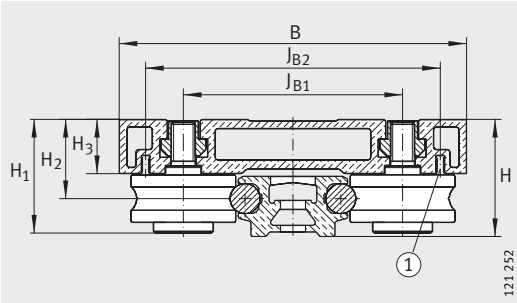

LFCL with LFS, -C, -CE, -CEE, -E, -EE, -N, -NZZ
① Threaded slot for screws M3

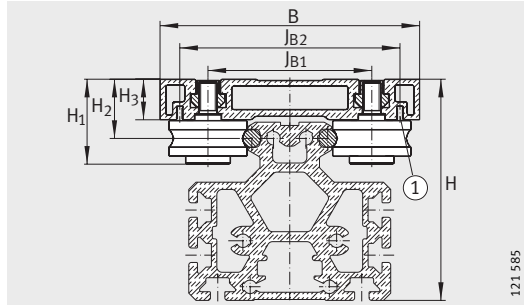

LFCL with LFS..-M[4)]
① Threaded slot for screws M3

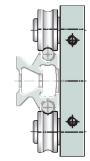

						Total height of carriage and guideway		
J_{L3}		H_2	H_3	G_4	Maximum screw depth for G_4	LFS, -C, -CE, -CEE, -E, -EE, -N, -NZZ	LFS-F	LFS-M[4)]
min.	max.	+0,3						
13	26	21,5	15,4	M6	10	32,1	–	63,1
15	55	26,4	18	M8	12	39	33,9	–
18	119	33,9	23,4	M10	14	59	–	–

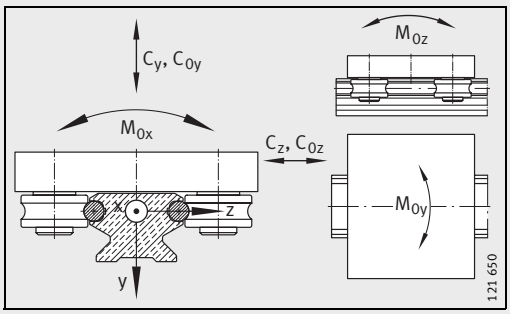

Load directions

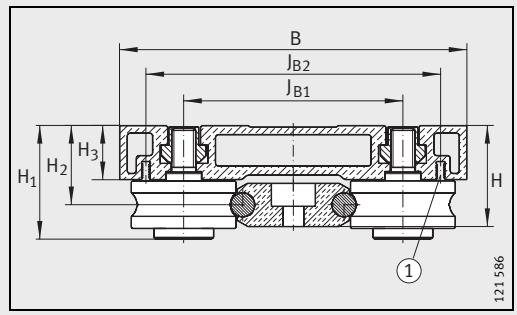

LFCL with LFS..-F
① Threaded slot for screws M3

Track roller guidance system with compact carriage

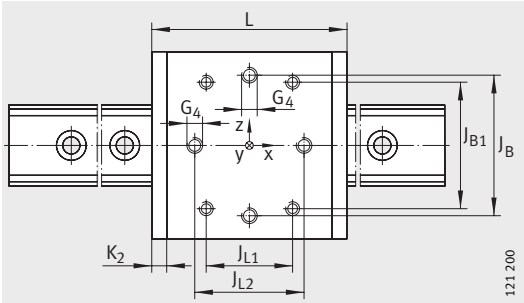

LFKL with LFS, -C, -CE, -CEE, -E, -EE, -N, -NZZ, -M, -F, -FE
View rotated 90°

Dimension table · Dimensions in mm

Carriage	Mass m ≈kg	Track roller[3]	For shaft diameter	Dimensions H_1	B	L	Mounting dimensions J_B ±0,2	J_{B1}	K_2
LFKL20-SF[2]	0,2	**LFR50/5-4-2Z**	**4**	20,5	56	69	39	34	5
LFKL25-SF[2]	0,3	**LFR50/5-6-2Z**	**6**	23,5	65	85	50	40	5
LFKL32-SF	0,7	**LFR50/8-6-2Z**	**6**	32	86	112	59	54	7
LFKL52-SF	1,5	**LFR5201-10-2Z**	**10**	46,1	130	136	90	83	10
LFKL52-E-SF	2,9	**LFR5301-10-2Z**	**10**	53,8	145	186	105	90	10
LFKL52-EE-SF	4,3	**LFR5302-10-2Z**	**10**	55	155	205	115	95,2	10

Ordering designation
Corrosion-resistant design: LFKL..-RB, LFS..-RB with LFR..-2RSR-RB
Guideways without holes: LFS..-OL.

1) Tightening torque for track roller bolts, concentric bolts are supplied tightened to M_A.
2) Without lubrication nipple, relubrication possible via end holes.
3) For ordering of replacement parts, please contact us.
4) The guideway LFS..-M can only be combined with carriages with adjustable clearance. If SF and LFKL carriages are to be used, please contact us first.

Basic load ratings[1]

Carriage	Guide-way	Track roller[2]	Basic load ratings C_y N	C_{0y} N	C_z N	C_{0z} N	M_{0x} Nm	M_{0y} Nm	M_{0z} Nm
LFKL20-SF	**LFS20**	**LFR50/5-4-2Z**	1 350	870	2 400	1 700	7	28	15
LFKL25-SF	**LFS25**	**LFR50/5-6-2Z**	1 280	820	2 580	1 800	8	40	18
LFKL32-SF	**LFS32**	**LFR50/8-6-2Z**	4 100	2 400	6 600	4 200	30	130	70
LFKL52-SF	**LFS52**	**LFR5201-10-2Z**	10 000	5 200	16 800	10 000	110	290	150
LFKL52-E-SF	**LFS52-E**	**LFR5301-10-2Z**	17 800	8 900	28 400	15 500	180	800	460
LFKL52-EE-SF	**LFS52-EE**	**LFR5302-10-2Z**	20 000	10 000	32 400	18 200	215	1 100	620

1) For basic load ratings in combination with LFS..-RB, see page 17.
2) For ordering of replacement parts, please contact us.

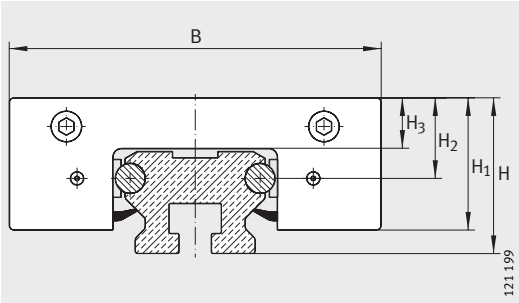

LFKL with LFS, -C, -CE, -CEE, -E, -EE, -N, -NZZ

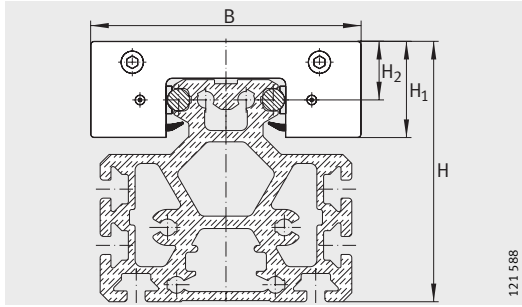

LFKL with LFS..-M[4)]

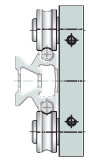

							Total height of carriage and guideway		
J_{L1}	J_{L2}	H_2	H_3	G_4	M_A[1)]		LFS, -C, -CE, -CEE, -E, -EE, -N, -NZZ	LFS-F, -FE	LFS-M[4)]
					Standard	Corrosion-resistant			
	±0,2	+0,3			Nm	Nm			
34	49	13	8,7	M5	2,5	2,5	22	–	–
45	60	14,4	9	M5	2,5	2,5	25	–	56
60	70	20,5	14	M8	15	12	35,5	25,5	81,5
60	70	29,2	19,4	M10	40	23	54,3	38,2	118,9
105	110	35,3	24	M10	40	23	60,4	44,3	125
120	140	35,3	24	M12	70	39	60,4	44,3	125

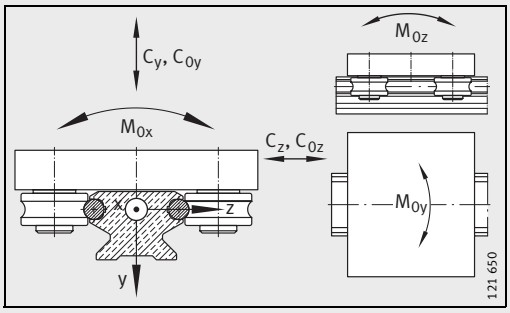

Load directions

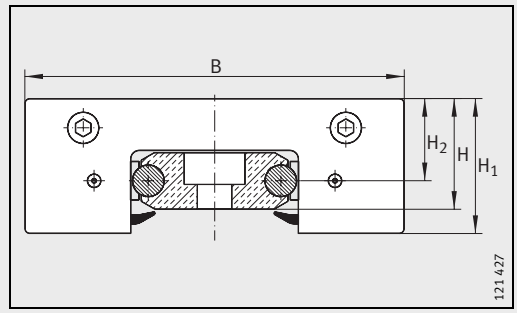

LFKL with LFS..-F, -FE

Track roller guidance system with open carriage

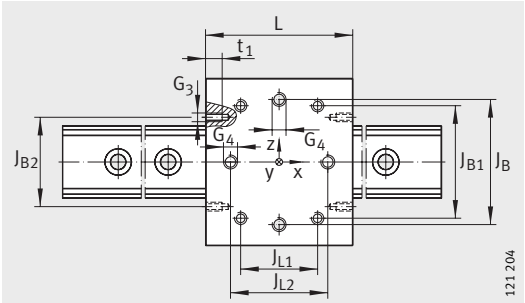

LFL with LFS, -C, -CE, -CEE, -E, -EE, -N, -NZZ, -M, -F, -FE
View rotated 90°

Dimension table · Dimensions in mm

Carriage	Mass m ≈kg	Track roller[3]	For shaft diameter	Dimensions H_1	B	L	Mounting dimensions J_B ±0,2	J_{B1}	J_{B2}	J_{L1}	J_{L2} ±0,2
LFL20-SF[2]	0,16	**LFR50/5-4-2Z**	**4**	20,5	55	50	40	34	–	24	38
LFL32-SF	0,4	**LFR50/8-6-2Z**	**6**	30	80	90	59	54	56	60	70
LFL52-SF	1	**LFR5201-10-2Z**	**10**	43,2	120	100	90	83,2	65	60	70
LFL52-E-SF	1,9	**LFR5301-10-2Z**	**10**	53,8	135	150	105	90	65	105	110

Ordering designation
Corrosion-resistant design: LFL..-RB, LFS..-RB with LFR..-2RSR-RB
Guideways without holes: LFS..-OL.

Corrosion-resistant design available by agreement.

1) Tightening torque for track roller bolts, concentric bolts are supplied tightened to M_A.

2) Hole in underside for cap wiper AB LFL20.

3) For ordering of replacement parts, please contact us.

4) The guideway LFS..-M can only be combined with carriages with adjustable clearance.
If SF and LFCL carriages are to be used, please contact us first.

Basic load ratings[1]

Carriage	Guide-way	Track roller[2]	Basic load ratings C_y N	C_{0y} N	C_z N	C_{0z} N	M_{0x} Nm	M_{0y} Nm	M_{0z} Nm
LFL20-SF	**LFS20**	**LFR50/5-4-2Z**	1 350	870	2 400	1 700	7	20	10
LFL32-SF	**LFS32**	**LFR50/8-6-2Z**	4 100	2 400	6 600	4 200	30	130	70
LFL52-SF	**LFS52**	**LFR5201-10-2Z**	10 000	5 200	16 800	10 000	110	290	150
LFL52-E-SF	**LFS52-E**	**LFR5301-10-2Z**	17 800	8 900	28 400	15 500	180	800	460

1) For basic load ratings in combination with LFS..-RB, see page 17.

2) For ordering of replacement parts, please contact us.

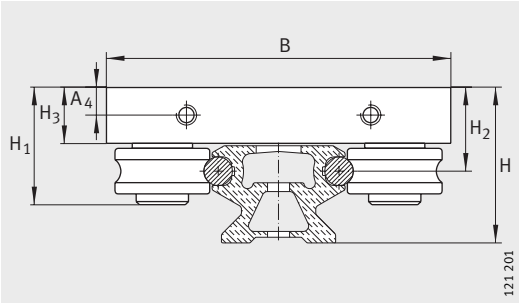

LFL with LFS, -C, -CE, -CEE, -E, -EE, -N, -NZZ

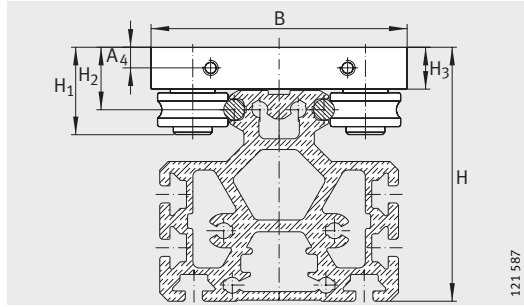

LFL with LFS..-M[4)]

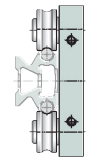

								Total height of carriage and guideway		
t_1	H_2	H_3	A_4	G_3	G_4	M_A[1)]		LFS, -C, -CE, -CEE, -E, -EE, -N, -NZZ	LFS-F, -FE	LFS-M[4)]
						Standard	Corrosion-resistant			
	+0,3					Nm	Nm			
–	13	9	–	M3[2)]	M5	2,5	2,5	22	–	–
7	20,5	14	7	M6	M8	15	12	35,5	25,5	81,5
12	29,2	19,5	9,75	M6	M10	40	23	54,3	38,2	118,9
12	35,3	24	12	M6	M10	40	23	60,4	44,3	125

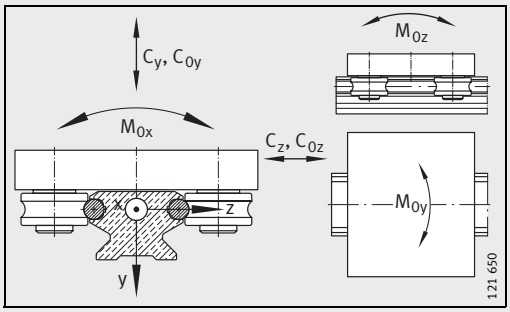

Load directions

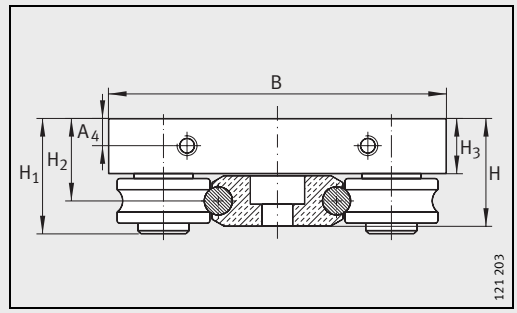

LFL with LFS..-F, -FE

Track roller guidance system with non-locating carriage

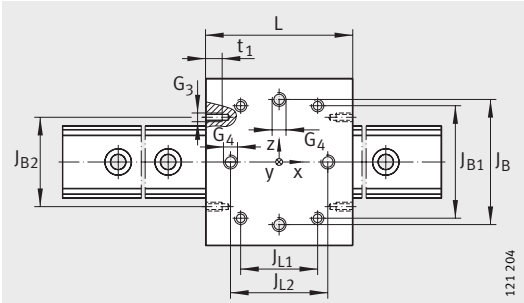

LFLL with LFS, -C, -CE, -CEE, -E, -EE, -N, -NZZ, -M, -F, -FE
View rotated 90°

Dimension table · Dimensions in mm

Carriage	Mass m ≈kg	For shaft diameter	Dimensions H_1	B	L	Mounting dimensions J_B ±0,2	J_{B1}	J_{B2}	J_{L1}	J_{L2} ±0,2	t_1
LFLL32-SF	0,4	**6**	32,5	80	90	59	54	56	60	70	7
LFLL52-SF	1	**10**	45	120	100	90	83	65	60	70	12

Ordering designation
Guideways without holes: LFS..-OL.

Corrosion-resistant design available by agreement.

1) LFLL32-SF: ±0,5 axial displacement capacity.

2) LFLL52-SF: ±1 axial displacement capacity.

3) The guideway LFS..-M can only be combined with carriages with adjustable clearance.
If SF and LFCL carriages are to be used, please contact us first.

Basic load ratings[1)]

Carriage	Guide-way	Track roller[2)]	Basic load ratings C_z N	C_{0z} N	M_{0y} Nm
LFLL32-SF	**LFS32**	**LFR22/8-6-2RSR-RNA + IR6,4X12X17**	9 000	8 000	250
LFLL52-SF	**LFS52**	**LFR2202-10-2RSR-RNA + IR10,5X20X21**	17 000	19 000	550

1) For basic load ratings in combination with LFS..-RB, see page 17.

2) For ordering of replacement parts, please contact us.

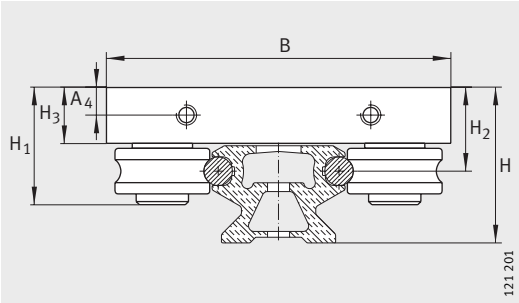

LFLL with LFS, -C, -CE, -CEE, -E, -EE, -N, -NZZ

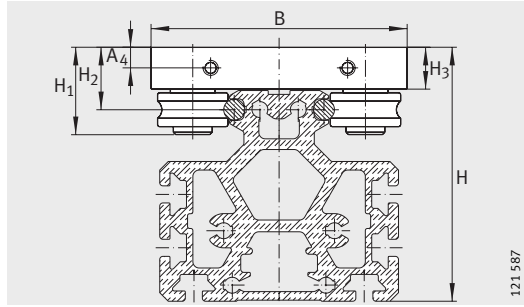

LFLL with LFS..-M[3)]

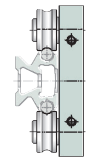

					Total height of carriage and guideway		
H_2	H_3	A_4	G_3	G_4	LFS, -C, -CE, -CEE, -E, -EE, -N, -NZZ	LFS-F, -FE	LFS-M[3)]
20,5[1)]	13,75	7	M6	M8	35,5[1)]	25,5[1)]	81,5[1)]
29,2[2)]	19,5	9,75	M6	M10	54,3[2)]	38,2[2)]	118,9[2)]

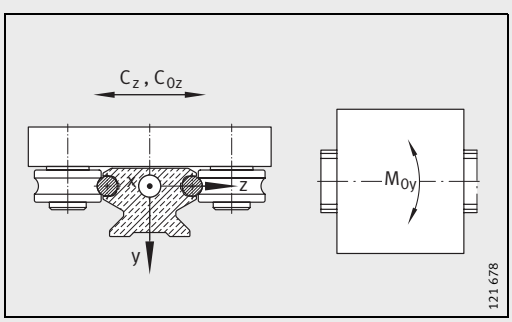

Load directions

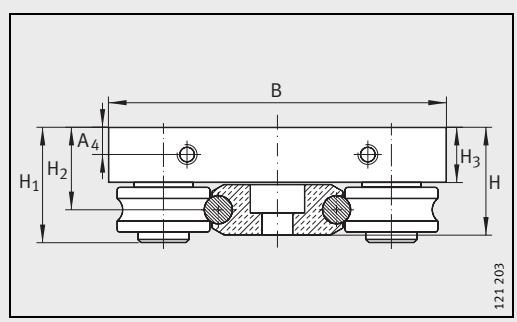

LFLL with LFS..-F, -FE

Track roller guidance system with bogie carriage

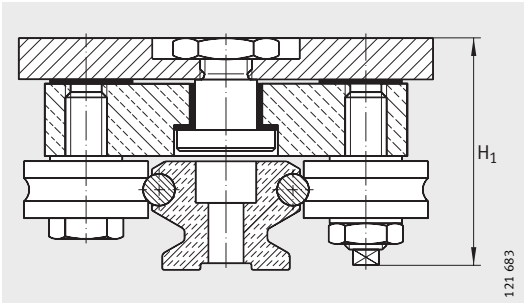

LFDL-B

Dimension table · Dimensions in mm

Carriage[1]	Mass m ≈kg	Track roller[3]	For shaft diameter	Dimensions H_1	B	L	Mounting dimensions J_B	J_{B1}	J_{L1}	J_{L2}
LFDL32-B	1	**LFR50/8-6-2Z**	**6**	43	80	100	60	54	60	70
LFDL32-SF				37						
LFDL52-B	2,5	**LFR5201-10-2Z**	**10**	65,1	120	150	90	83	76	90
LFDL52-SF				55						

Corrosion-resistant design available by agreement.

1) In order to protect the raceways, the carriages can also be fitted with the lubrication and wiper unit AB (special accessory). Please contact us.

2) Tightening torque for track roller bolts, concentric bolts are supplied tightened to M_A.

3) For ordering of replacement parts, please contact us.

Basic load ratings[1]

Carriage	Guide-way	Track roller[2]	Basic load ratings C_y N	C_{0y} N	C_z N	C_{0z} N	M_{0x} Nm	M_{0y} Nm	M_{0z} Nm
LFDL32-B	**LFS32**	**LFR50/8-6-2Z**	4 100	2 400	6 600	4 200	30	130	70
LFDL32-SF	**LFS32**	**LFR50/8-6-2Z**							
LFDL52-B	**LFS52**	**LFR5201-10-2Z**	10 000	5 200	16 800	10 000	110	380	200
LFDL52-B-SF	**LFS52**	**LFR5201-10-2Z**							

1) For basic load ratings in combination with LFS..-RB, see page 17.

2) For ordering of replacement parts, please contact us.

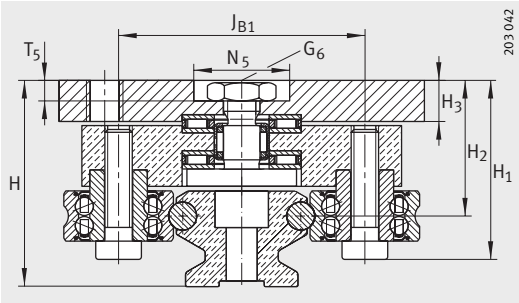

LFDL-SF with LFS, -C, -CE, -CEE, -E, -EE, -N, -NZZ

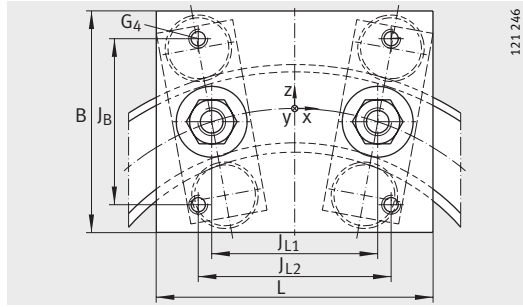

Top view

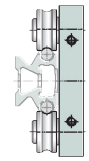

							Total height of carriage and guideway
H_2 +0,3	H_3	T_5	G_4	N_5	G_6	M_A 2) Standard Nm	LFS, -C, -CE, -CEE, -E, -EE, -N, -NZZ
29,2	9	5	M8	21	M8	15	44,2
41	11	6	M10	26	M10	40	66,1

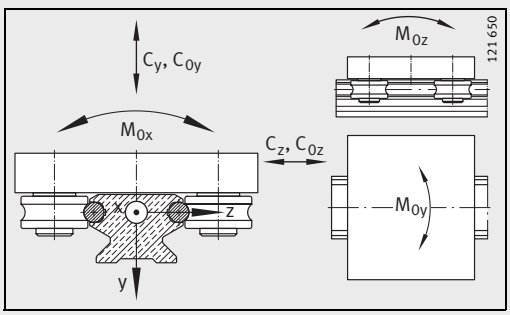

Load directions

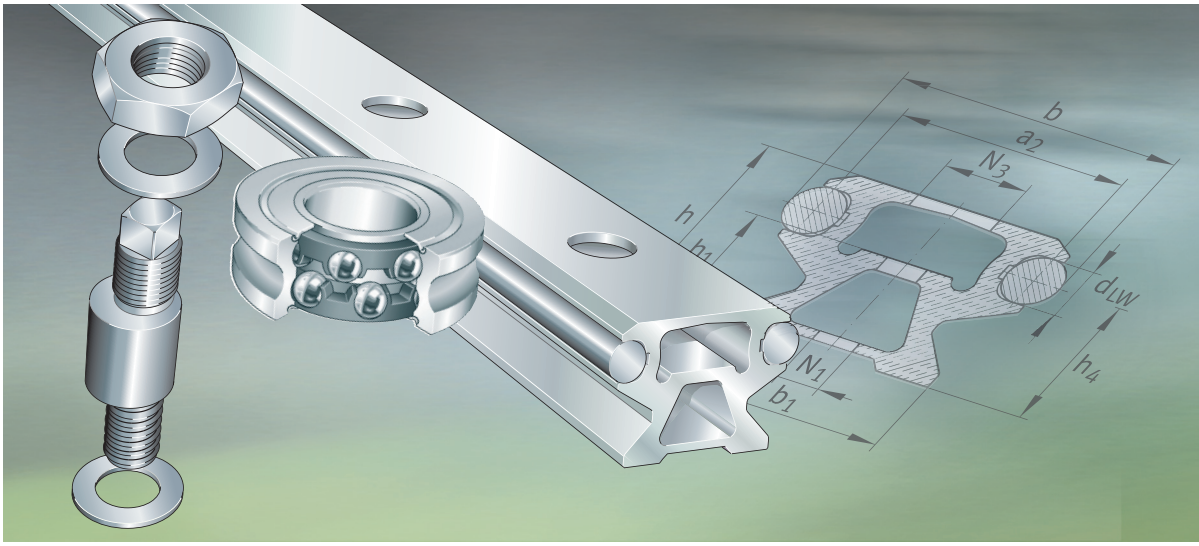

Track rollers
Bolts
Guideways

Track rollers, bolts, guideways

		Page
Product overview	Track rollers	60
Features		61
	Possible combinations of track rollers and guideways	63
Design and safety guidelines	Adjacent construction for non-locating track rollers	63
Product overview	Bolts	64
Features		65
Product overview	Guideways	66
Features		68
Design and safety guidelines	Guideway hole patterns	70
Dimension tables	Locating track rollers	74
	Bolts	76
	Non-locating track rollers	78
	Possible combinations of track rollers and bolts	79
	Guideways	80
	Closed oval tracks with guideway connectors VBS	88

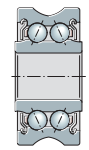

Locating track roller

LFR

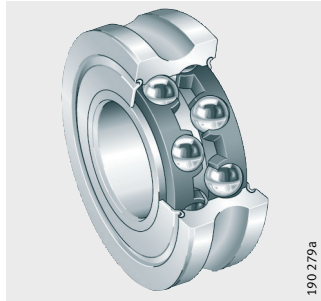

Non-locating track roller

LFR..-2RSR-NA

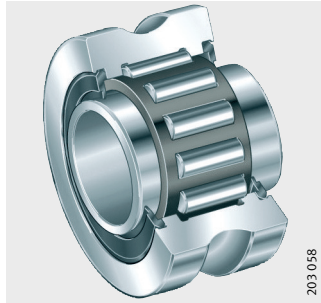

LFR..-2RSR-RNA

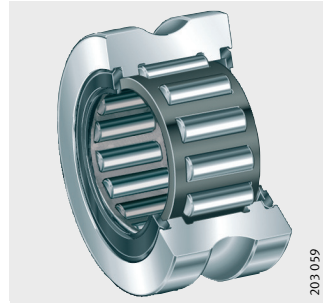

Track rollers

Features

Track rollers LFR are double row angular contact ball bearings comprising an outer ring with a gothic arch profile, an inner ring and two ball and cage assemblies with plastic cages. The inner ring and outer ring are made from rolling bearing steel 100Cr6.

The special outer ring gives two point contact in the contact zone with the raceway, *Figure 1*. The contact angle α is a maximum of 30°.

The bearings can support axial forces from both directions as well as radial forces.

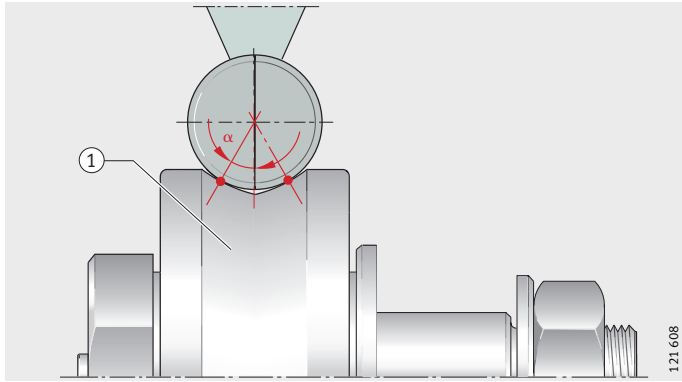

α = 30°
① Gothic arch raceway groove

Figure 1
Gothic arch,
two point contact, contact angle

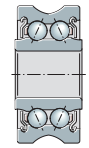

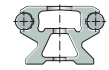

Sealing and lubrication

Gap seals on both sides protect the rolling element system against contamination. Bearings with this seal type have the suffix 2Z.

The track rollers are also available on request with contact seals on both sides, suffix 2RS and 2RSR.

The track rollers are greased for life and are therefore maintenance-free. From outside diameter ≧ 52 mm, the inner ring has a lubrication bore.

Seal types

For seal types and their specific features, see table.

2Z seal	
121 606	**Gap seal:** - not radially preloaded - low friction - to be used with low levels of contamination
2RSR seal	
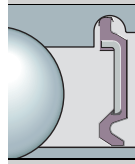 121 605	**Contact seal:** - radially preloaded - to be used with higher requirements for sealing action and under heavy contamination
2RS seal	
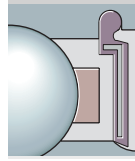 121 684	**Contact seal:** - axially preloaded - to be used with higher requirements for sealing action and under heavy contamination

Corrosion-resistant design

The inner ring and outer ring are made from corrosion-resistant steel. The rolling elements are protected against corrosion by the grease.

Corrosion-resistant designs have contact seals and the suffix 2RS-RB or 2RSR-RB.

Accuracy and internal clearance

The dimensional and geometrical accuracies correspond to tolerance class PN to DIN 620.

The radial internal clearance corresponds approximately to class CN; for internal clearance classes, see Catalogue HR1, Rolling Bearings.

Further information

Further information is given on the following pages:

- dimension table see page 74, 78, 79
- bolts see page 64
- guideways see page 66
- accessories see page 92.

Possible combinations of track rollers and guideways

The tables show the possible combinations of track rollers with the guideways LFS and TS.

Combinations with guideways LFS

Width and shaft diameter[1]		Track roller LFR					
b	d_{Lw}	50/5-4	50/5-6	50/8-6	5201-10	5301-10	5302-10
20	4	●	–	–	–	–	–
25	6	–	●	●	–	–	–
32	6	–	●	●	–	–	–
42	10	–	–	–	●	●	●
52	10	–	–	–	●	●	●
86	10	–	–	–	●	●	●
120	10	–	–	–	●	●	●

● Available size

1) Width b and shaft diameter d_{Lw} see dimension tables for guideways, from page 80.

Combinations with shaft and support rail units TS[1]

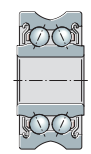

Shaft diameter	Track roller LFR						
d_{Lw}[1]	5201-12	5204-16	5206-20	5206-25	5207-30	5208-40	5308-50
12	●	–	–	–	–	–	–
16	–	●	–	–	–	–	–
20	–	–	●	–	–	–	–
25	–	–	–	●	–	–	–
30	–	–	–	–	●	–	–
40	–	–	–	–	–	●	–
50	–	–	–	–	–	–	●

● Available size

1) Shaft and support rail units TS and shaft diameter d_{Lw} see Catalogue WF1, Shaft Guidance Systems.

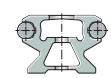

Design and safety guidelines

Adjacent construction for non-locating track rollers

For non-locating track rollers without an inner ring, the rolling element raceway on the shaft must be hardened and ground.
The surface hardness must be 670 HV + 170 HV.
The hardening depth CHD or Rht must be sufficiently large.

For design of the shaft see table.

Tolerances and surface data for the shaft raceway

Diameter tolerance of shafts		Roughness	Roundness	Parallelism
Without inner ring	With inner ring	max.	max.	max.
k5	g6 (with point load)	R_a0,4 (R_z2)	25% of diameter tolerance	50% of diameter tolerance

Concentric

LFZ

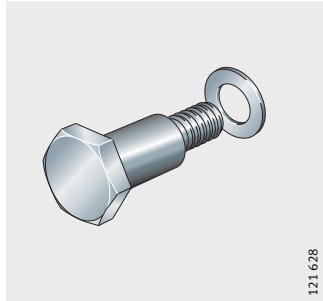

LFZ..-A1

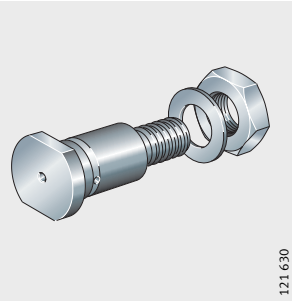

Eccentric

LFE

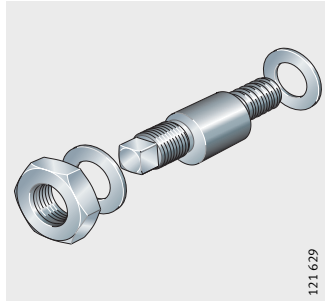

LFE..-A1

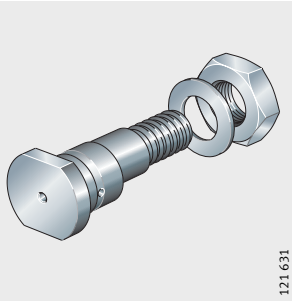

Bolts

Features

The bolts, which are made from high strength screw steel, are available with a concentric and eccentric collar; designation LFZ or LFE. Depending on their intended purpose, they are supplied with a washer, nut, drive fit lubrication nipple and sealing cap, see table Delivered condition.

The eccentric designs LFE and LFE..-A1 allow the track roller guidance systems to be set clearance-free.

Delivered condition

Designation and suffix	Included in delivery	Design
LFZ	Concentric bolt with washer	Standard
LFE	Eccentric bolt with washer and nut	Standard
LFZ..-A1 LFE..-A1	Concentric or eccentric bolt with washer and nut, drive fit lubrication nipple and sealing cap	Standard
NIP-A2	Drive fit lubrication nipple	Accessory
VD2	Sealing cap	Accessory

Lubrication

Bolts LFZ..-A1 and LFE..-A1 have a lubrication hole. Track rollers of outside diameter ≧ 52 mm can be lubricated via this hole.
A lubrication nipple NIP-A2 can be pressed into the hole, *Figure 1*.
If the hole will not be used for relubrication, it must be closed off using the sealing cap VD2.

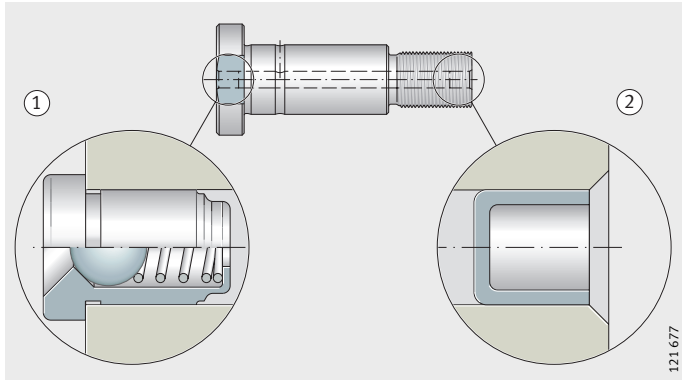

① Drive fit lubrication nipple NIP A2
② Sealing cap VD2

Figure 1
Drive fit lubrication nipple and sealing cap

Corrosion-resistant design

In this case, the bolts, washers and nuts are made from corrosion-resistant steel. These designs have the suffix RB.

Further information

Further information is given on the following pages:

- dimension table see page 76
- track rollers see page 60
- guideways see page 66
- accessories see page 92.

Solid profile
Hollow section profile

LFS

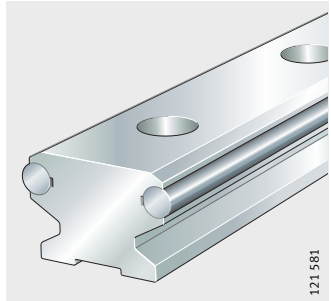

LFS..-C

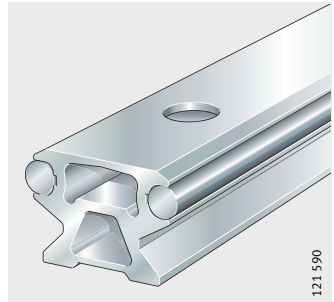

Flat design

Two raceways or one raceway

LFS..-F

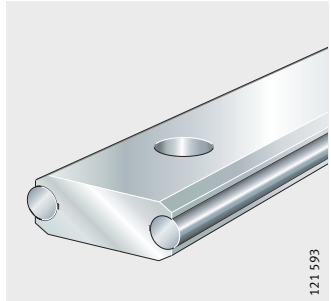

LFS..-FH

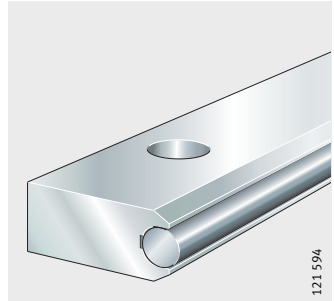

Support rail

LFS..-M

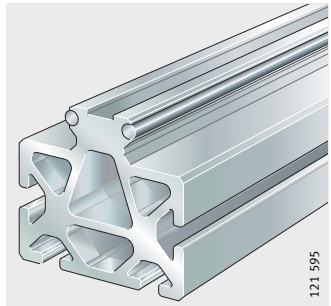

With slots

For toothed racks or toothed belts

LFS..-N

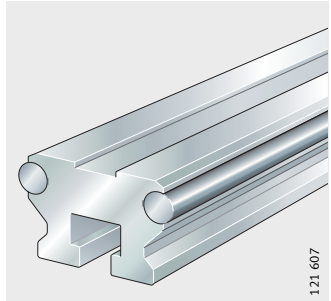

LFS..-NZZ

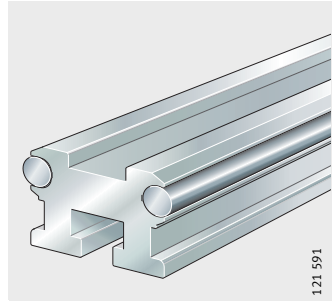

Wide, flat design

For toothed racks or toothed belts

LFS120

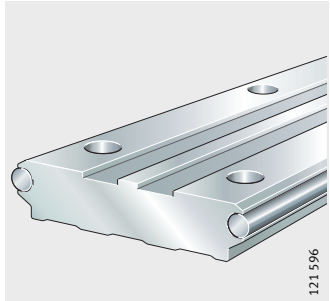

Half guideway

With hollow section

LFS..-CH

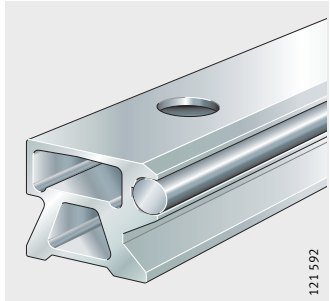

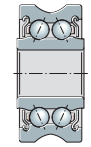

Curved guideway element

LFSR

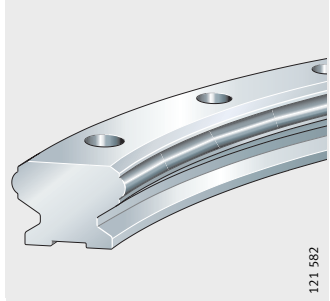

Features

Designs

Guideway designs: see table.

Guideway	Design
LFS 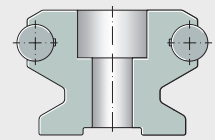 121 637	▪ With solid profile For location from above through holes
LFS..-C 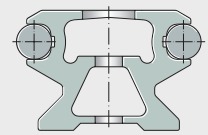 121 638	▪ With hollow section profile (low mass) ▪ Location from above through holes ▪ Ends of hollow sections closed off by plastic end covers
LFS..-F 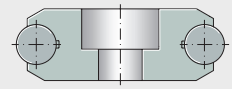 121 639	▪ Flat guideway ▪ Preferably for applications with stationary carriage and moving guideway ▪ Location from above through holes
LFS..-M 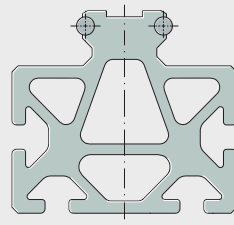 121 640	▪ With support rail giving high bending rigidity ▪ The support rail can be incorporated in modular constructions by means of slots. The slots are designed for nuts to DIN EN ISO 4 032 and T-nuts to DIN 508 ▪ The end faces of the hollow sections are closed off using plastic end covers. Slot closing strips are also available
LFSR 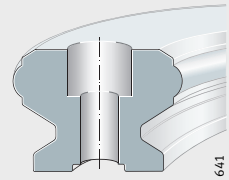 121 641	▪ Curved guideway element made from steel ▪ Location from above through holes ▪ Combinations of curved guideway elements or of curved and straight elements should be treated in the same way as multi-piece guideways and must **always be ordered together**

Designs
continued

Guideway	Design
LFS120 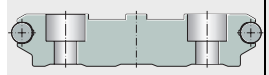 121 646	- Wide, low guideway - With recesses for toothed racks or toothed belts - Location from above through holes
LFS..-CH 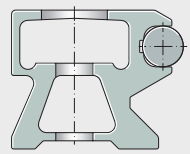 121 643	- With hollow section (low mass) and only one shaft as raceway (half guideway) - Mainly for applications with increased distance between support sides - Location from above through holes
LFS..-FH 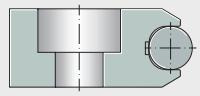 121 644	- Flat guideway with only one shaft as raceway - Mainly for applications with increased distance between support sides - Location from above through holes
LFS..-N, LFS..-NZZ 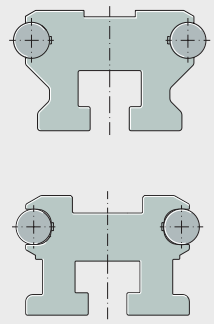 121 656	- With T-slot for location from below - The upper slot in the guideways and the lateral slots in LFS..-NZZ are suitable for toothed racks or toothed belts - Supplied with special support washers for the fixing screws; the quantity is based on the length of the guideway
TSN 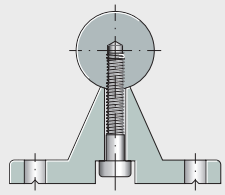 121 657	- Composite unit, aluminium support rail with screw mounted raceway shaft - Location from above - See Catalogue WF1

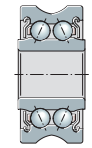

Guideways without fixing holes

All LFS guideways with the exception of LFSR are also available without fixing holes; suffix OL.

Design and safety guidelines

Guideway hole patterns

Unless specified otherwise, the guideways have a symmetrical hole pattern, *Figure 1*.

Upon request, an asymmetrical hole pattern may be available. In this case, $a_L \geqq a_{L\,min}$ and $a_R \geqq a_{R\,min}$.

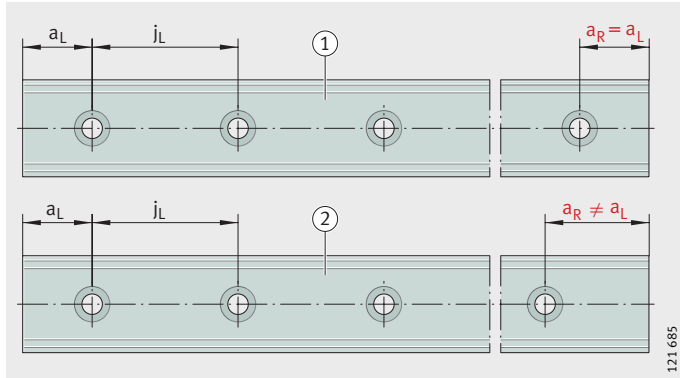

① Symmetrical hole pattern
② Asymmetrical hole pattern

Figure 1
Hole patterns of guideways with one row of holes

Hole pitch values

The hole pitch values j_L are stated in the dimension tables. For high loads, guideways are available with reduced hole pitch values j_L, *Figure 2*.

These guideways have the suffix E or EE; examples: LFS..-E, LFS..-EE.

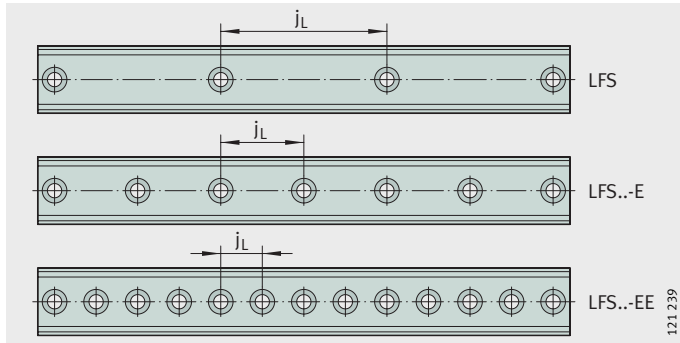

Figure 2
Hole pitch values j_L

Maximum number of pitches between holes

The number of pitches between holes is the rounded whole number equivalent to:

$$n = \frac{l - 2 \cdot a_{L\,min}}{j_L}$$

The distances a_L and a_R are generally determined by:

$$a_L + a_R = l - n \cdot j_L$$

For guideways with a symmetrical hole pattern:

$$a_L = a_R = \frac{1}{2} \cdot (l - n \cdot j_L)$$

Number of holes:

$$x = n + 1$$

a_L, a_R mm
Distance between start or end of guideway and nearest hole

$a_{L\,min}$, $a_{R\,min}$ mm
Minimum values for a_L, a_R according to dimension tables

l mm
Guideway length

n –
Maximum possible number of hole pitches

j_L mm
Distance between holes

x –
Number of holes.

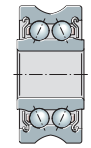

Attention! If the minimum values for a_L und a_R are not observed, the counterbores of the holes may be intersected.

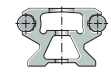

Multi-piece guideways

If single-piece guideways are not possible, guideways LFS can be assembled from matched and marked sections, *Figure 3*.

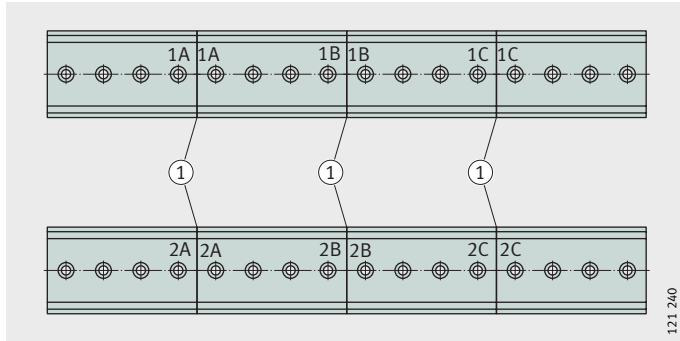

① Marked joints

Figure 3
Multi-piece guideways

Two guideways LFS can have a deviation from each other at the joint of:

- $\Delta a = \pm 0{,}01$ mm
- $\Delta h_4 = \pm 0{,}05$ mm, *Figure 4*.

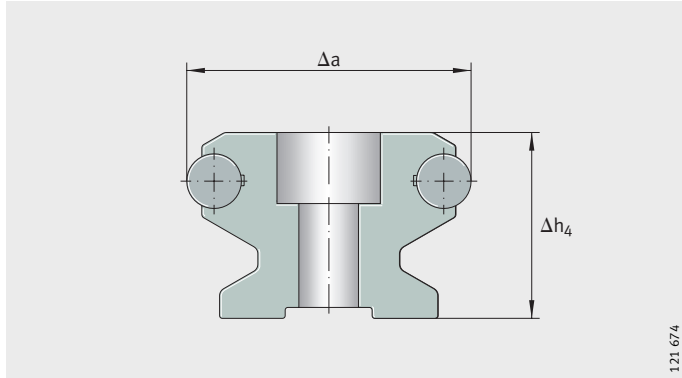

Figure 4
Deviation at the joint on guideways assembled from sections

Guideways without holes

All guideways LFS are available without holes, with the exception of LFSR. These guideways have the suffix OL, for example LFS..-OL.

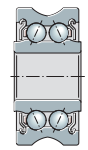

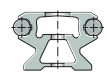

Locating track rollers

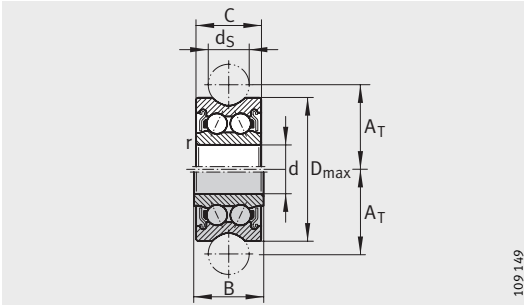

LFR..-2Z

Dimension table · Dimensions in mm

Designation	Mass m ≈kg	Dimensions d	D_{max}	B	A_T	C
LFR50/5-4-2Z	0,01	5	16	8	9	7
LFR50/5-4-2RS-RB						
LFR50/5-6-2Z	0,01	5	17	8	10,5	7
LFR50/5-6-2RS-RB						
LFR50/8-6-2Z	0,02	8	24	11	14	11
LFR50/8-6-2RS-RB						
LFR5201-10-2Z	0,08	12	35	15,9	20,65	15,9
LFR5201-10-2RS-RB						
LFR5301-10-2Z	0,1	12	42	19	24	19
LFR5301-10-2RS-RB						
LFR5302-10-2Z	0,17	15	47	19	26,65	19
LFR5302-10-2RS-RB						
LFR5201-12-2Z	0,08	12	35	15,9	21,75	15,9
LFR5201-12-2RS-RB						
LFR5204-16-2Z	0,23	20	52	22,6	31,5	20,6
LFR5204-16-2RS-RB						
LFR5206-20-2Z	0,43	25	72	25,8	41	23,8
LFR5206-20-2RS-RB[5]						
LFR5206-25-2Z	0,43	25	72	25,8	43,5	23,8
LFR5206-25-2RS-RB						
LFR5207-30-2Z	0,66	30	80	29	51	27
LFR5207-30-2RS-RB[5]						
LFR5208-40-2Z	1,36	40	98	38	62,5	36
LFR5208-40-2RS-RB[5]						
LFR5308-50-2Z	1,4	40	110	46	72,5	44
LFR5308-50-KDD-RB[5]						

Corrosion-resistant design with the suffix ..-RB.

1) Effective dynamic load rating as track roller (radial).
2) Effective static load rating as track roller (radial).
3) Fatigue limit load.
4) Rolling contact diameter.
5) Corrosion-resistant design available by agreement.

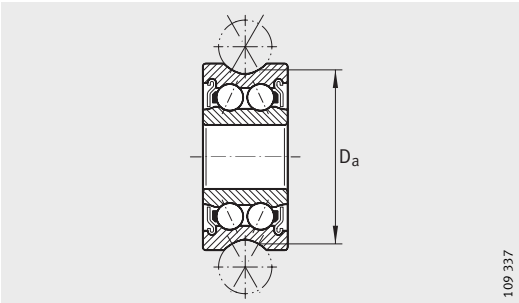

LFR..-2Z

			Load carrying capacity				
d_s	D_a 4)	r_{min}	$C_{r\,w}$ 1) N	$C_{0r\,w}$ 2) N	C_{ur} 3) N	$F_{r\,per}$ N	$F_{0r\,per}$ N
4	14,54	0,2	1 560	850	43	1 700	1 700
6	15,8	0,2	1 630	900	44,5	2 230	1 800
6	22,8	0,3	4 100	2 300	115	2 550	4 600
10	32,25	0,6	8 300	5 000	250	4 550	8 300
10	38,95	0,6	13 200	7 700	370	6 100	11 600
			11 700	7 200	360	6 600	2 100
10	44,25	1	14 500	9 100	455	9 200	16 700
12	33,1	0,6	8 300	5 000	250	4 500	8 200
16	49,14	1	15 300	10 100	520	10 000	17 600
20	64,68	1	23 200	16 500	870	20 800	33 000
25	65,35	1	22 700	16 100	850	18 800	32 000
30	76,02	1	28 500	20 800	1 100	18 000	31 000
40	90,36	1,1	38 500	29 000	1 480	50 000	58 000
50	101,7	1,1	54 000	40 500	2 000	69 000	81 000

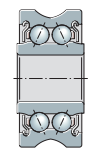

Bolts

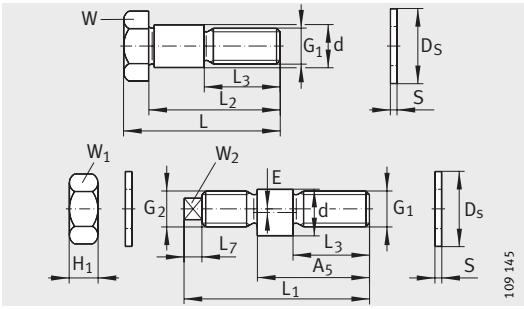

LFZ, LFE

Dimension table · Dimensions in mm

Designation	Mass m ≈kg	Dimensions d	G_1	G_2	L	L_2	L_3	L_1	A_5
LFZ5	0,01	5	M4	–	19,5	16	9,5	–	–
LFE5-0,5				M4	–	–	9	20,5	15
LFZ8	0,02	8	M8	–	28,3	24,3	15	–	–
LFE8-1				M8X0,75	–	–	13,7	33,2	22
LFZ12	0,04	12	M10	–	43	36	22	–	–
LFE12-1				M10	–	–	19,5	50	33,5
LFZ12/M12	0,06			–	50,8	43,8	24	–	–
LFE12-1/M12				M12	–	–		57	41
LFZ15	0,06	15	M12	–	50,8	43,8	26	–	–
LFE15-1				M12	–	–	24	57	41
LFZ12X45-A1[2]	0,04	12	M10X1,5	–	50	45	16	–	–
LFE12X45-A1[2]									30
LFZ20X67-A1	0,2	20	M16X1,5	–	75	67	23	–	–
LFE20X67-A1									45
LFZ25X82-A1	0,4	25	M20X1,5	–	92	82	30	–	–
LFE25X82-A1									57
LFZ30X95-A1	0,62	30	M24X1,5	–	107	95	32	–	–
LFE30X95-A1									67
LFZ40X107-A1	1,1	40	M30X1,5	–	117	107	42	–	–
LFE40X107-A1									72
LFZ40X115-A1	1,2				125	115			–
LFE40X115-A1									72

Corrosion-resistant design available by agreement.

1) No washer required.

2) Without lubrication hole.

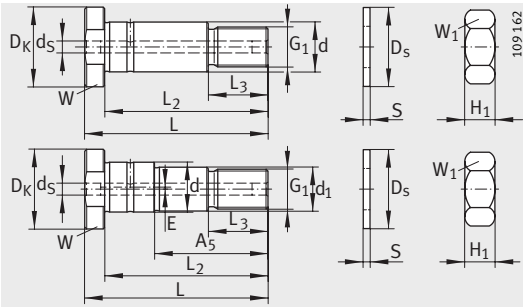

LFZ..-A1, LFE..-A1

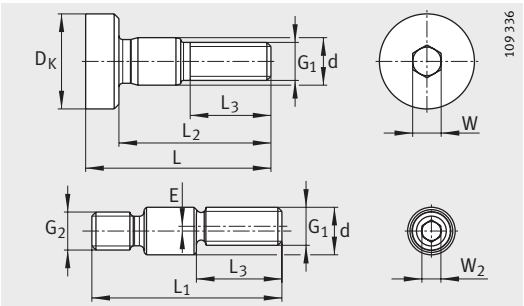

LFZ5 and LFE5-0,5

L_7	D_s	E	H_1	S	D_K	d_s	d_1	Width across flats		
								W	W_1	W_2
–	–	–	–	–[1)]	10	–	–	3	–	–
		0,5	2,9		–			–	7	2
–	14	–	–	1	–	–	–	12	–	–
3,5		1	4					–	13	5
–	21	–	–	1,8	–	–	–	17	–	–
5		1	8,4					–	17	6
–	19	–	–					17	–	–
5		1	6,5	1,5				–	17	6
–	21	–	–	2	–	–	–	19	–	–
4		1	6,5					–	19	6
–	21	–	8	2	20	–	–	17	17	–
		0,75					10			
–	30	–	13	3	30	5,9	–	27	24	–
		1					17			
–	37	–	16	3	40	5,9	–	36	30	–
		1					22			
–	44	–	19	4	45	5,9	–	41	36	–
		1					27			
–	56	–	24	4	55	5,9	–	46	46	–
		1					36			
		–					–			
		1					36			

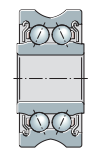

Non-locating track rollers

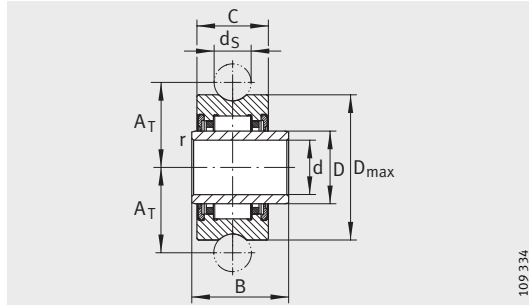

LFR..-2RSR-NA

Dimension table · Dimensions in mm

Designation	Inner ring[4]	Mass	Dimensions								Load carrying capacity		
		m ≈kg	d	D_{max}	$B^{0}_{-0,12}$	A_T	C	D	d_S	r_{min}	C_{rw}[1] N	C_{0rw}[2] N	C_{urw}[3] N
LFR22/8-6-2RSR-NA	**IR8X12X14**	0,032	8	24	14	14	11,8	12	6	0,3	4 000	4 300	630
LFR2202-10-2RSR-NA	**IR15X20X16**	0,079	15	35	16	20,63	13,8	20	10	0,3	6 500	9 300	1 310
LFR2204-10-2RSR-NA	**IR20X25X20**	0,17	20	47	20	26,64	17,8	25	10	0,3	13 80	18 60	2 550

Non-locating track rollers also available without inner ring: LFR..-2RSR-RNA.

Note the guidelines relating to the adjacent construction, see page 63.

Corrosion-resistant design available by agreement.

1) Effective dynamic load rating as track roller (radial).

2) Effective static load rating as track roller (radial).

3) Fatigue limit load.

4) Lubrication hole in inner ring (diameter) 2 mm.

Possible combinations of track rollers and bolts

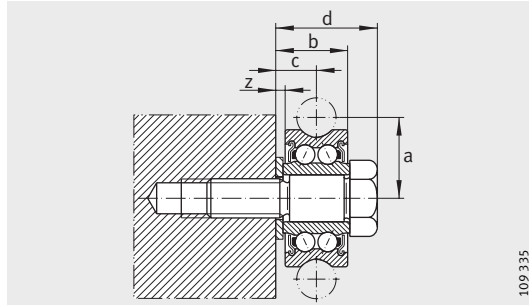

Mounting situation

Dimension table · Dimensions in mm

Designation		Dimensions				
Locating track roller	Bolt	a[1]	b	z	c	d
LFR50/5-4-2Z[2]	**LFZ5**	9	8	–	4	10,9
LFR50/5-4-2Z[2]	**LFE5-0,5**					
LFR50/5-6-2Z[2]	**LFZ5**	10,5	8	–	4	10,9
LFR50/5-6-2Z[2]	**LFE5-0,5**					
LFR50/8-6-2Z	**LFZ8**	14	12	1	7	16
LFR50/8-6-2Z	**LFE8-1**					
LFR5201-10-2Z	**LFZ12**	20,65	17,8	1,8	10,7	25,7
LFR5201-10-2Z	**LFE12-1**					
LFR5301-10-2Z	**LFZ12/M12**	24	20,8	1,8	12,2	27,3
LFR5301-10-2Z	**LFE12-1/M12**					
LFR5302-10-2Z	**LFZ15**	26,65	20,8	1,8	12,2	27,3
LFR5302-10-2Z	**LFE15-1**					
LFR5201-12-2Z	**LFZ12X45-A1**	21,75	17,9	2	10,95	25,9
LFR5201-12-2Z	**LFE12X45-A1**					
LFR5204-16-2Z	**LFZ20X67-A1**	31,5	25,6	3	15,8	38,6
LFR5204-16-2Z	**LFE20X67-A1**					
LFR5206-20-2Z	**LFZ25X82-A1**	41	28,8	3	17,4	44,8
LFR5206-20-2Z	**LFE25X82-A1**					
LFR5206-25-2Z	**LFZ25X82-A1**	43,5	28,8	3	17,4	44,8
LFR5206-25-2Z	**LFE25X82-A1**					
LFR5207-30-2Z	**LFZ30X95-A1**	51	33	4	20,5	52
LFR5207-30-2Z	**LFE30X95-A1**					
LFR5208-40-2Z	**LFZ40X107-A1**	62,5	42	4	25	62
LFR5208-40-2Z	**LFE40X107-A1**					
LFR5308-50-2Z	**LFZ40X115-A1**	72,5	50	4	29	74
LFR5308-50-2Z	**LFE40X115-A1**					

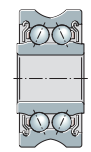

[1] With eccentric bolts, the dimension a varies by ±E according to the table, page 77.

[2] No washer required.

Guideways

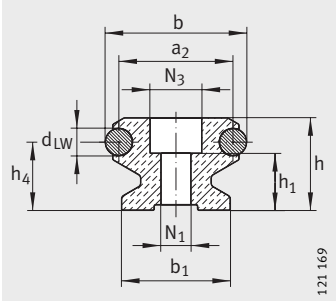

LFS

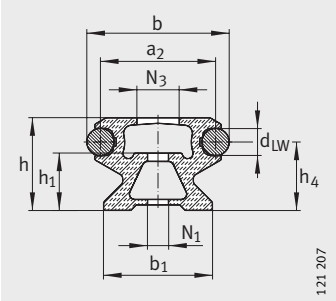

LFS..-C

Dimension table · Dimensions in mm

Designation	Mass m ≈kg	Dimensions b	h	l_{max} [1]	Mounting dimensions b_1	a_2	j_L	a_L [2] min.	a_L [2] max.	a_R [2] min.	a_R [2] max.
LFS20	0,6	20	12,2	2 000	17	16	62,5	9	54	9	54
LFS25	1,1	25	15	2 000	21	19	62,5	10	54	10	54
LFS32	1,6	32	20	6 000	24	26	125	11	116	11	116
LFS32-E							62,5		52		52
LFS32-C [4]	1,1						125		116		116
LFS32-CE [4]							62,5		52		52
LFS32-F	1		10	4 000	–		125		116		116
LFS42-C [4]	2,2	42	20	8 000	28	32	125	20	113	20	113
LFS42-CE [4]							62,5		51		51
LFS42-F			15	4 000			125	17		17	
LFS52	4,4	52	34	8 000	40	42	250	17	235	17	235
LFS52-E							125		110		110
LFS52-EE							62,5		49		49
LFS52-C [4]	3						250		235		235
LFS52-CE [4]							125		110		110
LFS52-CEE [4]							62,5		49		49
LFS52-F			18	4 000	–		250		235		235
LFS52-FE							125		110		110
LFS86-C [4]	4,4	86	34	8 000	71	76	250	17	235	17	235
LFS86-CE [4]							125		110		110
LFS120 [7]	7,9	120	25	6 000	100	110	250	17	235	17	235
LFS120-E							125		110	17	110

Guideways in corrosion-resistant design: LFS..-RB, note page 17.

Guideways LFS, LFS..-C and LFS..-F available without holes: LFS..-OL, LFS..-C OL, LFS..-F OL.

Modulus of elasticity for LFS..-C, LFS..-CE, LFS..-CEE, LFS..-E, LFS..-EE, LFS..-F, LFS..-FE: 72 000 N/mm^2.

1) Maximum length of single-piece guideways; longer guideways are supplied in several sections and are marked accordingly.

2) a_L and a_R are dependent on the guideway length l_{max}, for calculation see page 70.

3) Under maximum load F_z and F_{0z}, support washers DIN 433 and the maximum tightening torque according to the table, page 26, are required.

4) The design of the hollow sections is dependent on the size.

5) Counterbore depth for screws DIN 7 984.

6) If support washers to DIN 433 are used, screws to DIN 7 984 are recommended.

7) Hole patterns Z and ZZ are available by agreement.

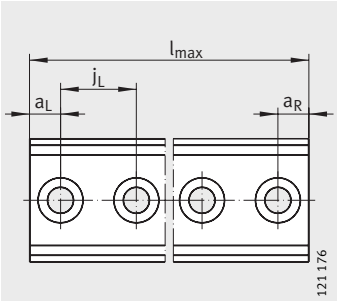

LFS, LFS..-C, LFS..-F
View rotated 90°

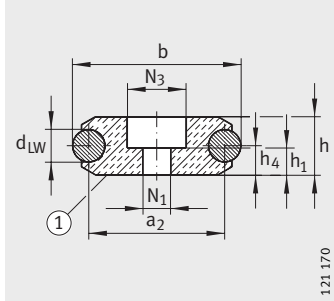

LFS..-F
① Underside marked

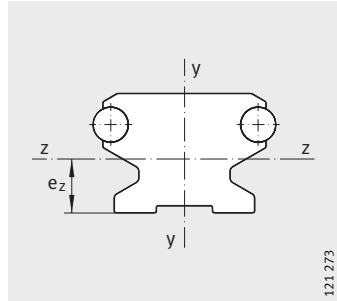

Bending axes

					Surface data					
d_{LW}	h_4	h_1	N_1	N_3 3)	Cross-sectional area mm²	y-y I_y mm⁴	y-y W_y mm³	z-z e_z mm	z-z I_z mm⁴	z-z W_z mm³
4	9	7,6	4,5	8	165	3 065	362	6,4	2 053	324
6	10,6	8,5	5,5	10	237	6 390	608	7,5	4 510	600
6	15	12	6,5	12	440	20 100	1 440	10,4	14 100	1 360
					261	18 305	1 165	10,1	10 072	995
	5	3,5 5)			230	11 300	810	5	2 190	438
10	12,6	12 6)	9	15	358	33 929	1 858	10,1	14 052	1 391
	7,5	8 5)			370	29 280	1 864	7,5	16 200	2 160
10	25,1	21	11	19	1 170	138 624	5 878	17,8	113 037	6 350
					649	113 821	4 896	17,1	74 878	4 378
	9	8 5)			670	84 000	3 610	9	19 900	2 211
10	25,1	21 6)	13	21	1 185	613 720	16 587	17,5	155 160	8 866
10	16,1	12	11	19	2 468	2 330 980	40 751	12,5	9 365	117 074

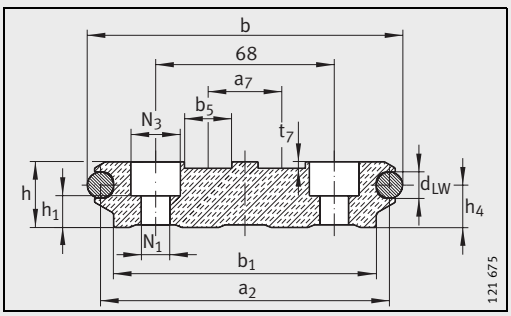

LFS120

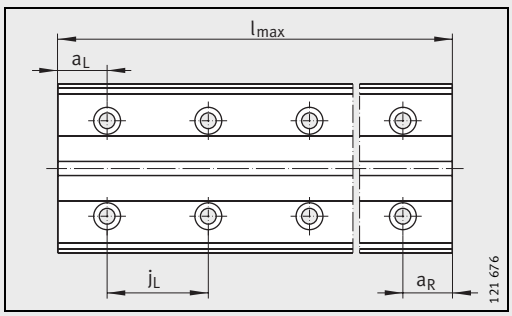

LFS120

Guideways

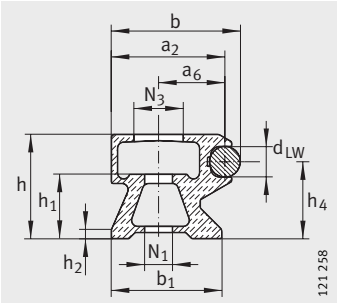

LFS..-CH

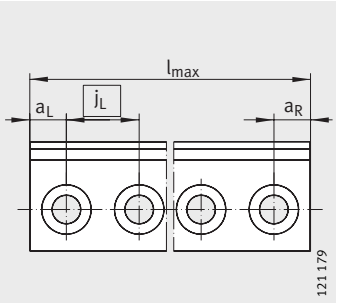

LFS..-CH, LFS..-FH
View rotated 90°

Dimension table · Dimensions in mm

Designation	Mass m ≈kg	Dimensions b	h	l_{max} [1]	Mounting dimensions b_1	a_2	a_6	j_L	a_L [2] min.	a_L [2] max.	a_R [2] min.	a_R [2] max.
LFS32-CH	0,9	26	20	4 000	24	23	13	125	11	116	6	116
LFS32-CHE								62,5		52		52
LFS32-FH	0,8		10		–			125		116		116
LFS32-FHE								62,5		52		52
LFS52-CH	2,1	42	34	8 000	36	37	21	250	17	235	10	235
LFS52-CHE								125		110		110
LFS52-CHEE								62,5		49		49
LFS52-FH	2,3		18		–			250		235		235
LFS52-FHE								125		110		110
LFS52-FHEE								62,5		49		49

Guideways in corrosion-resistant design: LFS..-RB, note page 17.

Guideways LFS..-CH and LFS..-FH available without holes: LFS..-CH OL, LFS..-FH OL.

Modulus of elasticity for LFS..-CH, LFS..-CHE, LFS..-CHEE, LFS..-E, LFS..-FH, LFS..-FH, LFS..-FHEE: 72 000 N/mm^2.

1) Maximum length of single-piece guideways; longer guideways are supplied in several sections and are marked accordingly.

2) a_L and a_R are dependent on the guideway length l_{max}, for calculation see page 70.

3) For screws to DIN 912-8.8 (DIN EN ISO 4762), and under maximum load, support washers to DIN 433 (DIN EN ISO 7092) are required.

4) Counterbore depth for screws DIN 7 984.

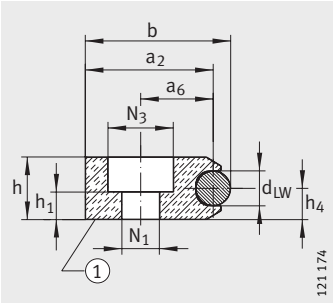

LFS..-FH
① Underside marked

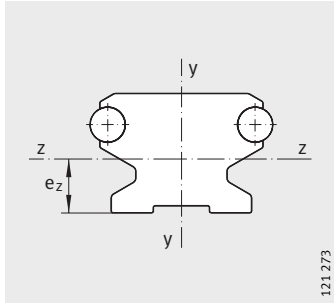

Bending axes

						Surface data					
d_{LW}	h_1	h_4	h_2	N_1 3)	N_3	Cross-sectional area mm²	y-y		z-z		
							I_y mm⁴	W_y mm³	e_z mm	I_z mm⁴	W_z mm³
6	12	15	2	6,5	12	220	12 374	1 267	11,4	9 118	799
	3,5	5	–			216	8 681	790	5	1 897	379
10	21	25,1	3	11	19	555	75 367	4 558	16	62 469	3 904
	8 4)	9	–			629	66 642	3 765	9	17 798	1 977

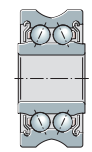

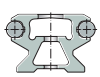

Guideways

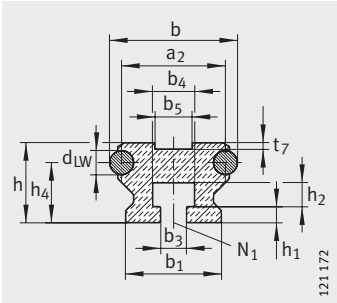

LFS..-N

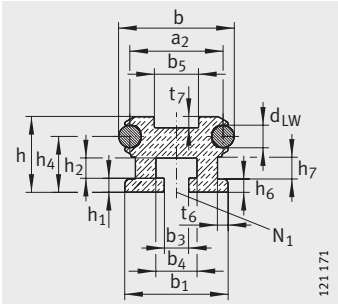

LFS..-NZZ

Dimension table · Dimensions in mm

Designation	Mass m ≈kg/m	Dimensions b	h	l_{max} [1]	Mounting dimensions b_1	a_2	b_3 [2]	b_4	b_5	t_6	a_7	j_L [3]	d_{LW}	h_1	h_2	h_5	h_4
LFS25-M [5]	3,5	25	46	2 000	56	19	–	–	5,2	30	–	–	6	–	22	–	41,6
LFS25-N	1	25	15	2 000	21	19	5,5	8,2	–	–	–	62,5	6	3	5	–	10,6
LFS32-M [5]	6,4	32	66,5	6 000	75	26	–	–	10,2	43	–	–	6	–	25	–	61
LFS32-N	1,4	32	20	6 000	24	26	6,5	10,5	10,5	–	–	125	6	4	6	–	15
LFS52-M [5]	11,2	52	98,6	8 000	112	42	18	44	10,2	80	52	–	10	–	25	50	89,7
LFS52-NZZ	3,9	52	34	8 000	46,5	42	11	18,5	18,5	4,7	–	250	10	6,4	9	–	25,1

Guideways in corrosion-resistant design: LFS..-RB, note page 17.

Modulus of elasticity for LFS..-M, LFS..-N, LFS..-NZZ, LFS..-ZZ: 72 000 N/mm^2.

1) Maximum length of single-piece guideways; longer guideways are supplied in several sections and are marked accordingly.

2) For screws to DIN 931 (DIN EN ISO 4014), DIN 933-8.8 (DIN EN ISO 4017), special support washers are included in the delivery of guideways LFS..-N and LFS52-NZZ.

3) Recommended screw pitch value (hole pitch value), see page 70.

4) One core hole for non-cutting thread drill or self-tapping screws to DIN 7 513.

5) The guideway LFS..-M can only be combined with carriages with adjustable clearance. If SF and LFCL carriages are to be used, please contact us first.

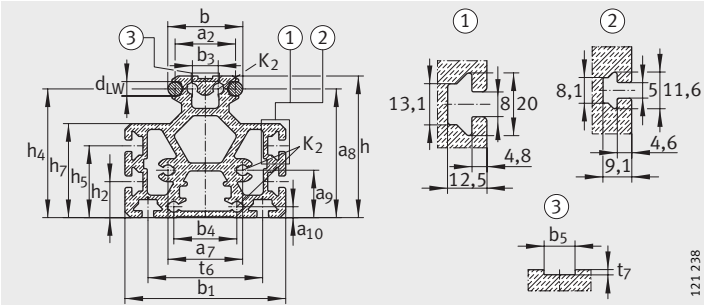

LFS..-M
① for LFS52-M and LFS32-M
② for LFS25-M, ③ Detail of slot

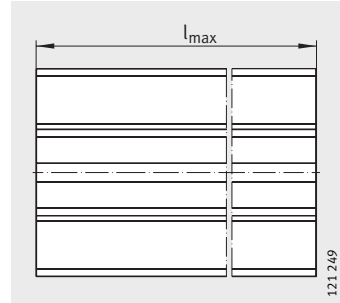

LFS..-M
View rotated through 90°

								Surface data					
h_7	h_6	t_7	a_{10}	a_9	a_8	N_1	K_2 ∅[4]	Cross-sectional area mm²	y-y I_y mm⁴	y-y W_y mm³	z-z e_z mm	z-z I_z mm⁴	z-z W_z mm³
31,5	–	1,6	–	–	–	–	4,65	1 156	314 429	11 230	19,4	186 693	9 623
–	–	–	–	–	–	M5	–	192	5 980	570	8	4 420	530
47	–	1,6	–	–	–	–	–	2 206	1 000 234	26 672	36,8	762 105	20 707
–	–	1,6	–	–	–	M6	–	360	19 600	1 400	11,1	12 600	1 135
65,4	–	1,8	7,5	33	89,7	–	7,45	3 691	3 717 250	66 380	42,6	3 014 470	55 462
10	6	5	–	–	–	M10	–	994	170 350	7 327	16,8	82 786	4 927

LFS..-N, LSF52-NZZ
View rotated through 90 °

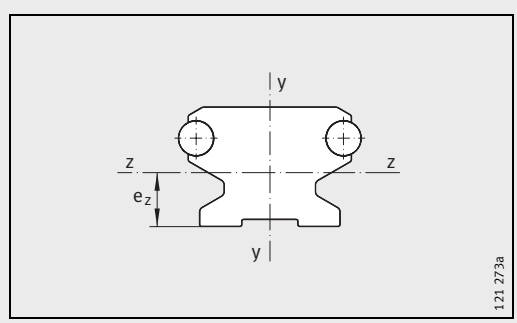

Bending axes

Guideways

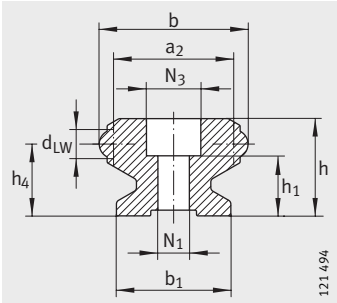

LFSR..-ST

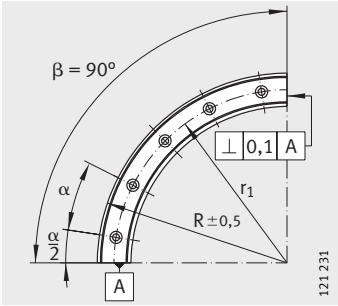

LFSR../90-ST

Dimension table · Dimensions in mm

Designation	Mass	Dimensions							
	m ≈kg	b	h	R	β °	b_1	a_2	d_{LW}	h_1
LFSR32-100/90-ST	0,5	32	20	100	90	24	26	6	13,5
LFSR32-100/180-ST	1				180				
LFSR32-100/360-ST	2				360				
LFSR32-150/90-ST	0,8			150	90				
LFSR32-150/180-ST	1,6				180				
LFSR32-150/360-ST	3,2				360				
LFSR32-300/90-ST	1,7			300	90				
LFSR32-300/180-ST	3,4				180				
LFSR32-300/360-ST	6,8				360				
LFSR32-500/90-ST	2,9			500	90				
LFSR32-500/180-ST	5,8				180				
LFSR32-500/360-ST	11,6				360				
LFSR52-150/90-ST	2	52	34	150	90	40	42	10	21
LFSR52-150/180-ST	4				180				
LFSR52-150/360-ST	8				360				
LFSR52-300/90-ST	4,5			300	90				
LFSR52-300/180-ST	9				180				
LFSR52-300/360-ST	18				360				
LFSR52-500/90-ST	7,8			500	90				
LFSR52-500/180-ST	15,6				180				
LFSR52-500/360-ST	31,2				360				

Attention!
If these curved guideway elements are required in combination with straight guideway sections, these must always be ordered together as a unit.

Corrosion-resistant design available by agreement.

1) For screw DIN ISO 4 762-8.8.

2) Number of holes on the pitch circle r_1.

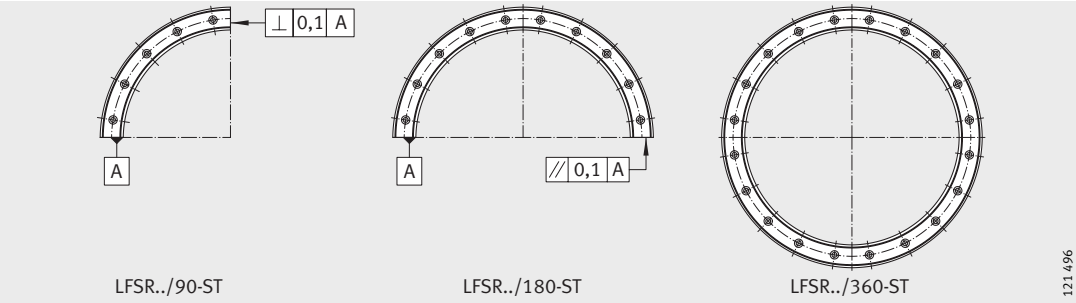

LFSR..-ST

h_4	N_1 [1)]	N_3	x [2)]	r_1	α °	α/2 °
15	6,5	12	3	84	30	15
			6			
			12			
			3	134	30	15
			6			
			12			
			4	284	22,5	11,25
			8			
			16			
			5	484	18	9
			10			
			20			
25,1	11	19	3	124	30	15
			6			
			12			
			4	274	22,5	11,25
			8			
			16			
			5	474	18	9
			10			
			20			

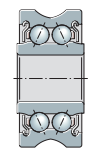

Closed oval tracks with guideway connectors VBS

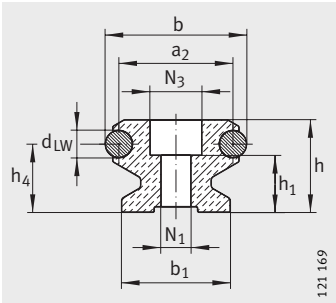

LFS (section A–A)

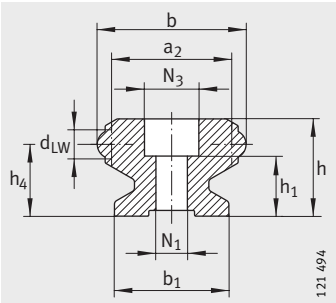

LFSR (section B–B)

Dimension table · Dimensions in mm

Closed oval tracks		Dimensions				Mounting dimensions		
Designation		b	h	β	l_{max} [1]	b_1	a_2	j_L
With two 180° arcs	With four 90° arcs			°				
–	**LFS32-OV-100/90-VBS**	32	20	90	6 000	24	26	125
LFS32-OV-100/180-VBS	–			180				
–	**LFS32-OV-300/90-VBS**			90				
LFS32-OV-300/180-VBS	–			180				
	LFS32-OV-500/90-VBS			90				
LFS32-OV-500/180-VBS	–			180				
–	**LFS52-OV-150/90-VBS**	52	34	90	8 000	40	42	250
LFS52-OV-150/180-VBS	–			180				
–	**LFS52-OV-300/90-VBS**			90				
LFS52-OV-300/180-VBS	–			180				
	LFS52-OV-500/90-VBS			90				
LFS52-OV-500/180-VBS	–			180				

Attention!
If these curved guideway elements are required in combination with straight guideway sections, these must always be ordered together as a unit.
Closed oval tracks can only be ordered as a single unit.
One unit comprises two curved guideway elements LFSR with an arc of 180° and two straight guideway sections LFS or a unit comprises four curved guideway elements LFSR with an arc of 90° and four straight guideway sections LFS.

1) Maximum length of single-piece guideways.
2) For fixing screw to DIN ISO 4 762-8.8.
3) Number of holes on the pitch circle r_1.

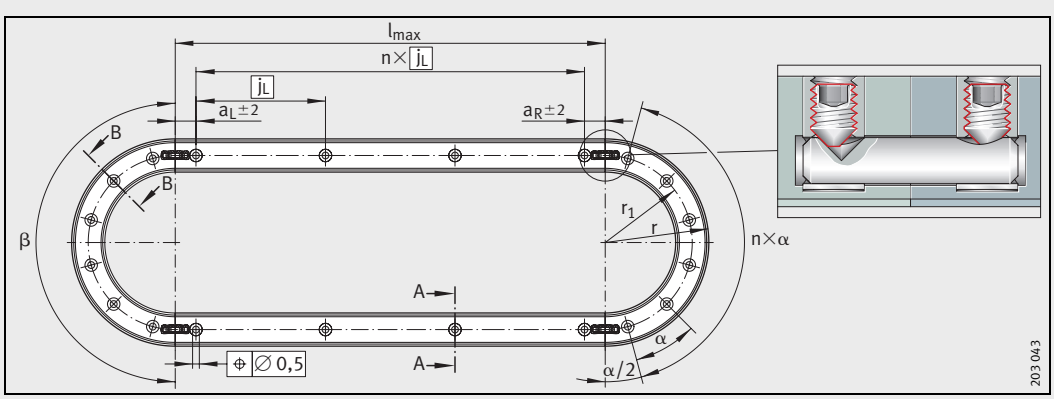

Closed oval track with two 180° arcs

a_L, a_R min.	a_L, a_R max.	d_{LW}	h_1	h_4	N_1 2)	N_3	x 3)	r	r_1	α °
36	116	6	12	15	6,5	12	3	100	84	30
							6			
30							4	300	284	22,5
							8			
							5	500	484	18
							10			
49	235	10	21	25	11	19	3	150	124	30
							6			
41							4	300	274	22,5
							8			
							5	500	474	18
							10			

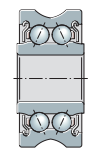

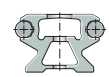

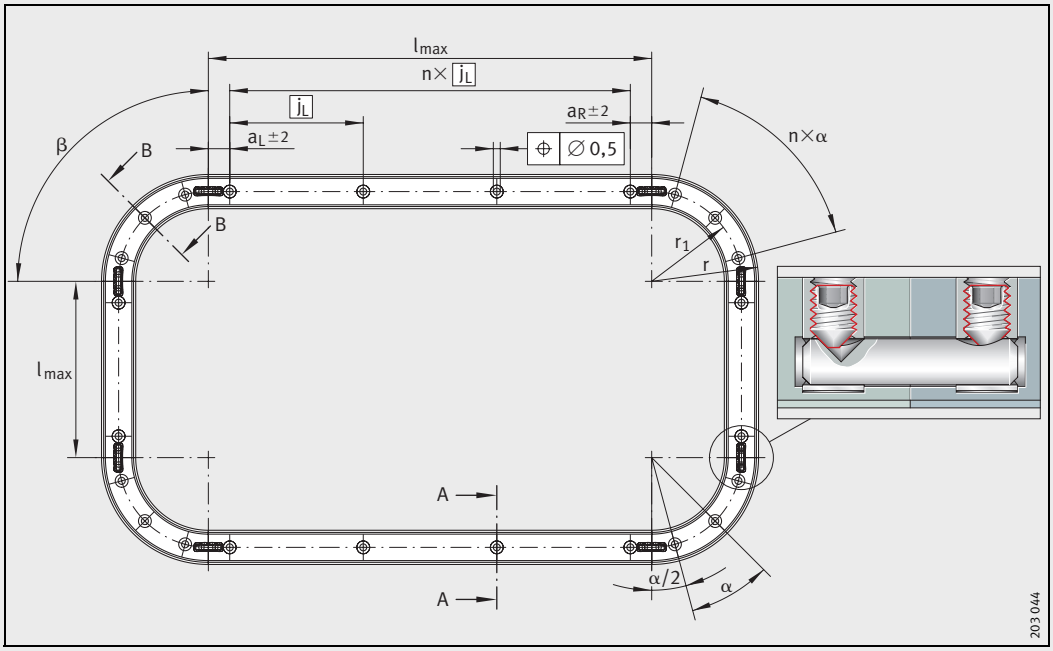

Closed oval track with four 90° arcs

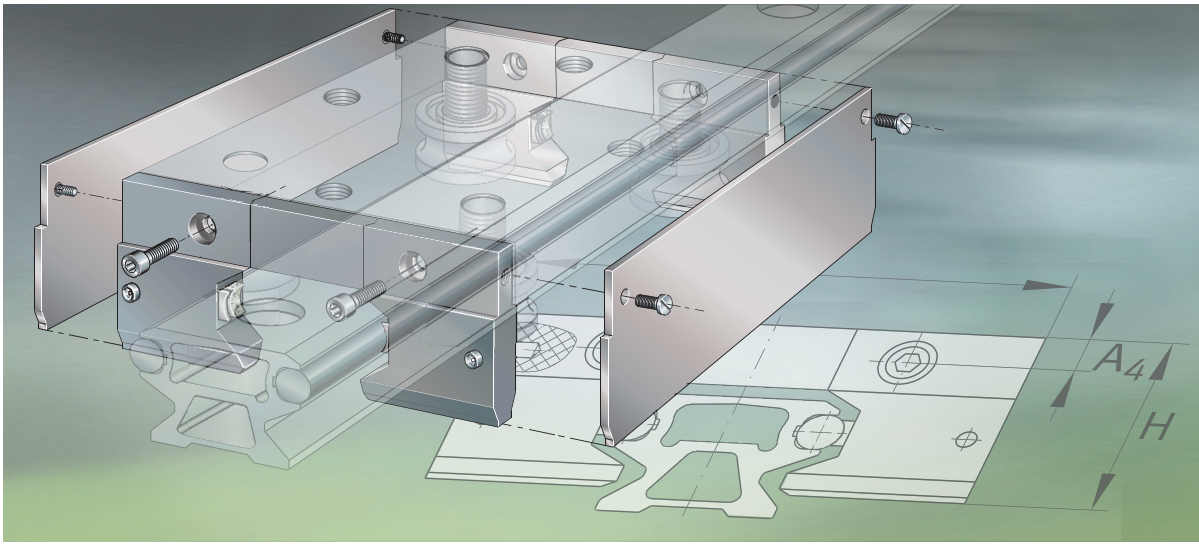

Accessories

Accessories

		Page
Product overview	Accessories	92
Features	Guideway connectors for guideways	94
	End plates	94
	Lubrication and wiper units	94
	Cap wipers	95
	Side plates	96
	Stops	96
	End covers	96
	Slot closing strips	96
	Fasteners	97
Dimension tables	Guideway connectors for guideways LFS	99
	End plates	100
	Lubrication and wiper units	101
	Cap wipers	103
	Side plates	104
	Stops	105
	End covers	107
	Slot closing strips	108

Connectors for guideways

VBS

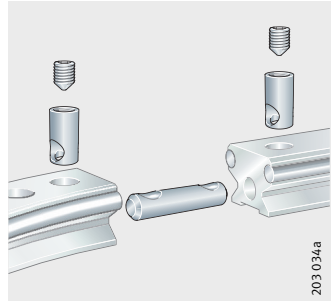

End plate

ANS.LFS

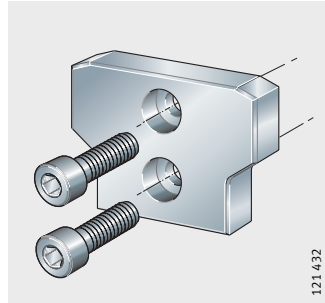

Lubrication and wiper units

AB.W

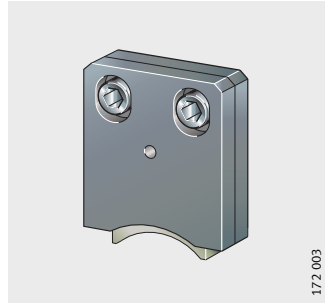

AB

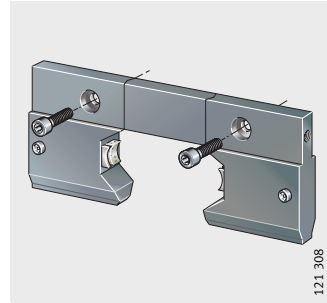

Cap wipers

AB.LFR

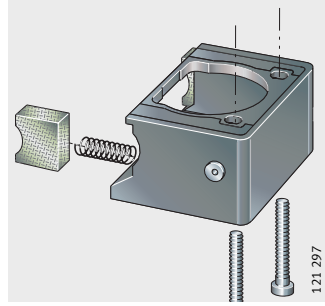

AB.LFL20

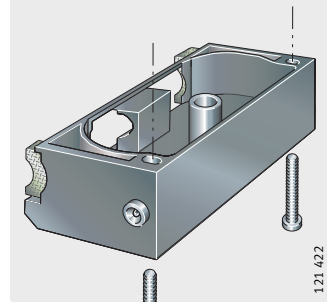

Side plates

ABAL

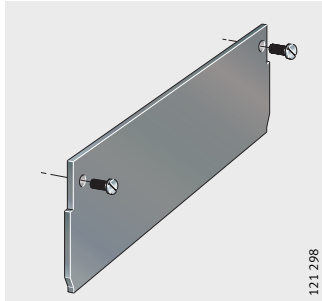

Stops

PAH

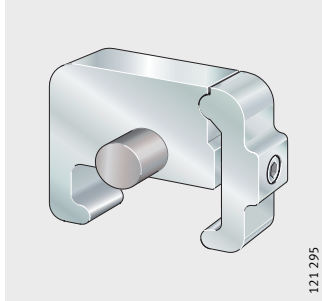

PASTP

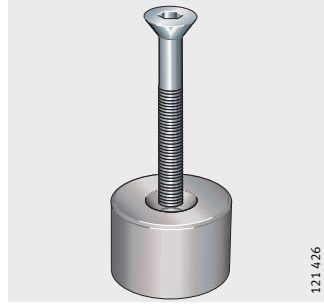

End cover
Slot closing strip

KA.LFS

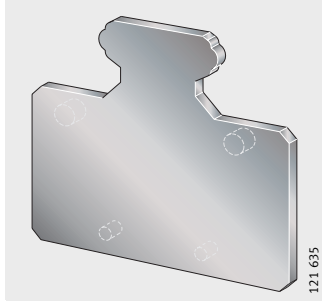

NAD

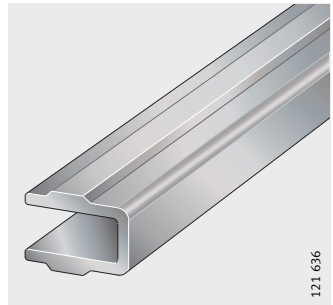

Fasteners

Fixing screw
T-nuts
T-bolt
T-strip
Fixing bracket
Fixing lug

MU, SHR, LEIS-M

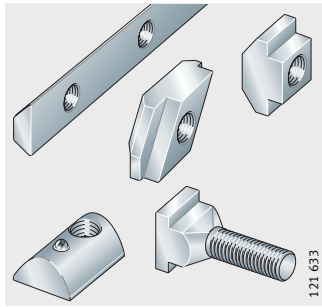

WKL, SPPR

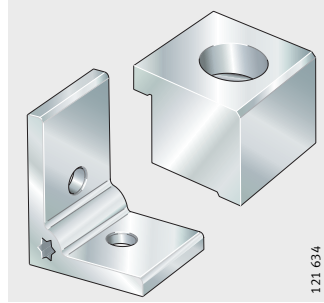

Accessories

Features

Connectors for guideways

Guideway connectors VBS are accessories for curved and straight LFS guideways.

They comprise:

- pins
- bushes
- grub screws.

The guideway connectors are suitable for all LF guideways. Curved guideways to be joined are supplied with the guideway connector as standard. Straight guideways to be joined can be supplied with the guideway connector as an option.

The VBS reduces running noise at the joint, ensures an increased operating life for the guidance system and improves the operational reliability.

End plates

End plates ANS.LFS (also for use with hollow section guideways) are made from steel. They secure the rolled-in raceway shafts by the physical locking principle. In the case of solid section guideways, holes must be made in the end faces (by the customer) for screw mounting of the end plates.

The end plates prevent the shaft creep that can occur under unfavourable conditions on all guideways that comprise an aluminium support rail into which a steel shaft is rolled or pressed.

Attention! These can be supplied already fitted, but this must be indicated when ordering.

Lubrication and wiper units

Type AB.W

The lubrication and wiper unit AB.W comprises a plastic housing and is fixed to the adjacent construction. It contains a felt lubrication insert. This is supplied soaked with oil that has H1 approval and can be replenished with oil via a hole in the housing if necessary.

Lubrication and wiper units AB.W are supplied with fixing screws.

Type AB

The lubrication and wiper unit AB comprises a plastic housing and is screw mounted to the end of the carriage LFL or LFDL. It contains felt lubrication inserts on both sides. These are supplied soaked with oil that has H1 approval and can be replenished with oil via lubrication nipples if necessary. The lubrication and wiper units AB can be fixed to carriages using two screws.

Cap wipers

The cap wipers comprise a plastic housing and are slid over the track roller from below. They contain felt lubrication inserts on both sides. These are supplied soaked with oil that has H1 approval and can be replenished with oil via lubrication nipples if necessary.

The cap wipers can be fixed using two screws to the screw mounting channels in the carriage LFCL and thus seal the track rollers from below at the screw head. When bolts LFZ and LFE are used in an application design, there is a gap that can be sealed, for example using silicone.

Cap wipers are supplied with fixing screws.

Type AB.LFR

If two or more AB.LFR are used per side, the displacement resistance can be reduced by removing the felt insert on the inner side.

AB.LFR are suitable for mounting on the carriage LFCL42 as well as customer designs. For mounting on the carriage LFCL42, the upper cover must be replaced by the two covers supplied, *Figure 1*.

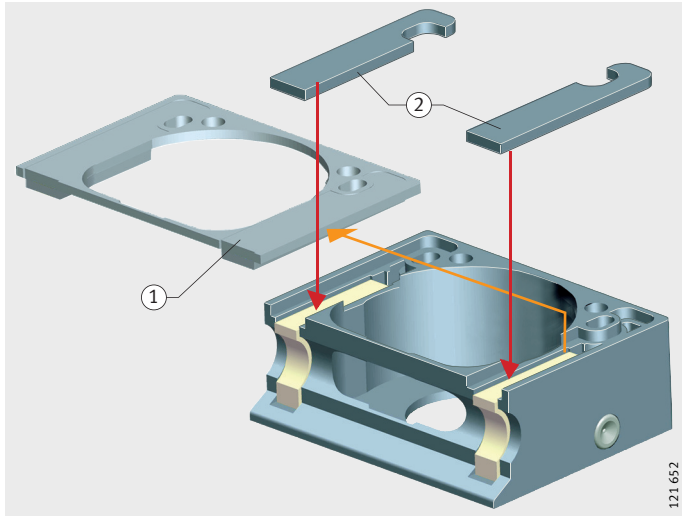

① For mounting on the customer design
② For mounting on LFCL42

Figure 1
Mounting on the carriage LFCL

Type AB.LFR5302

An exception is the cap wiper AB.LFR5302. This comprises an end cover and a relubrication and wiper unit AB.W10 that can be screw mounted to either the right or left of the end cover. Its function and location correspond to those of the other sizes.

Accessories

Side plates

The side plate ABAL is made from plastic and can be screw mounted to the sides of the carriage LFL..-SF.
The side plates are used to supplement the lubrication and wiper units AB. The carriage can be sealed on all sides, with the exception of the underside, by means of two side plates and two lubrication and wiper units.

The side plate is supplied with fixing screws.

It can only be mounted in conjunction with the lubrication and wiper unit AB.

Stops

Type PAH

The stop PAH comprises anodised aluminium and a buffer made from shock-absorbent plastic. The stop can be placed at any position on the guideway. It is then clamped in place by means of a screw.

The stop is used as an end stop or restricts the travel of the carriage.

If the carriage is to run up against a stop PAH, the central section of lubrication and wiper units must be removed.

Type PASTP

The stop PASTP is made from plastic. It can be screw mounted in a threaded hole (to be made by the customer) in the guideway.
This hole can be drilled at any position on the guideway LFS.
The stop is used as an end stop or restricts the travel of the carriage.

If the carriage is to run up against a stop PASTP, the central section of lubrication and wiper units must be removed.

End covers

End covers KA are made from plastic. The end covers close off the end faces of the hollow sections in guideways LFS..-C, LFS..-M and LFS..-CH and in the hollow section carriage LFCL.

Slot closing strips

Slot closing strips NAD are made from plastic.
They close off the slots in the guideway LFS..-M.
For information on NAD, see publication ALE, Driven Linear Units.

Fasteners

Fixing brackets, fixing lugs

For location of LFS-M with the integral profiled aluminium support rail, fixing brackets and fixing lugs are available, *Figure 2*, *Figure 3*, *Figure 4* and table Fasteners and designations, page 98.

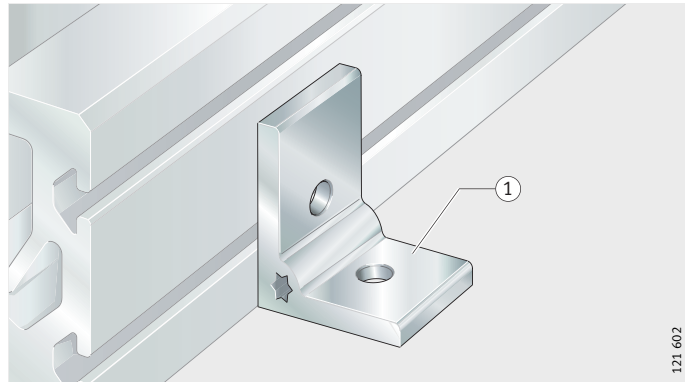

① WKL

Figure 2
Fixing bracket

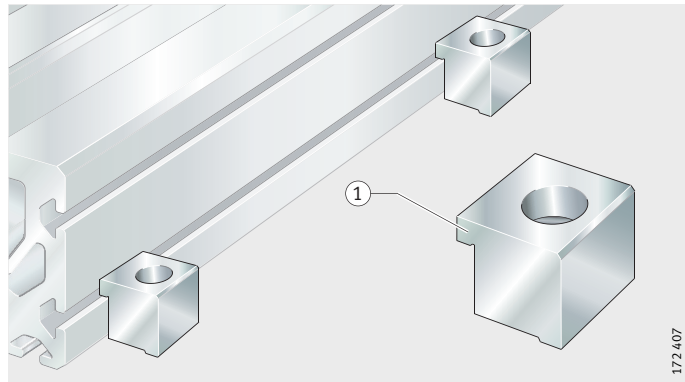

① SPPR

Figure 3
Fixing lug

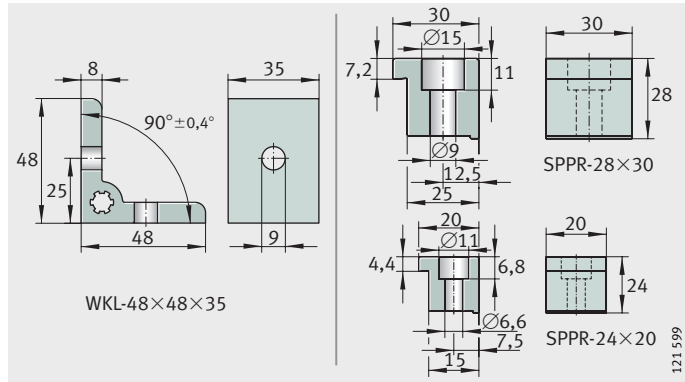

Figure 4
Fixing brackets and fixing lugs

T-strip, T-nuts, T-bolts

For integration in existing systems or for extension, T-nuts and corresponding T-bolts are available, *Figure 5* and table Fasteners and designations.

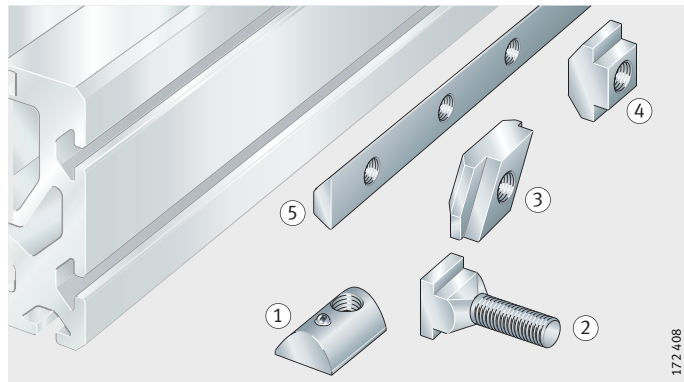

① MU..-POS
② SHR-DIN787-M8×8×32
③ MU-M
④ MU-DIN 508
⑤ LEIS-M, T-Nut

Figure 5
Fixing screws and T-nuts

Fasteners and designations

Fastener	Designation
Fixing bracket	WKL-48×48×35
For slot width 8 mm (LFS32-M, LFS52-M)	
Fixing lug	SPPR-28×30
T-nut	MU-DIN508-M4×8 MU-DIN508-M6×8
Rotatable T-nut	MU-M4×8-Rhombus MU-M6×8-Rhombus
Positionable T-nut	MU-M6×8-POS MU-M8×8-POS
T-bolt	SHR-DIN787-M8×8×32
T-strip (steel) Hole pitch50 mm	LEIS-M6/8-T-Nut (state length)[1)] LEIS-M8/8-T-Nut (state length)[1)]
For slot width 5 mm (LFS25-M)	
Fixing lug	SPPR-24×20
T-nut	MU-DIN508-M4×5
Positionable T-nut	MU-M5×5-POS

1) Maximum single-piece length: 2 000 mm.

Connectors for guideways LFS

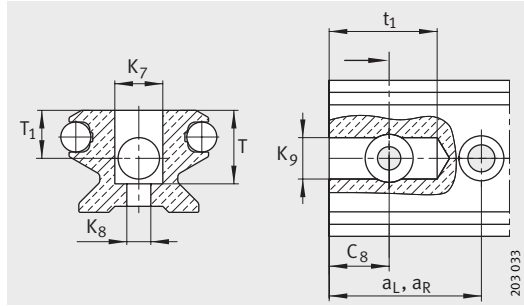

VBS

Dimension table · Dimensions in mm

Designation	Dimensions								
	T	T_1 ±0,1	t_1 +0,5	a_L min.	a_R min.	C_8 ±0,1	K_7 +0,2	K_8	K_9 +0,5
VBS32	16,5	10	25	30	30	15	12	6,5	9
VBS32-100			17			9			
VBS42	16,5	10	25	30	30	15	12	6,5	9
VBS52	30	22	30	40	40	20	16	8	13
VBS52-150			23			14			

Attention!
If these are to be used with curved guideways LFSR, please contact us.

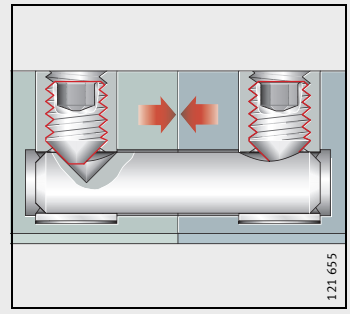

Guideway connector VBS

End plates

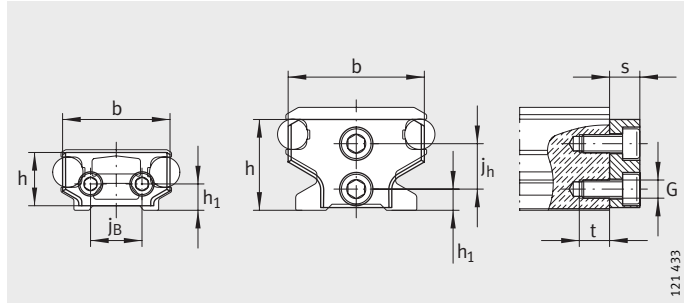

ANS.LFS

Dimension table · Dimensions in mm

Designation	Dimensions										Suitable for guideway
	b	j_B	a	s	t	N_3 ∅	h	h_1	j_h	G	
ANS.LFS20	15,4	–	–	6	12	–	11	6,2	–	M5	LFS20
ANS.LFS25	20	–	–	5	7	–	14	4	7	M3	LFS25
ANS.LFS32	30	–	–	8	7	–	20	5	10	M4	LFS32
ANS.LFS32-C	30	–	–	8	15	12H13	–	–	–	∅6,5H13	LFS32-C
ANS.LFS32-F	26	11	–	6	–	–	9	5	–	M4	LFS32-F
ANS.LFS32-FH	22	9	9	6	7	–	9	5	–	M3	LFS32-FH
ANS.LFS32-N	26	11	–	6	–	–	9	15	–	M4	LFS32-N
ANS.LFS42-C	35,5	17	–	8	7	–	18	8	–	M4	LFS42-C
ANS.LFS52	45	–	–	10	10	–	30	7	15	M6	LFS52
ANS.LFS52-C	45	–	–	10	20	19H13	30	–	–	∅11H13	LFS52-C
ANS.LFS52-F	42	21	–	8	10	–	16	9	–	M5	LFS52-F
ANS.LFS52-FH	37	20	6,5	8	10	–	16	9	–	M5	LFS52-FH
ANS.LFS52-NZZ	42	21	–	8	10	–	16	24	–	M5	LFS52-NZZ
ANS.LFS86-C	80	45	–	8	10	–	30	17,5	–	M5	LFS86-C
ANS.LFS120	114	80	–	5	10	–	16	8	–	M6	LFS120

ANS cannot be mounted on:
LFS32-C: a_L, $a_R < 28$ mm
LFS52-C: a_L, $a_R < 40$ mm.

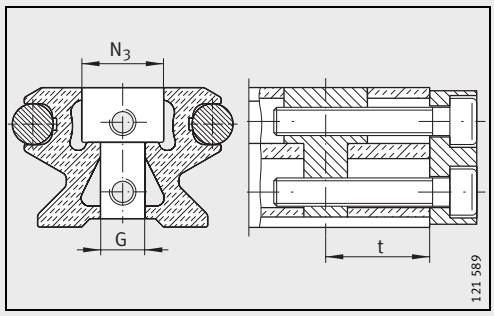

ANS.LFS..-C (hollow section)

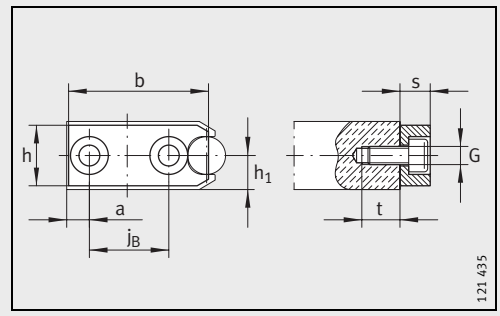

ANS.LFS..-FH

Lubrication and wiper units

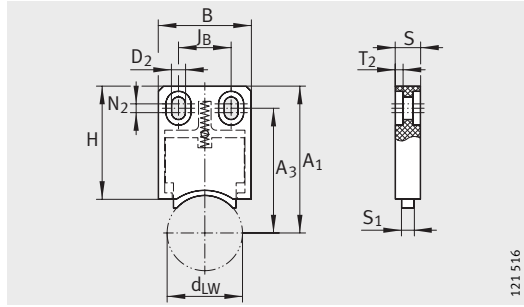

AB.W

Dimension table · Dimensions in mm

Designation	Mass m ≈kg	Dimensions d_{LW}	B	S	H	J_B ±0,1	D_2	T_2	S_1	A_1	N_2	A_3	Suitable for track roller
AB.W10	0,03	10	22,5	10	45	10	4,5	3	5	49	4	40,3	LFR5201-2Z, LFR5301-2Z, LFR5302-2Z
AB.W12	0,03	12	22,5	10	45	10	4,5	3	5	51	4	42,3	LFR5201-12-2Z
AB.W16	0,03	16	22,5	10	45	10	4,5	3	5	52	4	43,3	LFR5204-16-2Z
AB.W20	0,03	20	22,5	10	45	10	4,5	3	5	54	4	45,3	LFR5206-20-2Z
AB.W25	0,03	25	37	10	45	21	5,5	3	5	54	3,5	45,3	LFR5206-25-2Z
AB.W30	0,03	30	37	10	45	21	5,5	3	5	59	3,5	50,3	LFR5207-30-2Z
AB.W40	0,03	45	37	10	45	21	5,5	3	5	71	3,5	62,3	LFR5208-40-2Z
AB.W50	0,03	50	37	10	45	21	5,5	3	5	76	3,5	67,3	LFR5308-50-2Z

Lubrication and wiper units

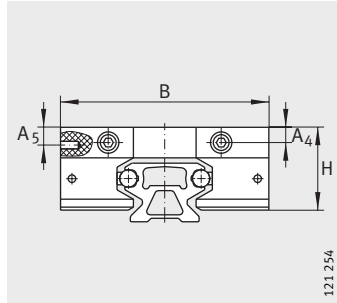

AB

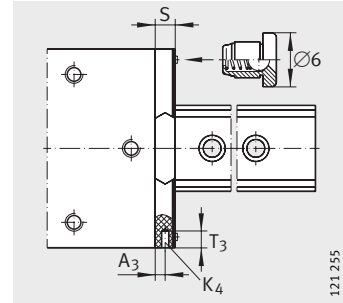

AB
View rotated 90°

Dimension table · Dimensions in mm

Designation	Mass m ≈kg	Dimensions B	T_3	S	A_3	H	A_4	A_5	K_4 for screws DIN 7 972	Suitable for carriage
AB32	0,03	80	6	11	5	32	7	7	St2,9	LFL32, LFDL32[1)]
AB52	0,1	120	20	18	8,5	45,5	9,7	15	St4,8	LFL52, LFDL52
AB52/1	0,13	135	20	18	8,5	55	12	20,6	St4,8	LFL52-E
AB.LFLL32	0,03	80	6	11	5	32	7	7	St2,9	LFLL32-SF[1)]
AB.LFLL52	0,1	120	20	18	8,5	45,5	9,7	15	St4,8	LFLL52-SF

1) Please contact us.

Cap wipers

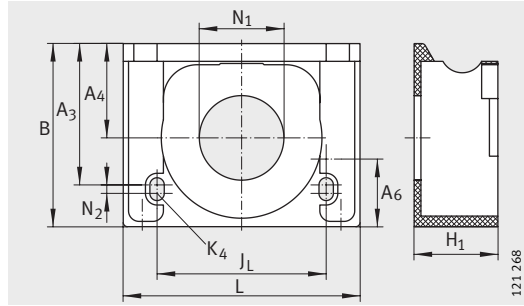

AB.LFR

Dimension table · Dimensions in mm

Designation	Mass	Dimensions										Suitable for track roller	Suitable for carriage
	m ≈kg	B	A_3	A_4	N_2	A_6	L ±0,1	J_L	H_1	K_4	N_1 +0,1		
AB.LFL20	0,009	21,3	16,5	10,8	1	8,5	50	42,5	11,5	M3	10	LFR50/..4	LFL20
AB.LFR50/8	0,02	31,6	25,9	15,6	2	6,4	51	28,5	15	M3	15	LFR50/8	LFCL25
AB.LFR5201	0,02	43,3	33,4	22,3	2	16	56	40	21,3	M3	20	LFR5201	LFCL42
AB.LFR5301	0,03	50	38,7	26	2	10,4	76	46	25	M3	20	LFR5301	LFCL86
AB.LFR5302[1)]	–	57	46	–	1,5	15,5	58	48	31	M3	–	LFR5302	–

[1)] Note the guidelines on page 95.

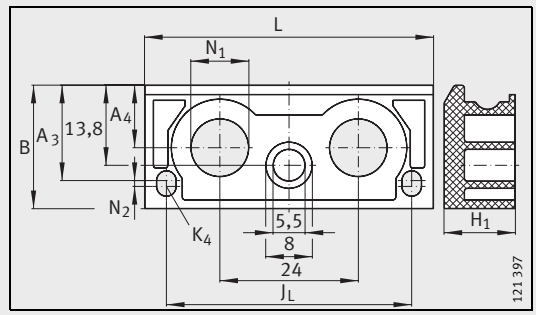

AB.LFL20

Side plates

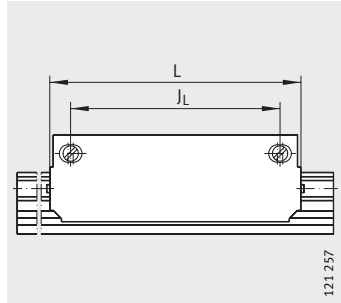

ABAL

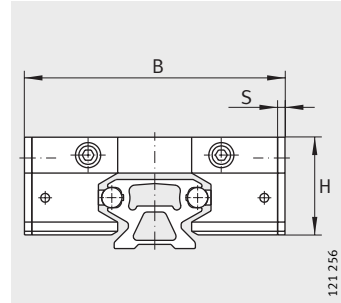

ABAL

Dimension table · Dimensions in mm

Designation	Mass m ≈kg	Dimensions B	S	L	J_L	H	Suitable for carriage
ABAL32	0,03	86	3	112	100	32	LFL32
ABAL52	0,04	130	5	136	117	49,5	LFL52
ABAL52/1	0,05	145	5	186	167	55	LFL52-E

Stops

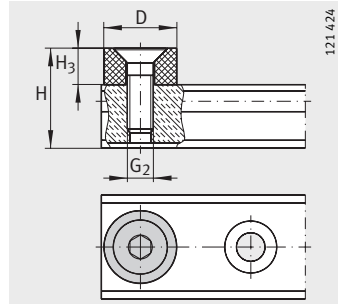

PASTP

Dimension table · Dimensions in mm

Designation	Mass m ≈kg	Dimensions D	H_3	G_2	H	Suitable for guideway
PASTP20	0,008	14	7	M5	22,2	LFS20
PASTP25	0,008	14	7	M5	25	LFS25
PASTP32	0,01	16	11	M6	31	LFS32
PASTP42	0,01	16	11	M6	31	LFS42-C
PASTP52	0,01	20	11	M8	45	LFS52
PASTP86	0,01	20	11	M8	45	LFS86-C

Stops

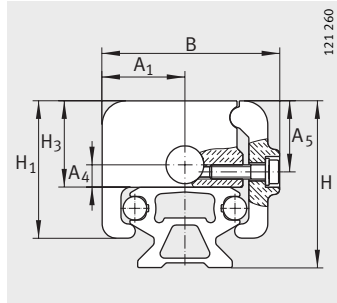

PAH

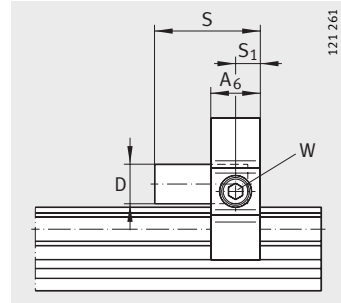

PAH
View rotated 90°

Dimension table · Dimensions in mm

Designation	Mass	Dimensions											Suitable for guideway
	m ≈kg	B	A_1	S	A_6	D	H	H_1	H_3	A_4	A_5	Width across flats W	
PAH32	0,05	46	21	30	15	10	39	32	19	7	14	5	LFS32-C, -N
PAH52	0,17	75	35	43	20	16	70,5	58	36,5	9,5	30	6	LFS52-C, -NZZ

End covers

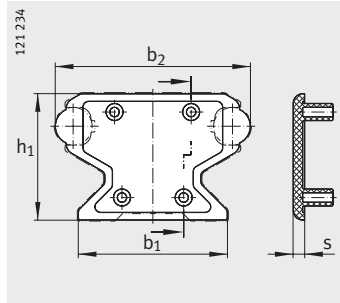

KA.LFS..-C

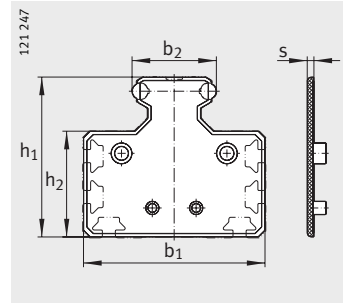

KA.LFS..-M

Dimension table · Dimensions in mm

Designation	Mass m ≈kg	Dimensions					Suitable for guideway
		b_2	b_1	S	h_1	h_2	
KA.LFS25-M	0,01	24,4	55,4	3	45,4	30,9	LFS25-M
KA.LFS32-C	0,01	31,4	23,4	3	19,4	–	LFS32-C
KA.LFS32-M	0,012	31,4	75,4	3	59,9	46,4	LFS32-M
KA.LFS32-CH	0,02	25,4	23,4	3	19,4	–	LFS32-CH
KA.LFS42-C	0,012	41,4	27,4	3	19,4	–	LFS42-C
KA.LFS52-C	0,013	51,6	39,5	3	33,4	–	LFS52-C
KA.LFS52-M	0,015	51,6	111,4	4	98	64,8	LFS52-M
KA.LFS52-CH	0,02	41,4	35,5	3	33,4	–	LFS52-CH
KA.LFS86-C	0,015	85,6	70,4	3	33,4	–	LFS86-C

Slot closing strips

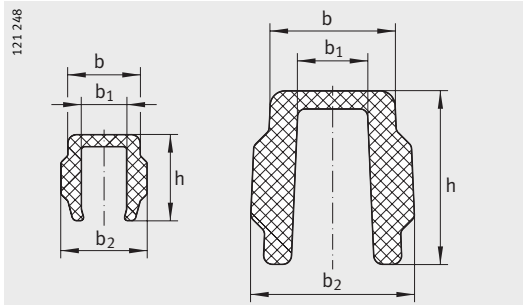

NAD

Dimension table · Dimensions in mm

Designation	Mass m ≈kg	Dimensions b	b_1	b_2	h	Suitable for guideway
NAD5X5,7	0,012	4,8	3	5,7	5,7	LFS25-M
NAD8X11,5	0,027	8,2	5,5	9,2	11,5	LFS32-M, LFS52-M

Addresses

Germany
Schaeffler KG
Linear Technology Division
Berliner Straße 134
66424 Homburg (Saar)
Tel. +49 6841 701-0
Fax +49 6841 701-2625
info.linear@schaeffler.com

Argentina
Schaeffler Argentina S.r.l.
Av. Alvarez Jonte 1938
Buenos Aires C1416EXR
Tel. +54 11 40 16 15 00
Fax +54 11 45 82 33 20
info-ar@schaeffler.com

Australia
Schaeffler Australia Pty Ltd.
Level 1, Bldg. 8,
49 Frenchs Forest Road
Frenchs Forest, NSW 2086
Tel. +61 2 8977 1000
Fax +61 2 9452 4242
info.au@schaeffler.com

Austria
Schaeffler Austria GmbH
Marktstraße 5
2331 Vösendorf
Tel. +43 1 69 92 54 10
Fax +43 1 6 99 25 41 55
info.at@schaeffler.com

Belarus
Schaeffler KG Repräsentanz Weißrußland
Representative Office Ukraine
4-yj Zagorodnyi per. - 58-B
220079 Minsk
Tel. +375 17-204 11 49
Fax +375 17-210 24 18
fagminsk@mail.bn.by

Belgium
Schaeffler Belgium S.P.R.L.
Avenue du Commerce, 38
1420 Braine L'Alleud
Tel. +32 2 3 89 13 89
Fax +32 2 3 89 13 99
info.be@schaeffler.com

Bosnia and Herzegovina
Valjkasti Lezajevi d.o.o.
Domobranska 11
10000 Zagreb
Croatia
Tel. +385 1 37 01 943
Fax +385 1 37 64 473
fag@fag.hr

Brazil
Schaeffler Brasil Ltda.
Av. Independência, 3500-A
Bairro Éden
Sorocaba SP 18087-101
Tel. +55 15 33 35 15 00
Fax +55 15 33 35 19 60
info.br@schaeffler.com

Bulgaria
Schaeffler Bulgaria OOD
Dondukov-Blvd. 62 A apt. 10
Sofia 1504
Tel. +359 2 946 3900
+359 2 943 4008
Fax +359 2 946 3886
+359 2 943 4134
info.bg@schaeffler.com

Addresses

Canada
Schaeffler Canada Inc.
2871 Plymouth Drive
Oakville, ON L6H 5S5
Tel. +1 800 263 4397 (Toll Free)
Tel. +1 905 8 29 27 50
Fax +1 905 8 29 25 63
info.ca@schaeffler.com

China
Beijing Representative Office
Room 708-711, Scitech Tower No. 22
Jianguomenwai Avenue
100004 Beijing
Tel. +86 10 6515 0288
Fax +86 10 6512 3433
l.huang@schaeffler.com

Croatia
Schaeffler Hrvatska d.o.o.
Domobranska 11
10000 Zagreb
Tel. +385 1 37 01 943
Fax +385 1 37 64 473
info.hr@schaeffler.com

Czech Republic
Schaeffler CZ s r.o.
Prubezná 74a
100 00 Praha 10
Tel. +420 267 298 111
Fax +420 267 298 110
info.cz@schaeffler.com

Denmark
Schaeffler Danmark ApS
Jens Baggesens Vej 90P
8200 Aarhus N
Tel. +45 70 15 44 44
Fax +45 70 15 22 02
info.dk@schaeffler.com

Estonia
Schaeffler KG Repräsentanz Baltikum
K. Ulmana gatve 119
2167 Riga
Latvia
Tel. +371 7 06 37 95
Fax +371 7 06 37 96
info.lv@schaeffler.com

Finland
Schaeffler Finland Oy
Lautamiehentie 3
02770 Espoo
Tel. +358 207 36 6204
Fax +358 207 36 6205
info.fi@schaeffler.com

France
Schaeffler France SAS
44-48, rue Louveau - BP 91
92323 Chatillon
Tel. +33 140 92 16 16
Fax +33 140 92 87 57
info.fr@schaeffler.com

Schaeffler France SAS
93, route de Bitche, BP 30186
67506 Haguenau
Tel. +33 3 88 63 40 40
Fax +33 3 88 63 40 41
info.fr@schaeffler.com

Great Britain
Schaeffler (UK) Ltd
Forge Lane, Minworth
Sutton Coldfield B76 1AP
Tel. +44 121 / 3 51 38 33
Fax +44 121 / 3 51 76 86
info.uk@schaeffler.com

Schaeffler (UK) Ltd
Bynea
CARMS SA14 9TG Llanelli
Tel. +44 15 54 / 77 22 88
Fax +44 15 54 / 77 12 01
info.uk@schaeffler.com

The Barden Corporation (UK) Ltd
Plymbridge Road - Estover
Plymouth PL6 7LH
Tel. +44 1752 73 55 55
Fax +44 1752 73 34 81
sales@barden.co.uk

Hungary
Schaeffler Magyarország Ipari Kft.
Neuman János út 1/B fsz.
1117 Budapest
Tel. +36 1 / 4 81 30 50
Fax +36 1 / 4 81 30 53
budapest@schaeffler.com

Italy
Schaeffler Italia S.r.l.
Strada Regionale 229 Km. 17
28015 Momo (Novara)
Tel. 0321 929211
Fax 0321 929300
info.it@schaeffler.com

Japan
Schaeffler Japan Co., Ltd.
Square Building 18F
2-3-12 Shin-Yokohama, Kohoku-ku
Yokohama, 222-0033
Tel. +81 45 476 5900
Fax +81 45 476 5920
info.jp@schaeffler.com

Korea
Schaeffler Ansan Corporation
1054-2 Shingil-dong
Ansan-shi
Kyonggi-do, 425-020
Tel. +82 31 490 6911
Fax +82 31 494 3888
info.kr@schaeffler.com

Latvia
Schaeffler KG Repräsentanz Baltikum
K. Ulmana gatve 119
2167 Riga
Tel. +371 7 06 37 95
Fax +371 7 06 37 96
info.lv@schaeffler.com

Lithuania
Schaeffler KG Repräsentanz Baltikum
K. Ulmana gatve 119
2167 Riga
Latvia
Tel. +371 7 06 37 95
Fax +371 7 06 37 96
info.lv@schaeffler.com

Mexico
INA Mexico, S.A. de C.V.
Paseo de la Reforma 383, int. 704
Col. Cuahtemoc
Mexico D.F. 06500
Tel. +52 55 55 25 00 12
Fax +52 55 55 25 01 94
info.mx@schaeffler.com

Netherlands
Schaeffler Nederland B.V.
Gildeweg 31
3771 NB Barneveld
Tel. +31 342 40 30 00
Fax +31 342 40 32 80
info.nl@schaeffler.com

New Zealand
Schaeffler New Zealand
(Unit R, Cain Commercial Centre) 20 Cain Road
1642 Penrose
Tel. +54 11 40 16 15 00
Fax +54 11 45 82 33 20
sales.nz@schaeffler.com

Norway
Schaeffler Norge AS
Nils Hansens Vei 2
0667 Oslo
Tel. +47 23 24 93 30
Fax +47 23 24 93 31
info.no@schaeffler.com

Poland
Schaeffler Polska
Budynek E
ul. Szyszkowa 35/37
02-285 Warszawa
Tel. +48 22 8 78 41 20
Fax +48 22 8 78 41 22
info.pl@schaeffler.com

Portugal
INA Rolamentos Lda.
Av. Fontes Pereira de Melo, 470
4149-012 Porto
Tel. +351 22 / 5 32 08 00
Fax +351 22 / 5 32 08 60
marketing.pt@schaeffler.com

Romania
S.C. Schaeffler Romania S.R.L.
Aleea Schaeffler Nr. 3
Cristian/Brasov 507055
Tel. +40 268 505808
Fax +40 268 505848
info.se@schaeffler.com

Russia
Schaeffler Rußland GmbH
Ul. Tjuschina 4-6
191 119 St. Petersburg
Tel. +7 812 325 22 92
Fax +7 812 325 22 93
fag@fag.spb.ru

Schaeffler Rußland
Korp. 14
Leningradsky Prospekt 37A
125167 Moscow
Tel. +7 95 7 37 76 60
Fax +7 95 7 37 76 53
info.ru@schaeffler.com

Serbia
Schaeffler KG Repräsentanz Serbien
Branka Krsmanovica 12
11118 Beograd
Tel. +381 11 308 87 82
Fax +381 11 308 87 75
fagbgdyu@sezampro.yu

Addresses

Singapore
Schaeffler (Singapore) Pte. Ltd.
151 Lorong Chuan, #06-01
New Tech Park, Lobby A
556741 Singapore
Tel. +65 6540 8600
Fax +65 6540 8668
info.sg@schaeffler.com

Slovakia
Schaeffler Slovensko, spol. s.r.o.
Ulica Dr. G. Schaefflera
024 01 Kysucké Nové Mesto
Tel. +421 41 4 20 59 11
Fax +421 41 4 20 59 18
info.sk@schaeffler.com

INA Kysuce, a.s.
Ulica Dr. G. Schaefflera
02401 Kysucké Nové Mesto
Tel. +421 41 4 20 51 11
Fax +421 41 4 20 59 18

INA Skalica spol. s r.o.
Ulica Dr. G. Schaefflera 1
90901 Skalica
Tel. +421 34 6 96 11 11
Fax +421 34 6 64 55 68

Slovenia
Schaeffler Slovenija
Glavni trg 17/b
2000 Maribor
Tel. +386 2 22 82 070
Fax +386 2 22 82 07 5
info.si@schaeffler.com

South Africa
Schaeffler South Africa (Pty.) Ltd.
1 End Street Ext. Corner Heidelberg Road
2000 Johannesburg
Tel. +27 11 225 3000
Fax +27 11 334 1755
info.co.za@schaeffler.com

Spain
Schaeffler Iberia, s.l.
Polígono Ind. Pont Reixat
08960 Sant Just Desvern
Tel. +34 93 / 4 80 34 10
Fax +34 93 / 3 72 92 50
marketing.es@schaeffler.com

Sweden
Schaeffler Sverige AB
Charles gata 10
195 61 Arlandastad
Tel. +46 8 59 51 09 00
Fax +46 8 59 51 09 60
info.se@schaeffler.com

Switzerland
HYDREL GmbH
Badstraße 14
8590 Romanshorn
Tel. +41 71 4 66 66 66
Fax +41 71 4 66 63 33
info.ch@schaeffler.com

Turkey
Schaeffler Rulmanlari Ticaret Limited Sirketi
Aydin Sokak Dagli Apt. 4/4
1. Levent
34340 Istanbul
Tel. +90 212 / 2 79 27 41
Fax +90 212 / 2 81 66 45
info.tr@schaeffler.com

Ukraine
Schaeffler KG
Representative Office Ukraine
Ul. Schelkowitschnaja 16B, of. 29-30
01024 Kiew
Tel. +380 44 253 72 60
Fax +380 44 253 96 42
info.ua@schaeffler.com

USA
Schaeffler Group USA Inc.
308 Springhill Farm Road
Corporate Offices
Fort Mill, SC 29715
Tel. +1 803 548 8500
Fax +1 803 548 8599
info.us@schaeffler.com

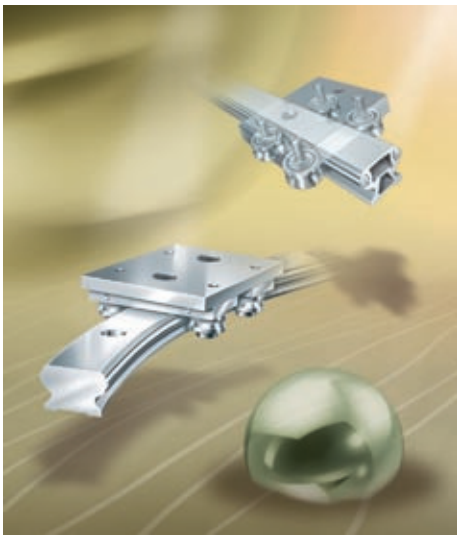

Schaeffler KG

Linear Technology Division
Berliner Strasse 134
66424 Homburg/Saar (Germany)
Internet www.ina.com
E-Mail info.linear@schaeffler.com

In Germany:
Phone 0180 5003872
Fax 0180 5003873

From Other Countries:
Phone +49 6841 701-0
Fax +49 6841 701-2625

MATNR 032918356-0000 / LF1 / GB-D / 20080315 / Printed in Germany by Stürtz GmbH