MOTION & CONTROL™
NSK

High Durability NSK Water Pump Bearings

- High durability for powerful engines
- High reliability through a newly developed water resistant seal
- Improved grease

High durability NSK water pump bearings support the advancement of engines. These reliable bearings have three times greater durability than previous bearings.

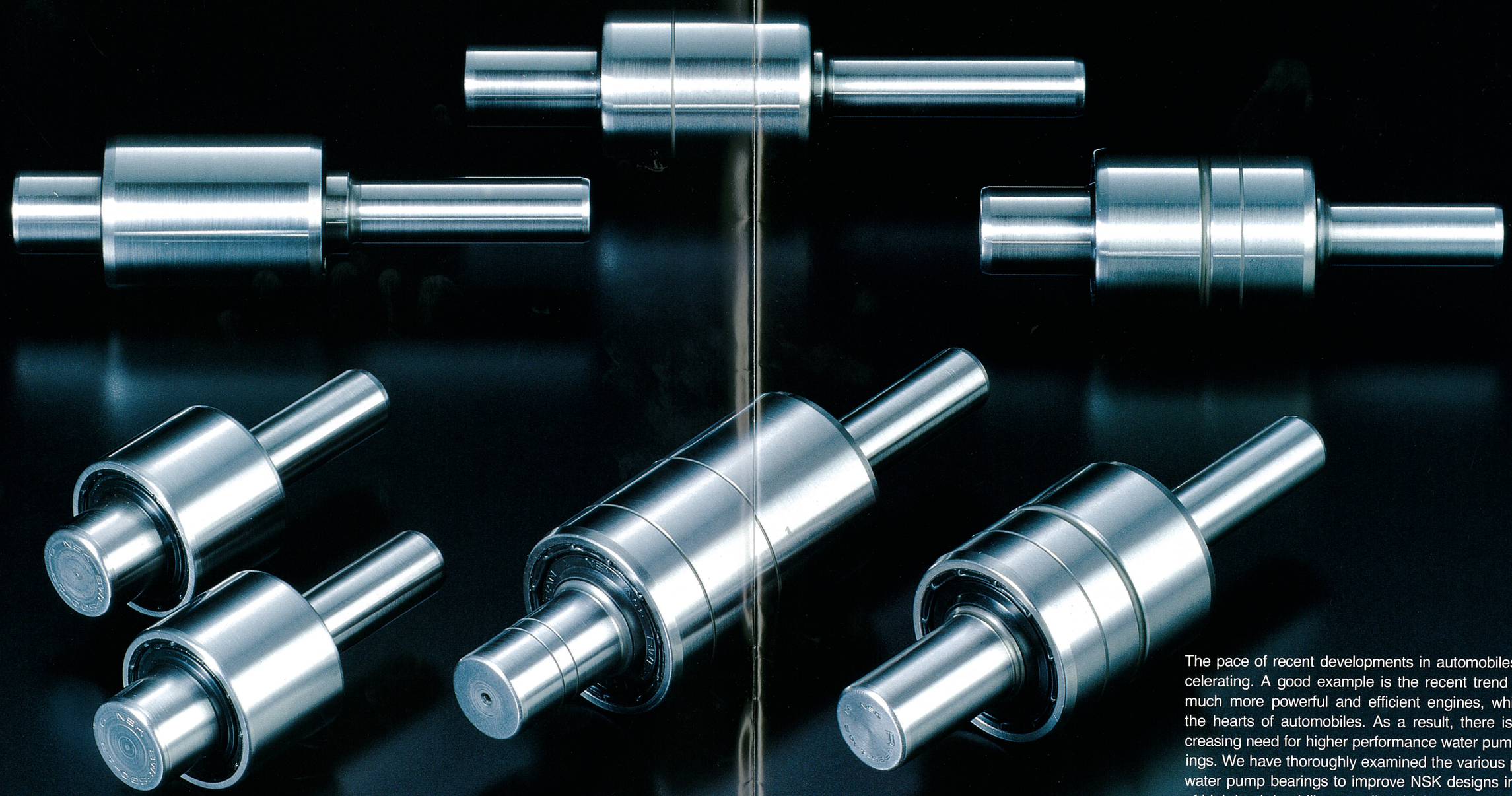

The pace of recent developments in automobiles is accelerating. A good example is the recent trend toward much more powerful and efficient engines, which are the hearts of automobiles. As a result, there is an increasing need for higher performance water pump bearings. We have thoroughly examined the various parts of water pump bearings to improve NSK designs in terms of high load durability as well as high resistance to heat, load and water. As a result, NSK has developed water pump bearings with higher performance. These improved bearings are the NSK high durability water pump bearings. We would like to introduce you to the outstanding features of these bearings, such as their newly developed water resistant seals, and the adoption of improved grease and materials.

Types and Features

Types

Water pump bearings come in two types. One is a Ball·Ball type (BWF) and the other is a Ball·Roller type (RWF). The Ball·Roller type design offers a much higher radial load capability of the roller row, which is particularly important when supporting either a fan or a relatively high off-set belt load.

Features

•Newly developed water resistant seals offer five times greater durability.
NSK has developed brand-new water resistant seals. As a result, the durability under wet conditions is increased over five times.

•A better grease <WPH> was developed.
NSK has developed an improved grease for water pumps. It is superior in terms of resistance to water, heat, and rust.

•Longer life is achieved by adoption of a new steel material.
The new steel is a low oxygen and high cleanliness steel which has a life three times longer than common bearing steels. Also, the steel is carburized to achieve a much longer life.

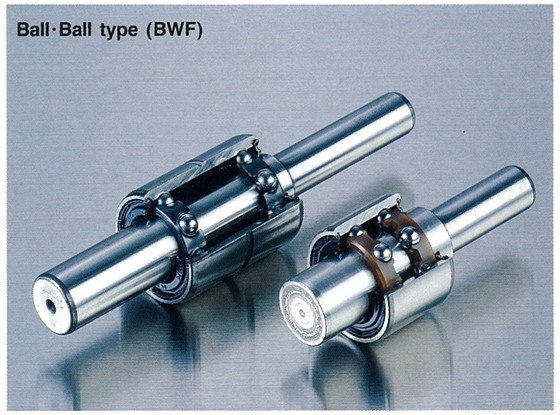

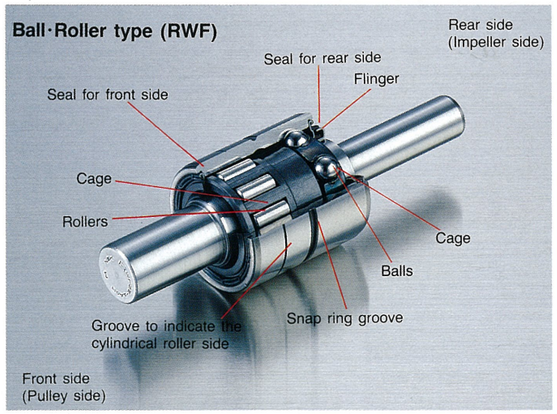

Properties

Any water (or water + coolant) entering through the mechanical seal may adversely affects the water pump bearing's effectiveness. If water enters into the bearing, surface fatigue occurs more rapidly due to insufficient oil film formation. Consequently, the bearing life decreases sharply. Therefore, it is very important to prevent water penetration to achieve full bearing life. <High durability water pump bearings> are so named for their high durability and reliability.

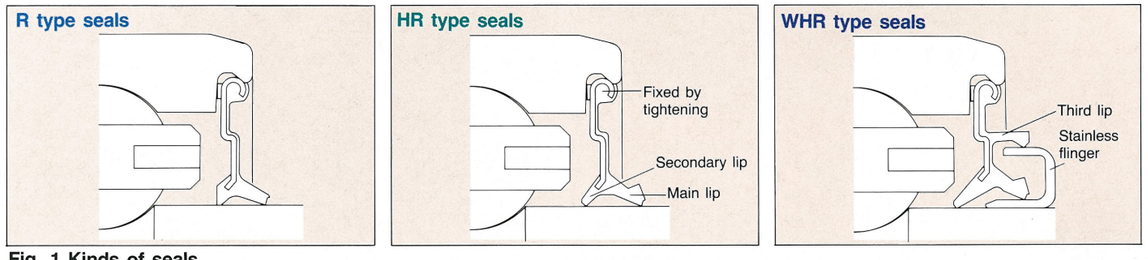

Fig. 1 Kinds of seals

•Seals

<R type seals>
Since rubber seals tightly hug the outer ring recess, water penetration from the outside is prevented completely. A double-lip type seal is adopted, so that water penetration and grease leakage can be minimized.

<HR type seals>
The water resistance of the main lips is increased beyond the degree of R type seals. Also, the HR type seal provides improved sealing in environments of engine vibration and unbalanced runout vibration.

<WHR type seals>
The third lip and flinger prevent water penetration remarkably well. The slinger prevents seal wear generated by a rusty surface, thereby increasing reliability.

Fig. 2 Percentage of failure of seals under NSK's accelerated testing conditions

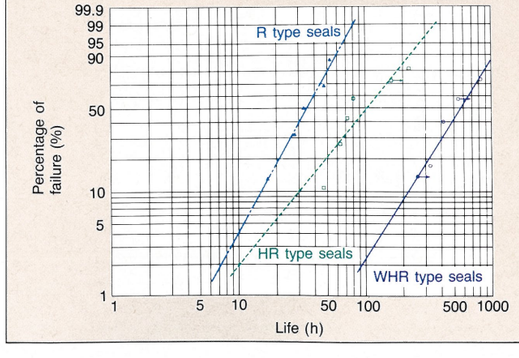

•Grease (WPH grease)

The recent trends toward more powerful and efficient engines require better grease which has higher resistance to heat, load and water. NSK's WPH grease was developed to answer these demands.

1. The thickener is a urea compound, which ensures proper lubrication for long periods because of its resistance to water and temperature effects.
2. The base oil of WPH is poly-alpha-olefin, which has high anti-oxidation capability and high heat stability. These characteristics result in excellent resistance to grease deterioration and bearing seizure at elevated bearing temperatures.
3. WPH has been shown to be excellent for rust prevention.

Fig. 3 Water resistance capability of greases

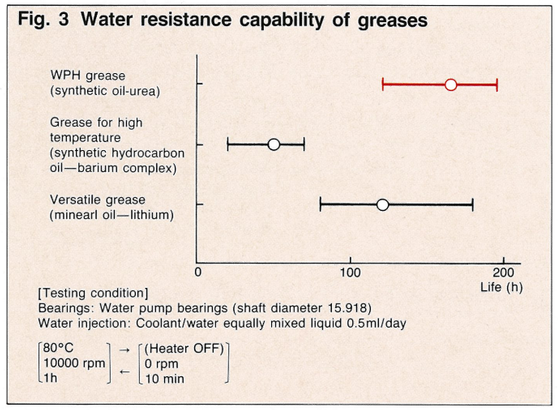

Fig. 4 Heat resistance capability of greases

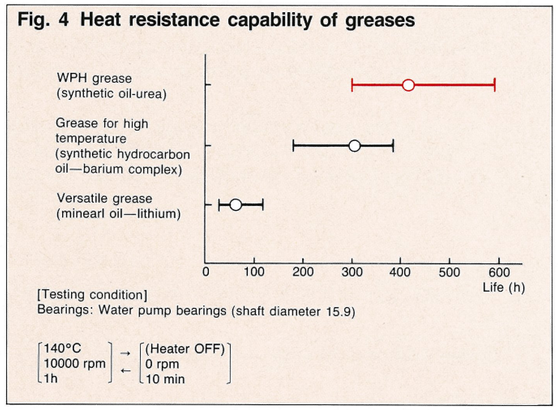

Design and Manufacturing

•NSK high durability water pump bearings incorporate NSK's technology in their design and manufacturing.

•Rollers in the bearings are crowned, thus avoiding edge loading even under an off-set load which would otherwise cause large misalignment. (See Fig. 5 and Fig. 6)

•NSK water pump bearings are designed to minimize stress concentration and are produced without distortion, to maintain the high strength required in certain applications such as those with cooling fan resonance or excessive belt tension. (See Fig. 7)

Fig. 5 Distribution of roller surface pressure for general bearings

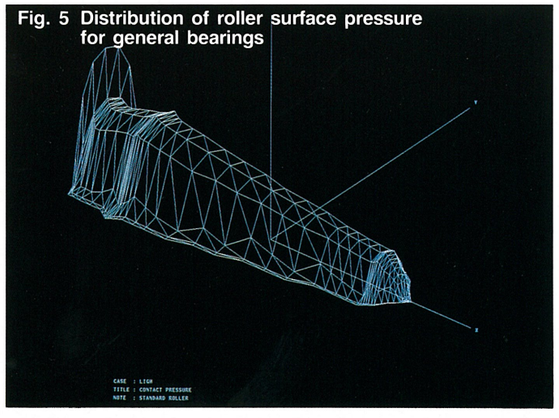

Fig. 6 Distribution of roller surface pressure for NSK water pump bearings

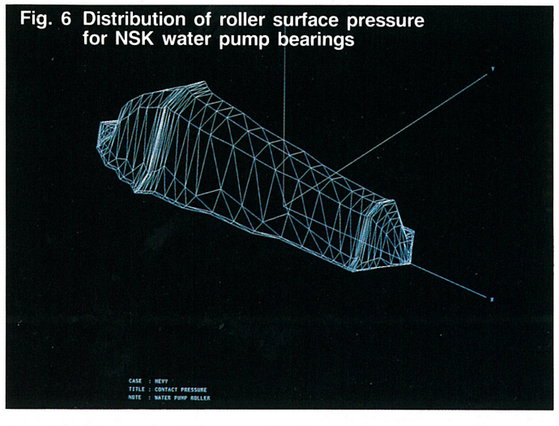

Fig. 7 An example of FEM analysis of shaft stress distribution

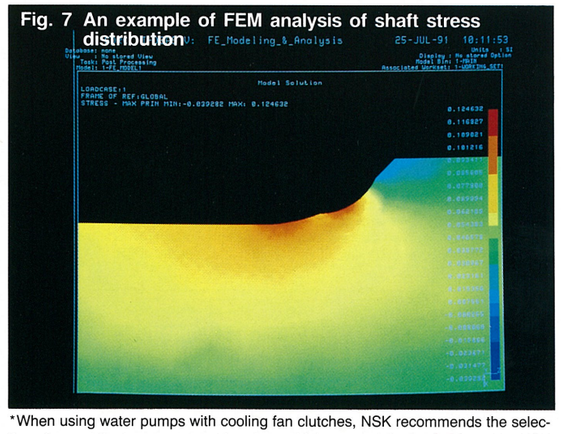

*When using water pumps with cooling fan clutches, NSK recommends the selection of one of the lower resonant bearings which were originally developed by NSK for fan clutches.

•Each chamfer is designed for ease of assembly and to avoid generating an unbalanced load.

Technical specification and bearing number system

Technical specification

(1) Calculation of rating fatigue life

Suppose a number of bearings of the same type are operated individually under the same conditions. After a certain period of time, 10% of them fail as a result of flaking caused by rolling fatigue. In this case, the total number of revolutions is defined as the rating fatigue life, or if the speed is constant, the rating fatigue life is often expressed by the total number of operating hours completed at the time when 10% of the bearings become inoperable due to flaking. It can be calculated by using the equation on the right.

If the amount of the load's off-set is large, it is necessary to investigate and consider the incline of shafts, as well as the effect of the edge load. In such cases please consult NSK.

(2) Standard design dimensions

Standard design dimensions of both Ball·Roller type and Ball·Ball type water pump bearings are described from page 7 to page 10. If other dimensions are required, please consult NSK.

Calculation of rating fatigue life

Ball bearings $$L_h = \frac{10^6}{60n}\left(\frac{C}{P}\right)^3$$

Roller bearings $$L_h = \frac{10^6}{60n}\left(\frac{C}{P}\right)^{\frac{10}{3}}$$

where
L_h : Rating fatigue life (h)
P : Bearing load (N) {kgf}
C : Basic load rating (N) {kgf}
n : Bearing speed (rpm)

(3) Accuracy

Both Ball·Ball type and Ball·Roller type of water pump bearings have the same dimensional tolerances as outlined below.

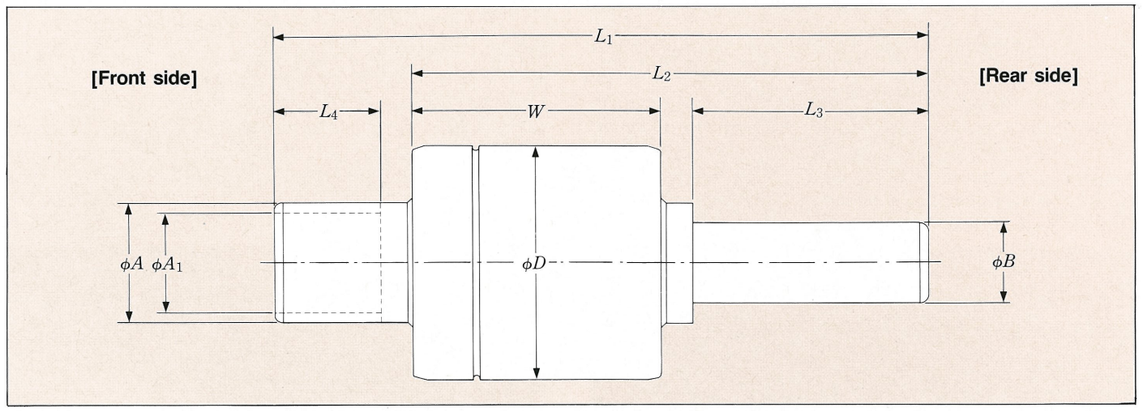

Units: μm

Types of bearings		Tolerance of outside diameter of outer ring D		Tolerance of width of outer ring W		Tolerance of diameter of main shaft A		Tolerance of diameter of front shaft A_1		Tolerance of diameter of rear shaft B		Tolerance of shaft length L_1		Tolerance of front shaft length L_4		Tolerance of rear shaft length L_3		Tolerance of assembled width L_2	
		high	low	high	low	high	low	high	low	high	low	high	low	high	low	high	low	high	low
RWF BWF	All dimensions	0	−13	+150	−150	0	−13	0	−13	0	−13	+250	−250	+250	−250	+250	−250	+150	−150

(4) Dimensions of chamfers

Standard chamfer designs and dimensions of NSK water pump bearings are as follows:

Fig. 8 Shaft chamfer

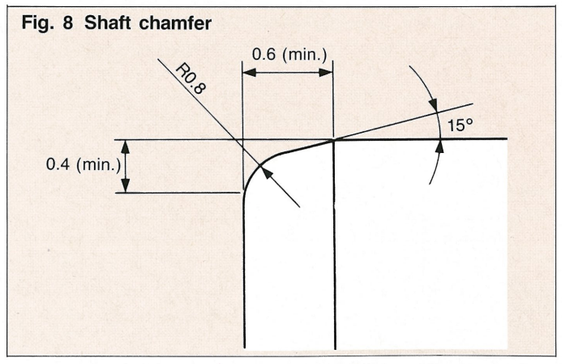

Fig. 9 Outer ring chamfer

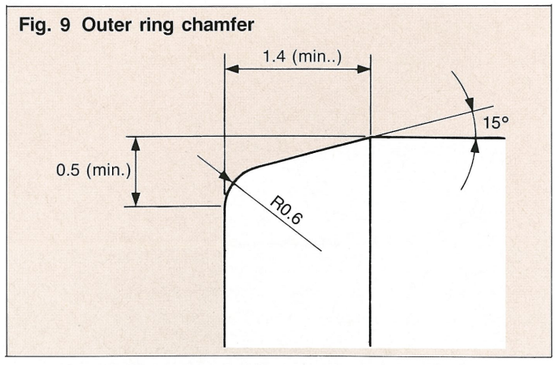

(5) Internal bearing clearances

The internal clearance in rolling bearings in operation greatly influences bearing performance in terms of fatigue life, vibration, noise, heat-generation, etc. Consequently, the selection of a proper internal clearance is one of the most important tasks. Theoretically, the longest bearing life can be expected when the clearance is slightly negative. However, it is difficult to achieve such an ideal condition, and an excessive negative clearance will greatly shorten the bearing life. Therefore, a clearance of zero or a slightly positive amount, instead of a negative one, should be selected in general. The clearance of water pump bearings is normally selected within the range between 0.010 mm—0.040 mm, but it may be necessary to change this range depending on the interference, rigidity, material, and temperature of the housing. Please consult NSK for further information on this topic.

Fig. 10 Water pump bearings·correlation of internal bearing clearance and temperature

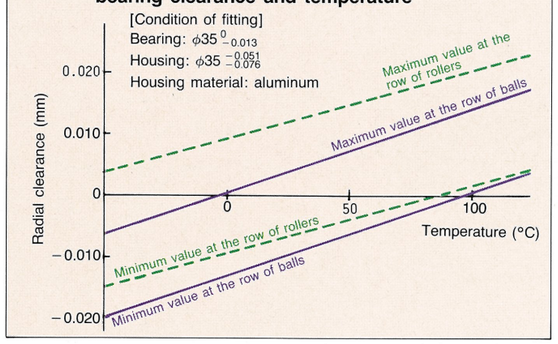

(6) Mounting

The mounting of bearings deserves careful attention, because the entry of dust and debris on bearing raceways or rolling elements can cause excessive noise, vibration and premature failure. Also, proper tools and assembly techniques should be used to prevent the transmission of forces between the bearing shaft and the outer ring.

Fig. 11 Pressing bearing into housing

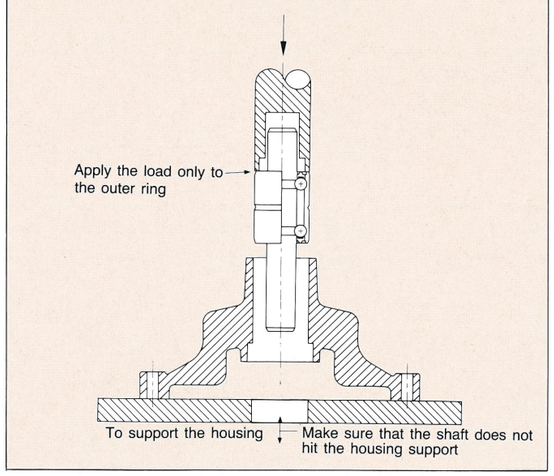

Fig. 12 Pressing hub onto shaft of mounting bearing

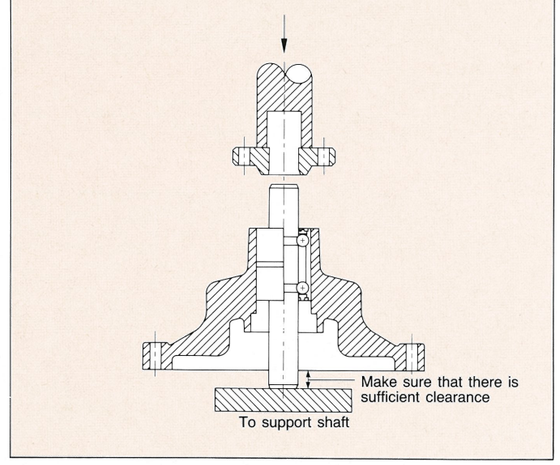

Bearing numbering system

The water pump bearing numbering system is outlined in Fig. 13. The dimensions for each bearing number are shown in the design tables on pages 7 to 18.

Fig. 13 Formulation of bearing numbers

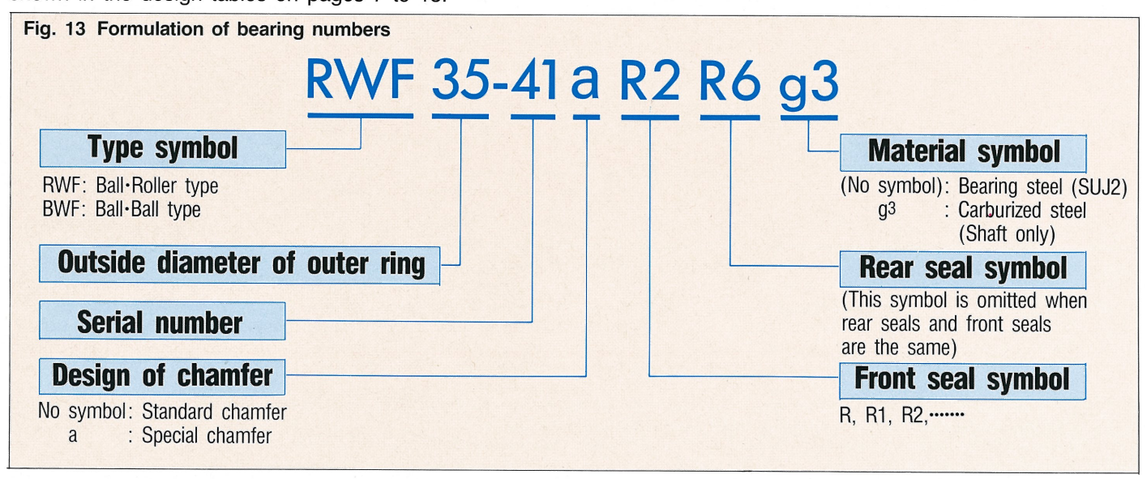

Design table (Ball·Roller type <RWF>)

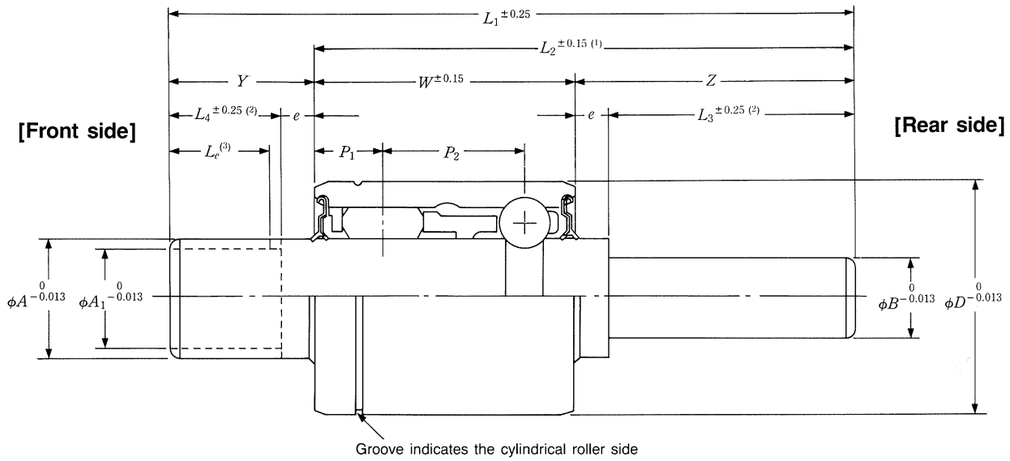

Bearing series numbers	Dimensions (mm)									Pitches		Basic load ratings							
												Roller row				Ball row			
	Outside dia. of outer ring D	Width of outer ring W	Dia. of main shaft A	Dia. of front shaft A_1	Dia. of rear shaft B	Shaft length (4) (Maximum) L_1	Protrusion from outer ring face (4) (Maximum) Y	Protrusion from the stepped shaft (4) (Maximum) Z	Protrusion of stepped part (5) e	P_1	P_2	(N) C_r	(N) C_{0r}	{kgf} C_r	{kgf} C_{0r}	(N) C_r	(N) C_{0r}	{kgf} C_r	{kgf} C_{0r}
RWF26	26	30	12	–	12	150	55	55	R type seals:	9.75	14.25	12 800	11 400	1 310	1 160	3 950	1 560	405	159
	26	39	12	–	12	150	55	55	1.5	9.75	23.25	12 800	11 400	1 310	1 160	3 950	1 560	405	159
									HR type seals:										
RWF28	28	20	17.2	–	12	150	55	55	2.0	5.25	9.55	6 300	5 250	645	535	5 100	2 400	520	244
									WHR type seals:										
RWFS30	30	30	17.2	–	12	150	55	55	2.5	8.75	14.75	13 200	12 600	1 350	1 280	6 000	2 670	615	273
RWF30	30	30	15.918	–	12	150	55	55		8.85	14.38	15 300	13 600	1 560	1 390	6 600	2 760	675	281
	30	38.84	15.918	–	12	150	55	55		9.8	22.27	17 700	16 400	1 800	1 670	6 600	2 760	675	281
	30	46	15.918	–	12	150	55	55		9.8	29.43	17 700	16 400	1 800	1 670	6 600	2 760	675	281
RWF35	35	38.84	17.5	(15.918)	12	150	55	55		9.85	21.49	21 800	20 300	2 200	2 070	8 150	3 450	830	355
	35	46	17.5	(15.918)	12	150	55	55		9.85	28.65	21 800	20 300	2 200	2 070	8 150	3 450	830	355
	35	56	17.5	(15.918)	12	150	55	55		9.8	38.7	21 800	20 300	2 200	2 070	8 150	3 450	830	355
RWF41	41	38.9	20	–	12	150	55	55		12.65	16.74	28 000	27 200	2 860	2 770	9 800	4 250	1 000	430
RWF42	42	46	22	(15.918)	12	150	55	55		12.15	24.35	24 900	23 600	2 540	2 410	11 600	5 100	1 180	520
	42	56	22	–	12	150	55	55		12.15	34.35	24 900	23 600	2 540	2 410	11 600	5 100	1 180	520

Notes (1) The assembled width (L_2) is considered to be the standard dimension for specifying a design. As shown in the figure, the assembled length (L_2) is the distance between the front end face of an outer ring and the rear end face of a shaft. Please contact NSK, if you want to use a different dimension to specify a design. The tolerance of the assembled width (L_2) refers to the case when there is no axial clearance.
(2) The standard shaft length of the front side (L_4) or that of the rear side (L_3) is obtained by subtracting the protrusion of the stepped part (e) from the shaft protrusion (front: Y; rear: Z).
(3) The effective shaft length of the front or rear side (L_e: the length which can assure the tolerance of the shaft diameter) is obtained by subtracting 2.5 mm from the shaft length (from: L_4; rear: L_3).
(4) The shaft length (L_1), the shaft protrusion of the front side (Y), and the shaft protrusion of the rear side (Z) show their maximum dimension. When you need a dimension larger than these values, please contact NSK.
(5) The protrusion of the stepped part (e) shows the minimum length necessary to prevent seals from touching the stepped part.

Remarks When other dimensions than those shown here are necessary, please contact NSK. For actual results of manufacture, please refer to page 11 to page 14.

Dimensional table (Ball·Ball type <BWF>)

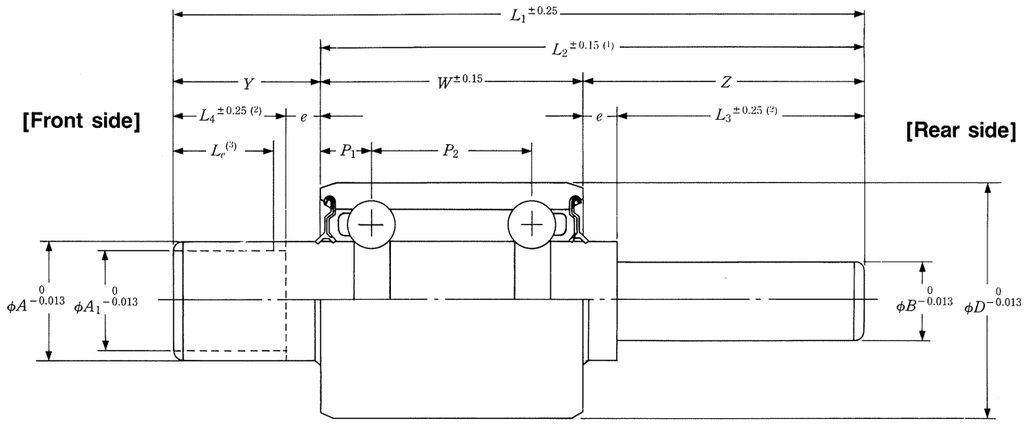

Bearing series numbers	Dimensions (mm)											Basic load ratings (One row)			
	Outside dia. of outer ring D	Width of outer ring W	Dia. of main shaft A	Dia. of front shaft A_1	Dia. of rear shaft B	Shaft length (4) (Maximum) L_1	Protrusion from outer ring face (4) (Maximum) Y	Protrusion from the stepped shaft (4) (Maximum) Z	Protrusion of stepped part (5) e	Pitches P_1	Pitches P_2	(N) C_r	(N) C_{0r}	{kgf} C_r	{kgf} C_{0r}
BWF24	24	15	10	(9.6)	(8)	150	55	55	R type seals: 1.5	4	7	3 300	1 200	340	122
BWF26	26	30	12	–	–	150	55	55	HR type seals: 2.0	6	18	3 950	1 560	405	159
	26	39	12	–	–	150	55	55		6	27	3 950	1 560	405	159
BWF28	28	20	17.2	–	12	150	55	55	WHR type seals: 2.5	5.2	9.6	5 100	2 400	520	244
BWFS30	30	20	17.2	12	12	150	55	55		6.5	7	6 000	2 670	615	273
	30	23	17.2	(15.918)	12	150	55	55		6.5	10	6 000	2 670	615	273
	30	30	17.2	–	12	150	55	55		6.5	17	6 000	2 670	615	273
	30	23	17.2	–	12	150	55	55		(6.74)	9.525	6 600	2 750	675	281
BWF30	30	30	15.918	–	12	150	55	55		6	18	6 000	2 640	610	269
	30	38.89	15.918	(12)	12	150	55	55		5.945	27	6 000	2 640	610	269
	30	38.89	15.918	(12)	12	150	55	55		6.77	25.35	6 600	2 750	675	281
BWF35	35	29.9	17.5	–	12	150	55	55		6.95	16	8 150	3 450	830	355
	35	38.89	17.5	(15.918)	12	150	55	55		7.195	24.5	8 150	3 450	830	355
	35	38.89	18	–	12	150	55	55		7.195	24.5	8 150	3 450	830	355
	35	46	17.5	(15.918)	12	150	55	55		7.195	31.61	8 150	3 450	830	355
	35	46	18	–	12	150	55	55		7 195	31.61	8 150	3 450	830	355
BWF40	40	46	19	(17)	12	150	55	55		8	30	9 800	4 250	995	430

Notes (1) The assembled width (L_2) is considered to be the standard dimension for specifying a design. As shown in the figure, the assembled length (L_2) is the distance between the front end face of an outer ring and the rear end face of a shaft. Please contact NSK, if you want to use a different dimension to specify a design. The tolerance of the assembled width (L_2) refers to the case when there is no axial clearance.
(2) The standard shaft length of the front side (L_4) or that of the rear side (L_3) is obtained by subtracting the protrusion of the stepped part (e) from the shaft protrusion (front: Y; rear: Z).
(3) The effective shaft length of the front or rear side (L_e: the length which can assure the tolerance of the shaft diameter) is obtained by subtracting 2.5 mm from the shaft length (from: L_4; rear: L_3).
(4) The shaft length (L_1), the shaft protrusion of the front side (Y), and the shaft protrusion of the rear side (Z) show their maximum dimension. When you need a dimension larger than these values, please contact NSK.
(5) The protrusion of the stepped part (e) shows the minimum length necessary to prevent seals from touching the stepped part.

Remarks When other dimensions than those shown here are necessary, please contact NSK. For actual results of manufacture, please refer to page 15 to page 18.

Dimensional table (Ball·Roller type <RWF>)

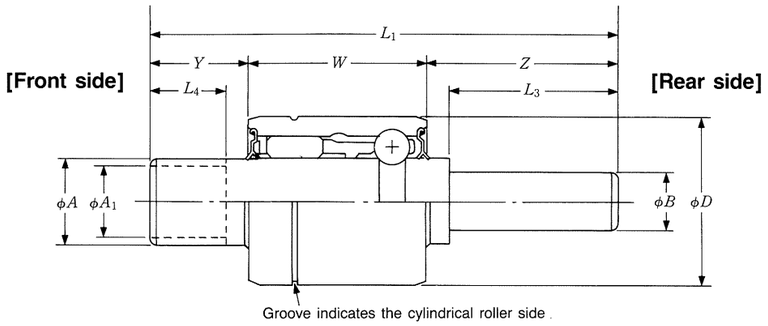

Groove indicates the cylindrical roller side

Bearing series numbers	Dimensions (mm) D	W	A	A_1	B	L_1	Y	Z	L_4	L_3	Bearing numbers
RWF26	26	30	12	—	—	82	17.6	34.4	—	—	**RWF26-3R**
	26	30	12	—	—	94.5	21.5	34	—	—	**RWF26-4R**
	26	39	12	—	—	73	19	34	—	—	**RWF26-2aR**
	26	39	12	—	—	73	19	34	—	—	**RWF26-2a1R**
RWF28	28	20	17.2	—	12	74.6	13.1	41.5	—	39.5	**RWF28-1R4**
	28	20	17.2	—	12	74.6	13.1	41.5	—	39.5	**RWF28-1R4U1**
	28	20	17.2	—	12	74.6	13.1	41.5	—	37.85	**RWF28-1AR4R9U1**
	28	20	17.2	—	12	74.6	13.1	41.5	—	37.85	**RWF28-1AR4R10U1**
	28	20	17.2	—	12	65.5	11	34.5	—	32.5	**RWF28-2aR4**
RWF30	30	30	15.918	—	12	94.2	16.5	47.7	—	45.2	**RWF30-114CR11**
	30	30	15.918	—	12	100	17	53	—	51	**RWF30-115CR11**
	30	30	15.918	—	12	79.3	12.1	37.2	—	34.05	**RWF30-118CaR11R15U1**
	30	30	15.918	—	12	79.3	12.1	37.2	—	34.05	**RWF30-118Ca1R11R15U1**
	30	30	15.918	—	12	79.3	13.1	36.2	—	32.2	**RWF30-140CaR11R15U1**
	30	30	15.918	—	12	89.5	15.5	44	—	41	**RWF30-152HaR11R15**
	30	30	15.918	—	12	80	11	39	—	35	**RWF30-153CR11R15**
	30	30	15.918	—	12	80.3	12.1	38.2	—	35.2	**RWF30-161CR11R15**
	30	38.84	15.918	—	12	112	30.025	43.135	—	40.5	**RWF30-2R**
	30	38.84	15.918	—	12	101	25	37.16	—	33.95	**RWF30-8HaR11R10**
	30	38.84	15.918	—	12	114	25.025	50.135	—	47.5	**RWF30-10aR**
	30	38.84	15.918	—	12	88	12.5	36.66	—	34	**RWF30-23R**
	30	38.84	15.918	—	12	106	30	37.16	—	33.95	**RWF30-29HaR11R10g3**
	30	38.84	15.918	—	12	105.2	20.5	45.86	—	41.31	**RWF30-31BaR**
	30	38.84	15.918	—	12	105.2	20.5	45.86	—	41.31	**RWF30-31CaR**
	30	38.84	15.918	—	12	112	30	43.16	—	40.5	**RWF30-32HaRR6**
	30	38.84	15.918	—	12	106.8	20.5	47.46	—	42.91	**RWF30-33aR**
	30	38.84	15.918	—	12	106.8	20.5	47.46	—	42.91	**RWF30-33CaR**
	30	38.84	15.918	—	12	93	18.5	35.66	—	32.61	**RWF30-40BR**
	30	38.84	15.918	—	12	93	18.5	35.66	—	32.61	**RWF30-40CR**
	30	38.84	15.918	—	12	106.2	18.5	48.86	—	41	**RWF30-45BaR**
	30	38.84	15.918	—	12	118.9	20	60.06	—	52.9	**RWF30-48BaR**
	30	38.84	15.918	—	12	96.7	20.5	37.36	—	34.31	**RWF30-49BaR**
	30	38.84	15.918	—	12	122.4	33.5	50.06	—	47.01	**RWF30-52R**
	30	38.84	15.918	—	—	68.39	25.05	4.5	—	—	**RWF30-58R**
	30	38.84	15.918	—	—	68.39	25.05	4.5	—	—	**RWF30-58CR**
	30	38.84	15.918	—	12	93.05	20	34.21	—	32.21	**RWF30-67BR**
	30	38.84	15.918	—	12	93.05	20	34.21	—	32.21	**RWF30-67CR**
	30	38.84	15.918	—	12	90.2	15.5	35.86	—	33.86	**RWF30-68BaR**
	30	38.84	15.918	—	12	90.2	15.5	35.86	—	33.86	**RWF30-68CaR**

Bearing series numbers	Dimensions (mm) D	W	A	A_1	B	L_1	Y	Z	L_4	L_3	Bearing numbers
	30	38.84	15.918	—	12	93	18.5	35.66	—	32.61	**RWF30-69BR**
	30	38.84	15.918	—	12	93	18.5	35.66	—	32.61	**RWF30-69CR**
	30	38.84	15.918	—	12	115.3	20.5	55.96	—	52.96	**RWF30-72BR**
	30	38.84	15.918	—	12	115.3	20.5	55.96	—	52.96	**RWF30-72CR**
	30	38.84	15.918	—	12	94.6	16	39.76	—	36.71	**RWF30-74BR**
	30	38.84	15.918	—	12	94.6	16	39.76	—	36.71	**RWF30-74CR**
	30	38.84	15.918	—	12	115.3	24.5	51.96	—	48.96	**RWF30-77BR**
	30	38.84	15.918	—	12	108.9	20	50.06	—	48.4	**RWF30-82BR**
	30	38.84	15.918	—	12	92.7	19.2	34.66	—	31.61	**RWF30-86R11**
	30	38.84	15.918	—	12	99	11	49.16	—	46	**RWF30-94CR11R6**
	30	38.84	15.918	—	12	104.2	16.7	48.66	—	47	**RWF30-97R11**
	30	38.84	15.918	—	12	103	16.5	47.66	—	43	**RWF30-98CR**
	30	38.84	15.918	—	12	94.5	16.5	39.16	—	35.95	**RWF30-102a1R11R10**
	30	38.84	15.918	—	12	123.3	20.5	63.96	—	60.81	**RWF30-104BaR11R10**
	30	38.84	15.918	—	12	123.3	20.5	63.96	—	60.81	**RWF30-104CaR11R15**
	30	38.84	15.918	—	12	99	20.5	39.66	—	36.51	**RWF30-105CaR11R15**
	30	38.84	15.918	—	12	92.5	15.5	38.16	—	35.01	**RWF30-106CaR11R15**
	30	38.84	15.918	—	12	109.1	20.5	49.76	—	46.61	**RWF30-109CaR11R15**
	30	38.84	15.918	—	12	106.2	18.5	48.86	—	45.71	**RWF30-110CaR11R15**
	30	38.84	15.918	—	12	108.9	20	50.06	—	46.91	**RWF30-111CaR11R15**
	30	38.84	15.918	—	12	99.7	16.5	44.36	—	41.7	**RWF30-112CR11**
	30	38.84	15.918	—	12	121.2	20	62.36	—	59.21	**RWF30-113CaR11R15**
	30	38.84	15.918	—	12	93.9	17.4	37.66	—	34.51	**RWF30-117CaR11R15**
	30	38.84	15.918	—	12	91	13.5	38.66	—	36.32	**RWF30-121CR11**
	30	38.84	15.918	—	12	91	13.5	38.66	—	36.32	**RWF30-121CaR11**
	30	38.84	15.918	—	12	103	16.5	47.66	—	43	**RWF30-125CR**
	30	38.84	15.918	—	12	106.5	17.5	50.16	—	48	**RWF30-126CR11**
	30	38.84	15.918	—	12	96.5	16.5	41.16	—	38.75	**RWF30-128HaRR6**
	30	38.84	15.918	—	12	92.5	16.5	37.16	—	34.75	**RWF30-129HaRR6**
	30	38.84	15.918	—	12	100.75	15.5	46.41	—	42.36	**RWF30-132Ca1R11R15**
	30	38.84	15.918	—	12	126.4	16.7	70.86	—	69.2	**RWF30-136R11**
	30	38.84	15.918	—	12	98.4	17.7	41.86	—	38.71	**RWF30-137CaR11R15**
	30	38.84	15.918	—	12	99.4	18.5	42.06	—	39.45	**RWF30-141CaR**
	30	38.84	15.918	—	12	100	20	41.16	—	39.45	**RWF30-143CaR**
	30	38.84	15.918	—	12	108.8	20.5	49.46	—	44.91	**RWF30-145CaR**
	30	38.84	15.918	—	12	106	30	37.16	—	33.95	**RWF30-158HaR11R10g3**
	30	46	15.918	—	12	99.5	17	36.5	—	33.35	**RWF30-90EaR11R15**
	30	46	15.918	—	12	99.5	17	36.5	—	33.35	**RWF30-90Ea1R11R15**
RWFS30	30	30	17.2	—	12	80.5	13.5	37	—	35	**RWFS30-7BaR**
	30	30	17.2	—	12	77	13.1	33.9	—	31.9	**RWFS30-8BaR**
	30	30	17.2	—	12	77.7	12.1	35.6	—	33.6	**RWFS30-14BaR13**
	30	30	17.2	—	12	82.8	13.5	39.3	—	36.3	**RWFS30-19aR13R16**
	30	30	17.2	—	12	79.3	13.1	36.2	—	33.2	**RWFS30-20aR13R16**
	30	30	17.2	—	12	79.2	13.1	36.2	—	33.2	**RWFS30-20a1R13R16**
	30	30	17.2	—	12	78.6	12.1	36.5	—	33.5	**RWFS30-22aR13R16U1**
	30	30	17.2	—	12	78.7	13.1	35.6	—	33.6	**RWFS30-28aR**
	30	30	17.2	—	12	78.7	13.1	35.6	—	33.6	**RWFS30-28aRR23**
	30	30	17.2	—	—	52.4	19.4	3	—	—	**RWFS30-29HaR13**
	30	30	17.2	—	12	82.8	14.5	38.3	—	35.3	**RWFS30-33aR13R16**

Dimensional table (Ball·Roller type <RWF>)

Bearing series numbers	Dimensions (mm)										Bearing numbers
	D	W	A	A_1	B	L_1	Y	Z	L_4	L_3	
	30	34	17.2	—	12	95.3	14.9	46.4	—	43.4	**RWFS30-30aR19R16**
RWF35	35	29.9	17.5	—	12	96.2	13.6	52.7	—	50.45	**RWF35-79R4**
	35	29.9	17.5	—	12	99.9	15.3	54.7	—	51.4	**RWF35-197CR25R34**
	35	33.4	17.5	—	12	83.7	13.95	36.35	—	32.35	**RWF35-111aR28R24**
	35	33.4	17.5	—	12	86	13.95	38.65	—	34.65	**RWF35-131aR28R34**
	35	33.4	17.5	—	12	86	13.95	38.65	—	34.65	**RWF35-131CaR28R34**
	35	38.84	18	15.918	12	112	30.025	43.135	28.525	40.75	**RWF35-1AaRR12**
	35	38.84	18	15.918	12	101	25.025	37.135	23.5	33.95	**RWF35-9HaR17R21**
	35	38.84	18	15.918	12	106	30	37.16	28.5	33.95	**RWF35-48HaR17R35**
	35	38.84	18	15.918	12	112	30	43.16	28.75	40.5	**RWF35-82aRR21**
	35	38.84	17.5	—	12	100.4	15	46.56	—	40.35	**RWF35-118CaR25R26+Y1**
	35	38.84	18	17.5	12	100.4	15	46.56	15	40.35	**RWF35-136aR17R21+Y1**
	35	38.84	17.5	—	12	100.4	17	44.56	—	38.35	**RWF35-138CaR25R26g3+Y1**
	35	38.84	17.5	—	12	105.2	26	40.36	—	37.15	**RWF35-139CaR25R34**
	35	38.84	17.5	—	12	113.12	24.53	49.75	—	46.54	**RWF35-141CaR25R34U5**
	35	38.84	17.5	—	12	101.62	24.53	41.46	—	35.04	**RWF35-144CaR25R34**
	35	38.84	18	15.918	12	113.5	25.1	49.56	23.85	47	**RWF35-153R17**
	35	38.84	17.5	—	12	133.9	32.56	62.5	—	59.29	**RWF35-155CaR25R34**
	35	38.84	17.5	—	12	99.25	17.05	43.36	—	40.15	**RWF35-166CaR25**
	35	38.84	17.5	15.918	12	128.5	30.1	59.56	28.6	56.35	**RWF35-177AR25**
	35	38.84	18	15.918	12	92.5	16.5	37.16	14	34.75	**RWF35-183JaR17R12**
	35	38.84	17.5	—	12	100.3	20	41.46	—	38.96	**RWF35-191CaR25R34**
	35	38.84	17.5	—	12	99	20.5	39.66	—	36.45	**RWF35-192CaR25R34**
	35	46	18	15.918	12	114	27	41	25.5	38.75	**RWF35-3KaR17R12**
	35	46	18	15.918	12	114	27	41	25.5	37.85	**RWF35-3LaR17R21**
	35	46	18	15.918	12	119	30	43	28.5	39.85	**RWF35-5Ha1R17R21g3**
	35	46	18	15.918	12	119	30	43	28.5	39.85	**RWF35-5Ha1R17R35g3**
	35	46	18	15.918	12	100.5	18	36.5	16.25	34	**RWF35-14a2R17R21**
	35	46	18	—	12	114	26.3	41.7	—	37	**RWF35-15R**
	35	46	18	15.918	12	143.2	43.5	53.7	8.7	50.7	**RWF35-31aR**
	35	46	18	15.918	12	108.5	21.5	41	19.5	38.75	**RWF35-45HaR**
	35	46	18	—	10.2	116.5	18.5	52	—	20	**RWF35-53aARR19**
	35	46	18	17	12	112.9	23.9	43	21.65	38.5	**RWF35-54R**
	35	46	18	17	12	123	34	43	32.25	38.5	**RWF35-77R**
	35	46	18	17.5	12	115.3	20.5	48.8	19	44.3	**RWF35-93aR17**
	35	46	18	17.5	12	111.4	20.5	43.9	19	41.9	**RWF35-120BaR17**
	35	46	17.5	—	12	111.4	20.5	44.9	—	41.9	**RWF35-120CaR25**
	35	46	17.5	15.918	12	120.5	30	44.5	28.5	41.75	**RWF35-124GaR25R34g3**
	35	46	17.5	15.918	12	120.5	30	44.5	28.5	41.75	**RWF35-124HaR25R26g3**
	35	46	17.5	—	12	109.1	21	42.1	—	38.89	**RWF35-142CaR25R34**
	35	46	17.5	—	12	125.6	20.5	59.1	—	55.89	**RWF35-143CaR25R26**
	35	46	17.5	—	12	125.6	20.5	59.1	—	55.89	**RWF35-143CaR25R34**
	35	46	17.5	—	12	113.9	21	46.9	—	43.69	**RWF35-146CaR25R26**
	35	46	17.5	—	12	113.9	21	46.9	—	43.69	**RWF35-146CaR25R34**
	35	46	18	15.918	12	98.6	16.8	35.8	15.5	33.3	**RWF35-154R17**
	35	46	18	15.918	12	110.7	26.5	38.2	25	35.95	**RWF35-162HaR17R10**
	35	46	17.5	—	12	104.25	17	41.25	—	38.04	**RWF35-167CaR25**
	35	46	18	15.918	12	110.7	26.5	38.2	25	35.95	**RWF35-184HaR17R10**
	35	56	18	15.918	12	126	28.5	41.5	26.5	37	**RWF35-19AR17R10**

Bearing series numbers	Dimensions (mm)										Bearing numbers
	D	W	A	A_1	B	L_1	Y	Z	L_4	L_3	
	35	56	18	15.918	—	89	28.5	4	27.25	—	**RWF35-42BaRg3**
	35	56	18	15.918	12	125.5	27.5	42	26	39.25	**RWF35-69HaR17R21g3**
	35	56	17.5	—	12	136.6	20.5	60.1	—	56.89	**RWF35-171CR25R26**
	35	56	17.5	—	12	136.6	20.5	60.1	—	56.89	**RWF35-171CR25R34**
	35	56	17.5	—	12	121.9	20	45.9	—	42.69	**RWF35-172CR25R34UR2**
	35	56	17.5	15.918	12	123	27.5	39.5	26	36.75	**RWF35-182CaR25R34g3**
	35	56	18	—	12	122.5	28.5	38	—	35.25	**RWF35-185AaR17R12g3**
	35	56	17.5	—	12	145.6	20.5	69.1	—	46.5	**RWF35-194CR25R34**
RWF38Z	38.1	53.98	18.961	—	12	123.3	20.495	48.825	—	45.825	**RWF38Z-10aR1R5**
	38.1	53.98	18.961	—	12	123.3	20.495	48.825	—	45.825	**RWF38Z-10aR1R6**
RWF41	41	38.9	20	—	12	101.4	13.5	49	—	47.4	**RWF41-3R**
	41	38.9	20	—	12	101.4	13.5	49	—	46.4	**RWF41-3AR2R1**
RWF42	42	46	22	19	12	132.45	36.45	50	34.95	45	**RWF42-12R**
	42	46	22	18	12	112	28.5	37.5	27	35	**RWF42-15R**
	42	46	22	19	12	112	28.5	37.5	27	35	**RWF42-24R**
	42	46	22	—	16	142	33	63	—	57	**RWF42-30RR3+Y**
	42	46	22	19	12	110.5	23.6	40.9	22.6	39	**RWF42-33AR**
	42	46	22	18	13	115.5	26.5	43	24	38.5	**RWF42-34AR**
	42	46	22	15.918	12	126	30	50	29	47.5	**RWF42-36RR5**
	42	46	22	—	12	111.4	24.4	41	—	38.75	**RWF42-39Ha1R6R4g3**
	42	46	22	17.5	12	106	24.5	35.5	23.5	33	**RWF42-41RR4**
	42	46	22	15.918	12	111	28	37	10.5	33.75	**RWF42-50HR6R8g3**
	42	46	22	17	12	126.5	32.5	48	11.5	41.5	**RWF42-51AR6**
	42	46	22	—	16	149.5	35	68.5	—	62.5	**RWF42-58AR6R5**
	42	46	22	—	12	107.6	24.4	37.2	—	34.95	**RWF42-62R6R4**
	42	46	22	—	16	147.5	41	60.5	—	54.5	**RWF42-67R6R5**
	42	46	22	19	12	130.8	23.6	61.2	22.6	59.3	**RWF42-68R6**
	42	46	22	—	12	104.4	17.4	41	—	38.75	**RWF42-71aR6R4g3**
	42	46	22	—	12	104.4	17.4	41	—	38.75	**RWF42-71a1R6R4g3**
	42	46	22	—	12	111.4	24.4	41	—	38.75	**RWF42-73HaR6R4g3**
	42	46	22	—	12	146.5	56.7	43.8	—	37.8	**RWF42-78R6R3g3+Y**
	42	46	22	—	12	130.2	40.4	43.8	—	37.8	**RWF42-79R6R3g3+Y**
	42	46	22	—	12	130.2	40.4	43.8	—	37.8	**RWF42-79AR6R3g3+Y**
	42	46	22	—	12	139.2	49.4	43.8	—	37.8	**RWF42-84R6R3g3+Y**
	42	46	22	—	12	139.2	49.4	43.8	—	37.8	**RWF42-84AR6R3g3+Y**
	42	46	22	—	12	106.5	21	39.5	—	36.25	**RWF42-85R6R8**
	42	46	22	—	12	117.8	28	43.8	—	37.8	**RWF42-86R6R3g3+Y**
	42	46	22	—	12	147.5	41	60.5	—	54.5	**RWF42-89RR3+Y**
	42	46	22	15.918	12	115.5	30	39.5	8.5	35.5	**RWF42-96MR9**
	42	46	22	—	12	111.4	24.4	41	—	38.5	**RWF42-99MR9**
	42	46	22	—	12	118	28	44	—	40.75	**RWF42-104HaR6R8g3**
	42	46	22	15.918	12	114	28	40	9	36	**RWF42-109Ha6R8g3**
	42	56	22	—	12	140.9	35.8	49.1	—	46.1	**RWF42-77AR6R8**
	42	56	22	—	12	127.8	28	43.8	—	37.8	**RWF42-97AR6R3g3+Y**
	42	56	22	—	12	127	29	42	—	38	**RWF42-98MR9**
	42	56	22	—	12	136.1	19.2	60.9	—	51.9	**RWF42-101R6R8**

Dimensional table (Ball·Ball type <BWF>)

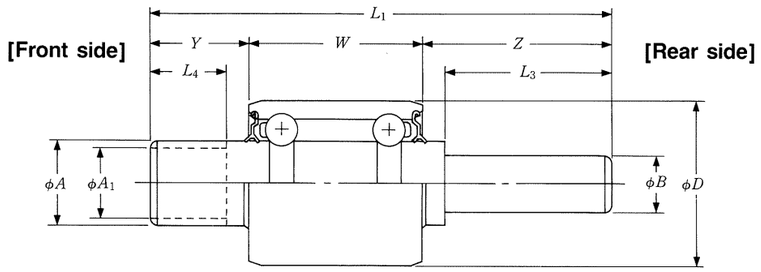

Bearing series numbers	Dimensions (mm) D	W	A	A_1	B	L_1	Y	Z	L_4	L_3	Bearing numbers
BWF24	24	15	10	9.6	8	60.35	11.65	33.7	1.5	—	**BWF24-7g3**
	24	15	10	9.6	8	60.35	11.65	33.7	1.5	—	**BWF24-8g3**
	24	15	10	—	8	60.35	11.65	33.7	—	—	**BWF24-9g3**
BWF26	26	30	12	—	12	78.5	15	33.5	—	—	**BWF26-38R**
	26	39	12	—	12	99	21.5	38.5	—	—	**BWF26-3AR**
	26	39	12	—	12	102.5	21.5	42	—	—	**BWF26-4FR**
	26	39	12	—	12	103.5	21.5	43	—	—	**BWF26-11R**
	26	39	12	—	12	94.5	21.5	34	—	—	**BWF26-14RUJ**
	26	39	12	—	12	89.5	16.5	34	—	—	**BWF26-36aR**
	26	39	12	—	12	94.5	21.5	34	—	—	**BWF26-44R**
	26	39	12	—	12	94.5	21.5	34	—	—	**BWF26-44R7**
	26	39	12	—	12	98	16.5	42.5	—	—	**BWF26-46a1Rg3**
	26	39	12	—	12	94.5	21.5	34	—	—	**BWF26-59R**
	26	39	12	—	12	103.5	17.5	47	—	—	**BWF26-61R**
	26	39	12	—	12	94.5	21.5	34	—	—	**BWF26-62aR7R**
	26	39	12	—	12	94.5	21.5	34	—	—	**BWF26-66MR11**
BWF28	28	20	17.2	—	12	77.1	13	44.1	—	40.45	**BWF28-17aR4R10**
	28	20	17.2	—	12	77.1	13	44.1	—	40.45	**BWF28-17AaR4R10**
BWF30	30	27	15.918	—	12.008	83.3	18.78	37.52	—	35.8	**BWF30-E12**
	30	27	15.918	—	12.008	81.5	18	36.5	—	34.5	**BWF30-E20**
	30	30	15.918	—	12	86	16.5	39.5	37	—	**BWF30-209R**
	30	32.645	15.918	—	12.738	83.44	16.865	33.93	—	32.13	**BWF30-259XaR11**
	30	38.89	15.918	—	12	107.5	85.945	47.055	—	44	**BWF30-5R**
	30	38.89	15.918	12	12	103.5	21.555	43.055	19.5	40.75	**BWF30-6HaRR6**
	30	38.89	15.918	—	12	105.5	23.5	43.11	—	40.5	**BWF30-15aRR6**
	30	38.89	15.918	14	12	101	24	38.11	21.8	35.11	**BWF30-44R**
	30	38.89	15.918	—	12	93	18.5	35.61	—	32.61	**BWF30-56aR**
	30	38.89	15.918	—	12	93	18.5	35.61	—	32.61	**BWF30-56AaR11R14**
	30	38.89	15.918	—	12	93	18.5	35.61	—	32.61	**BWF30-56CR**
	30	38.89	15.918	—	12	93	18.5	35.61	—	32.61	**BWF30-56GaR**
	30	38.89	15.918	15	—	124.05	35.155	50.005	32.6	—	**BWF30-74R**
	30	38.89	15.918	—	12	112	30	43.11	—	40.5	**BWF30-76BaR**
	30	38.89	15.918	—	12	98.5	22.5	37.11	—	33.5	**BWF30-119Z**
	30	38.89	15.918	—	—	115.9	23.81	53.2	—	—	**BWF30-121R**
	30	38.89	15.918	14	12	113.7	24	50.81	22	47.81	**BWF30-124R**
	30	38.89	15.918	—	12	112	23.1	50.01	—	—	**BWF30-130R**
	30	38.89	15.918	12	12	115	25.3	50.81	23.1	47.81	**BWF30-138R**
	30	38.89	15.918	—	12	78	12	36	—	33.4	**BWF30-143AR**

Bearing series numbers	Dimensions (mm) D	W	A	A_1	B	L_1	Y	Z	L_4	L_3	Bearing numbers
	30	38.89	15.918	—	12	99.5	16.5	44.11	—	41.5	**BWF30-148R1**
	30	38.89	15.918	—	12	100	26	35.11	—	32.61	**BWF30-151R**
	30	38.89	15.918	—	12	122.4	33.5	50.01	—	47	**BWF30-158R**
	30	38.89	15.918	—	12	94.6	16	39.71	—	36.71	**BWF30-159R**
	30	38.89	15.918	—	12	91.9	18.5	34.51	—	31.51	**BWF30-162R**
	30	38.89	15.918	—	12	94.9	16.455	39.555	—	36.5	**BWF30-164R**
	30	38.89	15.918	—	12	112.69	27	46.8	—	44.3	**BWF30-165aR**
	30	38.89	15.918	—	12	112.69	27	46.8	—	44.3	**BWF30-165AaR**
	30	38.89	15.918	—	12	90.2	15.5	35.81	—	32.81	**BWF30-175aR**
	30	38.89	15.918	12	12	98.5	16.5	43.11	14.5	40.75	**BWF30-177aRR6**
	30	38.89	15.918	—	12	98	17	42.11	—	39.11	**BWF30-180R**
	30	38.89	15.918	12	12	92.5	16.5	37.11	14.5	34.5	**BWF30-181aR**
	30	38.89	15.918	—	12	93.05	20	34.16	—	32.16	**BWF30-198XR**
	30	38.89	15.918	12	12	105.5	16.5	50.11	13.5	46	**BWF30-214R**
	30	38.89	15.918	—	12	99.5	16.5	44.11	—	41.5	**BWF30-218R1**
	30	38.89	15.918	—	—	78.89	15	25	—	—	**BWF30-219R**
	30	38.89	15.918	—	12	101.8	16.5	46.41	—	43.8	**BWF30-220R**
	30	38.89	15.918	12	12	103	16.5	47.61	1.5	43	**BWF30-223XR**
	30	38.89	15.918	—	12	88	12.5	36.61	—	34.61	**BWF30-225XR11R6**
	30	38.89	15.918	—	12	99	11	49.11	—	46.56	**BWF30-226R11R6**
	30	38.89	15.918	—	12	82.6	11.2	32.51	—	30.51	**BWF30-229XR11R6**
	30	38.89	15.918	12	12	103	16.5	47.61	1.5	43	**BWF30-231XR**
	30	38.89	15.918	—	12	101.8	16.5	46.41	—	43.8	**BWF30-234R**
	30	38.89	15.918	12	12	92.5	16.5	37.11	14.5	34.75	**BWF30-240aR**
	30	38.89	15.918	12	12	103.5	21.555	43.055	19.5	40.75	**BWF30-241HaRR6**
	30	38.89	15.918	—	12	92.5	16.5	37.11	—	34.75	**BWF30-242HaRR6**
	30	38.89	15.918	—	12	92.5	16.5	37.11	—	34.75	**BWF30-243JaRR6**
	30	38.89	15.918	—	12	92.7	19.2	34.61	—	32	**BWF30-246MR17**
	30	38.89	15.918	—	12	121.2	20	62.31	—	59.7	**BWF30-248MaR17**
	30	38.89	15.995	—	—	97.79	17.9	41	—	—	**BWF30-258XaR11**
	30	38.89	15.918	—	12	99.4	18.5	42.01	—	39.45	**BWF30-262aR**
	30	38.89	15.918	—	12	99.4	18.5	42.01	—	39.01	**BWF30-264aR11R15**
	30	38.89	15.918	—	12	94.5	16.5	39.11	—	36.1	**BWF30-265MR17**
	30	38.89	15.918	—	12	112.69	27	46.8	—	44.3	**BWF30-266AR**
BWFS30	30	20	17.2	12	12	62.7	13.5	29.2	11.5	26.2	**BWFS30-27R13R12**
	30	23	17.2	—	12	71.2	13.5	34.7	—	31.7	**BWFS30-1R**
	30	23	17.2	—	12	71.2	13.5	34.7	—	31.7	**BWFS30-1BR10R12**
	30	23	17.2	—	12	71.2	13.5	34.7	—	31.7	**BWFS30-1BR10R22**
	30	23	17.2	—	12	77.8	15.5	39.3	—	33.3	**BWFS30-5aRR3**
	30	23	17.2	—	12	77.8	15.5	39.3	—	33.3	**BWFS30-5CaR**
	30	23	17.2	—	12	77.8	15.5	39.3	—	33.3	**BWFS30-5CaRR3+Y**
	30	23	17.2	—	12	77.8	15.5	39.3	—	33.3	**BWFS30-5CaR13R12**
	30	23	17.2	—	12	77.8	15.5	39.3	—	33.3	**BWFS30-5CaR13R16**
	30	23	17.2	—	12	79	13.5	42.5	—	40	**BWFS30-6R**
	30	23	17.2	—	12	75	13.5	38.5	—	36.5	**BWFS30-15R**
	30	23	17.2	—	12	75	13.5	38.5	—	36.2	**BWFS30-21AR10R12**
	30	23	17.2	—	12	75	13.5	38.5	—	35.6	**BWFS30-26aR13R16**
	30	23	17.2	—	12	92.5	15.5	54	—	51	**BWFS30-29aR13R16**
	30	23	17.2	15.918	12	92.5	16.5	53	14.5	50	**BWFS30-30R13R12**

Dimensional table (Ball·Ball type <BWF>)

Bearing series numbers	Dimensions (mm)										Bearing numbers
	D	W	A	A_1	B	L_1	Y	Z	L_4	L_3	
	30	23	17.2	—	12	76.5	13	40.5	—	37.5	**BWFS30-32aR13R16**
	30	23	17.2	—	12	68.7	11	34.7	—	32.4	**BWFS30-49AR10R22**
	30	23	17.2	—	12	80	15.5	41.5	—	39.2	**BWFS30-50R13R16**
	30	23	17.2	—	12	71.2	13.5	34.7	—	31.7	**BWFS30-54XaR10R22**
	30	30	17.2	—	12	79.3	13.1	36.2	—	34.2	**BWFS30-39MR23**
BWF35	35	29.9	17.5	—	12	79	12	37.1	—	32	**BWF35-27XaR4R18**
	35	29.9	17.5	—	12	79	12	37.1	—	32.25	**BWF35-27aR25R26**
	35	29.9	17.5	—	12	88	16	42.1	—	38.95	**BWF35-28AaR25R26**
	35	29.9	17.5	—	12	85.55	17.3	38.35	—	35.35	**BWF35-40aR4**
	35	29.9	17.5	—	12	102.85	17.3	55.65	—	52.65	**BWF35-48aR25**
	35	29.9	17.5	—	12	103.55	17.3	56.35	—	53.2	**BWF35-54AaR25R34**
	35	29.9	17.5	—	12	86.25	17.3	39.05	—	35.9	**BWF35-55AaR25R34**
	35	29.9	17.5	—	12	99.75	15.6	54.25	—	51.1	**BWF35-57Aa1R25R34**
	35	29.9	17.5	—	12	92	15.5	46.6	—	44.25	**BWF35-58aR25R18**
	35	29.9	17.5	—	12	85.5	15.5	40.1	—	37.75	**BWF35-60XaR4R18**
	35	29.9	17.5	—	12	85.5	15.5	40.1	—	36.95	**BWF35-61AaR25R34**
	35	29.9	17.5	—	12	103.55	17.3	56.35	—	53.2	**BWF35-66MaR38**
	35	29.9	17.5	—	12	88	16	42.1	—	39	**BWF35-68MR38**
	35	29.9	17.5	—	12	79	12	37.1	—	34	**BWF35-71MR38**
	35	38.89	17.5	—	12	91	15	37.11	—	33.95	**BWF35-32AaR25R26**
	35	38.89	17.5	—	12	91	15	37.11	—	33.95	**BWF35-32AaR25R34**
	35	38.89	18	—	12	108.2	22	47.31	—	45	**BWF35-42R**
	35	38.89	17.5	15.918	12	103.4	16.4	48.11	14.9	45.75	**BWF35-59aR4R18**
	35	38.89	17.5	—	12	113.12	24.48	49.75	—	47	**BWF35-63MaR38**
	35	38.89	17.5	15.918	12	101	25	37.11	23.5	34.1	**BWF35-70MR38**
	35	38.89	17.5	—	12	91	15	37.11	—	34.1	**BWF35-72MR38**
	35	38.89	17.5	15.918	12	106	28.75	38.36	27.25	34.1	**BWF35-74MR38**
	35	38.89	17.5	—	12	100.4	15	40.1	—	40.1	**BWF35-78MR38**
	35	46	18	—	13	119	26.5	46.5	—	42	**BWF35-3BR**
	35	46	18	—	12	114	26.5	41.5	—	37	**BWF35-13R**
	35	46	18	—	13	112	26.5	39.5	—	35	**BWF35-14R**
	35	46	17.5	—	12	113.9	21	46.9	—	42.4	**BWF35-64MR38**
	35	46	17.5	15.918	12	100.5	18	36.5	16.25	33.5	**BWF35-69MR38**
	35	46	17.5	15.918	12	119	30	43	28.25	40	**BWF35-73MR38**
	35	46	17.5	15.918	12	114	27	41	25.25	38	**BWF35-76MR38**
BWF40	40	46	19	—	12	126.35	30.35	50	—	45	**BWF40-6AR**
	40	46	19	—	—	82.5	4	32.5	—	—	**BWF40-16**
	40	46	19	18	13	119	26.5	46.5	24	42	**BWF40-17R**
	40	46	19	—	12	111	24.3	40.7	—	38.7	**BWF40-19R**
	40	46	19	—	12	110.5	22.6	41.9	—	39.9	**BWF40-25R**
	40	46	19	—	12	93.5	25	47.5	—	45.5	**BWF40-26R**
	40	46	19	18	13	125.8	33.3	46.5	30.8	42	**BWF40-28R**
	40	46	19	12	12	118.5	25	47.5	—	45.5	**BWF40-31R**
	40	46	19	18	13	115.5	26.5	43	24	38.5	**BWF40-34R**
	40	46	19	—	12	118.5	31.8	40.7	—	38.7	**BWF40-38R**
	40	46	19	—	12	105.4	20.5	38.9	—	36.9	**BWF40-43R**
	40	46	19	—	12	111.45	28.9	36.55	—	34.55	**BWF40-52aR**
	40	46	19	18	13	112	28.5	37.5	26	35	**BWF40-76R**
	40	46	19	17	12	116.85	30.35	40.5	27.8	35.5	**BWF40-77AR**
	40	46	19	18	12	112	28.5	37.5	26	35	**BWF40-80R**

Bearing series numbers	Dimensions (mm)										Bearing numbers
	D	W	A	A_1	B	L_1	Y	Z	L_4	L_3	
	40	46	19	—	—	66.8	3	17.8	—	—	**BWF40-81aR**
	40	46	19	—	12	116.8	30.3	40.5	—	35.5	**BWF40-87R**
	40	46	19	—	12	126.35	30.35	50	—	45	**BWF40-88R**
	40	46	19	17	12	126.35	30.35	50	27.8	45	**BWF40-89R**
	40	46	19	17	12	126.35	30.35	50	27.8	45	**BWF40-89S8R**
	40	46	19	17	12	129.8	29.8	54	27.3	49	**BWF40-90R**
	40	46	19	—	12	112	28.5	37.5	—	35	**BWF40-91R**
	40	46	19	18	12	112	28.5	37.5	26	35	**BWF40-92R**
	40	46	19	—	12	129.8	29.8	54	—	49	**BWF40-93R**
	40	46	19	—	12	112.12	28.9	37.22	—	33.35	**BWF40-94aRR1**
	40	46	19	—	12	117.12	33.9	37.22	—	33.35	**BWF40-95aRR1**
	40	46	19	—	12	105.52	22.3	37.22	—	33.35	**BWF40-96aRR1**
	40	46	19	—	12	104.52	22.3	36.22	—	32.35	**BWF40-97aRR1**
	40	46	19	18	12	119	26.5	46.5	24	42	**BWF40-98R**

MOTION & CONTROL™
NSK

Worldwide Sales Offices

NSK Ltd.–Headquarters, Tokyo, Japan **www.nsk.com**
ASIA BUSINESS STRATEGIC DIVISION-HEADQUARTERS tel: 03-3779-7145
INDUSTRIAL MACHINERY BEARINGS DIVISION-HEADQUARTERS tel: 03-3779-7227
AUTOMOTIVE DIVISION-HEADQUARTERS tel: 03-3779-7189
NEEDLE ROLLER BEARINGS STRATEGIC DIVISION-HEADQUARTERS tel: 03-3779-7121
PRECISION MACHINERY & PARTS DIVISION-HEADQUARTERS tel: 03-3779-7219

Africa

South Africa:
NSK South Africa (Pty) Ltd.
Johannesburg tel: 011-458-3600

Asia and Oceania

Australia:
NSK Australia Pty. Ltd. **www.nskaustralia.com.au**
Melbourne tel: 03-9764-8302

China:
NSK Hong Kong Ltd.
Hong Kong tel: 2739-9933
Kunshan NSK Co., Ltd.
Kunshan Plant tel: 0512-5771-5654
Guizhou HS NSK Bearings Co., Ltd.
Anshun Plant tel: 0853-3521505
NSK Steering Systems Dongguan Co., Ltd.
Dongguan Plant tel: 0769-242-7230
Zhangjiagang NSK Precision Machinery Co., Ltd.
Jiangsu Plant tel: 0512-5867-6496
Timken-NSK Bearings (Suzhou) Co., Ltd.
Jiangsu Plant tel: 0512-6665-5666
NSK China Technology Center
Jiangsu tel: 0512-5771-5654
NSK (Shanghai) Trading Co., Ltd.
Shanghai tel: 021-6235-0198
NSK Representative Offices **www.nsk.com.cn**
Beijing tel: 010-6590-8161
Shanghai tel: 021-6235-0198
Guangzhou tel: 020-8732-0583
Anshun tel: 0853-3522522
Chengdu tel: 028-8661-4200
NSK (China) Investment Co., Ltd.
Shanghai tel: 021-6235-0198

India:
Rane NSK Steering Systems Ltd.
Chennai Plant tel: 04114-266002, 265313, 265363, 265365
NSK Ltd. India Blanch Office
Chennai tel: 044-2433-4732, 044-2434-3036, 3067

Indonesia:
PT. NSK Bearings Manufacturing Indonesia
Jakarta Plant tel: 021-898-0155
PT. NSK Indonesia
Jakarta tel: 021-252-3458

Korea:
NSK Korea Co., Ltd. **www.kr.nsk.com**
Seoul tel: 02-3287-0300
Changwon Plant tel: 055-287-6001

Malaysia:
NSK Bearings (Malaysia) Sdn. Bhd.
Kuala Lumpur tel: 03-77223373
NSK Micro Precision (M) Sdn. Bhd.
Malaysia Plant tel: 03-8961-6288

New Zealand:
NSK New Zealand Ltd. **www.nsk-rhp.co.nz**
Auckland tel: 09-276-4992

Philippines:
NSK Representative Office
Manila tel: 02-759-6246

Singapore:
NSK International (Singapore) Pte Ltd.
Singapore tel: 65-6273-0357
NSK Singapore (Pte) Ltd.
Singapore tel: 65-6278-1711

Taiwan:
Taiwan NSK Precision Co., Ltd.
Taipei tel: 02-2591-0656

Thailand:
NSK Bearings (Thailand) Co., Ltd.
Bangkok tel: 02-6412-150~58
NSK Bearings Manufacturing (Thailand) Co., Ltd.
Chonburi Plant tel: 038-454010~454016
SIAM NSK Steering Systems Co., Ltd.
Chachoengsao Plant tel: 038-522-343~350
NSK Asia Pacific Technology Center (Thailand) Co., Ltd.
Chonburi tel: 038-454631~454633

Europe

NSK Europe Ltd.
(European Headquarters) **www.eu.nsk.com**
Maidenhead, U.K. tel: 01628-509800

France:
NSK France SAS
Paris tel: 01-30-57-39-39

Germany:
NSK Deutschland GmbH
Düsseldorf tel: 02102-481-0
NSK Precision Europe GmbH
Düsseldorf tel: 02102-481-0
NSK Steering Systems Europe Ltd.
Stuttgart tel: 0771-79082-277
Neuweg Fertigung GmbH
Munderkingen tel: 07393-540

Italy:
NSK Italia S.p.A.
Milano tel: 02-995-19-1
Industria Cuscinetti S.p.A.
Torino Plant tel: 0119824811

Netherlands:
NSK European Distribution Centre B.V.
Tilburg tel: 013-4647647

Poland:
NSK Europe Ltd. Warsaw Liaison Office
Warsaw Liaison tel: 022-645-1525, 1526
NSK Iskra S.A.
Kielce tel: 041-366-5001
NSK European Technology Center, Poland Office
Kielce tel: 041-366-5812

Spain:
NSK Spain S.A.
Barcelona tel: 093-575-4041

Turkey:
NSK Bearings Middle East Trading Co., Ltd.
Istanbul tel: 0216-442-7106

United Kingdom:
NSK Bearings Europe Ltd.
Peterlee Plant tel: 0191-586-6111
NSK European Technology Centre
Newark tel: 01636-605123
NSK UK Ltd.
Newark tel: 01636-605123
NSK Steering Systems Europe Ltd.
Coventry tel: 024-76-588588

North and South America

NSK Americas, Inc. (American Headquarters)
Ann Arbor, Michigan, U.S.A. tel: 734-913-7500

Argentina:
NSK Argentina SRL
Buenos Aires tel: 11-4704-5100

Brazil:
NSK Brasil Ltda. **www.br.nsk.com**
São Paulo tel: 011-3269-4723

Canada:
NSK Canada Inc. **www.ca.nsk.com**
Toronto tel: 905-890-0740

Mexico:
NSK Rodamientos Mexicana, S.A. de C.V. **www.mx.nsk.com**
Mexico City tel: 55-301-2741, 55-301-3115, 55-301-4762

United States of America:
NSK Corporation **www.nsk-corp.com**
Ann Arbor tel: 734-913-7500
Sales Offices:
Ann Arbor, Michigan tel: 734-913-7500
Cerritos tel: 562-926-2975
NSK American Technology Center
Ann Arbor tel: 734-913-7500
NSK Precision America, Inc. **www.npa.nsk.com**
Chicago tel: 630-620-8500
NSK Steering Systems America, Inc. **www.nastech.nsk.com**
Bennington, Vermont tel: 802-442-5448
NSK Latin America Inc. **www.latinamerica.nsk.com**
Miami tel: 305-477-0605

NSK Ltd. has a basic policy not to export any products or technology designated as controlled items by export-related laws. When exporting the products in this brochure, the laws of the exporting country must be observed. Specifications are subject to change without notice and without any obligation on the part of the manufacturer. Every care has been taken to ensure the accuracy of the data contained in this brochure, but no liability can be accepted for any loss or damage suffered through errors or omissions. We will gratefully acknowledge any additions or corrections.

For more information about NSK products, please contact:

PRINTED WITH SOY INK™
Eco-awareness and reliability in motion
NSK
Printed on 100% recycled paper.
CAT. No. E396a 2005 C-9 Printed in Japan ©NSK Ltd. 1992