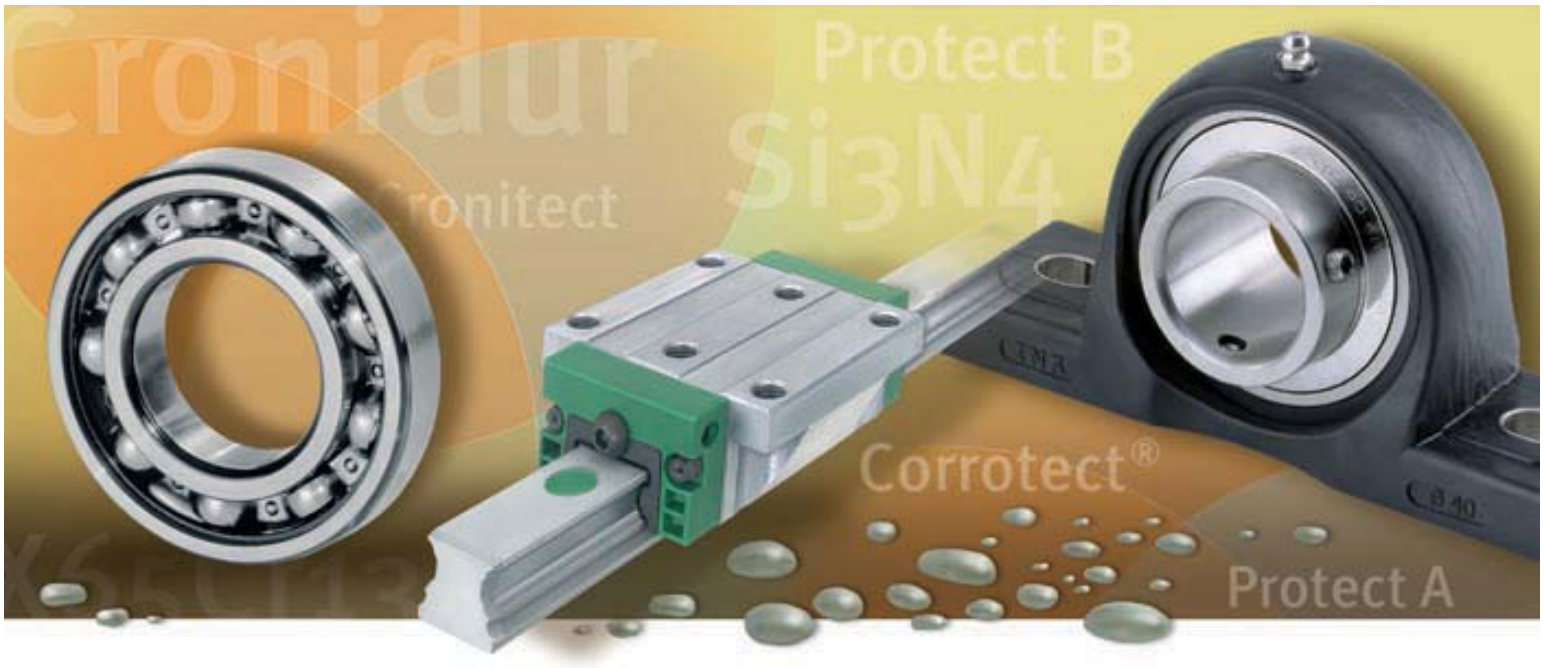

Corrosion-resistant products

SCHAEFFLER GROUP
INDUSTRIAL

Foreword

INA and FAG products have proved themselves over many years, even under critical and problematic environmental conditions. Their use may, however, be restricted by corrosive or chemical media such as those present in agriculture, mining, the chemical industry and in the food and drinks industry.

Range

For applications involving these demanding requirements for anti-corrosion protection, reliability and operating life, we now offer an expanded range of corrosion-resistant products that are presented together in this publication:

- deep groove ball bearings, miniature deep groove ball bearings
- insert bearings and housing units
- yoke and stud type track rollers
- linear guidance systems
- Permaglide® plain bearings
- maintenance-free ELGES rod ends.

Special coatings, special materials

The bearings are made from high alloy, corrosion-resistant steels or are coated with the special coating Corrotect®, Durotect® CK (Protect A) or Durotect® CK+ (Protect B).
The housings are made from Corrotect® coated flake graphite cast iron or glass fibre reinforced plastic. The plastic is highly resistant to moisture, UV radiation, bacteriological and fungal attacks as well as many chemical media. The plain bearings comprise the maintenance-free P11 or the maintenance-free and lead-free P143.

Additional measures

The positive characteristics of the products are completed by additional anti-corrosion measures such as high performance plastics for cases and seals as well as particularly high performance ceramic components matched to the application. As a result, there is no longer any obstacle to the successful, long term use of the machine elements under problematic and corrosive conditions.

Replacement for ...

This edition replaces TPI 64, issued in April 2007. The data in the catalogue represent the current level of technology and manufacture as of May 2008. They reflect not only progress in rolling bearing technology but also the experience gathered in practical use.
Any information in previous publications that does not concur with the data in this Technical Product Information is therefore invalid.

Safety guidelines and symbols

High product safety

Our products correspond to the current level of research and technology. If the bearing arrangement is designed correctly, the products are handled and fitted correctly and as agreed and if they are maintained as instructed, they do not give rise to any direct hazards.

Follow instructions

This publication describes standard products. Since these are used in numerous applications, we cannot make a judgement as to whether any malfunctions will cause harm to persons or property.

It is always and fundamentally the responsibility of the designer and user to ensure that all specifications are observed and that all necessary safety information is communicated to the end user. This applies in particular to applications in which product failure and malfunction may constitute a hazard to human beings.

Definition of guidelines and symbols

The warning and hazard symbols are defined along the lines of ANSI Z535.6–2006.

The meaning of the guidelines and symbols is as follows.

If they are not observed, damage or malfunctions in the product or the adjacent construction will occur.

Contents

	Page
Safety guidelines and symbols	2
Product overview	4
Technical principles	6
Deep groove ball bearings, miniature deep groove ball bearings	26
Insert bearings and housing units	39
Insert bearings	42
Housing units with cast iron or sheet steel housing	50
Housing units with plastic housing	60
Yoke and stud type track rollers	80
Linear guidance systems	89
Monorail guidance systems	92
Track roller guidance systems	96
Linear ball bearings and solid shafts	98
Miniature guidance systems	108
Driven linear units	112
Screw drives	114
Maintenance-free Permaglide® plain bearings	116
Maintenance-free ELGES rod ends	126

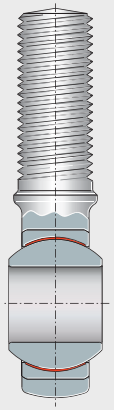

118 129

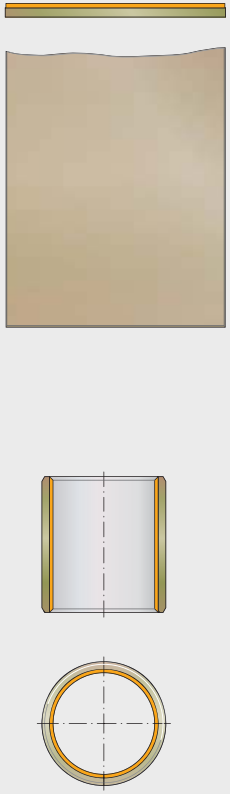

136 500

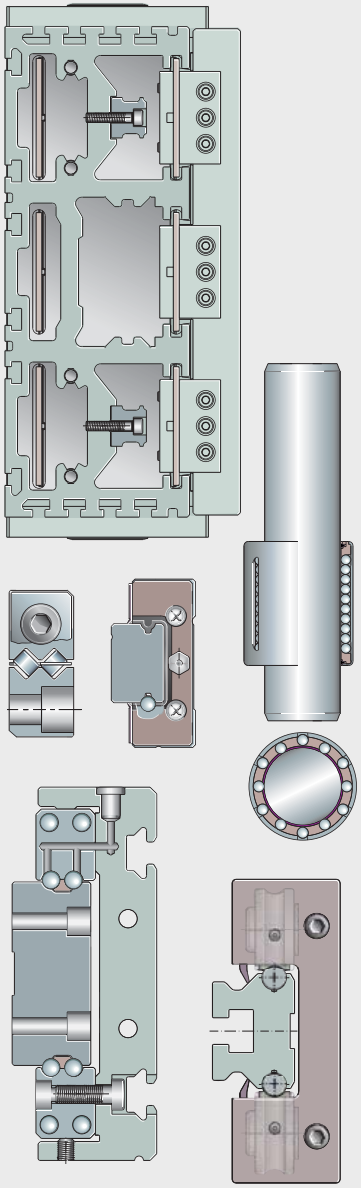

217 110

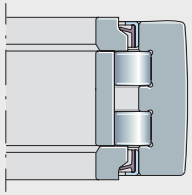

110 252

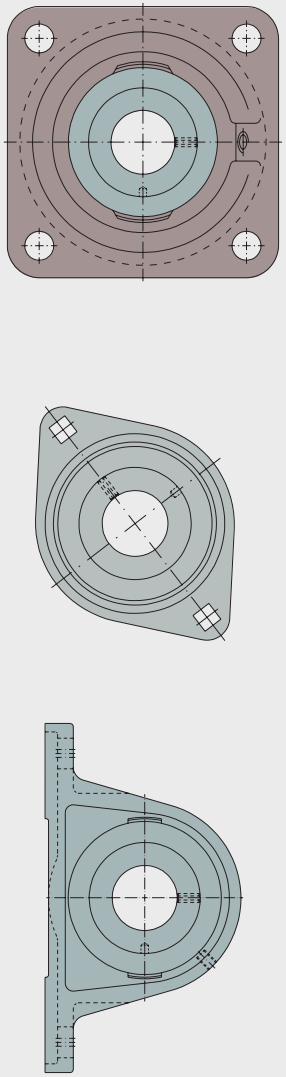

214 508

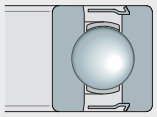

135 455

Materials, coatings, lubricants

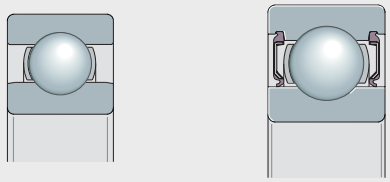

135 453

Deep groove ball bearings
Miniature deep groove ball bearings

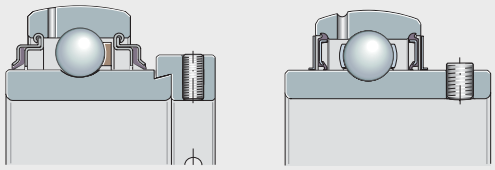

214 507

Insert bearings and housing units

- Radial insert ball bearings
- Housing units with cast iron or sheet steel housing
- Housing units with plastic housing

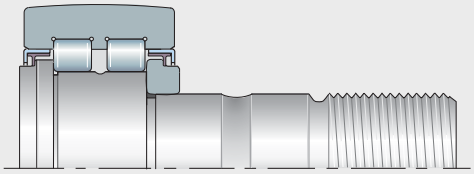

110 251

Yoke type track rollers
Stud type track rollers

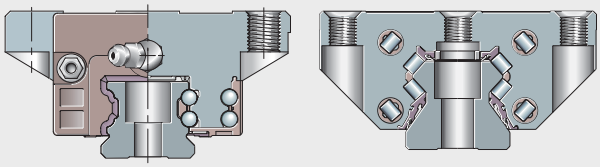

217 109

Linear guidance systems

- Monorail guidance systems
- Track roller guidance systems
- Linear ball bearings and solid shafts
- Miniature guidance systems
- Driven linear units
- Ballscrews

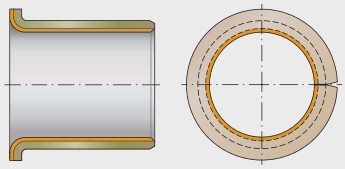

136 499

Maintenance-free Permaglide® plain bearings

- Bushes
- Flanged bushes
- Strips

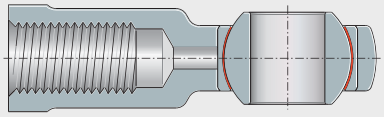

118 128

Maintenance-free ELGES rod ends

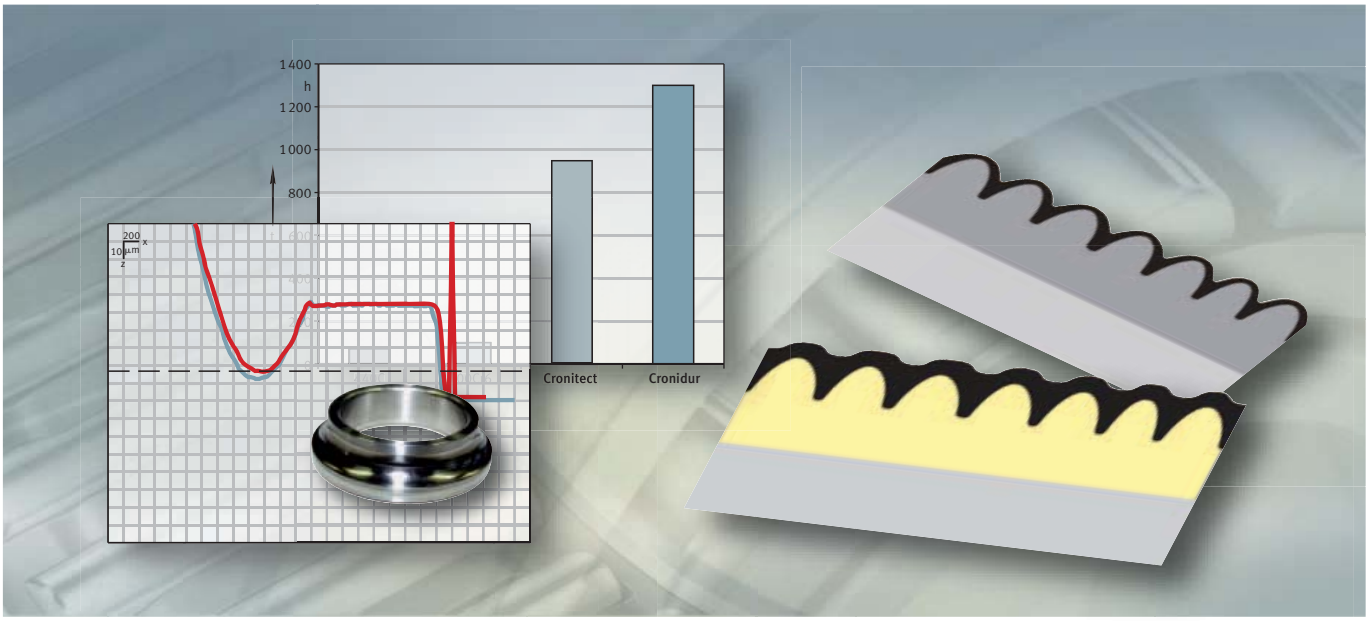

Materials
Coatings
Lubricants

Materials, coatings, lubricants

Page

Materials

Corrosion-resistant steels 8
- High performance steels Cronidur and Cronitect 8
- Media resistance 10
- Wear resistance 12
- Fatigue life 13

Ceramic in hybrid bearings 14
- Insensitive to inadequate lubrication and dry running 14
- Media resistance of silicon nitride 15

High performance plastic PAEK 16
- Characteristics of the plastic 16
- Applications 17

Coatings

Types of coatings 18

Special coating Corrotect® 19
- Basic data 19
- Characteristics of the coating 20

Durotect® CK (Protect A) 21
- Anti-corrosion and anti-wear protection 21
- Advantages of the coating 21
- Technical/physical data 21

Durotect® CK+ (Protect B) 22
- Anti-corrosion and high anti-wear protection 22
- Advantages of the coating 22
- Technical/physical data 22

Lubricants

Greases 23
- Arcanol greases for relubrication 23
- Lubricants for the food industry 23
- Greases with high media resistance 23
- Greases for clean room applications 23
- Further information 23

Materials

Corrosion-resistant steels

In addition to the special coatings Corrotect®, Durotect® CK (Protect A) and Durotect® CK+ (Protect B), there is also a range of corrosion-resistant materials for rolling bearings operating in corrosive environments.

Steels used as standard and proven in this situation include: X90CrMoV18 (material no. 1.4112), X105CrMoV18 (material no. 1.4125) and X46Cr13 (material no. 1.4034).

These materials have satisfactory corrosion resistance in many media.

High performance steels Cronidur and Cronitect

For higher performance requirements, highly corrosion-resistant, nitrogen alloyed martensitic HNS steels (High Nitrogen Steel) such as Cronidur and the newly developed steel Cronitect are also available by agreement. In contrast to Cronidur, Cronitect has nitrogen introduced into the structure by means of a surface layer hardening process.

Both steels are clearly superior to conventional corrosion-resistant steels for rolling bearings in terms of corrosion resistance, wear resistance and fatigue strength.

Corrosion resistance

Objective statements on the corrosion resistance of a material can be obtained by means of passive current density measurements. As a function of the electrical voltage, the current flowing in an electrolyte between two electrodes made from the material under investigation is measured. The corrosion resistance increases as the current measured decreases.

Although steel classified as corrosion-resistant 440C has a higher chromium content, its corrosion resistance is significantly lower than that of Cronidur and Cronitect. The reason lies in the different interactions between the chemical compounds that chromium forms with carbon and nitrogen respectively. The chromium content effective against corrosion is reduced in comparison with its initial condition by carbon during heat treatment.

Due to their special quenching and tempering and surface treatment, Cronidur and Cronitect have very high corrosion resistance against aqueous media and heavily diluted acids, alkalines or salt solutions. They are therefore suitable for a wide range of applications, for example in clean rooms and electronic component manufacturing plant as well as in the pharmaceutical and food industries.

Salt spray test

In order to assess corrosion resistance, steels and coatings are subjected to a standardised salt spray test in accordance with DIN EN ISO 9 227.

The results show clearly the extremely high resistance of the high performance steels Cronidur and Cronitect compared to the classic corrosion-resistant steels and coatings.

While the typical rolling bearing steel X46Cr13 shows clear signs of corrosion after only approx. 6 h, Cronidur and Cronitect are up to 200 times more resistant compared to the corrosion-resistant steels, see *Figure 1* to *Figure 3*, page 9.

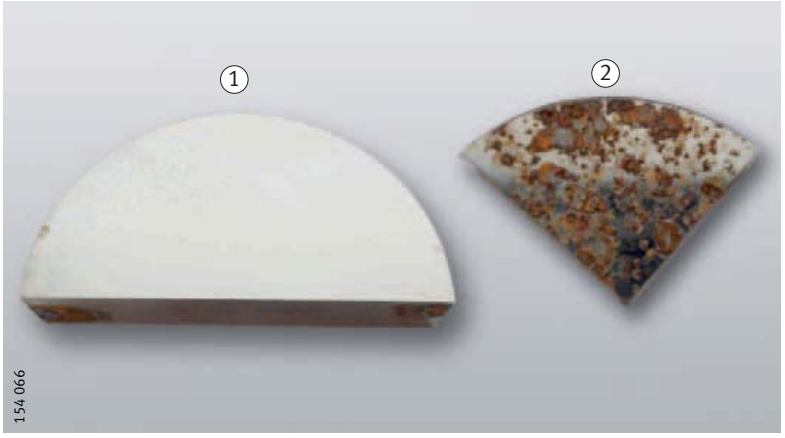

① Cronitect
② 440C steel

Figure 1
Corrosion resistance, comparison after 24 h in salt spray test

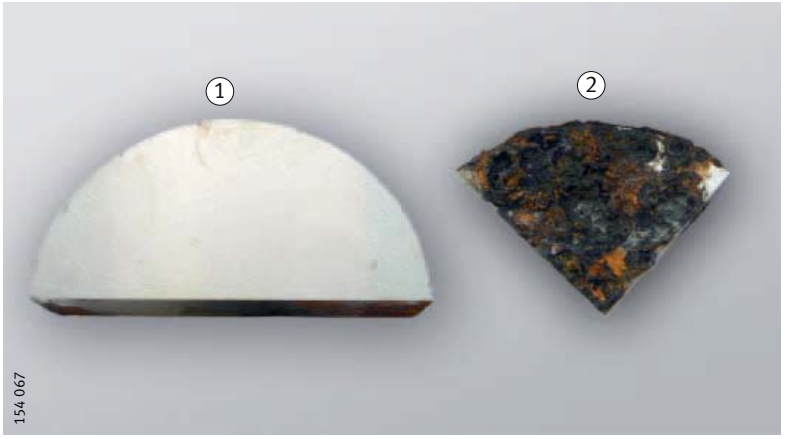

Cronitect
440C steel

Figure 2
Corrosion resistance, comparison after 500 h in salt spray test

t = corrosion resistance in hours
X46Cr13
X105CrMo17 (440C)
③ Durotect® CK (Protect A), 2 µm
④ Durotect® CK+ (Protect B), 2 m
⑤ Durotect® CM, 2 m
⑥ Durotect® CM, 50 m, to 360 h possible, depending on post-treatment
⑦ Corrotect® A*, free from Cr(VI)
⑧ Corrotect® C, containing Cr(VI)
⑨ Cronitect

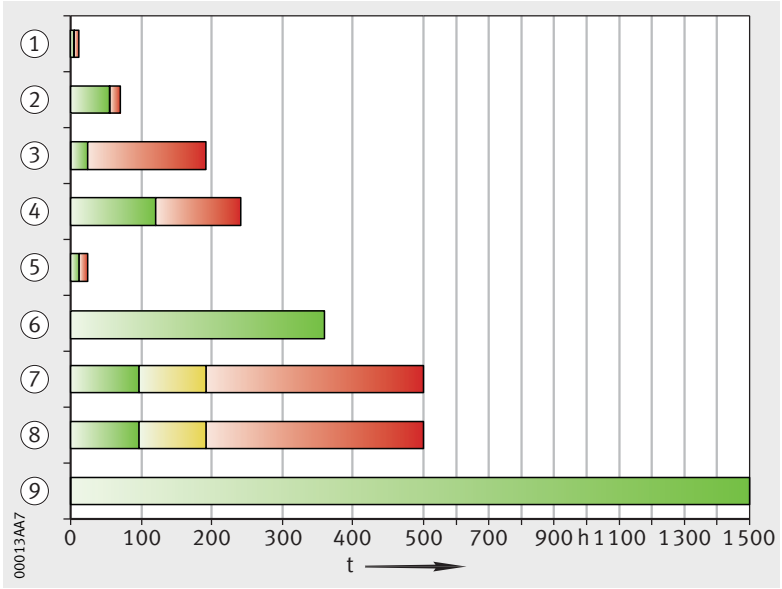

Figure 3
Corrosion resistance, comparison: Corrosion-resistant steels, coatings, Cronitect

Materials

Media resistance

In the food industry in particular, the resistance of the material in relation to various cleaning agents is of increasing importance.

In many cases, the corrosion resistance of conventional steels such as 440C is no longer sufficient. In this case too, the high performance steel Cronidur shows a significantly higher media resistance: see tables. The media resistance of Cronitect is comparable to that of Cronidur.

Resistance to media

Medium	Concen-tration	X65Cr13 (1.4037)		X5CrNi18-10 X4CrNi18-10 (1.4301)		Cronidur		X105CrMoV18 (440C) (1.4125)	
		20	80	20	80	20	80	20	80
	%	°C		°C		°C		°C	
Hydrochloric acid HCl	0,1	–	–	+	+	+	+	–	–
	1	–	–	(+)	–	–	–	–	–
	18	–	–	–	–	–	–	–	–
Sulphuric acid H_2SO_4	1	–	–	+	–	–	–	–	–
	10	–	–	(+)	–	–	–	–	–
	96	(+)	–	+	(+)	–	–	–	–
Nitric acid HNO_3	5	–	–	+	+	+	+	–	–
	25	+	(+)	+	+	+	+	+	(+)
	65	+	(+)	+	+	+	(+)	+	(+)
Phosphoric acid H_3PO_3	1	+	+	+	+	+	+	+	+
	10	–	–	+	+	+	+	(+)	+
	85	+	–	+	+	+	(+)	+	–
Formic acid HCOOH	5	–	–	+	+	+	+	–	–
	25	–	–	+	+	+	(–)	–	–
Ethanoic acid CH_3COOH	5	(+)	–	+	+	+	+	+	–
	25	(+)	–	+	+	+	+	+	–

+ Resistant
(+) Moderately resistant
– Barely usable
(–) Not resistant

Resistance to media

Medium	Concen-tration %	X65Cr13 (1.4037)		X5CrNi18-10 X4CrNi18-10 (1.4301)		Cronidur		X105CrMoV18 (440C) (1.4125)	
Citric acid	5	(+)	–	+	+	+	+	+	+
	25	(+)	–	+	+	+	+	–	–
Sodium chloride NaCl	10	(–)	(–)	+	+	+	+	(–)	(–)
Sea water	4	(–)	(–)	+	+	+	+	(–)	(–)
Distilled water	–	+	+	+	+	+	+	+	+
Ammonia NH_4OH	1	+	+	+	+	+	+	+	+
	10	+	+	+	+	+	+	+	+
Potassium hydroxide solution KOH	0,1	+	+	+	+	+	+	+	+
	1	+	+	+	+	+	+	+	+
	10	+	+	+	+	+	+	+	+
Hydrogen fluoride HF	1	–	–	–	–	–	–	–	–
	5	n	–	n	–	n	–	n	–
Sulphurous acid H_2SO_3	1	–	–	+	+	+	+	–	–
Chloroacetic acid	5	(+)	–	+	(+)	+	–	(+)	–
Sodium hypo-chlorite bleach	1	n	(–)	n	+	n	+	n	(–)
Hydrogen peroxide H_2O_2	5	+	+	+	+	+	+	+	+

+ Resistant
(+) Moderately resistant
– Barely usable
(–) Not resistant
n Not tested

The material is determined by the application

Which steels are used, whether a coating is more advisable or whether corrosion-resistant steels are better in technical terms or more cost-effective, is fundamentally dependent on the application.

Wear resistance

In order to achieve a long operating life, it is particularly important that a rolling bearing steel has high wear resistance where lubrication is poor, for example due to the effect of water.
The wear resistance of a material can be assessed by methods including dry running tests.

Dry running test

Angular contact ball bearings 7205B with bearing rings made from 100Cr6 or Cronitect and ceramic rolling elements were compared in dry running. The speed was 1000 min^{-1}, the contact pressure was 1350 MPa and the dry running time was 300 h.

The red curve indicates the surface profile at the start of the test, the blue curve indicates the surface profile at the end of the test, see *Figure 4* and *Figure 5*. While the curve at the end of the test deviates considerably from the initial curve in the case of 100Cr6 steel, indicating considerable wear, the two lines are approximately congruent in the case of Cronitect. The raceways made from the high performance steel Cronitect and, to a comparable extent also Cronidur, show hardly any changes or wear.

Due to the extremely high wear resistance, Cronidur and Cronitect are also suitable for dry running and media lubrication.

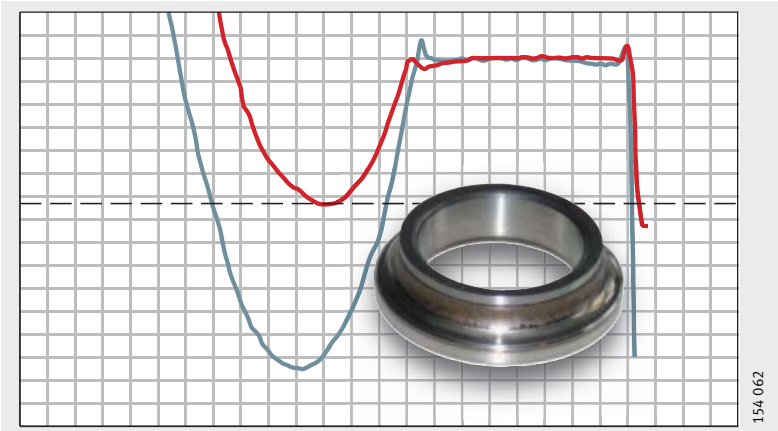

Figure 4
Bearing rings made from 100Cr6

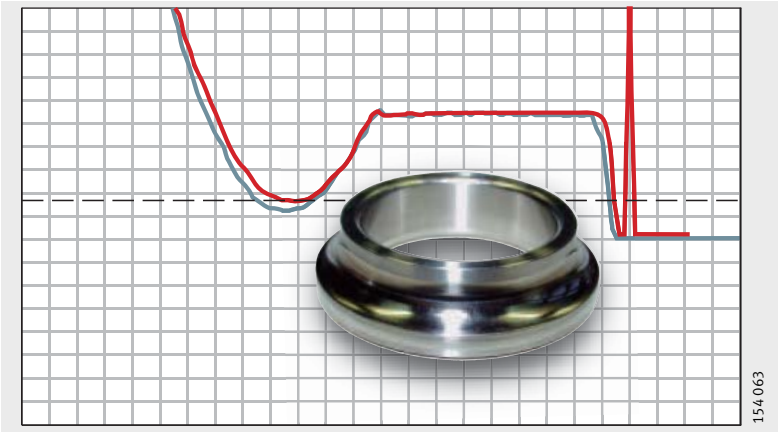

Figure 5
Bearing rings made from Cronitect

Fatigue life

Where bearings are lubricated and the lubricant has good cleanliness, the bearing operating life is determined by the fatigue strength of the rolling bearing steel.

Life test

The comparison of the material fatigue life determined for four materials in the test is shown in *Figure 6*. The contact pressure in the test was 2 500 MPa.

In comparison with the corrosion-resistant steel 440C, and to a similar extent for the standard rolling bearing steel 100Cr6, the fatigue limit life of Cronitect and Cronidur is higher by a factor 9 to 13.

The basic dynamic load rating C_r of ball bearings with rings made from Cronidur or Cronitect is, in comparison with conventional rolling bearing steel, up to 50% higher depending on the design.

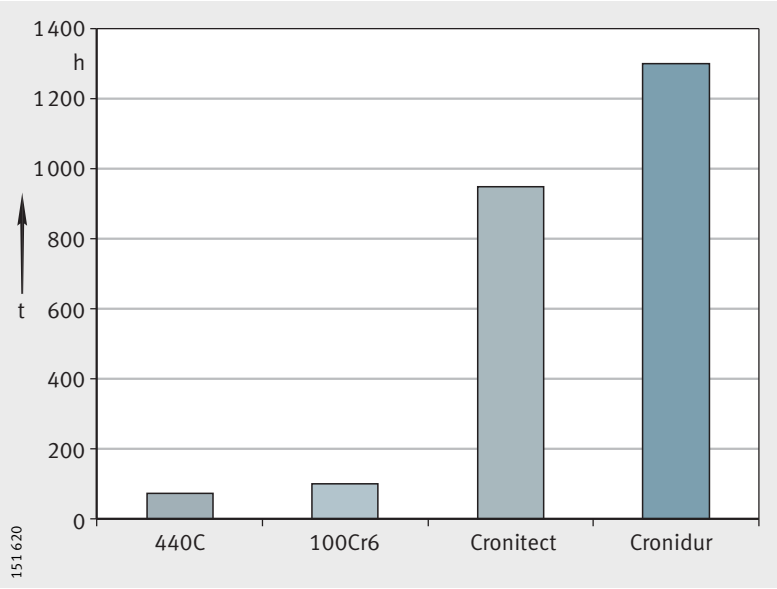

t = fatigue limit life in hours

Figure 6
Fatigue limit life of various steels

Materials

Ceramic in hybrid bearings

Ceramic has become firmly established as an important group of materials for rolling bearing components. Since this material has a range of excellent characteristics, rolling elements made from silicon nitride Si_3N_4 are increasingly used in combination with coatings, special materials or very specific application-requirements.

Silicon nitride is light, has a long operating life and offers significant advantages in many applications. Ceramic balls made from Si_3N_4 are thus characterised, for example, by their low inherent mass together with high hardness, corrosion resistance and electrical insulation.

The significant diferences compared to the classic rolling bearing steel 100Cr6 are shown in the table.

Advantages of pure hybrid bearings compared to steel bearings

Characteristics		Silicon nitride Si_3N_4	Rolling bearing steel 100Cr6
Density	g/cm^3	3,2	7,8
4 point bending strength	MPa	600 – 700	>2 500
Modulus of elasticity	GPa	300 – 330	200 – 210
Hardness HV10	GPa	1 600	700
Fracture toughness	$MPa\ m^{1/2}$	7 – 8	20
Specific electrical resistance at +20 °C	Ω	$10^{17} – 10^{18}$	$10^{-1} – 1$
Coefficient of thermal expansion	$10^{-6}K^{-1}$	3,2	11,6
Thermal conductivity	$Wm^{-1}K^{-1}$	32	45
Corrosion behaviour		Good	Poor
Magnetism		None	Yes
Hot hardness		Good	Poor, good under certain conditions
Max. operating temperature	+°C	800 – 1 000	150

Insensitive to inadequate lubrication and dry running

Rolling bearings made from steel tend to undergo adhesive wear at the rolling contact in conditions of poor lubrication. Metallic contact leads, particularly under high contact pressure at the rolling contact, to cold bonding at the surface, resulting in wear. Steel bearings are therefore not suitable for dry running and media lubrication.

Due to the favourable tribological characteristics of the ceramic/steel material combination, the wear resistance is significantly higher in this case. In combination with the highly wear-resistant high performance steels Cronidur and Cronitect, a long bearing operating life is achieved with ceramic rolling elements under conditions of poor lubrication, media exposure or dry running.

Media resistance of silicon nitride

Silicon nitride has very good chemical resistance to most acids such as hydrochloric acid, sulphuric acid, nitric acid, phosphoric acid and alkalis such as sodium hydroxide solution at room temperature: see table. One exception is hydrofluoric acid. Ceramic has only moderate resistance in this case.

Resistance of various ceramics

Medium	Concen-tration	Si_3N_4 NBD200		Si_3N_4 TSN03NH		ZrO_2		SiC	
	%	RT	80 °C	RT	80 °C	RT	80 °C	RT	80 °C
Deionised water	–	+	+	+	+	+	+	+	+
Sea water	–	+	+	+	+	+	+	+	+
Sodium chloride	10	+	+	+	+	+	+	+	+
Ammonia	10	+	+	+	+	+	+	+	+
Potassium hydroxide solution	1	+	+	+	+	X	X	X	X
	10	+	+	+	+	+	+	+	+
Sodium hydroxide solution	1	+	+	+	+	X	X	X	X
	10	+	+	+	+	+	+	+	+
Citric acid	10	+	+	+	(+)	X	X	X	X
Hydrochloric acid	18	+	+	+	(+)	X	X	X	X
Sulphuric acid	49	+	+	+	(+)	+	+	+	+
Nitrohydrochloric acid	–	+	+	+	(+)	+	+	+	+
Phosphoric acid	10	+	+	+	(+)	X	X	X	X
	85	+	+	+	+	+	+	+	+
Hydrofluoric acid	1	(+)	–	+	–	X	X	X	X
	5	(+)	–	+	–	(+)	–	+	+
	20	(+)	–	+	–	–	–	+	+

+ Resistant
(+) Moderately resistant
– Not resistant
X Not resistant

Applications

Bearings with ceramic rolling elements are used in spindles for machine tools, in turbomolecular pumps as well as in electric motors and generators.

They are also used in preference in areas of application including medical equipment and aerospace. Due to their high specific resistance, furthermore, they are ideally suited where complete electrical insulation is required.

They are indispensable in bearing arrangements operating in environments with little lubrication or oil as well as in aggressive media.

High performance plastic PAEK

Polyaryletherketone (PAEK) is a high performance polymer that is optimally suitable for demanding applications in corrosive environments. Due to its excellent characteristics, this material is also increasingly used as a substitute for metals, composites and other polymers.

Characteristics of the plastic

Temperature-resistant, wear-resistant, good for dry running

PAEK is resistant to high temperatures and, depending on the load, is suitable for operating temperatures up to +250 °C. The wear resistance is strongly influenced by the filler materials and is significantly better than that of the standard material PA66 with glass fibre reinforcement that is frequently used for cages.

It has good characteristics in dry running and excellent wear resistance at various grades of contact surface roughness over a wide range of pressures, speeds and temperatures, *Figure 7*.

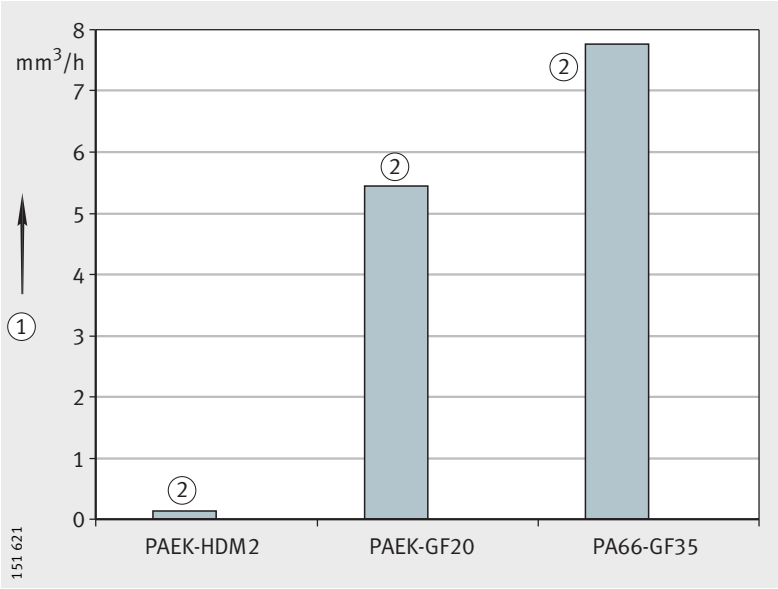

① Volume loss
② Plastic cage and steel rolling elements

Figure 7
Wear of various cage materials in dry running

Resistant to chemicals

Polyaryletherketone is a partially crystalline material that is highly resistant even at high temperatures to chemicals as well as organic and inorganic fluids, see table Resistance of PAEK cages in cleaning agents, page 17.

The composition and inherent purity of the material lead to extremely low smoke development and emission of toxic gases in a fire.

Resistance of PAEK cages in cleaning agents

Medium	Max. chloride concentration mg/l	Max. concentration	Temperature + °C	Resistant
Sodium hydroxide solution NaOH	500	5%	90	Yes
Phosphoric acid H_3PO_4	200	5%	90	
Nitric acid HNO_3	200	5%	90	
Sulphuric acid H_2SO_4	150	1,5%	60	
Peracetic acid (Aseptic) (Aseptic)	100 5 5	500 mg/l 2 000 mg/l 4 000 mg/l	40 60 60	
Monobromoacetic acid or mono-chloroacetic acid	100	1% mixed with each of 1%: H_3PO_4, HNO_3, H_2SO_4	30	
NaOH + NaOCl Chloralkaline cleaner	300	5%	70	
Sodium hypochlorite NaOCl	300	300 mg/l active chlorine	60 20	
Hot water	100	–	125	
Steam approx. 0,5 bar	100	–	110	
Ozone	80	3 mg/l	30	

Resistant to hydrolysis

PAEK can, without any significant deterioration in its characteristics, be used for long periods at temperatures above +200 °C, in steam or water at high pressure.

High strength with low mass

The strength and rigidity are very high while density is low.

Purity

Due to its inherent purity, the material has extremely small quantities of extractable ions and is characterised by low outgassing in vacuum, even at high temperatures. The material is thus also highly suitable for use in the food industry.
Some PAEK materials conform to the requirements of the US Food and Drug Administration (FDA).

Dimensional stability

The plastic has high dimensional stability and thus maintains its geometry and characteristics even at various temperatures, in moisture, under the influence of chemicals and when subjected to physical loading.

Applications

PAEK is highly suitable for rolling bearing cages, end pieces of linear guidance systems and tyres on track rollers.

Coatings

In order that standard components can function for long periods, without maintenance and reliably even under extreme operating conditions, the Schaeffler Group has developed several coatings for such requirements.

These coatings increase the corrosion resistance and/or wear resistance of the surface.

The selection of the coating is always dependent on the area of operation and the application.

Types of coatings

Components at risk of corrosion are protected by:

- the special coating Corrotect®, page 19
- the thin layer chromium coating Durotect® CK (Protect A), page 21
- the thin layer chromium coating Durotect® CK+ (Protect B), page 22.

The surface of the thin layer chromium coating holds a certain amount of lubricant. This gives protection against wear.

Particularly high wear resistance is achieved by means of the chromium mixed oxide layer LC in Durotect® CK+ (Protect B). Even under highly unfavourable environmental conditions, this coating still acts in a supportive capacity to the lubricant. Since the coating increases the wear resistance of the base material, the preload is maintained over an extended period.

For use in the food industry, compliance with exacting environmental and health conditions must be achieved.
The coating Durotect® CK (Protect A) is free from Cr(VI) and can therefore be used in this sector too.

Special coating Corrotect®

Basic data

Composition:

- Zinc alloy (for example, with Ni, Fe or Co)
- Yellow or black chromate passivation (containing Cr(VI))
- Thick layer or nanoparticle-backed thick layer passivation (free from Cr(VI))
- Thickness ranges:
  - 0,5 µm to 3 µm
  - 2 µm to 5 µm.

Test method:

- neutral salt spray test in accordance with DIN EN ISO 9 227, ASTM B117, *Figure 1*.

The coating is effective against condensation, rainwater, contaminated water and weakly alkaline and weakly acidic cleaning agents.

The coating is attacked by strongly acidic or alkaline media and media containing high levels of salt.

Figure 1
Coated and uncoated part after 24 h in the salt spray test

Coatings

Characteristics of the coating

The special coating Corrotect® has the following characteristics:

- It is an extremely thin anti-corrosion coating with cathodic protection. Under load, the coating is compacted into the surface roughness profile and is partly worn away.
- The chromate coating and the passivation increase the anti-corrosion protection and contribute to the optical appearance of the component.
- Anti-corrosion protection in the seal area.

In comparison with many other coating systems and materials, combines good anti-corrosion protection with low cost.

Guidance on the handling and use of parts with Corrotect® coating

Before pressing in coated parts, light greasing is recommended in order to reduce the press-in forces.

As with all zinc and zinc alloy coatings, the anti-corrosion protection is impaired in temperature ranges above +120 °C.

Even if there is no indication of impairment of the grease operating life, the interaction between the coating and the lubricant should be checked in each case and the relubrication intervals adapted as appropriate.

In the area of the seal lips, there is running-in of the extremely thin layer; an optically bright surface is formed. In contact with moisture or corrosive media, the formation of rust on this bright surface is prevented in the long term by the remote effect of the cathodic protection mechanism, *Figure 2*.

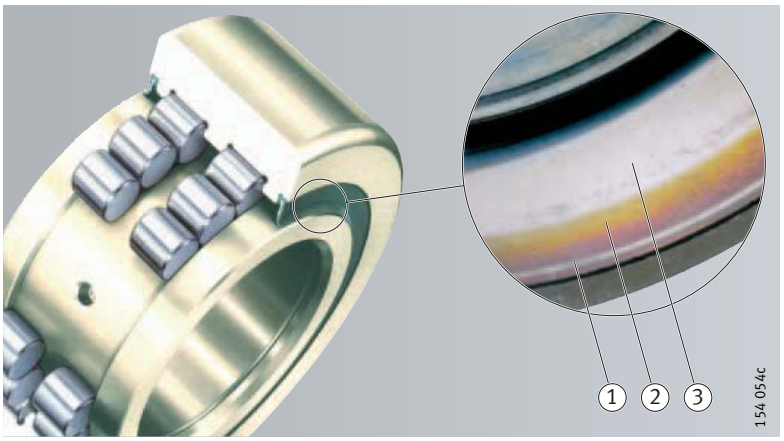

① Seal running surface
② Coated surface
③ Coated raceway with overrolling

Figure 2
Seal running surface

Durotect® CK (Protect A)

Anti-corrosion and anti-wear protection

Durotect® CK (Protect A) is a pure chromium coating with a pearly surface structure.

The coating is applied by electroplating. The parts to be coated are heated to approx. +50 °C. Since no structural changes occur, the parts retain full dimensional stability.

The matt grey chromium layer with its pearly structure retains a certain amount of lubricant between the pearls. As a result, effective anti-wear protection is achieved even under mixed friction or slippage conditions.

During running-in, the rolling elements and seals burnish the surface. This leads to reduced friction coefficients.

Advantages of the coating

This coating

- is resistant to various chlorides, various oils, sulphur compounds, chlorine compounds and weak acidic media
- does not influence the load carrying capacity and operating life of the coated products
- has higher wear resistance due to its high hardness
- ensures effective anti-wear protection even under mixed friction conditions
- offers good protection against EP additives
- has good thermal conductivity
- is moderately resistant to corrosion.

Durotect® CK (Protect A) contains no Cr(VI). Components with this coating are therefore particularly suitable for use in the food industry.

Technical/physical data

The table shows technical/physical data for Durotect® CK (Protect A).

Durotect® CK (Protect A)

	Data
Suffix	KD
Colour	Matt grey
Coating thickness[1)]	1 µm – 3 µm 1 µm – 6 µm
Number of layers	1
Composition	Pure chromium layer with pearly surface
Hardness	950 HV – 1 300 HV
Anti-corrosion protection[2)]	24 h
Anti-wear protection	Under mixed friction
Maximum length	4 000 mm
Contains Cr(VI)[3)]	no

1) Thickness in functional area.

2) Salt spray test to DIN EN ISO 9 227, no load.

3) Parts containing Cr(VI) are not suitable for the food industry.

Coatings

Durotect® CK+ (Protect B) Anti-corrosion and high anti-wear protection

Durotect® CK+ (Protect B) comprises two layers:
a thin layer chromium coating is covered by chromium mixed oxide.

The corrosion resistance is provided by the chromium mixed oxide layer. The chromium mixed oxide layer acts in a supportive capacity to the lubricant when used in aggressive atmospheres and at high temperatures.

Advantages of the coating

This coating

- is resistant to various chlorides, various oils, sulphur compounds, chlorine compounds and weak acidic media
- does not influence the load carrying capacity and operating life of the coated products
- improves the running-in behaviour
- offers effective anti-wear protection under inadequate lubrication
- offers good protection against EP additives
- has a second layer that acts in a supportive capacity to the lubricant in aggressive atmospheres and at high temperatures
- has good thermal conductivity
- offers high anti-wear protection together with high anti-corrosion protection.

Where high requirements for anti-corrosion protection are present and continuous lubrication cannot be ensured, Durotect® CK+ (Protect B) is the suitable coating.

Technical/physical data

The table shows technical/physical data for Durotect® CK+ (Protect B).

Durotect® CK+ (Protect B)

	Data
Suffix	KDC
Colour	Black
Coating thickness[1)]	4 µm – 6 µm
Number of layers	2
Composition	Thin layer chromium coating with coating of chromium mixed oxide
Hardness	950 HV
Anti-corrosion protection[2)]	120 h
Anti-wear protection	Under mixed friction
Maximum length	4 000 mm
Contains Cr(VI)[3)]	yes

1) Thickness in functional area.

2) Salt spray test to DIN EN ISO 9 227, no load.

3) Parts containing Cr(VI) are not suitable for the food industry.

Lubricants

Greases

Lubrication and maintenance are extremely important for long, reliable operation of rolling bearings. Where special environmental conditions apply, however, there is often a requirement to achieve not only fundamental characteristics such as reduction of friction and anti-wear protection but also additional characteristics such as media resistance or suitability of the lubricants for the food industry. For these expanded requirements, there are various greases for initial greasing and relubrication.

Arcanol greases for relubrication

Grease that are particularly suitable for relubrication are included in the Arcanol range, see table Rolling bearing lubricants for initial greasing and relubrication, page 24. The greases, which were developed in partnership with renowned lubricant manufacturers, are subjected to comprehensive series of tests before approval and, thereafter, every single batch is inspected.

Lubricants for the food industry

Greases for use in the food industry are subject to various regulations and specifications around the world. Internationally, the most widely known of these are the US American regulations. Two grease classes have been defined for the food-producing industry, which are known as the lubricants H1 und H2.

Approval as lubricant H1 and H2 is currently given by the NSF.

Lubricant H1

These lubricants are suitable for applications in which “incidental contact between food and lubricant unavoidable by technical measures” may occur. Such lubricants must be non-toxic and neutral in taste and odour.

Lubricant H2

Lubricants H2 may only be used in the food and pharmaceutical industries where the possibility of contact with food is completely eliminated.

Lubricants with high media resistance

If fluids (water, contaminated water, weak acids or alkalis) can come into contact with rolling bearings, greases with good media resistance should be used. This can delay washout of lubricants and extend the operating life of greased bearings.

Greases for clean room applications

In the area of semiconductor production or LCD production, the quantity of airborne particles plays an important role in the quality of the manufactured products. Through the selection of special greases, particle emission can be reduced in comparison with standard greases.

In high vacuum, special greases based on alkoxyfluoroethers with particularly favourable vapourisation characteristics are used.

Further information

Lubrication is a design element that has a decisive influence on the reliability and operating life of bearings. For the design of bearing arrangements, attention must be paid to the information on lubrication in Catalogue HR 1, Rolling Bearings.

Lubricants

Rolling bearing lubricants for initial greasing and relubrication

Designation	Classification	Type of grease
GA32	Grease with foodstuffs approval	Aluminium complex soap, SHC or white oil
GA47	Rolling bearing grease resistant to media for temperatures up to +140 °C	Barium complex soap, mineral oil
GA11	Rolling bearing grease resistant to media for temperatures up to +250 °C	PTFE, alkoxyfluoroether
GA08	Grease for line contact	Lithium complex soap, mineral oil
L430	Grease with low particle emission	Polycarbamide, ether oil

Operating temperature °C	Upper continuous temperature limit $T_{limit, upper}$ °C	NLGI class	Speed parameter $n \cdot d_M$ $min^{-1} \cdot mm$	ISO VG class	H1 registration	Arcanol rolling bearing grease
–30 to +120	+70	1 to 2	500 000	150 to 220	yes	FOOD 2
–20 to +140	+70	1 to 2	350 000	150 to 320	–	–
–40 to +250	+180	2	300 000	460 to 680	Possible	TEMP 200
–30 to +140	+95	2 to 3	500 000	150 to 320	–	LOAD 150
–40 to +180	+100	2	500 000	100	–	–

FAG

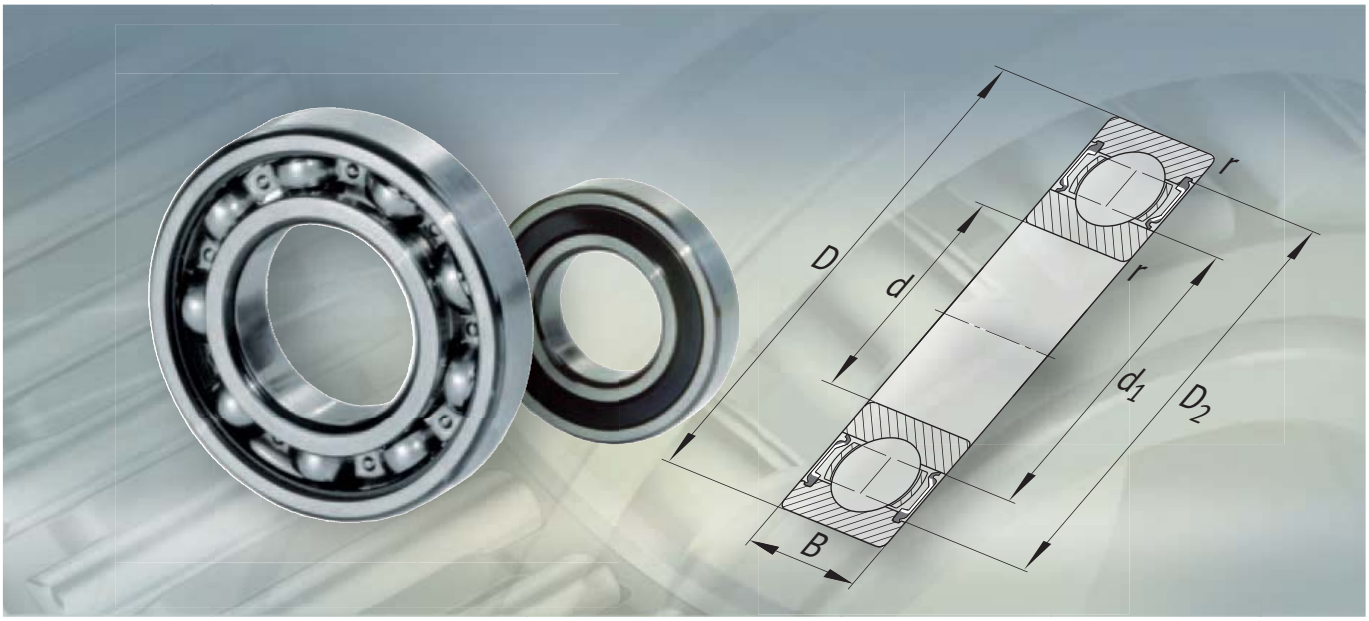

Deep groove ball bearings
Miniature deep groove ball bearings

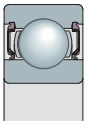

Deep groove ball bearings
Miniature deep groove ball bearings

Page

Product overview

Deep groove ball bearings, miniature deep groove ball bearings 28

Features

Single row deep groove ball bearings 29

Deep groove ball bearings made from Cronitect 29

Single row miniature deep groove ball bearings 31

Sealing 31

Lubrication 31

Operating temperature 31

Prefixes and suffixes 32

Further information 32

Design and safety guidelines

Axial load carrying capacity 32

Minimum radial load 32

Accuracy

Main dimensions, dimensional and geometrical tolerances, radial internal clearance 32

Dimension tables

Deep groove ball bearings, single row, sealed 33

Miniature deep groove ball bearings, single row, open or sealed 35

Deep groove ball bearings
Miniature deep groove ball bearings

Deep groove ball bearings

Single row
Lip seals

S618..-2RS, S619..-2RS,
S60..-2RS, S62..-2RS, S63..-2RS

135 451

Miniature deep groove ball bearings

Single row
Open

S60, S62, S63, S68, S69,
S60..-X, S68..-X, S69..-X, SMR

135 446

Gap seals

S60..-2Z, S62..-2Z, S63..-2Z, S68..-2Z, S69..-2Z,
S60..-X-2Z, S68..-X-2Z, S69..-X-2Z, SMR..-2Z

135 452

Deep groove ball bearings
Miniature deep groove ball bearings

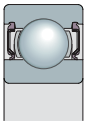

Features

Single row deep groove ball bearings

Single row deep groove ball bearings are the most frequently used type of rolling bearing. They are produced in numerous sizes and designs and are particularly economical. Due to their low frictional torque, they are also suitable for high speeds.

Due to the raceway geometry, the use of balls as rolling elements and the design without a filling slot, deep groove ball bearings can support axial loads in both directions as well as radial loads; see Axial load carrying capacity, page 32.

The angular adjustment facility of single row deep groove ball bearings is limited, so the bearing positions must be well aligned.

By agreement, bearings of series 618 and 619 are also available with a flanged outer ring. The flange allows axial location of the bearings by compact means.

Anti-corrosion protection

The bearing rings, cages and rolling elements are made from corrosion-resistant steel and have the prefix S.

As a result, they are resistant to moisture, contaminated water, salt spray mist and weak alkaline or weak acidic cleaning agents.

In the sealed version (suffix 2RS) the acid resistance is limited by the sealing ring material nitrile butadiene rubber NBR.

Deep groove ball bearings made from Cronitect

By agreement, deep groove ball bearings made from Cronitect are available in three designs.

The corrosion resistance and suitability of the bearing under the influence of the media must be checked by the user for the specific application.

Design 1

- Inner ring and outer ring made from Cronitect
- Highly effective contact seal, type SHRS made from FKM, with alloy steel sheathing
- Balls made from corrosion-resistant steel.

Advantages

In comparison with standard deep groove ball bearings made from corrosion-resistant steel, such as the design S6001-2RS, the following advantages apply:

- significantly higher corrosion and media resistance
- considerably better sealing against fluids
- significantly higher dynamic load carrying capacity
- significantly longer operating life even under problematic operating conditions
- no rust formation even in aggressive media.

Ordering example **X6001-2SHRS-FKM**

Design 2

- Inner ring and outer ring made from Cronitect
- Highly effective contact seal, type SHRS made from FKM, with alloy steel sheathing
- Balls made from ceramic Si_3N_4.

Advantages

In comparison with design 1, the following additional advantages apply:

- increased wear resistance
- suitable for heavy exposure to water and fluid media
- very long operating life even under the most problematic operating conditions
- increased operational security.

Ordering example **XHC6001-2SHRS-FKM**

Design 3

- Inner ring and outer ring made from Cronitect
- Open, without seals
- Balls made from ceramic Si_3N_4
- Cage made from PAEK-HDM2.

Advantages

In comparison with standard deep groove ball bearings made from corrosion-resistant steel, such as the design S6001, the following advantages apply:

- significantly higher corrosion and media resistance
- suitable for dry running and media lubrication
- significantly higher dynamic load carrying capacity
- long operating life even under extreme operating conditions
- operation without lubricant possible.

Ordering example **XHC6001**

Single row miniature deep groove ball bearings

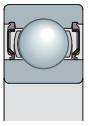

Single row miniature deep groove ball bearings correspond in their structure, function and area of application to single row deep groove ball bearings. Due to their small dimensions, with an inside diameter starting at d = 1 mm, however, they are particularly suitable for small electric motors, office machinery, medical equipment, household applicances, power tools and similar applications in the miniature sector.

By agreement, these bearings are also available with a flanged outer ring. This allows axial location of the bearings by compact means.

Sealing

Deep groove ball bearings

The bearings are sealed on both sides by lip seals made from nitrile butadiene rubber NBR. By agreement, however, the deep groove ball bearings are also available in an open version (without suffix) or with gap seals on both sides (suffix 2Z).

Miniature deep groove ball bearings

The deep groove ball bearings are available in an open version and with gap seals. By agreement, they are also available with lip seals on both sides (suffix 2RS).

Lubrication

The bearings have an initial greasing using a standard grease. The grease filling is sufficient for the entire operating life of the bearings.

Special greases, such as those for clean room or food processing applications, are available by agreement.

Operating temperature

Deep groove ball bearings without seals can be used up to an operating temperature of +120 °C.
For applications at temperatures above +120 °C, please contact us.

Deep groove ball bearings with lip seals can be used at operating temperatures from –30 °C to +110 °C, limited by the grease and sealing ring material.

Bearings with gap seals can be used at temperatures from –30 °C to +120 °C.

Prefixes and suffixes

Prefixes and suffixes for available designs:
see table Available designs.

Available designs

Prefix	Suffix	Description	Design
S	–	Corrosion-resistant steel	Standard
X	–	Cronitect steel	Available by agreement
HC	–	Hybrid bearing with ceramic balls made from Si_3N_4	
–	2RS	Contact lip seals on both sides	Standard
–	2SHRS	Contact high performance lip seals with alloy steel sheathing on both sides	Available by agreement
–	FKM	Seal material FKM	
–	2Z	Gap seals on both sides	
–	–	Open, not sealed	–

Further information

For information on the load carrying capacity and life, design of bearing arrangements, lubrication, fitting and operation of the bearings, attention must be be paid to Catalogue HR 1, Rolling Bearings.

Design and safety guidelines

Axial load carrying capacity

Deep groove ball bearings are also suitable for low axial loads.

If the bearing is subjected to high loads and high speeds, a reduced life as well as increased friction and bearing temperature must be taken into consideration.

Minimum radial load

In order to ensure slippage-free operation, the bearings must be subjected to a minimum radial load. This applies particularly in the case of high speeds and high accelerations. In continuous operation, a minimum radial load of the order of $P/C_r > 0{,}01$ is necessary for ball bearings with cage.

Accuracy

Main dimensions, dimensional and geometrical tolerances, radial internal clearance

The main dimensions of single row deep groove ball bearings correspond to DIN 625-1.

The dimensional and running tolerances correspond to tolerance class PN to DIN 620.

The radial internal clearance is CN.

Deep groove ball bearings

Single row
Sealed

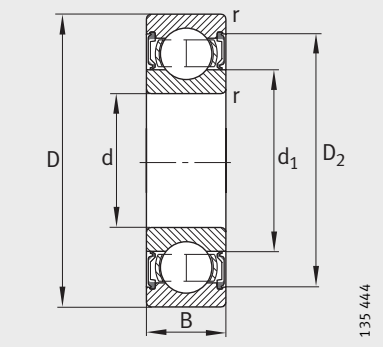

Seal 2RS

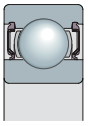

Dimension table · Dimensions in mm

Designation[1]	Mass	Dimensions						Basic load ratings		Limiting speed
	m	d	D	B	r	d_1	D_2	dyn. C_r	stat. C_{0r}	n_G
	≈g				min.			N	N	min^{-1}
S61800-2RS	5,6	**10**	19	5	0,3	11,8	17,15	1 462	672	22 000
S61900-2RS	10	**10**	22	6	0,3	13,2	19,37	2 295	1 016	21 000
S61801-2RS	6,5	**12**	21	5	0,3	13,8	19,15	1 632	832	20 000
S61901-2RS	12	**12**	24	6	0,3	15,35	21,4	2 456	1 176	18 000
S61802-2RS	7,6	**15**	24	5	0,3	16,8	22,15	1 759	1 000	16 000
S61902-2RS	19	**15**	28	7	0,3	18,8	25,3	3 672	1 808	15 000
S61803-2RS	8,2	**17**	26	5	0,3	18,8	24,3	1 895	1 168	15 000
S61903-2RS	20	**17**	30	7	0,3	21	27,8	3 901	2 056	13 000
S61804-2RS	18	**20**	32	7	0,3	22,6	29,52	3 417	1 968	13 000
S61904-2RS	40	**20**	37	9	0,3	23,65	33,5	5 423	2 944	11 000
S61805-2RS	24	**25**	37	7	0,3	28,2	34,12	3 655	2 344	10 000
S61905-2RS	47	**25**	42	9	0,3	30,9	39,45	5 950	3 632	9 300
S61806-2RS	27	**30**	42	7	0,3	33,11	39,2	3 859	2 720	9 000
S61807-2RS	32	**35**	47	7	0,3	38,21	43,69	4 020	3 056	7 500
S61808-2RS	35	**40**	52	7	0,3	43,21	48,99	4 182	3 344	6 700
S61809-2RS	42	**45**	58	7	0,3	48,2	54,96	5 261	4 304	6 000
S61810-2RS	52	**50**	65	7	0,3	54,2	60,96	5 618	4 872	5 300

[1] Deep groove ball bearings are available by agreement in an open version.

Deep groove ball bearings

Single row
Sealed

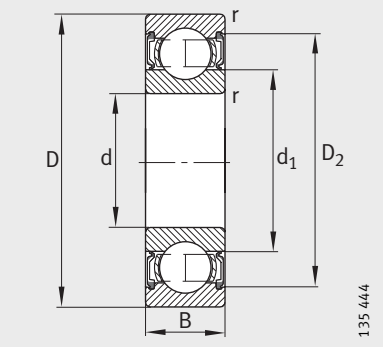

Seal 2RS

Dimension table · Dimensions in mm

Designation[1)2)]	Mass	Dimensions						Basic load ratings		Limiting speed
	m	d	D	B	r	d_1	D_2	dyn. C	stat. C_0	n_G
	≈g				min.			N	N	min^{-1}
S6000-2RS	19	**10**	26	8	0,3	12,9	22,4	3 860	1 570	19 000
S6200-2RS	32	**10**	30	9	0,6	15,3	25,28	4 340	1 920	16 000
S6300-2RS	53	**10**	35	11	0,6	17,7	24,3	6 870	2 750	16 000
S6001-2RS	22	**12**	28	8	0,3	17,2	25,5	4 340	1 910	17 000
S6201-2RS	37	**12**	32	10	0,6	18,5	27,95	5 770	2 450	15 000
S6301-2RS	60	**12**	37	12	1	19,3	31,9	8 240	3 360	15 000
S6002-2RS	30	**15**	32	9	0,3	20,2	28,7	4 750	2 270	14 000
S6202-2RS	45	**15**	35	11	0,6	21,7	31,4	6 490	3 000	13 000
S6302-2RS	82	**15**	42	13	1	24,5	36,8	9 710	4 370	12 000
S6003-2RS	39	**17**	35	10	0,3	23,5	31,85	5 090	2 630	12 000
S6203-2RS	65	**17**	40	12	0,6	24,9	35,8	8 130	3 850	12 000
S6303-2RS	115	**17**	47	14	1	27,5	41,1	11 550	5 330	10 000
S6004-2RS	69	**20**	42	12	0,6	27,6	38,7	7 960	4 050	10 000
S6204-2RS	106	**20**	47	14	1	29,5	40,9	10 910	5 360	9 700
S6304-2RS	144	**20**	52	15	1,1	30	45,4	13 490	6 310	9 500
S6005-2RS	80	**25**	47	12	0,6	31,7	42,7	8 550	4 690	9 000
S6205-2RS	128	**25**	52	15	1	34	45,7	11 900	6 300	8 400
S6305-2RS	232	**25**	62	17	0,1	38,1	53,2	17 490	9 060	7 500
S6006-2RS	116	**30**	55	13	1	38	49,9	11 240	6 610	7 500
S6206-2RS	199	**30**	62	16	1	40,7	55,1	16 530	9 080	7 000
S6306-2RS	346	**30**	72	19	1	44,9	62,35	22 630	12 080	6 400
S6007-2RS	155	**35**	62	14	1	44	57,05	13 560	8 250	6 500
S6207-2RS	288	**35**	72	17	1,1	47,6	64,83	21 810	12 360	6 000
S6307-2RS	457	**35**	80	21	1,5	50,49	71,58	28 290	15 270	5 700
S6008-2RS	192	**40**	68	15	1	49,2	62,5	14 250	9 220	5 800
S6208-2RS	366	**40**	80	18	1,1	52,93	70,8	24 730	14 330	5 400
S6009-2RS	245	**45**	75	16	1	54,5	69	15 150	9 660	5 300
S6209-2RS	407	**45**	85	19	1,1	56,56	74,48	27 790	16 300	5 100
S6010-2RS	261	**50**	80	16	1	60	74,55	18 510	13 260	4 800
S6210-2RS	463	**50**	90	20	1,1	63,46	81,38	29 800	18 610	4 600

1) Deep groove ball bearings are available by agreement in an open version.

2) Available by agreement:
S6011 – S6012,
S6211 – S6212,
S6308 – S6310.

Miniature deep groove ball bearings

Single row
Open or sealed

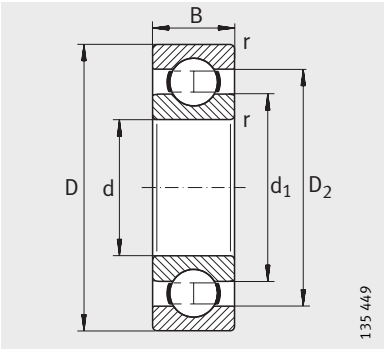

Open

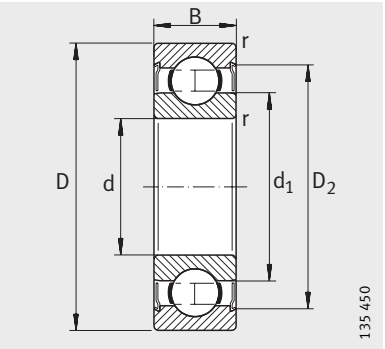

Seal 2Z

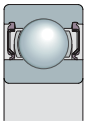

Dimension table · Dimensions in mm

Designation[1)2)]	Mass	Dimensions						Basic load ratings		Limiting speeds
	m	d	D	B	r	d_1	D_2	dyn. C_r	stat. C_{0r}	n_G
	≈g				min.			N	N	min^{-1}
S681	0,03	**1**	3	1	0,05	1,6	2,4	51	12	130 000
S681-X	0,1	**1,5**	4	1,2	0,05	2,15	3,05	75	21	100 000
S681-X-2Z	0,14	**1,5**	4	2	0,05	2,15	3,5	75	21	100 000
S601-X	0,31	**1,5**	6	2,5	0,15	3	4,8	232	60	75 000
S601-X-2Z	0,4	**1,5**	6	3	0,15	3	5,4	232	60	75 000
S682	0,15	**2**	5	1,5	0,08	2,7	3,9	92	30	85 000
S682-2Z	0,2	**2**	5	2,3	0,08	2,7	4,4	92	30	85 000
S692	0,28	**2**	6	2,3	0,15	3	4,8	232	60	75 000
S692-2Z	0,35	**2**	6	3	0,15	3	5,4	232	60	75 000
S682-X	0,2	**2,5**	6	1,8	0,08	3,7	4,9	129	36	71 000
S682-X-2Z	0,35	**2,5**	6	2,6	0,08	3,7	5,4	129	36	71 000
S692-X	0,4	**2,5**	7	2,5	0,15	3,85	5,65	265	78	63 000
S692-X-2Z	0,55	**2,5**	7	3,5	0,15	3,85	6,2	265	78	63 000
S602-X	0,61	**2,5**	8	2,8	0,15	4,1	6,44	381	108	60 000
S602-X-2Z	0,85	**2,5**	8	4	0,15	4,1	7,04	381	108	60 000
SMR63	0,2	**3**	6	2	0,1	3,7	4,9	143	45	71 000
SMR63-2Z	0,28	**3**	6	2,5	0,1	3,7	5,4	143	45	71 000
S683	0,32	**3**	7	2	0,1	4,28	5,75	218	66	63 000
S683-2Z	0,45	**3**	7	3	0,1	3,85	6,35	218	66	63 000
SMR83	0,51	**3**	8	2,5	0,15	5	6,8	272	884	60 000
SMR83-2Z	0,67	**3**	8	3	0,15	5	7,4	272	884	60 000
S693	0,6	**3**	8	3	0,15	4,35	6,65	388	108	60 000
S693-2Z	0,8	**3**	8	4	0,15	4,35	7,25	388	108	60 000
S603	0,84	**3**	9	3	0,15	4,86	7,2	395	94	56 000
S603-2Z	1,43	**3**	9	5	0,15	4,35	7,9	395	94	56 000
S623	1,45	**3**	10	4	0,15	4,8	7,08	436	132	50 000
S623-2Z	1,65	**3**	10	4	0,15	4,35	7,98	436	132	50 000

1) Bearings with RS seals are available by agreement.

2) Bearings with a flanged outer ring are available by agreement.

Miniature deep groove ball bearings

Single row
Open or sealed

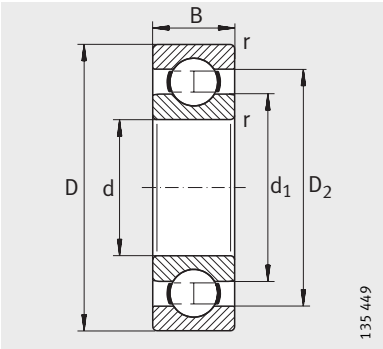

Open

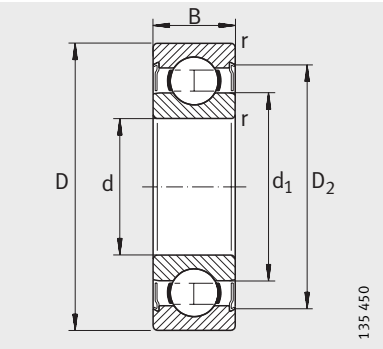

Seal 2Z

Dimension table (continued) · Dimensions in mm

Designation[1)2)]	Mass	Dimensions						Basic load ratings		Limiting speeds
	m	d	D	B	r	d_1	D_2	dyn. C_r	stat. C_{0r}	n_G
	≈g				min.			N	N	min^{-1}
SMR74-2Z	0,33	**4**	7	2,5	0,1	4,8	6,3	177	66	60 000
SMR84	0,39	**4**	8	2	0,15	5	6,8	272	84	56 000
SMR84-2Z	0,56	**4**	8	3	0,15	5	7,4	272	84	56 000
S684	0,65	**4**	9	2,5	0,1	5,2	7,5	442	138	53 000
S684-2Z	1	**4**	9	4	0,1	5,2	8,1	442	138	53 000
SMR104	0,95	**4**	10	3	0,2	6,15	8,35	408	126	48 000
SMR104-2Z	1,33	**4**	10	4	0,2	5,6	8,95	408	126	48 000
S694	1,69	**4**	11	4	0,15	6,15	8,95	667	216	48 000
S694-2Z	1,75	**4**	11	4	0,15	5,6	9,85	667	216	48 000
S604	2,19	**4**	12	4	0,2	6,15	8,95	667	216	48 000
S604-2Z	2,34	**4**	12	4	0,2	5,6	9,85	667	216	48 000
S624	3,1	**4**	13	5	0,2	6,95	10,45	904	300	40 000
S624-2Z	3,2	**4**	13	5	0,2	6	11,35	904	300	40 000
S634	5,24	**4**	16	5	0,3	8,2	11,7	932	318	36 000
S634-2Z	5,44	**4**	16	5	0,3	6,7	11	932	318	36 000
SMR85	0,25	**5**	8	2	0,1	5,75	7,25	211	72	53 000
SMR85-2Z	0,34	**5**	8	2,5	0,1	5,8	7,4	150	54	53 000
SMR95	0,54	**5**	9	2,5	0,15	6	7,8	300	102	50 000
SMR95-2Z	0,58	**5**	9	3	0,15	6	8,2	300	102	50 000
S685	1,16	**5**	11	3	0,15	6,81	9,19	496	180	45 000
S685-2Z	1,93	**5**	11	5	0,15	6,2	9,9	496	180	45 000
S695	2,39	**5**	13	4	0,2	7,5	10,5	748	264	43 000
S695-2Z	2,31	**5**	13	4	0,2	6,6	11,2	748	264	43 000
S605	3,46	**5**	14	5	0,2	7,79	11,28	925	312	40 000
S605-2Z	3,75	**5**	14	5	0,2	6,9	12,2	925	312	40 000
S625	4,95	**5**	16	5	0,3	8,55	12,5	1 197	414	36 000
S625-2Z	5,1	**5**	16	5	0,3	7,5	13,8	1 197	414	36 000
S635	8,5	**5**	19	6	0,3	10,12	15,02	1 618	546	32 000
S635-2Z	8,89	**5**	19	6	0,3	8,5	16,5	1 618	546	32 000

1) Bearings with RS seals are available by agreement.
2) Bearings with a flanged outer ring are available by agreement.

Miniature deep groove ball bearings

Single row
Open or sealed

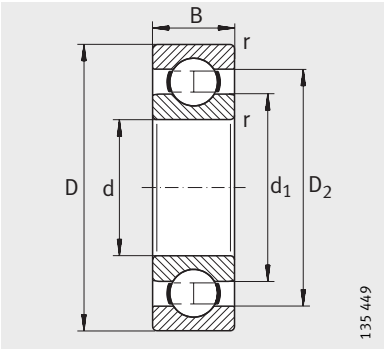

Open

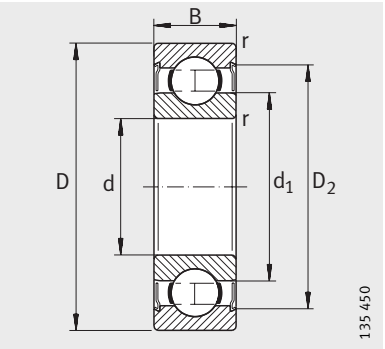

Seal 2Z

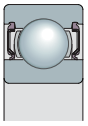

Dimension table (continued) · Dimensions in mm

Designation[1)2)]	Mass	Dimensions						Basic load ratings		Limiting speeds
	m	d	D	B	r	d_1	D_2	dyn. C_r	stat. C_{0r}	n_G
	≈g				min.			N	N	min^{-1}
SMR106	0,55	**6**	10	2,5	0,15	7,04	8,9	347	132	45 000
SMR106-2Z	0,7	**6**	10	3	0,15	7,04	9,3	347	132	45 000
SMR126	1,25	**6**	12	3	0,2	7,73	10,19	496	180	43 000
SMR126-2Z	1,66	**6**	12	4	0,2	7,2	10,9	496	180	43 000
S686	1,87	**6**	13	3,5	0,15	8	11	748	270	40 000
S686-2Z	2,68	**6**	13	5	0,15	7,4	11,7	748	270	40 000
S696	3,85	**6**	15	5	0,2	8,2	11,7	932	318	40 000
S696-2Z	3,65	**6**	15	5	0,2	7,5	13	932	318	40 000
S606	5,94	**6**	17	6	0,3	8,92	13,75	1 571	516	38 000
S606-2Z	6,89	**6**	17	6	0,3	8,2	14,8	1 571	516	38 000
S626	8,12	**6**	19	6	0,3	10,12	15,02	1 619	546	32 000
S626-2Z	8,65	**6**	19	6	0,3	8,5	16,5	1 619	546	32 000
SMR117	0,59	**7**	11	2,5	0,15	8,04	9,96	313	126	43 000
SMR117-2Z	0,71	**7**	11	3	0,15	8,04	10,26	313	126	43 000
S687	2,03	**7**	14	3,5	0,15	9	12	816	312	40 000
S687-2Z	2,95	**7**	14	5	0,15	8,5	12,7	816	312	40 000
S697	5,26	**7**	17	5	0,3	10,4	13,6	1 116	438	36 000
S697-2Z	5,01	**7**	17	5	0,3	9,3	14,3	1 116	438	36 000
S607	7,8	**7**	19	6	0,3	10,12	15,02	1 618	546	36 000
S607-2Z	8,24	**7**	19	6	0,3	9	16,5	1 618	546	36 000
S627	12,7	**7**	22	7	0,3	12,14	18	2 278	846	30 000
S627-2Z	13,1	**7**	22	7	0,3	10,5	19,03	2 278	846	30 000

1) Bearings with RS seals are available by agreement.
2) Bearings with a flanged outer ring are available by agreement.

Miniature deep groove ball bearings

Single row
Open or sealed

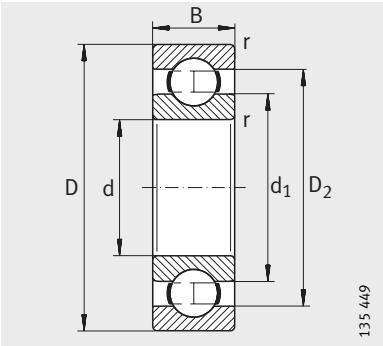

Open

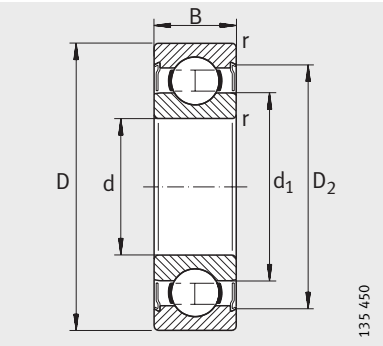

Seal 2Z

Dimension table (continued) · Dimensions in mm

Designation[1)2)]	Mass	Dimensions						Basic load ratings		Limiting speeds
	m	d	D	B	r	d_1	D_2	dyn. C_r	stat. C_{0r}	n_G
	≈g				min.			N	N	min^{-1}
SMR128	0,7	**8**	12	2,5	0,15	9,05	10,9	374	168	40 000
SMR128-2Z	0,99	**8**	12	3,5	0,15	9,05	11,33	374	168	40 000
S688	3,11	**8**	16	4	0,2	10,5	13,5	871	360	36 000
S688-2Z	4,05	**8**	16	5	0,2	9,65	14,2	871	360	36 000
S698	7,12	**8**	19	6	0,3	10,5	15,5	1 551	564	36 000
S698-2Z	7,57	**8**	19	6	0,3	9,8	16,66	1 551	564	36 000
S608	11,8	**8**	22	7	0,3	12,14	18	2 285	846	34 000
S608-2Z	12,9	**8**	22	7	0,3	10,5	19,03	2 285	846	34 000
S628	17,1	**8**	24	8	0,3	12,8	18,7	2 312	870	28 000
S628-2Z	18,5	**8**	24	8	0,3	11,9	19,9	2 312	870	28 000
S689	3,41	**9**	17	4	0,2	11,5	14,5	918	408	36 000
S689-2Z	4,38	**9**	17	5	0,2	10,7	15,2	918	408	36 000
S629	19	**9**	26	8	0,3	14,5	21,3	3 169	1 212	28 000
S629-2Z	21,8	**9**	26	8	0,3	13,9	22,38	3 169	1 212	28 000

1) Bearings with RS seals are available by agreement.
2) Bearings with a flanged outer ring are available by agreement.

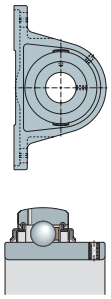

Insert bearings and housing units

Insert bearings
Housing units
with cast iron, sheet steel or plastic housings

Insert bearings and housing units

		Page
Product overview	Insert bearings	42
Features	Ready to fit, easy to fit, robust	43
	Compensation of static misalignments	43
	Insert bearings in corrosion-resistant VA design	43
	Insert bearings with Corrotect® coating	44
	Suffixes	44
	Further information	45
Design and safety guidelines	Axial load carrying capacity of insert bearings	45
	Speed limits for insert bearings	45
	Shaft tolerances for insert bearings	45
Accuracy	Radial internal clearance and normal tolerances	45
Dimension tables	Insert bearings, corrosion-resistant VA design, grub screws in inner ring	46
	Insert bearings, Corrotect® coating, with eccentric locking collar	48
Product overview	Housing units with cast iron or sheet steel housing	50
Features	Housings with integral insert bearing	51
	Units with cast iron housing	51
	Units with sheet steel housing	51
	Operating temperature	52
	Suffixes	53
	Further information	53
Design and safety guidelines	Cast iron housings	53
	Sheet steel housings	53
Accuracy	Cast iron housings	53
	Sheet steel housings	53
Dimension tables	Housing units with cast iron housing, plummer block housing units, with Corrotect® coating	54
	Housing units with cast iron housing, flanged housing units, with Corrotect® coating	56
	Housing units with sheet steel housing, flanged housing units, corrosion-resistant VA design	58

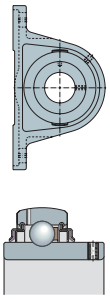

		Page
Product overview	Housing units with plastic housing	60
Features	Housings with integral insert bearing	61
	Housing units	62
	End caps	63
	Operating temperature	65
	Suffixes	65
	Further information	65
Design and safety guidelines	Load carrying capacity of insert bearings and housings	65
	Speed limits for insert bearings	65
	Shaft tolerances for insert bearings	65
Accuracy	Tolerances of plastic housings	65
Dimension tables	Housing units with plastic housing, plummer block housing units, insert bearing in corrosion-resistant VA design or with Corrotect® coating	66
	Housing units with plastic housing, flanged housing units, insert bearing in corrosion-resistant VA design or with Corrotect® coating	70
	Housing units with plastic housing, flanged housing units, insert bearing with Corrotect® coating	72
	Housing units with plastic housing, flanged housing units, insert bearing in corrosion-resistant VA design or with Corrotect® coating	74
	Housing units with plastic housing, take-up housing units, insert bearing in corrosion-resistant VA design or with Corrotect® coating	76

Radial insert ball bearings

With grub screws in inner ring
Corrosion-resistant VA design

GYE..-KRR-B-VA

With eccentric locking collar
With Corrotect® coating

GRAE..-NPP-B-FA125.5

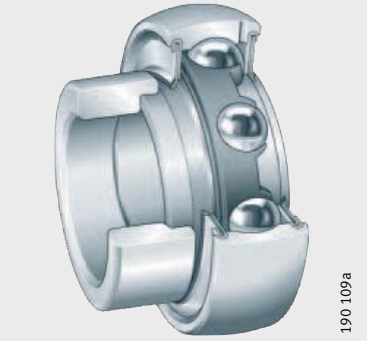

GE..-KRR-B-FA125.5

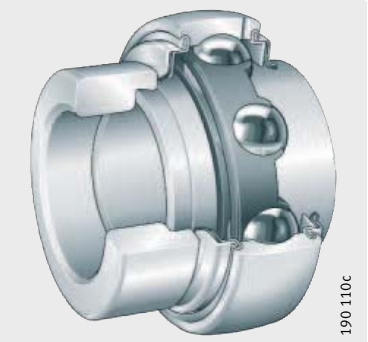

Insert bearings

Features

Corrosion-resistant insert bearings are designed for corrosion-resistant bearing arrangements. They are therefore equally suitable for applications involving moisture, contaminated water, salt spray mist and for weakly alkaline or weakly acidic cleaning agents.
The classic areas of application include the agricultural, construction and mining sectors, conveying equipment, textile, paper and woodworking machinery as well as machinery for the food and drink industry.

Ready to fit, easy to fit, robust

The bearings are available in a corrosion-resistant VA design or with Corrotect® coating. They correspond in their design to single row deep groove ball bearings of series 62, are ready to fit, particularly easy to fit and allow robust, economical bearing arrangements with a long operating life. They are located on the shaft by means of grub screws in the extended inner ring or by means of an eccentric locking collar.

Operation even under difficult conditions is ensured by seals and greases that are matched to the application.

Compensation of static misalignments

The outer ring of the bearings has a spherical outside surface.
In housings with a concave bore, they can therefore compensate static misalignment of the shaft:

- if relubrication is used, up to ±2,5°
- if relubrication is not used, up to ±5°.

The units must not be used to support swivelling or tumbling motion.

Insert bearings in corrosion-resistant VA design

In series GYE..-KRR-B-VA, the bearing rings and rolling elements are made from high alloy, corrosion-resistant rolling bearing steel with an increased chromium and molybdenum content, material number 1.4125.

Sheet steel cages made from corrosion-resistant steel, material number 1.4301, retain and guide the rolling elements.

Location by grub screws

The inner ring is located axially on the shaft by means of two grub screws offset by 120°. This location method is suitable for bearing arrangements with a constant direction of rotation or, under low speed and load, for an alternating direction of rotation.

The grub screws are self-retaining and have a fine pitch thread with cup point for secure location of the bearings.

Sealing and lubrication

Single-piece seals RSR seal the insert bearings on both sides. Additional outer flinger shields made from corrosion-resistant steel, material number 1.4301, protect the seals against mechanical damage.

Initial greasing is carried out with an aluminium complex soap grease with food applications approval to NSF-H1 that is sufficient in many case for the entire operating life of the bearings.
For relubrication, the outer rings have lubrication holes on their circumference.

Operating temperature

The insert bearings are suitable for operating temperatures from −35 °C to +100 °C.

Insert bearings

Insert bearings with Corrotect® coating

The series GRAE..-NPP-B-FA125.5 and GE..-KRR-B-FA125.5 are coated on all faces with Corrotect®.

The special coating Corrotect® is an economical alternative to insert bearings with conventional anti-corrosion protection. For a description of the Corrotect® coating, see page 19.

Plastic cages made from polyamide PA66 retain and guide the rolling elements.

Location by locking collar

The bearings are located on the shaft by a locking collar. They are therefore particularly suitable for bearing arrangements with a constant direction of rotation or, under low speed and load, for an alternating direction of rotation.

The locking collar is preferably tightened in the direction of rotation and must be secured by means of a grub screw. This location method prevents damage to the shaft and can be easily loosened again.

Sealing and lubrication

Three-piece seals P or R seal the bearings on both sides. The NBR part is protected against mechanical damage by zinc plated sheet steel shields. In seals P, the seal lip is axially preloaded, in seals R it is radially preloaded.

Initial greasing is carried out with GA47, a barium complex soap grease with a mineral oil base that is sufficient in many cases for the entire operating life of the bearings; for information on grease GA47 see Catalogue HR 1, Rolling Bearings.

In order to increase the grease quantity, insert bearings with seals R have sheet steel shields that are angled and extended outwards. This provides more space for the grease. This extends the bearing operating life and the relubrication intervals. For relubrication, the outer rings have lubrication holes on their circumference.

Operating temperature

Corrosion-resistant insert bearings are suitable for operating temperatures from –20 °C to +120 °C.

Suffixes

Suffixes for available designs: see table Available designs.

Available designs

Suffix	Description
B	Bearing with spherical outside surface of outer ring
FA125.5	With Corrotect® coating, protected against corrosion
KRR	Lip seals on both sides (seal R, three-piece)
NPP	Lip seals on both sides (seal P, three-piece)
2RSR	Lip seals on both sides (vulcanised, single-piece)
VA	Corrosion-resistant design made from high alloy rolling bearing steel
FA107	Bearing with lubrication holes on the locating side

Further information

For further details on Corrotect®, see page 19.

For information on the design of bearing arrangements, lubrication, fitting and operation of the bearings, attention must be be paid to Catalogue HR 1, Rolling Bearings.

Design and safety guidelines

Axial load carrying capacity of insert bearings

The axial load carrying capacity of insert bearings is determined significantly by the method by which they are located on the shaft; see Catalogue HR 1, Rolling Bearings.

Speed limits for insert bearings

The speed limits are dependent on the load, the clearance between the bearing bore and the shaft and the friction of the seals; see Catalogue HR 1, Rolling Bearings.

Shaft tolerances for insert bearings

The permissible shaft tolerance is determined by the speed and load. Tolerances from h6 to h9 are possible.

Conventional drawn shafts will suffice for most applications.

Accuracy

Radial internal clearance and normal tolerances

The outside diameter of the bearings corresponds to tolerance class PN to DIN 620-2. The inner ring bore has a plus tolerance to facilitate assembly of the bearings.

The radial internal clearance is C3 and is thus larger than in normal deep groove ball bearings. The larger internal clearance allows better support of angular misalignment and shaft deflection.

The normal tolerances of the bearings and the values for radial internal clearance are described in Catalogue HR 1, Rolling Bearings.

Insert bearings

Corrosion-resistant VA design
Grub screws in the inner ring

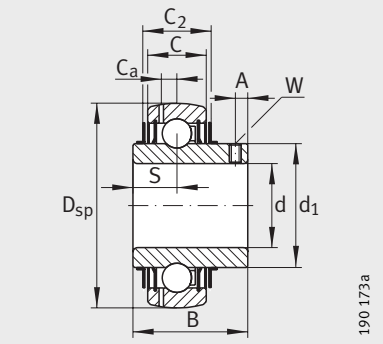

GYE..-KRR-B-VA

Dimension table · Dimensions in mm

Designation[1]	Mass	Dimensions				
	m	d	D_{sp}	C	C_2	B
	≈kg				max.	
GYE12-KRR-B-VA	0,11	**12**	40	12	12,6	25
GYE15-KRR-B-VA	0,1	**15**	40	12	12,6	25
GYE17-KRR-B-VA	0,08	**17**	40	12	12,6	25
GYE20-KRR-B-VA[2)3)]	0,15	**20**	47	16	16,6	31
GYE25-KRR-B-VA[2)3)]	0,2	**25**	52	17	17,6	34,1
GYE30-KRR-B-VA[2)3)]	0,3	**30**	62	19	19,6	38,1
GYE35-KRR-B-VA[2)3)]	0,5	**35**	72	20	20,6	42,9
GYE40-KRR-B-VA[2)3)]	0,6	**40**	80	21	21,6	49,2
GYE45-KRR-B-VA[2)3)]	0,66	**45**	85	22	22,6	49,2
GYE50-KRR-B-VA[2)3)]	0,78	**50**	90	23	23,6	51,6

1) Speed limits for insert bearings: see page 45 and Catalogue HR 1, Rolling Bearings.
2) Lubrication groove and two lubrication holes in the outer ring.
3) Optionally available in design FA 107, see page 44.

					Basic load ratings	
S	d_1	C_a	A	W	dyn. C_r N	stat. C_{0r} N
9,6	23,9	3,4	4	2,5	9 800	4 750
9,6	23,9	3,4	4	2,5	9 800	4 750
9,6	23,9	3,4	4	2,5	9 800	4 750
12,7	29,05	4	5	2,5	12 800	6 600
14,3	34,03	4,15	5	2,5	14 000	7 800
15,9	40,31	5	6	3	19 500	11 300
17,5	47,4	5,7	6,5	3	25 500	15 300
19	52,83	5,9	8	4	32 500	19 800
19	57,3	6,5	8	4	32 500	20 400
19	62,92	6,5	9	5	35 000	23 200

Insert bearings

With Corrotect® coating
With eccentric locking collar

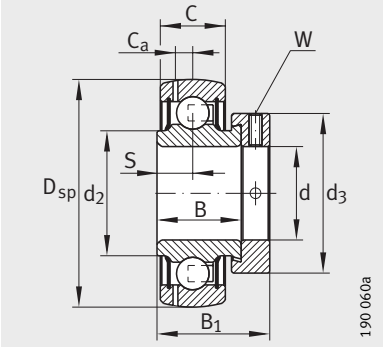

GRAE..-NPP-B-FA125.5

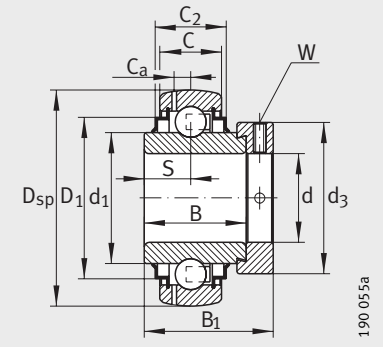

GE..-KRR-B-FA125.5

Dimension table · Dimensions in mm

Designation[1]	Mass m ≈kg	Dimensions d	D_{sp}	C	C_2	B	S
GRAE20-NPP-B-FA125.5	0,16	**20**	47	14	–	21,4	7,5
GE20-KRR-B-FA125.5	0,19	**20**	47	14	16,6	34,1	17,1
GRAE25-NPP-B-FA125.5	0,19	**25**	52	15	–	21,4	7,5
GE25-KRR-B-FA125.5	0,25	**25**	52	15	16,7	34,9	17,5
GRAE30-NPP-B-FA125.5	0,32	**30**	62	18	–	23,8	9
GE30-KRR-B-FA125.5	0,39	**30**	62	18	20,7	36,5	18,3
GRAE35-NPP-B-FA125.5	0,47	**35**	72	19	–	25,4	9,5
GE35-KRR-B-FA125.5	0,55	**35**	72	19	22,5	37,7	18,8
GRAE40-NPP-B-FA125.5	0,62	**40**	80	21	–	30,2	11
GE40-KRR-B-FA125.5	0,73	**40**	80	21	23,5	42,9	21,4
GRAE45-NPP-B-FA125.5	0,69	**45**	85	22	–	30,2	11
GE45-KRR-B-FA125.5	0,83	**45**	85	22	26,4	42,9	21,4
GRAE50-NPP-B-FA125.5	0,73	**50**	90	22	–	30,2	11
GE50-KRR-B-FA125.5	0,99	**50**	90	22	26,4	49,2	24,6
GRAE60-NPP-B-FA125.5	1,4	**60**	110	24	–	37,1	13,5

[1] Speed limits for insert bearings: see page 45 and Catalogue HR 1, Rolling Bearings.

							Basic load ratings	
d_1	d_2	D_1	C_a	B_1	d_3 max.	W	dyn. C_r N	stat. C_{0r} N
–	26,9	–	4	31	33	3	12 800	6 600
27,6	–	37,4	4	43,7	33	3	12 800	6 600
–	30,5	–	3,9	31	37,5	3	14 000	7 800
33,8	–	42,5	3,9	44,5	37,5	3	14 000	7 800
–	37,4	–	4,7	35,8	44	4	19 500	11 300
40,2	–	52	4,7	48,5	44	4	19 500	11 300
–	44,6	–	5,6	39	51	5	25 500	15 300
46,8	–	60,3	5,6	51,3	51	5	25 500	15 300
–	49,4	–	6,4	43,8	58	5	32 500	19 800
52,3	–	68,3	6,4	56,5	58	5	32 500	19 800
–	54,3	–	6,4	43,8	63	5	32 500	20 400
57,9	–	72,3	6,4	56,5	63	5	32 500	20 400
–	59,4	–	6,9	43,8	69	5	35 000	23 200
62,8	–	77,3	6,9	62,8	69	5	35 000	23 200
–	72	–	7,2	53,1	84	5	52 000	36 000

Housing units
With cast iron or sheet steel housing

Housing units with cast iron housing

With Corrotect® coating

PASE..-N-FA125,
RASE..-N-FA125

PCJT..-N-FA125,
RCJT..-N-FA125

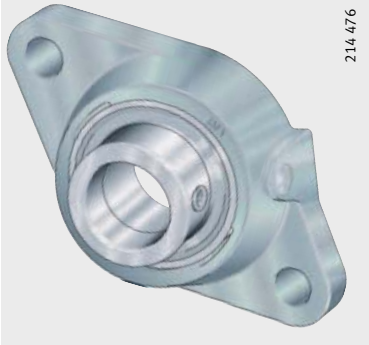

PCJ..-N-FA125,
RCJ..-N-FA125

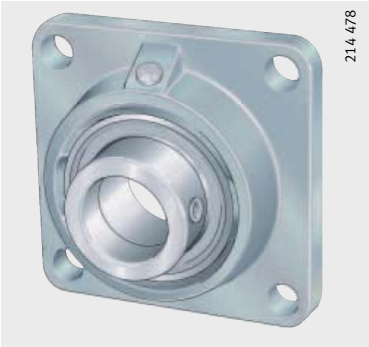

Housing units with sheet steel housing

Corrosion-resistant VA design

GRRY..-VA,
RRY..-VA

Housing units
With cast iron or sheet steel housing

Features

Corrosion-resistant units are available as plummer block and flanged housing units. Their area of application corresponds to that of the insert bearings, in other words where moisture, contaminated water, salt spray mist or weakly alkaline and weakly acidic cleaning agents are present.

Housings with integral insert bearing

The units are ready to fit and comprise INA sheet steel or INA cast iron housings in which INA insert bearings are integrated; for a description of the insert bearings, see page 43 and page 44. In order to ensure function and reliability under all operating conditions, the bearing and housing are matched to each other.

Due to the spherical outside surface of the bearing outer ring and the concave housing bore, housing units can compensate for static angular misalignment of the shaft; see Insert bearings, page 43.

The units are used predominantly as locating bearings, but are also suitable as non-locating bearings under low loads and speeds.

The housings are screw mounted to the adjacent construction. Less stringent tolerances are sufficient for the screw mounting surfaces.

Units with cast iron housing

Cast iron units are available as plummer block housing units PASE..-N-FA125 and RASE..-N-FA125 as well as flanged housing units PCJT..-N-FA125, RCJT..-N-FA125, PCJ..-N-FA125 and RCJ..-N-FA125.

The housings and insert bearings are coated with Corrotect® and have the suffix FA125. The housings are single-piece components, have high load carrying capacity and are screw mounted to the adjacent construction by means of fixing holes. For location, screws in accordance with DIN EN ISO 4 762 are suitable.

Relubrication facility

For relubrication of insert bearings, the housing bore has a lubrication groove and the housing has a lubrication hole for conventional tapered lubrication nipples to DIN 71 412.
In the delivered condition, the hole in the housing is closed off by a plastic plug.

Units with sheet steel housings

These units are available in their preferred versions as series GRRY..-VA and RRY..-VA.

GRRY can be relubricated via a lubrication nipple.

The units comprise insert bearings in a corrosion-resistant VA design, for insert bearings see page 43, and two-piece sheet steel housings made from corrosion-resistant steel, material number 1.4301.
The bearings and units have the suffix VA.

The units are designed for moderate loads and lightweight constructions.

Further possible combinations

Sheet steel housings with Corrotect® coating can also be combined with the insert bearing GRAE..-NPP-B-FA125.5.
Possible combinations and available diameters d:
see table Possible combinations, page 52.
The housings and bearings must be ordered separately.

Housing units
With cast iron or sheet steel housing

Possible combinations

Combination Insert bearing with sheet steel housing[1]		GRAE..-NPP-B-FA125.5 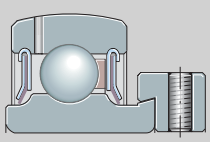 190 425c
Plummer block housings		
GEH..-PBS-FA125	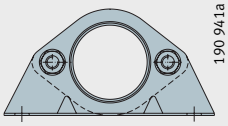 190 941a	d = 20 mm to 40 mm
GEH..-BT-FA125	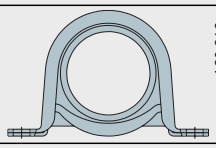 190 942a	d = 20 mm to 30 mm
Two-bolt flanged housings		
FLAN..-MST-FA125 (2 pieces)	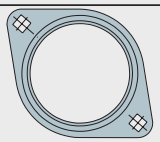 190 945a	d = 20 mm to 40 mm
Three-bolt flanged housings		
FLAN..-MSB-FA125 (2 pieces)	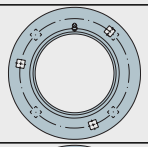 190 947a	d = 20 mm to 55 mm
FLAN..-MSA-FA125 **FLAN..-MSB-FA125**	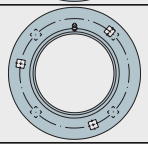 190 947a	d = 25 mm to 45 mm With relubrication facility
FLAN..-MSTR-FA125	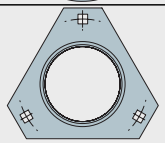 190 948a	d = 20 mm to 35 mm

[1] For housing code and bearing bore, see table.

Housing code and bearing bore

Housing code	47	52	62	72	80	85	90	100
Bearing bore diameter	20	25	30	35	40	45	50	55

Operating temperature

Corrosion-resistant units are suitable for operating temperatures from –20 °C to +120 °C.

Suffixes

Suffixes for available designs: see table Available designs.

Available designs

Suffix	Design
FA125	With Corrotect® coating, protected against corrosion
VA	Design made from corrosion-resistant steel

Further information

For further details on Corrotect®, see page 19.

For information on the design of bearing arrangements, lubrication, fitting and operation of the bearings and units, attention must be paid to Catalogue HR 1, Rolling Bearings.

Design and safety guidelines

Due to their versatile characteristics, INA housed bearing units can be easily used in almost all industrial sectors. If bearing arrangements are planned for equipment in which a malfunction could be hazardous to persons or an unplanned stoppage of the machine could cause major disruption, it is essential that you consult us before proceeding with the design.

Cast iron housings

Radial load carrying capacity

Cast iron housings can support the same radial loads as the insert bearings fitted.

The static load carrying capacity of insert bearings C_{0r} is stated in the dimension tables.

For shock loads, appropriate safety factors must be applied.
In this case, please contact us.

Axial load carrying capacity

The axial load carrying capacity of cast iron housings is $0{,}5 \times C_{0r}$.

Sheet steel housings

Radial load carrying capacity

Sheet steel housings are suitable for moderate loads.
The permissible radial load carrying capacity $C_{0r\,G}$ of sheet steel housings is given in the dimension tables.

Axial load carrying capacity

The permissible axial load carrying capacity of sheet steel housings is $0{,}5 \times C_{0r\,G}$.

Accuracy

The housings correspond predominantly to DIN 626-2 and ISO 3 228, insofar as they are described therein.

Cast iron housings

The dimensional tolerances for the machined surfaces of cast iron housings are ±0,25 mm.

The dimensional tolerances for unmachined as well as machined to unmachined surfaces correspond to GTB 14, DIN 1 680-2.

Sheet steel housings

The bearing seat of sheet steel housings is designed such that the bearing is seated in the housing with a defined swivel moment once the housing parts are bolted together.

Housing units with cast iron housing

Plummer block housing units
With Corrotect® coating

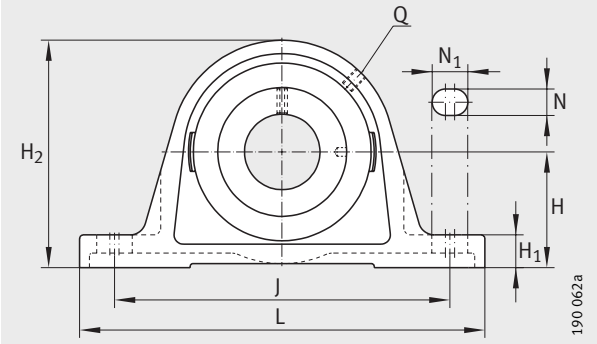

PASE..-N-FA125, RASE..-N-FA125

Dimension table · Dimensions in mm

Designation			Mass	Dimensions					
Unit	Housing	Radial insert ball bearing	m ≈kg	d	H	J	L	A	A_1
PASE20-N-FA125	GG.ASE04-E-N-FA125.1	GRAE20-NPP-B-FA125.5	0,6	**20**	33,3	97	130	32	19
RASE20-N-FA125	GG.ASE04-E-N-FA125.1	GE20-KRR-B-FA125.5	0,63	**20**	33,3	97	130	32	19
PASE25-N-FA125	GG.ASE05-N-FA125.1	GRAE25-NPP-B-FA125.5	0,67	**25**	36,5	103	130	36	21
RASE25-N-FA125	GG.ASE05-N-FA125.1	GE25-KRR-B-FA125.5	0,75	**25**	36,5	103	130	36	21
PASE30-N-FA125	GG.ASE06-N-FA125.1	GRAE30-NPP-B-FA125.5	1,13	**30**	42,9	118	158	40	25
RASE30-N-FA125	GG.ASE06-N-FA125.1	GE30-KRR-B-FA125.5	1,18	**30**	42,9	118	158	40	25
PASE35-N-FA125	GG.ASE07-N-FA125.1	GRAE35-NPP-B-FA125.5	1,57	**35**	47,6	126	163	45	27
RASE35-N-FA125	GG.ASE07-N-FA125.1	GE35-KRR-B-FA125.5	1,65	**35**	47,6	126	163	45	27
PASE40-N-FA125	GG.ASE/AK08-N-FA125.1	GRAE40-NPP-B-FA125.5	1,84	**40**	49,2	138	179	48	30
RASE40-N-FA125	GG.ASE/AK08-N-FA125.1	GE40-KRR-B-FA125.5	1,95	**40**	49,2	138	179	48	30
PASE50-N-FA125	GG.ASE10-N-FA125.1	GRAE50-NPP-B-FA125.5	2,59	**50**	57,2	158	200	54	34
RASE50-N-FA125	GG.ASE10-N-FA125.1	GE50-KRR-B-FA125.5	2,8	**50**	57,2	158	200	54	34
PASE60-N-FA125	GG.ASE12-N-FA125.1	GRAE60-NPP-B-FA125.5	4,35	**60**	69,9	190	240	60	42

1) To be ordered separately.
For a description of the end caps, see Catalogue HR 1, Rolling Bearings.

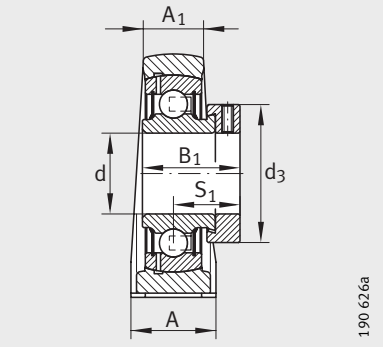

PASE..-N-FA125

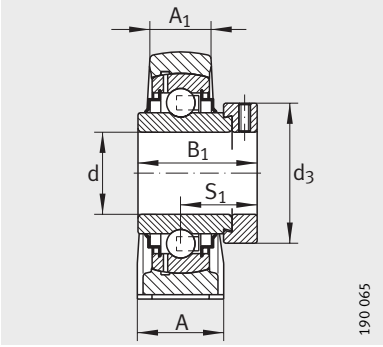

RASE..-N-FA125

								Basic load ratings		End cap[1)]
H_1	H_2	N	N_1	B_1	S_1	Q	d_3 max.	dyn. C_r N	stat. C_{0r} N	
14,5	64	11	19	31	23,5	R_p1/8	33	12 800	6 600	KASK04
14,5	64	11	19	43,7	26,6	R_p1/8	33	12 800	6 600	KASK04
14,5	70	11	19	31	23,5	R_p1/8	37,5	14 000	7 800	KASK05
14,5	70	11	19	44,5	27	R_p1/8	37,5	14 000	7 800	KASK05
17	82	14	22	35,8	26,8	R_p1/8	44	19 500	11 300	KASK06
17	82	14	22	48,5	30,2	R_p1/8	44	19 500	11 300	KASK06
19	93	14	21	39	29,5	R_p1/8	51	25 500	15 300	KASK07
19	93	14	21	51,3	32,5	R_p1/8	51	25 500	15 300	KASK07
19	99	14	26	43,8	32,8	R_p1/8	58	32 500	19 800	KASK08
19	99	14	26	56,5	35,1	R_p1/8	58	32 500	19 800	KASK08
21,5	115	18	23	43,8	32,8	R_p1/8	69	35 000	23 200	KASK10
21,5	115	18	23	62,8	38,2	R_p1/8	69	35 000	23 200	KASK10
25	140	18	28	53,1	39,6	R_p1/8	84	52 000	36 000	KASK12

Housing units with cast iron housing

Flanged housing units
With Corrotect® coating

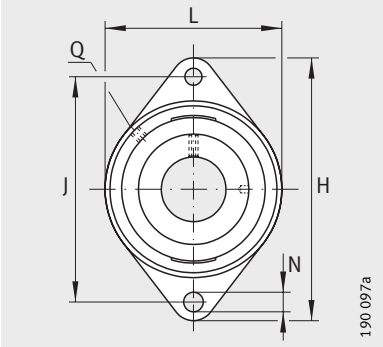

PCJT..-N-FA125, RCJT..-N-FA125

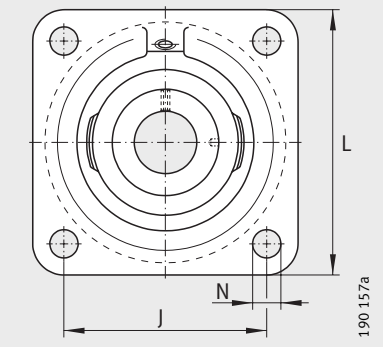

PCJ..-N-FA125,RCJ..-N-FA125

Dimension table · Dimensions in mm

Designation			Mass	Dimensions				
Unit	Housing	Radial insert ball bearing	m ≈kg	d	L	H	A_1	N
PCJT20-N-FA125	GG.CJT04-N-FA125.1	GRAE20-NPP-B-FA125.5	0,44	**20**	61	112	10	11,5
RCJT20-N-FA125	GG.CJT04-N-FA125.1	GE20-KRR-B-FA125.5	0,48	**20**	61	112	10	11,5
PCJ20-N-FA125	GG.CJ04-N-FA125.1	GRAE20-NPP-B-FA125.5	0,6	**20**	86	–	10	11,5
RCJ20-N-FA125	GG.CJ04-N-FA125.1	GE20-KRR-B-FA125.5	0,63	**20**	86	–	10	11,5
PCJT25-N-FA125	GG.CJT05-N-FA125.1	GRAE25-NPP-B-FA125.5	0,58	**25**	70	124	11	11,5
RCJT25-N-FA125	GG.CJT05-N-FA125.1	GE25-KRR-B-FA125.5	0,63	**25**	70	124	11	11,5
PCJ25-N-FA125	GG.CJ05-N-FA125.1	GRAE25-NPP-B-FA125.5	0,76	**25**	95	–	11	11,5
RCJ25-N-FA125	GG.CJ05-N-FA125.1	GE25-KRR-B-FA125.5	0,81	**25**	95	–	11	11,5
PCJT30-N-FA125	GG.CJT06-N-FA125.1	GRAE30-NPP-B-FA125.5	0,83	**30**	80	142	12	11,5
RCJT30-N-FA125	GG.CJT06-N-FA125.1	GE30-KRR-B-FA125.5	0,9	**30**	80	142	12	11,5
PCJ30-N-FA125	GG.CJ06-N-FA125.1	GRAE30-NPP-B-FA125.5	1,11	**30**	108	–	12	11,5
RCJ30-N-FA125	GG.CJ06-N-FA125.1	GE30-KRR-B-FA125.5	1,17	**30**	108	–	12	11,5
PCJT35-N-FA125	GG.CJT07-N-FA125.1	GRAE35-NPP-B-FA125.5	1,13	**35**	92	155	12,5	14
RCJT35-N-FA125	GG.CJT07-N-FA125.1	GE35-KRR-B-FA125.5	1,21	**35**	92	155	12,5	14
PCJ35-N-FA125	GG.CJ07-N-FA125.1	GRAE35-NPP-B-FA125.5	1,46	**35**	118	–	12,5	14
RCJ35-N-FA125	GG.CJ07-N-FA125.1	GE35-KRR-B-FA125.5	1,54	**35**	118	–	12,5	14
PCJT40-N-FA125	GG.CJT08-N-FA125.1	GRAE40-NPP-B-FA125.5	1,57	**40**	105	172	13	14
RCJT40-N-FA125	GG.CJT08-N-FA125.1	GE40-KRR-B-FA125.5	1,68	**40**	105	172	13	14
PCJ40-N-FA125	GG.CJ08-N-FA125.1	GRAE40-NPP-B-FA125.5	1,89	**40**	130	–	13	14
RCJ40-N-FA125	GG.CJ08-N-FA125.1	GE40-KRR-B-FA125.5	2,01	**40**	130	–	13	14
PCJT50-N-FA125	GG.CJT10-N-FA125.1	GRAE50-NPP-B-FA125.5	1,98	**50**	116	190	13	18
RCJT50-N-FA125	GG.CJT10-N-FA125.1	GE50-KRR-B-FA125.5	2,2	**50**	116	190	13	18
PCJ50-N-FA125	GG.CJ10-N-FA125.1	GRAE50-NPP-B-FA125.5	2,3	**50**	143	–	13	18
RCJ50-N-FA125	GG.CJ10-N-FA125.1	GE50-KRR-B-FA125.5	2,53	**50**	143	–	13	18
PCJT60-N-FA125	GG.CJT12-N-FA125.1	GRAE60-NPP-B-FA125.5	3,25	**60**	138	238	16	18

1) To be ordered separately.
For a description of the end caps, see Catalogue HR 1, Rolling Bearings.

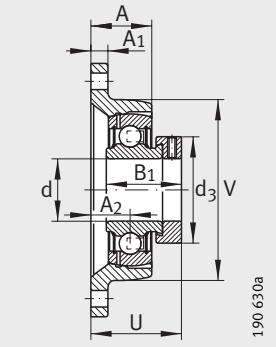

PCJT..-N-FA125

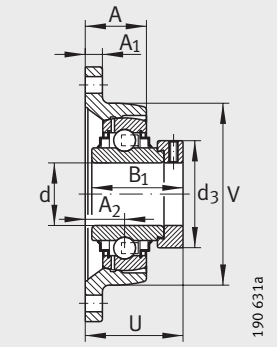

RCJT..-N-FA125

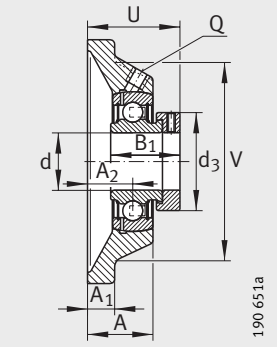

PCJ..-N-FA125

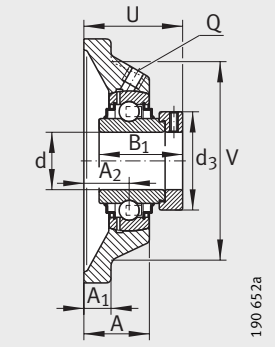

RCJ..-N-FA125

								Basic load ratings		End cap[1)]
B_1	J	A_2	Q	d_3 max.	A	U	V	dyn. C_r N	stat. C_{0r} N	
31	90	19	R_p1/8	33	28	42,5	61	12 800	6 600	KASK04
43,7	90	19	R_p1/8	33	28	45,6	61	12 800	6 600	KASK04
31	63,5	19	R_p1/8	33	29	42,5	68	12 800	6 600	KASK04
43,7	63,5	19	R_p1/8	33	29	45,6	68	12 800	6 600	KASK04
31	99	19	R_p1/8	37,5	29	42,5	70	14 000	7 800	KASK05
44,5	99	19	R_p1/8	37,5	29	46	70	14 000	7 800	KASK05
31	70	19	R_p1/8	37,5	29	42,5	74	14 000	7 800	KASK05
44,5	70	19	R_p1/8	37,5	29	46	74	14 000	7 800	KASK05
35,8	116,5	20	R_p1/8	44	29	46,8	80	19 500	11 300	KASK06
48,5	116,5	20	R_p1/8	44	29	50,2	80	19 500	11 300	KASK06
35,8	82,5	20	R_p1/8	44	29	46,8	85	19 500	11 300	KASK06
48,5	82,5	20	R_p1/8	44	29	50,2	85	19 500	11 300	KASK06
39	130	21	R_p1/8	51	30,5	50,5	92	25 500	15 300	KASK07
51,3	130	21	R_p1/8	51	30,5	53,5	92	25 500	15 300	KASK07
39	92	21	R_p1/8	51	30,5	50,5	100	25 500	15 300	KASK07
51,3	92	21	R_p1/8	51	30,5	53,5	100	25 500	15 300	KASK07
43,8	143,5	24	R_p1/8	58	34,5	56,8	105	32 500	19 800	KASK08
56,5	143,5	24	R_p1/8	58	34,5	59,1	105	32 500	19 800	KASK08
43,8	101,5	24	R_p1/8	58	34,5	56,8	110	32 500	19 800	KASK08
56,5	101,5	24	R_p1/8	58	34,5	59,1	110	32 500	19 800	KASK08
43,8	157	28	R_p1/8	69	39	60,8	116	35 000	23 200	KASK10
62,8	157	28	R_p1/8	69	39	66,2	116	35 000	23 200	KASK10
43,8	111	28	R_p1/8	69	39	60,8	125	35 000	23 200	KASK10
62,8	111	28	R_p1/8	69	39	66,2	125	35 000	23 200	KASK10
53,1	202	34	R_p1/8	84	46	73,6	138	52 000	36 000	KASK12

Housing units with sheet steel housing

Flanged housing units
Corrosion-resistant
VA design

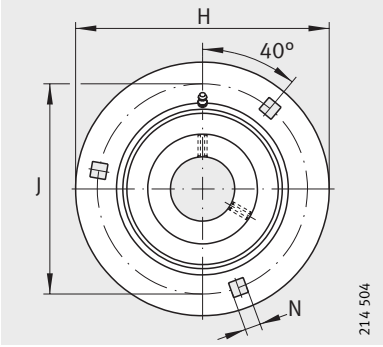

GRRY..-VA

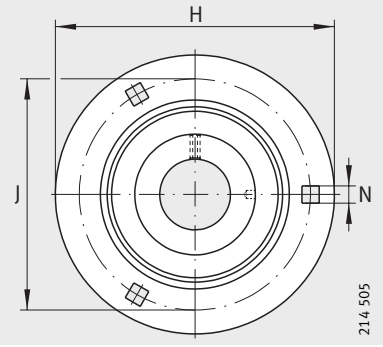

RRY..-VA

Dimension table · Dimensions in mm

Designation			Mass	Dimensions		
Unit	Housing	Radial insert ball bearing	m ≈kg	d	H	S
RRY12-VA[1]	**FLAN40-MSB-VA** (2 pieces)	**GYE12-KRR-B-VA**	0,21	**12**	81	2
RRY15-VA[1]	**FLAN40-MSB-VA** (2 pieces)	**GYE15-KRR-B-VA**	0,2	**15**	81	2
RRY17-VA[1]	**FLAN40-MSB-VA** (2 pieces)	**GYE17-KRR-B-VA**	0,19	**17**	81	2
GRRY20-VA[2]	FLAN47-MSB-VA/FLAN47-MSA-VA (1 piece each)	GYE20-KRR-B-VA	0,34	**20**	90,5	2
RRY20-VA	FLAN47-MSB-VA (2 pieces)	GYE20-KRR-B-VA	0,34	**20**	90,5	2
GRRY25-VA[2]	FLAN52-MSB-VA/FLAN52-MSA-VA (1 piece each)	GYE25-KRR-B-VA	0,38	**25**	95	2
RRY25-VA	FLAN52-MSB-VA (2 pieces)	GYE25-KRR-B-VA	0,38	**25**	95	2
GRRY30-VA[2]	FLAN62-MSB-VA/FLAN62-MSA-VA (1 piece each)	GYE30-KRR-B-VA	0,63	**30**	112,7	2,5
RRY30-VA	FLAN62-MSB-VA (2 pieces)	GYE30-KRR-B-VA	0,63	**30**	112,7	2,5

[1] Housing and radial insert ball bearing must be ordered separately.
[2] Bearing can be relubricated.

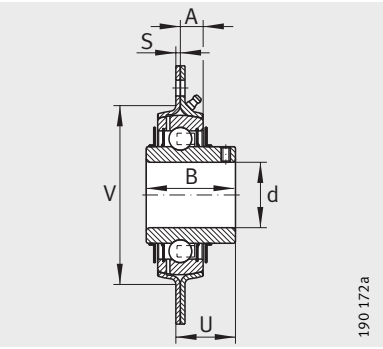

GRRY..-VA, RRY..-VA

						Number of screw mounting holes	Load carrying capacity of housing	Basic load ratings	
N	B	J	A	U	V	n	$C_{0r\,G}$ N	dyn. C_r N	stat. C_{0r} N
7,1	25	63,5	7	17,4	48	3	2 700	9 800	4 750
7,1	25	63,5	7	17,4	48	3	2 700	9 800	4 750
7,1	25	63,5	7	17,4	48	3	2 700	9 800	4 750
8,7	31	71,5	8	20,3	55	3	3 200	12 800	6 800
8,7	31	71,5	8	20,3	55	3	3 200	12 800	6 800
8,7	34	76	8,7	21,7	60	3	3 650	14 000	7 800
8,7	34	76	8,7	21,7	60	3	3 650	14 000	7 800
10,5	38,1	90,5	9	24,7	71	3	5 000	19 500	11 300
10,5	38,1	90,5	9	24,7	71	3	5 000	19 500	11 300

Product overview

Housing units
With plastic housing

Plummer block housing units

RASEY..-TV-VA,
PASE..-TV-FA125.5

RSHEY..-TV-VA,
PSHE..-TV-FA125.5

Flanged housing units

RCJTY..-TV-VA,
PCJT..-TV-FA125.5

GLCTE..-TV-FA125.5

RCJY..-TV-VA,
PCJ..-TV-FA125.5

Take-up housing units

RTUEY..-TV-VA,
PTUE..-TV-FA125.5

RHEY..-TV-VA,
PHE..-TV-FA125.5

Housing units
With plastic housing

Features

Housing units with a plastic housing are available as plummer block and flanged housing units as well as take-up housing units and have the suffix TV.

The glass fibre reinforced material PBT is highly resistant to moisture, UV radiation, bacterial and fungal attacks as well as many chemical media.

Housings with integral insert bearing

The units are ready to fit and comprise plastic housings in which INA insert bearings are integrated; for a description of the insert bearings, see page 43 and page 44. In order to ensure function and reliability under all operating conditions, the bearing and housing are matched to each other.

Bearings of the corrosion-resistant VA design are located on the shaft by means of grub screws, bearings with the suffix FA125.5 are located by means of an eccentric locking collar.

The units are used predominantly as locating bearings, but are also suitable as non-locating bearings under low loads and speeds.

The housings are screw mounted to the adjacent construction. Less stringent tolerances are sufficient for the screw mounting surfaces.

Compensation of static misalignments

Due to the spherical outside surface of the bearing outer ring and the concave housing bore, INA housing units can compensate for static angular misalignment of the shaft.

Housing units
With plastic housing

Housing units

The housing units are available with insert bearings in the corrosion-resistant VA design or with Corrotect® coating to FA125.5.

Plummer block housing units

Plummer block housing units are available with a long base or short base. The housings are made from glass fibre reinforced plastic PBT, are not split and are screw mounted to the adjacent construction by means of slots or threaded holes. Fixing screws to DIN EN ISO 4 762 are suitable.

For relubrication of insert bearings, the housing bore has a lubrication groove and the housing has a lubrication hole for conventional tapered lubrication nipples to DIN ANSI B1.1. The lubrication nipple is supplied already fitted, a bearing end cap is supplied loose at the time of delivery.

Flanged housing units

Flanged housing units are available as two-bolt and four-bolt units. For location, the housings have through holes for screws to DIN EN ISO 4 762.

The housing material, the design of lubrication arrangements and the delivered condition correspond to those of plummer block housing units.

Take-up housing units

Take-up housing units allow some displacement. They are used where shafts must carry out long displacement motions.

The housing material, the design of lubrication arrangements and the delivered condition correspond to those of plummer block housing units.

End caps

Closed design

Each housing unit is supplied with a closed end cap KASK..-S-G.

Open design

For all units, open end caps are available by agreement with an integral rotary shaft seal KASK..-S-R-NBR, *Figure 1* and table.

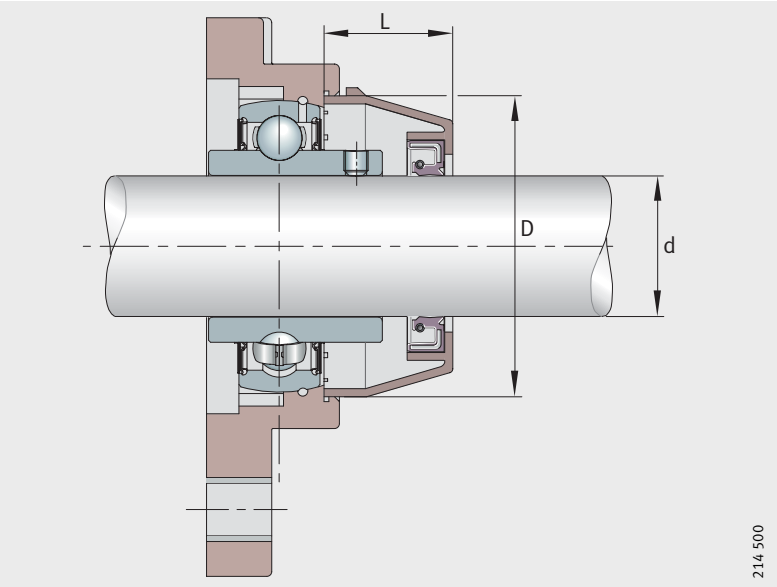

Figure 1
Open end cap
with integral rotary shaft seal

End caps, designations and dimensions

Designation		Dimensions (mm)		
End cap, closed design	End cap, open design	d	D	L
KASK04-S-G	KASK04-S-R-NBR	20	50	23
KASK05-S-G	KASK05-S-R-NBR	25	55	25
KASK06-S-G	KASK06-S-R-NBR	30	64	30
KASK07-S-G	KASK07-S-R-NBR	35	74,5	32
KASK08-S-G	KASK08-S-R-NBR	40	84	37
KASK09-S-G	KASK09-S-R-NBR	45	89	41
KASK10-S-G	KASK10-S-R-NBR	50	94	47

Back Seal component

For series PCJT..-TV-FA125.5 and PCJ..-TV-FA125.5, a Back Seal component RWDR..-R-NBR is available that closes off the rear face of the housing, *Figure 2*.
For dimensions see *Figure 3* and table.

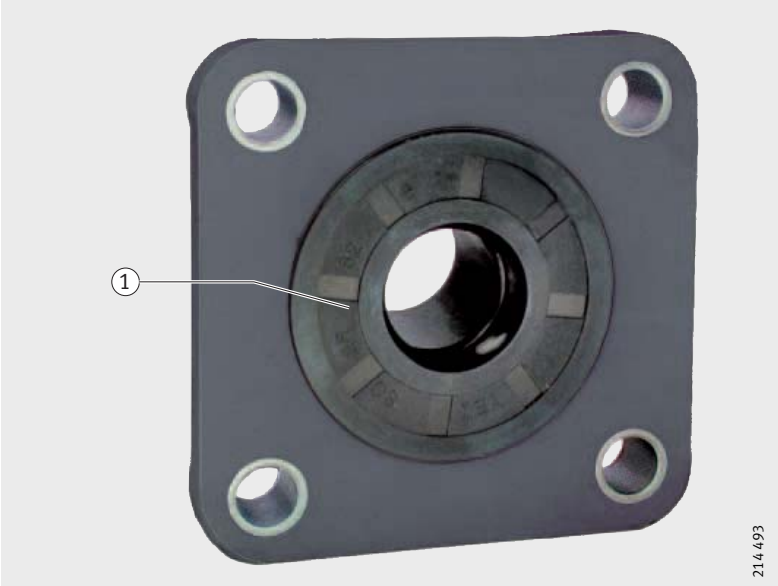

① Back Seal component

Figure 2
PCJ with Back Seal component

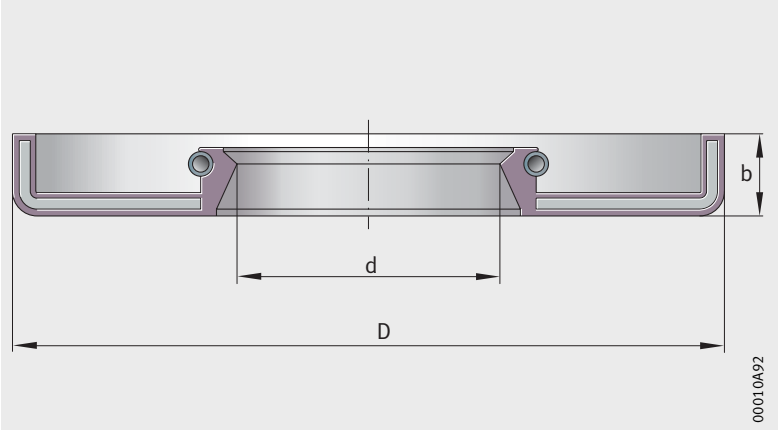

Figure 3
Dimensions
of Back Seal component

Designations and dimensions

Designation	Dimensions (mm)		
	d	b	D
RWDR04-R-NBR	20	6	52
RWDR05-R-NBR	25	6	62
RWDR06-R-NBR	30	6	72
RWDR07-R-NBR	35	6	82
RWDR08-R-NBR	40	6	88
RWDR09-R-NBR	45	6	93
RWDR10-R-NBR	50	6	98

Operating temperature

Units with a plastic housing are suitable for operating temperatures from –20 °C to +80 °C.

Suffixes

Suffixes for the available designs: see table.

Available designs

Suffix	Design
TV	Housing made from glass fibre reinforced plastic
VA	Corrosion-resistant design made from high alloy rolling bearing steel
FA125.5	Bearing with Corrotect® coating, protected against corrosion

Further information

For information on the design of bearing arrangements, lubrication, fitting and operation of the bearings, attention must be be paid to Catalogue HR 1, Rolling Bearings.

Design and safety guidelines

Due to their versatile characteristics, INA housed bearing units can be easily used in almost all industrial sectors. If bearing arrangements are planned for equipment in which a malfunction could be hazardous to persons or an unplanned stoppage of the machine could cause major disruption, it is essential that you consult us before proceeding with the design.

Load carrying capacity of insert bearings and housings

The axial load carrying capacity of insert bearings must not exceed the axial load carrying capacity of the housing.

Radial and axial load carrying capacity of housings

The housings can support radial loads up to $C_{0r\,G}$ and axial loads up to $0{,}25 \times C_{0r}$.

Speed limits for insert bearings

The speed limits are dependent on the load, the clearance between the bearing bore and the shaft and the friction of the seals; see Catalogue HR 1, Rolling Bearings.

Shaft tolerances for insert bearings

Tolerances from h6 to h9 are suitable for unit shafts.

Conventional drawn shafts will suffice for most applications.

Accuracy

Tolerances of plastic housings

The dimensional and geometrical tolerances of plastic housings correspond to DIN 16 901.

Housing units with plastic housing

Plummer block housing units
Insert bearings
in corrosion-resistant VA design
or with Corrotect® coating

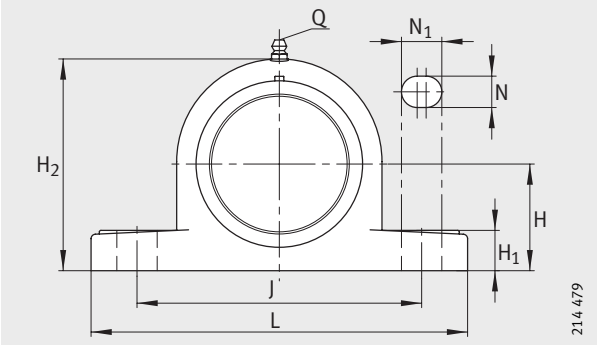

RASEY..-TV-VA, PASE..-TV-FA125.5

Dimension table · Dimensions in mm

Designation			Mass	Dimensions				
Unit[1]	Housing	Radial insert ball bearing	m ≈kg	d	H	J	L	A
RASEY20-TV-VA	GEH.ASE04-TV	GYE20-KRR-B-FA107-VA	0,31	**20**	33,3	95	127	38
PASE20-TV-FA125.5	GEH.ASE04-TV	GRAE20-NPP-B-FA107/125.5	0,32	**20**	33,3	95	127	38
RASEY25-TV-VA	GEH.ASE05-TV	GYE25-KRR-B-FA107-VA	0,38	**25**	36,5	105	140,5	38
PASE25-TV-FA125.5	GEH.ASE05-TV	GRAE25-NPP-B-FA107/125.5	0,37	**25**	36,5	105	140,5	38
RASEY30-TV-VA	GEH.ASE06-TV	GYE30-KRR-B-FA107-VA	0,58	**30**	42,9	119	163	46
PASE30-TV-FA125.5	GEH.ASE06-TV	GRAE30-NPP-B-FA107/125.5	0,6	**30**	42,9	119	163	46
RASEY35-TV-VA	GEH.ASE07-TV	GYE35-KRR-B-FA107-VA	0,81	**35**	47,6	127	168	48
PASE35-TV-FA125.5	GEH.ASE07-TV	GRAE35-NPP-B-FA107/125.5	0,82	**35**	47,6	127	168	48
RASEY40-TV-VA	GEH.ASE08-TV	GYE40-KRR-B-FA107-VA	1,05	**40**	49,2	137	184	54
PASE40-TV-FA125.5	GEH.ASE08-TV	GRAE40-NPP-B-FA107/125.5	1,06	**40**	49,2	137	184	54
RASEY45-TV-VA[2]	GEH.ASE09-TV	GYE45-KRR-B-FA107-VA	1,16	**45**	54	146	192	54
PASE45-TV-FA125.5[2]	GEH.ASE09-TV	GRAE45-NPP-B-FA107/125.5	1,19	**45**	54	146	192	54
RASEY50-TV-VA[2]	GEH.ASE10-TV	GYE50-KRR-B-FA107-VA	1,41	**50**	57,2	159	206	60
PASE50-TV-FA125.5[2]	GEH.ASE10-TV	GRAE50-NPP-B-FA107/125.5	1,37	**50**	57,2	159	206	60

[1] Available end caps: see page 63.
[2] Available by agreement.

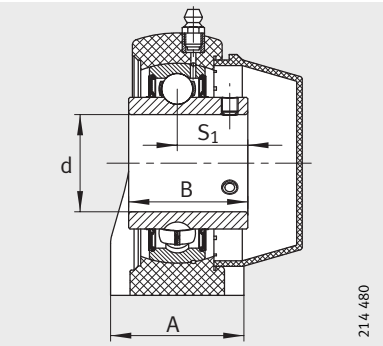

RASEY..-TV-VA

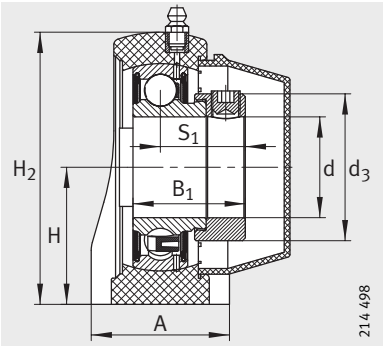

PASE..-TV-FA125.5

									Basic load ratings		Load carrying capacity of housing
H_1	H_2	N	N_1	B	B_1	S_1	Q	d_3 max.	dyn. C_r N	stat. C_{0r} N	$C_{0r\,G}$ N
14,2	65,5	11	14	31	–	18,3	1/4 – 28 UNF	–	12 800	6 600	7 700
14,2	65,5	11	14	–	31	23,5	1/4 – 28 UNF	33	12 800	6 600	7 700
14,5	71	11	14	34,1	–	19,8	1/4 – 28 UNF	–	14 000	7 800	10 000
14,5	71	11	14	–	31	23,5	1/4 – 28 UNF	37,5	14 000	7 800	10 000
17,8	84	14	18	38,1	–	22,2	1/4 – 28 UNF	–	19 500	11 300	10 600
17,8	84	14	18	–	35,8	26,8	1/4 – 28 UNF	44	19 500	11 300	10 600
18	94,5	14	18	42,9	–	25,4	1/4 – 28 UNF	–	25 500	15 300	10 800
18	94,5	14	18	–	39	29,5	1/4 – 28 UNF	51	25 500	15 300	10 800
19,5	99	14	18	49,2	–	30,2	1/4 – 28 UNF	–	32 500	19 800	11 100
19,5	99	14	18	–	43,8	32,8	1/4 – 28 UNF	58	32 500	19 800	11 100
23	106	17	20	49,2	–	30,2	1/4 – 28 UNF	–	32 500	20 400	11 400
23	106	17	20	–	43,8	32,7	1/4 – 28 UNF	63	32 500	20 400	11 400
23	114	17	20	51,6	–	32,6	1/4 – 28 UNF	–	35 000	23 200	11 700
23	114	17	20	–	43,8	32,7	1/4 – 28 UNF	69	35 000	23 200	11 700

Housing units with plastic housing

Plummer block housing units
Insert bearings
in corrosion-resistant VA design
or with Corrotect® coating

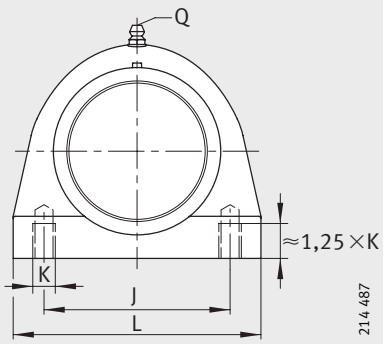

RSHEY..-TV-VA,
PSHE..-TV-FA125.5

Dimension table · Dimensions in mm

Designation			Mass	Dimensions			
Unit[1]	Housing	Radial insert ball bearing	m ≈kg	d	H	A	H_2
RSHEY20-TV-VA	GEH.SHE04-TV	GYE20-KRR-B-FA107-VA	0,29	**20**	33,3	34,5	66
PSHE20-TV-FA125.5	GEH.SHE04-TV	GRAE20-NPP-B-FA107/125.5	0,3	**20**	33,3	34,5	66
RSHEY25-TV-VA	GEH.SHE05-TV	GYE25-KRR-B-FA107-VA	0,36	**25**	36,5	39,5	73,5
PSHE25-TV-FA125.5	GEH.SHE05-TV	GRAE25-NPP-B-FA107/125.5	0,35	**25**	36,5	39,5	73,5
RSHEY30-TV-VA	GEH.SHE06-TV	GYE30-KRR-B-FA107-VA	0,55	**30**	42,9	42,5	84
PSHE30-TV-FA125.5	GEH.SHE06-TV	GRAE30-NPP-B-FA107/125.5	0,57	**30**	42,9	42,5	84
RSHEY35-TV-VA	GEH.SHE07-TV	GYE35-KRR-B-FA107-VA	0,79	**35**	47,6	47,5	95
PSHE35-TV-FA125.5	GEH.SHE07-TV	GRAE35-NPP-B-FA107/125.5	0,8	**35**	47,6	47,5	95
RSHEY40-TV-VA	GEH.SHE08-TV	GYE40-KRR-B-FA107-VA	0,97	**40**	49,2	48	100,5
PSHE40-TV-FA125.5	GEH.SHE08-TV	GRAE40-NPP-B-FA107/125.5	0,99	**40**	49,2	48	100,5
RSHEY45-TV-VA[2]	GEH.SHE09-TV	GYE45-KRR-B-FA107-VA	1,09	**45**	54	50	108,5
PSHE45-TV-FA125.5[2]	GEH.SHE09-TV	GRAE45-NPP-B-FA107/125.5	1,12	**45**	54	50	108,5
RSHEY50-TV-VA[2]	GEH.SHE10-TV	GYE50-KRR-B-FA107-VA	1,26	**50**	57,2	54	115
PSHE50-TV-FA125.5[2]	GEH.SHE10-TV	GRAE50-NPP-B-FA107/125.5	1,22	**50**	57,2	54	115

[1] Available end caps: see page 63.
[2] Available by agreement.

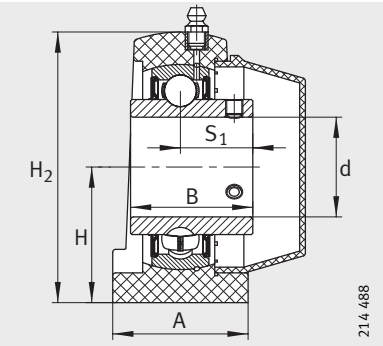

RSHEY..-TV-VA

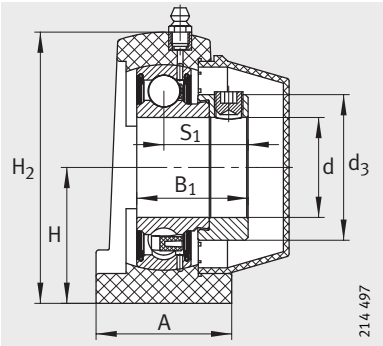

PSHE..-TV-FA125.5

								Basic load ratings		Load carrying capacity of housing
K	B	B_1	J	S_1	Q	d_3 max.	L	dyn. C_r N	stat. C_{0r} N	$C_{0r\,G}$ N
M8	31	–	50,8	18,3	1/4 – 28 UNF	–	72,8	12 800	6 600	6 900
M8	–	31	50,8	23,5	1/4 – 28 UNF	33	72,8	12 800	6 600	6 900
M10	34,1	–	50,8	19,8	1/4 – 28 UNF	–	76,2	14 000	7 800	7 000
M10	–	31	50,8	23,5	1/4 – 28 UNF	37,5	76,2	14 000	7 800	7 000
M10	38,1	–	76,2	22,2	1/4 – 28 UNF	–	101	19 500	11 300	6 500
M10	–	35,8	76,2	26,8	1/4 – 28 UNF	44	101	19 500	11 300	6 500
M10	42,9	–	82,6	25,4	1/4 – 28 UNF	–	110	25 500	15 300	8 000
M10	–	39	82,6	29,5	1/4 – 28 UNF	51	110	25 500	15 300	8 000
M12	49,2	–	88,9	30,2	1/4 – 28 UNF	–	120	32 500	19 800	9 100
M12	–	43,8	88,9	32,8	1/4 – 28 UNF	58	120	32 500	19 800	9 100
M12	49,2	–	95,3	30,2	1/4 – 28 UNF	–	124	32 500	20 400	10 400
M12	–	43,8	95,3	32,7	1/4 – 28 UNF	63	124	32 500	20 400	10 400
M16	51,6	–	101,6	32,6	1/4 – 28 UNF	–	135	35 000	23 200	11 000
M16	–	43,8	101,6	32,7	1/4 – 28 UNF	69	135	35 000	23 200	11 000

Housing units with plastic housing

Flanged housing units
Insert bearings
in corrosion-resistant VA design
or with Corrotect® coating

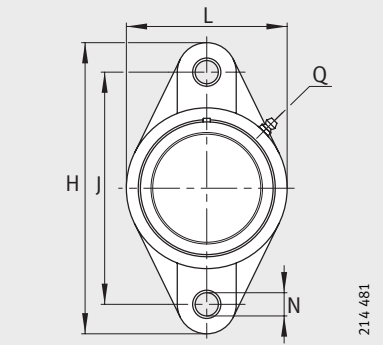

RCJTY..-TV-VA, PCJT..-TV-FA125.5

Dimension table · Dimensions in mm

Designation			Mass	Dimensions				
Unit[1]	Housing	Radial insert ball bearing	m ≈kg	d	L	H	A_1	N
RCJTY20-TV-VA	GEH.CJT04-TV	GYE20-KRR-B-FA107-VA	0,26	**20**	63,8	114	11,4	11
PCJT20-TV-FA125.5[2]	GEH.CJT04-TV	GRAE20-NPP-B-FA107/125.5	0,27	**20**	63,8	114	11,4	11
RCJTY25-TV-VA	GEH.CJT05-TV	GYE25-KRR-B-FA107-VA	0,33	**25**	70	130	13,5	11
PCJT25-TV-FA125.5[2]	GEH.CJT05-TV	GRAE25-NPP-B-FA107/125.5	0,33	**25**	70	130	13,5	11
RCJTY30-TV-VA	GEH.CJT06-TV	GYE30-KRR-B-FA107-VA	0,47	**30**	80	148	13,3	11
PCJT30-TV-FA125.5[2]	GEH.CJT06-TV	GRAE30-NPP-B-FA107/125.5	0,49	**30**	80	148	13,3	11
RCJTY35-TV-VA	GEH.CJT07-TV	GYE35-KRR-B-FA107-VA	0,68	**35**	90	163	16,1	13
PCJT35-TV-FA125.5[2]	GEH.CJT07-TV	GRAE35-NPP-B-FA107/125.5	0,69	**35**	90	163	16,1	13
RCJTY40-TV-VA	GEH.CJT08-TV	GYE40-KRR-B-FA107-VA	0,92	**40**	100	176	20	14
PCJT40-TV-FA125.5[2]	GEH.CJT08-TV	GRAE40-NPP-B-FA107/125.5	0,93	**40**	100	176	20	14
RCJTY45-TV-VA[3]	GEH.CJT09-TV	GYE45-KRR-B-FA107-VA	1,05	**45**	108	188,5	21	17
PCJT45-TV-FA125.5[2][3]	GEH.CJT09-TV	GRAE45-NPP-B-FA107/125.5	1,09	**45**	108	188,5	21	17
RCJTY50-TV-VA[3]	GEH.CJT10-TV	GYE50-KRR-B-FA107-VA	1,23	**50**	115	197	21	17
PCJT50-TV-FA125.5[2][3]	GEH.CJT10-TV	GRAE50-NPP-B-FA107/125.5	1,18	**50**	115	197	21	17

[1] Available end caps: see page 63.
[2] For these series, Back Seal components are also available.
[3] Available by agreement.

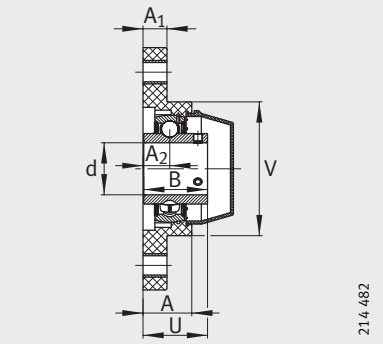

RCJTY..-TV-VA

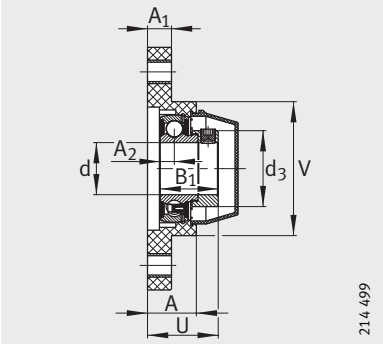

PCJT..-TV-FA125.5

									Basic load ratings		Load carrying capacity of housing
B	B_1	J	A_2	Q	d_3 max.	A	U	V	dyn. C_r N	stat. C_{0r} N	$C_{0r\,G}$ N
31	–	90	15,4	1/4 – 28 UNF	–	26,5	33,7	63,8	12 800	6 600	8 500
–	31	90	15,4	1/4 – 28 UNF	33	26,5	38,9	63,8	12 800	6 600	8 500
34,1	–	99	17	1/4 – 28 UNF	–	29,1	36,8	70	14 000	7 800	11 100
–	31	99	17	1/4 – 28 UNF	37,5	29,1	40,5	70	14 000	7 800	11 100
38,1	–	117	19	1/4 – 28 UNF	–	30,6	41,2	80	19 500	11 300	14 200
–	35,8	117	19	1/4 – 28 UNF	44	30,6	45,8	80	19 500	11 300	14 200
42,9	–	130	18	1/4 – 28 UNF	–	32,8	43,4	90	25 500	15 300	14 900
–	39	130	18	1/4 – 28 UNF	51	32,8	47,5	90	25 500	15 300	14 900
49,2	–	144	21,5	1/4 – 28 UNF	–	36,5	51,7	100	32 500	19 800	14 900
–	43,8	144	21,5	1/4 – 28 UNF	58	36,5	54,3	100	32 500	19 800	14 900
49,2	–	148,5	24	1/4 – 28 UNF	–	41	54,2	108	32 500	20 400	15 100
–	43,8	148,5	24	1/4 – 28 UNF	63	41	56,8	108	32 500	20 400	15 100
51,6	–	157	25	1/4 – 28 UNF	–	43	57,6	115	35 000	23 200	15 600
–	43,8	157	25	1/4 – 28 UNF	69	43	57,8	115	35 000	23 200	15 600

Housing units with plastic housing

Flanged housing units
Insert bearings
with Corrotect® coating

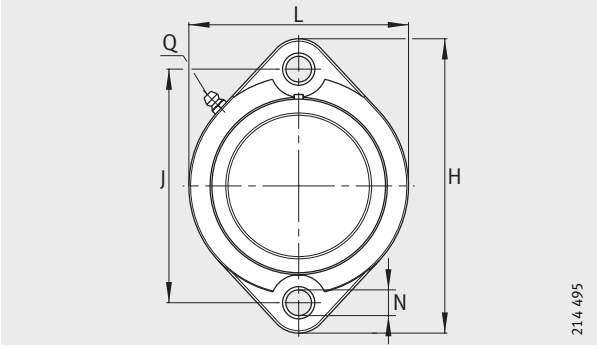

GLCTE..-TV-FA125.5

Dimension table · Dimensions in mm

Designation			Mass	Dimensions				
Unit[1]	Housing	Radial insert ball bearing	m ≈kg	d	L	H	A_1	N
GLCTE20-TV-FA125.5	GEH.GLCTE04-TV	GRAE20-NPP-B-FA107/125.5	0,26	**20**	66,5	90,5	18,4	9
GLCTE25-TV-FA125.5	GEH.GLCTE05-TV	GRAE25-NPP-B-FA107/125.5	0,29	**25**	71	97	18,4	9
GLCTE30-TV-FA125.5	GEH.GLCTE06-TV	GRAE30-NPP-B-FA107/125.5	0,47	**30**	84	112,5	20,5	11
GLCTE35-TV-FA125.5	GEH.GLCTE07-TV	GRAE35-NPP-B-FA107/125.5	0,66	**35**	94	126	22,5	11
GLCTE40-TV-FA125.5	GEH.GLCTE08-TV	GRAE40-NPP-B-FA107/125.5	0,86	**40**	100	150	24	14

[1] Available end caps: see page 63.

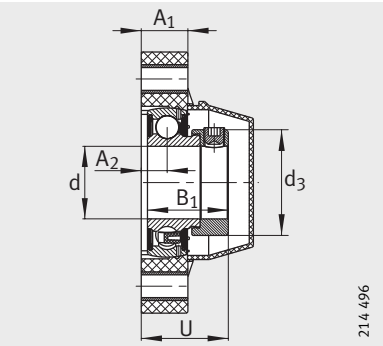

GLCTE..-TV-FA125.5

						Basic load ratings		Load carrying capacity of housing
B_1	J	A_2	Q	d_3 max.	U	dyn. C_r N	stat. C_{0r} N	$C_{0r\,G}$ N
31	71,4	9,5	1/4 – 28 UNF	33	33	12 800	6 600	7 200
31	76,2	10	1/4 – 28 UNF	37,5	33,5	14 000	7 800	9 400
35,8	90,5	11,5	1/4 – 28 UNF	44	38,3	19 500	11 300	12 000
39	100	12,5	1/4 – 28 UNF	51	42	25 500	15 300	12 600
43,8	119	13,5	1/4 – 28 UNF	58	46,3	32 500	19 800	12 800

Housing units with plastic housing

Flanged housing units
Insert bearings
in corrosion-resistant VA design
or with Corrotect® coating

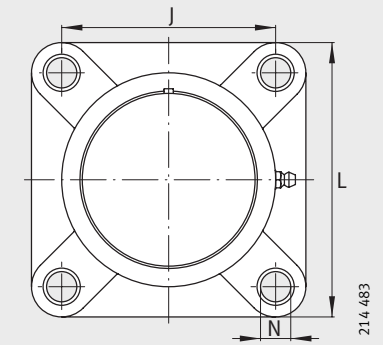

RCJY..-TV-VA, PCJ..-TV-FA125.5

Dimension table · Dimensions in mm

Designation			Mass	Dimensions				
Unit[1]	Housing	Radial insert ball bearing	m ≈kg	d	L	A_1	N	B
RCJY20-TV-VA	GEH.CJ04-TV	GYE20-KRR-B-FA107-VA	0,32	**20**	87	13,4	11	31
PCJ20-TV-FA125.5[2]	GEH.CJ04-TV	GRAE20-NPP-B-FA107/125.5	0,33	**20**	87	13,4	11	–
RCJY25-TV-VA	GEH.CJ05-TV	GYE25-KRR-B-FA107-VA	0,4	**25**	95	14,3	11	34,1
PCJ25-TV-FA125.5[2]	GEH.CJ05-TV	GRAE25-NPP-B-FA107/125.5	0,39	**25**	95	14,3	11	–
RCJY30-TV-VA	GEH.CJ06-TV	GYE30-KRR-B-FA107-VA	0,55	**30**	107	14,3	11	38,1
PCJ30-TV-FA125.5[2]	GEH.CJ06-TV	GRAE30-NPP-B-FA107/125.5	0,57	**30**	107	14,3	11	–
RCJY35-TV-VA	GEH.CJ07-TV	GYE35-KRR-B-FA107-VA	0,78	**35**	118	15,5	13	42,9
PCJ35-TV-FA125.5[2]	GEH.CJ07-TV	GRAE35-NPP-B-FA107/125.5	0,79	**35**	118	15,5	13	–
RCJY40-TV-VA	GEH.CJ08-TV	GYE40-KRR-B-FA107-VA	1,04	**40**	130	17	14	49,2
PCJ40-TV-FA125.5[2]	GEH.CJ08-TV	GRAE40-NPP-B-FA107/125.5	1,05	**40**	130	17	14	–
RCJY45-TV-VA[3]	GEH.CJ09-TV	GYE45-KRR-B-FA107-VA	1,16	**45**	137	19	17	49,2
PCJ45-TV-FA125.5[2][3]	GEH.CJ09-TV	GRAE45-NPP-B-FA107/125.5	1,2	**45**	137	19	17	–
RCJY50-TV-VA[3]	GEH.CJ10-TV	GYE50-KRR-B-FA107-VA	1,36	**50**	143	21	17	51,6
PCJ50-TV-FA125.5[2][3]	GEH.CJ10-TV	GRAE50-NPP-B-FA107/125.5	1,32	**50**	143	21	17	–

1) Available end caps: see page 63.
2) For these series, Back Seal components are also available.
3) Available by agreement.

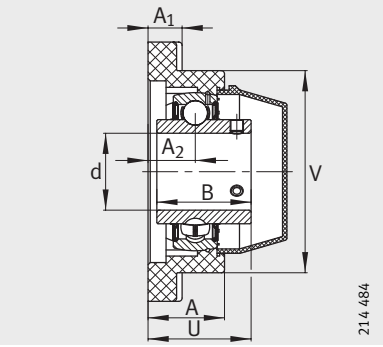

RCJTY..-TV-VA

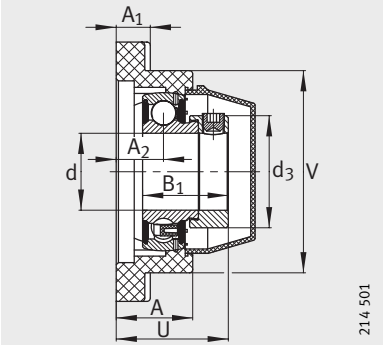

PCJ..-TV-FA125.5

								Basic load ratings		Load carrying capacity of housing
B_1	J	A_2	Q	d_3 max.	A	U	V	dyn. C_r N	stat. C_{0r} N	$C_{0r\,G}$ N
–	63,5	18	1/4 – 28 UNF	–	28	36,3	63,5	12 800	6 600	10 200
31	63,5	18	1/4 – 28 UNF	33	28	41,5	63,5	12 800	6 600	10 200
–	70	17	1/4 – 28 UNF	–	28	36,8	70	14 000	7 800	12 100
31	70	17	1/4 – 28 UNF	37,5	28	40,5	70	14 000	7 800	12 100
–	83	19,2	1/4 – 28 UNF	–	31,5	41,4	80	19 500	11 300	17 700
35,8	83	19,2	1/4 – 28 UNF	44	31,5	46	80	19 500	11 300	17 700
–	92	21,5	1/4 – 28 UNF	–	34,8	46,9	90	25 500	15 300	18 500
39	92	21,5	1/4 – 28 UNF	51	34,8	51	90	25 500	15 300	18 500
–	102	23	1/4 – 28 UNF	–	37,5	53,2	99	32 500	19 800	19 200
43,8	102	23	1/4 – 28 UNF	58	37,5	55,8	99	32 500	19 800	19 200
–	105	24	1/4 – 28 UNF	–	41	54,2	105	32 500	20 400	19 300
43,8	105	24	1/4 – 28 UNF	63	41	56,8	105	32 500	20 400	19 300
–	111	25	1/4 – 28 UNF	–	43	57,6	111	35 000	23 200	19 600
43,8	111	25	1/4 – 28 UNF	69	43	57,8	111	35 000	23 200	19 600

Housing units with plastic housing

Take-up housing units
Insert bearings
in corrosion-resistant VA design
or with Corrotect® coating

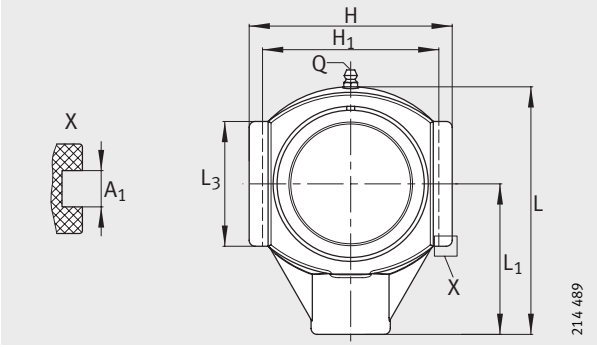

RTUEY..-TV-VA, PTUE..-TV-FA125.5

Dimension table · Dimensions in mm

Designation			Mass	Dimensions					
Unit[1]	Housing	Radial insert ball bearing	m ≈kg	d	A_2	A_1	L	L_1	K
RTUEY20-TV-VA	GEH.TUE04-TV	GYE20-KRR-B-FA107-VA	0,39	**20**	27,5	12	99	64	M16
PTUE20-TV-FA125.5	GEH.TUE04-TV	GRAE20-NPP-B-FA107/125.5	0,4	**20**	27,5	12	99	64	M16
RTUEY25-TV-VA	GEH.TUE05-TV	GYE25-KRR-B-FA107-VA	0,42	**25**	27,5	12	99	64	M16
PTUE25-TV-FA125.5	GEH.TUE05-TV	GRAE25-NPP-B-FA107/125.5	0,41	**25**	27,5	12	99	64	M16
RTUEY30-TV-VA	GEH.TUE06-TV	GYE30-KRR-B-FA107-VA	0,69	**30**	34,5	12	125	76	M16
PTUE30-TV-FA125.5	GEH.TUE06-TV	GRAE30-NPP-B-FA107/125.5	0,71	**30**	34,5	12	125	76	M16
RTUEY35-TV-VA	GEH.TUE07-TV	GYE35-KRR-B-FA107-VA	0,81	**35**	34,5	12	125	76	M16
PTUE35-TV-FA125.5	GEH.TUE07-TV	GRAE35-NPP-B-FA107/125.5	0,82	**35**	34,5	12	125	76	M16
RTUEY40-TV-VA	GEH.TUE08-TV	GYE40-KRR-B-FA107-VA	1,04	**40**	33,5	16	140	85	M16
PTUE40-TV-FA125.5	GEH.TUE08-TV	GRAE40-NPP-B-FA107/125.5	1,05	**40**	33,5	16	140	85	M16
RTUEY45-TV-VA[2]	GEH.TUE09-TV	GYE45-KRR-B-FA107-VA	1,16	**45**	40	16	149	90	M20
PTUE45-TV-FA125.5[2]	GEH.TUE09-TV	GRAE45-NPP-B-FA107/125.5	1,19	**45**	40	16	149	90	M20
RTUEY50-TV-VA[2]	GEH.TUE10-TV	GYE50-KRR-B-FA107-VA	1,32	**50**	40	16	149	90	M20
PTUE50-TV-FA125.5[2]	GEH.TUE10-TV	GRAE50-NPP-B-FA107/125.5	1,28	**50**	40	16	149	90	M20

[1] Available end caps: see page 63.
[2] Available by agreement.

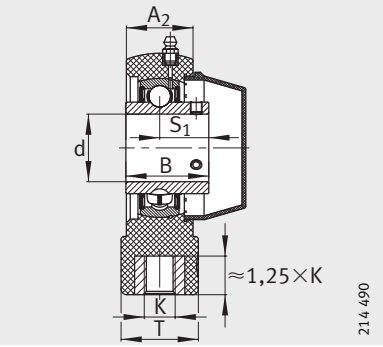

RTUEY..-TV-VA

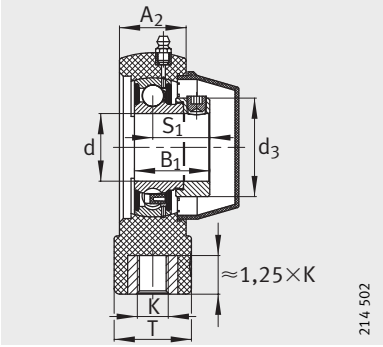

PTUE..-TV-FA125.5

									Basic load ratings		Load carrying capacity of housing
B	B_1	H	H_1	S_1	Q	T	L_3	d_3 max.	dyn. C_r N	stat. C_{0r} N	C_{0rG} N
31	–	89	76	18,3	1/4 – 28 UNF	36	47	–	12 800	6 600	9 600
–	31	89	76	23,5	1/4 – 28 UNF	36	47	33	12 800	6 600	9 600
34,1	–	89	76	19,8	1/4 – 28 UNF	36	47	–	14 000	7 800	10 000
–	31	89	76	23,5	1/4 – 28 UNF	36	47	37,5	14 000	7 800	10 000
38,1	–	102,5	89	22,2	1/4 – 28 UNF	40	63	–	19 500	11 300	10 200
–	35,8	102,5	89	26,8	1/4 – 28 UNF	40	63	44	19 500	11 300	10 200
42,9	–	102,5	89	25,4	1/4 – 28 UNF	40	63	–	25 500	15 300	10 700
–	39	102,5	89	29,5	1/4 – 28 UNF	40	63	51	25 500	15 300	10 700
49,2	–	113	102	30,2	1/4 – 28 UNF	40	80	–	32 500	19 800	11 200
–	43,8	113	102	32,8	1/4 – 28 UNF	40	80	58	32 500	19 800	11 200
49,2	–	117	102	30,2	1/4 – 28 UNF	50	85	–	32 500	20 400	11 800
–	43,8	117	102	32,8	1/4 – 28 UNF	50	85	63	32 500	20 400	11 800
51,6	–	117	102	32,6	1/4 – 28 UNF	50	85	–	35 000	23 200	12 200
–	43,8	117	102	32,8	1/4 – 28 UNF	50	85	69	35 000	23 200	12 200

Housing units with plastic housing

Take-up housing units
Insert bearings
in corrosion-resistant VA design
or with Corrotect® coating

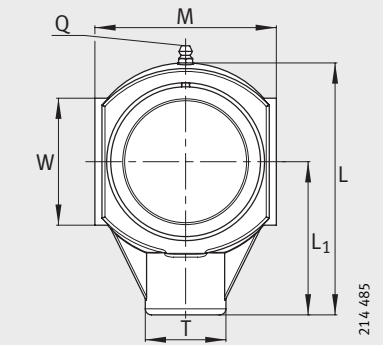

RHEY..-TV-VA, PHE..-TV-FA125.5

Dimension table · Dimensions in mm

Designation			Mass	Dimensions				
Unit[1]	Housing	Radial insert ball bearing	m ≈kg	d	L	A_2	L_1	K
RHEY20-TV-VA	GEH.HE04-TV	GYE20-KRR-B-FA107-VA	0,36	**20**	99	27,5	63,5	M16
PHE20-TV-FA125.5	GEH.HE04-TV	GRAE20-NPP-B-FA107/125.5	0,37	**20**	99	27,5	63,5	M16
RHEY25-TV-VA	GEH.HE05-TV	GYE25-KRR-B-FA107-VA	0,4	**25**	99	27,5	63,5	M16
PHE25-TV-FA125.5	GEH.HE05-TV	GRAE25-NPP-B-FA107/125.5	0,4	**25**	99	27,5	63,5	M16
RHEY30-TV-VA	GEH.HE06-TV	GYE30-KRR-B-FA107-VA	0,67	**30**	125	34,5	76	M16
PHE30-TV-FA125.5	GEH.HE06-TV	GRAE30-NPP-B-FA107/125.5	0,69	**30**	125	34,5	76	M16
RHEY35-TV-VA	GEH.HE07-TV	GYE35-KRR-B-FA107-VA	0,78	**35**	125	34,5	76	M16
PHE35-TV-FA125.5	GEH.HE07-TV	GRAE35-NPP-B-FA107/125.5	0,79	**35**	125	34,5	76	M16
RHEY40-TV-VA	GEH.HE08-TV	GYE40-KRR-B-FA107-VA	1,01	**40**	140	34,5	85	M16
PHE40-TV-FA125.5	GEH.HE08-TV	GRAE40-NPP-B-FA107/125.5	1,02	**40**	140	34,5	85	M16
RHEY45-TV-VA[2]	GEH.HE09-TV	GYE45-KRR-B-FA107-VA	1,13	**45**	149	40	90	M20
PHE45-TV-FA125.5[2]	GEH.HE09-TV	GRAE45-NPP-B-FA107/125.5	1,16	**45**	149	40	90	M20
RHEY50-TV-VA[2]	GEH.HE10-TV	GYE50-KRR-B-FA107-VA	1,28	**50**	149	40	90	M20
PHE50-TV-FA125.5[2]	GEH.HE10-TV	GRAE50-NPP-B-FA107/125.5	1,24	**50**	149	40	90	M20

[1] Available end caps: see page 63.
[2] Available by agreement.

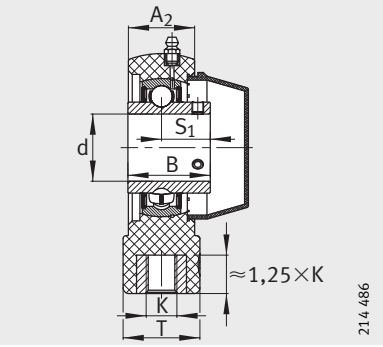

RHEY..-TV-VA

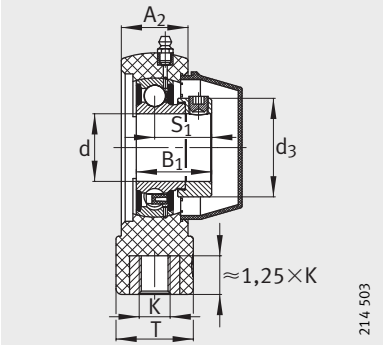

PHE..-TV-FA125.5

								Basic load ratings		Load carrying capacity of housing
B	B_1	M	S_1	Q	d_3 max.	T	W	dyn. C_r N	stat. C_{0r} N	$C_{0r\,G}$ N
31	–	65	18,3	1/4 – 28 UNF	–	36	47	12 800	6 600	9 600
–	31	65	23,5	1/4 – 28 UNF	33	36	47	12 800	6 600	9 600
34,1	–	74	19,8	1/4 – 28 UNF	–	36	47	14 000	7 800	10 000
	31	74	23,5	1/4 – 28 UNF	37,5	36	47	14 000	7 800	10 000
38,1	–	90	22,2	1/4 – 28 UNF	–	40	63	19 500	11 300	10 200
–	35,8	90	26,8	1/4 – 28 UNF	44	40	63	19 500	11 300	10 200
42,9	–	90	25,4	1/4 – 28 UNF	–	40	63	25 500	15 300	10 700
–	39	90	29,5	1/4 – 28 UNF	51	40	63	25 500	15 300	10 700
49,2	–	100	30,2	1/4 – 28 UNF	–	40	80	32 500	19 800	11 200
–	43,8	100	32,8	1/4 – 28 UNF	58	40	80	32 500	19 800	11 200
49,2	–	110	30,2	1/4 – 28 UNF	–	50	85	32 500	20 400	11 800
–	43,8	110	32,8	1/4 – 28 UNF	63	50	85	32 500	20 400	11 800
51,6	–	110	32,6	1/4 – 28 UNF	–	50	85	35 000	23 200	12 200
–	43,8	110	32,8	1/4 – 28 UNF	69	50	85	35 000	23 200	12 200

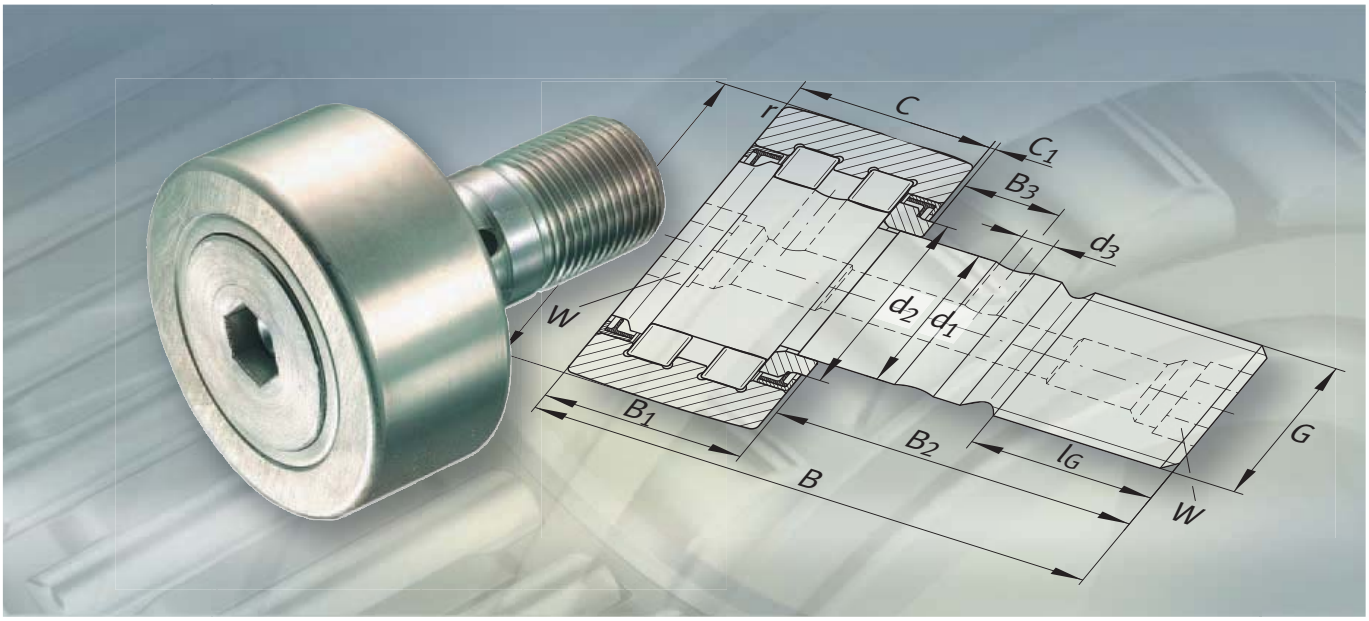

Yoke type track rollers
Stud type track rollers

Yoke type track rollers
Stud type track rollers

Page

Product overview

Yoke type track rollers, stud type track rollers 82

Features

Yoke type track rollers 83
Stud type track rollers 83
Outside surface profile of the outer ring 83
X-life 83
Anti-corrosion protection 83
Radial internal clearance 84
Sealing and lubrication 84
Operating temperature 84
Suffixes 84
Further information 84

Dimension tables

Yoke type track rollers, with Corrotect® coating, sealed 85
Stud type track rollers, with Corrotect® coating, sealed 86

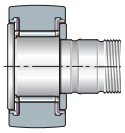

Yoke type track rollers
Stud type track rollers

Yoke type track rollers

Full complement cylindrical roller set, with central rib
Protected lip seals

PWTR..-2RS-RR

109 176a

Stud type track rollers

Full complement cylindrical roller set, with central rib
Protected lip seals

PWKR..-2RS-RR

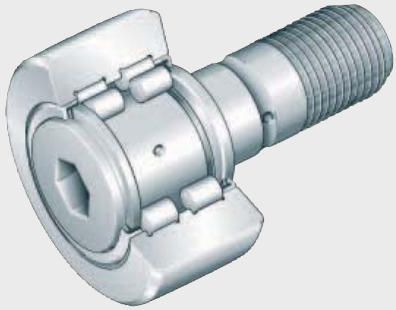

110 111a

Yoke type track rollers
Stud type track rollers

Features

Yoke type track rollers

Yoke type track rollers of series PWTR are double row units mounted on shafts or studs. They comprise thick-walled outer rings with a profiled outside surface and full complement cylindrical roller sets.

Bearings without a cage have the largest possible number of rolling elements and therefore have particularly high load carrying capacity. They can support high radial loads as well as axial loads arising from slight misalignment and skewed running; they are suitable for cam gears, bed ways, conveying equipment etc.

Stud type track rollers

Stud type track rollers PWKR comprise thick-walled outer rings with a profiled outside surface, solid section roller studs with a fixing thread, axial washers and full complement, double row cylindrical roller sets.

They can support high radial loads as well as axial loads arising from slight misalignment and skewed running.

Outside surface profile of the outer ring

In most cases, yoke and stud type track rollers with a crowned outside surface are used since they are often inclined in relation to the mating track and edge stresses must be avoided.

The series PWTR and PWKR have an outside surface with the optimised INA profile.

X-life

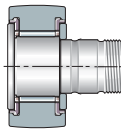

The new X-life yoke and stud type track rollers PWTR and PWKR have been improved in several respects and, as a result, give even higher performance.

Due to a modified material and the optimised raceway geometry of the outer rings, the basic rating life has been increased by up to 30%. The static and dynamic load carrying capacity has also been increased. At the same time, the stress placed on the mating track has been reduced as a result of the optimised outside surface profile and its improved outer ring surface quality.

This gives a highly robust bearing arrangement with an extended operating life.

Anti-corrosion protection

In principle, corrosion-resistant steels may be used for yoke and stud type track rollers. In many applications, however, the special coating Corrotect® is more cost-effective.

The coating is effective against moisture, contaminated water, salt spray and weakly alkaline and weakly acidic cleaning agents. For a description of the Corrotect® coating, see page 19.

Coated as standard

Yoke type track rollers PWTR..-RR and stud type track rollers PWKR..-RR are supplied as standard with the Cr(VI)-free Corrotect® coating. All other yoke and stud type track rollers with the Corrotect® coating are treated as special designs.

Figure 1 shows an uncoated stud type track roller after a salt spray test, *Figure 2* shows a coated stud type track roller after the test, page 84.

Fitting of coated track rollers

In order to reduce the press-in force required, the surface of the parts should be lightly greased – the tolerances are increased by the thickness of the coating.

Before fitting, the compatibility of track rollers with Corrotect® coating with the media concerned should always be checked.

Figure 1
NUKR52 without coating after salt spray test

Figure 2
PWKR52-2RS-RR with Corrotect® coating after salt spray test

Radial internal clearance

The radial internal clearance corresponds approximately to class C2.

Sealing and lubrication

The series PWTR and PWKR are sealed on both sides by protected lip seals.

They are greased using a lithium complex soap grease to GA08 and can be lubricated via the roller stud.
For relubrication, Arcanol LOAD150 is suitable.

Operating temperature

The bearings are suitable for temperatures from –30 °C to +120 °C.

Suffixes

Suffixes for the available designs: see table.

Available designs

Suffix	Description
RR	Corrosion-resistant by means of special coating Corrotect®
2RS	Protected lip seals on both sides of the yoke type track roller

Further information

For information on the load carrying capacity and life, design of bearing arrangements, lubrication, fitting and operation of the bearings, attention must be paid to Catalogue HR 1, Rolling Bearings.

Yoke type track rollers

With Corrotect® coating
Sealed

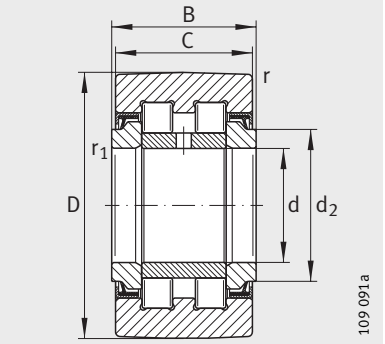

PWTR..-2RS-RR
(optimised INA profile)

Dimension table · Dimensions in mm

Designation		Mass	Dimensions							Basic load ratings[1]				Fatigue limit load	Speed
	x-life	m ≈g	D	d	B h12	C	d_2	r min.	r_1 min.	dyn. $C_{r\,w}$ N	stat. $C_{0r\,w}$ N	dyn. $F_{r\,per}$ N	stat. $F_{0r\,per}$ N	$C_{ur\,w}$ N	$n_{D\,G}$ min^{-1}
PWTR15-2RS-RR	**XL**	99	**35**	15	19	18	20	0,6	0,3	12 600	14 600	10 600	14 600	1 760	6 000
PWTR17-2RS-RR	**XL**	147	**40**	17	21	20	22	1	0,5	14 300	18 000	16 400	18 000	2 160	5 000
PWTR1542-2RS-RR	**XL**	158	**42**	15	19	18	20	0,6	0,3	14 700	16 200	16 200	16 200	2 140	6 000
PWTR1747-2RS-RR	**XL**	220	**47**	17	21	20	22	1	0,5	15 900	18 400	18 400	18 400	2 440	5 000
PWTR20-2RS-RR	**XL**	245	**47**	20	25	24	27	1	0,5	24 600	30 500	20 700	30 500	3 750	3 800
PWTR2052-2RS-RR	**XL**	321	**52**	20	25	24	27	1	0,5	27 000	35 000	31 000	35 000	4 250	3 800
PWTR25-2RS-RR	**XL**	281	**52**	25	25	24	31	1	0,5	25 500	33 000	21 800	33 000	4 100	3 800
PWTR2562-2RS-RR	**XL**	450	**62**	25	25	24	31	1	0,5	30 000	42 500	42 500	42 500	5 200	3 800
PWTR30-2RS-RR	**XL**	465	**62**	30	29	28	38	1	0,5	35 000	45 500	29 000	45 500	5 800	2 200
PWTR3072-2RS-RR	**XL**	697	**72**	30	29	28	38	1	0,5	41 000	56 000	54 000	56 000	7 200	2 200
PWTR35-2RS-RR	**XL**	630	**72**	35	29	28	44	1,1	0,6	38 500	54 000	39 000	54 000	7 000	1 800
PWTR3580-2RS-RR	**XL**	836	**80**	35	29	28	44	1,1	0,6	43 500	64 000	59 000	64 000	8 100	1 800
PWTR40-2RS-RR	**XL**	816	**80**	40	32	30	50,5	1,1	0,6	45 000	61 000	39 500	61 000	7 900	1 500
PWTR45-2RS-RR	**XL**	883	**85**	45	32	30	55,2	1,1	0,6	45 500	63 000	41 000	63 000	8 200	1 300
PWTR4090-2RS-RR	**XL**	1 129	**90**	40	32	30	50,5	1,1	0,6	52 000	75 000	67 000	75 000	9 700	1 500
PWTR50-2RS-RR	**XL**	950	**90**	50	32	30	59,8	1,1	0,6	46 000	66 000	42 000	66 000	8 500	1 100
PWTR45100-2RS-RR	**XL**	1 396	**100**	45	32	30	55,2	1,1	0,6	56 000	85 000	85 000	85 000	10 900	1 300
PWTR50110-2RS-RR	**XL**	1 690	**110**	50	32	30	59,8	1,1	0,6	59 000	94 000	94 000	94 000	12 100	1 100

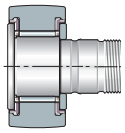

[1] Values are only valid for bearings marked as X-life.

Stud type track rollers

With Corrotect® coating
Sealed

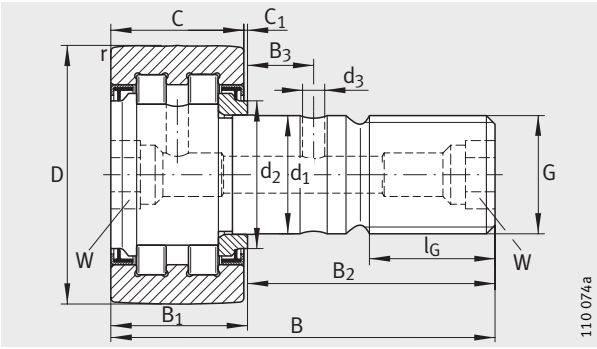

PWKR..-2RS-RR
(optimised INA profile)

Dimension table · Dimensions in mm

Designation		Mass	Dimensions										
	x-life	m ≈g	D	d_1 h7	B	B_1 max.	B_2	B_3	C	C_1	r min.	d_2	d_3
PWKR35-2RS-RR	**XL**	164	**35**	16	52	19,6	32,5	7,8	18	0,8	0,6	20	3
PWKR40-2RS-RR	**XL**	242	**40**	18	58	21,6	36,5	8	20	0,8	1	22	3
PWKR47-2RS-RR	**XL**	380	**47**	20	66	25,6	40,5	9	24	0,8	1	27	4
PWKR52-2RS-RR	**XL**	450	**52**	20	66	25,6	40,5	9	24	0,8	1	31	4
PWKR62-2RS-RR	**XL**	795	**62**	24	80	30,6	49,5	11	28	1,3	1	38	4
PWKR72-2RS-RR	**XL**	1 020	**72**	24	80	30,6	49,5	11	28	1,3	1,1	44	4
PWKR80-2RS-RR	**XL**	1 600	**80**	30	100	37	63	15	35	1	1,1	47	4
PWKR90-2RS-RR	**XL**	1 960	**90**	30	100	37	63	15	35	1	1,1	47	4

1) Drive fit lubrication nipples are supplied loose.
Only these lubrication nipples should be used.

2) Nominal dimension for hexagonal socket.

3) Values are only valid for bearings marked as X-life.

			Drive fit lubrication nipple[1]	Nut tightening torque	Basic load ratings[3]				Fatigue limit load	Speed
G	l_G	W[2]		M_A	dyn. $C_{r\,w}$	stat. $C_{0r\,w}$	dyn. $F_{r\,per}$	stat. $F_{0r\,per}$	$C_{ur\,w}$	$n_{D\,G}$
				Nm	N	N	N	N	N	min^{-1}
M16X1,5	17	8	NIPA2X7,5	58	12 600	14 600	10 600	14 600	1 760	6 000
M18X1,5	19	8	NIPA2X7,5	87	14 300	18 000	16 400	18 000	2 160	5 000
M20X1,5	21	10	NIPA2X7,5	120	24 600	30 500	20 700	30 500	3 750	3 800
M20X1,5	21	10	NIPA2X7,5	120	25 500	33 000	21 800	33 000	4 100	3 800
M24X1,5	25	14	NIPA3X9,5	220	35 000	45 500	29 000	45 500	5 800	2 200
M24X1,5	25	14	NIPA3X9,5	220	38 500	54 000	39 000	54 000	7 000	2 200
M30X1,5	32	14	NIPA3X9,5	450	56 000	79 000	60 000	79 000	10 600	1 800
M30X1,5	32	14	NIPA3X9,5	450	62 000	92 000	92 000	92 000	12 300	1 800

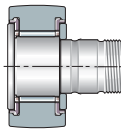

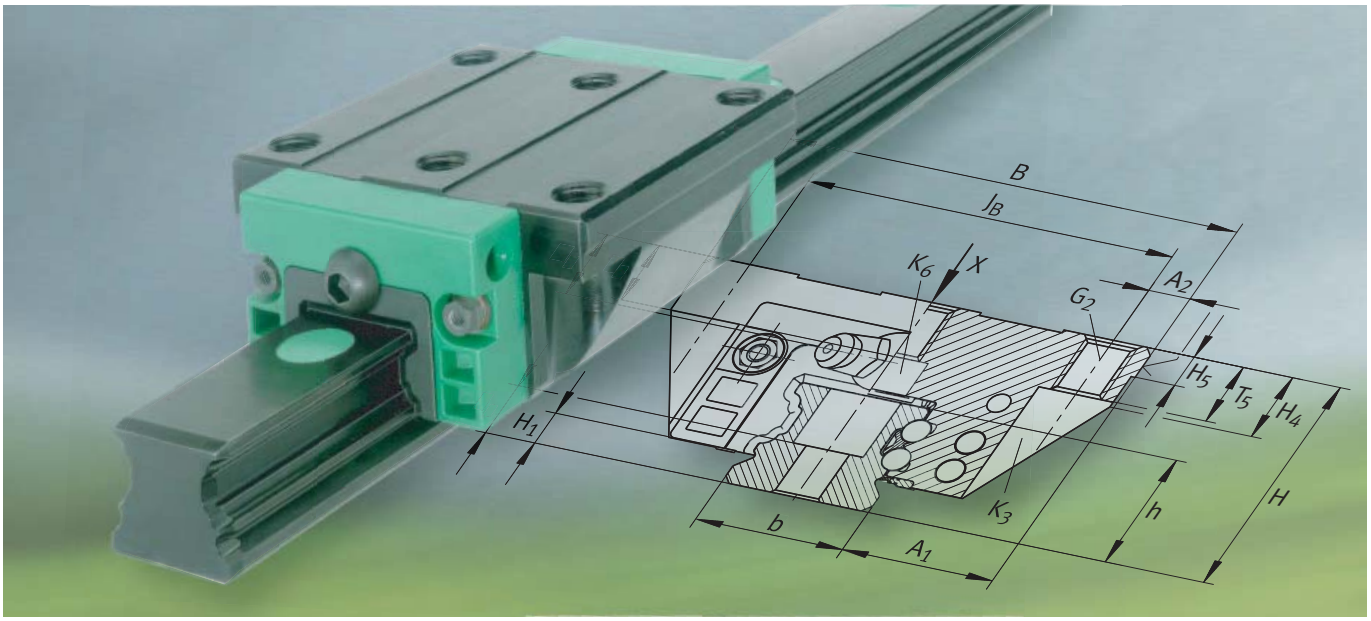

Linear guidance systems

Monorail guidance systems
Track roller guidance systems
Linear ball bearings and solid shafts
Miniature guidance systems
Driven linear units
Screw drives

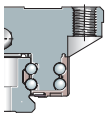

Linear guidance systems

		Page
Product overview	Monorail guidance systems	92
Features	Linear recirculating roller bearing and guideway assemblies	93
	Six-row linear recirculating ball bearing and guideway assemblies	93
	Four-row linear recirculating ball bearing and guideway assemblies	94
	Two-row linear recirculating ball bearing and guideway assemblies	94
	Two-row linear recirculating ball bearing units	95
	Anti-corrosion and anti-wear protection by coatings	95
	Further information	95
Product overview	Track roller guidance systems	96
Features	Carriages	97
	Composite guideways	97
	Profiled track rollers	97
	Anti-corrosion and anti-wear protection	97
	Further information	97
Product overview	Linear ball bearings and solid shafts	98
Features	Linear ball bearings	99
	Anti-corrosion and anti-wear protection	100
	Solid shafts	100
	Operating temperature	101
	Suffixes	101
	Further information	101
Dimension tables	Compact range, linear ball bearings, open or sealed, with anti-corrosion protection	102
	Light range, linear ball bearings, sealed, self-aligning	103
	Heavy duty range, linear ball bearings, gap seals or contact seals, self-aligning	104
	Machined range, linear ball bearings, sealed, with anti-corrosion protection	106
	Solid shafts	107

		Page
Product overview	Miniature guidance systems	108
Features	Miniature linear recirculating ball bearing and guideway assemblies	109
	Further information	110
	Miniature carriage units	110
	Further information	111
	Miniature linear guidance sets	111
	Further information	111
Product overview	Driven linear units	112
Features	Support rails	113
	Carriages	113
	Return units	113
	Further information	113
Product overview	Screw drives	114
Features	Design of screw drive	115

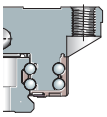

Linear recirculating roller bearing and guideway assemblies

RUE..-E

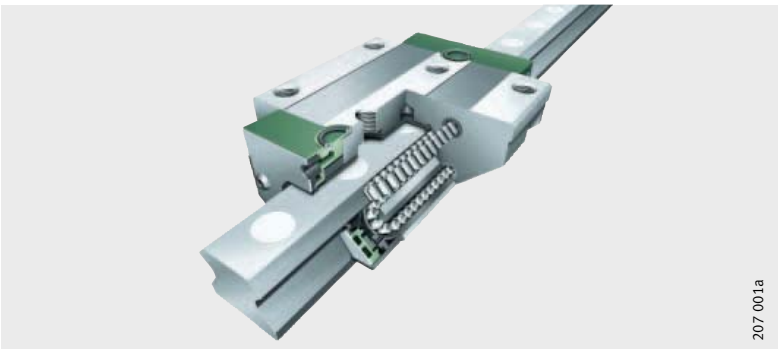

Six-row linear recirculating ball bearing and guideway assemblies

KUSE

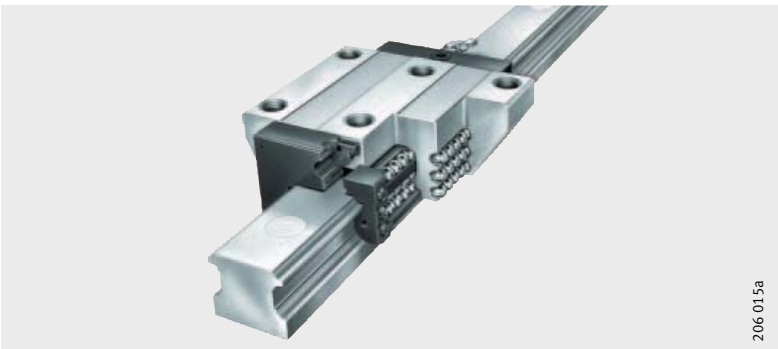

Four-row linear recirculating ball bearing and guideway assemblies

KUVE..-B

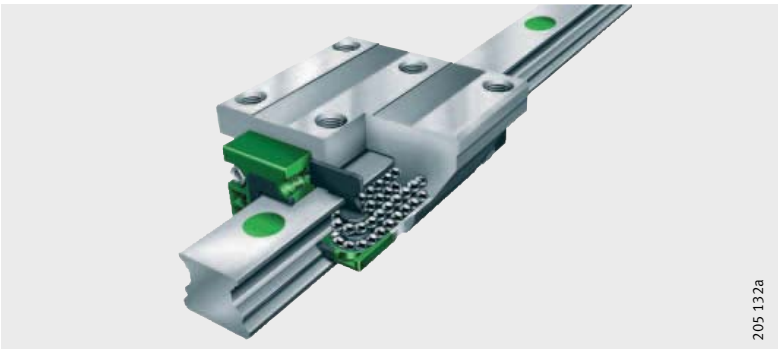

Two-row linear recirculating ball bearing and guideway assemblies

KUE

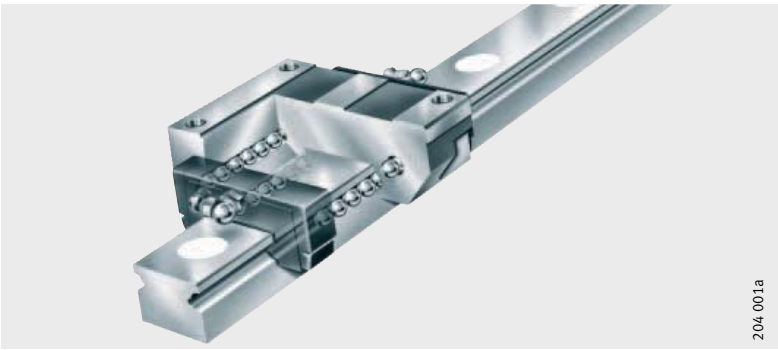

Monorail guidance systems

Features

Monorail guidance systems are compact linear guidance systems based on rollers or balls with high rigidity and load carrying capacity. These guidance systems can support forces from all directions – apart from the direction of motion – and moments about all axes.

They are available in various accuracy and preload classes and are therefore also suitable for applications with high guidance and positioning requirements.

In order to reduce the frequency and costs of maintenance, the monorail guidance systems have a lubricant reservoir. All-round sealing of the carriages protects the linear systems against contamination even under critical environmental conditions.

Linear recirculating roller bearing and guideway assemblies

Linear recirculating roller bearing and guideway assemblies RUE..-E are, due to the full complement cylindrical rollers, the INA monorail guidance systems with the highest load carrying capacity and rigidity. They comprise at least one carriage with a full complement roller system, a guideway, integral elastic wipers on the end faces of the carriage, sealing strips on the upper side and underside of the carriage and closing plugs to close off the fixing holes in the guideway.

Linear recirculating roller bearing and guideway assemblies are suitable for accelerations up to 100 m/s^2, speeds up to 180 m/min and operating temperatures from –10 °C to +100 °C.

Guidance systems with roller chain

In this case, the rolling elements are not in a full complement arrangement, but are guided instead by a rolling element chain. Solutions with a rolling element chain run with less noise than full complement guidance systems. Due to the rolling element chain, there are fewer load-bearing rolling elements in the load zone. Since the longer saddle plate variant is used in the chain version, however, the basic load ratings and rigidity values are similar to those of the full complement standard version.

Guidance systems with an integral rolling element chain are available in the series RUE..-E-KT-L and RUE..-E-KT-HL.

Six-row linear recirculating ball bearing and guideway assemblies

Six-row linear recirculating ball bearing and guideway assemblies KUSE are the guidance systems based on balls with the highest load carrying capacity and rigidity. They comprise at least one carriage with a full complement ball system, a guideway, integral elastic wipers on the end faces of the carriage, sealing strips on the underside of the carriage and plastic closing plugs.

Linear recirculating ball bearing and guideway assemblies KUSE are suitable for accelerations up to 150 m/s^2, speeds up to 300 m/min and operating temperatures from –10 °C to +100 °C. They are used in applications with long unrestricted strokes, high and very high loads and high to very high rigidity.

Four-row linear recirculating ball bearing and guideway assemblies

Four-row linear recirculating ball bearing and guideway assemblies KUVE..-B are the most versatile and most extensively developed range of monorail guidance system from the Schaeffler Group, *Figure 1*. These units comprise at least one carriage with a full complement ball system, a guideway, integral elastic wipers on the end faces of the carriage, sealing strips on the upper side and underside of the carriage and plastic closing plugs.

Linear recirculating ball bearing and guideway assemblies KUVE are suitable for accelerations up to 150 m/s^2, speeds up to 360 m/min and operating temperatures from –10 °C to +100 °C.

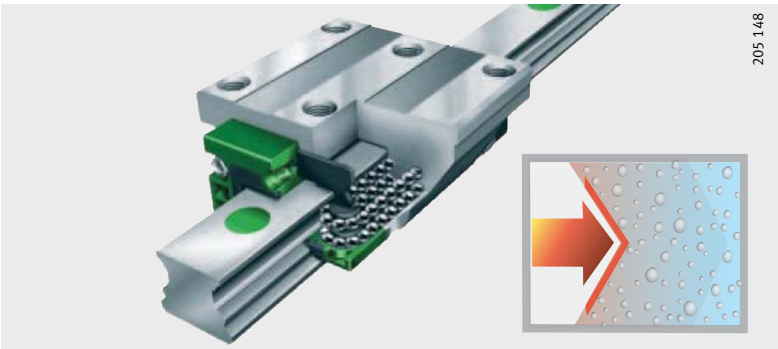

Figure 1
KUVE..-B-RB, corrosion-resistant steel

Low-noise guidance system by means of Quad-Spacers

Running noise in linear guidance systems can be reduced by various methods. Schaeffler decided in favour of plastic spacer elements – known as Quad-Spacers. Since the balls are not in contact with each other, there is no collision noise. This reduces the noise in the recirculation system and the guidance systems run significantly more quietly.

Under highly dynamic operating conditions or with ingress of contaminant particles into the guidance system, this design also averts the risk of fracture.

KUVE..-B-KT is particularly suitable where the emphasis is on high dynamic characteristics and low noise.

Both new carriage versions can be used on the existing guideways.

Two-row linear recirculating ball bearing and guideway assemblies

Two-row linear recirculating ball bearing and guideway assemblies KUE are the economical alternative where guidance systems with moderate load capacity are required. The units comprise at least one carriage with a full complement ball system, a guideway, integral elastic wipers on the end faces of the carriage, sealing strips on the underside of the carriage and plastic closing plugs.

Linear recirculating ball bearing and guideway assemblies KUE are suitable for accelerations up to 150 m/s^2, speeds up to 180 m/min and operating temperatures from –10 °C to +100 °C. They are used for long unrestricted strokes, moderate loads, moderate rigidity and low friction.

Two-row linear recirculating ball bearing units

These full complement, ball-based linear guidance systems with high load carrying capacity comprise a guideway and one or more linear recirculating ball bearing units or carriages in which the linear recirculating ball bearing units KUVS are screw mounted, *Figure 2*.

The guidance systems have adjustable clearance and allow large support distances.

The carriage has threaded through holes for fixing to the adjacent construction. The linear recirculating ball bearing units are sealed on all sides by the wipers on the end faces and the sealing strips which form a gap seal in conjunction with the guideway.

The carriage has a saddle plate made from anodised aluminium and accommodates two linear recirculating ball bearing units as standard. For simple fixing to the adjacent construction, T-slots are present that can be used with conventional hexagonal nuts and T-bolts.

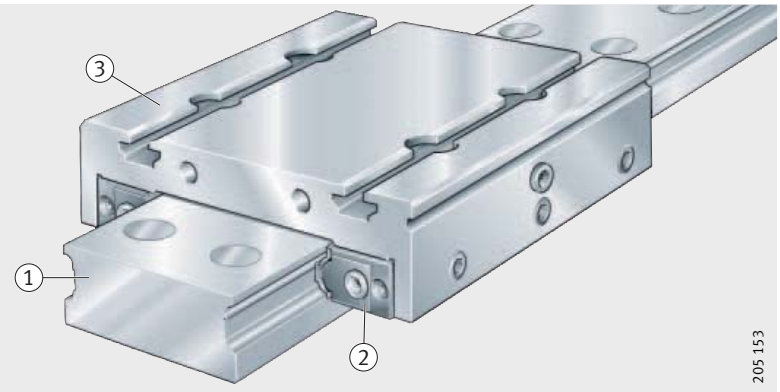

① Guideway
② Linear recirculating ball bearing unit
③ Carriage

Figure 2
Linear guidance system with linear recirculating ball bearing units, carriage and guideway

Anti-corrosion and anti-wear protection by coatings

Coatings increase the corrosion resistance and/or wear resistance of the surface.

Components at risk of corrosion are protected by:

- the special coating Corrotect®
- the thin layer chromium coating Protect A (Durotect® CK)
- the thin layer chromium coating Protect B (Durotect® CK+).

For information on the coatings, see page 18.

Suffixes

Suffixes for the available designs: see table.

Available designs

Suffix	Description
RRF	Carriage and guideway with Corrotect® coating
RRFT	Guideway only with Corrotect® coating
KD[1)]	Protect A (Durotect® CK), high anti-wear protection, moderate anti-corrosion protection
KDC[1)]	Protect B (Durotect® CK+), high anti-wear and high anti-corrosion protection
RB[2)]	Corrosion-resistant steel

1) Only for KUVE..-B and RUE..-E.

2) Only for KUVE..-B.

Further information

For information on the load carrying capacity and life, design of bearing arrangements, lubrication, fitting and operation of the guidance systems, attention must be paid to Publication PF 1.

With hollow section carriage
Clearance-free

LFCL

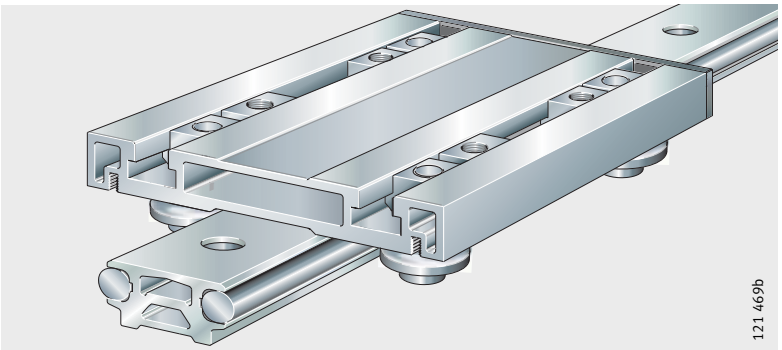

With compact carriage
Clearance-free

LFKL..-SF

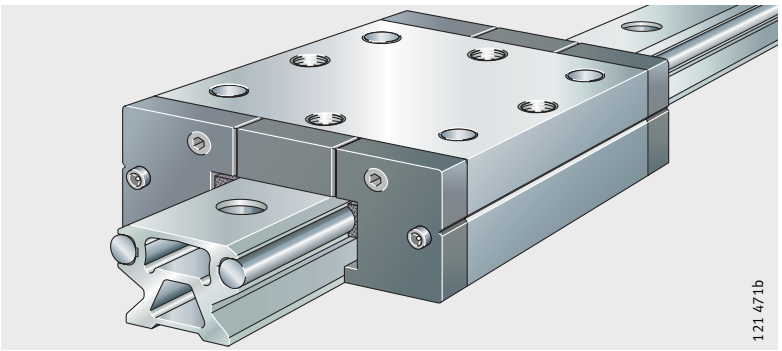

With open carriage
Clearance-free

LFL..-SF

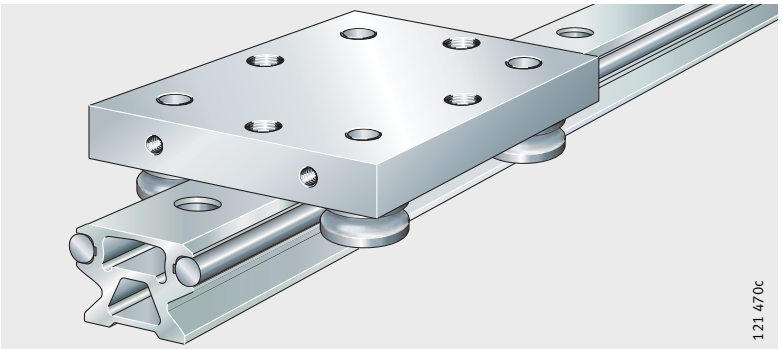

With bogie carriage
Adjustable clearance

LFDL..-B

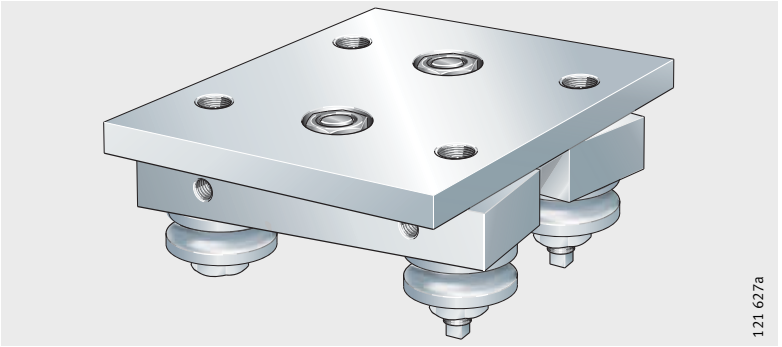

Track roller guidance systems

Features

Track roller guidance systems LF are preferably used, due to their lightweight construction, for tasks in handling systems, where quiet running, high speeds and long travel distances are required together with uniformly low displacement resistance.

In order to cover a wide spectrum of requirements using standard components, the guidance systems are structured according to a modular concept. On the basis of the carriages, composite guideway, track rollers as system elements and a precisely suitable range of accessories, designs exactly matched to the application can be achieved. Such guidance systems directly matched to the specific requirements give very successful support to the increasing demand for optimally configured individual components.

Carriages

Carriages LF are supplied as:

- cost-effective, lightweight hollow section carriages
- robust, open carriages for high performance guidance systems of simple construction
- enclosed, compact carriages where guidance systems must operate in contaminated environments
- non-locating bearing carriages for locating and non-locating bearing applications with two guideway-based systems running in parallel
- bogie carriages for curved or closed oval or circular tracks.

Composite guideways

Composite guideways are available as solid and hollow section guideways with a support rail having high bending rigidity, half guideways, curved elements and in a flat design.

Profiled track rollers

Profiled track rollers without a filling slot are used for the guidance of carriages and support of forces. These double row angular contact ball bearings have an outer ring with a gothic arch raceway profile, are sealed on both sides and are greased for life. They can support axial loads from both sides and high radial forces due to the thick-walled outer ring.

Anti-corrosion and anti-wear protection

Aluminium parts are anodised, shafts and track rollers are made from corrosion-resistant steel, material number 1.4125 and have the suffix VA.

Further information

For information on the load carrying capacity and life, design of bearing arrangements, lubrication, fitting and operation of the guidance systems, attention must be paid to Catalogue LF 1, Track Roller Guidance Systems.

Compact range

Gap seals or
lip seals on both sides

KH

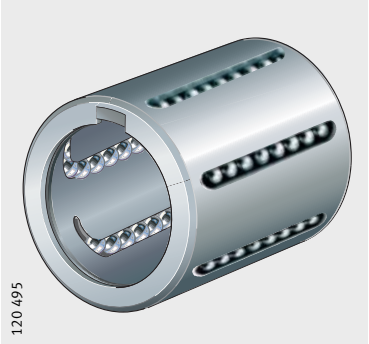

Light range

Lip seals on both sides

KN..-B

Heavy duty and machined range

Lip seals on both sides

KS

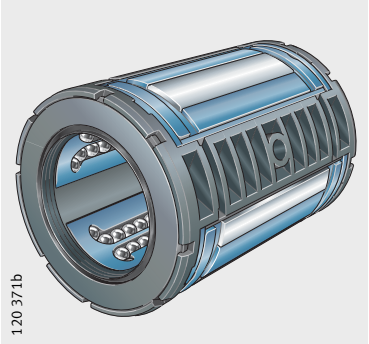

KB

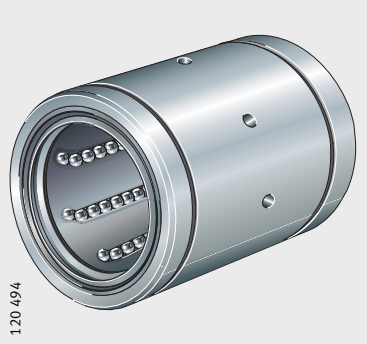

Solid shafts

Corrosion-resistant

W

Features

Linear ball bearings

Corrosion-resistant linear ball bearings are available in the compact and machined ranges. The series have an anti-corrosion coating, are of a closed construction and are designed for use on shafts. They can support high loads while having a relatively low mass and allow the construction of linear guidance systems with unlimited travel.

For simple mounting on the adjacent construction, the bearings are also supplied as complete linear bearing units. In this case the linear ball bearings are integrated in a high strength, rigid aluminium or pressure diecast housing.

Due to the comparatively low total mass, the units are particularly suitable for reduced mass designs with high loads and where higher accelerations and travel speeds are required. The holes in the housings allow simple screw mounting of the units to the adjacent construction.

Compact range

Linear ball bearings of the compact range have a small radial design envelope and are particularly economical. Their low section height automatically makes them attractive for applications in which only a small amount of radial space is available.

For economical surrounding constructions, the bearings are simply pressed into the locating bore. No additional axial location is required.

Light range

The linear ball bearings comprise a hardened and ground outer ring in which a plastic cage with inserted load plates is integrated. The plates are supported in the housing bore by means of a retaining ring. Due to the retaining ring, the plates can “rock” and thus compensate for static misalignments.

In the appropriate housing, the bearings have adjustable clearance. In order to compensate misalignments arising from manufacturing tolerances, mounting errors and shaft deflection, the linear bearings are self-aligning up to $\pm 30'$.

Their robust construction allows operation even under aggressive operating conditions.

Heavy duty range

These linear ball bearings comprise a plastic cage with loosely retained segments. The double row segments with crowned raceway plates can realign themselves in all directions and thus compensate misalignments. Since the complete segment undergoes realignment, there is no disruption to the recirculation of the balls. This results in uniformly low displacement resistance.

Linear ball bearings of the heavy duty range and the corresponding ball bearing units have particularly high load carrying capacity. They have very good running characteristics.

In the appropriate housing, the bearings have adjustable clearance. In order to compensate misalignments arising from manufacturing tolerances, mounting errors and shaft deflection, the linear bearings are self-aligning up to $\pm 40'$.

Machined range

Bearings of the machined range have high precision and particularly high rigidity. They have excellent running characteristics.
The balls are guided with high precision throughout the return area by a special spring washer. As a result, the displacement resistance remains uniformly low even under difficult operating conditions and irrespective of the mounting position.

For axial location of the bearings, retaining rings in accordance with DIN 471 are suitable.

Sealing and lubrication

Linear ball bearings are available in an open version and with contact seals on both sides (suffix PP).

Due to the initial greasing with a high quality grease and the integral lubricant reservoir, the linear ball bearings are maintenance-free for many applications. If necessary, series KB..-PP-RR-AS can also be relubricated via openings in the outer ring or radial holes in the centre of the bearing.

Anti-corrosion and anti-wear protection

Linear ball bearings of the compact and machined ranges are supplied with Corrotect® coating. In the light and heavy duty ranges, the load plates can be supplied coated by agreement.

By agreement, however, the linear ball bearings are also available with the anti-corrosion and anti-wear coating Protect A (Durotect® CK) or Protect B (Durotect® CK+).
For a description of the coating, see page 18.

Solid shafts

Solid shafts are precision shafts made from corrosion-resistant steels and have metric dimensions. Suitable steels used include X46Cr13, material number 1.4034, or X90CrMoV18, material number 1.4112.
The surface hardness is 550 HV + 70 HV (54 HRC + 4 HRC).
For location, the shafts can be provided with radial and axial threaded holes or can by agreement be produced completely in accordance with a customer drawing.

Suitable as precision raceway

The material quality guarantees high dimensional and geometrical accuracy (roundness, parallelism). Due to their high surface hardness and surface quality, the shafts are highly suitable as precision raceways for linear ball bearings. They can be combined with linear bearings, yoke type, stud type and profiled track rollers to give linear guidance systems that are rigid, precise, economical and ready to fit, with high load carrying capacity and a long operating life.

Due to the hardness curve, shafts made from the materials X46Cr13 and X90CrMoV18 have only limited corrosion resistance on the end faces. This also applies to any soft-annealed areas.

Coatings for shafts

In addition to shafts made from corrosion-resistant steels, all precision shafts made from quenched and tempered steel can be supplied with hard chromium coating, Corrotect®, Protect A and Protect B. Corrotect® provides a good level of anti-corrosion protection, Protect A (Durotect® CK) and Protect B (Durotect® CK+) provide high to very high levels of anti-corrosion and anti-wear protection.

Hard chromium coating is suitable for applications in which a high level of anti-wear protection is required. The chromium coating also offers good corrosion resistance. The thickness of the chromium coating is at least 5 µm, the hardness is 800 HV to 1 050 HV. Chromium coated shafts are to tolerance h7.

For information on the coatings, see page 18.

Operating temperature

Linear ball bearings are suitable for operating temperatures from −30 °C to +80 °C.

Suffixes

Suffixes for the available designs: see table.

Available designs

Suffix	Description
AS	With relubrication facility
KD	Protect A, high wear protection and moderate anti-corrosion protection, by agreement
KDC	Protect B, high anti-corrosion and high anti-wear protection, by agreement
PP	Lip seals on both sides
RR	With Corrotect® coating
X46	Corrosion-resistant steel X46Cr13, material number 1.4034
X90	Corrosion-resistant steel X90CrMoV18, material number 1.4112

Further information

For information on the load carrying capacity and life, design of bearing arrangements, lubrication, fitting and operation of the bearings and shafts, attention must be paid to Catalogue WF 1, Shaft Guidance Systems.

Compact range

Linear ball bearings

Open or sealed
With anti-corrosion protection

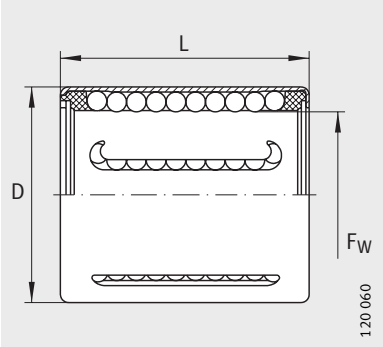

KH..-RR
Open

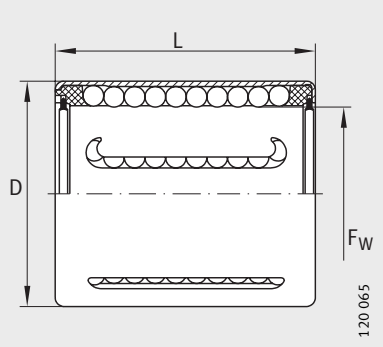

KH..-PP-RR
Sealed

Dimension table · Dimensions in mm

Designation		Mass	Dimensions					Basic load ratings[3]			
[1]	[2]	m	F_W	D	L	J_{L4}	N_2	dyn. C_{min}	stat. $C_{0\,min}$	dyn. C_{max}	stat. $C_{0\,max}$
		≈g						N	N	N	N
KH06-RR	**KH06-PP-RR**	7	**6**	12	22	4	2	340	240	390	340
KH08-RR	**KH08-PP-RR**	12	**8**	15	24	6	2	410	280	475	400
KH10-RR	**KH10-PP-RR**	14,5	**10**	17	26	6	2,5	510	370	590	520
KH12-RR	**KH12-PP-RR**	18,5	**12**	19	28	6	2,5	670	510	800	740
KH14-RR	**KH14-PP-RR**	20,5	**14**	21	28	6	2,5	690	520	830	760
KH16-RR	**KH16-PP-RR**	27,5	**16**	24	30	7	2,5	890	620	1 060	910
KH20-RR	**KH20-PP-RR**	32,5	**20**	28	30	7	2,5	1 110	790	1 170	1 010
KH25-RR	**KH25-PP-RR**	66	**25**	35	40	8	2,5	2 280	1 670	2 420	2 130
KH30-RR	**KH30-PP-RR**	95	**30**	40	50	8	2,5	3 300	2 700	3 300	3 100
KH40-RR	**KH40-PP-RR**	182	**40**	52	60	9	2,5	5 300	4 450	5 300	4 950
KH50-RR	**KH50-PP-RR**	252	**50**	62	70	9	2,5	6 800	6 300	6 800	7 000

1) With preservative.
2) With initial greasing, sealed on both sides.
3) The basic load ratings are only valid for hardened (670 HV + 170 HV) and ground shaft raceways.

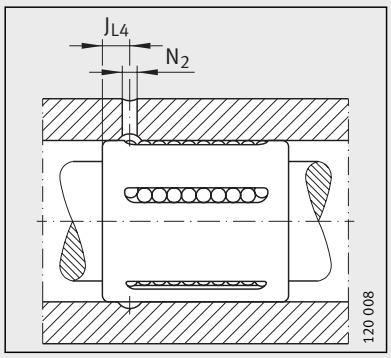

Light range

Linear ball bearings

Sealed
Self-aligning

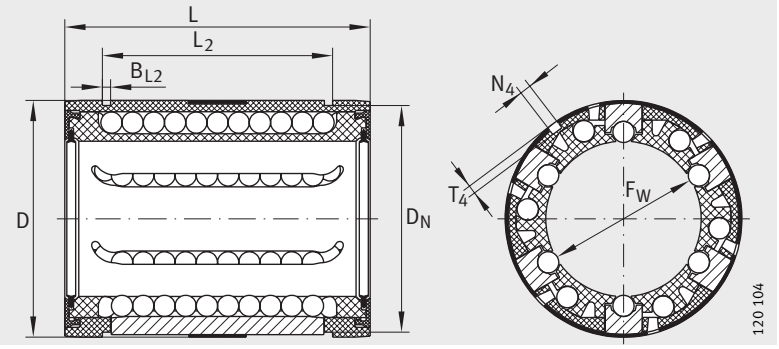

KN..-B

Dimension table · Dimensions in mm

Designation[3]	Mass	Dimensions								Ball rows		Basic load ratings[1]			
	m	F_W	D	L	L_2	B_{L2}	D_N	T_4	N_4[2]	$b_{1\,max}$		dyn. C_{min}	stat. $C_{0\,min}$	dyn. C_{max}	stat. $C_{0\,max}$
	≈g				H13						Quantity	N	N	N	N
KN16-B	30	**16**	26	36	24,6	1,3	25	0,7	3	1,5	5	870	620	1 040	910
KN20-B	60	**20**	32	45	31,2	1,6	30,7	0,9	3	2,5	6	1 730	1 230	1 830	1 570
KN25-B	130	**25**	40	58	43,7	1,85	38,5	1,4	3	2,5	6	3 100	2 220	3 250	2 850
KN30-B	190	**30**	47	68	51,7	1,85	44,7	2,2	3	2,5	6	3 750	2 850	3 950	3 650
KN40-B	350	**40**	62	80	60,3	2,15	59,4	2,2	3	3	6	6 300	4 350	6 700	5 600
KN50-B	670	**50**	75	100	77,3	2,65	71,4	2,3	3	3	6	9 300	6 500	9 800	8 300

1) The basic load ratings are only valid for hardened (670 HV + 170 HV) and ground shaft raceways.
2) Hole position symmetrical to bearing width C.
3) Also available with segment cutout.

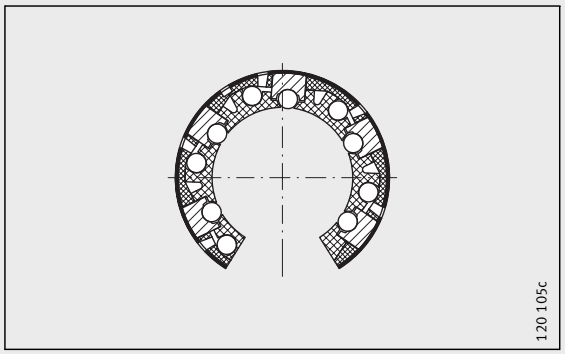

KNO..-B
With segment cutout[3]

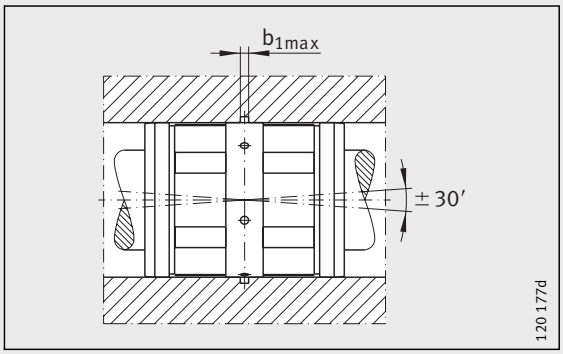

Self-aligning up to ±30′

Heavy duty range

Linear ball bearings

Gap seals or contact seals
Self-aligning

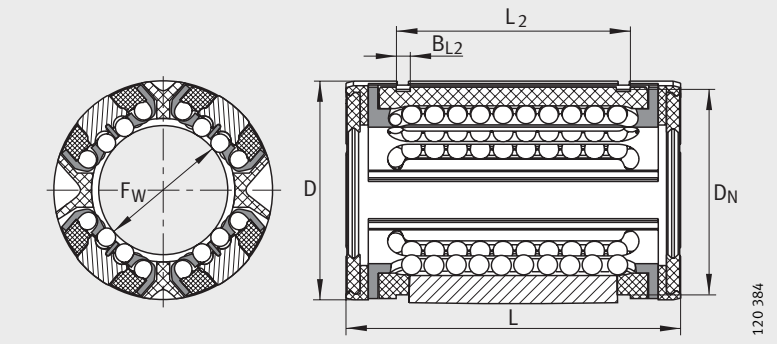

KS

Dimension table · Dimensions in mm

Designation[4]	Mass m ≈g	Dimensions F_W	D	L	L_2 H13	B_{L2}	D_N
KS12	18	**12**	22	32	22,6	1,3	21
KS16	28	**16**	26	36	24,6	1,3	25
KS20	51	**20**	32	45	31,2	1,6	30,7
KS25	102	**25**	40	58	43,7	1,85	38
KS30	172	**30**	47	68	51,7	1,85	44,7
KS40	335	**40**	62	80	60,3	2,15	59,4
KS50	589	**50**	75	100	77,3	2,65	71,4

1) The basic load ratings are only valid for hardened (670 HV + 170 HV) and ground shaft raceways.
2) Hole position symmetrical to bearing width L.
3) Only one lubrication and fixing hole each in size 16 and 20.
4) Also available with segment cutout.

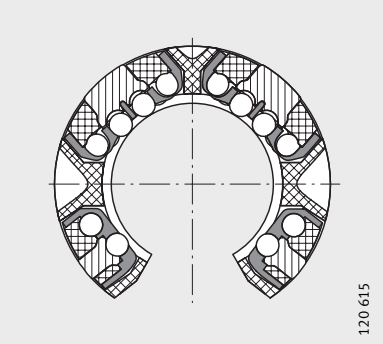

KSO
With segment cutout[4)]

			Ball rows	Basic load ratings[1)]			
A_{10}	N_1[2)]	N_4[2)]	Quantity	dyn. C_{min} N	stat. $C_{0\,min}$ N	dyn. C_{max} N	stat. $C_{0\,max}$ N
–	–	3	8	630	600	900	1 100
–	3[3)]	3[3)]	8	1 060	950	1 430	1 550
–	3[3)]	3[3)]	8	1 780	1 600	2 200	2 310
1,5	3,5	3	8	2 700	2 430	3 950	4 300
2	3,5	3	8	4 650	3 970	5 900	6 000
1,5	3,5	3	8	8 800	7 200	10 200	9 600
2,5	4,5	5	8	12 300	9 700	15 100	13 900

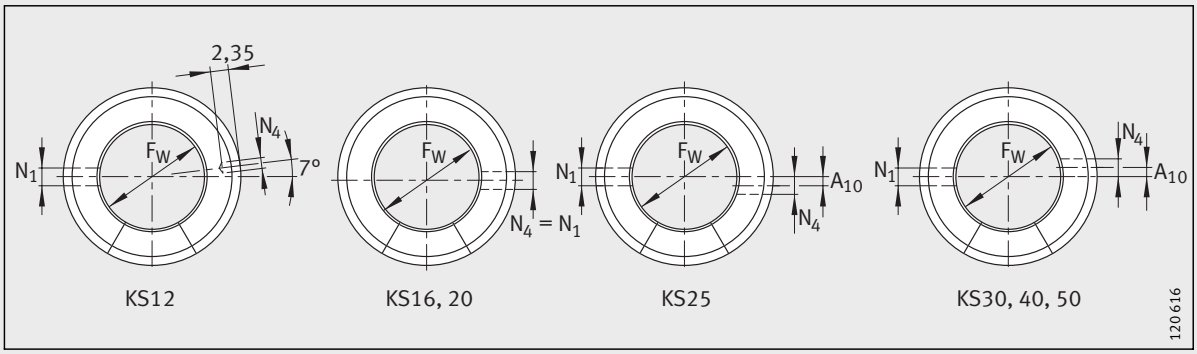

Machined range

Linear ball bearings

Sealed
With anti-corrosion protection

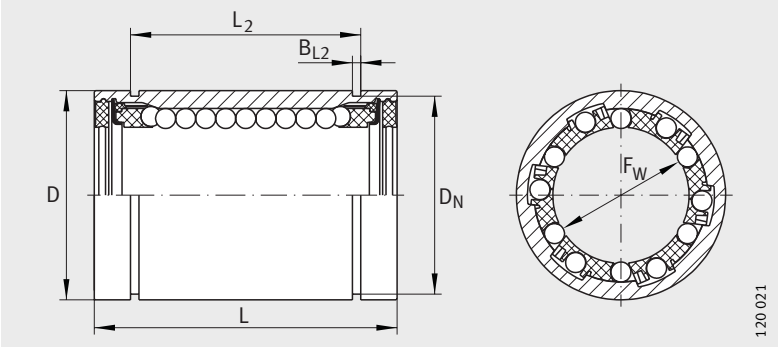

KB
Closed, sealed

Dimension table · Dimensions in mm

Designation[1)4)]	Mass	Dimensions							Ball rows	Basic load ratings[3)]			
	m	F_W	D	L	L_2	B_{L2}[2)]	D_N[2)]	N_2		dyn. C_{min}	stat. $C_{0\,min}$	dyn. C_{max}	stat. $C_{0\,max}$
	≈g		h5	h12	H13				Quantity	N	N	N	N
KB12-PP-RR-AS	40	**12** $^{+0,008}_{0}$	22	32	22,6	1,3	21	1,5	5	540	385	640	570
KB16-PP-RR-AS	50	**16** $^{+0,009}_{-0,001}$	26	36	24,6	1,3	24,9	2	5	710	530	840	780
KB20-PP-RR-AS	90	**20** $^{+0,009}_{-0,001}$	32	45	31,2	1,6	30,3	2	6	1 570	1 230	1 660	1 570
KB25-PP-RR-AS	190	**25** $^{+0,011}_{-0,001}$	40	58	43,7	1,85	37,5	2,5	6	2 800	2 220	2 950	2 850
KB30-PP-RR-AS	300	**30** $^{+0,011}_{-0,001}$	47	68	51,7	1,85	44,5	2,5	6	3 600	2 850	3 800	3 600
KB40-PP-RR-AS	600	**40** $^{+0,013}_{-0,002}$	62	80	60,3	2,15	59	3	6	6 000	4 400	6 400	5 600
KB50-PP-RR-AS	1 000	**50** $^{+0,013}_{-0,002}$	75	100	77,3	2,65	72	4	6	8 700	6 300	9 200	8 000

1) With initial greasing, sealed on both sides, with relubrication facility.
2) Slot dimensions suitable for retaining rings to DIN 471.
3) The basic load ratings are only valid for hardened (670 HV + 170 HV) and ground shaft raceways.
4) Also available in slotted design and with segment cutout.

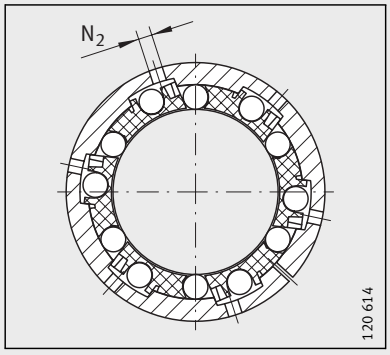

KBS
Slotted[4)]

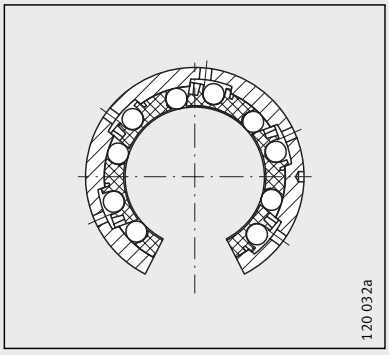

KBO
With segment cutout[4)]

Solid shafts

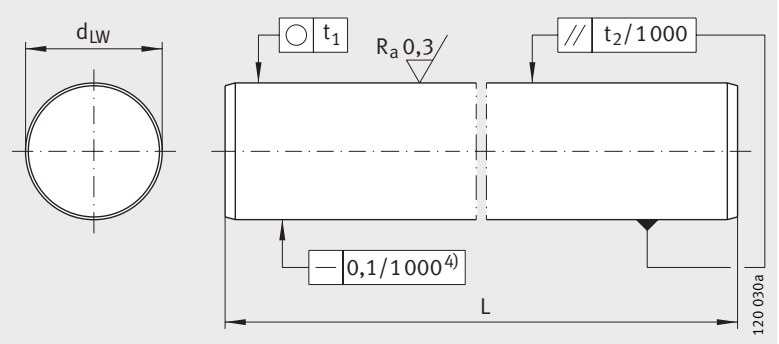

W

Dimension table · Dimensions in mm

Designation	Mass	Dimensions		Tolerance			Roundness	Parallelism	Effective hardening depth
	m	d_{LW}	L	h6	Special tolerance[1)]		t_1	t_2[2)]	Rht[3)]
					j5	f7			
	≈kg/m			µm	µm	µm	µm	µm	min.
W04	0,1	**4**	2 500	0 / −8	–	–	4	5	0,4
W05	0,15	**5**	3 600	0 / −8	–	–	4	5	0,4
W06	0,22	**6**	4 000	0 / −8	–	–	4	5	0,4
W08	0,39	**8**	4 000	0 / −9	–	–	4	6	0,4
W10	0,62	**10**	6 000	0 / −9	–	–	4	6	0,4
W12	0,89	**12**	6 000	0 / −11	–	–	5	8	0,6
W14	1,21	**14**	6 000	0 / −11	–	–	5	8	0,6
W15	1,39	**15**	6 000	0 / −11	–	−16 / −34	5	8	0,6
W16	1,58	**16**	6 000	0 / −11	+5 / −3	−16 / −34	5	8	0,6
W18	2	**18**	6 000	0 / −11	–	−16 / −34	5	8	0,6
W20	2,47	**20**	6 000	0 / −13	+5 / −4	−20 / −41	6	9	0,9
W24	3,55	**24**	6 000	0 / −13	–	–	6	9	0,9
W25	3,85	**25**	6 000	0 / −13	+5 / −4	−20 / −41	6	9	0,9
W30	5,55	**30**	6 000	0 / −13	+5 / −4	−20 / −41	6	9	0,9
W32	6,31	**32**	6 000	0 / −16	+6,5	−25 / −50	7	11	1,5
W40	9,87	**40**	6 000	0 / −16	+6 / −5	–	7	11	1,5
W50	15,41	**50**	6 000	0 / −16	+6 / −5	–	7	11	1,5
W60	22,2	**60**	6 000	0 / −19	–	–	8	13	2,2
W80	39,45	**80**	6 000	0 / −19	–	–	8	13	2,2

1) Only for shafts made from quenched and tempered steel.

2) Differential diameter measurement.

3) To DIN ISO 13 012.

4) For shaft length < 400 mm max. straightness tolerance of 0,04 mm.

Miniature linear recirculating ball bearing and guideway assemblies

Two-row

KWEM, TKDM

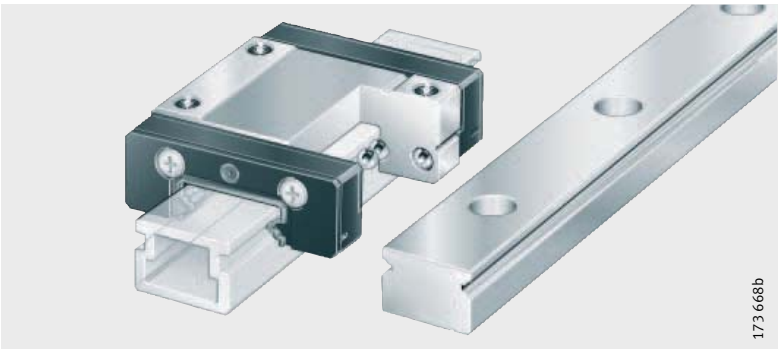

Four-row

KUME..-C

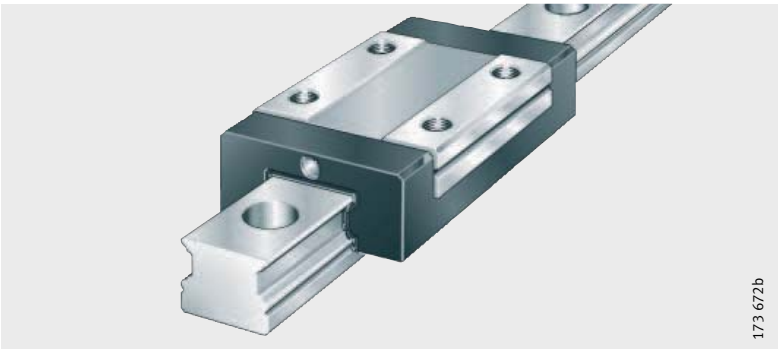

Miniature carriage units

RMWE

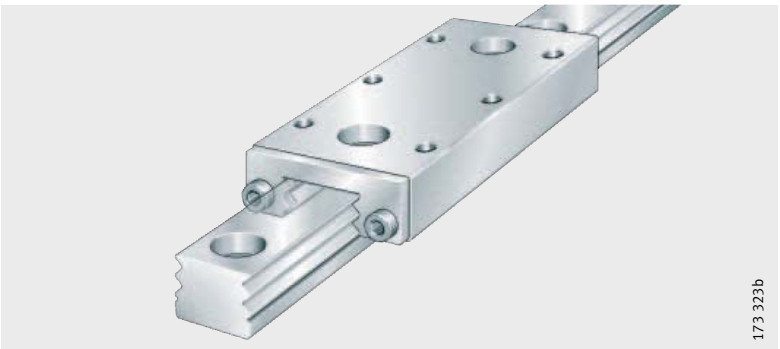

Miniature linear guidance sets

RWS

Miniature guidance systems

Features

Miniature linear recirculating ball bearing and guideway assemblies

Miniature linear recirculating ball bearing and guideway assemblies are available in two-row and four-row designs. Due to the steels used for the saddle plates and guideways, the units are corrosion-resistant. If very high levels of corrosion resistance are required, the suitability of the bearings for the specific application must be investigated.

The linear guidance systems are preloaded and are used as linear locating bearings. They can support forces from all directions – apart from the direction of motion – and moments about all axes.

Two-row linear recirculating ball bearing and guideway assemblies

These units have moderate load carrying capacity and moderate to high moment load carrying capacity.

The saddle plates and guideways are corrosion-resistant.
Seals on the end faces of the carriages protect the rolling element system against contamination. The carriages are greased and can be relubricated.

The units are suitable for accelerations up to 50 m/s^2 and speeds up to 180 m/min.

Two-row units are available in the accuracy classes G1 and G2.

Four-row linear recirculating ball bearing and guideway assemblies

Four-row miniature linear recirculating ball bearing and guideway assemblies are ready-to-fit guidance systems for unlimited stroke lengths. They have high load carrying capacity and rigidity. Due to the lubricant reservoir in the carriage, they are maintenance-free in many applications after initial greasing.

The units are suitable for accelerations up to 40 m/s^2 and speeds up to 180 m/min.

Four-row units are in the accuracy class G2.

Interchangeability

The guideways and carriages can be used in any combination within the same accuracy and interchangeability class. This simplifies the fitting of guidance systems, gives easier spare parts purchasing and allows very economical stockholding.

Preload

Miniature linear recirculating ball bearing and guideway assemblies are available in the preload classes according to the table.
TKDM5 is only available in V0.

Preload

Preload class	Preload setting
V0	(Standard) zero to slight preload
V1	Preload

Sealing and lubrication

Two-row units have seals on the end faces of the carriages to seal the rolling element system. In the four-row units, the rolling element system is sealed by means of gap seals on the end faces of the carriages.

The two-row design is greased, but it can also be supplied ungreased.
Four-row series are not greased.
Lubrication can be carried out using conventional pointed nozzles.

Operating temperature

Two-row units can be used at temperatures from –40 °C to +100 °C, four-row units at temperatures from –40 °C to +80 °C.

Further information

For information on the load carrying capacity and life, design of bearing arrangements, lubrication, fitting and operation of the units, attention must be paid to Technical Product Information TPI 163, Miniature linear recirculating ball bearing and guideway assemblies.

Miniature carriage units

Miniature carriage units with cylindrical roller flat cages are corrosion-resistant, ready-to-fit cage guidance systems for limited stroke lengths. The saddle plates of the carriages, the guideways, the cage strip and the end pieces are made from corrosion-resistant steel. If very high levels of corrosion resistance are required, the suitability of the bearings for the specific application must be investigated.

The units are produced in numerous carriage and guideway lengths, giving highly cost-effective designs. They have a high load carrying capacity, high rigidity and high accuracy whilst requiring very little space. Due to their compact design, they can often be used to replace guidance systems which require significantly more space.

As linear locating bearings with at least one carriage, they can support forces from all directions – apart from the direction of motion – and moments about all axes. They have higher rigidity than recirculating ball guidance systems, are very smooth-running and have high running accuracy. The standard accuracy class is G2.

The carriage units are particularly suitable for short stroke lengths, oscillating and low-friction motion and for high loads where high rigidity is required.

Sealing

In order to prevent damage to the guidance systems, the raceways must be kept clean at all times. If the end pieces used as standard are not adequate for this purpose, additional seals must be provided in the adjacent construction.

Preload

Miniature carriage units are in preload class V1 in accordance with the table.

Preload class

Class	Preload	Application
V1	0,005 · C to 0,02 · C	Low to moderate loads; moderate to high rigidity; moment loads

Further information

For information on the load carrying capacity and life, design of bearing arrangements, lubrication, fitting and operation of the carriage units, attention must be paid to Technical Product Information TPI 160, Miniature carriage units.

Miniature linear guidance sets

Miniature linear guidance sets with cylindrical roller flat cages are corrosion-resistant locating bearings for limited stroke lengths and are preloaded during fitting.

They can support forces from all directions – apart from the direction of motion – and moments about all axes and have higher load carrying capacity and rigidity than recirculating systems. The standard accuracy is G1.

Due to their design, they are particularly suitable for short stroke lengths, low-friction and oscillating motion and for high loads where very high rigidity is required, as well as requiring very little space.

The units are produced in numerous standard lengths, giving especially cost-effective designs. Since the spacing between support points can be varied by design, they can be easily matched to predetermined adjacent constructions. The guidance systems can be located through the adjacent construction or through the guideways.

Sealing

In order to prevent damage to the guidance systems, the raceways must be kept clean at all times. If the end pieces used as standard are not adequate for this purpose, additional seals must be provided in the adjacent construction.

Preload

The guidance systems must be preloaded in accordance with the table.

Preload class

Class	Preload	Application
V1	0,005 · C to 0,02 · C	Low to moderate loads; moderate to high rigidity; moment loads

Further information

For information on the load carrying capacity and life, design of bearing arrangements, lubrication, fitting and operation of the sets, attention must be paid to Technical Product Information TPI 162, Miniature linear guidance sets.

Driven linear units

With four-row linear recirculating ball guidance systems KUVE and triple toothed belt drive

MDKUVE..-3ZR-VA

With six-row linear recirculating ball guidance systems KUSE and toothed belt drive

MKUSE..-ZR-VA

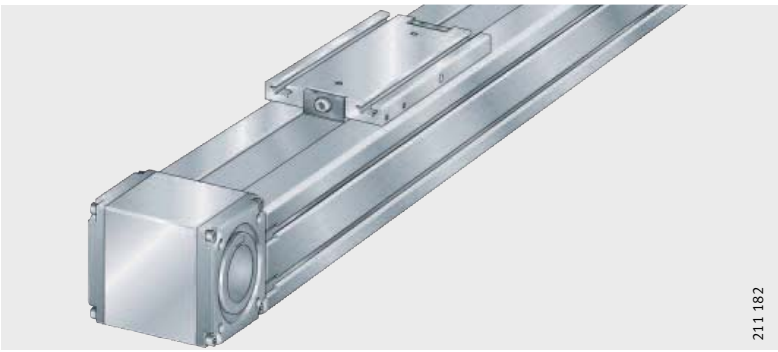

With external track roller guidance system LF and toothed belt drive

MLF..-VA

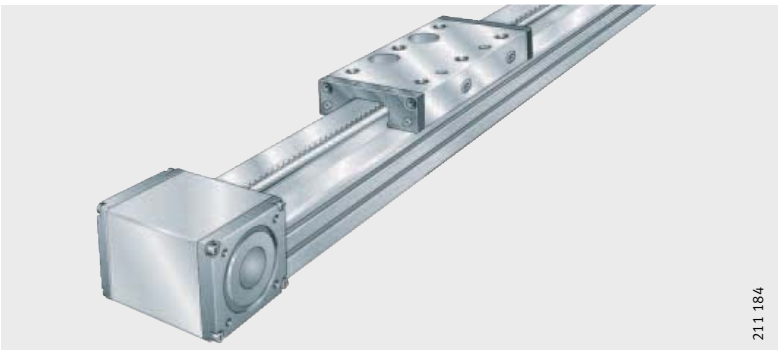

With internal track roller guidance system LF and toothed belt drive

MLFI..-VA

Driven linear units

Features

In automation and handling applications, the traverse and positioning systems must be capable of moving small and large masses over various stroke lengths quickly, reliably and to high accuracy. In order to fulfil these tasks, there are proven linear actuators with recirculating ball guidance systems or track roller guidance systems and toothed belt drive.

Linear actuators of a corrosion-resistant design comprise a support rail, guidance system, carriage, toothed belt drive, return units and bellows (in the case of recirculating ball guidance systems). With the exception of the rolling elements, all the steel parts are made from steel that is corrosion-resistant or protected against corrosion (suffix VA).

Support rail

Support rails are composite rails with a carrier profile made from anodised aluminium. In the case of recirculating ball guidance systems, the linear recirculating ball bearing and guideway assemblies KUVE and KUSE run on guideways.

In the case of track roller guidance systems, hardened and ground shafts are incorporated in the guideway for the track rollers LF.

Carriages

The saddle plate of the carriages is an anodised aluminium plate. This is guided clearance-free by the recirculating ball guidance systems or adjustable track rollers.
There are integral clamping devices for the toothed belt in both sides of the carriage.
Carriages of different lengths are available to support higher moment loads.
The carriage is driven by maintenance-free toothed belts.

In the case of the track roller guidance systems, the carriage is protected by lubrication and wiper units. The raceways on the support rails can be relubricated through lubrication nipples arranged on the end faces of the carriage.

For location on the adjacent construction, the carriages have threaded holes or T-slots.

Return units

The return units comprise an anodised profiled aluminium housing, two covers and a shaft unit.

The shafts are supported by tapered roller bearings arranged on both sides. The bearings are lubricated for life.

The toothed belt recirculates about a gear set mounted on the shaft.

Further information

For information on the load carrying capacity and life, design of bearing arrangements, lubrication, fitting and operation of the linear actuators, attention must be paid to Catalogue AL 1 (ALE), Driven Linear Units.

Screw drives

With single nut

KGT..-VA

With double nut

KGT..-VA

Screw drive

Features

Ball screw drives convert rotary motion into linear motion and vice versa.

Design of screw drive

A ball screw drive comprises a spindle, spindle nut with a ball return system and balls. Due to the balls rolling between the spindle shaft and the nut, they achieve an efficiency of up to 90% compared to trapezoidal lead screw drives.

Spindle

The ball raceways on the spindle are induction hardened; the effective hardening depth is dependent on the pitch and ball size.

Nut

Nuts with axial clearance can be supplied premounted on the spindle or separately on sleeves. Nuts with slight or moderate preload are premounted on the spindles.

The bearings for the locating and non-locating bearing sides can be supplied separately or premounted on machined spindle seats.

Anti-corrosion protection

Corrosion-resistant screw drives are available by agreement.

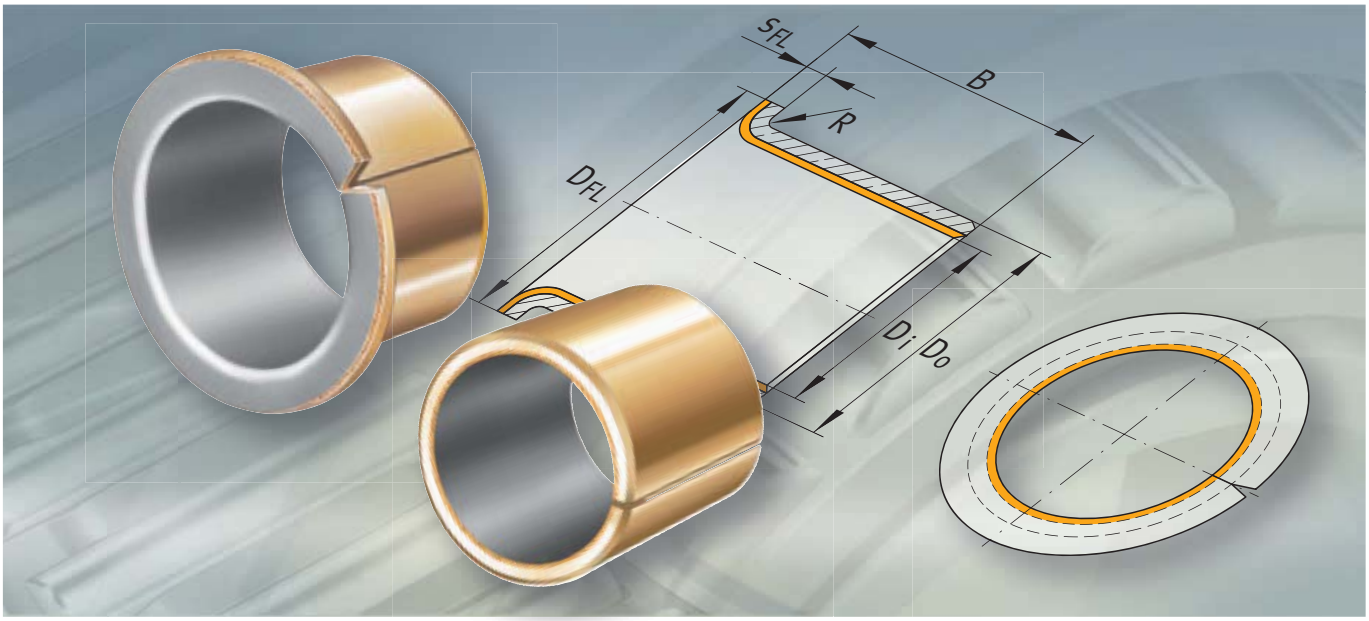

Maintenance-free Permaglide® plain bearings

Bushes
Flanged bushes
Strips

Maintenance-free Permaglide® plain bearings

		Page
Product overview	Maintenance-free Permaglide® plain bearings	118
Features	Maintenance-free Permaglide® plain bearing material P11 and P143	119
	Further information	120
Dimension tables	Bushes, maintenance-free, with bronze backing	121
	Flanged bushes, maintenance-free, with bronze backing	123
	Strips, maintenance-free, with bronze backing	125

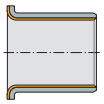

Maintenance-free Permaglide® plain bearings

Bushes

PAP..-P11,
PAP..-P143

Flanged bushes

PAF..-P11,
PAF..-P143

Strips

PAS..-P11,
PAS..-P143

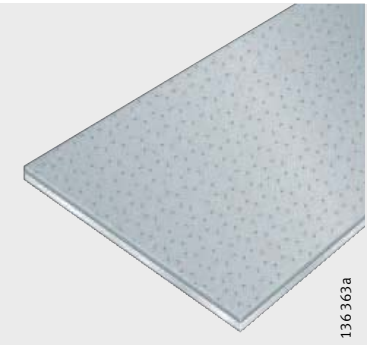

Maintenance-free Permaglide® plain bearings

Features

Permaglide® plain bearings are bearings for very small radial and axial design envelopes. These products are available as bushes, flanged bushes and strips made from maintenance-free Permaglide® P11 and P143.

Maintenance-free Permaglide® plain bearing material P11 and P143

In P11 and P143, the backing is made from bronze, *Figure 1*. Plain bearings made from this material have a high degree of corrosion resistance, have very good thermal conductivity, are antimagnetic and are suitable for dry running.

The low-wear material has good sliding characteristics, a low coefficient of friction and high resistance to chemicals. It does not absorb water (it is highly resistant to swelling), does not tend to weld to metal and is also suitable for hydrodynamic operation.

P11 and P143 can be used for rotary and oscillating motion as well as for short stroke linear motion.

P11

This material contains lead (Pb). Materials containing lead should not be allowed to come into contact with foodstuffs or pharmaceutical products.

P143

P143 is lead-free. In place of lead, zinc sulphide (ZnS) is used as a dry lubricant. Products in this variant are available by agreement.

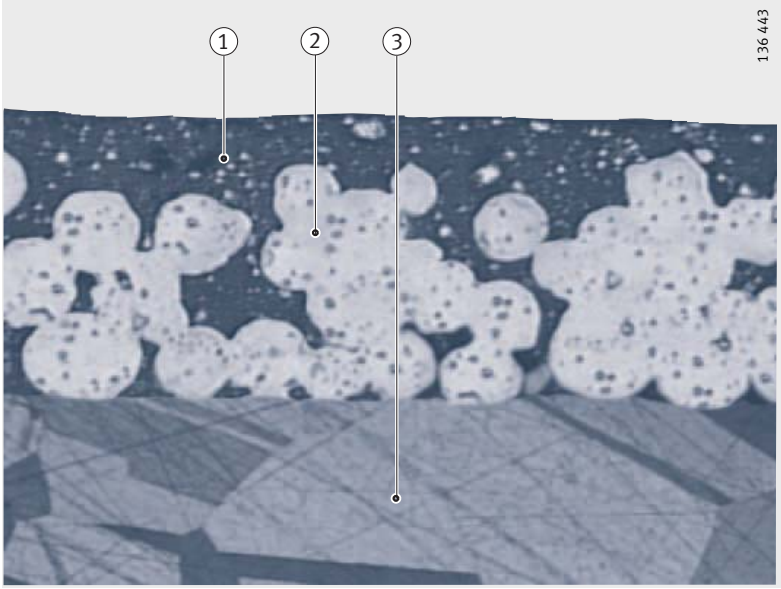

① Running-in layer: polytetrafluoroethylene (PTFE), lead (Pb) or zinc sulphide (ZnS), 0,01 mm to 0,03 mm thick

② Sliding layer: porous bronze layer, filled with PTFE/Pb or PTFE/zinc sulphide (ZnS), 0,2 mm to 0,35 mm thick

③ Bronze backing

Figure 1
Permaglide® P11 and P143

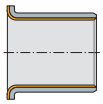

Maintenance-free Permaglide® plain bearings

Technical data

The important mechanical and physical characteristics of the maintenance-free P11 and P143 plain bearing materials are shown in the table.

Data

Characteristics				
Maximum pv value for dry running	Continuous operation	pv	1,8	$N/mm^2 \cdot m/s$
	For short periods		3,6	$N/mm^2 \cdot m/s$
Permissible specific bearing load	Static	p_{max}	250	N/mm^2
	Very low sliding speed		140	N/mm^2
	Rotating, oscillating		56	N/mm^2
Permissible sliding speed	Dry running	v_{max}	2	m/s
	Hydrodynamic operation		>2	m/s
Permissible operating temperature	–	ϑ	−200 °C to +280 °C	
Coefficient of thermal expansion	Bronze backing	α_{Bz}	$17 \cdot 10^{-6}$	K^{-1}
Coefficient of thermal conductivity	Bronze backing	λ_{Bz}	>70	$W (m \cdot K)^{-1}$
Relative electrical resistance after running-in		$R_{rel\ min}$	>1	$\Omega \cdot cm^2$

Further information

The complete Permaglide® standard range is described in detail in Catalogue 706, Permaglide® plain bearings.

Bushes

Maintenance-free
Bronze backing

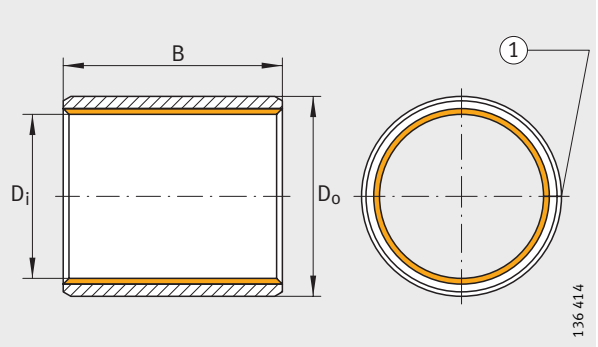

PAP..-P11, PAP..-P143
1 Joint gap

Dimension table · Dimensions in mm

Designation[1]	Mass m ≈g	Dimensions D_i	D_o	B ±0,25
PAP0406-P11	0,8	**4**	6	6
PAP0406-P143	0,8	**4**	6	6
PAP0505-P11	0,8	**5**	7	5
PAP0505-P143	0,8	**5**	7	5
PAP0606-P11	1,1	**6**	8	6
PAP0606-P143	1,1	**6**	8	6
PAP0610-P11	1,8	**6**	8	10
PAP0610-P143	1,8	**6**	8	10
PAP0808-P11	1,9	**8**	10	8
PAP0808-P143	1,9	**8**	10	8
PAP0810-P11	2,3	**8**	10	10
PAP0810-P143	2,3	**8**	10	10
PAP0812-P11	2,8	**8**	10	12
PAP0812-P143	2,8	**8**	10	12
PAP1005-P11	1,4	**10**	12	5
PAP1005-P143	1,4	**10**	12	5
PAP1010-P11	2,8	**10**	12	10
PAP1010-P143	2,8	**10**	12	10
PAP1015-P11	4,2	**10**	12	15
PAP1015-P143	4,2	**10**	12	15
PAP1020-P11	5,7	**10**	12	20
PAP1020-P143	5,7	**10**	12	20

Dimension table (continued) · Dimensions in mm

Designation[1]	Mass m ≈g	Dimensions D_i	D_o	B ±0,25
PAP1210-P11	3,3	**12**	14	10
PAP1210-P143	3,3	**12**	14	10
PAP1212-P11	4	**12**	14	12
PAP1212-P143	4	**12**	14	12
PAP1215-P11	5,1	**12**	14	15
PAP1215-P143	5,1	**12**	14	15
PAP1220-P11	6,7	**12**	14	20
PAP1220-P143	6,7	**12**	14	20
PAP1225-P11	8,4	**12**	14	25
PAP1225-P143	8,4	**12**	14	25
PAP1415-P11	5,8	**14**	16	15
PAP1415-P143	5,8	**14**	16	15
PAP1515-P11	6,2	**15**	17	15
PAP1515-P143	6,2	**15**	17	15
PAP1525-P11	10,3	**15**	17	25
PAP1525-P143	10,3	**15**	17	25
PAP1615-P11	6,6	**16**	18	15
PAP1615-P143	6,6	**16**	18	15
PAP1625-P11	11	**16**	18	25
PAP1625-P143	11	**16**	18	25
PAP1815-P11	7,4	**18**	20	15
PAP1815-P143	7,4	**18**	20	15
PAP1825-P11	12,3	**18**	20	25
PAP1825-P143	12,3	**18**	20	25

Recommended mounting tolerances:
Shaft $d_W < 80$ mm = f7.
Shaft $d_W \geqq 80$ mm = h8.
Housing bore = H7.

[1] The P143 variant is supplied by agreement.

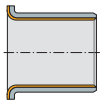

Bushes

Maintenance-free
Bronze backing

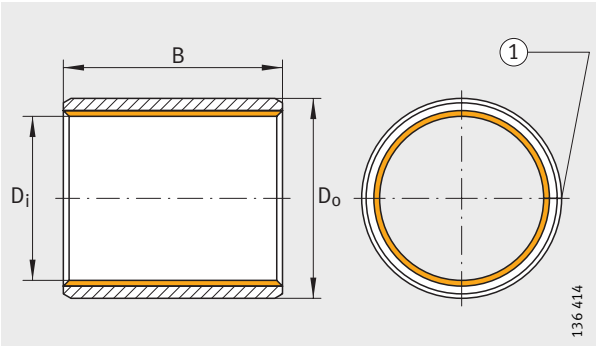

PAP..-P11, PAP..-P143
1 Joint gap

Dimension table (continued) · Dimensions in mm

Designation[1]	Mass m ≈kg	Dimensions D_i	D_o	B ±0,25
PAP2015-P11	12,8	**20**	23	15
PAP2015-P143	12,8	**20**	23	15
PAP2020-P11	17	**20**	23	20
PAP2020-P143	17	**20**	23	20
PAP2025-P11	21,3	**20**	23	25
PAP2025-P143	21,3	**20**	23	25
PAP2030-P11	25,5	**20**	23	30
PAP2030-P143	25,5	**20**	23	30
PAP2215-P11	14	**22**	25	15
PAP2215-P143	14	**22**	25	15
PAP2220-P11	18,6	**22**	25	20
PAP2220-P143	18,6	**22**	25	20
PAP2225-P11	23,3	**22**	25	25
PAP2225-P143	23,3	**22**	25	25
PAP2430-P11	30,3	**24**	27	30
PAP2430-P143	30,3	**24**	27	30
PAP2525-P11	26,2	**25**	28	25
PAP2525-P143	26,2	**25**	28	25
PAP2530-P11	31,5	**25**	28	30
PAP2530-P143	31,5	**25**	28	30
PAP2830-P11	47,9	**28**	32	30
PAP2830-P143	47,9	**28**	32	30
PAP3020-P11	34,1	**30**	34	20
PAP3020-P143	34,1	**30**	34	20
PAP3030-P11	51,1	**30**	34	30
PAP3030-P143	51,1	**30**	34	30
PAP3040-P11	68,2	**30**	34	40
PAP3040-P143	68,2	**30**	34	40
PAP3520-P11	39,4	**35**	39	20
PAP3520-P143	39,4	**35**	39	20
PAP3530-P11	59,1	**35**	39	30
PAP3530-P143	59,1	**35**	39	30
PAP4050-P11	112	**40**	44	50
PAP4050-P143	112	**40**	44	50
PAP4550-P11	159	**45**	50	50
PAP4550-P143	159	**45**	50	50

Dimension table (continued) · Dimensions in mm

Designation[1]	Mass m ≈kg	Dimensions D_i	D_o	B ±0,25
PAP5030-P11	105	**50**	55	30
PAP5030-P143	105	**50**	55	30
PAP5040-P11	140	**50**	55	40
PAP5040-P143	140	**50**	55	40
PAP5060-P11	211	**50**	55	60
PAP5060-P143	211	**50**	55	60
PAP5540-P11	154	**55**	60	40
PAP5540-P143	154	**55**	60	40
PAP6040-P11	167	**60**	65	40
PAP6040-P143	167	**60**	65	40
PAP6050-P11	209	**60**	65	50
PAP6050-P143	209	**60**	65	50
PAP6060-P11	251	**60**	65	60
PAP6060-P143	251	**60**	65	60
PAP6070-P11	293	**60**	65	70
PAP6070-P143	293	**60**	65	70
PAP7050-P11	242	**70**	75	50
PAP7050-P143	242	**70**	75	50
PAP7070-P11	339	**70**	75	70
PAP7070-P143	339	**70**	75	70
PAP8060-P11	331	**80**	85	60
PAP8060-P143	331	**80**	85	60
PAP80100-P11	552	**80**	85	100
PAP80100-P143	552	**80**	85	100
PAP9060-P11	371	**90**	95	60
PAP9060-P143	371	**90**	95	60
PAP90100-P11	619	**90**	95	100
PAP90100-P143	619	**90**	95	100
PAP9560-P11	391	**95**	100	60
PAP9560-P143	391	**95**	100	60
PAP10060-P11	411	**100**	105	60
PAP10060-P143	411	**100**	105	60
PAP100115-P11	788	**100**	105	115
PAP100115-P143	788	**100**	105	115

Recommended mounting tolerances:
Shaft $d_W < 80$ mm = f7.
Shaft $d_W \geqq 80$ mm = h8.
Housing bore = H7.

[1] The P143 variant is supplied by agreement.

Flanged bushes

Maintenance-free
Bronze backing

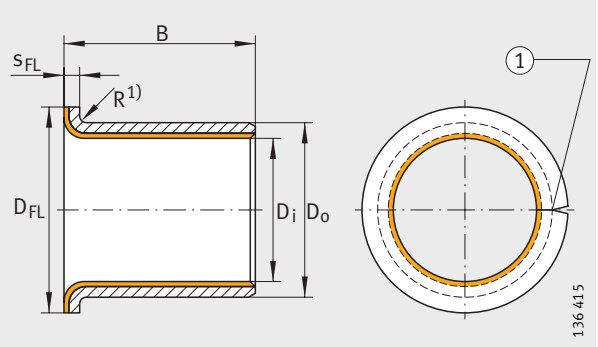

PAF..-P11, PAF..-P143
1 Joint gap

Dimension table · Dimensions in mm

Designation 2)	Mass	Dimensions				
	m	D_i	D_o	D_{FL}	B	s_{FL}
	≈g			±0,5	±0,25	−0,2
PAF06080-P11	1,8	**6**	8	12	8	1
PAF06080-P143	1,8	**6**	8	12	8	1
PAF08055-P11	1,8	**8**	10	15	5,5	1
PAF08055-P143	1,8	**8**	10	15	5,5	1
PAF08095-P11	2,7	**8**	10	15	9,5	1
PAF08095-P143	2,7	**8**	10	15	9,5	1
PAF10070-P11	2,7	**10**	12	18	7	1
PAF10070-P143	2,7	**10**	12	18	7	1
PAF10120-P11	4,1	**10**	12	18	12	1
PAF10120-P143	4,1	**10**	12	18	12	1
PAF10170-P11	5,5	**10**	12	18	17	1
PAF10170-P143	5,5	**10**	12	18	17	1
PAF12070-P11	3,2	**12**	14	20	7	1
PAF12070-P143	3,2	**12**	14	20	7	1
PAF12090-P11	3,9	**12**	14	20	9	1
PAF12090-P143	3,9	**12**	14	20	9	1
PAF12120-P11	4,9	**12**	14	20	12	1
PAF12120-P143	4,9	**12**	14	20	12	1

Recommended mounting tolerances:
Shaft = f7.
Housing bore = H7.

1) Inside diameter and radius:
For $D_i \leqq 8$, R1 = −0,5.
For $D_i > 8$, R1 = ±0,5.

2) The P143 variant is supplied by agreement.

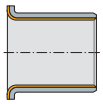

Flanged bushes

Maintenance-free
Bronze backing

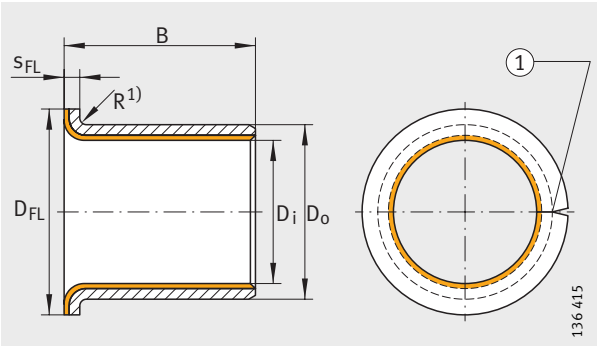

PAF..-P11, PAF..-P143
1 Joint gap

Dimension table (continued) · Dimensions in mm

Designation 2)	Mass	Dimensions				
	m	D_i	D_o	D_{FL}	B	s_{FL}
	≈g			±0,5	±0,25	−0,2
PAF15120-P11	6	**15**	17	23	12	1
PAF15120-P143	6	**15**	17	23	12	1
PAF15170-P11	8	**15**	17	23	17	1
PAF15170-P143	8	**15**	17	23	17	1
PAF16120-P11	6,3	**16**	18	24	12	1
PAF16120-P143	6,3	**16**	18	24	12	1
PAF18100-P11	6,1	**18**	20	26	10	1
PAF18100-P143	6,1	**18**	20	26	10	1
PAF18220-P11	11,8	**18**	20	26	22	1
PAF18220-P143	11,8	**18**	20	26	22	1
PAF20115-P11	12,4	**20**	23	30	11,5	1,5
PAF20115-P143	12,4	**20**	23	30	11,5	1,5
PAF20165-P11	16,6	**20**	23	30	16,5	1,5
PAF20165-P143	16,6	**20**	23	30	16,5	1,5
PAF25215-P11	25,5	**25**	28	35	21,5	1,5
PAF25215-P143	25,5	**25**	28	35	21,5	1,5
PAF30160-P11	33,5	**30**	34	42	16	2
PAF30160-P143	33,5	**30**	34	42	16	2
PAF30260-P11	50	**30**	34	42	26	2
PAF30260-P143	50	**30**	34	42	26	2
PAF35260-P11	58	**35**	39	47	26	2
PAF35260-P143	58	**35**	39	47	26	2
PAF40260-P11	67	**40**	44	53	26	2
PAF40260-P143	67	**40**	44	53	26	2

Recommended mounting tolerances:
Shaft = f7.
Housing bore = H7.

1) Inside diameter and radius:
For $D_i \leqq 8$, R1 = −0,5.
For $D_i > 8$, R1 = ±0,5.

2) The P143 variant is supplied by agreement.

Strips

Maintenance-free
Bronze backing

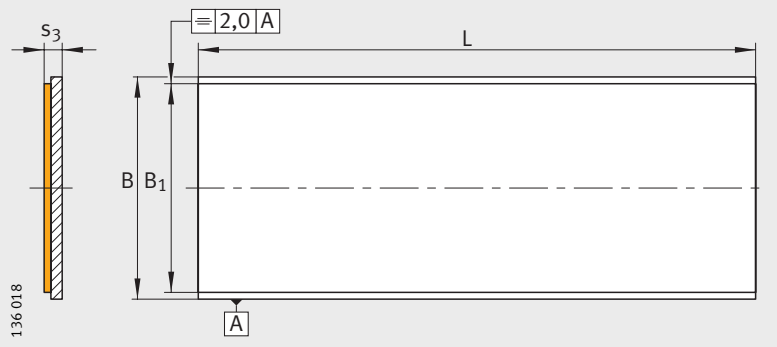

PAS..-P11, PAS..-P143

Dimension table · Dimensions in mm

Designation[1]	Mass	Dimensions			
	m	s_3	B	B_1	L
	≈g	−0,04	+1,5		+3
PAS10160-P11	658	**1**	160	148	500
PAS10160-P143	658	**1**	160	148	500
PAS15180-P11	1 132	**1,5**	180	148	500
PAS15180-P143	1 132	**1,5**	180	148	500
PAS20180-P11	1 523	**2**	180	168	500
PAS20180-P143	1 523	**2**	180	168	500
PAS25180-P11	1 915	**2,5**	180	168	500
PAS25180-P143	1 915	**2,5**	180	168	500

[1] The P143 variant is supplied by agreement.

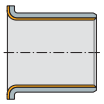

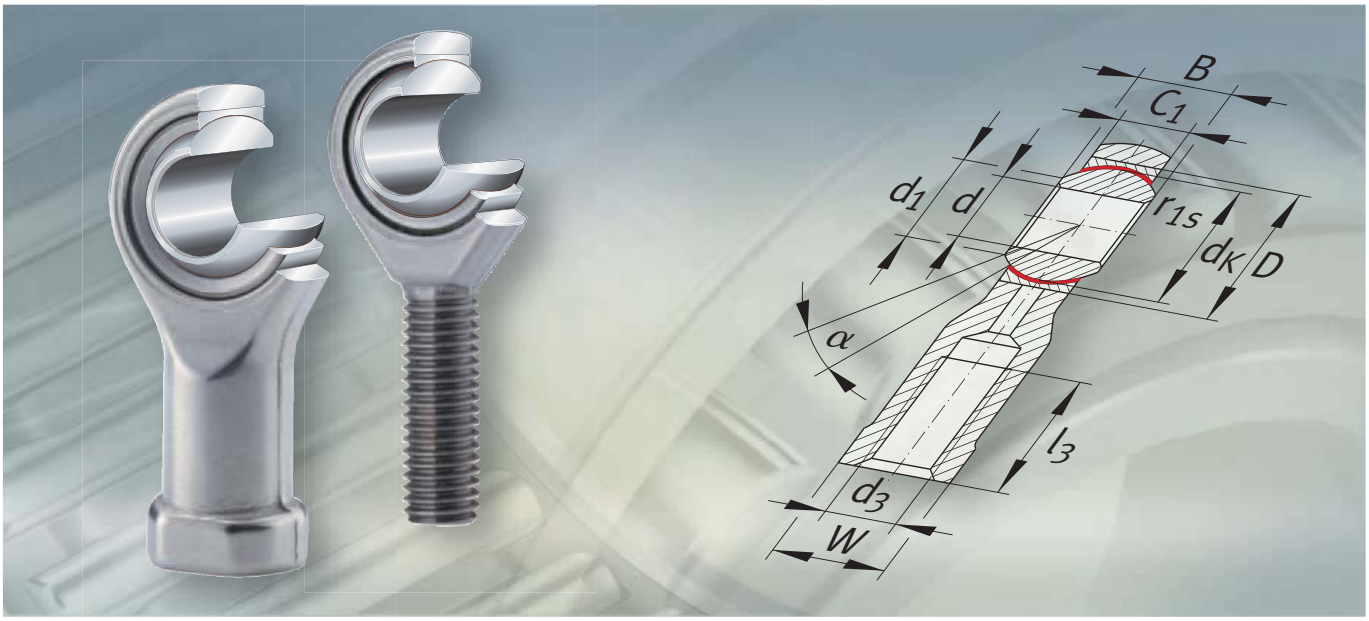

Maintenance-free ELGES rod ends

Maintenance-free ELGES rod ends

		Page
Product overview	Maintenance-free ELGES rod ends	128
Features	Corrosion resistance	129
	Applications	129
Design and safety guidelines	Load carrying capacity	130
	Rating life of the rod end	131
	Rating life of the spherical plain bearing	131
Accuracy		135
Dimension tables	Rod ends with internal thread	136
	Rod ends with external thread	138

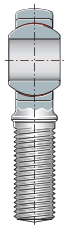

With internal thread

With right or left hand thread

GIKSR..-PS, GIKPSR..-PS

GIKSL..-PS

With external thread

With right or left hand thread

GAKSR..-PS

GAKSL..-PS

Maintenance-free ELGES rod ends

Features

Maintenance-free rod ends made from alloy steel comprise a housing with integral shank and a maintenance-free spherical plain bearing, *Figure 1*. The housing and shank has a thread to DIN 13, the diameter range extends from 5 mm to 30 mm. The bore tolerance of the spherical plain bearings is H7.

The rod ends conform to DIN ISO 12 240-4, dimension series K and have a radial spherical plain bearing GE..-PS and a right or left hand internal or external thread. The sliding contact pair comprises corrosion-resistant steel and corrosion-resistant PTFE-bronze film fixed in the outer ring crowned surface. Due to this sliding contact pair, they are completely maintenance-free.

All rod ends with an internal thread are also available with CETOP mounting dimensions in accordance with ISO 8139 for pneumatic cylinders.

Figure 1
Rod ends, corrosion-resistant, dimension series K

Corrosion resistance

The steels used as standard and proven in this situation are corrosion-resistant steels such as X105CrMo17 (material no. 1.4125) for the inner ring and X8CrNiS18-9 (material no. 1.4305) or alternatively X5CrNi18-10 (material no. 1.4301) for the outer ring and housing.

Applications

These materials have corrosion resistance corresponding to market requirements in many media.

The preferred areas of application include machinery for the food and drink industry, butchery machines, the chemical industry and medical equipment. The products have also proven effective in aircraft and ship building as well as for applications in buses and rail vehicles.

Rod ends with CETOP mounting dimensions are often used in control and automation engineering.

Temperature range

The rod ends can be used without restriction in the temperature range from –10 °C to +80 °C. At operating temperatures above +80 °C, the load carrying capacity and thus the operating life of the bearings is reduced.

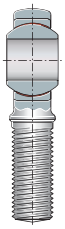

Design and safety guidelines

Load carrying capacity

The load carrying capacity is indicated by means of the basic dynamic load rating C_r and the basic static load rating C_{0r}.

Basic dynamic load rating

The basic dynamic load rating C_r refers to the spherical plain bearing fitted. It represents a factor used for calculating the bearing rating life.

The equivalent bearing load and additional bending stresses in the shank area are taken into consideration if, in addition to radial load in a tensile or compressive direction, other transverse forces act in an axial direction to the shank.

Basic static load rating

The basic static load rating C_{0r} of the rod end refers only to the load carrying capacity of the rod end housing.

It describes the maximum constant tensile load when utilising to the full the material yield strength in the most highly stressed cross-section.

Permissible loading of rod ends

The permissible load depends on the type of load. Pulsating or alternating loads subject the material of the rod ends to greater stress than constant loads. For calculation, these operating conditions must be taken into consideration by means of the load factor f_b, see table.

Load factor f_b

Type of load	Pulsating load	Load factor f_b
Unilateral load 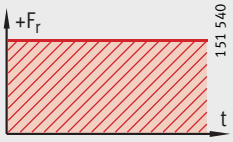	All series	1
Pulsating load 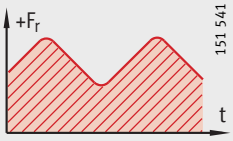	GIKSR..-PS GAKSR..-PS GIKPSR..-PS	2,25 3
Alternating load 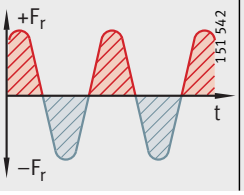		

Rating life of the rod end

Two calculations must always be carried out:

- the permissible load on the rod end
- the rating life of the spherical plain bearing.

The maximum equivalent bearing load P must not exceed the permissible load P_{per} on the rod end.

The following applies:

$$P_{per} \geqq P$$

Loading of the rod end

$$P_{per} = \frac{C_{0r}}{f_b}$$

Rating life of the spherical plain bearing

The following example illustrates the rating life calculation of a maintenance-free spherical plain bearing incorporating the sliding material PTFE-bronze film.

Scope

- Radial spherical plain bearing 5 mm ≦ d ≦ 30 mm
- Temperature range –30 °C ≦ t ≦ +200 °C
- Unilateral contact pressure:
  - Constant load 2 N/mm^2 ≦ p ≦ 100 N/mm^2
  - Variable load 5 N/mm^2 ≦ p ≦ 50 N/mm^2
- Sliding speed 1 mm/s ≦ v ≦ 211 mm/s
- Bearing dry, without lubrication
- Sliding speed factor f_v ≧ 0,4
  If f_v ≦ 1, good heat dissipation is required
- Load frequency P_{Hz} ≦ 5 Hz.

With an increase in bearing temperature of between +80 °C and +200 °C, the operating life to be expected decreases in accordance with the temperature factors used in rating life calculation.

Failure criteria

Increase in radial internal clearance with:

- unilateral load direction, by 0,25 mm
- alternating load direction, by 0,5 mm
  - under an alternating load p ≧ 10 N/mm^2, the sliding material can undergo plastic deformation by approx. 0,1 mm without wear.

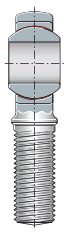

Factors for rating life calculation

Symbol	Value
Specific load parameter K	$K = 100\ N/mm^2$
Temperature factor f_2	
$-50\ °C \leqq t \leqq +80\ °C$ $+80\ °C < t \leqq +200\ °C$	$f_2 = 1$ $f_2 = 1{,}4 - 0{,}005 \cdot t$
Load type factor f_5	
Alternating load Pulsating load	$f_5 = 1$ $f_5 = 1{,}4$
Sliding distance	
$65\ N/mm^2 < p \leqq 100\ N/mm^2$	$s = \frac{42052415}{p^{1{,}75829}}$
$45\ N/mm^2 < p \leqq 65\ N/mm^2$	$s = \frac{32897507}{p^{1{,}69947}}$
$25\ N/mm^2 < p \leqq 45\ N/mm^2$	$s = \frac{24115273}{p^{1{,}61789}}$
$5\ N/mm^2 < p \leqq 25\ N/mm^2$	$s = \frac{6837121}{p^{1{,}2263}}$
$2\ N/mm^2 < p \leqq 5\ N/mm^2$	$s = \frac{3500000}{p^{0{,}81025}}$

Combined swivel and tilt motion

Swivel and tilt angle in simple motion:

- In swivel motion, the outer ring and inner ring move about the bearing axis, while in rotary motion the rating life must be calculated using $\beta = 180\ °C$.
- In tilt motion, the outer ring and inner ring move perpendicular to the bearing axis, the permissible tilt angle α is given in the dimension tables.

Combined swivel and tilt motion

Linear motion:

$$\beta_1 = \sqrt[2]{\beta^2 + (\alpha_1 + \alpha_2)^2}$$

Ellipsoid motion:

$$\beta_1 = \frac{\pi \cdot \beta \cdot (\alpha_1 + \alpha_2) + (\beta - \alpha_1 - \alpha_2)^2}{\beta + \alpha_1 + \alpha_2}$$

Constant load

For simple motion:

$$v = 2{,}91 \cdot 10^{-4} \cdot d_K \cdot \beta \cdot f$$

For combined motion:

$$v = 2{,}91 \cdot 10^{-4} \cdot d_K \cdot \beta_1 \cdot f$$

Calculation of theoretical rating life L and L_h under constant load:

$$p = K \cdot \frac{P}{C_r}$$

$$x = \frac{v \cdot 1{,}0305^p}{109{,}771}$$

$$f_v = \frac{2{,}1048}{2{,}255^x}$$

$$L = f_2 \cdot f_v \cdot \frac{s \cdot f}{v} \cdot 14$$

$$L_h = \frac{L}{f \cdot 60}$$

Variable load

For pulsating and oscillating load, the following applies:

$$f_{Hz} = 0{,}433 - \frac{P_{Hz} \cdot p^{1{,}6}}{790{,}5}$$

Calculation of theoretical rating life L_W and L_{hW} under variable load:

$$L_W = L \cdot f_{Hz} \cdot f_5$$

$$L_{hW} = \frac{L_W}{f \cdot 60}$$

Symbols, units and definitions

C_r N
Basic dynamic load rating, radial

C_{0r} N
Basic static load rating of rod end, radial

d_K mm
Ball diameter

f min^{-1}
Oscillation frequency or speed

f_b –
Load factor

f_v –
Sliding speed factor for PTFE-bronze film

f_{Hz} –
Factor for variable load

f_2 –
Temperature factor

f_5 –
Load type factor for maintenance-free spherical plain bearings

K N/mm^2
Specific load parameter

L osc.
Theoretical rating life under constant load

L_h h
Theoretical rating life under constant load

L_w osc.
Theoretical rating life under variable load

L_{hw} h
Theoretical rating life under variable load

p N/mm^2
Contact pressure, specific bearing load

P N
Equivalent bearing load

P_{per} N
Permissible load on rod end

P_{Hz} Hz
Load frequency

s m
Sliding distance

v mm/s
Mean sliding speed

α_1 °
Tilt angle – from centre to left

α_2 °
Tilt angle – from centre to right

β °
Swivel or oscillation angle (between two extreme points).

Further information

For information on the load carrying capacity and life, design of bearing arrangements, lubrication, fitting and operation of spherical plain bearings and rod ends, attention must be paid to Catalogue 238, Spherical Plain Bearings, Plain Bushes, Rod Ends.

Accuracy

The accuracy of metric ISO threads conforms to DIN 13.

Tolerances for the mounting bore should be selected according to the table.

Shaft tolerance

Radial spherical plain bearing	Shaft tolerance (recommended)
GE..-PS	m6

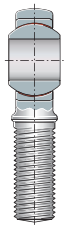

Rod ends

With internal thread, maintenance-free
Dimension series K, type F

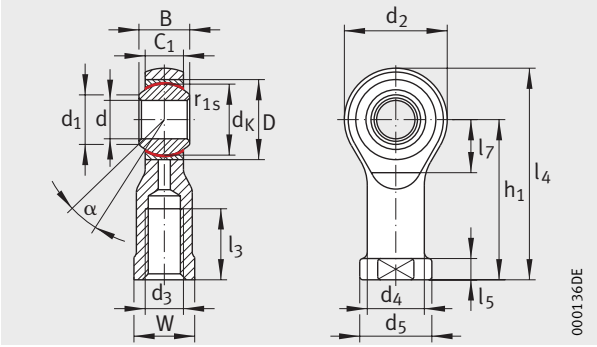

GIKSR..-PS, GIKPSR..-PS
Corrosion-resistant steel/PTFE-bronze film

Dimension table · Dimensions in mm

Designation[1]	Mass	Dimensions									
	m	d[2]	D	B	d_K	d_1	d_2	d_3	d_4	h_1	C_1
	≈kg			–0,12			max.				
GIKSR5-PS	0,017	**5**$^{+0,012}$	13	8	11,1	7,7	19	M5	9	27	6
GIKPSR5-PS								M4			
GIKSR6-PS	0,025	**6**$^{+0,012}$	16	9	12,7	8,9	21	M6	10	30	6,75
GIKSR8-PS	0,043	**8**$^{+0,015}$	19	12	15,8	10,3	25	M8	12,5	36	9
GIKSR10-PS	0,072	**10**$^{+0,015}$	22	14	19	12,9	29	M10	15	43	10,5
GIKPSR10-PS								M10X1,25			
GIKSR12-PS	0,107	**12**$^{+0,018}$	26	16	22,2	15,4	33	M12	17,5	50	12
GIKPSR12-PS								M12X1,25			
GIKSR14-PS	0,16	**14**$^{+0,018}$	28[3]	19	25,4	16,8	37	M14	20	57	13,5
GIKSR16-PS	0,21	**16**$^{+0,018}$	32	21	28,5	19,3	43	M16	22	64	15
GIKPSR16-PS								M16X1,5			
GIKSR18-PS	0,295	**18**$^{+0,018}$	35	23	31,7	21,8	47	M18X1,5	25	71	16,5
GIKSR20-PS	0,38	**20**$^{+0,021}$	40	25	34,9	24,3	51	M20X1,5	27,5	77	18
GIKSR22-PS	0,49	**22**$^{+0,021}$	42	28	38,1	25,8	55	M22X1,5	30	84	20
GIKSR25-PS	0,65	**25**$^{+0,021}$	47	31	42,8	29,5	61	M24X2	33,5	94	22
GIKSR30-PS	1,15	**30**$^{+0,021}$	55	37	50,8	34,8	71	M30X2	40	110	25
GIKPSR30-PS								M27X2			

1) For a left hand thread, the R is replaced by an L, for example GIKSL.
2) Bore tolerance H7 (arithmetic mean value).
3) Variation from DIN ISO 12 240-4, dimension series K, type F.
4) Basic static load rating of rod end.

							Chamfer dimension	Basic load ratings		Radial internal clearance
α	l_3	l_4	l_5	l_7	d_5	W	r_{1s}	dyn. C_r	stat. C_{0r} [4]	
°	min.		≈	min.			min.	N	N	
13	8	36,5	4	9	11	9	0,3	6 000	3 800	0,003 – 0,035
13	9	40,5	5	10	13	11	0,3	7 650	3 400	0,003 – 0,035
13	12	48,5	5	12	16	14	0,3	12 900	5 700	0,005 – 0,040
13	15	57,5	6,5	14	19	17	0,3	18 000	8 000	0,005 – 0,040
13	18	66,5	6,5	16	22	19	0,3	24 000	9 100	0,005 – 0,045
15	21	75,5	8	18	25	22	0,3	31 000	13 700	0,005 – 0,045
15	24	85,5	8	21	27	22	0,3	39 000	19 000	0,005 – 0,045
15	27	94,5	10	23	31	27	0,3	47 500	23 000	0,005 – 0,045
15	30	102,5	10	25	34	30	0,3	57 000	22 800	0,010 – 0,055
15	33	111,5	12	27	37	32	0,3	68 000	30 400	0,010 – 0,055
15	36	124,5	12	30	42	36	0,3	85 000	36 200	0,010 – 0,055
15	45	145,5	15	35	50	41	0,3	114 000	47 500	0,010 – 0,055

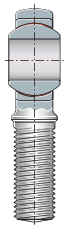

Rod ends

With external thread, maintenance-free
Dimension series K, type F

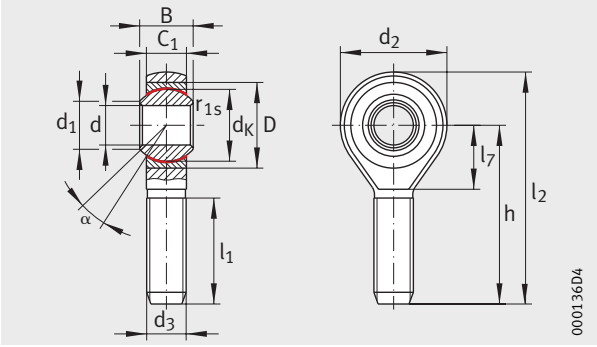

GAKSR..-PS
Corrosion-resistant steel/PTFE-bronze film

Dimension table · Dimensions in mm

Designation[1]	Mass	Dimensions							
	m	d[2]	D	B	d_K	d_1	d_2	d_3	h
	≈kg			−0,12			max.		
GAKSR5-PS	0,01	**5**$^{+0,012}$	13	8	11,1	7,7	19	M5	33
GAKSR6-PS	0,02	**6**$^{+0,012}$	16	9	12,7	8,9	21	M6	36
GAKSR8-PS	0,03	**8**$^{+0,015}$	19	12	15,8	10,3	25	M8	42
GAKSR10-PS	0,05	**10**$^{+0,015}$	22	14	19	12,9	29	M10	48
GAKSR12-PS	0,09	**12**$^{+0,018}$	26	16	22,2	15,4	33	M12	54
GAKSR14-PS	0,13	**14**$^{+0,018}$	28[3]	19	25,4	16,8	37	M14	60
GAKSR16-PS	0,19	**16**$^{+0,018}$	32	21	28,5	19,3	43	M16	66
GAKSR18-PS	0,26	**18**$^{+0,018}$	35	23	31,7	21,8	47	M18X1,5	72
GAKSR20-PS	0,34	**20**$^{+0,021}$	40	25	34,9	24,3	51	M20X1,5	78
GAKSR22-PS	0,44	**22**$^{+0,021}$	42	28	38,1	25,8	55	M22X1,5	84
GAKSR25-PS	0,59	**25**$^{+0,021}$	47	31	42,8	29,5	61	M24X2	94
GAKSR30-PS	1,06	**30**$^{+0,021}$	55	37	50,8	34,8	71	M30X2	110

1) For a left hand thread, the R is replaced by an L, for example GAKSL.
2) Bore tolerance H7 (arithmetic mean value).
3) Variation from DIN ISO 12 240-4, dimension series K, type F.
4) Basic static load rating of rod end.

					Chamfer dimension	Basic load ratings		Radial internal clearance
C_1	α °	l_1	l_2	l_7	r_{1s} min.	dyn. C_r N	stat. C_{0r} [4)] N	
6	13	19	42,5	9	0,3	6 000	1 800	0,003 – 0,035
6,75	13	21	46,5	10	0,3	7 650	2 500	0,003 – 0,035
9	13	25	54,5	12	0,3	12 900	4 600	0,005 – 0,040
10,5	13	28	62,5	14	0,3	18 000	7 300	0,005 – 0,040
12	13	32	70,5	16	0,3	24 000	9 100	0,005 – 0,045
13,5	15	36	78,5	18	0,3	31 000	13 700	0,005 – 0,045
15	15	37	87,5	21	0,3	39 000	19 000	0,005 – 0,045
16,5	15	41	95,5	23	0,3	47 500	23 000	0,005 – 0,045
18	15	45	104	25	0,3	57 000	22 800	0,010 – 0,055
20	15	48	112	27	0,3	68 000	30 400	0,010 – 0,055
22	15	55	125	30	0,3	85 000	36 200	0,010 – 0,055
25	15	66	146	35	0,3	114 000	47 500	0,010 – 0,055

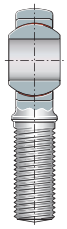

Notes

Notes

Notes

Schaeffler KG

Industriestrasse 1–3
91074 Herzogenaurach (Germany)
Internet www.ina.com
E-Mail info@schaeffler.com

In Germany:
Phone 0180 5003872
Fax 0180 5003873

From Other Countries:
Phone +49 9132 82-0
Fax +49 9132 82-4950

Schaeffler KG

Georg-Schäfer-Strasse 30
97421 Schweinfurt (Germany)
Internet www.fag.com
E-Mail FAGinfo@schaeffler.com

In Germany:
Phone 0180 5003872
Fax 0180 5003873

From Other Countries:
Phone +49 9721 91-0
Fax +49 9721 91-3435

Every care has been taken to ensure the correctness of the information contained in this publication but no liability can be accepted for any errors or omissions. We reserve the right to make technical changes.

© Schaeffler KG · 2008, June

This publication or parts thereof may not be reproduced without our permission.

MATNR 032983999-0000 / TPI 64 / GB-D / 2008062 / Printed in Germany by Hofmann Druck