Bearings for screw drives

Axial angular contact ball bearings
Needle roller/axial cylindrical roller bearings
Seal carrier assemblies
Precision locknuts

SCHAEFFLER GROUP
INDUSTRIAL

added competence

The right product for every application

=

Optimum benefit for you

With its forward-looking bearing arrangement solutions for feed spindles, main spindles, rotary tables and linear guidance units, Schaeffler KG has been at the forefront of the world market for decades. The bearing components alone, however, are often no longer the decisive factor for these machine subsystems.

Our customers have of course benefited directly from significant performance improvements and unique selling propositions thanks to our “ready-to-fit” products; these compact, ready-to-fit bearings are used in accordance with the simple principle: unpack, screw mount, use. In order to optimise the entire machine tool system, however, it is becoming ever more important not simply to support the subsystems but to integrate important functions such as measurement, sealing, lubrication, braking etc. in the components themselves. This intellectual approach is fulfilled comprehensively by the new concept **added competence** in the Production Machinery Sector since it attaches central importance to systems solution thinking for the bearing, bearing position and entire system. This means that you can now access a product range that gives optimum coverage for all your applications in the machine tool.

Since direct drives and mechatronic solutions are used ever more frequently in machine tools, we have incorporated a further strong partner in the form of IDAM – INA Drives & Mechatronics – in our spectrum of capabilities. In this way, we can now supply you from a single source with bearing elements and the appropriate drive system to give complete systems that are precisely matched to each other. This opens up completely new technical and economic design possibilities for your requirements as well as significant advantages in the time and process chain.

In terms of products, we offer you a comprehensive, precisely balanced range, precision technology and top product quality. In order to match the pulse of your developments as closely as possible, furthermore, we have a worldwide network of engineers, service and sales technicians working for you and ensuring that we maintain close contact with you in your own location.

In conclusion, we are convinced that we will always have the right product for your application. Just contact us to see what we can do for you.

added competence

Bearings for screw drives

Matrix for preselection of bearings **4**

The application-oriented matrix allows rapid preselection of the suitable bearing.

Axial angular contact ball bearings **6**

Axial angular contact ball bearings are precision bearings for screw drives. Depending on the series, they can support radial forces as well as axial forces from one or both sides. The inner ring is matched to the ball and cage assemblies and the outer ring. As a result, the bearings can be set to a defined axial preload. Contact seals protect the rolling element system against contamination and moisture. For higher speeds, gap seals can be used.

The bearings are available with and without fixing holes in the outer ring. Bearings with holes are screw mounted directly on the adjacent construction. This solution is particularly economical since there is no need for the locating bore otherwise required or for the bearing cover with the associated matching work.

For many applications, a bearing arrangement of lower precision is often sufficient. For this purpose, bearings with less stringent tolerances are available.

Needle roller/ axial cylindrical roller bearings **60**

These bearings are double direction precision axial cylindrical roller bearings with a radial bearing component. The inner ring, outer ring and cylindrical roller and cage assemblies are matched to each other such that they can be set to a defined axial preload using a precision locknut.

The bearings are available with and without fixing holes in the outer ring. Bearings with holes are screw mounted directly on the adjacent construction. The large contact surface and the small pitch of the holes allows a connnection to the adjacent construction that is extremely rigid and with low tendency to settling. The bearing cover that would otherwise be required to hold the bearing, and the matching work required, can therefore be dispensed with.

If the axial abutment of the shaft locating washer is not sufficient or a seal raceway is required, bearings with a stepped, extended shaft locating washer on one side are suitable.

Seal carrier assemblies Precision locknuts **88**

Seal carrier assemblies DRS are complete sealing sets that are screw mounted on the outer ring of needle roller/axial cylindrical roller bearings ZARF(L). They are precisely centred in this position and seal the bearings against external influences.

The precision locknuts AM, ZM, ZMA for axial or radial locking are used to set bearings for screw drives to a defined axial preload. They are also used where high axial forces must be supported and high runout accuracy and rigidity are required.

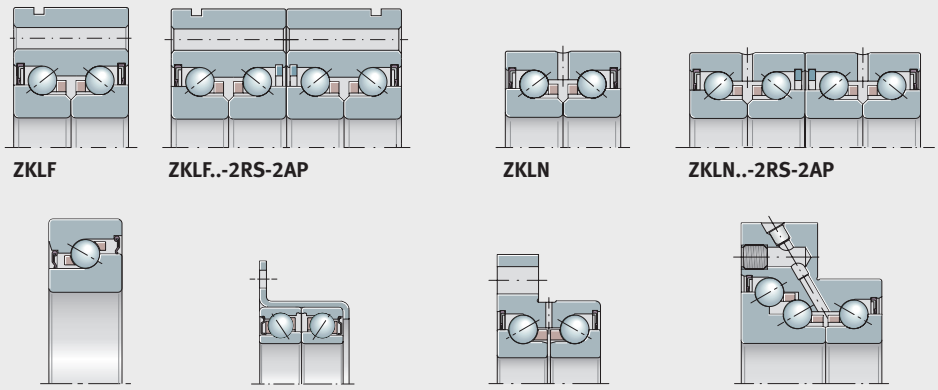

107 558a

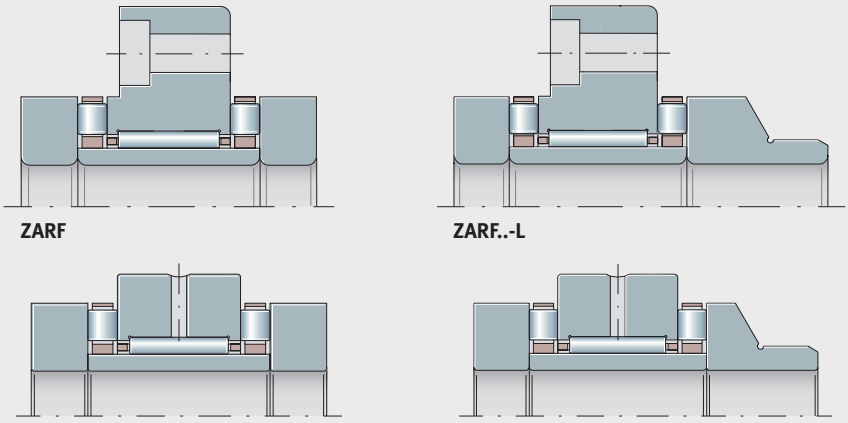

107 559

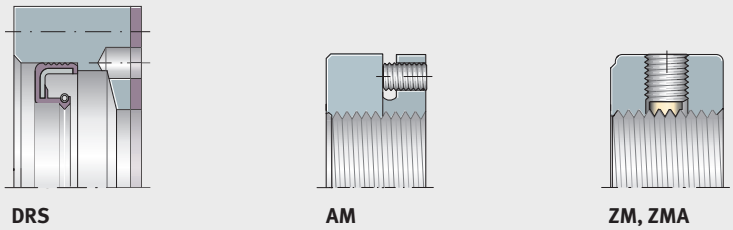

107 560

Matrix for preselection of bearings

Application	Series	
For standard applications	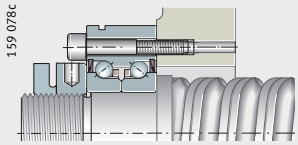 159 078c	**ZKLF..-2Z** **ZKLF..-2RS** **ZKLF..-2RS-PE**
	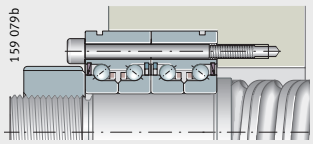 159 079b	**ZKLF..-2RS-2AP**
	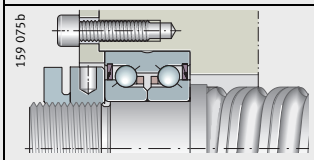 159 075b	**ZKLN..-2Z** **ZKLN..-2RS** **ZKLN..-2RS-PE**
	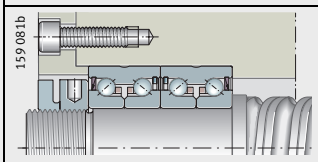 159 081b	**ZKLN..-2RS-2AP**
	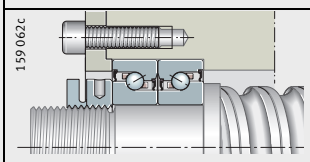 159 062c	**7602** **7602-2RS** **7603** **7603-2RS** **BSB** **BSB-2RS**
For special applications	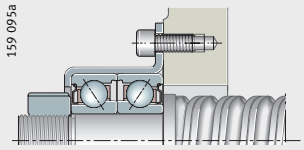 159 095a	**ZKLR..-2Z** **ZKLR..-2RS**
	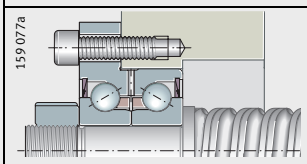 159 077a	**ZKLFA..-2Z** **ZKLFA..-2RS**
	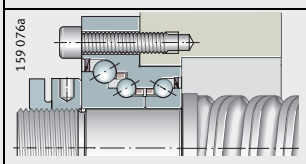 159 076a	**DKLFA..-2RS**
For applications requiring very high accuracy and rigidity	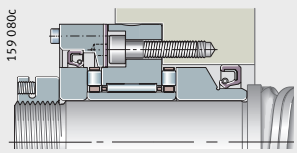 159 080c	**ZARF (L)**
	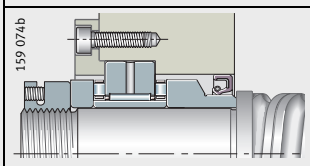 159 074b	**ZARN (L)**

Definition of symbols

+++ very good
++ good
+ satisfactory
– sufficient

Attention!

This selection matrix is a general overview for preliminary assessment of whether bearings can be considered for the required purpose.
For the specific application, the data in the product sections and the technical principles must always be taken into consideration.

Features	Characteristics					
	High runout accuracy	High speeds and low friction	High rigidity and load carrying capacity	Work on adjacent construction and mounting	Low lubricant consumption	For description see page
– Outer ring for flange mounting – Gap seals or contact seals on both sides – Greased, with relubrication facility – Most economical type of screw drive bearing arrangement	++ ++ +	+++ ++ ++	+ + +	+++ +++ +++	++ ++ ++	**10**
– As ZKLF, but in matched pair – Significantly higher load carrying capacity and rigidity than ZKLF	++	++	++	++	++	**11**
– Gap seals or contact seals on both sides – Greased, with relubrication facility – Easier to fit than single row bearings, e.g. for plummer block housings	++ ++ +	+++ ++ ++	+ + +	+ + +	++ ++ ++	**12**
– As ZKLN, but in matched pair – Significantly higher load carrying capacity and rigidity than ZKLN	++	++	++	+	++	**13**
– Open or sealed on both sides – Highly suitable for mounting in pairs to form wide range of contact angle combinations	++ ++ ++ ++ ++ ++	+++ ++ +++ ++ +++ ++	+ + + + + +	– – – – – –	++ ++ ++ ++ ++ ++	**14**
– Particularly economical alternative to solutions with individual ball bearings – Gap seals or contact seals on both sides – Simple to fit – For applications with comparatively low loads, but high positional accuracy	+ +	+++ ++	– –	+++ +++	++ ++	**15**
– Outer ring for flange mounting – Stepped outer ring with flattened areas on both sides – Gap seals or contact seals on both sides	++ ++	+++ ++	+ +	+++ +++	++ ++	**16**
– Higher load capacity on one side – Outer ring for flange mounting – Sealed on both sides – For vertical axes – For locating/locating bearing arrangements	+	++	++	+++	++	**17**
– Outer ring for flange mounting – Very high accuracy, rigidity and load carrying capacity – Bearing prepared for sealing	+++	+	+++	+	–	**63**
– Very high accuracy, rigidity and load carrying capacity – Bearing prepared for sealing	+++	+	+++	–	–	**64**

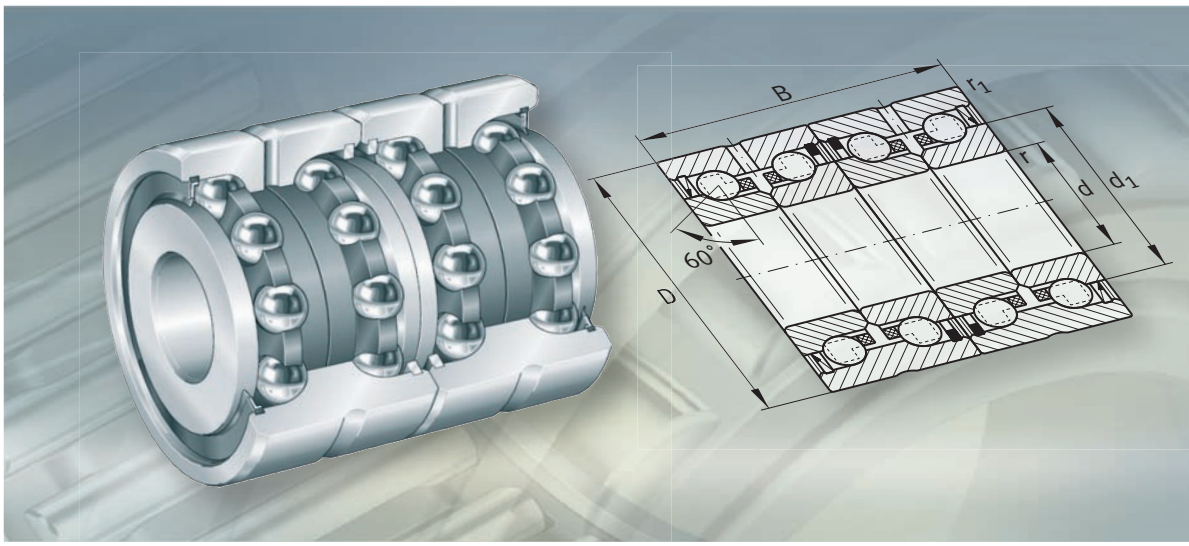

Axial angular contact ball bearings

Axial angular contact ball bearings

Page

Product overview

Axial angular contact ball bearings 8

Features

Double row, for screw mounting 10
Double row, not for screw mounting 12
Single row, for matching in pairs 14
Angular contact ball bearing unit, for screw mounting 15
Double row, with flange, for screw mounting 16
Triple row, with flange, for screw mounting 17
Operating temperature 18
Cages 18
Suffixes 18

Design and safety guidelines

Basic rating life 19
Static load safety factor 20
Maximum radial load on screw connections for ZKLF 26
Permissible static axial load for ZKLF 27
Design of adjacent construction 27
Speeds 27
Friction 28
Lubrication 29
Mounting guidelines 30

Dimension tables

Axial angular contact ball bearings
- for screw mounting 34
- for screw mounting, less stringent tolerances 36
- for screw mounting, matched pair 38
- not for screw mounting 40
- not for screw mounting, less stringent tolerances 44
- not for screw mounting, matched pair 46
- single direction 48
- single direction, sealed 52

Angular contact ball bearing units, for screw mounting 54

Double row axial angular contact ball bearings with flange, for screw mounting 56

Triple row axial angular contact ball bearings with flange, for screw mounting 58

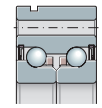

Double row, for screw mounting

Lip seals or gap seals

ZKLF..-2RS, ZKLF..-2Z

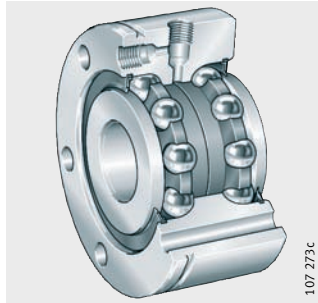

ZKLF..-2RS-PE

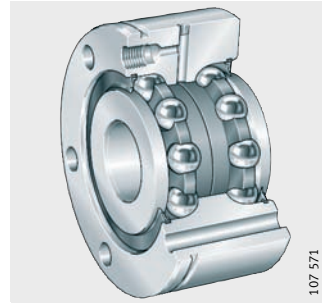

Matched pair

ZKLF..-2RS-2AP

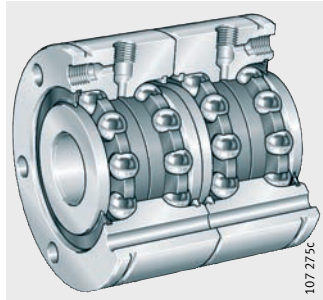

Double row, not for screw mounting

Lip seals or gap seals

ZKLN..-2RS, ZKLN..-2Z, ZKLN..-2RS-PE

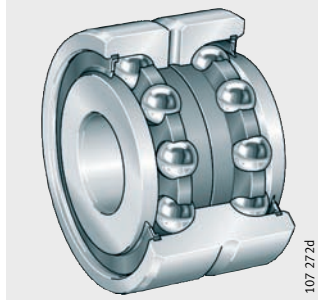

Matched pair

ZKLN..-2RS-2AP

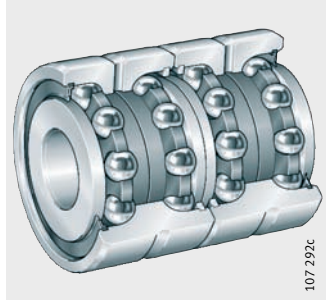

Single row, for matching in pairs

With or without lip seals

7602, 7603, BSB

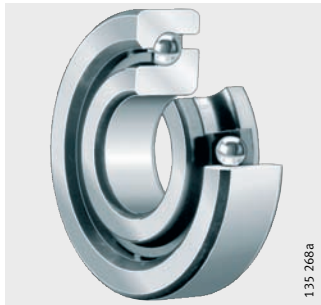

7602..-2RS, 7603..-2RS, BSB..-2RS

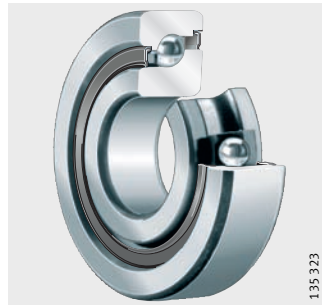

Angular contact ball bearing unit, for screw mounting

Lip seals or gap seals

ZKLR..-2RS, ZKLR..-2Z

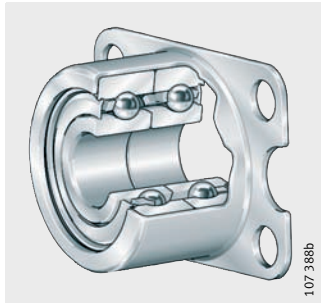

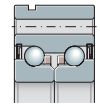

Double or triple row, flange with flattened areas, for screw mounting

Double row
Lip seals or gap seals

ZKLFA..-2RS, ZKLFA..-2Z

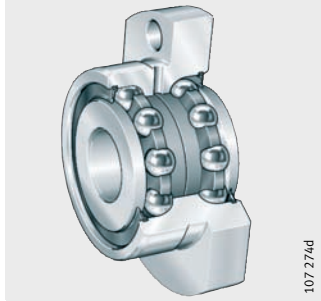

Triple row
Lip seals

DKLFA..-2RS

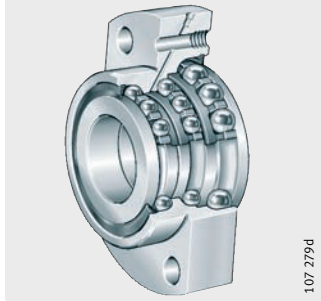

Axial angular contact ball bearings

Features

Screw drive bearing arrangements are subjected to requirements that often cannot be optimally fulfilled by the design construction of conventional bearings.

For the design of bearing arrangements for the highly dynamic operating conditions in screw drives that have high accuracy, high load carrying capacity, high rigidity, low friction, are easy to fit and maintenance-free or low-maintenance, there is a wide range of INA and FAG axial angular contact ball bearings. With this product range, solutions can be found to all the technical and economic demands placed on the bearing arrangements of screw drives.

Single row and multi-row designs

Axial angular contact ball bearings are available as single, double or triple row ready-to-fit units. They are self-retaining and comprise thick-walled, geometrically stable outer rings, ball and cage assemblies and one-piece or two-piece inner rings. In several series, the outer ring has through holes for simple flange mounting to the adjacent construction.

The bearing rings are matched to each other such that a defined preload is achieved when the rings are clamped in place using a precision locknut.

Radial and axial load carrying capacity

Due to the contact angle of 60°, the bearings can support not only radial forces but high axial forces as well.

Double row, for screw mounting

Axial angular contact ball bearings ZKLF are screw mounted directly on the adjacent construction or in a radial locating bore, *Figure 1* and *Figure 2*, page 11. The cover that would otherwise be required and the associated matching work can therefore be dispensed with.

In order to aid removal of the bearings from a locating bore, the outer ring has a circumferential extraction slot.

Relubrication is facilitated by radial and axial threaded connectors with detachable grub screws.

ZKLF..-2RS
ZKLF..-2Z

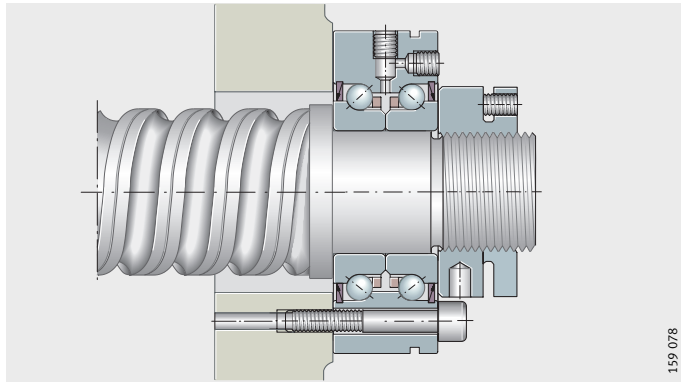

Figure 1
Outer ring screw mounted on flat adjacent construction, preloaded using locknut

With less stringent tolerances

Axial angular contact ball bearings ZKLF..-2RS-PE correspond to series ZKLF but have a runout tolerance within P5 to DIN 620, less stringent diameter tolerances and the suffix PE.
They are used where a lower positional accuracy is acceptable. As a result, the adjacent construction does not need to be as accurate with these bearings.

Relubrication is facilitated by an axial threaded connector. The radial lubrication duct is firmly closed off.

ZKLF..-2RS-PE

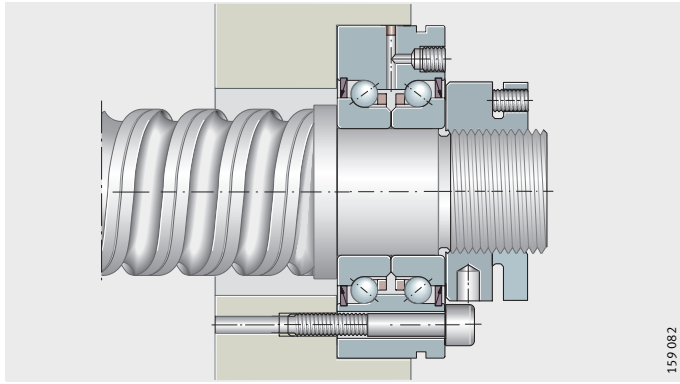

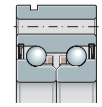

Figure 2
Outer ring screw mounted in bore, preloaded using locknut

Heavy series

Axial angular contact ball bearings ZKLF..-2RS and ZKLF..-2Z are also available in a heavy series. For the same shaft diameter, they have a larger cross-section and thus higher basic load ratings.

Matched pairs

Bearings of series ZKLF..-2RS-2AP comprise a matched pair of bearings ZKLF..-2RS, *Figure 3*. The individual bearings are matched to each other.

Matched bearings have an arrow marking on the outside surface of the outer rings. When the bearings are arranged correctly, the lip seals face outwards. During fitting, the hole pattern of the two bearings must match, not the marking.

ZKLF..-2RS-2AP

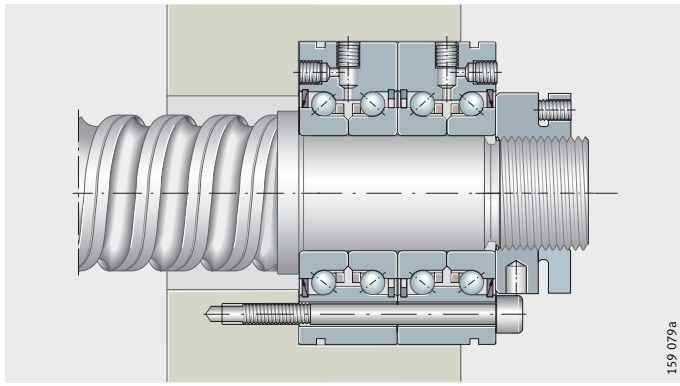

Figure 3
Matched pair, outer ring screw mounted in bore, preloaded using locknut

Seals

Bearings with the suffix 2RS have lip seals and highly effective sealing.

Bearings with the suffix 2Z are sealed using gap seals and are suitable for higher speeds.

Lubrication

The bearings are greased using a lithium soap grease to GA28 and can be lubricated via the lubrication connectors in the outer ring. For the majority of applications, the initial greasing is sufficient for the whole bearing operating life.

Double row, not for screw mounting

Axial angular contact ball bearings ZKLN are mounted in a housing bore, *Figure 4*. The bearing outer ring is axially located by a cover.

ZKLN..-2RS
ZKLN..-2Z

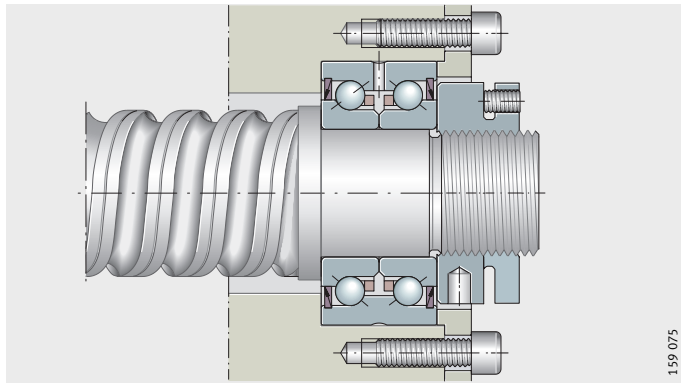

Figure 4
Outer ring located using cover, preloaded using locknut

With less stringent tolerances

Axial angular contact ball bearings ZKLN..-2RS-PE correspond to series ZKLN but have a runout tolerance within P5 to DIN 620, less stringent diameter tolerances and the suffix PE.
They are used where a lower positional accuracy is acceptable. As a result, the adjacent construction does not need to be as accurate with these bearings.

Heavy series

Axial angular contact ball bearings ZKLN..-2RS and ZKLN..-2Z are also available in a heavy series. For the same shaft diameter, they have a larger cross-section and thus higher basic load ratings.

Matched pairs

Bearings of series ZKLN..-2RS-2AP comprise a matched pair of bearings ZKLN..-2RS, *Figure 5*. The individual bearings are matched to each other.

Matched bearings have an arrow marking on the outside surface of the outer rings. When the bearings are arranged correctly, the lip seals face outwards.

The bearing outer rings are axially clamped by a cover, *Figure 5*.

ZKLN..-2RS-2AP

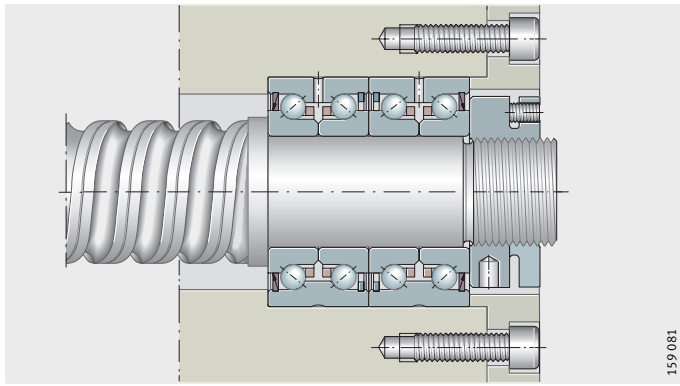

Figure 5
Matched pair,
outer rings located using cover,
preloaded using locknut

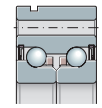

Seals

Bearings with the suffix 2RS have lip seals and highly effective sealing.

Bearings with the suffix 2Z are sealed using gap seals and are suitable for higher speeds.

Lubrication

The bearings are greased using a lithium soap grease to GA28 and can be lubricated via a lubrication slot and lubrication holes in the outer ring. For the majority of applications, the initial greasing is sufficient for the whole bearing operating life.

Single row, for matching in pairs

Bearings 7602, 7603 and BSB are designed as universal bearings, *Figure 6* and *Figure 7*.

They can be combined in a wide range of sets for different requirements, *Figure 7*.

7602..-2RS, 7603..-2RS, BSB..-2RS

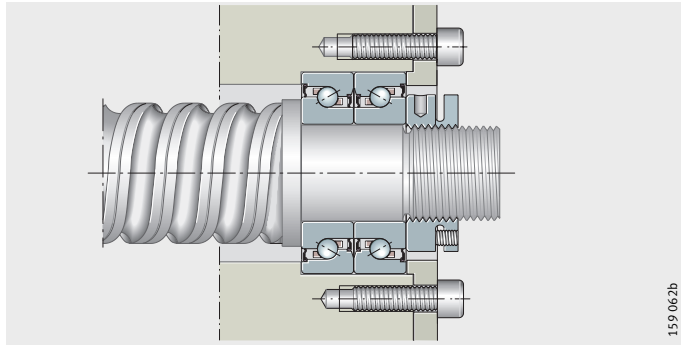

Figure 6
Single row axial angular contact ball bearings, two-bearing set in O arrangement

7602, 7603, BSB

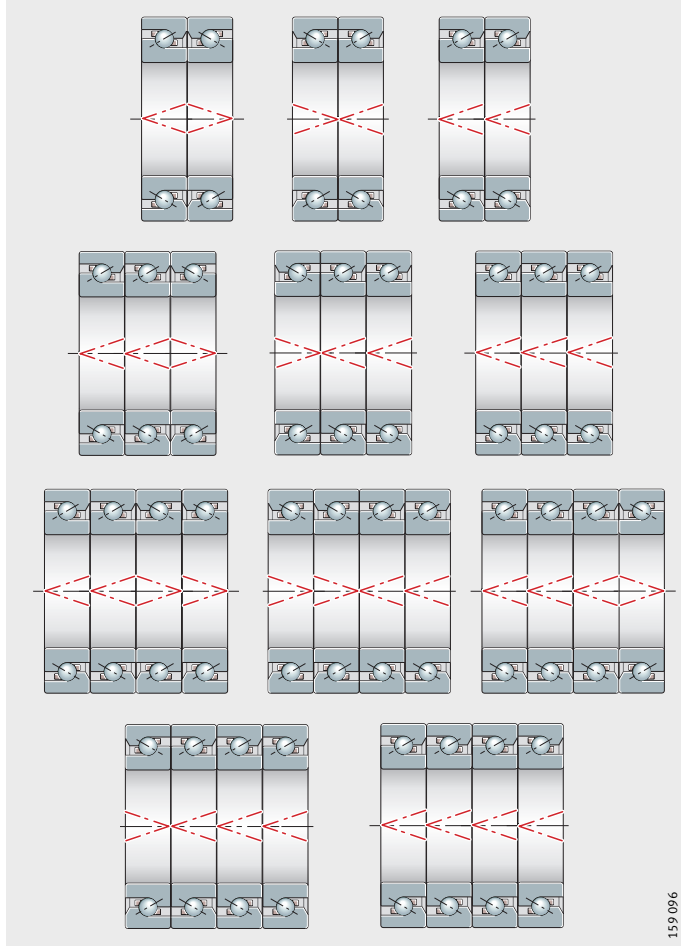

Figure 7
Set combinations

Seals

Single row axial angular contact ball bearings for matching are bearings of the open basic design. However, some sizes are fitted with seals.

Lubrication

Single row axial angular contact ball bearings of the open basic design are not supplied greased. The designs fitted with seals are greased for life with Arcanol L55.

Angular contact ball bearing unit, for screw mounting

Angular contact ball bearing units ZKLR are low-cost bearings and therefore particularly economical. They comprise a deep drawn sheet steel housing with an integral matched pair of angular contact ball bearings in an X arrangement, *Figure 8*.
The housing has a Corrotect® coating and is thus protected against rust. The ball bearings are sealed on both sides by lip seals or gap seals. The bearing assembly is preloaded clearance-free.

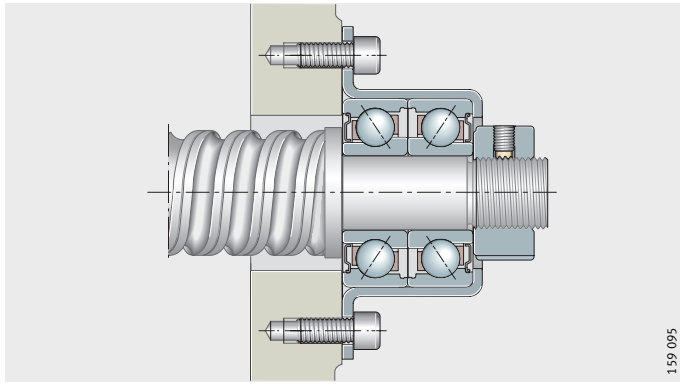

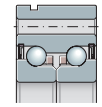

ZKLR..-2RS
ZKLR..-2Z

Figure 8
Angular contact ball bearing unit

Particularly easy to fit

The units are particularly easy to fit.
They:

- are directly flange mounted, for example on the milled face of the adjacent construction. This eliminates the need for precise, costly fits and additional flange covers for seating and axial location of the bearings
- require no additional parts for location of the bearings in the housing
- reduce errors in fitting due to the smaller number of components compared to conventional solutions
- are self-aligning by means of the screw drive nut during fitting. This effectively eliminates any warping due to misalignment of the bearing seats
- have a defined preload. It is not necessary to preload the bearing during fitting as is usually the case with screw drive bearing arrangements
- require only clearance-free axial location on the threaded spindle.

Seals

Bearings with the suffix 2RS have lip seals and highly effective sealing. Bearings with the suffix 2Z are sealed using gap seals and are suitable for higher speeds.

Lubrication

The bearings are greased using a lithium soap grease to DIN 51825–K2N–40.

Operating limits

The units are highly suitable, due to their dimensions and design, for space-saving and simple bearing arrangements in highly dynamic screw drives, for example:

- in inspection and measuring equipment
- in small machine tools
- in medical and laboratory equipment
- in precision engineering and electronic components manufacture
- where complete units will give a simpler bearing arrangement.

Double row, with flange, for screw mounting

Series ZKLFA has a stepped outer ring. It can therefore be screw mounted easily on the adjacent construction, *Figure 9*.
The flange has flattened areas on both sides, so the radial design envelope in the adjacent construction can be kept very small.

ZKLFA..-2RS
ZKLFA..-2Z

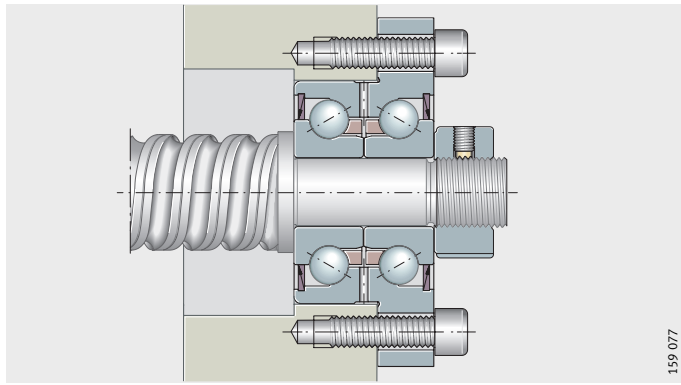

Figure 9
Outer ring screw mounted on adjacent construction, preloaded using locknut

Seals

Bearings with the suffix 2RS have lip seals and highly effective sealing. Bearings with the suffix 2Z are sealed using gap seals and are suitable for higher speeds.

Lubrication

The bearings are greased using a lithium soap grease to GA28 and can be lubricated via a lubrication groove and lubrication holes in the outer ring. For the majority of applications, the initial greasing is sufficient for the whole bearing operating life.

Triple row, with flange, for screw mounting

Axial angular contact ball bearings DKLFA..-2RS have, in addition to two rows of balls with a contact angle of 60° in an O arrangement, an extra row of balls, *Figure 10*. Due to this additional row, the bearings can support higher axial loads in one direction.

Due to the stepped outer ring, the bearings can be easily flange mounted on the adjacent construction. The flange has flattened areas on both sides. As a result, it requires only a small design envelope in the adjacent construction.

DKLFA..-2RS

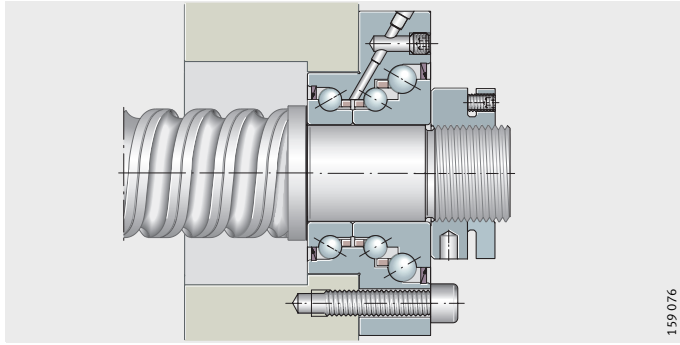

Figure 10
Outer ring screw mounted on adjacent construction, preloaded using locknut

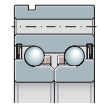

In order to make full use of the load carrying capacity of bearings DKLFA..-2RS, their design requires that they are subjected to continuous load in the main load direction. They are therefore used mainly in screw drives with a locating/locating bearing arrangement and tensioned spindles or in vertically arranged screw drive bearing arrangements.

For design of the bearing arrangement, please contact us.

Seals

Triple row axial angular contact ball bearings have lip seals on both sides.

Lubrication

The bearings are greased using a lithium soap grease to GA28. If necessary, lubrication can be carried out via a threaded connector for central lubrication systems on the flange side.

For calculation of relubrication intervals based on a stated load spectrum (speed, load, operating duration, environmental conditions), please contact us.

Operating temperature

Sealed axial angular contact ball bearings are suitable for operating temperatures from –30 °C to +120 °C, restricted by the grease, the seal material and the plastic cages in the ball and cage assemblies.

The operating temperature influences the dynamic bearing characteristics. The values given in the dimension table are based on a room temperature of +20 °C.

Cages

The axial angular contact ball bearings have plastic cages. The cage design is not indicated in the suffix.

In series 7602, 7603 and BSB, the polyamide cages are indicated by the suffix TVP or T.

Suffixes

Suffixes for the available designs: see table.

Available designs

Suffix	Description	Design
PE	Less stringent bearing design	Standard
T, TVP	Polyamide cage, guided by balls	
2AP	Axial angular contact ball bearings, matched pair (ZKLN, ZKLF)	
2RS	Contact seals on both sides	
2Z	Gap seals on both sides	

Design and safety guidelines

Basic rating life

The decisive factors in determining the bearing size are the basic rating life, the static load safety factor and the axial limiting load. The basic rating life L and L_h are calculated as follows:

$$L_{10} = \left(\frac{C}{P}\right)^p$$

$$L_{10h} = \frac{16\,666}{n} \cdot \left(\frac{C}{P}\right)^p$$

L_{10} 10^6 revolutions
Basic rating life in millions of revolutions

L_{10h} h
Basic rating life in operating hours

C_r, C_a N
Basic dynamic radial or axial load rating according to dimension table
C_r is valid for a contact angle $\alpha \leqq 45°$,
C_a is valid for a contact angle $\alpha > 45°$

P N
Equivalent dynamic bearing load

p –
Life exponent p = 3

n min^{-1}
Operating speed.

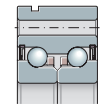

Resultant and equivalent bearing load P for ZKLR

Bearing unit Designation	Factor P
ZKLR0624-2Z	$P = 140 + 0{,}13\ F_a^{1,4} + 0{,}003 \cdot F_r^{1,9}$
ZKLR0828-2Z	$P = 210 + 0{,}28\ F_a^{1,27} + 0{,}002 \cdot F_r^{1,9}$
ZKLR1035-2Z	$P = 240 + 0{,}47\ F_a^{1,17} + 0{,}0015 \cdot F_r^{1,9}$
ZKLR1244-2RS	$P = 580 + 0{,}046\ F_a^{1,3} + 0{,}076 \cdot F_r^{1,28}$
ZKLR1547-2RS	$P = 540 + 0{,}011\ F_a^{1,5} + 0{,}022 \cdot F_r^{1,45}$
ZKLR2060-2RS	$P = 960 + 0{,}0082\ F_a^{1,5} + 0{,}017 \cdot F_r^{1,45}$

Static limiting load diagrams for ZKLR

The easy-to-use static limiting load diagrams allow quick verification of the bearing size of series ZKLR, as a function of the axial and radial operating load, *Figure 21* to *Figure 23*, page 25.
The decisive requirement is that the intersection between the axial and radial load must be below the limit line.

Example: If the operating loads F_a and F_r are below the limit line, the bearing size is suitable for the application,
see example *Figure 23*, page 25.

Resultant and equivalent bearing load P for ZKLN, ZKLF, ZKLFA, DKLFA, BSB, 7602, 7603

The bearings are axially preloaded to a defined value if the recommended precision locknuts are used and the correct nut tightening torque is applied. The resultant axial bearing load $F_{a\,res}$ is determined from the axial operating load F_{aB} and taking account of the axial preload according to *Figure 11*, page 21, to *Figure 15*, page 22. For 7602, 7603 and BSB, the $F_{a\,res}$ diagrams are based on two-bearing sets in an O or X arrangement, see page 14.
For calculation of other set combinations, please contact us.

A load in excess of the limit value will lead to the rolling element row without load lifting off the raceway. As a result, higher wear will occur under rapid acceleration. For extreme moment loads and statically overdefined systems (locating/locating bearing arrangements), please contact us. The calculation program BEARINX® can give a precise design in this case.

Axial and radial operating loads

Under purely axial load, $P = F_{a\,res}$. If additional radial operating loads are present, P must be calculated as follows:

$$P = X \cdot F_r + Y \cdot F_{a\,res}$$

The values X and Y are given in the following table.

Factors X and Y

Load ratio	Factor	
	X	Y
$\frac{F_{a\,res}}{F_r} \leqq 2{,}17$	1,9	0,55
$\frac{F_{a\,res}}{F_r} > 2{,}17$	0,92	1

Load varying in steps

In this case, P and n are calculated as follows (q = time portion %):

$$P = \sqrt[p]{\frac{q_1 \cdot n_1 \cdot P_1^{\,p} + \ldots + q_z \cdot n_z \cdot P_z^{\,p}}{q_1 \cdot n_1 + \ldots + q_z \cdot n_z}}$$

$$n = \frac{q_1 \cdot n_1 + \ldots + q_z \cdot n_z}{100}$$

Static load safety factor

The static load safety factor S_0 indicates the security against impermissible permanent deformations in the bearing:

$$S_0 = \frac{C_0}{P_0}$$

S_0 –
Static load safety factor
C_{0r}, C_{0a} N
Basic static radial or axial load rating according to dimension table
C_{0r} is valid for a contact angle $\alpha \leqq 45°$,
C_{0a} is valid for a contact angle $\alpha > 45°$
P_0 N
Maximum static load of bearing.

In machine tools, S_0 should be $\geqq 4$.

Resultant bearing load $F_{a\ res}$

Example (red lines)
Bearing ZKLN1545
Axial operating load $F_{aB} = 1500$ N
$F_{a\ res} \approx 1750$ N
Loading by operating load and preload

F_{aB} = operating load
$F_{a\ res}$ = resultant bearing load
° = limit value

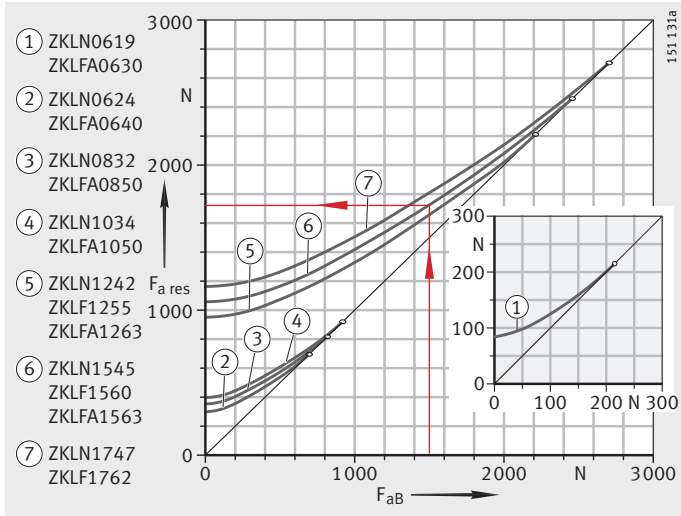

Figure 11
Resultant bearing load
ZKLN, ZKLF and ZKLFA,
up to d = 17 mm

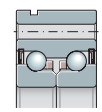

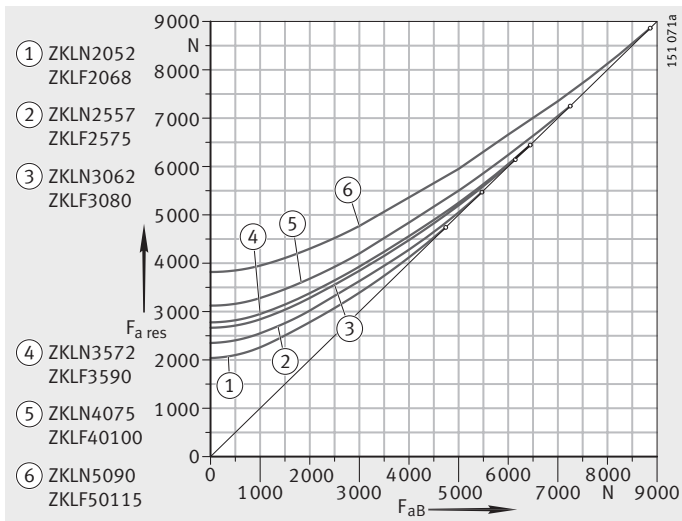

F_{aB} = operating load
$F_{a\ res}$ = resultant bearing load
° = limit value

Figure 12
Resultant bearing load
ZKLN, ZKLF,
from d = 20 mm to 50 mm

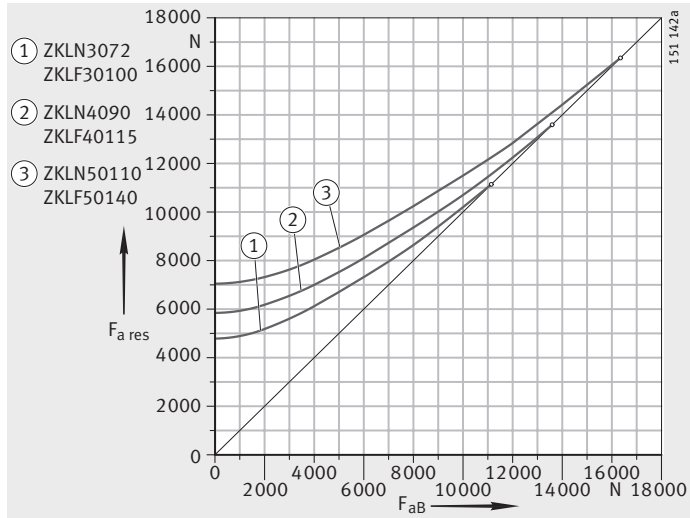

F_{aB} = operating load
$F_{a\,res}$ = resultant bearing load
° = limit value

Figure 13
Resultant bearing load
ZKLN, ZKLF, heavy series

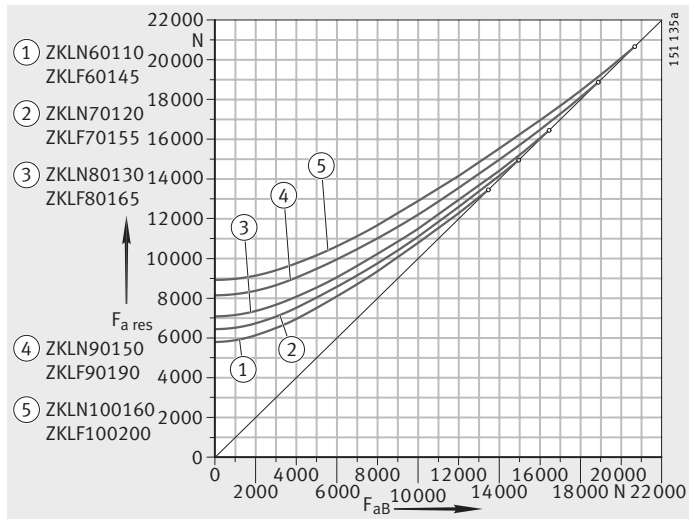

F_{aB} = operating load
$F_{a\,res}$ = resultant bearing load
° = limit value

Figure 14
Resultant bearing load
ZKLN, ZKLF, from d = 60 mm

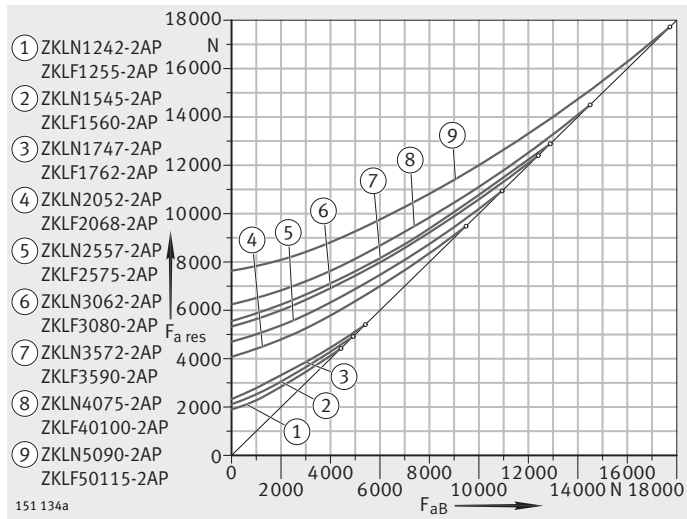

F_{aB} = operating load
$F_{a\,res}$ = resultant bearing load
° = limit value

Figure 15
Resultant bearing load
ZKLN..-2AP and ZKLF..-2AP

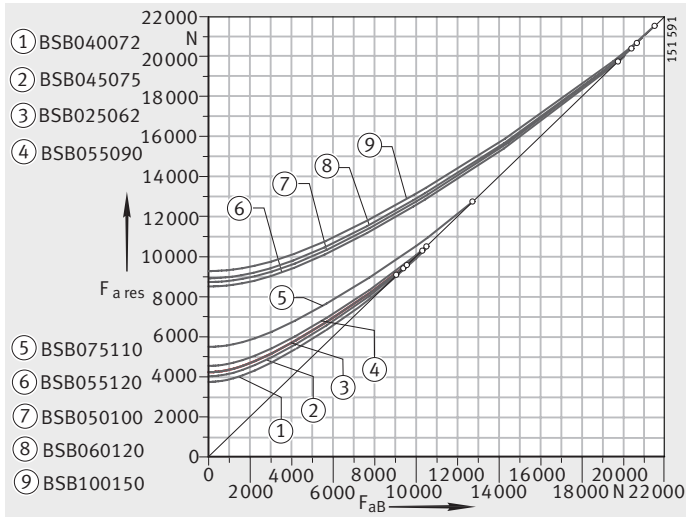

F_{aB} = operating load
$F_{a\,res}$ = resultant bearing load
° = limit value

Figure 16
Resultant bearing load
BSB

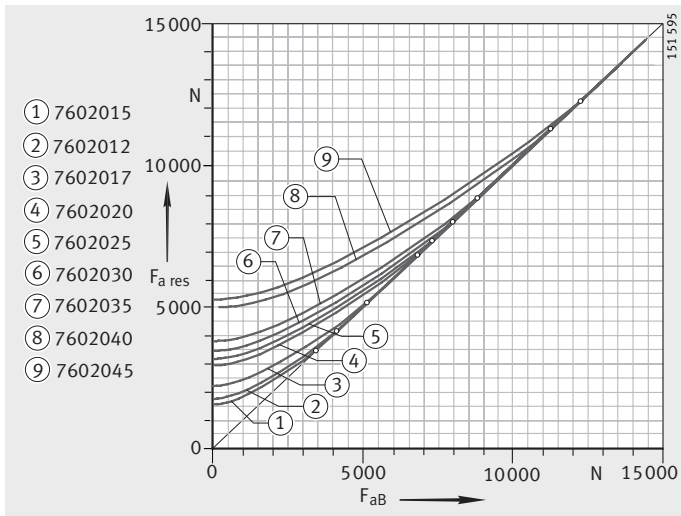

F_{aB} = operating load
$F_{a\,res}$ = resultant bearing load
° = limit value

Figure 17
Resultant bearing load
7602012 to 7602045

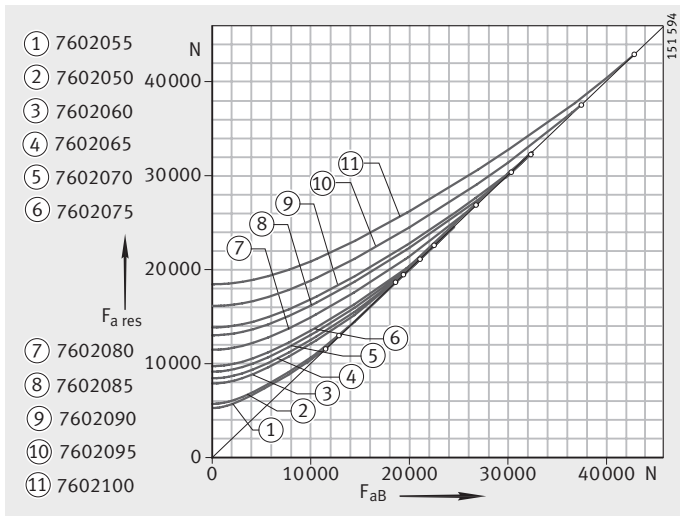

F_{aB} = operating load
$F_{a\,res}$ = resultant bearing load
° = limit value

Figure 18
Resultant bearing load
7602050 to 7602100

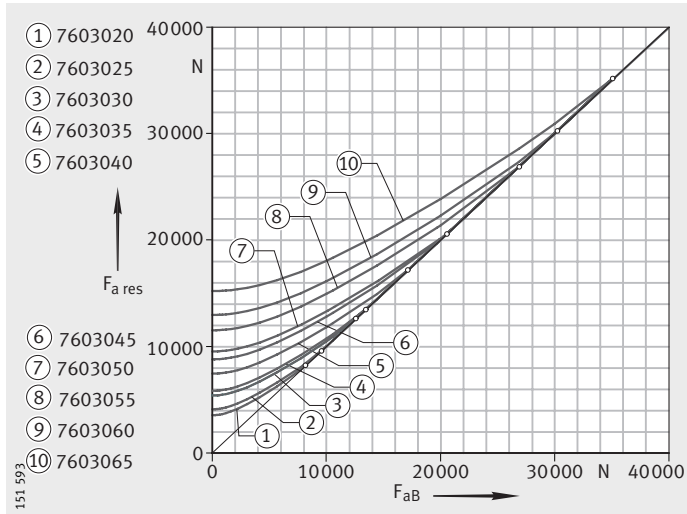

F_{aB} = operating load
$F_{a\,res}$ = resultant bearing load
° = limit value

Figure 19
Resultant bearing load
7603020 to 7603065

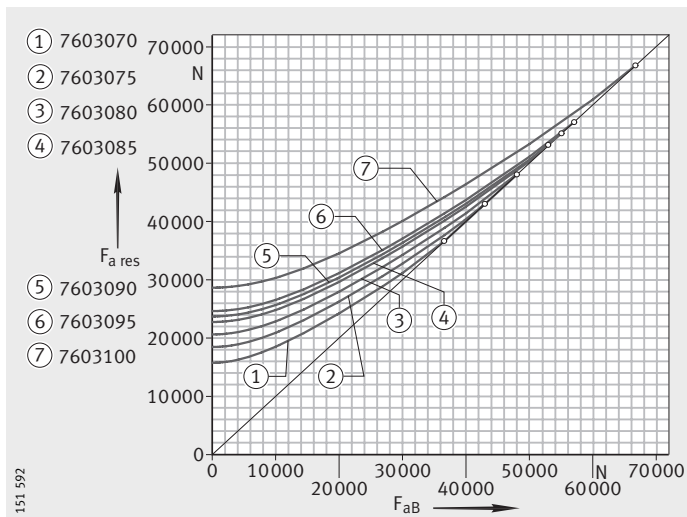

F_{aB} = operating load
$F_{a\,res}$ = resultant bearing load
° = limit value

Figure 20
Resultant bearing load
7603070 to 7603100

F_a = axial load
F_r = radial load

Figure 21
Static limiting load diagrams
ZKLR

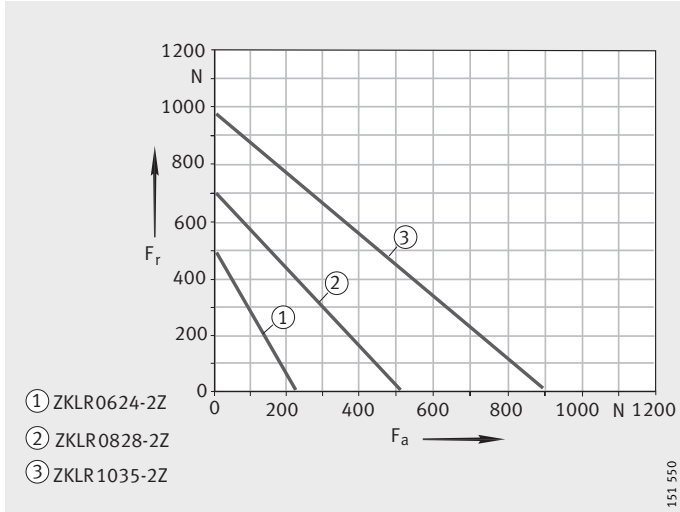

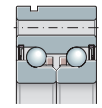

F_a = axial load
F_r = radial load

Figure 22
Static limiting load diagrams
ZKLR

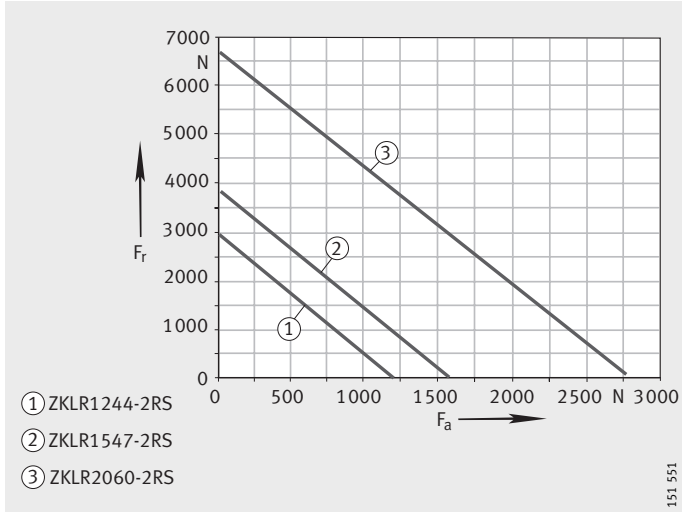

F_a = 300 N
F_r = 600 N
Bearing is suitable in static terms since the intersection F_a/F_r is below the limit line

Figure 23
Static limiting load diagram – example ZKLR1035-2Z

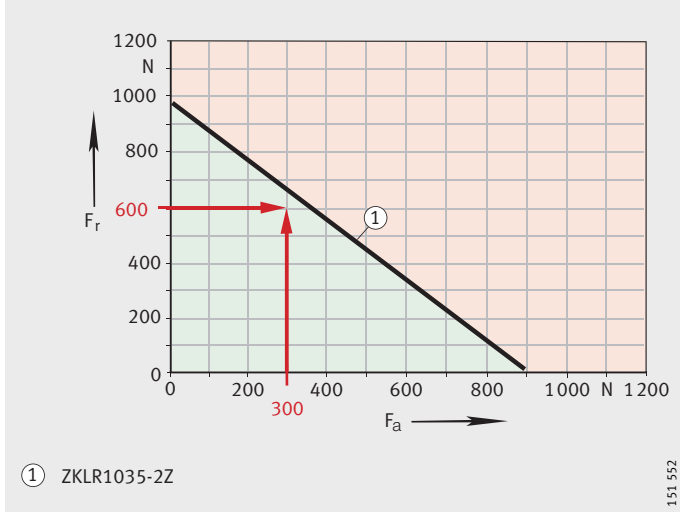

Maximum radial load on screw connections for ZKLF

If bearings of series ZKLF are screw mounted on a flat adjacent construction, the maximum radial load that can be supported by the screw connections must be taken into consideration.

If the screws used are as stated in the dimension tables to DIN EN ISO 4 762, the maximum radial load that can be supported before the outer ring moves, in the case of dry components, is restricted to $\approx 0{,}1 \times C_{0a}$. If the outer ring is additionally bonded in place using, for example, Loctite 638, the maximum radial load that can be supported increases to approx. $\approx 0{,}5 \times C_{0a}$.

If the maximum radial loads that can be supported (without any axial load content) are considered in relation to the rolling element set, it can be seen that:

- With a static load safety factor of $S_0 \geqq 4$ as required for machine tools, the load that can be supported by the screw connections of the outer ring is in any case greater than the radial load as restricted by the rolling element set.

This means that (at least in theory) radial loads can be supported that, in relation to the rolling element set, will lead to a static load safety factor of $S_0 \leqq 1$ (incipient plastic deformation of rolling elements), if the outer ring is additionally bonded in place.

This means that, under normal design criteria and with the decisive static load safety factor for the corresponding areas of application (e.g. $S_0 = 4$ for machine tools), the rolling element set is always the decisive criterion.

Permissible static axial load for ZKLF

For bearings of series ZKLF, the permissible static axial load in the direction of the screw connections, *Figure 24*, is:

$$P_{0\,per} \leqq \frac{C_{0a}}{2}$$

The basic static axial load rating C_{0a} is stated in the dimension tables.

ZKLF

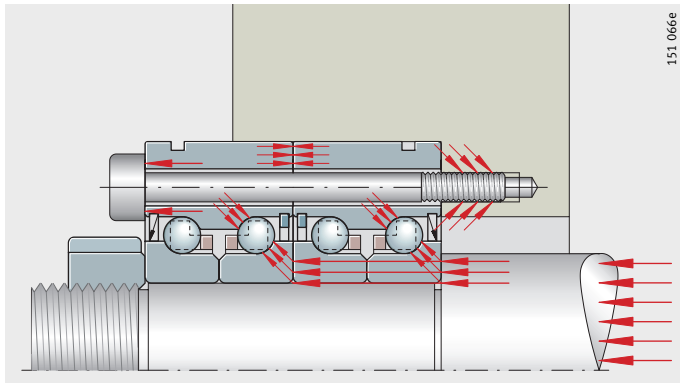

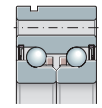

Figure 24
Static axial load in the direction of the screw connections

Design of adjacent construction

The adjacent construction (the shaft and housing) must be designed in accordance with the data in the dimension tables.

The abutment diameters for the shaft and housing shoulders d_a and D_a must be in accordance with the dimension tables.

D_a and d_a are recommended minimum abutment diameters. If these values are not used, the rib diameter d_1 according to the dimension table must be observed.

Matched bearings

In matched bearing pairs of series ZKLN and ZKLF, the depth of the housing bore must be defined such that the outer ring of the outermost bearing is radially supported to at least $^1/_4$ of its width.

Speeds

The limiting speeds n_G given in the dimension tables are based on the following conditions:

- bearing preloaded, no external operating load
- operating duration 25%
- max. equilibrium temperature +50 °C.

Under favourable environmental influences, a bearing with gap seals (suffix 2Z) can be used instead of contact seals. The limiting speed of these bearings is approximately twice that of axial angular contact ball bearings with contact seals.

Friction

In most applications, preloading of bearings by means of the locknut tightening torque gives sufficiently accurate setting values. The reference here is the tightening torque M_A according to the dimension table in conjunction with an INA precision locknut.

The frictional torque M_{RL} given in the dimension tables is a guide value. The frictional torques are based, for bearings of series ZKLN, ZKLF, ZKLFA, DKLFA, 7602..-2RS, 7603..-2RS, BSB..-2RS and ZKLR on grease lubrication, measured at a speed of $n = 5\ min^{-1}$.

For unsealed bearings of series 7602, 7603 and BSB, the frictional torque M_{RL} is based on lightly oiled raceways.

For dimensioning of the drive, the starting frictional torque and the frictional torque at high speeds of 2 to $3 \times M_{RL}$ must be taken into consideration.

Seal friction

In axial angular contact ball bearings with contact seals (suffix 2RS), the extent of seal friction must not be neglected. Sealing influences the limiting speeds.

Frictional energy

The frictional energy N_R of the bearings can be calculated as follows:

$$N_R = \frac{M_{RL} \cdot n}{9{,}55}$$

N_R Frictional energy	W
M_{RL} Bearing frictional torque	Nm
n Operating speed.	min^{-1}

In any analysis of the thermal balance, the various operating speeds n_i and their corresponding time portions q_i must be taken into consideration.

Lubrication

Bearings for screw drives can be lubricated with grease or oil. In machine tools, however, the mean bearing temperature should not exceed +50 °C. If this is the case, a lubrication method without heat dissipation such as grease lubrication or oil impulse lubrication can be selected.

For higher bearing temperatures and open bearings, recirculating oil lubrication should be used.

Grease lubrication

Bearings with a relubrication facility of series ZKLN, ZKLF, ZKLFA and DKLFA are greased with a lithium soap grease to GA28 and are preferably run with grease lubrication. In most cases, the initial greasing is sufficient for the whole operating life of the bearing.

Under certain application conditions, relubrication may be necessary. In this case, Arcanol MULTITOP is suitable. The initial greasing is compatible with greases with a mineral oil base.

For checking by calculation of the grease operating life or relubrication interval, please contact us.

Relubrication interval

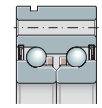

The relubrication intervals cannot be determined precisely in advance. They are essentially dependent on the operating conditions and the environmental influences such as temperature, contamination, dust, water, etc.

Bearings must always be relubricated:

- before and after long stoppage periods
- in conditions of high humidity
- within the defined lubrication intervals as stated in the technical proposal letter.

For the following conditions, please contact us:

- if the bearings are stationary
- if vibration is present
- if very small oscillating movements occur.

Relubrication quantity

If bearings of series ZKLN, ZKLF, ZKLFA and DKLFA must be relubricated due to the application conditions, please contact us regarding the relubrication quantities.

Oil lubrication

Other lubrication methods such as oil impulse lubrication or recirculating oil lubrication are also possible. For oil lubrication, good results have been obtained with oils CLP to DIN 51 517 and HLP to DIN 51 524 of ISO-VG 32 to ISO-VG 100.

If oil impulse lubrication is intended for series ZKLN and ZKLF, gap seals are advantageous. They prevent contamination entering the bearing and allow oil to leave the bearing. This prevents overlubrication.

Mounting guidelines

Bearings should only be fitted and dismantled in accordance with the Fitting and Maintenance Manual TPI 100. This TPI is available upon request.

During fitting of bearings, mounting forces should be applied only to the bearing ring to be fitted. Mounting forces must never be directed through the rolling elements or sealing rings.

The characteristics of the bearings are only valid when used in combination with INA precision locknuts and the associated tightening torques given in the dimension tables.

Axial angular contact ball bearings are self-retaining and the individual bearing components are matched to each other. The inner rings must not removed from the bearing during fitting and dismantling. If individual bearing components are removed from the bearing, please contact us before carrying out any reassembly.

Location of outer ring using ring nut for ZKLN, 7602, 7603, BSB

Axial angular contact ball bearings ZKLN, 7602, 7603 and BSB must be located clearance-free in the housing and on the shaft and must be axially preloaded during fitting. The axial preload force must be distributed evenly over the circumference in order to avoid deformation of the raceways.

Outer rings are axially tensioned to the preload force given in the dimension table by means of a ring nut (not supplied), *Figure 25*. Secure the ring nut against loosening (using, for example, Loctite 638).

Ring nuts with a runout of max. 5 µm apply the preload force evenly over the bearing rings and should therefore be used in preference to location by means of a cover.

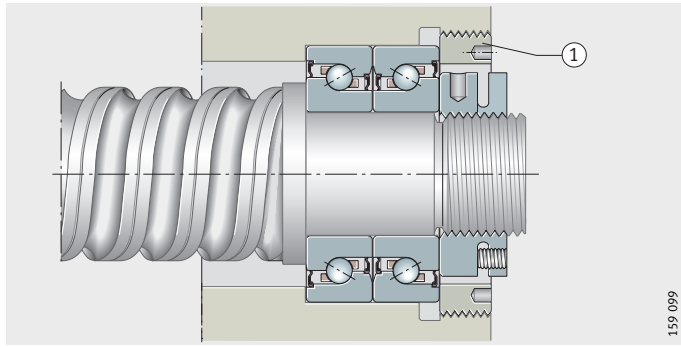

ZKLN, 7602, 7603, BSB

① Ring nut

Figure 25
Two-bearing set in O arrangement, locknut, ring nut

Location of outer ring using a cover

Clamping of the outer rings using a cover and cap screws leads to deformation of the raceways, *Figure 26*. In order to minimise the deformation and achieve the calculated life:

- the cover should be designed with adequate rigidity
- the number of fixing screws should be selected in accordance with the load but at least four should be used
- the screws should be tightened in a cross-wise sequence in four stages (finger tight, 40%, 70%, 100% of M_A).

Observe the axial preload force in the dimension table.
If other values are used, this will influence the bearing preload, bearing friction and heat generation in the bearing position.

ZKLN, 7602, 7603, BSB

① Cover
② Locknut
③ Gap before tightening of the cover fixing screws

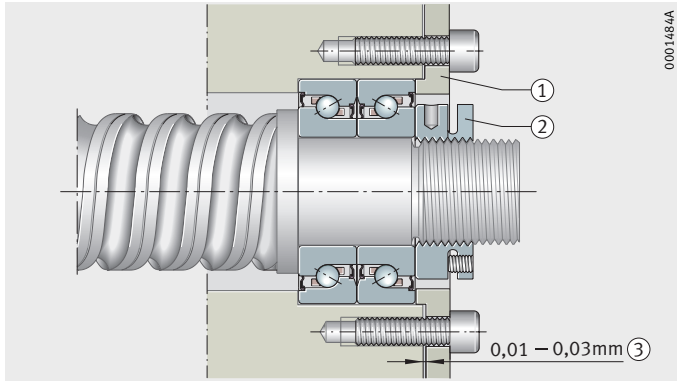

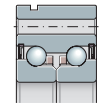

Figure 26
Two-bearing set in O arrangement, locknut, cover

Location of inner ring using locknut

Axial angular contact ball bearings must be axially preloaded during fitting by means of a precision locknut.

When preloading the bearings by means of the bearing inner rings using the recommended precision locknut, the tightening torques given in the dimension tables must be observed.
The tightening torques for the individual bearing sizes are only valid for the INA precision locknuts listed.

The preload force for series DKLFA is determined specifically on the basis of the operating conditions (load spectrum).
Please contact us.

In order to counteract settling, it is recommended that the locknut should initially be tightened to twice the tightening torque M_A and then relieved of load again. It should only then be tightened again to the stated tightening torque M_A. Finally, the precision locknut should be secured against rotation by the torque-controlled tightening of the grub screws.

The characteristics of the bearings are only valid if the preload forces specified in the dimension tables are observed.
The tightening torques for INA precision locknuts required for this purpose are also given in the dimension tables.

If other suitable locknuts are used, the manufacturer's guidance on calculation of the necessary tightening torque should be observed.

Only locknuts with a minimum runout accuracy of the end face to the thread of 5 µm should be used.

Fixing screws

The fixing screws for the outer ring must be tightened in a crosswise sequence. They may be loaded up to 70% of their proof stress.

If the bearing outer ring is supported by an additional housing cover, it must be ensured that the fixing screws are sufficiently well dimensioned.

Fitting of angular contact ball bearing units

Angular contact ball bearing units ZKLR require no additional preload after fitting. They can often therefore be located on the spindle simply by means of clearance-free clamping.

The type of axial location depends on the load to be supported.

The adjacent construction can be a milled flat face or, if necessary, even an unmachined screw mounting surface without radial centring.

Fitting

Locate the bearing unit using a locknut ① or clearance-free clamping on the threaded spindle ②, *Figure 27*.

Screw mount the bearing unit on the adjacent construction; tighten the screws only finger tight ③.

Move the screw drive nut ④ towards the bearing unit (the position of the screw drive is the datum for the linear guidance system, the nut serves as a functional element for alignment).
The bearing will align itself to the optimum radial position (due to the constraining forces exerted by the datum).

Screw the bearing unit to the adjacent construction using the tightening torque specified in the assembly drawing ⑤.

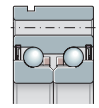

ZKLR

① Locknut
② Threaded spindle
③ Tightening of fixing screws finger tight
④ Screw drive nut
⑤ Tightening of fixing screws

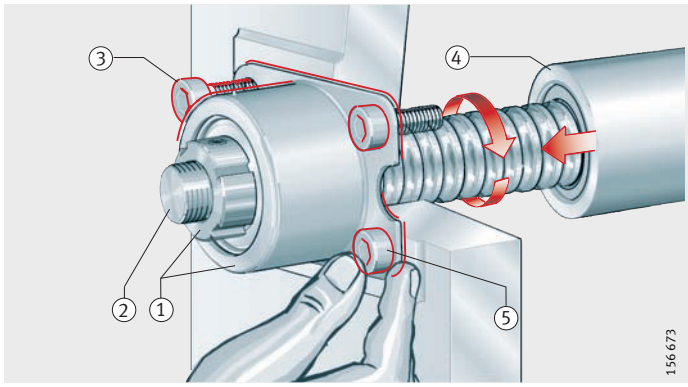

Figure 27
Fitting of bearing unit

Axial angular contact ball bearings

For screw mounting

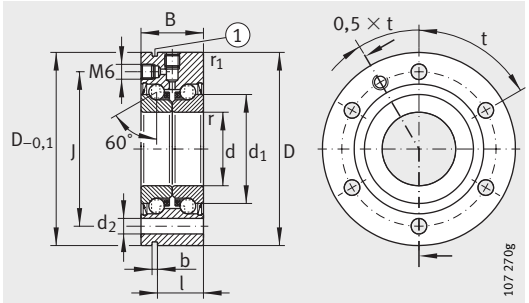

ZKLF..-2RS, ZKLF..-2Z (d ≦ 50 mm)
1 Extraction slot

Dimension table · Dimensions in mm

Designation	Mass	Dimensions										Mounting dimensions		Fixing screws[1] DIN 912-10.9	
	m	d	D	B	d_1	r	r_1	J	d_2	b	l	D_a	d_a		
	≈kg			–0,25		min.	min.					max.	min.	Size	Quantity
ZKLF1255-2RS	0,37	**12$_{-0,005}$**	55$_{-0,01}$	25	25	0,3	0,6	42	6,8	3	17	33	16	M6	3
ZKLF1255-2Z	0,37	**12$_{-0,005}$**	55$_{-0,01}$	25	25	0,3	0,6	42	6,8	3	17	33	16	M6	3
ZKLF1560-2RS	0,43	**15$_{-0,005}$**	60$_{-0,01}$	25	28	0,3	0,6	46	6,8	3	17	35	20	M6	3
ZKLF1560-2Z	0,43	**15$_{-0,005}$**	60$_{-0,01}$	25	28	0,3	0,6	46	6,8	3	17	35	20	M6	3
ZKLF1762-2RS	0,45	**17$_{-0,005}$**	62$_{-0,01}$	25	30	0,3	0,6	48	6,8	3	17	37	23	M6	3
ZKLF1762-2Z	0,45	**17$_{-0,005}$**	62$_{-0,01}$	25	30	0,3	0,6	48	6,8	3	17	37	23	M6	3
ZKLF2068-2RS	0,61	**20$_{-0,005}$**	68$_{-0,01}$	28	34,5	0,3	0,6	53	6,8	3	19	43	25	M6	4
ZKLF2068-2Z	0,61	**20$_{-0,005}$**	68$_{-0,01}$	28	34,5	0,3	0,6	53	6,8	3	19	43	25	M6	4
ZKLF2575-2RS	0,72	**25$_{-0,005}$**	75$_{-0,01}$	28	40,5	0,3	0,6	58	6,8	3	19	48	32	M6	4
ZKLF2575-2Z	0,72	**25$_{-0,005}$**	75$_{-0,01}$	28	40,5	0,3	0,6	58	6,8	3	19	48	32	M6	4
ZKLF3080-2RS	0,78	**30$_{-0,005}$**	80$_{-0,01}$	28	45,5	0,3	0,6	63	6,8	3	19	53	40	M6	6
ZKLF3080-2Z	0,78	**30$_{-0,005}$**	80$_{-0,01}$	28	45,5	0,3	0,6	63	6,8	3	19	53	40	M6	6
ZKLF30100-2RS[3]	1,63	**30$_{-0,005}$**	100$_{-0,01}$	38	51	0,3	0,6	80	8,8	3	30	64	47	M8	8
ZKLF30100-2Z	1,63	**30$_{-0,005}$**	100$_{-0,01}$	38	51	0,3	0,6	80	8,8	3	30	64	47	M8	8
ZKLF3590-2RS	1,13	**35$_{-0,005}$**	90$_{-0,01}$	34	52	0,3	0,6	75	8,8	3	25	62	45	M8	4
ZKLF3590-2Z	1,13	**35$_{-0,005}$**	90$_{-0,01}$	34	52	0,3	0,6	75	8,8	3	25	62	45	M8	4
ZKLF40100-2RS	1,46	**40$_{-0,005}$**	100$_{-0,01}$	34	58	0,3	0,6	80	8,8	3	25	67	50	M8	4
ZKLF40100-2Z	1,46	**40$_{-0,005}$**	100$_{-0,01}$	34	58	0,3	0,6	80	8,8	3	25	67	50	M8	4
ZKLF40115-2RS[3]	2,2	**40$_{-0,005}$**	115$_{-0,01}$	46	65	0,6	0,6	94	8,8	3	36	80	56	M8	12
ZKLF40115-2Z[3]	2,2	**40$_{-0,005}$**	115$_{-0,01}$	46	65	0,6	0,6	94	8,8	3	36	80	56	M8	12
ZKLF50115-2RS	1,86	**50$_{-0,005}$**	115$_{-0,01}$	34	72	0,3	0,6	94	8,8	3	25	82	63	M8	6
ZKLF50115-2Z	1,86	**50$_{-0,005}$**	115$_{-0,01}$	34	72	0,3	0,6	94	8,8	3	25	82	63	M8	6
ZKLF50140-2RS[3]	4,7	**50$_{-0,005}$**	140$_{-0,01}$	54	80	0,6	0,6	113	11	3	45	98	63	M10	12
ZKLF50140-2Z[3]	4,7	**50$_{-0,005}$**	140$_{-0,01}$	54	80	0,6	0,6	113	11	3	45	98	63	M10	12
ZKLF60145-2Z	4,3	**60$_{-0,008}$**	145$_{-0,015}$	45	85	0,6	0,6	120	8,8	3	35	100	82	M8	8
ZKLF70155-2Z	4,9	**70$_{-0,008}$**	155$_{-0,015}$	45	85	0,6	0,6	130	8,8	3	35	110	92	M8	8
ZKLF80165-2Z	5,3	**80$_{-0,008}$**	165$_{-0,015}$	45	105	0,6	0,6	140	8,8	3	35	120	102	M8	8
ZKLF90190-2Z	8,7	**90$_{-0,008}$**	190$_{-0,015}$	55	120	0,6	0,6	165	11	3	45	138	116	M10	8
ZKLF100200-2Z	9,3	**100$_{-0,008}$**	200$_{-0,015}$	55	132	0,6	0,6	175	11	3	45	150	128	M10	8

1) Tightening torque of fixing screws according to manufacturer's data. Screws are not included in the delivery.
2) Mass moment of inertia for rotating inner ring.
3) Heavy series.
4) Only valid in conjunction with INA precision locknuts.
5) The axial runout data for screw drive bearing arrangements are based on the rotating inner ring.

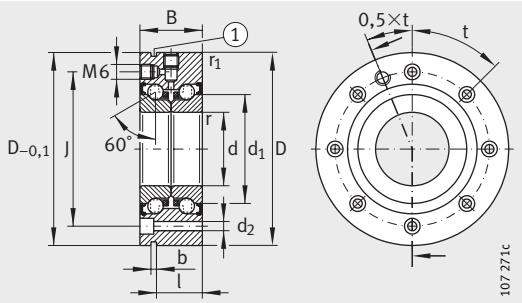

ZKLF..-2Z, (60 mm ≦ d ≦ 100 mm)
1 Extraction slot

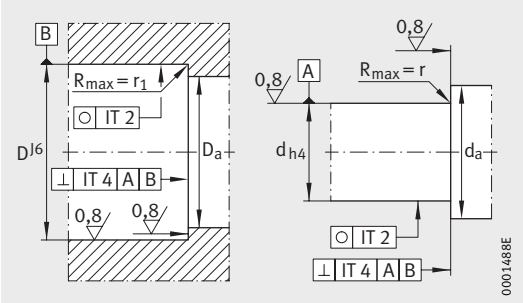

Design of adjacent construction

Pitch t	Basic load ratings axial dyn. C_a	stat. C_{0a}	Limiting speed n_G grease	Bearing frictional torque M_{RL}	Rigidity axial c_{aL}	Tilting rigidity c_{kL}	Mass moment of inertia[2] M_m	Axial run-out[5]	Recommended INA locknut; to be ordered separately Designation		Tightening torque[4] M_A	Axial pre-load force
Quantity Xt	N	N	min^{-1}	Nm	N/µm	Nm/mrad	kg · cm^2	µm			Nm	N
3X120°	16 900	24 700	3 800	0,16	375	50	0,068	2	**ZM12**	–	8	5 038
3X120°	16 900	24 700	7 600	0,08	375	50	0,068	2	**ZM12**	–	8	5 038
3X120°	17 900	28 000	3 500	0,2	400	65	0,102	2	**ZM15**	**AM15**	10	5 484
3X120°	17 900	28 000	7 000	0,1	400	65	0,102	2	**ZM15**	**AM15**	10	5 484
3X120°	18 800	31 000	3 300	0,24	450	80	0,132	2	**ZM17**	**AM17**	15	7 157
3X120°	18 800	31 000	6 600	0,12	450	80	0,132	2	**ZM17**	**AM17**	15	7 157
4X 90°	26 000	47 000	3 000	0,3	650	140	0,273	2	**ZM20**	**AM20**	18	9 079
4X 90°	26 000	47 000	5 400	0,15	650	140	0,273	2	**ZM20**	**AM20**	18	9 079
4X 90°	27 500	55 000	2 600	0,4	750	200	0,486	2	**ZM25**	**AM25**	25	9 410
4X 90°	27 500	55 000	4 700	0,2	750	200	0,486	2	**ZM25**	**AM25**	25	9 410
6X 60°	29 000	64 000	2 200	0,5	850	300	0,73	2,5	**ZM30**	**AM30**	32	10 451
6X 60°	29 000	64 000	4 300	0,25	850	300	0,73	2,5	**ZM30**	**AM30**	32	10 451
8X 45°	59 000	108 000	2 100	0,8	950	400	1,91	2,5	**ZMA30/52**	**AM30**	65	19 509
8X 45°	59 000	108 000	4 000	0,4	950	400	1,91	2,5	**ZMA30/52**	**AM30**	65	19 509
4X 90°	41 000	89 000	2 000	0,6	900	400	1,51	2,5	**ZM35**	**AM35/58**	40	10 770
4X 90°	41 000	89 000	3 800	0,3	900	400	1,51	2,5	**ZM35**	**AM35/58**	40	10 770
4X 90°	43 000	101 000	1 800	0,7	1 000	550	2,26	2,5	**ZM40**	**AM40**	55	13 412
4X 90°	43 000	101 000	3 300	0,35	1 000	550	2,26	2,5	**ZM40**	**AM40**	55	13 412
12X 30°	72 000	149 000	1 600	1,3	1 200	750	5,5	2,5	**ZMA40/62**	**AM40**	110	25 185
12X 30°	72 000	149 000	3 100	0,65	1 200	750	5,5	2,5	**ZMA40/62**	**AM40**	110	25 815
6X 60°	46 500	126 000	1 500	0,9	1 250	1 000	5,24	2,5	**ZM50**	**AM50**	85	17 009
6X 60°	46 500	126 000	3 000	0,45	1 250	1 000	5,24	2,5	**ZM50**	**AM50**	85	17 009
12X 30°	113 000	250 000	1 200	2,6	1 400	1 500	15,2	2,5	**ZMA50/75**	**AM50**	150	29 436
12X 30°	113 000	250 000	2 500	1,3	1 400	1 500	15,2	2,5	**ZMA50/75**	**AM50**	150	29 436
8X 45°	84 000	214 000	3 000	1	1 300	1 650	13,7	3	**ZMA60/98**	**AM60**	100	17 893
8X 45°	88 000	241 000	2 800	1,2	1 450	2 250	19,8	3	**ZMA70/110**	**AM70**	130	19 717
8X 45°	91 000	265 000	2 700	1,4	1 600	3 000	27,6	3	**ZMA80/120**	**AM80**	160	20 604
8X 45°	135 000	395 000	2 300	2,3	1 700	4 400	59,9	3	**ZMA90/130**	**AM90**	200	25 198
8X 45°	140 000	435 000	2 150	2,6	1 900	5 800	85,3	3	**ZMA100/140**	**AM100**	250	28 760

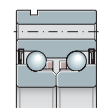

Axial angular contact ball bearings

For screw mounting
Less stringent tolerances

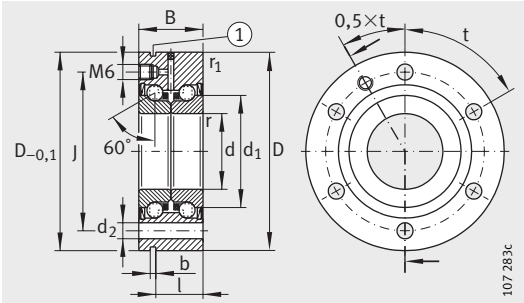

ZKLF..-2RS-PE
1 Extraction slot

Dimension table · Dimensions in mm

Designation	Mass	Dimensions										Mounting dimensions		Fixing screws[1] DIN 912-10.9	
	m	d	D	B	d_1	r	r_1	J	d_2	b	l	D_a	d_a		
	≈kg	–0,01		–0,25		min.	min.					max.	min.	Size	Quantity
ZKLF1255-2RS-PE	0,37	**12**	$55_{-0,013}$	25	25	0,3	0,6	42	6,8	3	17	33	16	M6	3
ZKLF1560-2RS-PE	0,43	**15**	$60_{-0,013}$	25	28	0,3	0,6	46	6,8	3	17	35	20	M6	3
ZKLF1762-2RS-PE	0,45	**17**	$62_{-0,013}$	25	30	0,3	0,6	48	6,8	3	17	37	23	M6	3
ZKLF2068-2RS-PE	0,61	**20**	$68_{-0,013}$	28	34,5	0,3	0,6	53	6,8	3	19	43	25	M6	4
ZKLF2575-2RS-PE	0,72	**25**	$75_{-0,013}$	28	40,5	0,3	0,6	58	6,8	3	19	48	32	M6	4
ZKLF3080-2RS-PE	0,78	**30**	$80_{-0,013}$	28	45,5	0,3	0,6	63	6,8	3	19	53	40	M6	6
ZKLF3590-2RS-PE	1,13	**35**	$90_{-0,015}$	34	52	0,3	0,6	75	8,8	3	25	62	45	M8	4
ZKLF40100-2RS-PE	1,46	**40**	$100_{-0,015}$	34	58	0,3	0,6	80	8,8	3	25	67	50	M8	4
ZKLF50115-2RS-PE	1,86	**50**	$115_{-0,015}$	34	72	0,3	0,6	94	8,8	3	25	82	63	M8	6

1) Tightening torque of fixing screws according to manufacturer's data.
Screws are not included in the delivery.

2) Mass moment of inertia for rotating inner ring.

3) Only valid in conjunction with INA precision locknuts.

4) The axial runout data for screw drive bearing arrangements are based on the rotating inner ring.

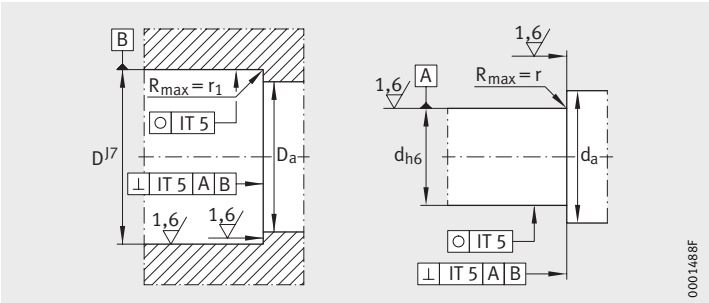

Design of adjacent construction

Pitch t Quantity Xt	Basic load ratings axial dyn. C_a N	stat. C_{0a} N	Limiting speed n_G grease min^{-1}	Bearing frictional torque M_{RL} Nm	Rigidity axial c_{aL} N/µm	Tilting rigidity c_{kL} Nm/mrad	Mass moment of inertia[2] M_m kg · cm²	Axial run-out[4] µm	Recommended INA locknut; to be ordered separately Designation		Tightening torque[3] M_A Nm	Axial preload force N
3X120°	16 900	24 700	3 800	0,16	375	50	0,068	5	**ZM12**	–	8	5 038
3X120°	17 900	28 000	3 500	0,2	400	65	0,102	5	**ZM15**	**AM15**	10	5 484
3X120°	18 800	31 000	3 300	0,24	450	80	0,132	5	**ZM17**	**AM17**	15	7 157
4X 90°	26 000	47 000	3 000	0,3	650	140	0,273	5	**ZM20**	**AM20**	18	9 079
4X 90°	27 500	55 000	2 600	0,4	750	200	0,486	5	**ZM25**	**AM25**	25	9 410
6X 60°	29 000	64 000	2 200	0,5	850	300	0,73	5	**ZM30**	**AM30**	32	10 451
4X 90°	41 000	89 000	2 000	0,6	900	400	1,51	5	**ZM35**	**AM35/58**	40	10 770
4X 90°	43 000	101 000	1 800	0,7	1 000	550	2,26	5	**ZM40**	**AM40**	55	13 412
6X 60°	46 500	126 000	1 500	0,9	1 250	1 000	5,24	5	**ZM50**	**AM50**	85	17 009

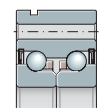

Axial angular contact ball bearings

For screw mounting
Matched pair

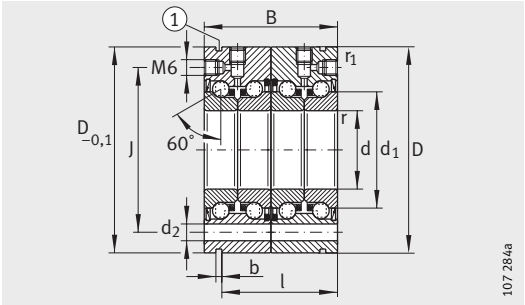

ZKLF..-2RS-2AP
1 Extraction slot

Dimension table · Dimensions in mm

Designation	Mass	Dimensions										Mounting dimensions		Fixing screws[1] DIN 912-10.9	
	m	d	D	B	d_1	r	r_1	J	d_2	l	b	D_a	d_a		
	≈kg	−0,005	−0,010	−0,50		min.	min.					max.	min.	Size	Quantity
ZKLF1762-2RS-2AP	0,9	**17**	62	50	30	0,3	0,6	48	6,8	42	3	37	23	M6X60	5
ZKLF2068-2RS-2AP	1,22	**20**	68	56	34,5	0,3	0,6	53	6,8	47	3	43	25	M6X70	7
ZKLF2575-2RS-2AP	1,44	**25**	75	56	40,5	0,3	0,6	58	6,8	47	3	48	32	M6X70	7
ZKLF3080-2RS-2AP	1,56	**30**	80	56	45,5	0,3	0,6	63	6,8	47	3	53	40	M6X70	11
ZKLF3590-2RS-2AP	2,26	**35**	90	68	52	0,3	0,6	75	8,8	59	3	62	45	M8X80	7
ZKLF40100-2RS-2AP	2,92	**40**	100	68	58	0,3	0,6	80	8,8	59	3	67	50	M8X80	7
ZKLF50115-2RS-2AP	3,72	**50**	115	68	72	0,3	0,6	94	8,8	59	3	82	63	M8X80	11

1) Tightening torque of fixing screws according to manufacturer's data.
Screws are not included in the delivery.

2) Mass moment of inertia for rotating inner ring.

3) Only valid in conjunction with INA precision locknuts.

4) The axial runout data for screw drive bearing arrangements are based on the rotating inner ring.

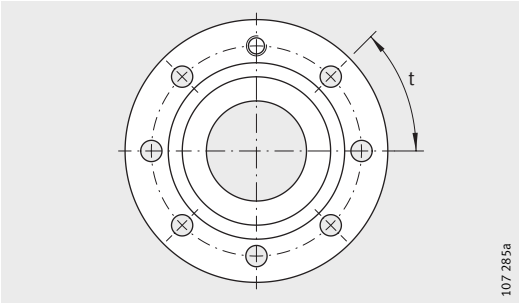

Hole pattern

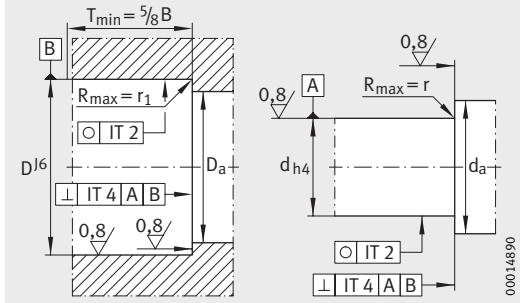

Design of adjacent construction

Pitch t Quantity Xt	Basic load ratings axial dyn. C_a N	stat. C_{0a} N	Limiting speed n_G grease min^{-1}	Bearing frictional torque M_{RL} Nm	Rigidity axial c_{aL} N/µm	Tilting rigidity c_{kL} Nm/mrad	Mass moment of inertia[2] M_m kg · cm²	Axial run-out[4] µm	Recommended INA locknut; to be ordered separately Designation		Tightening torque[3] M_A Nm	Axial preload force N
6X60°	30 500	62 000	3 300	0,36	800	200	0,264	2	**ZM17**	**AM17**	15	7 157
8X45°	42 000	94 000	3 000	0,45	1 150	320	0,564	2	**ZMA20/38**	**AM20**	18	9 079
8X45°	44 500	111 000	2 600	0,6	1 300	450	0,972	2	**ZMA25/45**	**AM25**	25	9 410
12X30°	47 500	127 000	2 200	0,75	1 500	620	1,46	2,5	**ZMA30/52**	**AM30**	32	10 451
8X45°	66 000	177 000	2 000	0,9	1 600	900	3,02	2,5	**ZMA35/58**	**AM35/58**	40	10 770
8X45°	70 000	202 000	1 800	1,05	1 750	1 200	4,52	2,5	**ZMA40/62**	**AM40**	55	13 412
12X30°	76 000	250 000	1 500	1,35	2 200	2 250	10,48	2,5	**ZMA50/75**	**AM50**	85	17 009

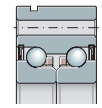

Axial angular contact ball bearings

Not for screw mounting

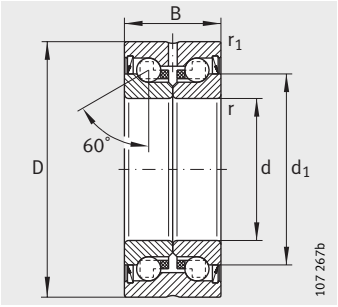

ZKLN..-2RS
ZKLN..-2Z

Dimension table · Dimensions in mm

Designation	Mass	Dimensions						Mounting dimensions		Basic load ratings axial	
	m	d	D	B	d_1	r	r_1	D_a	d_a	dyn. C_a	stat. C_{0a}
	≈kg	–0,005	–0,010	–0,25		min.	min.	max.	min.	N	N
ZKLN0619-2Z	0,02	$\mathbf{6^{+0,002}_{-0,003}}$	19	12	12	0,3	0,3	16	9	4 900	6 100
ZKLN0624-2RS	0,03	$\mathbf{6^{+0,002}_{-0,003}}$	24	15	14	0,3	0,6	19	9	6 900	8 500
ZKLN0624-2Z	0,03	$\mathbf{6^{+0,002}_{-0,003}}$	24	15	14	0,3	0,6	19	9	6 900	8 500
ZKLN0832-2RS	0,09	**8**	32	20	19	0,3	0,6	26	11	12 500	16 300
ZKLN0832-2Z	0,09	**8**	32	20	19	0,3	0,6	26	11	12 500	16 300
ZKLN1034-2RS	0,1	**10**	34	20	21	0,3	0,6	28	14	13 400	18 800
ZKLN1034-2Z	0,1	**10**	34	20	21	0,3	0,6	28	14	13 400	18 800
ZKLN1242-2RS	0,2	**12**	42	25	25	0,3	0,6	33	16	16 900	24 700
ZKLN1242-2Z	0,2	**12**	42	25	25	0,3	0,6	33	16	16 900	24 700
ZKLN1545-2RS	0,21	**15**	45	25	28	0,3	0,6	35	20	17 900	28 000
ZKLN1545-2Z	0,21	**15**	45	25	28	0,3	0,6	35	20	17 900	28 000
ZKLN1747-2RS	0,22	**17**	47	25	30	0,3	0,6	37	23	18 800	31 000
ZKLN1747-2Z	0,22	**17**	47	25	30	0,3	0,6	37	23	18 800	31 000
ZKLN2052-2RS	0,31	**20**	52	28	34,5	0,3	0,6	43	25	26 000	47 000
ZKLN2052-2Z	0,31	**20**	52	28	34,5	0,3	0,6	43	26	26 000	47 000
ZKLN2557-2RS	0,34	**25**	57	28	40,5	0,3	0,6	48	32	27 500	55 000
ZKLN2557-2Z	0,34	**25**	57	28	40,5	0,3	0,6	48	32	27 500	55 000
ZKLN3062-2RS	0,39	**30**	62	28	45,5	0,3	0,6	53	40	29 000	64 000
ZKLN3062-2Z	0,39	**30**	62	28	45,5	0,3	0,6	53	40	29 000	64 000
ZKLN3072-2RS[2]	0,72	**30**	72	38	51	0,3	0,6	64	47	59 000	108 000
ZKLN3072-2Z[2]	0,72	**30**	72	38	51	0,3	0,6	64	47	59 000	108 000
ZKLN3572-2RS	0,51	**35**	72	34	52	0,3	0,6	62	45	41 000	89 000
ZKLN3572-2Z	0,51	**35**	72	34	52	0,3	0,6	62	45	41 000	89 000

1) Mass moment of inertia for rotating inner ring.
2) Heavy series.
3) Only valid in conjunction with INA precision locknuts.
4) The axial runout data for screw drive bearing arrangements are based on the rotating inner ring.

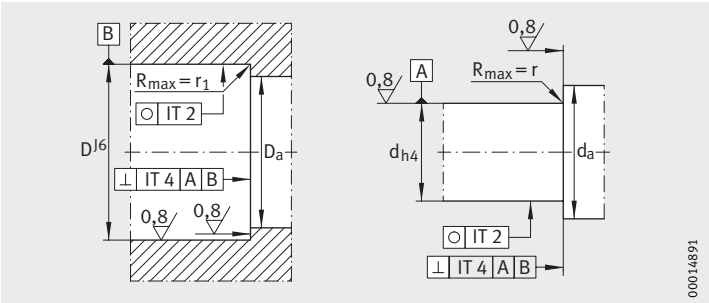

Design of adjacent construction

Limiting speed	Bearing frictional torque	Rigidity axial	Tilting rigidity	Mass moment of inertia[1]	Axial runout[4]	Recommended INA locknut; to be ordered separately			
n_G grease	M_{RL}	c_{aL}	c_{kL}	M_m		Designation		Tightening torque[3] M_A	Axial preload force
min^{-1}	Nm	N/µm	Nm/mrad	$kg \cdot cm^2$	µm			Nm	N
14 000	0,01	150	4	0,0019	2	**ZM06**	–	1	916
6 800	0,04	200	8	0,0044	2	**ZM06**	–	2	2 404
12 000	0,02	200	8	0,0044	2	**ZM06**	–	2	2 404
5 100	0,08	250	20	0,02	2	**ZM08**	–	4	2 216
9 500	0,04	250	20	0,02	2	**ZM08**	–	4	2 216
4 600	0,12	325	25	0,029	2	**ZM10**	–	6	4 891
8 600	0,06	325	25	0,029	2	**ZM10**	–	6	4 891
3 800	0,16	375	50	0,068	2	**ZM12**	–	8	5 038
7 600	0,08	375	50	0,068	2	**ZM12**	–	8	5 038
3 500	0,2	400	65	0,102	2	**ZM15**	**AM15**	10	5 484
7 000	0,1	400	65	0,102	2	**ZM15**	**AM15**	10	5 484
3 300	0,24	450	80	0,132	2	**ZM17**	**AM17**	15	7 157
6 600	0,12	450	80	0,132	2	**ZM17**	**AM17**	15	7 157
3 000	0,3	650	140	0,273	2	**ZM20**	**AM20**	18	9 079
5 400	0,15	650	140	0,273	2	**ZM20**	**AM20**	18	9 079
2 600	0,4	750	200	0,486	2	**ZM25**	**AM25**	25	9 410
4 700	0,2	750	200	0,486	2	**ZM25**	**AM25**	25	9 410
2 200	0,5	850	300	0,73	2,5	**ZM30**	**AM30**	32	10 451
4 300	0,25	850	300	0,73	2,5	**ZM30**	**AM30**	32	10 451
2 100	0,8	950	400	1,91	2,5	**ZMA30/52**	**AM30**	65	19 509
4 000	0,4	950	400	1,91	2,5	**ZMA30/52**	**AM30**	65	19 509
2 000	0,6	900	400	1,51	2,5	**ZM35**	**AM35/58**	40	10 770
3 800	0,3	900	400	1,51	2,5	**ZM35**	**AM35/58**	40	10 770

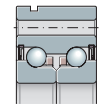

Axial angular contact ball bearings

Not for screw mounting

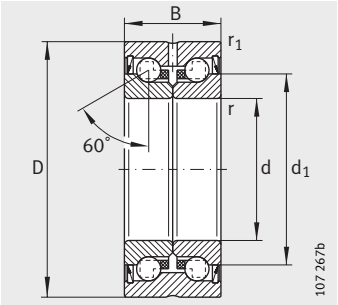

ZKLN..-2RS
ZKLN..-2Z

Dimension table (continued) · Dimensions in mm

Designation	Mass	Dimensions						Mounting dimensions		Basic load ratings axial	
	m	d	D	B	d_1	r	r_1	D_a	d_a	dyn. C_a	stat. C_{0a}
	≈kg			–0,25		min.	min.	max.	min.	N	N
ZKLN4075-2RS	0,61	**40$_{-0,005}$**	75$_{-0,01}$	34	58	0,3	0,6	67	50	43 000	101 000
ZKLN4075-2Z	0,61	**40$_{-0,005}$**	75$_{-0,01}$	34	58	0,3	0,6	67	50	43 000	101 000
ZKLN4090-2RS[2]	0,95	**40$_{-0,005}$**	90$_{-0,01}$	46	65	0,6	0,6	80	56	72 000	149 000
ZKLN4090-2Z[2]	0,95	**40$_{-0,005}$**	90$_{-0,01}$	46	65	0,6	0,6	80	56	72 000	149 000
ZKLN5090-2RS	0,88	**50$_{-0,005}$**	90$_{-0,01}$	34	72	0,3	0,6	82	63	46 500	126 000
ZKLN5090-2Z	0,88	**50$_{-0,005}$**	90$_{-0,01}$	34	72	0,3	0,6	82	63	46 500	126 000
ZKLN50110-2RS[2]	2,5	**50$_{-0,005}$**	110$_{-0,01}$	54	80	0,6	0,6	98	63	113 000	250 000
ZKLN50110-2Z[2]	2,5	**50$_{-0,005}$**	110$_{-0,01}$	54	80	0,6	0,6	98	63	113 000	250 000
ZKLN60110-2Z	2,2	**60$_{-0,008}$**	110$_{-0,015}$	45	85	0,6	0,6	100	82	84 000	214 000
ZKLN70120-2Z	2,4	**70$_{-0,008}$**	120$_{-0,015}$	45	95	0,6	0,6	110	92	88 000	241 000
ZKLN80130-2Z	2,7	**80$_{-0,008}$**	130$_{-0,015}$	45	105	0,6	0,6	120	102	91 000	265 000
ZKLN90150-2Z	4,5	**90$_{-0,008}$**	150$_{-0,015}$	55	120	0,6	0,6	138	116	135 000	395 000
ZKLN100160-2Z	4,9	**100$_{-0,008}$**	160$_{-0,015}$	55	132	0,6	0,6	150	128	140 000	435 000

1) Mass moment of inertia for rotating inner ring.
2) Heavy series.
3) Only valid in conjunction with INA precision locknuts.
4) The axial runout data for screw drive bearing arrangements are based on the rotating inner ring.

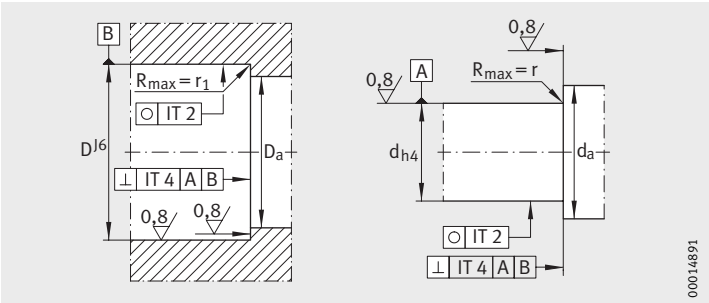

Design of adjacent construction

Limiting speed	Bearing frictional torque	Rigidity axial	Tilting rigidity	Mass moment of inertia[1]	Axial runout[4]	Recommended INA locknut; to be ordered separately			
n_G grease	M_{RL}	c_{aL}	c_{kL}	M_m		Designation		Tightening torque[3] M_A	Axial preload force
min^{-1}	Nm	N/µm	Nm/mrad	$kg \cdot cm^2$	µm			Nm	N
1 800	0,7	1 000	550	2,26	2,5	**ZM40**	**AM40**	55	13 412
3 300	0,35	1 000	550	2,26	2,5	**ZM40**	**AM40**	55	13 412
1 600	1,3	1 200	750	5,5	2,5	**ZMA40/62**	**AM40**	110	25 185
3 100	0,65	1 200	750	5,5	2,5	**ZMA40/62**	**AM40**	110	25 185
1 500	0,9	1 250	1 000	5,24	2,5	**ZM50**	**AM50**	85	17 009
3 000	0,45	1 250	1 000	5,24	2,5	**ZM50**	**AM50**	85	17 009
1 200	2,6	1 400	1 500	15,2	2,5	**ZMA50/75**	**AM50**	150	29 436
2 500	1,3	1 400	1 500	15,2	2,5	**ZMA50/75**	**AM50**	150	29 436
3 000	1	1 300	1 650	13,7	3	**ZMA60/98**	**AM60**	100	17 893
2 800	1,2	1 450	2 250	19,8	3	**ZMA70/110**	**AM70**	130	19 171
2 700	1,4	1 600	3 000	27,6	3	**ZMA80/120**	**AM80**	160	20 604
2 300	2,3	1 700	4 400	59,9	3	**ZMA90/130**	**AM90**	200	25 198
2 150	2,6	1 900	5 800	85,3	3	**ZMA100/140**	**AM100**	250	28 760

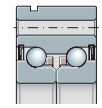

Axial angular contact ball bearings

Not for screw mounting
Less stringent tolerances

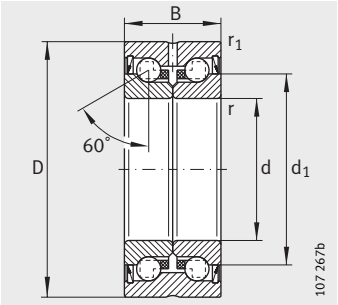

ZKLN..-2RS-PE

Dimension table · Dimensions in mm

Designation	Mass	Dimensions						Mounting dimensions		Basic load ratings axial	
	m	d	D	B	d_1	r	r_1	D_a	d_a	dyn. C_a	stat. C_{0a}
	≈kg			–0,25		min.	min.	max.	min.	N	N
ZKLN0624-2RS-PE	0,03	**6** $^{+0,003}_{-0,005}$	$24_{-0,01}$	15	14	0,3	0,6	19	9	6 900	8 500
ZKLN1034-2RS-PE	0,1	**10** $_{-0,008}$	$34_{-0,011}$	20	21	0,3	0,6	28	14	13 400	18 800
ZKLN1242-2RS-PE	0,2	**12** $_{-0,01}$	$42_{-0,011}$	25	25	0,3	0,6	33	16	16 900	24 700
ZKLN1545-2RS-PE	0,21	**15** $_{-0,01}$	$45_{-0,011}$	25	28	0,3	0,6	35	20	17 900	28 000
ZKLN1747-2RS-PE	0,22	**17** $_{-0,01}$	$47_{-0,011}$	25	30	0,3	0,6	37	23	18 800	31 000
ZKLN2052-2RS-PE	0,31	**20** $_{-0,01}$	$52_{-0,013}$	28	34,5	0,3	0,6	43	25	26 000	47 000
ZKLN2557-2RS-PE	0,34	**25** $_{-0,01}$	$57_{-0,013}$	28	40,5	0,3	0,6	48	32	27 500	55 000
ZKLN3062-2RS-PE	0,39	**30** $_{-0,01}$	$62_{-0,013}$	28	45,5	0,3	0,6	53	40	29 000	64 000
ZKLN3572-2RS-PE	0,51	**35** $_{-0,01}$	$72_{-0,013}$	34	52	0,3	0,6	62	45	41 000	89 000
ZKLN5090-2RS-PE	0,88	**50** $_{-0,01}$	$90_{-0,015}$	34	72	0,3	0,6	82	63	46 500	126 000

1) Mass moment of inertia for rotating inner ring.
2) Only valid in conjunction with INA precision locknuts.
3) The axial runout data for screw drive bearing arrangements are based on the rotating inner ring.

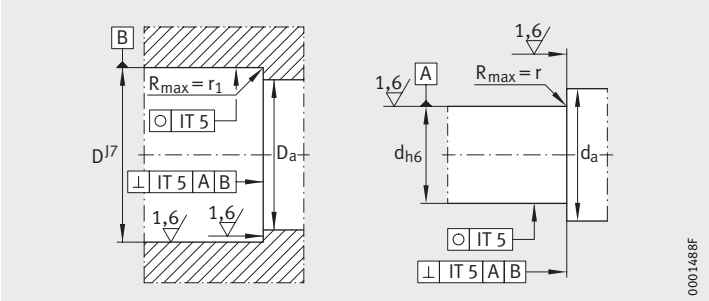

Design of adjacent construction

Limiting speed	Bearing frictional torque	Rigidity axial	Tilting rigidity	Mass moment of inertia[1)]	Axial runout[3)]	Recommended INA locknut; to be ordered separately			
						Designation		Tightening torque[2)]	Axial preload force
n_G grease	M_{RL}	c_{aL}	c_{kL}	M_m				M_A	
min^{-1}	Nm	N/µm	Nm/mrad	$kg \cdot cm^2$	µm			Nm	N
6 800	0,04	200	8	0,0044	5	**ZM06**	–	2	2 404
4 600	0,12	325	25	0,029	5	**ZM10**	–	6	4 891
3 800	0,16	375	50	0,068	5	**ZM12**	–	8	5 038
3 500	0,2	400	65	0,102	5	**ZM15**	**AM15**	10	5 484
3 300	0,24	450	80	0,132	5	**ZM17**	**AM17**	15	7 157
3 000	0,3	650	140	0,273	5	**ZM20**	**AM20**	18	9 079
2 600	0,4	750	200	0,486	5	**ZM25**	**AM25**	25	9 410
2 200	0,5	850	300	0,73	5	**ZM30**	**AM30**	32	10 451
2 000	0,6	900	400	1,51	5	**ZM35**	**AM35/38**	40	10 770
1 500	0,9	1 250	1 000	5,24	5	**ZM50**	**AM50**	85	17 009

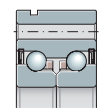

Axial angular contact ball bearings

Not for screw mounting
Matched pair

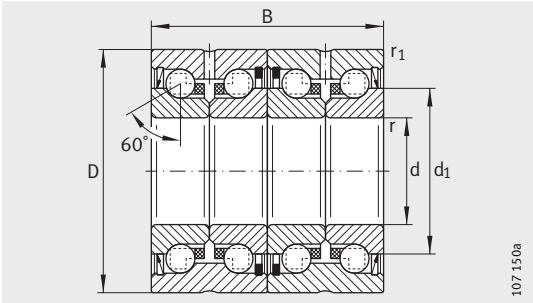

ZKLN..-2RS-2AP

Dimension table · Dimensions in mm

Designation	Mass	Dimensions						Mounting dimensions		Basic load ratings axial	
	m	d	D	B	d_1	r	r_1	D_a	d_a	dyn. C_a	stat. C_{0a}
	≈kg	–0,005	–0,01	–0,5		min.	min.	max.	min.	N	N
ZKLN1747-2RS-2AP	0,44	**17**	47	50	30	0,3	0,6	37	23	30 500	62 000
ZKLN2052-2RS-2AP	0,62	**20**	52	56	34,5	0,3	0,6	43	25	42 000	94 000
ZKLN2557-2RS-2AP	0,68	**25**	57	56	40,5	0,3	0,6	48	32	44 500	111 000
ZKLN3062-2RS-2AP	0,78	**30**	62	56	45,5	0,3	0,6	53	40	47 500	127 000
ZKLN3572-2RS-2AP	1,02	**35**	72	68	52	0,3	0,6	62	45	66 000	177 000
ZKLN4075-2RS-2AP	1,22	**40**	75	68	58	0,3	0,6	67	50	70 000	202 000
ZKLN5090-2RS-2AP	1,76	**50**	90	68	72	0,3	0,6	82	63	76 000	250 000

1) Mass moment of inertia for rotating inner ring.
2) Only valid in conjunction with INA precision locknuts.
3) The axial runout data for screw drive bearing arrangements are based on the rotating inner ring.

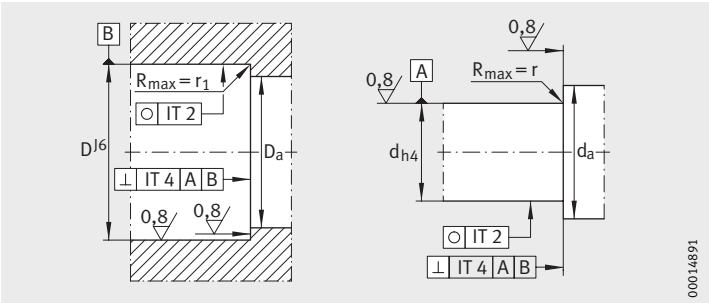

Design of adjacent construction

Limiting speed	Bearing frictional torque	Rigidity axial	Tilting rigidity	Mass moment of inertia[1]	Axial runout[3]	Recommended INA locknut; to be ordered separately			
n_G grease	M_{RL}	c_{aL}	c_{kL}	M_m		Designation		Tightening torque[2] M_A	Axial preload force
min^{-1}	Nm	N/µm	Nm/mrad	$kg \cdot cm^2$	µm			Nm	N
3 300	0,36	800	200	0,264	2	**ZM17**	**AM17**	15	7 157
3 000	0,45	1 150	320	0,546	2	**ZMA20/38**	**AM20**	18	9 079
2 600	0,6	1 300	450	0,972	2	**ZMA25/45**	**AM25**	25	9 410
2 200	0,75	1 500	620	1,46	2,5	**ZMA30/52**	**AM30**	32	10 451
2 000	0,9	1 600	900	3,02	2,5	**ZMA35/58**	**AM35/58**	40	10 770
1 800	1,05	1 750	1 200	4,52	2,5	**ZMA40/62**	**AM40**	55	13 412
1 500	1,35	2 200	2 250	10,48	2,5	**ZMA50/75**	**AM50**	85	17 009

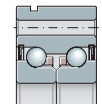

Axial angular contact ball bearings

Single direction

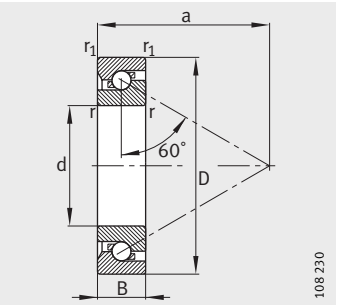

7602, 7603, BSB

Dimension table · Dimensions in mm

Designation	Mass	Dimensions					Mounting dimensions		Basic load ratings axial	
	m	d	D	B	r, r_1	a	D_a H12	d_a h12	dyn. C_a	stat. C_{0a}
	≈kg				min.	≈			N	N
7602012-TVP	0,042	**12**$_{-0,004}$	32$_{-0,006}$	10$_{-0,08}$	0,6	24	27	17	12 200	20 700
7602015-TVP	0,052	**15**$_{-0,004}$	35$_{-0,006}$	11$_{-0,08}$	0,6	27,5	30	20,5	13 100	24 700
7602017-TVP	0,074	**17**$_{-0,004}$	40$_{-0,006}$	12$_{-0,08}$	0,6	31	34,5	23	17 200	32 500
7602020-TVP	0,139	**20**$_{-0,005}$	47$_{-0,006}$	14$_{-0,12}$	1	36	39,5	27,5	19 100	38 000
BSB020047-T	0,13	**20**$_{-0,005}$	47$_{-0,006}$	15$_{-0,12}$	1	36,5	39,5	27,5	20 800	43 000
7603020-TVP	0,17	**20**$_{-0,005}$	52$_{-0,007}$	15$_{-0,12}$	1,1	39,5	43,5	30,5	25 500	53 000
7602025-TVP	0,147	**25**$_{-0,005}$	52$_{-0,007}$	15$_{-0,12}$	1	41	45	32	23 200	50 000
BSB025062-T	0,24	**25**$_{-0,005}$	62$_{-0,007}$	15$_{-0,12}$	1	46,5	52	38	29 500	68 000
7603025-TVP	0,275	**25**$_{-0,005}$	62$_{-0,007}$	17$_{-0,12}$	1,1	47,5	52	38	29 500	68 000
BSB030062-T	0,22	**30**$_{-0,005}$	62$_{-0,007}$	15$_{-0,12}$	1	47,5	52,5	39,5	27 500	66 000
7602030-TVP	0,232	**30**$_{-0,005}$	62$_{-0,007}$	16$_{-0,12}$	1	48	52,5	39,5	27 500	66 000
7603030-TVP	0,409	**30**$_{-0,005}$	72$_{-0,007}$	19$_{-0,12}$	1,1	55,5	61	45	36 500	89 000
BSB035072-T	0,3	**35**$_{-0,006}$	72$_{-0,007}$	15$_{-0,12}$	1	54	60,5	46,5	31 500	81 000
7602035-TVP	0,339	**35**$_{-0,006}$	72$_{-0,007}$	17$_{-0,12}$	1,1	55	60,5	46,5	31 500	81 000
7603035-TVP	0,546	**35**$_{-0,006}$	80$_{-0,007}$	21$_{-0,12}$	1,5	61,5	67	51	38 000	100 000
BSB040072-T	0,26	**40**$_{-0,006}$	72$_{-0,007}$	15$_{-0,12}$	1	56	62,5	49	29 500	82 000
7602040-TVP	0,418	**40**$_{-0,006}$	80$_{-0,007}$	18$_{-0,12}$	1,1	62,5	69,5	53,5	39 000	106 000
BSB040090-T	0,65	**40**$_{-0,006}$	90$_{-0,008}$	20$_{-0,12}$	1,5	67	75,5	56,5	52 000	138 000
7603040-TVP	0,751	**40**$_{-0,006}$	90$_{-0,008}$	23$_{-0,12}$	1,5	68,5	75,5	56,5	52 000	138 000
BSB045075-T	0,26	**45**$_{-0,006}$	75$_{-0,007}$	15$_{-0,12}$	1	59,5	68	52	30 000	85 000
7602045-TVP	0,488	**45**$_{-0,006}$	85$_{-0,008}$	19$_{-0,12}$	1,1	66	73	57	39 500	111 000
BSB045100-T	0,81	**45**$_{-0,006}$	100$_{-0,008}$	20$_{-0,12}$	1,5	75	85,5	64,5	62 000	172 000
7603045-TVP	0,992	**45**$_{-0,006}$	100$_{-0,008}$	25$_{-0,12}$	1,5	77,5	85,5	64,5	62 000	172 000
7602050-TVP	0,557	**50**$_{-0,006}$	90$_{-0,008}$	20$_{-0,12}$	1,1	71,5	79	63	41 000	122 000
BSB050100-T	0,75	**50**$_{-0,006}$	100$_{-0,008}$	20$_{-0,12}$	1,5	75	85,5	64,5	62 000	172 000
7603050-TVP	1,29	**50**$_{-0,006}$	110$_{-0,008}$	27$_{-0,12}$	2	85,5	94	72	72 000	203 000
BSB055090-T	0,38	**55**$_{-0,007}$	90$_{-0,008}$	15$_{-0,15}$	1,0	70,5	80	65	33 500	98 000
7602055-TVP	0,74	**55**$_{-0,007}$	100$_{-0,008}$	21$_{-0,15}$	1,5	77,5	85,5	69,5	42 000	132 000
BSB055120-T	1,2	**55**$_{-0,007}$	120$_{-0,008}$	20$_{-0,15}$	2,0	86	97,5	77	63 000	188 000
7603055-TVP	1,67	**55**$_{-0,007}$	120$_{-0,008}$	29$_{-0,15}$	2	91,5	101	77	85 000	255 000

1) Valid for matched pair of bearings in O or X arrangement.

2) Valid for individual bearing with stated preload force, bearing lightly oiled.

3) Only valid in conjunction with INA precision locknuts.

4) The axial runout data for screw drive bearing arrangements are based on the rotating inner ring.

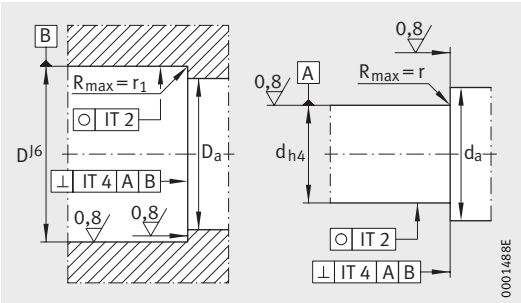

Design of adjacent construction

Limiting speed	Bearing frictional torque[2]	Rigidity[1] axial	Axial runout[4]	Recommended INA locknut; to be ordered separately			
				Designation		Tightening torque[3]	Axial preload force
n_G grease	M_{RL}	c_{aL}				M_A	
min^{-1}	Nm	N/µm	µm			Nm	N
8 000	0,015	476	2	**ZM12**	**AM12**	8	6 110
6 700	0,02	516	2	**ZM15**	**AM15**	10	5 740
6 000	0,03	596	2	**ZM17**	**AM17**	15	8 060
5 000	0,05	703	2	**ZM20**	**AM20**	18	8 490
5 600	0,05	703	2	**ZM20**	**AM20**	18	8 490
4 500	0,06	787	2	**ZM20**	**AM20**	25	11 600
4 500	0,065	772	2	**ZM25**	**AM25**	25	9 430
4 300	0,085	917	2	**ZM25**	**AM25**	40	14 480
3 800	0,085	917	2	**ZM25**	**AM25**	40	14 480
4 200	0,085	893	2	**ZM30**	**AM30**	32	10 240
3 800	0,085	893	2	**ZM30**	**AM30**	32	10 240
3 200	0,13	1 073	2	**ZM30**	**AM30**	55	16 180
3 700	0,115	1 020	2	**ZM35**	**AM35**	40	11 310
3 200	0,115	1 020	2	**ZM35**	**AM35**	40	11 310
3 000	0,17	1 192	2	**ZM35**	**AM35**	65	17 380
3 500	0,115	1 016	2	**ZM40**	**AM40**	40	10 190
2 800	0,17	1 190	2	**ZM40**	**AM40**	55	13 330
3 100	0,225	1 292	2	**ZM40**	**AM40**	110	25 120
2 600	0,225	1 292	2	**ZM40**	**AM40**	110	25 120
3 300	0,13	1 072	2	**ZM45**	**AM45**	50	11 140
2 600	0,19	1 247	2	**ZM45**	**AM45**	65	14 410
2 700	0,3	1 473	2	**ZM45**	**AM45**	120	25 160
2 200	0,3	1 473	2	**ZM45**	**AM45**	120	25 160
2 400	0,23	1 360	2	**ZM50**	**AM50**	85	16 810
2 700	0,33	1 473	2	**ZM50**	**AM50**	120	23 770
2 000	0,36	1 601	2	**ZM50**	**AM50**	150	28 930
2 800	0,19	1 246	3	**ZM55**	**AM55**	60	12 040
2 200	0,25	1 394	3	**ZM55**	**AM55**	85	15 060
2 400	0,36	1 553	3	**ZM55**	**AM55**	110	20 070
1 900	0,46	1 723	3	**ZM55**	**AM55**	130	24 120

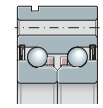

Axial angular contact ball bearings

Single direction

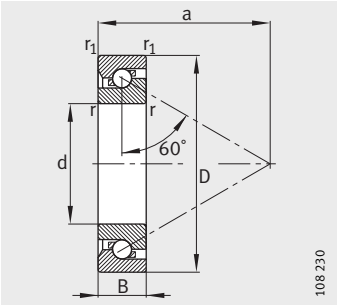

7602, 7603, BSB

Dimension table (continued) · Dimensions in mm

Designation[4]	Mass	Dimensions					Mounting dimensions	
	m	d	D	B	r, r_1	a	D_a H12	d_a h12
	≈kg				min.	≈		
7602060-TVP	0,94	**60$_{-0,007}$**	110$_{-0,008}$	22$_{-0,15}$	1,5	86	96	77
BSB060120-T	1,1	**60$_{-0,007}$**	120$_{-0,009}$	22$_{-0,15}$	1,5	88	100,5	79,5
7603060-TVP	2,08	**60$_{-0,007}$**	130$_{-0,009}$	31$_{-0,15}$	2,1	98	107,5	82,5
7602065-TVP	1,19	**65$_{-0,007}$**	120$_{-0,009}$	23$_{-0,15}$	1,5	92,5	103	84
7603065-TVP	2,58	**65$_{-0,007}$**	140$_{-0,009}$	33$_{-0,15}$	2,1	107,5	118,5	91,5
7602070-TVP	1,3	**70$_{-0,007}$**	125$_{-0,009}$	24$_{-0,15}$	1,5	96,5	108	87
7603070-TVP	3,16	**70$_{-0,007}$**	150$_{-0,009}$	35$_{-0,15}$	2,1	113	124,5	95,5
BSB075110-T	0,47	**75$_{-0,007}$**	110$_{-0,008}$	15$_{-0,15}$	1,5	87,5	99,5	85
7602075-TVP	1,42	**75$_{-0,007}$**	130$_{-0,009}$	25$_{-0,15}$	1,5	102,5	114,5	93,5
7603075-TVP	3,74	**75$_{-0,007}$**	160$_{-0,01}$	37$_{-0,15}$	2,1	123	135,5	105,5
7602080-TVP	1,72	**80$_{-0,007}$**	140$_{-0,009}$	26$_{-0,15}$	2	109	122	100
7603080-TVP	4,5	**80$_{-0,007}$**	170$_{-0,01}$	39$_{-0,15}$	2,1	129,5	143	111
7602085-TVP	2,17	**85$_{-0,008}$**	150$_{-0,009}$	28$_{-0,2}$	2	117	131	107
7603085-TVP	5,24	**85$_{-0,008}$**	180$_{-0,01}$	41$_{-0,2}$	3	136	151	116
7602090-TVP	2,67	**90$_{-0,008}$**	160$_{-0,01}$	30$_{-0,2}$	2	124	138,5	113,5
7603090-TVP	6,18	**90$_{-0,008}$**	190$_{-0,011}$	43$_{-0,2}$	3	142,5	157,5	122,5
7602095-TVP	3,25	**95$_{-0,008}$**	170$_{-0,01}$	32$_{-0,2}$	2,1	131	146,5	119,5
7603095-TVP	7,22	**95$_{-0,008}$**	200$_{-0,011}$	45$_{-0,2}$	3	150	165	130
BSB100150-T	1,4	**100$_{-0,008}$**	150$_{-0,009}$	22,5$_{-0,2}$	2	119,5	135	114,5
7602100-TVP	3,9	**100$_{-0,008}$**	180$_{-0,01}$	34$_{-0,2}$	2,1	138	154,5	125,5
7603100-TVP	8,78	**100$_{-0,008}$**	215$_{-0,011}$	47$_{-0,2}$	3	161	178	140

1) Valid for matched pair of bearings in O or X arrangement.
2) Valid for individual bearing with stated preload force, bearing lightly oiled.
3) Only valid in conjunction with INA precision locknuts.
4) Available by agreement.
5) The axial runout data for screw drive bearing arrangements are based on the rotating inner ring.

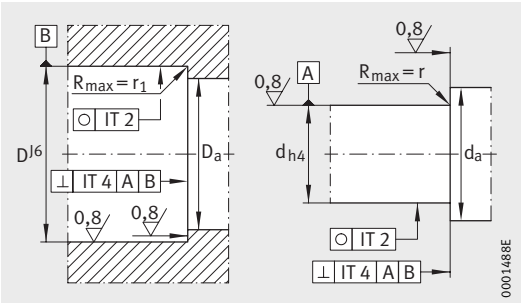

Design of adjacent construction

Basic load ratings axial		Limiting speed	Bearing frictional torque[2]	Rigidity[1] axial	Axial runout[5]	Recommended INA locknut; to be ordered separately			
dyn. C_a	stat. C_{0a}	n_G grease	M_{RL}	c_{aL}		Designation		Tightening torque[3] M_A	Axial preload force
N	N	min^{-1}	Nm	N/µm	µm			Nm	N
58 000	183 000	2 000	0,35	1 623	3	**ZM60**	**AM60**	100	17 410
64 000	196 000	2 300	0,38	1 623	3	**ZM60**	**AM60**	120	20 020
92 000	270 000	1 800	0,54	1 840	3	**ZM60**	**AM60**	150	25 840
60 000	197 000	1 800	0,41	1 753	3	**ZM65**	**AM65**	110	17 680
106 000	330 000	1 600	0,7	2 052	3	**ZM65**	**AM65**	150	25 290
68 000	220 000	1 800	0,44	1 753	3	**ZM70**	**AM70**	115	17 300
117 000	360 000	1 600	0,76	2 108	3	**ZM70**	**AM70**	180	27 640
37 000	133 000	2 300	0,29	1 534	3	**ZM75**	**AM75**	140	18 560
70 000	236 000	1 600	0,48	1 888	3	**ZM75**	**AM75**	160	22 820
132 000	425 000	1 400	0,92	2 335	3	**ZM75**	**AM75**	200	29 360
81 000	275 000	1 500	0,6	2 047	3	**ZM80**	**AM80**	160	21 620
144 000	465 000	1 400	1,1	2 466	3	**ZM80**	**AM80**	220	31 020
95 000	340 000	1 400	0,76	2 209	3	**ZM85**	**AM85**	250	30 460
169 000	550 000	1 300	1,25	2 539	3	**ZM85**	**AM85**	280	36 310
102 000	365 000	1 400	0,79	2 275	3	**ZM90**	**AM90**	250	29 160
172 000	580 000	1 200	1,3	2 654	3	**ZM90**	**AM90**	300	37 360
116 000	410 000	1 300	0,95	2 435	3	–	–	–	31 700
175 000	600 000	1 200	1,45	2 770	3	–	–	–	38 280
73 000	265 000	1 800	0,6	2 052	3	**ZM100**	**AM100**	200	21 190
128 000	465 000	1 200	1,1	2 594	3	**ZM100**	**AM100**	255	29 150
201 000	700 000	1 100	1,7	2 965	3	**ZM100**	**AM100**	305	36 330

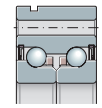

Axial angular contact ball bearings

Single direction
Sealed

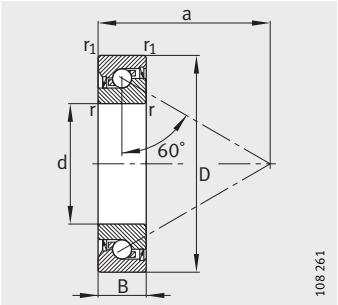

7602..-2RS, 7603..-2RS,
BSB..-2RS

Dimension table · Dimensions in mm

Designation	Mass	Dimensions					Mounting dimensions	
	m	d	D	B	r, r_1	a	D_a H12	d_a h12
	≈kg				min.	≈		
7602012-2RS-TVP	0,042	**$12_{-0,004}$**	$32_{-0,006}$	$10_{-0,08}$	0,6	24	27	17
7602015-2RS-TVP	0,052	**$15_{-0,004}$**	$35_{-0,006}$	$11_{-0,08}$	0,6	27,5	30	20,5
7602020-2RS-TVP	0,12	**$20_{-0,005}$**	$47_{-0,006}$	$14_{-0,12}$	1	36	39,5	27,5
7603020-2RS-TVP	0,17	**$20_{-0,005}$**	$52_{-0,007}$	$15_{-0,12}$	1,1	36,5	43,5	30,5
7602025-2RS-TVP	0,15	**$25_{-0,005}$**	$52_{-0,007}$	$15_{-0,12}$	1	41	45	32
BSB025062-2RS-T	0,24	**$25_{-0,005}$**	$62_{-0,007}$	$15_{-0,12}$	1	46,5	52	38
7603025-2RS-TVP	0,27	**$25_{-0,005}$**	$62_{-0,007}$	$17_{-0,12}$	1,1	47,5	52	38
BSB030062-2RS-T	0,22	**$30_{-0,005}$**	$62_{-0,007}$	$15_{-0,12}$	1	47,5	52,5	39,5
7602030-2RS-TVP	0,23	**$30_{-0,005}$**	$62_{-0,007}$	$16_{-0,12}$	1	48	52,5	39,5
BSB035072-2RS-T	0,3	**$35_{-0,006}$**	$72_{-0,007}$	$15_{-0,12}$	1	54	60,5	46,5
BSB040072-2RS-T	0,26	**$40_{-0,006}$**	$72_{-0,007}$	$15_{-0,12}$	1	56	62,5	49

1) Valid for matched pair of bearings in O or X arrangement.
2) Valid for individual bearing with stated preload force, bearing lightly oiled.
3) Only valid in conjunction with INA precision locknuts.
4) The axial runout data for screw drive bearing arrangements are based on the rotating inner ring.

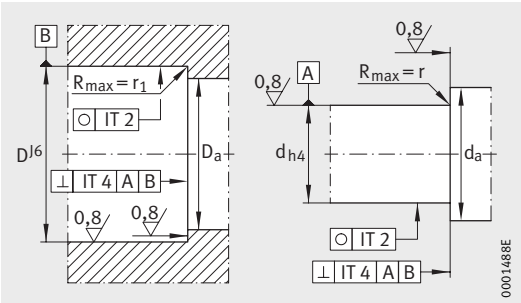

Design of adjacent construction

Basic load ratings axial		Limiting speed	Bearing frictional torque[2]	Rigidity[1] axial	Axial runout[4]	Recommended INA locknut; to be ordered separately			
dyn. C_a	stat. C_{0a}	n_G grease	M_{RL}	c_{aL}		Designation		Tightening torque[3] M_A	Axial preload force
N	N	min^{-1}	Nm	N/µm	µm			Nm	N
12 200	20 700	8 000	0,018	476	2	**ZM12**	**AM12**	8	6 110
13 100	24 700	6 700	0,024	516	2	**ZM15**	**AM15**	10	5 740
19 100	38 000	5 000	0,06	703	2	**ZM20**	**AM20**	18	8 490
25 500	53 000	4 500	0,07	787	2	**ZM20**	**AM20**	18	11 600
23 200	50 000	3 800	0,08	772	2	**ZM25**	**AM25**	25	9 430
29 500	68 000	4 300	0,1	917	2	**ZM25**	**AM25**	40	14 480
29 500	68 000	3 800	0,1	917	2	**ZM25**	**AM25**	40	14 480
27 500	66 000	4 200	0,1	893	2	**ZM30**	**AM30**	32	10 240
27 500	66 000	3 800	0,1	893	2	**ZM30**	**AM30**	32	10 240
31 500	81 000	3 700	0,14	1 020	2	**ZM35**	**AM35**	40	11 310
29 500	82 000	3 500	0,14	1 016	2	**ZM40**	**AM40**	40	10 190

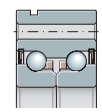

Angular contact ball bearing units

For screw mounting

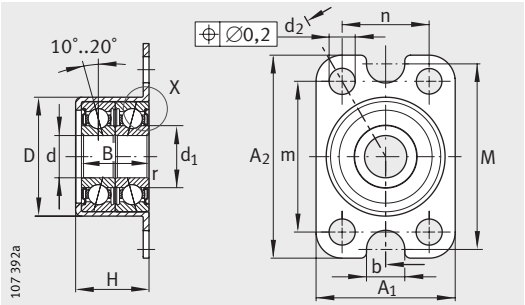

ZKLR0624-2Z, ZKLR0828-2Z

Dimension table · Dimensions in mm

Designation	Mass	Dimensions													
	m ≈kg	d	A_1	A_2	D +0,03 −0,01	B ±0,25	d_1	r min.	d_2	b	m	n	M	H −0,5	d_a
ZKLR0624-2Z	0,023	**6**$_{-0,008}$	24	35	20,5	12	10,4	0,3	4,5	6,6	26	15	32	13	8
ZKLR0828-2Z	0,03	**8**$_{-0,008}$	28	35	23,9	14	11,8	0,3	4,5	6,6	26	20	35	15,5	10,4
ZKLR1035-2Z	0,05	**10**$_{-0,008}$	35	35	28,14	16	14,7	0,3	4,5	–	26	26	–	17,5	12,4
ZKLR1244-2RS	0,12	**12**$_{-0,007}$	44	50	35,45	20	16,6	0,3	6,6	–	38	32	–	22	14
ZKLR1547-2RS	0,14	**15**$_{-0,007}$	47	51	38,45	22	18	0,3	6,6	–	39	35	–	24	17,5
ZKLR2060-2RS	0,3	**20**$_{-0,008}$	60	60	50,45	28	24,4	0,3	6,6	–	47	47	–	30	24

1) Tightening torque for the fixing screws as recommended by the manufacturer. Screws must be ordered separately.

2) Mass moment of inertia for rotating inner ring.

3) The locknut is only used to axially locate the bearing unit. It has no influence on the bearing preload.

4) Stated geometrical tolerances only required in diameter area between D_{ai} and D_{aa}.

5) Only valid in conjunction with INA precision locknuts.

6) Statistically determined mean values from measurements on the complete bearing.

7) The axial runout data for screw drive bearing arrangements are based on the rotating inner ring.

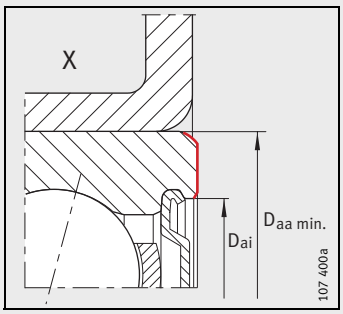

Axial abutment area of outer ring

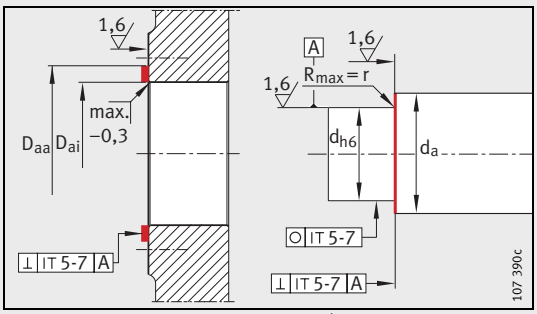

Design of adjacent construction[4)]

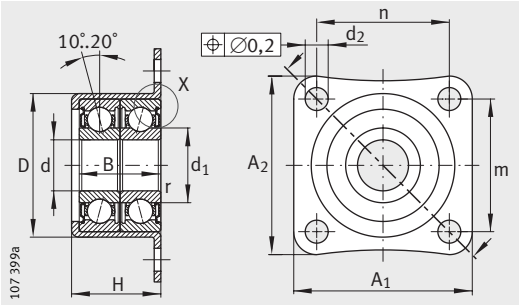

ZKLR1035-2Z

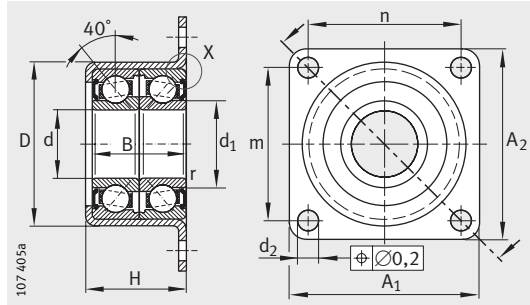

ZKLR1244-2RS, ZKLR1547-2RS, ZKLR2060-2RS

		Fixing screws DIN 912[1)]		Basic load ratings				Limiting speed	Bearing frictional torque	Rigidity axial[6)]	Mass moment of inertia[2)]	Axial runout[7)]	Recommended INA locknut; to be ordered separately[3)]	
				radial		axial							Designation	Tightening torque[5)]
D_{ai}	D_{aa}			dyn. C_r	stat. C_{0r}	dyn. C_a	stat. C_{0a}	n_G grease	M_{RL}	c_{aL}	M_m			M_A
	min.	Size	Quantity	N	N	N	N	min^{-1}	Nm	N/µm	kg · cm^2	µm		Nm
16	19	M4 M6	4 2	3 850	1 870	1 340	1 250	7 300	0,04	17	0,0014	7	**ZM06**	2
18	22	M4 M6	4 2	4 900	2 280	1 810	1 520	6 200	0,08	20	0,0028	7	**ZM08**	4
22	26	M4	4	7 400	3 600	2 550	2 420	5 100	0,12	26	0,0075	7	**ZM10**	6
27	32	M6	4	13 600	8 500	13 200	17 900	3 700	0,16	170	0,0102	7	**ZM12**	8
29	35	M6	4	16 700	10 700	16 400	22 400	3 400	0,2	200	0,0178	7	**ZM15**	10
39	47	M6	4	28 000	19 100	27 500	40 000	2 800	0,3	250	0,263	8	**ZM20**	18

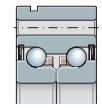

Double row axial angular contact ball bearings with flange

For screw mounting

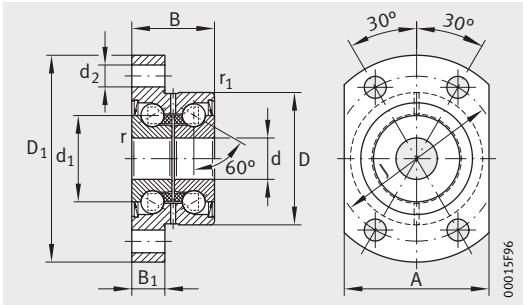

ZKLFA..-2RS, ZKLFA..-2Z

Dimension table · Dimensions in mm

Designation	Mass	Dimensions											Mounting dimensions	
	m	d	D	B	d_1	D_1	r	r_1	B_1	d_2	J	A	d_a	
	≈kg	–0,005	–0,01	–0,25			min.	min.					min.	max.
ZKLFA0630-2Z	0,05	**6**	19	12	12	30	0,3	0,3	5	3,5	24	22	9	15
ZKLFA0640-2RS	0,08	**6**	24	15	14	40	0,3	0,6	6	4,5	32	27	9	18
ZKLFA0640-2Z	0,08	**6**	24	15	14	40	0,3	0,6	6	4,5	32	27	9	18
ZKLFA0850-2RS	0,17	**8**	32	20	19	50	0,3	0,6	8	5,5	40	35	11	25
ZKLFA0850-2Z	0,17	**8**	32	20	19	50	0,3	0,6	8	5,5	40	35	11	25
ZKLFA1050-2RS	0,18	**10**	32	20	21	50	0,3	0,6	8	5,5	40	35	14	27
ZKLFA1050-2Z	0,18	**10**	32	20	21	50	0,3	0,6	8	5,5	40	35	14	27
ZKLFA1263-2RS	0,3	**12**	42	25	25	63	0,3	0,6	10	6,8	53	45	16	31
ZKLFA1263-2Z	0,3	**12**	42	25	25	63	0,3	0,6	10	6,8	53	45	16	31
ZKLFA1563-2RS	0,31	**15**	42	25	28	63	0,3	0,6	10	6,8	53	45	20	34
ZKLFA1563-2Z	0,31	**15**	42	25	28	63	0,3	0,6	10	6,8	53	45	20	34

1) Tightening torque for the fixing screws as recommended by the manufacturer.
Screws are not included in the delivery.

2) Mass moment of inertia for rotating inner ring.

3) Only valid in conjunction with INA precision locknuts.

4) The axial runout data for screw drive bearing arrangements are based on the rotating inner ring.

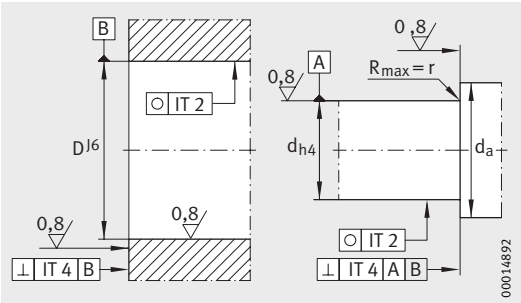

Design of adjacent construction

Fixing screws[1] DIN 912-10.9		Basic load ratings axial		Limiting speed	Bearing frictional torque	Rigidity axial	Tilting rigidity	Mass moment of inertia[2]	Axial runout[4]	Recommended INA locknut; to be ordered separately		
		dyn. C_a	stat. C_{0a}	n_G grease	M_{RL}	c_{aL}	c_{kL}	M_m		Designation	Tightening torque[3]	Axial preload force
Size	Quantity	N	N	min^{-1}	Nm	N/µm	Nm/mrad	kg · cm²	µm		M_A Nm	N
M3	4	4 900	6 100	14 000	0,01	150	4	0,0019	2	**ZM06** –	2	916
M4	4	6 900	8 500	6 800	0,04	200	8	0,0044	2	**ZM06** –	2	2 404
M4	4	6 900	8 500	12 000	0,02	200	8	0,0044	2	**ZM06** –	2	2 404
M5	4	12 500	16 300	5 100	0,08	250	20	0,02	2	**ZM08** –	4	2 216
M5	4	12 500	16 300	9 500	0,04	250	20	0,02	2	**ZM08** –	4	2 216
M5	4	13 400	18 800	4 600	0,12	325	25	0,029	2	**ZM10** –	6	4 891
M5	4	13 400	18 800	8 600	0,06	325	25	0,029	2	**ZM10** –	6	4 891
M6	4	16 900	24 700	3 800	0,16	375	50	0,068	2	**ZM12** –	8	5 038
M6	4	16 900	24 700	7 600	0,08	375	50	0,068	2	**ZM12** –	8	5 038
M6	4	17 900	28 000	3 500	0,2	400	65	0,102	2	**ZM15 AM15**	10	5 484
M6	4	17 900	28 000	7 000	0,1	400	65	0,102	2	**ZM15 AM15**	10	5 484

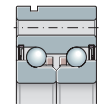

Triple row axial angular contact ball bearings with flange

For screw mounting

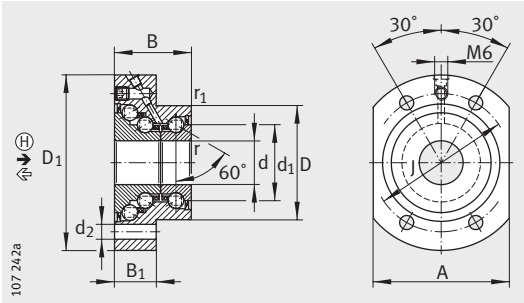

DKLFA..-2RS (d ≦ 20 mm)

Attention!

The bearings require continuous load in the main load direction Ⓗ.

Dimension table · Dimensions in mm

Designation	Mass	Dimensions											Mounting dimensions	
	m	d	D	B	d_1	D_1	r	r_1	B_1	d_2	J	A	d_a	
	≈kg	–0,010	–0,013	–0,25			min.	min.					min.	max.
DKLFA1575-2RS	0,53	**15**	45	32	28	75	0,3	0,6	18	6,8	58	55	20	35
DKLFA2080-2RS	0,7	**20**	52	35	34,5	80	0,3	0,6	19	6,8	63	62	25	43
DKLFA2590-2RS	0,9	**25**	57	38	40,5	90	0,3	0,6	22	8,8	75	70	32	48
DKLFA30100-2RS	1	**30**	62	38	45,5	100	0,3	0,6	22	8,8	80	72	40	53
DKLFA30110-2RS[3]	2,5	**30**	75	56	51	110	0,3	0,6	35	8,8	95	85	47	64
DKLFA40115-2RS	1,5	**40**	72	42	58	115	0,3	0,6	23	8,8	94	90	50	67
DKLFA40140-2RS[3]	4,2	**40**	90	60	65	140	0,3	0,6	35	11	118	110	56	80

1) Tightening torque for the fixing screws as recommended by the manufacturer. Screws are not included in the delivery.

2) Mass moment of inertia for rotating inner ring.

3) Heavy series.

4) The axial runout data for screw drive bearing arrangements are based on the rotating inner ring.

INA locknuts (accessories)

Triple row angular contact ball bearing Designation	Recommended INA locknut; to be ordered separately Designation		
	①		②
DKLFA1575-2RS	**AM15**	**ZMA15/33**	**ZM17**
DKLFA2080-2RS	**AM20**	**ZMA20/38**	**ZM25**
DKLFA2590-2RS	**AM25**	**ZMA25/45**	**AM30**
DKLFA30100-2RS	**AM30**	**ZMA30/52**	**ZM35**
DKLFA30110-2RS	**AM30/65**	–	**ZM35**
DKLFA40115-2RS	**AM40**	**ZMA40/62**	**ZM45**
DKLFA40140-2RS	**AM40/85**	–	**ZM45**

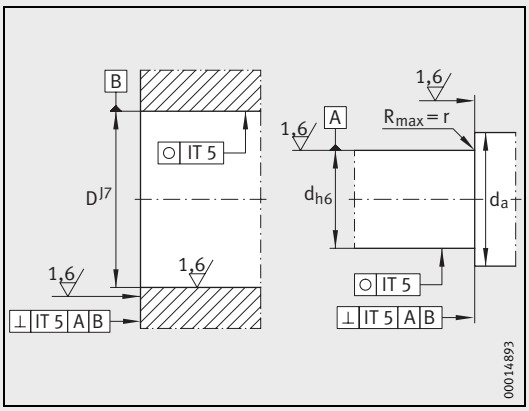

Design of adjacent construction

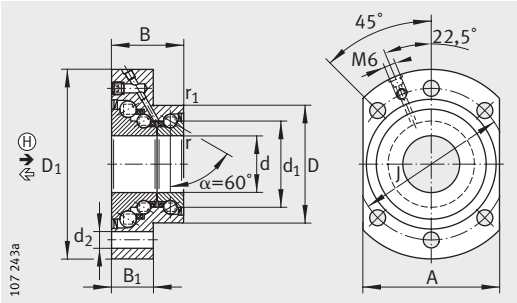

DKLFA..-2RS (d ≧ 25 mm)

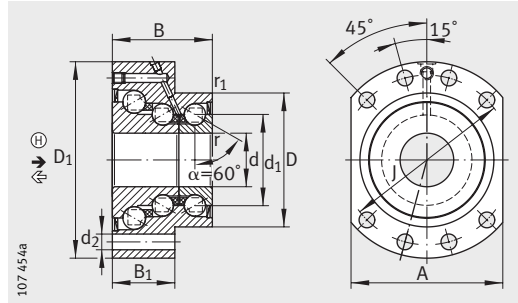

DKLFA..-2RS
Heavy series

Fixing screws[1] DIN 912-10.9		Basic load ratings				Limiting speed	Bearing frictional torque	Rigidity	Rigidity	Tilting rigid-ity	Mass moment of inertia[2]	Axial run-out[4]
		axial ⇐		axial Ⓗ ➔				axial ⇐	axial ➔			
		dyn. C_a	stat. C_{0a}	dyn. C_a	stat. C_{0a}	n_G grease	M_{RL}	c_{aL}	c_{aL}	c_{kL}	M_m	
Size	Quan-tity	N	N	N	N	min^{-1}	Nm	N/µm	N/µm	Nm/mrad	kg · cm²	µm
M6	4	17 900	28 000	37 000	83 000	2 600	0,35	500	950	140	0,278	5
M6	4	26 000	47 000	44 500	110 000	2 200	0,45	750	1 100	260	0,553	5
M8	6	27 500	55 000	52 000	144 000	2 000	0,6	850	1 200	370	1,12	5
M8	6	29 000	64 000	55 000	165 000	1 800	0,75	900	1 400	500	1,7	5
M8	8	59 000	108 000	106 000	257 000	1 600	1,5	1 300	1 600	650	3,23	5
M8	6	43 000	101 000	73 000	227 000	1 500	1	1 100	1 700	1 000	4,23	5
M10	8	72 000	149 000	126 000	363 000	1 200	2,5	1 800	2 000	1 370	9,32	5

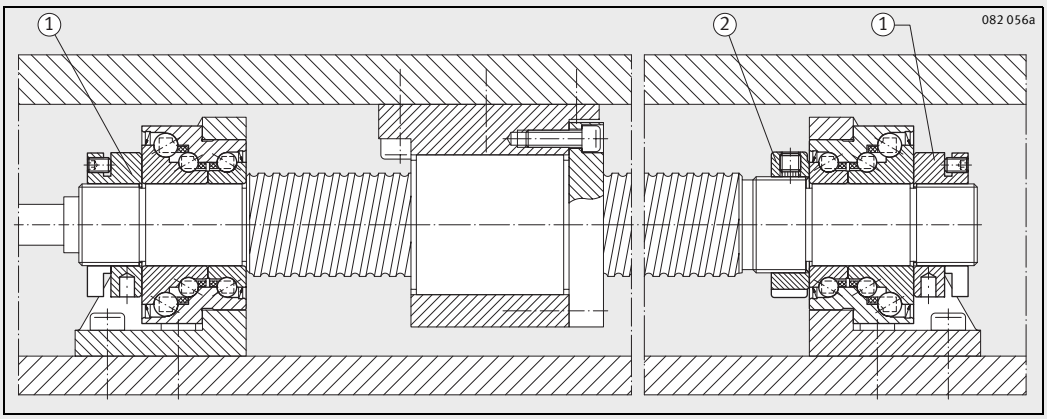

Ball screw drive spindle with locating bearing arrangement on both sides
Numbers in circles: see table INA locknuts (accessories), page 58

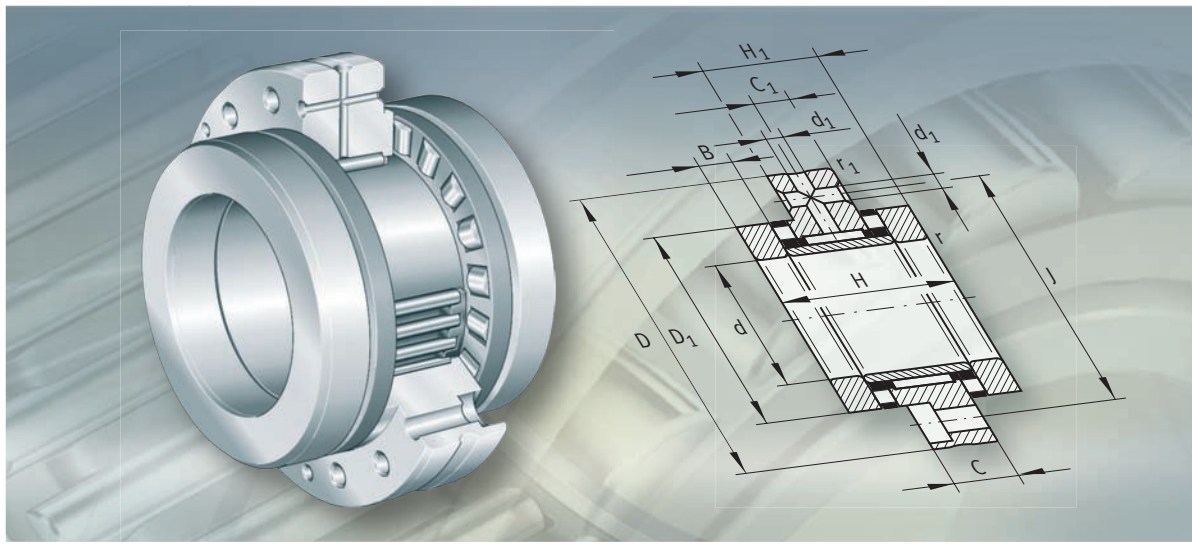

Needle roller/ axial cylindrical roller bearings

Needle roller/ axial cylindrical roller bearings

		Page
Product overview	Needle roller/axial cylindrical roller bearings	62
Features	Bearings for screw mounting	63
	Bearings not for screw mounting	64
	Operating temperature	64
	Suffixes	64
Design and safety guidelines	Basic rating life	65
	Resultant and equivalent bearing load	65
	Static load safety factor	65
	Design of adjacent construction	67
	Speeds	67
	Friction	68
	Lubrication	68
	Mounting guidelines	70
Accuracy		71
Dimension tables	Needle roller/axial cylindrical roller bearings, light series, for screw mounting	72
	Needle roller/axial cylindrical roller bearings, heavy series, for screw mounting	76
	Needle roller/axial cylindrical roller bearings, light series, not for screw mounting	80
	Needle roller/axial cylindrical roller bearings, heavy series, not for screw mounting	84

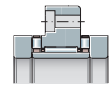

Needle roller/ axial cylindrical roller bearings

For screw mounting

ZARF

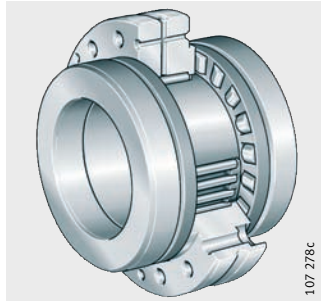

With extended shaft locating washer

ZARF..-L

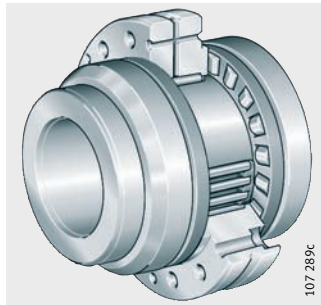

Not for screw mounting

ZARN

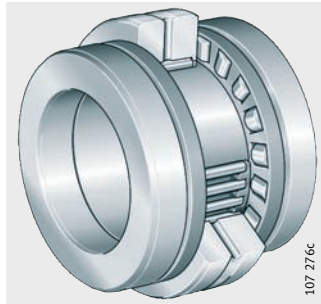

With extended shaft locating washer

ZARN..-L

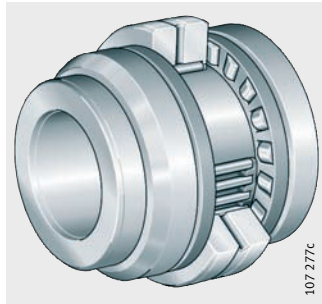

Needle roller/ axial cylindrical roller bearings

Features

Needle roller/axial cylindrical roller bearings comprise an outer ring with radial and axial raceways, shaft locating washers, an inner ring, a radial needle roller and cage assembly and axial cylindrical roller and cage assemblies. The bearings are available in versions for screw mounting and not for screw mounting.

Radial and axial load carrying capacity

In addition to radial forces, the bearings can also support axial forces from both directions and tilting moments.

Preload and internal clearance

The outer ring, inner ring and axial cages are matched to each other such that the bearing is axially clearance-free after preloading by means of an INA precision locknut.
The radial internal clearance is C2 according to DIN 620.

Bearings for screw mounting

Needle roller/axial cylindrical roller bearings ZARF(L) have holes in the outer ring. These are used for screw mounting directly on the adjacent construction or in a radial locating bore, *Figure 1*.

Due to screw mounting of the outer ring, the cover that would otherwise be required and the matching work can therefore be dspensed with. The bearings are preloaded against the shaft shoulder by means of a precision locknut AM or ZM(A).

With seal carrier assembly

In the interests of a simpler design, a seal carrier assembly DRS, *Figure 1*, ①, is recommended. The seal carrier assembly is centred on the outer ring and seals the bearing against outside influences.

ZARF..-L

① Seal carrier asembly DRS
② Locknut
③ Stepped shaft locating washer
④ Sealing ring

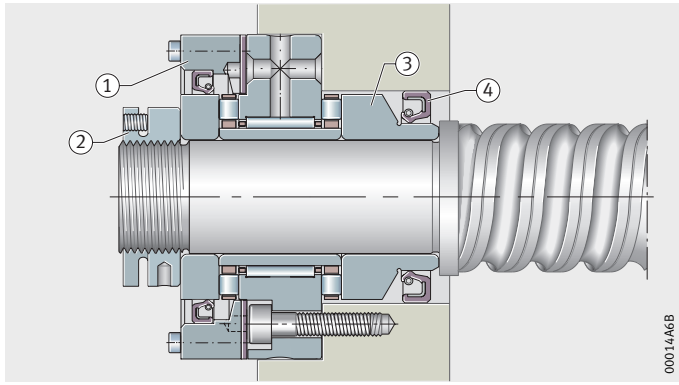

Figure 1
Stepped shaft locating washer with sealing ring

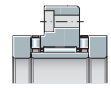

With extended shaft locating washer

ZARF..-L has an extended and stepped shaft locating washer, *Figure 1*. These series are used in preference where the shaft locating washers are not adequately supported axially by the shaft shoulder or the bearing unit cannot be sealed on the outside surface of the normal shaft locating washer due to space conditions in the adjacent construction.

Heavy series

ZARF(L) is also available in a heavy series. This series has a larger cross-section for the same shaft diameter and therefore higher basic load ratings.

Bearings not for screw mounting

Bearings ZARN(L) are mounted in a housing bore and the outer ring is located using a cover, *Figure 2*. They are preloaded against the shaft shoulder by means of a precision locknut AM or ZM(A).

ZARN

① Cover

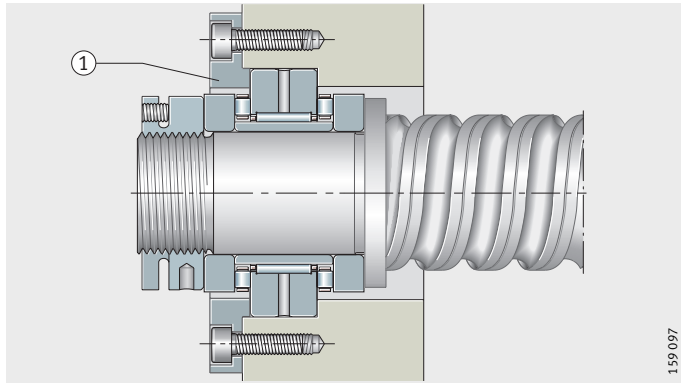

Figure 2
Bearing outer ring located using cover

With extended shaft locating washer

ZARN..-L has an extended and stepped shaft locating washer, *Figure 3*.
This series is used in preference where the shaft locating washer is not adequately supported axially by the shaft shoulder or the bearing unit cannot be sealed on the outside surface of the normal shaft locating washer due to space conditions in the adjacent construction.

ZARN..-L

① Stepped shaft locating washer
② Sealing ring

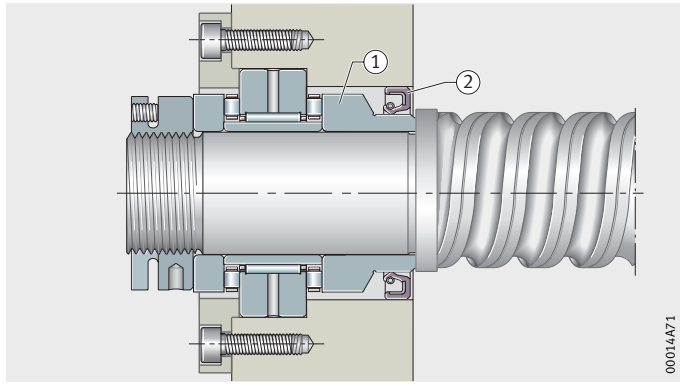

Figure 3
Stepped shaft locating washer with sealing ring

Heavy series

ZARN(L) is also available in a heavy series.
This series has a larger cross-section for the same shaft diameter and therefore higher basic load ratings.

Operating temperature

The bearings are suitable for temperatures from –30 °C to +120 °C.

Suffixes

Suffixes for the available designs: see table.

Available designs

Suffix	Description	Design
L	Extended, stepped shaft locating washer	Standard
TV	Cages made from glass fibre reinforced polyamide 66	

Design and safety guidelines

Basic rating life

The decisive factors in determining the bearing size are the basic rating life, the static load safety factor and the axial limiting load. The basic rating life L and L_h are calculated as follows:

$$L_{10} = \left(\frac{C}{P}\right)^p$$

$$L_{10h} = \frac{16\,666}{n} \cdot \left(\frac{C}{P}\right)^p$$

C_r, C_a N
Basic dynamic radial or axial load rating according to dimension table

p –
Life exponent p = 10/3.

Resultant and equivalent bearing load

The resultant axial bearing load $F_{a\ res}$ is determined from the axial operating load F_{aB} and taking account of the axial preload, *Figure 4*, page 66, to *Figure 6*, page 66.

Under purely axial load, $P = F_{a\ res}$. If additional radial operating loads are present, these must be calculated separately using the radial basic load ratings. The limit values up to which the axial load can be supported without clearance are shown, *Figure 4*, page 66, to *Figure 6*, page 66.

A load in excess of the limit value will lead to the rolling element row without load lifting off the raceway. As a result, higher wear will occur under rapid acceleration. For extreme moment loads and statically overdefined systems (locating/locating bearing arrangements), please contact us. The calculation program BEARINX® can give a precise design in this case.

Load varying in steps

In this case, P and n are calculated as follows (q = time portion %):

$$P = \sqrt[p]{\frac{q_1 \cdot n_1 \cdot P_1^{\,p} + \ldots + q_z \cdot n_z \cdot P_z^{\,p}}{q_1 \cdot n_1 + \ldots + q_z \cdot n_z}}$$

$$n = \frac{q_1 \cdot n_1 + \ldots + q_z \cdot n_z}{100}$$

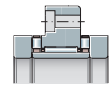

Static load safety factor

The static load safety factor S_0 is calculated according to (see also page 20):

$$S_0 = \frac{C_0}{P_0}$$

In machine tools, S_0 should be ≧ 4.

Resultant bearing load $F_{a\ res}$

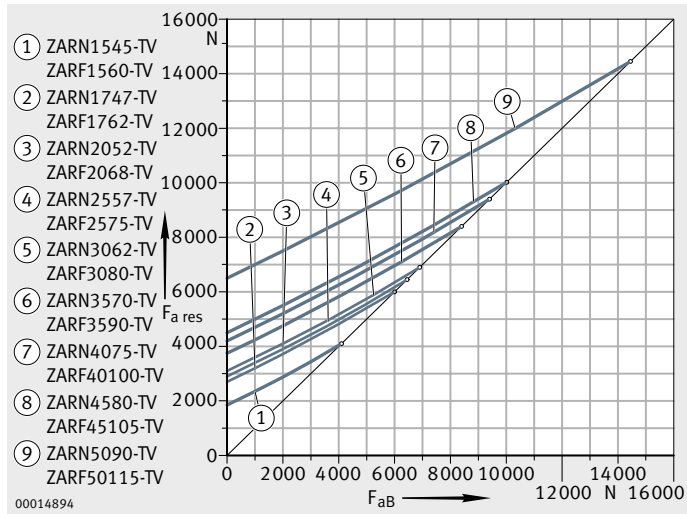

F_{aB} = operating load
$F_{a\ res}$ = resultant bearing load
° = limit value

Figure 4
Resultant bearing load
ZARN, ZARF, light series

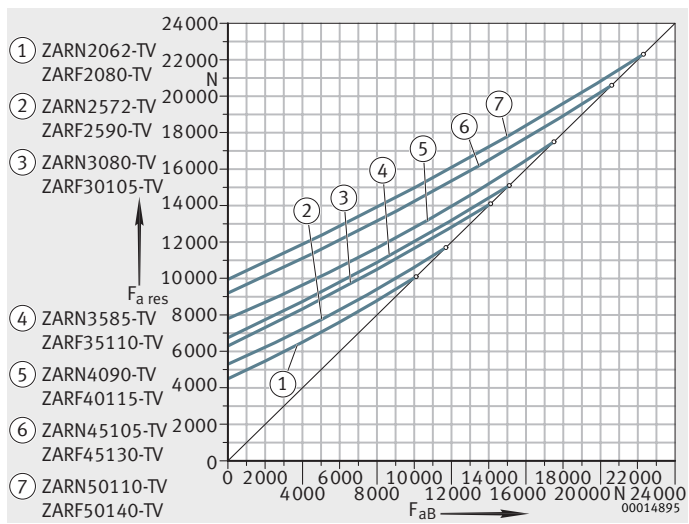

F_{aB} = operating load
$F_{a\ res}$ = resultant bearing load
° = limit value

Figure 5
Resultant bearing load
ZARN, ZARF,
heavy series up to d = 50 mm

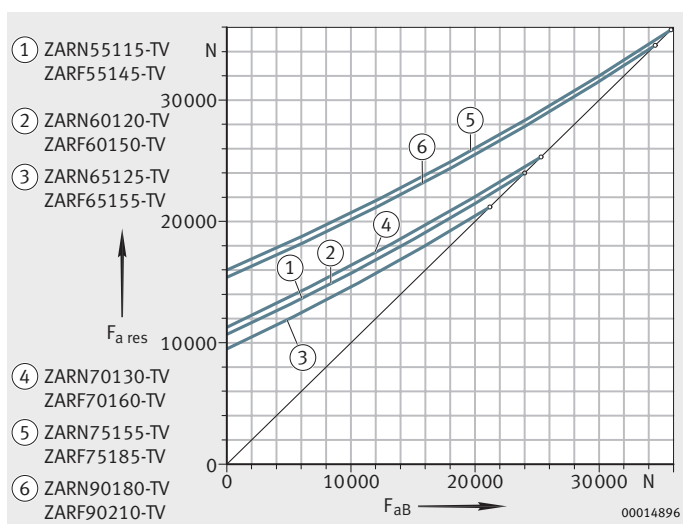

F_{aB} = operating load
$F_{a\ res}$ = resultant bearing load
° = limit value

Figure 6
Resultant bearing load
ZARN, ZARF,
heavy series from d = 55 mm

Design of adjacent construction

The adjacent construction (the shaft and housing) must be designed in accordance with the data in the dimension tables.

The abutment diameters for the shaft and housing shoulders d_a and D_a must be in accordance with the dimension tables.

The permissible contact pressure for the adjacent construction must be observed.

Examples of possible lubricant feeds: see *Figure 7* and *Figure 8*, page 69.

Sealing of the bearing position

The bearings are sealed, *Figure 1*, page 63:

- in the direction of the spindle by a rotary shaft seal on the outside surface machined free from spiral marks of the extended shaft locating washer (ZARN...L, ZARF...L)
- in the direction of the drive by the seal carrier assembly DRS.

Speeds

The limiting speeds n_G given in the dimension tables are based on the following conditions:

- bearing preloaded, no external operating load
- operating duration 25%
- max. equilibrium temperature +50 °C.

The limiting speeds n_G are valid for oil lubrication with adequate cooling.

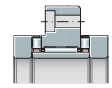

Friction

In most applications, preloading of bearings by means of the locknut tightening torque gives sufficiently accurate setting values.
The reference here is the tightening torque M_A according to the dimension tables in conjunction with an INA precision locknut.

The frictional torque M_{RL} given in the dimension tables is a guide value. It is based on lightly oiled bearings, measured at a speed of $n = 5\ min^{-1}$.

For dimensioning of the drive, the starting frictional torque and the frictional torque at high speeds of 2 to $3 \times M_{RL}$ must be taken into consideration.

Frictional torque and bearing preload

For applications in which the frictional torque is decisive (for example temperature development, frictional torque compensation between different bearing positions, etc.), it is recommended that the bearing preload should be set in accordance with the bearing frictional torque M_{RL}.

Frictional energy

The frictional energy N_R of the bearings can be calculated as follows:

$$N_R = \frac{M_{RL} \cdot n}{9{,}55}$$

N_R Frictional energy	W
M_{RL} Bearing frictional torque	Nm
n Operating speed.	min^{-1}

In any analysis of the thermal balance, the various operating speeds n_i and their corresponding time portions q_i must be taken into consideration.

Lubrication

Needle roller/axial cylindrical roller bearings can be relubricated via the outer ring. They are supplied with oil-based or dry preservative and should preferably be lubricated with oil.

Good results have been obtained with oils CLP to DIN 51 517 and HLP to DIN 51 524 of ISO-VG 32 to ISO-VG 100.

Relubrication for grease lubrication

Relubrication should be carried out with the bearing rotating and still warm from operation in order to achieve good replacement and distribution of grease.

The relubrication interval and quantity can only be determined under operating conditions since it is not possible to calculate all the influences in advance.
Relubrication: see INA Fitting and Maintenance Manual TPI 100.

Where a vertical axis of rotation is used in conjunction with automatic lubrication systems, the lubrication impulse should be selected such that the supply to the upper axial bearing is sufficient.

Lubricant feed

Examples of lubricant feeds for ZARF(L) are shown in *Figure 7*, *Figure 8*.

Before initial operation, it must be ensured that all raceways are adequately supplied with lubricant.

ZARF..-L

① Oil inlet
② Oil outlet
③ Rotary shaft seal
④ Cover
⑤ Seal carrier assembly

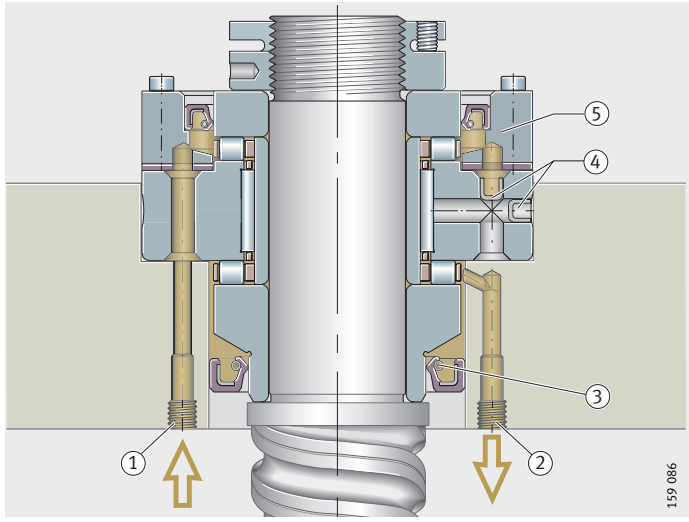

Figure 7
Lubricant feed for vertical mounting position

ZARF..-L

① Oil inlet
② Oil outlet
③ Rotary shaft seal
④ Cover
⑤ Seal carrier assembly

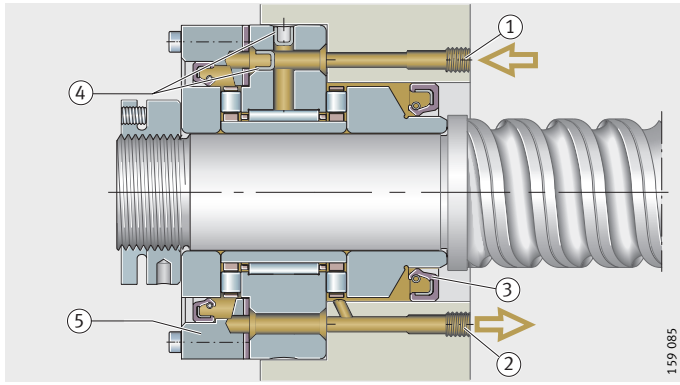

Figure 8
Lubricant feed for horizontal mounting position

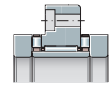

Needle roller/ axial cylindrical roller bearings

Mounting guidelines

Bearings should only be fitted and dismantled in accordance with INA Fitting and Maintenance Manual TPI 100.
This TPI is available upon request.

During fitting of bearings, mounting forces should be applied only to the bearing ring to be fitted. Mounting forces must never be directed through the rolling elements.

The characteristics of the bearings are only valid when used in combination with INA precision locknuts and the associated tightening torques given in the dimension tables.

ZARN and ZARF are not self-retaining. The individual bearing components are matched to each other. The individual parts of different bearings must not be interchanged during fitting.

Setting the axial preload

The preload in the axial component of ZARF(L) bearings is decisive for the function. It must therefore be set with sufficient accuracy.

Since direct force measurement of these values in fitting is not cost-effective, the axial preload is set indirectly using the following methods:

- either by means of the tightening torque M_A of the precision locknut. The frictional torque may deviate from the value given in the dimension table
- or by means of the bearing frictional torque M_{RL}.

Preloading by locknut

Needle roller/axial cylindrical roller bearings must be axially preloaded during fitting by means of a precision locknut.

When preloading the bearing unit by means of the bearing inner rings using the recommended precision locknut, the tightening torques given in the dimension tables must be observed or the preload must be set using the bearing frictional torque given in the dimension tables. The tightening torques given for the individual bearing sizes are only valid for the INA precision locknuts listed.

In order to counteract settling, it is recommended that the locknut should initially be tightened to twice the tightening torque M_A and then relieved of load again. It should only then be tightened again to the stated tightening torque M_A. Finally, the precision locknut should be secured against rotation by the torque-controlled tightening of the set screws.

Fixing screws

The fixing screws for the outer ring must be tightened in a crosswise sequence. They may be loaded up to 70% of their proof stress.

If the bearing outer ring is supported by an additional housing cover, it must be ensured that the fixing screws are sufficiently well dimensioned.

Accuracy

Dimensional and geometrical accuracy (DIN 620):

- axial P4
- radial P6.

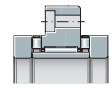

Needle roller/ axial cylindrical roller bearings

Light series
For screw mounting

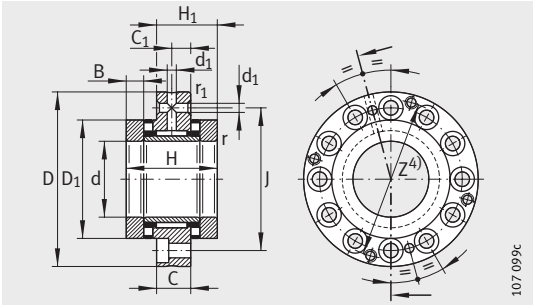

ZARF

Dimension table · Dimensions in mm

Designation	Mass	Dimensions																	
	m	d	D	H	H_1	H_2	H_3	C	C_1	D_1	D_2	D_3	B	B_1	B_2	r	r_1	d_1	J
	≈kg															min.	min.		
ZARF1560-TV	0,42	**15**	60	40	26	–	–	14	8	35	–	–	7,5	–	–	0,3	0,6	3,2	46
ZARF1560-L-TV	0,45	**15**	60	–	–	53	39	14	8	35	24	34	7,5	20,5	11	0,3	0,6	3,2	46
ZARF1762-TV	0,49	**17**	62	43	27,5	–	–	14	8	38	–	–	9	–	–	0,3	0,6	3,2	48
ZARF1762-L-TV	0,52	**17**	62	–	–	57	41,5	14	8	38	28	38	9	23	11	0,3	0,6	3,2	48
ZARF2068-TV	0,56	**20**	68	46	29	–	–	14	8	42	–	–	10	–	–	0,3	0,6	3,2	53
ZARF2068-L-TV	0,61	**20**	68	–	–	60	43	14	8	42	30	40	10	24	11	0,3	0,6	3,2	53
ZARF2575-TV	0,78	**25**	75	50	33	–	–	18	10	47	–	–	10	–	–	0,3	0,6	3,2	58
ZARF2575-L-TV	0,84	**25**	75	–	–	65	48	18	10	47	36	45	10	25	11	0,3	0,6	3,2	58
ZARF3080-TV	0,85	**30**	80	50	33	–	–	18	10	52	–	–	10	–	–	0,3	0,6	3,2	63
ZARF3080-L-TV	0,9	**30**	80	–	–	65	48	18	10	52	40	50	10	25	11	0,3	0,6	3,2	63

1) If rotary shaft seals are used, the outside diameter of the sealing ring must be taken into consideration.

2) Tightening torque of fixing screws according to manufacturer's data.
Screws are not included in the delivery.

3) Mass moment of inertia for rotating inner ring.

4) Mounting dimension for seal carrier assembly DRS.
Seal carrier assemblies: see page 91 and page 97.

5) Only valid in conjunction with INA precision locknuts.

6) The axial runout data for screw drive bearing arrangements are based on the rotating inner ring.

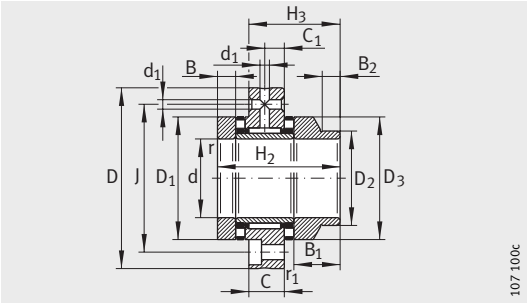

ZARF..-L

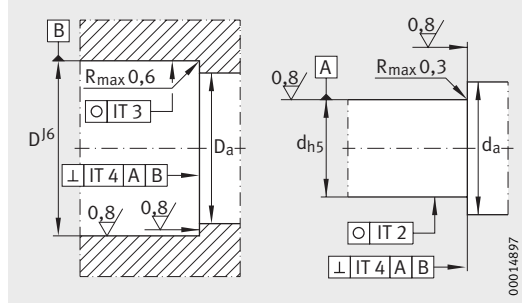

Design of adjacent construction

Mounting dimensions[1]		Basic load ratings				Limiting speeds		Bearing frictional torque	Rigidity axial	Tilting rigidity	Mass moment of inertia[3]	Axial runout[6]
		axial		radial								
D_a	d_a	dyn. C_a	stat. C_{0a}	dyn. C_r	stat. C_{0r}	n_G oil	n_G grease	M_{RL}	c_{aL}	c_{kL}	M_m	
max.	min.	N	N	N	N	min^{-1}	min^{-1}	Nm	N/µm	Nm/mrad	kg · cm^2	µm
36	28	24 900	53 000	13 000	17 500	8 500	2 200	0,35	1 400	110	0,24	1
36	22	24 900	53 000	13 000	17 500	8 500	2 200	0,35	1 400	110	0,274	1
39	28	26 000	57 000	14 000	19 900	7 800	2 100	0,4	1 600	160	0,373	1
39	26	26 000	57 000	14 000	19 900	7 800	2 100	0,4	1 600	160	0,464	1
43	33	33 500	76 000	14 900	22 400	7 000	2 000	0,5	1 800	230	0,615	1
43	28	33 500	76 000	14 900	22 400	7 000	2 000	0,5	1 800	230	0,683	1
48	39	35 500	86 000	22 600	36 000	6 000	1 900	0,55	1 900	350	0,989	1
48	34	35 500	86 000	22 600	36 000	6 000	1 900	0,55	1 900	350	1,15	1
53	44	39 000	101 000	24 300	41 500	5 500	1 800	0,65	2 200	520	1,46	1
53	38	39 000	101 000	24 300	41 500	5 500	1 800	0,65	2 200	520	1,7	1

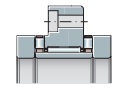

Designation	Recommended INA locknut; to be ordered separately				Rotary shaft seal to DIN 3 760; to be ordered separately	Fixing screws[2] DIN 912-10.9	
	Designation		Tightening torque[5] M_A Nm	Axial preload force N		Size	Quantity
ZARF1560-TV	**ZMA15/33**	**AM15**	10	6 506	–	M6	6
ZARF1560-L-TV	**ZMA15/33**	**AM15**	10	6 506	24X35X7	M6	6
ZARF1762-TV	**ZM17**	**AM17**	12	7 078	–	M6	6
ZARF1762-L-TV	**ZM17**	**AM17**	12	7 078	28X40X7	M6	6
ZARF2068-TV	**ZMA20/38**	**AM20**	18	9 376	–	M6	8
ZARF2068-L-TV	**ZMA20/38**	**AM20**	18	9 376	30X42X7	M6	8
ZARF2575-TV	**ZMA25/45**	**AM25**	25	10 470	–	M6	8
ZARF2575-L-TV	**ZMA25/45**	**AM25**	25	10 470	36X47X7	M6	8
ZARF3080-TV	**ZMA30/52**	**AM30**	32	11 091	–	M6	12
ZARF3080-L-TV	**ZMA30/52**	**AM30**	32	11 091	40X52X7	M6	12

Needle roller/ axial cylindrical roller bearings

Light series
For screw mounting

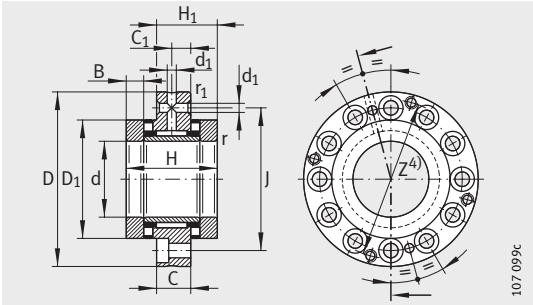

ZARF

Dimension table (continued) · Dimensions in mm

Designation	Mass	Dimensions																	
	m	d	D	H	H_1	H_2	H_3	C	C_1	D_1	D_2	D_3	B	B_1	B_2	r	r_1	d_1	J
	≈kg															min.	min.		
ZARF3590-TV	1,12	**35**	90	54	35	–	–	18	10	60	–	–	11	–	–	0,3	0,6	3,2	73
ZARF3590-L-TV	1,25	**35**	90	–	–	70	51	18	10	60	45	58	11	27	12	0,3	0,6	3,2	73
ZARF40100-TV	1,35	**40**	100	54	35	–	–	18	10	65	–	–	11	–	–	0,3	0,6	3,2	80
ZARF40100-L-TV	1,45	**40**	100	–	–	70	51	18	10	65	50	63	11	27	12	0,3	0,6	3,2	80
ZARF45105-TV	1,7	**45**	105	60	40	–	–	22,5	12,5	70	–	–	11,5	–	–	0,3	0,6	6	85
ZARF45105-L-TV	1,85	**45**	105	–	–	75	55	22,5	12,5	70	56	68	11,5	26,5	12	0,3	0,6	6	85
ZARF50115-TV	2,1	**50**	115	60	40	–	–	22,5	12,5	78	–	–	11,5	–	–	0,3	0,6	6	94
ZARF50115-L-TV	2,45	**50**	115	–	–	78	58	22,5	12,5	78	60	78	11,5	29,5	12	0,3	0,6	6	94

1) If rotary shaft seals are used, the outside diameter of the sealing ring must be taken into consideration.

2) Tightening torque of fixing screws according to manufacturer's data.
Screws are not included in the delivery.

3) Mass moment of inertia for rotating inner ring.

4) Mounting dimension for seal carrier assembly DRS.
Seal carrier assemblies: see page 91 and page 97.

5) Only valid in conjunction with INA precision locknuts.

6) The axial runout data for screw drive bearing arrangements are based on the rotating inner ring.

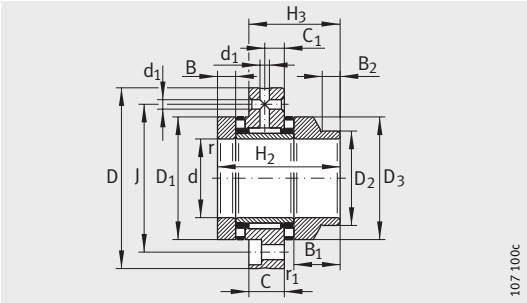

ZARF..-L

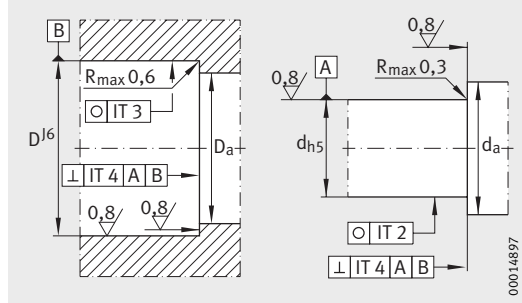

Design of adjacent construction

Mounting dimensions[1]		Basic load ratings				Limiting speeds		Bearing frictional torque	Rigidity axial	Tilting rigidity	Mass moment of inertia[3]	Axial runout[6]
		axial		radial								
D_a	d_a	dyn. C_a	stat. C_{0a}	dyn. C_r	stat. C_{0r}	n_G oil	n_G grease	M_{RL}	c_{aL}	c_{kL}	M_m	
max.	min.	N	N	N	N	min^{-1}	min^{-1}	Nm	N/µm	Nm/mrad	kg · cm^2	µm
61	50	56 000	148 000	26 000	47 000	4 800	1 700	0,9	2 600	740	2,8	1
61	43	56 000	148 000	26 000	47 000	4 800	1 700	0,9	2 600	740	3,21	1
66	55	59 000	163 000	27 500	53 000	4 400	1 600	1	2 800	1 030	3,78	1
66	48	59 000	163 000	27 500	53 000	4 400	1 600	1	2 800	1 030	4,35	1
71	60	61 000	177 000	38 000	74 000	4 000	1 500	1,2	3 000	1 340	5,33	1
71	54	61 000	177 000	38 000	74 000	4 000	1 500	1,2	3 000	1 340	6,03	1
79	67	90 000	300 000	40 000	82 000	3 600	1 200	2,2	4 800	2 470	8,42	1
79	58	90 000	300 000	40 000	82 000	3 600	1 200	2,2	4 800	2 470	10,46	1

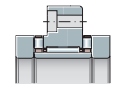

Designation	Recommended INA locknut; to be ordered separately				Rotary shaft seal to DIN 3 760; to be ordered separately	Fixing screws[2] DIN 912-10.9	
	Designation		Tightening torque[5]	Axial preload force			
			M_A Nm	N		Size	Quantity
ZARF3590-TV	**ZMA35/58**	**AM35/58**	42	12 486	–	M6	12
ZARF3590-L-TV	**ZMA35/58**	**AM35/58**	42	12 486	45X60X8	M6	12
ZARF40100-TV	**ZMA40/62**	**AM40**	55	14 240	–	M8	8
ZARF40100-L-TV	**ZMA40/62**	**AM40**	55	14 240	50X65X8	M8	8
ZARF45105-TV	**ZMA45/68**	**AM45**	65	15 765	–	M8	8
ZARF45105-L-TV	**ZMA45/68**	**AM45**	65	15 765	56X70X8	M8	8
ZARF50115-TV	**ZMA50/75**	**AM50**	85	18 410	–	M8	12
ZARF50115-L-TV	**ZMA50/75**	**AM50**	85	18 410	60X80X8	M8	12

Needle roller/ axial cylindrical roller bearings

Heavy series
For screw mounting

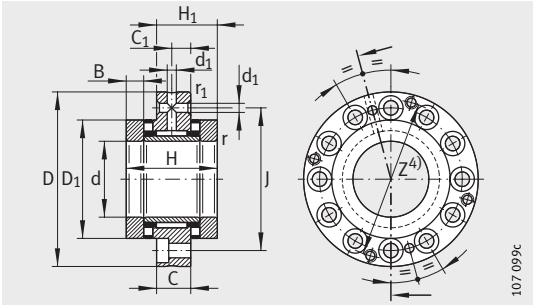

ZARF

Dimension table · Dimensions in mm

Designation	Mass	Dimensions															
	m	d	D	H	H_1	H_2	H_3	C	C_1	D_1	D_2	D_3	B	B_1	B_2	r	r_1
	≈kg															min.	min.
ZARF2080-TV	1,1	**20**	80	60	38	–	–	18	10	52	–	–	12,5	–	–	0,3	0,6
ZARF2080-L-TV	1,22	**20**	80	–	–	75	53	18	10	52	40	50	12,5	27,5	11	0,3	0,6
ZARF2590-TV	1,6	**25**	90	60	38	–	–	18	10	62	–	–	12,5	–	–	0,3	0,6
ZARF2590-L-TV	1,75	**25**	90	–	–	75	53	18	10	62	48	60	12,5	27,5	11	0,3	0,6
ZARF30105-TV	1,95	**30**	105	66	41	–	–	18	10	68	–	–	14	–	–	0,3	0,6
ZARF30105-L-TV	2,15	**30**	105	–	–	82	57	18	10	68	52	66	14	30	12	0,3	0,6
ZARF35110-TV	1,6	**35**	110	66	41	–	–	18	10	73	–	–	14	–	–	0,3	0,6
ZARF35110-L-TV	1,85	**35**	110	–	–	82	57	18	10	73	60	73	14	30	12	0,3	0,6
ZARF40115-TV	2,7	**40**	115	75	47,5	–	–	22,5	12,5	78	–	–	16	–	–	0,3	0,6
ZARF40115-L-TV	3	**40**	115	–	–	93	65,5	22,5	12,5	78	60	78	16	34	12	0,3	0,6
ZARF45130-TV	3,9	**45**	130	82	51	–	–	22,5	12,5	90	–	–	17,5	–	–	0,3	0,6
ZARF45130-L-TV	4,3	**45**	130	–	–	103	72	22,5	12,5	90	70	88	17,5	38,5	14	0,3	0,6

1) If rotary shaft seals are used, the outside diameter of the sealing ring must be taken into consideration.

2) Tightening torque of fixing screws according to manufacturer's data.
Screws are not included in the delivery.

3) Mass moment of inertia for rotating inner ring.

4) Mounting dimension for seal carrier assembly DRS.
Seal carrier assemblies: see page 91 and page 97.

5) Only valid in conjunction with INA precision locknuts.

6) The axial runout data for screw drive bearing arrangements are based on the rotating inner ring.

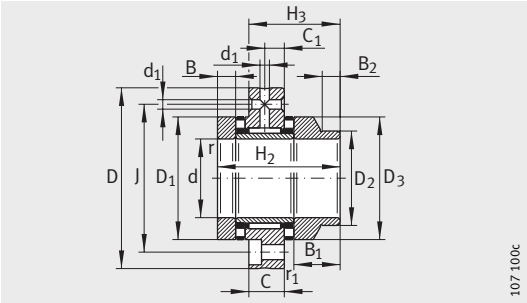

ZARF..-L

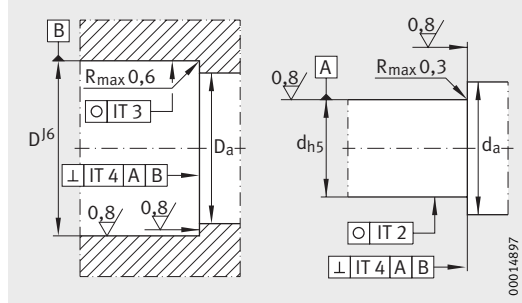

Design of adjacent construction

		Mounting dimensions[1]		Basic load ratings				Limiting speeds		Bearing frictional torque	Rigidity axial	Tilting rigidity	Mass moment of inertia[3]	Axial run-out[6]
				axial		radial								
d_1	J	D_a max.	d_a min.	dyn. C_a N	stat. C_{0a} N	dyn. C_r N	stat. C_{0r} N	n_G oil min^{-1}	n_G grease min^{-1}	M_{RL} Nm	c_{aL} N/µm	c_{kL} Nm/mrad	M_m kg · cm²	µm
3,2	63	53	38	64 000	141 000	22 600	36 000	6 000	1 500	1,3	2 300	400	1,98	1
3,2	63	53	38	64 000	141 000	22 600	36 000	6 000	1 500	1,3	2 300	400	2,27	1
3,2	73	63	45	80 000	199 000	24 300	41 500	4 900	1 400	1,6	3 000	800	3,88	1
3,2	73	63	45	80 000	199 000	24 300	41 500	4 900	1 400	1,6	3 000	800	4,51	1
3,2	85	69	52	107 000	265 000	26 000	47 000	4 400	1 300	2,1	3 300	1 100	6,53	1
3,2	85	69	50	107 000	265 000	26 000	47 000	4 400	1 300	2,1	3 300	1 100	7,43	1
3,2	88	74	60	105 000	265 000	27 500	53 000	4 000	1 250	2,3	2 500	1 300	8,47	1
3,2	88	74	58	105 000	265 000	27 500	53 000	4 000	1 250	2,3	3 500	1 300	10,4	1
6	94	79	65	117 000	315 000	38 000	74 000	3 700	1 200	2,5	3 800	1 800	13,3	1
6	94	79	58	117 000	315 000	38 000	74 000	3 700	1 200	2,5	3 800	1 800	15,5	1
6	105	91	70	154 000	405 000	40 000	82 000	3 300	1 150	3,5	4 000	2 100	23,7	1
6	105	91	68	154 000	405 000	40 000	82 000	3 300	1 150	3,5	4 000	2 100	28,1	1

Designation	Recommended INA locknut; to be ordered separately				Rotary shaft seal to DIN 3 760; to be ordered separately	Fixing screws[2] DIN 912-10.9	
	Designation		Tightening torque[5] M_A Nm	Axial preload force N		Size	Quantity
ZARF2080-TV	**ZMA20/52**	**AM20**	38	18 448	–	M6	12
ZARF2080-L-TV	**ZMA20/52**	**AM20**	38	18 448	40X52X7	M6	12
ZARF2590-TV	**ZMA25/58**	**AM25**	55	20 790	–	M6	12
ZARF2590-L-TV	**ZMA25/58**	**AM25**	55	20 790	48X62X8	M6	12
ZARF30105-TV	**ZMA30/65**	**AM30**	75	24 287	–	M8	12
ZARF30105-L-TV	**ZMA30/65**	**AM30**	75	24 287	52X68X8	M8	12
ZARF35110-TV	**ZMA35/70**	**AM35**	100	27 480	–	M8	12
ZARF35110-L-TV	**ZMA35/70**	**AM35**	100	27 480	60X75X8	M8	12
ZARF40115-TV	**ZMA40/75**	**AM40**	120	29 834	–	M8	12
ZARF40115-L-TV	**ZMA40/75**	**AM40**	120	29 834	60X80X8	M8	12
ZARF45130-TV	**ZMA45/85**	**AM45**	150	33 549	–	M8	12
ZARF45130-L-TV	**ZMA45/85**	**AM45**	150	33 549	70X90X10	M8	12

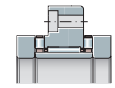

Needle roller/ axial cylindrical roller bearings

Heavy series
For screw mounting

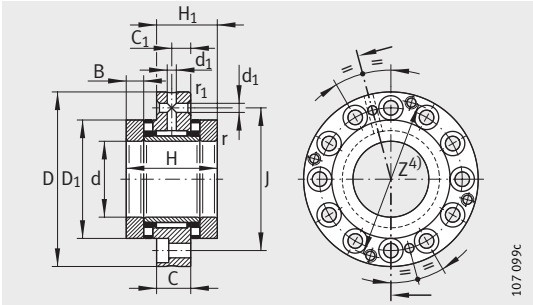

ZARF

Dimension table (continued) · Dimensions in mm

Designation	Mass	Dimensions																	
	m	d	D	H	H_1	H_2	H_3	C	C_1	D_1	D_2	D_3	B	B_1	B_2	r	r_1	d_1	J
	≈kg															min.	min.		
ZARF50140-TV	4,2	**50**	140	82	51	–	–	22,5	12,5	95	–	–	17,5	–	–	0,3	0,6	6	113
ZARF50140-L-TV	4,65	**50**	140	–	–	103	72	22,5	12,5	95	75	93	17,5	38,5	14	0,3	0,6	6	113
ZARF55145-TV	4,5	**55**	145	82	51	–	–	22,5	12,5	100	–	–	17,5	–	–	0,3	0,6	6	118
ZARF55145-L-TV	5	**55**	145	–	–	103	72	22,5	12,5	100	80	98	17,5	38,5	14	0,3	0,6	6	118
ZARF60150-TV	4,7	**60**	150	82	51	–	–	22,5	12,5	105	–	–	17,5	–	–	0,3	0,6	6	123
ZARF60150-L-TV	5,35	**60**	150	–	–	103	72	22,5	12,5	105	90	105	17,5	38,5	16	0,3	0,6	6	123
ZARF65155-TV	5,1	**65**	155	82	51	–	–	22,5	12,5	110	–	–	17,5	–	–	0,3	0,6	6	128
ZARF65155-L-TV	5,7	**65**	155	–	–	103	72	22,5	12,5	110	90	108	17,5	38,5	16	0,3	0,6	6	128
ZARF70160-TV	5,2	**70**	160	82	51	–	–	22,5	12,5	115	–	–	17,5	–	–	0,3	0,6	6	133
ZARF70160-L-TV	5,95	**70**	160	–	–	103	72	22,5	12,5	115	100	115	17,5	38,5	16	0,3	0,6	6	133
ZARF75185-TV	9,4	**75**	185	100	62	–	–	27	15	135	–	–	21	–	–	0,3	1	6	155
ZARF75185-L-TV	10,6	**75**	185	–	–	125	87	27	15	135	115	135	21	46	16	0,3	1	6	155
ZARF90210-TV	13,7	**90**	210	110	69,5	–	–	32	17,5	160	–	–	22,5	–	–	0,3	1	8	180
ZARF90210-L-TV	15,1	**90**	210	–	–	135	94,5	32	17,5	160	130	158	22,5	47,5	16	0,3	1	8	180

1) If rotary shaft seals are used, the outside diameter of the sealing ring must be taken into consideration.

2) Tightening torque of fixing screws according to manufacturer's data.
Screws are not included in the delivery.

3) Mass moment of inertia for rotating inner ring.

4) Mounting dimension for seal carrier assembly DRS.
Seal carrier assemblies: see page 91 and page 97.

5) Only valid in conjunction with INA precision locknuts.

6) The axial runout data for screw drive bearing arrangements are based on the rotating inner ring.

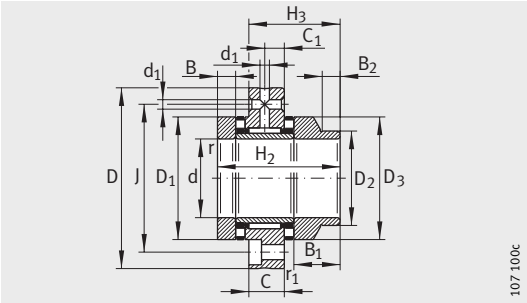

ZARF..-L

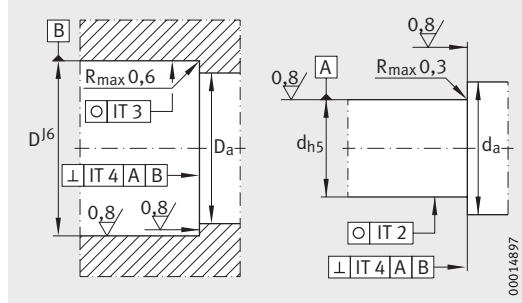

Design of adjacent construction

Mounting dimensions[1]		Basic load ratings				Limiting speeds		Bearing frictional torque	Rigidity axial	Tilting rigidity	Mass moment of inertia[3]	Axial run-out[6]
		axial		radial								
D_a	d_a	dyn. C_a	stat. C_{0a}	dyn. C_r	stat. C_{0r}	n_G oil	n_G grease	M_{RL}	c_{aL}	c_{kL}	M_m	
max.	min.	N	N	N	N	min^{-1}	min^{-1}	Nm	N/µm	Nm/mrad	kg · cm²	µm
96	75	172 000	480 000	42 000	90 000	3 100	1 100	3,8	4 600	2 900	29,8	1
96	73	172 000	480 000	42 000	90 000	3 100	1 100	3,8	4 600	2 900	35,3	1
101	85	177 000	500 000	44 000	98 000	2 900	1 000	4	4 900	3 600	36,1	1
101	78	177 000	500 000	44 000	98 000	2 900	1 000	4	4 900	3 600	43	1
106	90	187 000	550 000	44 500	92 000	2 700	950	4,2	5 300	4 300	43,8	1
106	88	187 000	550 000	44 500	92 000	2 700	950	4,2	5 300	4 300	54,5	1
111	97	172 000	500 000	54 000	104 000	2 600	900	4	4 800	4 000	51	1
111	88	172 000	500 000	54 000	104 000	2 600	900	4	4 800	4 000	60,1	1
116	100	201 000	630 000	56 000	119 000	2 400	800	4,8	5 800	6 000	62,2	1
116	98	201 000	630 000	56 000	119 000	2 400	800	4,8	5 800	6 000	77,3	1
136	113	290 000	890 000	72 000	132 000	2 100	700	8	6 600	8 500	149	2
136	110	290 000	890 000	72 000	132 000	2 100	700	8	6 600	8 500	188	2
161	130	325 000	1 030 000	98 000	210 000	1 800	700	10,5	7 700	14 500	312	2
161	125	325 000	1 030 000	98 000	210 000	1 800	700	10,5	7 700	14 500	372	2

Designation	Recommended INA locknut; to be ordered separately				Rotary shaft seal to DIN 3 760; to be ordered separately	Fixing screws[2] DIN 912-10.9	
	Designation		Tightening torque[5] M_A Nm	Axial preload force N		Size	Quantity
ZARF50140-TV	**ZMA50/92**	**AM50**	180	37 109	–	M10	12
ZARF50140-L-TV	**ZMA50/92**	**AM50**	180	37 109	75X95X10	M10	12
ZARF55145-TV	**ZMA55/98**	**AM55**	220	40 772	–	M10	12
ZARF55145-L-TV	**ZMA55/98**	**AM55**	220	40 772	80X100X10	M10	12
ZARF60150-TV	**ZMA60/98**	**AM60**	250	42 190	–	M10	12
ZARF60150-L-TV	**ZMA60/98**	**AM60**	250	42 190	90X110X12	M10	12
ZARF65155-TV	**ZMA65/105**	**AM65**	270	41 778	–	M10	12
ZARF65155-L-TV	**ZMA65/105**	**AM65**	270	41 778	90X110X12	M10	12
ZARF70160-TV	**ZMA70/110**	**AM70**	330	47 692	–	M10	12
ZARF70160-L-TV	**ZMA70/110**	**AM70**	330	47 692	100X120X12	M10	12
ZARF75185-TV	**ZMA75/125**	**AM75**	580	76 339	–	M12	12
ZARF75185-L-TV	**ZMA75/125**	**AM75**	580	76 339	115X140X12	M12	12
ZARF90210-TV	**ZMA90/155**	**AM90**	960	102 468	–	M12	16
ZARF90210-L-TV	**ZMA90/155**	**AM90**	960	102 468	130X160X12	M12	16

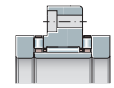

Needle roller/ axial cylindrical roller bearings

Light series
Not for screw mounting

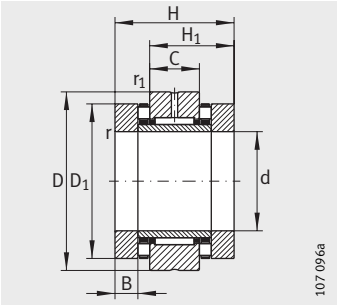

ZARN

Dimension table · Dimensions in mm

Designation	Mass	Dimensions														
	m	d	D	H	H_1	H_2	H_3	C	D_1	D_2	D_3	B	B_1	B_2	r	r_1
	≈kg														min.	min.
ZARN1545-TV	0,34	**15**	45	40	28	–	–	16	35	–	–	7,5	–	–	0,3	0,6
ZARN1545-L-TV	0,37	**15**	45	–	–	53	41	16	35	24	34	7,5	20,5	11	0,3	0,6
ZARN1747-TV	0,37	**17**	47	43	29,5	–	–	16	38	–	–	9	–	–	0,3	0,6
ZARN1747-L-TV	0,41	**17**	47	–	–	57	43,5	16	38	28	38	9	23	11	0,3	0,6
ZARN2052-TV	0,41	**20**	52	46	31	–	–	16	42	–	–	10	–	–	0,3	0,6
ZARN2052-L-TV	0,46	**20**	52	–	–	60	45	16	42	30	40	10	24	11	0,3	0,6
ZARN2557-TV	0,53	**25**	57	50	35	–	–	20	47	–	–	10	–	–	0,3	0,6
ZARN2557-L-TV	0,59	**25**	57	–	–	65	50	20	47	36	45	10	25	11	0,3	0,6
ZARN3062-TV	0,6	**30**	62	50	35	–	–	20	52	–	–	10	–	–	0,3	0,6
ZARN3062-L-TV	0,75	**30**	62	–	–	65	50	20	52	40	50	10	25	11	0,3	0,6

1) If rotary shaft seals are used, the outside diameter of the sealing ring must be taken into consideration.
2) Mass moment of inertia for rotating inner ring.
3) Only valid in conjunction with INA precision locknuts.
4) The axial runout data for screw drive bearing arrangements are based on the rotating inner ring.

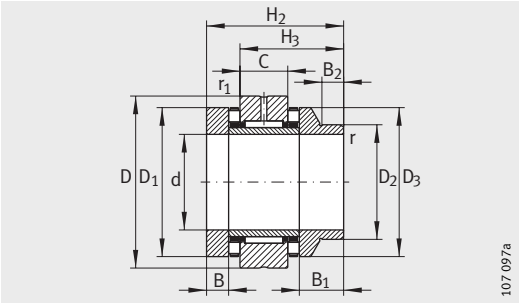

ZARN..-L

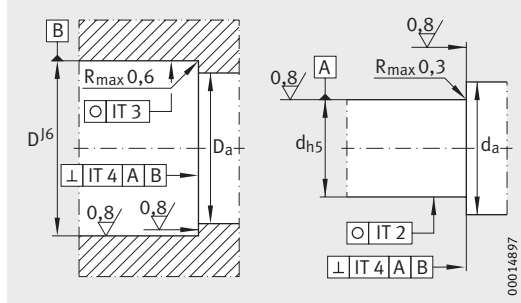

Design of adjacent construction

Mounting dimensions[1]		Basic load ratings				Limiting speeds		Bearing frictional torque	Rigidity axial	Tilting rigidity	Mass moment of inertia[2]	Axial runout[4]
		axial		radial								
D_a	d_a	dyn. C_a	stat. C_{0a}	dyn. C_r	stat. C_{0r}	n_G oil	n_G grease	M_{RL}	c_{aL}	c_{kL}	M_m	
max.	min.	N	N	N	N	min^{-1}	min^{-1}	Nm	N/µm	Nm/mrad	kg · cm^2	µm
36	28	24 900	53 000	13 000	17 500	8 500	2 200	0,35	1 400	110	0,24	1
36	22	24 900	53 000	13 000	17 500	8 500	2 200	0,35	1 400	110	0,274	1
39	28	26 000	57 000	14 000	19 900	7 800	2 100	0,4	1 600	160	0,373	1
39	26	26 000	57 000	14 000	19 900	7 800	2 100	0,4	1 600	160	0,464	1
43	33	33 500	76 000	14 900	22 400	7 000	2 000	0,5	1 800	230	0,615	1
43	28	33 500	76 000	14 900	22 400	7 000	2 000	0,5	1 800	230	0,683	1
48	39	35 500	86 000	22 600	36 000	6 000	1 900	0,55	1 900	350	0,989	1
48	34	35 500	86 000	22 600	36 000	6 000	1 900	0,55	1 900	350	1,15	1
53	44	39 000	101 000	24 300	41 500	5 500	1 800	0,65	2 200	520	1,46	1
53	38	39 000	101 000	24 300	41 500	5 500	1 800	0,65	2 200	520	1,7	1

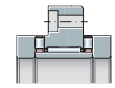

Designation	Recommended INA locknut; to be ordered separately				Rotary shaft seal to DIN 3 760; to be ordered separately
	Designation		Tightening torque[3] M_A Nm	Axial preload force N	
ZARN1545-TV	**ZMA15/33**	**AM15**	10	6 506	–
ZARN1545-L-TV	**ZMA15/33**	**AM15**	10	6 506	24X35X7
ZARN1747-TV	**ZM17**	**AM17**	12	7 078	–
ZARN1747-L-TV	**ZM17**	**AM17**	12	7 078	28X40X7
ZARN2052-TV	**ZMA20/38**	**AM20**	18	9 376	–
ZARN2052-L-TV	**ZMA20/38**	**AM20**	18	9 376	30X42X7
ZARN2557-TV	**ZMA25/45**	**AM25**	25	10 470	–
ZARN2557-L-TV	**ZMA25/45**	**AM25**	25	10 470	36X47X7
ZARN3062-TV	**ZMA30/52**	**AM30**	32	11 091	–
ZARN3062-L-TV	**ZMA30/52**	**AM30**	32	11 091	40X52X7

Needle roller/
axial cylindrical roller bearings

Light series
Not for screw mounting

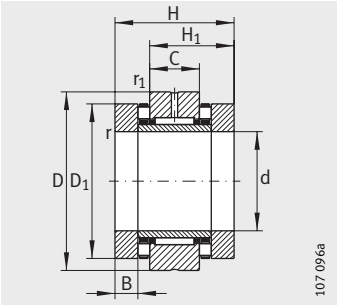

ZARN

Dimension table (continued) · Dimensions in mm

Designation	Mass	Dimensions														
	m	d	D	H	H_1	H_2	H_3	C	D_1	D_2	D_3	B	B_1	B_2	r	r_1
	≈kg														min.	min.
ZARN3570-TV	0,8	**35**	70	54	37	–	–	20	60	–	–	11	–	–	0,3	0,6
ZARN3570-L-TV	0,93	**35**	70	–	–	70	53	20	60	45	58	11	27	12	0,3	0,6
ZARN4075-TV	0,9	**40**	75	54	37	–	–	20	65	–	–	11	–	–	0,3	0,6
ZARN4075-L-TV	1	**40**	75	–	–	70	53	20	65	50	63	11	27	12	0,3	0,6
ZARN4580-TV	1,12	**45**	80	60	42,5	–	–	25	70	–	–	11,5	–	–	0,3	0,6
ZARN4580-L-TV	1,27	**45**	80	–	–	75	57,5	25	70	56	68	11,5	26,5	12	0,3	0,6
ZARN5090-TV	1,43	**50**	90	60	42,5	–	–	25	78	–	–	11,5	–	–	0,3	0,6
ZARN5090-L-TV	1,78	**50**	90	–	–	78	60,5	25	78	60	78	11,5	29,5	12	0,3	0,6

1) If rotary shaft seals are used, the outside diameter of the sealing ring must be taken into consideration.
2) Mass moment of inertia for rotating inner ring.
3) Only valid in conjunction with INA precision locknuts.
4) The axial runout data for screw drive bearing arrangements are based on the rotating inner ring.

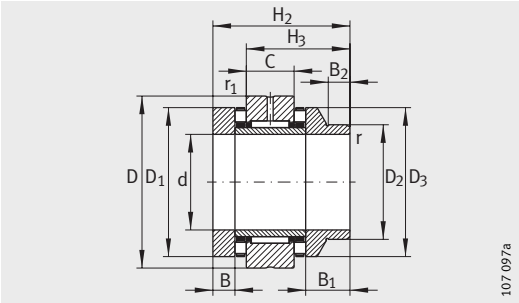

ZARN..-L

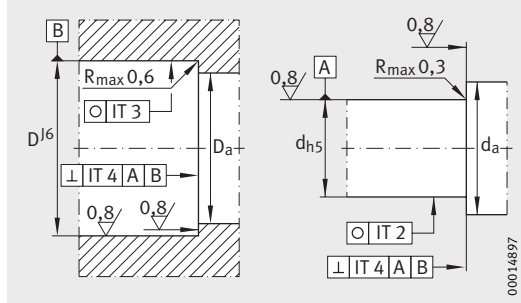

Design of adjacent construction

Mounting dimensions[1]		Basic load ratings				Limiting speeds		Bearing frictional torque	Rigidity axial	Tilting rigidity	Mass moment of inertia[2]	Axial runout[4]
		axial		radial								
D_a	d_a	dyn. C_a	stat. C_{0a}	dyn. C_r	stat. C_{0r}	n_G oil	n_G grease	M_{RL}	c_{aL}	c_{kL}	M_m	
max.	min.	N	N	N	N	min^{-1}	min^{-1}	Nm	N/µm	Nm/mrad	kg · cm^2	µm
61	50	56 000	148 000	26 000	47 000	4 800	1 700	0,9	2 600	740	2,8	1
61	43	56 000	148 000	26 000	47 000	4 800	1 700	0,9	2 600	740	3,21	1
66	55	59 000	163 000	27 500	53 000	4 400	1 600	1	2 800	1 030	3,78	1
66	48	59 000	163 000	27 500	53 000	4 400	1 600	1	2 800	1 030	4,35	1
71	60	61 000	177 000	38 000	74 000	4 000	1 500	1,2	3 000	1 340	5,33	1
71	54	61 000	177 000	38 000	74 000	4 000	1 500	1,2	3 000	1 340	6,03	1
79	67	90 000	300 000	40 000	82 000	3 600	1 200	2,2	4 800	2 470	8,42	1
79	58	90 000	300 000	40 000	82 000	3 600	1 200	2,2	4 800	2 470	10,46	1

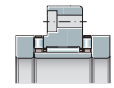

Designation	Recommended INA locknut; to be ordered separately				Rotary shaft seal to DIN 3 760; to be ordered separately
	Designation		Tightening torque[3] M_A Nm	Axial preload force N	
ZARN3570-TV	**ZMA35/58**	**AM35/58**	42	12 486	–
ZARN3570-L-TV	**ZMA35/58**	**AM35/58**	42	12 486	45X60X8
ZARN4075-TV	**ZMA40/62**	**AM40**	55	14 240	–
ZARN4075-L-TV	**ZMA40/62**	**AM40**	55	14 240	50X65X8
ZARN4580-TV	**ZMA45/68**	**AM45**	65	15 765	–
ZARN4580-L-TV	**ZMA45/68**	**AM45**	65	15 765	56X70X8
ZARN5090-TV	**ZMA50/75**	**AM50**	85	18 410	–
ZARN5090-L-TV	**ZMA50/75**	**AM50**	85	18 410	60X80X8

Needle roller/ axial cylindrical roller bearings

Heavy series
Not for screw mounting

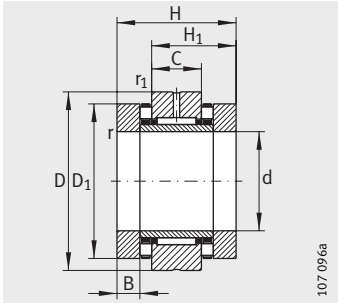

ZARN

Dimension table · Dimensions in mm

Designation	Mass	Dimensions														
	m	d	D	H	H_1	H_2	H_3	C	D_1	D_2	D_3	B	B_1	B_2	r	r_1
	≈kg														min.	min.
ZARN2062-TV	0,87	**20**	62	60	40	–	–	20	52	–	–	12,5	–	–	0,3	0,6
ZARN2062-L-TV	0,99	**20**	62	–	–	75	55	20	52	40	50	12,5	27,5	11	0,3	0,6
ZARN2572-TV	1,17	**25**	72	60	40	–	–	20	62	–	–	12,5	–	–	0,3	0,6
ZARN2572-L-TV	1,32	**25**	72	–	–	75	55	20	62	48	60	12,5	27,5	11	0,3	0,6
ZARN3080-TV	1,5	**30**	80	66	43	–	–	20	68	–	–	14	–	–	0,3	0,6
ZARN3080-L-TV	1,7	**30**	80	–	–	82	59	20	68	52	66	14	30	12	0,3	0,6
ZARN3585-TV	1,65	**35**	85	66	43	–	–	20	73	–	–	14	–	–	0,3	0,6
ZARN3585-L-TV	1,8	**35**	85	–	–	82	59	20	73	60	73	14	30	12	0,3	0,6
ZARN4090-TV	2,09	**40**	90	75	50	–	–	25	78	–	–	16	–	–	0,3	0,6
ZARN4090-L-TV	2,39	**40**	90	–	–	93	68	25	78	60	78	16	34	12	0,3	0,6
ZARN45105-TV	3,02	**45**	105	82	53,5	–	–	25	90	–	–	17,5	–	–	0,3	0,6
ZARN45105-L-TV	3,42	**45**	105	–	–	103	74,5	25	90	70	88	17,5	38,5	14	0,3	0,6
ZARN50110-TV	3,3	**50**	110	82	53,5	–	–	25	95	–	–	17,5	–	–	0,3	0,6
ZARN50110-L-TV	3,75	**50**	110	–	–	103	74,5	25	95	75	93	17,5	38,5	14	0,3	0,6

1) If rotary shaft seals are used, the outside diameter of the sealing ring must be taken into consideration.
2) Mass moment of inertia for rotating inner ring.
3) Only valid in conjunction with INA precision locknuts.
4) The axial runout data for screw drive bearing arrangements are based on the rotating inner ring.

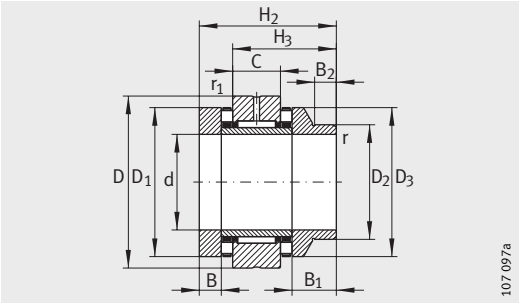

ZARN..-L

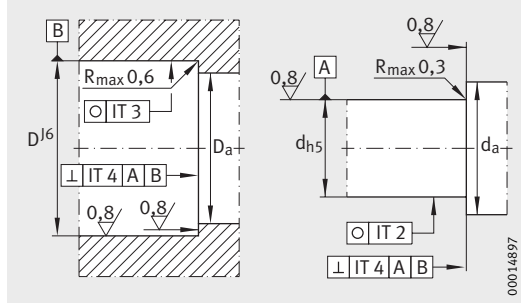

Design of adjacent construction

Mounting dimensions[1]		Basic load ratings				Limiting speeds		Bearing frictional torque	Rigidity axial	Tilting rigidity	Mass moment of inertia[2]	Axial runout[4]
		axial		radial								
D_a	d_a	dyn. C_a	stat. C_{0a}	dyn. C_r	stat. C_{0r}	n_G oil	n_G grease	M_{RL}	c_{aL}	c_{kL}	M_m	
max.	min.	N	N	N	N	min^{-1}	min^{-1}	Nm	N/µm	Nm/mrad	kg · cm^2	µm
53	38	64 000	141 000	22 600	36 000	6 000	1 500	1,3	2 300	400	1,98	1
53	38	64 000	141 000	22 600	36 000	6 000	1 500	1,3	2 300	400	2,27	1
63	45	80 000	199 000	24 300	41 500	4 900	1 400	1,6	3 000	800	3,88	1
63	45	80 000	199 000	24 300	41 500	4 900	1 400	1,6	3 000	800	4,51	1
69	52	107 000	265 000	26 000	47 000	4 400	1 300	2,1	3 300	1 100	6,53	1
69	50	107 000	265 000	26 000	47 000	4 400	1 300	2,1	3 300	1 100	7,43	1
74	60	105 000	265 000	27 500	53 000	4 000	1 250	2,3	3 500	1 300	8,47	1
74	58	105 000	265 000	27 500	53 000	4 000	1 250	2,3	3 500	1 300	10,4	1
79	65	117 000	315 000	38 000	74 000	3 700	1 200	2,5	3 800	1 800	13,3	1
79	58	117 000	315 000	38 000	74 000	3 700	1 200	2,5	3 800	1 800	15,5	1
91	70	154 000	405 000	40 000	82 000	3 300	1 150	3,5	4 000	2 100	23,7	1
91	68	154 000	405 000	40 000	82 000	3 300	1 150	3,5	4 000	2 100	28,1	1
96	75	172 000	480 000	42 000	90 000	3 100	1 100	3,8	4 600	2 900	29,8	1
96	73	172 000	480 000	42 000	90 000	3 100	1 100	3,8	4 600	2 900	35,3	1

Designation	Recommended INA locknut; to be ordered separately				Rotary shaft seal to DIN 3 760; to be ordered separately
	Designation		Tightening torque[3] M_A Nm	Axial preload force N	
ZARN2062-TV	**ZMA20/52**	**AM20**	38	18 448	–
ZARN2062-L-TV	**ZMA20/52**	**AM20**	38	18 448	40X52X7
ZARN2572-TV	**ZMA25/58**	**AM25**	55	20 790	–
ZARN2572-L-TV	**ZMA25/58**	**AM25**	55	20 790	48X62X8
ZARN3080-TV	**ZMA30/65**	**AM30**	75	24 287	–
ZARN3080-L-TV	**ZMA30/65**	**AM30**	75	24 287	52X68X8
ZARN3585-TV	**ZMA35/70**	**AM35**	100	27 480	–
ZARN3585-L-TV	**ZMA35/70**	**AM35**	100	27 480	60X75X8
ZARN4090-TV	**ZMA40/75**	**AM40**	120	29 834	–
ZARN4090-L-TV	**ZMA40/75**	**AM40**	120	29 834	60X80X8
ZARN45105-TV	**ZMA45/85**	**AM45**	150	33 549	–
ZARN45105-L-TV	**ZMA45/85**	**AM45**	150	33 549	70X90X10
ZARN50110-TV	**ZMA50/92**	**AM50**	180	37 109	–
ZARN50110-L-TV	**ZMA50/92**	**AM50**	180	37 109	75X95X10

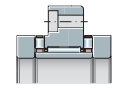

Needle roller/ axial cylindrical roller bearings

Heavy series
Not for screw mounting

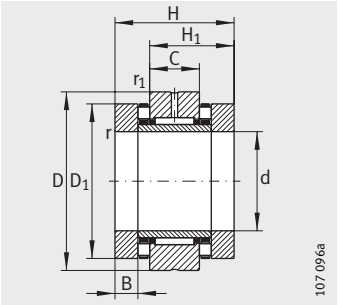

ZARN

Dimension table (continued) · Dimensions in mm

Designation	Mass	Dimensions														
	m	d	D	H	H_1	H_2	H_3	C	D_1	D_2	D_3	B	B_1	B_2	r	r_1
	≈kg														min.	min.
ZARN55115-TV	3,5	**55**	115	82	53,5	–	–	25	100	–	–	17,5	–	–	0,3	0,6
ZARN55115-L-TV	4	**55**	115	–	–	103	74,5	25	100	80	98	17,5	38,5	14	0,3	0,6
ZARN60120-TV	3,7	**60**	120	82	53,5	–	–	25	105	–	–	17,5	–	–	0,3	0,6
ZARN60120-L-TV	4,85	**60**	120	–	–	103	74,5	25	105	90	105	17,5	38,5	16	0,3	0,6
ZARN65125-TV	4	**65**	125	82	53,5	–	–	25	110	–	–	17,5	–	–	0,3	0,6
ZARN65125-L-TV	4,6	**65**	125	–	–	103	74,5	25	110	90	108	17,5	38,5	16	0,3	0,6
ZARN70130-TV	4,1	**70**	130	82	53,5	–	–	25	115	–	–	17,5	–	–	0,3	0,6
ZARN70130-L-TV	4,85	**70**	130	–	–	103	74,5	25	115	100	115	17,5	38,5	16	0,3	0,6
ZARN75155-TV	7,9	**75**	155	100	65	–	–	30	135	–	–	21	–	–	0,3	1
ZARN75155-L-TV	9,1	**75**	155	–	–	125	90	30	135	115	135	21	46	16	0,3	1
ZARN90180-TV	11,8	**90**	180	110	72,5	–	–	35	160	–	–	22,5	–	–	0,3	1
ZARN90180-L-TV	13,2	**90**	180	–	–	135	97,5	35	160	130	158	22,5	47,5	16	0,3	1

1) If rotary shaft seals are used, the outside diameter of the sealing ring must be taken into consideration.
2) Mass moment of inertia for rotating inner ring.
3) Only valid in conjunction with INA precision locknuts.
4) The axial runout data for screw drive bearing arrangements are based on the rotating inner ring.

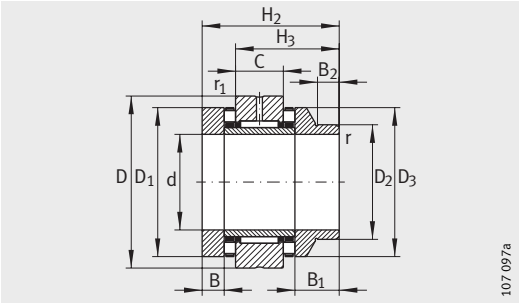

ZARN..-L

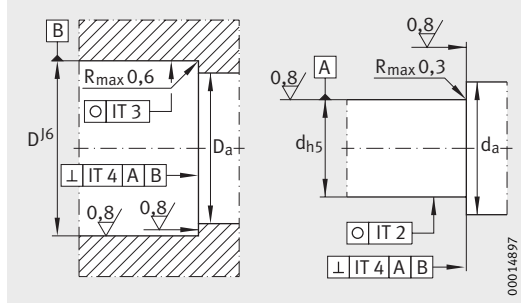

Design of adjacent construction

Mounting dimensions[1]		Basic load ratings				Limiting speeds		Bearing frictional torque	Rigidity axial	Tilting rigidity	Mass moment of inertia[2]	Axial runout[4]
		axial		radial								
D_a	d_a	dyn. C_a	stat. C_{0a}	dyn. C_r	stat. C_{0r}	n_G oil	n_G grease	M_{RL}	c_{aL}	c_{kL}	M_m	
max.	min.	N	N	N	N	min^{-1}	min^{-1}	Nm	N/µm	Nm/mrad	kg · cm²	µm
101	85	177 000	500 000	44 000	98 000	2 900	1 000	4	4 900	3 600	36,1	1
101	78	177 000	500 000	44 000	98 000	2 900	1 000	4	4 900	3 600	43	1
106	90	187 000	550 000	44 500	92 000	2 700	950	4,2	5 300	4 300	43,8	1
106	88	187 000	550 000	44 500	92 000	2 700	950	4,2	5 300	4 300	54,5	1
111	97	172 000	500 000	54 000	104 000	2 600	900	4	4 800	4 000	51	1
111	88	172 000	500 000	54 000	104 000	2 600	900	4	4 800	4 000	60,1	1
116	100	201 000	630 000	56 000	119 000	2 400	800	4,8	5 800	6 000	62,2	1
116	98	201 000	630 000	56 000	119 000	2 400	800	4,8	5 800	6 000	77,3	1
136	113	290 000	890 000	72 000	132 000	2 100	700	8	6 600	8 500	149	2
136	110	290 000	890 000	72 000	132 000	2 100	700	8	6 600	8 500	188	2
161	130	325 000	1 030 000	98 000	210 000	1 800	700	10,5	7 700	14 500	312	2
161	125	325 000	1 030 000	98 000	210 000	1 800	700	10,5	7 700	14 500	372	2

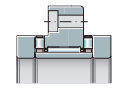

Designation	Recommended INA locknut; to be ordered separately				Rotary shaft seal to DIN 3 760; to be ordered separately
	Designation		Tightening torque[3] M_A Nm	Axial preload force N	
ZARN55115-TV	**ZMA55/98**	**AM55**	220	40 772	–
ZARN55115-L-TV	**ZMA55/98**	**AM55**	220	40 772	80X100X10
ZARN60120-TV	**ZMA60/98**	**AM60**	250	42 190	–
ZARN60120-L-TV	**ZMA60/98**	**AM60**	250	42 190	90X110X12
ZARN65125-TV	**ZMA65/105**	**AM65**	270	41 778	–
ZARN65125-L-TV	**ZMA65/105**	**AM65**	270	41 778	90X110X12
ZARN70130-TV	**ZMA70/110**	**AM70**	330	47 692	–
ZARN70130-L-TV	**ZMA70/110**	**AM70**	330	47 692	100X120X12
ZARN75155-TV	**ZMA75/125**	**AM75**	580	76 339	–
ZARN75155-L-TV	**ZMA75/125**	**AM75**	580	76 339	115X140X12
ZARN90180-TV	**ZMA90/155**	**AM90**	960	102 246	–
ZARN90180-L-TV	**ZMA90/155**	**AM90**	960	102 246	130X160X12

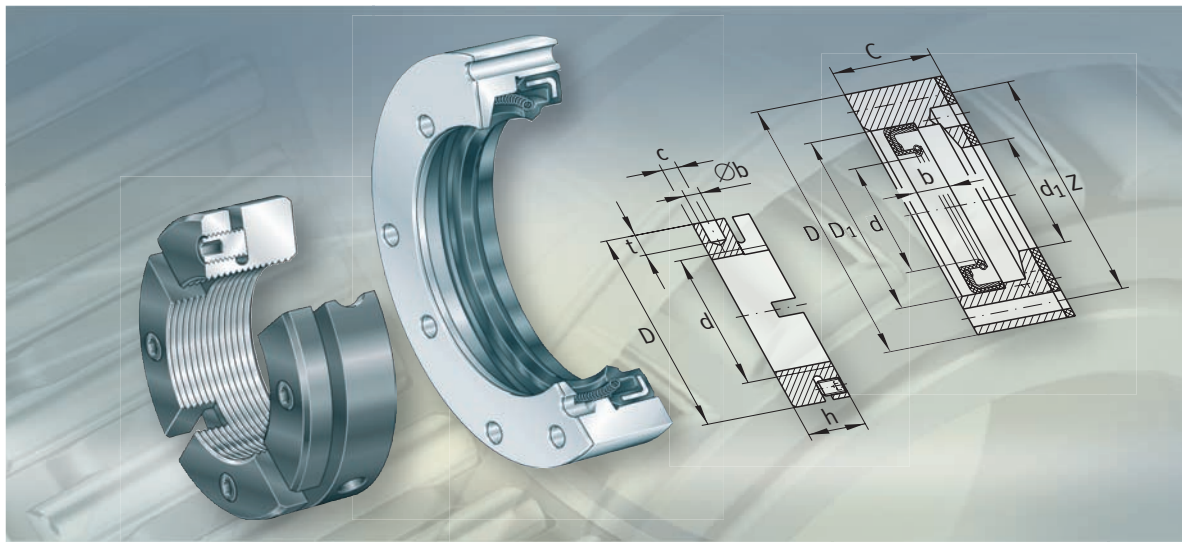

Seal carrier assemblies
Precision locknuts

Seal carrier assemblies
Precision locknuts

		Page
Product overview	Seal carrier assemblies, precision locknuts	90
Features	Seal carrier assemblies	91
	Operating temperature	91
	Precision locknuts	92
Design and safety guidelines	Breakaway torque	94
	Ultimate axial load	94
	Fitting and dismantling	94
Accuracy		96
Dimension tables	Seal carrier assemblies DRS	97
	Precision locknuts AM	98
	Adapters AMS	99
	Precision locknuts ZM, ZMA	100

Seal carrier assemblies
Precision locknuts

Seal carrier assemblies

DRS

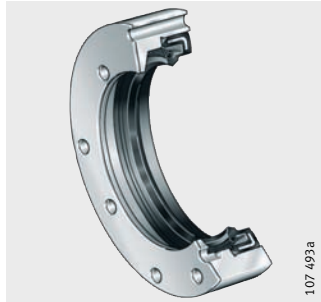

Precision locknuts

For axial locking

AM

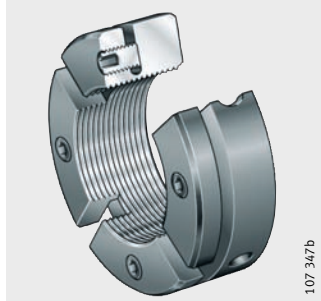

For radial locking

ZM, ZMA

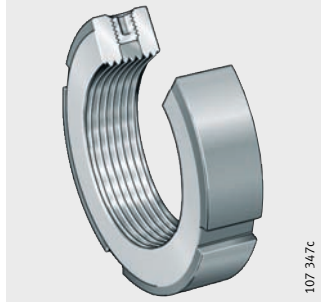

Seal carrier assemblies
Precision locknuts

Features
Seal carrier assemblies

Seal carrier assemblies DRS are screw mounted to the outer ring of needle roller/axial cylindrical roller bearings ZARF(L) and precisely centred in this position, *Figure 1*, ①. They seal the bearings against outside influences.

The sealing elements are supplied as a complete kit and comprise a seal carrier with an integral rotary shaft seal, a gasket and hexagonal socket cap screws for fixing the carrier to the central washer of the bearing.

DRS
ZMA
ZARF..-L

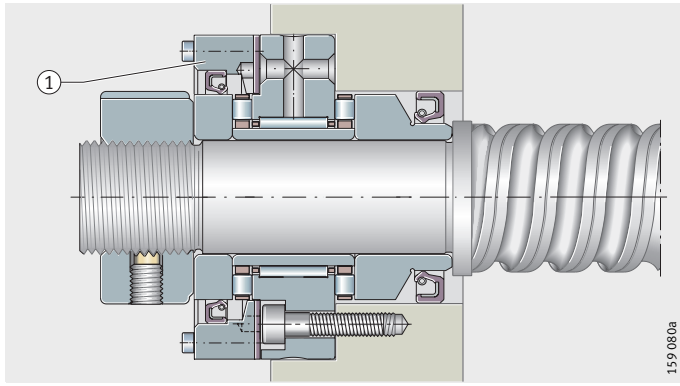

① Seal carrier asembly DRS

Figure 1
Needle roller/
axial cylindrical roller bearing,
seal carrier assembly, locknut

Operating temperature

Seal carrier assemblies are suitable for operating temperatures from −30 °C to +120 °C, restricted by the seal material.

Precision locknuts

Precision locknuts are used where high axial forces must be supported and high runout accuracy and rigidity are required, *Figure 2*, ①, *Figure 3*, page 93, ①.

The thread and the axial face of the locknut in contact with the rolling bearing are produced in a single clamping operation. This allows very high runout accuracy to be achieved.

Locknuts are available in the designs AM, ZM and ZMA. If handled correctly, they can be reused several times.

Axial locking by segments

Locknuts of series AM are divided into several segments for applying the locking forces. When the hexagonal socket grub screws are tightened, the segments are elastically deformed. As a result, the thread flanks of the segments are pressed against the flanks of the shaft thread and give a high frictional force that acts to prevent loosening of the nut. The runout of the nut is not affected by this method of locking.

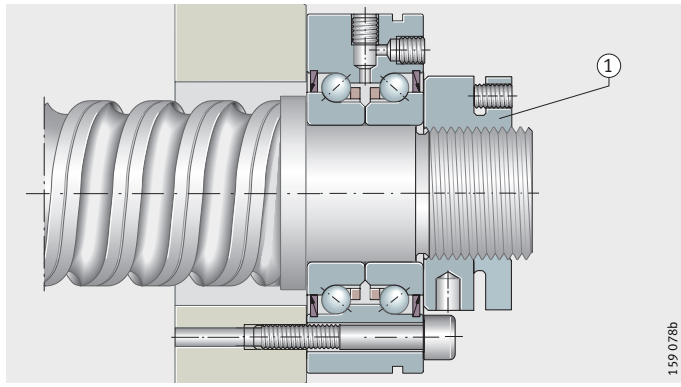

AM
ZKLF..-2RS

① Precision locknut AM

Figure 2
Axial angular contact ball bearings

Locking by radial locking pegs

Locknuts ZM and ZMA are secured against rotation by means of two radially acting locking pegs, *Figure 3*, ①.
ZMA is the heavy series.

The locking pegs are manufactured together with the internal thread of the locknut. They mesh in the thread of the shaft without affecting the runout or damaging the thread, *Figure 3*, ②.

The locking pegs are secured by grub screws with a hexagonal socket arranged concentrically over the locking pegs, *Figure 3*, ③.

DRS
ZMA
ZARF..-L

① Precision locknut ZMA
② Locking peg
③ Grub screw

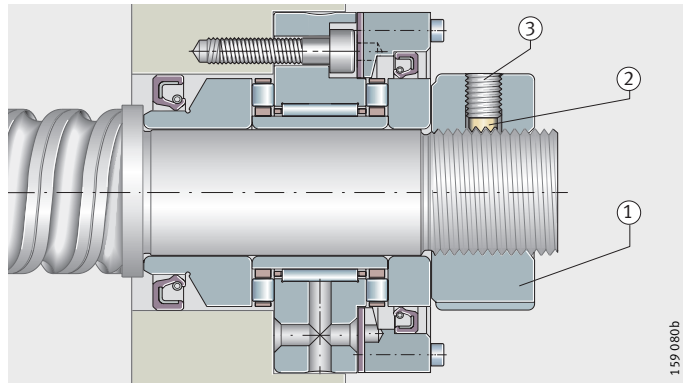

Figure 3
Needle roller/
axial cylindrical roller bearings

Design and safety guidelines

Shaft threads for the precision locknuts must be precision machined, see table.

Recommended shaft thread

Shaft thread	
Tolerance class “medium”	Tolerance class “fine”
6g DIN 13 T21-24	4h DIN 13 T21-24

The journal thread must support the locknut over its whole width.

Breakaway torque

The breakaway torques M_L given in the dimension tables are based on a locknut tightened against a rigid shaft shoulder to the reference tightening torque M_{AL} and secured.

Ultimate axial load

The axial ultimate loads F_{aB} are valid for a journal thread with a tolerance 6g or better and a minimum strength of 700 N/mm^2.

For dynamic loading, the permissible value can be taken as 75% of the ultimate load F_{aB}.

Fitting and dismantling

For the fitting and dismantling of bearings and precision locknuts, the information in the INA Fitting and maintenance manual, TPI 100 must be observed.

Locknuts must be fully screwed onto the shaft thread.

Precision locknuts with axial locking

Locknuts AM can be tightened using a hook wrench to DIN 1810B that engages in four, six or eight holes around the circumference.

The grub screws are then tightened in a crosswise sequence to the specified tightening torque M_A using an Allen key. Dismantling is carried out by uniformly loosening the grub screws of all segments in order to prevent a single segment being left tensioned.

Tightening by means of just one segment is not permissible. For tightening, an adapter of series AMS can be used that ensures uniform loading of all segments. The adapter AMS must be ordered separately, see dimension table, page 99.

For tightening using the adapter AMS, a hook wrench to DIN 1810A or to DIN 1810B can be used.

If precision locknuts AM are fitted using the adapter AMS, a maximum tightening torque of twice the value given in the dimension table for the bearing is permissible.

Segments can be axially deformed if the grub screws are not tightened uniformly in a crosswise sequence or the locknut AM is not fully screwed onto the shaft thread. The specified tightening torque M_A according to the dimension table must be observed.

Precision locknuts with radial locking

Locknuts ZM and ZMA can be tightened using a hook wrench to DIN 1810A that engages in one of the four slots around the circumference.

The two grub screws are then tightened alternately to the specified tightening torque M_A using an Allen key; for M_A, see dimension tables for the bearings.

For dismantling, the two grub screws are first loosened and the locking pegs loosened by light impacts with a plastic hammer on the outside surface of the locknut (in the vicinity of the screw holes).

The locknut can then be easily unscrewed without damaging the journal thread.

Accuracy

Accuracy of precision locknuts, see table.

Axial runout

Axial runout of face to thread[1)] µm	Metric ISO thread “fine”
5	5H, DIN 13 T21-24

1) The face and thread are machined in a single clamping operation in order to achieve the highest accuracy. Before measurement, the precision locknut is clamped on a threaded mandrel with a defined tightening torque against a rigid shoulder. The grub screws are left untightened.

Seal carrier assemblies

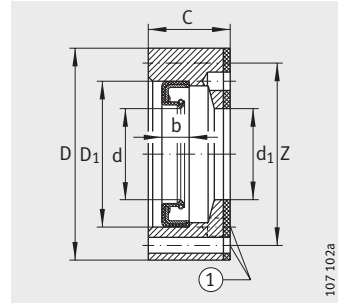

DRS[1)]
① 4 holes, offset by 90°

Dimension table · Dimensions in mm

Designation	Mass	Dimensions				Rotary shaft seal				Corresponding bearing in standard or L design
	m	D	C	d_1	Z[2)]	d	D_1	b	Socket head screws DIN 912	
	≈kg								4 each	Designation
DRS1560	0,16	60	14	35	52,4	35	45	7	M3X20	**ZARF1560-TV**
DRS1762	0,18	62	15,5	38	54,4	38	47	7	M3X25	**ZARF1762-TV**
DRS2068	0,11	68	17	42	60,4	42	55	8	M3X25	**ZARF2068-TV**
DRS2080	0,2	80	22	52	73,4	52	68	8	M3X30	**ZARF2080-TV**
DRS2575	0,16	75	17	47	67,4	47	62	6	M3X25	**ZARF2575-TV**
DRS2590	0,3	90	22	62	81	62	75	10	M3X30	**ZARF2590-TV**
DRS3080	0,15	80	17	52	73,4	52	68	8	M3X25	**ZARF3080-TV**
DRS30105	0,35	105	25	68	95	68	85	10	M4X35	**ZARF30105-TV**
DRS3590	0,15	90	19	60	80	60	72	8	M4X25	**ZARF3590-TV**
DRS35110	0,3	110	25	73	101	73	95	10	M3X30	**ZARF35110-TV**
DRS40100	0,25	100	19	65	90	65	80	8	M4X30	**ZARF40100-TV**
DRS40115	0,5	115	27,5	78	106	78	100	10	M3X35	**ZARF40115-TV**
DRS45105	0,3	105	20	70	95	70	85	8	M4X30	**ZARF45105-TV**
DRS45130	0,7	130	31	90	120	90	110	12	M4X40	**ZARF45130-TV**
DRS50115	0,2	115	20	78	106	78	100	10	M3X30	**ZARF50115-TV**
DRS50140	0,8	140	30	95	127,5	95	115	13	M5X40	**ZARF50140-TV**
DRS55145	0,9	145	30	100	132,5	100	120	12	M5X40	**ZARF55145-TV**
DRS60150	0,9	150	30	105	137,5	105	125	12	M5X40	**ZARF60150-TV**
DRS65155	1	155	30	110	142,5	110	130	12	M5X40	**ZARF65155-TV**
DRS70160	1	160	30	115	147,5	115	135	13	M5X40	**ZARF70160-TV**
DRS75185	1,8	185	36	135	172,5	135	160	15	M5X50	**ZARF75185-TV**
DRS90210	2,7	210	38	160	194	160	180	15	M5X50	**ZARF90210-TV**

1) The seal carrier assembly is supplied as a kit comprising:
– seal carrier
– rotary shaft seal
– flange seal
– socket head screws.

2) Four holes offset by 90°.

Precision locknuts

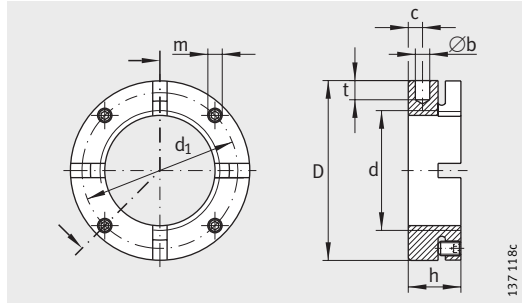

AM15 to AM40 with 4 segments
AM45 to AM90 with 6 segments
AM100 to AM130 with 8 segments

Dimension table · Dimensions in mm

Designation	Nut thread	Mass	Dimensions							Grub screw	Locknut[1]			
										Tightening torque	Axial rupture load	Breakaway torque	Reference tightening torque	Mass moment of inertia
		m	D	h	b	t	d_1	c	m	M_A	F_{aB}	M_L at	M_{AL}	M_M
	d	≈kg			H11					Nm	N	Nm	Nm	kg · cm²
AM15	**M15X1**	0,06	30	18	4	5	24	5	M5	3	100 000	20	10	0,09
AM17	**M17X1**	0,07	32	18	4	5	26	5	M5	3	120 000	25	15	0,11
AM20	**M20X1**	0,13	38	18	4	6	31	5	M6	5	145 000	45	18	0,23
AM25	**M25X1,5**	0,16	45	20	5	6	38	6	M6	5	205 000	60	25	0,49
AM30	**M30X1,5**	0,20	52	20	5	7	45	6	M6	5	250 000	70	32	0,86
AM30/65	**M30X1,5**	0,50	65	30	6	8	45	6	M6	5	400 000	70	32	2,8
AM35/58	**M35X1,5**	0,23	58	20	5	7	51	6	M6	5	280 000	90	40	1,3
AM35	**M35X1,5**	0,33	65	22	6	8	58	6	M6	5	330 000	100	40	2,4
AM40	**M40X1,5**	0,30	65	22	6	8	58	6	M6	5	350 000	120	55	2,3
AM40/85	**M40X1,5**	0,75	85	32	6	8	58	6	M6	5	570 000	120	55	7,6
AM45	**M45X1,5**	0,34	70	22	6	8	63	6	M6	5	360 000	220	65	2,9
AM50	**M50X1,5**	0,43	75	25	6	8	68	8	M6	5	450 000	280	85	4,3
AM55	**M55X2**	0,60	85	26	6	8	75	8	M8	15	520 000	320	95	7,7
AM60	**M60X2**	0,65	90	26	6	8	80	8	M8	15	550 000	365	100	9,4
AM65	**M65X2**	0,83	100	26	8	10	88	8	M8	15	560 000	400	120	14,6
AM70	**M70X2**	0,79	100	28	8	10	90	9	M8	15	650 000	450	130	14,7
AM75	**M75X2**	1,23	115	30	8	10	102	10	M10	20	750 000	610	150	29
AM80	**M80X2**	0,93	110	30	8	10	98	10	M10	20	670 000	770	160	21,3
AM85	**M85X2**	0,97	115	30	8	10	102	10	M10	20	690 000	930	180	24,8
AM90	**M90X2**	1,53	130	32	8	10	118	13	M10	20	900 000	1 100	200	48
AM100	**M100X2**	1,12	130	30	8	10	118	10	M10	20	740 000	1 200	250	38
AM110	**M110X2**	1,22	140	30	8	10	128	10	M10	20	770 000	1 300	250	48
AM120	**M120X2**	1,56	155	30	8	10	142	10	M10	20	880 000	1 450	250	75
AM130	**M130X2**	1,67	165	30	8	10	152	10	M10	20	900 000	1 600	250	92

[1] Caution!
If precision locknuts AM are fitted using the adapter AMS,
a maximum tightening torque of twice the value given in the dimension table for the bearing is permissible.

Adapters

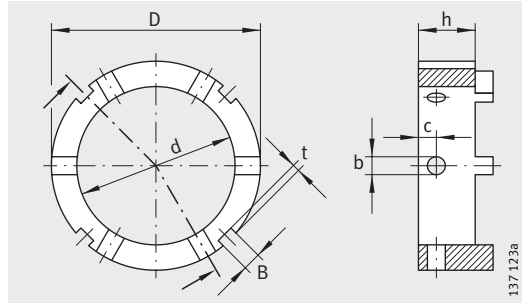

AMS

Dimension table · Dimensions in mm

Designation	Mass	Dimensions							For precision locknuts
	m ≈kg	D	h	d	b H11	c	B	t	
AMS20	0,047	32	14	22	4	5	4	2	**AM15, AM17, AM20**
AMS30	0,093	45	15	35	5	5	5	2	**AM25, AM30, AM35/58, AM30/65**
AMS40	0,217	65	16	45	6	6	6	2,5	**AM35, AM40**
AMS50	0,245	70	19	53	6	6	6	2,5	**AM45, AM50**
AMS60	0,37	85	20	65	6	6	7	3	**AM55, AM60**
AMS70	0,615	98	25	75	8	10	8	3,5	**AM65, AM70**
AMS80	0,755	110	25	85	8	10	8	3,5	**AM75, AM80, AM85**
AMS90	1,215	130	25	95	8	10	10	4	**AM90**
AMS110	0,74	130	25	110	8	10	10	4	**AM100, AM110**
AMS130	1,485	155	25	130	8	10	12	5	**AM120, AM130**

Precision locknuts

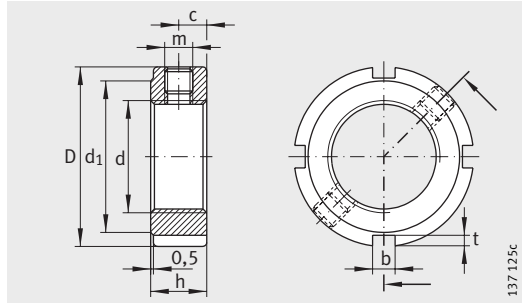

ZM, ZMA

Dimension table · Dimensions in mm

Designation	Thread	Mass	Dimensions							Grub screw	Locknut			
										Tightening torque	Axial rupture load	Breakaway torque	Reference tightening torque	Mass moment of inertia
		m	D	h	b	t	d_1	c	m	M_A	F_{aB}	M_L at	M_{AL}	M_M
		≈kg								Nm	N	Nm	Nm	kg · cm²
ZM06	**M6X0,5**	0,01	16	8	3	2	11	4	M4	1	17 000	20	2	0,004
ZM08[1]	**M8X0,75**	0,01	16	8	3	2	11	4	M4	1	23 000	25	4	0,004
ZM10[1]	**M10X1**	0,01	18	8	3	2	14	4	M4	1	31 000	30	6	0,006
ZM12	**M12X1**	0,015	22	8	3	2	18	4	M4	1	38 000	30	8	0,013
ZM15	**M15X1**	0,018	25	8	3	2	21	4	M4	1	50 000	30	10	0,021
ZMA15/33	**M15X1**	0,08	33	16	4	2	28	8	M5	3	106 000	30	10	0,14
ZM17	**M17X1**	0,028	28	10	4	2	23	5	M5	3	57 000	30	15	0,401
ZM20	**M20X1**	0,035	32	10	4	2	27	5	M5	3	69 000	40	18	0,068
ZMA20/38	**M20X1**	0,12	38	20	5	2	33	10	M5	3	174 000	40	18	0,297
ZMA20/52	**M20X1**	0,32	52	25	5	2	47	12,5	M5	3	218 000	40	18	1,38
ZM25	**M25X1,5**	0,055	38	12	5	2	33	6	M6	5	90 000	60	25	0,157
ZMA25/45	**M25X1,5**	0,16	45	20	5	2	40	10	M6	5	211 000	60	25	0,572
ZMA25/58	**M25X1,5**	0,43	58	28	6	2,5	52	14	M6	5	305 000	60	25	2,36
ZM30	**M30X1,5**	0,075	45	12	5	2	40	6	M6	5	112 000	70	32	0,304
ZMA30/52	**M30X1,5**	0,22	52	22	5	2	47	11	M6	5	270 000	70	32	1,1
ZMA30/65	**M30X1,5**	0,55	65	30	6	2,5	59	15	M6	5	390 000	70	32	3,94
ZM35	**M35X1,5**	0,099	52	12	5	2	47	6	M6	5	134 000	80	40	0,537
ZMA35/58	**M35X1,5**	0,26	58	22	6	2,5	52	11	M6	5	300 000	80	40	1,66
ZMA35/70	**M35X1,5**	0,61	70	30	6	2,5	64	15	M6	5	460 000	80	40	5,2
ZM40	**M40X1,5**	0,14	58	14	6	2,5	52	7	M6	5	157 000	95	55	0,945
ZMA40/62	**M40X1,5**	0,27	62	22	6	2,5	56	11	M8	15	310 000	95	55	2,07
ZMA40/75	**M40X1,5**	0,67	75	30	6	2,5	69	15	M8	15	520 000	95	55	6,72
ZM45	**M45X1,5**	0,17	65	14	6	2,5	59	7	M6	5	181 000	110	65	1,48
ZMA45/68	**M45X1,5**	0,35	68	24	6	2,5	62	12	M8	15	360 000	110	65	3,2
ZMA45/85	**M45X1,5**	0,92	85	32	7	3	78	16	M8	15	630 000	110	65	11,9
ZM50	**M50X1,5**	0,19	70	14	6	2,5	64	7	M6	5	205 000	130	85	1,92
ZMA50/75	**M50X1,5**	0,43	75	25	6	2,5	68	12,5	M8	15	415 000	130	85	4,89
ZMA50/92	**M50X1,5**	1,06	92	32	8	3,5	84	16	M8	15	680 000	130	85	16,1
ZM55	**M55X2**	0,23	75	16	7	3	68	8	M6	5	229 000	150	95	2,77
ZMA55/98	**M55X2**	1,17	98	32	8	3,5	90	16	M8	15	620 000	150	95	20,5

[1] When clamped, the grub screw protrudes by approx. 0,5 mm.

Precision locknuts

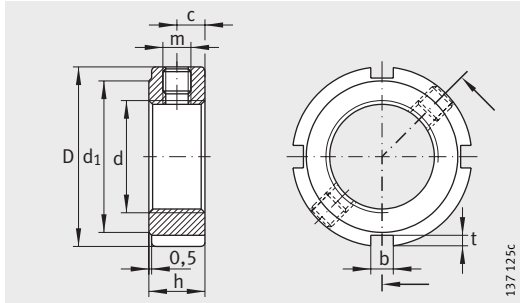

ZM, ZMA

Dimension table (continued) · Dimensions in mm

Designation	Thread	Mass	Dimensions							Grub screw	Locknut			
										Tightening torque	Axial rupture load	Breakaway torque	Reference tightening torque	Mass moment of inertia
		m	D	h	b	t	d_1	c	m	M_A	F_{aB}	M_L at	M_{AL}	M_M
		≈kg								Nm	N	Nm	Nm	kg · cm²
ZM60	**M60X2**	0,25	80	16	7	3	73	8	M6	5	255 000	180	100	3,45
ZMA60/98	**M60X2**	1,07	98	32	8	3,5	90	16	M8	15	680 000	180	100	19,6
ZM65	**M65X2**	0,27	85	16	7	3	78	8	M6	5	280 000	200	120	4,24
ZMA65/105	**M65X2**	1,21	105	32	8	3,5	97	16	M8	15	750 000	200	120	25,6
ZM70	**M70X2**	0,36	92	18	8	3,5	85	9	M8	15	305 000	220	130	6,61
ZMA70/110	**M70X2**	1,4	110	35	8	3,5	102	17,5	M8	15	810 000	220	130	33
ZM75	**M75X2**	0,4	98	18	8	3,5	90	9	M8	15	331 000	260	150	8,41
ZMA75/125	**M75X2**	2,11	125	38	8	3,5	117	19	M8	15	880 000	260	150	62,2
ZM80	**M80X2**	0,46	105	18	8	3,5	95	9	M8	15	355 000	285	160	11,2
ZMA80/120	**M80X2**	1,33	120	35	8	4	105	17,5	M8	15	810 000	285	160	44,6
ZM85	**M85X2**	0,49	110	18	8	3,5	102	9	M8	15	385 000	320	190	13,1
ZM90	**M90X2**	0,7	120	20	10	4	108	10	M8	15	410 000	360	200	21,8
ZMA90/130	**M90X2**	2,01	130	38	10	4	120	19	M8	15	910 000	360	200	64,1
ZMA90/155	**M90X2**	3,36	155	38	10	4	146	19	M8	15	1 080 000	360	200	150
ZM100	**M100X2**	0,77	130	20	10	4	120	10	M8	15	465 000	425	250	28,6
ZMA100/140	**M100X2**	2,23	140	38	12	5	128	19	M10	20	940 000	425	250	82,8
ZM105	**M105X2**	1,05	140	22	12	5	126	11	M10	20	495 000	475	300	44,5
ZM110	**M110X2**	1,09	145	22	12	5	133	11	M10	20	520 000	510	350	50,1
ZM115	**M115X2**	1,13	150	22	12	5	137	11	M10	20	550 000	550	400	56,2
ZM120	**M120X2**	1,28	155	24	12	5	138	12	M10	20	580 000	600	450	68,4
ZM125	**M125X2**	1,33	160	24	12	5	148	12	M10	20	610 000	640	500	76,1
ZM130	**M130X2**	1,36	165	24	12	5	149	12	M10	20	630 000	700	550	84,3
ZM140	**M140X2**	1,85	180	26	14	6	160	13	M12	38	690 000	800	600	133
ZM150	**M150X2**	2,24	195	26	14	6	171	13	M12	38	750 000	900	650	188

MATNR 029097495-0000 / TPI 123 / GB-D / 2009102 / Printed in Germany by Hofmann Druck

Schaeffler KG

Industriestraße 1–3
91074 Herzogenaurach (Germany)
Internet www.ina.com
E-Mail info@schaeffler.com

In Germany:
Phone 0180 5003872
Fax 0180 5003873

From other countries:
Phone +49 9132 82-0
Fax +49 9132 82-4950

Schaeffler KG

Georg-Schäfer-Straße 30
97421 Schweinfurt (Germany)
Internet www.fag.com
E-Mail FAGinfo@schaeffler.com

In Germany:
Phone 0180 5003872
Fax 0180 5003873

From other countries:
Phone +49 9721 91-0
Fax +49 9721 91-3435

Every care has been taken to ensure the correctness of the information contained in this publication but no liability can be accepted for any errors or omissions.
We reserve the right to make technical changes.

© Schaeffler KG · 2009, October

This publication or parts thereof may not be reproduced without our permission.

TPI 123 GB-D