Product Reference Guide

CATALOG PRG

PRODUCT REFERENCE GUIDE

CORPORATE OFFICES
308 SPRINGHILL FARM ROAD
FORT MILL, SOUTH CAROLINA 29715

TELEPHONE (803)548-8500
FAX (803)548-8599

DISTRIBUTOR CUSTOMER SERVICE
TOLL FREE 800-523-6572
FAX (803)548-8594

FOREWORD

This publication was designed to serve as a quick reference to the standard product series offered by INA USA Corporation (INA) for its domestic market. The guide provides a current overview of INA products, including basic envelope dimensions and capacities, in one publication – it is not an engineering design guide intended to replace INA engineering catalogs. Consequently, the metric and inch conversions are listed to 3 decimal places for easy reference and rapid identification of correct replacement part(s), not 4 decimal places as necessary for quality control purposes.

This publication can be used to narrow the choices between the many different INA product lines and series for new designs. Detailed engineering information for new designs can be found in our traditional catalogs or by contacting the INA Engineering Department.

A significant portion of INA sales are special production sizes. The identification of those parts is sometimes difficult since a comprehensive listing is beyond the intent of this publication. Special part numbers take as many different forms as the series listed here, but the basic system is to use sequential numbers for each new design. Usually the prefix is F or FC but can include VH, INA or the bearing type such as NA. INA maintains a technical help desk to identify sizes not known or to match competitors' parts.

The toll free 800 numbers listed will give you access to INA Customer Service representatives. These representatives can tap into INA Worldwide resources to provide the bearings you need.

Storage Life

Lubricants age naturally due to environmental influences. It is therefore the user's responsibility to follow the directions given by the lubricant manufacturer.

The greases used in INA rolling bearings have a mineral oil base and experience shows that they can be stored for up to 3 years without deteriorating providing the following important conditions are met.

- Closed storage room
- Temperature between 0°C and 40°C
- Relative atmospheric humidity 65% or less
- Security from chemical agents (vapors, gases, fluids)
- Sealed rolling bearings

The frictional torque can be considerably higher after linger storage periods than in freshly greased bearings and the lubricity of the grease can also have deteriorated.

INA bearings have many optional features available including:

- ISO series of bearings generally include the standard clearance options CN, C2, C3 and C4.
- ISO bearing series include PN, P6 and P5 precision classes.
- Corrotect™ plating is available for most bearing designs. Corrotect is a patented process for zinc–iron and zinc–iron–cobalt plating in a thin layer which can be applied to standard components. The protection exceeds stainless steel and the cost is half. Add suffix RR.
- All sealed bearings are supplied pregreased. In most cases the standard lubricant is Shell Retinax LX 2 or equivalent. Other greases are available, some at extra cost.
- Unsealed bearings may not be greased when shipped.
- Speed limits as published, are based on oil lubrication for open bearings or grease lubrication for sealed bearings. The speed limits are calculated based on a nominal load and heat balance equation. Higher speeds may be allowed depending on the application.
- Dynamic capacities are published based on INA standard usage of ISO and ABMA formulas. New life theory threshold values are published in other INA publications.
- Life calculations and evaluations can be made from INA engineering based catalogs which are available from your INA Sales Representative.
- Other features are available based on current production volumes including heat stabilization of the rings, matched bearing sets, with oil holes and grooves, etc.

ABMA	American Bearing Manufacturers Association
ASTM	American Society Of Testing And Materials
DIN	Deutsches Institut für Normung e.V.
ISO	International Standards Organization

Elges, Andrews and Corrotect are registered trademarks of INA USA Corporation.
Permaglide is a registered trademark and a product of KOLBENSCHMIDT AG, Neckarsulm, also produced in Greensburg, Indiana, USA.
All other products and company names are trademarks or registered trademarks of their respective companies.

ALL RIGHTS RESERVED

INA USA Corporation
308 Springhill Farm Road
Fort Mill, SC 29715

Reproduction of this publication in whole or in part without the express written consent of INA USA Corporation is prohibited.

Although every effort has been made to ensure the accuracy of the information contained in this catalog, INA shall not be liable for any omissions or errors. Purchasers should consult their own testing to determine the suitability of any product for a particular purpose. In no event shall INA be liable for any claims for damages based upon breach of warranty, breach of contract, negligence, strict liability in tort, or any other legal theory.

All sales from catalog orders are subject to the Standard Terms and Conditions of Sale. Please contact your INA Sales Representative for a copy of the Standard Terms and Conditions of Sale.

INA USA Corporation reserves the right to make changes / revisions to specifications contained herein without notice.

©Copyright 1999, 2000, 2003 INA USA Corporation

Use of INA Part Numbers & Suffixes

INA has extra options to give you the maximum flexibility in answering customer needs.
Cage styles, seal types, internal clearances, and needle sorts are available to help you select the right part for your customers.

UG - Shell type open bearings come standard without grease (Example: SCE87 UG)
AA040 - Shell type sealed bearings come standard with 40% Retinax LX2 (Example: SCE8799 AA040)
0-7 - Radial needle roller & cage assemblies come standard with 0-7 Micron Needle Sorts
(Example: NRA5X49.8G2 0-7, K25X33X24B 0-7)

The table below provides a quick reference regarding our part numbers and integral suffixes. See each part section for part number schematics.

PART / SUFFIX	DEFINITION	EXAMPLE
HK1010, SCE86PP	INA Part Number	SCE87, PASE1-1/2, RA100RR
2RS	2 Lip Seals	62032RS, 3200J2RS
2Z	2 Gap Shields	62032Z, 3300J2Z
J	Steel Cage	52100J, 3200J
KDD, KDDU	2 Gap Shields	LR5208KDD, LR5307KDDU
M	Bronze Cage	930M, 89460M
NPP, NPPU	2 Lip Seals	GRA100NPPB, LR5202NPPU
PP	2 Lip Seals	SCE87PP
RR	2 Land Riding Seals	G1103KRRB, RA100RR
TN	Plastic Cage	81102TN, 87410TN
X	Cylindrical OD for Track Rollers	NATV20PPX, NUTR20X
-	Normal Clearance	6203, 62032RS
C2	C2 Clearance	6302 C2, 63022Z C2
C3	C3 Clearance	6205 C3, 62052RS C3
C4	C4 Clearance	5305J C4, 6210 C4
AA040	40% - Shell Retinax LX2	HK1010 AA040
UG	Ungreased / Corrosion Protected	HK1010 UG
0-7	0-7 Micron - Needle Sort	NRA5X49.8G2 0-7, K25X33X24B 0-7
0-10	0-10 Micron - Needle Sort	AXK6590 0-10

PRODUCT REFERENCE GUIDE

NEEDLE BEARINGS PAGES 1-50

CAM FOLLOWERS PAGES 51-84

THRUST BEARINGS PAGES 85-178

RADIAL BALL BEARINGS PAGES 179-288

HIGH PRECISION BEARINGS PAGES 289-322

CYLINDRICAL ROLLER BEARINGS PAGES 323-344

ROLLER CLUTCHES PAGES 345-352

SEALS, SNAP RINGS & ROLLERS PAGES 353-370

PLAIN BEARINGS & ROD ENDS PAGES 371-444

LINEAR PAGES 445-666

THIN SECTION, SLEWING RINGS & OTHER PRODUCTS PAGES 667-700

Section Contents
NEEDLE BEARINGS

BEARING SERIES	BEARING DESCRIPTION	PAGE
INFORMATION	NEEDLE BEARING, GENERAL OVERVIEW	2
P / N IDENTIFICATION	NEEDLE BEARINGS	3
HK	OPEN END METRIC CAGED SHELL	7
BK	CLOSED END METRIC CAGED SHELL	7
SCE	OPEN END INCH CAGED SHELL	7
BCE	CLOSED END INCH CAGED SHELL	7
SCH	OPEN END HEAVY INCH CAGED SHELL	7
HK..2RS	OPEN END SEALED METRIC CAGED SHELL	12
BK..RS	CLOSED END SEALED METRIC CAGED SHELL	12
SCH..PP	OPEN END SEALED INCH CAGED SHELL	12
BCH..P	CLOSED END SEALED INCH CAGED SHELL	12
CSN	CLOSED END INCH GREASE RETAINED FULL COMPLEMENT SHELL	15
SN	OPEN END INCH GREASE RETAINED FULL COMPLEMENT SHELL	15
S	OPEN END INCH MECHANICALLY RETAINED FULL COMPLEMENT SHELL	16
CS	CLOSED END INCH MECHANICALLY RETAINED FULL COMPLEMENT SHELL	16
C	INCH CAGE AND ROLLER ASSEMBLIES	17
K	METRIC CAGE AND ROLLER ASSEMBLIES	17
KBK	WRIST PIN CAGE AND ROLLER ASSEMBLIES	25
KZK	CRANK PIN CAGE AND ROLLER ASSEMBLIES	26
NAO	METRIC SEPARABLE PRECISION GROUND NEEDLE	27
NA49	METRIC ISO SERIES 49 PRECISION GROUND NEEDLE	28
NA69	METRIC ISO SERIES 69 PRECISION GROUND NEEDLE	28
NKI	METRIC SERIES NKI PRECISION GROUND NEEDLE	28
NKIS	METRIC SERIES NKIS PRECISION GROUND NEEDLE	29
NA48	METRIC ISO SERIES 48 PRECISION GROUND NEEDLE	31
NA49..2RS	METRIC ISO SERIES 49 SEALED PRECISION GROUND NEEDLE	32
RNAO	METRIC SEPARABLE PRECISION GROUND NEEDLE BEARINGS WITHOUT INNER	33
NCS	INCH PRECISION GROUND NEEDLE BEARINGS WITHOUT INNER	35
NK	METRIC SERIES NKI PRECISION GROUND NEEDLE BEARINGS WITHOUT INNER	35
NKS	METRIC SERIES NKIS PRECISION GROUND NEEDLE BEARINGS WITHOUT INNER	35
RNA49	METRIC ISO SERIES 49 PRECISION GROUND NEEDLE BEARINGS WITHOUT INNER	35
RNA69	METRIC ISO SERIES 69 PRECISION GROUND NEEDLE BEARINGS WITHOUT INNER	35
RNA48	METRIC ISO SERIES 48 PRECISION GROUND NEEDLE BEARINGS WITHOUT INNER	39
RNA49..2RS	METRIC ISO SERIES 49 SEALED PRECISION GROUND NEEDLE WITHOUT INNER	40
PNA	METRIC ALIGNING PRECISION GROUND NEEDLE	41
RPNA	METRIC ALIGNING PRECISION GROUND NEEDLE BEARINGS WITHOUT INNER	41
IR	METRIC PRECISION GROUND NEEDLE BEARING INNER RINGS	42
LR	METRIC GROUND INNER RINGS	47
PI	INCH PRECISION GROUND NEEDLE BEARING INNER RINGS	48

General Information
NEEDLE BEARINGS

PRODUCT DESCRIPTION

INA Drawn Shell Needle Bearings

- Deep Drawn Shell design for maximum capacity in the minimum radial space.
- Cage guided needle rollers for low friction, whole roller loading and high speeds.
- Available in standard inch and metric series with seals available as an option.
- Available open for through shaft locations or with one end closed for shaft end locations to improve sealing.
- Available in alternate design styles as full complement mechanically retained or full complement grease retained.
- Easily mounted without snap rings or shoulders.

INA Cage And Roller Assemblies

- Combinations of needle rollers within various retainer designs for use with hardened shaft and housing.
- Retainer guides needles providing full length roller contact for maximum capacity, low friction and long life.
- Cages allow easy assembly compared to full sets of loose needles and adapt to higher misalignments.
- Cages are available in various materials and designs as required by the applications, such as KZK and KBK for crankpin and wristpin locations.

INA Precision Ground Needle Bearings

- Through hardened machined and ground raceways with cage and roller complements.
- Retainer guides needles providing full length roller contact for maximum capacity, low friction and long life.
- Design series exist to match ISO, DIN, popular metric and inch dimension series.
- Available with seals, higher precision or heat stabilization.
- Location hole and groove in outer ring.

INA Self Aligning Needle Bearings

- Precision ground needle bearing with cage and roller complement.
- Internal spherical seat to statically realign.
- Allows for initial static misalignment up to 3°.
- Plastic aligning seats and raceway are captured within a drawn shell for ease of assembly.

Part Number Identification
NEEDLE BEARINGS

DRAWN SHELL NEEDLE BEARINGS

INCH SERIES
SCE, BCE, SCH, BCH, SN, CS, CSN

METRIC SERIES
HK, BK

HK **25** **20** **2RS** **AS1**

PREFIX

SCE	Standard Series, Caged, Open End
BCE	Standard Series, Caged, Closed End
SCH	Heavy Series, Caged, Open End
BCH	Heavy Series, Caged, Closed End
S	Standard, Series, Full Complement, Mechanically Retained, Open End
SN	Standard Series, Full Complement, Grease Retained, Open End
CS	Standard Series, Full Complement, Mechanically Retained, Closed End
CSN	Standard Series, Full Complement, Grease Retained, Closed End
HK	Metric Series, Caged, Open End
BK	Metric Series, Caged, Closed End

Shaft
Millimeters

Sixteenths Of An Inch

Width
Millimeters

Sixteenths Of An Inch

SUFFIX

RS	Seal, Metric
2RS	2 Seals, Metric
P	Seal, Inch
PP	2 Seals, Inch
AS1	Oil Hole
RR	Corrotect Plated

Part Number Identification
NEEDLE BEARINGS

CAGE AND ROLLER ASSEMBLIES METRIC SERIES

K, KZK, KBK

K 25 x 35 x 40 TN

PREFIX

K	Metric
KZK	Metric, Crank
KBK	Metric, Wrist

Shaft In Millimeters

Housing Bore In Millimeters

Width In Millimeters

SUFFIX

ZW	2 Roller Rows
AG	Silver Plated
A,B	Design Variation
TN	Plastic Cage

UNIT CAGES INCH SERIES

C 32 38 16

UNIT CAGE

Shaft Sixteenths Of An Inch

Housing Bore Sixteenths Of An Inch

Width Sixteenths Of An Inch

RADIAL NEEDLE BEARINGS WITHOUT RIBS METRIC SERIES

NAO, RNAO

NAO 25 x 35 x 4 TN

PREFIX

NAO	With Inner Ring
RNAO	Without Inner Ring

Shaft In Millimeters

OD In Millimeters

Width In Millimeters

SUFFIX

TN	Plastic Cage

Part Number Identification
NEEDLE BEARINGS

PRECISION GROUND NEEDLE BEARINGS METRIC ISO SERIES

NA, RNA

NA **4914** **P6** **C3**

PREFIX

NA	Metric
RNA	Metric, No Inner Ring

48..	ISO Dimension Series
49..	ISO Dimension Series
69..	ISO Dimension Series

..XX	ISO Definition Of Shaft Diameter

SUFFIX

P.	Precision Class
C.	Clearance Group
RR	Corrotect Plated
ISR	Inner Ring Oil Groove & Hole
S.	Heat Stabilized

PRECISION GROUND BEARINGS INCH SERIES

NCS

NCS **12** **12**

Precision Ground Needle Bearing

Shaft Sixteenths Of An Inch

WIDTH Sixteenths Of An Inch

PRECISION GROUND RADIAL NEEDLE BEARING METRIC SERIES

NK, NKS, NKI, NKIS

NK **35/30** **TN**

NK	No Inner Ring, Light Series
NKS	No Inner Ring, Heavy Series
NKI	With Inner Ring, Light Series
NKIS	With Inner Ring, Heavy Series

##/## – Shaft / Width
– Shaft

TN	Plastic Cage

Part Number Identification
NEEDLE BEARINGS

ALIGNING NEEDLE ROLLER BEARINGS
METRIC SERIES

PNA, RPNA

RPNA 15 / 28

- **RPNA**
  - PNA — With Inner Ring
  - RPNA — Without Inner Ring
- **15** — **Shaft** In Millimeters
- **28** — **OD** In Millimeters

INNER RINGS
INCH SERIES

PI

PI 05 08 08

- **PI** — **PREFIX**
  - PI — Inner Ring With Oil Groove
- **05** — **Shaft** Sixteenths Of An Inch
- **08** — **OD** Sixteenths Of An Inch
- **08** — **Width** Sixteenths Of An Inch

INNER RINGS
METRIC SERIES

IR, LR

IR 05 x 08 x 08 ISI

- **IR** — **PREFIX**
  - IR — Precision Ground For Precision Needle Bearings
  - LR — Precision Ground For Needle Bearings
- **05** — **Shaft** In Millimeters
- **08** — **OD** In Millimeters
- **08** — **Width** In Millimeters
- **ISI** — **SUFFIX**
  - ISI — Oil Hole
  - ISRI — Oil Hole & Groove

Shell Bearings

CAGE GUIDED NEEDLE ROLLER BEARING SERIES

- Drawn cup
- Combined inch and metric sizes
- Open for through shafts
- Closed for shaft ends

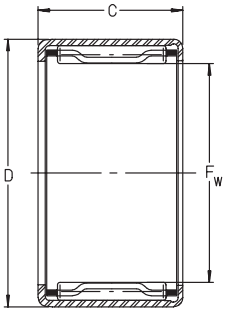

SCE, SCH, HK

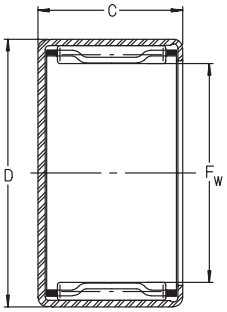

BCE, BCH, BK

For details on part numbers, descriptive suffixes and various technical references, please refer to front of this section.
For engineering or technical information contact your local sales representative or call Distributor Sales (800)523-6572.

PART NUMBER OPEN END	PART NUMBER CLOSED END	SHAFT F_w inch	SHAFT F_w mm	OD D inch	OD D mm	WIDTH C inch	WIDTH C mm	WGT. lbs	WGT. g	DYN. CAP. C lbf	DYN. CAP. C N	STAT. CAP. C_0 lbf	STAT. CAP. C_0 N	SPEED LIMIT rpm
HK 0306 TN	BK 0306 TN	0.118	3	0.256	6.5	0.236	6	0.002	1	275	1,230	189	840	46,000
SCE24TN	BCE24TN	0.125	3.175	0.250	6.350	0.250	6.350	0.003	1	240	1,070	165	740	31,500
SCE2–1/2–4		0.156	3.969	0.281	7.145	0.250	6.350	0.003	1	285	1,260	211	940	25,000
SCE2–1/2–4TN		0.156	3.969	0.281	7.145	0.250	6.350	0.003	1	275	1,230	204	910	25,000
HK 0408	BK 0408	0.157	4	0.315	8	0.315	8	0.004	2	400	1,780	295	1,310	41,000
SCE34TN	BCE34TN	0.187	4.762	0.344	8.731	0.250	6.350	0.003	1	400	1,790	305	1,360	21,000
SCE36TN	BCE36TN	0.187	4.762	0.344	8.731	0.375	9.525	0.004	2	620	2,750	530	2,350	21,000
SCE36		0.187	4.762	0.344	8.731	0.375	9.530	0.004	2	630	2,800	550	2,440	21,000
HK 0509	BK 0509	0.197	5	0.354	9	0.354	9	0.004	2	540	2,400	445	1,990	38,000
HK 0608		0.236	6	0.394	10	0.315	8	0.005	2	455	2,030	370	1,650	35,000
HK 0609	BK 0609	0.236	6	0.394	10	0.354	9	0.006	3	640	2,850	590	2,600	35,000
SCE44	BCE44	0.250	6.350	0.437	11.112	0.250	6.350	0.005	2	360	1,600	260	1,200	44,000
SCE45	BCE45	0.250	6.350	0.437	11.112	0.313	7.938	0.006	3	570	2,500	470	2,090	44,000
SCE47	BCE47	0.250	6.350	0.437	11.112	0.437	11.112	0.009	4	920	4,000	870	3,850	44,000
HK 0709	BK 0709	0.276	7	0.433	11	0.354	9	0.006	3	700	3,100	660	2,950	31,000
SCE55	BCE55	0.313	7.938	0.500	12.700	0.313	7.938	0.008	4	650	2,900	590	2,600	35,500
SCE57	BCE57	0.313	7.938	0.500	12.700	0.437	11.112	0.013	6	1,060	4,700	1,090	4,850	35,500
SCE59	BCE59	0.313	7.938	0.500	12.700	0.563	14.288	0.014	6	1,340	6,000	1,480	6,600	35,500
SCH57	BCH57	0.313	7.938	0.563	14.288	0.437	11.112	0.015	7	1,070	4,750	930	4,100	35,500
HK 0808	BK 0808	0.315	8	0.472	12	0.315	8	0.006	3	620	2,750	590	2,600	28,000
HK 0810	BK 0810	0.315	8	0.472	12	0.394	10	0.007	3	850	3,800	890	3,950	28,000
HK 0908		0.354	9	0.512	13	0.315	8	0.007	3	870	3,850	930	4,150	25,000
HK 0910	BK 0910	0.354	9	0.512	13	0.394	10	0.009	4	960	4,250	1,050	4,650	25,000
HK 0912	BK 0912	0.354	9	0.512	13	0.472	12	0.01	5	1,190	5,300	1,420	6,300	25,000
SCE65	BCE65	0.375	9.525	0.563	14.288	0.313	7.938	0.007	3	650	2,900	610	2,700	29,500
SCE66	BCE66	0.375	9.525	0.563	14.288	0.375	9.525	0.009	4	870	3,900	890	3,950	29,500
SCE67	BCE67	0.375	9.525	0.563	14.288	0.437	11.112	0.011	5	980	4,350	1,030	4,600	29,500
SCE68	BCE68	0.375	9.525	0.563	14.288	0.500	12.700	0.013	6	1,300	5,800	1,490	6,600	29,500
SCE610	BCE610	0.375	9.525	0.563	14.288	0.625	15.875	0.015	7	1,660	7,400	2,040	9,000	29,500
SCH68	BCH68	0.375	9.525	0.625	15.875	0.500	12.700	0.020	9	1,590	7,100	1,590	7,100	29,500
HK 1010	BK 1010	0.394	10	0.551	14	0.394	10	0.009	4	990	4,400	1,150	5,100	23,000
HK 1012	BK 1012	0.394	10	0.551	14	0.472	12	0.011	5	1,240	5,500	1,530	6,800	23,000
HK 1015	BK 1015	0.394	10	0.551	14	0.591	15	0.013	6	1,530	6,800	1,980	8,800	23,000
SCE78	BCE78	0.437	11.112	0.625	15.875	0.500	12.700	0.016	7	1,430	6,400	1,760	7,800	25,000
SCE710		0.437	11.112	0.625	15.875	0.625	15.875	0.020	9	1,830	8,100	2,400	10,700	25,000
SCH78	BCH78	0.438	11.112	0.688	17.462	0.500	12.700	0.020	9	1,760	7,900	1,840	8,200	25,000
HK 1210	BK 1210	0.472	12	0.630	16	0.394	10	0.01	5	1,110	4,950	1,390	6,200	20,000
HK 1212	BK 1212	0.472	12	0.709	18	0.472	12	0.02	9	1,460	6,500	1,640	7,300	19,000
SCE85	BCE85	0.500	12.700	0.687	17.462	0.313	7.938	0.009	4	820	3,650	890	3,950	22,000
SCE86	BCE86	0.500	12.700	0.687	17.462	0.375	9.525	0.011	5	1,040	4,600	1,210	5,400	22,000
SCE87	BCE87	0.500	12.700	0.687	17.462	0.437	11.112	0.013	6	1,330	5,900	1,660	7,400	22,000
SCE88	BCE88	0.500	12.700	0.687	17.462	0.500	12.700	0.016	7	1,550	6,900	2,030	9,000	22,000
SCE810	BCE810	0.500	12.700	0.687	17.462	0.625	15.875	0.021	9	1,980	8,800	2,750	12,300	22,000
SCE812	BCE812	0.500	12.700	0.687	17.462	0.750	19.050	0.025	11	2,230	9,900	3,200	14,300	22,000
SCH87	BCH87	0.500	12.700	0.750	19.050	0.438	11.112	0.020	9	1,650	7,340	1,760	7,800	22,000
SCH88	BCH88	0.500	12.700	0.750	19.050	0.500	12.700	0.022	10	1,910	8,500	2,120	9,400	22,000

Shell Bearings

CAGE GUIDED NEEDLE ROLLER BEARING SERIES

- Drawn cup
- Combined inch and metric sizes
- Open for through shafts
- Closed for shaft ends

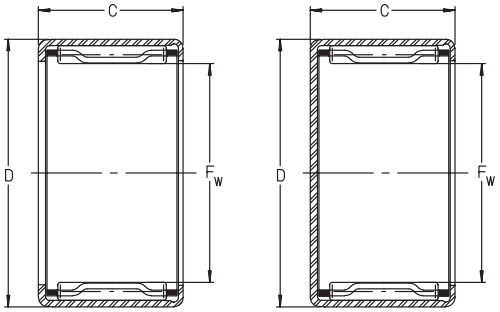

SCE, SCH, HK

BCE, BCH, BK

For details on part numbers, descriptive suffixes and various technical references, please refer to front of this section.
For engineering or technical information contact your local sales representative or call Distributor Sales (800)523-6572.

PART NUMBER OPEN END	PART NUMBER CLOSED END	SHAFT F_w inch	SHAFT F_w mm	OD D inch	OD D mm	WIDTH C inch	WIDTH C mm	WGT. lbs	WGT. g	DYN. CAP. C lbf	DYN. CAP. C N	STAT. CAP. C_0 lbf	STAT. CAP. C_0 N	SPEED LIMIT rpm
SCH810	BCH810	0.500	12.700	0.750	19.050	0.625	15.875	0.022	10	2,360	10,500	2,800	12,400	22,000
SCH812	BCH812	0.500	12.700	0.750	19.050	0.750	19.050	0.035	16	2,850	12,600	3,500	15,700	22,000
HK 1312	BK 1312	0.512	13	0.748	19	0.472	12	0.022	10	1,530	6,800	1,780	7,900	18,000
HK 1412	BK 1412	0.551	14	0.787	20	0.472	12	0.023	11	1,600	7,100	1,910	8,500	16,000
SCE95		0.563	14.288	0.750	19.050	0.313	7.938	0.010	5	910	4,000	1,060	4,700	19,600
SCE96	BCE96	0.563	14.288	0.750	19.050	0.375	9.525	0.013	6	1,160	5,200	1,440	6,400	19,600
SCE97		0.563	14.288	0.750	19.050	0.438	11.130	0.019	8	1,480	6,600	1,980	8,800	19,600
SCE98	BCE98	0.563	14.288	0.750	19.050	0.500	12.700	0.020	9	1,730	7,700	2,420	10,800	19,600
SCE910	BCE910	0.563	14.288	0.750	19.050	0.625	15.875	0.022	10	2,120	9,600	3,150	14,000	19,600
SCE912	BCE912	0.563	14.288	0.750	19.050	0.750	19.050	0.026	12	2,410	10,700	3,700	16,400	19,600
SCH98	BCH98	0.563	14.288	0.813	20.638	0.500	12.700	0.026	12	2,050	9,100	2,380	10,600	19,600
SCH910	BCH910	0.563	14.288	0.813	20.638	0.625	15.875	0.028	13	2,700	12,000	3,350	15,000	19,600
SCH912	BCH912	0.563	14.288	0.813	20.638	0.750	19.050	0.037	17	3,250	14,400	4,300	19,000	19,600
HK 1512	BK 1512	0.591	15	0.827	21	0.472	12	0.024	11	1,780	7,900	2,110	9,400	16,000
HK 1516	BK 1516	0.591	15	0.827	21	0.630	16	0.033	15	2,360	10,500	3,250	14,400	16,000
HK 1522	BK 1522	0.591	15	0.827	21	0.866	22	0.044	20	3,000	13,400	4,400	19,500	16,000
SCE105	BCE105	0.625	15.875	0.813	20.638	0.313	7.938	0.012	5	970	4,300	1,180	5,200	17,600
SCE107	BCE107	0.625	15.875	0.813	20.638	0.437	11.112	0.017	8	1,480	6,600	2,100	9,300	17,600
SCE107–1/2	BCE107–1/2	0.625	15.875	0.813	20.638	0.469	11.910	0.018	8	1,600	7,100	2,320	10,300	17,600
SCE108	BCE108	0.625	15.875	0.813	20.638	0.500	12.700	0.020	9	1,830	8,100	2,700	12,000	17,600
SCE1010	BCE1010	0.625	15.875	0.813	20.638	0.625	15.875	0.025	11	2,330	10,400	3,650	16,300	17,600
SCE1012	BCE1012	0.625	15.875	0.813	20.638	0.750	19.050	0.031	14	2,700	12,100	4,450	19,700	17,600
SCH108	BCH108	0.625	15.875	0.875	22.225	0.500	12.700	0.028	13	2,250	10,000	2,750	12,200	17,600
SCH1010	BCH1010	0.625	15.875	0.875	22.225	0.625	15.875	0.035	16	2,850	12,700	3,750	16,700	17,600
SCH1012	BCH1012	0.625	15.875	0.875	22.225	0.750	19.050	0.042	19	3,300	14,700	4,500	20,000	17,600
SCH1016	BCH1016	0.625	15.875	0.875	22.225	1.000	25.400	0.055	25	4,300	19,100	6,300	28,000	17,600
HK 1612	BK 1612	0.630	16	0.866	22	0.472	12	0.026	12	1,710	7,600	2,180	9,700	15,000
HK 1616	BK 1616	0.630	16	0.866	22	0.630	16	0.035	16	2,450	10,900	3,450	15,300	15,000
HK 1622	BK 1622	0.630	16	0.866	22	0.866	22	0.049	22	2,950	13,100	4,350	19,400	15,000
HK 1712	BK 1712	0.669	17	0.906	23	0.472	12	0.026	12	1,780	7,900	2,320	10,300	14,000
SCE116		0.687	17.462	0.875	22.225	0.375	9.525	0.014	6	1,290	5,700	1,770	7,900	16,000
SCE118	BCE118	0.687	17.462	0.875	22.225	0.500	12.700	0.021	10	1,930	8,600	2,950	13,200	16,000
SCE1110	BCE1110	0.687	17.462	0.875	22.225	0.625	15.875	0.028	13	2,460	10,900	4,050	18,000	16,000
SCE1112	BCE1112	0.687	17.462	0.875	22.225	0.750	19.050	0.035	16	2,800	12,400	4,750	21,000	16,000
SCH117	BCH117	0.688	17.462	0.938	23.812	0.437	11.112	0.029	13	1,900	8,400	2,260	10,000	16,000
SCH1110	BCH1110	0.688	17.462	0.938	23.812	0.625	15.875	0.037	17	2,900	12,900	3,850	17,100	16,000
SCH1112	BCH1112	0.688	17.462	0.938	23.812	0.750	19.050	0.045	20	3,550	15,900	5,100	22,700	16,000
HK 1812	BK 1812	0.709	18	0.945	24	0.472	12	0.029	13	1,820	8,100	2,450	10,900	13,000
HK 1816	BK 1816	0.709	18	0.945	24	0.63	16	0.04	18	2,600	11,600	3,900	17,300	13,000
SCE126	BCE126	0.750	19.050	1.000	25.400	0.375	9.525	0.022	10	1,600	7,100	1,860	8,300	14,700
SCE128	BCE128	0.750	19.050	1.000	25.400	0.500	12.700	0.031	14	2,210	9,800	2,800	12,500	14,700
SCE1210	BCE1210	0.750	19.050	1.000	25.400	0.625	15.875	0.040	18	2,850	12,800	3,950	17,500	14,700
SCE1212	BCE1212	0.750	19.050	1.000	25.400	0.750	19.050	0.046	21	3,450	15,300	5,000	22,100	14,700
SCH1212	BCH1212	0.750	19.050	1.063	26.988	0.750	19.050	0.060	27	4,150	18,500	5,300	23,600	14,700
HK 2010		0.787	20	1.024	26	0.394	10	0.026	12	1,440	6,400	1,840	8,200	12,000
HK 2012	BK 2012	0.787	20	1.024	26	0.472	12	0.031	14	1,930	8,600	2,700	12,100	12,000

Shell Bearings

CAGE GUIDED NEEDLE ROLLER BEARING SERIES

- Drawn cup
- Combined inch and metric sizes
- Open for through shafts
- Closed for shaft ends

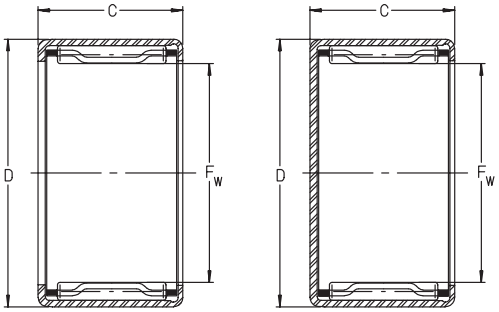

SCE, SCH, HK

BCE, BCH, BK

For details on part numbers, descriptive suffixes and various technical references, please refer to front of this section.
For engineering or technical information contact your local sales representative or call Distributor Sales (800)523-6572.

PART NUMBER OPEN END	PART NUMBER CLOSED END	SHAFT F_w inch	SHAFT F_w mm	OD D inch	OD D mm	WIDTH C inch	WIDTH C mm	WGT. lbs	WGT. g	DYN. CAP. C lbf	DYN. CAP. C N	STAT. CAP. C_0 lbf	STAT. CAP. C_0 N	SPEED LIMIT rpm
HK 2016	BK 2016	0.787	20	1.024	26	0.630	16	0.042	19	2,850	12,700	4,500	20,100	12,000
HK 2020	BK 2020	0.787	20	1.024	26	0.787	20	0.053	24	3,550	15,700	5,800	26,000	12,000
HK 2030	BK 2030	0.787	20	1.024	26	1.181	30	0.077	35	4,900	21,800	9,000	40,000	12,000
SCE136		0.813	20.638	1.063	26.988	0.375	9.525	0.031	14	1,590	7,100	1,880	8,400	13,600
SCE138	BCE138	0.813	20.638	1.063	26.988	0.500	12.700	0.035	16	2,420	10,800	3,200	14,300	13,600
SCE1312	BCE1312	0.813	20.638	1.063	26.988	0.750	19.050	0.053	24	3,600	15,900	5,300	23,700	13,600
SCE1314		0.813	20.638	1.063	26.988	0.875	22.225	0.060	27	4,150	18,500	6,500	29,000	13,600
SCH1310	BCH1310	0.813	20.638	1.125	28.575	0.625	15.875	0.055	25	3,550	15,900	4,650	20,700	13,600
SCH1312	BCH1312	0.813	20.638	1.125	28.575	0.750	19.050	0.066	30	4,350	19,200	6,000	26,500	13,600
HK 22x28x7.5 TN		0.866	22	1.102	28	0.295	7.5	0.02	9	1,300	5,800	1,710	7,600	11,000
HK 2210		0.866	22	1.102	28	0.394	10	0.029	13	1,690	7,500	2,360	10,500	11,000
HK 2212	BK 2212	0.866	22	1.102	28	0.472	12	0.033	15	2,050	9,100	3,000	13,400	11,000
HK 2216	BK 2216	0.866	22	1.102	28	0.630	16	0.046	21	3,000	13,400	4,950	22,100	11,000
HK 2220	BK 2220	0.866	22	1.102	28	0.787	20	0.057	26	3,700	16,500	6,500	29,000	11,000
SCE146	BCE146	0.875	22.225	1.125	28.575	0.375	9.525	0.029	13	1,850	8,200	2,400	10,700	12,600
SCE148	BCE148	0.875	22.225	1.125	28.575	0.500	12.700	0.042	19	2,500	11,200	3,550	15,800	12,600
SCE1412	BCE1412	0.875	22.225	1.125	28.575	0.750	19.050	0.061	28	3,800	16,900	6,100	27,000	12,600
SCE1416	BCE1416	0.875	22.225	1.125	28.575	1.000	25.400	0.075	34	4,950	22,100	8,500	38,000	12,600
SCH1412	BCH1412	0.875	22.225	1.188	30.162	0.750	19.050	0.070	32	4,400	19,500	6,100	27,000	12,600
SCH1416	BCH1416	0.875	22.225	1.188	30.162	1.000	25.400	0.094	43	5,800	25,500	8,600	38,500	12,600
SCE1516	BCE1516	0.937	23.812	1.187	30.162	1.000	25.400	0.084	38	5,400	24,100	9,700	43,000	11,800
HK 24x30x7.5 TN		0.945	24	1.181	30	0.295	7.5	0.022	10	1,370	6,100	1,840	8,200	10,000
HK 2512	BK 2512	0.984	25	1.260	32	0.472	12	0.044	20	2,470	11,000	3,400	15,200	10,000
HK 2516	BK 2516	0.984	25	1.260	32	0.630	16	0.06	27	3,500	15,600	5,400	24,000	10,000
HK 2520	BK 2520	0.984	25	1.260	32	0.787	20	0.073	33	4,450	19,900	7,400	33,000	10,000
HK 2526	BK 2526	0.984	25	1.260	32	1.024	26	0.097	44	5,700	25,500	10,100	45,000	10,000
HK 2538	BK 2538	0.984	25	1.260	32	1.496	38	0.141	64	7,600	34,000	14,800	66,000	10,000
SCE166	BCE166	1.000	25.400	1.250	31.750	0.375	9.525	0.040	18	1,750	7,800	2,300	10,200	11,000
SCE168	BCE168	1.000	25.400	1.250	31.750	0.500	12.700	0.042	19	2,850	12,600	4,300	19,100	11,000
SCE1612	BCE1612	1.000	25.400	1.250	31.750	0.750	19.050	0.060	27	4,150	18,500	7,000	31,500	11,000
SCE1616	BCE1616	1.000	25.400	1.250	31.750	1.000	25.400	0.084	38	5,600	24,800	10,200	45,500	11,000
SCH1610	BCH1610	1.000	25.400	1.313	33.338	0.625	15.875	0.077	35	3,750	16,700	5,100	22,700	11,000
SCH1612	BCH1612	1.000	25.400	1.313	33.338	0.750	19.050	0.080	36	4,500	20,000	6,400	28,500	11,000
SCH1616	BCH1616	1.000	25.400	1.313	33.338	1.000	25.400	0.105	47	6,500	28,900	10,400	46,300	11,000
HK 2816	BK 2816	1.102	28	1.378	35	0.630	16	0.064	29	3,700	16,400	6,000	26,500	9,000
HK 2820	BK 2820	1.102	28	1.378	35	0.787	20	0.079	36	4,700	20,900	8,100	36,000	9,000
SCE186	BCE186	1.125	28.575	1.375	34.925	0.375	9.525	0.042	19	1,870	8,300	2,600	11,500	9,800
SCE188	BCE188	1.125	28.575	1.375	34.925	0.500	12.700	0.045	21	2,900	12,800	4,550	20,200	9,800
SCE1812	BCE1812	1.125	28.575	1.375	34.925	0.750	19.050	0.066	30	4,250	18,900	7,700	34,000	9,800
SCE1816	BCE1816	1.125	28.575	1.375	34.925	1.000	25.400	0.088	40	5,800	26,000	11,100	49,500	9,800
SCH1810	BCH1810	1.125	28.575	1.500	38.100	0.625	15.875	0.094	43	4,900	21,800	6,500	29,000	9,800
SCH1812	BCH1812	1.125	28.575	1.500	38.100	0.750	19.050	0.105	48	5,700	25,000	7,800	35,000	9,800
SCH1816	BCH1816	1.125	28.575	1.500	38.100	1.000	25.400	0.138	63	7,100	31,500	10,600	46,500	9,800
SCH1818	BCH1818	1.125	28.575	1.500	38.100	1.125	28.580	0.186	85	9,100	40,500	14,500	65,000	9,800
SCH1820	BCH1820	1.125	28.575	1.500	38.100	1.250	31.750	0.121	55	9,200	40,900	14,600	64,500	9,800
HK 3012	BK 3012	1.181	30	1.457	37	0.472	12	0.051	23	2,700	12,100	4,100	18,200	8,500

Shell Bearings

CAGE GUIDED NEEDLE ROLLER BEARING SERIES

- Drawn cup
- Combined inch and metric sizes
- Open for through shafts
- Closed for shaft ends

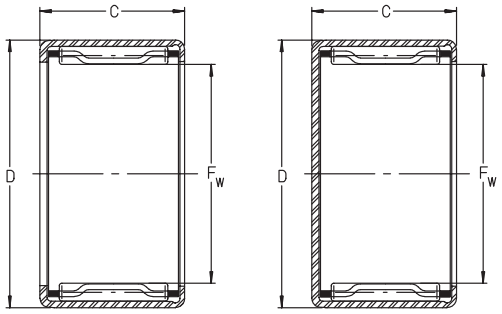

SCE, SCH, HK

BCE, BCH, BK

For details on part numbers, descriptive suffixes and various technical references, please refer to front of this section.
For engineering or technical information contact your local sales representative or call Distributor Sales (800)523-6572.

PART NUMBER OPEN END	PART NUMBER CLOSED END	SHAFT F_W inch	SHAFT F_W mm	OD D inch	OD D mm	WIDTH C inch	WIDTH C mm	WGT. lbs	WGT. g	DYN. CAP. C lbf	DYN. CAP. C N	STAT. CAP. C_0 lbf	STAT. CAP. C_0 N	SPEED LIMIT rpm
HK 3016	BK 3016	1.181	30	1.457	37	0.630	16	0.068	31	3,850	17,200	6,500	29,000	8,500
HK 3020	BK 3020	1.181	30	1.457	37	0.787	20	0.086	39	4,950	22,000	8,900	39,500	8,500
HK 3026	BK 3026	1.181	30	1.457	37	1.024	26	0.112	51	6,300	28,000	12,100	54,000	8,500
HK 3038	BK 3038	1.181	30	1.457	37	1.496	38	0.168	76	8,400	37,500	17,800	79,000	8,500
SCE1916		1.187	30.162	1.500	38.100	1.000	25.400	0.095	43	7,400	33,000	12,900	57,000	9,300
SCE208	BCE208	1.250	31.750	1.500	38.100	0.500	12.700	0.049	22	3,000	13,500	4,950	22,200	8,800
SCE2010	BCE2010	1.250	31.750	1.500	38.100	0.625	15.875	0.066	30	3,700	16,500	6,500	29,000	8,800
SCE2012	BCE2012	1.250	31.750	1.500	38.100	0.750	19.050	0.082	37	4,750	21,100	8,900	39,500	8,800
SCE2016	BCE2016	1.250	31.750	1.500	38.100	1.000	25.400	0.099	45	6,100	27,000	12,300	55,000	8,800
SCE2020	BCE2020	1.250	31.750	1.500	38.100	1.250	31.750	0.123	56	7,500	33,500	16,100	71,000	8,800
SCH208	BCH208	1.250	31.750	1.625	41.275	0.500	12.700	0.079	36	3,700	16,400	4,700	21,000	8,800
SCH2012	BCH2012	1.250	31.750	1.625	41.275	0.750	19.050	0.137	62	6,100	27,100	8,900	39,500	8,800
SCH2016	BCH2016	1.250	31.750	1.625	41.275	1.000	25.400	0.157	71	8,100	36,000	12,900	57,500	8,800
SCH2020	BCH2020	1.250	31.750	1.625	41.275	1.250	31.750	0.174	79	9,800	43,600	16,400	72,900	8,800
HK 32x39x24		1.260	32	1.535	39	0.945	24	0.11	50	6,200	27,500	12,100	54,000	8,000
SCE2110		1.313	33.338	1.625	41.275	0.625	15.875	0.082	37	4,750	21,100	7,600	34,000	8,400
SCE228	BCE228	1.375	34.925	1.625	41.275	0.500	12.700	0.055	25	3,050	13,600	5,300	23,700	8,000
SCE2212	BCE2212	1.375	34.925	1.625	41.275	0.750	19.050	0.086	39	4,800	21,500	9,600	42,500	8,000
SCE2216		1.375	34.925	1.625	41.275	1.000	25.400	0.128	58	6,200	27,500	13,300	59,000	8,000
SCE2220	BCE2220	1.375	34.925	1.625	41.275	1.250	31.750	0.179	81	7,600	34,000	17,300	77,000	8,000
SCH2212	BCH2212	1.375	34.925	1.750	44.450	0.750	19.050	0.127	57	6,600	29,500	10,100	45,000	8,000
SCH2216	BCH2216	1.375	34.925	1.750	44.450	1.000	25.400	0.170	77	8,800	39,000	14,700	65,000	8,000
HK 3512	BK 3512	1.378	35	1.654	42	0.472	12	0.06	27	2,950	13,100	4,800	21,300	7,500
HK 3516	BK 3516	1.378	35	1.654	42	0.630	16	0.079	36	4,200	18,700	7,500	33,500	7,500
HK 3520	BK 3520	1.378	35	1.654	42	0.787	20	0.097	44	5,400	23,800	10,300	46,000	7,500
SCE248	BCE248	1.500	38.100	1.875	47.625	0.500	12.700	0.106	48	4,200	18,600	5,800	26,000	7,400
SCE2410	BCE2410	1.500	38.100	1.875	47.625	0.625	15.875	0.119	54	5,500	24,400	8,300	36,500	7,400
SCE2412	BCE2412	1.500	38.100	1.875	47.625	0.750	19.050	0.137	62	6,800	30,500	10,900	48,500	7,400
SCE2414	BCE2414	1.500	38.100	1.875	47.625	0.875	22.225	0.159	72	8,100	36,000	13,500	60,000	7,400
SCE2416	BCE2416	1.500	38.100	1.875	47.625	1.000	25.400	0.183	83	8,700	38,500	14,900	66,000	7,400
SCE2420	BCE2420	1.500	38.100	1.875	47.625	1.250	31.750	0.232	105	10,600	47,500	19,200	86,000	7,400
HK 4012	BK 4012	1.575	40	1.850	47	0.472	12	0.066	30	3,150	14,000	5,500	24,300	6,500
HK 4016	BK 4016	1.575	40	1.850	47	0.630	16	0.086	39	4,500	20,000	8,700	38,500	6,500
HK 4020	BK 4020	1.575	40	1.850	47	0.787	20	0.119	54	5,700	25,500	11,700	52,000	6,500
SCE2610	BCE2610	1.625	41.275	2.000	50.800	0.625	15.875	0.121	55	5,700	25,500	8,900	40,000	6,800
SCE2620	BCE2620	1.625	41.275	2.000	50.800	1.250	31.750	0.243	110	11,400	51,000	21,900	97,000	6,800
SCE2812	BCE2812	1.750	44.450	2.125	53.975	0.750	19.050	0.181	82	7,100	31,500	12,300	55,000	6,300
SCE2816	BCE2816	1.750	44.450	2.125	53.975	1.000	25.400	0.254	115	9,300	41,500	17,000	76,000	6,300
SCE2820		1.750	44.450	2.125	53.975	1.250	31.750	0.295	134	12,400	55,000	24,300	108,000	6,300
SCE2824	BCE2824	1.750	44.450	2.125	53.975	1.500	38.100	0.359	163	14,000	62,000	29,000	130,000	6,300
HK 4512		1.772	45	2.047	52	0.472	12	0.073	33	3,350	14,900	6,200	27,500	6,000
HK 4516	BK 4516	1.772	45	2.047	52	0.630	16	0.101	46	4,800	21,300	9,700	43,000	6,000
HK 4520	BK 4520	1.772	45	2.047	52	0.787	20	0.123	56	6,100	27,000	13,300	59,000	6,000
HK 50x57x16		1.969	50	2.244	57	0.630	16	0.11	50	4,100	18,200	8,200	36,500	5,000
HK 5020	BK 5020	1.969	50	2.283	58	0.787	20	0.154	70	7,000	31,000	14,200	63,000	5,000
HK 5025	BK 5025	1.969	50	2.283	58	0.984	25	0.198	90	8,700	38,500	18,900	84,000	5,000

Shell Bearings

CAGE GUIDED NEEDLE ROLLER BEARING SERIES

- Drawn cup
- Combined inch and metric sizes
- Open for through shafts
- Closed for shaft ends

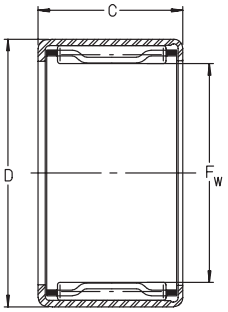

SCE, SCH, HK

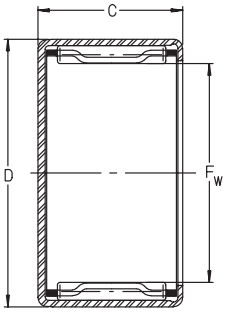

BCE, BCH, BK

For details on part numbers, descriptive suffixes and various technical references, please refer to front of this section.
For engineering or technical information contact your local sales representative or call Distributor Sales (800)523-6572.

PART NUMBER OPEN END	PART NUMBER CLOSED END	SHAFT F_w inch	SHAFT F_w mm	OD D inch	OD D mm	WIDTH C inch	WIDTH C mm	WGT. lbs	WGT. g	DYN. CAP. C lbf	DYN. CAP. C N	STAT. CAP. C_0 lbf	STAT. CAP. C_0 N	SPEED LIMIT rpm
SCE328		2.000	50.800	2.375	60.325	0.500	12.700	0.128	58	4,900	21,800	7,900	35,000	5,500
SCE3210		2.000	50.800	2.375	60.325	0.625	15.875	0.150	68	6,400	28,500	11,200	49,500	5,500
SCE3216	BCE3216	2.000	50.800	2.375	60.325	1.000	25.400	0.225	102	9,300	41,500	17,900	80,000	5,500
SCE3220		2.000	50.800	2.375	60.325	1.250	31.750	0.304	138	12,400	55,000	26,000	116,000	5,500
SCE348		2.125	53.975	2.500	63.500	0.500	12.700	0.137	62	5,200	5,200	8,700	39,000	5,200
SCE3410	BCE3410	2.125	53.975	2.500	63.500	0.625	15.875	0.159	72	7,000	31,000	12,700	57,000	5,200
SCE3416		2.125	53.975	2.500	63.500	1.000	25.400	0.256	116	11,200	50,000	23,200	103,000	5,200
HK 5520	BK 5520	2.165	55	2.480	63	0.787	20	0.163	74	7,100	31,500	15,100	67,000	4,700
HK 5528	BK 5528	2.165	55	2.480	63	1.102	28	0.232	105	9,900	44,000	23,200	103,000	4,700
SCE3612	BCE3612	2.250	57.150	2.625	66.675	0.750	19.050	0.196	89	8,400	37,500	16,200	72,000	4,900
SCE3616	BCE3616	2.250	57.150	2.625	66.675	1.000	25.400	0.265	120	11,300	50,000	24,000	107,000	4,900
HK 6012	BK 6012	2.362	60	2.677	68	0.472	12	0.108	49	3,900	17,400	7,200	32,000	4,400
HK 6020	BK 6020	2.362	60	2.677	68	0.787	20	0.179	81	7,500	33,500	16,900	75,000	4,400
HK 6032	BK 6032	2.362	60	2.677	68	1.260	32	0.3	136	11,900	53,000	30,500	135,000	4,400
SCE4412	BCE4412	2.750	69.850	3.125	79.375	0.750	19.050	0.291	132	8,800	38,500	18,300	80,000	4,000
SCE5612		3.500	88.900	4.000	101.600	0.750	19.050	0.410	186	11,900	53,000	23,200	103,000	3,150

Shell Bearings
SEALED SERIES

- Drawn cup caged needle bearings
- Open and closed, single or double sealed

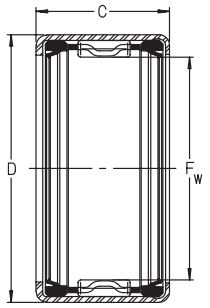

SCE..PP, SCH..PP, HK..2RS

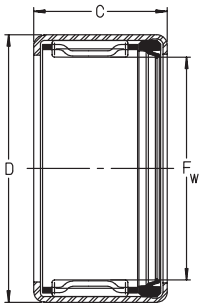

SCE..P, SCH..P, HK..RS

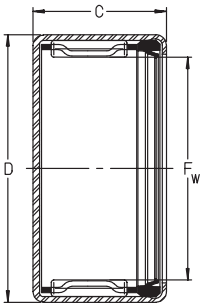

BCE..P, BCH..P, BK..RS

For details on part numbers, descriptive suffixes and various technical references, please refer to front of this section.
For engineering or technical information contact your local sales representative or call Distributor Sales (800)523-6572.

PART NUMBER 2 SEALS	PART NUMBER 1 SEAL	PART NUMBER 1 SEAL CLOSED END	SHAFT F_w inch	SHAFT F_w mm	OD D inch	OD D mm	WIDTH C inch	WIDTH C mm	WGT. lbs	WGT. g	DYN. CAP. C lbf	DYN. CAP. C N	STAT. CAP. C_0 lbf	STAT. CAP. C_0 N	SPEED LIMIT rpm
	SCE45P		0.250	6.350	0.438	11.112	0.313	7.938	0.007	3	360	1,600	260	1,200	27,000
SCE46PP			0.250	6.350	0.438	11.112	0.375	9.525	0.010	5	360	1,600	260	1,200	27,000
	SCE46P		0.250	6.350	0.438	11.112	0.375	9.525	0.010	5	570	2,500	470	2,090	27,000
SCE47PP			0.250	6.350	0.438	11.112	0.438	11.112	0.009	4	570	2,500	470	2,090	27,000
	SCE48P	BCE48P	0.250	6.350	0.438	11.112	0.500	12.700	0.009	4	920	4,000	870	3,850	27,000
SCE49PP			0.250	6.350	0.438	11.112	0.563	14.288	0.011	5	920	4,000	870	3,850	27,000
	SCE56P		0.313	7.938	0.500	12.700	0.375	9.525	0.009	4	650	2,900	590	2,600	23,000
SCE57PP			0.313	7.938	0.500	12.700	0.438	11.112	0.008	4	650	2,900	590	2,600	23,000
	SCE58P	BCE58P	0.313	7.938	0.500	12.700	0.500	12.700	0.013	6	1,060	4,700	1,090	4,850	23,000
SCE59PPR			0.313	7.938	0.500	12.700	0.563	14.288	0.011	5	1,060	4,700	1,090	4,850	23,000
	SCH58P	BCH58P	0.313	7.938	0.563	14.288	0.500	12.700	0.009	4	1,170	5,200	1,080	4,800	21,000
	HK 0810 RS		0.315	8	0.472	12	0.394	10	0.007	3	620	2,750	590	2,600	20,000
HK 0812.2RS			0.315	8	0.472	12	0.472	12	0.007	3	620	2,750	590	2,600	20,000
	SCE66P	BCE66P	0.375	9.525	0.563	14.288	0.375	9.525	0.011	5	650	2,900	610	2,700	20,000
SCE67PP			0.375	9.525	0.563	14.288	0.438	11.112	0.026	12	650	2,900	610	2,700	20,000
SCE68PP			0.375	9.525	0.563	14.288	0.500	12.700	0.013	6	870	3,900	890	3,950	20,000
	SCE69P	BCE69P	0.375	9.525	0.563	14.288	0.563	14.288	0.015	7	1,300	5,800	1,490	6,600	20,000
SCE610PP			0.375	9.525	0.563	14.288	0.625	15.875	0.015	7	1,300	5,800	1,490	6,600	20,000
	HK 1012 RS		0.394	10	0.551	14	0.472	12	0.009	4	990	4,400	1,150	5,100	17,000
HK 1014.2RS			0.394	10	0.551	14	0.551	14	0.010	5	990	4,400	1,150	5,100	17,000
	SCH79P	BCH79P	0.438	11.112	0.688	17.462	0.563	14.288	0.020	9	1,780	7,900	1,840	8,200	15,000
SCH710PP			0.438	11.112	0.688	17.462	0.625	15.875	0.024	11	1,780	7,900	1,840	8,200	15,000
	HK 1214 RS		0.472	12	0.709	18	0.551	14	0.022	10	1,460	6,500	1,640	7,300	14,000
HK 1216.2RS			0.472	12	0.709	18	0.630	16	0.024	11	1,460	6,500	1,640	7,300	14,000
	SCE86P		0.500	12.700	0.688	17.462	0.375	9.525	0.020	9	820	3,650	890	3,950	15,000
SCE87PP			0.500	12.700	0.688	17.462	0.438	11.112	0.013	6	820	3,650	890	3,950	15,000
	SCE89P	BCE89P	0.500	12.700	0.688	17.462	0.563	14.288	0.022	10	1,550	6,900	2,030	9,000	15,000
SCE810PP			0.500	12.700	0.688	17.462	0.625	15.875	0.022	10	1,550	6,900	2,030	9,000	15,000
SCE812PP			0.500	12.700	0.688	17.462	0.750	19.050	0.030	14	1,980	8,800	2,750	12,300	15,000
	SCH813PR	BCH813P	0.500	12.700	0.750	19.050	0.813	20.638	0.037	17	2,850	12,600	3,550	15,700	14,000
SCH814PPR			0.500	12.700	0.750	19.050	0.875	22.225	0.026	12	2,850	12,600	3,550	15,700	14,000
	HK 1414 RS	BK 1414 RS	0.551	14	0.787	20	0.551	14	0.026	12	1,600	7,100	1,910	8,500	12,000
HK 1416.2RS			0.551	14	0.787	20	0.630	16	0.029	13	1,600	7,100	1,910	8,500	12,000
	SCE99P		0.563	14.288	0.750	19.050	0.563	14.288	0.026	12	1,730	7,700	2,420	10,800	14,000
SCE910PP			0.563	14.288	0.750	19.050	0.625	15.875	0.029	13	1,730	7,700	2,420	10,800	14,000
SCE912PP			0.563	14.288	0.750	19.050	0.750	19.050	0.027	12	2,120	9,600	3,150	14,000	14,000
	SCH910PR	BCH910PR	0.563	14.288	0.813	20.638	0.625	15.875	0.022	10	2,450	10,900	3,000	13,300	12,000
	SCH913P	BCH913P	0.563	14.288	0.813	20.638	0.813	20.638	0.042	19	3,250	14,400	4,250	19,000	12,000
	HK 1514 RS	BK 1514 RS	0.591	15	0.827	21	0.551	14	0.026	12	1,750	7,800	2,200	9,800	11,000
HK 1516.2RS			0.591	15	0.827	21	0.630	16	0.033	15	1,750	7,800	2,200	9,800	11,000
	HK 1518 RS		0.591	15	0.827	21	0.709	18	0.035	16	2,360	10,500	3,250	14,400	11,000
HK 1520.2RS			0.591	15	0.827	21	0.787	20	0.040	18	2,360	10,500	3,250	14,400	11,000
	SCE109P		0.625	15.875	0.813	20.638	0.563	14.288	0.022	10	1,830	8,100	2,700	12,000	13,000
SCE1010PP			0.625	15.875	0.813	20.638	0.625	15.875	0.022	10	1,830	8,100	2,700	12,000	13,000
	SCE1011P		0.625	15.875	0.813	20.638	0.687	17.460	0.026	12	2,330	10,400	3,650	16,300	13,000
SCE1012PP			0.625	15.875	0.813	20.638	0.750	19.050	0.029	13	2,330	10,400	3,650	16,300	13,000

Shell Bearings
SEALED SERIES

- Drawn cup caged needle bearings
- Open and closed, single or double sealed

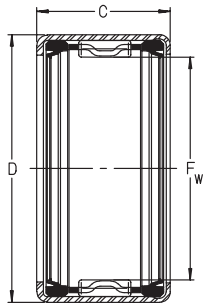

SCE..PP, SCH..PP, HK..2RS

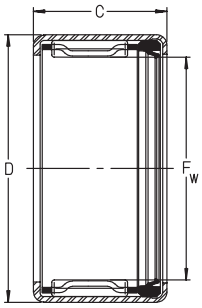

SCE..P, SCH..P, HK..RS

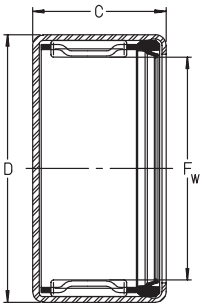

BCE..P, BCH..P, BK..RS

For details on part numbers, descriptive suffixes and various technical references, please refer to front of this section.
For engineering or technical information contact your local sales representative or call Distributor Sales (800)523-6572.

PART NUMBER 2 SEALS	PART NUMBER 1 SEAL	PART NUMBER 1 SEAL CLOSED END	SHAFT F_w inch	SHAFT F_w mm	OD D inch	OD D mm	WIDTH C inch	WIDTH C mm	WGT. lbs	WGT. g	DYN. CAP. C lbf	DYN. CAP. C N	STAT. CAP. C_0 lbf	STAT. CAP. C_0 N	SPEED LIMIT rpm
SCE1014PP			0.625	15.875	0.813	20.638	0.875	22.225	0.033	15	2,700	12,100	4,450	19,700	13,000
	HK 1614 RS	BK 1614 RS	0.630	16	0.866	22	0.551	14	0.029	13	1,710	7,600	2,180	9,700	11,000
HK 1616.2RS			0.630	16	0.866	22	0.630	16	0.031	14	1,710	7,600	2,180	9,700	11,000
HK 1620.2RS			0.630	16	0.866	22	0.787	20	0.040	18	2,450	10,900	3,450	15,300	11,000
		BCH06604PK	0.670	17.015	0.938	23.813	0.688	17.480	0.037	17	1,660	7,400	1,800	8,000	11,000
		BCH06604PR	0.670	17.015	0.938	23.813	0.688	17.480	0.037	17	1,660	7,400	1,800	8,000	11,000
	SCH06604PR		0.670	17.015	0.939	23.838	0.688	17.480	0.029	13	1,660	7,400	1,800	8,000	11,000
	HK 1814 RS		0.709	18	0.945	24	0.551	14	0.031	14	1,820	8,100	2,450	10,900	9,500
HK 1816.2RS			0.709	18	0.945	24	0.630	16	0.033	15	1,820	8,100	2,450	10,900	9,500
SCE128PP			0.750	19.050	1.000	25.400	0.438	11.112	0.029	13	1,600	7,100	1,860	8,300	10,000
	SCE129P	BCE129P	0.750	19.050	1.000	25.400	0.563	14.288	0.037	17	2,210	9,800	2,800	12,500	10,000
SCE1210PP			0.750	19.050	1.000	25.400	0.625	15.875	0.036	17	2,210	9,800	2,800	12,500	10,000
	SCE1211P	BCE1211P	0.750	19.050	1.000	25.400	0.687	17.460	0.049	22	2,850	12,800	3,950	17,500	10,000
SCE1212PP			0.750	19.050	1.000	25.400	0.750	19.050	0.045	20	2,850	12,800	3,950	17,500	10,000
SCE1214PPR			0.750	19.050	1.000	25.400	0.875	22.225	0.056	25	3,450	15,300	5,000	22,100	10,000
HK 2016.2RS			0.787	20	1.024	26	0.630	16	0.040	18	1,930	8,600	2,700	12,100	8,500
	HK 2018 RS	BK 2018 RS	0.787	20	1.024	26	0.709	18	0.046	21	2,850	12,700	4,500	20,100	8,500
HK 2020.2RS			0.787	20	1.024	26	0.787	20	0.051	23	2,850	12,700	4,500	20,100	8,500
	HK 2214 RS		0.866	22	1.102	28	0.551	14	0.035	16	2,050	9,100	3,000	13,400	8,000
HK 2216.2RS			0.866	22	1.102	28	0.630	16	0.040	18	2,050	9,100	3,000	13,400	8,000
	HK 2218 RS		0.866	22	1.102	28	0.709	18	0.053	24	3,000	13,400	4,950	22,100	8,000
HK 2220.2RS			0.866	22	1.102	28	0.787	20	0.057	26	3,000	13,400	4,950	22,100	8,000
SCE148PP			0.875	22.225	1.125	28.575	0.500	12.700	0.035	16	1,850	8,200	2,400	10,700	9,000
SCE1414PP			0.875	22.225	1.125	28.575	0.875	22.225	0.066	30	3,800	16,900	6,100	27,000	9,000
	SCH1413P	BCH1413P	0.875	22.225	1.188	30.162	0.813	20.638	0.075	34	4,400	19,500	6,100	27,000	8,000
SCH1414PP			0.875	22.225	1.188	30.162	0.875	22.225	0.060	27	4,050	18,100	6,100	27,000	8,000
HK 2516.2RS			0.984	25	1.260	32	0.630	16	0.060	27	2,470	11,000	3,400	15,200	7,000
	HK 2518 RS	BK 2518 RS	0.984	25	1.260	32	0.709	18	0.064	29	3,500	15,600	5,400	24,000	7,000
HK 2520.2RS			0.984	25	1.260	32	0.787	20	0.068	31	3,500	15,600	5,400	24,000	7,000
HK 2524.2RS			0.984	25	1.260	32	0.945	24	0.088	40	4,450	19,900	7,400	33,000	7,000
HK 2530.2RS			0.984	25	1.260	32	1.181	30	0.104	47	5,700	25,500	10,100	45,000	7,000
SCE1616PP			1.000	25.400	1.250	31.750	1.000	25.400	0.073	33	4,050	18,000	6,800	30,000	8,000
	SCH1613P		1.000	25.400	1.313	33.338	0.813	20.638	0.079	36	4,150	18,500	6,400	28,500	7,000
	SCH1614P	BCH1614P	1.000	25.400	1.313	33.338	0.875	22.225	0.086	39	4,500	20,000	6,400	28,500	7,000
SCH1616PP			1.000	25.400	1.313	33.338	1.000	25.400	0.095	43	4,500	20,000	6,400	28,500	7,000
HK 2820.2RS			1.102	28	1.378	35	0.787	20	0.075	34	3,700	16,400	6,000	26,500	6,000
HK 3016.2RS			1.181	30	1.457	37	0.630	16	0.068	31	2,700	12,100	4,100	18,200	6,000
HK 3018 RS			1.181	30	1.457	37	0.709	18	0.082	37	3,850	17,200	6,500	29,000	6,000
HK 3020.2RS			1.181	30	1.457	37	0.787	20	0.079	36	3,850	17,200	6,500	29,000	6,000
HK 3024.2RS			1.181	30	1.457	37	0.945	24	0.097	44	4,950	22,000	8,900	39,500	6,000
	SCE2012P		1.250	31.750	1.500	38.100	0.750	19.050	0.079	36	3,650	16,300	6,400	28,500	6,500
	SCE2014PR		1.250	31.750	1.500	38.100	0.875	22.225	0.084	38	4,750	21,100	8,900	39,500	6,500
SCE2016PPR			1.250	31.750	1.500	38.100	1.000	25.400	0.108	49	4,750	21,100	8,900	39,500	6,500
	SCH2018P		1.250	31.750	1.625	41.275	1.125	28.580	0.168	76	8,200	36,500	13,000	58,000	6,000
SCH2020PP			1.250	31.750	1.625	41.275	1.250	31.750	0.192	87	7,400	33,000	12,800	57,000	6,000
		BCH2212PV	1.375	34.925	1.750	44.450	0.750	19.050	0.099	45	5,600	25,000	9,100	40,500	6,000

Shell Bearings
SEALED SERIES

- Drawn cup caged needle bearings
- Open and closed, single or double sealed

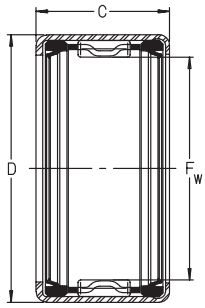

SCE..PP, SCH..PP, HK..2RS

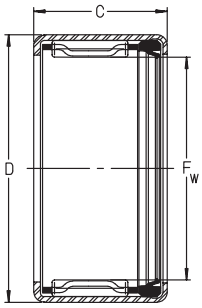

SCE..P, SCH..P, HK..RS

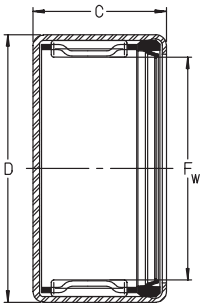

BCE..P, BCH..P, BK..RS

For details on part numbers, descriptive suffixes and various technical references, please refer to front of this section.
For engineering or technical information contact your local sales representative or call Distributor Sales (800)523-6572.

PART NUMBER 2 SEALS	PART NUMBER 1 SEAL	PART NUMBER 1 SEAL CLOSED END	SHAFT F_w inch	SHAFT F_w mm	OD D inch	OD D mm	WIDTH C inch	WIDTH C mm	WGT. lbs	WGT. g	DYN. CAP. C lbf	DYN. CAP. C N	STAT. CAP. C_0 lbf	STAT. CAP. C_0 N	SPEED LIMIT rpm
HK 3516.2RS			1.378	35	1.654	42	0.630	16	0.071	32	2,950	13,100	4,800	21,300	5,000
	HK 3518 RS		1.378	35	1.654	42	0.709	18	0.086	39	4,200	18,700	7,500	33,500	5,000
HK 3520.2RS			1.378	35	1.654	42	0.787	20	0.090	41	4,200	18,700	7,500	33,500	5,000
	SCE2414P		1.500	38.100	1.875	47.625	0.875	22.225	0.155	70	6,900	30,500	11,100	49,500	5,500
	SCE2416P		1.500	38.100	1.875	47.625	1.000	25.400	0.183	83	8,100	36,000	13,700	61,000	5,500
	SCE2422P		1.500	38.100	1.875	47.625	1.375	34.920	0.243	110	10,600	47,000	19,200	19,464	5,500
SCE2424PP			1.500	38.100	1.875	47.625	1.500	38.100	0.258	117	10,600	47,000	19,200	19,464	5,500
HK 4016.2RS			1.575	40	1.850	47	0.630	16	0.082	37	3,150	14,000	5,500	24,300	4,500
	HK 4018 RS		1.575	40	1.850	47	0.709	18	0.099	45	4,500	20,000	8,700	38,500	4,500
HK 4020.2RS			1.575	40	1.850	47	0.787	20	0.106	48	4,500	20,000	8,700	38,500	4,500
	HK 4518 RS		1.772	45	2.047	52	0.709	18	0.110	50	4,800	21,300	9,700	43,000	4,000
HK 4520.2RS			1.772	45	2.047	52	0.787	20	0.119	54	4,800	21,300	9,700	43,000	4,000
	HK 5022 RS		1.969	50	2.284	58	0.866	22	0.168	76	7,000	31,000	14,200	63,000	3,600
HK 5024.2RS			1.969	50	2.284	58	0.945	24	0.179	81	7,000	31,000	14,200	63,000	3,600

Shell Bearings
CSN, SN, SNH SERIES

- Full complement grease retained series
- Drawn cup needle rollers
- Open and closed end designs

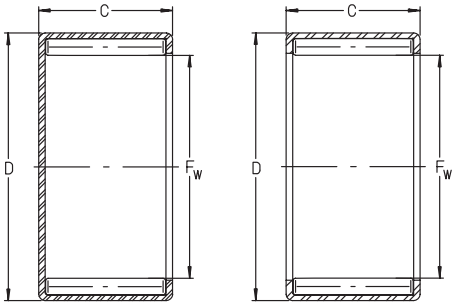

CSN, CSNH SN, SNH

For details on part numbers, descriptive suffixes and various technical references, please refer to front of this section.
For engineering or technical information contact your local sales representative or call Distributor Sales (800)523-6572.

PART NUMBER	SHAFT F_w inch	SHAFT F_w mm	OD D inch	OD D mm	WIDTH C inch	WIDTH C mm	WGT. lbs	WGT. g	DYN. CAP. C lbf	DYN. CAP. C N	STAT. CAP. C_0 lbf	STAT. CAP. C_0 N	SPEED LIMIT rpm
SN45	0.250	6.350	0.438	11.112	0.313	7.938	0.007	3	980	4,350	1,100	4,900	10,000
SN55	0.313	7.938	0.500	12.700	0.313	7.938	0.009	4	1,260	5,600	1,390	6,200	8,300
SN56	0.313	7.938	0.500	12.700	0.375	9.525	0.011	5	1,370	6,100	1,980	8,800	8,300
SN57	0.313	7.938	0.500	12.700	0.438	11.113	0.011	5	1,620	7,200	2,200	9,800	8,300
SN65	0.375	9.525	0.563	14.288	0.313	7.938	0.010	5	1,390	6,200	1,660	7,400	7,100
CSN66	0.375	9.525	0.563	14.288	0.500	12.700	0.008	4	1,550	6,900	2,090	9,300	7,100
SN66	0.375	9.525	0.563	14.288	0.375	9.525	0.008	4	1,300	5,800	1,190	5,300	7,100
SN68	0.375	9.525	0.563	14.288	0.500	12.700	0.015	7	1,730	7,700	1,730	7,700	7,100
SN76	0.438	11.112	0.625	15.875	0.375	9.525	0.020	9	1,710	7,600	2,470	11,000	6,300
SN78	0.438	11.112	0.625	15.875	0.500	12.700	0.018	8	2,230	9,900	3,600	16,000	6,300
SN88	0.500	12.700	0.688	17.462	0.500	12.700	0.020	9	2,650	11,800	4,150	18,400	5,600
SN810	0.500	12.700	0.688	17.462	0.625	15.875	0.024	11	2,900	12,900	5,300	23,600	5,600
SN812	0.500	12.700	0.688	17.462	0.750	19.050	0.031	14	3,600	15,900	6,600	29,500	5,600
SNH87	0.500	12.700	0.750	19.050	0.438	11.112	0.024	11	2,110	9,400	1,960	8,700	5,300
SN105	0.625	15.875	0.813	20.638	0.313	7.938	0.015	7	1,440	6,400	1,510	6,700	4,550
SN116	0.688	17.462	0.875	22.225	0.375	9.525	0.019	9	2,090	9,300	3,850	17,100	4,200
SN128	0.750	19.050	1.000	25.400	0.500	12.700	0.037	17	3,350	15,000	5,600	25,000	3,750
SN148	0.875	22.225	1.125	28.575	0.500	12.700	0.040	18	3,900	17,400	7,100	31,500	3,250
SN1816	1.125	28.575	1.375	34.925	1.000	25.400	0.130	59	8,200	36,500	20,200	90,000	2,600
CSN2816	1.750	44.450	2.125	53.975	1.000	25.400	0.269	122	13,300	59,000	30,500	136,000	1,660

Full Complement Shell Bearings

MECHANICALLY RETAINED SERIES

- Drawn cup
- Open or closed end

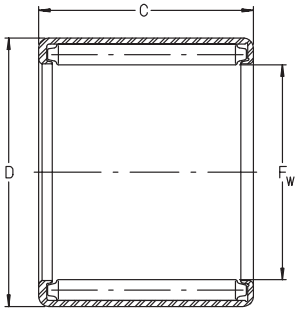

S, SH

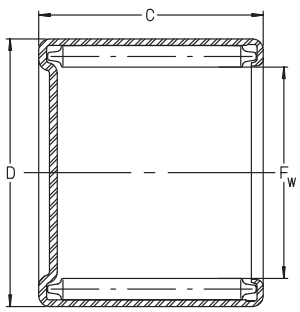

CS, CSH

For details on part numbers, descriptive suffixes and various technical references, please refer to front of this section.
For engineering or technical information contact your local sales representative or call Distributor Sales (800)523-6572.

PART NUMBER	SHAFT F_w inch	SHAFT F_w mm	OD D inch	OD D mm	WIDTH C inch	WIDTH C mm	WGT. lbs	WGT. g	DYN. CAP. C lbf	DYN. CAP. C N	STAT. CAP. C_0 lbf	STAT. CAP. C_0 N	SPEED LIMIT rpm
S44	0.250	6.350	0.438	11.112	0.250	6.350	0.004	2	600	2650	570	2550	15,000
S45	0.250	6.350	0.438	11.112	0.313	7.938	0.007	3	820	3650	880	3900	15,000
S55	0.313	7.938	0.500	12.700	0.313	7.938	0.007	3	940	4200	1,100	4900	12,500
S57	0.313	7.938	0.500	12.700	0.438	11.112	0.011	5	1,420	6300	1,870	8300	12,500
CS59	0.313	7.938	0.500	12.700	0.563	14.288	0.015	7	1,870	8300	2,700	11900	12,500
S66	0.375	9.525	0.563	14.288	0.375	9.525	0.011	5	1,300	5800	1,780	7900	10,700
S78	0.438	11.112	0.625	15.875	0.500	12.700	0.018	8	2,230	9900	3,150	14100	9,400
S810	0.500	12.700	0.688	17.462	0.625	15.875	0.024	11	2,700	12000	4,850	21600	8,300
S85	0.500	12.700	0.688	17.462	0.313	7.938	0.021	10	1,370	6100	1,780	7900	8,400
S88	0.500	12.700	0.688	17.462	0.500	12.700	0.020	9	2,180	9700	3,650	16300	8,400
S98	0.563	14.288	0.750	19.050	0.500	12.700	0.020	9	2,300	10230	4,050	18014	7,500
S1012	0.625	15.875	0.813	20.638	0.750	19.050	0.035	16	3,650	16300	7,600	34000	6,800
S108	0.625	15.875	0.813	20.638	0.500	12.700	0.022	10	2,450	10900	4,550	20300	6,800
S116	0.688	17.462	0.875	22.225	0.375	9.525	0.020	9	2,050	9100	3,250	14400	6,300
S1110	0.688	17.463	0.875	22.225	0.625	15.880	0.031	14	3,200	14200	6,700	30000	6,300
S1112	0.688	17.463	0.875	22.225	0.750	19.050	0.037	17	3,850	17100	8,400	37500	6,300
S1210	0.750	19.050	1.000	25.400	0.625	15.875	0.044	20	4,000	17700	7,000	31000	5,600
CS1210	0.750	19.050	1.000	25.400	0.625	15.875	0.044	20	4,000	17700	7,000	31000	5,600
S1212	0.750	19.050	1.000	25.400	0.750	19.050	0.055	25	4,800	21350	8,900	39500	5,600
S128	0.750	19.050	1.000	25.400	0.500	12.700	0.035	16	3,200	14300	5,200	23100	5,600
S1316	0.813	20.638	1.063	26.988	1.000	25.400	0.079	36	7,300	32500	13,700	61000	5,200
CS1316	0.813	20.638	1.063	26.988	1.000	25.400	0.079	36	7,300	32500	13,700	61000	5,200
S138	0.813	20.638	1.063	26.988	0.500	12.700	0.040	18	3,000	13400	4,900	21700	5,200
S1412	0.875	22.225	1.125	28.575	0.750	19.050	0.064	29	5,000	22300	8,800	39000	4,900
S148	0.875	22.225	1.125	28.575	0.500	12.700	0.040	18	3,650	16300	5,800	26000	4,900
CS1516	0.938	23.812	1.188	30.162	1.000	25.400	0.084	38	7,500	33500	14,800	66000	4,600
S1612	1.000	25.400	1.250	31.750	0.750	19.050	0.071	32	5,500	24600	11,900	53000	4,300
S168	1.000	25.400	1.250	31.750	0.500	12.700	0.044	20	3,600	15900	6,700	30000	4,300
SH1612	1.000	25.400	1.314	33.380	0.750	19.050	0.088	40	6,900	30500	11,100	49500	4,250
SH1616	1.000	25.400	1.314	33.380	1.000	25.400	0.108	49	8,900	39500	15,700	70000	4,250
S1710	1.063	26.988	1.313	33.338	0.625	15.875	0.062	28	4,750	21100	9,900	44000	4,100
S1812	1.125	28.575	1.375	34.925	0.750	19.050	0.079	36	6,500	29000	13,300	59000	3,900
S2012	1.250	31.750	1.500	38.100	0.750	19.050	0.086	39	6,300	28000	14,800	66000	3,500
S2016	1.250	31.750	1.500	38.100	1.000	25.400	0.117	53	8,200	36500	20,900	93000	3,500
S2212	1.375	34.925	1.625	41.275	0.750	19.050	0.095	43	6,400	28500	16,000	71000	3,200
S2220	1.375	34.925	1.625	41.275	1.250	31.750	0.159	72	10,300	46000	30,000	133000	3,200
S2416	1.500	38.100	1.875	47.625	1.000	25.400	0.207	94	10,700	47500	2,410	10700	2,850
S2610	1.625	41.275	2.000	50.800	0.625	15.875	0.130	59	6,500	29000	12,400	55000	2,650
S268	1.625	41.275	2.000	50.800	0.500	12.700	0.088	40	7,300	32500	12,400	55000	2,650
S2812	1.750	44.450	2.125	53.975	0.750	19.050	0.175	80	8,100	36000	16,900	75000	2,490
S2824	1.750	44.450	2.125	53.975	1.500	38.100	0.375	170	18,900	84000	44,000	196000	2,490
S3016	1.875	47.625	2.250	57.150	1.000	25.400	0.256	116	13,500	60000	28,500	126000	2,340
S308	1.875	47.625	2.250	57.150	0.500	12.700	0.115	52	5,700	25500	9,600	42500	2,340
S3216	2.000	50.800	2.375	60.325	1.000	25.400	0.267	121	12,400	55000	30,500	136000	2,200
S3624	2.250	57.150	2.625	66.675	1.500	38.100	0.084	38	19,600	87000	56,000	250000	1,970
S4216	2.625	66.675	3.000	76.200	1.000	25.400	0.353	160	14,400	64000	40,000	177000	1,700

Needle Roller And Cage Assemblies

UNIT CAGE SERIES

- Inch and metric
- Single and double row

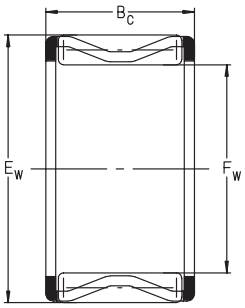

For details on part numbers, descriptive suffixes and various technical references, please refer to front of this section.
For engineering or technical information contact your local sales representative or call Distributor Sales (800)523-6572.

PART NUMBER	SHAFT F_w inch	SHAFT F_w mm	HSG. BORE E_w inch	HSG. BORE E_w mm	WIDTH B_c inch	WIDTH B_c mm	WGT. lbs	WGT. g	DYN. CAP. C lbf	DYN. CAP. C N	STAT. CAP. C_0 lbf	STAT. CAP. C_0 N	SPEED LIMIT rpm
K 3x5x7 TN	0.118	3	0.197	5	0.276	7	0.001	0.3	345	1540	290	1290	50,000
K 3x5x9 TN	0.118	3	0.197	5	0.354	9	0.001	0.4	385	1710	335	1480	50,000
K 3x6x7 TN	0.118	3	0.236	6	0.276	7	0.001	0.4	320	1430	218	970	47,000
K 4x7x7 TN	0.158	4	0.276	7	0.276	7	0.001	0.5	390	1740	285	1270	43,000
K 4x7x10 TN	0.158	4	0.276	7	0.394	10	0.002	0.7	520	2330	415	1840	43,000
K 5x8x8 TN	0.197	5	0.315	8	0.315	8	0.002	0.7	530	2350	430	1920	39,000
K 5x8x10 TN	0.197	5	0.315	8	0.394	10	0.002	0.9	670	3000	600	2650	39,000
K 6x9x8 TN	0.236	6	0.354	9	0.315	8	0.002	0.8	590	2600	510	2280	37,000
K 6x9x10 TN	0.236	6	0.354	9	0.394	10	0.002	1.1	750	3350	710	3150	37,000
K 6x10x13 TN	0.236	6	0.394	10	0.512	13	0.004	1.9	850	3800	700	3100	35,000
K 7x9x7 TN	0.276	7	0.354	9	0.276	7	0.001	0.6	405	1810	425	1880	35,000
K 7x10x8 TN	0.276	7	0.394	10	0.315	8	0.002	0.9	640	2850	600	2650	34,000
K 7x10x10 TN	0.276	7	0.394	10	0.394	10	0.002	1	820	3650	810	3600	34,000
K 8x11x8 TN	0.315	8	0.433	11	0.315	8	0.002	1	700	3100	670	3000	32,000
K 8x11x10 TN	0.315	8	0.433	11	0.394	10	0.003	1.2	890	3950	920	4100	32,000
K 8x11x13 TN	0.315	8	0.433	11	0.512	13	0.004	1.7	1,150	5100	1,300	5800	32,000
K 8x12x8	0.315	8	0.472	12	0.315	8	0.001	0.4	800	3550	690	3050	32,000
K 8x12x10 TN	0.315	8	0.472	12	0.394	10	0.004	2	1,120	5000	1,060	4700	32,000
K 9x12x10 TN	0.354	9	0.472	12	0.394	10	0.003	1.5	1,010	4500	1,120	5000	31,000
K 9x12x13 TN	0.354	9	0.472	12	0.512	13	0.005	2.1	1,330	5900	1,600	7100	31,000
C060806	0.375	9.525	0.500	12.700	0.375	9.525	0.005	2.5	900	4000	940	4200	30,000
K 10x13x10 TN	0.394	10	0.512	13	0.394	10	0.004	1.6	1,070	4750	1,240	5500	29,000
K 10x13x13 TN	0.394	10	0.512	13	0.512	13	0.005	2.3	1,390	6200	1,750	7800	29,000
K 10x13x16 TN	0.394	10	0.512	13	0.630	16	0.006	2.9	1,600	7100	2,090	9300	29,000
K 10x14x10 TN	0.394	10	0.551	14	0.394	10	0.006	2.5	1,300	5800	1,350	6000	29,000
K 10x14x13 TN	0.394	10	0.551	14	0.512	13	0.01	4.6	1,690	7500	1,890	8400	29,000
K 10x16x12 TN	0.394	10	0.630	16	0.472	12	0.012	5.5	1,820	8100	1,620	7200	28,000
K 12x15x10 TN	0.472	12	0.591	15	0.394	10	0.006	2.9	1,100	4900	1,370	6100	27,000
K 12x15x13 TN	0.472	12	0.591	15	0.512	13	0.005	2.3	1,440	6400	1,910	8500	27,000
K 12x15x20 ZW TN	0.472	12	0.591	15	0.787	20	0.011	5	1,890	8400	2,750	12200	27,000
K 12x16x10	0.472	12	0.630	16	0.394	10	0.008	3.7	1,440	6400	1,620	7200	27,000
K 12x16x13 TN	0.472	12	0.630	16	0.512	13	0.012	5.5	1,800	8000	2,110	9400	27,000
K 12x17x13 TN	0.472	12	0.669	17	0.512	13	0.011	4.9	2,160	9600	2,340	10400	26,000
K 12x18x12 TN	0.472	12	0.709	18	0.472	12	0.013	6	2,250	10000	2,230	9900	26,000
C081008	0.500	12.700	0.625	15.875	0.500	12.700	0.009	4.2	1,490	6600	1,960	8700	26,000
K 14x17x10	0.551	14	0.669	17	0.394	10	0.009	4	1,190	5300	1,600	7100	25,000
K 14x17x17 TN	0.551	14	0.669	17	0.669	17	0.009	4	2,050	9100	3,150	14100	25,000
K 14x18x10	0.551	14	0.709	18	0.394	10	0.009	4	1,600	7100	1,910	8500	25,000
K 14x18x13	0.551	14	0.709	18	0.512	13	0.014	6.5	1,840	8200	2,270	10100	25,000
K 14x18x14	0.551	14	0.709	18	0.551	14	0.013	6	2,140	9500	2,750	12300	25,000
K 14x18x15 TN	0.551	14	0.709	18	0.591	15	0.011	5	2,140	9500	2,750	12300	25,000
K 14x18x17	0.551	14	0.709	18	0.669	17	0.018	8	2,430	10800	3,250	14400	25,000
K 14x20x12	0.551	14	0.787	20	0.472	12	0.019	8.5	2,320	10300	2,380	10600	24,000
C091108	0.563	14.288	0.688	17.463	0.500	12.700	0.010	4.7	1,630	7300	2,290	10200	25,000
C091110	0.563	14.288	0.688	17.463	0.625	15.875	0.013	5.9	2,190	9800	3,350	15000	25,000
K 15x18x17 TN	0.591	15	0.709	18	0.669	17	0.01	4.6	1,800	8000	2,700	12100	25,000

Needle Roller And Cage Assemblies

UNIT CAGE SERIES

- Inch and metric
- Single and double row

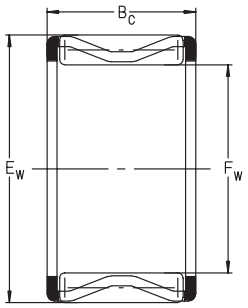

For details on part numbers, descriptive suffixes and various technical references, please refer to front of this section.
For engineering or technical information contact your local sales representative or call Distributor Sales (800)523-6572.

PART NUMBER	SHAFT F_W inch	SHAFT F_W mm	HSG. BORE E_W inch	HSG. BORE E_W mm	WIDTH B_C inch	WIDTH B_C mm	WGT. lbs	WGT. g	DYN. CAP. C lbf	DYN. CAP. C N	STAT. CAP. C_0 lbf	STAT. CAP. C_0 N	SPEED LIMIT rpm
K 15x19x10	0.591	15	0.748	19	0.394	10	0.011	5	1,690	7500	2,070	9200	24,000
K 15x19x13	0.591	15	0.748	19	0.512	13	0.015	7	1,910	8500	2,450	10900	24,000
K 15x19x17	0.591	15	0.748	19	0.669	17	0.021	9.5	2,550	11300	3,500	15600	24,000
K 15x20x13	0.591	15	0.787	20	0.512	13	0.015	7	2,230	9900	2,600	11500	24,000
K 15x21x15	0.591	15	0.827	21	0.591	15	0.024	11	3,200	14300	3,700	16400	24,000
K 15x21x21	0.591	15	0.827	21	0.827	21	0.037	17	4,350	19400	5,500	24300	24,000
C101208	0.625	15.875	0.750	19.050	0.500	12.700	0.011	5.2	1,840	8200	2,750	12300	24,000
K 16x20x10	0.630	16	0.787	20	0.394	10	0.012	5.5	1,750	7800	2,230	9900	24,000
K 16x20x13	0.630	16	0.787	20	0.512	13	0.017	7.5	2,000	8900	2,650	11800	24,000
K 16x20x17	0.630	16	0.787	20	0.669	17	0.022	10	2,650	11700	3,800	16800	24,000
K 16x22x12	0.630	16	0.866	22	0.472	12	0.022	10	2,600	11500	2,800	12500	23,000
K 16x22x13	0.630	16	0.866	22	0.512	13	0.026	12	2,800	12400	3,150	13900	23,000
K 16x22x16	0.630	16	0.866	22	0.630	16	0.026	12	3,350	14800	3,950	17500	23,000
K 16x22x20	0.630	16	0.866	22	0.787	20	0.037	17	4,100	18300	5,100	22800	23,000
K 16x24x20	0.630	16	0.945	24	0.787	20	0.049	22	4,800	21400	5,300	23500	22,000
K 17x21x10	0.669	17	0.827	21	0.394	10	0.012	5.5	1,820	8100	2,380	10600	23,000
K 17x21x13	0.669	17	0.827	21	0.512	13	0.014	6.5	2,340	10400	3,300	14600	23,000
K 17x21x17	0.669	17	0.827	21	0.669	17	0.021	9.5	2,750	12200	4,000	17900	23,000
K 18x22x10	0.709	18	0.866	22	0.394	10	0.013	6	1,890	8400	2,550	11300	22,000
K 18x22x13	0.709	18	0.866	22	0.512	13	0.018	8	2,070	9200	2,850	12700	22,000
K 18x22x17	0.709	18	0.866	22	0.669	17	0.024	11	2,700	12100	4,050	18000	22,000
K 18x24x12	0.709	18	0.945	24	0.472	12	0.026	12	2,650	11700	3,000	13300	22,000
K 18x24x13	0.709	18	0.945	24	0.512	13	0.029	13	2,950	13100	3,450	15300	22,000
K 18x24x20	0.709	18	0.945	24	0.787	20	0.04	18	4,550	20200	6,100	27000	22,000
K 18x25x14	0.709	18	0.984	25	0.551	14	0.033	15	3,800	16800	4,350	19300	22,000
K 18x25x22	0.709	18	0.984	25	0.866	22	0.051	23	5,200	23100	6,500	29000	22,000
K 18x28x16	0.709	18	1.102	28	0.630	16	0.053	24	4,400	19600	4,250	18900	21,000
K 19x23x13	0.748	19	0.906	23	0.512	13	0.018	8	2,140	9500	3,050	13500	22,000
K 19x23x17	0.748	19	0.906	23	0.669	17	0.024	11	2,800	12500	4,300	19200	22,000
C121616	0.750	19.050	1.000	25.400	1.000	25.400	0.058	26.4	5,600	25000	7,800	34500	21,000
K 20x24x10	0.787	20	0.945	24	0.394	10	0.014	6.5	2,000	8900	2,850	12600	21,000
K 20x24x12	0.787	20	0.945	24	0.472	12	0.018	8	2,200	9800	3,200	14300	21,000
K 20x24x13	0.787	20	0.945	24	0.512	13	0.02	9	2,200	9800	3,200	14300	21,000
K 20x24x17	0.787	20	0.945	24	0.669	17	0.026	12	2,900	12900	4,600	20400	21,000
K 20x26x12	0.787	20	1.024	26	0.472	12	0.024	11	3,000	13400	3,650	16200	21,000
K 20x26x13	0.787	20	1.024	26	0.512	13	0.026	12	3,250	14400	4,000	17900	21,000
K 20x26x17	0.787	20	1.024	26	0.669	17	0.035	16	4,300	19200	5,800	26000	21,000
K 20x26x20	0.787	20	1.024	26	0.787	20	0.042	19	4,750	21100	6,500	29000	21,000
K 20x28x16	0.787	20	1.102	28	0.630	16	0.044	20	4,450	19800	5,000	22400	20,000
K 20x28x20	0.787	20	1.102	28	0.787	20	0.06	27	5,400	23900	6,400	28500	20,000
K 20x28x25	0.787	20	1.102	28	0.984	25	0.071	32	6,900	30500	8,800	39000	20,000
K 20x30x30	0.787	20	1.181	30	1.181	30	0.108	49	8,000	35500	9,300	41500	20,000
C131608	0.813	20.638	1.000	25.400	0.500	12.700	0.023	10.2	2,800	12500	3,950	17600	21,000
C131714	0.813	20.638	1.063	26.988	0.875	22.230	0.054	24.7	5,100	22600	7,000	31000	21,000
K 21x25x13	0.827	21	0.984	25	0.512	13	0.02	9	2,270	10100	3,400	15100	21,000
K 21x25x17	0.827	21	0.984	25	0.669	17	0.022	10	3,000	13300	4,850	21500	21,000

Needle Roller And Cage Assemblies

UNIT CAGE SERIES

- Inch and metric
- Single and double row

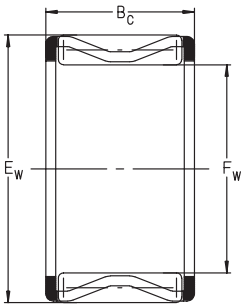

For details on part numbers, descriptive suffixes and various technical references, please refer to front of this section.
For engineering or technical information contact your local sales representative or call Distributor Sales (800)523-6572.

PART NUMBER	SHAFT F_w inch	SHAFT F_w mm	HSG. BORE E_w inch	HSG. BORE E_w mm	WIDTH B_c inch	WIDTH B_c mm	WGT. lbs	WGT. g	DYN. CAP. C lbf	DYN. CAP. C N	STAT. CAP. C_0 lbf	STAT. CAP. C_0 N	SPEED LIMIT rpm
K 22x26x10	0.866	22	1.024	26	0.394	10	0.017	7.5	2,050	9100	3,000	13400	20,000
K 22x26x13	0.866	22	1.024	26	0.512	13	0.021	9.5	2,340	10400	3,600	15900	20,000
K 22x26x17	0.866	22	1.024	26	0.669	17	0.026	12	3,100	13700	5,100	22700	20,000
K 22x28x17	0.866	22	1.102	28	0.669	17	0.04	18	4,350	19400	6,100	27000	20,000
K 22x29x16	0.866	22	1.142	29	0.630	16	0.035	16	4,500	20000	5,700	25500	19,000
K 22x30x15 TN	0.866	22	1.181	30	0.591	15	0.04	18	4,500	20100	5,300	23400	19,000
K 22x32x24	0.866	22	1.260	32	0.945	24	0.095	43	7,600	34000	9,000	40000	18,000
C141816	0.875	22.225	1.125	28.575	1.000	25.400	0.066	30.1	6,500	29000	9,800	43500	19,000
K 23x35x16 TN	0.906	23	1.378	35	0.630	16	0.064	29	5,500	24500	5,400	23900	17,000
K 24x28x10	0.945	24	1.102	28	0.394	10	0.019	8.5	2,160	9600	3,350	14800	19,000
K 24x28x13	0.945	24	1.102	28	0.512	13	0.022	10	2,470	11000	3,950	17600	19,000
K 24x28x17	0.945	24	1.102	28	0.669	17	0.029	13	3,250	14500	5,600	25000	19,000
K 24x29x13	0.945	24	1.142	29	0.512	13	0.031	14	3,050	13600	4,450	19700	18,000
K 24x30x17	0.945	24	1.181	30	0.669	17	0.042	19	4,400	19500	6,200	27500	18,000
K 24x30x31 ZW	0.945	24	1.181	30	1.221	31	0.071	32	6,200	27500	9,800	43500	18,000
K 25x29x10	0.984	25	1.142	29	0.394	10	0.019	8.5	2,230	9900	3,450	15400	18,000
K 25x29x13	0.984	25	1.142	29	0.512	13	0.024	11	2,550	11300	4,150	18400	18,000
K 25x29x17	0.984	25	1.142	29	0.669	17	0.031	14	3,350	14900	5,800	26000	18,000
K 25x30x13	0.984	25	1.181	30	0.512	13	0.024	11	3,300	14600	4,900	21800	18,000
K 25x30x17	0.984	25	1.181	30	0.669	17	0.035	16	4,200	18700	6,700	30000	18,000
K 25x30x20	0.984	25	1.181	30	0.787	20	0.04	18	4,900	21700	8,200	36500	18,000
K 25x30x26 ZW	0.984	25	1.181	30	1.024	26	0.042	19	4,800	21400	8,000	35500	18,000
K 25x31x17	0.984	25	1.221	31	0.669	17	0.042	19	4,400	19600	6,400	28500	18,000
K 25x31x21	0.984	25	1.221	31	0.827	21	0.044	20	5,600	24700	8,500	38000	18,000
K 25x32x16	0.984	25	1.260	32	0.630	16	0.046	21	4,700	21000	6,300	28000	17,000
K 25x33x20	0.984	25	1.299	33	0.787	20	0.073	33	6,400	28500	8,500	38000	17,000
K 25x33x24	0.984	25	1.299	33	0.945	24	0.086	39	7,600	34000	10,600	47000	17,000
K 25x35x30	0.984	25	1.378	35	1.181	30	0.143	65	10,600	47000	13,900	62000	16,000
C161908	1.000	25.400	1.188	30.162	0.500	12.700	0.027	12.4	3,050	13700	4,700	20900	18,000
C162112	1.000	25.400	1.313	33.338	0.750	19.050	0.072	32.6	6,400	28500	8,500	38000	17,000
C162116	1.000	25.400	1.313	33.338	1.000	25.400	0.096	43.5	8,200	36500	11,900	53000	17,000
K 26x30x10	1.024	26	1.181	30	0.394	10	0.015	7	2,270	10100	3,600	16100	18,000
K 26x30x13	1.024	26	1.181	30	0.512	13	0.024	11	2,600	11600	4,300	19200	18,000
K 26x30x17	1.024	26	1.181	30	0.669	17	0.033	15	3,400	15200	6,200	27500	18,000
K 26x30x22 ZW	1.024	26	1.181	30	0.866	22	0.026	12	3,550	15700	6,400	28500	18,000
K 28x33x13	1.102	28	1.299	33	0.512	13	0.029	13	3,450	15300	5,400	24200	16,000
K 28x33x17	1.102	28	1.299	33	0.669	17	0.037	17	4,450	19700	7,500	33500	16,000
K 28x33x27 TN	1.102	28	1.299	33	1.063	27	0.042	19	5,200	23300	9,200	41000	16,000
K 28x34x17	1.102	28	1.339	34	0.669	17	0.053	24	4,900	21800	7,500	33500	16,000
K 28x35x16	1.102	28	1.378	35	0.630	16	0.053	24	4,850	21500	6,600	29500	16,000
K 28x35x18	1.102	28	1.378	35	0.709	18	0.06	27	5,400	24000	7,600	34000	16,000
K 28x35x27	1.102	28	1.378	35	1.063	27	0.09	41	7,900	35000	12,400	55000	16,000
K 28x40x18	1.102	28	1.575	40	0.709	18	0.11	50	7,500	33500	8,300	37000	14,000
K 28x40x25	1.102	28	1.575	40	0.984	25	0.154	70	10,200	45500	12,400	55000	14,000
C182212	1.125	28.575	1.375	34.925	0.750	19.050	0.062	28.2	5,000	22200	7,400	33000	15,000
C182416	1.125	28.575	1.500	38.100	1.000	25.400	0.131	59.3	9,700	43000	13,400	60000	15,000

Needle Roller And Cage Assemblies

UNIT CAGE SERIES

- Inch and metric
- Single and double row

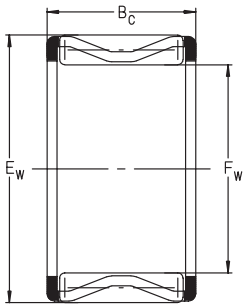

For details on part numbers, descriptive suffixes and various technical references, please refer to front of this section.
For engineering or technical information contact your local sales representative or call Distributor Sales (800)523-6572.

PART NUMBER	SHAFT F_W inch	SHAFT F_W mm	HSG. BORE E_W inch	HSG. BORE E_W mm	WIDTH B_C inch	WIDTH B_C mm	WGT. lbs	WGT. g	DYN. CAP. C lbf	DYN. CAP. C N	STAT. CAP. C_0 lbf	STAT. CAP. C_0 N	SPEED LIMIT rpm
C182420	1.125	28.575	1.500	38.100	1.250	31.750	0.163	74.1	11,700	52000	17,100	76000	15,000
K 30x34x13	1.181	30	1.339	34	0.512	13	0.031	14	2,750	12300	4,900	21700	15,000
K 30x35x13	1.181	30	1.378	35	0.512	13	0.031	14	3,500	15600	5,700	25500	15,000
K 30x35x17	1.181	30	1.378	35	0.669	17	0.042	19	4,400	19600	7,600	34000	15,000
K 30x35x26 ZW	1.181	30	1.378	35	1.024	26	0.079	36	5,400	24000	9,900	44000	15,000
K 30x35x27	1.181	30	1.378	35	1.063	27	0.066	30	6,900	30500	13,300	59000	15,000
K 30x37x16	1.181	30	1.457	37	0.630	16	0.06	27	5,200	23100	7,500	33500	15,000
K 30x37x18	1.181	30	1.457	37	0.709	18	0.066	30	5,800	26000	8,700	38500	15,000
K 30x40x18	1.181	30	1.575	40	0.709	18	0.106	48	7,200	32000	9,000	40000	14,000
K 30x40x30	1.181	30	1.575	40	1.181	30	0.161	73	11,000	49000	15,500	69000	15,000
C202412 (F88312)	1.250	31.750	1.500	38.100	0.750	19.050	0.068	31.1	5,800	26000	9,600	42500	15,000
C202612	1.250	31.750	1.625	41.275	0.750	19.050	0.107	48.7	7,800	34500	10,500	46500	13,000
C202616	1.250	31.750	1.625	41.275	1.000	25.400	0.143	64.9	10,100	45000	14,600	65000	13,000
C202624	1.250	31.750	1.625	41.275	1.500	38.100	0.215	97.4	14,400	64000	22,700	101000	13,000
C202812	1.250	31.750	1.750	44.450	0.750	19.050	0.149	67.8	10,200	45500	12,400	55000	13,000
K 32x37x13	1.260	32	1.457	37	0.512	13	0.04	18	3,500	15500	5,700	25500	14,000
K 32x37x17	1.260	32	1.457	37	0.669	17	0.042	19	4,450	19900	8,000	35500	14,000
K 32x37x27	1.260	32	1.457	37	1.063	27	0.066	30	6,700	30000	13,500	60000	14,000
K 32x37x28 TN	1.260	32	1.457	37	1.102	28	0.046	21	5,300	23600	9,800	43500	14,000
K 32x38x16	1.260	32	1.496	38	0.630	16	0.055	25	4,850	21500	7,800	34500	14,000
K 32x38x20	1.260	32	1.496	38	0.787	20	0.066	30	6,000	26500	10,100	45000	14,000
K 32x38x26	1.260	32	1.496	38	1.024	26	0.084	38	7,500	33500	13,700	61000	14,000
K 32x39x16	1.260	32	1.535	39	0.630	16	0.082	37	5,400	23800	8,000	35500	14,000
K 32x39x18	1.260	32	1.535	39	0.709	18	0.068	31	6,000	26500	9,200	41000	14,000
K 32x40x25	1.260	32	1.575	40	0.984	25	0.108	49	8,400	37500	13,000	58000	14,000
K 32x40x36	1.260	32	1.575	40	1.417	36	0.161	73	12,100	54000	20,700	92000	14,000
K 32x40x42 ZW TN	1.260	32	1.575	40	1.654	42	0.17	77	11,200	50000	18,900	84000	14,000
K 32x46x32	1.260	32	1.811	46	1.260	32	0.262	119	14,800	66000	18,700	83000	13,000
C222820	1.375	34.925	1.750	44.450	1.250	31.750	0.195	88.2	12,600	56000	19,800	88000	12,000
K 35x40x13	1.378	35	1.575	40	0.512	13	0.042	19	3,650	16200	6,300	28000	13,000
K 35x40x17	1.378	35	1.575	40	0.669	17	0.046	21	4,700	20800	8,700	38500	13,000
K 35x40x25	1.378	35	1.575	40	0.984	25	0.068	31	6,600	29500	13,500	60000	13,000
K 35x40x27 TN	1.378	35	1.575	40	1.063	27	0.086	39	5,600	25000	10,900	48500	13,000
K 35x40x30 ZW	1.378	35	1.575	40	1.181	30	0.106	48	5,700	25500	11,200	50000	13,000
K 35x40x32 ZW	1.378	35	1.575	40	1.260	32	0.11	50	7,200	32000	14,800	66000	13,000
K 35x42x16	1.378	35	1.654	42	0.630	16	0.075	34	5,500	24400	8,400	37500	13,000
K 35x42x18	1.378	35	1.654	42	0.709	18	0.075	34	6,200	27500	9,700	43000	13,000
K 35x42x20	1.378	35	1.654	42	0.787	20	0.082	37	6,700	30000	11,000	49000	13,000
K 35x42x30	1.378	35	1.654	42	1.181	30	0.148	67	8,800	39000	15,300	68000	13,000
K 35x43x18	1.378	35	1.693	43	0.709	18	0.084	38	6,400	28500	9,400	42000	13,000
K 35x45x20	1.378	35	1.772	45	0.787	20	0.123	56	8,300	37000	11,200	50000	12,000
K 35x45x30	1.378	35	1.772	45	1.181	30	0.176	80	11,900	53000	17,800	79000	12,000
K 35x45x49	1.378	35	1.772	45	1.929	49	0.304	138	18,400	82000	31,500	139000	12,000
K 36x42x16	1.417	36	1.654	42	0.630	16	0.064	29	5,500	24600	9,600	42500	13,000
K 37x42x17	1.457	37	1.654	42	0.669	17	0.049	22	5,000	22400	9,700	43000	12,000
K 37x42x27	1.457	37	1.654	42	1.063	27	0.09	41	7,200	32000	15,300	68000	12,000

Needle Roller And Cage Assemblies

UNIT CAGE SERIES

- Inch and metric
- Single and double row

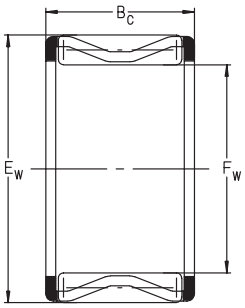

For details on part numbers, descriptive suffixes and various technical references, please refer to front of this section.
For engineering or technical information contact your local sales representative or call Distributor Sales (800)523-6572.

PART NUMBER	SHAFT F_w inch	SHAFT F_w mm	HSG. BORE E_w inch	HSG. BORE E_w mm	WIDTH B_c inch	WIDTH B_c mm	WGT. lbs	WGT. g	DYN. CAP. C lbf	DYN. CAP. C N	STAT. CAP. C_0 lbf	STAT. CAP. C_0 N	SPEED LIMIT rpm
K 37x45x26	1.457	37	1.772	45	1.024	26	0.135	61	9,900	44000	16,600	74000	12,000
K 38x43x17	1.496	38	1.693	43	0.669	17	0.064	29	4,600	20500	8,700	38500	12,000
K 38x43x27	1.496	38	1.693	43	1.063	27	0.095	43	7,100	31500	15,300	68000	12,000
K 38x46x20	1.496	38	1.811	46	0.787	20	0.104	47	8,000	35500	12,800	57000	12,000
K 38x46x32	1.496	38	1.811	46	1.260	32	0.168	76	12,400	55000	22,300	99000	12,000
C243016	1.500	38.100	1.875	47.625	1.000	25.400	0.168	76.2	10,800	48000	16,700	74000	11,000
C243020	1.500	38.100	1.875	47.625	1.250	31.750	0.210	95.3	13,000	58000	21,300	95000	11,000
C243024	1.500	38.100	1.875	47.625	1.500	38.100	0.252	114.3	15,300	68000	26,000	116000	11,000
K 39x44x24	1.535	39	1.732	44	0.945	24	0.066	30	6,400	28500	13,300	59000	12,000
K 39x44x26 ZW	1.535	39	1.732	44	1.024	26	0.099	45	6,200	27500	12,600	56000	12,000
K 40x44x13	1.575	40	1.732	44	0.512	13	0.04	18	3,150	14000	6,400	28500	12,000
K 40x45x13	1.575	40	1.772	45	0.512	13	0.049	22	3,950	17600	7,300	32500	12,000
K 40x45x17	1.575	40	1.772	45	0.669	17	0.068	31	4,800	21400	9,300	41500	12,000
K 40x45x21	1.575	40	1.772	45	0.827	21	0.073	33	5,600	24900	11,200	50000	12,000
K 40x45x27	1.575	40	1.772	45	1.063	27	0.101	46	7,400	33000	16,400	73000	12,000
K 40x45x30 ZW	1.575	40	1.772	45	1.181	30	0.128	58	6,000	26500	12,100	54000	12,000
K 40x46x17	1.575	40	1.811	46	0.669	17	0.062	28	5,600	25000	10,100	45000	11,000
K 40x47x18	1.575	40	1.850	47	0.709	18	0.086	39	6,600	29500	11,200	50000	11,000
K 40x47x20	1.575	40	1.850	47	0.787	20	0.093	42	7,300	32500	12,800	57000	11,000
K 40x48x20	1.575	40	1.890	48	0.787	20	0.108	49	8,100	36000	13,300	59000	11,000
K 42x47x13	1.654	42	1.850	47	0.512	13	0.04	18	4,000	17800	7,500	33500	11,000
K 42x47x17	1.654	42	1.850	47	0.669	17	0.071	32	4,900	21700	9,700	43000	11,000
K 42x47x25 TN	1.654	42	1.850	47	0.984	25	0.057	26	6,200	27500	13,000	58000	11,000
K 42x47x27	1.654	42	1.850	47	1.063	27	0.108	49	7,500	33500	16,900	75000	11,000
K 42x47x30 ZW	1.654	42	1.850	47	1.181	30	0.119	54	7,500	33500	17,100	76000	11,000
K 42x50x18	1.654	42	1.969	50	0.709	18	0.117	53	7,100	31500	11,200	50000	11,000
K 42x50x20	1.654	42	1.969	50	0.787	20	0.117	53	7,900	35000	12,800	57000	11,000
K 43x48x17	1.693	43	1.890	48	0.669	17	0.066	30	4,850	21600	9,700	43000	11,000
K 43x48x27	1.693	43	1.890	48	1.063	27	0.11	50	7,500	33500	16,900	75000	11,000
K 43x50x18	1.693	43	1.969	50	0.709	18	0.09	41	7,000	31000	12,100	54000	11,000
C283412	1.750	44.450	2.125	53.975	0.750	19.050	0.145	65.6	9,100	40500	13,900	62000	10,000
C283416	1.750	44.450	2.125	53.975	1.000	25.400	0.193	87.5	11,900	53000	19,800	88000	10,000
C283424	1.750	44.450	2.125	53.975	1.500	38.100	0.289	131.3	16,900	75000	31,000	138000	10,000
K 45x49x19	1.772	45	1.929	49	0.748	19	0.06	27	4,050	18000	9,100	40500	10,000
K 45x50x17	1.772	45	1.969	50	0.669	17	0.075	34	5,100	22500	10,300	46000	10,000
K 45x50x27	1.772	45	1.969	50	1.063	27	0.112	51	7,800	34500	18,000	80000	10,000
K 45x50x32 TN	1.772	45	1.969	50	1.260	32	0.099	45	8,700	38500	20,500	91000	10,000
K 45x51x36 ZW	1.772	45	2.008	51	1.417	36	0.187	85	10,100	45000	22,300	99000	10,000
K 45x52x18	1.772	45	2.047	52	0.709	18	0.093	42	7,100	31500	12,800	57000	10,000
K 45x52x21 TN	1.772	45	2.047	52	0.827	21	0.075	34	6,700	30000	11,700	52000	10,000
K 45x53x20	1.772	45	2.087	53	0.787	20	0.121	55	8,800	39000	15,100	67000	10,000
K 45x53x21	1.772	45	2.087	53	0.827	21	0.132	60	8,700	38500	15,100	67000	10,000
K 45x53x22	1.772	45	2.087	53	0.866	22	0.132	60	9,600	42500	17,100	76000	10,000
K 45x53x28	1.772	45	2.087	53	1.102	28	0.179	81	11,700	52000	22,000	98000	10,000
K 45x59x18 TN	1.772	45	2.323	59	0.709	18	0.159	72	9,900	44000	12,100	54000	9,500
K 45x59x32	1.772	45	2.323	59	1.260	32	0.326	148	16,400	73000	22,900	102000	9,500

Needle Roller And Cage Assemblies

UNIT CAGE SERIES

- Inch and metric
- Single and double row

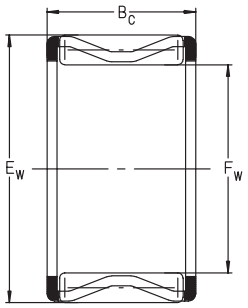

For details on part numbers, descriptive suffixes and various technical references, please refer to front of this section.
For engineering or technical information contact your local sales representative or call Distributor Sales (800)523-6572.

PART NUMBER	SHAFT F_W inch	SHAFT F_W mm	HSG. BORE E_W inch	HSG. BORE E_W mm	WIDTH B_C inch	WIDTH B_C mm	WGT. lbs	WGT. g	DYN. CAP. C lbf	DYN. CAP. C N	STAT. CAP. C_0 lbf	STAT. CAP. C_0 N	SPEED LIMIT rpm
K 45x59x36	1.772	45	2.323	59	1.417	36	0.351	159	17,100	76000	24,500	109000	9,500
K 47x52x17	1.850	47	2.047	52	0.669	17	0.077	35	5,200	23300	11,000	49000	10,000
K 47x52x27	1.850	47	2.047	52	1.063	27	0.112	51	7,900	35000	18,700	83000	10,000
K 47x53x25	1.850	47	2.087	53	0.984	25	0.112	51	8,700	38500	18,400	82000	10,000
K 47x55x28	1.850	47	2.165	55	1.102	28	0.176	80	11,900	53000	22,700	101000	9,500
K 48x54x19	1.890	48	2.126	54	0.748	19	0.101	46	6,900	30500	13,700	61000	9,500
K 50x55x13.5	1.969	50	2.165	55	0.532	13.5	0.066	30	4,100	18200	8,200	36500	9,500
K 50x55x17	1.969	50	2.165	55	0.669	17	0.077	35	4,950	22100	10,600	47000	9,500
K 50x55x20	1.969	50	2.165	55	0.787	20	0.095	43	6,000	26500	13,500	60000	9,500
K 50x55x30	1.969	50	2.165	55	1.181	30	0.143	65	8,800	39000	21,800	97000	9,500
K 50x57x18	1.969	50	2.244	57	0.709	18	0.104	47	7,500	33500	14,200	63000	9,000
K 50x58x20	1.969	50	2.284	58	0.787	20	0.165	75	8,000	35500	13,900	62000	9,000
K 50x58x25	1.969	50	2.284	58	0.984	25	0.198	90	9,900	44000	18,200	81000	9,000
K 52x57x12	2.047	52	2.244	57	0.472	12	0.053	24	4,050	18000	8,200	36500	9,000
K 55x60x20	2.165	55	2.362	60	0.787	20	0.088	40	6,400	28500	14,800	66000	8,500
K 55x60x27	2.165	55	2.362	60	1.063	27	0.132	60	8,500	38000	21,800	97000	8,500
K 55x60x30	2.165	55	2.362	60	1.181	30	0.157	71	9,200	41000	24,300	108000	8,500
K 55x60x40 ZW	2.165	55	2.362	60	1.575	40	0.218	99	10,900	48500	30,000	133000	8,500
K 55x62x18	2.165	55	2.441	62	0.709	18	0.115	52	8,000	35500	15,700	70000	8,500
K 55x63x15	2.165	55	2.480	63	0.591	15	0.117	53	5,600	25000	9,200	41000	8,500
K 55x63x20	2.165	55	2.480	63	0.787	20	0.148	67	9,000	40000	16,600	74000	8,500
K 55x63x25	2.165	55	2.480	63	0.984	25	0.176	80	11,200	50000	22,500	100000	8,500
K 55x63x32	2.165	55	2.480	63	1.260	32	0.225	102	13,900	62000	29,000	130000	8,500
K 56x61x20	2.205	56	2.402	61	0.787	20	0.099	45	6,200	27500	14,600	65000	8,500
C364216	2.250	57.150	2.625	66.675	1.000	25.400	0.243	110.1	13,500	60000	25,000	112000	7,900
C364220	2.250	57.150	2.625	66.675	1.250	31.750	0.304	137.6	14,400	64000	27,500	122000	7,900
C364224	2.250	57.150	2.625	66.675	1.500	38.100	0.364	165.2	17,500	78000	35,500	157000	7,900
K 58x63x17	2.284	58	2.480	63	0.669	17	0.095	43	6,100	27000	14,400	64000	8,000
K 58x64x19	2.284	58	2.520	64	0.748	19	0.101	46	7,900	35000	17,500	78000	8,000
K 58x65x18	2.284	58	2.559	65	0.709	18	0.115	52	7,900	35000	15,700	70000	8,000
K 58x65x36 ZW	2.284	58	2.559	65	1.417	36	0.28	127	11,000	49000	24,100	107000	8,000
K 60x65x20	2.362	60	2.559	65	0.787	20	0.115	52	6,600	29500	16,200	72000	8,000
K 60x65x30	2.362	60	2.559	65	1.181	30	0.17	77	9,600	42500	26,000	116000	8,000
K 60x66x33 ZW	2.362	60	2.598	66	1.299	33	0.229	104	10,300	46000	25,000	112000	8,000
K 60x66x40 ZW	2.362	60	2.598	66	1.575	40	0.256	116	13,000	58000	34,000	151000	8,000
K 60x68x20	2.362	60	2.677	68	0.787	20	0.157	71	9,800	43500	19,100	85000	7,500
K 60x68x23	2.362	60	2.677	68	0.906	23	0.207	94	11,100	49500	22,700	101000	7,500
K 60x68x25	2.362	60	2.677	68	0.984	25	0.196	89	11,900	53000	25,000	111000	7,500
K 60x68x27	2.362	60	2.677	68	1.063	27	0.251	114	11,100	49500	22,500	100000	7,500
K 60x68x30 ZW	2.362	60	2.677	68	1.181	30	0.284	129	10,000	44500	19,800	88000	7,500
K 60x68x34 ZW	2.362	60	2.677	68	1.339	34	0.309	140	10,800	48000	21,600	96000	7,500
K 60x75x42	2.362	60	2.953	75	1.654	42	0.529	240	26,500	118000	44,500	197000	7,500
K 62x70x40 ZW	2.441	62	2.756	70	1.575	40	0.384	174	14,800	66000	33,000	146000	7,500
K 63x70x21	2.480	63	2.756	70	0.827	21	0.146	66	10,200	45500	22,700	101000	7,500
C404616	2.500	63.500	2.875	73.025	1.000	25.400	0.268	121.4	14,000	62000	27,000	121000	7,200
C404620	2.500	63.500	2.875	73.025	1.250	31.750	0.335	151.8	16,600	74000	34,000	151000	7,200

Needle Roller And Cage Assemblies

UNIT CAGE SERIES

- Inch and metric
- Single and double row

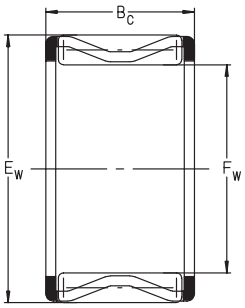

For details on part numbers, descriptive suffixes and various technical references, please refer to front of this section.
For engineering or technical information contact your local sales representative or call Distributor Sales (800)523-6572.

PART NUMBER	SHAFT F_w inch	SHAFT F_w mm	HSG. BORE E_w inch	HSG. BORE E_w mm	WIDTH B_c inch	WIDTH B_c mm	WGT. lbs	WGT. g	DYN. CAP. C lbf	DYN. CAP. C N	STAT. CAP. C_0 lbf	STAT. CAP. C_0 N	SPEED LIMIT rpm
C404624	2.500	63.500	2.875	73.025	1.500	38.100	0.402	182.1	19,600	87000	42,000	186000	7,200
K 64x70x16	2.520	64	2.756	70	0.630	16	0.117	53	6,300	28000	13,500	60000	7,500
K 65x70x20	2.559	65	2.756	70	0.787	20	0.123	56	6,900	30500	17,300	77000	7,500
K 65x70x30	2.559	65	2.756	70	1.181	30	0.183	83	9,900	44000	28,000	124000	7,500
K 65x73x23	2.559	65	2.874	73	0.906	23	0.238	108	10,300	46000	21,100	94000	7,000
K 65x73x30	2.559	65	2.874	73	1.181	30	0.311	141	12,800	57000	27,500	123000	7,000
K 68x74x20	2.677	68	2.913	74	0.787	20	0.157	71	8,000	35500	18,900	84000	7,000
K 68x74x30	2.677	68	2.913	74	1.181	30	0.221	100	10,500	46500	26,500	118000	7,000
K 68x74x35 ZW	2.677	68	2.913	74	1.378	35	0.265	120	10,900	48500	28,000	125000	7,000
K 68x75x32 ZW	2.677	68	2.953	75	1.260	32	0.291	132	12,100	54000	29,000	128000	7,000
K 70x76x20	2.756	70	2.992	76	0.787	20	0.157	71	8,100	36000	19,300	86000	6,500
K 70x76x30	2.756	70	2.992	76	1.181	30	0.243	110	11,700	52000	31,500	139000	6,500
K 70x78x25	2.756	70	3.071	78	0.984	25	0.273	124	11,700	52000	25,000	112000	6,500
K 70x78x30	2.756	70	3.071	78	1.181	30	0.326	148	13,500	60000	30,500	135000	6,500
K 70x78x46 ZW	2.756	70	3.071	78	1.811	46	0.496	225	17,500	78000	42,500	189000	6,500
K 70x80x30	2.756	70	3.150	80	1.181	30	0.331	150	16,400	73000	33,500	148000	6,500
K 72x80x20	2.835	72	3.150	80	0.787	20	0.216	98	9,300	41500	19,100	85000	6,500
K 73x79x20	2.874	73	3.110	79	0.787	20	0.165	75	8,300	37000	20,200	90000	6,500
K 75x81x20	2.953	75	3.189	81	0.787	20	0.174	79	8,400	37500	21,100	94000	6,500
K 75x81x30	2.953	75	3.189	81	1.181	30	0.251	114	11,700	52000	32,000	143000	6,500
K 75x83x23	2.953	75	3.268	83	0.906	23	0.273	124	11,200	50000	24,500	109000	6,000
K 75x83x30	2.953	75	3.268	83	1.181	30	0.324	147	13,900	62000	32,000	143000	6,000
K 75x83x35 ZW	2.953	75	3.268	83	1.378	35	0.401	182	14,200	63000	33,000	147000	6,000
K 75x83x40 ZW	2.953	75	3.268	83	1.575	40	0.465	211	16,400	73000	40,000	177000	6,000
C485416	3.000	76.200	3.375	85.725	1.000	25.400	0.318	144.0	14,800	66000	31,500	140000	6,100
C485424	3.000	76.200	3.375	85.726	1.500	38.100	0.476	216.0	21,100	94000	49,000	219000	6,100
K 80x86x20	3.150	80	3.386	86	0.787	20	0.132	60	8,700	38500	22,000	98000	6,000
K 80x86x30	3.150	80	3.386	86	1.181	30	0.174	79	12,600	56000	35,500	159000	6,000
K 80x88x30	3.150	80	3.465	88	1.181	30	0.304	138	16,200	72000	40,000	179000	6,000
K 80x88x40 ZW	3.150	80	3.465	88	1.575	40	0.501	227	17,100	76000	43,000	192000	6,000
K 80x88x46 ZW	3.150	80	3.465	88	1.811	46	0.573	260	19,800	88000	52,000	231000	6,000
K 85x92x20	3.347	85	3.622	92	0.787	20	0.225	102	10,000	44500	24,300	108000	5,500
K 90x97x20	3.543	90	3.819	97	0.787	20	0.24	109	10,100	45000	25,500	113000	5,000
K 90x98x27	3.543	90	3.858	98	1.063	27	0.331	150	13,700	61000	33,500	150000	5,000
K 90x98x30	3.543	90	3.858	98	1.181	30	0.379	172	15,300	68000	38,500	172000	5,000
K 95x103x30	3.740	95	4.055	103	1.181	30	0.364	165	15,500	69000	40,500	180000	4,900
K 95x103x40 ZW	3.740	95	4.055	103	1.575	40	0.587	266	18,700	83000	51,000	228000	4,900
K 100x107x21	3.937	100	4.213	107	0.827	21	0.265	120	10,800	48000	28,500	127000	4,700
K 100x108x27	3.937	100	4.252	108	1.063	27	0.408	185	12,800	57000	32,000	143000	4,700
K 100x108x30	3.937	100	4.252	108	1.181	30	0.397	180	16,000	71000	42,500	188000	4,700
C647224	4.000	101.600	4.500	114.300	1.500	38.100	0.847	384.0	27,500	122000	62,000	275000	4,500
K 105x112x21	4.134	105	4.409	112	0.827	21	0.284	129	10,700	47500	28,500	127000	4,500
K 105x113x30	4.134	105	4.449	113	1.181	30	0.476	216	16,200	72000	44,500	197000	4,500
K 110x117x24	4.331	110	4.606	117	0.945	24	0.379	172	12,600	56000	35,500	158000	4,300
K 110x118x30	4.331	110	4.646	118	1.181	30	0.478	217	17,500	78000	49,000	219000	4,300
K 115x123x27	4.528	115	4.843	123	1.063	27	0.441	200	14,200	63000	38,000	170000	4,100

Needle Roller And Cage Assemblies

UNIT CAGE SERIES

- Inch and metric
- Single and double row

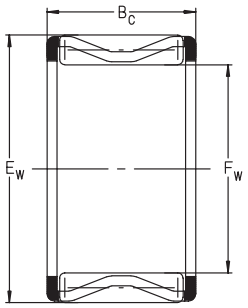

For details on part numbers, descriptive suffixes and various technical references, please refer to front of this section.
For engineering or technical information contact your local sales representative or call Distributor Sales (800)523-6572.

PART NUMBER	SHAFT F_w inch	SHAFT F_w mm	HSG. BORE E_w inch	HSG. BORE E_w mm	WIDTH B_c inch	WIDTH B_c mm	WGT. lbs	WGT. g	DYN. CAP. C lbf	DYN. CAP. C N	STAT. CAP. C_0 lbf	STAT. CAP. C_0 N	SPEED LIMIT rpm
K 120x127x24	4.724	120	5.000	127	0.945	24	0.364	165	13,300	59000	39,000	174000	4,000
K 120x127x34	4.724	120	5.000	127	1.339	34	0.49	222	18,200	81000	58,000	260000	4,000
K 125x133x35	4.921	125	5.236	133	1.378	35	0.606	275	19,300	86000	58,000	260000	3,800
K 130x137x24	5.118	130	5.394	137	0.945	24	0.375	170	13,700	61000	42,000	186000	3,700
K 135x143x35	5.315	135	5.630	143	1.378	35	0.662	300	20,500	91000	65,000	290000	3,500
K 145x153x26	5.709	145	6.024	153	1.024	26	0.578	262	16,600	74000	51,000	225000	3,300
K 145x153x36	5.709	145	6.024	153	1.417	36	0.662	300	22,000	98000	73,000	325000	3,300
K 150x160x46	5.906	150	6.299	160	1.811	46	1.257	570	33,000	147000	106,000	470000	3,200
K 155x163x26	6.102	155	6.417	163	1.024	26	0.584	265	16,900	75000	53,000	236000	3,100
K 155x163x36	6.102	155	6.417	163	1.417	36	0.785	356	22,500	100000	76,000	340000	3,100
K 160x170x46	6.299	160	6.693	170	1.811	46	1.213	550	34,000	152000	115,000	510000	3,000
K 165x173x26	6.496	165	6.811	173	1.024	26	0.706	320	18,200	81000	60,000	265000	2,900
K 170x180x46	6.693	170	7.087	180	1.811	46	1.323	600	35,500	158000	121,000	540000	2,800
K 175x183x32	6.890	175	7.205	183	1.260	32	0.882	400	22,300	99000	79,000	350000	2,700
K 185x195x37	7.284	185	7.677	195	1.457	37	1.338	607	29,000	128000	96,000	425000	2,600
K 195x205x37	7.677	195	8.071	205	1.457	37	1.367	620	30,000	133000	101,000	450000	2,500
K 210x220x42	8.268	210	8.661	220	1.654	42	1.632	740	34,500	154000	126,000	560000	2,300
K 220x230x42	8.661	220	9.055	230	1.654	42	1.742	790	35,500	158000	133,000	590000	2,200
K 240x250x42	9.449	240	9.843	250	1.654	42	1.874	850	37,000	164000	142,000	630000	2,000
K 265x280x50	10.433	265	11.024	280	1.969	50	3.991	1810	57,000	255000	193,000	860000	1,800

Conrod Bearings
KBK SERIES

- Needle roller and cage assemblies
- Wristpin bearing positions

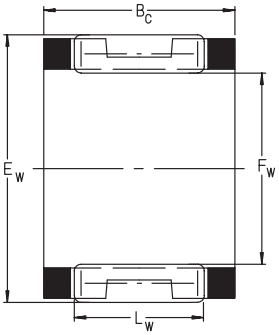

For details on part numbers, descriptive suffixes and various technical references, please refer to front of this section.
For engineering or technical information contact your local sales representative or call Distributor Sales (800)523-6572.

PART NUMBER	SHAFT F_W inch	SHAFT F_W mm	HSG. BORE E_W inch	HSG. BORE E_W mm	WIDTH B_C inch	WIDTH B_C mm	WEIGHT lbs	WEIGHT g	DYN. CAP. lbf	DYN. CAP. N	STAT. CAP. lbf	STAT. CAP. N	ROLLER LENGTH inch	ROLLER LENGTH mm
KBK 9x13x12.5	0.354	9	0.512	13	0.492	12.5	0.011	5	1350	6000	1370	6100	0.386	9.8
KBK 10x13x14.5	0.394	10	0.512	13	0.571	14.5	0.01	4.7	1210	5400	1480	6600	0.425	10.8
KBK 10x14x13	0.394	10	0.551	14	0.512	13	0.013	6	1350	6000	1390	6200	0.386	9.8
KBK 12x15x13	0.472	12	0.591	15	0.512	13	0.01	4.7	1330	5900	1730	7700	0.386	9.8
KBK 12x15x15	0.472	12	0.591	15	0.591	15	0.012	5.5	1350	6000	1780	7900	0.425	10.8
KBK 12x15x17.5	0.472	12	0.591	15	0.689	17.5	0.014	6.5	1750	7800	2470	11000	0.543	13.8
KBK 12x16x13	0.472	12	0.630	16	0.512	13	0.015	7	1550	6900	1750	7800	0.386	9.8
KBK 12x16x16	0.472	12	0.630	16	0.630	16	0.019	8.5	1800	8000	2140	9500	0.465	11.8
KBK 13x17x17.5	0.512	13	0.669	17	0.689	17.5	0.022	10	2180	9700	2770	12300	0.543	13.8
KBK 14x18x13	0.551	14	0.709	18	0.512	13	0.018	8	1640	7300	1960	8700	0.386	9.8
KBK 14x18x14.5	0.551	14	0.709	18	0.571	14.5	0.018	8	1640	7300	1960	8700	0.386	9.8
KBK 14x18x17	0.551	14	0.709	18	0.669	17	0.024	11	2160	9600	2790	12400	0.504	12.8
KBK 14x18x21	0.551	14	0.709	18	0.827	21	0.024	11	2810	12500	3910	17400	0.701	17.8
KBK 15x19x20	0.591	15	0.748	19	0.787	20	0.029	13	2540	11300	3480	15500	0.622	15.8
KBK 16x20x20	0.630	16	0.787	20	0.787	20	0.031	14	2650	11800	3800	16900	0.622	15.8
KBK 18x22x22	0.709	18	0.866	22	0.866	22	0.037	17	3040	13500	4650	20700	0.622	15.8
KBK 18x22x24	0.709	18	0.866	22	0.945	24	0.04	18	3170	14100	4950	22000	0.701	17.8
KBK 18x22x25	0.709	18	0.866	22	0.984	25	0.044	20	3130	13900	4830	21500	0.78	19.8
KBK 20x24x30	0.787	20	0.945	24	1.181	30	0.051	23	3570	15900	5960	26500	0.78	19.8
KBK 20x25x22	0.787	20	0.984	25	0.866	22	0.044	20	3640	16200	5240	23300	0.642	16.3

Conrod Bearings

KZK SERIES

- Needle roller and cage assemblies
- Crankpin bearing positions

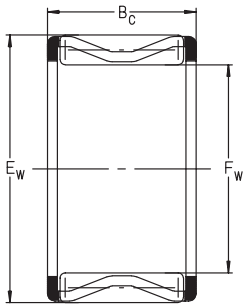

For details on part numbers, descriptive suffixes and various technical references, please refer to front of this section.
For engineering or technical information contact your local sales representative or call Distributor Sales (800)523-6572.

PART NUMBER	SHAFT F_W inch	SHAFT F_W mm	HSG. BORE E_W inch	HSG. BORE E_W mm	WIDTH B_C inch	WIDTH B_C mm	WEIGHT lbs	WEIGHT g	DYN. CAP. lbf	DYN. CAP. N	STAT. CAP. lbf	STAT. CAP. N
KZK 12x16x10	0.472	12	0.630	16	0.394	10	0.008	3.5	1440	6400	1620	7200
KZK 12x17x10	0.472	12	0.669	17	0.394	10	0.011	5	1660	7400	1660	7400
KZK 14x18x10	0.551	14	0.709	18	0.394	10	0.009	4	1600	7100	1910	8500
KZK 14.4x20.4x10	0.567	14.4	0.803	20.4	0.394	10	0.014	6.5	1820	8100	1750	7800
KZK 16x21x10	0.630	16	0.827	21	0.394	10	0.013	6	1840	8200	2070	9200
KZK 16x22x12	0.630	16	0.866	22	0.472	12	0.021	9.5	2470	11000	2680	11900
KZK 18x24x12	0.709	18	0.945	24	0.472	12	0.022	10	2610	11600	2950	13100
KZK 18x24x15	0.709	18	0.945	24	0.591	15	0.031	14	2970	13200	3480	15500
KZK 20x26x12	0.787	20	1.024	26	0.472	12	0.024	11	2740	12200	3210	14300
KZK 20x26x17	0.787	20	1.024	26	0.669	17	0.033	15	3440	15300	4290	19100
KZK 22x28x13	0.866	22	1.102	28	0.512	13	0.033	15	3130	13900	3930	17500
KZK 22x28x16	0.866	22	1.102	28	0.630	16	0.04	18	3510	15600	4540	20200
KZK 22x29x16	0.866	22	1.142	29	0.630	16	0.046	21	4000	17800	4900	21800
KZK 25x32x16	0.984	25	1.260	32	0.630	16	0.053	24	4090	18200	5190	23100
KZK 30x37x16	1.181	30	1.457	37	0.630	16	0.064	29	4800	21500	6900	30500
KZK 35x42x20	1.378	35	1.654	42	0.787	20	0.093	42	5800	26000	9100	40500
KZK 40x48x20	1.575	40	1.890	48	0.787	20	0.121	55	7300	32500	11500	51000

Precision Needle Bearings

NAO SERIES

- With inner rings
- Metric series
- Without ribs
- Ground raceways

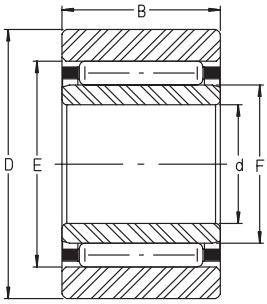

For details on part numbers, descriptive suffixes and various technical references, please refer to front of this section.
For engineering or technical information contact your local sales representative or call Distributor Sales (800)523-6572.

PART NUMBER	SHAFT d inch	SHAFT d mm	OD D inch	OD D mm	WIDTH B inch	WIDTH B mm	WGT. lbs	WGT. g	DYN. CAP. C lbf	DYN. CAP. C N	STAT. CAP. C_0 lbf	STAT. CAP. C_0 N	F mm	E mm	AXIAL PLAY inch	AXIAL PLAY mm	SPEED LIMIT OIL rpm
NAO 6x17x10 TN	0.236	6	0.669	17	0.394	10	0.031	14	1,070	4750	1,240	5500	10	13	0.020	0.5	29000
NAO 9x22x12 TN	0.354	9	0.866	22	0.472	12	0.052	23.5	2,250	10000	2,230	9900	12	18	0.020	0.5	25000
NAO 12x24x13	0.472	12	0.945	24	0.512	13	0.066	30	2,000	8900	2,650	11800	16	20	0.020	0.5	24000
NAO 12x24x20	0.472	12	0.945	24	0.787	20	0.097	44	3,000	13300	4,450	19800	16	20	0.020	0.5	24000
NAO 12x28x12	0.472	12	1.102	28	0.472	12	0.088	40	2,600	11500	2,800	12500	16	22	0.020	0.5	22000
NAO 15x28x13	0.591	15	1.102	28	0.512	13	0.064	29	2,200	9800	3,200	14300	20	24	0.020	0.5	22000
NAO 15x32x12	0.591	15	1.260	32	0.472	12	0.11	50	3,000	13400	3,650	16200	20	26	0.020	0.5	21000
NAO 17x30x13	0.669	17	1.181	30	0.512	13	0.093	42	2,340	10400	3,600	15900	22	26	0.020	0.5	21000
NAO 17x35x16	0.669	17	1.378	35	0.630	16	0.172	78	4,500	20000	5,700	25500	22	29	0.020	0.5	19000
NAO 20x35x17	0.787	20	1.378	35	0.669	17	0.168	76	3,350	14900	5,800	26000	25	29	0.020	0.5	18000
NAO 20x37x16	0.787	20	1.457	37	0.630	16	0.181	82	4,700	21000	6,300	28000	25	32	0.020	0.5	17000
NAO 25x40x17	0.984	25	1.575	40	0.669	17	0.194	88	4,400	19600	7,600	34000	30	35	0.032	0.8	15000
NAO 25x42x16	0.984	25	1.654	42	0.630	16	0.19	86	5,200	23100	7,500	33500	30	37	0.032	0.8	15000
NAO 25x42x32	0.984	25	1.654	42	1.260	32	0.419	190	8,900	39500	15,100	67000	30	37	0.032	0.8	15000
NAO 30x45x13	1.181	30	1.772	45	0.512	13	0.17	77	3,650	16200	6,300	28000	35	40	0.032	0.8	13000
NAO 30x45x17	1.181	30	1.772	45	0.669	17	0.225	102	4,700	20800	8,700	38500	35	40	0.032	0.8	13000
NAO 30x45x26	1.181	30	1.772	45	1.024	26	0.346	157	6,200	27500	12,600	56000	35	40	0.032	0.8	13000
NAO 30x47x16	1.181	30	1.850	47	0.630	16	0.24	109	5,500	24400	8,400	37500	35	42	0.032	0.8	13000
NAO 30x47x18	1.181	30	1.850	47	0.709	18	0.262	119	6,200	27500	9,700	43000	35	42	0.032	0.8	13000
NAO 30x52x18	1.181	30	2.047	52	0.709	18	0.39	177	6,300	28000	10,200	45500	37	44	0.032	0.8	12000
NAO 35x50x17	1.378	35	1.969	50	0.669	17	0.249	113	4,800	21400	9,300	41500	40	45	0.032	0.8	12000
NAO 35x55x20	1.378	35	2.165	55	0.787	20	0.419	190	7,300	32500	12,800	57000	40	47	0.032	0.8	11000
NAO 35x57x20.5	1.378	35	2.244	57	0.807	20.5	0.476	216	8,100	36000	13,300	59000	42	50	0.032	0.8	11000
NAO 40x55x17	1.575	40	2.165	55	0.669	17	0.28	127	5,100	22500	10,300	46000	45	50	0.032	0.8	10000
NAO 40x65x20	1.575	40	2.559	65	0.787	20	0.615	279	8,000	35500	13,900	62000	50	58	0.032	0.8	9500
NAO 50x68x20	1.969	50	2.677	68	0.787	20	0.507	230	6,400	28500	14,800	66000	55	60	0.039	1	8500
NAO 50x78x20	1.969	50	3.071	78	0.787	20	0.904	410	9,800	43500	19,100	85000	60	68	0.039	1	7500
NAO 70x100x30	2.756	70	3.937	100	1.181	30	1.874	850	16,200	72000	40,000	179000	80	88	0.039	1	6000
NAO 75x105x25	2.953	75	4.134	105	0.984	25	1.535	696	12,800	57000	30,500	136000	85	93	0.039	1	5500
NAO 80x110x30	3.150	80	4.331	110	1.181	30	2.029	920	15,300	68000	38,500	172000	90	98	0.039	1	5000
NAO 90x120x30	3.543	90	4.724	120	1.181	30	2.302	1044	16,000	71000	42,500	188000	100	108	0.039	1	4700

Precision Needle Bearings

NA, NKI, NKIS SERIES

- With inner rings
- Metric
- Cage guided rollers
- Ground raceways with ribs

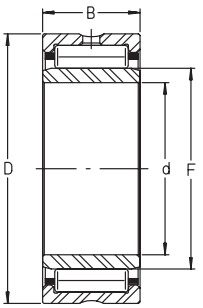

For details on part numbers, descriptive suffixes and various technical references, please refer to front of this section.
For engineering or technical information contact your local sales representative or call Distributor Sales (800)523-6572.

PART NUMBER	SHAFT d inch	SHAFT d mm	OD D inch	OD D mm	WIDTH B inch	WIDTH B mm	WGT. lbs	WGT. g	DYN. CAP. C lbf	DYN. CAP. C kN	STAT. CAP. C_0 lbf	STAT. CAP. C_0 kN	F inch	F mm	SPEED LIMIT GREASE rpm	SPEED LIMIT OIL rpm
NKI 5/12 TN	0.197	5	0.591	15	0.472	12	0.025	11.5	890	3.95	920	4.1	0.315	8	32000	32000
NKI 5/16 TN	0.197	5	0.591	15	0.630	16	0.034	15.3	1,150	5.1	1,300	5.8	0.315	8	32000	32000
NKI 6/12 TN	0.236	6	0.630	16	0.472	12	0.030	13.5	1,010	4.5	1,120	5.0	0.354	9	30000	30000
NKI 6/16 TN	0.236	6	0.630	16	0.630	16	0.038	17.4	1,330	5.9	1,600	7.1	0.354	9	30000	30000
NKIS 6 TN	0.236	6	0.748	19	0.512	13	0.044	19.9	1,300	5.8	1,350	6.0	0.394	10	28000	28000
NKI 7/12 TN	0.276	7	0.669	17	0.472	12	0.030	13.7	1,070	4.75	1,240	5.5	0.394	10	29000	29000
NKI 7/16 TN	0.276	7	0.669	17	0.630	16	0.040	18.2	1,390	6.2	1,750	7.8	0.394	10	29000	29000
NKIS 7 TN	0.276	7	0.866	22	0.630	16	0.076	34.6	2,160	9.6	2,340	10.4	0.472	12	26000	26000
NKIS 8	0.315	8	0.984	25	0.630	16	0.104	47.1	3,250	14.4	3,100	13.8	0.551	14	25000	25000
NKI 9/12	0.354	9	0.748	19	0.472	12	0.037	16.6	1,440	6.4	1,600	7.1	0.472	12	27000	27000
NKI 9/16	0.354	9	0.748	19	0.630	16	0.048	21.9	2,020	9.0	2,470	11.0	0.472	12	27000	27000
NKIS 9	0.354	9	1.024	26	0.630	16	0.091	41.4	3,250	14.4	3,150	14.0	0.591	15	24000	24000
NA 4900	0.394	10	0.866	22	0.512	13	0.051	23	1,910	8.5	2,070	9.2	0.551	14	25000	25000
NKI 10/16	0.394	10	0.866	22	0.630	16	0.065	29.4	2,270	10.1	2,600	11.5	0.551	14	25000	25000
NKI 10/20	0.394	10	0.866	22	0.787	20	0.082	37.1	2,900	12.8	3,500	15.6	0.551	14	25000	25000
NKIS 10	0.394	10	1.102	28	0.630	16	0.119	54	3,550	15.7	3,550	15.8	0.630	16	23000	23000
NA 4901	0.472	12	0.945	24	0.512	13	0.057	26	2,110	9.4	2,450	10.9	0.630	16	24000	24000
NKI 12/16	0.472	12	0.945	24	0.630	16	0.073	33.3	2,550	11.3	3,150	13.9	0.630	16	24000	24000
NKI 12/20	0.472	12	0.945	24	0.787	20	0.092	41.9	3,250	14.4	4,250	18.8	0.630	16	24000	24000
NA 6901	0.472	12	0.945	24	0.866	22	0.101	46	3,600	16.0	4,850	21.6	0.630	16	24000	24000
NKIS 12	0.472	12	1.181	30	0.630	16	0.132	60	3,800	16.8	4,000	17.7	0.709	18	22000	22000
NKI 15/16	0.591	15	1.063	27	0.630	16	0.086	38.8	2,900	13.0	3,900	17.4	0.748	19	22000	22000
NKI 15/20	0.591	15	1.063	27	0.787	20	0.107	48.7	3,700	16.5	5,300	23.6	0.748	19	22000	22000
NA 4902	0.591	15	1.102	28	0.512	13	0.075	34	2,380	10.6	3,050	13.6	0.787	20	22000	22000
NA 6902	0.591	15	1.102	28	0.906	23	0.140	63.6	3,900	17.3	5,700	25.5	0.787	20	22000	22000
NKIS 15	0.591	15	1.378	35	0.787	20	0.203	92	5,500	24.5	6,300	28.0	0.866	22	20000	20000
NKI 17/16	0.669	17	1.142	29	0.630	16	0.093	42.4	3,050	13.5	4,200	18.7	0.827	21	21000	21000
NKI 17/20	0.669	17	1.142	29	0.787	20	0.118	53.4	3,850	17.1	5,700	25.5	0.827	21	21000	21000
NA 4903	0.669	17	1.181	30	0.512	13	0.082	37	2,470	11.0	3,300	14.6	0.866	22	21000	21000
NA 6903	0.669	17	1.181	30	0.906	23	0.159	72	4,200	18.6	6,500	29.0	0.866	22	21000	21000
NKIS 17	0.669	17	1.457	37	0.787	20	0.216	98	5,800	26.0	7,000	31.0	0.945	24	18000	18000
NKI 20/16	0.787	20	1.260	32	0.630	16	0.108	49	3,350	15.0	5,000	22.3	0.945	24	19000	19000
NKI 20/20	0.787	20	1.260	32	0.787	20	0.135	61	4,250	19.0	6,900	30.5	0.945	24	19000	19000
NA 4904	0.787	20	1.457	37	0.669	17	0.166	75.2	4,700	21.0	5,700	25.5	0.984	25	17000	17000
NA 6904	0.787	20	1.457	37	1.181	30	0.311	141	8,100	36.0	11,500	51.0	0.984	25	17000	17000
NKIS 20	0.787	20	1.654	42	0.787	20	0.284	129	6,400	28.5	8,200	36.5	1.102	28	16000	16000
NKI 22/16	0.866	22	1.339	34	0.630	16	0.115	52	3,450	15.3	5,300	23.6	1.024	26	18000	18000
NKI 22/20	0.866	22	1.339	34	0.787	20	0.144	65.4	4,350	19.4	7,200	32.0	1.024	26	18000	18000
NA 49/22	0.866	22	1.535	39	0.669	17	0.176	80	5,100	22.8	6,600	29.5	1.102	28	16000	16000
NA 69/22	0.866	22	1.535	39	1.181	30	0.331	150	8,400	37.5	12,400	55.0	1.102	28	16000	16000
NKI 25/20	0.984	25	1.496	38	0.787	20	0.175	79.4	4,900	21.9	7,600	34.0	1.142	29	16000	16000
NKI 25/30	0.984	25	1.496	38	1.181	30	0.273	124	7,300	32.5	12,800	57.0	1.142	29	16000	16000
NA 4905	0.984	25	1.654	42	0.669	17	0.194	88	5,300	23.6	7,100	31.5	1.181	30	15000	15000
NA 6905	0.984	25	1.654	42	1.181	30	0.355	161	8,800	39.0	13,300	59.0	1.181	30	15000	15000
NKIS 25	0.984	25	1.850	47	0.866	22	0.357	162	7,500	33.5	9,800	43.5	1.260	32	14000	14000
NKI 28/20	1.102	28	1.654	42	0.787	20	0.213	96.5	5,200	23.1	8,400	37.5	1.260	32	14000	14000

Precision Needle Bearings

NA, NKI, NKIS SERIES

- With inner rings
- Metric
- Cage guided rollers
- Ground raceways with ribs

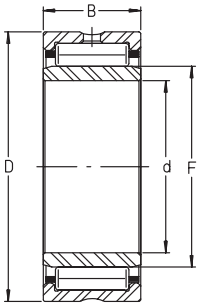

For details on part numbers, descriptive suffixes and various technical references, please refer to front of this section.
For engineering or technical information contact your local sales representative or call Distributor Sales (800)523-6572.

PART NUMBER	SHAFT d inch	SHAFT d mm	OD D inch	OD D mm	WIDTH B inch	WIDTH B mm	WGT. lbs	WGT. g	DYN. CAP. C lbf	DYN. CAP. C kN	STAT. CAP. C_0 lbf	STAT. CAP. C_0 kN	F inch	F mm	SPEED LIMIT GREASE rpm	SPEED LIMIT OIL rpm
NKI 28/30	1.102	28	1.654	42	1.181	30	0.322	146	7,800	34.5	14,200	63.0	1.260	32	14000	14000
NA 49/28	1.102	28	1.772	45	0.669	17	0.215	97.7	5,500	24.5	7,500	33.5	1.260	32	13000	13000
NA 69/28	1.102	28	1.772	45	1.181	30	0.401	182	9,100	40.5	14,200	63.0	1.260	32	13000	13000
NKI 30/20	1.181	30	1.772	45	0.787	20	0.247	112	5,500	24.3	9,300	41.5	1.378	35	13000	13000
NKI 30/30	1.181	30	1.772	45	1.181	30	0.375	170	8,200	36.5	15,500	69.0	1.378	35	13000	13000
NA 4906	1.181	30	1.850	47	0.669	17	0.223	101	5,600	25.0	8,000	35.5	1.378	35	13000	13000
NA 6906	1.181	30	1.850	47	1.181	30	0.423	192	9,800	43.5	16,000	71.0	1.378	35	13000	13000
NKIS 30	1.181	30	2.047	52	0.866	22	0.406	184	8,200	36.5	11,200	50.0	1.457	37	12000	12000
NKI 32/20	1.260	32	1.850	47	0.787	20	0.260	118	5,600	24.9	9,800	43.5	1.457	37	12000	12000
NKI 32/30	1.260	32	1.850	47	1.181	30	0.397	180	8,300	37.0	16,400	73.0	1.457	37	12000	12000
NA 49/32	1.260	32	2.047	52	0.787	20	0.348	158	6,900	30.5	10,700	47.5	1.575	40	12000	12000
NA 69/32	1.260	32	2.047	52	1.417	36	0.635	288	10,600	47.0	18,400	82.0	1.575	40	12000	12000
NKI 35/20	1.378	35	1.969	50	0.787	20	0.280	127	5,800	26.0	10,600	47.0	1.575	40	12000	12000
NKI 35/30	1.378	35	1.969	50	1.181	30	0.426	193	8,800	39.0	17,800	79.0	1.575	40	12000	12000
NA 4907	1.378	35	2.165	55	0.787	20	0.375	170	7,100	31.5	11,200	50.0	1.654	42	11000	11000
NA 6907	1.378	35	2.165	55	1.417	36	0.684	310	10,800	48.0	19,300	86.0	1.654	42	11000	11000
NKIS 35	1.378	35	2.284	58	0.866	22	0.485	220	8,800	39.0	12,800	57.0	1.693	43	11000	11000
NKI 38/20	1.496	38	2.087	53	0.787	20	0.300	136	6,100	27.0	11,500	51.0	1.693	43	11000	11000
NKI 38/30	1.496	38	2.087	53	1.181	30	0.456	207	9,100	40.5	19,100	85.0	1.693	43	11000	11000
NKI 40/20	1.575	40	2.165	55	0.787	20	0.313	142	6,200	27.5	11,900	53.0	1.772	45	10000	10000
NKI 40/30	1.575	40	2.165	55	1.181	30	0.476	216	9,200	41.0	19,800	88.0	1.772	45	10000	10000
NA 4908	1.575	40	2.441	62	0.866	22	0.507	230	9,700	43.0	15,100	67.0	1.890	48	9500	9500
NA 6908	1.575	40	2.441	62	1.575	40	0.948	430	14,800	66.0	26,000	116.0	1.890	48	9500	9500
NKIS 40	1.575	40	2.559	65	0.866	22	0.620	281	9,600	42.5	15,100	67.0	1.969	50	9500	9500
NKI 42/20	1.654	42	2.244	57	0.787	20	0.326	148	6,400	28.5	12,600	56.0	1.850	47	10000	10000
NKI 42/30	1.654	42	2.244	57	1.181	30	0.490	222	9,700	43.0	21,100	94.0	1.850	47	10000	10000
NKI 45/25	1.772	45	2.441	62	0.984	25	0.505	229	8,500	38.0	16,600	74.0	1.969	50	9000	9000
NKI 45/35	1.772	45	2.441	62	1.378	35	0.710	322	11,200	50.0	23,800	106.0	1.969	50	9000	9000
NA 4909	1.772	45	2.677	68	0.866	22	0.598	271	10,100	45.0	16,400	73.0	2.047	52	8500	8500
NA 6909	1.772	45	2.677	68	1.575	40	1.091	495	15,500	69.0	28,500	127.0	2.047	52	8500	8500
NKIS 45	1.772	45	2.835	72	0.866	22	0.741	336	10,100	45.0	16,600	74.0	2.165	55	8500	8500
NKI 50/25	1.969	50	2.677	68	0.984	25	0.595	270	9,000	40.0	18,400	82.0	2.165	55	8500	8500
NKI 50/35	1.969	50	2.677	68	1.378	35	0.836	379	11,900	53.0	26,500	118.0	2.165	55	8500	8500
NA 4910	1.969	50	2.835	72	0.866	22	0.604	274	10,600	47.0	18,000	80.0	2.284	58	8000	8000
NA 6910	1.969	50	2.835	72	1.575	40	1.136	515	16,400	73.0	31,500	139.0	2.284	58	8000	8000
NKIS 50	1.969	50	3.150	80	1.102	28	1.142	518	14,200	63.0	22,000	98.0	2.362	60	7500	7500
NKI 55/25	2.165	55	2.835	72	0.984	25	0.600	272	9,400	42.0	20,200	90.0	2.362	60	7500	7500
NKI 55/35	2.165	55	2.835	72	1.378	35	0.836	379	12,600	56.0	29,000	130.0	2.362	60	7500	7500
NA 4911	2.165	55	3.150	80	0.984	25	0.867	393	13,000	58.0	22,500	100.0	2.480	63	7500	7500
NA 6911	2.165	55	3.150	80	1.772	45	1.720	780	20,200	90.0	39,500	176.0	2.480	63	7500	7500
NKIS 55	2.165	55	3.347	85	1.102	28	1.230	558	15,100	67.0	24,300	108.0	2.559	65	7000	7000
NKI 60/25	2.362	60	3.228	82	0.984	25	0.869	394	9,800	43.5	20,000	89.0	2.677	68	7000	7000
NKI 60/35	2.362	60	3.228	82	1.378	35	1.219	553	13,900	62.0	31,500	139.0	2.677	68	7000	7000
NA 4912	2.362	60	3.347	85	0.984	25	0.939	426	13,500	60.0	24,300	108.0	2.677	68	7000	7000
NA 6912	2.362	60	3.347	85	1.772	45	1.782	808	21,100	94.0	43,000	191.0	2.677	68	7000	7000
NKIS 60	2.362	60	3.543	90	1.102	28	1.235	560	15,300	68.0	25,500	113.0	2.756	70	6500	6500

Precision Needle Bearings

NA, NKI, NKIS SERIES

- With inner rings
- Metric
- Cage guided rollers
- Ground raceways with ribs

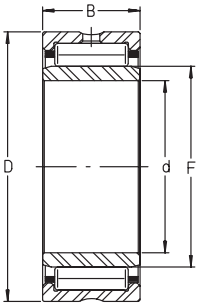

For details on part numbers, descriptive suffixes and various technical references, please refer to front of this section.
For engineering or technical information contact your local sales representative or call Distributor Sales (800)523-6572.

PART NUMBER	SHAFT d inch	SHAFT d mm	OD D inch	OD D mm	WIDTH B inch	WIDTH B mm	WGT. lbs	WGT. g	DYN. CAP. C lbf	DYN. CAP. C kN	STAT. CAP. C_0 lbf	STAT. CAP. C_0 kN	F inch	F mm	SPEED LIMIT GREASE rpm	SPEED LIMIT OIL rpm
NKI 65/25	2.559	65	3.543	90	0.984	25	1.030	467	11,900	53.0	22,500	100.0	2.874	73	6500	6500
NA 4913	2.559	65	3.543	90	0.984	25	1.005	456	13,700	61.0	25,000	112.0	2.835	72	6500	6500
NKI 65/35	2.559	65	3.543	90	1.378	35	1.453	659	16,900	75.0	35,000	156.0	2.874	73	6500	6500
NA 6913	2.559	65	3.543	90	1.772	45	1.837	833	21,400	95.0	44,500	198.0	2.835	72	6500	6500
NKIS 65	2.559	65	3.740	95	1.102	28	1.413	641	16,000	71.0	27,500	123.0	2.953	75	6000	6000
NKI 70/25	2.756	70	3.740	95	0.984	25	1.149	521	12,600	56.0	27,000	119.0	3.150	80	6000	6000
NKI 70/35	2.756	70	3.740	95	1.378	35	1.625	737	17,500	78.0	41,500	184.0	3.150	80	6000	6000
NKIS 70	2.756	70	3.937	100	1.102	28	1.499	680	16,900	75.0	30,000	133.0	3.150	80	6000	6000
NA 4914	2.756	70	3.937	100	1.181	30	1.605	728	18,900	84.0	35,000	156.0	3.150	80	6000	6000
NA 6914	2.756	70	3.937	100	2.126	54	2.955	1340	29,000	128.0	60,000	265.0	3.150	80	6000	6000
NKI 75/25	2.953	75	4.134	105	0.984	25	1.413	641	15,500	69.0	27,500	123.0	3.347	85	5500	5500
NA 4915	2.953	75	4.134	105	1.181	30	1.709	775	19,300	86.0	36,500	162.0	3.347	85	5500	5500
NKI 75/35	2.953	75	4.134	105	1.378	35	2.002	908	22,000	98.0	43,500	193.0	3.347	85	5500	5500
NA 6915	2.953	75	4.134	105	2.126	54	3.197	1450	29,000	130.0	62,000	275.0	3.347	85	5500	5500
NKI 80/25	3.150	80	4.331	110	0.984	25	1.493	677	16,200	72.0	29,500	132.0	3.543	90	5000	5000
NA 4916	3.150	80	4.331	110	1.181	30	1.936	878	20,000	89.0	39,000	174.0	3.543	90	5000	5000
NKI 80/35	3.150	80	4.331	110	1.378	35	2.115	959	23,200	103.0	47,000	208.0	3.543	90	5000	5000
NA 6916	3.150	80	4.331	110	2.126	54	3.356	1522	30,500	135.0	67,000	300.0	3.543	90	5000	5000
NKI 85/26	3.347	85	4.528	115	1.024	26	1.638	743	16,400	73.0	31,000	137.0	3.740	95	4900	4900
NKI 85/36	3.347	85	4.528	115	1.417	36	2.293	1040	24,100	107.0	50,000	223.0	3.740	95	4900	4900
NA 4917	3.347	85	4.724	120	1.378	35	2.756	1250	25,000	111.0	53,000	237.0	3.937	100	4800	4800
NA 6917	3.347	85	4.724	120	2.480	63	4.851	2200	37,500	166.0	90,000	400.0	3.937	100	4800	4800
NKI 90/26	3.543	90	4.724	120	1.024	26	1.715	778	17,100	76.0	33,000	146.0	3.937	100	4700	4700
NKI 90/36	3.543	90	4.724	120	1.417	36	2.403	1090	25,000	111.0	53,000	237.0	3.937	100	4700	4700
NA 4918	3.543	90	4.921	125	1.378	35	2.893	1312	25,500	114.0	56,000	250.0	4.134	105	4600	4600
NA 6918	3.543	90	4.921	125	2.480	63	5.094	2310	38,500	172.0	96,000	425.0	4.134	105	4600	4600
NKI 95/26	3.740	95	4.921	125	1.024	26	1.799	816	17,500	78.0	35,000	155.0	4.134	105	4500	4500
NKI 95/36	3.740	95	4.921	125	1.417	36	2.525	1145	25,500	114.0	56,000	250.0	4.134	105	4500	4500
NA 4919	3.740	95	5.118	130	1.378	35	3.023	1371	26,000	116.0	58,000	260.0	4.331	110	4400	4400
NA 6919	3.740	95	5.118	130	2.480	63	5.513	2500	39,000	174.0	99,000	440.0	4.331	110	4400	4400
NKI 100/30	3.937	100	5.118	130	1.181	30	2.183	990	22,000	98.0	47,000	210.0	4.331	110	4300	4300
NKI 100/40	3.937	100	5.118	130	1.575	40	2.933	1330	28,500	127.0	65,000	290.0	4.331	110	4300	4300
NKIS 100	3.937	100	5.315	135	1.260	32	2.955	1340	20,500	91.0	46,000	204.0	4.528	115	4200	4200
NA 4920	3.937	100	5.512	140	1.575	40	4.190	1900	29,000	128.0	61,000	270.0	4.528	115	4100	4100
NA 4822	4.331	110	5.512	140	1.181	30	2.381	1080	21,100	94.0	48,500	216.0	4.724	120	3900	3900
NKI 110/40	4.331	110	5.512	140	1.575	40	3.219	1460	25,500	113.0	62,000	275.0	4.724	120	3900	3900
NA 4922	4.331	110	5.906	150	1.575	40	4.564	2070	29,500	132.0	65,000	290.0	4.921	125	3800	3800
NA 4824	4.724	120	5.906	150	1.181	30	2.580	1170	22,300	99.0	54,000	239.0	5.118	130	3600	3600
NA 4924	4.724	120	6.496	165	1.772	45	6.306	2860	40,500	181.0	88,000	390.0	5.315	135	3400	3400
NA 4826	5.118	130	6.496	165	1.378	35	3.991	1810	26,500	118.0	70,000	310.0	5.709	145	3300	3300
NA 4926	5.118	130	7.087	180	1.969	50	8.600	3900	45,500	203.0	106,000	470.0	5.906	150	3200	3200
NA 4828	5.512	140	6.890	175	1.378	35	4.234	1920	27,000	120.0	73,000	325.0	6.102	155	3100	3100
NKI 140/32	5.512	140	7.087	180	1.260	32	4.520	2050	25,500	114.0	58,000	260.0	6.102	155	3100	3100
NA 4928	5.512	140	7.480	190	1.969	50	9.151	4150	47,000	209.0	112,000	500.0	6.299	160	3000	3000
NA 4830	5.906	150	7.480	190	1.575	40	5.998	2720	34,000	152.0	90,000	400.0	6.496	165	2900	2900
NA 4832	6.299	160	7.874	200	1.575	40	6.372	2890	36,000	160.0	98,000	435.0	6.890	175	2700	2700

Precision Needle Bearings

NA, NKI, NKIS SERIES

- With inner rings
- Metric
- Cage guided rollers
- Ground raceways with ribs

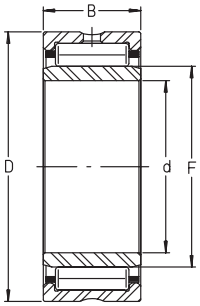

For details on part numbers, descriptive suffixes and various technical references, please refer to front of this section.
For engineering or technical information contact your local sales representative or call Distributor Sales (800)523-6572.

PART NUMBER	SHAFT d inch	SHAFT d mm	OD D inch	OD D mm	WIDTH B inch	WIDTH B mm	WGT. lbs	WGT. g	DYN. CAP. C lbf	DYN. CAP. C kN	STAT. CAP. C_0 lbf	STAT. CAP. C_0 kN	F inch	F mm	SPEED LIMIT GREASE rpm	SPEED LIMIT OIL rpm
NA 4834	6.693	170	8.465	215	1.772	45	8.732	3960	41,500	185.0	115,000	510.0	7.284	185	2500	2500
NA 4836	7.087	180	8.858	225	1.772	45	9.261	4200	43,500	194.0	124,000	550.0	7.677	195	2400	2400
NA 4838	7.480	190	9.449	240	1.969	50	12.370	5610	51,000	227.0	155,000	690.0	8.268	210	2300	2300
NA 4840	7.874	200	9.843	250	1.969	50	12.877	5840	52,000	230.0	162,000	720.0	8.661	220	2200	2200
NA 4844	8.661	220	10.630	270	1.969	50	14.068	6380	55,000	243.0	178,000	790.0	9.449	240	2000	2000
NA 4848	9.449	240	11.811	300	2.362	60	22.050	10000	80,000	355.0	243,000	1080.0	10.433	265	1800	1800
NA 4852	10.236	260	12.598	320	2.362	60	23.373	10600	83,000	370.0	260,000	1160.0	11.221	285	1700	1700
NA 4856	11.024	280	13.780	350	2.717	69	33.737	15300	101,000	450.0	290,000	1300.0	12.008	305	1600	1600
NA 4860	11.811	300	14.961	380	3.150	80	48.069	21800	139,000	620.0	400,000	1770.0	12.992	330	1400	1400
NA 4864	12.598	320	15.748	400	3.150	80	50.715	23000	142,000	630.0	415,000	1850.0	13.780	350	1400	1400
NA 4868	13.386	340	16.535	420	3.150	80	53.361	24200	144,000	640.0	435,000	1940.0	14.567	370	1300	1300
NA 4872	14.173	360	17.323	440	3.150	80	56.448	25600	148,000	660.0	455,000	2020.0	15.354	390	1200	1200
NA 4876	14.961	380	18.898	480	3.937	100	93.933	42600	225,000	1000.0	650,000	2900.0	16.339	415	1100	1100

Precision Needle Bearings

NA49..2RS, NA49..RS SERIES

- With inner rings
- Sealed

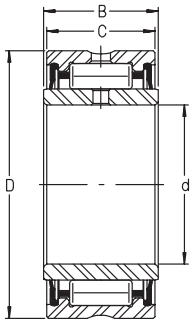

For details on part numbers, descriptive suffixes and various technical references, please refer to front of this section.
For engineering or technical information contact your local sales representative or call Distributor Sales (800)523-6572.

PART NUMBER	PART NUMBER	SHAFT d inch	SHAFT d mm	OD D inch	OD D mm	WIDTH INNER B inch	WIDTH INNER B mm	WIDTH OUTER C inch	WIDTH OUTER C mm	WGT. lbs	WGT. g	DYN. CAP. C lbf	DYN. CAP. C N	STAT. CAP. C_0 lbf	STAT. CAP. C_0 N	SPEED LIMIT rpm
NA 4900 2RS	NA 4900 RS	0.394	10	0.866	22	0.551	14	0.512	13	0.054	24.5	1530	6800	1550	6900	13000
NA 4901 2RS	NA 4901 RS	0.472	12	0.945	24	0.551	14	0.512	13	0.061	27.5	1710	7600	1870	8300	12000
NA 4902 2RS	NA 4902 RS	0.591	15	1.102	28	0.551	14	0.512	13	0.082	37	1930	8600	2320	10300	10000
NA 4903 2RS	NA 4903 RS	0.669	17	1.181	30	0.551	14	0.512	13	0.088	40	1980	8800	2470	11000	9000
NA 4904 2RS	NA 4904 RS	0.787	20	1.457	37	0.709	18	0.669	17	0.176	80	3890	17300	4470	19900	7500
NA 4905 2RS	NA 4905 RS	0.984	25	1.654	42	0.709	18	0.669	17	0.197	89.5	4340	19300	5440	24200	6500
NA 4906 2RS	NA 4906 RS	1.181	30	1.85	47	0.709	18	0.669	17	0.229	104	4740	21100	6410	28500	5500
NA 4907 2RS	NA 4907 RS	1.378	35	2.165	55	0.827	21	0.787	20	0.386	175	5960	26500	8880	39500	4800
NA 4908 2RS	NA 4908 RS	1.575	40	2.441	62	0.906	23	0.866	22	0.556	252	8090	36000	11920	53000	4200
NA 4909 2RS	NA 4909 RS	1.772	45	2.677	68	0.906	23	0.866	22	0.639	290	8540	38000	13260	59000	3900
NA 4910 2RS	NA 4910 RS	1.969	50	2.835	72	0.906	23	0.866	22	0.65	295	8990	40000	14390	64000	3500

Precision Needle Bearings

RNAO SERIES

- Without inner rings
- Without ribs
- Ground raceways
- Metric series

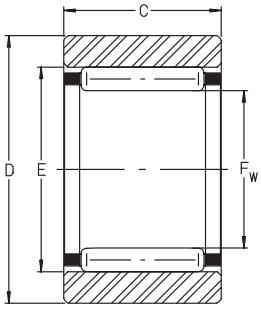

For details on part numbers, descriptive suffixes and various technical references, please refer to front of this section.
For engineering or technical information contact your local sales representative or call Distributor Sales (800)523-6572.

PART NUMBER	SHAFT F_w inch	SHAFT F_w mm	OD D inch	OD D mm	WIDTH C inch	WIDTH C mm	WGT. lbs	WGT. g	DYN. CAP. C lbf	DYN. CAP. C N	STAT. CAP. C_0 lbf	STAT. CAP. C_0 N	E inch	E mm	SPEED LIMIT OIL rpm
RNAO 5x10x8 TN	0.197	5	0.394	10	0.315	8	0.007	3	530	2350	430	1920	0.315	8	37000
RNAO 6x13x8 TN	0.236	6	0.512	13	0.315	8	0.013	6	590	2600	510	2280	0.354	9	32000
RNAO 7x14x8 TN	0.276	7	0.551	14	0.315	8	0.013	6	640	2850	600	2650	0.394	10	31000
RNAO 8x15x10 TN	0.315	8	0.591	15	0.394	10	0.018	8	890	3950	920	4100	0.433	11	29000
RNAO 10x17x10 TN	0.394	10	0.669	17	0.394	10	0.022	10	1,070	4750	1,240	5500	0.512	13	27000
RNAO 12x19x13.5 TN	0.472	12	0.748	19	0.532	13.5	0.033	15	1,440	6400	1,910	8500	0.591	15	25000
RNAO 12x22x12 TN	0.472	12	0.866	22	0.472	12	0.042	19	2,250	10000	2,230	9900	0.709	18	24000
RNAO 15x23x13	0.591	15	0.906	23	0.512	13	0.044	20	1,910	8500	2,450	10900	0.748	19	23000
RNAO 16x24x13	0.630	16	0.945	24	0.512	13	0.046	21	2,000	8900	2,650	11800	0.787	20	22000
RNAO 16x24x20	0.630	16	0.945	24	0.787	20	0.071	32	3,000	13300	4,450	19800	0.787	20	22000
RNAO 16x28x12	0.630	16	1.102	28	0.472	12	0.071	32	2,600	11500	2,800	12500	0.866	22	21000
RNAO 17x25x13	0.669	17	0.984	25	0.512	13	0.049	22	2,340	10400	3,300	14600	0.827	21	22000
RNAO 18x30x24	0.709	18	1.181	30	0.945	24	0.152	69	4,500	20100	6,000	26500	0.945	24	20000
RNAO 20x28x13	0.787	20	1.102	28	0.512	13	0.055	25	2,200	9800	3,200	14300	0.945	24	20000
RNAO 20x28x26	0.787	20	1.102	28	1.024	26	0.110	50	3,800	16800	6,400	28500	0.945	24	20000
RNAO 20x32x12	0.787	20	1.260	32	0.472	12	0.084	38	3,000	13400	3,650	16200	1.024	26	19000
RNAO 22x30x13	0.866	22	1.181	30	0.512	13	0.060	27	2,340	10400	3,600	15900	1.024	26	19000
RNAO 22x35x16	0.866	22	1.378	35	0.630	16	0.130	59	4,500	20000	5,700	25500	1.142	29	17000
RNAO 25x35x17	0.984	25	1.378	35	0.669	17	0.117	53	3,350	14900	5,800	26000	1.142	29	16000
RNAO 25x35x26	0.984	25	1.378	35	1.024	26	0.168	76	4,350	19400	8,300	37000	1.142	29	16000
RNAO 25x37x16	0.984	25	1.457	37	0.630	16	0.132	60	4,700	21000	6,300	28000	1.260	32	16000
RNAO 25x37x32	0.984	25	1.457	37	1.260	32	0.262	119	8,100	36000	12,600	56000	1.260	32	16000
RNAO 26x39x13	1.024	26	1.535	39	0.512	13	0.132	60	2,600	11600	4,300	19200	1.181	30	15000
RNAO 30x40x17	1.181	30	1.575	40	0.669	17	0.132	60	4,400	19600	7,600	34000	1.378	35	14000
RNAO 30x40x26	1.181	30	1.575	40	1.024	26	0.207	94	6,100	27000	11,500	51000	1.378	35	14000
RNAO 30x42x16	1.181	30	1.654	42	0.630	16	0.130	59	5,200	23100	7,500	33500	1.457	37	14000
RNAO 30x42x32	1.181	30	1.654	42	1.260	32	0.302	137	8,900	39500	15,100	67000	1.457	37	14000
RNAO 35x45x13	1.378	35	1.772	45	0.512	13	0.117	53	3,650	16200	6,300	28000	1.575	40	12000
RNAO 35x45x17	1.378	35	1.772	45	0.669	17	0.152	69	4,700	20800	8,700	38500	1.575	40	12000
RNAO 35x45x26	1.378	35	1.772	45	1.024	26	0.201	91	6,200	27500	12,600	56000	1.575	40	12000
RNAO 35x47x16	1.378	35	1.850	47	0.630	16	0.172	78	5,500	24400	8,400	37500	1.654	42	12000
RNAO 35x47x18	1.378	35	1.850	47	0.709	18	0.196	89	6,200	27500	9,700	43000	1.654	42	12000
RNAO 35x47x32	1.378	35	1.850	47	1.260	32	0.344	156	9,400	42000	16,900	75000	1.654	42	12000
RNAO 37x52x18	1.457	37	2.047	52	0.709	18	0.276	125	6,300	28000	10,200	45500	1.732	44	11000
RNAO 40x50x17	1.575	40	1.969	50	0.669	17	0.163	74	4,800	21400	9,300	41500	1.772	45	11000
RNAO 40x50x34	1.575	40	1.969	50	1.339	34	0.335	152	8,200	36500	18,700	83000	1.772	45	11000
RNAO 40x55x20	1.575	40	2.165	55	0.787	20	0.320	145	7,300	32500	12,800	57000	1.850	47	11000
RNAO 40x55x40	1.575	40	2.165	55	1.575	40	0.606	275	13,900	62000	26,500	118000	1.890	48	10000
RNAO 42x57x20	1.654	42	2.244	57	0.787	20	0.326	148	8,100	36000	13,300	59000	1.969	50	10000
RNAO 45x55x17	1.772	45	2.165	55	0.669	17	0.183	83	5,100	22500	10,300	46000	1.969	50	10000
RNAO 45x62x40	1.772	45	2.441	62	1.575	40	0.831	377	15,100	67000	30,500	135000	2.087	53	9000
RNAO 50x62x20	1.969	50	2.441	62	0.787	20	0.309	140	6,000	26500	13,500	60000	2.165	55	9000
RNAO 50x65x20	1.969	50	2.559	65	0.787	20	0.370	168	8,000	35500	13,900	62000	2.284	58	8500
RNAO 50x65x40	1.969	50	2.559	65	1.575	40	0.783	355	13,700	61000	28,000	124000	2.284	58	8500
RNAO 55x68x20	2.165	55	2.677	68	0.787	20	0.366	166	6,400	28500	14,800	66000	2.362	60	8000
RNAO 60x78x20	2.362	60	3.071	78	0.787	20	0.562	255	9,800	43500	19,100	85000	2.677	68	7000

Precision Needle Bearings

RNAO SERIES

- Without inner rings
- Without ribs
- Ground raceways
- Metric series

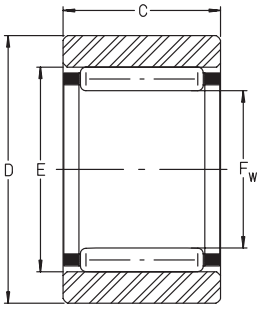

For details on part numbers, descriptive suffixes and various technical references, please refer to front of this section.
For engineering or technical information contact your local sales representative or call Distributor Sales (800)523-6572.

PART NUMBER	SHAFT F_w inch	SHAFT F_w mm	OD D inch	OD D mm	WIDTH C inch	WIDTH C mm	WGT. lbs	WGT. g	DYN. CAP. C lbf	DYN. CAP. C N	STAT. CAP. C_0 lbf	STAT. CAP. C_0 N	E inch	E mm	SPEED LIMIT OIL rpm
RNAO 60x78x40	2.362	60	3.071	78	1.575	40	0.959	435	16,900	75000	38,500	171000	2.677	68	7000
RNAO 65x85x30	2.559	65	3.347	85	1.181	30	1.023	464	12,800	57000	27,500	123000	2.874	73	6500
RNAO 70x90x30	2.756	70	3.543	90	1.181	30	1.100	499	13,500	60000	30,500	135000	3.071	78	6000
RNAO 80x100x30	3.150	80	3.937	100	1.181	30	1.279	580	16,200	72000	40,000	179000	3.465	88	5500
RNAO 85x105x25	3.347	85	4.134	105	0.984	25	1.012	459	12,800	57000	30,500	136000	3.661	93	5000
RNAO 90x105x26	3.543	90	4.134	105	1.024	26	0.822	373	13,700	61000	33,500	150000	3.858	98	5000
RNAO 90x110x30	3.543	90	4.331	110	1.181	30	1.345	610	15,300	68000	38,500	172000	3.858	98	4900
RNAO 100x120x30	3.937	100	4.724	120	1.181	30	1.530	694	16,000	71000	42,500	188000	4.252	108	4500

Precision Needle Bearings

NCS, NK, NKS, RNA48, RNA49, RNA69 SERIES

- Without inner rings
- Inch and metric
- Ground raceways with ribs
- Cage guided rollers

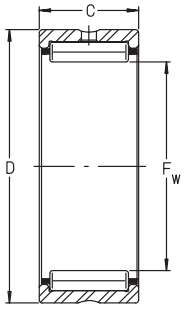

NCS, NK, RNA48, NKS

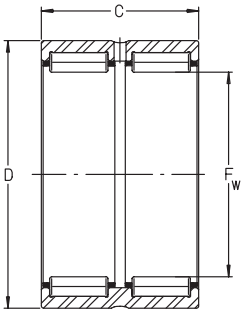

RNA69

For details on part numbers, descriptive suffixes and various technical references, please refer to front of this section.
For engineering or technical information contact your local sales representative or call Distributor Sales (800)523-6572.

PART NUMBER	SHAFT F_w inch	SHAFT F_w mm	OD D inch	OD D mm	WIDTH C inch	WIDTH C mm	WGT. lbs	WGT. g	DYN. CAP. C lbf	DYN. CAP. C N	STAT. CAP. C_0 lbf	STAT. CAP. C_0 N	SPEED LIMIT OIL rpm
NK 5/10 TN	0.197	5	0.394	10	0.394	10	0.007	3.1	530	2350	430	1920	37000
NK 5/12 TN	0.197	5	0.394	10	0.472	12	0.008	3.7	670	3000	600	2650	37000
NK 6/10 TN	0.236	6	0.472	12	0.394	10	0.01	4.7	590	2600	510	2280	33000
NK 6/12 TN	0.236	6	0.472	12	0.472	12	0.013	5.7	750	3350	710	3150	33000
NK 7/10 TN	0.276	7	0.551	14	0.394	10	0.015	6.9	640	2850	600	2650	31000
NK 7/12 TN	0.276	7	0.551	14	0.472	12	0.018	8.2	820	3650	810	3600	31000
NK 8/12 TN	0.315	8	0.591	15	0.472	12	0.019	8.7	890	3950	920	4100	29000
NK 8/16 TN	0.315	8	0.591	15	0.630	16	0.026	12	1,150	5100	1,300	5800	29000
NK 9/12 TN	0.354	9	0.630	16	0.472	12	0.023	10.3	1,010	4500	1,120	5000	28000
NK 9/16 TN	0.354	9	0.630	16	0.630	16	0.028	12.8	1,330	5900	1,600	7100	28000
NK 10/12 TN	0.394	10	0.669	17	0.472	12	0.022	10.1	1,070	4750	1,240	5500	27000
NK 10/16 TN	0.394	10	0.669	17	0.630	16	0.029	13.3	1,390	6200	1,750	7800	27000
NK 12/12	0.472	12	0.748	19	0.472	12	0.027	12.1	1,440	6400	1,600	7100	25000
NK 12/16	0.472	12	0.748	19	0.630	16	0.035	15.9	2,020	9000	2,470	11000	25000
RNA 4900	0.551	14	0.866	22	0.512	13	0.036	16.5	1,910	8500	2,070	9200	25000
NK 14/16	0.551	14	0.866	22	0.630	16	0.046	20.7	2,270	10100	2,600	11500	24000
NK 14/20	0.551	14	0.866	22	0.787	20	0.056	25.5	2,900	12800	3,500	15600	24000
NK 15/16	0.591	15	0.906	23	0.630	16	0.048	21.8	2,410	10700	2,850	12700	23000
NK 15/20	0.591	15	0.906	23	0.787	20	0.059	26.6	3,050	13600	3,850	17200	23000
NCS 1012	0.625	15.875	1.125	28.575	0.750	19.05	0.11	50	3700	16400	3750	16700	22000
NCS 1016	0.625	15.875	1.125	28.575	1.000	25.4	0.15	68	4750	21100	5200	23000	22000
RNA 4901	0.630	16	0.945	24	0.512	13	0.038	17.4	2,110	9400	2,450	10900	24000
NK 16/16	0.630	16	0.945	24	0.630	16	0.049	22.4	2,550	11300	3,150	13900	22000
NK 16/20	0.630	16	0.945	24	0.787	20	0.063	28.4	3,250	14400	4,250	18800	22000
RNA 6901	0.630	16	0.945	24	0.866	22	0.068	31	3,600	16000	4,850	21600	22000
NK 17/16	0.669	17	0.984	25	0.630	16	0.052	23.7	2,700	11900	3,350	15000	22000
NK 17/20	0.669	17	0.984	25	0.787	20	0.066	29.8	3,400	15100	4,600	20400	22000
NK 18/16	0.709	18	1.024	26	0.630	16	0.055	24.9	2,800	12500	3,650	16200	21000
NK 18/20	0.709	18	1.024	26	0.787	20	0.069	31.4	3,550	15800	4,950	22000	21000
NK 19/16	0.748	19	1.063	27	0.630	16	0.058	26.1	2,900	13000	3,900	17400	21000
NK 19/20	0.748	19	1.063	27	0.787	20	0.071	32.2	3,700	16500	5,300	23600	21000
NCS 1212	0.750	19.05	1.250	31.75	0.750	19.05	0.12	54	4600	20400	5200	23000	21000
NCS 1216	0.750	19.05	1.250	31.75	1.000	25.4	0.16	73	5900	26000	7100	32000	21000
RNA 4902	0.787	20	1.102	28	0.512	13	0.048	21.7	2,380	10600	3,050	13600	22000
NK 20/16	0.787	20	1.102	28	0.630	16	0.06	27	2,900	13000	3,950	17500	20000
NK 20/20	0.787	20	1.102	28	0.787	20	0.075	33.9	3,700	16400	5,400	23800	20000
RNA 6902	0.787	20	1.102	28	0.906	23	0.088	39.7	3,900	17300	5,700	25500	20000
NKS 20	0.787	20	1.260	32	0.787	20	0.107	48.7	5,200	23000	5,600	25000	19000
NK 21/16	0.827	21	1.142	29	0.630	16	0.062	28.1	3,050	13500	4,200	18700	20000
NK 21/20	0.827	21	1.142	29	0.787	20	0.078	35.2	3,850	17100	5,700	25500	20000
RNA 4903	0.866	22	1.181	30	0.512	13	0.049	22.2	2,470	11000	3,300	14600	21000
NK 22/16	0.866	22	1.181	30	0.630	16	0.066	30	3,150	14000	4,450	19900	19000
NK 22/20	0.866	22	1.181	30	0.787	20	0.082	37	4,000	17700	6,100	27000	19000
RNA 6903	0.866	22	1.181	30	0.906	23	0.093	42.4	4,200	18600	6,500	29000	19000
NKS 22	0.866	22	1.378	35	0.787	20	0.135	61.5	5,500	24500	6,300	28000	17000
NCS 1412	0.875	22.225	1.375	34.925	0.750	19.05	0.13	59	5,100	22800	6200	27500	19000

Precision Needle Bearings

NCS, NK, NKS, RNA48, RNA49, RNA69 SERIES

- Without inner rings
- Inch and metric
- Ground raceways with ribs
- Cage guided rollers

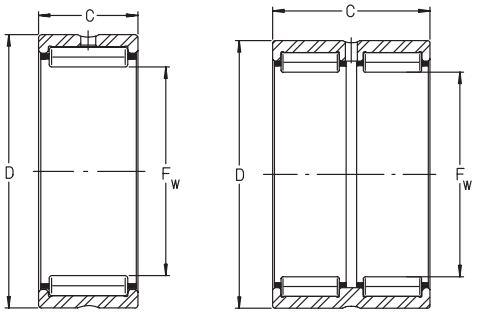

NCS, NK, RNA48, NKS RNA69

For details on part numbers, descriptive suffixes and various technical references, please refer to front of this section.
For engineering or technical information contact your local sales representative or call Distributor Sales (800)523-6572.

PART NUMBER	SHAFT F_w inch	SHAFT F_w mm	OD D inch	OD D mm	WIDTH C inch	WIDTH C mm	WGT. lbs	WGT. g	DYN. CAP. C lbf	DYN. CAP. C N	STAT. CAP. C_0 lbf	STAT. CAP. C_0 N	SPEED LIMIT OIL rpm
NCS 1416	0.875	22.225	1.375	34.925	1.000	25.4	0.18	82	6600	29500	8500	38000	19000
NCS 1512	0.938	23.813	1.438	36.513	0.750	19.05	0.14	63	5400	23900	6700	30000	18000
NK 24/16	0.945	24	1.260	32	0.630	16	0.07	31.9	3,350	15000	5,000	22300	18000
NK 24/20	0.945	24	1.260	32	0.787	20	0.088	40	4,250	19000	6,900	30500	18000
NKS 24	0.945	24	1.457	37	0.787	20	0.144	65.5	5,800	26000	7,000	31000	16000
NK 25/16	0.984	25	1.299	33	0.630	16	0.072	32.6	3,350	14900	5,000	22400	17000
NK 25/20	0.984	25	1.299	33	0.787	20	0.093	42	4,250	18800	6,900	30500	17000
RNA 4904	0.984	25	1.457	37	0.669	17	0.115	52.3	4,700	21000	5,700	25500	17000
RNA 6904	0.984	25	1.457	37	1.181	30	0.221	100	8,100	36000	11,500	51000	16000
NKS 25	0.984	25	1.496	38	0.787	20	0.150	68.1	6,200	27500	7500	33500	16000
NCS 1612	1.000	25.4	1.500	38.1	0.750	19.05	0.15	68	5300	23800	6800	30000	17000
NCS 1616	1.000	25.4	1.500	38.1	1.000	25.4	0.2	91	7200	32000	10000	44500	17000
NK 26/16	1.024	26	1.339	34	0.630	16	0.075	34	3,450	15300	5,300	23600	16000
NK 26/20	1.024	26	1.339	34	0.787	20	0.093	42	4,350	19400	7,200	32000	16000
NK 28/20	1.102	28	1.457	37	0.787	20	0.115	52.2	4,950	22000	7,600	34000	15000
NK 28/30	1.102	28	1.457	37	1.181	30	0.181	82	7,400	33000	12,800	57000	15000
RNA 49/22	1.102	28	1.535	39	0.669	17	0.111	50.2	5,100	22800	6,600	29500	16000
RNA 69/22	1.102	28	1.535	39	1.181	30	0.216	98	8,400	37500	12,400	55000	15000
NKS 28	1.102	28	1.654	42	0.787	20	0.184	83.6	6,400	28500	8,200	36500	14000
NCS 1816	1.125	28.575	1.625	41.275	1.000	25.4	0.22	100	7100	31500	10100	45000	15000
NCS 1820	1.125	28.575	1.625	41.275	1.250	31.75	0.28	127	10000	44500	15700	70000	15000
NK 29/20	1.142	29	1.496	38	0.787	20	0.118	53.7	4,900	21900	7,600	34000	15000
NK 29/30	1.142	29	1.496	38	1.181	30	0.186	84.3	7,300	32500	12,800	57000	15000
NK 30/20	1.181	30	1.575	40	0.787	20	0.143	65	5,100	22600	8,100	36000	14000
NK 30/30	1.181	30	1.575	40	1.181	30	0.216	97.9	7,500	33500	13,500	60000	14000
RNA 4905	1.181	30	1.654	42	0.669	17	0.135	61	5,300	23600	7,100	31500	15000
RNA 6905	1.181	30	1.654	42	1.181	30	0.247	112	8,800	39000	13,300	59000	14000
NKS 30	1.181	30	1.772	45	0.866	22	0.229	104	7,100	32000	9,000	40000	13000
NCS 2012	1.250	31.75	1.750	44.45	0.750	19.05	0.18	82	6000	26500	8300	37000	14000
NCS 2016	1.250	31.75	1.750	44.45	1.000	25.4	0.24	109	7700	34000	11500	51000	14000
NCS 2020	1.250	31.75	1.750	44.45	1.250	31.75	0.3	136	9900	44000	15900	71000	14000
NK 32/20	1.260	32	1.654	42	0.787	20	0.15	68	5,200	23100	8,400	37500	13000
NK 32/30	1.260	32	1.654	42	1.181	30	0.225	102	7,800	34500	14,200	63000	13000
RNA 49/28	1.260	32	1.772	45	0.669	17	0.161	73.2	5,500	24400	7,500	33500	13000
RNA 69/28	1.260	32	1.772	45	1.181	30	0.298	135	9,100	40500	14,200	63000	13000
NKS 32	1.260	32	1.850	47	0.866	22	0.242	110	7,500	33500	10,000	43500	12000
NCS 2216	1.375	34.925	1.875	47.625	1.000	25.4	0.26	118	8200	36500	12900	57000	13000
NCS 2220	1.375	34.925	1.875	47.625	1.250	31.75	0.33	150	11000	49000	18800	84000	13000
NK 35/20	1.378	35	1.772	45	0.787	20	0.163	73.8	5,500	24300	9,300	41500	12000
NK 35/30	1.378	35	1.772	45	1.181	30	0.247	112	8,200	36500	15,500	69000	12000
RNA 4906	1.378	35	1.850	47	0.669	17	0.153	69.4	5,600	25000	8,000	35500	13000
RNA 6906	1.378	35	1.850	47	1.181	30	0.278	126	9,800	43500	16,000	71000	12000
NKS 35	1.378	35	1.969	50	0.866	22	0.260	118	8,000	35000	10,500	47000	12000
NK 37/20	1.457	37	1.850	47	0.787	20	0.17	77	5,600	24900	9,800	43500	12000
NK 37/30	1.457	37	1.850	47	1.181	30	0.249	113	8,300	37000	16,400	73000	12000
NKS 37	1.457	37	2.047	52	0.866	22	0.271	123	8,200	36500	11,200	50000	11000

Precision Needle Bearings

NCS, NK, NKS, RNA48, RNA49, RNA69 SERIES

- Without inner rings
- Inch and metric
- Ground raceways with ribs
- Cage guided rollers

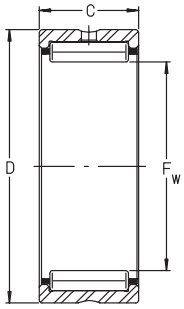

NCS, NK, RNA48, NKS

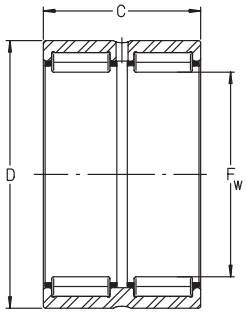

RNA69

For details on part numbers, descriptive suffixes and various technical references, please refer to front of this section.
For engineering or technical information contact your local sales representative or call Distributor Sales (800)523-6572.

PART NUMBER	SHAFT F_w inch	SHAFT F_w mm	OD D inch	OD D mm	WIDTH C inch	WIDTH C mm	WGT. lbs	WGT. g	DYN. CAP. C lbf	DYN. CAP. C N	STAT. CAP. C_0 lbf	STAT. CAP. C_0 N	SPEED LIMIT OIL rpm
NK 38/20	1.496	38	1.890	48	0.787	20	0.175	79.4	5,700	25500	10,100	45000	11000
NK 38/30	1.496	38	1.890	48	1.181	30	0.256	116	8,500	38000	17,100	76000	11000
NCS 2416	1.500	38.1	2.063	52.388	1.000	25.4	0.34	154	8400	37500	13700	61000	12000
NCS 2420	1.500	38.1	2.063	52.388	1.250	31.75	0.42	190	12600	56000	20400	91000	11000
NK 40/20	1.575	40	1.969	50	0.787	20	0.182	82.7	5,800	26000	10,600	47000	11000
NK 40/30	1.575	40	1.969	50	1.181	30	0.276	125	8,800	39000	17,800	79000	11000
RNA 49/32	1.575	40	2.047	52	0.787	20	0.196	89.1	6,900	30500	10,700	47500	12000
RNA 69/32	1.575	40	2.047	52	1.417	36	0.357	162	10,600	47000	18,400	82000	11000
NKS 40	1.575	40	2.165	55	0.866	22	0.284	129	8,500	38000	12,100	54000	10000
NCS 2616	1.625	41.275	2.188	55.563	1.000	25.4	0.36	163	10500	47000	16600	74000	11000
NCS 2620	1.625	41.275	2.188	55.563	1.250	31.75	0.46	209	11100	49500	20000	89000	11000
NK 42/20	1.654	42	2.047	52	0.787	20	0.189	85.8	6,000	26500	11,000	49000	10000
NK 42/30	1.654	42	2.047	52	1.181	30	0.287	130	8,900	39500	18,400	82000	10000
RNA 4907	1.654	42	2.165	55	0.787	20	0.236	107	7,100	31500	11,200	50000	11000
RNA 6907	1.654	42	2.165	55	1.417	36	0.426	193	10,800	48000	19,300	86000	10000
NK 43/20	1.693	43	2.087	53	0.787	20	0.19	86	6,100	27000	11,500	51000	10000
NK 43/30	1.693	43	2.087	53	1.181	30	0.293	133	9,100	40500	19,100	85000	10000
NKS 43	1.693	43	2.283	58	0.866	22	0.306	139	8,700	39000	12,800	57000	9500
NCS 2816	1.750	44.45	2.313	58.738	1.000	25.4	0.39	177	9400	42000	16500	73000	10000
NCS 2820	1.750	44.45	2.313	58.738	1.250	31.75	0.48	218	13300	59000	22800	102000	10000
NK 45/20	1.772	45	2.165	55	0.787	20	0.202	91.5	6,200	27500	11,900	53000	10000
NK 45/30	1.772	45	2.165	55	1.181	30	0.306	139	9,200	41000	19,800	88000	10000
NKS 45	1.772	45	2.362	60	0.866	22	0.319	145	9,100	40500	13,500	60000	9500
NK 47/20	1.850	47	2.244	57	0.787	20	0.208	94.5	6,400	28500	12,600	56000	9500
NK 47/30	1.850	47	2.244	57	1.181	30	0.313	142	9,700	43000	21,100	94000	9500
NCS 3016	1.875	47.625	2.438	61.913	1.000	25.4	0.41	186	9600	42500	17300	77000	9500
NCS 3020	1.875	47.625	2.438	61.913	1.250	31.75	0.51	231	12000	53000	23000	102000	9500
RNA 4908	1.890	48	2.441	62	0.866	22	0.309	140	9,700	43000	15,100	67000	9500
RNA 6908	1.890	48	2.441	62	1.575	40	0.564	256	14,800	66000	26,000	116000	9000
NK 50/25	1.969	50	2.441	62	0.984	25	0.348	158	8,500	38000	16,600	74000	9000
NK 50/35	1.969	50	2.441	62	1.378	35	0.487	221	11,200	50000	23,800	106000	9000
NKS 50	1.969	50	2.559	65	0.866	22	0.345	157	9,500	42500	15,000	67000	8500
NCS 3216	2.000	50.8	2.563	65.088	1.000	25.4	0.39	177	11400	51000	18800	84000	9000
NCS 3220	2.000	50.8	2.563	65.088	1.250	31.75	0.5	227	14300	64000	26500	117000	9000
RNA 4909	2.047	52	2.677	68	0.866	22	0.401	182	10,100	45000	16,400	73000	8500
RNA 6909	2.047	52	2.677	68	1.575	40	0.745	338	15,500	69000	28,500	127000	8000
NK 55/25	2.165	55	2.677	68	0.984	25	0.397	180	9,000	40000	18,400	82000	8000
NK 55/35	2.165	55	2.677	68	1.378	35	0.551	250	11,900	53000	26,500	118000	8000
NKS55	2.165	55	2.835	72	0.866	22	0.486	221	10,100	45000	16,600	74000	7500
NCS 3624	2.250	57.15	3.000	76.2	1.500	38.1	0.93	422	20400	91000	37500	168000	7500
RNA 4910	2.284	58	2.835	72	0.866	22	0.359	163	10,600	47000	18,000	80000	8000
RNA 6910	2.284	58	2.835	72	1.575	40	0.684	310	16,400	73000	31,500	139000	7500
NK 60/25	2.362	60	2.835	72	0.984	25	0.408	185	9,400	42000	20,200	90000	7500
NK 60/35	2.362	60	2.835	72	1.378	35	0.569	258	12,600	56000	29,000	130000	7500
NKS 60	2.362	60	3.150	80	1.102	28	0.737	335	14,000	63000	22,000	98000	7000
RNA 4911	2.480	63	3.150	80	0.984	25	0.562	255	13,000	58000	22,500	100000	7500

Precision Needle Bearings

NCS, NK, NKS, RNA48, RNA49, RNA69 SERIES

- Without inner rings
- Inch and metric
- Ground raceways with ribs
- Cage guided rollers

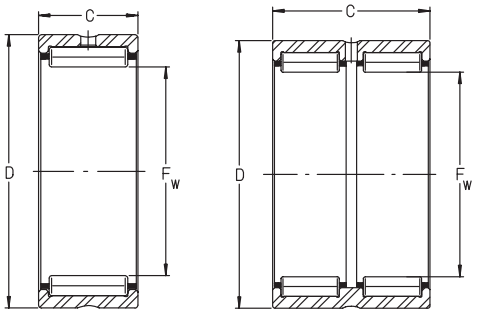

NCS, NK, RNA48, NKS RNA69

For details on part numbers, descriptive suffixes and various technical references, please refer to front of this section.
For engineering or technical information contact your local sales representative or call Distributor Sales (800)523-6572.

PART NUMBER	SHAFT F_w inch	SHAFT F_w mm	OD D inch	OD D mm	WIDTH C inch	WIDTH C mm	WGT. lbs	WGT. g	DYN. CAP. C lbf	DYN. CAP. C N	STAT. CAP. C_0 lbf	STAT. CAP. C_0 N	SPEED LIMIT OIL rpm
RNA 6911	2.480	63	3.150	80	1.772	45	1.036	470	20,200	90000	39,500	176000	7000
NCS 4024	2.500	63.5	3.250	82.55	1.500	38.1	1.04	472	19800	88000	34500	153000	7000
NK 65/25	2.559	65	3.071	78	0.984	25	0.487	221	9,900	44000	22,000	98000	7000
NK 65/35	2.559	65	3.071	78	1.378	35	0.684	310	13,300	59000	32,000	142000	7000
NKS 65	2.559	65	3.346	85	1.102	28	0.783	356	15,000	67000	24,300	108000	6500
NK 68/25	2.677	68	3.228	82	0.984	25	0.531	241	9,800	43500	20,000	89000	6500
NK 68/35	2.677	68	3.228	82	1.378	35	0.745	338	13,900	62000	31,500	139000	6500
RNA 4912	2.677	68	3.347	85	0.984	25	0.606	275	13,500	60000	24,300	108000	7000
RNA 6912	2.677	68	3.347	85	1.772	45	1.076	488	21,100	94000	43,000	191000	6500
NCS 4424	2.750	69.85	3.500	88.9	1.500	38.1	1.11	503	22300	99000	45000	201000	6500
NK 70/25	2.756	70	3.347	85	0.984	25	0.573	260	10,000	44500	20,700	92000	6500
NK 70/35	2.756	70	3.347	85	1.378	35	0.816	370	14,200	63000	32,500	144000	6500
NKS 70	2.756	70	3.543	90	1.102	28	0.836	380	15,300	68000	25,400	113000	6000
RNA 4913	2.835	72	3.543	90	0.984	25	0.688	312	13,700	61000	25,000	112000	6500
RNA 6913	2.835	72	3.543	90	1.772	45	1.279	580	21,400	95000	44,500	198000	6000
NK 73/25	2.874	73	3.543	90	0.984	25	0.666	302	11,900	53000	22,500	100000	6000
NK 73/35	2.874	73	3.543	90	1.378	35	0.944	428	16,900	75000	35,000	156000	6000
NK 75/25	2.953	75	3.622	92	0.984	25	0.695	315	12,100	54000	23,400	104000	6000
NK 75/35	2.953	75	3.622	92	1.378	35	0.981	445	17,300	77000	36,500	162000	6000
NKS 75	2.953	75	3.740	90	1.102	28	0.884	402	16,000	71000	27,700	123000	6000
NCS 4824	3.000	76.2	3.750	95.25	1.500	38.1	1.23	558	21900	98000	41500	194000	6000
NK 80/25	3.150	80	3.740	95	0.984	25	0.664	301	12,600	56000	27,000	119000	5500
NK 80/35	3.150	80	3.740	95	1.378	35	0.937	425	17,500	78000	41,500	184000	5500
RNA 4914	3.150	80	3.937	100	1.181	30	1.014	460	18,900	84000	35,000	156000	6000
RNA 6914	3.150	80	3.937	100	2.126	54	1.89	857	29,000	128000	60,000	265000	5500
NCS 5228	3.250	82.55	4.250	107.95	1.750	44.45	2.12	961	29500	131000	54000	240000	5500
NCS 5232	3.250	82.55	4.250	107.95	2.000	50.8	2.43	1102	33500	149000	63000	280000	5500
NK 85/25	3.347	85	4.134	105	0.984	25	0.937	425	15,500	69000	27,500	123000	5000
RNA 4915	3.347	85	4.134	105	1.181	30	1.078	489	19,300	86000	36,500	162000	5500
NK 85/35	3.347	85	4.134	105	1.378	35	1.323	600	22,000	98000	43,500	193000	5000
RNA 6915	3.347	85	4.134	105	2.126	54	2.062	935	29,000	130000	62,000	275000	5000
NCS 5632	3.500	88.9	4.500	114.3	2.000	50.8	2.57	1166	34500	152000	67000	295000	5000
NK 90/25	3.543	90	4.331	110	0.984	25	0.992	450	16,200	72000	29,500	132000	4900
RNA 4916	3.543	90	4.331	110	1.181	30	1.138	516	20,000	89000	39,000	174000	5000
NK 90/35	3.543	90	4.331	110	1.378	35	1.389	630	23,200	103000	47,000	208000	4900
RNA 6916	3.543	90	4.331	110	2.126	54	2.176	987	30,500	135000	67,000	300000	4900
NK 95/26	3.740	95	4.528	115	1.024	26	1.08	490	16,400	73000	31,000	137000	4700
NK 95/36	3.740	95	4.528	115	1.417	36	1.499	680	24,100	107000	50,000	223000	4700
NK 100/26	3.937	100	4.724	120	1.024	26	1.136	515	17,100	76000	33,000	146000	4500
RNA 4917	3.937	100	4.724	120	1.378	35	1.449	657	25,000	111000	53,000	237000	4800
NK 100/36	3.937	100	4.724	120	1.417	36	1.577	715	25,000	111000	53,000	237000	4500
RNA 6917	3.937	100	4.724	120	2.480	63	2.646	1200	37,500	166000	90,000	400000	4500
NK 105/26	4.134	105	4.921	125	1.024	26	1.191	540	17,500	78000	35,000	155000	4300
RNA 4918	4.134	105	4.921	125	1.378	35	1.643	745	25,500	114000	56,000	250000	4600
NK 105/36	4.134	105	4.921	125	1.417	36	1.572	713	25,500	114000	56,000	250000	4300
RNA 6918	4.134	105	4.921	125	2.480	63	2.933	1330	38,500	172000	96,000	425000	4300

Precision Needle Bearings

NCS, NK, NKS, RNA48, RNA49, RNA69 SERIES

- Without inner rings
- Inch and metric
- Ground raceways with ribs
- Cage guided rollers

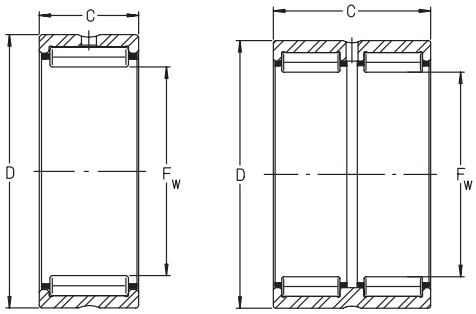

NCS, NK, RNA48, NKS RNA69

For details on part numbers, descriptive suffixes and various technical references, please refer to front of this section.
For engineering or technical information contact your local sales representative or call Distributor Sales (800)523-6572.

PART NUMBER	SHAFT F_w inch	SHAFT F_w mm	OD D inch	OD D mm	WIDTH C inch	WIDTH C mm	WGT. lbs	WGT. g	DYN. CAP. C lbf	DYN. CAP. C N	STAT. CAP. C_0 lbf	STAT. CAP. C_0 N	SPEED LIMIT OIL rpm
NCS 6832	4.250	107.95	5.250	133.35	2.000	50.8	2.91	1320	44000	196000	97000	430000	4200
NK 110/30	4.331	110	5.118	130	1.181	30	1.433	650	22,000	98000	47,000	210000	4100
RNA 4919	4.331	110	5.118	130	1.378	35	1.585	719	26,000	116000	58,000	260000	4400
NK 110/40	4.331	110	5.118	130	1.575	40	1.83	830	28,500	127000	65,000	290000	4100
RNA 6919	4.331	110	5.118	130	2.480	63	3.219	1460	39,000	174000	99,000	440000	4100
NCS 7240	4.500	114.3	6.000	152.4	2.500	63.5	4.16	1887	64000	285000	115000	510000	3800
RNA 4920	4.528	115	5.512	140	1.575	40	2.536	1150	29,000	128000	61,000	270000	4100
RNA 4822	4.724	120	5.512	140	1.181	30	1.477	670	21,100	94000	48,500	216000	3800
NK 120/40	4.724	120	5.512	140	1.575	40	2.007	910	25,500	113000	62,000	275000	3800
RNA 4922	4.921	125	5.906	150	1.575	40	2.734	1240	29,500	132000	65,000	290000	3800
RNA 4824	5.118	130	5.906	150	1.181	30	1.61	730	22,300	99000	54,000	239000	3500
RNA 4924	5.315	135	6.496	165	1.772	45	4.101	1860	40,500	181000	88,000	390000	3400
RNA 4826	5.709	145	6.496	165	1.378	35	2.183	990	26,500	118000	70,000	310000	3200
RNA 4926	5.906	150	7.087	180	1.969	50	4.873	2210	45,500	203000	106,000	470000	3200
RNA 4828	6.102	155	6.890	175	1.378	35	2.315	1050	27,000	120000	73,000	325000	3000
NK 155/32	6.102	155	7.087	180	1.260	32	2.646	1200	25,500	114000	58,000	260000	2900
RNA 4928	6.299	160	7.480	190	1.969	50	5.182	2350	47,000	209000	112,000	500000	3000
RNA 4830	6.496	165	7.480	190	1.575	40	3.528	1600	34,000	152000	90,000	400000	2800
RNA 4832	6.890	175	7.874	200	1.575	40	3.749	1700	36,000	160000	98,000	435000	2600
RNA 4834	7.284	185	8.465	215	1.772	45	5.601	2540	41,500	185000	115,000	510000	2500
RNA 4836	7.677	195	8.858	225	1.772	45	5.909	2680	43,500	194000	124,000	550000	2300
RNA 4838	8.268	210	9.449	240	1.969	50	7.078	3210	51,000	227000	155,000	690000	2200
RNA 4840	8.661	220	9.843	250	1.969	50	7.387	3350	52,000	230000	162,000	720000	2100
RNA 4844	9.449	240	10.630	270	1.969	50	7.982	3620	55,000	243000	178,000	790000	1900
RNA 4848	10.433	265	11.811	300	2.362	60	11.907	5400	80,000	355000	243,000	1080000	1700
RNA 4852	11.221	285	12.598	320	2.362	60	12.789	5800	83,000	370000	260,000	1160000	1600
RNA 4856	12.008	305	13.780	350	2.717	69	20.507	9300	101,000	450000	290,000	1300000	1500
RNA 4860	12.992	330	14.961	380	3.150	80	28.004	12700	139,000	620000	400,000	1770000	1400
RNA 4864	13.780	350	15.748	400	3.150	80	29.547	13400	142,000	630000	415,000	1850000	1300
RNA 4868	14.567	370	16.535	420	3.150	80	30.87	14000	144,000	640000	435,000	1940000	1200
RNA 4872	15.354	390	17.323	440	3.150	80	32.634	14800	148,000	660000	455,000	2020000	1200
RNA 4876	16.339	415	18.898	480	3.937	100	57.33	26000	225,000	1000000	650,000	2900000	1100

Precision Needle Bearings

RNA49..RS, RNA49..2RS SERIES

- Without inner rings
- Sealed

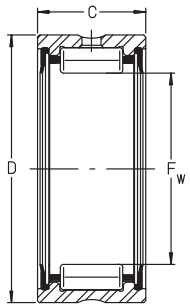

For details on part numbers, descriptive suffixes and various technical references, please refer to front of this section.
For engineering or technical information contact your local sales representative or call Distributor Sales (800)523-6572.

PART NUMBER	PART NUMBER	SHAFT F_w inch	SHAFT F_w mm	OD D inch	OD D mm	WIDTH C inch	WIDTH C mm	WGT. lbs	WGT. g	DYN. CAP. C lbf	DYN. CAP. C N	STAT. CAP. C_0 lbf	STAT. CAP. C_0 N	SPEED LIMIT GREASE rpm
RNA 4900 2RS	RNA 4900 RS	0.551	14	0.866	22	0.512	13	0.035	16	1,530	6800	1,550	6900	13000
RNA 4901 2RS	RNA 4901 RS	0.630	16	0.945	24	0.512	13	0.04	18	1,710	7600	1,870	8300	12000
RNA 4902 2RS	RNA 4902 RS	0.787	20	1.102	28	0.512	13	0.047	21.5	1,930	8600	2,320	10300	10000
RNA 4903 2RS	RNA 4903 RS	0.866	22	1.181	30	0.512	13	0.051	23	1,980	8800	2,470	11000	9000
RNA 4904 2RS	RNA 4904 RS	0.984	25	1.457	37	0.669	17	0.123	56	3,900	17300	4,450	19900	7500
RNA 4905 2RS	RNA 4905 RS	1.181	30	1.654	42	0.669	17	0.132	60	4,350	19300	5,400	24200	6500
RNA 4906 2RS	RNA 4906 RS	1.378	35	1.850	47	0.669	17	0.152	69	4,750	21100	6,400	28500	5500
RNA 4907 2RS	RNA 4907 RS	1.654	42	2.165	55	0.787	20	0.236	107	6,000	26500	8,900	39500	4800
RNA 4908 2RS	RNA 4908 RS	1.890	48	2.441	62	0.866	22	0.34	154	8,100	36000	11,900	53000	4200
RNA 4909 2RS	RNA 4909 RS	2.047	52	2.677	68	0.866	22	0.346	157	8,500	38000	13,300	59000	3900
RNA 4910 2RS	RNA 4910 RS	2.284	58	2.835	72	0.866	22	0.353	160	9,000	40000	14,400	64000	3500

Self Aligning Needle Bearings

PNA, RPNA SERIES

- Metric series
- Self contained aligning adaptor
- for static or initial misalignment
- With or without inner ring

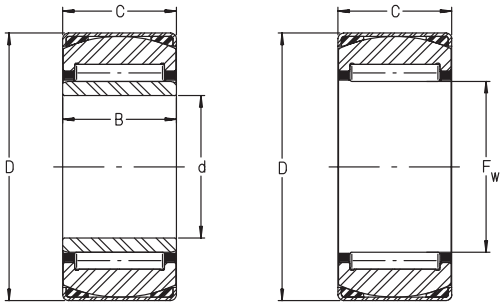

PNA RPNA

For details on part numbers, descriptive suffixes and various technical references, please refer to front of this section.
For engineering or technical information contact your local sales representative or call Distributor Sales (800)523-6572.

PART NUMBER	SHAFT d inch	SHAFT d mm	OD D inch	OD D mm	WIDTH C inch	WIDTH C mm	WEIGHT lbs	WEIGHT g	DYN. CAP. RADIAL lbf	DYN. CAP. RADIAL N	STAT. CAP. RADIAL lbf	STAT. CAP. RADIAL N	PERM. AXIAL SHIFT inch	PERM. AXIAL SHIFT mm	SPEED LIMIT OIL rpm	SPEED LIMIT GREASE rpm
PNA 12/28	0.472	12	1.102	28	0.472	12	0.082	37	1550	6900	1780	7900	0.02	0.5	24000	14000
PNA 15/32	0.591	15	1.260	32	0.630	16	0.137	62	2810	12500	3640	16200	0.02	0.5	22000	13000
PNA 17/35	0.669	17	1.378	35	0.630	16	0.161	73	2920	13000	3930	17500	0.02	0.5	21000	13000
PNA 20/42	0.787	20	1.654	42	0.787	20	0.300	136	4230	18800	6860	30500	0.02	0.5	18000	11000
PNA 22/44	0.866	22	1.732	44	0.787	20	0.320	145	4950	22000	7640	34000	0.02	0.5	16000	9500
PNA 25/47	0.984	25	1.850	47	0.787	20	0.346	157	5080	22600	8090	36000	0.02	0.5	15000	9000
PNA 30/52	1.181	30	2.047	52	0.787	20	0.399	181	5460	24300	9330	41500	0.02	0.5	13000	8000
PNA 35/55	1.378	35	2.165	55	0.787	20	0.390	177	5850	26000	10600	47000	0.02	0.5	11000	6500
PNA 40/62	1.575	40	2.441	62	0.787	20	0.501	227	6180	27500	11900	53000	0.02	0.5	10000	6000

PART NUMBER	SHAFT F_w inch	SHAFT F_w mm	OD D inch	OD D mm	WIDTH C inch	WIDTH C mm	WEIGHT lbs	WEIGHT g	DYN. CAP. RADIAL lbf	DYN. CAP. RADIAL N	STAT. CAP. RADIAL lbf	STAT. CAP. RADIAL N	PEED LIMIT OIL rpm	SPEED LIMIT GREASE rpm
RPNA 15/28	0.591	15	1.102	28	0.472	12	0.071	32	1550	6900	1780	7900	24000	14000
RPNA 18/32	0.709	18	1.260	32	0.630	16	0.115	52	2810	12500	3640	16200	22000	13000
RPNA 20/35	0.787	20	1.378	35	0.630	16	0.137	62	2920	13000	3930	17500	21000	13000
RPNA 25/42	0.984	25	1.654	42	0.787	20	0.24	109	4230	18800	6860	30500	18000	11000
RPNA 28/44	1.102	28	1.732	44	0.787	20	0.247	112	4950	22000	7640	34000	16000	9500
RPNA 30/47	1.181	30	1.850	47	0.787	20	0.276	125	5080	22600	8090	36000	15000	9000
RPNA 35/52	1.378	35	2.047	52	0.787	20	0.289	131	5460	24300	9330	41500	13000	8000
RPNA 40/55	1.575	40	2.165	55	0.787	20	0.311	141	5850	26000	10600	47000	11000	6500
RPNA 45/62	1.772	45	2.441	62	0.787	20	0.388	176	6200	27500	11900	53000	10000	6000

Inner Rings

IR SERIES

- Metric series
- Hardened
- Precision ground for use with precision needle bearings
- ★ With oil hole included

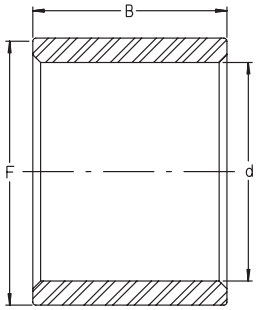

For details on part numbers, descriptive suffixes and various technical references, please refer to front of this section.
For engineering or technical information contact your local sales representative or call Distributor Sales (800)523-6572.

PART NUMBER	SHAFT d inch	SHAFT d mm	OD F inch	OD F mm	WIDTH B inch	WIDTH B mm	WEIGHT lbs	WEIGHT g
IR 5x8x12	0.197	5	0.315	8	0.472	12	0.006	2.79
IR 5x8x16	0.197	5	0.315	8	0.630	16	0.008	3.75
IR 6x9x12	0.236	6	0.354	9	0.472	12	0.007	3.17
IR 6x9x16	0.236	6	0.354	9	0.630	16	0.009	4.3
★IR 6x10x10	0.236	6	0.394	10	0.394	10	0.008	3.7
★IR 6x10x12	0.236	6	0.394	10	0.472	12	0.01	4.6
IR 7x10x10.5	0.276	7	0.394	10	0.413	10.5	0.007	3.09
IR 7x10x12	0.276	7	0.394	10	0.472	12	0.008	3.61
IR 7x10x16	0.276	7	0.394	10	0.630	16	0.011	4.9
★IR 8x12x10	0.315	8	0.472	12	0.394	10	0.011	4.8
IR 8x12x10.5	0.315	8	0.472	12	0.413	10.5	0.011	5
★IR 8x12x12	0.315	8	0.472	12	0.472	12	0.013	5.7
IR 8x12x12.5	0.315	8	0.472	12	0.492	12.5	0.013	5.9
IR 9x12x12	0.354	9	0.472	12	0.472	12	0.01	4.5
IR 9x12x16	0.354	9	0.472	12	0.630	16	0.013	6.1
IR 10x13x12.5	0.394	10	0.512	13	0.492	12.5	0.011	5.2
★IR 10x14x12	0.394	10	0.551	14	0.472	12	0.016	7.3
IR 10x14x13	0.394	10	0.551	14	0.512	13	0.016	7.4
★IR 10x14x14	0.394	10	0.551	14	0.551	14	0.018	8
IR 10x14x16	0.394	10	0.551	14	0.630	16	0.02	9.2
IR 10x14x20	0.394	10	0.551	14	0.787	20	0.026	11.6
IR 12x15x12	0.472	12	0.591	15	0.472	12	0.013	5.8
IR 12x15x12.5	0.472	12	0.591	15	0.492	12.5	0.013	6.1
IR 12x15x16	0.472	12	0.591	15	0.630	16	0.018	8
IR 12x15x16.5	0.472	12	0.591	15	0.650	16.5	0.018	8.1
IR 12x15x22.5	0.472	12	0.591	15	0.886	22.5	0.024	10.9
★IR 12x16x12	0.472	12	0.630	16	0.472	12	0.017	7.9
IR 12x16x13	0.472	12	0.630	16	0.512	13	0.019	8.7
★IR 12x16x14	0.472	12	0.630	16	0.551	14	0.021	9.5
IR 12x16x16	0.472	12	0.630	16	0.630	16	0.024	10.9
IR 12x16x20	0.472	12	0.630	16	0.787	20	0.03	13.5
IR 12x16x22	0.472	12	0.630	16	0.866	22	0.033	14.9
IR 14x17x17	0.551	14	0.669	17	0.669	17	0.022	10
IR 15x18x16	0.591	15	0.709	18	0.630	16	0.021	9.6
IR 15x18x16.5	0.591	15	0.709	18	0.650	16.5	0.022	9.9
IR 15x19x16	0.591	15	0.748	19	0.630	16	0.028	12.8
IR 15x19x20	0.591	15	0.748	19	0.787	20	0.036	16.4
★IR 15x20x12	0.591	15	0.787	20	0.472	12	0.027	12.1
IR 15x20x13	0.591	15	0.787	20	0.512	13	0.03	13.5
★IR 15x20x14	0.591	15	0.787	20	0.551	14	0.032	14.7
IR 15x20x23	0.591	15	0.787	20	0.906	23	0.054	24.4
IR 17x20x16	0.669	17	0.787	20	0.630	16	0.024	10.7
IR 17x20x16.5	0.669	17	0.787	20	0.650	16.5	0.024	11.1
IR 17x20x20	0.669	17	0.787	20	0.787	20	0.03	13.5
IR 17x20x20.5	0.669	17	0.787	20	0.807	20.5	0.03	13.8
IR 17x20x30.5	0.669	17	0.787	20	1.201	30.5	0.045	20.6

Inner Rings
IR SERIES

- Metric series
- Hardened
- Precision ground for use with precision needle bearings
- ★ With oil hole included

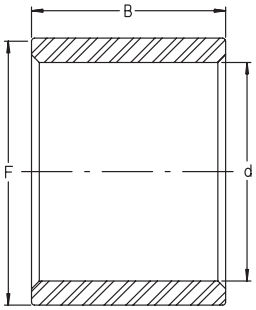

For details on part numbers, descriptive suffixes and various technical references, please refer to front of this section.
For engineering or technical information contact your local sales representative or call Distributor Sales (800)523-6572.

PART NUMBER	SHAFT d inch	SHAFT d mm	OD F inch	OD F mm	WIDTH B inch	WIDTH B mm	WEIGHT lbs	WEIGHT g
IR 17x21x16	0.669	17	0.827	21	0.630	16	0.032	14.3
IR 17x21x20	0.669	17	0.827	21	0.787	20	0.04	18
IR 17x22x13	0.669	17	0.866	22	0.512	13	0.033	14.9
★IR 17x22x14	0.669	17	0.866	22	0.551	14	0.036	16.4
IR 17x22x16	0.669	17	0.866	22	0.630	16	0.041	18.7
IR 17x22x23	0.669	17	0.866	22	0.906	23	0.06	27.1
IR 17x24x20	0.669	17	0.945	24	0.787	20	0.074	33.6
IR 20x24x16	0.787	20	0.945	24	0.630	16	0.036	16.5
IR 20x24x20	0.787	20	0.945	24	0.787	20	0.047	21.3
★IR 20x25x16	0.787	20	0.984	25	0.630	16	0.047	21.1
IR 20x25x17	0.787	20	0.984	25	0.669	17	0.049	22.4
★IR 20x25x18	0.787	20	0.984	25	0.709	18	0.054	24.3
IR 20x25x20	0.787	20	0.984	25	0.787	20	0.061	27.5
IR 20x25x20.5	0.787	20	0.984	25	0.807	20.5	0.062	28.2
IR 20x25x26.5	0.787	20	0.984	25	1.043	26.5	0.08	36.1
IR 20x25x30	0.787	20	0.984	25	1.181	30	0.09	40.9
IR 20x25x38.5	0.787	20	0.984	25	1.516	38.5	0.116	52.5
IR 20x28x20	0.787	20	1.102	28	0.787	20	0.1	45.2
IR 22x26x16	0.866	22	1.024	26	0.630	16	0.039	17.5
IR 22x26x20	0.866	22	1.024	26	0.787	20	0.051	23.2
IR 22x28x17	0.866	22	1.102	28	0.669	17	0.066	29.8
IR 22x28x20	0.866	22	1.102	28	0.787	20	0.077	35
IR 22x28x20.5	0.866	22	1.102	28	0.807	20.5	0.079	36
IR 22x28x30	0.866	22	1.102	28	1.181	30	0.12	54.4
IR 25x29x20	0.984	25	1.142	29	0.787	20	0.056	25.5
IR 25x29x30	0.984	25	1.142	29	1.181	30	0.087	39.3
★IR 25x30x16	0.984	25	1.181	30	0.630	16	0.057	26
IR 25x30x17	0.984	25	1.181	30	0.669	17	0.061	27.5
★IR 25x30x18	0.984	25	1.181	30	0.709	18	0.066	29.8
IR 25x30x20	0.984	25	1.181	30	0.787	20	0.072	32.6
IR 25x30x20.5	0.984	25	1.181	30	0.807	20.5	0.074	33.5
IR 25x30x26.5	0.984	25	1.181	30	1.043	26.5	0.095	43.3
IR 25x30x30	0.984	25	1.181	30	1.181	30	0.11	50.1
IR 25x30x32	0.984	25	1.181	30	1.260	32	0.117	53
IR 25x30x38.5	0.984	25	1.181	30	1.516	38.5	0.141	63.8
IR 25x32x22	0.984	25	1.260	32	0.866	22	0.114	51.7
IR 28x32x17	1.102	28	1.260	32	0.669	17	0.054	24.5
IR 28x32x20	1.102	28	1.260	32	0.787	20	0.063	28.4
IR 28x32x30	1.102	28	1.260	32	1.181	30	0.097	43.8
IR 29x32x13	1.142	29	1.260	32	0.512	13	0.033	14.8
IR 30x35x13	1.181	30	1.378	35	0.512	13	0.055	25
IR 30x35x16	1.181	30	1.378	35	0.630	16	0.068	30.8
IR 30x35x17	1.181	30	1.378	35	0.669	17	0.071	32.3
★IR 30x35x18	1.181	30	1.378	35	0.709	18	0.078	35.3
IR 30x35x20	1.181	30	1.378	35	0.787	20	0.088	40
IR 30x35x20.5	1.181	30	1.378	35	0.807	20.5	0.09	40.7

Inner Rings

IR SERIES

- Metric series
- Hardened
- Precision ground for use with precision needle bearings
- ★ With oil hole included

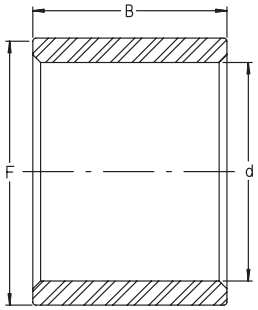

For details on part numbers, descriptive suffixes and various technical references, please refer to front of this section.
For engineering or technical information contact your local sales representative or call Distributor Sales (800)523-6572.

PART NUMBER	SHAFT d inch	SHAFT d mm	OD F inch	OD F mm	WIDTH B inch	WIDTH B mm	WEIGHT lbs	WEIGHT g
IR 30x35x26	1.181	30	1.378	35	1.024	26	0.111	50.3
IR 30x35x30	1.181	30	1.378	35	1.181	30	0.13	58.9
IR 30x37x18	1.181	30	1.457	37	0.709	18	0.11	50
IR 30x37x22	1.181	30	1.457	37	0.866	22	0.134	60.8
★IR 30x38x20	1.181	30	1.496	38	0.787	20	0.143	64.8
IR 32x37x20	1.260	32	1.457	37	0.787	20	0.093	42
IR 32x37x30	1.260	32	1.457	37	1.181	30	0.138	62.7
IR 32x40x20	1.260	32	1.575	40	0.787	20	0.15	68
IR 32x40x36	1.260	32	1.575	40	1.417	36	0.273	124
IR 33x37x13	1.299	33	1.457	37	0.512	13	0.048	21.9
IR 35x40x17	1.378	35	1.575	40	0.669	17	0.084	38.3
IR 35x40x20	1.378	35	1.575	40	0.787	20	0.098	44.4
IR 35x40x20.5	1.378	35	1.575	40	0.807	20.5	0.102	46.1
IR 35x40x30	1.378	35	1.575	40	1.181	30	0.15	67.9
★IR 35x42x20	1.378	35	1.654	42	0.787	20	0.141	63.9
IR 35x42x20.5	1.378	35	1.654	42	0.807	20.5	0.146	66
★IR 35x42x21	1.378	35	1.654	42	0.827	21	0.149	67.7
★IR 35x42x23	1.378	35	1.654	42	0.906	23	0.163	74
IR 35x42x36	1.378	35	1.654	42	1.417	36	0.258	117
IR 35x43x22	1.378	35	1.693	43	0.866	22	0.181	82
IR 38x43x20	1.496	38	1.693	43	0.787	20	0.106	48.1
IR 38x43x30	1.496	38	1.693	43	1.181	30	0.162	73.6
IR 40x45x17	1.575	40	1.772	45	0.669	17	0.094	42.5
IR 40x45x20	1.575	40	1.772	45	0.787	20	0.111	50.5
IR 40x45x20.5	1.575	40	1.772	45	0.807	20.5	0.116	52.5
IR 40x45x30	1.575	40	1.772	45	1.181	30	0.17	77.1
IR 40x48x22	1.575	40	1.890	48	0.866	22	0.204	92.3
★IR 40x48x23	1.575	40	1.890	48	0.906	23	0.215	97.3
IR 40x48x40	1.575	40	1.890	48	1.575	40	0.375	170
★IR 40x50x20	1.575	40	1.969	50	0.787	20	0.234	106
IR 40x50x22	1.575	40	1.969	50	0.866	22	0.26	118
IR 42x47x20	1.654	42	1.850	47	0.787	20	0.118	53.5
IR 42x47x30	1.654	42	1.850	47	1.181	30	0.179	81
IR 45x50x25	1.772	45	1.969	50	0.984	25	0.157	71.1
IR 45x50x25.5	1.772	45	1.969	50	1.004	25.5	0.163	73.7
IR 45x50x35	1.772	45	1.969	50	1.378	35	0.223	101
IR 45x52x22	1.772	45	2.047	52	0.866	22	0.196	89
★IR 45x52x23	1.772	45	2.047	52	0.906	23	0.205	93
IR 45x52x40	1.772	45	2.047	52	1.575	40	0.362	164
★IR 45x55x20	1.772	45	2.165	55	0.787	20	0.258	117
IR 45x55x22	1.772	45	2.165	55	0.866	22	0.287	130
★IR 50x55x20	1.969	50	2.165	55	0.787	20	0.138	62.6
IR 50x55x25	1.969	50	2.165	55	0.984	25	0.172	77.8
IR 50x55x35	1.969	50	2.165	55	1.378	35	0.247	112
IR 50x58x22	1.969	50	2.283	58	0.866	22	0.254	115
★IR 50x58x23	1.969	50	2.283	58	0.906	23	0.262	119

Inner Rings
IR SERIES

- Metric series
- Hardened
- Precision ground for use with precision needle bearings
- ★ With oil hole included

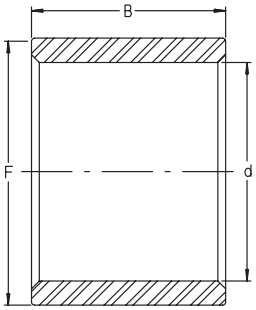

For details on part numbers, descriptive suffixes and various technical references, please refer to front of this section.
For engineering or technical information contact your local sales representative or call Distributor Sales (800)523-6572.

PART NUMBER	SHAFT d inch	SHAFT d mm	OD F inch	OD F mm	WIDTH B inch	WIDTH B mm	WEIGHT lbs	WEIGHT g
IR 50x58x40	1.969	50	2.283	58	1.575	40	0.461	209
★IR 50x60x20	1.969	50	2.362	60	0.787	20	0.284	129
IR 50x60x25	1.969	50	2.362	60	0.984	25	0.359	163
IR 50x60x28	1.969	50	2.362	60	1.102	28	0.404	183
IR 55x60x25	2.165	55	2.362	60	0.984	25	0.19	86
IR 55x60x35	2.165	55	2.362	60	1.378	35	0.267	121
IR 55x63x25	2.165	55	2.480	63	0.984	25	0.311	141
IR 55x63x45	2.165	55	2.480	63	1.772	45	0.564	256
IR 55x65x28	2.165	55	2.559	65	1.102	28	0.437	198
IR 60x68x25	2.362	60	2.677	68	0.984	25	0.335	152
IR 60x68x35	2.362	60	2.677	68	1.378	35	0.47	213
IR 60x68x45	2.362	60	2.677	68	1.772	45	0.606	275
IR 60x70x25	2.362	60	2.756	70	0.984	25	0.43	195
IR 60x70x28	2.362	60	2.756	70	1.102	28	0.476	216
IR 65x72x25	2.559	65	2.835	72	0.984	25	0.313	142
IR 65x72x45	2.559	65	2.835	72	1.772	45	0.571	259
IR 65x73x25	2.559	65	2.874	73	0.984	25	0.362	164
IR 65x73x35	2.559	65	2.874	73	1.378	35	0.512	232
IR 65x75x28	2.559	65	2.953	75	1.102	28	0.507	230
IR 70x80x25	2.756	70	3.150	80	0.984	25	0.494	224
IR 70x80x30	2.756	70	3.150	80	1.181	30	0.589	267
IR 70x80x35	2.756	70	3.150	80	1.378	35	0.69	313
IR 70x80x54	2.756	70	3.150	80	2.126	54	1.074	487
IR 70x80x56	2.756	70	3.150	80	2.205	56	1.116	506
IR 75x85x25	2.953	75	3.346	85	0.984	25	0.525	238
IR 75x85x30	2.953	75	3.346	85	1.181	30	0.633	287
IR 75x85x35	2.953	75	3.346	85	1.378	35	0.741	336
IR 75x85x54	2.953	75	3.346	85	2.126	54	1.147	520
IR 80x90x25	3.150	80	3.543	90	0.984	25	0.56	254
IR 80x90x30	3.150	80	3.543	90	1.181	30	0.67	304
IR 80x90x35	3.150	80	3.543	90	1.378	35	0.783	355
IR 80x90x54	3.150	80	3.543	90	2.126	54	1.213	550
IR 85x95x26	3.346	85	3.740	95	1.024	26	0.617	280
IR 85x95x36	3.346	85	3.740	95	1.417	36	0.86	390
IR 85x100x35	3.346	85	3.937	100	1.378	35	1.279	580
IR 85x100x63	3.346	85	3.937	100	2.480	63	2.315	1050
IR 90x100x26	3.543	90	3.937	100	1.024	26	0.648	294
IR 90x100x30	3.543	90	3.937	100	1.181	30	0.75	340
IR 90x100x36	3.543	90	3.937	100	1.417	36	0.895	406
IR 90x105x35	3.543	90	4.134	105	1.378	35	1.345	610
IR 90x105x63	3.543	90	4.134	105	2.480	63	2.448	1110
IR 95x105x26	3.740	95	4.134	105	1.024	26	0.69	313
IR 95x105x36	3.740	95	4.134	105	1.417	36	0.948	430
IR 95x110x35	3.740	95	4.331	110	1.378	35	1.418	643
IR 95x110x63	3.740	95	4.331	110	2.480	63	2.58	1170
IR 100x110x30	3.937	100	4.331	110	1.181	30	0.816	370

Inner Rings
IR SERIES

- Metric series
- Hardened
- Precision ground for use with precision needle bearings
- ★ With oil hole included

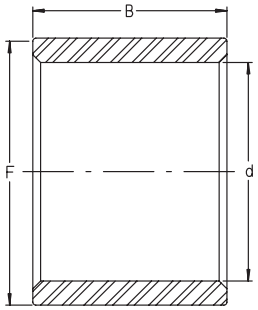

For details on part numbers, descriptive suffixes and various technical references, please refer to front of this section.
For engineering or technical information contact your local sales representative or call Distributor Sales (800)523-6572.

PART NUMBER	SHAFT d inch	SHAFT d mm	OD F inch	OD F mm	WIDTH B inch	WIDTH B mm	WEIGHT lbs	WEIGHT g
IR 100x110x40	3.937	100	4.331	110	1.575	40	1.114	505
IR 100x115x40	3.937	100	4.528	115	1.575	40	1.709	775
IR 110x120x30	4.331	110	4.724	120	1.181	30	0.902	409
IR 110x125x40	4.331	110	4.921	125	1.575	40	1.852	840
IR 120x130x30	4.724	120	5.118	130	1.181	30	0.975	442
IR 120x135x45	4.724	120	5.315	135	1.772	45	2.205	1000
IR 130x145x35	5.118	130	5.709	145	1.378	35	1.885	855
IR 130x150x50	5.118	130	5.906	150	1.969	50	3.726	1690
IR 140x155x35	5.512	140	6.102	155	1.378	35	2.022	917
IR 140x160x50	5.512	140	6.299	160	1.969	50	3.969	1800
IR 150x165x40	5.906	150	6.496	165	1.575	40	2.47	1120
IR 160x175x40	6.299	160	6.890	175	1.575	40	2.646	1200
IR 170x185x45	6.693	170	7.283	185	1.772	45	3.197	1450
IR 180x195x45	7.087	180	7.677	195	1.772	45	3.33	1510
IR 190x210x50	7.480	190	8.268	210	1.969	50	5.314	2410
IR 200x220x50	7.874	200	8.661	220	1.969	50	5.49	2490
IR 220x240x50	8.661	220	9.449	240	1.969	50	6.064	2750
IR 240x265x60	9.449	240	10.433	265	2.362	60	10.143	4600
IR 260x285x60	10.236	260	11.22	285	2.362	60	10.981	4980
IR 280x305x69	11.024	280	12.008	305	2.717	69	13.451	6100
IR 300x330x80	11.811	300	12.992	330	3.150	80	20.286	9200
IR 320x350x80	12.598	320	13.780	350	3.150	80	21.609	9800
IR 340x370x80	13.386	340	14.567	370	3.150	80	22.491	10200
IR 360x390x80	14.173	360	15.354	390	3.150	80	24.035	10900
IR 380x415x100	14.961	380	16.339	415	3.937	100	37.485	17000

Inner Rings
LR SERIES

- Metric series
- Hardened
- Fine machined for use with shell bearings

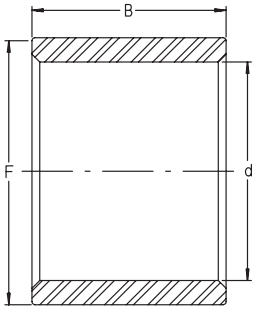

For details on part numbers, descriptive suffixes and various technical references, please refer to front of this section.
For engineering or technical information contact your local sales representative or call Distributor Sales (800)523-6572.

PART NUMBER	SHAFT d inch	SHAFT d mm	OD F inch	OD F mm	WIDTH B inch	WIDTH B mm	WEIGHT lbs	WEIGHT g
LR 7x10x10.5	0.276	7	0.394	10	0.413	10.5	0.007	3.09
LR 8x12x10.5	0.315	8	0.472	12	0.413	10.5	0.011	5
LR 8x12x12.5	0.315	8	0.472	12	0.492	12.5	0.013	5.9
LR 10x13x12.5	0.394	10	0.512	13	0.492	12.5	0.011	5.2
LR 12x15x12.5	0.472	12	0.591	15	0.492	12.5	0.013	6.1
LR 12x15x16.5	0.472	12	0.591	15	0.650	16.5	0.018	8.1
LR 12x15x22.5	0.472	12	0.591	15	0.886	22.5	0.024	10.9
LR 15x18x12.5	0.591	15	0.709	18	0.492	12.5	0.016	7.2
LR 15x18x16.5	0.591	15	0.709	18	0.650	16.5	0.022	9.9
LR 17x20x16.5	0.669	17	0.787	20	0.650	16.5	0.024	11.1
LR 17x20x20.5	0.669	17	0.787	20	0.807	20.5	0.03	13.8
LR 17x20x30.5	0.669	17	0.787	20	1.201	30.5	0.045	20.6
LR 20x25x12.5	0.787	20	0.984	25	0.492	12.5	0.036	16.3
LR 20x25x16.5	0.787	20	0.984	25	0.650	16.5	0.048	21.7
LR 20x25x20.5	0.787	20	0.984	25	0.807	20.5	0.062	28.2
LR 20x25x26.5	0.787	20	0.984	25	1.043	26.5	0.08	36.1
LR 20x25x38.5	0.787	20	0.984	25	1.516	38.5	0.116	52.5
LR 22x28x20.5	0.866	22	1.102	28	0.807	20.5	0.079	36
LR 25x30x12.5	0.984	25	1.181	30	0.492	12.5	0.044	20
LR 25x30x16.5	0.984	25	1.181	30	0.650	16.5	0.059	26.7
LR 25x30x20.5	0.984	25	1.181	30	0.807	20.5	0.074	33.5
LR 25x30x26.5	0.984	25	1.181	30	1.043	26.5	0.095	43.3
LR 25x30x38.5	0.984	25	1.181	30	1.516	38.5	0.141	63.8
LR 30x35x12.5	1.181	30	1.378	35	0.492	12.5	0.051	23.3
LR 30x35x16.5	1.181	30	1.378	35	0.650	16.5	0.069	31.4
LR 30x35x20.5	1.181	30	1.378	35	0.807	20.5	0.09	40.7
LR 35x40x12.5	1.378	35	1.575	40	0.492	12.5	0.06	27.2
LR 35x40x16.5	1.378	35	1.575	40	0.650	16.5	0.082	37.4
LR 35x40x20.5	1.378	35	1.575	40	0.807	20.5	0.102	46.1
LR 40x45x16.5	1.575	40	1.772	45	0.650	16.5	0.091	41.4
LR 40x45x20.5	1.575	40	1.772	45	0.807	20.5	0.116	52.5
LR 45x50x20.5	1.772	45	1.969	50	0.807	20.5	0.13	58.8
LR 45x50x25.5	1.772	45	1.969	50	1.004	25.5	0.163	73.7
LR 50x55x20.5	1.969	50	2.165	55	0.807	20.5	0.141	64.1

Inner Rings

PI SERIES

- Inch series
- Hardened with oil hole and groove
- Precision ground for use with shell or precision ground bearings

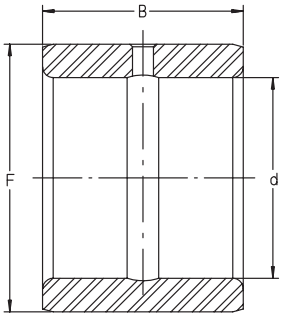

For details on part numbers, descriptive suffixes and various technical references, please refer to front of this section.
For engineering or technical information contact your local sales representative or call Distributor Sales (800)523-6572.

PART NUMBER	SHAFT d inch	SHAFT d mm	OD F inch	OD F mm	WIDTH B inch	WIDTH B mm	WEIGHT lbs	WEIGHT g
PI050808	0.313	7.938	0.500	12.7	0.500	12.7	0.016	7.3
PI060908	0.375	9.525	0.563	14.288	0.500	12.7	0.019	8.5
PI060912	0.375	9.525	0.563	14.288	0.750	19.05	0.03	13.4
PI061008	0.375	9.525	0.625	15.875	0.500	12.7	0.026	12.0
PI061012	0.375	9.525	0.625	15.875	0.750	19.05	0.04	18.0
PI081208	0.500	12.7	0.750	19.05	0.500	12.7	0.033	15.0
PI081212	0.500	12.7	0.750	19.05	0.750	19.05	0.05	22.6
PI081216	0.500	12.7	0.750	19.05	1.000	25.4	0.066	30.1
PI101406	0.625	15.875	0.875	22.225	0.375	9.525	0.03	13.6
PI101408	0.625	15.875	0.875	22.225	0.500	12.7	0.04	18
PI101412	0.625	15.875	0.875	22.225	0.750	19.05	0.06	27.2
PI101416	0.625	15.875	0.875	22.225	1.0001	25.4	0.08	36.3
PI121608	0.750	19.05	1.000	25.4	0.500	12.7	0.046	21.1
PI121612	0.750	19.05	1.000	25.4	0.750	19.05	0.07	31.6
PI121616	0.750	19.05	1.000	25.4	1.000	25.4	0.093	42.1
PI121620	0.750	19.05	1.000	25.4	1.2550	31.75	0.14	63.5
PI141808	0.875	22.225	1.125	28.575	0.500	12.7	0.05	22.7
PI141812	0.875	22.225	1.125	28.575	0.750	19.05	0.08	36.3
PI141816	0.875	22.225	1.125	28.575	1.000	25.4	0.11	49.9
PI141820	0.875	22.225	1.125	28.575	1.250	31.75	0.13	59
PI162012	1.000	25.4	1.250	31.75	0.750	19.05	0.09	40.6
PI162016	1.000	25.4	1.250	31.75	1.000	25.4	0.119	54.1
PI162020	1.000	25.4	1.250	31.75	1.250	31.75	0.149	67.7
PI182208	1.125	28.575	1.375	34.925	0.500	12.7	0.07	31.8
PI182212	1.125	28.575	1.375	34.925	0.750	19.05	0.099	45.1
PI182216	1.125	28.575	1.375	34.925	1.000	25.4	0.13	58.9
PI182220	1.125	28.575	1.375	34.925	1.250	31.75	0.17	77.1
PI202416	1.250	31.75	1.500	38.1	1.000	25.4	0.146	66.2
PI202420	1.250	31.75	1.500	38.1	1.250	31.75	0.182	82.7
PI212616	1.313	33.338	1.625	41.275	1.000	25.4	0.195	88.3
PI222610	1.375	34.925	1.625	41.275	0.625	15.875	0.1	45.4
PI222620	1.375	34.925	1.625	41.275	1.250	31.75	0.2	90.7
PI232816	1.437	36.512	1.750	44.45	1.000	25.4	0.22	99.8
PI232820	1.437	36.512	1.750	44.45	1.250	31.75	0.27	122.4
PI232824	1.437	36.512	1.750	44.45	1.500	38.1	0.33	149.7
PI242812	1.500	38.1	1.750	44.45	0.750	19.05	0.13	58.9
PI242816	1.500	38.1	1.750	44.45	1.000	25.4	0.18	81.6
PI242820	1.500	38.1	1.750	44.45	1.250	31.75	0.221	100.1
PI253016	1.563	39.688	1.875	47.625	1.000	25.4	0.23	104.3
PI253020	1.563	39.688	1.875	47.625	1.250	31.75	0.29	131.5
PI263216	1.625	41.275	2.000	50.8	1.000	25.4	0.26	117.9
PI263220	1.625	41.275	2.000	50.8	1.250	31.75	0.361	163.5
PI273216	1.687	42.862	2.0002	50.8	1.000	25.4	0.24	108.9
PI273220	1.687	42.862	2.000	50.8	1.250	31.75	0.306	138.6
PI283624	1.750	44.45	2.250	57.15	1.500	38.1	0.637	288.7
PI324024	2.000	50.8	2.500	63.5	1.500	38.1	0.725	328.6

Inner Rings
PI SERIES

- Inch series
- Hardened with oil hole and groove
- Precision ground for use with shell or precision ground bearings

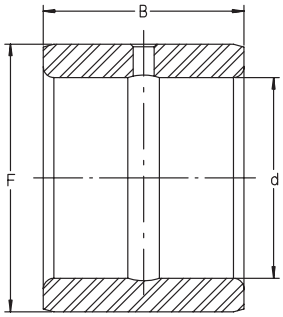

For details on part numbers, descriptive suffixes and various technical references, please refer to front of this section.
For engineering or technical information contact your local sales representative or call Distributor Sales (800)523-6572.

PART NUMBER	SHAFT d inch	SHAFT d mm	OD F inch	OD F mm	WIDTH B inch	WIDTH B mm	WEIGHT lbs	WEIGHT g
PI364024	2.250	57.15	2.500	63.5	1.500	38.1	0.378	171.4
PI364424	2.250	57.15	2.750	69.85	1.510	38.35	0.809	367
PI404824	2.500	63.5	3.000	76.2	1.500	38.1	0.891	404
PI445228	2.750	69.85	3.250	82.55	1.750	44.45	1.12	508
PI445232	2.750	69.85	3.250	82.55	2.000	50.8	1.29	585
PI485632	3.000	76.2	3.500	88.9	2.000	50.8	1.382	626.9

NOTES

Section Contents
CAM FOLLOWERS

BEARING SERIES	BEARING DESCRIPTION	PAGE
INFORMATION	CAM FOLLOWER, GENERAL OVERVIEW	52
INFORMATION	TRACK ROLLER, GENERAL OVERVIEW	52
P / N IDENTIFICATION	CAM FOLLOWERS	53
P / N IDENTIFICATION	TRACK ROLLERS	53
YOKE SELECTOR	**COMBINED INCH AND METRIC YOKE TYPE TRACK ROLLERS SORTED BY SHAFT**	**56**
STO	YOKE TYPE METRIC CAGED NEEDLE TRACK ROLLER	61
RSTO	YOKE TYPE METRIC CAGED NEEDLE TRACK ROLLER WITHOUT INNER	61
NATR	YOKE TYPE METRIC CAGED NEEDLE TRACK ROLLER	62
NATR..PP	YOKE TYPE METRIC SEALED CAGED NEEDLE TRACK ROLLER	62
NATV	YOKE TYPE METRIC FULL COMPLEMENT NEEDLE TRACK ROLLER	63
NATV..PP	YOKE TYPE METRIC SEALED FULL COMPLEMENT NEEDLE TRACK ROLLER	63
NUTR	YOKE TYPE METRIC LABYRINTH SEALED CYLINDRICAL ROLLER TRACK ROLLER	64
PWTR..2RS	YOKE TYPE METRIC SEALED CYLINDRICAL ROLLER TRACK ROLLER	65
NNTR..2Z	YOKE TYPE METRIC SHIELDED CYLINDRICAL ROLLER TRACK ROLLER	66
NNTR..2ZL	YOKE TYPE METRIC SEALED CYLINDRICAL ROLLER TRACK ROLLER	66
RNA22..2RS	YOKE TYPE METRIC SEALED NEEDLE TRACK ROLLER WITHOUT INNER	67
NA22..2RS	YOKE TYPE METRIC SEALED NEEDLE TRACK ROLLER	68
RF	YOKE TYPE INCH FULL COMPLEMENT NEEDLE TRACK ROLLER	69
RF..PP	YOKE TYPE INCH SEALED FULL COMPLEMENT NEEDLE TRACK ROLLER	69
LR5..KDDU	YOKE TYPE METRIC SHIELDED DOUBLE ROW BALL TRACK ROLLER	70
LR5..NPPU	YOKE TYPE METRIC SEALED DOUBLE ROW BALL TRACK ROLLER	70
LR2..NPPU	YOKE TYPE METRIC SEALED SINGLE ROW BALL TRACK ROLLER	74
LR6..KDDU	YOKE TYPE METRIC SHIELDED SINGLE ROW BALL TRACK ROLLER	74
LR6..NPPU	YOKE TYPE METRIC SEALED SINGLE ROW BALL TRACK ROLLER	74
LR2..RRU	YOKE TYPE METRIC SEALED SINGLE ROW BALL TRACK ROLLER	76
STUD SELECTOR	**COMBINED INCH AND METRIC STUD TYPE CAM FOLLOWERS SORTED BY OD**	**77**
NIP	GREASE NIPPLES FOR CAM FOLLOWERS	78
VD	LUBRICATION PLUGS FOR CAM FOLLOWERS	78
KR	STUD TYPE METRIC CAGED NEEDLE CAM FOLLOWER	79
KR..PP	STUD TYPE METRIC SEALED CAGED NEEDLE CAM FOLLOWER	79
KRV	STUD TYPE METRIC FULL COMPLEMENT NEEDLE CAM FOLLOWER	80
KRV..PP	STUD TYPE METRIC SEALED FULL COMPLEMENT NEEDLE CAM FOLLOWER	80
NUKR	STUD TYPE METRIC LABYRINTH SEALED CYLINDRICAL ROLLER CAM FOLLOWER	81
PWKR..2RS	STUD TYPE METRIC SEALED CYLINDRICAL ROLLER CAM FOLLOWER	82
CF	STUD TYPE INCH FULL COMPLEMENT NEEDLE CAM FOLLOWER	83
CF..PP	STUD TYPE INCH SEALED FULL COMPLEMENT NEEDLE CAM FOLLOWER	83
CFE	STUD TYPE INCH FULL COMPLEMENT NEEDLE CAM FOLLOWER	83

General Information
CAM FOLLOWERS

PRODUCT DESCRIPTION

INA Yoke Type Track Rollers

- Available in designs to meet ISO, popular metric and inch series cross sections.
- Metric product with crowned OD standard and available with cylindrical OD.
- Inch product with cylindrical OD standard and available with crowned OD.
- Designed with outer races to act as tires independent of rigid housings, effective load ratings include reverse bending stress allowances.
- Available with needle roller complement, cylindrical roller complements and ball complements to match machine needs.
- Available with sliding or rolling thrust contact or without axial guidance.
- Sealed versions include gap, labyrinth and contact types.
- Available with reduced runout.
- Relubrication groove in inner ring bore.

INA Stud Type Cam Followers

- Available in designs to meet ISO, popular metric and inch series cross sections.
- Metric product with crowned OD standard and available with cylindrical OD.
- Inch product with cylindrical OD standard and available with crowned OD.
- Designed with outer races to act as tires independent of rigid housings, effective load ratings include reverse bending stress allowances.
- Available with needle roller or cylindrical roller complements.
- Available with sliding or rolling thrust contact or without axial guidance.
- Sealed versions include gap, labyrinth and contact types.
- Available with reduced runout.
- Available with eccentric sleeves for adjusting the center of action.

Part Number Identification
CAM FOLLOWERS

YOKE TYPE TRACK ROLLERS WITHOUT AXIAL GUIDANCE

RSTO, STO

RSTO **20** **TN**

PREFIX

RSTO	Metric, Needle Roller, Outer Ring Without Ribs, Without Inner Ring
STO	Metric, Needle Roller, Outer Ring Without Ribs, With Inner Ring

Shaft
In Millimeters

SUFFIX

X	Cylindrical Outer Surface
TN	Plastic Cage
P.	Precision Class

YOKE TYPE TRACK ROLLERS WITH AXIAL GUIDANCE

NATR, NATV

NATR **10** **PP**

PREFIX

NATR	Metric, Needle Roller, Axial Guidance By Washers, Gap Seals With Inner Ring
NATV	Metric, Needle Roller, Axial Guidance By Washers, Full Complement, Gap Seals, With Inner Ring

Shaft
In Millimeters

SUFFIX

PP	Two Contact Seals
X	Cylindrical Outside Surface
P.	Precision Class

Part Number Identification
CAM FOLLOWERS

YOKE TYPE TRACK ROLLERS WITH AXIAL GUIDANCE

NUTR **15** **42** **P5**

PREFIX

NUTR	Metric, Cylindrical Roller, Axial Guidance By Rolling Elements, Full Complement, Labyrinth Seals, With Inner Ring
PWTR	Metric, Cylindrical Roller, Axial Guidance By Rolling Elements, Full Complement, Contact Seals, With Inner Ring

Shaft
In Millimeters

OD
In Millimeters
Heavy Series

SUFFIX

X	Cylindrical Outer Surface
P	Precision Class

YOKE TYPE TRACK ROLLERS WITHOUT AXIAL GUIDANCE / SEALED

RNA 22, NA 22

RNA 22 **01** **2RS**

PREFIX

RNA 22	Metric, Needle Roller, Without Inner Ring
NA 22	Metric, Needle Roller, With Inner Ring

ID per ISO Standards, in mm
/6, /8 – 6, 8 mm
00, 01, 02, 03 = 10, 12, 15, 17 mm
04 – 10 = Number x 5

SUFFIX

2RS	Sealed On Both Sides
X	Cylindrical Outside Surface
P	Precision Class

YOKE / STUD TYPE CAM FOLLOWERS INCH SERIES

RF, CF

RF **12** **PP**

PREFIX

RF	Full Complement, Yoke Type
CF	Full Complement, Stud Type
E	Eccentric Sleeve

Tire OD
Sixteenths
Of An Inch

SUFFIX

NONE	Gap Seals
PP	Contact Seals
SK	Hexagonal Socket
Y	Crowned OD

Part Number Identification
CAM FOLLOWERS

YOKE TYPE TRACK ROLLER
BALL BEARING TYPE ELEMENT

LR

LR 6 08 NPPU

Yoke Type Track Roller

2..	Standard Sereis
6..	Miniature Series
60..	Light Series
52..	Standard Double Row Series
53..	Heavy Duty Double Row Series

BORE
per ISO code

SUFFIX

NPPU	Sealed With Crowned OD
RRU	Sealed On Extended Inner, Crowned OD
KDDU	Shielded With Crowned OD
KDD	Shielded With Cylindrical OD
NPP	Sealed With Cylindrical OD

STUD TYPE CAM FOLLOWERS
NEEDLE & CYLINDRICAL ROLLER
TYPE ELEMENT

KR, KRV, NUKR, PWKR

KR E 30 PP

PREFIX

KR	Metric, Axial Guidance By Rib & Washer, Gap Seals
KRV	Metric, Axial Guidance By Rib & Washer, Full Complement, Gap Seals
NUKR	Metric, Axial Guidance By Rolling Elements, Full Complement, Labyrinth Seals
PWKR	Metric, 2 Row Cylindrical Roller, Full Complement, With Contact Seals

E	Eccentric Collar

OD
In Millimeters

SUFFIX

PP	Sealing Rings (KR, KRV Only)
X	Cylindrical Outer Surface
SK	Hexagonal Socket In End Of Stud
P.	Precision Class
2RS	Contact Seals (PWKR Only)

Yoke Type Cam Follower Selector

INCH AND METRIC SERIES

- Sorted by roller OD
- Series specific details can be found on subsequent pages.
  Please refer to Section Contents or Index for the correct page numbers.

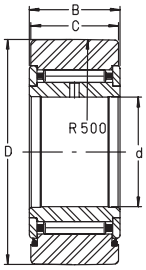

NATR SHOWN FOR DIMENSION REFERENCE ONLY

For details on part numbers, descriptive suffixes and various technical references, please refer to front of this section.
For engineering or technical information contact your local sales representative or call Distributor Sales (800)523-6572.

PART NUMBER	SHAFT d inch	SHAFT d mm	OD D inch	OD D mm	WIDTH INNER B inch	WIDTH INNER B mm	WIDTH OUTER C inch	WIDTH OUTER C mm	SPEED LIMIT rpm
LR604NPPU	0.158	4	0.512	13	0.158	4	0.158	4	40,000
LR605KDDU	0.197	5	0.630	16	0.197	5	0.197	5	38,000
LR605NPPU	0.197	5	0.630	16	0.197	5	0.197	5	38,000
NATR 5	0.197	5	0.630	16	0.472	12	0.433	11	22,000
NATV 5	0.197	5	0.630	16	0.472	12	0.433	11	8,500
LR50/5NPPU	0.197	5	0.669	17	0.276	7	0.276	7	23,500
LR50/6NPPU	0.236	6	0.748	19	0.354	9	0.354	9	22,500
LR606KDDU	0.236	6	0.748	19	0.236	6	0.236	6	36,000
LR606NPPU	0.236	6	0.748	19	0.236	6	0.236	6	36,000
NATR 6	0.236	6	0.748	19	0.472	12	0.433	11	20,000
NATV 6	0.236	6	0.748	19	0.472	12	0.433	11	7,000
STO 6 TN	0.236	6	0.748	19	0.394	10	0.386	9.8	26,000
RF12	0.250	6.350	0.750	19.050	0.563	14.288	0.500	12.7	6,000
LR50/7NPPU	0.276	7	0.866	22	0.394	10	0.394	10	21,000
LR607KDDU	0.276	7	0.866	22	0.236	6	0.236	6	34,000
LR607NPPU	0.276	7	0.866	22	0.236	6	0.236	6	34,000
RF14	0.250	6.350	0.875	22.225	0.563	14.288	0.500	12.7	6,000
LR50/8NPPU	0.315	8	0.945	24	0.433	11	0.433	11	20,000
LR608KDDU	0.315	8	0.945	24	0.276	7	0.276	7	32,000
LR608NPPU	0.315	8	0.945	24	0.276	7	0.276	7	32,000
NATR 8	0.315	8	0.945	24	0.591	15	0.551	14	15,000
NATV 8	0.315	8	0.945	24	0.591	15	0.551	14	5,500
STO 8 TN	0.315	8	0.945	24	0.394	10	0.386	9.8	20,800
RF16	0.313	7.938	1.000	25.400	0.688	17.463	0.625	15.875	5,000
LR5000NPPU	0.394	10	1.102	28	0.472	12	0.472	12	18,500
LR6000 NPPU	0.394	10	1.102	28	0.315	8	0.315	8	28,000
RF18	0.313	7.937	1.125	28.575	0.687	17.460	0.625	15.875	5,000
NATR 10	0.394	10	1.181	30	0.591	15	0.551	14	11,000
NATV 10	0.394	10	1.181	30	0.591	15	0.551	14	4,500
STO 10	0.394	10	1.181	30	0.472	12	0.465	11.8	14,300
LR5001NPPU	0.472	12	1.181	30	0.472	12	0.472	12	17,500
LR6001 NPPU	0.472	12	1.181	30	0.315	8	0.315	8	26,000
RF20	0.375	9.525	1.250	31.750	0.813	20.638	0.750	19.05	4,400
LR200KDD	0.394	10	1.260	32	0.354	9	0.354	9	16,000
LR200NPP	0.394	10	1.260	32	0.354	9	0.354	9	16,000
LR200NPPU	0.394	10	1.260	32	0.354	9	0.354	9	16,000
LR5200KDD	0.394	10	1.260	32	0.551	14	0.551	14	16,000
LR5200KDDU	0.394	10	1.260	32	0.551	14	0.551	14	16,000
LR5200NPPU	0.394	10	1.260	32	0.551	14	0.551	14	16,000
NATR 12	0.472	12	1.260	32	0.591	15	0.551	14	9,000
NATV 12	0.472	12	1.260	32	0.591	15	0.551	14	3,900
STO 12	0.472	12	1.260	32	0.472	12	0.465	11.8	11,700
RF22	0.375	9.525	1.375	34.925	0.813	20.638	0.750	19.05	4,400
LR201NPP	0.472	12	1.378	35	0.394	10	0.394	10	15,000
LR201NPPU	0.472	12	1.378	35	0.394	10	0.394	10	15,000
LR201RR	0.472	12	1.378	35	0.591	15	0.394	10	15,000

Yoke Type Cam Follower Selector

INCH AND METRIC SERIES

- Sorted by roller OD
- Series specific details can be found on subsequent pages.
  Please refer to Section Contents or Index for the correct page numbers.

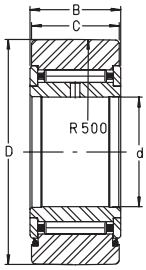

NATR SHOWN FOR DIMENSION REFERENCE ONLY

For details on part numbers, descriptive suffixes and various technical references, please refer to front of this section.
For engineering or technical information contact your local sales representative or call Distributor Sales (800)523-6572.

PART NUMBER	SHAFT d inch	SHAFT d mm	OD D inch	OD D mm	WIDTH INNER B inch	WIDTH INNER B mm	WIDTH OUTER C inch	WIDTH OUTER C mm	SPEED LIMIT rpm
LR201RRU	0.472	12	1.378	35	0.591	15	0.394	10	15,000
LR5201KDD	0.472	12	1.378	35	0.626	15.9	0.626	15.9	15,000
LR5201KDDU	0.472	12	1.378	35	0.626	15.9	0.626	15.9	15,000
LR5201NPPU	0.472	12	1.378	35	0.626	15.9	0.626	15.9	15,000
LR5002NPPU	0.591	15	1.378	35	0.512	13	0.512	13	14,500
LR6002 NPPU	0.591	15	1.378	35	0.354	9	0.354	9	22,000
NATR 15	0.591	15	1.378	35	0.748	19	0.709	18	7,000
NATV 15	0.591	15	1.378	35	0.748	19	0.709	18	3,400
NUTR 15	0.591	15	1.378	35	0.748	19	0.709	18	6,500
PWTR 15 2RS	0.591	15	1.378	35	0.748	19	0.709	18	6,000
STO 15	0.591	15	1.378	35	0.472	12	0.465	11.8	8,450
RF24	0.438	11.113	1.500	38.100	0.937	23.810	0.875	22.225	3,400
LR202NPP	0.591	15	1.575	40	0.433	11	0.433	11	14,000
LR202NPPU	0.591	15	1.575	40	0.433	11	0.433	11	14,000
LR202RR	0.591	15	1.575	40	0.567	14.4	0.433	11	14,000
LR202RRU	0.591	15	1.575	40	0.567	14.4	0.433	11	14,000
LR5202KDD	0.591	15	1.575	40	0.626	15.9	0.626	15.9	14,000
LR5202KDDU	0.591	15	1.575	40	0.626	15.9	0.626	15.9	14,000
LR5202NPPU	0.591	15	1.575	40	0.626	15.9	0.626	15.9	14,000
LR5003NPPU	0.669	17	1.575	40	0.551	14	0.551	14	12,500
LR6003 NPPU	0.669	17	1.575	40	0.394	10	0.394	10	19,000
NATR 17	0.669	17	1.575	40	0.827	21	0.787	20	6,000
NATV 17	0.669	17	1.575	40	0.827	21	0.787	20	2,900
NUTR 17	0.669	17	1.575	40	0.827	21	0.787	20	5,500
PWTR 17 2RS	0.669	17	1.575	40	0.827	21	0.787	20	5,000
STO 17	0.669	17	1.575	40	0.630	16	0.622	15.8	7,150
RF26	0.438	11.113	1.625	41.275	0.937	23.810	0.875	22.225	3,400
LR5301NPPU	0.472	12	1.654	42	0.748	19	0.748	19	10,500
NUTR 15 42	0.591	15	1.654	42	0.748	19	0.709	18	6,500
PWTR 15 42 2RS	0.591	15	1.654	42	0.748	19	0.709	18	6,000
RF28	0.500	12.700	1.750	44.450	1.063	26.990	1.000	25.4	2,700
LR5302NPPU	0.591	15	1.850	47	0.748	19	0.748	19	10,000
LR203NPP	0.669	17	1.850	47	0.472	12	0.472	12	11,000
LR203NPPU	0.669	17	1.850	47	0.472	12	0.472	12	11,000
LR203RR	0.669	17	1.850	47	0.721	18.3	0.472	12	11,000
LR203RRU	0.669	17	1.850	47	0.721	18.3	0.472	12	11,000
LR5203KDD	0.669	17	1.850	47	0.689	17.5	0.689	17.5	11,000
LR5203KDDU	0.669	17	1.850	47	0.689	17.5	0.689	17.5	11,000
LR5203NPPU	0.669	17	1.850	47	0.689	17.5	0.689	17.5	11,000
NUTR 17 47	0.669	17	1.850	47	0.827	21	0.787	20	5,500
PWTR 17 47 2RS	0.669	17	1.850	47	0.827	21	0.787	20	5,000
LR5004NPPU	0.787	20	1.850	47	0.630	16	0.630	16	11,000
LR6004 NPPU	0.787	20	1.850	47	0.472	12	0.472	12	17,000
NATR 20	0.787	20	1.850	47	0.984	25	0.945	24	4,900
NATV 20	0.787	20	1.850	47	0.984	25	0.945	24	2,600
NUTR 20	0.787	20	1.850	47	0.984	25	0.945	24	4,200

Yoke Type Cam Follower Selector

INCH AND METRIC SERIES

- Sorted by roller OD
- Series specific details can be found on subsequent pages.
  Please refer to Section Contents or Index for the correct page numbers.

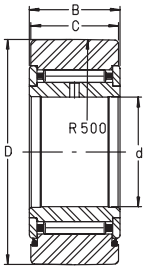

NATR SHOWN FOR DIMENSION REFERENCE ONLY

For details on part numbers, descriptive suffixes and various technical references, please refer to front of this section.
For engineering or technical information contact your local sales representative or call Distributor Sales (800)523-6572.

PART NUMBER	SHAFT d inch	SHAFT d mm	OD D inch	OD D mm	WIDTH INNER B inch	WIDTH INNER B mm	WIDTH OUTER C inch	WIDTH OUTER C mm	SPEED LIMIT rpm
PWTR 20 2RS	0.787	20	1.850	47	0.984	25	0.945	24	3,800
STO 20	0.787	20	1.850	47	0.630	16	0.622	15.8	6,110
RF30	0.500	12.700	1.875	47.625	1.063	26.990	1.000	25.4	2,700
RF32	0.625	15.875	2.000	50.800	1.313	33.340	1.250	31.75	2,300
LR5303NPPU	0.669	17	2.047	52	0.874	22.2	0.874	22.2	9,500
LR204NPP	0.787	20	2.047	52	0.551	14	0.551	14	10,000
LR204NPPU	0.787	20	2.047	52	0.551	14	0.551	14	10,000
LR204RR	0.787	20	2.047	52	0.697	17.7	0.551	14	10,000
LR204RRU	0.787	20	2.047	52	0.697	17.7	0.551	14	10,000
LR5204KDD	0.787	20	2.047	52	0.811	20.6	0.811	20.6	10,000
LR5204KDDU	0.787	20	2.047	52	0.811	20.6	0.811	20.6	10,000
LR5204NPPU	0.787	20	2.047	52	0.811	20.6	0.811	20.6	10,000
NUTR 20 52	0.787	20	2.047	52	0.984	25	0.945	24	4,200
PWTR 20 52 2RS	0.787	20	2.047	52	0.984	25	0.945	24	3,800
LR5005NPPU	0.984	25	2.047	52	0.630	16	0.630	16	9,500
NATR 25	0.984	25	2.047	52	0.984	25	0.945	24	3,600
NATV 25	0.984	25	2.047	52	0.984	25	0.945	24	2,100
NUTR 25	0.984	25	2.047	52	0.984	25	0.945	24	3,400
PWTR 25 2RS	0.984	25	2.047	52	0.984	25	0.945	24	3,800
STO 25	0.984	25	2.047	52	0.630	16	0.622	15.8	4,680
RF36	0.625	15.875	2.250	57.150	1.313	33.340	1.250	31.75	2,300
LR5304KDD	0.787	20	2.441	62	0.874	22.2	0.874	22.2	9,000
LR5304KDDU	0.787	20	2.441	62	0.874	22.2	0.874	22.2	9,000
LR5304NPPU	0.787	20	2.441	62	0.874	22.2	0.874	22.2	9,000
LR205NPP	0.984	25	2.441	62	0.591	15	0.591	15	9,000
LR205NPPU	0.984	25	2.441	62	0.591	15	0.591	15	9,000
LR205RR	0.984	25	2.441	62	0.827	21	0.591	15	9,000
LR205RRU	0.984	25	2.441	62	0.827	21	0.591	15	9,000
LR5205KDD	0.984	25	2.441	62	0.811	20.6	0.811	20.6	9,000
LR5205KDDU	0.984	25	2.441	62	0.811	20.6	0.811	20.6	9,000
LR5205NPPU	0.984	25	2.441	62	0.811	20.6	0.811	20.6	9,000
NUTR 25 62	0.984	25	2.441	62	0.984	25	0.945	24	3,400
PWTR 25 62 2RS	0.984	25	2.441	62	0.984	25	0.945	24	3,800
LR5006NPPU	1.181	30	2.441	62	0.748	19	0.748	19	8,000
NATR 30	1.181	30	2.441	62	1.142	29	1.102	28	2,600
NATV 30	1.181	30	2.441	62	1.142	29	1.102	28	1,700
NUTR 30	1.181	30	2.441	62	1.142	29	1.102	28	2,600
PWTR 30 2RS	1.181	30	2.441	62	1.142	29	1.102	28	2,200
STO 30	1.181	30	2.441	62	0.787	20	0.780	19.8	3,250
RF40	0.750	19.050	2.500	63.500	1.563	39.690	1.500	38.1	2,000
LR5007NPPU	1.378	35	2.677	68	0.787	20	0.787	20	6,600
RF44	0.750	19.050	2.750	69.850	1.563	39.690	1.500	38.1	2,000
LR5305KDD	0.984	25	2.835	72	1.000	25.4	1.000	25.4	7,900
LR5305KDDU	0.984	25	2.835	72	1.000	25.4	1.000	25.4	7,900
LR5305NPPU	0.984	25	2.835	72	1.000	25.4	1.000	25.4	7,900
LR206NPP	1.181	30	2.835	72	0.630	16	0.630	16	7,100

Yoke Type Cam Follower Selector

INCH AND METRIC SERIES

- Sorted by roller OD
- Series specific details can be found on subsequent pages.
  Please refer to Section Contents or Index for the correct page numbers.

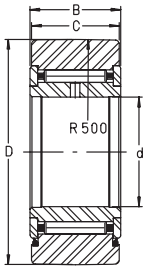

NATR SHOWN FOR DIMENSION REFERENCE ONLY

For details on part numbers, descriptive suffixes and various technical references, please refer to front of this section.
For engineering or technical information contact your local sales representative or call Distributor Sales (800)523-6572.

PART NUMBER	SHAFT d inch	SHAFT d mm	OD D inch	OD D mm	WIDTH INNER B inch	WIDTH INNER B mm	WIDTH OUTER C inch	WIDTH OUTER C mm	SPEED LIMIT rpm
LR206NPPU	1.181	30	2.835	72	0.630	16	0.630	16	7,100
LR206RR	1.181	30	2.835	72	0.945	24	0.630	16	7,100
LR206RRU	1.181	30	2.835	72	0.945	24	0.630	16	7,100
LR5206KDD	1.181	30	2.835	72	0.937	23.8	0.937	23.8	7,100
LR5206KDDU	1.181	30	2.835	72	0.937	23.8	0.937	23.8	7,100
LR5206NPPU	1.181	30	2.835	72	0.937	23.8	0.937	23.8	7,100
NUTR 30 72	1.181	30	2.835	72	1.142	29	1.102	28	2,600
PWTR 30 72 2RS	1.181	30	2.835	72	1.142	29	1.102	28	2,200
NATR 35	1.378	35	2.835	72	1.142	29	1.102	28	2,000
NATV 35	1.378	35	2.835	72	1.142	29	1.102	28	1,400
NUTR 35	1.378	35	2.835	72	1.142	29	1.102	28	2,100
PWTR 35 2RS	1.378	35	2.835	72	1.142	29	1.102	28	1,800
STO 35	1.378	35	2.835	72	0.787	20	0.780	19.8	2,860
RF48	1.000	25.400	3.000	76.200	1.813	46.040	1.750	44.45	1,600
LR5306NPPU	1.181	30	3.150	80	1.189	30.2	1.189	30.2	6,200
LR207NPP	1.378	35	3.150	80	0.669	17	0.669	17	5,600
LR207NPPU	1.378	35	3.150	80	0.669	17	0.669	17	5,600
LR207RR	1.378	35	3.150	80	0.984	25	0.669	17	5,600
LR207RRU	1.378	35	3.150	80	0.984	25	0.669	17	5,600
LR5207KDD	1.378	35	3.150	80	1.063	27	1.063	27	5,600
LR5207KDDU	1.378	35	3.150	80	1.063	27	1.063	27	5,600
LR5207NPPU	1.378	35	3.150	80	1.063	27	1.063	27	5,600
NUTR 35 80	1.378	35	3.150	80	1.142	29	1.102	28	2,100
PWTR 35 80 2RS	1.378	35	3.150	80	1.142	29	1.102	28	1,800
NATR 40	1.575	40	3.150	80	1.260	32	1.181	30	1,700
NATV 40	1.575	40	3.150	80	1.260	32	1.181	30	1,300
NUTR 40	1.575	40	3.150	80	1.260	32	1.181	30	1,600
PWTR 40 2RS	1.575	40	3.150	80	1.260	32	1.181	30	1,500
STO 40	1.575	40	3.150	80	0.787	20	0.780	19.8	2,210
RF52	1.000	25.400	3.250	82.550	1.813	46.040	1.750	44.45	1,600
LR208NPP	1.575	40	3.347	85	0.709	18	0.709	18	5,000
LR208NPPU	1.575	40	3.347	85	0.709	18	0.709	18	5,000
LR208RR	1.575	40	3.347	85	1.063	27	0.709	18	5,000
LR208RRU	1.575	40	3.347	85	1.063	27	0.709	18	5,000
LR5208KDD	1.575	40	3.347	85	1.189	30.2	1.189	30.2	5,000
LR5208KDDU	1.575	40	3.347	85	1.189	30.2	1.189	30.2	5,000
LR5208NPPU	1.575	40	3.347	85	1.189	30.2	1.189	30.2	5,000
NATR 45	1.772	45	3.347	85	1.260	32	1.181	30	1,500
NUTR 45	1.772	45	3.347	85	1.260	32	1.181	30	1,400
PWTR 45 2RS	1.772	45	3.347	85	1.260	32	1.181	30	1,300
STO 45	1.772	45	3.347	85	0.787	20	0.780	19.8	1,950
RF56	1.125	28.575	3.500	88.900	2.063	52.390	2.000	50.8	1,400
LR5307KDD	1.378	35	3.543	90	1.374	34.9	1.374	34.9	5,100
LR5307KDDU	1.378	35	3.543	90	1.374	34.9	1.374	34.9	5,100
LR5307NPPU	1.378	35	3.543	90	1.374	34.9	1.374	34.9	5,100
NUTR 40 90	1.575	40	3.543	90	1.260	32	1.181	30	1,600

Yoke Type Cam Follower Selector

INCH AND METRIC SERIES

- Sorted by roller OD
- Series specific details can be found on subsequent pages.
  Please refer to Section Contents or Index for the correct page numbers.

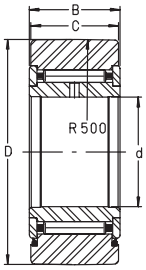

NATR SHOWN FOR DIMENSION REFERENCE ONLY

For details on part numbers, descriptive suffixes and various technical references, please refer to front of this section.
For engineering or technical information contact your local sales representative or call Distributor Sales (800)523-6572.

PART NUMBER	SHAFT d inch	SHAFT d mm	OD D inch	OD D mm	WIDTH INNER B inch	WIDTH INNER B mm	WIDTH OUTER C inch	WIDTH OUTER C mm	SPEED LIMIT rpm
PWTR 40 90 2RS	1.575	40	3.543	90	1.260	32	1.181	30	1,500
LR209NPP	1.772	45	3.543	90	0.748	19	0.748	19	4,500
LR209NPPU	1.772	45	3.543	90	0.748	19	0.748	19	4,500
NATR 50	1.969	50	3.543	90	1.260	32	1.181	30	1,300
NATV 50	1.969	50	3.543	90	1.260	32	1.181	30	1,000
NUTR 50	1.969	50	3.543	90	1.260	32	1.181	30	1,300
PWTR 50 2RS	1.969	50	3.543	90	1.260	32	1.181	30	1,100
STO 50	1.969	50	3.543	90	0.787	20	0.780	19.8	1,690
LR5308KDD	1.575	40	3.937	100	1.437	36.5	1.437	36.5	4,700
LR5308KDDU	1.575	40	3.937	100	1.437	36.5	1.437	36.5	4,700
LR5308NPPU	1.575	40	3.937	100	1.437	36.5	1.437	36.5	4,700
NUTR 45 100	1.772	45	3.937	100	1.260	32	1.181	30	1,400
PWTR 45 100 2RS	1.772	45	3.937	100	1.260	32	1.181	30	1,300
RF64	1.250	31.750	4.000	101.600	2.313	58.740	2.250	57.15	1,300
NUTR 50 110	1.969	50	4.331	110	1.260	32	1.181	30	1,300
PWTR 50 110 2RS	1.969	50	4.331	110	1.260	32	1.181	30	1,100
NNTR 50X130X65 2Z	1.969	50	5.118	130	2.559	65	2.480	63	1,100
NNTR 50X130X65 2ZL	1.969	50	5.118	130	2.559	65	2.480	63	1,100
NNTR 55X140X70 2Z	2.165	55	5.512	140	2.756	70	2.677	68	850
NNTR 55X140X70 2ZL	2.165	55	5.512	140	2.756	70	2.677	68	850
NNTR 60X150X75 2Z	2.362	60	5.906	150	2.953	75	2.874	73	800
NNTR 60X150X75 2ZL	2.362	60	5.906	150	2.953	75	2.874	73	800
NNTR 65X160X75 2Z	2.559	65	6.299	160	2.953	75	2.874	73	700
NNTR 65X160X75 2ZL	2.559	65	6.299	160	2.953	75	2.874	73	700
NNTR 70X180X85 2Z	2.756	70	7.087	180	3.347	85	3.268	83	600
NNTR 70X180X85 2ZL	2.756	70	7.087	180	3.347	85	3.268	83	600
NNTR 80X200X90 2Z	3.150	80	7.874	200	3.543	90	3.465	88	500
NNTR 80X200X90 2ZL	3.150	80	7.874	200	3.543	90	3.465	88	500
NNTR 90X220X100 2Z	3.543	90	8.661	220	3.937	100	3.858	98	400
NNTR 90X220X100 2ZL	3.543	90	8.661	220	3.937	100	3.858	98	400
NNTR 100X240X105 2Z	3.937	100	9.449	240	4.134	105	4.055	103	340
NNTR 100X240X105 2ZL	3.937	100	9.449	240	4.134	105	4.055	103	340
NNTR 110X260X115 2Z	4.331	110	10.236	260	4.528	115	4.449	113	300
NNTR 110X260X115 2ZL	4.331	110	10.236	260	4.528	115	4.449	113	300
NNTR 120X290X135 2Z	4.724	120	11.417	290	5.315	135	5.236	133	260
NNTR 120X290X135 2ZL	4.724	120	11.417	290	5.315	135	5.236	133	260
NNTR 130X310X146 2Z	5.118	130	12.205	310	5.748	146	5.669	144	240
NNTR 130X310X146 2ZL	5.118	130	12.205	310	5.748	146	5.669	144	240
NNTR 140X340X162 2Z	5.512	140	13.385	340	6.378	162	6.299	160	200
NNTR 140X340X162 2ZL	5.512	140	13.385	340	6.378	162	6.299	160	200
NNTR 150X360X173 2Z	5.906	150	14.173	360	6.811	173	6.732	171	180
NNTR 150X360X173 2ZL	5.906	150	14.173	360	6.811	173	6.732	171	180

Yoke Type Track Rollers
RSTO, STO SERIES

- Metric series
- Caged needle roller
- Available with cylindrical OD – suffix X
- Accepts no thrust

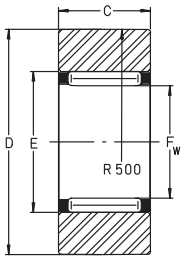

RSTO

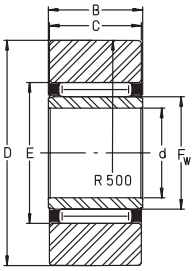

STO

For details on part numbers, descriptive suffixes and various technical references, please refer to front of this section.
For engineering or technical information contact your local sales representative or call Distributor Sales (800)523-6572.

PART NUMBER WITHOUT INNER RING	PART NUMBER WITH INNER RING	SHAFT d inch	SHAFT d mm	OD D inch	OD D mm	WIDTH INNER B inch	WIDTH INNER B mm	WIDTH OUTER C inch	WIDTH OUTER C mm	TRACK DYN. CAP. Cw lbf	TRACK DYN. CAP. Cw N	TRACK STAT. CAP. C_0w lbf	TRACK STAT. CAP. C_0w N
RSTO 5 TN	—	—	—	0.630	16	—	—	0.307	7.8	570	2550	570	2550
RSTO 6 TN	STO 6 TN	0.236	6	0.748	19	0.394	10	0.386	9.8	840	3750	1,010	4500
RSTO 8 TN	STO 8 TN	0.315	8	0.945	24	0.394	10	0.386	9.8	940	4200	1,240	5500
RSTO 10	STO 10	0.394	10	1.181	30	0.472	12	0.465	11.8	1,890	8400	2,070	9200
RSTO 12	STO 12	0.472	12	1.260	32	0.472	12	0.465	11.8	2,000	8900	2,270	10100
RSTO 15	STO 15	0.591	15	1.378	35	0.472	12	0.465	11.8	2,050	9100	2,410	10700
RSTO 17	STO 17	0.669	17	1.575	40	0.630	16	0.622	15.8	3,200	14300	4,000	17700
RSTO 20	STO 20	0.787	20	1.850	47	0.630	16	0.622	15.8	3,650	16200	4,850	21500
RSTO 25	STO 25	0.984	25	2.047	52	0.630	16	0.622	15.8	3,700	16500	5,100	22900
RSTO 30	STO 30	1.181	30	2.441	62	0.787	20	0.780	19.8	5,200	23300	7,900	35000
RSTO 35	STO 35	1.378	35	2.835	72	0.787	20	0.780	19.8	5,800	26000	9,200	41000
RSTO 40	STO 40	1.575	40	3.150	80	0.787	20	0.780	19.8	5,400	24000	8,800	39000
RSTO 45	STO 45	1.772	45	3.347	85	0.787	20	0.780	19.8	5,700	25500	9,700	43000
RSTO 50	STO 50	1.969	50	3.543	90	0.787	20	0.780	19.8	5,800	26000	10,500	46500

CONTINUED FROM ABOVE

PART NUMBER WITHOUT INNER RING	PART NUMBER WITH INNER RING	WGT. lbs	WGT. g	F_w inch	F_w mm	E inch	E mm	DYN. CAP. C lbf	DYN. CAP. C N	STAT. CAP. C_0 lbf	STAT. CAP. C_0 N	SPEED LIMIT OIL rpm
RSTO 5 TN	—	0.019	8.5	0.276	7	0.394	10	640	2850	600	2650	29,900
RSTO 6 TN	STO 6 TN	0.037	17	0.394	10	0.512	13	1,070	4750	1,240	5500	26,000
RSTO 8 TN	STO 8 TN	0.057	26	0.472	12	0.591	15	1,100	4900	1,370	6100	20,800
RSTO 10	STO 10	0.108	49	0.551	14	0.787	20	2,320	10300	2,380	10600	14,300
RSTO 12	STO 12	0.126	57	0.630	16	0.866	22	2,600	11500	2,800	12500	11,700
RSTO 15	STO 15	0.139	63	0.787	20	1.024	26	3,000	13400	3,650	16200	8,450
RSTO 17	STO 17	0.236	107	0.866	22	1.142	29	4,500	20000	5,700	25500	7,150
RSTO 20	STO 20	0.335	152	0.984	25	1.260	32	4,700	21000	6,300	28000	6,110
RSTO 25	STO 25	0.39	177	1.181	30	1.457	37	5,200	23100	7,500	33500	4,680
RSTO 30	STO 30	0.679	308	1.496	38	1.811	46	8,000	35500	12,800	57000	3,250
RSTO 35	STO 35	0.972	441	1.654	42	1.969	50	8,100	36000	13,300	59000	2,860
RSTO 40	STO 40	1.169	530	1.969	50	2.284	58	8,000	35500	13,900	62000	2,210
RSTO 45	STO 45	1.27	576	2.165	55	2.480	63	9,000	40000	16,600	74000	1,950
RSTO 50	STO 50	1.36	617	2.362	60	2.677	68	9,800	43500	19,100	85000	1,690

Yoke Type Track Rollers

NATR SERIES

- Metric series
- Cage guided needle roller design
- Accepts thrust through flange
- Available sealed – suffix PP
- Available with cylindrical OD – suffix X

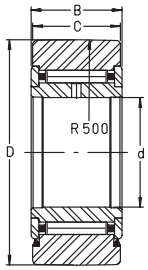

For details on part numbers, descriptive suffixes and various technical references, please refer to front of this section.
For engineering or technical information contact your local sales representative or call Distributor Sales (800)523-6572.

PART NUMBER	SHAFT d inch	SHAFT d mm	OD D inch	OD D mm	WIDTH INNER B inch	WIDTH INNER B mm	WIDTH OUTER C inch	WIDTH OUTER C mm	WEIGHT lbs	WEIGHT g	SPEED LIMIT rpm
NATR 5	0.197	5	0.630	16	0.472	12	0.433	11	0.031	14	22000
NATR 6	0.236	6	0.748	19	0.472	12	0.433	11	0.044	20	20000
NATR 8	0.315	8	0.945	24	0.591	15	0.551	14	0.09	41	15000
NATR 10	0.394	10	1.181	30	0.591	15	0.551	14	0.141	64	11000
NATR 12	0.472	12	1.260	32	0.591	15	0.551	14	0.157	71	9000
NATR 15	0.591	15	1.378	35	0.748	19	0.709	18	0.227	103	7000
NATR 17	0.669	17	1.575	40	0.827	21	0.787	20	0.318	144	6000
NATR 20	0.787	20	1.850	47	0.984	25	0.945	24	0.542	246	4900
NATR 25	0.984	25	2.047	52	0.984	25	0.945	24	0.606	275	3600
NATR 30	1.181	30	2.441	62	1.142	29	1.102	28	1.036	470	2600
NATR 35	1.378	35	2.835	72	1.142	29	1.102	28	1.4	635	2000
NATR 40	1.575	40	3.150	80	1.260	32	1.181	30	1.775	805	1700
NATR 45	1.772	45	3.347	85	1.260	32	1.181	30	2.007	910	1500
NATR 50	1.969	50	3.543	90	1.260	32	1.181	30	2.117	960	1300

CONTINUED FROM ABOVE

PART NUMBER	EFFECT. DYN. CAP. Cw lbf	EFFECT. DYN. CAP. Cw N	EFFECT. STAT. CAP. C_0w lbf	EFFECT. STAT. CAP. C_{0w} N	DYN. CAP. C lbf	DYN. CAP. C N	STAT. CAP. C_0 lbf	STAT. CAP. C_0 N
NATR 5	710	3150	740	3300	850	3800	840	3750
NATR 6	790	3500	880	3900	960	4250	1,030	4600
NATR 8	1,240	5500	1,440	6400	1,530	6800	1,730	7700
NATR 10	1,530	6800	1,890	8400	1,820	8100	2,180	9700
NATR 12	1,550	6900	1,980	8800	1,960	8700	2,470	11000
NATR 15	2,180	9700	3,150	14100	2,900	12900	4,250	19000
NATR 17	2,450	10900	3,500	15500	3,200	14200	4,600	20400
NATR 20	3,500	15500	5,700	25500	4,400	19500	7,200	32000
NATR 25	3,450	15400	6,000	26500	4,750	21200	8,500	38000
NATR 30	5,300	23600	8,700	38500	7,600	34000	13,300	59000
NATR 35	5,700	25500	10,000	44500	8,300	37000	15,500	69000
NATR 40	7,400	33000	13,300	59000	11,000	49000	21,100	94000
NATR 45	7,300	32500	13,300	59000	11,500	51000	22,700	101000
NATR 50	7,200	32000	13,300	59000	11,700	52000	24,300	108000

Yoke Type Track Rollers

NATV SERIES

- Metric series
- Full complement needle roller design
- Accepts thrust through flange
- Available sealed – suffix PP
- Available with cylindrical OD – suffix X

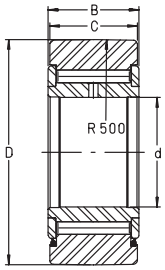

For details on part numbers, descriptive suffixes and various technical references, please refer to front of this section.
For engineering or technical information contact your local sales representative or call Distributor Sales (800)523-6572.

PART NUMBER	SHAFT d inch	SHAFT d mm	OD D inch	OD D mm	WIDTH INNER B inch	WIDTH INNER B mm	WIDTH OUTER C inch	WIDTH OUTER C mm	WEIGHT lbs	WEIGHT g	SPEED LIMIT rpm
NATV 5	0.197	5	0.630	16	0.472	12	0.433	11	0.033	15	8500
NATV 6	0.236	6	0.748	19	0.472	12	0.433	11	0.046	21	7000
NATV 8	0.315	8	0.945	24	0.591	15	0.551	14	0.093	42	5500
NATV 10	0.394	10	1.181	30	0.591	15	0.551	14	0.143	65	4500
NATV 12	0.472	12	1.260	32	0.591	15	0.551	14	0.159	72	3900
NATV 15	0.591	15	1.378	35	0.748	19	0.709	18	0.232	105	3400
NATV 17	0.669	17	1.575	40	0.827	21	0.787	20	0.335	152	2900
NATV 20	0.787	20	1.850	47	0.984	25	0.945	24	0.56	254	2600
NATV 25	0.984	25	2.047	52	0.984	25	0.945	24	0.628	285	2100
NATV 30	1.181	30	2.441	62	1.142	29	1.102	28	1.061	481	1700
NATV 35	1.378	35	2.835	72	1.142	29	1.102	28	1.427	647	1400
NATV 40	1.575	40	3.150	80	1.260	32	1.181	30	1.962	890	1300
NATV 50	1.969	50	3.543	90	1.260	32	1.181	30	2.183	990	1000

CONTINUED FROM ABOVE

PART NUMBER	EFFECT. DYN. CAP. Cw lbf	EFFECT. DYN. CAP. Cw N	EFFECT. STAT. CAP. C_0w lbf	EFFECT. STAT. CAP. C_0w N	DYN. CAP. C lbf	DYN. CAP. C N	STAT. CAP. C_0 lbf	STAT. CAP. C_0 N
NATV 5	1,090	4850	1,460	6500	1,440	6400	1,910	8500
NATV 6	1,240	5500	1,780	7900	1,640	7300	2,430	10800
NATV 8	1,750	7800	2,550	11400	2,340	10400	3,500	15600
NATV 10	2,140	9500	3,300	14600	2,750	12200	4,250	19000
NATV 12	2,180	9700	3,450	15400	2,950	13200	4,900	21700
NATV 15	2,900	12800	5,200	23000	4,100	18300	7,900	35000
NATV 17	3,350	14800	6,000	26500	4,700	21000	8,900	39500
NATV 20	4,650	20600	9,400	42000	6,300	28000	13,300	59000
NATV 25	4,600	20500	9,900	44000	7,000	31000	16,200	72000
NATV 30	6,900	30500	14,200	63000	10,900	48500	24,300	108000
NATV 35	7,400	33000	16,400	73000	11,900	53000	28,500	127000
NATV 40	9,200	41000	20,200	90000	14,800	66000	35,500	159000
NATV 50	9,100	40500	20,900	93000	16,200	72000	43,000	191000

Yoke Type Track Rollers
NUTR SERIES

- Metric series
- 2 row cylindrical roller design
- Accepts thrust through rollers
- Includes labyrinth seals for higher temperatures
- Available with cylindrical OD – suffix X

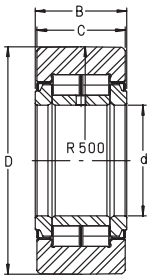

For details on part numbers, descriptive suffixes and various technical references, please refer to front of this section.
For engineering or technical information contact your local sales representative or call Distributor Sales (800)523-6572.

PART NUMBER	SHAFT d inch	SHAFT d mm	OD D inch	OD D mm	WIDTH INNER B inch	WIDTH INNER B mm	WIDTH OUTER C inch	WIDTH OUTER C mm	WEIGHT lbs	WEIGHT g	SPEED LIMIT rpm
NUTR 15	0.591	15	1.378	35	0.748	19	0.709	18	0.218	99	6,500
NUTR 17	0.669	17	1.575	40	0.827	21	0.787	20	0.324	147	5,500
NUTR 15 42	0.591	15	1.654	42	0.748	19	0.709	18	0.348	158	6,500
NUTR 17 47	0.669	17	1.850	47	0.827	21	0.787	20	0.485	220	5,500
NUTR 20	0.787	20	1.850	47	0.984	25	0.945	24	0.54	245	4,200
NUTR 20 52	0.787	20	2.047	52	0.984	25	0.945	24	0.708	321	4,200
NUTR 25	0.984	25	2.047	52	0.984	25	0.945	24	0.62	281	3,400
NUTR 25 62	0.984	25	2.441	62	0.984	25	0.945	24	0.992	450	3,400
NUTR 30	1.181	30	2.441	62	1.142	29	1.102	28	1.025	465	2,600
NUTR 30 72	1.181	30	2.835	72	1.142	29	1.102	28	1.537	697	2,600
NUTR 35	1.378	35	2.835	72	1.142	29	1.102	28	1.389	630	2,100
NUTR 35 80	1.378	35	3.150	80	1.142	29	1.102	28	1.843	836	2,100
NUTR 40	1.575	40	3.150	80	1.260	32	1.181	30	1.799	816	1,600
NUTR 45	1.772	45	3.347	85	1.260	32	1.181	30	1.947	883	1,400
NUTR 40 90	1.575	40	3.543	90	1.260	32	1.181	30	2.489	1129	1,600
NUTR 50	1.969	50	3.543	90	1.260	32	1.181	30	2.095	950	1,300
NUTR 45 100	1.772	45	3.937	100	1.260	32	1.181	30	3.078	1396	1,400
NUTR 50 110	1.969	50	4.331	110	1.260	32	1.181	30	3.726	1690	1,300

CONTINUED FROM ABOVE

PART NUMBER	EFFECT DYN. CAP. Cw lbf	EFFECT DYN. CAP. Cw N	EFFECT STAT. CAP. C_0w lbf	EFFECT STAT. CAP. C_0w N	$F_{r\ perm}$ lbf	$F_{r\ perm}$ N	$F_{or\ perm}$ lbf	$F_{or\ perm}$ N	DYN. CAP. C lbf	DYN. CAP. C N	STAT. CAP. C_0 lbf	STAT. CAP. C_0 N
NUTR 15	3,600	16,000	4,100	18,300	1,870	8,300	3,700	16,400	5,200	23,000	6,100	27,000
NUTR 17	4,150	18,500	5,100	22,800	2,950	13,200	5,100	22,800	5,600	24,800	7,000	31,000
NUTR 15 42	4,350	19,400	5,400	23,800	5,400	23,900	5,400	23,900	5,200	23,000	6,100	27,000
NUTR 17 47	4,800	21,300	6,300	28,000	6,300	28,000	6,300	28,000	5,600	24,800	7,000	31,000
NUTR 20	6,300	28,000	7,900	35,000	3,700	16,500	7,400	33,000	8,800	39,000	11,200	50,000
NUTR 20 52	7,100	31,500	9,200	41,000	8,700	38,500	9,200	41,000	8,800	39,000	11,200	50,000
NUTR 25	6,500	29,000	8,400	37,500	3,900	17,300	7,800	34,500	9,800	43,500	13,500	60,000
NUTR 25 62	8,000	35,500	11,200	50,000	11,200	50,000	11,200	50,000	9,800	43,500	13,500	60,000
NUTR 30	9,000	40,000	11,500	51,000	5,300	23,600	10,600	47,000	13,300	59,000	17,800	79,000
NUTR 30 72	10,800	48,000	14,600	65,000	14,600	65,000	14,600	65,000	13,300	59,000	17,800	79,000
NUTR 35	10,100	45,000	13,700	61,000	7,200	32,000	13,700	61,000	14,600	65,000	20,900	93,000
NUTR 35 80	11,500	51,000	16,200	72,000	16,200	72,000	16,200	72,000	14,600	65,000	20,900	93,000
NUTR 40	12,600	56,000	17,100	76,000	6,900	30,500	13,500	60,000	20,200	90,000	30,000	134,000
NUTR 45	12,600	56,000	17,800	79,000	7,100	31,500	13,700	61,000	21,400	95,000	33,000	147,000
NUTR 40 90	14,800	66,000	21,600	96,000	18,900	84,000	21,600	96,000	20,200	90,000	30,000	134,000
NUTR 50	12,800	57,000	18,200	81,000	7,200	32,000	14,200	63,000	22,500	100,000	36,000	161,000
NUTR 45 100	16,200	72,000	24,300	108,000	23,800	106,000	24,300	108,000	21,400	95,000	33,000	147,000
NUTR 50 110	17,100	76,000	27,000	121,000	27,000	121,000	27,000	121,000	22,500	100,000	36,000	161,000

Yoke Type Track Rollers
PWTR SERIES

- Metric series
- 2 row cylindrical roller design
- Accepts thrust through rollers
- Sealed

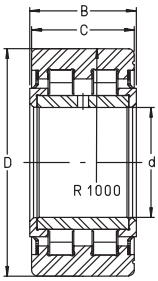

For details on part numbers, descriptive suffixes and various technical references, please refer to front of this section.
For engineering or technical information contact your local sales representative or call Distributor Sales (800)523-6572.

PART NUMBER	SHAFT d inch	SHAFT d mm	OD D inch	OD D mm	WIDTH INNER B inch	WIDTH INNER B mm	WIDTH OUTER C inch	WIDTH OUTER C mm	WEIGHT lbs	WEIGHT g	SPEED LIMIT rpm
PWTR 15 2RS	0.591	15	1.378	35	0.748	19	0.709	18	0.218	99	6000
PWTR 17 2RS	0.669	17	1.575	40	0.827	21	0.787	20	0.324	147	5000
PWTR 15 42 2RS	0.591	15	1.654	42	0.748	19	0.709	18	0.348	158	6000
PWTR 17 47 2RS	0.669	17	1.850	47	0.827	21	0.787	20	0.485	220	5000
PWTR 20 2RS	0.787	20	1.850	47	0.984	25	0.950	24	0.54	245	3800
PWTR 20 52 2RS	0.787	20	2.047	52	0.984	25	0.950	24	0.708	321	3800
PWTR 25 2RS	0.984	25	2.047	52	0.984	25	0.950	24	0.62	281	3800
PWTR 25 62 2RS	0.984	25	2.441	62	0.984	25	0.950	24	0.992	450	3800
PWTR 30 2RS	1.181	30	2.441	62	1.142	29	1.102	28	1.025	465	2200
PWTR 30 72 2RS	1.181	30	2.835	72	1.142	29	1.102	28	1.537	697	2200
PWTR 35 2RS	1.378	35	2.835	72	1.142	29	1.102	28	1.389	630	1800
PWTR 35 80 2RS	1.378	35	3.150	80	1.142	29	1.102	28	1.843	836	1800
PWTR 40 2RS	1.575	40	3.150	80	1.260	32	1.181	30	1.799	816	1500
PWTR 45 2RS	1.772	45	3.347	85	1.260	32	1.181	30	1.947	883	1300
PWTR 40 90 2RS	1.575	40	3.543	90	1.260	32	1.181	30	2.489	1129	1500
PWTR 50 2RS	1.969	50	3.543	90	1.260	32	1.181	30	2.095	950	1100
PWTR 45 100 2RS	1.772	45	3.937	100	1.260	32	1.181	30	3.078	1396	1300
PWTR 50 110 2RS	1.969	50	4.331	110	1.260	32	1.181	30	3.726	1690	1100

CONTINUED FROM ABOVE

PART NUMBER	EFFECT DYN. CAP. Cw lbf	EFFECT DYN. CAP. Cw N	EFFECT STAT. CAP. C_0w lbf	EFFECT STAT. CAP. C_0w N	$F_{r\ perm}$ lbf	$F_{r\ perm}$ N	$F_{or\ perm}$ lbf	$F_{or\ perm}$ N	DYN. CAP. C lbf	DYN. CAP. C N	STAT. CAP. C_0 lbf	STAT. CAP. C_0 N
PWTR 15 2RS	2,750	11,400	2,750	11,000	2,110	7,600	2,750	11,000	3,600	15,900	3,550	15,700
PWTR 17 2RS	3,100	13,500	3,300	14,100	3,200	10,800	3,300	14,100	3,850	17,200	4,000	17,800
PWTR 15 42 2RS	3,200	12,900	3,400	13,800	3,400	14,100	3,400	13,800	3,600	15,900	3,550	15,700
PWTR 17 47 2RS	3,500	14,900	3,900	16,400	3,900	16,000	3,900	16,400	3,850	17,200	4,000	17,800
PWTR 20 2RS	7,900	23,200	3,700	25,500	7,400	18,300	7,400	25,500	6,900	30,500	7,500	33,500
PWTR 20 52 2RS	5,700	25,500	6,600	29,500	6,600	29,500	6,600	29,500	6,900	30,500	7,500	33,500
PWTR 25 2RS	5,400	23,800	6,200	25,500	4,200	16,100	6,200	25,500	7,500	33,500	9,000	40,000
PWTR 25 62 2RS	6,400	24,200	8,000	32,500	8,000	32,500	8,000	32,500	7,500	33,500	9,000	40,000
PWTR 30 2RS	7,800	29,000	8,400	39,500	4,950	25,500	8,400	39,500	11,200	50,000	12,800	57,000
PWTR 30 72 2RS	9,300	35,000	10,800	49,500	10,800	49,000	10,800	49,500	11,200	50,000	12,800	57,000
PWTR 35 2RS	8,700	41,000	10,000	46,500	6,500	34,500	10,000	46,500	12,600	56,000	15,100	67,000
PWTR 35 80 2RS	9,900	38,500	12,100	49,500	12,100	49,500	12,100	49,500	12,600	56,000	15,100	67,000
PWTR 40 2RS	10,100	41,500	12,100	53,000	7,900	32,000	12,100	53,000	14,800	66,000	18,700	83,000
PWTR 45 2RS	10,300	41,500	12,600	55,000	8,200	36,500	12,600	55,000	15,700	70,000	20,500	91,000
PWTR 40 90 2RS	11,700	41,500	14,800	58,000	14,800	66,000	14,800	58,000	14,800	66,000	18,700	83,000
PWTR 50 2RS	10,300	41,500	13,000	57,000	8,300	32,500	13,000	57,000	16,400	73,000	22,300	99,000
PWTR 45 100 2RS	12,600	41,000	16,900	74,000	16,900	65,000	16,900	74,000	15,700	70,000	20,500	91,000
PWTR 50 110 2RS	13,500	54,000	18,400	82,000	18,400	73,000	18,400	82,000	16,400	73,000	22,300	99,000

Yoke Type Track Rollers

NNTR SERIES

- Metric series
- Double row cylindrical roller
- Accepts thrust through rollers
- Available with cylindrical OD – suffix X
- Sealed version greased
- Shielded version for use with oil mist

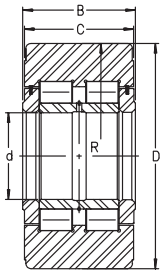

For details on part numbers, descriptive suffixes and various technical references, please refer to front of this section.
For engineering or technical information contact your local sales representative or call Distributor Sales (800)523-6572.

PART NUMBER LOW GAP SHIELDS	PART NUMBER CONTACT SEALS	SHAFT d inch	SHAFT d mm	OD D inch	OD D mm	WIDTH INNER B inch	WIDTH INNER B mm	WIDTH OUTER C inch	WIDTH OUTER C mm	WEIGHT lbs	WEIGHT kg
NNTR 50X130X65 2Z	NNTR 50X130X65 2ZL	1.969	50	5.118	130	2.559	65	2.480	63	11.5	5.2
NNTR 55X140X70 2Z	NNTR 55X140X70 2ZL	2.165	55	5.512	140	2.756	70	2.677	68	14.1	6.4
NNTR 60X150X75 2Z	NNTR 60X150X75 2ZL	2.362	60	5.906	150	2.953	75	2.874	73	17.2	7.8
NNTR 65X160X75 2Z	NNTR 65X160X75 2ZL	2.559	65	6.299	160	2.953	75	2.874	73	19.4	8.8
NNTR 70X180X85 2Z	NNTR 70X180X85 2ZL	2.756	70	7.087	180	3.347	85	3.268	83	28.7	13
NNTR 80X200X90 2Z	NNTR 80X200X90 2ZL	3.150	80	7.874	200	3.543	90	3.465	88	37.0	16.8
NNTR 90X220X100 2Z	NNTR 90X220X100 2ZL	3.543	90	8.661	220	3.937	100	3.858	98	49.6	22.5
NNTR 100X240X105 2Z	NNTR 100X240X105 2ZL	3.937	100	9.449	240	4.134	105	4.055	103	61.7	28
NNTR 110X260X115 2Z	NNTR 110X260X115 2ZL	4.331	110	10.236	260	4.528	115	4.449	113	78.5	35.6
NNTR 120X290X135 2Z	NNTR 120X290X135 2ZL	4.724	120	11.417	290	5.315	135	5.236	133	116.4	52.8
NNTR 130X310X146 2Z	NNTR 130X310X146 2ZL	5.118	130	12.205	310	5.748	146	5.669	144	143.8	65.2
NNTR 140X340X162 2Z	NNTR 140X340X162 2ZL	5.512	140	13.386	340	6.378	162	6.299	160	192.3	87.2
NNTR 150X360X173 2Z	NNTR 150X360X173 2ZL	5.906	150	14.173	360	6.811	173	6.732	171	229.3	104

CONTINUED FROM ABOVE

PART NUMBER LOW GAP SHIELDS	PART NUMBER CONTACT SEALS	EFF. DYN. CAP. Cw lbf x 1000	EFF. DYN. CAP. Cw kN	EFF. STAT. CAP. C_0w lbf x 1000	EFF. STAT. CAP. C_0w kN	DYN. CAP. C lbf x 1000	DYN. CAP. C kN	STAT. CAP. C_0 lbf x 1000	STAT. CAP. C_0 kN	SPEED LIMIT rpm	CROWN RADIUS inch	CROWN RADIUS mm
NNTR 50X130X65 2Z	NNTR 50X130X65 2ZL	43	192	56	250	51	229	65	290	1100	393.7	10,000
NNTR 55X140X70 2Z	NNTR 55X140X70 2ZL	50	223	67	300	63	280	83	370	850	393.7	10,000
NNTR 60X150X75 2Z	NNTR 60X150X75 2ZL	57	255	79	350	72	320	96	425	800	393.7	10,000
NNTR 65X160X75 2Z	NNTR 65X160X75 2ZL	62	275	83	370	76	340	102	455	700	393.7	10,000
NNTR 70X180X85 2Z	NNTR 70X180X85 2ZL	79	350	110	490	98	435	135	600	600	393.7	10,000
NNTR 80X200X90 2Z	NNTR 80X200X90 2ZL	92	410	130	580	115	510	160	710	500	393.7	10,000
NNTR 90X220X100 2Z	NNTR 90X220X100 2ZL	111	495	162	720	146	650	214	950	400	393.7	10,000
NNTR 100X240X105 2Z	NNTR 100X240X105 2ZL	126	560	187	830	166	740	255	1130	340	393.7	10,000
NNTR 110X260X115 2Z	NNTR 110X260X115 2ZL	151	670	229	1020	198	880	310	1370	300	393.7	10,000
NNTR 120X290X135 2Z	NNTR 120X290X135 2ZL	200	890	310	1370	260	1150	400	1790	260	590.6	15,000
NNTR 130X310X146 2Z	NNTR 130X310X146 2ZL	229	1020	360	1600	295	1320	470	2080	240	590.6	15,000
NNTR 140X340X162 2Z	NNTR 140X340X162 2ZL	275	1220	425	1900	365	1620	580	2600	200	590.6	15,000
NNTR 150X360X173 2Z	NNTR 150X360X173 2ZL	310	1370	490	2170	405	1810	660	2950	180	590.6	15,000

Yoke Type Track Rollers

RNA22..2RS SERIES

- Metric series
- Sealed
- Without inner ring
- Without axial guidance
- Available with cylindrical OD – suffix X

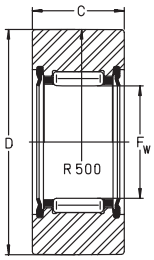

For details on part numbers, descriptive suffixes and various technical references, please refer to front of this section.
For engineering or technical information contact your local sales representative or call Distributor Sales (800)523-6572.

PART NUMBER	SHAFT F_w inch	SHAFT F_w mm	OD D inch	OD D mm	WIDTH OUTER C inch	WIDTH OUTER C mm	WGT. lbs	WGT. g	DYN. CAP. TRACK lbf	DYN. CAP. TRACK N	STAT. CAP. TRACK lbf	STAT. CAP. TRACK N	DYN. CAP. lbf	DYN. CAP. N	STAT. CAP. lbf	STAT. CAP. N	SPEED LIMIT rpm
RNA 22/6 2RS	0.394	10	0.748	19	0.465	11.8	0.04	18	880	3900	830	3700	1,190	5300	1,050	4650	18000
RNA 22/8 2RS	0.472	12	0.945	24	0.465	11.8	0.064	29	1,080	4800	1,080	4800	1,280	5700	1,210	5400	14000
RNA 2200 2RS	0.551	14	1.181	30	0.543	13.8	0.115	52	1,570	7000	1,800	8000	1,750	7800	1,870	8300	11000
RNA 2201 2RS	0.630	16	1.260	32	0.543	13.8	0.126	57	1,690	7500	2,020	9000	1,960	8700	2,230	9900	9500
RNA 2202 2RS	0.787	20	1.378	35	0.543	13.8	0.132	60	1,710	7600	2,160	9600	2,200	9800	2,750	12300	7000
RNA 2203 2RS	0.866	22	1.575	40	0.622	15.8	0.207	94	2,230	9900	3,100	13800	2,750	12200	3,750	16700	6000
RNA 2204 2RS	0.984	25	1.850	47	0.701	17.8	0.335	152	3,400	15200	4,100	18300	4,250	18900	5,000	22300	4600
RNA 2205 2RS	1.181	30	2.047	52	0.701	17.8	0.395	179	3,550	15700	4,500	20000	4,750	21100	6,100	27000	3500
RNA 2206 2RS	1.378	35	2.441	62	0.780	19.8	0.626	284	4,100	18300	5,700	25500	5,200	23300	7,200	32000	2800
RNA 2207 2RS	1.654	42	2.835	72	0.894	22.7	0.953	432	5,200	23000	8,000	35500	6,700	30000	10,500	46500	2200
RNA 2208 2RS	1.890	48	3.150	80	0.894	22.7	1.169	530	6,200	27500	9,100	40500	8,700	38500	13,000	58000	1700
RNA 2209 2RS	2.047	52	3.347	85	0.894	22.7	1.202	545	6,400	28500	9,700	43000	9,100	40500	14,400	64000	1600
RNA 2210 2RS	2.284	58	3.543	90	0.894	22.7	1.241	563	6,300	28000	9,600	42500	9,600	42500	15,700	70000	1300

Cam Followers

NA22..2RS SERIES

- Metric series
- Yoke type
- Sealed
- With inner ring
- Without axial guidance

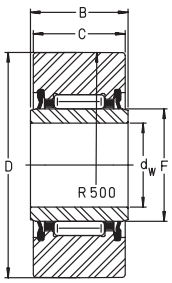

For details on part numbers, descriptive suffixes and various technical references, please refer to front of this section.
For engineering or technical information contact your local sales representative or call Distributor Sales (800)523-6572.

PART NUMBER	SHAFT d_w inch	SHAFT d_w mm	OD D inch	OD D mm	WIDTH OUTER C inch	WIDTH OUTER C mm	WIDTH INNER B inch	WIDTH INNER B mm	WEIGHT lbs	WEIGHT g
NA 22/6 2RS	0.236	6	0.748	19	0.465	11.8	0.472	12	0.049	22
NA 22/8 2RS	0.315	8	0.945	24	0.465	11.8	0.472	12	0.075	34
NA 2200 2RS	0.394	10	1.181	30	0.543	13.8	0.551	14	0.132	60
NA 2201 2RS	0.472	12	1.260	32	0.543	13.8	0.551	14	0.148	67
NA 2202 2RS	0.591	15	1.378	35	0.543	13.8	0.551	14	0.165	75
NA 2203 2RS	0.669	17	1.575	40	0.622	15.8	0.630	16	0.247	112
NA 2204 2RS	0.787	20	1.850	47	0.701	17.8	0.709	18	0.39	177
NA 2205 2RS	0.984	25	2.047	52	0.701	17.8	0.709	18	0.461	209
NA 2206 2RS	1.181	30	2.441	62	0.780	19.8	0.787	20	0.714	324
NA 2207 2RS	1.378	35	2.835	72	0.894	22.7	0.906	23	1.114	505
NA 2208 2RS	1.575	40	3.150	80	0.894	22.7	0.906	23	1.385	628
NA 2209 2RS	1.772	45	3.347	85	0.894	22.7	0.906	23	1.444	655
NA 2210 2RS	1.969	50	3.543	90	0.894	22.7	0.906	23	1.521	690

CONTINUED FROM ABOVE

PART NUMBER	DYN. CAP. TRACK lbf	DYN. CAP. TRACK N	STAT. CAP. TRACK lbf	STAT. CAP. TRACK N	DYN. CAP. lbf	DYN. CAP. N	STAT. CAP. lbf	STAT. CAP. N	SPEED LIMIT rpm
NA 22/6 2RS	880	3900	830	3700	1,190	5300	1,050	4650	18000
NA 22/8 2RS	1,080	4800	1,080	4800	1,280	5700	1,210	5400	14000
NA 2200 2RS	1,570	7000	1,800	8000	1,750	7800	1,870	8300	11000
NA 2201 2RS	1,690	7500	2,020	9000	1,960	8700	2,230	9900	9500
NA 2202 2RS	1,710	7600	2,160	9600	2,200	9800	2,750	12300	7000
NA 2203 2RS	2,230	9900	3,100	13800	2,750	12200	3,750	16700	6000
NA 2204 2RS	3,400	15200	4,100	18300	4,250	18900	5,000	22300	4600
NA 2205 2RS	3,550	15700	4,500	20000	4,750	21100	6,100	27000	3500
NA 2206 2RS	4,100	18300	5,700	25500	5,200	23300	7,200	32000	2800
NA 2207 2RS	5,200	23000	8,000	35500	6,700	30000	10,500	46500	2200
NA 2208 2RS	6,200	27500	9,100	40500	8,700	38500	13,000	58000	1700
NA 2209 2RS	6,400	28500	9,700	43000	9,100	40500	14,400	64000	1600
NA 2210 2RS	6,300	28000	9,600	42500	9,600	42500	15,700	70000	1300

Cam Followers

RF SERIES

- Inch series
- Yoke type track roller
- Cylindrical tire OD
- Available with crowned OD – suffix Y
- Available sealed – suffix PP

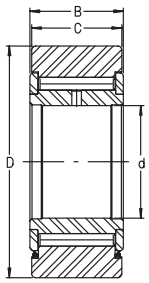

For details on part numbers, descriptive suffixes and various technical references, please refer to front of this section.
For engineering or technical information contact your local sales representative or call Distributor Sales (800)523-6572.

PART NUMBER	SHAFT d inch	SHAFT d mm	TIRE OD D inch	TIRE OD D mm	TIRE WIDTH C inch	TIRE WIDTH C mm	LENGTH B inch	LENGTH B mm	WEIGHT lbs	WEIGHT g	SPEED LIMIT rpm
RF12	0.250	6.350	0.750	19.050	0.5	12.7	0.563	14.288	0.054	24.7	6000
RF14	0.250	6.350	0.875	22.225	0.5	12.7	0.563	14.288	0.075	33.8	6000
RF16	0.313	7.938	1.000	25.400	0.625	15.875	0.688	17.463	0.118	53.4	5000
RF18	0.313	7.937	1.125	28.575	0.625	15.875	0.687	17.460	0.156	70.7	5000
RF20	0.375	9.525	1.250	31.750	0.75	19.05	0.813	20.638	0.228	103.3	4400
RF22	0.375	9.525	1.375	34.925	0.75	19.05	0.813	20.638	0.283	128.4	4400
RF24	0.438	11.113	1.500	38.100	0.875	22.225	0.937	23.810	0.388	175.8	3400
RF26	0.438	11.113	1.625	41.275	0.875	22.225	0.937	23.810	0.588	266.8	3400
RF28	0.500	12.700	1.750	44.450	1	25.4	1.063	26.990	0.600	272	2700
RF30	0.500	12.700	1.875	47.625	1	25.4	1.063	26.990	0.694	314.8	2700
RF32	0.625	15.875	2.000	50.800	1.25	31.75	1.313	33.340	0.958	434.4	2300
RF36	0.625	15.875	2.250	57.150	1.25	31.75	1.313	33.340	1.245	564.6	2300
RF40	0.750	19.050	2.500	63.500	1.5	38.1	1.563	39.690	1.818	824.3	2000
RF44	0.750	19.050	2.750	69.850	1.5	38.1	1.563	39.690	2.249	1020	2000
RF48	1.000	25.400	3.000	76.200	1.75	44.45	1.813	46.040	2.972	1348	1600
RF52	1.000	25.400	3.250	82.550	1.75	44.45	1.813	46.040	3.572	1620	1600
RF56	1.125	28.575	3.500	88.900	2	50.8	2.063	52.390	4.686	2125	1400
RF64	1.250	31.750	4.000	101.600	2.25	57.15	2.313	58.740	6.968	3160	1300

CONTINUED FROM ABOVE

PART NUMBER	EFFECT. DYN. CAP. Cw lbf	EFFECT. DYN. CAP. Cw N	EFFECT. STAT. CAP. C_0w lbf	EFFECT. STAT. CAP. C_0w N	DYN. CAP. C lbf	DYN. CAP. C N	STAT. CAP. C_0 lbf	STAT. CAP. C_0 N
RF12	1,210	5400	1,780	7900	1,910	8500	3,100	13700
RF14	1,480	6600	2,380	10600	1,910	8500	3,100	13700
RF16	1,730	7700	3,100	13700	2,500	11200	4,750	21200
RF18	1,980	8800	3,700	16500	2,500	11200	4,750	21200
RF20	3,300	14600	4,600	20500	4,500	20100	6,500	29000
RF22	3,650	16200	5,400	23800	4,500	20100	6,500	29000
RF24	4,200	18600	6,600	29500	5,400	24200	8,700	38500
RF26	4,500	20000	7,300	32500	5,400	24200	8,700	38500
RF28	5,500	24400	9,700	43000	7,000	31000	12,400	55000
RF30	5,700	25500	10,600	47000	7,000	31000	12,400	55000
RF32	7,400	33000	11,200	50000	10,300	46000	16,600	74000
RF36	8,300	37000	13,500	60000	10,300	46000	16,600	74000
RF40	11,500	51000	21,100	94000	13,900	62000	25,000	112000
RF44	12,100	54000	23,200	103000	13,900	62000	25,000	112000
RF48	13,500	60000	28,000	125000	18,200	81000	40,000	177000
RF52	14,600	65000	31,500	140000	18,200	81000	39,500	176000
RF56	19,000	85000	43,000	191000	23,200	103000	52,000	231000
RF64	21,400	95000	55,000	244000	27,500	122000	73,000	325000

Yoke Type Track Rollers

LR5... SERIES

- Ball bearing type
- Double row angular contact
- Thick walled outer ring

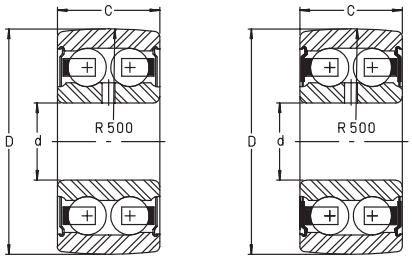

LR5..KDDU LR5..NPPU

When operating against a flat raceway or cam plate, the effective load ratings C_W and C_{0W} and the limiting radial loads Fr and For must be used due to the elastic deformation of the outer ring. With track rollers where Frperm< C_W, the dynamic loading may not be greater than Fr perm.

For details on part numbers, descriptive suffixes and various technical references, please refer to front of this section.
For engineering or technical information contact your local sales representative or call Distributor Sales (800)523-6572.

PART NUMBER	SHAFT d inch	SHAFT d mm	TIRE OD D inch	TIRE OD D mm	WIDTH C inch	WIDTH C mm	WEIGHT lbs	WEIGHT kg	SPEED LIMIT GREASE rpm
LR50/5NPPU	0.197	5	0.669	17	0.275	7	0.022	0.01	23500
LR50/6NPPU	0.236	6	0.748	19	0.354	9	0.044	0.02	22500
LR50/7NPPU	0.276	7	0.866	22	0.394	10	0.044	0.02	21000
LR50/8NPPU	0.315	8	0.945	24	0.433	11	0.066	0.03	20000
LR5000NPPU	0.394	10	1.102	28	0.472	12	0.066	0.03	18500
LR5001NPPU	0.474	12	1.181	30	0.472	12	0.066	0.03	17500
LR5200KDDU	0.394	10	1.260	32	0.551	14	0.154	0.07	16000
LR5200KDD	0.394	10	1.260	32	0.551	14	0.154	0.07	16000
LR5200NPPU	0.394	10	1.260	32	0.551	14	0.154	0.07	16000
LR5201KDDU	0.474	12	1.378	35	0.626	15.9	0.176	0.08	15000
LR5201KDD	0.474	12	1.378	35	0.626	15.9	0.176	0.08	15000
LR5201NPPU	0.474	12	1.378	35	0.626	15.9	0.176	0.08	15000
LR5002NPPU	0.591	15	1.378	35	0.512	13	0.11	0.05	14500
LR5202KDDU	0.591	15	1.575	40	0.626	15.9	0.243	0.11	14000
LR5202KDD	0.591	15	1.575	40	0.626	15.9	0.243	0.11	14000
LR5202NPPU	0.591	15	1.575	40	0.626	15.9	0.243	0.11	14000
LR5003NPPU	0.669	17	1.575	40	0.551	14	0.154	0.07	12500
LR5301NPPU	0.472	12	1.654	42	0.748	19	0.265	0.12	10500
LR5302NPPU	0.591	15	1.850	47	0.748	19	0.331	0.15	10000
LR5203KDDU	0.669	17	1.850	47	0.689	17.5	0.375	0.17	11000
LR5203KDD	0.669	17	1.850	47	0.689	17.5	0.375	0.17	11000
LR5203NPPU	0.669	17	1.850	47	0.689	17.5	0.375	0.17	11000
LR5004NPPU	0.787	20	1.850	47	0.63	16	0.265	0.12	11000
LR5303NPPU	0.669	17	2.047	52	0.874	22.2	0.463	0.21	9500
LR5204KDDU	0.787	20	2.047	52	0.811	20.6	0.507	0.23	10000
LR5204KDD	0.787	20	2.047	52	0.811	20.6	0.507	0.23	10000
LR5204NPPU	0.787	20	2.047	52	0.811	20.6	0.507	0.23	10000
LR5005NPPU	0.984	25	2.047	52	0.63	16	0.331	0.15	9500
LR5304KDDU	0.787	20	2.441	62	0.874	22.2	0.75	0.34	9000
LR5304KDD	0.787	20	2.441	62	0.874	22.2	0.75	0.34	9000
LR5304NPPU	0.787	20	2.441	62	0.874	22.2	0.75	0.34	9000
LR5205KDDU	0.984	25	2.441	62	0.811	20.6	0.75	0.34	9000
LR5205KDD	0.984	25	2.441	62	0.811	20.6	0.75	0.34	9000
LR5205NPPU	0.984	25	2.441	62	0.811	20.6	0.75	0.34	9000
LR5006NPPU	1.181	30	2.441	62	0.748	19	0.551	0.25	8000
LR5007NPPU	1.378	35	2.677	68	0.787	20	0.662	0.3	6600
LR5305KDD	0.984	25	2.835	72	1	25.4	1.103	0.5	7900
LR5305KDDU	0.984	25	2.835	72	1	25.4	1.103	0.5	7900
LR5305NPPU	0.984	25	2.835	72	1	25.4	1.103	0.5	7900
LR5206KDD	1.181	30	2.835	72	0.937	23.8	1.125	0.51	7100
LR5206KDDU	1.181	30	2.835	72	0.937	23.8	1.125	0.51	7100
LR5206NPPU	1.181	30	2.835	72	0.937	23.8	1.125	0.51	7100
LR5306NPPU	1.181	30	3.150	80	1.189	30.2	1.477	0.67	6200
LR5207KDD	1.378	35	3.150	80	1.063	27	1.455	0.66	5600
LR5207KDDU	1.378	35	3.150	80	1.063	27	1.455	0.66	5600
LR5207NPPU	1.378	35	3.150	80	1.063	27	1.455	0.66	5600

Yoke Type Track Rollers

LR5... SERIES

- Ball bearing type
- Double row angular contact
- Thick walled outer ring

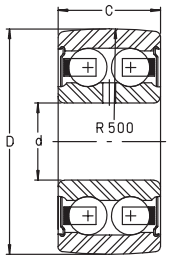

LR5..KDDU

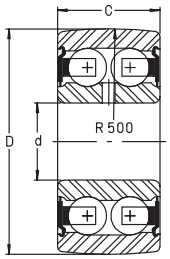

LR5..NPPU

When operating against a flat raceway or cam plate, the effective load ratings C_w and C_{0w} and the limiting radial loads Fr and For must be used due to the elastic deformation of the outer ring. With track rollers where Frperm< C_w, the dynamic loading may not be greater than Fr perm.

For details on part numbers, descriptive suffixes and various technical references, please refer to front of this section.
For engineering or technical information contact your local sales representative or call Distributor Sales (800)523-6572.

DYN. CAP. C lbf	DYN. CAP. C N	STAT. CAP. C_0 lbf	STAT. CAP. C_0 N	EFFECTIVE DYN. CAP. C_w lbf	EFFECTIVE DYN. CAP. C_w N	EFFECTIVE DYN. CAP. C_{0w} lbf	EFFECTIVE DYN. CAP. C_{0w} N	LIMITING Frperm lbf	LIMITING Frperm N	PART NUMBER
410	1810	210	950	370	1660	210	950	430	1900	LR50/5NPPU
700	3100	320	1400	600	2650	300	1310	500	2200	LR50/6NPPU
820	3650	380	1700	740	3300	380	1690	760	3380	LR50/7NPPU
1170	5200	590	2610	950	4200	530	2360	790	3500	LR50/8NPPU
1290	5700	730	3250	1070	4750	640	2850	1190	5300	LR5000NPPU
1400	6200	850	3750	1120	4850	700	3100	1120	5400	LR5001NPPU
1810	8000	1030	4600	1530	6800	910	4050	1730	7700	LR5200KDDU
1810	8000	1030	4600	1530	6800	910	4050	1730	7700	LR5200KDD
1810	8000	1030	4600	1530	6800	910	4050	1730	7700	LR5200NPPU
2360	10600	1320	5900	1930	8600	1150	5100	1510	6700	LR5201KDDU
2360	10600	1320	5900	1930	8600	1150	5100	1510	6700	LR5201KDD
2360	10600	1320	5900	1930	8600	1150	5100	1510	6700	LR5201NPPU
1940	8600	1220	5400	1460	6500	920	4100	1190	5300	LR5002NPPU
2650	11800	1590	7100	2200	9800	1390	6200	2390	10600	LR5202KDDU
2650	11800	1590	7100	2200	9800	1390	6200	2390	10600	LR5202KDD
2650	11800	1590	7100	2200	9800	1390	6200	2390	10600	LR5202NPPU
2070	9200	1390	6200	1730	7700	1170	5200	2300	10200	LR5003NPPU
3300	14700	1890	8400	2540	11300	1590	7100	2360	10500	LR5301NPPU
3980	17700	2310	10300	3280	14600	2070	9200	2810	12500	LR5302NPPU
3300	14800	2040	9100	2850	12600	1840	8200	3580	15900	LR5203KDDU
3300	14800	2040	9100	2850	12600	1840	8200	3580	15900	LR5203KDD
3300	14800	2040	9100	2850	12600	1840	8200	3580	15900	LR5203NPPU
3250	14500	2150	9600	2600	11500	1730	7700	2480	11000	LR5004NPPU
4740	21100	2810	12500	3870	17200	2490	11100	3480	15500	LR5303NPPU
4450	19900	2850	12600	3550	15800	2360	10500	3290	14600	LR5204KDDU
4450	19900	2850	12600	3550	15800	2360	10500	3290	14600	LR5204KDD
4450	19900	2850	12600	3550	15800	2360	10500	3290	14600	LR5204NPPU
3500	15500	2490	11100	2600	11600	1820	8100	2450	10900	LR5005NPPU
5500	24500	3550	15800	4750	21100	3250	14500	6080	27000	LR5304KDDU
5500	24500	3550	15800	4750	21100	3250	14500	6080	27000	LR5304KDD
5500	24500	3550	15800	4750	21100	3250	14500	6080	27000	LR5304NPPU
4850	21600	3350	14900	4150	18500	2900	13000	5630	25000	LR5205KDDU
4850	21600	3350	14900	4150	18500	2900	13000	5630	25000	LR5205KDD
4850	21600	3350	14900	4150	18500	2900	13000	5630	25000	LR5205NPPU
4450	20300	3500	15600	3550	15800	2650	11800	4100	18200	LR5006NPPU
5800	24500	4800	21400	3900	17600	2950	13100	3170	14100	LR5007NPPU
7300	32500	4850	21600	6200	27500	4400	19500	7760	34500	LR5305KDD
7300	32500	4850	21600	6200	27500	4400	19500	7760	34500	LR5305KDDU
7300	32500	4850	21600	6200	27500	4400	19500	7760	34500	LR5305NPPU
6700	30000	4800	21300	5500	24600	4000	17700	6640	29500	LR5206KDD
6700	30000	4800	21300	5500	24600	4000	17700	6640	29500	LR5206KDDU
6700	30000	4800	21300	5500	24600	4000	17700	6640	29500	LR5206NPPU
10200	45500	7100	31500	8200	36500	6000	26500	9790	43500	LR5306NPPU
8900	39500	6500	29000	6900	30500	5000	22400	6410	28500	LR5207KDD
8900	39500	6500	29000	6900	30500	5000	22400	6410	28500	LR5207KDDU
8900	39500	6500	29000	6900	30500	5000	22400	6410	28500	LR5207NPPU

Yoke Type Track Rollers

LR5... SERIES

- Ball bearing type
- Double row angular contact
- Thick walled outer ring

When operating against a flat raceway or cam plate, the effective load ratings C_W and C_{0W} and the limiting radial loads Fr and For must be used due to the elastic deformation of the outer ring. With track rollers where Frperm< C_W, the dynamic loading may not be greater than Fr perm.

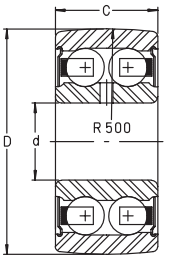

LR5..KDDU

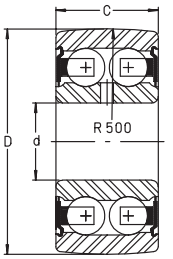

LR5..NPPU

For details on part numbers, descriptive suffixes and various technical references, please refer to front of this section.
For engineering or technical information contact your local sales representative or call Distributor Sales (800)523-6572.

PART NUMBER	SHAFT d inch	SHAFT d mm	TIRE OD D inch	TIRE OD D mm	WIDTH C inch	WIDTH C mm	WEIGHT lbs	WEIGHT kg	SPEED LIMIT GREASE rpm
LR5208KDD	1.575	40	3.347	85	1.189	30.2	1.654	0.75	5000
LR5208KDDU	1.575	40	3.347	85	1.189	30.2	1.654	0.75	5000
LR5208NPPU	1.575	40	3.347	85	1.189	30.2	1.654	0.75	5000
LR5307KDD	1.378	35	3.543	90	1.374	34.9	2.139	0.97	5100
LR5307KDDU	1.378	35	3.543	90	1.374	34.9	2.139	0.97	5100
LR5307NPPU	1.378	35	3.543	90	1.374	34.9	2.139	0.97	5100
LR5308KDD	1.575	40	3.937	100	1.437	36.5	2.646	1.2	4700
LR5308KDDU	1.575	40	3.937	100	1.437	36.5	2.646	1.2	4700
LR5308NPPU	1.575	40	3.937	100	1.437	36.5	2.646	1.2	4700

Yoke Type Track Rollers

LR5... SERIES

- Ball bearing type
- Double row angular contact
- Thick walled outer ring

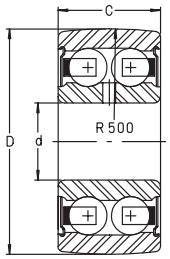

LR5..KDDU

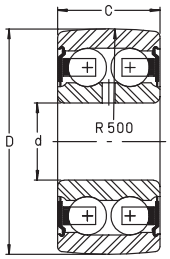

LR5..NPPU

When operating against a flat raceway or cam plate, the effective load ratings C_w and C_{0w} and the limiting radial loads Fr and For must be used due to the elastic deformation of the outer ring. With track rollers where Frperm< C_w, the dynamic loading may not be greater than Fr perm.

For details on part numbers, descriptive suffixes and various technical references, please refer to front of this section.
For engineering or technical information contact your local sales representative or call Distributor Sales (800)523-6572.

DYN. CAP. C lbf	DYN. CAP. C N	STAT. CAP. C_0 lbf	STAT. CAP. C_0 N	EFFECTIVE DYN. CAP. C_w lbf	EFFECTIVE DYN. CAP. C_w N	EFFECTIVE DYN. CAP. C_{0w} lbf	EFFECTIVE DYN. CAP. C_{0w} N	LIMITING Frperm lbf	LIMITING Frperm N	PART NUMBER
11300	50000	8500	37500	7800	34500	5700	25500	4680	20800	LR5208KDD
11300	50000	8500	37500	7800	34500	5700	25500	4680	20800	LR5208KDDU
11300	50000	8500	37500	7800	34500	5700	25500	4680	20800	LR5208NPPU
12700	56000	8900	39500	10000	44500	7400	33000	8890	39500	LR5307KDD
12700	56000	8900	39500	10000	44500	7400	33000	8890	39500	LR5307KDDU
12700	56000	8900	39500	10000	44500	7400	33000	8890	39500	LR5307NPPU
15400	69000	11100	49500	12600	56000	9400	42000	15700	70000	LR5308KDD
15400	69000	11100	49500	12600	56000	9400	42000	15700	70000	LR5308KDDU
15400	69000	11100	49500	12600	56000	9400	42000	15700	70000	LR5308NPPU

Yoke Type Track Rollers

LR6 & LR2 SERIES

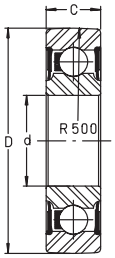

- Ball bearing type
- Single row conrad type
- Shielded or sealed
- Thick walled outer ring

When operating against a flat raceway or cam plate, the effective load ratings C_W and C_{0W} and the limiting radial loads Fr and For must be used due to the elastic deformation of the outer ring. With track rollers where Frperm< C_W, the dynamic loading may not be greater than Fr perm.

For details on part numbers, descriptive suffixes and various technical references, please refer to front of this section.
For engineering or technical information contact your local sales representative or call Distributor Sales (800)523-6572.

PART NUMBER	SHAFT d inch	SHAFT d mm	TIRE OD D inch	TIRE OD D mm	WIDTH C inch	WIDTH C mm	WEIGHT lbs	WEIGHT kg	SPEED LIMIT GREASE rpm
LR604NPPU	0.157	4	0.512	13	0.157	4	0.022	0.01	40000
LR605NPPU	0.197	5	0.630	16	0.197	5	0.022	0.01	38000
LR605KDDU	0.197	5	0.630	16	0.197	5	0.022	0.01	38000
LR606NPPU	0.236	6	0.748	19	0.236	6	0.022	0.01	36000
LR606KDDU	0.236	6	0.748	19	0.236	6	0.022	0.01	36000
LR607NPPU	0.276	7	0.866	22	0.236	6	0.022	0.01	34000
LR607KDDU	0.276	7	0.866	22	0.236	6	0.022	0.01	34000
LR608NPPU	0.315	8	0.945	24	0.276	7	0.044	0.02	32000
LR608KDDU	0.315	8	0.945	24	0.276	7	0.044	0.02	32000
LR6000 NPPU	0.394	10	1.102	28	0.315	8	0.044	0.02	28000
LR6001 NPPU	0.474	12	1.181	30	0.315	8	0.066	0.03	26000
LR200NPPU	0.394	10	1.260	32	0.354	9	0.11	0.05	16000
LR200KDD	0.394	10	1.260	32	0.354	9	0.11	0.05	16000
LR200NPP	0.394	10	1.260	32	0.354	9	0.11	0.05	16000
LR201NPPU	0.474	12	1.378	35	0.394	10	0.11	0.05	15000
LR201NPP	0.474	12	1.378	35	0.394	10	0.11	0.05	15000
LR6002 NPPU	0.591	15	1.378	35	0.354	9	0.11	0.05	22000
LR202NPPU	0.591	15	1.575	40	0.433	11	0.154	0.07	14000
LR202NPP	0.591	15	1.575	40	0.433	11	0.154	0.07	14000
LR6003 NPPU	0.669	17	1.575	40	0.394	10	0.154	0.07	19000
LR203NPPU	0.669	17	1.850	47	0.474	12	0.243	0.11	11000
LR203NPP	0.669	17	1.850	47	0.474	12	0.243	0.11	11000
LR6004 NPPU	0.787	20	1.850	47	0.474	12	0.243	0.11	17000
LR204NPPU	0.787	20	2.047	52	0.551	14	0.331	0.15	10000
LR204NPP	0.787	20	2.047	52	0.551	14	0.331	0.15	10000
LR205NPPU	0.984	25	2.441	62	0.591	15	0.507	0.23	9000
LR205NPP	0.984	25	2.441	62	0.591	15	0.507	0.23	9000
LR206NPPU	1.181	30	2.835	72	0.63	16	0.728	0.33	7100
LR206NPP	1.181	30	2.835	72	0.63	16	0.728	0.33	7100
LR207NPPU	1.378	35	3.150	80	0.669	17	0.882	0.4	5600
LR207NPP	1.378	35	3.150	80	0.669	17	0.882	0.4	5600
LR208NPPU	1.575	40	3.347	85	0.709	18	0.992	0.45	5000
LR208NPP	1.575	40	3.347	85	0.709	18	0.992	0.45	5000
LR209NPPU	1.772	45	3.543	90	0.748	19	1.103	0.5	4500
LR209NPP	1.772	45	3.543	90	0.748	19	1.103	0.5	4500

Yoke Type Track Rollers

LR6 & LR2 SERIES

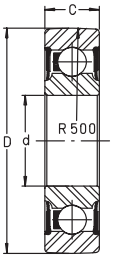

- Ball bearing type
- Single row conrad type
- Shielded or sealed
- Thick walled outer ring

When operating against a flat raceway or cam plate, the effective load ratings C_w and C_{0w} and the limiting radial loads Fr and For must be used due to the elastic deformation of the outer ring. With track rollers where Frperm< C_w, the dynamic loading may not be greater than Fr perm.

For details on part numbers, descriptive suffixes and various technical references, please refer to front of this section.
For engineering or technical information contact your local sales representative or call Distributor Sales (800)523-6572.

DYN. CAP. C lbf	DYN. CAP. C N	STAT. CAP. C_0 lbf	STAT. CAP. C_0 N	EFFECTIVE DYN. CAP. C_w lbf	EFFECTIVE DYN. CAP. C_w N	EFFECTIVE DYN. CAP. C_{0w} lbf	EFFECTIVE DYN. CAP. C_{0w} N	LIMITING Frperm lbf	LIMITING Frperm N	PART NUMBER
218	970	81	360	194	860	79	350	160	700	LR604NPPU
299	1330	113	500	268	1190	110	490	220	980	LR605NPPU
299	1330	113	500	268	1190	110	490	220	980	LR605KDDU
443	1970	167	740	392	1740	158	700	320	1400	LR606NPPU
443	1970	167	740	392	1740	158	700	320	1400	LR606KDDU
527	2340	200	890	479	2130	196	870	390	1740	LR607NPPU
527	2340	200	8970	479	2130	196	870	390	1740	LR607KDDU
743	3300	304	1350	619	2750	281	1250	560	2500	LR608NPPU
743	3300	304	1350	619	2750	281	1250	560	2500	LR608KDDU
1035	4600	441	1960	821	3650	383	1700	570	2550	LR6000 NPPU
1148	5100	529	2350	968	4300	473	2100	920	4100	LR6001 NPPU
1150	5100	530	2370	980	4350	480	2130	960	4260	LR200NPPU
1150	5100	530	2370	980	4350	480	2130	960	4260	LR200KDD
1150	5100	530	2370	980	4350	480	2130	960	4260	LR200NPP
1530	6800	686	3050	1260	5600	608	2700	1010	4500	LR201NPPU
1530	6800	686	3050	1260	5600	608	2700	1010	4500	LR201NPP
1260	5600	640	2850	1013	4500	518	2300	1040	4600	LR6002 NPPU
1710	7600	830	3700	1463	6500	740	3300	1490	6600	LR202NPPU
1710	7600	830	3700	1463	6500	740	3300	1490	6600	LR202NPP
1350	6000	725	3220	1215	5400	673	2990	1350	5980	LR6003 NPPU
2160	9600	1070	4750	1890	8400	990	4400	1980	8800	LR203NPPU
2160	9600	1070	4750	1890	8400	990	4400	1980	8800	LR203NPP
2115	9400	1125	5000	1508	6700	803	3570	1050	4650	LR6004 NPPU
2880	12800	1485	6600	2360	10500	1260	5600	2410	10700	LR204NPPU
2880	12800	1485	6600	2360	10500	1260	5600	2410	10700	LR204NPP
3150	14000	1755	7800	2810	12500	1600	7100	3200	14200	LR205NPPU
3150	14000	1755	7800	2810	12500	1600	7100	3200	14200	LR205NPP
4390	19500	2540	11300	3735	16600	2160	9600	4320	19200	LR206NPPU
4390	19500	2540	11300	3735	16600	2160	9600	4320	19200	LR206NPP
5740	25500	3440	15300	4545	20200	2680	11900	4390	19500	LR207NPPU
5740	25500	3440	15300	4545	20200	2680	11900	4390	19500	LR207NPP
7310	32500	4460	19800	5130	22800	3060	13600	3020	13400	LR208NPPU
7310	32500	4460	19800	5130	22800	3060	13600	3020	13400	LR208NPP
7310	32500	4590	20400	5060	22500	3080	13700	2990	13300	LR209NPPU
7310	32500	4590	20400	5060	22500	3080	13700	2990	13300	LR209NPP

Yoke Type Track Rollers

LR2.. SERIES

- Single row
- Conrad ball bearing type
- Extended inner ring
- R type lip seals with extra grease capacity
- U indicates crowned OD

When operating against a flat raceway or cam plate, the effective load ratings C_W and C_0w and the limiting radial loads Fr and For must be used due to the elastic deformation of the outer ring. With track rollers where Frperm< C_W, the dynamic loading may not be greater than Fr perm.

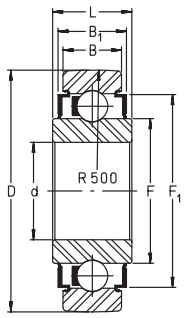

LR..RRU

For details on part numbers, descriptive suffixes and various technical references, please refer to front of this section.
For engineering or technical information contact your local sales representative or call Distributor Sales (800)523-6572.

PART NUMBER	d inch	d mm	D inch	D mm	B inch	B mm	B_1 inch	B_1 mm	F inch	F mm	F_1 inch	F_1 mm	L inch	L mm	WGT. lbs	WGT. kg
LR201RRU	0.472	12	1.378	35	0.394	10	_	_	0.728	18.5	_	_	0.591	15	0.15	0.07
LR201RR	0.472	12	1.378	35	0.394	10	_	_	0.728	18.5	_	_	0.591	15	0.15	0.07
LR202RRU	0.591	15	1.5748	40	0.433	11	_	_	0.847	21.5	_	_	0.567	14.4	0.18	0.08
LR202RR	0.591	15	1.5748	40	0.433	11	_	_	0.847	21.5	_	_	0.567	14.4	0.18	0.08
LR203RRU	0.669	17	1.8504	47	0.472	12	_	_	0.965	24.5	_	_	0.721	18.3	0.24	0.11
LR203RR	0.669	17	1.8504	47	0.472	12	_	_	0.965	24.5	_	_	0.721	18.3	0.24	0.11
LR204RRU	0.787	20	2.0472	52	0.551	14	_	_	1.13	28.7	_	_	0.697	17.7	0.35	0.16
LR204RR	0.787	20	2.0472	52	0.551	14	_	_	1.13	28.7	_	_	0.697	17.7	0.35	0.16
LR205RRU	0.984	25	2.4409	62	0.591	15	0.658	16.7	1.331	33.8	1.677	42.6	0.827	21	0.57	0.26
LR205RR	0.984	25	2.4409	62	0.591	15	0.658	16.7	1.331	33.8	1.677	42.6	0.827	21	0.57	0.26
LR206RRU	1.181	30	2.8346	72	0.63	16	0.772	19.6	1.587	40.3	2.047	52	0.945	24	0.82	0.37
LR206RR	1.181	30	2.8346	72	0.63	16	0.772	19.6	1.587	40.3	2.047	52	0.945	24	0.82	0.37
LR207RRU	1.378	35	3.1496	80	0.669	17	0.776	19.7	1.843	46.8	2.374	60.3	0.984	25	1.06	0.48
LR207RR	1.378	35	3.1496	80	0.669	17	0.776	19.7	1.843	46.8	2.374	60.3	0.984	25	1.06	0.48
LR208RRU	1.575	40	3.3465	85	0.709	18	0.807	20.5	2.059	52.3	2.685	68.2	1.063	27	1.17	0.53
LR208RR	1.575	40	3.3465	85	0.709	18	0.807	20.5	2.059	52.3	2.685	68.2	1.063	27	1.17	0.53

CONTINUED FROM ABOVE

PART NUMBER	DYN. CAP. C lbf	DYN. CAP. C N	STAT. CAP. C_0 lbf	STAT. CAP. C_0 N	EFFECTIVE DYN. CAP. C_w lbf	EFFECTIVE DYN. CAP. C_w N	EFFECTIVE DYN. CAP. C_{0w} lbf	EFFECTIVE DYN. CAP. C_{0w} N	LIMITING Frperm lbf	LIMITING Frperm N	SPEED LIMIT GREASE rpm
LR201RRU	15000	1530	6800	686	3050	1260	5600	608	2700	1010	4500
LR201RR	15000	1530	6800	686	3050	1260	5600	608	2700	1010	4500
LR202RRU	14000	1710	7600	830	3700	1463	6500	740	3300	1490	6600
LR202RR	14000	1710	7600	830	3700	1463	6500	740	3300	1490	6600
LR203RRU	11000	2160	9600	1070	4750	1890	8400	990	4400	1980	8800
LR203RR	11000	2160	9600	1070	4750	1890	8400	990	4400	1980	8800
LR204RRU	10000	2880	12800	1485	6600	2360	10500	1260	5600	2410	10700
LR204RR	10000	2880	12800	1485	6600	2360	10500	1260	5600	2410	10700
LR205RRU	9000	3150	14000	1755	7800	2810	12500	1600	7100	3200	14200
LR205RR	9000	3150	14000	1755	7800	2810	12500	1600	7100	3200	14200
LR206RRU	7100	4390	19500	2540	11300	3735	16600	2160	9600	4320	19200
LR206RR	7100	4390	19500	2540	11300	3735	16600	2160	9600	4320	19200
LR207RRU	5600	5740	25500	3440	15300	4545	20200	2680	11900	4390	19500
LR207RR	5600	5740	25500	3440	15300	4545	20200	2680	11900	4390	19500
LR208RRU	5000	7310	22800	4460	19800	5130	22800	3060	13600	3020	13400
LR208RR	5000	7310	22800	4460	19800	5130	22800	3060	13600	3020	13400

Stud Type Cam Follower Selector

INCH AND METRIC SERIES

- Sorted by Tire OD
- All metric versions available with a cylindrical tire OD – suffix X
- All versions available with seals – suffix PP
- All inch versions available with a crowned tire OD – suffix Y
- All versions available with eccentric sleeve for adjustment by – prefix E
- Series specific details can be found on subsequent pages.
  Please refer to Section Contents or Index for the correct page numbers.

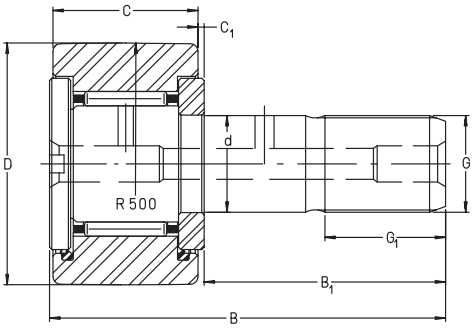

KR SHOWN FOR DIMENSION REFERENCE ONLY

For details on part numbers, descriptive suffixes and various technical references, please refer to front of this section.
For engineering or technical information contact your local sales representative or call Distributor Sales (800)523-6572.

PART NUMBER	TIRE OD D inch	TIRE OD D mm	STUD DIA. d inch	STUD DIA. d mm	TIRE WIDTH C inch	TIRE WIDTH C mm	TOTAL LENGTH B inch	TOTAL LENGTH B mm	WEIGHT lbs	WEIGHT g	THREADS G
CF8–1	0.5	12.7	0.19	4.826	0.375	9.525	1.032	26.2	0.024	11	10–32 UNF
CF10–1	0.625	15.875	0.25	6.35	0.438	11.113	1.221	31	0.044	20	1/4–28 UNF
KRV 16	0.630	16	0.236	6	0.433	11	1.102	28	0.044	20	M6
KR 16	0.630	16	0.236	6	0.433	11	1.102	28	0.044	20	M6
KRV 19	0.748	19	0.315	8	0.433	11	1.260	32	0.071	32	M8
KR 19	0.748	19	0.315	8	0.433	11	1.260	32	0.071	32	M8
CF12	0.75	19.05	0.375	9.525	0.500	12.7	1.406	35.7	0.075	34	3/8–24 UNF
KRV 22	0.866	22	0.394	10	0.472	12	1.417	36	0.099	45	M10x1
KR 22	0.866	22	0.394	10	0.472	12	1.417	36	0.099	45	M10x1
CF14	0.875	22.225	0.375	9.525	0.500	12.7	1.406	35.7	0.099	45	3/8–24 UNF
CF16	1	25.4	0.4375	11.112	0.625	15.875	1.654	42	0.159	72	7/16–20 UNF
KRV 26	1.024	26	0.394	10	0.472	12	1.417	36	0.135	61	M10x1
KR 26	1.024	26	0.394	10	0.472	12	1.417	36	0.135	61	M10x1
CF18	1.125	28.575	0.4375	11.112	0.625	15.875	1.654	42	0.194	88	7/16–20 UNF
KRV 30	1.181	30	0.472	12	0.551	14	1.575	40	0.196	89	M12x1.5
KR 30	1.181	30	0.472	12	0.551	14	1.575	40	0.196	89	M12x1.5
CF20	1.25	31.75	0.5	12.7	0.750	19.05	2.032	51.6	0.300	136	1/2–20 UNF
KRV 32	1.260	32	0.472	12	0.551	14	1.575	40	0.221	100	M12x1.5
KR 32	1.260	32	0.472	12	0.551	14	1.575	40	0.221	100	M12x1.5
CF22	1.375	34.925	0.5	12.7	0.750	19.05	2.032	51.6	0.348	158	1/2–20 UNF
KRV 35	1.378	35	0.630	16	0.709	18	2.047	52	0.377	171	M16x1.5
KR 35	1.378	35	0.630	16	0.709	18	2.047	52	0.377	171	M16x1.5
NUKR 35	1.378	35	0.630	16	0.709	18	2.047	52	0.362	164	M 16x1.5
PWKR 35 2RS	1.378	35	0.630	16	0.709	18	2.047	52	0.362	164	M 16x1.5
CF24	1.5	38.1	0.625	15.875	0.875	22.225	2.406	61.1	0.525	238	5/8–18 UNF
KRV 40	1.575	40	0.709	18	0.787	20	2.284	58	0.549	249	M18x1.5
KR 40	1.575	40	0.709	18	0.787	20	2.284	58	0.549	249	M18x1.5
NUKR 40	1.575	40	0.709	18	0.787	20	2.284	58	0.534	242	M 18x1.5
PWKR 40 2RS	1.575	40	0.709	18	0.787	20	2.284	58	0.534	242	M 18x1.5
CF26	1.625	41.275	0.625	15.875	0.875	22.225	2.406	61.1	0.598	271	5/8–18 UNF
CF28	1.75	44.45	0.75	19.05	1.000	25.4	2.780	70.6	0.827	375	3/4–16 UNF
KRV 47	1.850	47	0.787	20	0.945	24	2.598	66	0.86	390	M20x1.5
KR 47	1.850	47	0.787	20	0.945	24	2.598	66	0.86	390	M20x1.5
NUKR 47	1.850	47	0.787	20	0.945	24	2.598	66	0.838	380	M 20x1.5
PWKR 47 2RS	1.850	47	0.787	20	0.945	24	2.598	66	0.838	380	M 20x1.5
CF30	1.875	47.625	0.75	19.05	1.000	25.4	2.780	70.6	0.924	419	3/4–16 UNF
CF32	2	50.8	0.875	22.225	1.250	31.75	3.280	83.3	1.352	613	7/8–14 UNF
KRV 52	2.047	52	0.787	20	0.945	24	2.598	66	1.025	465	M20x1.5
KR 52	2.047	52	0.787	20	0.945	24	2.598	66	1.025	465	M20x1.5
NUKR 52	2.047	52	0.787	20	0.945	24	2.598	66	0.992	450	M 20x1.5
PWKR 52 2RS	2.047	52	0.787	20	0.945	24	2.598	66	0.992	450	M 20x1.5
CF36	2.25	57.15	0.875	22.225	1.250	31.75	3.280	83.3	1.636	742	7/8–14 UNF
KRV 62	2.441	62	0.945	24	1.142	29	3.150	80	1.768	802	M24x1.5
KR 62	2.441	62	0.945	24	1.142	29	3.150	80	1.768	802	M24x1.5
NUKR 62	2.441	62	0.945	24	1.142	29	3.150	80	1.753	795	M 24x1.5
PWKR 62 2RS	2.441	62	0.945	24	1.142	29	3.150	80	1.753	795	M 24x1.5

Stud Type Cam Follower Selector
INCH AND METRIC SERIES

- Sorted by Tire OD
- All metric versions available with a cylindrical tire OD – suffix X
- All versions available with seals – suffix PP
- All inch versions available with a crowned tire OD – suffix Y
- All versions available with eccentric sleeve for adjustment by – prefix E
- Series specific details can be found on subsequent pages.
  Please refer to Section Contents or Index for the correct page numbers.

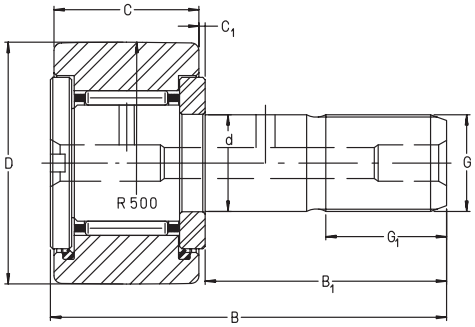

KR SHOWN FOR DIMENSION REFERENCE ONLY

For details on part numbers, descriptive suffixes and various technical references, please refer to front of this section.
For engineering or technical information contact your local sales representative or call Distributor Sales (800)523-6572.

PART NUMBER	TIRE OD D inch	TIRE OD D mm	STUD DIA. d inch	STUD DIA. d mm	TIRE WIDTH C inch	TIRE WIDTH C mm	TOTAL LENGTH B inch	TOTAL LENGTH B mm	WEIGHT lbs	WEIGHT g	THREADS G
CF40	2.5	63.5	1	25.4	1.500	38.1	3.780	96	2.421	1098	1–14 UNF
CF44	2.75	69.85	1	25.4	1.500	38.1	3.780	96	2.867	1300	1–14 UNF
KRV 72	2.835	72	0.945	24	1.142	29	3.150	80	2.304	1045	M24x1.5
KR 72	2.835	72	0.945	24	1.142	29	3.150	80	2.304	1045	M24x1.5
NUKR 72	2.835	72	0.945	24	1.142	29	3.150	80	2.249	1020	M 24x1.5
PWKR 72 2RS	2.835	72	0.945	24	1.142	29	3.150	80	2.249	1020	M 24x1.5
CF48	3	76.2	1.25	31.75	1.750	44.45	4.280	108.7	4.123	1870	1–1/4–12 UNF
KRV 80	3.150	80	1.181	30	1.378	35	3.937	100	3.442	1561	M30x1.5
KR 80	3.150	80	1.181	30	1.378	35	3.937	100	3.442	1561	M30x1.5
NUKR 80	3.150	80	1.181	30	1.378	35	3.937	100	3.528	1600	M 30x1.5
PWKR 80 2RS	3.150	80	1.181	30	1.378	35	3.937	100	3.528	1600	M 30x1.5
CF52	3.25	82.55	1.75	44.45	1.750	44.45	4.280	108.7	5.733	2600	1–1/4–12 UNF
KR 85	3.347	85	1.181	30	1.378	35	3.937	100	3.837	1740	M30x1.6
KRV 90	3.543	90	1.181	30	1.378	35	3.937	100	4.344	1970	M30x1.5
KR 90	3.543	90	1.181	30	1.378	35	3.937	100	4.344	1970	M30x1.5
NUKR 90	3.543	90	1.181	30	1.378	35	3.937	100	4.322	1960	M 30x1.5
PWKR 90 2RS	3.543	90	1.181	30	1.378	35	3.937	100	4.322	1960	M 30x1.5
CF64	4	101.6	1.5	38.1	2.250	57.15	5.780	146.8	9.316	4225	1–1/2–12UNF

Closing Plugs
VD SERIES

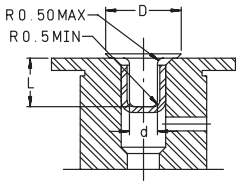

PART NUMBER	NOM. HOLE inch	NOM. HOLE mm	d inch	d mm	D inch	D mm	L inch	L mm	WEIGHT PER 1000 lbs	WEIGHT PER 1000 kg	MATING CAM FOLLOWERS
VD 1 A	0.157	4	0.106	2.7	0.394	10	0.205	5.2	0.221	0.1	METRIC SIZES 16 THRU 26
VD 2 A	0.236	6	0.185	4.7	0.472	12	0.287	7.3	0.221	0.1	METRIC SIZES 30 THRU 40
VD 3 A	0.315	8	0.264	6.7	0.591	15	0.394	10	0.441	0.2	METRIC SIZES 47 THRU 90
VD 7 A	0.126	3.2	0.094	2.4	0.335	8.5	0.169	4.3	0.221	0.1	CF 8–1 THRU CF 10–1
VD 5 A	0.189	4.8	0.138	3.5	0.433	11	0.217	5.5	0.221	0.1	CF 12 THRU CF 44
VD 6 A	0.252	6.4	0.201	5.1	0.512	13	0.295	7.5	1.103	0.5	CF 48 THRU CF64

Lubrication Nipples
NIP SERIES

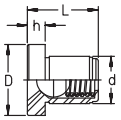

PART NUMBER	d inch	d mm	D inch	D mm	L inch	L mm	h inch	h mm	WEIGHT PER 1000 lbs	WEIGHT PER 1000 kg	MATING CAM FOLLOWERS
NIP A 1	0.157	4	0.236	6	0.236	6	0.059	1.5	0.441	0.2	METRIC SIZES 16 THRU 26
NIP A 2	0.236	6	0.315	8	0.354	9	0.079	2	0.441	0.2	METRIC SIZES 30 THRU 40
NIP A 3	0.315	8	0.394	10	0.472	12	0.118	3	0.441	0.3	METRIC SIZES 47 THRU 90

Stud Type Cam Followers

KR SERIES

- Cage guided needle rollers
- Metric
- Accepts thrust through flange
- All versions available with seals – suffix PP
- All versions available with a cylindrical tire OD – suffix X
- Available with hex socket – suffix SK
- Available with eccentric sleeve – prefix E

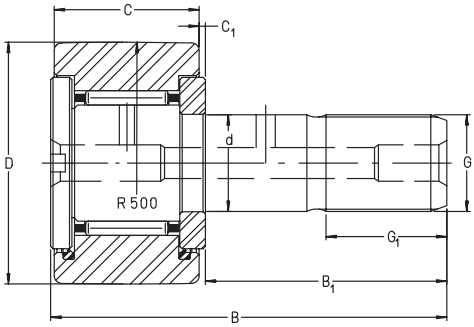

For details on part numbers, descriptive suffixes and various technical references, please refer to front of this section.
For engineering or technical information contact your local sales representative or call Distributor Sales (800)523-6572.

PART NUMBER	TIRE OD D inch	TIRE OD D mm	STUD DIA. d inch	STUD DIA. d mm	TIRE WIDTH C inch	TIRE WIDTH C mm	LENGTH B inch	LENGTH B mm	WEIGHT lbs	WEIGHT g	EFFECT. DYN. CAP. Cw lbf	EFFECT. DYN. CAP. Cw N	EFFECT. STAT. CAP. C_0w lbf	EFFECT. STAT. CAP. C_0w N
KR 16	0.630	16	0.236	6	0.433	11	1.102	28	0.044	20	710	3150	740	3300
KR 19	0.748	19	0.315	8	0.433	11	1.260	32	0.071	32	790	3500	880	3900
KR 22	0.866	22	0.394	10	0.472	12	1.417	36	0.099	45	1,000	4450	1,170	5200
KR 26	1.024	26	0.394	10	0.472	12	1.417	36	0.135	61	1,150	5100	1,390	6200
KR 30	1.181	30	0.472	12	0.551	14	1.575	40	0.196	89	1,530	6800	1,890	8400
KR 32	1.260	32	0.472	12	0.551	14	1.575	40	0.221	100	1,600	7100	2,020	9000
KR 35	1.378	35	0.630	16	0.709	18	2.047	52	0.377	171	2,180	9700	3,150	14100
KR 40	1.575	40	0.709	18	0.787	20	2.284	58	0.549	249	2,450	10900	3,500	15500
KR 47	1.850	47	0.787	20	0.945	24	2.598	66	0.86	390	3,500	15500	5,700	25500
KR 52	2.047	52	0.787	20	0.945	24	2.598	66	1.025	465	3,800	16800	6,400	28500
KR 62	2.441	62	0.945	24	1.142	29	3.150	80	1.768	802	6,000	26500	10,700	47500
KR 72	2.835	72	0.945	24	1.142	29	3.150	80	2.304	1045	6,300	28000	11,900	53000
KR 80	3.150	80	1.181	30	1.378	35	3.937	100	3.442	1561	8,900	39500	17,300	77000
KR 85	3.347	85	1.181	30	1.378	35	3.937	100	3.837	1740	9,100	40500	18,000	80000
KR 90	3.543	90	1.181	30	1.378	35	3.937	100	4.344	1970	9,300	41500	18,700	83000

CONTINUED FROM ABOVE

PART NUMBER	B_1 inch	B_1 mm	THREADS G	G_1 inch	G_1 mm	C_1 inch	C_1 mm	NUT TORQUE ft-lbf	NUT TORQUE Nm	SPEED LIMIT GREASE rpm	DYN. CAP. C lbf	DYN. CAP. C N	STAT. CAP. C_0 lbf	STAT. CAP. C_0 N
KR 16	0.630	16	M6	0.315	8	0.024	0.6	2.21	3	22000	850	3800	840	3750
KR 19	0.787	20	M8	0.394	10	0.024	0.6	5.9	8	20000	960	4250	1,030	4600
KR 22	0.906	23	M10x1	0.472	12	0.024	0.6	11.06	15	16000	1,280	5700	1,460	6500
KR 26	0.906	23	M10x1	0.472	12	0.024	0.6	11.06	15	16000	1,280	5700	1,460	6500
KR 30	0.984	25	M12x1.5	0.512	13	0.024	0.6	16.23	22	11000	1,820	8100	2,180	9700
KR 32	0.984	25	M12x1.5	0.512	13	0.024	0.6	16.23	22	11000	1,820	8100	2,180	9700
KR 35	1.280	32.5	M16x1.5	0.669	17	0.032	0.8	43	58	7000	2,900	12900	4,250	19000
KR 40	1.437	36.5	M18x1.5	0.748	19	0.032	0.8	64	87	6000	3,200	14200	4,600	20400
KR 47	1.595	40.5	M20x1.5	0.827	21	0.032	0.8	89	120	4900	4,400	19500	7,200	32000
KR 52	1.595	40.5	M20x1.5	0.827	21	0.032	0.8	89	120	4900	4,400	19500	7,200	32000
KR 62	1.949	49.5	M24x1.5	0.984	25	0.032	0.8	162	220	3800	6,900	30500	11,900	53000
KR 72	1.949	49.5	M24x1.5	0.984	25	0.032	0.8	162	220	3800	6,900	30500	11,900	53000
KR 80	2.480	63	M30x1.5	1.260	32	0.039	1	332	450	2600	10,100	45000	19,100	85000
KR 85	2.480	63	M30x1.6	1.260	32	0.039	1	332	450	2600	10,100	45000	19,100	85000
KR 90	2.480	63	M30x1.5	1.260	32	0.039	1	332	450	2600	10,100	45000	19,100	85000

PLEASE NOTE THAT KR 16 & KR 19 HAVE LUBRICATION HOLES THROUGH THE HEAD ONLY ON THE SCREWDRIVER SLOT. NO RELUBRICATION IS POSSIBLE ON THE HEX BORE ON THOSE SIZES.

Stud Type Cam Followers

KRV SERIES

- Full complement needle rollers
- All versions available with seals – suffix PP
- Metric
- Accepts thrust through flange
- Available with hex socket – suffix SK
- Available with eccentric sleeve – prefix E
- Available with a cylindrical tire OD – suffix X

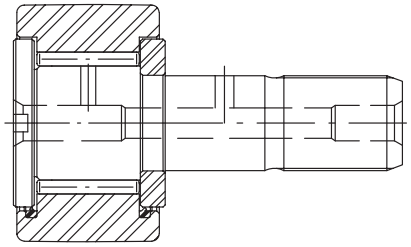

KRV

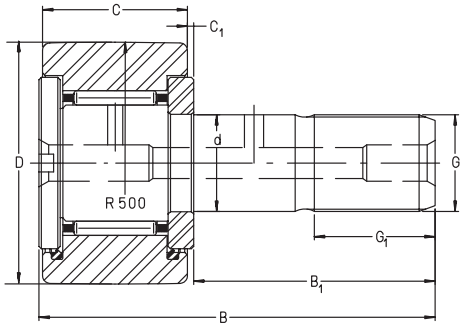

KR

For details on part numbers, descriptive suffixes and various technical references, please refer to front of this section.
For engineering or technical information contact your local sales representative or call Distributor Sales (800)523-6572.

PART NUMBER	TIRE OD D inch	TIRE OD D mm	STUD DIA. d inch	STUD DIA. d mm	TIRE WIDTH C inch	TIRE WIDTH C mm	LENGTH B inch	LENGTH B mm	WEIGHT lbs	WEIGHT g	EFFECT. DYN. CAP. Cw lbf	EFFECT. DYN. CAP. Cw N	EFFECT. STAT. CAP. C_0w lbf	EFFECT. STAT. CAP. C_0w N
KRV 16	0.630	16	0.236	6	0.433	11	1.102	28	0.044	20	1,090	4850	1,460	6500
KRV 19	0.748	19	0.315	8	0.433	11	1.260	32	0.071	32	1,240	5500	1,780	7900
KRV 22	0.866	22	0.394	10	0.472	12	1.417	36	0.099	45	1,420	6300	2,050	9100
KRV 26	1.024	26	0.394	10	0.472	12	1.417	36	0.135	61	1,640	7300	2,550	11300
KRV 30	1.181	30	0.472	12	0.551	14	1.575	40	0.196	89	2,140	9500	3,300	14600
KRV 32	1.260	32	0.472	12	0.551	14	1.575	40	0.221	100	2,250	10000	3,550	15800
KRV 35	1.378	35	0.630	16	0.709	18	2.047	52	0.377	171	2,900	12800	5,200	23000
KRV 40	1.575	40	0.709	18	0.787	20	2.284	58	0.549	249	3,350	14800	6,000	26500
KRV 47	1.850	47	0.787	20	0.945	24	2.598	66	0.86	390	4,650	20600	9,400	42000
KRV 52	2.047	52	0.787	20	0.945	24	2.598	66	1.025	465	5,100	22500	10,800	48000
KRV 62	2.441	62	0.945	24	1.142	29	3.150	80	1.768	802	7,600	34000	17,100	76000
KRV 72	2.835	72	0.945	24	1.142	29	3.150	80	2.304	1045	8,300	37000	19,100	85000
KRV 80	3.150	80	1.181	30	1.378	35	3.937	100	3.442	1561	11,100	49500	27,000	120000
KRV 90	3.543	90	1.181	30	1.378	35	3.937	100	4.344	1970	11,900	53000	29,000	130000

CONTINUED FROM ABOVE

PART NUMBER	B_1 inch	B_1 mm	THREADS G	G_1 inch	G_1 mm	C_1 inch	C_1 mm	SPEED LIMIT GREASE rpm	NUT TORQUE ft-lbf	NUT TORQUE Nm	DYN. CAP. C lbf	DYN. CAP. C N	STAT. CAP. C_0 lbf	STAT. CAP. C_0 N
KRV 16	0.630	16	M6	0.315	8	0.024	0.6	8500	2.21	3	1,440	6400	1,910	8500
KRV 19	0.787	20	M8	0.394	10	0.024	0.6	7000	5.9	8	1,640	7300	2,430	10800
KRV 22	0.906	23	M10x1	0.472	12	0.024	0.6	6000	11.06	15	1,930	8600	2,900	12900
KRV 26	0.906	23	M10x1	0.472	12	0.024	0.6	6000	11.06	15	1,930	8600	2,900	12900
KRV 30	0.984	25	M12x1.5	0.512	13	0.024	0.6	4500	16.23	22	2,750	12200	4,250	19000
KRV 32	0.984	25	M12x1.5	0.512	13	0.024	0.6	4500	16.23	22	2,750	12200	4,250	19000
KRV 35	1.280	32.5	M16x1.5	0.669	17	0.032	0.8	3400	43	58	4,100	18300	7,900	35000
KRV 40	1.437	36.5	M18x1.5	0.748	19	0.032	0.8	2900	64	87	4,700	21000	8,900	39500
KRV 47	1.595	40.5	M20x1.5	0.827	21	0.032	0.8	2600	89	120	6,300	28000	13,300	59000
KRV 52	1.595	40.5	M20x1.5	0.827	21	0.032	0.8	2600	89	120	6,300	28000	13,300	59000
KRV 62	1.949	49.5	M24x1.5	0.984	25	0.032	0.8	2200	162	220	9,300	41500	20,500	91000
KRV 72	1.949	49.5	M24x1.5	0.984	25	0.032	0.8	2200	162	220	9,300	41500	20,500	91000
KRV 80	2.480	63	M30x1.5	1.260	32	0.039	1	1700	332	450	13,500	60000	32,000	142000
KRV 90	2.480	63	M30x1.5	1.260	32	0.039	1	1700	332	450	13,500	60000	32,000	142000

PLEASE NOTE THAT KRV 16 & KRV 19 HAVE LUBRICATION HOLES THROUGH THE HEAD ONLY ON THE SCREWDRIVER SLOT. NO RELUBRICATION IS POSSIBLE ON THE HEX BORE ON THOSE SIZES.

Stud Type Cam Followers
NUKR SERIES

- Available with cylindrical tire OD – suffix X
- 2 row full complement cylindrical rollers
- Metric
- Labyrinth seals included for higher temperatures
- Accepts thrust through rollers
- Available with eccentric sleeve – prefix E

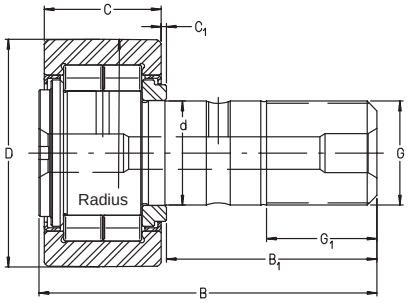

For details on part numbers, descriptive suffixes and various technical references, please refer to front of this section.
For engineering or technical information contact your local sales representative or call Distributor Sales (800)523-6572.

PART NUMBER	TIRE OD D inch	TIRE OD D mm	STUD DIA. d inch	STUD DIA. d mm	TIRE WIDTH C inch	TIRE WIDTH C mm	TOTAL LENGTH B inch	TOTAL LENGTH B mm	WEIGHT lbs	WEIGHT g	EFFECTIVE DYN. CAP. Cw lbf	EFFECTIVE DYN. CAP. Cw N	EFFECTIVE STAT. CAP. C_0w lbf	EFFECTIVE STAT. CAP. C_0w N	$F_{r\ perm}$ lbf	$F_{r\ perm}$ N
NUKR 35	1.378	35	0.630	16	0.709	18	2.047	52	0.362	164	3,600	15,000	4,100	16,800	1,870	8,600
NUKR 40	1.575	40	0.787	18	0.787	20	2.284	58	0.534	242	4,150	18,400	5,100	22,600	2,950	13,100
NUKR 47	1.850	47	0.787	20	0.945	24	2.598	66	0.838	380	6,300	28,000	7,800	35,000	3,700	16,400
NUKR 52	2.047	52	0.787	20	0.945	24	2.598	66	0.992	450	6,500	29,000	8,400	37,500	3,900	17,300
NUKR 62	2.441	62	0.945	24	1.102	28	3.150	80	1.753	795	9,100	40,000	11,500	50,000	5,600	23,500
NUKR 72	2.835	72	0.945	24	1.102	28	3.150	80	2.249	1020	10,100	44,500	13,700	50,000	7,500	32,000
NUKR 80	3.150	80	1.181	30	1.378	35	3.937	100	3.528	1600	15,100	69,000	20,900	98,000	10,000	47,500
NUKR 90	3.543	90	1.181	30	1.378	35	3.937	100	4.322	1960	17,300	79,000	24,700	117,000	16,200	77,000

CONTINUED FROM ABOVE

PART NUMBER	$F_{or\ perm}$ lbf	$F_{or\ perm}$ N	B_1 inch	B_1 mm	G	G_1 inch	G_1 mm	C_1 inch	C_1 mm	M_a nut torque ft-lbf	M_a nut torque Nm	SPEED LIMIT GREASE rpm	DYN. CAP. lbf	DYN. CAP. N	STAT. CAP. lbf	STAT. CAP. N	GREASE NIPPLE
NUKR 35	3,700	16,800	1.280	32.5	M 16x1.5	0.669	17	0.032	0.800	43	58	6500	5,200	21,200	6,100	24,600	NIP A 2x7,5 AP 8
NUKR 40	5,100	22,600	1.437	36.5	M 18x1.5	0.748	19	0.032	0.800	64	87	5500	5,600	24,800	7,000	31,000	NIP A 2x7,5 AP 8
NUKR 47	7,400	35,000	1.595	40.5	M 20x1.5	0.827	21	0.032	0.800	89	120	4200	8,800	39,000	11,200	50,000	NIP A 2x7,5 AP 8
NUKR 52	7,800	37,500	1.595	40.5	M 20x1.5	0.827	25	0.032	0.800	89	120	4200	9,800	43,000	13,500	60,000	NIP A2x7,5 AP 8
NUKR 62	11,100	50,000	1.949	49.5	M 24x1.5	0.984	25	0.032	1,300	162	220	2600	13,300	59,000	17,800	78,000	NIP A 3x9,5 AP 8
NUKR 72	13,700	50,000	1.949	49.5	M 24x1.5	0.984	25	0.032	1,300	162	220	2600	14,600	65,000	20,900	92,000	NIP A 3x9,5 AP 8
NUKR 80	20,000	98,000	2.480	63	M 30x1.5	1.260	32	0.039	1.000	332	450	1800	21,400	79,000	30,000	143,000	NIP A 3x9,5 AP 8
NUKR 90	24,700	117,000	2.480	63	M 30x1.5	1.260	32	0.039	1.000	332	450	1800	21,400	97,000	30,000	143,000	NIP A 3x9,5 AP 8

Stud Type Cam Followers
PWKR SERIES

- 2 row full complement cylindrical rollers
- Metric
- Contact seals included
- Accepts thrust through rollers
- Available with eccentric sleeve – prefix E

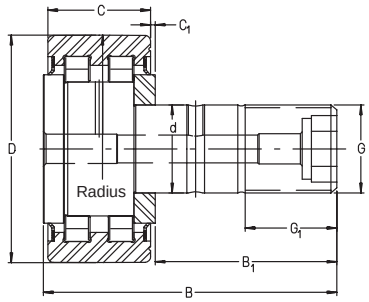

For details on part numbers, descriptive suffixes and various technical references, please refer to front of this section.
For engineering or technical information contact your local sales representative or call Distributor Sales (800)523-6572.

PART NUMBER	TIRE OD D inch	TIRE OD D mm	STUD DIA. d inch	STUD DIA. d mm	TIRE WIDTH C inch	TIRE WIDTH C mm	TOTAL LENGTH B inch	TOTAL LENGTH B mm	WEIGHT lbs	WEIGHT g	EFFECTIVE DYN. CAP. Cw lbf	EFFECTIVE DYN. CAP. Cw N	EFFECTIVE STAT. CAP. C_0w lbf	EFFECTIVE STAT. CAP. C_0w N	$F_{r\ perm}$ lbf	$F_{r\ perm}$ N
PWKR 35 2RS	1.378	35	0.630	16	0.709	18	2.047	52	0.362	164	2,750	11,600	2,700	11,300	2,110	9.400
PWKR 40 2RS	1.575	40	0.709	18	0.787	20	2.284	58	0.534	242	4,150	12,900	3,300	13,400	3,200	14.200
PWKR 47 2RS	1.850	47	0.787	20	0.945	24	2.598	66	0.838	380	6,300	23,200	5,700	25,500	5,700	25.500
PWKR 52 2RS	2.047	52	0.787	20	0.945	24	2.598	66	0.992	450	6,500	24,200	6,200	28,000	4,200	18.600
PWKR 62 2RS	2.441	62	0.945	24	1.102	28	3.150	80	1.753	795	9,100	35,000	8,400	39,500	4,950	22.100
PWKR 72 2RS	2.835	72	0.945	24	1.102	28	3.150	80	2.249	1020	10,100	38,000	10,800	46,500	10,800	48.000
PWKR 80 2RS	3.150	80	1.181	30	1.378	35	3.937	100	3.528	1600	15,100	56,000	17,800	70,000	12,800	57.000
PWKR 90 2RS	3.540	90	1.181	30	1.378	35	3.937	100	4.322	1960	17,300	63,000	20,500	82,000	19,600	87.000

CONTINUED FROM ABOVE

PART NUMBER	$F_{or\ perm}$ lbf	$F_{or\ perm}$ N	B_1 inch	B_1 mm	G	G_1 inch	G_1 mm	C_1 inch	C_1 mm	M_a nut torque ft-lbf	M_a nut torque Nm	SPEED LIMIT GREASE rpm	DYN. CAP. lbf	DYN. CAP. N	STAT. CAP. lbf	STAT. CAP. N
PWKR 35 2RS	2,700	11,300	1.280	32.500	M 16x1.5	0.669	17	0.032	0.800	43	58	6500	5,200	23.000	6,100	27
PWKR 40 2RS	3,300	13,400	1.437	36.500	M 18x1.5	0.748	19	0.032	0.800	64	87	5500	5,600	24.800	7,000	31
PWKR 47 2RS	5,700	25,500	1.595	40.500	M 20x1.5	0.827	21	0.032	0.800	89	120	4200	8,800	39.000	11,200	50
PWKR 52 2RS	6,200	28,000	1.595	40.500	M 20x1.5	0.827	21	0.032	0.800	89	120	3400	9,800	43.500	13,500	60
PWKR 62 2RS	8,400	39,500	1.949	49.500	M 24x1.5	0.984	25	0.032	0.800	162	220	2600	13,300	59.000	17,800	79
PWKR 72 2RS	10,800	46,500	1.949	49.500	M 24x1.5	0.984	25	0.032	0.800	162	220	2100	14,600	65.000	20,900	93
PWKR 80 2RS	17,800	70,000	2.480	63.000	M 30x1.5	1.260	32	0.039	1.000	332	450	1800	21,400	95.000	30,000	133
PWKR 90 2RS	20,500	82,000	2.480	63.000	M 30x1.5	1.260	32	0.039	1.000	332	450	1800	21,400	95.000	30,000	133

Cam Followers

CF SERIES

- Inch series
- Stud type cam follower
- Cylindrical tire OD
- Available with crowned OD – suffix Y
- Available sealed – suffix PP
- Available with eccentric sleeve – prefix E

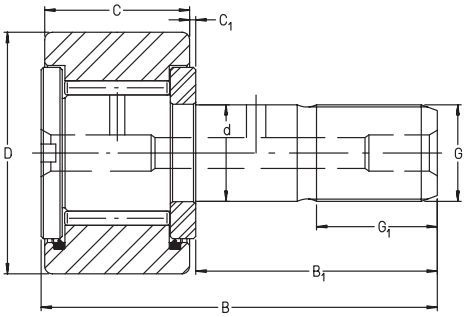

CF

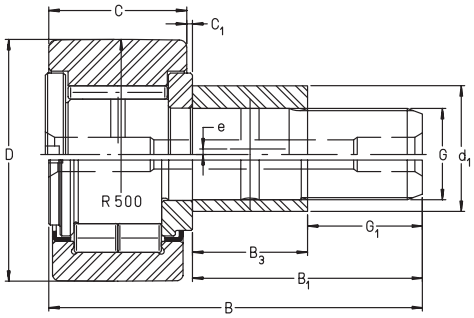

CFE

For details on part numbers, descriptive suffixes and various technical references, please refer to front of this section.
For engineering or technical information contact your local sales representative or call Distributor Sales (800)523-6572.

PART NUMBER	TIRE OD D inch	TIRE OD D mm	STUD DIA. d inch	STUD DIA. d mm	TIRE WIDTH C inch	TIRE WIDTH C mm	LENGTH B inch	LENGTH B mm	WEIGHT lbs	WEIGHT g	EFFECT. DYN. CAP. Cw lbf	EFFECT. DYN. CAP. Cw N	EFFECT. STAT. CAP. C_0w lbf	EFFECT. STAT. CAP. C_0w N
CF8–1	0.5	12.700	0.19	4.826	0.375	9.525	1.032	26.200	0.024	11	640	2850	830	3700
CF10–1	0.625	15.875	0.25	6.350	0.438	11.113	1.221	31.000	0.044	20	355	1580	435	1930
CF12	0.75	19.050	0.375	9.525	0.500	12.700	1.406	35.700	0.075	34	1,210	5400	1,780	7900
CF14	0.875	22.225	0.375	9.525	0.500	12.700	1.406	35.700	0.099	45	1,480	6600	2,380	10600
CF16	1	25.400	0.4375	11.112	0.625	15.875	1.654	42.000	0.159	72	1,730	7700	3,100	13700
CF18	1.125	28.575	0.4375	11.112	0.625	15.875	1.654	42.000	0.194	88	1,980	8800	3,700	16500
CF20	1.25	31.750	0.5	12.700	0.750	19.050	2.032	51.600	0.300	136	3,300	14600	4,600	20500
CF22	1.375	34.925	0.5	12.700	0.750	19.050	2.032	51.600	0.348	158	3,650	16200	5,400	23800
CF24	1.5	38.100	0.625	15.875	0.875	22.225	2.406	61.100	0.525	238	4,200	18600	6,600	29500
CF26	1.625	41.275	0.625	15.875	0.875	22.225	2.406	61.100	0.598	271	4,500	20000	7,300	32500
CF28	1.75	44.450	0.75	19.050	1.000	25.400	2.780	70.600	0.827	375	5,500	24400	9,700	43000
CF30	1.875	47.625	0.75	19.050	1.000	25.400	2.780	70.600	0.924	419	5,700	25500	10,600	47000
CF32	2	50.800	0.875	22.225	1.250	31.750	3.280	83.300	1.352	613	7,400	33000	11,200	50000
CF36	2.25	57.150	0.875	22.225	1.250	31.750	3.280	83.300	1.636	742	8,300	37000	13,500	60000
CF40	2.5	63.500	1	25.400	1.500	38.100	3.780	96.000	2.421	1098	11,500	51000	21,100	94000
CF44	2.75	69.850	1	25.400	1.500	38.100	3.780	96.000	2.867	1300	12,100	54000	23,200	103000
CF48	3	76.200	1.25	31.750	1.750	44.450	4.280	108.700	4.123	1870	13,500	60000	28,000	125000
CF52	3.25	82.550	1.75	44.450	1.750	44.450	4.280	108.700	5.733	2600	14,600	65000	31,500	140000
CF64	4	101.600	1.5	38.100	2.250	57.150	5.780	146.800	9.316	4225	21,400	95000	55,000	244000

CONTINUED FROM ABOVE

PART NUMBER	B_1 inch	B_1 mm	THREADS G	G_1 inch	G_1 mm	C_1 inch	C_1 mm	NUT TORQUE ft-lbf	NUT TORQUE Nm	SPEED LIMIT rpm	DYN. CAP. C lbf	DYN. CAP. C N	STAT. CAP. C_0 lbf	STAT. CAP. C_0 N
CF8–1	0.625	15.875	10–32 UNF	0.25	6.350	0.031	0.79	0.67	0.9	10000	830	3700	1,080	4800
CF10–1	0.75	19.050	1/4–28 UNF	0.3125	7.938	0.031	0.79	1.58	2.1	9000	940	4200	1,350	6000
CF12	0.875	22.225	3/8–24 UNF	0.375	9.525	0.031	0.79	5.42	7.3	6000	1,910	8500	3,100	13700
CF14	0.875	22.225	3/8–24 UNF	0.375	9.525	0.031	0.79	5.42	7.3	6000	1,910	8500	3,100	13700
CF16	1	25.400	7/16–20 UNF	0.5	12.700	0.031	0.79	8.75	11.9	5000	2,500	11200	4,750	21200
CF18	1	25.400	7/16–20 UNF	0.5	12.700	0.031	0.79	8.75	11.9	5000	2,500	11200	4,750	21200
CF20	1.25	31.750	1/2–20 UNF	0.625	15.875	0.031	0.79	13.75	18.6	4400	4,500	20100	6,500	29000
CF22	1.25	31.750	1/2–20 UNF	0.625	15.875	0.031	0.79	13.75	18.6	4400	4,500	20100	6,500	29000
CF24	1.5	38.100	5/8–18 UNF	0.75	19.050	0.031	0.79	27.92	37.8	3400	5,400	24200	8,700	38500
CF26	1.5	38.100	5/8–18 UNF	0.75	19.050	0.031	0.79	27.92	37.8	3400	5,400	24200	8,700	38500
CF28	1.75	44.450	3/4–16 UNF	0.875	22.225	0.031	0.79	50.00	67.8	2700	7,000	31000	12,400	55000
CF30	1.75	44.450	3/4–16 UNF	0.875	22.225	0.031	0.79	50.00	67.8	2700	7,000	31000	12,400	55000
CF32	2	50.800	7/8–14 UNF	1	25.400	0.031	0.79	79.17	107	2300	10,300	46000	16,600	74000
CF36	2	50.800	7/8–14 UNF	1	25.400	0.031	0.79	79.17	107	2300	10,300	46000	16,600	74000
CF40	2.25	57.150	1–14 UNF	1.125	28.575	0.031	0.79	120.83	164	2000	13,900	62000	25,000	112000
CF44	2.25	57.150	1–14 UNF	1.125	28.575	0.031	0.79	120.83	164	2000	13,900	62000	25,000	112000
CF48	2.5	63.500	1–1/4–12 UNF	1.25	31.750	0.031	0.79	187.50	254	1600	18,200	81000	40,000	177000
CF52	2.5	63.500	1–1/4–12 UNF	1.25	31.750	0.031	0.79	187.50	254	1600	18,200	81000	39,500	176000
CF64	3.5	88.900	1–1/2–12UNF	1.5	38.100	0.031	0.79	254.17	345	1300	27,500	122000	73,000	325000

NOTES

Section Contents
THRUST BEARINGS

BEARING SERIES	BEARING DESCRIPTION	PAGE
INFORMATION	THRUST BEARING, GENERAL OVERVIEW	87
P / N IDENTIFICATION	THRUST BEARINGS	88
BEARING SELECTOR	**BALL AND ROLLER THRUST BEARING SIZE SELECTOR SORTED BY SHAFT**	**95**
2000	INCH LIGHT/MEDIUM 3 PIECE BALL	118
2900	METRIC LIGHT SERIES 3 PIECE BALL	119
4100	METRIC MEDIUM SERIES SELF ALIGNING SEAT 3 PIECE BALL	120
4100AW	METRIC SELF ALIGNING SEATS	121
4400	INCH MEDIUM SERIES 3 PIECE BALL	122
51100	METRIC ISO LIGHT SERIES 3 PIECE BALL	124
51200	METRIC ISO MEDIUM SERIES 3 PIECE BALL	125
52200	METRIC ISO LIGHT SERIES DOUBLE DIRECTION BALL	126
52300	METRIC ISO MEDIUM SERIES DOUBLE DIRECTION BALL	126
900	METRIC MEDIUM SERIES 3 PIECE BALL	127
B	INCH BANDED BALL THRUST BEARING	128
D	INCH BANDED BALL THRUST BEARING	129
DL	METRIC LIGHT SERIES 3 PIECE BALL	130
EW	INCH LIGHT SERIES FLAT RACE BALL THRUST BEARING	131
FT	INCH MEDIUM SERIES FLAT RACE BALL	132
FTO	INCH LIGHT SERIES FLAT RACE BALL	133
GT	INCH MEDIUM SERIES 3 PIECE BALL	134
W	INCH MEDIUM SERIES 3 PIECE BALL	135
500	METRIC HEAVY SERIES SELF ALIGNING SEAT 3 PIECE BALL	138
HW	INCH HEAVY SERIES 3 PIECE BALL	138
MIXED SPECIALS	SPECIALS NOT OTHERWISE LISTED WITH CAPACITY	138
NON-SERIES	MISCELLANEOUS BALL & ROLLER THRUST BEARING DIMENSIONS	138
1000	METRIC HEAVY SERIES 3 PIECE BALL	139
800	METRIC MEDIUM SERIES DOUBLE DIRECTION SELF ALIGNING BALL	140
1900	METRIC MEDIUM SERIES DOUBLE DIRECTION BALL	140
3900	METRIC MEDIUM SERIES 3 PIECE BALL	140
DM	METRIC MEDIUM SERIES 3 PIECE BALL	140
MW	INCH MEDIUM SERIES 3 PIECE BALL	140
RT700	INCH HEAVY SERIES CYLINDRICAL ROLLER	141
89400	METRIC ISO 2 ROW POCKET SERIES CYLINDRICAL ROLLER	142
CAGE & BALL	INCH AND METRIC THRUST CAGE AND BALL ASSEMBLIES	144
CAGE SELECTOR	**INCH AND METRIC THRUST CAGE AND ROLLER ASSEMBLIES**	**146**
AXK	METRIC CAGE AND NEEDLE ASSEMBLY	146
K81100	METRIC ISO CAGE AND ROLLER ASSEMBLY	146
K81200	METRIC ISO CAGE AND ROLLER ASSEMBLY	146
K89300	METRIC ISO CAGE AND ROLLER ASSEMBLY	146

Section Contents
THRUST BEARINGS

BEARING SERIES	BEARING DESCRIPTION	PAGE
TC	INCH CAGE AND NEEDLE ASSEMBLY	146
K87400	METRIC ISO CAGE AND ROLLER ASSEMBLY	147
K89400	METRIC ISO CAGE AND ROLLER ASSEMBLY	147
XW	INCH LIGHT SERIES 3 PIECE BALL	136
WASHER SELECTOR	INCH AND METRIC THRUST WASHERS	152
AS	METRIC DUAL PURPOSE 1mm ROLLER WASHER	152
GS	METRIC ISO HOUSING PILOTED ROLLER WASHER	152
LS	METRIC DUAL PURPOSE WIDE ROLLER WASHER	152
WS	METRIC ISO SHAFT PILOTED ROLLER WASHER	152
TWA	INCH DUAL PURPOSE 1/32 ROLLER WASHER	152
TWB	INCH DUAL PURPOSE 1/16 ROLLER WASHER	152
TWC	INCH DUAL PURPOSE 3/32 ROLLER WASHER	152
TWD	INCH DUAL PURPOSE 1/8 ROLLER WASHER	152
81100	METRIC ISO LIGHT SERIES CYLINDRICAL ROLLER	164
81200	METRIC ISO MEDIUM SERIES CYLINDRICAL ROLLER	165
87400	METRIC ISO HEAVY MULTIPLE ROLLER POCKET SERIES CYLINDRICAL ROLLER	141
89300	METRIC ISO 2 ROW POCKET SERIES CYLINDRICAL ROLLER	166
COMPONENT	METRIC ISO SERIES COMPONENT BREAK DOWN FOR K8 WS & GS	167
AXW	METRIC PILOTED THRUST RACE	170
RCT	INCH CRANE HOOK CYLINDRICAL ROLLER	171
RT600	INCH MEDIUM SERIES CYLINDRICAL ROLLER	172
RTL	INCH LIGHT SERIES CYLINDRICAL ROLLER	173
RTW600	INCH MEDIUM SERIES SELF ALIGNING SEAT CYLINDRICAL ROLLER	174
RWCT	INCH CRANE HOOK CYLINDRICAL ROLLER WITH GREASE FITTING	171
ZS	METRIC CENTER WASHER FOR DOUBLE DIRECTION ROLLER	176

PRODUCT DESCRIPTION

INA Ball Thrust Bearings

- Available in a wide collection of ISO, DIN and popular inch and metric series.
- Available as banded, 3 piece grooved race, 3 piece flat race and self aligning series.
- Races are made from through hardening and case hardening steels, selective sizes available from stainless steel.
- Cage materials include phenolic, steel, plastic, aluminum and bronze.

INA Roller Thrust Bearings

- Available in a wide collection of ISO, DIN and popular inch and metric series.
- Available as complete bearings or cage and roller assemblies and washer components.
- Races are made from through hardening and case hardening steels.
- Cage materials include phenolic, steel, plastic, aluminum and bronze.

INA Double Direction Thrust Bearings

- Available in a wide collection of ISO, DIN and popular metric series.
- Available as complete bearings in ball series or component groups of cage and roller assemblies and ZS washers.
- Races are made from through hardening and case hardening steels.

INA Self Aligning Thrust Bearings

- Available in a wide collection of ISO, DIN and popular inch and metric series.
- Available as complete bearings with the self aligning seats sold separately.
- Races are made from through hardening and case hardening steels.

Part Number Identification
THRUST BEARINGS

THRUST BEARINGS
METRIC SERIES

900, 1000, 2900, 3900, 51100,
1900, 500, 3700, 4100, 800

29 **10**

SERIES

900	Medium Series, 3 Piece Ball
1000	Heavy Series,,3 Piece Ball
2900	Light Series, 3 Piece Ball
3900	Medium Series, 3 Piece Ball
51100	Light Series, 3 Piece Ball
1900	Medium Series, Double Direction Ball
500	Heavy Series, Double Direction, Self Aligning
3700	Medium Series, Double Direction, Self Aligning
4100	Medium Series, Double Direction, Self Aligning
800	Medium Series, Double Direction Ball

SIZE

Shaft per ISO Standards, in mm
/6, /8 – 6, 8 mm
00, 01, 02, 03 = 10, 12, 15, 17 mm
04 – 10 = Number x 5

METRIC ISO SERIES
5 DIGIT NUMBERS

5 **1** **1** **10**

5	Ball Thrust Bearing
6	Radial Ball Bearing
7	Angular Contact Bearing
8	Roller Thrust Bearing

WIDTH SERIES

8, 0, 1, 2, 3, 4, 5, 6, 9

DIAMETER SERIES

1, 2, 3, 4

00	10 mm Shaft
01	12 mm Shaft
02	15 mm Shaft
03	17 mm Shaft
04<	1/5 Shaft In mm
/XXX	Shaft In mm

Part Number Identification
THRUST BEARINGS

ANDREWS BALL THRUST BEARINGS
METRIC SERIES

DL, DM

DL **15**

SERIES

DL	Light Series, 3 Piece Ball
DM	Medium Series, 3 Piece Ball

SHAFT
In Millimeters

ANDREWS BALL THRUST BEARINGS
INCH SERIES

EW, W, HW, MW, XW

EW **1/4**

SERIES

EW	Light Series, Flat Race Ball
W	Standard, Grooved Race Ball
HW	Heavy Series, Grooved Race Ball
MW	Medium Series, Grooved Race Ball
XW	Extra Light Series, Grooved Race Ball

SIZE
Bearing Shaft
In Inches

Andrews is a registered trademark of INA USA Corporation

Part Number Identification
THRUST BEARINGS

ANDREWS THRUST BEARINGS
INCH SERIES

FT, D, B, GT, RTL, 44

FT **10**

SERIES

FT	Flat Race Ball
D	Banded Ball
B	Thin Banded Ball
GT	Grooved Race Ball
RTL	Cylindrical Roller
44XX	Heavy Series Grooved Race Ball

SIZE

(Size 1) = 1/2 inch
(Size – 1) = Number of 16ths Greater Than 1/2 Inch

AXIAL CYLINDRICAL BEARING
METRIC SERIES

811, 812, 893, 894, 874

8 **11** **02** **TN**

8##	K8## Cage & Roller Assembly Plus GS & WS Washers

ISO SHAFT STANDARDS

00	10 mm Shaft
01	12 mm Shaft
02	15mm Shaft
03	17mm Shaft
04<	1/5 Shaft In mm

TN	Plastic Cage (Polyamid 66 Cage)

1st Digit	ISO Width Series
2nd Digit	ISO Diameter Series

Part Number Identification
THRUST BEARINGS

BEARING WASHERS
METRIC SERIES

AS, LS, ZS

AS **04** **14**

PREFIX

AS	1 mm Thick
LS	Bearing Washer, Lower Accuracy
ZS	Center Washer, For Double Direction Bearing Combinations

Shaft In mm

OD In mm

AXIAL NEEDLE CAGE AND ROLLER ASSEMBLIES
METRIC SERIES

AXK

AXK **04** **14** **TN**

AXK Needle Rollers & Cage

Shaft In mm

OD In mm

Plastic Cage

PILOTED AXIAL NEEDLE / CYLINDRICAL BEARINGS
METRIC SERIES

AXW

AXW **10** **TN**

AXW Needle Rollers & Cage Assembly & AS Washer With Centering Spigot

Shaft In mm

TN Plastic Cage

Part Number Identification
THRUST BEARINGS

BEARING WASHERS
METRIC SERIES

GS, WS

GS811 **17**

PREFIX

GS	Housing Washer, ISO Series 11, 12, 74, 93, 94
WS	Shaft Washer ISO Series 11, 12, 74, 93, 94

00	10mm Shaft
01	12mm Shaft
02	15mm Shaft
03	17mm Shaft
04>	1/5 Shaft In mm

AXIAL NEEDLE / CYLINDRICAL
CAGE AND ROLLER ASSEMBLIES
METRIC SERIES

K811, K812, K874, K893, K894

K811 **04** **TN**

K811 & K812	Cylindrical Rollers, ISO Series 1 & 4, Single Row
K874	Cylindrical Rollers, ISO Series 4, Multi Row
K893 & K894	Cylindrical Rollers ISO Series 3 & 4, Double Row

02	15mm Shaft
03	17mm Shaft
04 <	1/5 Shaft In mm

Plastic Cage

ROLLER THRUST
INCH SERIES

RT, RTW

RT **6** **15**

SERIES

RT	Cylindrical Roller Thrust
RTW	Self Aligning Cylindrical Roller Thrust

6	Medium Series
7	Heavy Series

Sequential Number

Part Number Identification
THRUST BEARINGS

SPECIAL DIMENSION ANDREWS THRUST BEARINGS INCH SERIES

X, Y, Z, P, RT, J, N, RR, BR, RRT

05 **X** **22**

SIZE
Bearing Shaft
.1 x Size Code In Inches

IDENTITY
Insignificant
Sequential Number

SERIES

X	Three Piece Ball Bearing With Grooved Race
Y	Outside Banded Ball Bearing
Z	Inside Banded Ball Bearing
P	Three Piece Ball Bearing with Flat Races
RT	Cylindrical Roller Thrust
J	Pressed Steel Retainer
N	Nylon Retainer
RR	Radial Roller
BR	Radial Ball
RRT	Radial Roller Thrust

AXIAL NEEDLE / CYLINDRICAL CAGE AND ROLLER ASSEMBLIES INCH SERIES

TC

TC **4** **11**

TC Needle Rollers & Cage

Shaft In Sixteenths
Of An Inch

OD In Sixteenths
Of An Inch

Part Number Identification
THRUST BEARINGS

BEARING WASHERS
INCH SERIES

TWA, TWB, TWC, TWD

TWA **4** **11**

WIDTH SERIES

TWA	.030–.032 Inch
TWB	.060–.063 Inch
TWC	.092–.095 Inch
TWD	.123–.126 Inch

Shaft In Sixteenths Of An Inch

OD In Sixteenths Of An Inch

Thrust Bearing Selector

PART NUMBER AND SIZE

- Ball and roller thrust bearings
- Sorted by shaft dimension
- Series specific details can be found on subsequent pages. Please refer to Section Contents or Index for the correct page numbers.

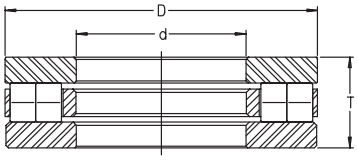

RT7 SHOWN FOR DIMENSIONAL REFERENCE

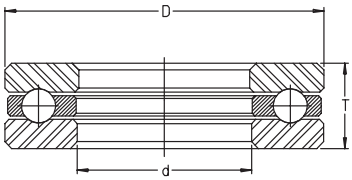

GT SHOWN FOR DIMENSIONAL REFERENCE

For details on part numbers, descriptive suffixes and various technical references, please refer to front of this section.
For engineering or technical information contact your local sales representative or call Distributor Sales (800)523-6572.

PART NUMBER	SHAFT inch	SHAFT mm	OD inch	OD mm	WIDTH inch	WIDTH mm
00Z22	0.000	0	2.250	57.15	1.000	25.4
01X03	0.161	4.089	0.462	11.735	0.283	7.188
01Y04	0.187	4.75	0.500	12.7	0.225	5.715
FT01	0.188	4.763	0.437	11.110	0.193	4.910
FT02	0.188	4.763	0.438	11.112	0.188	4.762
FT03	0.188	4.763	0.531	13.493	0.188	4.762
FT04	0.188	4.763	0.938	23.825	0.375	9.525
02X10	0.197	5.004	0.735	18.669	0.594	15.088
02X09	0.199	5.055	0.613	15.57	0.443	11.252
02Y10	0.250	6.35	0.495	12.57	0.255	6.48
FT05	0.250	6.350	0.563	14.287	0.219	5.556
02P25	0.250	6.35	0.563	14.3	0.224	5.69
2004	0.250	6.350	0.625	15.875	0.438	11.113
02X12	0.250	6.35	0.656	16.66	0.230	5.85
EW-1/4	0.250	6.350	0.656	16.662	0.250	6.350
02P12	0.250	6.35	0.666	16.916	0.260	6.604
FT06	0.250	6.350	0.813	20.650	0.375	9.530
W-1/4	0.250	6.350	0.813	20.650	0.375	9.530
FT07	0.250	6.350	0.844	21.438	0.375	9.525
02PS16	0.252	6.4	0.563	14.288	0.223	5.67
03Y01	0.312	7.925	0.515	13.081	0.255	6.477
FC67686	0.313	7.938	0.625	15.875	0.204	5.18
FT08	0.313	7.938	0.625	15.875	0.250	6.350
2044	0.313	7.938	0.675	17.145	0.281	7.144
EW-5/16	0.313	7.938	0.750	19.050	0.250	6.350
FT09	0.313	7.938	0.844	21.431	0.375	9.525
W-5/16	0.313	7.938	1.000	25.400	0.531	13.490
03Y04	0.313	7.95	0.615	15.62	0.318	8.08
03Y49	0.314	7.976	0.515	13.081	0.109	2.769
03Y51	0.316	8.026	0.682	17.323	0.315	8.001
03Y03	0.316	8.03	0.688	17.48	0.313	7.95
03X16	0.329	8.357	1.192	30.277	0.801	20.345
00Z27A	0.358	9.09	1.680	42.67	0.635	16.13
03Y50	0.375	9.525	0.600	15.24	0.068	1.724
FT010	0.375	9.525	0.688	17.480	0.281	7.144
03Y12	0.375	9.525	0.750	19.05	0.313	7.938
EW-3/8	0.375	9.525	0.813	20.650	0.250	6.350
W-3/8	0.375	9.525	1.000	25.400	0.530	13.460
FT011	0.375	9.525	1.031	26.190	0.500	12.700
FT012	0.375	9.525	1.094	27.790	0.500	12.700
HW-3/8	0.375	9.525	1.125	28.575	0.625	15.875
03Y47	0.375	9.525	1.202	30.53	0.500	12.7
03Y21	0.376	9.55	0.753	19.13	0.314	7.97
03Y13	0.376	9.563	0.600	15.24	0.187	4.75
03Y40	0.378	9.601	0.943	23.952	0.313	7.938
03Y07	0.380	9.652	0.640	16.256	0.380	9.652
03Y10	0.380	9.652	0.671	17.043	0.380	9.652

Thrust Bearing Selector
PART NUMBER AND SIZE

- Ball and roller thrust bearings
- Sorted by shaft dimension
- Series specific details can be found on subsequent pages. Please refer to Section Contents or Index for the correct page numbers.

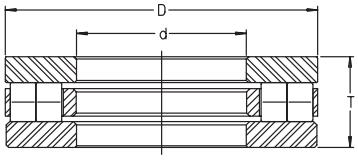

RT7 SHOWN FOR DIMENSIONAL REFERENCE

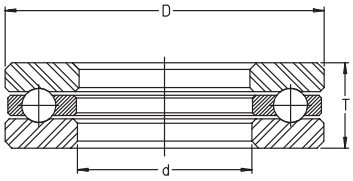

GT SHOWN FOR DIMENSIONAL REFERENCE

For details on part numbers, descriptive suffixes and various technical references, please refer to front of this section.
For engineering or technical information contact your local sales representative or call Distributor Sales (800)523-6572.

PART NUMBER	SHAFT inch	SHAFT mm	OD inch	OD mm	WIDTH inch	WIDTH mm
51100	0.394	10.000	0.945	24.000	0.354	9.000
900	0.394	10.000	0.984	25.000	0.472	12.000
4100	0.394	10.000	0.984	25.000	0.556	14.122
51200	0.394	10.000	1.024	26.000	0.433	11.000
2900	0.394	10.000	1.024	26.000	0.472	12.000
04Y09	0.406	10.31	1.057	26.85	0.370	9.39
2003	0.438	11.113	0.750	19.050	0.250	6.350
FT013	0.438	11.113	0.813	20.650	0.313	7.950
2085	0.438	11.113	0.875	22.225	0.250	6.350
04Y07	0.438	11.113	0.890	22.606	0.438	11.113
2063	0.438	11.113	0.937	23.800	0.500	12.700
FT014	0.438	11.113	1.094	27.788	0.500	12.700
W-7/16	0.438	11.113	1.281	32.540	0.625	15.875
04Y01	0.441	11.201	0.813	20.638	0.251	6.375
DL12	0.472	12.000	0.906	23.000	0.354	9.000
51101	0.472	12.000	1.024	26.000	0.354	9.000
51201	0.472	12.000	1.102	28.000	0.433	11.000
2901	0.472	12.000	1.102	28.000	0.472	12.000
05Y04	0.499	12.675	0.890	22.606	0.442	11.227
05Y03	0.499	12.687	0.765	19.431	0.442	11.227
2002	0.500	12.700	0.750	19.050	0.438	11.113
FT015	0.500	12.700	0.875	22.225	0.250	6.350
FT016	0.500	12.700	0.875	22.225	0.375	9.525
2097	0.500	12.700	0.875	22.225	0.563	14.288
EW-1/2	0.500	12.700	0.969	24.610	0.250	6.350
05Y05	0.500	12.7	0.990	25.146	0.505	12.827
05X04	0.500	12.7	0.995	25.273	0.380	9.652
2458	0.500	12.700	1.062	26.975	0.312	7.925
05Y06	0.500	12.7	1.122	28.5	0.500	12.7
05X44	0.500	12.7	1.187	30.15	0.442	11.227
B1	0.500	12.700	1.219	30.956	0.625	15.880
D1	0.500	12.700	1.219	30.963	0.563	14.300
FT1	0.500	12.700	1.219	30.963	0.563	14.300
GT1	0.500	12.700	1.219	30.963	0.563	14.300
W-1/2	0.500	12.700	1.281	32.540	0.625	15.875
HW-1/2	0.500	12.700	1.313	33.350	0.719	18.263
4401	0.500	12.700	1.438	36.513	0.625	15.875
05Y60	0.503	12.776	1.234	31.344	0.564	14.326
05X101	0.504	12.8	0.969	24.61	0.230	5.84
05Y11	0.531	13.48	0.890	22.606	0.443	11.24
05Y74	0.533	13.538	0.800	20.32	0.187	4.75
05Y18	0.533	13.538	0.810	20.574	0.187	4.75
F-200284	0.555	14.1	1.451	36.85	0.435	11.05
05X60	0.560	14.224	1.224	31.09	0.385	9.779
B2	0.563	14.288	1.219	30.960	0.625	15.880
D2	0.563	14.288	1.219	30.963	0.563	14.300
FT2	0.563	14.288	1.219	30.963	0.563	14.300

Thrust Bearing Selector
PART NUMBER AND SIZE

- Ball and roller thrust bearings
- Sorted by shaft dimension
- Series specific details can be found on subsequent pages. Please refer to Section Contents or Index for the correct page numbers.

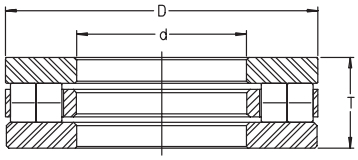

RT7 SHOWN FOR DIMENSIONAL REFERENCE

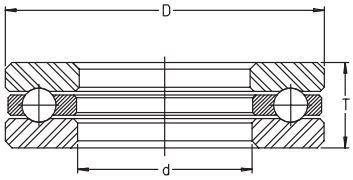

GT SHOWN FOR DIMENSIONAL REFERENCE

For details on part numbers, descriptive suffixes and various technical references, please refer to front of this section.
For engineering or technical information contact your local sales representative or call Distributor Sales (800)523-6572.

PART NUMBER	SHAFT inch	SHAFT mm	OD inch	OD mm	WIDTH inch	WIDTH mm
GT2	0.563	14.288	1.219	30.963	0.563	14.300
W-9/16	0.563	14.288	1.406	35.710	0.625	15.875
4402	0.563	14.288	1.438	36.530	0.625	15.875
05Y12	0.564	14.326	1.015	25.781	0.569	14.453
05XS12	0.564	14.326	1.276	32.41	0.505	12.827
05X67	0.590	14.991	1.378	35.001	0.556	14.127
DL15	0.591	15.000	1.024	26.000	0.354	9.000
51102	0.591	15.000	1.102	28.000	0.354	9.000
811 02 TN	0.591	15.000	1.102	28.000	0.354	9.000
FC69992	0.591	15	1.102	28	0.354	9
2902	0.591	15.000	1.221	31.000	0.472	12.000
51202	0.591	15.000	1.260	32.000	0.472	12.000
902	0.591	15.000	1.378	35.000	0.551	14.000
4102	0.591	15.000	1.378	35.000	0.591	15.000
502	0.591	15.000	1.378	35.000	0.787	20.000
06X77	0.595	15.113	1.028	26.111	0.359	9.119
06Y42	0.625	15.875	0.995	25.273	0.442	11.227
2006	0.625	15.875	1.000	25.400	0.500	12.700
EW-5/8	0.625	15.875	1.094	27.788	0.281	7.140
2132	0.625	15.875	1.125	28.575	0.563	14.288
2043	0.625	15.875	1.250	31.750	0.563	14.288
D3	0.625	15.875	1.344	34.138	0.563	14.300
FT3	0.625	15.875	1.344	34.138	0.563	14.300
GT3	0.625	15.875	1.344	34.138	0.563	14.300
B3	0.625	15.875	1.344	34.138	0.625	15.875
W-5/8	0.625	15.875	1.406	35.710	0.625	15.875
4403	0.625	15.875	1.563	39.700	0.625	15.875
06Y12	0.627	15.926	0.917	23.29	0.187	4.75
06Y60	0.627	15.926	0.917	23.292	0.187	4.75
06X63	0.627	15.926	0.992	25.197	0.500	12.7
06XS07	0.627	15.926	1.276	32.41	0.505	12.83
06Y33	0.627	15.926	1.421	36.093	0.458	11.633
06Y49	0.628	15.951	1.354	34.391	0.583	14.81
06Y36	0.629	15.975	1.000	25.4	0.375	9.525
06X65	0.629	15.975	1.406	35.712	0.630	16.01
06P06	0.629	15.977	1.094	27.781	0.286	7.264
06X30	0.630	16.002	1.625	41.275	0.925	23.5
06Y05	0.656	16.65	1.140	28.956	0.500	12.7
06X62	0.659	16.738	1.378	35	0.636	16.154
DL17	0.669	17.000	1.102	28.000	0.374	9.500
51103	0.669	17.000	1.181	30.000	0.354	9.000
811 03 TN	0.669	17.000	1.181	30.000	0.354	9.000
51203	0.669	17.000	1.378	35.000	0.472	12.000
FC66992.1	0.669	17	1.457	37	0.276	7
FC66992.5	0.669	17	1.457	37	0.548	13.92
503	0.669	17.000	1.457	37.000	0.787	20.000
FC68404	0.673	17.1	1.461	37.1	0.548	13.92

Thrust Bearing Selector
PART NUMBER AND SIZE

- Ball and roller thrust bearings
- Sorted by shaft dimension
- Series specific details can be found on subsequent pages. Please refer to Section Contents or Index for the correct page numbers.

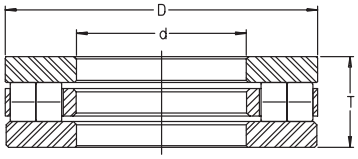

RT7 SHOWN FOR DIMENSIONAL REFERENCE

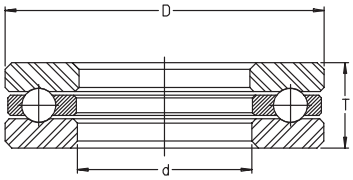

GT SHOWN FOR DIMENSIONAL REFERENCE

For details on part numbers, descriptive suffixes and various technical references, please refer to front of this section.
For engineering or technical information contact your local sales representative or call Distributor Sales (800)523-6572.

PART NUMBER	SHAFT inch	SHAFT mm	OD inch	OD mm	WIDTH inch	WIDTH mm
FC68404.1	0.673	17.1	1.461	37.1	0.548	13.92
FC69726	0.673	17.1	1.461	37.1	0.548	13.92
D4	0.688	17.463	1.344	34.138	0.563	14.300
FT4	0.688	17.463	1.344	34.138	0.563	14.300
GT4	0.688	17.463	1.344	34.138	0.563	14.300
B4	0.688	17.463	1.344	34.140	0.625	15.880
4404	0.688	17.463	1.563	39.700	0.625	15.875
2903	0.709	18.000	1.378	35.000	0.472	12.000
07Y08	0.735	18.669	1.406	35.712	0.458	11.633
2009	0.750	19.050	1.250	31.750	0.438	11.113
2005	0.750	19.050	1.250	31.750	0.563	14.288
EW-3/4	0.750	19.050	1.313	33.350	0.281	7.140
D5	0.750	19.050	1.469	37.313	0.563	14.300
FT5	0.750	19.050	1.469	37.313	0.563	14.300
GT5	0.750	19.050	1.469	37.313	0.563	14.300
B5	0.750	19.050	1.469	37.313	0.625	15.880
W-3/4	0.750	19.050	1.531	38.890	0.625	15.875
4405	0.750	19.050	1.688	42.880	0.630	16.000
HW-3/4	0.750	19.050	1.813	46.050	0.875	22.225
07Y03	0.753	19.126	1.125	28.575	0.625	15.875
07Y51	0.753	19.126	1.469	37.306	0.568	14.427
07X78	0.753	19.127	1.250	31.75	0.442	11.23
07P21	0.754	19.152	1.313	33.338	0.286	7.264
07X51	0.781	19.837	1.783	45.293	1.041	26.441
51104	0.787	20.000	1.378	35.000	0.394	10.000
811 04 TN	0.787	20.000	1.378	35.000	0.394	10.000
2904	0.787	20.000	1.457	37.000	0.472	12.000
DL20	0.787	20.000	1.535	39.000	0.520	13.200
51204	0.787	20.000	1.575	40.000	0.551	14.000
904	0.787	20.000	1.575	40.000	0.551	14.000
4104	0.787	20.000	1.575	40.000	0.630	16.000
1004	0.787	20.000	1.772	45.000	0.906	23.000
504	0.787	20.000	1.772	45.000	0.945	24.000
2007	0.813	20.638	1.250	31.750	0.500	12.700
B6	0.813	20.638	1.469	37.310	0.625	15.880
D6	0.813	20.638	1.469	37.313	0.563	14.300
FT6	0.813	20.638	1.469	37.313	0.563	14.300
GT6	0.813	20.638	1.469	37.313	0.563	14.300
08Y24	0.813	20.638	1.483	37.67	0.575	14.6
4406	0.813	20.638	1.688	42.880	0.625	15.875
08Y04	0.813	20.66	1.265	32.131	0.189	4.813
08Y42	0.814	20.68	1.093	27.76	0.250	6.35
08Y14	0.829	21.057	1.093	27.762	0.250	6.35
08Y23	0.843	21.4	1.562	39.675	0.501	12.725
08Y06	0.843	21.41	1.265	32.131	0.505	12.827
08Y07	0.843	21.41	1.390	35.306	0.505	12.827
08X12	0.844	21.438	1.625	41.275	1.000	25.4

Thrust Bearing Selector
PART NUMBER AND SIZE

- Ball and roller thrust bearings
- Sorted by shaft dimension
- Series specific details can be found on subsequent pages. Please refer to Section Contents or Index for the correct page numbers.

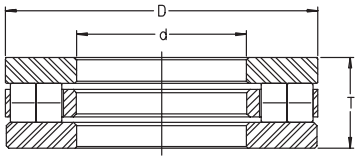

RT7 SHOWN FOR DIMENSIONAL REFERENCE

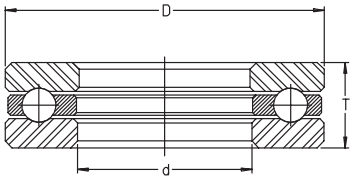

GT SHOWN FOR DIMENSIONAL REFERENCE

For details on part numbers, descriptive suffixes and various technical references, please refer to front of this section.
For engineering or technical information contact your local sales representative or call Distributor Sales (800)523-6572.

PART NUMBER	SHAFT inch	SHAFT mm	OD inch	OD mm	WIDTH inch	WIDTH mm
08Y32	0.847	21.514	1.375	34.925	0.500	12.7
2904-1/2	0.866	22.000	1.654	42.000	0.551	14.000
2011	0.875	22.225	1.375	34.925	0.563	14.288
EW-7/8	0.875	22.225	1.500	38.100	0.375	9.525
W-7/8	0.875	22.225	1.656	42.060	0.625	15.875
D7	0.875	22.225	1.844	46.838	0.625	15.875
FT7	0.875	22.225	1.844	46.838	0.625	15.875
GT7	0.875	22.225	1.844	46.838	0.625	15.875
RTL7	0.875	22.225	1.844	46.838	0.625	15.875
B7	0.875	22.225	1.844	46.840	0.750	19.050
4407	0.875	22.225	1.938	49.230	0.750	19.050
HW-7/8	0.875	22.225	2.063	52.400	1.000	25.400
08X25	0.875	22.225	2.563	65.088	0.781	19.844
08Y38	0.878	22.301	1.515	38.481	0.380	9.652
2001	0.938	23.813	1.500	38.100	0.500	12.700
D8	0.938	23.813	1.844	46.838	0.625	15.875
FT8	0.938	23.813	1.844	46.838	0.625	15.875
GT8	0.938	23.813	1.844	46.838	0.625	15.875
RTL8	0.938	23.813	1.844	46.838	0.625	15.875
B8	0.938	23.813	1.844	46.838	0.750	19.050
4408	0.938	23.813	1.938	49.230	0.750	19.050
FC67327	0.945	24	1.496	38	0.143	3.62
FC67327.3	0.945	24	1.496	38	0.143	3.62
51105	0.984	25.000	1.654	42.000	0.433	11.000
811 05 TN	0.984	25.000	1.654	42.000	0.433	11.000
2905	0.984	25.000	1.772	45.000	0.551	14.000
DL25	0.984	25.000	1.772	45.000	0.551	14.000
51205	0.984	25.000	1.850	47.000	0.591	15.000
F-233454.4	0.984	25	1.860	47.25	0.182	4.62
905	0.984	25.000	1.890	48.000	0.610	15.500
4105	0.984	25.000	1.890	48.000	0.669	17.000
505	0.984	25.000	2.284	58.000	1.181	30.000
09XS28	0.990	25.146	1.772	45.009	0.553	14.046
10Y25	1.000	25.4	1.500	38.1	0.625	15.875
2008	1.000	25.400	1.500	38.100	0.625	15.875
FC69708.1	1.000	25.4	1.613	40.97	0.228	5.79
2087	1.000	25.400	1.625	41.275	0.563	14.288
EW1	1.000	25.400	1.625	41.280	0.375	9.530
2010	1.000	25.400	1.750	44.450	0.563	14.288
W1	1.000	25.400	1.781	45.240	0.625	15.875
F-216064.3	1.000	25.4	1.925	48.9	0.197	5
B9	1.000	25.400	1.969	50.010	0.750	19.050
D9	1.000	25.400	1.969	50.013	0.625	15.875
FT9	1.000	25.400	1.969	50.013	0.625	15.875
GT9	1.000	25.400	1.969	50.013	0.625	15.875
RTL9	1.000	25.400	1.969	50.013	0.625	15.875
4409	1.000	25.400	2.063	52.400	0.750	19.050

Thrust Bearing Selector
PART NUMBER AND SIZE

- Ball and roller thrust bearings
- Sorted by shaft dimension
- Series specific details can be found on subsequent pages. Please refer to Section Contents or Index for the correct page numbers.

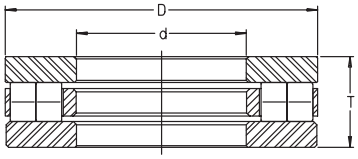

RT7 SHOWN FOR DIMENSIONAL REFERENCE

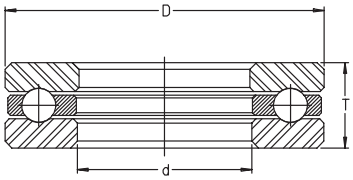

GT SHOWN FOR DIMENSIONAL REFERENCE

For details on part numbers, descriptive suffixes and various technical references, please refer to front of this section.
For engineering or technical information contact your local sales representative or call Distributor Sales (800)523-6572.

PART NUMBER	SHAFT inch	SHAFT mm	OD inch	OD mm	WIDTH inch	WIDTH mm
RT601	1.000	25.400	2.126	53.988	0.813	20.638
RTW601	1.000	25.400	2.251	57.168	1.062	26.975
HW1	1.000	25.400	2.438	61.930	1.125	28.575
10Y03	1.031	26.18	1.640	41.656	0.630	16.002
RTW602	1.060	26.924	2.251	57.168	1.062	26.975
2209	1.063	26.988	1.687	42.850	0.625	15.875
B10	1.063	26.988	1.969	50.012	0.750	19.050
D10	1.063	26.988	1.969	50.013	0.625	15.875
FT10	1.063	26.988	1.969	50.013	0.625	15.875
GT10	1.063	26.988	1.969	50.013	0.625	15.875
RTL10	1.063	26.988	1.969	50.013	0.625	15.875
4410	1.063	26.988	2.063	52.400	0.750	19.050
RT602	1.063	26.988	2.126	53.988	0.812	20.625
10XS18	1.064	27.038	1.875	47.63	0.500	12.7
EW1-1/8	1.125	28.575	1.750	44.450	0.375	9.530
2024	1.125	28.575	1.875	47.625	0.563	14.288
W1-1/8	1.125	28.575	1.906	48.410	0.625	15.875
11Y01	1.125	28.575	1.995	50.673	0.627	15.926
RTL11	1.125	28.575	2.094	53.181	0.625	15.875
D11	1.125	28.575	2.094	53.188	0.625	15.875
FT11	1.125	28.575	2.094	53.188	0.625	15.875
GT11	1.125	28.575	2.094	53.188	0.625	15.875
B11	1.125	28.575	2.094	53.190	0.750	19.050
4411	1.125	28.575	2.188	55.580	0.750	19.050
11RT03	1.125	28.575	2.250	57.15	0.752	19.1
RT603	1.125	28.575	2.250	57.150	0.813	20.638
RTW603	1.125	28.575	2.375	60.325	1.062	26.975
11RT04	1.127	28.626	2.625	66.675	0.752	19.1
11XS10	1.129	28.677	1.750	44.45	0.380	9.652
11X09	1.135	28.829	2.175	55.245	1.062	26.975
11X58	1.181	30	1.850	47	0.433	11
51106	1.181	30.000	1.850	47.000	0.433	11.000
811 06 TN	1.181	30.000	1.850	47.000	0.433	11.000
2906	1.181	30.000	1.969	50.000	0.551	14.000
51206	1.181	30.000	2.047	52.000	0.630	16.000
812 06 TN	1.181	30.000	2.047	52.000	0.630	16.000
906	1.181	30.000	2.087	53.000	0.610	15.500
DL30	1.181	30.000	2.087	53.000	0.610	15.500
4106	1.181	30.000	2.087	53.000	0.709	18.000
893 06 TN	1.181	30.000	2.362	60.000	0.709	18.000
3906	1.181	30.000	2.362	60.000	0.748	19.000
1908	1.181	30.000	2.520	64.000	1.260	32
808	1.181	30.000	2.520	64.000	1.496	38.000
11X04	1.181	30	2.717	69	1.654	42
11YT127E	1.185	30.099	2.635	66.929	0.766	19.456
2283	1.188	30.163	1.938	49.212	0.531	13.494
RTL12	1.188	30.163	2.094	53.181	0.625	15.875

Thrust Bearing Selector
PART NUMBER AND SIZE

- Ball and roller thrust bearings
- Sorted by shaft dimension
- Series specific details can be found on subsequent pages. Please refer to Section Contents or Index for the correct page numbers.

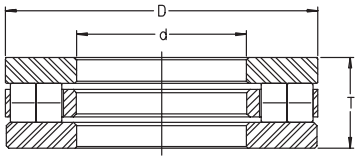

RT7 SHOWN FOR DIMENSIONAL REFERENCE

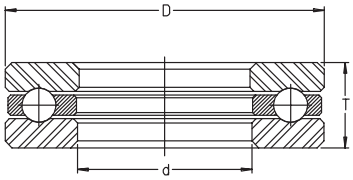

GT SHOWN FOR DIMENSIONAL REFERENCE

For details on part numbers, descriptive suffixes and various technical references, please refer to front of this section.
For engineering or technical information contact your local sales representative or call Distributor Sales (800)523-6572.

PART NUMBER	SHAFT inch	SHAFT mm	OD inch	OD mm	WIDTH inch	WIDTH mm
D12	1.188	30.163	2.094	53.188	0.625	15.875
FT12	1.188	30.163	2.094	53.188	0.625	15.875
GT12	1.188	30.163	2.094	53.188	0.625	15.875
B12	1.188	30.163	2.094	53.190	0.750	19.050
4412	1.188	30.163	2.188	55.580	0.750	19.050
RT604	1.188	30.163	2.250	57.150	0.813	20.637
RTW604	1.188	30.163	2.375	60.325	1.062	26.975
2096	1.250	31.750	2.000	50.800	0.813	20.638
EW1-1/4	1.250	31.750	2.063	52.400	0.500	12.700
W1-1/4	1.250	31.750	2.094	53.190	0.719	18.260
FC68496.1	1.250	31.75	2.120	53.848	0.184	4.67
4413	1.250	31.750	2.313	58.750	0.750	19.050
RTL13	1.250	31.750	2.344	59.531	0.625	15.875
D13	1.250	31.750	2.344	59.538	0.625	15.875
FT13	1.250	31.750	2.344	59.538	0.625	15.875
GT13	1.250	31.750	2.344	59.538	0.625	15.875
B13	1.250	31.750	2.344	59.538	0.750	19.050
RT605	1.250	31.750	2.375	60.325	0.813	20.637
RTW605	1.250	31.750	2.500	63.500	1.063	26.988
12Y23	1.250	31.75	2.750	69.85	0.813	20.638
12YT127J	1.256	31.902	2.635	66.929	0.766	19.456
FC68495	1.275	32.385	2.162	54.915	0.193	4.9
12Y01	1.280	32.512	1.875	47.625	1.000	25.4
12Y03	1.281	32.542	2.140	54.356	1.005	25.527
F-223428.1	1.299	33	2.047	52	0.161	4.1
13YS19SS	1.299	33	2.484	63.09	0.630	16.01
FC67909	1.306	33.18	1.925	48.9	0.143	3.62
13X11	1.313	33.338	2.254	57.25	0.688	17.463
13X49	1.313	33.338	2.254	57.252	0.689	17.488
4414	1.313	33.338	2.313	58.750	0.750	19.050
RTL14	1.313	33.338	2.344	59.531	0.625	15.875
D14	1.313	33.338	2.344	59.538	0.625	15.875
FT14	1.313	33.338	2.344	59.538	0.625	15.875
GT14	1.313	33.338	2.344	59.538	0.625	15.875
B14	1.313	33.338	2.344	59.540	0.750	19.050
RT606	1.313	33.338	2.375	60.325	0.813	20.637
RTW606	1.313	33.338	2.500	63.500	1.062	26.975
13Y18	1.346	34.188	2.150	54.61	0.585	14.86
FC67945	1.375	34.925	2.148	54.55	0.330	8.38
EW1-3/8	1.375	34.925	2.188	55.575	0.500	12.700
W1-3/8	1.375	34.925	2.219	56.360	0.719	18.260
4415	1.375	34.925	2.438	61.930	0.750	19.050
D15	1.375	34.925	2.469	62.713	0.625	15.875
FT15	1.375	34.925	2.469	62.713	0.625	15.875
GT15	1.375	34.925	2.469	62.713	0.625	15.875
RTL15	1.375	34.925	2.469	62.713	0.625	15.875
B15	1.375	34.925	2.469	62.713	0.750	19.050

Thrust Bearing Selector
PART NUMBER AND SIZE

- Ball and roller thrust bearings
- Sorted by shaft dimension
- Series specific details can be found on subsequent pages. Please refer to Section Contents or Index for the correct page numbers.

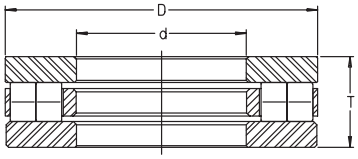

RT7 SHOWN FOR DIMENSIONAL REFERENCE

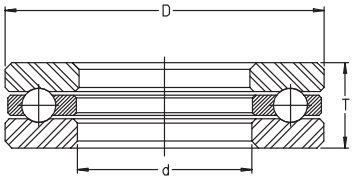

GT SHOWN FOR DIMENSIONAL REFERENCE

For details on part numbers, descriptive suffixes and various technical references, please refer to front of this section.
For engineering or technical information contact your local sales representative or call Distributor Sales (800)523-6572.

PART NUMBER	SHAFT inch	SHAFT mm	OD inch	OD mm	WIDTH inch	WIDTH mm
RT607	1.375	34.925	2.875	73.025	0.813	20.637
RTW607	1.375	34.925	3.000	76.200	1.062	26.975
51107X	1.378	35.000	2.047	52.000	0.472	12.000
811 07 TN	1.378	35.000	2.047	52.000	0.472	12.000
51107	1.378	35.000	2.087	53.000	0.472	12.000
2907	1.378	35.000	2.165	55.000	0.630	16.000
DL35	1.378	35.000	2.244	57.000	0.681	17.300
51207	1.378	35.000	2.441	62.000	0.709	18.000
812 07 TN	1.378	35.000	2.441	62.000	0.709	18.000
907	1.378	35.000	2.441	62.000	0.709	18.000
4107	1.378	35.000	2.441	62.000	0.827	21.000
893 07 TN	1.378	35.000	2.677	68.000	0.787	20.000
3907	1.378	35.000	2.677	68.000	0.906	23.000
DM35	1.378	35.000	2.677	68.000	0.965	24.500
1007	1.378	35.000	2.835	72.000	1.457	37.000
4416	1.438	36.513	2.438	61.930	0.750	19.050
B16	1.438	36.513	2.469	62.710	0.750	19.050
FT16	1.438	36.513	2.469	62.713	0.625	15.875
RTL16	1.438	36.513	2.469	62.713	0.625	15.875
D16	1.438	36.513	2.469	65.888	0.625	15.875
GT16	1.438	36.513	2.469	65.888	0.625	15.875
RT608	1.438	36.513	2.875	73.025	0.812	20.625
RTW608	1.438	36.513	3.000	76.200	1.602	40.691
2092	1.438	36.513	3.250	82.550	1.313	33.338
FC68417	1.448	36.78	2.047	52	0.170	4.32
FC67907	1.455	36.95	2.126	54	0.143	3.62
FC68168	1.496	38	2.480	63	0.197	5
EW1-1/2	1.500	38.100	2.313	58.750	0.500	12.700
W1-1/2	1.500	38.100	2.344	59.540	0.719	18.260
4417	1.500	38.100	2.563	65.100	0.750	19.050
RTL17	1.500	38.100	2.594	65.881	0.625	15.875
D17	1.500	38.100	2.594	65.888	0.625	15.875
FT17	1.500	38.100	2.594	65.888	0.625	15.875
GT17	1.500	38.100	2.594	65.888	0.625	15.875
B17	1.500	38.100	2.594	65.888	0.750	19.050
MW1-1/2	1.500	38.100	2.875	73.025	1.125	28.575
RT609	1.500	38.100	3.000	76.200	0.813	20.637
RTW609	1.500	38.100	3.125	79.375	1.062	26.975
15X55	1.535	38.994	2.438	61.918	1.605	40.77
4418	1.563	39.688	2.563	65.100	0.750	19.050
RTL18	1.563	39.688	2.594	65.881	0.625	15.875
D18	1.563	39.688	2.594	65.888	0.625	15.875
FT18	1.563	39.688	2.594	65.888	0.625	15.875
GT18	1.563	39.688	2.594	65.888	0.625	15.875
B18	1.563	39.688	2.594	65.890	0.750	19.050
RT610	1.563	39.688	3.000	76.200	0.812	20.625
RTW610	1.563	39.688	3.125	79.375	1.062	26.975

Thrust Bearing Selector
PART NUMBER AND SIZE

- Ball and roller thrust bearings
- Sorted by shaft dimension
- Series specific details can be found on subsequent pages. Please refer to Section Contents or Index for the correct page numbers.

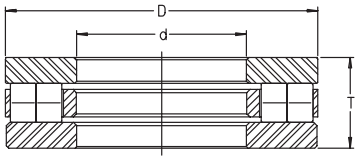

RT7 SHOWN FOR DIMENSIONAL REFERENCE

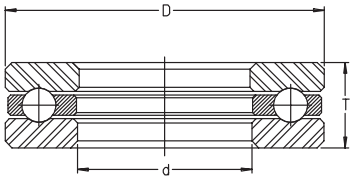

GT SHOWN FOR DIMENSIONAL REFERENCE

For details on part numbers, descriptive suffixes and various technical references, please refer to front of this section.
For engineering or technical information contact your local sales representative or call Distributor Sales (800)523-6572.

PART NUMBER	SHAFT inch	SHAFT mm	OD inch	OD mm	WIDTH inch	WIDTH mm
51108	1.575	40.000	2.362	60.000	0.512	13.000
811 08 TN	1.575	40.000	2.362	60.000	0.512	13.000
2908	1.575	40.000	2.362	60.000	0.630	16.000
F-201422	1.575	40	2.441	62	0.236	6
908	1.575	40.000	2.520	64.000	0.709	18.000
DL40	1.575	40.000	2.520	64.000	0.748	19.000
4108	1.575	40.000	2.520	64.000	0.827	21.000
51208	1.575	40.000	2.677	68.000	0.748	19.000
812 08 TN	1.575	40.000	2.677	68.000	0.748	19.000
893 08 TN	1.575	40.000	3.071	78.000	0.866	22.000
508	1.575	40.000	3.347	85.000	1.732	44.000
874 08	1.575	40.000	3.543	90.000	0.906	23.000
15X40	1.575	40	3.543	90	1.449	36.8
F-217925.1	1.591	40.4	2.149	54.58	0.143	3.62
F-217926.1	1.591	40.4	2.149	54.58	0.150	3.8
F-217927.1	1.591	40.4	2.149	54.58	0.157	4
2282	1.625	41.275	2.381	60.477	0.656	16.662
EW1-5/8	1.625	41.275	2.438	61.930	0.500	12.700
W1-5/8	1.625	41.275	2.469	62.710	0.719	18.260
4419	1.625	41.275	2.813	71.450	0.875	22.225
B19	1.625	41.275	2.969	75.410	0.875	22.220
FT19	1.625	41.275	2.969	75.413	0.813	20.638
GT19	1.625	41.275	2.969	75.413	0.813	20.638
D19	1.625	41.275	2.969	75.413	0.813	20.650
RTL19	1.625	41.275	2.969	75.413	0.813	20.650
RCT11	1.625	41.275	3.093	78.562	0.812	20.625
RT611	1.625	41.275	3.250	82.550	1.000	25.400
RTW611	1.625	41.275	3.375	85.725	1.312	33.325
16Y03	1.656	42.054	2.640	67.056	1.005	25.52
2041	1.688	42.863	2.375	60.325	0.563	14.288
4420	1.688	42.863	2.813	71.450	0.875	22.225
B20	1.688	42.863	2.969	75.410	0.875	22.220
FT20	1.688	42.863	2.969	75.413	0.813	20.638
GT20	1.688	42.863	2.969	75.413	0.813	20.638
D20	1.688	42.863	2.969	75.413	0.813	20.650
RTL20	1.688	42.863	2.969	75.413	0.813	20.650
RT612	1.688	42.863	3.250	82.550	1.000	25.400
RTW612	1.688	42.863	3.376	85.748	1.313	33.338
FC67908	1.695	43.06	2.496	63.4	0.137	3.47
FC69100.1	1.726	43.85	2.641	67.09	0.198	5.02
FC67996	1.744	44.31	2.434	61.83	0.150	3.81
EW1-3/4	1.750	44.450	2.625	66.675	0.625	15.875
W1-3/4	1.750	44.450	2.688	68.280	0.755	19.180
4421	1.750	44.450	2.938	74.630	0.875	22.225
RTL21	1.750	44.450	3.094	78.588	0.813	20.637
FT21	1.750	44.450	3.094	78.588	0.813	20.638
GT21	1.750	44.450	3.094	78.588	0.813	20.638

Thrust Bearing Selector
PART NUMBER AND SIZE

- Ball and roller thrust bearings
- Sorted by shaft dimension
- Series specific details can be found on subsequent pages. Please refer to Section Contents or Index for the correct page numbers.

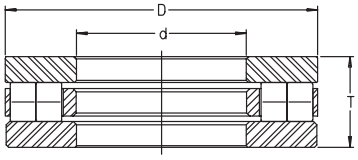

RT7 SHOWN FOR DIMENSIONAL REFERENCE

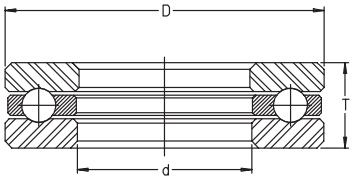

GT SHOWN FOR DIMENSIONAL REFERENCE

For details on part numbers, descriptive suffixes and various technical references, please refer to front of this section.
For engineering or technical information contact your local sales representative or call Distributor Sales (800)523-6572.

PART NUMBER	SHAFT inch	SHAFT mm	OD inch	OD mm	WIDTH inch	WIDTH mm
D21	1.750	44.450	3.094	78.588	0.813	20.650
B21	1.750	44.450	3.094	78.590	0.875	22.220
RT613	1.750	44.450	3.375	85.725	1.000	25.400
RTW613	1.750	44.450	3.500	88.900	1.312	33.325
17YS10SS	1.753	44.53	3.109	78.97	0.818	20.78
51109	1.772	45.000	2.559	65.000	0.551	14.000
811 09 TN	1.772	45.000	2.559	65.000	0.551	14.000
2909	1.772	45.000	2.677	68.000	0.630	16.000
DL45	1.772	45.000	2.835	72.000	0.886	22.500
51209	1.772	45.000	2.874	73.000	0.787	20.000
812 09 TN	1.772	45.000	2.874	73.000	0.787	20.000
909	1.772	45.000	2.874	73.000	0.866	22.000
4109	1.772	45.000	2.874	73.000	0.984	25.000
893 09 TN	1.772	45.000	3.346	85.000	0.945	24.000
3909	1.772	45.000	3.347	85.000	1.102	28.000
1009	1.772	45.000	3.740	95.000	1.850	47.000
509	1.772	45.000	3.740	95.000	1.969	50.000
874 09	1.772	45.000	3.937	100.000	0.984	25.000
FC67905	1.774	45.05	2.480	63	0.143	3.62
FC65785.3	1.776	45.11	2.460	62.48	0.143	3.63
17RT11	1.776	45.11	3.635	92.329	1.125	28.575
4422	1.813	46.038	2.938	74.630	0.875	22.225
FT22	1.813	46.038	3.094	78.588	0.813	20.638
GT22	1.813	46.038	3.094	78.588	0.813	20.638
D22	1.813	46.038	3.094	78.588	0.813	20.650
RTL22	1.813	46.038	3.094	78.588	0.813	20.650
B22	1.813	46.038	3.094	78.590	0.875	22.220
RT614	1.813	46.038	3.375	85.725	1.000	25.400
RTW614	1.813	46.038	3.500	88.900	1.312	33.325
FC67997	1.824	46.33	2.475	62.87	0.150	3.8
18Y02	1.828	46.431	2.608	66.243	0.630	16
EW1-7/8	1.875	47.625	2.750	69.850	0.625	15.875
W1-7/8	1.875	47.625	2.813	71.450	0.750	19.050
4423	1.875	47.625	3.063	77.800	0.875	22.225
B23	1.875	47.625	3.219	81.760	0.875	22.220
D23	1.875	47.625	3.219	81.763	0.813	20.650
FT23	1.875	47.625	3.219	81.763	0.813	20.638
GT23	1.875	47.625	3.219	81.763	0.813	20.638
RTL23	1.875	47.625	3.219	81.763	0.813	20.650
RT615	1.875	47.625	3.500	88.900	1.000	25.400
RTW615	1.875	47.625	3.625	92.075	1.312	33.325
18X15	1.876	47.65	3.250	82.55	1.515	38.48
FC69598	1.911	48.55	2.604	66.14	0.143	3.62
F213342.3	1.924	48.87	2.582	65.58	0.143	3.62
FC65970.2	1.924	48.87	2.604	66.14	0.143	3.63
4424	1.938	49.213	3.063	77.800	0.875	22.225
B24	1.938	49.213	3.219	81.760	0.875	22.220

Thrust Bearing Selector
PART NUMBER AND SIZE

- Ball and roller thrust bearings
- Sorted by shaft dimension
- Series specific details can be found on subsequent pages. Please refer to Section Contents or Index for the correct page numbers.

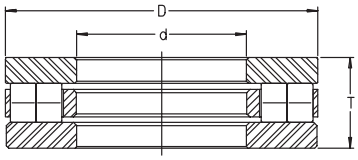

RT7 SHOWN FOR DIMENSIONAL REFERENCE

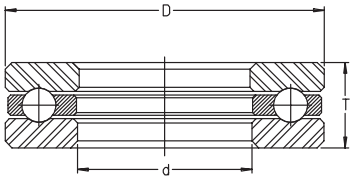

GT SHOWN FOR DIMENSIONAL REFERENCE

For details on part numbers, descriptive suffixes and various technical references, please refer to front of this section.
For engineering or technical information contact your local sales representative or call Distributor Sales (800)523-6572.

PART NUMBER	SHAFT inch	SHAFT mm	OD inch	OD mm	WIDTH inch	WIDTH mm
D24	1.938	49.213	3.219	81.763	0.813	20.650
FT24	1.938	49.213	3.219	81.763	0.813	20.638
GT24	1.938	49.213	3.219	81.763	0.813	20.638
RTL24	1.938	49.213	3.219	81.763	0.813	20.650
RCT16	1.938	49.213	3.246	82.448	0.812	20.625
RT616	1.938	49.213	3.500	88.900	1.000	25.400
RTW616	1.938	49.213	3.625	92.075	1.312	33.325
51110	1.969	50.000	2.756	70.000	0.551	14.000
811 10 TN	1.969	50.000	2.756	70.000	0.551	14.000
2910	1.969	50.000	2.913	74.000	0.709	18.000
51210	1.969	50.000	3.071	78.000	0.866	22.000
812 10 TN	1.969	50.000	3.071	78.000	0.866	22.000
910	1.969	50.000	3.071	78.000	0.866	22.000
4110	1.969	50.000	3.071	78.000	0.984	25.000
DL50	1.969	50.000	3.150	80.000	0.965	24.500
1912	1.969	50.000	3.543	90.000	1.673	42.5
3910	1.969	50.000	3.622	92.000	1.221	31.000
893 10 TN	1.969	50.000	3.740	95.000	1.063	27.000
FC66199.4	1.970	50.05	3.091	78.5	0.583	14.8
FC66935.1	1.979	50.27	2.876	73.05	0.143	3.63
F226568.4	1.988	50.5	2.953	75	0.198	5.03
EW2	2.000	50.800	2.875	73.020	0.625	15.875
W2	2.000	50.800	2.969	75.410	0.750	19.050
XW2	2.000	50.800	3.063	77.800	0.688	17.480
4425	2.000	50.800	3.188	80.980	0.875	22.225
2280	2.000	50.800	3.250	82.550	0.813	20.638
D25	2.000	50.800	3.344	84.938	0.813	20.650
RTL25	2.000	50.800	3.344	84.938	0.813	20.637
FT25	2.000	50.800	3.344	84.938	0.813	20.638
GT25	2.000	50.800	3.344	84.938	0.813	20.638
B25	2.000	50.800	3.344	84.940	0.875	22.220
2023	2.000	50.800	3.500	88.900	1.625	41.275
RT617	2.000	50.800	3.625	92.075	1.000	25.400
MW2	2.000	50.800	3.688	93.680	1.375	34.925
RTW617	2.000	50.800	3.750	95.250	1.312	33.325
RCT17	2.000	50.800	3.952	100.380	1.000	25.400
RWCT17	2.000	50.800	4.000	101.600	1.000	25.400
RT727	2.000	50.800	6.000	152.400	1.375	34.925
FC69103.1	2.037	51.75	3.035	77.09	0.238	6.05
20PS01	2.056	52.222	2.247	57.074	0.142	3.6
4426	2.063	52.388	3.188	80.980	0.875	22.225
D26	2.063	52.388	3.344	84.938	0.813	20.650
FT26	2.063	52.388	3.344	84.938	0.813	20.638
GT26	2.063	52.388	3.344	84.938	0.813	20.638
B26	2.063	52.388	3.344	84.940	0.875	22.220
XW2-1/8	2.125	53.975	3.188	80.980	0.688	17.480
W2-1/8	2.125	53.975	3.219	81.760	0.875	22.225

Thrust Bearing Selector
PART NUMBER AND SIZE

- Ball and roller thrust bearings
- Sorted by shaft dimension
- Series specific details can be found on subsequent pages. Please refer to Section Contents or Index for the correct page numbers.

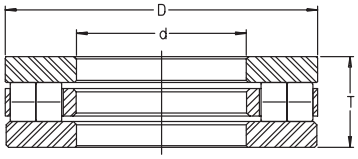

RT7 SHOWN FOR DIMENSIONAL REFERENCE

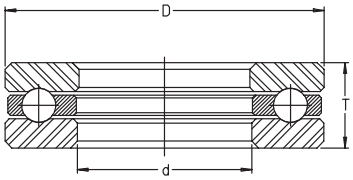

GT SHOWN FOR DIMENSIONAL REFERENCE

For details on part numbers, descriptive suffixes and various technical references, please refer to front of this section.
For engineering or technical information contact your local sales representative or call Distributor Sales (800)523-6572.

PART NUMBER	SHAFT inch	SHAFT mm	OD inch	OD mm	WIDTH inch	WIDTH mm
4427	2.125	53.975	3.313	84.150	0.875	22.225
FT27	2.125	53.975	3.594	91.288	0.813	20.638
GT27	2.125	53.975	3.594	91.288	0.813	20.638
D27	2.125	53.975	3.594	91.288	0.813	20.650
RTL27	2.125	53.975	3.594	91.288	0.813	20.650
B27	2.125	53.975	3.594	91.290	0.875	22.225
RT618	2.125	53.975	3.750	95.250	1.000	25.400
RTW618	2.125	53.975	3.875	98.425	1.312	33.325
FC67324.7	2.126	54	3.032	77.01	0.188	4.77
FC65747	2.128	54.04	2.900	73.66	0.143	3.63
51111	2.165	55.000	3.071	78.000	0.630	16.000
811 11 TN	2.165	55.000	3.071	78.000	0.630	16.000
2911	2.165	55.000	3.071	78.000	0.709	18.000
911	2.165	55.000	3.465	88.000	0.965	24.500
4111	2.165	55.000	3.465	88.000	1.102	28.000
DL55	2.165	55.000	3.465	88.000	1.102	28.000
51211	2.165	55.000	3.543	90.000	0.984	25.000
812 11 TN	2.165	55.000	3.543	90.000	0.984	25.000
3911	2.165	55.000	3.937	100.000	1.299	33.000
893 11 TN	2.165	55.000	4.134	105.000	1.181	30.000
FC67324.1S	2.186	55.53	3.032	77.01	0.188	4.77
4428	2.188	55.563	3.313	84.138	0.875	22.225
FT28	2.188	55.563	3.594	91.288	0.813	20.638
GT28	2.188	55.563	3.594	91.288	0.813	20.638
D28	2.188	55.563	3.594	91.288	0.813	20.650
RTL28	2.188	55.563	3.594	91.288	0.813	20.650
B28	2.188	55.563	3.594	91.290	0.875	22.220
21Z02	2.188	55.575	3.751	95.275	1.255	31.87
21P01	2.190	55.626	3.594	91.288	0.817	20.75
4703	2.248	57.099	3.372	85.649	0.755	19.177
EW2-1/4	2.250	57.150	3.125	79.380	0.625	15.875
B29	2.250	57.150	3.719	80.747	0.875	22.220
W2-1/4	2.250	57.150	3.344	84.940	0.875	22.225
XW2-1/4	2.250	57.150	3.352	85.150	0.688	17.480
22X23	2.250	57.15	3.438	87.313	0.875	22.225
4429	2.250	57.150	3.438	87.330	0.880	22.360
FT29	2.250	57.150	3.719	94.463	0.813	20.638
GT29	2.250	57.150	3.719	94.463	0.813	20.638
D29	2.250	57.150	3.719	94.463	0.813	20.650
RTL29	2.250	57.150	3.719	94.463	0.813	20.650
RT619	2.250	57.150	3.875	98.425	1.000	25.400
RCT19	2.250	57.150	4.000	101.600	1.000	25.400
RTW619	2.250	57.150	4.000	101.600	1.312	33.325
RCT20C	2.250	57.150	4.250	107.950	1.000	25.400
RWCT19	2.250	57.150	4.250	107.950	1.000	25.400
FC65786.2	2.294	58.27	3.076	78.13	0.143	3.63
FC67906	2.294	58.27	3.109	78.98	0.143	3.62

Thrust Bearing Selector
PART NUMBER AND SIZE

- Ball and roller thrust bearings
- Sorted by shaft dimension
- Series specific details can be found on subsequent pages. Please refer to Section Contents or Index for the correct page numbers.

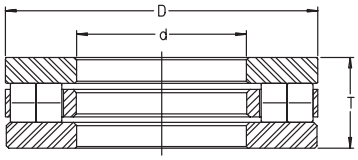

RT7 SHOWN FOR DIMENSIONAL REFERENCE

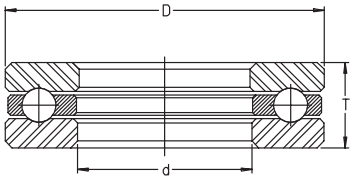

GT SHOWN FOR DIMENSIONAL REFERENCE

For details on part numbers, descriptive suffixes and various technical references, please refer to front of this section.
For engineering or technical information contact your local sales representative or call Distributor Sales (800)523-6572.

PART NUMBER	SHAFT inch	SHAFT mm	OD inch	OD mm	WIDTH inch	WIDTH mm
4430	2.313	58.738	3.438	87.330	0.875	22.225
B30	2.313	58.738	3.719	94.460	0.875	22.220
FT30	2.313	58.738	3.719	94.463	0.813	20.638
GT30	2.313	58.738	3.719	94.463	0.813	20.638
D30	2.313	58.738	3.719	94.463	0.813	20.650
RCT20B	2.313	58.738	4.265	108.331	1.005	25.527
2912	2.362	60.000	3.228	82.000	0.709	18.000
51112	2.362	60.000	3.347	85.000	0.669	17.000
811 12 TN	2.362	60.000	3.346	85.000	0.669	17.000
2913	2.362	60.000	3.543	90.000	0.787	20.000
912	2.362	60.000	3.543	90.000	0.965	24.500
4112	2.362	60.000	3.543	90.000	1.102	28.000
51212	2.362	60.000	3.740	95.000	1.024	26.000
812 12 TN	2.362	60.000	3.740	95.000	1.024	26.000
DL60	2.362	60.000	3.858	98.000	1.201	30.500
3912	2.362	60.000	4.173	106.000	1.378	35.000
893 12 TN	2.362	60.000	4.331	110.000	1.181	30.000
874 12	2.362	60.000	5.118	130.000	1.260	32.000
512	2.362	60.000	5.118	130.000	2.677	68.000
F-218320	2.374	60.3	3.260	82.8	0.110	2.8
F-223348	2.374	60.3	3.260	82.8	0.116	2.95
F-223349	2.374	60.3	3.272	83.1	0.124	3.15
F-223350	2.374	60.3	3.287	83.5	0.132	3.35
XW2-3/8	2.375	60.325	3.438	87.330	0.688	17.480
4431	2.375	60.325	3.563	90.500	0.875	22.225
W2-3/8	2.375	60.325	3.594	91.290	1.000	25.400
D31	2.375	60.325	3.844	97.638	0.813	20.650
FT31	2.375	60.325	3.844	97.638	0.813	20.638
GT31	2.375	60.325	3.844	97.638	0.813	20.638
RTL31	2.375	60.325	3.844	97.638	0.813	20.650
B31	2.375	60.325	3.844	97.640	0.875	22.220
RT620	2.375	60.325	4.000	101.600	1.000	25.400
RTW620	2.375	60.325	4.125	104.775	1.312	33.325
FC68865	2.380	60.45	3.285	83.45	0.222	5.63
4432	2.438	61.913	3.563	90.500	0.875	22.225
D32	2.438	61.913	3.844	97.638	0.813	20.650
FT32	2.438	61.913	3.844	97.638	0.813	20.638
GT32	2.438	61.913	3.844	97.638	0.813	20.638
RTL32	2.438	61.913	3.844	97.638	0.813	20.650
B32	2.438	61.913	3.844	97.640	0.875	22.225
F-225458	2.445	62.1	3.260	82.8	0.110	2.8
F-225459	2.445	62.1	3.260	82.8	0.116	2.95
F-225461	2.445	62.1	3.287	83.5	0.132	3.35
FC66012.9	2.488	63.2	3.380	85.85	0.152	3.87
FC66012	2.488	63.2	3.380	85.85	0.153	3.88
FC66012S381	2.488	63.2	3.380	85.85	0.153	3.88
XW2-1/2	2.500	63.500	3.563	90.500	0.688	17.480

Thrust Bearing Selector
PART NUMBER AND SIZE

- Ball and roller thrust bearings
- Sorted by shaft dimension
- Series specific details can be found on subsequent pages. Please refer to Section Contents or Index for the correct page numbers.

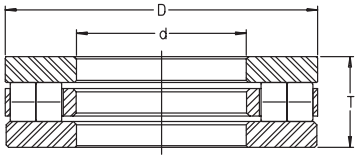

RT7 SHOWN FOR DIMENSIONAL REFERENCE

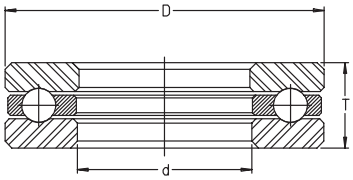

GT SHOWN FOR DIMENSIONAL REFERENCE

For details on part numbers, descriptive suffixes and various technical references, please refer to front of this section.
For engineering or technical information contact your local sales representative or call Distributor Sales (800)523-6572.

PART NUMBER	SHAFT inch	SHAFT mm	OD inch	OD mm	WIDTH inch	WIDTH mm
2281	2.500	63.500	3.688	93.662	0.938	23.813
W2-1/2	2.500	63.500	3.719	94.460	1.000	25.400
D33	2.500	63.500	3.969	100.813	0.813	20.650
RTL33	2.500	63.500	3.969	100.813	0.813	20.637
FT33	2.500	63.500	3.969	100.813	0.814	20.671
GT33	2.500	63.500	3.969	100.813	0.814	20.671
B33	2.500	63.500	3.969	100.813	0.875	22.225
4433	2.500	63.500	4.000	101.600	1.125	28.580
RT621	2.500	63.500	4.126	104.803	1.000	25.400
RTW621	2.500	63.500	4.250	107.950	1.312	33.325
25Y07	2.502	63.551	4.541	115.34	1.847	46.91
FC67222.1	2.540	64.516	3.320	84.328	0.159	4.03
51113	2.559	65.000	3.543	90.000	0.709	18.000
811 13 TN	2.559	65.000	3.543	90.000	0.709	18.000
51213	2.559	65.000	3.937	100.000	1.063	27.000
812 13 TN	2.559	65.000	3.937	100.000	1.063	27.000
913	2.559	65.000	3.937	100.000	1.063	27.000
4113	2.559	65.000	3.937	100.000	1.260	32.000
DL65	2.559	65.000	4.055	103.000	1.240	31.500
3913	2.559	65.000	4.409	112.000	1.417	36.000
893 13 TN	2.559	65.000	4.528	115.000	1.181	30.000
513	2.559	65.000	5.512	140.000	2.913	74.000
513	2.559	65	5.512	140	2.913	74
D34	2.563	65.088	3.969	100.813	0.813	20.650
FT34	2.563	65.088	3.969	100.813	0.813	20.638
GT34	2.563	65.088	3.969	100.813	0.813	20.638
B34	2.563	65.088	3.969	100.813	0.875	22.225
4434	2.563	65.088	4.000	101.600	1.125	28.580
25Y14	2.566	65.176	3.968	100.787	0.880	22.352
26RTW08	2.618	66.497	4.186	106.324	1.345	34.163
26RT18	2.624	66.65	4.342	110.287	1.005	25.527
26RT19	2.624	66.65	4.342	110.287	1.396	35.458
26RT20	2.624	66.65	4.342	110.29	1.005	25.53
XW2-5/8	2.625	66.675	3.750	95.250	0.750	19.050
W2-5/8	2.625	66.675	3.844	97.640	1.000	25.400
4435	2.625	66.675	4.125	104.770	1.125	28.580
RT622	2.625	66.675	4.343	110.300	1.000	25.400
D35	2.625	66.675	4.344	110.338	1.000	25.400
FT35	2.625	66.675	4.344	110.338	1.000	25.400
GT35	2.625	66.675	4.344	110.338	1.000	25.400
RTL35	2.625	66.675	4.344	110.338	1.000	25.400
B35	2.625	66.675	4.344	110.340	1.125	28.580
RTW622	2.625	66.675	4.530	115.062	1.312	33.325
26RT17.2	2.627	66.726	6.015	152.781	0.939	23.85
FC67977	2.627	66.726	6.015	152.781	0.939	23.85
D36	2.688	68.263	4.344	110.338	1.000	25.400
FT36	2.688	68.263	4.344	110.338	1.000	25.400

Thrust Bearing Selector
PART NUMBER AND SIZE

- Ball and roller thrust bearings
- Sorted by shaft dimension
- Series specific details can be found on subsequent pages. Please refer to Section Contents or Index for the correct page numbers.

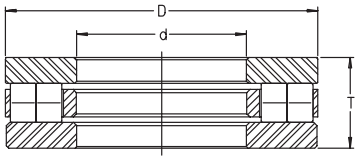

RT7 SHOWN FOR DIMENSIONAL REFERENCE

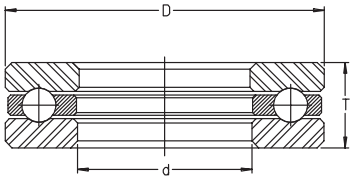

GT SHOWN FOR DIMENSIONAL REFERENCE

For details on part numbers, descriptive suffixes and various technical references, please refer to front of this section.
For engineering or technical information contact your local sales representative or call Distributor Sales (800)523-6572.

PART NUMBER	SHAFT inch	SHAFT mm	OD inch	OD mm	WIDTH inch	WIDTH mm
GT36	2.688	68.263	4.344	110.338	1.000	25.400
B36	2.688	68.263	4.344	110.340	1.125	28.580
XW2-3/4	2.750	69.850	3.875	98.430	0.750	19.050
W2-3/4	2.750	69.850	4.031	102.390	1.000	25.400
4436	2.750	69.850	4.250	107.950	1.125	28.580
RT623	2.750	69.850	4.468	113.475	1.000	25.400
B37	2.750	69.850	4.469	113.510	1.125	28.580
D37	2.750	69.850	4.469	113.513	1.000	25.400
FT37	2.750	69.850	4.469	113.513	1.000	25.400
GT37	2.750	69.850	4.469	113.513	1.000	25.400
RTL37	2.750	69.850	4.469	113.513	1.000	25.400
RTW623	2.750	69.850	4.655	118.237	1.313	33.338
RCT23	2.750	69.850	4.750	120.650	1.000	25.400
RWCT23	2.750	69.850	4.843	123.012	1.000	25.400
RCT24A	2.750	69.850	4.875	123.825	1.250	31.750
51114	2.756	70.000	3.740	95.000	0.709	18.000
811 14 TN	2.756	70.000	3.740	95.000	0.709	18.000
2914	2.756	70.000	3.740	95.000	0.787	20.000
27X30	2.756	70	4.055	103	1.063	27
914	2.756	70.000	4.055	103.000	1.063	27.000
4114	2.756	70.000	4.055	103.000	1.260	32.000
51214	2.756	70.000	4.134	105.000	1.063	27.000
812 14 TN	2.756	70.000	4.134	105.000	1.063	27.000
DL70	2.756	70.000	4.252	108.000	1.260	32.000
3914	2.756	70.000	4.724	120.000	1.496	38.000
DM70	2.756	70.000	4.803	122.000	1.634	41.500
893 14 TN	2.756	70.000	4.921	125.000	1.339	34.000
874 14	2.756	70.000	5.906	150.000	1.417	36.000
514	2.756	70.000	5.906	150.000	3.150	80.000
B38	2.813	71.438	4.469	113.510	1.125	28.580
D38	2.813	71.438	4.469	113.513	1.000	25.400
FT38	2.813	71.438	4.469	113.513	1.000	25.400
GT38	2.813	71.438	4.469	113.513	1.000	25.400
RCT23B	2.813	71.438	4.750	120.650	1.000	25.400
XW2-7/8	2.875	73.025	4.000	101.600	0.750	19.050
W2-7/8	2.875	73.025	4.156	105.560	1.000	25.400
FT39	2.875	73.025	4.594	116.688	1.000	25.400
GT39	2.875	73.025	4.594	116.688	1.000	25.400
F-390470.7	2.902	73.7	3.583	91	0.143	3.62
4437	2.938	74.613	4.438	112.730	1.125	28.580
D39	2.938	74.613	4.594	116.688	1.000	25.400
FT40	2.938	74.613	4.594	116.688	1.000	25.400
GT40	2.938	74.613	4.594	116.688	1.000	25.400
B39	2.938	74.613	4.594	116.690	1.125	28.580
51115	2.953	75.000	3.937	100.000	0.748	19.000
811 15 TN	2.953	75.000	3.937	100.000	0.748	19.000
2915	2.953	75.000	3.937	100.000	0.787	20.000

Thrust Bearing Selector
PART NUMBER AND SIZE

- Ball and roller thrust bearings
- Sorted by shaft dimension
- Series specific details can be found on subsequent pages. Please refer to Section Contents or Index for the correct page numbers.

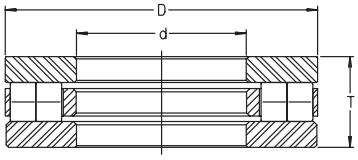

RT7 SHOWN FOR DIMENSIONAL REFERENCE

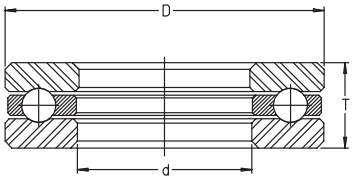

GT SHOWN FOR DIMENSIONAL REFERENCE

For details on part numbers, descriptive suffixes and various technical references, please refer to front of this section.
For engineering or technical information contact your local sales representative or call Distributor Sales (800)523-6572.

PART NUMBER	SHAFT inch	SHAFT mm	OD inch	OD mm	WIDTH inch	WIDTH mm
51215	2.953	75.000	4.331	110.000	1.063	27.000
812 15 TN	2.953	75.000	4.331	110.000	1.063	27.000
915	2.953	75.000	4.331	110.000	1.063	27.000
4115	2.953	75.000	4.331	110.000	1.260	32.000
DL75	2.953	75.000	4.409	112.000	1.280	32.500
3915	2.953	75.000	5.039	128.000	1.614	41.000
893 15 TN	2.953	75.000	5.315	135.000	1.417	36.000
515	2.953	75.000	6.299	160.000	3.268	83.000
XW3	3.000	76.200	4.125	104.770	0.750	19.050
W3	3.000	76.200	4.375	111.130	1.125	28.580
4438	3.000	76.200	4.500	114.300	1.125	28.580
D39-1/2	3.000	76.200	4.594	116.688	1.000	25.400
B40	3.000	76.200	4.719	119.860	1.125	28.580
D40	3.000	76.200	4.719	119.863	1.000	25.400
FT41	3.000	76.200	4.719	119.863	1.000	25.400
GT41	3.000	76.200	4.719	119.863	1.000	25.400
RTL41	3.000	76.200	4.719	119.863	1.000	25.400
RT624	3.000	76.200	4.719	119.870	1.000	25.400
RTW624	3.000	76.200	4.969	126.213	1.312	33.325
RT730	3.000	76.200	6.000	152.400	1.375	34.925
30RT04	3.000	76.2	6.380	162.052	1.312	33.32
RT731	3.000	76.200	7.000	177.800	1.375	34.925
RT732	3.000	76.200	8.000	203.200	1.375	34.925
RT733	3.000	76.200	9.000	228.600	1.375	34.925
30RT20.2	3.002	76.251	8.010	203.454	0.939	23.85
FT42	3.063	77.788	4.719	119.863	1.000	25.400
GT42	3.063	77.788	4.719	119.863	1.000	25.400
XW3-1/8	3.125	79.375	4.250	107.950	0.750	19.050
W3-1/8	3.125	79.375	4.500	114.300	1.125	28.580
4439	3.125	79.375	4.625	117.480	1.125	28.580
51116	3.150	80.000	4.134	105.000	0.748	19.000
811 16 TN	3.150	80.000	4.134	105.000	0.748	19.000
2916	3.150	80.000	4.331	110.000	0.906	23.000
51216	3.150	80.000	4.528	115.000	1.102	28.000
812 16 TN	3.150	80.000	4.528	115.000	1.102	28.000
31X42	3.150	80	4.528	115	1.142	29
916	3.150	80.000	4.528	115.000	1.142	29.000
4116	3.150	80.000	4.528	115.000	1.378	35.000
DL80	3.150	80.000	4.646	118.000	1.339	34.000
3916	3.150	80.000	5.354	136.000	1.732	44.000
893 16 TN	3.150	80.000	5.512	140.000	1.417	36.000
516	3.150	80.000	6.693	170.000	3.543	90.000
31X14	3.177	80.696	4.248	107.899	0.552	14.021
32RT01	3.249	82.517	4.875	123.825	1.000	25.4
XW3-1/4	3.250	82.550	4.375	111.130	0.750	19.050
2279	3.250	82.550	4.499	114.262	1.125	28.575
4440	3.250	82.550	4.750	120.650	1.125	28.580

Thrust Bearing Selector
PART NUMBER AND SIZE

- Ball and roller thrust bearings
- Sorted by shaft dimension
- Series specific details can be found on subsequent pages. Please refer to Section Contents or Index for the correct page numbers.

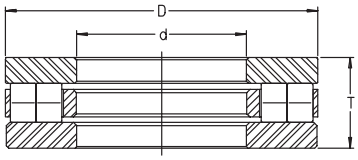

RT7 SHOWN FOR DIMENSIONAL REFERENCE

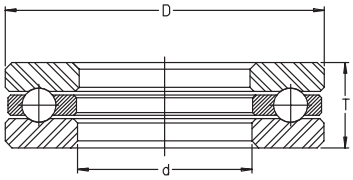

GT SHOWN FOR DIMENSIONAL REFERENCE

For details on part numbers, descriptive suffixes and various technical references, please refer to front of this section.
For engineering or technical information contact your local sales representative or call Distributor Sales (800)523-6572.

PART NUMBER	SHAFT inch	SHAFT mm	OD inch	OD mm	WIDTH inch	WIDTH mm
W3-1/4	3.250	82.550	4.813	122.250	1.250	31.750
RT625	3.250	82.550	4.968	126.187	1.000	25.400
B41	3.250	82.550	4.969	126.210	1.125	28.580
D41	3.250	82.550	4.969	126.213	1.000	25.400
FT43	3.250	82.550	4.969	126.213	1.000	25.400
GT43	3.250	82.550	4.969	126.213	1.000	25.400
RTL43	3.250	82.550	4.969	126.213	1.000	25.400
RTW625	3.250	82.550	5.220	132.585	1.313	33.338
RCT27A	3.250	82.550	6.125	155.575	1.500	38.100
RCT27C	3.250	82.550	6.187	157.150	1.750	44.450
RWCT27C	3.250	82.550	6.375	161.925	1.750	44.450
51117	3.347	85.000	4.331	110.000	0.748	19.000
811 17 TN	3.347	85.000	4.331	110.000	0.748	19.000
2917	3.347	85.000	4.528	115.000	0.866	22.000
917	3.347	85.000	4.921	125.000	1.201	30.500
51217	3.347	85.000	4.921	125.000	1.221	31.000
812 17 TN	3.347	85.000	4.921	125.000	1.220	31.000
DL85	3.347	85.000	4.921	125.000	1.339	34.000
4117	3.347	85.000	4.921	125.000	1.496	38.000
893 17	3.347	85.000	5.906	150.000	1.535	39.000
517	3.347	85.000	7.087	180.000	3.740	95.000
XW3-3/8	3.375	85.725	4.500	114.300	0.750	19.050
4441	3.375	85.725	4.875	123.820	1.125	28.580
W3-3/8	3.375	85.725	4.938	125.430	1.250	31.750
XW3-1/2	3.500	88.900	4.625	117.480	0.750	19.050
4442	3.500	88.900	5.000	127.000	1.125	28.580
W3-1/2	3.500	88.900	5.063	128.600	1.250	31.750
B42	3.500	88.900	5.219	132.560	1.125	28.580
D42	3.500	88.900	5.219	132.563	1.000	25.400
FT44	3.500	88.900	5.219	132.563	1.000	25.400
GT44	3.500	88.900	5.219	132.563	1.000	25.400
RTL44	3.500	88.900	5.219	132.563	1.000	25.400
RT626	3.500	88.900	5.220	132.575	1.000	25.400
RTW626	3.500	88.900	5.468	138.875	1.313	33.338
RCT27B	3.500	88.900	6.156	156.362	1.625	41.275
RWCT27B	3.500	88.900	6.375	161.925	1.625	41.275
RCT28A	3.500	88.900	6.750	171.450	1.625	41.275
2918	3.543	90.000	4.724	120.000	0.866	22.000
51118	3.543	90.000	4.724	120.000	0.866	22.000
811 18 TN	3.543	90.000	4.724	120.000	0.866	22.000
DL90	3.543	90.000	5.276	134.000	1.496	38.000
918	3.543	90.000	5.315	135.000	1.201	30.500
51218	3.543	90.000	5.315	135.000	1.378	35.000
812 18 TN	3.543	90.000	5.315	135.000	1.378	35.000
4118	3.543	90.000	5.315	135.000	1.496	38.000
893 18	3.543	90.000	6.102	155.000	1.535	39.000
518	3.543	90.000	7.480	190.000	3.937	100.000

Thrust Bearing Selector
PART NUMBER AND SIZE

- Ball and roller thrust bearings
- Sorted by shaft dimension
- Series specific details can be found on subsequent pages. Please refer to Section Contents or Index for the correct page numbers.

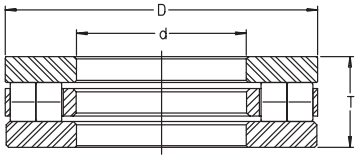

RT7 SHOWN FOR DIMENSIONAL REFERENCE

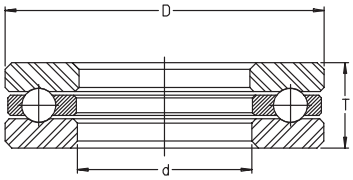

GT SHOWN FOR DIMENSIONAL REFERENCE

For details on part numbers, descriptive suffixes and various technical references, please refer to front of this section.
For engineering or technical information contact your local sales representative or call Distributor Sales (800)523-6572.

PART NUMBER	SHAFT inch	SHAFT mm	OD inch	OD mm	WIDTH inch	WIDTH mm
RCT30B	3.563	90.488	6.375	161.925	1.375	34.925
XW3-5/8	3.625	92.075	4.750	120.650	0.750	19.050
W3-5/8	3.625	92.075	5.188	131.780	1.250	31.750
4443	3.625	92.075	5.625	142.880	1.375	34.930
2919	3.740	95.000	5.118	130.000	0.984	25.000
919	3.740	95.000	5.512	140.000	1.280	32.500
DL95	3.740	95.000	5.512	140.000	1.496	38.000
4119	3.740	95.000	5.512	140.000	1.614	41.000
XW3-3/4	3.750	95.250	4.875	123.820	0.750	19.050
2278	3.750	95.250	5.061	128.549	1.281	32.544
W3-3/4	3.750	95.250	5.313	134.950	1.250	31.750
4444	3.750	95.250	5.750	146.050	1.375	34.930
RCT34A	3.750	95.250	7.125	180.975	1.875	47.625
38YT387C	3.870	98.298	5.010	127.254	0.688	17.463
XW3-7/8	3.875	98.425	5.000	127.000	0.750	19.050
W3-7/8	3.875	98.425	5.688	144.480	1.375	34.930
4445	3.875	98.425	5.875	149.230	1.375	34.930
2920	3.937	100.000	5.315	135.000	0.984	25.000
51120	3.937	100.000	5.315	135.000	0.984	25.000
811 20 TN	3.937	100.000	5.315	135.000	0.984	25.000
51220	3.937	100.000	5.906	150.000	1.496	38.000
812 20 TN	3.937	100.000	5.906	150.000	1.496	38.000
4120	3.937	100.000	5.906	150.000	1.614	41.000
920	3.937	100.000	5.906	150.000	2.067	52.500
DL100	3.937	100.000	6.063	154.000	1.634	41.500
893 20 TN	3.937	100.000	6.693	170.000	1.654	42.000
520	3.937	100.000	8.465	215.000	4.331	110.000
40X12	3.999	101.575	5.880	149.352	1.485	37.72
40YM04	3.999	101.575	6.014	152.756	1.475	37.465
XW4	4.000	101.600	5.250	133.350	0.875	22.225
W4	4.000	101.600	5.813	147.650	1.375	34.930
4446	4.000	101.600	6.000	152.400	1.375	34.925
RT734	4.000	101.600	7.000	177.800	1.750	44.450
RT735	4.000	101.600	8.000	203.200	1.750	44.450
4447	4.125	104.775	6.134	155.800	1.375	34.930
2921	4.134	105.000	5.512	140.000	0.984	25.000
41X04	4.134	105	6.102	155	1.575	40
921	4.134	105.000	6.102	155.000	1.575	40.000
4121	4.134	105.000	6.102	155.000	1.811	46.000
XW4-1/4	4.250	107.950	5.500	139.700	0.875	22.225
4448	4.250	107.950	6.250	158.750	1.375	34.930
W4-1/4	4.250	107.950	6.313	160.350	1.750	44.450
RCT35A	4.250	107.950	8.171	207.543	2.000	50.800
2922	4.331	110.000	5.709	145.000	0.984	25.000
51122	4.331	110.000	5.709	145.000	0.984	25.000
811 22 TN	4.331	110.000	5.709	145.000	0.984	25.000
51222	4.331	110.000	6.299	160.000	1.496	38.000

Thrust Bearing Selector
PART NUMBER AND SIZE

- Ball and roller thrust bearings
- Sorted by shaft dimension
- Series specific details can be found on subsequent pages. Please refer to Section Contents or Index for the correct page numbers.

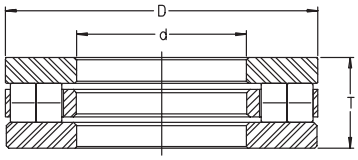

RT7 SHOWN FOR DIMENSIONAL REFERENCE

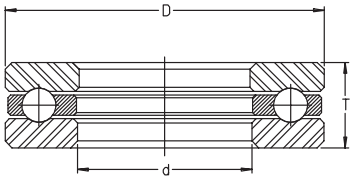

GT SHOWN FOR DIMENSIONAL REFERENCE

For details on part numbers, descriptive suffixes and various technical references, please refer to front of this section.
For engineering or technical information contact your local sales representative or call Distributor Sales (800)523-6572.

PART NUMBER	SHAFT inch	SHAFT mm	OD inch	OD mm	WIDTH inch	WIDTH mm
812 22 TN	4.331	110.000	6.299	160.000	1.496	38.000
922	4.331	110.000	6.299	160.000	1.575	40.000
4122	4.331	110.000	6.299	160.000	1.811	46.000
893 22	4.331	110.000	7.480	190.000	1.890	48.000
894 22	4.331	110.000	9.055	230.000	2.874	73.000
4449	4.375	111.125	6.375	161.920	1.375	34.930
XW4-1/2	4.500	114.300	5.750	146.050	1.000	25.400
W4-1/2	4.500	114.300	6.500	165.100	1.750	44.450
4450	4.500	114.300	6.750	171.450	1.625	41.280
RCT38A	4.500	114.300	8.125	206.375	2.000	50.800
RWCT38A	4.500	114.300	8.312	211.125	2.000	50.800
2923	4.528	115.000	5.906	150.000	0.984	25.000
923	4.528	115.000	6.496	165.000	1.693	43.000
4123	4.528	115.000	6.496	165.000	1.929	49.000
523	4.528	115.000	9.449	240.000	4.724	120.000
2284	4.625	117.475	5.997	152.320	1.500	38.100
4451	4.625	117.475	6.875	174.630	1.625	41.280
51124	4.724	120.000	6.102	155.000	0.984	25.000
811 24 TN	4.724	120.000	6.102	155.000	0.984	25.000
2924	4.724	120.000	6.299	160.000	1.063	27.000
51224	4.724	120.000	6.693	170.000	1.535	39.000
812 24 TN	4.724	120.000	6.693	170.000	1.535	39.000
924	4.724	120.000	6.693	170.000	1.693	43.000
5124	4.724	120.000	6.693	170.000	1.929	49.000
893 24	4.724	120.000	8.268	210.000	2.126	54.000
XW4-3/4	4.750	120.650	6.000	152.400	1.000	25.400
4452	4.750	120.650	7.000	177.800	1.625	41.280
W4-3/4	4.750	120.650	7.063	179.400	2.000	50.800
4453	4.875	123.825	7.125	180.980	1.625	41.280
2925	4.921	125.000	6.496	165.000	1.063	27.000
925	4.921	125.000	6.890	175.000	1.831	46.500
4125	4.921	125.000	6.890	175.000	2.087	53.000
525	4.921	125.000	10.630	270.000	5.118	130.000
49X13	4.933	125.298	6.892	175.057	1.836	46.63
XW5	5.000	127.000	6.500	165.100	1.018	25.850
4454	5.000	127.000	7.250	184.150	1.625	41.280
W5	5.000	127.000	7.313	185.750	2.000	50.800
RCT39A	5.000	127.000	9.156	232.562	2.250	57.150
RT740	5.000	127.000	10.000	254.000	2.000	50.800
51126	5.118	130.000	6.693	170.000	1.181	30.000
811 26 TN	5.118	130.000	6.693	170.000	1.181	30.000
926	5.118	130.000	7.087	180.000	1.831	46.500
4126	5.118	130.000	7.087	180.000	2.087	53.000
51226	5.118	130.000	7.480	190.000	1.772	45.000
812 26	5.118	130.000	7.480	190.000	1.772	45.000
893 26	5.118	130.000	8.858	225.000	2.283	58.000
4455	5.125	130.175	7.375	187.325	1.625	41.275

Thrust Bearing Selector
PART NUMBER AND SIZE

- Ball and roller thrust bearings
- Sorted by shaft dimension
- Series specific details can be found on subsequent pages. Please refer to Section Contents or Index for the correct page numbers.

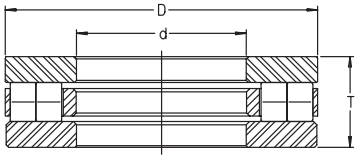

RT7 SHOWN FOR DIMENSIONAL REFERENCE

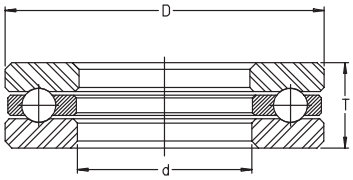

GT SHOWN FOR DIMENSIONAL REFERENCE

For details on part numbers, descriptive suffixes and various technical references, please refer to front of this section.
For engineering or technical information contact your local sales representative or call Distributor Sales (800)523-6572.

PART NUMBER	SHAFT inch	SHAFT mm	OD inch	OD mm	WIDTH inch	WIDTH mm
XW5-1/4	5.250	133.350	6.750	171.450	1.125	28.580
4456	5.250	133.350	7.500	190.500	1.625	41.280
52X12	5.251	133.375	7.135	181.23	1.485	37.72
52YM04Z	5.251	133.375	7.269	184.63	1.470	37.34
4457	5.375	136.525	7.625	193.675	1.630	41.400
XW5-1/2	5.500	139.700	7.000	177.800	1.007	25.580
W5-1/2	5.500	139.700	8.063	204.800	2.193	55.700
4458	5.500	139.700	8.250	209.550	1.875	47.630
RCT44A	5.500	139.700	10.100	256.540	0.000	0.000
51128	5.512	140.000	7.087	180.000	1.221	31.000
811 28 TN	5.512	140.000	7.087	180.000	1.220	31.000
2928	5.512	140.000	7.284	185.000	1.221	31.000
51228	5.512	140.000	7.874	200.000	1.811	46.000
812 28	5.512	140.000	7.874	200.000	1.811	46.000
928	5.512	140.000	7.874	200.000	2.047	52.000
4128	5.512	140.000	7.874	200.000	2.362	60.000
893 28	5.512	140.000	9.449	240.000	2.362	60.000
528	5.512	140.000	11.811	300.000	5.512	140.000
RCT45B	5.563	141.288	11.500	292.100	2.000	50.800
56RT02	5.625	142.875	8.270	210.058	1.750	44.45
4459	5.625	142.875	8.375	212.730	1.875	47.630
XW5-3/4	5.750	146.050	7.250	184.150	1.125	28.580
4460	5.750	146.050	8.500	215.900	1.875	47.630
4461	5.875	149.225	8.625	219.080	1.875	47.630
51130	5.906	150.000	7.480	190.000	1.221	31.000
811 30 TN	5.906	150.000	7.480	190.000	1.220	31.000
51230	5.906	150.000	8.465	215.000	1.969	50.000
812 30	5.906	150.000	8.465	215.000	1.969	50.000
930	5.906	150.000	8.661	220.000	2.165	55.000
4130	5.906	150.000	8.661	220.000	2.362	60.000
893 30	5.906	150.000	9.843	250.000	2.362	60.000
XW6	6.000	152.400	7.625	193.680	1.250	31.750
W6	6.000	152.400	8.688	220.663	2.375	60.325
4462	6.000	152.400	8.750	222.250	1.875	47.625
RCT45A	6.000	152.400	11.156	283.362	3.000	76.200
4463	6.125	155.575	8.875	225.420	1.875	47.630
4464	6.250	158.750	9.000	228.600	1.875	47.630
51132	6.299	160.000	7.874	200.000	1.221	31.000
811 32	6.299	160.000	7.874	200.000	1.220	31.000
51232	6.299	160.000	8.858	225.000	2.008	51.000
812 32	6.299	160.000	8.858	225.000	2.008	51.000
932	6.299	160.000	9.252	235.000	2.362	60.000
4132	6.299	160.000	9.252	235.000	2.559	65.000
893 32	6.299	160.000	10.630	270.000	2.638	67.000
4465	6.375	161.925	9.125	231.770	1.875	47.630
XW6-1/2	6.500	165.100	8.125	206.380	1.250	31.750
W6-1/2	6.500	165.100	9.406	238.910	2.500	63.500

Thrust Bearing Selector
PART NUMBER AND SIZE

- Ball and roller thrust bearings
- Sorted by shaft dimension
- Series specific details can be found on subsequent pages. Please refer to Section Contents or Index for the correct page numbers.

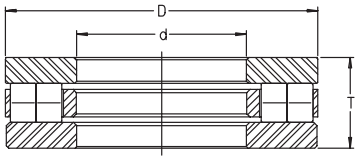

RT7 SHOWN FOR DIMENSIONAL REFERENCE

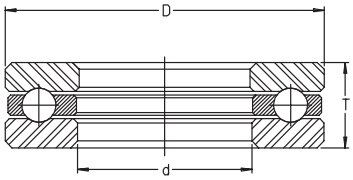

GT SHOWN FOR DIMENSIONAL REFERENCE

For details on part numbers, descriptive suffixes and various technical references, please refer to front of this section.
For engineering or technical information contact your local sales representative or call Distributor Sales (800)523-6572.

PART NUMBER	SHAFT inch	SHAFT mm	OD inch	OD mm	WIDTH inch	WIDTH mm
4466	6.500	165.100	9.500	241.300	2.250	57.150
65X14	6.504	165.202	8.125	206.375	1.255	31.877
65X12	6.570	166.878	7.570	192.278	0.688	17.47
4467	6.625	168.275	9.625	244.480	2.250	57.150
51134	6.693	170.000	8.465	215.000	1.339	34.000
811 34	6.693	170.000	8.465	215.000	1.339	34.000
51234	6.693	170.000	9.449	240.000	2.165	55.000
812 34	6.693	170.000	9.449	240.000	2.165	55.000
934	6.693	170.000	9.843	250.000	2.559	65.000
4134	6.693	170.000	9.843	250.000	2.756	70.000
893 34	6.693	170.000	11.024	280.000	2.638	67.000
4468	6.750	171.450	9.750	247.650	2.250	57.150
67X02	6.769	171.93	8.465	215.011	1.339	34.01
RCT49A	6.813	173.038	12.750	323.850	2.500	63.500
FC67080	6.970	177.038	8.125	206.376	1.510	38.35
XW7	7.000	177.800	8.750	222.250	1.375	34.930
W7	7.000	177.800	10.125	257.180	2.625	66.680
70X14	7.020	178.308	9.002	228.65	1.005	25.527
70X01	7.021	178.333	9.000	228.6	0.963	24.46
51136	7.087	180.000	8.858	225.000	1.339	34.000
811 36	7.087	180.000	8.858	225.000	1.339	34.000
51236	7.087	180.000	9.843	250.000	2.205	56.000
812 36	7.087	180.000	9.843	250.000	2.205	56.000
936	7.087	180.000	10.236	260.000	2.559	65.000
4136	7.087	180.000	10.236	260.000	2.756	70.000
893 36	7.087	180.000	11.811	300.000	2.874	73.000
51138	7.480	190.000	9.449	240.000	1.457	37.000
811 38	7.480	190.000	9.449	240.000	1.457	37.000
51238	7.480	190.000	10.630	270.000	2.441	62.000
812 38	7.480	190.000	10.630	270.000	2.441	62.000
938	7.480	190.000	10.827	275.000	2.756	70.000
4138	7.480	190.000	10.827	275.000	3.150	80.000
893 38	7.480	190.000	12.598	320.000	3.071	78.000
XW7-1/2	7.500	190.500	9.250	234.950	1.375	34.930
W7-1/2	7.500	190.500	10.875	276.220	2.750	69.850
78X03	7.873	199.969	11.417	290	2.761	70.13
51140	7.874	200.000	9.843	250.000	1.457	37.000
811 40	7.874	200.000	9.843	250.000	1.457	37.000
51240	7.874	200.000	11.024	280.000	2.441	62.000
812 40	7.874	200.000	11.024	280.000	2.441	62.000
940	7.874	200.000	11.417	290.000	2.756	70.000
4140	7.874	200.000	11.417	290.000	3.150	80.000
893 40	7.874	200.000	13.386	340.000	3.346	85.000
80X03	7.998	203.149	11.750	298.45	2.503	63.576
XW8	8.000	203.200	10.000	254.000	1.500	38.100
W8	8.000	203.200	11.625	295.280	3.000	76.200
RCT52	8.438	214.313	14.500	368.300	3.000	76.200

Thrust Bearing Selector
PART NUMBER AND SIZE

- Ball and roller thrust bearings
- Sorted by shaft dimension
- Series specific details can be found on subsequent pages. Please refer to Section Contents or Index for the correct page numbers.

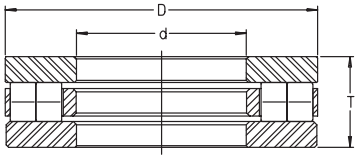

RT7 SHOWN FOR DIMENSIONAL REFERENCE

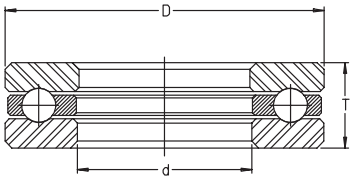

GT SHOWN FOR DIMENSIONAL REFERENCE

For details on part numbers, descriptive suffixes and various technical references, please refer to front of this section.
For engineering or technical information contact your local sales representative or call Distributor Sales (800)523-6572.

PART NUMBER	SHAFT inch	SHAFT mm	OD inch	OD mm	WIDTH inch	WIDTH mm
XW8-1/2	8.500	215.900	10.500	266.700	1.500	38.100
85X04	8.530	216.662	10.500	266.7	1.000	25.4
51144	8.661	220.000	10.630	270.000	1.457	37.000
811 44	8.661	220.000	10.630	270.000	1.457	37.000
51244	8.661	220.000	11.811	300.000	2.480	63.000
812 44	8.661	220.000	11.811	300.000	2.480	63.000
944	8.661	220.000	12.402	315.000	3.150	80.000
XW9	9.000	228.600	11.250	285.750	1.875	47.625
W9	9.000	228.600	13.125	333.380	3.500	88.900
RCT54	9.313	236.538	16.500	419.100	3.000	76.200
51148	9.449	240.000	11.811	300.000	1.772	45.000
811 48	9.449	240.000	11.811	300.000	1.772	45.000
51248	9.449	240.000	13.386	340.000	3.071	78.000
812 48	9.449	240.000	13.386	340.000	3.071	78.000
948	9.449	240.000	13.583	345.000	3.347	85.000
XW9-1/2	9.500	241.300	11.750	298.450	1.875	47.625
XW10	10.000	254.000	12.500	317.500	2.125	53.975
W10	10.000	254.000	14.625	371.475	4.000	101.600
RT756	10.000	254.000	20.000	508.000	3.750	95.250
51152	10.236	260.000	12.598	320.000	1.772	45.000
811 52	10.236	260.000	12.598	320.000	1.772	45.000
51252	10.236	260.000	14.173	360.000	3.110	79.000
812 52	10.236	260.000	14.173	360.000	3.110	79.000
952	10.236	260.000	14.764	375.000	3.543	90.000
XW10-1/2	10.500	266.700	13.000	330.200	2.125	53.975
XW11	11.000	279.400	13.750	349.250	2.375	60.320
W11	11.000	279.400	15.875	403.220	4.250	107.950
51156	11.024	280.000	13.780	350.000	2.087	53.000
811 56	11.024	280.000	13.780	350.000	2.087	53.000
51256	11.024	280.000	14.961	380.000	3.150	80.000
812 56	11.024	280.000	14.961	380.000	3.150	80.000
956	11.024	280.000	15.748	400.000	3.740	95.000
XW11-1/2	11.500	292.100	14.250	361.950	2.375	60.320
51160	11.811	300.000	14.961	380.000	2.441	62.000
811 60	11.811	300.000	14.961	380.000	2.441	62.000
51260	11.811	300.000	16.535	420.000	3.740	95.000
812 60	11.811	300.000	16.535	420.000	3.740	95.000
960	11.811	300.000	16.929	430.000	4.134	105.000
XW12	12.000	304.800	15.000	381.000	2.500	63.500
W12	12.000	304.800	17.375	441.330	4.500	114.300
XW12-1/2	12.500	317.500	15.500	393.700	2.625	66.680
51164	12.598	320.000	15.748	400.000	2.480	63.000
811 64	12.598	320.000	15.748	400.000	2.480	63.000
51264	12.598	320.000	17.323	440.000	3.740	95.000
812 64	12.598	320.000	17.323	440.000	3.740	95.000
XW13	13.000	330.200	16.250	412.750	2.750	69.850
51168	13.386	340.000	16.535	420.000	2.520	64.000

Thrust Bearing Selector
PART NUMBER AND SIZE

- Ball and roller thrust bearings
- Sorted by shaft dimension
- Series specific details can be found on subsequent pages. Please refer to Section Contents or Index for the correct page numbers.

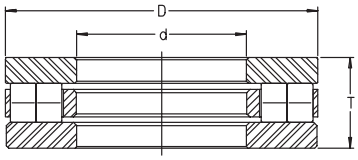

RT7 SHOWN FOR DIMENSIONAL REFERENCE

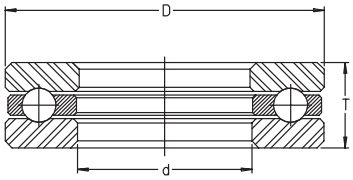

GT SHOWN FOR DIMENSIONAL REFERENCE

For details on part numbers, descriptive suffixes and various technical references, please refer to front of this section.
For engineering or technical information contact your local sales representative or call Distributor Sales (800)523-6572.

PART NUMBER	SHAFT inch	SHAFT mm	OD inch	OD mm	WIDTH inch	WIDTH mm
811 68	13.386	340.000	16.535	420.000	2.520	64.000
51268	13.386	340.000	18.110	460.000	3.780	96.000
812 68	13.386	340.000	18.110	460.000	3.780	96.000
140Z01	13.484	342.5	18.250	463.55	4.260	108.2
XW13-1/2	13.500	342.900	16.750	425.450	2.875	73.020
XW14	14.000	355.600	17.500	444.500	3.000	76.200
51172	14.173	360.000	17.323	440.000	2.559	65.000
811 72	14.173	360.000	17.323	440.000	2.559	65.000
51272	14.173	360.000	19.685	500.000	4.331	110.000
812 72	14.173	360.000	19.685	500.000	4.331	110.000
XW14-1/2	14.500	368.300	18.000	457.200	3.125	79.380
811 76	14.961	380.000	18.110	460.000	2.559	65.000
812 76	14.961	380.000	20.472	520.000	4.409	112.000
XW15	15.000	381.000	18.750	476.250	3.250	82.550
XW15-1/2	15.500	393.700	19.250	488.950	3.375	85.730
811 80	15.748	400.000	18.898	480.000	2.559	65.000
812 80	15.748	400.000	21.260	540.000	4.409	112.000
XW16	16.000	406.400	20.000	508.000	3.500	88.900
XW16-1/2	16.500	419.100	20.500	520.700	3.625	92.070
811 84	16.535	420.000	19.685	500.000	2.559	65.000
812 84	16.535	420.000	22.835	580.000	5.118	130.000
XW17	17.000	431.800	21.250	539.750	3.750	95.250
811 88	17.323	440.000	21.260	540.000	3.150	80.000
812 88	17.323	440.000	23.622	600.000	5.118	130.000
XW17-1/2	17.500	444.500	21.750	552.450	3.875	98.430
XW18	18.000	457.200	22.500	571.500	4.000	101.600
811 92	18.110	460.000	22.047	560.000	3.150	80.000
812 92	18.110	460.000	24.409	620.000	5.118	130.000
XW18-1/2	18.500	469.900	23.000	584.200	4.125	104.770
811 96	18.898	480.000	22.835	580.000	3.150	80.000
812 96	18.898	480.000	25.591	650.000	5.315	135.000
XW19	19.000	482.600	23.750	603.250	4.250	107.950
195X02	19.500	495.3	23.000	584.2	2.000	50.8
195X03	19.500	495.3	23.000	584.2	2.250	57.15
XW19-1/2	19.500	495.300	24.250	615.950	4.375	111.130
811/500	19.685	500.000	23.622	600.000	3.150	80.000
812/500	19.685	500.000	26.378	670.000	5.315	135.000
XW20	20.000	508.000	24.750	628.650	4.500	114.300
811/530	20.866	530.000	25.197	640.000	3.346	85.000
812/530	20.866	530.000	27.953	710.000	5.512	140.000
811/560	22.047	560.000	26.378	670.000	3.346	85.000
812/560	22.047	560.000	29.528	750.000	5.906	150.000
811/600	23.622	600.000	27.953	710.000	3.346	85.000
812/600	23.622	600.000	31.496	800.000	6.299	160.000

Ball Thrust Bearings
2000 SERIES

- Light/medium cross section
- Grooved race
- Single direction
- Separable axial contact
- Speed limit shown is for oil lubrication

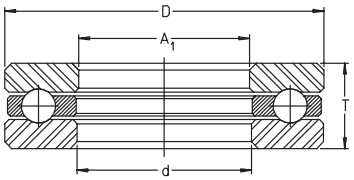

- Part numbers shown in bold may **not** be readily available, please call to check availability.

For details on part numbers, descriptive suffixes and various technical references, please refer to front of this section.
For engineering or technical information contact your local sales representative or call Distributor Sales (800)523-6572.

PART NUMBER	SHAFT d inch	SHAFT d mm	OD D inch	OD D mm	WIDTH T inch	WIDTH T mm	WEIGHT lbs	WEIGHT kg	DYN. CAP. lbf	DYN. CAP. N	STAT. CAP. lbf	STAT. CAP. N	SPEED LIMIT rpm
2004	0.250	6.350	0.625	15.875	0.438	11.113	0.026	0.012	940	4200	1110	4950	18000
2044	0.313	7.938	0.675	17.145	0.281	7.144	0.018	0.008	980	4350	1240	5500	16000
2003	0.438	11.113	0.750	19.050	0.250	6.350	0.015	0.007	1070	4750	1530	6800	14000
2063	0.438	11.113	0.937	23.800	0.500	12.700	0.064	0.029	1510	6700	2160	9600	11000
2085	0.438	11.113	0.875	22.225	0.250	6.350	0.022	0.010	980	4350	1390	6200	13000
2002	0.500	12.700	0.750	19.050	0.438	11.113	0.026	0.012	540	2380	780	3450	13000
2097	0.500	12.700	0.875	22.225	0.563	14.288	0.057	0.026	1070	4750	1660	7400	11000
2458	0.500	12.700	1.062	26.975	0.312	7.925	0.042	0.019	1460	6500	2160	9600	10000
2006	0.625	15.875	1.000	25.400	0.500	12.700	0.057	0.026	1010	4500	1660	7400	9500
2043	0.625	15.875	1.250	31.750	0.563	14.288	0.115	0.052	2410	10700	3390	15100	8500
2132	0.625	15.875	1.125	28.575	0.563	14.288	0.090	0.041	2070	9200	3130	13900	9000
2005	0.750	19.050	1.250	31.750	0.563	14.288	0.104	0.047	2250	10000	3730	16600	8000
2009	0.750	19.050	1.250	31.750	0.438	11.113	0.077	0.035	2250	10000	3730	16600	8000
2007	0.813	20.638	1.250	31.750	0.500	12.700	0.084	0.038	1750	7800	3240	14400	7500
2011	0.875	22.225	1.375	34.925	0.563	14.288	0.117	0.053	2290	10200	4050	18000	7000
2001	0.938	23.813	1.500	38.100	0.500	12.700	0.119	0.054	2230	9900	4050	18000	6500
2008	1.000	25.400	1.500	38.100	0.625	15.875	0.146	0.066	2230	9900	4050	18000	6500
2010	1.000	25.400	1.750	44.450	0.563	14.288	0.196	0.089	3730	16600	6600	29500	5500
2087	1.000	25.400	1.625	41.275	0.563	14.288	0.165	0.075	4200	18700	7800	34500	6000
2209	1.063	26.988	1.687	42.850	0.625	15.875	0.203	0.092	4700	20900	9400	42000	5500
2024	1.125	28.575	1.875	47.625	0.563	14.288	0.227	0.103	2680	11900	6000	26500	5000
2283	1.188	30.163	1.938	49.212	0.531	13.494	0.207	0.094	3910	17400	7800	34500	4800
2096	1.250	31.750	2.000	50.800	0.813	20.638	0.368	0.167	3910	17400	7800	34500	4800
2092	1.438	36.513	3.250	82.550	1.313	33.338	1.910	0.867	19300	86000	34600	154000	3400
2282	1.625	41.275	2.381	60.477	0.656	16.662	0.350	0.157	4000	17800	8900	39500	3900
2041	1.688	42.863	2.375	60.325	0.563	14.288	0.260	0.120	4000	17800	8900	39500	3800
2023	2.000	50.800	3.500	88.900	1.625	41.275	2.590	1.175	22900	102000	48600	216000	2800
2280	2.000	50.800	3.250	82.550	0.813	20.638	0.900	0.406	9200	41000	22500	100000	2800
2281	2.500	63.500	3.688	93.662	0.938	23.813	1.190	0.541	12400	55000	30600	136000	2600
2279	3.250	82.550	4.499	114.262	1.125	28.575	1.940	0.881	16600	74000	44300	197000	2000
2278	3.750	95.250	5.061	128.549	1.281	32.544	2.710	1.227	17800	79000	51000	227000	1800
2284	4.625	117.475	5.997	152.320	1.500	38.100	4.060	1.840	22000	98000	67400	300000	1500

Ball Thrust Bearings
2900 SERIES

- Light cross section
- Grooved race
- Single race
- Separable axial contact
- Speed limit shown is for oil lubrication

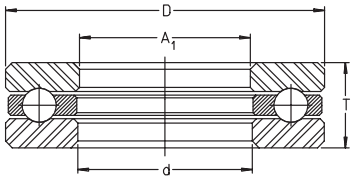

- Part numbers shown in bold may **not** be readily available, please call to check availability.

For details on part numbers, descriptive suffixes and various technical references, please refer to front of this section.
For engineering or technical information contact your local sales representative or call Distributor Sales (800)523-6572.

PART NUMBER	SHAFT d inch	SHAFT d mm	OD D inch	OD D mm	WIDTH T inch	WIDTH T mm	WEIGHT lbs	WEIGHT kg	DYN. CAP. lbf	DYN. CAP. N	STAT. CAP. lbf	STAT. CAP. N	SPEED LIMIT rpm	BORE A_1 inch	BORE A_1 mm
2900	0.394	10	1.024	26	0.472	12	0.072	0.033	2630	11700	3395	15100	11000	0.402	10.211
2901	0.472	12	1.102	28	0.472	12	0.082	0.037	2110	9400	3125	13900	9500	0.480	12.192
2902	0.591	15	1.221	31	0.472	12	0.094	0.043	2320	10300	3730	16600	8500	0.598	15.189
2903	0.709	18	1.378	35	0.472	12	0.115	0.052	3350	14900	5960	26500	7500	0.717	18.212
2904	0.787	20	1.457	37	0.472	12	0.121	0.055	3350	14900	5960	26500	7500	0.795	20.193
2904-1/2	0.866	22	1.654	42	0.551	14	0.185	0.084	4900	21800	8430	37500	6000	0.874	22.200
2905	0.984	25	1.772	45	0.551	14	0.203	0.092	5010	22300	9100	40500	5500	0.992	25.197
2906	1.181	30	1.969	50	0.551	14	1.312	0.595	5100	22700	9800	43500	5000	1.189	30.201
2907	1.378	35	2.165	55	0.630	16	0.302	0.137	6200	27500	12100	54000	4400	1.386	35.204
2908	1.575	40	2.362	60	0.630	16	1.605	0.728	5960	26500	12100	54000	4000	1.583	40.208
2909	1.772	45	2.677	68	0.630	16	0.421	0.191	6500	29000	14600	65000	3600	1.780	45.212
2910	1.969	50	2.913	74	0.709	18	0.564	0.256	8300	37000	19800	88000	3200	1.976	50.190
2911	2.165	55	3.071	78	0.709	18	0.582	0.264	8400	37500	21000	93000	3000	2.173	55.194
2912	2.362	60	3.228	82	0.709	18	0.604	0.274	8800	39000	23000	102000	2800	2.370	60.198
2913	2.362	60	3.543	90	0.787	20	0.919	0.417	9700	43000	25000	111000	2600	2.567	65.202
2914	2.756	70	3.740	95	0.787	20	0.871	0.395	10200	45500	27000	122000	2400	2.764	70.206
2915	2.953	75	3.937	100	0.787	20	0.922	0.418	10300	46000	29000	127000	2300	2.961	75.209
2916	3.150	80	4.331	110	0.906	23	1.376	0.624	13500	60000	37000	166000	2100	3.157	80.188
2917	3.347	85	4.528	115	0.866	22	1.369	0.621	11900	53000	35000	156000	2000	3.354	85.192
2918	3.543	90	4.724	120	0.866	22	1.638	0.743	11900	53000	35000	156000	1900	3.551	90.195
2919	3.740	95	5.118	130	0.984	25	2.029	0.920	17800	79000	51000	227000	1800	3.748	95.199
2920	3.937	100	5.315	135	0.984	25	2.119	0.961	17800	79000	53000	237000	1700	3.945	100.203
2921	4.134	105	5.512	140	0.984	25	2.227	1.010	18200	81000	57000	255000	1600	4.142	105.207
2922	4.331	110	5.709	145	0.984	25	2.293	1.040	19100	85000	62000	275000	1600	4.339	110.211
2923	4.528	115	5.906	150	0.984	25	2.368	1.074	18200	81000	57000	255000	1500	4.535	115.189
2924	4.724	120	6.299	160	1.063	27	3.111	1.411	21000	95000	70000	310000	1400	4.732	120.193
2925	4.921	125	6.496	165	1.063	27	3.594	1.630	19800	88000	65000	290000	1400	4.929	125.197
2928	5.512	140	7.284	185	1.221	31	4.611	2.091	27000	121000	90000	400000	1200	5.520	140.208

Ball Thrust Bearings

4100 SERIES

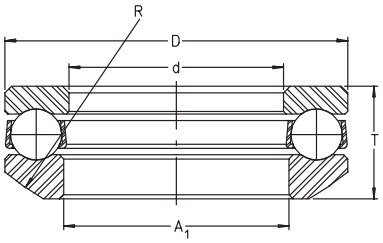

- Medium cross section
- Grooved race
- Single direction
- Separable axial contact
- Static alignment =± 3.0º
- Available in non aligning 900 series
- Speed limit shown is for oil lubrication

- Part numbers shown in bold may **not** be readily available, please call to check availability.

For details on part numbers, descriptive suffixes and various technical references, please refer to front of this section.

For engineering or technical information contact your local sales representative or call Distributor Sales (800)523-6572.

PART NUMBER	SHAFT d inch	SHAFT d mm	OD D inch	OD D mm	WIDTH T inch	WIDTH T mm	WEIGHT lbs	WEIGHT kg	DYN. CAP. lbf	DYN. CAP. N	STAT. CAP. lbf	STAT. CAP. N	SPEED LIMIT rpm	SEAT RADIUS R mm	BORE A_1 inch
4100	0.394	10	0.984	25	0.556	14	0.079	0.036	2650	11800	3390	15100	11000	25	0.472
4102	0.591	15	1.378	35	0.591	15	0.154	0.070	4340	19300	6290	28000	8000	30	0.669
4104	0.787	20	1.575	40	0.630	16	0.201	0.091	4450	19800	6970	31000	6500	35	0.866
4105	0.984	25	1.890	48	0.669	17	0.293	0.133	5850	26000	10340	46000	5000	35	1.063
4106	1.181	30	2.087	53	0.709	18	0.331	0.150	5960	26500	11240	50000	4700	40	1.260
4107	1.378	35	2.441	62	0.827	21	0.562	0.255	7980	35500	15100	67000	4200	50	1.457
4108	1.575	40	2.520	64	0.827	21	0.490	0.222	8540	38000	17500	78000	3800	50	1.654
4109	1.772	45	2.874	73	0.984	25	0.900	0.408	10680	47500	23400	104000	3400	60	1.850
4110	1.969	50	3.071	78	0.984	25	0.849	0.385	12100	54000	27000	121000	3100	65	2.047
4111	2.165	55	3.465	88	1.102	28	1.422	0.645	15700	70000	36000	158000	2800	70	2.244
4112	2.362	60	3.543	90	1.102	28	1.200	0.544	12600	56000	31000	136000	2600	75	2.441
4113	2.559	65	3.937	100	1.260	32	1.985	0.900	14800	66000	36000	158000	2400	80	2.638
4114	2.756	70	4.055	103	1.260	32	1.799	0.816	16600	74000	42000	187000	2300	85	2.835
4115	2.953	75	4.331	110	1.260	32	2.262	1.026	16900	75000	44000	197000	2100	90	3.032
4116	3.150	80	4.528	115	1.378	35	2.300	1.043	20000	89000	51000	225000	2100	95	3.228
4117	3.347	85	4.921	125	1.496	38	3.493	1.584	24000	107000	62000	275000	1900	105	3.465
4118	3.543	90	5.315	135	1.496	38	3.601	1.633	27000	120000	67000	300000	1800	110	3.662
4119	3.740	95	5.512	140	1.614	41	4.736	2.148	30000	132000	80000	355000	1700	125	3.858
4120	3.937	100	5.906	150	1.614	41	4.900	2.222	31000	137000	80000	355000	1600	125	4.055
4121	4.134	105	6.102	155	1.811	46	6.476	2.937	38000	169000	99000	440000	1500	130	4.252
4122	4.331	110	6.299	160	1.811	46	6.800	3.084	39000	172000	106000	470000	1500	135	4.449
4123	4.528	115	6.496	165	1.929	49	7.512	3.407	39000	172000	106000	470000	1400	140	4.646
4124	4.724	120	6.693	170	1.929	49	7.887	3.577	41000	181000	117000	520000	1400	140	4.843
4125	4.921	125	6.890	175	2.087	53	8.910	4.041	41000	181000	117000	520000	1300	150	5.039
4126	5.118	130	7.087	180	2.087	53	8.996	4.080	37000	165000	106000	470000	1300	155	5.236
4128	5.512	140	7.874	200	2.362	60	13.614	6.174	53000	234000	155000	690000	1200	170	5.630
4130	5.906	150	8.661	220	2.362	60	16.500	7.483	63000	280000	180000	800000	1100	185	6.063
4132	6.299	160	9.252	235	2.559	65	20.910	9.483	73000	325000	225000	1000000	1000	198	6.457
4134	6.693	170	9.843	250	2.756	70	25.569	11.596	81000	360000	250000	1110000	950	210	6.850
4136	7.087	180	10.236	260	2.756	70	26.771	12.141	88000	390000	277000	1230000	900	220	7.244
4138	7.480	190	10.827	275	3.150	80	34.885	15.821	97000	430000	306000	1360000	850	235	7.638
4140	7.874	200	11.417	290	3.150	80	38.398	17.414	105000	465000	335000	1490000	800	245	8.302

Aligning Washers
4100 AW SERIES

- Used with 4100 series ball thrust bearings
- Order bearing separately

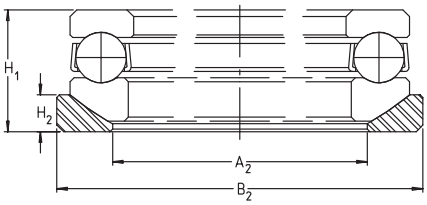

For details on part numbers, descriptive suffixes and various technical references, please refer to front of this section.
For engineering or technical information contact your local sales representative or call Distributor Sales (800)523-6572.

PART NUMBER	SHAFT A_2 inch	SHAFT A_2 mm	OD B_2 inch	OD B_2 mm	WIDTH WASHER H_2 inch	WIDTH WASHER H_2 mm	WIDTH BEARING H_1 inch	WIDTH BEARING H_1 mm	WEIGHT WASHER lbs	WEIGHT WASHER kg
4100AW	0.551	14	1.378	35	0.138	3.5	0.591	15	0.030	0.014
4102AW	0.748	19	1.496	38	0.197	5.0	0.669	17	0.050	0.023
4104AW	0.984	25	1.772	45	0.217	5.5	0.709	18	0.080	0.036
4105AW	1.339	34	0.197	5	0.236	6.0	0.748	19	0.070	0.032
4106AW	1.673	43	2.323	59	0.236	6.0	0.787	20	0.130	0.059
4107AW	1.693	43	2.638	67	0.276	7.0	0.906	23	0.160	0.073
4108AW	1.890	48	2.717	69	0.276	7.0	0.906	23	0.150	0.068
4109AW	2.087	53	3.071	78	0.315	8.0	1.063	27	0.240	0.109
4110AW	2.284	58	3.268	83	0.315	8.0	1.063	27	0.260	0.118
4111AW	2.598	66	3.701	94	0.315	8.0	1.181	30	0.310	0.141
4112AW	2.717	69	3.780	96	0.315	8.0	1.181	30	0.310	0.141
4113AW	2.913	74	4.134	105	0.354	9.0	1.339	34	0.420	0.191
4114AW	3.110	79	4.291	109	0.354	9.0	1.339	34	0.420	0.191
4115AW	3.307	84	4.488	114	0.394	10.0	1.339	34	0.420	0.191
4116AW	3.504	89	4.882	124	0.394	10.0	1.457	37	0.660	0.299
4117AW	3.780	96	5.433	138	0.413	10.5	1.575	40	0.950	0.431
4118AW	4.201	107	5.551	141	0.413	10.5	1.575	40	0.770	0.349
4119AW	4.213	107	5.945	151	0.492	12.5	1.732	44	1.200	0.544
4120AW	4.409	112	6.142	156	0.512	13.0	1.732	44	1.500	0.680
4121AW	4.646	118	6.417	163	0.551	14.0	1.929	49	1.600	0.726
4122AW	4.921	125	6.693	170	0.551	14.0	1.929	49	1.800	0.816
4123AW	5.039	128	6.811	173	0.551	14.0	2.047	52	1.800	0.816
4124AW	5.394	137	7.087	180	0.551	14.0	2.047	52	1.800	0.816
4125AW	5.472	139	7.323	186	0.551	14.0	2.205	56	1.800	0.816
4126AW	5.709	145	7.480	190	0.551	14.0	2.205	56	2.000	0.907
4128AW	6.102	155	8.347	212	0.610	15.5	2.441	62	3.100	1.406
4132AW	7.087	180	9.252	235	0.709	18.0	2.756	70	5.499	2.494
4130AW	7.165	182	8.663	220	0.630	16.0	2.559	65	5.499	2.494
4134AW	7.480	190	9.843	250	0.787	20.0	2.953	75	5.499	2.494
4136AW	7.953	202	10.236	260	0.748	19.0	2.953	75	6.600	2.993
4138AW	8.386	213	10.827	275	0.945	24.0	3.386	86	6.600	2.993
4140AW	8.819	224	11.417	290	0.866	22.0	3.386	86	6.600	2.993

Ball Thrust Bearings
4400 SERIES

- Medium cross section
- Grooved race
- Single direction
- Separable axial contact
- Speed limit shown is for oil lubrication

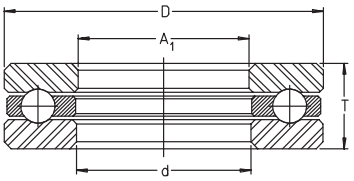

- Part numbers shown in bold may **not** be readily available, please call to check availability.

For details on part numbers, descriptive suffixes and various technical references, please refer to front of this section.
For engineering or technical information contact your local sales representative or call Distributor Sales (800)523-6572.

PART NUMBER	SHAFT d inch	SHAFT d mm	OD D inch	OD D mm	WIDTH T inch	WIDTH T mm	WEIGHT lbs	WEIGHT kg	DYN. CAP. lbf	DYN. CAP. N	STAT. CAP. lbf	STAT. CAP. N	SPEED LIMIT rpm	BORE A_1 inch	BORE A_1 mm
4401	0.500	12.700	1.438	36.513	0.625	15.875	0.190	0.086	3170	14100	4430	19700	8000	0.531	13.487
4402	0.563	14.288	1.438	36.530	0.625	15.875	0.185	0.084	3170	14100	4430	19700	8000	0.594	15.088
4403	0.625	15.875	1.563	39.700	0.625	15.875	0.218	0.099	3510	15600	5530	24600	7000	0.656	16.662
4404	0.688	17.463	1.563	39.700	0.625	15.875	0.212	0.096	3510	15600	5530	24600	7000	0.719	18.263
4405	0.750	19.050	1.688	42.880	0.630	16.000	0.247	0.112	3840	17100	6630	29500	6500	0.781	19.837
4406	0.813	20.638	1.688	42.880	0.625	15.875	0.236	0.107	3840	17100	6630	29500	6500	0.844	21.438
4407	0.875	22.225	1.938	49.230	0.750	19.050	0.390	0.177	5850	26000	10340	46000	5000	0.906	23.012
4408	0.938	23.813	1.938	49.230	0.750	19.050	0.377	0.171	5850	26000	10340	46000	5000	0.969	24.613
4409	1.000	25.400	2.063	52.400	0.750	19.050	0.419	0.190	5850	26000	10340	46000	5000	1.031	26.187
4410	1.063	26.988	2.063	52.400	0.750	19.050	0.404	0.183	5850	26000	10340	46000	5000	1.094	27.788
4411	1.125	28.575	2.188	55.580	0.750	19.050	0.454	0.206	5960	26500	11240	50000	4700	1.156	29.362
4412	1.188	30.163	2.188	55.580	0.750	19.050	0.437	0.198	5960	26500	11240	50000	4700	1.219	30.963
4413	1.250	31.750	2.313	58.750	0.750	19.050	0.483	0.219	5960	26500	11240	50000	4700	1.281	32.537
4414	1.313	33.338	2.313	58.750	0.750	19.050	0.470	0.213	6180	27500	12100	54000	4400	1.344	34.138
4415	1.375	34.925	2.438	61.930	0.750	19.050	0.509	0.231	5960	26500	12100	54000	4000	1.406	35.712
4416	1.438	36.513	2.438	61.930	0.750	19.050	0.498	0.226	5960	26500	12100	54000	4000	1.469	37.313
4417	1.500	38.100	2.563	65.100	0.750	19.050	0.556	0.252	6410	28500	13900	62000	3800	1.531	38.887
4418	1.563	39.688	2.563	65.100	0.750	19.050	0.534	0.242	6410	28500	13900	62000	3800	1.594	40.488
4419	1.625	41.275	2.813	71.450	0.875	22.225	0.809	0.367	10680	47500	23400	104000	3400	1.656	42.062
4420	1.688	42.863	2.813	71.450	0.875	22.225	0.783	0.355	10680	47500	23400	104000	3400	1.719	43.663
4421	1.750	44.450	2.938	74.630	0.875	22.225	0.851	0.386	9440	42000	21100	94000	3300	1.781	45.237
4422	1.813	46.038	2.938	74.630	0.875	22.225	0.822	0.373	9440	42000	21100	94000	3300	1.844	46.838
4423	1.875	47.625	3.063	77.800	0.875	22.225	0.889	0.403	9440	42000	21100	94000	3300	1.906	48.412
4424	1.938	49.213	3.063	77.800	0.875	22.225	0.878	0.398	6970	31000	17300	77000	3000	1.969	50.013
4425	2.000	50.800	3.188	80.980	0.875	22.225	0.953	0.432	6970	31000	17300	77000	3000	2.031	51.587
4426	2.063	52.388	3.188	80.980	0.875	22.225	0.917	0.416	6970	31000	17300	77000	3000	2.094	53.188
4427	2.125	53.975	3.313	84.150	0.875	22.225	0.970	0.440	9220	41000	22500	100000	2800	2.156	54.762
4428	2.188	55.563	3.313	84.138	0.875	22.225	0.937	0.425	9220	41000	22500	100000	2800	2.219	56.363
4429	2.250	57.150	3.438	87.330	0.880	22.360	1.019	0.462	9220	41000	22500	100000	2800	2.281	57.937
4430	2.313	58.738	3.438	87.330	0.875	22.225	1.001	0.454	8770	39000	22900	102000	2800	2.344	59.538
4431	2.375	60.325	3.563	90.500	0.875	22.225	1.001	0.454	8990	40000	22500	100000	2600	2.406	61.112
4432	2.438	61.913	3.563	90.500	0.875	22.225	1.010	0.458	8990	40000	22500	100000	2600	2.469	62.713
4433	2.500	63.500	4.000	101.600	1.125	28.580	1.881	0.853	14800	66000	36000	158000	2400	2.531	64.287
4434	2.563	65.088	4.000	101.600	1.125	28.580	1.830	0.830	14800	66000	36000	158000	2400	2.594	65.888
4435	2.625	66.675	4.125	104.770	1.125	28.580	1.998	0.906	16600	74000	42000	187000	2300	2.656	67.462
4436	2.750	69.850	4.250	107.950	1.125	28.580	2.059	0.934	16600	74000	42000	187000	2300	2.781	70.637
4437	2.938	74.613	4.438	112.730	1.125	28.580	2.170	0.984	16900	75000	44000	197000	2100	2.969	75.413
4438	3.000	76.200	4.500	114.300	1.125	28.580	2.201	0.998	16900	75000	44000	197000	2100	3.031	76.987
4439	3.125	79.375	4.625	117.480	1.125	28.580	2.260	1.025	16600	74000	44000	197000	2000	3.156	80.162
4440	3.250	82.550	4.750	120.650	1.125	28.580	2.322	1.053	16600	74000	44000	197000	2000	3.281	83.337
4441	3.375	85.725	4.875	123.820	1.125	28.580	2.388	1.083	24100	107000	62000	275000	1900	3.406	86.512
4442	3.500	88.900	5.000	127.000	1.125	28.580	2.498	1.133	17800	79000	51000	227000	1800	3.531	89.687
4443	3.625	92.075	5.625	142.880	1.375	34.930	3.991	1.810	30000	132000	80000	355000	1700	3.656	92.862
4444	3.750	95.250	5.750	146.050	1.375	34.930	4.434	2.011	30000	132000	80000	355000	1700	3.781	96.037
4445	3.875	98.425	5.875	149.230	1.375	34.930	4.807	2.180	24000	107000	70000	310000	1600	3.906	99.212
4446	4.000	101.600	6.000	152.400	1.375	34.925	4.648	2.108	24000	107000	70000	310000	1600	4.031	102.387

Ball Thrust Bearings
4400 SERIES

- Medium cross section
- Grooved race
- Single direction
- Separable axial contact
- Speed limit shown is for oil lubrication

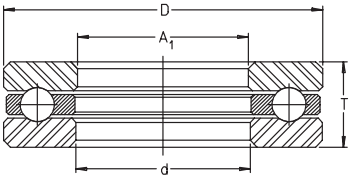

- Part numbers shown in bold may **not** be readily available, please call to check availability.

For details on part numbers, descriptive suffixes and various technical references, please refer to front of this section.
For engineering or technical information contact your local sales representative or call Distributor Sales (800)523-6572.

PART NUMBER	SHAFT d inch	SHAFT d mm	OD D inch	OD D mm	WIDTH T inch	WIDTH T mm	WEIGHT lbs	WEIGHT kg	DYN. CAP. lbf	DYN. CAP. N	STAT. CAP. lbf	STAT. CAP. N	SPEED LIMIT rpm	BORE A_1 inch	BORE A_1 mm
4447	4.125	104.775	6.134	155.800	1.375	34.930	5.204	2.360	24000	107000	70000	310000	1500	4.156	105.562
4448	4.250	107.950	6.250	158.750	1.375	34.930	4.844	2.197	24000	107000	70000	310000	1500	4.281	108.737
4449	4.375	111.125	6.375	161.920	1.375	34.930	5.601	2.540	24000	107000	70000	310000	1500	4.406	111.912
4450	4.500	114.300	6.750	171.450	1.625	41.280	7.071	3.207	34000	153000	100000	445000	1400	4.531	115.087
4451	4.625	117.475	6.875	174.630	1.625	41.280	8.092	3.670	34000	153000	100000	445000	1400	4.656	118.262
4452	4.750	120.650	7.000	177.800	1.625	41.280	7.332	3.325	34000	153000	100000	445000	1300	4.781	121.437
4453	4.875	123.825	7.125	180.980	1.625	41.280	8.710	3.950	33000	149000	100000	445000	1300	4.906	124.612
4454	5.000	127.000	7.250	184.150	1.625	41.280	7.590	3.442	33000	149000	100000	445000	1300	5.031	127.787
4455	5.125	130.175	7.375	187.325	1.625	41.275	8.996	4.080	36000	159000	110000	490000	1300	5.156	130.962
4456	5.250	133.350	7.500	190.500	1.625	41.280	7.973	3.616	36000	159000	110000	490000	1200	5.281	134.137
4457	5.375	136.525	7.625	193.675	1.630	41.400	8.134	3.689	36000	159000	110000	490000	1200	5.406	137.312
4458	5.500	139.700	8.250	209.550	1.875	47.630	11.993	5.439	53000	234000	155000	690000	1200	5.531	140.487
4459	5.625	142.875	8.375	212.730	1.875	47.630	12.167	5.518	51000	228000	155000	690000	1100	5.656	143.662
4460	5.750	146.050	8.500	215.900	1.875	47.630	12.319	5.587	44000	197000	135000	600000	1100	5.781	146.837
4461	5.875	149.225	8.625	219.080	1.875	47.630	12.500	5.669	44000	197000	135000	600000	1100	5.906	150.012
4462	6.000	152.400	8.750	222.250	1.875	47.625	12.679	5.750	44000	197000	135000	600000	1100	6.031	153.187
4463	6.125	155.575	8.875	225.420	1.875	47.630	13.060	5.923	47000	210000	148000	660000	1000	6.156	156.362
4464	6.250	158.750	9.000	228.600	1.875	47.630	13.241	6.005	46000	204000	148000	660000	1000	6.281	159.537
4465	6.375	161.925	9.125	231.770	1.875	47.630	13.422	6.087	46000	204000	148000	660000	1000	6.406	162.712
4466	6.500	165.100	9.500	241.300	2.250	57.150	18.579	8.426	56000	250000	178000	790000	1000	6.531	165.887
4467	6.625	168.275	9.625	244.480	2.250	57.150	18.826	8.538	56000	250000	178000	790000	950	6.656	169.062
4468	6.750	171.450	9.750	247.650	2.250	57.150	19.367	8.783	60000	265000	196000	870000	950	6.781	172.237

Ball Thrust Bearings
51100 SERIES

- Light cross section
- Grooved race
- Single direction axial contact
- Separable components
- Speed limit shown is for oil lubrication

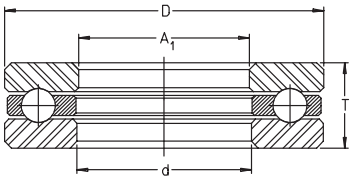

- Part numbers shown in bold may **not** be readily available, please call to check availability.

For details on part numbers, descriptive suffixes and various technical references, please refer to front of this section.
For engineering or technical information contact your local sales representative or call Distributor Sales (800)523-6572.

PART NUMBER	SHAFT d inch	SHAFT d mm	OD D inch	OD D mm	WIDTH T inch	WIDTH T mm	WEIGHT lbs	WEIGHT kg	DYN. CAP. lbf	DYN. CAP. kN	STAT. CAP. lbf	STAT. CAP. kN	SPEED LIMIT rpm	BORE A_1 inch	BORE A_1 mm
51100	0.394	10	0.945	24	0.354	9	0.042	0.019	1910	8.5	2500	11.1	11000	0.433	10.998
51101	0.472	12	1.024	26	0.354	9	0.049	0.022	2180	9.7	3130	13.9	11000	0.512	13.005
51102	0.591	15	1.102	28	0.354	9	0.051	0.023	2360	10.5	3730	16.6	9500	0.630	16.002
51103	0.669	17	1.181	30	0.354	9	0.055	0.025	2290	10.2	3730	16.6	8500	0.709	18.009
51104	0.787	20	1.378	35	0.394	10	0.084	0.038	3350	14.9	5960	26.5	7500	0.827	21.006
51105	0.984	25	1.654	42	0.433	11	0.126	0.057	4200	18.7	7760	34.5	6000	1.024	26.010
51106	1.181	30	1.850	47	0.433	11	0.106	0.048	4360	19.4	8880	39.5	5000	1.220	30.988
51107	1.378	35	2.087	53	0.472	12	0.194	0.088	4180	18.6	9220	41	4500	1.417	35.992
51107X	1.378	35	2.047	52	0.472	12	0.183	0.083	4180	18.6	9220	41	4600	1.417	35.992
51108	1.575	40	2.362	60	0.512	13	0.26	0.118	5600	24.9	12600	56	4000	1.654	42.012
51109	1.772	45	2.559	65	0.551	14	0.315	0.143	5850	26	13900	62	3600	1.850	46.990
51110	1.969	50	2.756	70	0.551	14	0.346	0.157	6070	27	15500	69	3300	2.047	51.994
51111	2.165	55	3.071	78	0.630	16	0.496	0.225	6970	31	17300	77	3000	2.244	56.998
51112	2.362	60	3.347	85	0.669	17	0.631	0.286	8770	39	22900	102	2800	2.441	62.001
51113	2.559	65	3.543	90	0.709	18	0.708	0.321	9670	43	25000	111	2600	2.638	67.005
51114	2.756	70	3.740	95	0.709	18	0.759	0.344	10200	45.5	27000	122	2400	2.835	72.009
51115	2.953	75	3.937	100	0.748	19	0.862	0.391	10300	46	29000	127	2300	3.031	76.987
51116	3.150	80	4.134	105	0.748	19	0.931	0.422	9400	42	29000	130	2200	3.228	81.991
51117	3.347	85	4.331	110	0.748	19	0.972	0.441	9400	42	29000	130	2100	3.465	88.011
51118	3.543	90	4.724	120	0.866	22	1.424	0.646	11900	53	35000	156	1900	3.661	92.989
51120	3.937	100	5.315	135	0.984	25	2.119	0.961	17800	79	53000	237	1700	4.055	102.997
51122	4.331	110	5.709	145	0.984	25	2.335	1.059	19100	85	62000	275	1600	4.449	113.005
51124	4.724	120	6.102	155	0.984	25	2.476	1.123	18700	83	62000	275	1500	4.843	123.012
51126	5.118	130	6.693	170	1.181	30	3.740	1.696	22500	100	73000	325	1300	5.236	132.994
51128	5.512	140	7.087	180	1.221	31	4.172	1.892	22900	102	79000	350	1200	5.630	143.002
51130	5.906	150	7.480	190	1.221	31	4.492	2.037	24300	108	90000	400	1200	6.024	153.010
51132	6.299	160	7.874	200	1.221	31	4.708	2.135	24300	108	90000	400	1100	6.417	162.992
51134	6.693	170	8.465	215	1.339	34	6.143	2.786	28000	125	103000	460	1000	6.811	172.999
51136	7.087	180	8.858	225	1.339	34	6.478	2.938	29000	130	111000	495	1000	7.205	183.007
51138	7.480	190	9.449	240	1.457	37	9.51	4.313	34000	153	128000	570	950	7.598	192.989
51140	7.874	200	9.843	250	1.457	37	8.56	3.882	36000	160	137000	610	900	7.992	202.997
51144	8.661	220	10.630	270	1.457	37	9.283	4.210	36000	161	146000	650	800	8.780	223.012
51148	9.449	240	11.811	300	1.772	45	15.04	6.821	48000	214	189000	840	750	9.567	243.002
51152	10.236	260	12.598	320	1.772	45	16.134	7.317	48000	215	202000	900	700	10.354	262.992
51156	11.024	280	13.780	350	2.087	53	24.202	10.976	65000	290	265000	1180	650	11.142	283.007
51160	11.811	300	14.961	380	2.441	62	35.514	16.106	81000	360	337000	1500	600	11.929	302.997
51164	12.598	320	15.748	400	2.480	63	38.14	17.297	89000	395	375000	1670	550	12.716	322.986
51168	13.386	340	16.535	420	2.520	64	40.673	18.446	89000	395	375000	1670	550	13.503	342.976
51172	14.173	360	17.323	440	2.559	65	43.432	19.697	98000	435	416000	1850	500	14.291	362.991

Ball Thrust Bearings
51200 SERIES

- Metric series
- Medium cross section
- Grooved race
- Single direction
- Separable axial contact
- Speed limit shown is for oil lubrication

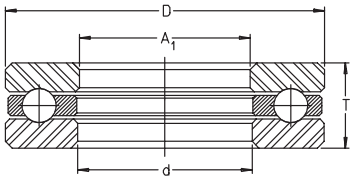

- Part numbers shown in bold may **not** be readily available, please call to check availability.

For details on part numbers, descriptive suffixes and various technical references, please refer to front of this section.

For engineering or technical information contact your local sales representative or call Distributor Sales (800)523-6572.

PART NUMBER	SHAFT d inch	SHAFT d mm	OD D inch	OD D mm	WIDTH T inch	WIDTH T mm	WEIGHT lbs	WEIGHT kg	DYN. CAP. lbf	DYN. CAP. kN	STAT. CAP. lbf	STAT. CAP. kN	SPEED LIMIT rpm	BORE A_1 inch	BORE A_1 mm
51200	0.394	10	1.024	26	0.433	11	0.064	0.029	2630	11.7	3395	15.1	11000	0.472	11.989
51201	0.472	12	1.102	28	0.433	11	0.095	0.043	2160	9.6	3125	13.9	10000	0.551	13.995
51202	0.591	15	1.260	32	0.472	12	0.130	0.059	3210	14.3	5100	22.7	8500	0.669	16.993
51203	0.669	17	1.378	35	0.472	12	0.119	0.054	3420	15.2	6000	26.5	7500	0.748	18.999
51204	0.787	20	1.575	40	0.551	14	0.170	0.077	4450	19.8	7000	31	6500	0.866	21.996
51205	0.984	25	1.850	47	0.591	15	0.320	0.145	5000	22.3	9100	40.5	5500	1.063	27.000
51206	1.181	30	2.047	52	0.630	16	0.388	0.176	6000	26.5	11200	50	4900	1.260	32.004
51207	1.378	35	2.441	62	0.709	18	0.467	0.212	8000	35.5	15100	67	4200	1.457	37.008
51208	1.575	40	2.677	68	0.748	19	0.774	0.351	8500	38	17500	78	3700	1.654	42.012
51209	1.772	45	2.874	73	0.787	20	0.690	0.313	10700	47.5	23400	104	3400	1.850	46.990
51210	1.969	50	3.071	78	0.866	22	1.061	0.481	12100	54	27000	121	3100	2.047	51.994
51211	2.165	55	3.543	90	0.984	25	1.330	0.603	15700	70	36000	158	2800	2.244	56.998
51212	2.362	60	3.740	95	1.024	26	1.903	0.863	12400	55	31000	136	2600	2.441	62.001
51213	2.559	65	3.937	100	1.063	27	1.629	0.739	14800	66	36000	158	2400	2.638	67.005
51214	2.756	70	4.134	105	1.063	27	1.821	0.826	21400	95	42000	187	5500	2.835	72.009
51215	2.953	75	4.331	110	1.063	27	1.865	0.846	16900	75	44000	197	2100	3.031	76.987
51216	3.150	80	4.528	115	1.102	28	2.026	0.919	20000	89	51000	225	2100	3.228	81.991
51217	3.347	85	4.921	125	1.221	31	2.761	1.252	24000	107	62000	275	1900	3.465	88.011
51218	3.543	90	5.315	135	1.378	35	3.691	1.674	27000	120	67000	300	1800	3.661	92.989
51220	3.937	100	5.906	150	1.496	38	4.902	2.223	31000	137	80000	355	1600	4.055	102.997
51222	4.331	110	6.299	160	1.496	38	5.413	2.455	39000	172	106000	470	1500	4.449	113.005
51224	4.724	120	6.693	170	1.535	39	7.607	3.450	41000	181	117000	520	1400	4.843	123.012
51226	5.118	130	7.480	190	1.772	45	9.087	4.121	40000	177	117000	520	1300	5.236	132.994
51228	5.512	140	7.874	200	1.811	46	9.986	4.529	53000	234	155000	690	1200	5.630	143.002
51230	5.906	150	8.465	215	1.969	50	12.324	5.589	55000	245	160000	710	1100	6.024	153.01
51232	6.299	160	8.858	225	2.008	51	13.345	6.052	56000	248	169000	750	1000	6.417	162.992
51234	6.693	170	9.449	240	2.165	55	16.524	7.494	62000	275	189000	840	1000	6.811	172.999
51236	7.087	180	9.843	250	2.205	56	17.755	8.052	64000	285	200000	890	950	7.205	183.007
51238	7.480	190	10.630	270	2.441	62	24.072	10.917	79000	350	250000	1110	850	7.638	194.005
51240	7.874	200	11.024	280	2.441	62	25.150	11.406	81000	360	263000	1170	850	8.031	203.987
51244	8.661	220	11.811	300	2.480	63	27.629	12.530	82000	365	274000	1220	750	8.819	224.003
51248	9.449	240	13.386	340	3.071	78	47.796	21.676	119000	530	398000	1770	700	9.606	243.992
51252	10.236	260	14.173	360	3.110	79	52.254	23.698	124000	550	438000	1950	650	10.394	264.008
51256	11.024	280	14.961	380	3.150	80	56.318	25.541	128000	570	459000	2040	600	11.181	283.997
51260	11.811	300	16.535	420	3.740	95	87.885	39.857	164000	730	598000	2660	550	11.969	304.013
51264	12.598	320	17.323	440	3.740	95	92.588	41.990	169000	750	625000	2780	550	12.795	324.993
51268	13.386	340	18.110	460	3.780	96	98.608	44.720	169000	750	652000	2900	500	13.583	345.008
51272	14.173	360	19.685	500	4.331	110	141.753	64.287	216000	960	816000	3630	470	14.370	364.998

Ball Thrust Bearings
52200 & 52300 SERIES

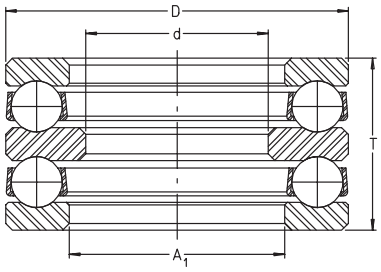

- Metric series
- Double direction – flat seat
- Separable axial contact
- Speed limit shown is for oil lubrication

- Part numbers shown in bold may **not** be readily available, please call to check availability.

For details on part numbers, descriptive suffixes and various technical references, please refer to front of this section.
For engineering or technical information contact your local sales representative or call Distributor Sales (800)523-6572.

PART NUMBER	SHAFT d inch	SHAFT d mm	OD D inch	OD D mm	WASHER BORE A_1 inch	WASHER BORE A_1 mm	WIDTH T inch	WIDTH T mm	CENTER THICKNESS B inch	CENTER THICKNESS B mm	WEIGHT lbs	WEIGHT kg	DYN. CAP. lbf	DYN. CAP. N	STA. CAP. lbf	STAT. CAP. N	SPEED LIMIT rpm
52202	0.394	10	1.260	32	0.669	17	22.000	22	0.197	5	0.179	0.081	3,700	16500	5,600	25000	7000
52204	0.591	15	1.575	40	0.866	22	1.024	26	0.236	6	0.331	0.150	5,100	22500	8,400	37500	6000
52205	0.787	20	1.850	47	1.063	27	1.102	28	0.276	7	0.485	0.220	6,200	27600	11,200	50000	5300
52206	0.984	25	2.047	52	1.260	32	1.142	29	0.276	7	0.551	0.250	5,700	25500	10,700	47500	4800
52207	1.181	30	2.441	62	1.457	37	1.339	34	0.315	8	0.904	0.410	7,900	35100	15,100	67000	4000
52208	1.181	30	2.677	68	1.654	42	1.417	36	0.354	9	1.213	0.550	10,500	46800	22,000	98000	4000
52209	1.378	35	2.874	73	1.850	47	1.457	37	0.354	9	1.323	0.600	8,800	39000	18,000	80000	3600
52210	1.575	40	3.071	78	2.047	52	1.535	39	0.354	9	1.566	0.710	11,100	49400	23,800	106000	3400

PART NUMBER	SHAFT d inch	SHAFT d mm	OD D inch	OD D mm	WASHER BORE A_1 inch	WASHER BORE A_1 mm	WIDTH T inch	WIDTH T mm	CENTER THICKNESS B inch	CENTER THICKNESS B mm	WEIGHT lbs	WEIGHT kg	DYN. CAP. lbf	DYN. CAP. N	STAT. CAP. lbf	STAT. CAP. N	SPEED LIMIT rpm
52305	0.787	20	2.047	52	1.063	27	1.339	34	0.315	8	0.728	0.330	7,800	34500	12,400	55000	4500
52306	0.984	25	2.362	60	1.260	32	1.496	38	0.354	9	1.036	0.470	8,500	37700	14,700	65500	3800
52307	1.181	30	2.677	68	1.457	37	1.732	44	0.354	9	1.499	0.680	11,100	49400	19,800	88000	3400
52308	1.181	30	3.071	78	1.654	42	1.929	49	0.394	10	2.315	1.050	13,900	61800	25,200	11200	3000
52309	1.378	35	3.346	85	1.850	47	2.047	52	0.472	12	2.756	1.250	17,100	76100	31,500	140000	2800
52310	1.575	40	3.740	95	2.047	52	2.283	58	0.551	14	3.859	1.750	19,900	88400	38,900	173000	2600

Ball Thrust Bearings
900 SERIES

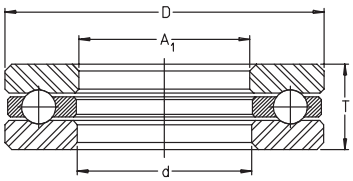

- Medium cross section
- Grooved race
- Single direction
- Available as self aligning 4100/4100AW series
- Separable axial contact
- Speed limit shown is for oil lubrication

- Part numbers shown in bold may **not** be readily available, please call to check availability.

For details on part numbers, descriptive suffixes and various technical references, please refer to front of this section.
For engineering or technical information contact your local sales representative or call Distributor Sales (800)523-6572.

PART NUMBER	SHAFT d inch	SHAFT d mm	OD D inch	OD D mm	WIDTH T inch	WIDTH T mm	WEIGHT lbs	WEIGHT kg	DYN. CAP. lbf	DYN. CAP. kN	STAT. CAP. lbf	STAT. CAP. kN	SPEED LIMIT rpm	BORE A_1 inch	BORE A_1 mm
900	0.394	10	0.984	25	0.472	12	0.067	0.030	2650	11.8	3390	15.1	11000	0.402	10.211
902	0.591	15	1.378	35	0.551	14	0.143	0.065	4340	19.3	6290	28	8000	0.598	15.189
904	0.787	20	1.575	40	0.551	14	0.169	0.077	4450	19.8	6970	31	6500	0.795	20.193
905	0.984	25	1.890	48	0.610	15.5	0.265	0.120	5850	26	10300	46	5000	0.992	25.197
906	1.181	30	2.087	53	0.610	15.5	0.298	0.135	5960	26.5	11200	50	4700	1.189	30.201
907	1.378	35	2.441	62	0.709	18	0.467	0.212	7980	35.5	15100	67	4200	1.386	35.204
908	1.575	40	2.520	64	0.709	18	0.465	0.211	8540	38	17500	78	3800	1.583	40.208
909	1.772	45	2.874	73	0.866	22	0.782	0.355	10700	47.5	23400	104	3400	1.780	45.212
910	1.969	50	3.071	78	0.866	22	0.843	0.382	12100	54	27000	121	3100	1.976	50.19
911	2.165	55	3.465	88	0.965	24.5	1.225	0.556	15700	70	36000	158	2800	2.173	55.194
912	2.362	60	3.543	90	0.965	24.5	1.186	0.538	12600	56	31000	136	2600	2.370	60.198
913	2.559	65	3.937	100	1.063	27	1.629	0.739	14800	66	36000	158	2400	2.567	65.202
914	2.756	70	4.055	103	1.063	27	1.670	0.757	16600	74	42000	187	2300	2.764	70.206
915	2.953	75	4.331	110	1.063	27	1.865	0.846	16900	75	44000	197	2100	2.961	75.209
916	3.150	80	4.528	115	1.142	29	2.119	0.961	20000	89	51000	225	2100	3.228	81.991
917	3.347	85	4.921	125	1.201	30.5	2.703	1.226	24000	107	62000	275	1900	3.354	85.192
918	3.543	90	5.315	135	1.201	30.5	3.067	1.391	27000	120	67000	300	1800	3.551	90.195
919	3.740	95	5.512	140	1.280	32.5	3.603	1.634	30000	132	80000	355	1700	3.748	95.199
920	3.937	100	5.906	150	1.280	32.5	7.380	3.347	31000	137	80000	355	1600	3.945	100.203
921	4.134	105	6.102	155	1.575	40	5.541	2.513	38000	169	99000	440	1500	4.142	105.207
922	4.331	110	6.299	160	1.575	40	6.196	2.810	39000	172	106000	470	1500	4.339	110.211
923	4.528	115	6.496	165	1.693	43	6.518	2.956	39000	172	106000	470	1400	4.535	115.189
924	4.724	120	6.693	170	1.693	43	6.858	3.110	41000	181	117000	520	1400	4.732	120.193
925	4.921	125	6.890	175	1.831	46.5	7.757	3.518	41000	181	117000	520	1300	4.929	125.197
926	5.118	130	7.087	180	1.831	46.5	8.401	3.810	40000	177	117000	520	1300	5.126	130.2
928	5.512	140	7.874	200	2.047	52	11.660	5.288	53000	234	155000	690	1200	5.520	140.208
930	5.906	150	8.661	220	2.165	55	16.008	7.260	63000	280	180000	800	1100	5.913	150.19
932	6.299	160	9.252	235	2.362	60	19.309	8.757	73000	325	225000	1000	1000	6.319	160.503
934	6.693	170	9.843	250	2.559	65	26.019	11.800	81000	360	250000	1110	950	6.713	170.51
936	7.087	180	10.236	260	2.559	65	24.910	11.297	88000	390	277000	1230	900	7.106	180.492
938	7.480	190	10.827	275	2.756	70	31.973	14.500	97000	430	306000	1360	850	7.500	190.5
940	7.874	200	11.417	290	2.756	70	33.148	15.033	105000	465	335000	1490	800	7.894	200.508
944	8.661	220	12.402	315	3.150	80	48.069	21.800	102000	455	335000	1490	750	8.681	220.497
948	9.449	240	13.583	345	3.347	85	56.510	25.628	142000	630	468000	2080	700	9.468	240.487
952	10.236	260	14.764	375	3.543	90	63.063	28.600	162000	720	542000	2410	650	10.256	260.502
956	11.024	280	15.748	400	3.740	95	83.228	37.745	182000	810	623000	2770	600	11.043	280.492
960	11.811	300	16.929	430	4.134	105	115.326	52.302	205000	910	708000	3150	550	11.831	300.507

Ball Thrust Bearings
B SERIES

- Banded assembly – Non-separable
- Medium cross section
- Grooved race
- Single direction
- Oil hole in band – Standard
- Speed limit shown is for oil lubrication

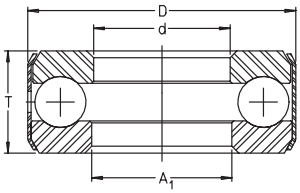

- Part numbers shown in bold may **not** be readily available, please call to check availability.

For details on part numbers, descriptive suffixes and various technical references, please refer to front of this section.
For engineering or technical information contact your local sales representative or call Distributor Sales (800)523-6572.

PART NUMBER	SHAFT d inch	SHAFT d mm	OD D inch	OD D mm	WIDTH T inch	WIDTH T mm	WEIGHT lbs	WEIGHT kg	DYN. CAP. lbf	DYN. CAP. N	STAT. CAP. lbf	STAT. CAP. N	SPEED LIMIT rpm	BORE A_1 inch
B1	0.500	12.700	1.219	30.956	0.625	15.880	0.132	0.060	3850	17100	5600	24900	7000	0.531
B2	0.563	14.288	1.219	30.960	0.625	15.880	0.130	0.059	3850	17100	5600	24900	7000	0.594
B3	0.625	15.875	1.344	34.138	0.625	15.875	0.154	0.070	4100	18200	6700	29800	6000	0.656
B4	0.688	17.463	1.344	34.140	0.625	15.880	0.148	0.067	4100	18200	6700	29800	6000	0.719
B5	0.750	19.050	1.469	37.313	0.625	15.880	0.174	0.079	4250	18900	7300	32500	5500	0.781
B6	0.813	20.638	1.469	37.310	0.625	15.880	0.165	0.075	4250	18900	7300	32500	5500	0.844
B7	0.875	22.225	1.844	46.840	0.750	19.050	0.344	0.156	6600	29400	12200	54300	4100	0.906
B8	0.938	23.813	1.844	46.838	0.750	19.050	0.333	0.151	6600	29400	12200	54300	4100	0.969
B9	1.000	25.400	1.969	50.010	0.750	19.050	0.370	0.168	8500	37800	15100	67000	4000	1.031
B10	1.063	26.988	1.969	50.012	0.750	19.050	0.357	0.162	8500	37800	15100	67000	4000	1.094
B11	1.125	28.575	2.094	53.190	0.750	19.050	0.399	0.181	8800	39100	16300	73000	3700	1.156
B12	1.188	30.163	2.094	53.190	0.750	19.050	0.386	0.175	8800	39100	16300	73000	3700	1.219
B13	1.250	31.750	2.344	59.538	0.750	19.050	0.490	0.222	9300	41400	18800	84000	3200	1.281
B14	1.313	33.338	2.344	59.540	0.750	19.050	0.481	0.218	9300	41400	18800	84000	3200	1.354
B15	1.375	34.925	2.469	62.713	0.750	19.050	0.527	0.239	9500	42300	20100	89000	3000	1.406
B16	1.438	36.513	2.469	62.710	0.750	19.050	0.512	0.232	9500	42300	20100	89000	3000	1.469
B17	1.500	38.100	2.594	65.888	0.750	19.050	0.556	0.252	9800	43600	21400	95000	2800	1.531
B18	1.563	39.688	2.594	65.890	0.750	19.050	0.540	0.245	9800	43600	21400	95000	2800	1.594
B19	1.625	41.275	2.969	75.410	0.875	22.220	0.869	0.394	12600	56000	27500	122000	2600	1.656
B20	1.688	42.863	2.969	75.410	0.875	22.220	0.845	0.383	12600	56000	27500	122000	2600	1.719
B21	1.750	44.450	3.094	78.590	0.875	22.220	0.922	0.418	12900	57400	29000	129000	2400	1.781
B22	1.813	46.038	3.094	78.590	0.875	22.220	0.895	0.406	12900	57400	29000	129000	2400	1.844
B23	1.875	47.625	3.219	81.760	0.875	22.220	0.968	0.439	13200	58700	31000	138000	2300	1.906
B24	1.938	49.213	3.219	81.760	0.875	22.220	0.942	0.427	13200	58700	31000	138000	2300	1.969
B25	2.000	50.800	3.344	84.940	0.875	22.220	1.017	0.461	13400	59600	32500	145000	2200	2.031
B26	2.063	52.388	3.344	84.940	0.875	22.220	0.986	0.447	13400	59600	32500	145000	2200	2.094
B27	2.125	53.975	3.594	91.290	0.875	22.225	1.166	0.529	13600	60000	34000	151000	2100	2.156
B28	2.188	55.563	3.594	91.290	0.875	22.220	1.140	0.517	13600	60000	34000	151000	2100	2.219
B29	2.250	57.150	3.719	80.747	0.875	22.220	1.235	0.560	14000	62000	36000	160000	2000	2.281
B30	2.313	58.738	3.719	94.460	0.875	22.220	1.191	0.540	14000	62000	36000	160000	2000	2.344
B31	2.375	60.325	3.844	97.640	0.875	22.220	1.270	0.576	14200	63000	37500	167000	1900	2.406
B32	2.438	61.913	3.844	97.640	0.875	22.225	1.237	0.561	14200	63000	37500	167000	1900	2.469
B33	2.500	63.500	3.969	100.813	0.875	22.225	1.343	0.609	14300	64000	39500	176000	1800	2.531
B34	2.563	65.088	3.969	100.813	0.875	22.225	1.299	0.589	14300	64000	39500	176000	1800	2.594
B35	2.625	66.675	4.344	110.340	1.125	28.580	2.229	1.011	21100	94000	54000	240000	1700	2.656
B36	2.688	68.263	4.344	110.340	1.125	28.580	2.152	0.976	21100	94000	54000	240000	1700	2.719
B37	2.750	69.850	4.469	113.510	1.125	28.580	2.265	1.027	21400	95000	57000	254000	1600	2.781
B38	2.813	71.438	4.469	113.510	1.125	28.580	2.216	1.005	21400	95000	57000	254000	1600	2.844
B39	2.938	74.613	4.594	116.690	1.125	28.580	2.428	1.101	21400	95000	57000	254000	1600	2.969
B40	3.000	76.200	4.719	119.860	1.125	28.580	2.578	1.169	22100	98000	59000	262000	1500	3.031
B41	3.250	82.550	4.969	126.210	1.125	28.580	2.683	1.217	22300	99000	62000	276000	1500	3.281
B42	3.500	88.900	5.219	132.560	1.125	28.580	2.847	1.291	23100	103000	68000	302000	1300	3.531

Ball Thrust Bearings
D SERIES

- Banded assembly – Non-separable
- Medium cross section
- Grooved race
- Single direction
- Oil hole in band – Standard
- Dimensionally interchangeable with GT, FT or RTL series
- Speed limit shown is for oil lubrication
- Part numbers shown in bold may **not** be readily available, please call to check availability.

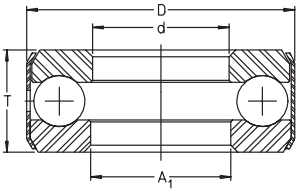

For details on part numbers, descriptive suffixes and various technical references, please refer to front of this section.

For engineering or technical information contact your local sales representative or call Distributor Sales (800)523-6572.

PART NUMBER	SHAFT d inch	SHAFT d mm	OD D inch	OD D mm	WIDTH T inch	WIDTH T mm	WEIGHT lbs	WEIGHT g	DYN. CAP. lbf	DYN. CAP. N	STAT. CAP. lbf	STAT. CAP. N	SPEED LIMIT rpm	A_1 BORE inch
D1	0.500	12.700	1.219	30.963	0.563	14.300	0.12	54	3850	17100	5600	24900	7000	0.531
D2	0.563	14.288	1.219	30.963	0.563	14.300	0.11	51	3850	17100	5600	24900	7000	0.594
D3	0.625	15.875	1.344	34.138	0.563	14.300	0.14	63	4100	18200	6700	29800	6000	0.656
D4	0.688	17.463	1.344	34.138	0.563	14.300	0.13	60	4100	18200	6700	29800	6000	0.719
D5	0.750	19.050	1.469	37.313	0.563	14.300	0.15	70	4250	18900	7300	32500	5500	0.781
D6	0.813	20.638	1.469	37.313	0.563	14.300	0.15	66	4250	18900	7300	32500	5500	0.844
D7	0.875	22.225	1.844	46.838	0.625	15.875	0.28	127	6600	29400	12200	54000	4100	0.906
D8	0.938	23.813	1.844	46.838	0.625	15.875	0.27	122	6600	29400	12200	54000	4100	0.969
D9	1.000	25.400	1.969	50.013	0.625	15.875	0.3	138	6700	29800	13100	58000	3800	1.031
D10	1.063	26.988	1.969	50.013	0.625	15.875	0.29	133	6700	29800	13100	58000	3800	1.094
D11	1.125	28.575	2.094	53.188	0.625	15.875	0.33	148	6900	30700	14000	62000	3600	1.156
D12	1.188	30.163	2.094	53.188	0.625	15.875	0.31	142	6900	30700	14000	62000	3600	1.219
D13	1.250	31.750	2.344	59.538	0.625	15.875	0.4	181	7200	32000	15700	70000	3200	1.281
D14	1.313	33.338	2.344	59.538	0.625	15.875	0.39	176	7200	32000	15700	70000	3200	1.344
D15	1.375	34.925	2.469	62.713	0.625	15.875	0.43	196	7300	32500	16600	74000	3000	1.406
D16	1.438	36.513	2.469	65.888	0.625	15.875	0.42	190	7300	32500	16600	74000	3000	1.469
D17	1.500	38.100	2.594	65.888	0.625	15.875	0.46	209	7700	34000	18300	81000	2800	1.531
D17A1	1.500	38.100	2.545	64.643	0.629	15.99	0.46	209	7700	34000	18300	81000	2800	1.521
D18	1.563	39.688	2.594	65.888	0.625	15.875	0.45	204	7700	34000	18300	81000	2800	1.594
D19	1.625	41.275	2.969	75.413	0.813	20.650	0.83	378	10300	46000	25000	111000	2400	1.656
D20	1.688	42.863	2.969	75.413	0.813	20.650	0.81	366	10300	46000	25000	111000	2400	1.719
D21	1.750	44.450	3.094	78.588	0.813	20.650	0.9	406	10600	47000	26500	118000	2300	1.781
D22	1.813	46.038	3.094	78.588	0.813	20.650	0.86	388	10600	47000	26500	118000	2300	1.844
D23	1.875	47.625	3.219	81.763	0.813	20.650	0.94	426	10800	48000	27500	122000	2200	1.906
D24	1.938	49.213	3.219	81.763	0.813	20.650	0.91	412	10800	48000	27500	122000	2200	1.969
D25	2.000	50.800	3.344	84.938	0.813	20.650	0.96	433	10800	48000	29000	129000	2100	2.031
D26	2.063	52.388	3.344	84.938	0.813	20.650	0.94	424	10800	48000	29000	129000	2100	2.094
D27	2.125	53.975	3.594	91.288	0.813	20.650	1.12	510	11100	49000	30000	133000	2000	2.156
D28	2.188	55.563	3.594	91.288	0.813	20.650	1.09	495	11100	49000	30000	133000	2000	2.219
D29	2.250	57.150	3.719	94.463	0.813	20.650	1.17	530	11200	50000	31500	140000	1900	2.281
D30	2.313	58.738	3.719	94.463	0.813	20.650	1.13	514	11200	50000	31500	140000	1900	2.344
D31	2.375	60.325	3.844	97.638	0.813	20.650	1.22	551	11500	51000	32500	145000	1900	2.406
D32	2.438	61.913	3.844	97.638	0.813	20.650	1.19	538	11500	51000	32500	145000	1900	2.469
D33	2.500	63.500	3.969	100.813	0.813	20.650	1.28	580	11500	51000	34000	151000	1800	2.531
D34	2.563	65.088	3.969	100.813	0.813	20.650	1.24	560	11500	51000	34000	151000	1800	2.594
D35	2.625	66.675	4.344	110.338	1.000	25.400	1.95	886	18100	81000	49000	218000	1600	2.656
D36	2.688	68.263	4.344	110.338	1.000	25.400	1.88	854	18100	81000	49000	218000	1600	2.719
D37	2.750	69.850	4.469	113.513	1.000	25.400	1.97	896	18200	81000	51000	227000	1600	2.781
D38	2.813	71.438	4.469	113.513	1.000	25.400	1.93	877	18200	81000	51000	227000	1600	2.844
D39	2.938	74.613	4.594	116.688	1.000	25.400	2.11	956	18200	81000	51000	227000	1600	2.969
D39-1/2	3.000	76.200	4.594	116.688	1.000	25.400	2.05	928	18200	81000	51000	227000	1600	3.063
D40	3.000	76.200	4.719	119.863	1.000	25.400	2.23	1010	18700	83000	54000	240000	1500	3.031
D41	3.250	82.550	4.969	126.213	1.000	25.400	2.34	1061	18800	84000	56000	249000	1500	3.281
D42	3.500	88.900	5.219	132.563	1.000	25.400	2.48	1125	19200	85000	60000	267000	1400	3.531

Ball Thrust Bearings
DL SERIES

- Light cross section
- Grooved race
- Single direction axial ball
- Separable
- Speed limit shown is for oil lubrication

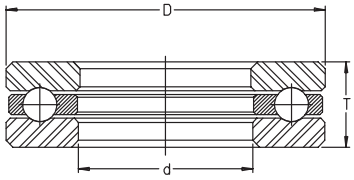

- Part numbers shown in bold may **not** be readily available, please call to check availability.

For details on part numbers, descriptive suffixes and various technical references, please refer to front of this section.
For engineering or technical information contact your local sales representative or call Distributor Sales (800)523-6572.

PART NUMBER	SHAFT d inch	SHAFT d mm	OD D inch	OD D mm	WIDTH T inch	WIDTH T mm	WEIGHT lbs	WEIGHT kg	DYN. CAP. lbf	DYN. CAP. kN	STAT. CAP. lbf	STAT. CAP. kN	SPEED LIMIT rpm
DL12	0.472	12	0.906	23	0.354	9	0.036	0.016	1510	6.7	2160	9.6	11000
DL15	0.591	15	1.024	26	0.354	9	0.146	0.066	1620	7.2	2600	11.6	10000
DL17	0.669	17	1.102	28	0.374	9.5	0.050	0.023	1600	7.1	2600	11.6	9000
DL20	0.787	20	1.535	39	0.520	13.2	0.120	0.054	2380	10.6	4350	19.4	7000
DL25	0.984	25	1.772	45	0.551	14	0.199	0.090	3750	16.6	6600	29.5	5500
DL30	1.181	30	2.087	53	0.610	15.5	0.280	0.127	3900	17.4	7800	34.5	4800
DL35	1.378	35	2.244	57	0.681	17.3	0.367	0.166	6200	27.5	12100	54.0	4400
DL40	1.575	40	2.520	64	0.748	19	0.500	0.227	6000	26.5	12100	54.0	4000
DL45	1.772	45	2.835	72	0.886	22.5	0.777	0.352	9400	42.0	21100	94.0	3300
DL50	1.969	50	3.150	80	0.965	24.5	1.300	0.590	12100	54.0	27000	121.0	3100
DL55	2.165	55	3.465	88	1.102	28	1.409	0.639	10900	48.5	23800	106.0	2800
DL60	2.362	60	3.858	98	1.201	30.5	2.205	1.000	12400	55.0	30500	136.0	2500
DL65	2.559	65	4.055	103	1.240	31.5	2.163	0.981	14800	66.0	35500	158.0	2400
DL70	2.756	70	4.252	108	1.260	32	2.403	1.090	16400	73.0	42000	187.0	2200
DL75	2.953	75	4.409	112	1.280	32.5	2.489	1.129	16900	75.0	44500	197.0	2100
DL80	3.150	80	4.646	118	1.339	34	2.800	1.270	19600	87.0	50500	225.0	2000
DL85	3.347	85	4.921	125	1.339	34	3.105	1.408	24100	107.0	62000	275.0	1900
DL90	3.543	90	5.276	134	1.496	38	3.991	1.810	23600	105.0	62000	275.0	1800
DL95	3.740	95	5.512	140	1.496	38	4.399	1.995	29500	132.0	80000	355.0	1700
DL100	3.937	100	6.063	154	1.634	41.5	5.402	2.450	31000	137.0	80000	355.0	1600

Ball Thrust Bearings

EW SERIES

- Light cross section
- Flat race
- Single direction
- Speed limit shown is for oil lubrication

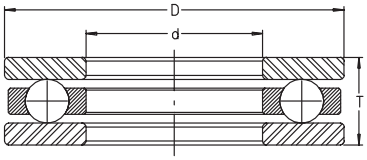

For details on part numbers, descriptive suffixes and various technical references, please refer to front of this section.
For engineering or technical information contact your local sales representative or call Distributor Sales (800)523-6572.

PART NUMBER	SHAFT d inch	SHAFT d mm	OD D inch	OD D mm	WIDTH T inch	WIDTH T mm	WEIGHT lbs	WEIGHT g	DYN. CAP. lbf	DYN. CAP. N	STAT. CAP. lbf	STAT. CAP. N	SPEED LIMIT rpm
EW–1/4	0.250	6.350	0.656	16.662	0.250	6.350	0.020	9.07	285	1260	101	450	18000
EW–5/16	0.313	7.938	0.750	19.050	0.250	6.350	0.018	7.94	325	1440	134	600	15000
EW–3/8	0.375	9.525	0.813	20.650	0.250	6.350	0.019	8.77	310	1390	134	600	13000
EW–1/2	0.500	12.700	0.969	24.610	0.250	6.350	0.026	11.79	390	1740	201	900	11000
EW–5/8	0.625	15.875	1.094	27.788	0.281	7.140	0.033	15.00	520	2320	260	1170	9500
EW–3/4	0.750	19.050	1.313	33.350	0.281	7.140	0.047	21.11	550	2470	315	1400	7500
EW–7/8	0.875	22.225	1.500	38.100	0.375	9.525	0.085	38.38	780	3450	455	2010	6500
EW1	1.000	25.400	1.625	41.280	0.375	9.530	0.092	41.90	760	3350	455	2010	6000
EW1–1/8	1.125	28.575	1.750	44.450	0.375	9.530	0.102	46.25	810	3600	530	2350	5500
EW1–1/4	1.250	31.750	2.063	52.400	0.500	12.700	0.204	92.67	1300	5800	810	3600	4800
EW1–3/8	1.375	34.925	2.188	55.575	0.500	12.700	0.222	100.79	1400	6200	940	4200	4400
EW1–1/2	1.500	38.100	2.313	58.750	0.500	12.700	0.242	109.95	1580	7000	1140	5100	4300
EW1–5/8	1.625	41.275	2.438	61.930	0.500	12.700	0.254	114.99	1470	6500	1070	4750	3900
EW1–3/4	1.750	44.450	2.625	66.675	0.625	15.875	0.387	175.66	1840	8200	1360	6000	3600
EW1–7/8	1.875	47.625	2.750	69.850	0.625	15.875	0.406	184.34	1810	8100	1360	6000	3400
EW2	2.000	50.800	2.875	73.020	0.625	15.875	0.427	193.62	1780	7900	1360	6000	3200
EW2–1/4	2.250	57.150	3.125	79.380	0.625	15.875	0.471	213.38	1870	8300	1530	6800	2900

Ball Thrust Bearings
FT SERIES

- Medium cross section
- Flat race inch series
- Single direction
- Dimensionally interchangeable with D, GT, and RTL series
- Separable axial contact
- Speed limit shown is for oil lubrication
- Part numbers shown in bold may **not** be readily available, please call to check availability.

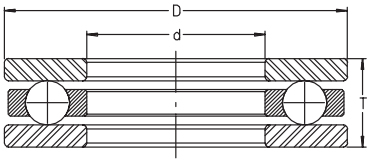

For details on part numbers, descriptive suffixes and various technical references, please refer to front of this section.
For engineering or technical information contact your local sales representative or call Distributor Sales (800)523-6572.

PART NUMBER	SHAFT d inch	SHAFT d mm	OD D inch	OD D mm	WIDTH T inch	WIDTH T mm	WEIGHT lbs	WEIGHT kg	DYN. CAP. lbf	DYN. CAP. N	STAT. CAP. lbf	STAT. CAP. N	SPEED LIMIT rpm
FT1	0.500	12.700	1.219	30.963	0.563	14.300	0.121	0.055	750	3350	375	1680	6500
FT2	0.563	14.288	1.219	30.963	0.563	14.300	0.115	0.052	740	3300	375	1680	6500
FT3	0.625	15.875	1.344	34.138	0.563	14.300	0.139	0.063	770	3400	415	1850	6000
FT4	0.688	17.463	1.344	34.138	0.563	14.300	0.130	0.059	770	3400	415	1850	6000
FT5	0.750	19.050	1.469	37.313	0.563	14.300	0.159	0.072	880	3800	530	2350	5000
FT6	0.813	20.638	1.469	37.313	0.563	14.300	0.150	0.068	880	3900	530	2350	5500
FT7	0.875	22.225	1.844	46.838	0.625	15.875	0.278	0.126	1520	6700	940	4200	4300
FT8	0.938	23.813	1.844	46.838	0.625	15.875	0.267	0.121	1520	6700	940	4200	4300
FT9	1.000	25.400	1.969	50.013	0.625	15.875	0.300	0.136	1520	6700	940	4200	4300
FT10	1.063	26.988	1.969	50.013	0.625	15.875	0.289	0.131	1520	6700	940	4200	4300
FT11	1.125	28.575	2.094	53.188	0.625	15.875	0.324	0.147	1510	6700	1010	4500	3600
FT12	1.188	30.163	2.094	53.188	0.625	15.875	0.311	0.141	1510	6700	1010	4500	3600
FT13	1.250	31.750	2.344	59.538	0.625	15.875	0.404	0.183	1520	6800	1070	4750	3300
FT14	1.313	33.338	2.344	59.538	0.625	15.875	0.388	0.176	1520	6800	1070	4750	3300
FT15	1.375	34.925	2.469	62.713	0.625	15.875	0.432	0.196	1610	7200	1210	5400	3000
FT16	1.438	36.513	2.469	62.713	0.625	15.875	0.417	0.189	1610	7200	1210	5400	3000
FT17	1.500	38.100	2.594	65.888	0.625	15.875	0.441	0.200	1690	7500	1340	6000	2800
FT18	1.563	39.688	2.594	65.888	0.625	15.875	0.421	0.191	1690	7500	1340	6000	2800
FT19	1.625	41.275	2.969	75.413	0.813	20.638	0.842	0.382	2390	10600	1890	8400	2400
FT20	1.688	42.863	2.969	75.413	0.813	20.638	0.818	0.371	2450	10900	1890	8400	2600
FT21	1.750	44.450	3.094	78.588	0.813	20.638	0.893	0.405	2600	11500	2100	9300	2400
FT22	1.813	46.038	3.094	78.588	0.813	20.638	0.864	0.392	2600	11500	2100	9300	2400
FT23	1.875	47.625	3.219	81.763	0.813	20.638	0.935	0.424	2550	11300	2100	9300	2300
FT24	1.938	49.213	3.219	81.763	0.813	20.638	0.904	0.410	2600	11600	2100	9300	2500
FT25	2.000	50.800	3.344	84.938	0.813	20.638	0.977	0.443	2440	10900	2100	9300	2000
FT26	2.063	52.388	3.344	84.938	0.813	20.638	0.944	0.428	2500	11200	2100	9300	2200
FT27	2.125	53.975	3.594	91.288	0.813	20.638	1.085	0.492	3350	14900	2700	12100	2000
FT28	2.188	55.563	3.594	91.288	0.813	20.638	1.054	0.478	3350	14900	2700	12100	2000
FT29	2.250	57.150	3.719	94.463	0.813	20.638	1.140	0.517	3550	15900	3000	13400	2000
FT30	2.313	58.738	3.719	94.463	0.813	20.638	1.107	0.502	3500	15600	3000	13400	1900
FT31	2.375	60.325	3.844	97.638	0.813	20.638	1.173	0.532	3400	15100	2850	12800	1900
FT32	2.438	61.913	3.844	97.638	0.813	20.638	1.140	0.517	3400	15100	2850	12800	1900
FT33	2.500	63.500	3.969	100.813	0.813	20.638	1.233	0.559	3600	15900	3150	14100	1800
FT34	2.563	65.088	3.969	100.813	0.813	20.638	1.195	0.542	3600	15900	3150	14100	1800
FT35	2.625	66.675	4.344	110.338	1.000	25.400	2.018	0.915	3650	16200	3450	15400	1600
FT36	2.688	68.263	4.344	110.338	1.000	25.400	1.967	0.892	3650	16200	3450	15400	1600
FT37	2.750	69.850	4.469	113.513	1.000	25.400	2.090	0.948	3800	16800	3600	16100	1600
FT38	2.813	71.438	4.469	113.513	1.000	25.400	2.037	0.924	3800	16900	3600	16100	1600
FT39	2.875	73.025	4.594	116.688	1.000	25.400	2.156	0.978	3800	16900	3600	16100	1600
FT40	2.938	74.613	4.594	116.688	1.000	25.400	2.101	0.953	3750	16700	3600	16100	1600
FT41	3.000	76.200	4.719	119.863	1.000	25.400	2.000	0.907	3800	17000	3750	16800	1500
FT42	3.063	77.788	4.719	119.863	1.000	25.400	2.172	0.985	3800	17000	3750	16800	1500
FT43	3.250	82.550	4.969	126.213	1.000	25.400	2.000	0.907	3950	17600	4100	18100	1400
FT44	3.500	88.900	5.219	132.563	1.000	25.400	3.001	1.361	4000	17700	4250	18800	1400

Ball Thrust Bearings

FT0 SERIES

- Light cross section
- Flat race
- Single direction
- Speed limit shown is for oil lubrication

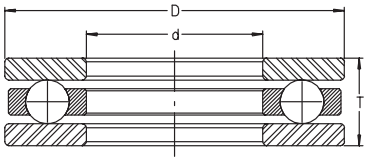

For details on part numbers, descriptive suffixes and various technical references, please refer to front of this section.
For engineering or technical information contact your local sales representative or call Distributor Sales (800)523-6572.

PART NUMBER	SHAFT d inch	SHAFT d mm	OD D inch	OD D mm	WIDTH T inch	WIDTH T mm	WEIGHT lbs	WEIGHT g	DYN. CAP. lbf	DYN. CAP. N	STAT. CAP. lbf	STAT. CAP. N	SPEED LIMIT rpm
FT01	0.188	4.763	0.438	11.112	0.188	4.762	0.005	2.39	103	455	42	187	25000
FT02	0.188	4.763	0.531	13.493	0.188	4.762	0.005	2.30	103	455	42	187	25000
FT03	0.188	4.763	0.625	15.875	0.250	6.350	0.007	3.26	207	920	85	380	19000
FT04	0.188	4.763	0.938	23.825	0.375	9.525	0.060	27.20	415	1850	201	900	14000
FT05	0.250	6.350	0.563	14.287	0.219	5.556	0.009	4.18	221	980	94	420	19000
FT06	0.250	6.350	0.813	20.650	0.375	9.530	0.050	22.70	390	1730	184	820	13000
FT07	0.250	6.350	0.844	21.438	0.375	9.525	0.042	19.24	390	1730	184	820	13000
FT08	0.313	7.938	0.625	15.875	0.250	6.350	0.012	5.66	213	950	94	420	17000
FT09	0.313	7.938	0.844	21.431	0.375	9.525	0.038	17.27	740	3300	300	1340	14000
FT010	0.375	9.525	0.688	17.480	0.281	7.144	0.017	7.50	232	1030	113	500	15000
FT011	0.375	9.525	1.031	26.190	0.500	12.700	0.080	36.11	740	3300	340	1510	11000
FT012	0.375	9.525	1.094	27.790	0.500	12.700	0.100	45.40	740	3300	340	1510	11000
FT013	0.438	11.113	0.813	20.650	0.313	7.950	0.025	11.25	360	1600	168	750	13000
FT014	0.438	11.113	1.094	27.788	0.500	12.700	0.086	38.99	730	3250	340	1510	10000
FT015	0.500	12.700	0.875	22.225	0.250	6.350	0.020	9.26	390	1740	201	900	11000
FT016	0.500	12.700	0.875	22.225	0.375	9.525	0.035	15.69	390	1740	201	900	11000

Ball Thrust Bearings
GT SERIES

- Medium cross section
- Grooved race
- Single direction
- Dimensionally interchangeable with D, FT or RTL series
- Separable axial contact
- Speed limit shown is for oil lubrication

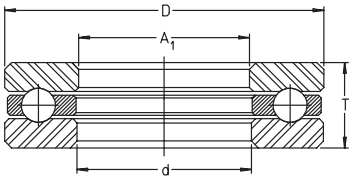

- Part numbers shown in bold may **not** be readily available, please call to check availability.

For details on part numbers, descriptive suffixes and various technical references, please refer to front of this section.
For engineering or technical information contact your local sales representative or call Distributor Sales (800)523-6572.

PART NUMBER	SHAFT d inch	SHAFT d mm	OD D inch	OD D mm	WIDTH T inch	WIDTH T mm	WEIGHT lbs	WEIGHT g	DYN. CAP. lbf	DYN. CAP. kN	STAT. CAP. lbf	STAT. CAP. kN	SPEED LIMIT rpm	BORE A_1 inch	BORE A_1 mm
GT1	0.500	12.700	1.219	30.963	0.563	14.300	0.126	57	2330	10.4	3750	16.7	8500	0.531	13.487
GT2	0.563	14.288	1.219	30.963	0.563	14.300	0.120	54	2330	10.4	3750	16.7	8500	0.594	15.088
GT3	0.625	15.875	1.344	34.138	0.563	14.300	0.143	65	2260	10.1	3750	16.7	8000	0.656	16.662
GT4	0.688	17.463	1.344	34.138	0.563	14.300	0.135	61	2260	10.1	3750	16.7	8000	0.719	18.263
GT5	0.750	19.050	1.469	37.313	0.563	14.300	0.161	73	2380	10.6	4400	19.6	7000	0.781	19.837
GT6	0.813	20.638	1.469	37.313	0.563	14.300	0.152	69	2380	10.6	4400	19.6	7000	0.844	21.438
GT7	0.875	22.225	1.844	46.838	0.625	15.875	0.279	126	3750	16.7	6700	29.8	5500	0.906	23.012
GT8	0.938	23.813	1.844	46.838	0.625	15.875	0.268	121	3750	16.7	6700	29.8	5500	0.969	24.613
GT9	1.000	25.400	1.969	50.013	0.625	15.875	0.302	137	3650	16.2	6700	29.8	5000	1.031	26.187
GT10	1.063	26.988	1.969	50.013	0.625	15.875	0.289	131	3650	16.2	6700	29.8	5000	1.094	27.788
GT11	1.125	28.575	2.094	53.188	0.625	15.875	0.329	149	3900	17.3	7800	34.7	4800	1.156	29.362
GT12	1.188	30.163	2.094	53.188	0.625	15.875	0.315	143	3900	17.3	7800	34.7	4800	1.219	30.963
GT13	1.250	31.750	2.344	59.538	0.625	15.875	0.414	188	4350	19.3	9500	42.3	4300	1.281	32.537
GT14	1.313	33.338	2.344	59.538	0.625	15.875	0.398	181	4350	19.3	9500	42.3	4300	1.344	34.138
GT15	1.375	34.925	2.469	62.713	0.625	15.875	0.440	199	4350	19.3	9500	42.3	4300	1.406	35.712
GT16	1.438	36.513	2.469	65.888	0.625	15.875	0.483	219	4350	19.3	9500	42.3	4300	1.469	37.313
GT17	1.500	38.100	2.594	65.888	0.625	15.875	0.468	212	4350	19.3	10000	44.5	3800	1.531	38.887
GT18	1.563	39.688	2.594	65.888	0.625	15.875	0.450	204	4350	19.3	10000	44.5	3800	1.594	40.488
GT19	1.625	41.275	2.969	75.413	0.813	20.638	0.850	386	6100	27.1	14000	62	3300	1.656	42.062
GT20	1.688	42.863	2.969	75.413	0.813	20.638	0.824	374	6100	27.1	14000	62	3300	1.719	43.663
GT21	1.750	44.450	3.094	78.588	0.813	20.638	0.893	405	6100	27.1	14000	62	3300	1.781	45.237
GT22	1.813	46.038	3.094	78.588	0.813	20.638	0.864	392	6100	27.1	14000	62	3300	1.844	46.838
GT23	1.875	47.625	3.219	81.763	0.813	20.638	0.953	432	6900	30.7	17500	78	3000	1.906	48.412
GT24	1.938	49.213	3.219	81.763	0.813	20.638	0.923	419	6900	30.7	17500	78	3000	1.969	50.013
GT25	2.000	50.800	3.344	84.938	0.813	20.638	0.966	438	9200	40.9	22600	101	2800	2.031	51.587
GT26	2.063	52.388	3.344	84.938	0.813	20.638	0.936	425	9200	40.9	22600	101	2800	2.094	53.188
GT27	2.125	53.975	3.594	91.288	0.813	20.638	1.106	501	9000	40	22600	101	2600	2.156	54.762
GT28	2.188	55.563	3.594	91.288	0.813	20.638	1.075	487	9000	40	22600	101	2600	2.219	56.363
GT29	2.250	57.150	3.719	94.463	0.813	20.638	1.148	521	9000	40	22600	101	2600	2.281	57.937
GT30	2.313	58.738	3.719	94.463	0.813	20.638	1.115	506	9000	40	22600	101	2600	2.344	59.538
GT31	2.375	60.325	3.844	97.638	0.813	20.638	1.190	540	9000	40	22600	101	2600	2.406	61.112
GT32	2.438	61.913	3.844	97.638	0.813	20.638	1.155	524	9000	40	22600	101	2600	2.469	62.713
GT33	2.500	63.500	3.969	100.813	0.814	20.671	1.266	574	10300	45.8	27500	122	2400	2.531	64.287
GT34	2.563	65.088	3.969	100.813	0.813	20.638	1.227	556	10300	45.8	27500	122	2400	2.594	65.888
GT35	2.625	66.675	4.344	110.338	1.000	25.400	1.969	893	12100	54	31000	138	2300	2.656	67.462
GT36	2.688	68.263	4.344	110.338	1.000	25.400	1.919	870	16700	74	42500	189	2300	2.719	69.063
GT37	2.750	69.850	4.469	113.513	1.000	25.400	2.041	926	16900	75	44500	198	2100	2.781	70.637
GT38	2.813	71.438	4.469	113.513	1.000	25.400	1.994	904	16900	75	44500	198	2100	2.844	72.238
GT39	2.875	73.025	4.594	116.688	1.000	25.400	2.098	952	16900	75	44500	198	2100	2.906	73.812
GT40	2.938	74.613	4.594	116.688	1.000	25.400	2.049	929	16900	75	44500	198	2100	2.969	75.413
GT41	3.000	76.200	4.719	119.863	1.000	25.400	2.156	978	16600	74	44500	198	2000	3.031	76.987
GT42	3.063	77.788	4.719	119.863	1.000	25.400	2.105	955	16600	74	44500	198	2000	3.094	78.588
GT43	3.250	82.550	4.969	126.213	1.000	25.400	2.271	1030	16600	74	44500	198	2000	3.281	83.337
GT44	3.500	88.900	5.219	132.563	1.000	25.400	2.443	1108	17700	79	51000	227	1800	3.531	89.687

Ball Thrust Bearings
W SERIES

- Medium cross section
- Grooved race
- Single direction
- Separable axial contact
- Speed limit shown is for oil lubrication

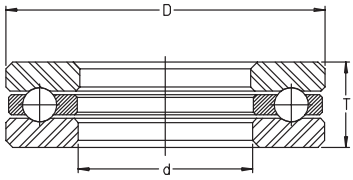

- Part numbers shown in bold may **not** be readily available, please call to check availability.

For details on part numbers, descriptive suffixes and various technical references, please refer to front of this section.
For engineering or technical information contact your local sales representative or call Distributor Sales (800)523-6572.

PART NUMBER	SHAFT d inch	SHAFT d mm	OD D inch	OD D mm	WIDTH T inch	WIDTH T mm	WEIGHT lbs	WEIGHT kg	DYN. CAP. lbf	DYN. CAP. kN	STAT. CAP. lbf	STAT. CAP. kN	SPEED LIMIT rpm
W-1/4	0.250	6.350	0.813	20.650	0.375	9.530	0.037	0.017	1170	5.2	1300	5.8	15000
W-5/16	0.313	7.938	1.000	25.400	0.531	13.490	0.084	0.038	1910	8.5	2500	11.1	11000
W-3/8	0.375	9.525	1.000	25.400	0.530	13.460	0.082	0.037	1910	8.5	2500	11.1	11000
W-7/16	0.438	11.113	1.281	32.540	0.625	15.875	0.157	0.071	3150	14.1	4450	19.7	8000
W-1/2	0.500	12.700	1.281	32.540	0.625	15.875	0.150	0.068	3150	14.1	4450	19.7	8000
W-9/16	0.563	14.288	1.406	35.710	0.625	15.875	0.181	0.082	4350	19.3	6300	28.0	8000
W-5/8	0.625	15.875	1.406	35.710	0.625	15.875	0.172	0.078	4350	19.3	6300	28.0	8000
W-3/4	0.750	19.050	1.531	38.890	0.625	15.875	0.192	0.087	3500	15.	5500	24.6	7000
W-7/8	0.875	22.225	1.656	42.060	0.625	15.875	0.221	0.1	4200	18.7	7800	34.5	6000
W1	1.000	25.400	1.781	45.240	0.625	15.875	0.234	0.106	3750	16.6	6600	29.5	5500
W1-1/8	1.125	28.575	1.906	48.410	0.625	15.875	0.254	0.115	3650	16.3	6600	29.5	5000
W1-1/4	1.250	31.750	2.094	53.190	0.719	18.260	0.355	0.161	6000	26.5	11200	50.0	4700
W1-3/8	1.375	34.925	2.219	56.360	0.719	18.260	0.379	0.172	6200	27.5	12100	54.0	4400
W1-1/2	1.500	38.100	2.344	59.540	0.719	18.260	0.404	0.183	4800	21.5	9800	43.5	4100
W1-5/8	1.625	41.275	2.469	62.710	0.719	18.260	0.434	0.197	6400	28.5	13900	62.0	3800
W1-3/4	1.750	44.450	2.688	68.280	0.755	19.180	0.547	0.248	6500	29.0	14600	65.0	3600
W1-7/8	1.875	47.625	2.813	71.450	0.750	19.050	0.564	0.256	6200	27.5	13900	62.0	3300
W2	2.000	50.800	2.969	75.410	0.750	19.050	0.613	0.278	6200	27.5	13900	62.0	3200
W2-1/8	2.125	53.975	3.219	81.760	0.875	22.225	0.770	0.349	8700	38.5	20000	89.0	3000
W2-1/4	2.250	57.150	3.344	84.940	0.875	22.225	0.931	0.422	9200	41.0	22500	100.0	2800
W2-3/8	2.375	60.325	3.594	91.290	1.000	25.400	1.286	0.583	12600	56.0	30500	136.0	2600
W2-1/2	2.500	63.500	3.719	94.460	1.000	25.400	1.330	0.603	12400	55.0	30500	136.0	2600
W2-5/8	2.625	66.675	3.844	97.640	1.000	25.400	1.400	0.635	11500	51.0	27000	121.0	2500
W2-3/4	2.750	69.850	4.031	102.390	1.000	25.400	1.491	0.676	12100	54.0	30500	136.0	2300
W2-7/8	2.875	73.025	4.156	105.560	1.000	25.400	1.537	0.697	12100	54.0	30500	136.0	2300
W3	3.000	76.200	4.375	111.130	1.125	28.580	2.022	0.917	16900	75.0	44500	197.0	2100
W3-1/8	3.125	79.375	4.500	114.300	1.125	28.580	2.077	0.942	16600	74.0	44500	197.0	2000
W3-1/4	3.250	82.550	4.813	122.250	1.250	31.750	2.500	1.134	20200	90.0	53000	237.0	2000
W3-3/8	3.375	85.725	4.938	125.430	1.250	31.750	2.809	1.274	19600	87.0	51000	225.0	1900
W3-1/2	3.500	88.900	5.063	128.600	1.250	31.750	2.880	1.306	19100	85.0	51000	225.0	1900
W3-5/8	3.625	92.075	5.188	131.780	1.250	31.750	3.199	1.451	19100	85.0	51000	225.0	1800
W3-3/4	3.750	95.250	5.313	134.950	1.250	31.750	3.301	1.497	19100	85.0	51000	225.0	1700
W3-7/8	3.875	98.425	5.688	144.480	1.375	34.930	4.059	1.841	23200	103.0	62000	275.0	1700
W4	4.000	101.600	5.813	147.650	1.375	34.930	4.148	1.881	23200	103.0	62000	275.0	1600
W4-1/4	4.250	107.950	6.313	160.350	1.750	44.450	6.754	3.063	33000	146.0	90000	400.0	1500
W4-1/2	4.500	114.300	6.500	165.100	1.750	44.450	7.850	3.560	33000	146.0	90000	400.0	1400
W4-3/4	4.750	120.650	7.063	179.400	2.000	50.800	8.800	3.991	44000	196.0	121000	540.0	1300
W5	5.000	127.000	7.313	185.750	2.000	50.800	10.103	4.582	43000	192.0	121000	540.0	1300
W5-1/2	5.500	139.700	8.063	204.800	2.193	55.700	13.708	6.217	53000	234.0	155000	690.0	1200
W6	6.000	152.400	8.688	220.663	2.375	60.325	16.701	7.574	55000	245.0	160000	710.0	1100
W6-1/2	6.500	165.100	9.406	238.910	2.500	63.500	20.326	9.218	60000	265.0	180000	800.0	1000
W7	7.000	177.800	10.125	257.180	2.625	66.680	25.000	11.338	66000	295.0	202000	900.0	900
W7-1/2	7.500	190.500	10.875	276.220	2.750	69.850	29.977	13.595	70000	310.0	225000	1000.0	850
W8	8.000	203.200	11.625	295.280	3.000	76.200	37.500	17.007	80000	355.0	250000	1110.0	800
W9	9.000	228.600	13.125	333.380	3.500	88.900	56.144	25.462	115000	510.0	360000	1600.0	700
W10	10.000	254.000	14.625	371.475	4.000	101.600	84.500	38.322	151000	670.0	488000	2170.0	650
W11	11.000	279.400	15.875	403.220	4.250	107.950	98.506	44.674	171000	760.0	560000	2490.0	600
W12	12.000	304.800	17.375	441.330	4.500	114.300	130.999	59.410	191000	850.0	640000	2840.0	550

Ball Thrust Bearings
XW SERIES

- Light cross section
- Grooved race
- Single direction
- Separable axial contact
- Speed limit shown is for oil lubrication

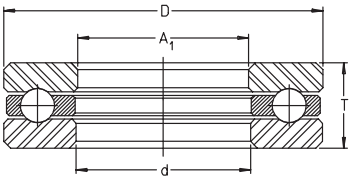

- Part numbers shown in bold may **not** be readily available, please call to check availability.

For details on part numbers, descriptive suffixes and various technical references, please refer to front of this section.
For engineering or technical information contact your local sales representative or call Distributor Sales (800)523-6572.

PART NUMBER	SHAFT d inch	SHAFT d mm	OD D inch	OD D mm	WIDTH T inch	WIDTH T mm	WEIGHT lbs	WEIGHT kg	DYN. CAP. lbf	DYN. CAP. kN	STAT. CAP. lbf	STAT. CAP. kN	SPEED LIMIT rpm
XW2	2.000	50.800	3.063	77.800	0.688	17.480	0.617	0.280	7000	31	17300	77	3000
XW2-1/8	2.125	53.975	3.188	80.980	0.688	17.480	0.690	0.313	7000	31	17300	77	3000
XW2-1/4	2.250	57.150	3.352	85.150	0.688	17.480	0.712	0.323	5800	26	15500	69	2800
XW2-3/8	2.375	60.325	3.438	87.330	0.688	17.480	0.770	0.349	5800	26	15500	69	2800
XW2-1/2	2.500	63.500	3.563	90.500	0.688	17.480	0.759	0.344	6000	27	16900	75	2600
XW2-5/8	2.625	66.675	3.750	95.250	0.750	19.050	0.893	0.405	6500	29	17300	77	2500
XW2-3/4	2.750	69.850	3.875	98.430	0.750	19.050	0.924	0.419	6400	29	17300	77	2400
XW2-7/8	2.875	73.025	4.000	101.600	0.750	19.050	1.100	0.499	6700	30	19100	85	2300
XW3	3.000	76.200	4.125	104.770	0.750	19.050	1.021	0.463	9400	42	29200	130	2200
XW3-1/8	3.125	79.375	4.250	107.950	0.750	19.050	1.052	0.477	9400	42	29200	130	2200
XW3-1/4	3.250	82.550	4.375	111.130	0.750	19.050	1.069	0.485	7000	31	20700	92	2100
XW3-3/8	3.375	85.725	4.500	114.300	0.750	19.050	1.301	0.590	7000	31	20700	92	2100
XW3-1/2	3.500	88.900	4.625	117.480	0.750	19.050	1.140	0.517	7100	32	22500	100	1900
XW3-5/8	3.625	92.075	4.750	120.650	0.750	19.050	1.171	0.531	7100	32	22500	100	1900
XW3-3/4	3.750	95.250	4.875	123.820	0.750	19.050	1.213	0.550	7400	33	24300	108	1800
XW3-7/8	3.875	98.425	5.000	127.000	0.750	19.050	1.244	0.564	7400	33	24300	108	1800
XW4	4.000	101.600	5.250	133.350	0.875	22.225	1.707	0.774	10700	48	35000	155	1700
XW4-1/4	4.250	107.950	5.500	139.700	0.875	22.225	1.819	0.825	11700	52	40000	177	1600
XW4-1/2	4.500	114.300	5.750	146.050	1.000	25.400	2.289	1.038	12100	54	45000	200	1500
XW4-3/4	4.750	120.650	6.000	152.400	1.000	25.400	2.386	1.082	12100	54	45000	200	1500
XW5	5.000	127.000	6.500	165.100	1.018	25.850	2.926	1.327	14200	63	47500	211	1400
XW5-1/4	5.250	133.350	6.750	171.450	1.125	28.580	3.497	1.586	14200	63	51000	226	1300
XW5-1/2	5.500	139.700	7.000	177.800	1.007	25.580	3.799	1.723	14200	63	51000	226	1300
XW5-3/4	5.750	146.050	7.250	184.150	1.125	28.580	3.782	1.715	14800	66	54000	241	1200
XW6	6.000	152.400	7.625	193.680	1.250	31.750	4.772	2.164	18000	80	66000	295	1200
XW6-1/2	6.500	165.100	8.125	206.380	1.250	31.750	5.118	2.321	18900	84	71000	315	1100
XW7	7.000	177.800	8.750	222.250	1.375	34.930	6.505	2.950	22300	99	84000	375	1000
XW7-1/2	7.500	190.500	9.250	234.950	1.375	34.930	7.100	3.220	23200	103	90000	400	950
XW8	8.000	203.200	10.000	254.000	1.500	38.100	9.400	4.263	19300	86	71000	315	850
XW8-1/2	8.500	215.900	10.500	266.700	1.500	38.100	9.744	4.419	29200	130	117000	520	850
XW9	9.000	228.600	11.250	285.750	1.875	47.625	15.199	6.893	39100	174	160000	710	800
XW9-1/2	9.500	241.300	11.750	298.450	1.875	47.625	15.790	7.161	40700	181	169000	750	750
XW10	10.000	254.000	12.500	317.500	2.125	53.975	21.148	9.591	54000	238	218000	970	700
XW10-1/2	10.500	266.700	13.000	330.200	2.125	53.975	22.200	10.068	54000	238	232000	1030	650
XW11	11.000	279.400	13.750	349.250	2.375	60.320	28.702	13.017	61000	270	250000	1110	650
XW11-1/2	11.500	292.100	14.250	361.950	2.375	60.320	32.499	14.739	61000	270	265000	1180	600
XW12	12.000	304.800	15.000	381.000	2.500	63.500	35.620	16.154	65000	290	285000	1260	600
XW12-1/2	12.500	317.500	15.500	393.700	2.625	66.680	43.000	19.501	69000	305	300000	1340	550
XW13	13.000	330.200	16.250	412.750	2.750	69.850	46.188	20.947	73000	325	320000	1420	550
XW13-1/2	13.500	342.900	16.750	425.450	2.875	73.020	54.000	24.490	81000	360	360000	1600	500
XW14	14.000	355.600	17.500	444.500	3.000	76.200	58.128	26.362	89000	395	375000	1670	500
XW14-1/2	14.500	368.300	18.000	457.200	3.125	79.380	68.000	30.839	98000	435	415000	1850	480
XW15	15.000	381.000	18.750	476.250	3.250	82.550	73.124	33.163	98000	435	445000	1970	470
XW15-1/2	15.500	393.700	19.250	488.950	3.375	85.730	83.001	37.642	107000	475	460000	2040	450
XW16	16.000	406.400	20.000	508.000	3.500	88.900	89.071	40.395	117000	520	500000	2240	440
XW16-1/2	16.500	419.100	20.500	520.700	3.625	92.070	105.000	47.619	117000	520	535000	2380	430

Ball Thrust Bearings
XW SERIES

- Light cross section
- Grooved race
- Single direction
- Separable axial contact
- Speed limit shown is for oil lubrication

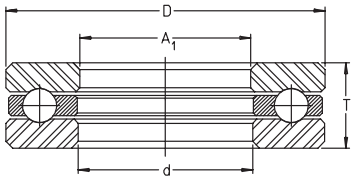

- Part numbers shown in bold may **not** be readily available, please call to check availability.

For details on part numbers, descriptive suffixes and various technical references, please refer to front of this section.
For engineering or technical information contact your local sales representative or call Distributor Sales (800)523-6572.

PART NUMBER	SHAFT d inch	SHAFT d mm	OD D inch	OD D mm	WIDTH T inch	WIDTH T mm	WEIGHT lbs	WEIGHT kg	DYN. CAP. lbf	DYN. CAP. kN	STAT. CAP. lbf	STAT. CAP. kN	SPEED LIMIT rpm
XW17	17.000	431.800	21.250	539.750	3.750	95.250	108.890	49.383	130000	580	590000	2610	410
XW17-1/2	17.500	444.500	21.750	552.450	3.875	98.430	118.999	53.968	142000	630	640000	2840	400
XW18	18.000	457.200	22.500	571.500	4.000	101.600	130.461	59.166	135000	600	640000	2840	390
XW18-1/2	18.500	469.900	23.000	584.200	4.125	104.770	143.001	64.853	135000	600	640000	2840	380
XW19	19.000	482.600	23.750	603.250	4.250	107.950	154.725	70.170	164000	730	750000	3330	370
XW19-1/2	19.500	495.300	24.250	615.950	4.375	111.130	167.999	76.190	157000	700	750000	3330	360
XW20	20.000	508.000	24.750	628.650	4.500	114.300	174.191	78.998	164000	730	800000	3540	350

Miscellaneous Ball & Roller Thrust Bearings

- Ball and roller thrust bearings
- Sorted by shaft dimension
- Special numbers containing “Y” are banded bearings

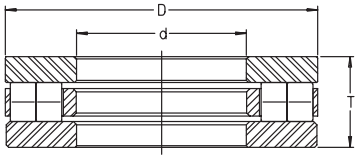

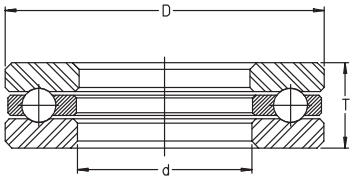

For details on part numbers, descriptive suffixes and various technical references, please refer to front of this section.
For engineering or technical information contact your local sales representative or call Distributor Sales (800)523-6572.

PART NUMBER	SHAFT d inch	SHAFT d mm	OD D inch	OD D mm	WIDTH T inch	WIDTH T mm	WEIGHT lbs	WEIGHT kg	DYN. CAP. lbf	DYN. CAP. kN	STAT. CAP. lbf	STAT. CAP. kN	SPEED LIMIT rpm	CLEARANCE BORE inch	CLEARANCE BORE mm	SEAT RADIUS mm
02X12	0.250	6.350	0.656	16.660	0.230	5.850	0.020	0.009	780	3.45	840	3.75	17000	NA	NA	NA
02P12	0.250	6.350	0.666	16.916	0.260	6.604	0.020	0.009	190	0.84	75	0.335	17000	NA	NA	NA
02PS16	0.252	6.400	0.563	14.288	0.223	5.670	0.007	0.003	220	0.98	94	0.42	19000	NA	NA	NA
03Y01	0.312	7.925	0.515	13.081	0.255	6.477	0.011	0.005	405	1.8	660	2.95	14000	0.328	8.33	NA
FC67686	0.313	7.938	0.625	15.875	0.204	5.180	0.051	0.023	151	0.67	171	0.76	19000	NA	NA	NA
03Y04	0.313	7.950	0.615	15.620	0.318	8.080	0.018	0.008	740	3.3	1100	4.9	13000	0.323	8.1	NA
03Y49	0.314	7.976	0.515	13.081	0.109	2.769	0.004	0.002	410	1.83	700	3.1	14000	0.328	8.33	NA
03Y51	0.316	8.026	0.682	17.323	0.315	8.001	0.020	0.009	1150	5.1	1530	6.8	12000	NA	NA	NA
03Y03	0.316	8.030	0.688	17.480	0.313	7.950	0.022	0.010	1190	5.3	1690	7.5	12000	0.318	8.08	NA
03X16	0.329	8.357	1.192	30.277	0.801	20.345	0.143	0.065	6500	29	7500	33.5	10000	NA	NA	NA
00Z27A	0.358	9.090	1.680	42.670	0.635	16.130	0.975	0.442	8100	36	12600	56	6000	NA	NA	NA
03Y50	0.375	9.525	0.600	15.240	0.068	1.724	0.013	0.006	435	1.93	800	3.55	12000	0.391	9.93	NA
03Y12	0.375	9.525	0.750	19.050	0.313	7.938	0.026	0.012	1210	5.4	1820	8.1	10000	0.380	9.66	NA
HW-3/8	0.375	9.525	1.125	28.575	0.625	15.875	0.12	0.055	2810	12.5	3330	14.8	10000	0.438	11.125	NA
03Y47	0.375	9.525	1.202	30.530	0.500	12.700	0.110	0.050	3700	16.5	5050	22.4	7500	0.385	9.78	NA
03Y21	0.376	9.550	0.753	19.130	0.314	7.970	0.024	0.011	1210	5.4	1820	8.1	10000	0.401	10.19	NA
03Y13	0.376	9.563	0.600	15.240	0.187	4.750	0.009	0.004	435	1.93	800	3.55	12000	0.391	9.93	NA
03Y40	0.378	9.601	0.943	23.952	0.313	7.938	0.040	0.018	1870	8.3	3050	13.6	9000	0.380	9.65	NA
03Y07	0.380	9.652	0.640	16.256	0.380	9.652	0.020	0.009	790	3.5	1260	5.6	12000	0.380	9.66	NA
03Y10	0.380	9.652	0.671	17.043	0.380	9.652	0.022	0.010	790	3.5	1260	5.6	11000	0.380	9.66	NA
04Y09	0.406	10.310	1.057	26.850	0.370	9.390	0.055	0.025	1870	8.3	3050	13.6	8000	0.433	10.98	NA
04Y07	0.438	11.113	0.890	22.606	0.438	11.113	0.046	0.021	1780	7.9	2600	11.6	9000	0.440	11.18	NA
04Y01	0.441	11.201	0.813	20.638	0.251	6.375	0.024	0.011	1260	5.6	1960	8.7	9500	0.442	11.23	NA
05Y04	0.499	12.675	0.890	22.606	0.442	11.227	0.042	0.019	1300	5.8	2230	9.9	8500	0.506	12.852	NA
05Y03	0.499	12.687	0.765	19.431	0.442	11.227	0.026	0.012	850	3.8	1570	7	9500	0.506	12.852	NA
05Y05	0.500	12.700	0.990	25.146	0.505	12.827	0.068	0.031	2450	10.9	3800	16.8	8000	0.506	12.852	NA
05X04	0.500	12.700	0.995	25.273	0.380	9.652	0.062	0.028	1510	6.7	2180	9.7	11000	0.511	12.979	NA
05Y06	0.500	12.700	1.122	28.500	0.500	12.700	0.093	0.042	3150	14	4700	20.9	7500	0.506	12.852	NA
05X44	0.500	12.700	1.187	30.150	0.442	11.227	0.088	0.040	2320	10.3	3800	16.8	7000	0.561	14.249	NA
HW-1/2	0.500	12.700	1.313	33.350	0.719	18.263	0.18	0.083	3420	15.2	4200	18.7	8500	0.563	14.3	NA
05Y60	0.503	12.776	1.234	31.344	0.564	14.326	0.130	0.059	3850	17.1	5600	24.8	7000	0.531	13.487	NA
05X101	0.504	12.800	0.969	24.610	0.230	5.840	0.031	0.014	940	4.2	1390	6.2	11000	NA	NA	NA
05Y11	0.531	13.480	0.890	22.606	0.443	11.240	0.040	0.018	1350	6	2380	10.6	8500	0.536	13.614	NA
05Y74	0.533	13.538	0.800	20.320	0.187	4.750	0.022	0.010	880	3.9	1640	7.3	9000	0.547	13.894	NA
05Y18	0.533	13.538	0.810	20.574	0.187	4.750	0.013	0.006	660	2.95	1370	6.1	9000	0.568	14.427	NA
F-200284	0.555	14.100	1.451	36.850	0.435	11.050	0.112	0.051	2360	10.5	4700	20.8	6000	0.799	20.295	NA
05X60	0.560	14.224	1.224	31.090	0.385	9.779	0.079	0.036	2300	10.3	3800	16.8	9000	NA	NA	NA
05Y12	0.564	14.326	1.015	25.781	0.569	14.453	0.075	0.034	1930	8.6	3300	14.6	7500	0.568	14.427	NA
05XS12	0.564	14.326	1.276	32.410	0.505	12.827	0.123	0.056	2400	10.7	3400	15.2	8500	NA	NA	NA
05X67	0.590	14.991	1.378	35.001	0.556	14.127	0.075	0.034	4350	19.4	6400	28.5	8000	0.598	15.189	NA
FC69992	0.591	15	1.102	28	0.354	9	0.057	0.026	2360	10.5	3800	16.8	9500	0.630	16	NA
502	0.591	15	1.378	35	0.787	20	0.271	0.123	5060	22.5	6970	31	8000	0.669	17	30
06X77	0.595	15.113	1.028	26.111	0.359	9.119	0.068	0.031	1640	7.3	2600	11.6	9700	NA	NA	NA
06Y42	0.625	15.875	0.995	25.273	0.442	11.227	0.049	0.022	1420	6.3	2650	11.8	7500	0.653	16.586	NA
06Y12	0.627	15.926	0.917	23.290	0.187	4.750	0.015	0.007	710	3.15	1570	7	7500	0.641	16.281	NA
06Y60	0.627	15.926	0.917	23.292	0.187	4.750	0.020	0.009	930	4.15	1960	8.7	7500	0.641	16.281	NA
06X63	0.627	15.926	0.992	25.197	0.500	12.700	0.062	0.028	1020	4.55	1690	7.5	9500	NA	NA	NA

Miscellaneous Ball & Roller Thrust Bearings

- Ball and roller thrust bearings
- Sorted by shaft dimension
- Special numbers containing “Y” are banded bearings

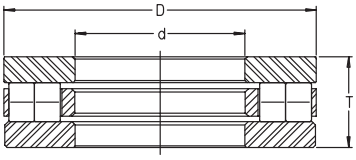

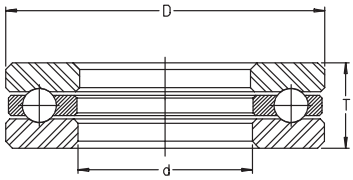

For details on part numbers, descriptive suffixes and various technical references, please refer to front of this section.
For engineering or technical information contact your local sales representative or call Distributor Sales (800)523-6572.

PART NUMBER	SHAFT d inch	SHAFT d mm	OD D inch	OD D mm	WIDTH T inch	WIDTH T mm	WEIGHT lbs	WEIGHT kg	DYN. CAP. lbf	DYN. CAP. kN	STAT. CAP. lbf	STAT. CAP. kN	SPEED LIMIT rpm	CLEARANCE BORE inch	CLEARANCE BORE mm	SEAT RADIUS mm
06XS07	0.627	15.926	1.276	32.410	0.505	12.830	0.135	0.061	2400	10.7	3400	15.2	8500	NA	NA	NA
06Y33	0.627	15.926	1.421	36.093	0.458	11.633	0.126	0.057	3550	15.8	6400	28.5	6000	0.650	16.510	NA
06Y49	0.628	15.951	1.354	34.391	0.583	14.810	0.057	0.026	4100	18.3	6750	30	6000	0.656	16.662	NA
06Y36	0.629	15.975	1.000	25.400	0.375	9.525	0.049	0.022	1440	6.4	2800	12.4	7000	0.639	16.231	NA
06X65	0.629	15.975	1.406	35.712	0.630	16.010	0.174	0.079	4350	19.4	6400	28.5	7500	NA	NA	NA
06P06	0.629	15.977	1.094	27.781	0.286	7.264	0.051	0.023	520	2.31	265	1.17	9000	NA	NA	NA
06X30	0.630	16.002	1.625	41.275	0.925	23.500	0.267	0.121	9800	43.5	13700	61	7000	NA	NA	NA
06Y05	0.656	16.650	1.140	28.956	0.500	12.700	0.079	0.036	2020	9	3700	16.5	6500	0.672	17.069	NA
06X62	0.659	16.738	1.378	35	0.636	16.154	0.162	0.073	4150	18.4	12100	54	7500	NA	NA	30
FC66992.1	0.669	17	1.457	37	0.276	7	0.144	0.065	3550	15.8	11200	50	7500	NA	NA	NA
FC66992.5	0.669	17	1.457	37	0.548	13.920	0.143	0.065	3550	15.8	11200	50	7500	NA	NA	NA
503	0.669	17	1.457	37	0.787	20	0.240	0.109	7190	32	10000	44.5	7500	0.749	19	35
FC68404	0.673	17.100	1.461	37.100	0.548	13.920	0.141	0.064	4150	18.4	12100	54	7500	NA	NA	NA
FC68404.1	0.673	17.100	1.461	37.100	0.548	13.920	0.139	0.063	4150	18.4	12100	54	7500	NA	NA	NA
FC69726	0.673	17.100	1.461	37.100	0.548	13.920	0.139	0.063	4150	18.4	12100	54	7500	NA	NA	NA
07Y08	0.735	18.669	1.406	35.712	0.458	11.633	0.123	0.056	3550	15.7	6400	28.5	5500	0.747	18.974	NA
HW-3/4	0.750	19.050	1.813	46.050	0.875	22.225	0.410	0.188	6860	30.5	10000	44.5	6000	0.813	20.650	NA
07Y03	0.753	19.126	1.125	28.575	0.625	15.875	0.088	0.040	1440	6.4	3100	13.7	6500	0.755	19.177	NA
07Y51	0.753	19.126	1.469	37.306	0.568	14.427	0.165	0.075	4250	18.9	7300	32.5	5500	0.771	19.583	NA
07X78	0.753	19.127	1.250	31.750	0.442	11.230	0.075	0.034	2250	10	3800	16.8	8000	0.755	19.177	NA
07P21	0.754	19.152	1.313	33.338	0.286	7.264	0.073	0.033	550	2.46	315	1.4	7500	NA	NA	NA
07X51	0.781	19.837	1.783	45.293	1.041	26.441	0.463	0.210	5350	23.8	15700	70	6000	1.021	25.938	NA
1004	0.787	20	1.772	45	0.906	23	0.410	0.188	9330	42	13490	60	6000	0.795	20.193	NA
504	0.787	20	1.772	45	0.945	24	0.437	0.198	9330	41.5	13500	60	6000	0.867	22	40
08Y24	0.813	20.638	1.483	37.670	0.575	14.600	0.135	0.061	3700	16.5	7900	35	5000	0.833	21.158	NA
08Y04	0.813	20.660	1.265	32.131	0.189	4.813	0.029	0.013	850	3.8	2700	11.9	5500	0.836	21.234	NA
08Y42	0.814	20.680	1.093	27.760	0.250	6.350	0.033	0.015	800	3.55	2430	10.8	6000	0.829	21.057	NA
08Y14	0.829	21.057	1.093	27.762	0.250	6.350	0.031	0.014	800	3.55	2430	10.8	6000	0.829	21.057	NA
08Y23	0.843	21.400	1.562	39.675	0.501	12.725	0.150	0.068	3050	13.6	6900	30.5	4900	0.853	21.666	NA
08Y06	0.843	21.410	1.265	32.131	0.505	12.827	0.088	0.040	1750	7.8	4350	19.4	5500	0.847	21.514	NA
08Y07	0.843	21.410	1.390	35.306	0.505	12.827	0.117	0.053	2380	10.6	5600	25	5500	0.850	21.590	NA
08X12	0.844	21.438	1.625	41.275	1.000	25.400	0.362	0.164	8000	35.5	12600	56	6500	NA	NA	NA
08Y32	0.847	21.514	1.375	34.925	0.500	12.700	0.117	0.053	2410	10.7	5600	25	5500	0.850	21.590	NA
HW-7/8	0.875	22.225	2.063	52.400	1.000	25.400	0.610	0.276	9100	40.5	13500	60	5500	0.938	23.825	NA
08X25	0.875	22.225	2.563	65.088	0.781	19.844	0.851	0.386	6500	29	13900	62	4600	1.500	38.100	NA
08Y38	0.878	22.301	1.515	38.481	0.380	9.652	0.104	0.047	2470	11	6000	26.5	4900	0.890	22.606	NA
FC67327.3	0.945	24	1.496	38	0.143	3.620	0.029	0.013	1980	8.8	6600	29.5	6500	1.129	28.680	NA
FC67327	0.945	24	1.496	38	0.143	3.620	0.027	0.012	1980	8.8	6600	29.5	6500	1.058	26.870	NA
F-233454.4	0.984	25	1.860	47.250	0.182	4.620	0.077	0.035	4750	21.1	15700	70	5500	1.061	26.950	NA
505	0.984	25	2.284	58	1.181	30	0.891	0.404	14600	65	22500	100	4500	1.063	27	45
09XS28	0.990	25.146	1.772	45.009	0.553	14.046	0.181	0.082	2290	10.2	7800	34.8	5500	NA	NA	NA
10Y25	1.000	25.400	1.500	38.100	0.625	15.875	0.143	0.065	2550	11.4	6300	28	4700	NA	NA	NA
FC69708.1	1.000	25.400	1.613	40.970	0.228	5.790	0.051	0.023	3150	13.9	12100	54	6000	NA	NA	NA
F-216064.3	1.000	25.400	1.925	48.900	0.197	5	0.088	0.040	4450	19.9	20500	91	5500	1.122	28.500	NA
HW1	1.000	25.400	2.438	61.930	1.125	28.575	0.950	0.432	11700	52	17800	79	4800	1.125	28.575	NA
10Y03	1.031	26.180	1.640	41.656	0.630	16.002	0.192	0.087	3300	14.7	7600	34	4400	1.035	26.289	NA
10XS18	1.064	27.038	1.875	47.630	0.500	12.700	0.207	0.094	3350	14.9	6700	30	5500	NA	NA	NA

Miscellaneous Ball & Roller Thrust Bearings

- Ball and roller thrust bearings
- Sorted by shaft dimension
- Special numbers containing “Y” are banded bearings

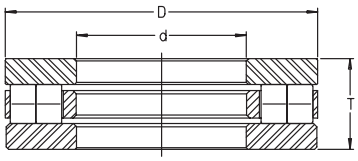

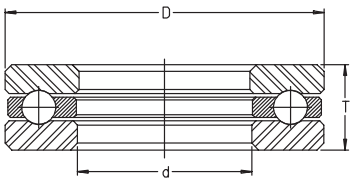

For details on part numbers, descriptive suffixes and various technical references, please refer to front of this section.
For engineering or technical information contact your local sales representative or call Distributor Sales (800)523-6572.

PART NUMBER	SHAFT d inch	SHAFT d mm	OD D inch	OD D mm	WIDTH T inch	WIDTH T mm	WEIGHT lbs	WEIGHT kg	DYN. CAP. lbf	DYN. CAP. kN	STAT. CAP. lbf	STAT. CAP. kN	SPEED LIMIT rpm	CLEARANCE BORE inch	CLEARANCE BORE mm	SEAT RADIUS mm
11Y01	1.125	28.575	1.995	50.673	0.627	15.926	0.293	0.133	6200	27.5	13000	58	3800	1.156	29.362	NA
11RT03	1.125	28.575	2.250	57.150	0.752	19.100	1.246	0.565	22300	99	39000	173	5500	NA	NA	NA
11RT04	1.127	28.626	2.625	66.675	0.752	19.100	1.300	0.590	30500	135	60000	265	5000	NA	NA	NA
11XS10	1.129	28.677	1.750	44.450	0.380	9.652	0.106	0.048	2470	11	6000	26.5	5500	1.145	29.083	NA
11X09	1.135	28.829	2.175	55.245	1.062	26.975	0.635	0.288	12600	56	22300	99	4800	NA	NA	NA
11X58	1.181	30	1.850	47	0.433	11	0.095	0.043	4250	18.8	9400	42	5000	1.260	32	NA
3906	1.181	30	2.362	60	0.748	19	0.516	0.234	7980	36	15100	67	4200	1.189	30.201	NA
1908	1.181	30	2.520	64	1.260	32	0.849	0.385	8,500	38	17,500	78	3800	1.583	40.208	NA
808	1.181	30	2.520	64	1.496	38	0.900	0.408	8540	38	17500	78	3800	1.654	42.012	NA
11X04	1.181	30	2.717	69	1.654	42	1.248	0.566	8700	38.5	17500	78	4000	1.654	42.012	50
11YT127E	1.185	30.099	2.635	66.929	0.766	19.456	0.370	0.168	7300	32.5	16600	74	3100	NA	NA	NA
FC68496.1	1.250	31.750	2.120	53.848	0.184	4.670	0.077	0.035	6100	27	20900	93	4700	1.383	35.130	NA
12Y23	1.250	31.750	2.750	69.850	0.813	20.638	0.833	0.378	10000	44.5	22700	101	3000	1.290	32.766	NA
12YT127J	1.256	31.902	2.635	66.929	0.766	19.456	0.728	0.330	10600	47	20500	91	4000	NA	NA	NA
FC68495	1.275	32.385	2.162	54.915	0.193	4.900	0.078	0.036	6100	27.1	5500	24.5	4600	1.424	36.170	NA
12Y01	1.280	32.512	1.875	47.625	1.000	25.400	0.397	0.180	3800	16.8	9400	42	3700	1.285	32.639	NA
12Y03	1.281	32.542	2.140	54.356	1.005	25.527	0.560	0.254	75000	33.5	15700	70	3500	1.285	32.639	NA
F-223428.1	1.299	33	2.047	52	0.161	4.100	0.055	0.025	4800	21.3	19300	86	4700	1.441	36.600	NA
13YS19SS	1.299	33	2.484	63.090	0.630	16.010	0.456	0.207	7300	32.5	16600	74	3100	1.396	35.458	NA
FC67909	1.306	33.180	1.925	48.900	0.143	3.620	0.042	0.019	2900	12.8	11500	51	4900	1.456	36.971	NA
13X11	1.313	33.338	2.254	57.250	0.688	17.463	0.426	0.193	7400	33	15500	69	4400	1.320	33.528	NA
13X49	1.313	33.338	2.254	57.252	0.689	17.488	0.461	0.209	7400	33	15500	69	4400	1.320	33.528	NA
13Y18	1.346	34.188	2.150	54.610	0.585	14.860	0.370	0.168	3350	15	8800	39	3400	1.346	34.188	NA
FC67945	1.375	34.925	2.148	54.550	0.330	8.380	0.174	0.079	4600	20.4	21600	96	4500	NA	NA	NA
3907	1.378	35	2.677	68	0.906	23	0.807	0.366	10800	48	20500	91	3900	1.386	35.204	NA
DM35	1.378	35	2.677	68	0.965	24.500	0.809	0.367	8500	38	17500	78	3800	NA	NA	NA
1007	1.378	35	2.835	72	1.457	37	1.660	0.754	20200	90	34400	153	3500	1.386	35.204	NA
FC68417	1.448	36.780	2.047	52	0.170	4.320	0.060	0.027	4050	18	16000	71	4500	1.540	39.104	NA
FC67907	1.455	36.950	2.126	54	0.143	3.620	0.051	0.023	3400	15.2	15100	67	4400	1.604	40.746	NA
FC68168	1.496	38	2.480	63	0.197	5	0.095	0.043	6300	28	25500	114	4000	1.691	42.950	NA
MW1-1/2	1.500	38.100	2.875	73.025	1.125	28.575	1.202	0.545	13900	62	26500	118	3500	NA	NA	NA
15X55	1.535	38.994	2.438	61.918	1.605	40.770	1.063	0.482	3600	16.1	8500	38	4000	1.626	41.300	NA
F-201422	1.575	40	2.441	62	0.236	6	0.112	0.051	6300	28	25500	114	3900	1.693	43	NA
508	1.575	40	3.347	85	1.732	44	2.706	1.227	20000	89	37000	163	3200	1.654	42	70
874 08	1.575	40	3.543	90	0.906	23	1.647	0.747	30500	135	108000	480	4400	NA	NA	NA
15X40	1.575	40	3.543	90	1.449	36.800	3.173	1.439	27500	123	50500	224	3100	1.693	43.002	NA
F-217925.1	1.591	40.400	2.149	54.580	0.143	3.620	0.037	0.017	2650	11.7	10800	48	4200	1.679	42.650	NA
F-217926.1	1.591	40.400	2.149	54.580	0.150	3.800	0.041	0.019	2650	11.7	10800	48	4200	1.679	42.650	NA
F-217927.1	1.591	40.400	2.149	54.580	0.157	4	0.045	0.020	2650	11.7	10800	48	4200	1.679	42.650	NA
16Y03	1.656	42.054	2.640	67.056	1.005	25.520	0.739	0.335	9800	43.5	21400	95	2700	1.661	42.189	NA
FC67908	1.695	43.060	2.496	63.400	0.137	3.470	0.064	0.029	4650	20.7	24700	110	3800	1.845	46.857	NA
FC69100.1	1.726	43.850	2.641	67.090	0.198	5.020	0.115	0.052	6500	29	25500	113	3600	1.874	47.588	NA
FC67996	1.744	44.310	2.434	61.830	0.150	3.810	0.062	0.028	3700	16.5	17800	79	3800	1.908	48.459	NA
17YS10SS	1.753	44.530	3.109	78.970	0.818	20.780	0.882	0.400	10600	47	26500	117	2400	1.771	44.983	NA
3909	1.772	45	3.347	85	1.102	28	1.499	0.680	17100	76	34000	150	3100	1.780	45.212	NA
1009	1.772	45	3.740	95	1.850	47	3.580	1.622	29700	132	51000	225	2800	1.780	45.212	NA
509	1.772	45	3.740	95	1.969	50	3.808	1.727	32000	142	54000	241	2800	1.850	47	80

Miscellaneous Ball & Roller Thrust Bearings

- Ball and roller thrust bearings
- Sorted by shaft dimension
- Special numbers containing “Y” are banded bearings

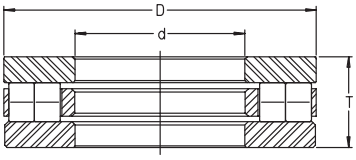

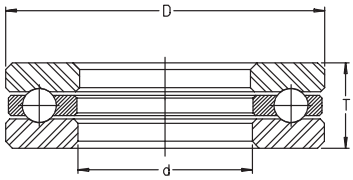

For details on part numbers, descriptive suffixes and various technical references, please refer to front of this section.
For engineering or technical information contact your local sales representative or call Distributor Sales (800)523-6572.

PART NUMBER	SHAFT d inch	SHAFT d mm	OD D inch	OD D mm	WIDTH T inch	WIDTH T mm	WEIGHT lbs	WEIGHT kg	DYN. CAP. lbf	DYN. CAP. kN	STAT. CAP. lbf	STAT. CAP. kN	SPEED LIMIT rpm	CLEARANCE BORE inch	CLEARANCE BORE mm	SEAT RADIUS mm
874 09	1.772	45	3.937	100	0.984	25	2.324	1.054	34500	154	126000	560	4000	NA	NA	NA
FC67905	1.774	45.050	2.480	63	0.143	3.620	0.064	0.029	4050	18.1	19800	88	3700	1.921	48.790	NA
FC65785.3	1.776	45.110	2.460	62.480	0.143	3.630	0.298	0.135	3200	14.2	14400	64	3700	1.887	47.929	NA
17RT11	1.776	45.110	3.635	92.329	1.125	28.575	2.515	1.140	42000	188	105000	465	3500	NA	NA	NA
FC67997	1.824	46.330	2.475	62.870	0.150	3.800	0.064	0.029	3850	17.2	17500	78	3700	1.971	50.068	NA
18Y02	1.828	46.431	2.608	66.243	0.630	16	0.404	0.183	7500	33.5	18200	81	2700	NA	NA	NA
18X15	1.876	47.650	3.250	82.550	1.515	38.480	1.674	0.759	13300	59	27000	119	3100	1.933	49.098	NA
FC69598	1.911	48.550	2.604	66.140	0.143	3.620	0.070	0.032	3750	16.7	18200	81	3500	2.074	52.670	NA
F213342.3	1.924	48.870	2.582	65.580	0.143	3.620	0.067	0.030	4150	18.4	20900	93	3500	2.014	51.160	NA
FC65970.2	1.924	48.870	2.604	66.140	0.143	3.630	0.062	0.028	3350	14.9	15700	70	3500	NA	NA	NA
1912	1.969	50	3.543	90	1.673	42.500	2.000	0.907	12,600	56	30,500	136	2600	2.370	60.198	NA
3910	1.969	50	3.622	92	1.221	31	2.205	1.000	20900	93	42000	185	2800	1.976	50.190	NA
FC66199.4	1.970	50.050	3.091	78.500	0.583	14.800	0.218	0.099			2080	9.26	3100	NA	NA	NA
FC66935.1	1.979	50.270	2.876	73.050	0.143	3.630	0.095	0.043	3350	14.8	15700	70	3200	2.161	54.890	NA
F226568.4	1.988	50.500	2.953	75	0.198	5.030	0.110	0.050	7300	32.5	33500	148	3200	2.150	54.600	NA
MW2	2.000	50.800	3.688	93.680	1.375	34.925	2.249	1.020	18200	81	34500	154	2800	NA	NA	NA
RWCT17	2.000	50.800	4.000	101.600	1.000	25.400	2.141	0.971	37000	165	90000	400	2700	NA	NA	NA
RT727	2.000	50.800	6.000	152.400	1.375	34.925	8.630	3.920	102000	455	310000	1380	2300	NA	NA	NA
FC69103.1	2.037	51.750	3.035	77.090	0.238	6.050	0.181	0.082	7400	33	33000	146	3100	2.242	56.940	NA
20PS01SS	2.056	52.222	2.247	57.074	0.142	3.600	1.991	0.903	91	0.405	84	0.375	3600	2.057	52.248	NA
FC67324.7	2.126	54	3.032	77.010	0.188	4.770	0.119	0.054	5350	23.8	27000	121	3100	2.274	57.770	NA
FC65747	2.128	54.040	2.900	73.660	0.143	3.630	0.406	0.184	5050	22.4	27500	123	3100	2.284	58.010	NA
3911	2.165	55	3.937	100	1.299	33	2.384	1.081	22300	99	46000	204	2600	2.173	55.194	NA
FC67324.1S	2.186	55.530	3.032	77.010	0.188	4.770	0.110	0.050	6600	29.5	28500	127	3000	2.274	57.770	NA
21Z02	2.188	55.575	3.751	95.275	1.255	31.870	2.101	0.953	17100	76	42500	189	2000	NA	NA	NA
21P01	2.190	55.626	3.594	91.288	0.817	20.750	0.805	0.365	3350	14.8	2700	12.1	2700	NA	NA	NA
4703	2.248	57.099	3.372	85.649	0.755	19.177	0.781	0.354	9700	43	26500	117	2800	2.271	57.683	NA
22X23	2.250	57.150	3.438	87.313	0.875	22.225	1.028	0.466	9300	41.5	22700	101	2800	NA	NA	NA
RWCT19	2.250	57.150	4.250	107.950	1.000	25.400	2.315	1.050	38500	172	97000	435	2500	NA	NA	NA
FC65786.2	2.294	58.270	3.076	78.130	0.143	3.630	0.434	0.197	4500	20	24000	108	2900	2.446	62.130	NA
FC67906	2.294	58.270	3.109	78.980	0.143	3.620	0.093	0.042	5800	26	34000	152	2900	2.445	62.094	NA
3912	2.362	60	4.173	106	1.378	35	3.197	1.450	24000	107	50000	224	2400	2.370	60.198	NA
874 12	2.362	60	5.118	130	1.260	32	4.983	2.260	58000	260	225000	1000	3000	NA	NA	NA
F-218320	2.374	60.300	3.260	82.800	0.110	2.800	0.072	0.033	2850	12.7	16000	71	2800	NA	NA	NA
F-223348	2.374	60.300	3.260	82.800	0.116	2.950	0.082	0.037	2850	12.7	16000	71	2800	NA	NA	NA
F-223349	2.374	60.300	3.272	83.100	0.124	3.150	0.090	0.041	2850	12.7	16000	71	2800	NA	NA	NA
F-223350	2.374	60.300	3.287	83.500	0.132	3.350	0.101	0.046	2850	12.7	16000	71	2800	NA	NA	NA
FC68865	2.380	60.450	3.285	83.450	0.222	5.630	0.187	0.085	8300	37	33500	148	2800	2.533	64.340	NA
F-225458	2.445	62.100	3.260	82.800	0.110	2.800	0.069	0.031	2800	12.5	16000	71	2800	NA	NA	NA
F-225459	2.445	62.100	3.260	82.800	0.116	2.950	0.076	0.035	2800	12.5	16000	71	2800	NA	NA	NA
F-225461	2.445	62.100	3.287	83.500	0.132	3.350	0.095	0.043	2800	12.5	16000	71	2700	NA	NA	NA
FC66012.9	2.488	63.200	3.380	85.850	0.152	3.870	0.116	0.053	6300	28	35500	158	2700	2.639	67.020	NA
FC66012	2.488	63.200	3.380	85.850	0.153	3.880	0.115	0.052	6000	26.5	33500	148	2700	2.639	67.020	NA
FC66012S381	2.488	63.200	3.380	85.850	0.153	3.880	0.114	0.052	6000	26.5	33500	148	2700	2.639	67.020	NA
25Y07	2.502	63.551	4.541	115.340	1.847	46.910	4.611	2.091	28500	127	67000	300	1700	2.813	71.438	NA
FC67222.1	2.540	64.516	3.320	84.328	0.159	4.030	0.121	0.055	5400	23.8	27000	121	2700	2.690	68.330	NA
3913	2.559	65	4.409	112	1.417	36	3.120	1.415	29000	127	60000	265	2300	2.567	65.202	NA

Miscellaneous Ball & Roller Thrust Bearings

- Ball and roller thrust bearings
- Sorted by shaft dimension
- Special numbers containing “Y” are banded bearings

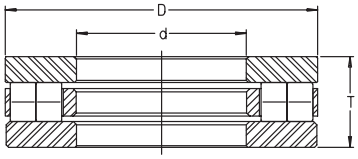

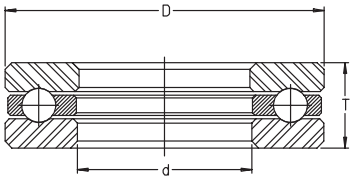

For details on part numbers, descriptive suffixes and various technical references, please refer to front of this section.
For engineering or technical information contact your local sales representative or call Distributor Sales (800)523-6572.

PART NUMBER	SHAFT d inch	SHAFT d mm	OD D inch	OD D mm	WIDTH T inch	WIDTH T mm	WEIGHT lbs	WEIGHT kg	DYN. CAP. lbf	DYN. CAP. kN	STAT. CAP. lbf	STAT. CAP. kN	SPEED LIMIT rpm	CLEARANCE BORE inch	CLEARANCE BORE mm	SEAT RADIUS mm
513	2.559	65	5.512	140	2.913	74	12.557	5.695	60000	265	111000	495	1900	2.677	68	125
25Y14	2.566	65.176	3.968	100.787	0.880	22.352	1.303	0.591	14400	64	39500	175	1800	2.584	65.634	NA
26RTW08	2.618	66.497	4.186	106.324	1.345	34.163	2.183	0.990	22700	101	55000	246	2800	2.745	69.723	165.1
26RT18	2.624	66.650	4.342	110.287	1.005	25.527	1.632	0.740	42000	188	112000	500	2700	2.870	72.900	NA
26RT19	2.624	66.650	4.342	110.287	1.396	35.458	2.904	1.317	42000	188	112000	500	2700	2.870	72.900	NA
26RT20	2.624	66.650	4.342	110.290	1.005	25.530	2.152	0.976	42000	187	112000	500	2700	2.870	72.900	NA
26RT17.2	2.627	66.726	6.015	152.781	0.939	23.850	5.078	2.303	76000	340	255000	1130	2200	NA	NA	NA
FC67977	2.627	66.726	6.015	152.781	0.939	23.850	5.078	2.303	97000	430	345000	1540	1800	NA	NA	NA
RWCT23	2.750	69.850	4.843	123.012	1.000	25.400	2.836	1.286	41500	184	112000	500	2100	NA	NA	NA
27X30	2.756	70	4.055	103	1.063	27	1.647	0.747	16600	74	42500	189	2300	2.759	70.079	NA
DM70	2.756	70	4.803	122	1.634	41.5	4.441	2.014	25500	114	58000	260	2100	NA	NA	NA
874 14	2.756	70	5.906	150	1.417	36	7.431	3.370	81000	360	310000	1380	2600	NA	NA	NA
F-390470.7	2.902	73.700	3.583	91	0.143	3.620	0.101	0.046	3900	17.4	21400	95	2400	3.046	77.360	NA
3915	2.953	75	5.039	128	1.614	41	4.728	2.144	36000	158	82000	365	2000	2.961	75.209	NA
RT730	3.000	76.200	6.000	152.400	1.375	34.925	7.280	3.300	94000	420	290000	1300	2100	NA	NA	NA
30RT04	3.000	76.200	6.380	162.052	1.312	33.320	8.225	3.730	94000	420	232000	1030	2000	3.047	77.394	NA
RT731	3.000	76.200	7.000	177.800	1.375	34.925	10.790	4.890	121000	540	420000	1860	1800	NA	NA	NA
RT732	3.000	76.200	8.000	203.200	1.375	34.925	14.840	6.730	145000	640	540000	2400	1700	NA	NA	NA
RT733	3.000	76.200	9.000	228.600	1.375	34.925	19.420	8.810	149000	660	570000	2550	1500	NA	NA	NA
30RT20.2	3.002	76.251	8.010	203.454	0.939	23.850	9.565	4.338	112000	500	460000	2050	1700	NA	NA	NA
31X42	3.150	80	4.528	115	1.142	29	2.057	0.933	22000	98	56000	250	2100	3.228	81.991	NA
3916	3.150	80	5.354	136	1.732	44	6.196	2.810	37000	166	81000	360	1900	3.157	80.188	NA
31X14	3.177	80.696	4.248	107.899	0.552	14.021	0.668	0.303	9600	42.5	29500	131	2100	NA	NA	NA
32RT01	3.249	82.517	4.875	123.825	1.000	25.400	2.426	1.100	44500	199	128000	570	2300	3.297	83.744	NA
RWCT27C	3.250	82.550	6.375	161.925	1.750	44.450	9.411	4.268	94000	420	260000	1170	1700	NA	NA	NA
RWCT27B	3.500	88.900	6.375	161.925	1.625	41.275	8.244	3.739	99000	440	280000	1250	1600	NA	NA	NA
38YT387C	3.870	98.298	5.010	127.254	0.688	17.463	0.807	0.366	12800	57	45000	201	1300	NA	NA	NA
40X12	3.999	101.575	5.880	149.352	1.485	37.720	4.895	2.220	24500	109	70000	310	1600	4.146	105.308	168.28
40YM04	3.999	101.575	6.014	152.756	1.475	37.465	5.486	2.488	24500	109	70000	310	1200	4.146	105.308	168.28
RT734	4.000	101.600	7.000	177.800	1.750	44.450	11.330	5.140	121000	540	380000	1700	1700	NA	NA	NA
RT735	4.000	101.600	8.000	203.200	1.750	44.450	16.480	7.470	160000	710	570000	2500	1500	NA	NA	NA
41X04	4.134	105	6.102	155	1.575	40	5.623	2.550	32000	142	85000	380	1500	4.140	105.156	NA
894 22	4.331	110	9.055	230	2.874	73	34.398	15.600	225000	1000	764000	3400	1700	NA	NA	NA
RWCT38A	4.500	114.300	8.312	211.125	2.000	50.800	17.470	7.923	144000	640	510000	2260	1100	NA	NA	NA
1025	4.921	125	10.630	270	5.118	130	76.070	34.500	205000	910	450000	2000	950	4.929	125.197	NA
49X13	4.933	125.298	6.892	175.057	1.836	46.630	7.393	3.353	37500	167	106000	470	1300	NA	NA	NA
RT740	5.000	127.000	10.000	254.000	2.000	50.800	29.430	13.350	206000	910	750000	3300	1200	NA	NA	NA
52X12	5.251	133.375	7.135	181.230	1.485	37.720	6.117	2.774	29000	128	91000	405	1300	5.396	137.058	217.5
52YM04Z	5.251	133.375	7.269	184.630	1.470	37.340	6.240	2.830	29000	128	91000	405	950	5.396	137.058	217.5
56RT02	5.625	142.875	8.270	210.058	1.750	44.450	5.733	2.600	135000	600	470000	2080	1400	5.730	145.540	NA
65X14	6.504	165.202	8.125	206.375	1.255	31.877	5.625	2.551	29000	130	108000	480	1100	NA	NA	NA
65X12	6.570	166.878	7.570	192.278	0.688	17.470	1.623	0.736	11900	53	60500	270	1100	NA	NA	NA
67X02	6.769	171.930	8.465	215.011	1.339	34.010	6.392	2.899	28000	126	105000	465	1000	NA	NA	NA
FC67080	6.970	177.038	8.125	206.376	1.510	38.350	5.072	2.300	23800	106	105000	465	1000	NA	NA	NA
70X14	7.020	178.308	9.002	228.650	1.005	25.527	5.894	2.673	17300	77	67000	300	1000	NA	NA	NA
70X01	7.021	178.333	9.000	228.600	0.963	24.460	4.977	2.257	20500	91	84000	375	1000	NA	NA	NA
78X03	7.873	199.969	11.417	290	2.761	70.130	38.698	17.550	53000	235	144000	640	800	7.895	200.533	NA

Miscellaneous Ball & Roller Thrust Bearings

- Ball and roller thrust bearings
- Sorted by shaft dimension
- Special numbers containing “Y” are banded bearings

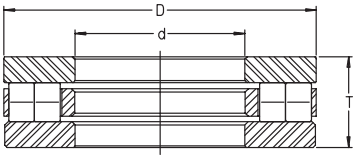

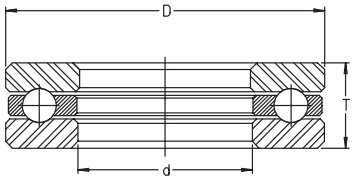

For details on part numbers, descriptive suffixes and various technical references, please refer to front of this section.
For engineering or technical information contact your local sales representative or call Distributor Sales (800)523-6572.

PART NUMBER	SHAFT d inch	SHAFT d mm	OD D inch	OD D mm	WIDTH T inch	WIDTH T mm	WEIGHT lbs	WEIGHT kg	DYN. CAP. lbf	DYN. CAP. kN	STAT. CAP. lbf	STAT. CAP. kN	SPEED LIMIT rpm	CLEARANCE BORE inch	CLEARANCE BORE mm	SEAT RADIUS mm
80X03	7.998	203.149	11.750	298.450	2.503	63.576	32.242	14.622	85000	380	285000	1260	800	7.998	203.149	NA
85X04	8.530	216.662	10.500	266.700	1.000	25.400	2.463	1.117	20000	89	89000	395	800	NA	NA	NA
RT756	10.000	254.000	20.000	508.000	3.750	95.250	220.690	100.090	880000	3900	3750000	16800	600	NA	NA	NA
140Z01	13.484	342.500	18.250	463.550	4.260	108.200	111.286	50.470	175000	780	890000	3950	370	NA	NA	NA
195X02	19.500	495.300	23.000	584.200	2.000	50.800	51.718	23.455	90000	400	475000	2113	370	19.990	507.746	NA
195X03	19.500	495.300	23.000	584.200	2.250	57.150	61.819	28.036	105000	465	620000	2750	370	19.970	507.238	NA

Thrust Ball and Cage Assemblies

- Sorted by pitch diameter
- Bore shown is larger than mating shaft
- OD shown is smaller than mating housing
- Load rating depends on raceway
- Speed limit shown is for oil lubrication

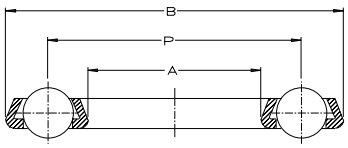

*CAGE SHAPE WILL VARY WITH CAGE MATERIAL

For details on part numbers, descriptive suffixes and various technical references, please refer to front of this section.
For engineering or technical information contact your local sales representative or call Distributor Sales (800)523-6572.

PART NUMBER	PITCH DIA. inch	PITCH DIA. mm	BALL DIA. inch	BALL DIA. mm	CAGE MAT'L	BORE inch	BORE mm	OD inch	OD mm	# BALLS	WEIGHT lbs	WEIGHT kg
01N06	0.313	7.938	0.062	1.580	Nylon	0.192	4.870	0.432	10.980	10	0.002	0.001
02J05	0.411	10.439	0.094	2.381	Steel	0.278	7.060	0.550	13.970	8	0.004	0.002
02N05	0.411	10.439	0.094	2.381	Nylon	0.255	6.480	0.557	14.150	10	0.004	0.002
FT08MK	0.470	11.938	0.094	2.381	Brass	0.315	8.000	0.626	15.900	10	0.007	0.003
03J08	0.521	13.233	0.094	2.381	Steel	0.382	9.700	0.665	16.890	10	0.004	0.002
03N10	0.529	13.437	0.094	2.381	Nylon	0.380	9.650	0.675	17.150	12	0.002	0.001
F-390671	0.529	13.440	0.094	2.381	Nylon	0.380	9.650	0.675	17.150	12	1.764	0.800
FT010MK	0.531	13.494	0.094	2.381	Brass	0.385	9.780	0.676	17.170	12	0.007	0.003
03N11	0.531	13.495	0.125	3.175	Nylon	0.330	8.380	0.730	18.540	8	0.007	0.003
04J02	0.570	14.478	0.125	3.175	Steel	0.406	10.310	0.730	18.540	11	0.015	0.007
04N03	0.612	15.545	0.125	3.175	Nylon	0.441	11.200	0.807	20.500	10	0.011	0.005
05N22	0.625	15.875	0.094	2.381	Nylon	0.501	12.730	0.756	19.200	10	0.007	0.003
05N21	0.687	17.450	0.125	3.175	Nylon	0.505	12.820	0.870	22.100	12	0.013	0.006
04J09	0.689	17.501	0.156	3.969	Steel	0.473	12.010	0.905	22.990	10	0.015	0.007
05J01	0.713	18.110	0.156	3.969	Steel	0.515	13.080	0.910	23.110	10	0.007	0.003
06J01	0.807	20.498	0.156	3.969	Steel	0.654	16.610	1.150	29.210	12	0.011	0.005
05J02	0.813	20.638	0.187	4.762	Steel	0.574	14.580	1.045	26.540	10	0.013	0.006
06J10	0.889	22.581	0.156	3.969	Steel	0.687	17.450	1.092	27.740	12	0.009	0.004
06J06	0.973	24.714	0.250	6.350	Steel	0.667	16.940	1.280	32.510	8	0.031	0.014
09N04	1.062	26.975	0.094	2.381	Nylon	0.906	23.000	1.242	31.550	26	0.009	0.004
09N03	1.107	28.118	0.094	2.381	Nylon	0.930	23.620	1.286	32.660	28	0.011	0.005
10N07	1.124	28.550	0.063	1.588	Nylon	1.093	27.760	1.539	39.100	30	0.007	0.003
08JS10SS	1.125	28.575	0.187	4.762	Stainless	0.870	22.100	1.382	35.100	12	0.029	0.013
08J04	1.135	28.829	0.250	6.350	Steel	0.816	20.730	1.450	36.830	10	0.037	0.017
09J02	1.250	31.750	0.250	6.350	Steel	0.940	23.880	1.560	39.620	12	0.037	0.017
FC67244	1.307	33.200	0.094	2.381	Nylon	1.128	28.651	1.472	37.389	30	0.007	0.003
10J01	1.319	33.503	0.250	6.350	Steel	1.012	25.700	1.616	41.050	14	0.071	0.032
08N01	1.363	34.620	0.250	6.350	Nylon	0.885	22.480	1.842	46.790	14	0.099	0.045
09XS28LKV	1.375	34.925	0.250	6.350	Phenolic	0.995	25.273	1.760	44.704	10	0.031	0.014
10J03	1.378	35.001	0.281	7.144	Steel	1.039	26.390	1.712	43.490	13	0.057	0.026
10J04	1.380	35.052	0.250	6.350	Steel	1.060	26.920	1.685	42.800	12	0.049	0.022
10JS04SS	1.380	35.052	0.250	6.350	Stainless	1.050	26.670	1.695	43.053	12	0.044	0.020
11J03	1.500	38.100	0.250	6.350	Steel	1.189	30.200	1.814	46.080	12	0.082	0.037
12J01	1.508	38.303	0.187	4.762	Steel	1.267	32.180	1.735	44.070	19	0.024	0.011
13J04	1.624	41.250	0.187	4.762	Steel	1.386	35.200	1.860	47.240	18	0.029	0.013
13N01	1.639	41.631	0.125	3.175	Nylon	1.370	34.800	1.911	48.540	32	0.020	0.009
12J02	1.672	42.469	0.313	7.938	Steel	1.270	32.260	2.075	52.710	13	0.077	0.035
16J03	1.782	45.263	0.125	3.175	Steel	1.604	40.740	1.941	49.300	16	0.026	0.012
15J03	1.920	48.768	0.281	7.144	Steel	1.565	39.750	2.275	57.790	14	0.077	0.035
17J03	2.080	52.832	0.250	6.350	Steel	1.762	44.750	2.383	60.530	18	0.064	0.029
18N05	2.093	53.162	0.125	3.175	Nylon	1.819	46.200	2.417	61.400	40	0.022	0.010
FC68328-955	2.164	54.966	0.281	7.144	Nylon	1.815	46.100	2.505	63.620	20	0.086	0.039
18J01	2.165	54.991	0.281	7.144	Steel	1.812	46.020	2.517	63.930	20	0.097	0.044
18J04	2.327	59.106	0.406	10.319	Steel	1.830	46.480	2.817	71.550	16	0.203	0.092
20J04	2.468	62.687	0.313	7.938	Steel	2.066	52.480	2.855	72.520	16	0.112	0.051
21J01	2.578	65.481	0.313	7.938	Steel	2.186	55.520	2.965	75.310	21	0.218	0.099
22N01	2.688	68.263	0.281	7.144	Nylon	2.265	57.530	3.109	78.970	18	0.097	0.044

Thrust Ball and Cage Assemblies

- Sorted by pitch diameter
- Bore shown is larger than mating shaft
- OD shown is smaller than mating housing
- Load rating depends on raceway
- Speed limit shown is for oil lubrication

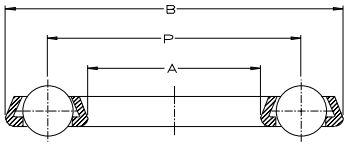

*CAGE SHAPE WILL VARY WITH CAGE MATERIAL

For details on part numbers, descriptive suffixes and various technical references, please refer to front of this section.
For engineering or technical information contact your local sales representative or call Distributor Sales (800)523-6572.

PART NUMBER	PITCH DIA. inch	PITCH DIA. mm	BALL DIA. inch	BALL DIA. mm	CAGE MAT'L	BORE inch	BORE mm	OD inch	OD mm	# BALLS	WEIGHT lbs	WEIGHT kg
23J03	2.771	70.393	0.375	9.525	Steel	2.325	59.060	3.240	82.290	18	0.187	0.085
23J04	2.795	70.993	0.375	9.525	Steel	2.380	60.450	3.200	81.280	22	0.273	0.124
24J02	2.992	75.997	0.438	11.113	Steel	2.450	62.230	3.525	89.535	18	0.088	0.040
28J01	3.417	86.792	0.500	12.700	Steel	2.830	71.880	4.000	101.600	19	0.441	0.200
32J02	3.750	95.250	0.438	11.113	Steel	3.225	81.920	4.262	108.250	22	0.591	0.268
FT41MK	3.878	98.501	0.375	9.525	Brass	3.004	76.300	4.705	119.500	13	0.856	0.388
49J01	5.517	140.132	0.531	13.494	Steel	4.900	124.460	6.145	156.080	28	0.864	0.392
49J02	5.900	149.860	0.813	20.638	Steel	4.945	125.600	6.875	174.630	20	1.985	0.900

Thrust Roller And Cage Assemblies

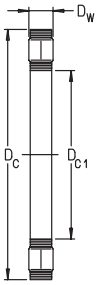

- Metric and inch
- Needle and cylindrical roller types
- Sorted by bore
- Speed limit shown is for oil lubrication

For details on part numbers, descriptive suffixes and various technical references, please refer to front of this section.
For engineering or technical information contact your local sales representative or call Distributor Sales (800)523-6572.

PART NUMBER	SHAFT D_{c1} inch	SHAFT D_{c1} mm	OD D_c inch	OD D_c mm	ROLLER DIA. inch	ROLLER DIA. mm	WEIGHT lbs	WEIGHT kg	DYN. CAP. lbf	DYN. CAP. kN	STAT. CAP. lbf	STAT. CAP. kN	SPEED LIMIT rpm	EB INTERNAL RACE DIA. inch	EB INTERNAL RACE DIA. mm	EA EXTERNAL RACE DIA. inch	EA EXTERNAL RACE DIA. mm
AXK 0414 TN	0.158	4	0.551	14	0.079	2	0.002	0.001	1000	4.45	1800	8	21000	0.197	5	0.512	13
AXK 0515 TN	0.197	5	0.591	15	0.079	2	0.002	0.001	1070	4.75	2070	9.2	21000	0.236	6	0.551	14
AXK 0619 TN	0.236	6	0.748	19	0.079	2	0.002	0.001	1530	6.8	3500	15.5	19000	0.276	7	0.709	18
TC411	0.250	6.350	0.687	17.450	0.078	1.984	0.004	0.002	1370	6.1	3000	13.3	20000	0.280	7.1	0.618	15.7
TC512	0.312	7.938	0.750	19.050	0.078	1.984	0.007	0.003	1560	6.9	3650	16.2	18000	0.350	8.9	0.681	17.3
AXK 0821 TN	0.315	8	0.827	21	0.079	2	0.004	0.002	1750	7.8	4350	19.4	18000	0.354	9	0.787	20
TC613	0.375	9.525	0.812	20.638	0.078	1.984	0.007	0.003	1620	7.2	4000	17.8	16000	0.409	10.4	0.748	19
AXK 1024	0.394	10	0.945	24	0.079	2	0.007	0.003	2070	9.2	5700	25.5	17000	0.472	12	0.906	23
AXK 1226	0.472	12	1.024	26	0.079	2	0.007	0.003	2230	9.9	6500	29	15000	0.551	14	0.984	25
TC815	0.500	12.700	0.938	23.813	0.078	1.984	0.009	0.004	1920	8.5	5300	23.6	13000	0.532	13.5	0.890	22.6
FC66073	0.574	14.580	1.481	37.620	0.094	2.380	0.033	0.015	4200	18.8	14000	64	13000	0.724	18.4	1.323	33.5
K 811 02 TN	0.591	15	1.102	28	0.138	3.500	0.013	0.006	3250	14.4	6400	28.5	13000	0.630	16	1.063	27
AXK 1528	0.591	15	1.102	28	0.079	2	0.009	0.004	2550	11.3	8100	36	13000	0.669	17	1.063	27
F-390674	0.591	15	1.062	26.970	0.078	1.980	0.007	0.003	1860	8.3	5300	23.7	11000	0.650	16.5	1.000	25.4
TC1018	0.625	15.875	1.125	28.575	0.078	1.984	0.009	0.004	2170	9.7	6600	29.5	11000	0.689	17.5	1.051	26.7
FC67394	0.625	15.875	1.388	35.250	0.187	4.760	0.029	0.013	6000	27	14000	63	11000	0.705	17.9	1.283	32.6
F-228532.3	0.630	16	1.378	35	0.177	4.500	0.022	0.010	4700	21.1	10900	48.5	11000	0.847	21.5	1.319	33.5
K 811 03 TN	0.669	17	1.181	30	0.138	3.500	0.020	0.009	3600	15.9	7500	33.5	12000	0.709	18	1.142	29
AXK 1730	0.669	17	1.181	30	0.079	2	0.009	0.004	2700	11.9	8900	39.5	12000	0.748	19	1.142	29
FC66992.1-951	0.673	17.086	1.346	34.200	0.098	2.500	0.014	0.006	3550	15.8	11000	50	9500	0.819	20.8	1.264	32.1
FC66992.5-951	0.673	17.086	1.346	34.200	0.098	2.500	0.022	0.010	3550	15.8	11200	50	9500	0.819	20.8	1.264	32.1
FC65762	0.673	17.100	1.580	40.130	0.098	2.500	0.108	0.049	4500	19.8	16000	69	8500	0.888	22.6	1.421	36.1
FC68404-950	0.677	17.200	1.348	34.250	0.118	3	0.017	0.008	4150	18.4	12000	54	9500	0.815	20.7	1.264	32.1
F-227239	0.709	18	1.378	35	0.177	4.500	0.028	0.013	4600	20.6	10500	46.5	9000	0.850	21.6	1.276	32.4
TC1220	0.750	19.050	1.250	31.750	0.078	1.984	0.014	0.006	2410	10.7	8000	35.5	9500	0.811	20.6	1.169	29.7
K 811 04 TN	0.787	20	1.378	35	0.177	4.500	0.029	0.013	5600	24.9	11900	53	10000	0.827	21	1.339	34
AXK 2035	0.787	20	1.378	35	0.079	2	0.011	0.005	2950	13.1	10500	46.5	10000	0.866	22	1.339	34
TC1423	0.875	22.225	1.438	36.513	0.078	1.984	0.013	0.006	2900	12.9	10500	46.5	8000	0.941	23.9	1.350	34.3
FC67337	0.875	22.225	1.510	38.354	0.125	3.170	0.022	0.010	4400	19.5	13000	58	8000	0.988	25.1	1.404	35.7
TC1427	0.875	22.225	1.688	42.863	0.078	1.984	0.029	0.013	4400	19.6	18600	83	7500	0.941	23.9	1.610	40.9
K 811 05 TN	0.984	25	1.654	42	0.197	5	0.033	0.015	7500	33.5	17100	76	8500	1.024	26	1.614	41
AXK 2542	0.984	25	1.654	42	0.079	2	0.015	0.007	3300	14.7	13000	58	8500	1.142	29	1.614	41
TC1625	1.000	25.400	1.562	39.688	0.078	1.984	0.013	0.006	3150	14	12100	54	7500	1.071	27.2	1.480	37.6
TC1726	1.062	26.988	1.625	41.275	0.078	1.984	0.021	0.010	3900	17.3	16400	73	7000	1.134	28.8	1.543	39.2
FC65433	1.125	28.575	1.668	42.370	0.078	1.980	0.013	0.006	3400	15	14000	61	7000	1.212	30.8	1.611	40.9
TC1828	1.125	28.575	1.750	44.450	0.078	1.984	0.018	0.008	3850	17.1	16300	73	6500	1.189	30.2	1.669	42.4
FC69011	1.148	29.160	1.768	44.910	0.078	1.980	0.018	0.008	2990	13.3	12000	53	6500	1.330	33.8	1.763	44.8
FC69011.3	1.148	29.160	1.768	44.910	0.078	1.980	0.018	0.008	2990	13.3	12000	53	6500	1.330	33.8	1.685	42.8
F-205509.1	1.163	29.540	2.047	52	0.059	1.500	0.013	0.006	3900	17.4	20000	90	6000	1.417	36	1.969	50
K 811 06 TN	1.181	30	1.850	47	0.197	5	0.037	0.017	8000	35.5	19300	86	7500	1.221	31	1.811	46
AXK 3047	1.181	30	1.850	47	0.079	2	0.018	0.008	3650	16.3	15700	70	7500	1.339	34	1.811	46
K 812 06 TN	1.181	30	2.047	52	0.295	7.500	0.073	0.033	14400	64	31500	141	7000	1.221	31	1.969	50
K 893 06 TN	1.181	30	2.362	60	0.217	5.500	0.529	0.240	15500	69	44500	197	6500	1.299	33	2.323	59
TC1931	1.188	30.163	1.938	49.213	0.078	1.984	0.033	0.015	4500	20	20500	91	6000	1.252	31.8	1.850	47
TC2031	1.250	31.750	1.938	49.213	0.078	1.984	0.022	0.010	4500	20	20500	91	6000	1.319	33.5	1.850	47
FC65442.3	1.283	32.588	2.257	57.328	0.109	2.770	0.020	0.009	7000	31	30000	132	5500	1.410	35.8	2.137	54.3

Thrust Roller And Cage Assemblies

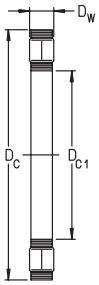

- Metric and inch
- Needle and cylindrical roller types
- Sorted by bore
- Speed limit shown is for oil lubrication

For details on part numbers, descriptive suffixes and various technical references, please refer to front of this section.
For engineering or technical information contact your local sales representative or call Distributor Sales (800)523-6572.

PART NUMBER	SHAFT D_{c1} inch	SHAFT D_{c1} mm	OD D_c inch	OD D_c mm	ROLLER DIA. inch	ROLLER DIA. mm	WEIGHT lbs	WEIGHT kg	DYN. CAP. lbf	DYN. CAP. kN	STAT. CAP. lbf	STAT. CAP. kN	SPEED LIMIT rpm	EB INTERNAL RACE DIA. inch	EB INTERNAL RACE DIA. mm	EA EXTERNAL RACE DIA. inch	EA EXTERNAL RACE DIA. mm
FC67344	1.285	32.639	1.750	44.450	0.078	1.980	0.008	0.004	2990	13.3	10500	46.5	6000	1.367	34.7	1.667	42.3
FC65442	1.327	33.710	2.247	57.070	0.109	2.770	0.020	0.009	4100	18.1	14000	64	5500	1.445	36.7	1.779	45.7
TC2233	1.375	34.925	2.062	52.388	0.078	1.984	0.033	0.015	4600	20.5	21600	96	5500	1.441	36.6	1.980	50.3
K 811 07 TN	1.378	35	2.047	52	0.197	5	0.042	0.019	8800	39	22700	101	6500	1.417	36	2.008	51
AXK 3552	1.378	35	2.047	52	0.079	2	0.022	0.010	4000	17.8	18200	81	6500	1.535	39	2.008	51
K 812 07 TN	1.378	35	2.441	62	0.295	7.5	0.095	0.043	18000	80	44500	199	6000	1.535	39	2.284	58
K 893 07 TN	1.378	35	2.677	68	0.236	6	0.750	0.340	18000	80	53000	237	5500	1.496	38	2.638	67
K 894 07 TN	1.378	35	3.150	80	0.354	9	0.245	0.111	35000	15.5	97000	430	5000	1.496	38	3.071	78
13MS08S369	1.380	35.050	3.017	76.644	0.375	9.525	0.587	0.266	22000	97	50000	224	4300	1.697	43.1	2.732	69.4
FC69802.1	1.400	35.560	2.047	52	0.197	5	0.050	0.022	8800	39	23000	101	5500	1.500	38.1	1.925	48.9
FC66565	1.408	35.760	2.488	63.200	0.109	2.770	0.079	0.036	3600	16	12500	55	4900	1.547	39.3	1.913	48.6
TC2435	1.500	38.100	2.188	55.563	0.078	1.984	0.024	0.011	4850	21.6	23700	105	5000	1.571	39.9	2.098	53.3
F-50664	1.502	38.150	2.177	55.300	0.125	3.170	0.033	0.015	6000	27	23000	102	5000	1.613	41.0	2.029	51.5
FC67017	1.502	38.150	2.177	55.300	0.156	3.960	0.049	0.022	8100	36	29000	127	5000	1.578	40.1	2.126	54.0
FC66558.1	1.502	38.150	2.295	58.290	0.156	3.960	0.042	0.019	8400	37.5	31000	136	5000	1.613	41.0	2.141	54.4
K 811 08 TN	1.575	40	2.362	60	0.236	6	0.068	0.031	12600	56	33500	148	6000	1.654	42	2.284	58
AXK 4060	1.575	40	2.362	60	0.118	3	0.035	0.016	6300	28	25500	114	6000	1.772	45	2.284	58
K 812 08 TN	1.575	40	2.677	68	0.354	9	0.179	0.081	24100	107	60000	265	5500	1.693	43	2.598	66
K 893 08 TN	1.575	40	3.071	78	0.276	7	1.067	0.484	27500	122	87000	385	4900	1.732	44	3.032	77
K 874 08	1.575	40	3.543	90	0.256	6.500	0.280	0.127	30500	135	108000	480	4400	1.772	45	3.504	89
K 894 08 TN	1.575	40	3.543	90	0.394	10	0.441	0.200	45000	200	130000	580	4400	1.693	43	3.425	87
F-32578	1.575	40	2.362	60	0.079	2	0.025	0.011	3500	15.5	8500	38	4800	1.870	47.5	2.268	57.6
F-56298	1.620	41.150	2.177	55.300	0.078	1.980	0.019	0.009	3400	15.2	15000	68	5000	1.693	43.0	2.094	53.2
F-226617-20	1.740	44.200	2.297	58.350	0.079	2	0.022	0.010	4000	17.9	19000	85	4700	1.752	44.5	2.224	56.5
TC2840	1.750	44.450	2.500	63.500	0.078	1.984	0.045	0.020	5600	24.9	30000	133	4400	1.819	46.2	2.409	61.2
K 811 09 TN	1.772	45	2.559	65	0.236	6	0.077	0.035	13300	59	36500	163	5000	1.850	47	2.480	63
AXK 4565	1.772	45	2.559	65	0.118	3	0.040	0.018	6700	30	29000	128	5000	1.969	50	2.480	63
K 812 09 TN	1.772	45	2.874	73	0.354	9	0.187	0.085	23600	10.5	60000	265	4900	1.890	48	2.756	70
K 893 09 TN	1.772	45	3.347	85	0.295	7.5	1.356	0.615	31500	139	100000	445	4400	1.929	49	3.268	83
K 874 09	1.772	45	3.937	100	0.276	7	0.384	0.174	34500	15.4	126000	560	4000	2.047	52	3.858	98
K 894 09 TN	1.772	45	3.937	100	0.433	11	0.578	0.262	54000	239	157000	700	4000	1.929	49	3.819	97
K 811 10 TN	1.969	50	2.756	70	0.236	6	0.084	0.038	13700	61.0	40000	177	4800	2.047	52	2.677	68
AXK 5070	1.969	50	2.756	70	0.118	3	0.044	0.020	7200	32	32000	143	4800	2.165	55	2.677	68
K 812 10 TN	1.969	50	3.071	78	0.354	9	0.216	0.098	26500	117	71000	315	4500	2.087	53	2.953	75
K 893 10 TN	1.969	50	3.740	95	0.315	8	1.956	0.887	37500	167	126000	560	4000	2.205	56	3.622	92
K 874 10 TN	1.969	50	4.331	110	0.315	8	0.564	0.256	45000	200	166000	740	3600	2.126	54	4.213	107
K 894 10 TN	1.969	50	4.331	110	0.472	12	0.794	0.360	66000	295	202000	900	3600	2.126	54	4.213	107
TC3244	2.000	50.800	2.750	69.850	0.078	1.984	0.033	0.015	5800	26	32500	145	4000	2.071	52.6	2.661	67.6
K 811 11 TN	2.165	55	3.071	78	0.236	6	0.099	0.045	20200	90	67000	300	4300	2.244	57	3.032	77
AXK 5578	2.165	55	3.071	78	0.118	3	0.062	0.028	8500	38	42000	186	4300	2.362	60	2.992	76
K 812 11 TN	2.165	55	3.543	90	0.433	11	0.366	0.166	34500	154	91000	405	4000	2.323	59	3.347	85
K 893 11 TN	2.165	55	4.134	105	0.354	9	2.602	1.180	41500	184	135000	600	3600	2.402	61	4.055	103
K 874 11	2.165	55	4.724	120	0.315	8	0.668	0.303	50000	222	196000	870	3300	2.559	65	4.646	118
K 894 11 TN	2.165	55	4.724	120	0.512	13	1.043	0.473	76000	340	236000	1050	3300	2.323	59	4.567	116
K 894 11 TN	2.259	55	4.724	120	0.512	13	1.043	0.473	76000	340	236000	1050	3300	2.323	59	4.567	116
TC3648	2.250	57.150	3.000	76.200	0.078	1.984	0.037	0.017	6000	26.5	35000	156	3600	2.319	58.9	2.909	73.9

Thrust Roller And Cage Assemblies

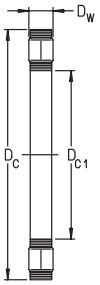

- Metric and inch
- Needle and cylindrical roller types
- Sorted by bore
- Speed limit shown is for oil lubrication

For details on part numbers, descriptive suffixes and various technical references, please refer to front of this section.
For engineering or technical information contact your local sales representative or call Distributor Sales (800)523-6572.

PART NUMBER	SHAFT D_{c1} inch	SHAFT D_{c1} mm	OD D_c inch	OD D_c mm	ROLLER DIA. inch	ROLLER DIA. mm	WEIGHT lbs	WEIGHT kg	DYN. CAP. lbf	DYN. CAP. kN	STAT. CAP. lbf	STAT. CAP. kN	SPEED LIMIT rpm	EB INTERNAL RACE DIA. inch	EB INTERNAL RACE DIA. mm	EA EXTERNAL RACE DIA. inch	EA EXTERNAL RACE DIA. mm
FC66717	2.259	57.380	3.038	77.160	0.125	3.170	0.053	0.024	8300	37	38000	170	3600	2.346	59.6	2.969	75.4
FC66141.6	2.259	57.380	3.042	77.260	0.125	3.170	0.043	0.020	7400	33	33000	148	3600	2.457	62.4	2.925	74.3
FC673241-950	2.265	57.530	2.953	75.010	0.124	3.150	0.046	0.021	6600	29	29000	127	3600	2.366	60.1	2.835	72.0
F-224443-50	2.323	59	2.732	69.400	0.059	1.500	0.011	0.005	2290	10	12000	54	3700	2.342	59.5	2.657	67.5
K 811 12 TN	2.362	60	3.347	85	0.295	7.500	0.181	0.082	23200	103	71000	315	4000	2.441	62	3.228	82
AXK 6085	2.362	60	3.347	85	0.118	3	0.073	0.033	10000	44	53000	234	4000	2.559	65	3.268	83
K 812 12 TN	2.362	60	3.740	95	0.433	11	0.388	0.176	38500	172	108000	480	3700	2.520	64	3.583	91
K 893 12 TN	2.362	60	4.331	110	0.354	9	2.778	1.260	44000	196	151000	670	3400	2.598	66	4.252	108
K 874 12	2.362	60	5.118	130	0.354	9	0.838	0.380	58000	260	225000	1000	3000	2.677	68	5.039	128
K 894 12 TN	2.362	60	5.118	130	0.551	14	1.186	0.538	88000	390	275000	1220	3000	2.559	65	4.961	126
FC69475	2.441	62	2.874	73	0.079	2	0.023	0.011	3700	16.5	19000	84	3500	2.480	63	2.835	72
TC4052	2.500	63.500	3.250	82.550	0.078	1.984	0.042	0.019	6200	27.5	37500	167	3300	2.571	65.3	3.161	80.3
FC67248.1	2.507	63.680	3.291	83.590	0.125	3.170	0.061	0.028	7500	33.5	35000	155	3300	2.618	66.5	3.260	82.8
K 811 13 TN	2.559	65	3.543	90	0.295	7.500	0.198	0.090	24100	107	76000	340	3700	2.638	67	3.425	87
AXK 6590	2.559	65	3.543	90	0.118	3	0.077	0.035	105000	465	57000	255	3700	2.756	70	3.465	88
K 812 13 TN	2.559	65	3.937	100	0.433	11	0.408	0.185	40000	177	112000	500	3500	2.717	69	3.780	96
K 893 13 TN	2.559	65	4.528	115	0.354	9	2.933	1.330	43500	194	151000	670	3200	2.795	71	4.449	113
K 874 13	2.559	65	5.512	140	0.394	10	1.036	0.470	67000	300	255000	1140	2800	2.835	72	5.394	137
K 894 13 TN	2.559	65	5.512	140	0.591	15	1.588	0.720	100000	445	315000	1410	2800	2.756	70	5.315	135
K 811 14 TN	2.756	70	3.740	95	0.295	7.500	0.203	0.092	25000	111	82000	365	3500	2.835	72	3.622	92
AXK 7095	2.756	70	3.740	95	0.158	4	0.132	0.060	12100	54	57000	255	3500	2.913	74	3.661	93
K 812 14 TN	2.756	70	4.134	105	0.433	11	0.467	0.212	42000	187	124000	550	3300	2.913	74	4.016	102
K 893 14 TN	2.756	70	4.921	125	0.394	10	4.013	1.820	54000	239	187000	830	3000	2.992	76	4.843	123
K 874 14	2.756	70	5.906	150	0.433	11	1.433	0.650	81000	360	310000	1380	2600	2.992	76	5.787	147
K 894 14	2.756	70	5.906	150	0.630	16	2.029	0.920	101000	450	315000	1390	2600	3.071	78	5.787	147
FC66142.1	2.760	70.100	3.539	89.890	0.125	3.170	0.071	0.032	10000	44.5	52000	232	3000	2.850	72.4	3.472	88.2
FC66719	2.760	70.100	3.539	89.890	0.125	3.170	0.068	0.031	10000	44.5	52000	231	3000	2.850	72.4	3.472	88.2
K 811 15 TN	2.953	75	3.937	100	0.295	7.500	0.212	0.096	23600	105	76000	340	3300	3.071	78	3.819	97
AXK 75100	2.953	75	3.937	100	0.158	4	0.135	0.061	12400	55	60000	265	3300	3.110	79	3.858	98
K 812 15 TN	2.953	75	4.331	110	0.433	11	0.430	0.195	38500	172	112000	500	3100	3.110	79	4.173	106
K 893 15 TN	2.953	75	5.315	135	0.433	11	4.917	2.230	64000	285	227000	1010	2700	3.189	81	5.197	132
K 874 15	2.953	75	6.299	160	0.472	12	1.764	0.800	97000	430	375000	1660	2500	3.150	80	6.181	157
K 894 15	2.953	75	6.299	160	0.669	17	2.359	1.070	112000	500	355000	1580	2500	3.307	84	6.142	156
FC67245.1	2.961	75.209	3.94	100.076	0.157	4	0.109	0.050	12000	54	58000	260	2700	3.232	82.1	3.866	98.2
TC4860	3.000	76.200	3.740	95	0.078	1.984	0.049	0.022	6600	29.5	42500	189	2800	3.071	78	3.661	93
K 811 16 TN	3.150	80	4.134	105	0.295	7.500	0.209	0.095	23800	106	79000	350	3100	3.268	83	4.016	102
AXK 80105	3.150	80	4.134	105	0.158	4	0.139	0.063	126000	560	63000	280	3100	3.307	84	4.055	103
K 812 16 TN	3.150	80	4.528	115	0.433	11	0.516	0.234	45000	201	142000	630	3000	3.307	84	4.409	112
K 893 16 TN	3.150	80	5.512	140	0.433	11	5.226	2.370	69000	305	250000	1110	2600	3.386	86	5.394	137
K 874 16	3.150	80	6.693	170	0.472	12	1.940	0.880	101000	450	405000	1810	2300	3.504	89	6.575	167
K 894 16	3.150	80	6.693	170	0.709	18	3.109	1.410	126000	560	400000	1770	2300	3.504	89	6.535	166
TC5266	3.250	82.550	4.125	104.775	0.125	3.175	0.145	0.066	10900	48.5	61000	270	2600	3.350	85.1	4.000	101.6
K 811 17 TN	3.347	85	4.331	110	0.295	7.500	0.260	0.118	25000	112	87000	385	3000	3.425	87	4.252	108
AXK 85110	3.347	85	4.331	110	0.158	4	0.148	0.067	130000	580	65000	290	3000	3.504	89	4.252	108
K 812 17 TN	3.347	85	4.921	125	0.472	12	0.617	0.280	49000	217	148000	660	2700	3.543	90	4.685	119
K 893 17	3.347	85	5.906	150	0.472	12	6.615	3	73000	325	255000	1140	2500	3.661	93	5.787	147

Thrust Roller And Cage Assemblies

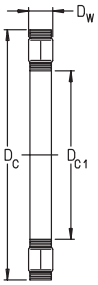

- Metric and inch
- Needle and cylindrical roller types
- Sorted by bore
- Speed limit shown is for oil lubrication

For details on part numbers, descriptive suffixes and various technical references, please refer to front of this section.
For engineering or technical information contact your local sales representative or call Distributor Sales (800)523-6572.

PART NUMBER	SHAFT D_{c1} inch	SHAFT D_{c1} mm	OD D_c inch	OD D_c mm	ROLLER DIA. inch	ROLLER DIA. mm	WEIGHT lbs	WEIGHT kg	DYN. CAP. lbf	DYN. CAP. kN	STAT. CAP. lbf	STAT. CAP. kN	SPEED LIMIT rpm	EB INTERNAL RACE DIA. inch	EB INTERNAL RACE DIA. mm	EA EXTERNAL RACE DIA. inch	EA EXTERNAL RACE DIA. mm
K 874 17	3.347	85	7.087	180	0.512	13	2.271	1.03	109000	485	430000	1920	2200	3.622	92	6.929	176
K 894 17	3.347	85	7.087	180	0.748	19	3.550	1.61	139000	620	445000	1980	2200	3.701	94	6.929	176
K 811 18 TN	3.543	90	4.724	120	0.354	9	0.331	0.15	31500	141	105000	465	2700	3.661	93	4.606	117
AXK 90120	3.543	90	4.724	120	0.158	4	0.190	0.086	164000	730	91000	405	2700	3.701	94	4.646	118
K 812 18 TN	3.543	90	5.315	135	0.551	14	1.195	0.542	65000	290	200000	890	2600	3.740	95	5.079	129
K 893 18	3.543	90	6.102	155	0.472	12	7.232	3.28	74000	330	270000	1200	2400	3.858	98	5.984	152
K 874 18	3.543	90	7.480	190	0.512	13	2.492	1.13	115000	510	470000	2090	2100	4.016	102	7.323	186
K 894 18	3.543	90	7.480	190	0.787	20	4.123	1.87	153000	680	495000	2200	2100	3.937	100	7.323	186
K 811 20 TN	3.937	100	5.315	135	0.433	11	0.551	0.25	44500	199	146000	650	2500	4.095	104	5.158	131
AXK 100135	3.937	100	5.315	135	0.158	4	0.229	0.104	205000	910	126000	560	2500	4.134	105	5.236	133
K 812 20	3.937	100	5.906	150	0.591	15	1.323	0.6	64000	285	189000	840	2300	4.213	107	5.591	142
K 893 20	3.937	100	6.693	170	0.512	13	8.952	4.06	85000	380	315000	1400	2100	4.291	109	6.575	167
K 874 20	3.937	100	8.268	210	0.591	15	3.660	1.66	153000	680	630000	2800	1900	4.331	110	8.110	206
K 894 20	3.937	100	8.268	210	0.866	22	5.292	2.4	191000	850	640000	2850	1900	4.409	112	8.110	206
TC6681	4.125	104.775	5.063	128.588	0.125	3.175	0.071	0.032	14200	63	92000	410	2100	4.221	107.200	4.949	125.700
K 811 22 TN	4.331	110	5.709	145	0.433	11	0.595	0.27	46500	207	157000	700	2300	4.488	114	5.551	141
AXK 110145	4.331	110	5.709	145	0.158	4	0.269	0.122	218000	970	139000	620	2300	4.528	115	5.630	143
K 812 22	4.331	110	6.299	160	0.591	15	1.510	0.685	67000	300	211000	940	2100	4.606	117	5.984	152
K 893 22	4.331	110	7.480	190	0.591	15	13.296	6.03	112000	500	420000	1870	1900	4.724	120	7.323	186
K 874 22	4.331	110	9.055	230	0.669	17	4.741	2.15	182000	810	750000	3350	1700	4.606	117	8.858	225
K 894 22	4.331	110	9.055	230	0.945	24	7.277	3.3	225000	1000	760000	3400	1700	4.843	123	8.858	225
K 811 24 TN	4.724	120	6.102	155	0.433	11	0.639	0.29	45500	203	157000	700	2100	4.882	124	5.945	151
AXK 120155	4.724	120	6.102	155	0.158	4	0.289	0.131	22900	102	153000	680	2100	4.921	125	6.024	153
K 812 24	4.724	120	6.693	170	0.591	15	1.610	0.73	70000	310	220000	980	2000	5.000	127	6.378	162
K 893 24	4.724	120	8.268	210	0.669	17	18.787	8.52	144000	640	540000	2420	1700	5.118	130	8.110	206
K 874 24	4.724	120	9.843	250	0.709	18	6.439	2.92	216000	960	920000	4100	1600	5.158	131	9.606	244
K 894 24	4.724	120	9.843	250	1.024	26	9.482	4.3	260000	1160	900000	4000	1600	5.315	135	9.646	245
K 811 26 TN	5.118	130	6.693	170	0.472	12	0.838	0.38	52000	233	182000	810	1900	5.315	135	6.496	165
AXK 130170	5.118	130	6.693	170	0.197	5	0.452	0.205	30000	133	189000	840	1900	5.354	136	6.575	167
K 812 26	5.118	130	7.480	190	0.748	19	2.523	1.144	96000	425	290000	1290	1800	5.394	137	7.126	181
K 893 26	5.118	130	8.858	225	0.709	18	22.050	10	160000	710	610000	2700	1600	5.551	141	8.661	220
K 874 26	5.118	130	10.630	270	0.748	19	7.519	3.41	236000	1050	1020000	4550	1400	5.669	144	10.433	265
K 894 26	5.118	130	10.630	270	1.102	28	11.025	5	300000	1330	1030000	4600	1400	5.787	147	10.433	265
K 811 28 TN	5.512	140	7.087	180	0.472	12	0.882	0.4	54000	242	196000	870	1800	5.709	145	6.890	175
AXK 140180	5.512	140	7.087	180	0.197	5	0.483	0.219	31000	138	202000	900	1800	5.748	146	6.969	177
K 812 28	5.512	140	7.874	200	0.748	19	2.639	1.197	100000	445	325000	1450	1700	5.787	147	7.520	191
K 893 28	5.512	140	9.449	240	0.748	19	26.438	11.99	184000	820	720000	3200	1500	5.984	152	9.252	235
K 874 28	5.512	140	11.024	280	0.748	19	8.114	3.68	250000	1110	1110000	4950	1400	6.102	155	10.866	276
K 894 28	5.512	140	11.024	280	1.102	28	13.230	6	310000	1380	1110000	4950	1400	6.181	157	10.827	275
K 811 30 TN	5.906	150	7.480	190	0.472	12	0.948	0.43	56000	250	209000	930	1700	6.102	155	7.284	185
AXK 150190	5.906	150	7.480	190	0.197	5	0.512	0.232	32000	143	216000	960	1700	6.142	156	7.362	187
K 812 30	5.906	150	8.465	215	0.827	21	3.352	1.52	133000	590	435000	1940	1600	6.221	158	8.307	211
K 893 30	5.906	150	9.843	250	0.748	19	27.849	12.63	189000	840	750000	3350	1400	6.378	162	9.646	245
K 874 30	5.906	150	11.811	300	0.827	21	9.812	4.45	285000	1260	1240000	5500	1300	6.378	162	11.614	295
K 894 30	5.906	150	11.811	300	1.181	30	15.656	7.1	355000	1570	1280000	5700	1300	6.614	168	11.614	295
K 811 32	6.299	160	7.874	200	0.472	12	1.114	0.505	58000	260	223000	990	1600	6.496	165	7.677	195

Thrust Roller And Cage Assemblies

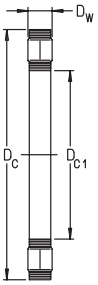

- Metric and inch
- Needle and cylindrical roller types
- Sorted by bore
- Speed limit shown is for oil lubrication

For details on part numbers, descriptive suffixes and various technical references, please refer to front of this section.
For engineering or technical information contact your local sales representative or call Distributor Sales (800)523-6572.

PART NUMBER	SHAFT D_{c1} inch	SHAFT D_{c1} mm	OD D_c inch	OD D_c mm	ROLLER DIA. inch	ROLLER DIA. mm	WEIGHT lbs	WEIGHT kg	DYN. CAP. lbf	DYN. CAP. kN	STAT. CAP. lbf	STAT. CAP. kN	SPEED LIMIT rpm	EB INTERNAL RACE DIA. inch	EB INTERNAL RACE DIA. mm	EA EXTERNAL RACE DIA. inch	EA EXTERNAL RACE DIA. mm
AXK 160200	6.299	160	7.874	200	0.197	5	0.542	0.246	33500	148	229000	1020	1600	6.535	166	7.756	197
K 812 32	6.299	160	8.858	225	0.827	21	3.535	1.603	135000	600	455000	2030	1500	6.614	168	8.661	220
K 893 32	6.299	160	10.630	270	0.827	21	36.625	16.61	218000	970	880000	3900	1300	6.850	174	10.433	265
K 874 32	6.299	160	12.598	320	0.866	22	11.753	5.33	325000	1450	1480000	6600	1200	6.969	177	12.441	316
K 894 32	6.299	160	12.598	320	1.260	32	18.963	8.6	400000	1780	1460000	6500	1200	7.047	179	12.402	315
K 811 34	6.693	170	8.465	215	0.551	14	1.654	0.75	73000	325	275000	1220	1500	6.929	176	8.228	209
K 812 34	6.693	170	9.449	240	0.866	22	4.167	1.89	153000	680	530000	2340	1400	7.087	180	9.252	235
K 893 34	6.693	170	11.024	280	0.827	21	38.279	17.36	225000	1000	910000	4050	1300	7.284	185	10.866	276
K 874 34	6.693	170	13.386	340	0.945	24	14.862	6.74	365000	1620	1640000	7300	1100	7.244	184	13.189	335
K 894 34	6.693	170	13.386	340	1.339	34	22.491	10.2	445000	1990	1660000	7400	1100	7.520	191	13.189	335
K 811 36	7.087	180	8.858	225	0.551	14	1.764	0.8	76000	340	290000	1300	1400	7.284	185	8.622	219
K 812 36	7.087	180	9.843	250	0.866	22	4.366	1.98	155000	690	550000	2440	1300	7.480	190	9.646	245
K 893 36	7.087	180	11.811	300	0.945	24	48.753	22.11	285000	1260	1150000	5100	1200	7.559	192	11.614	295
K 874 36	7.087	180	14.173	360	0.984	25	18.765	8.51	420000	1860	1930000	8600	1100	7.756	197	13.937	354
K 894 36	7.087	180	14.173	360	1.417	36	26.901	12.2	495000	2210	1840000	8200	1100	7.992	203	13.898	353
K 811 38	7.480	190	9.449	240	0.591	15	2.073	0.94	87000	385	335000	1500	1300	7.756	197	9.173	233
K 812 38	7.480	190	10.630	270	1.024	26	6.020	2.73	198000	880	670000	3000	1300	7.874	200	10.433	265
K 893 38	7.480	190	12.598	320	1.024	26	59.248	26.87	320000	1420	1280000	5700	1100	7.992	203	12.402	315
K 874 38	7.480	190	14.961	380	1.024	26	19.779	8.97	445000	1990	2090000	9300	1000	8.268	210	14.724	374
K 894 38	7.480	190	14.961	380	1.496	38	31.973	14.5	550000	2450	2070000	9200	1000	8.425	214	14.685	373
K 811 40	7.874	200	9.843	250	0.591	15	2.161	0.98	89000	395	350000	1550	1300	8.110	206	9.567	243
K 812 40	7.874	200	11.024	280	1.024	26	6.813	3.09	202000	900	710000	3150	1200	8.268	210	10.827	275
K 893 40	7.874	200	13.386	340	1.102	28	70.406	31.93	365000	1630	1480000	6600	1100	8.465	215	13.189	335
K 874 40	7.874	200	15.748	400	1.102	28	23.770	10.78	510000	2290	2410000	10700	950	8.583	218	15.512	394
K 894 40	7.874	200	15.748	400	1.575	40	35.721	16.2	610000	2700	2290000	10200	950	8.898	226	15.472	393
K 811 44	8.661	220	10.630	270	0.591	15	2.911	1.32	94000	420	390000	1730	1200	8.898	226	10.354	263
K 812 44	8.661	220	11.811	300	1.024	26	7.387	3.35	211000	940	780000	3450	1100	9.055	230	11.654	296
K 894 44	8.661	220	16.535	420	1.575	40	38.808	17.6	650000	2900	2600000	11500	900	9.685	246	16.260	413
K 811 48	9.449	240	11.811	300	0.709	18	4.631	2.1	135000	600	560000	2500	1100	9.764	248	11.654	296
K 812 48	9.449	240	13.386	340	1.260	32	12.458	5.65	310000	1370	1120000	5000	1000	10.276	261	13.189	335
K 894 48	9.449	240	17.323	440	1.575	40	42.336	19.2	670000	3000	2750000	12200	850	10.472	266	17.047	433
K 811 52	10.236	260	12.598	320	0.709	18	5.072	2.3	139000	620	600000	2650	1000	10.551	268	12.441	316
K 812 52	10.236	260	14.173	360	1.260	32	13.451	6.1	325000	1440	1210000	5400	950	11.024	280	13.898	353
K 894 52	10.236	260	18.898	480	1.732	44	56.228	25.5	800000	3550	3300000	14600	800	11.339	288	18.583	472
K 811 56	11.024	280	13.780	350	0.866	22	6.615	3	193000	860	820000	3650	900	11.339	288	13.622	346
K 812 56	11.024	280	14.961	380	1.260	32	14.112	6.4	330000	1460	1260000	5600	850	11.811	300	14.685	373
K 894 56	11.024	280	20.472	520	1.890	48	67.914	30.8	940000	4200	3900000	17400	700	12.244	311	20.158	512
K 811 60	11.811	300	14.961	380	0.984	25	10.650	4.83	238000	1060	1010000	4500	850	12.402	315	14.685	373
K 812 60	11.811	300	16.535	420	1.496	38	22.381	10.15	435000	1930	1640000	7300	800	12.913	328	16.260	413
K 894 60	11.811	300	21.260	540	1.890	48	72.104	32.7	970000	4300	4150000	18400	700	13.032	331	20.984	533
K 811 64	12.598	320	15.748	400	0.984	25	11.290	5.12	247000	1100	1070000	4750	800	13.150	334	15.512	394
K 812 64	12.598	320	17.323	440	1.496	38	23.594	10.7	440000	1960	1710000	7600	750	13.701	348	17.087	434
K 811 68	13.386	340	16.535	420	0.984	25	12.150	5.51	255000	1130	1120000	5000	750	13.937	354	16.299	414
K 812 68	13.386	340	18.110	460	1.496	38	24.806	11.25	465000	2060	1870000	8300	700	14.449	367	17.795	452
AXK360X390X5	14.173	360	15.354	390	0.197	5	0.706	0.32	38500	171	330000	1470	640	14.252	362	15.276	388
K 811 72	14.173	360	17.323	440	0.984	25	12.238	5.55	255000	1140	1150000	5100	700	14.724	374	17.087	434

Thrust Roller And Cage Assemblies

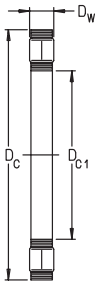

- Metric and inch
- Needle and cylindrical roller types
- Sorted by bore
- Speed limit shown is for oil lubrication

For details on part numbers, descriptive suffixes and various technical references, please refer to front of this section.
For engineering or technical information contact your local sales representative or call Distributor Sales (800)523-6572.

PART NUMBER	SHAFT D_{c1} inch	SHAFT D_{c1} mm	OD D_c inch	OD D_c mm	ROLLER DIA. inch	ROLLER DIA. mm	WEIGHT lbs	WEIGHT kg	DYN. CAP. lbf	DYN. CAP. kN	STAT. CAP. lbf	STAT. CAP. kN	SPEED LIMIT rpm	EB INTERNAL RACE DIA. inch	EB INTERNAL RACE DIA. mm	EA EXTERNAL RACE DIA. inch	EA EXTERNAL RACE DIA. mm
K 812 72	14.173	360	19.685	500	1.772	45	38.036	17.25	610000	2700	2380000	10600	650	15.472	393	19.370	492
K 811 76	14.961	380	18.110	460	0.984	25	13.406	6.08	265000	1170	1210000	5400	700	15.472	393	17.835	453
K 812 76	14.961	380	20.472	520	1.772	45	39.029	17.7	620000	2750	2470000	11000	650	16.260	413	20.118	511
K 811 80	15.748	400	18.898	480	0.984	25	14.068	6.38	270000	1200	1280000	5700	650	16.260	413	18.622	473
K 812 80	15.748	400	21.260	540	1.772	45	40.793	18.5	630000	2800	2550000	11400	600	17.047	433	20.906	531
K 811 84	16.535	420	19.685	500	0.984	25	14.333	6.5	275000	1230	1330000	5900	650	17.047	433	19.409	493
K 812 84	16.535	420	22.835	580	2.047	52	57.330	26	790000	3500	3200000	14200	600	18.071	459	22.480	571
K 811 88	17.323	440	21.260	540	1.260	32	25.402	11.52	400000	1780	1840000	8200	600	18.071	459	20.984	533
K 812 88	17.323	440	23.622	600	2.047	52	59.976	27.2	810000	3600	3350000	14800	550	18.858	479	23.268	591
K 811 92	18.110	460	22.047	560	1.260	32	26.240	11.9	415000	1840	1960000	8700	550	18.858	479	21.772	553
K 812 92	18.110	460	24.409	620	2.047	52	62.181	28.2	820000	3650	3450000	15400	550	19.646	499	24.055	611
K 811 96	18.898	480	22.835	580	1.260	32	27.673	12.55	420000	1860	2000000	8900	550	19.685	500	22.559	573
K 812 96	18.898	480	25.591	650	2.205	56	74.529	33.8	920000	4100	3800000	17000	500	20.472	520	25.236	641
K 811/500	19.685	500	23.622	600	1.260	32	28.511	12.93	430000	1910	2090000	9300	500	20.433	519	23.307	592
K 812/500	19.685	500	26.378	670	2.205	56	77.175	35	930000	4150	3950000	17600	490	21.260	540	26.024	661
K 811/530	20.866	530	25.197	640	1.339	34	35.236	15.98	480000	2140	2360000	10500	490	21.811	554	24.882	632
K 812/530	20.866	530	27.953	710	2.362	60	93.161	42.25	1070000	4750	4550000	20300	460	22.520	572	27.598	701
AXK560X606X5	22.047	560	23.858	606	0.197	5	1.433	0.65	51000	225	560000	2500	410	19.764	502	21.417	544
K 811/560	22.047	560	26.378	670	1.339	34	37.022	16.79	490000	2190	2470000	11000	470	22.992	584	26.063	662
K 812/560	22.047	560	29.528	750	2.362	60	103.635	47	1090000	4850	4750000	21100	440	24.055	611	29.173	741
K 811/600	23.622	600	27.953	710	1.339	34	39.580	17.95	500000	2230	2600000	11500	440	24.567	624	27.638	702
K 812/600	23.622	600	31.496	800	2.520	64	125.134	56.75	1240000	5500	5400000	24000	410	25.630	651	31.063	789

Thrust Washers

FLAT RACE THRUST WASHERS SORTED BY SHAFT DIMENSION

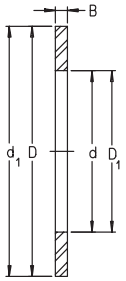

- Metric: AS, GS, LS, WS series
- Inch: TWA, TWB, TWC, TWD series
- Special Dimensions: F & FC
- Axial contact

For details on part numbers, descriptive suffixes and various technical references, please refer to front of this section.
For engineering or technical information contact your local sales representative or call Distributor Sales (800)523-6572.

PART NUMBER	SHAFT d inch	SHAFT d mm	HOUSING D inch	HOUSING D mm	THICKNESS B inch	THICKNESS B mm	WEIGHT pounds	WEIGHT kilograms	BORE D_1 inch	BORE D_1 mm	OD d_1 inch	OD d_1 mm
AS 0414	0.158	4	0.551	14	0.039	1	0.002	0.001	0.158	4	0.551	14
FC67316	0.188	4.780	0.687	17.450	0.032	0.810	0.003	0.001	0.188	4.780	0.687	17.450
AS 0515	0.197	5	0.591	15	0.039	1	0.002	0.001	0.197	5	0.591	15
FC67318	0.223	5.670	0.812	20.620	0.095	2.410	0.013	0.006	0.223	5.670	0.812	20.620
FC69491.1	0.232	5.893	0.770	19.558	0.032	0.810	0.031	0.014	0.232	5.893	0.770	19.558
AS 0619	0.236	6	0.748	19	0.039	1	0.004	0.002	0.236	6	0.748	19
LS 0619	0.236	6	0.748	19	0.108	2.750	0.009	0.004	0.236	6	0.748	19
TWA411	0.250	6.350	0.688	17.463	0.032	0.810	0.003	0.001	0.250	6.350	0.688	17.463
TWB411	0.250	6.350	0.688	17.463	0.063	1.600	0.006	0.003	0.250	6.350	0.688	17.463
TWC411	0.250	6.350	0.688	17.463	0.092	2.337	0.008	0.004	0.250	6.350	0.688	17.463
TWD411	0.250	6.350	0.688	17.463	0.126	3.200	0.011	0.005	0.250	6.350	0.688	17.463
TWA512	0.313	7.938	0.750	19.050	0.032	0.810	0.003	0.001	0.313	7.938	0.750	19.050
TWB512	0.313	7.938	0.750	19.050	0.063	1.600	0.007	0.003	0.313	7.938	0.750	19.050
TWC512	0.313	7.938	0.750	19.050	0.092	2.337	0.010	0.004	0.313	7.938	0.750	19.050
TWD512	0.313	7.938	0.750	19.050	0.126	3.200	0.013	0.006	0.313	7.938	0.750	19.050
AS 0821	0.315	8	0.827	21	0.039	1	0.004	0.002	0.315	8	0.827	21
LS 0821	0.315	8	0.827	21	0.108	2.750	0.009	0.004	0.315	8	0.827	21
TWA613	0.375	9.525	0.813	20.638	0.032	0.810	0.003	0.001	0.375	9.525	0.813	20.638
TWB613	0.375	9.525	0.813	20.638	0.063	1.600	0.007	0.003	0.375	9.525	0.813	20.638
TWC613	0.375	9.525	0.813	20.638	0.092	2.337	0.011	0.005	0.375	9.525	0.813	20.638
TWD613	0.375	9.525	0.813	20.638	0.126	3.200	0.015	0.007	0.375	9.525	0.813	20.638
AS 1024	0.394	10	0.945	24	0.039	1	0.007	0.003	0.394	10	0.945	24
LS 1024	0.394	10	0.945	24	0.108	2.750	0.015	0.007	0.394	10	0.945	24
AS 1226	0.472	12	1.024	26	0.039	1	0.007	0.003	0.472	12	1.024	26
LS 1226	0.472	12	1.024	26	0.108	2.750	0.018	0.008	0.472	12	1.024	26
TWA812	0.500	12.700	0.750	19.050	0.032	0.810	0.002	0.001	0.500	12.700	0.750	19.050
TWB812	0.500	12.700	0.750	19.050	0.063	1.600	0.004	0.002	0.500	12.700	0.750	19.050
TWC812	0.500	12.700	0.750	19.050	0.092	2.337	0.006	0.003	0.500	12.700	0.750	19.050
TWD812	0.500	12.700	0.750	19.050	0.126	3.200	0.009	0.004	0.500	12.700	0.750	19.050
TWA815	0.500	12.700	0.938	23.813	0.032	0.810	0.004	0.002	0.500	12.700	0.938	23.813
TWB815	0.500	12.700	0.938	23.813	0.063	1.600	0.009	0.004	0.500	12.700	0.938	23.813
TWC815	0.500	12.700	0.938	23.813	0.092	2.337	0.013	0.006	0.500	12.700	0.938	23.813
TWD815	0.500	12.700	0.938	23.813	0.126	3.200	0.018	0.008	0.500	12.700	0.938	23.813
TWA916	0.563	14.290	1.000	25.400	0.032	0.810	0.004	0.002	0.563	14.290	1.000	25.400
TWB916	0.563	14.290	1.000	25.400	0.063	1.600	0.010	0.004	0.563	14.290	1.000	25.400
TWC916	0.563	14.290	1.000	25.400	0.092	2.337	0.014	0.006	0.563	14.290	1.000	25.400
TWD916	0.563	14.290	1.000	25.400	0.126	3.200	0.019	0.009	0.563	14.290	1.000	25.400
AS 1528	0.591	15	1.102	28	0.039	1	0.007	0.003	0.591	15	1.102	28
GS 81102	0.591	15	1.102	28	0.108	2.750	0.020	0.009	0.630	16	1.102	28
LS 1528	0.591	15	1.102	28	0.108	2.750	0.020	0.009	0.591	15	1.102	28
WS 81102	0.591	15	1.102	28	0.108	2.750	0.020	0.009	0.591	15	1.102	28
TWA1018	0.625	15.875	1.125	28.575	0.032	0.810	0.006	0.003	0.625	15.875	1.125	28.575
TWB1018	0.625	15.875	1.125	28.575	0.063	1.600	0.012	0.006	0.625	15.875	1.125	28.575
TWC1018	0.625	15.875	1.125	28.575	0.092	2.337	0.018	0.008	0.625	15.875	1.125	28.575
TWD1018	0.625	15.875	1.125	28.575	0.126	3.200	0.025	0.011	0.625	15.875	1.125	28.575
F-228531.2	0.632	16.050	1.378	35	0.039	1	0.013	0.006	0.632	16.050	1.378	350

Thrust Washers

FLAT RACE THRUST WASHERS SORTED BY SHAFT DIMENSION

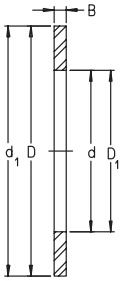

- Metric: AS, GS, LS, WS series
- Inch: TWA, TWB, TWC, TWD series
- Special Dimensions: F & FC
- Axial contact

For details on part numbers, descriptive suffixes and various technical references, please refer to front of this section.
For engineering or technical information contact your local sales representative or call Distributor Sales (800)523-6572.

PART NUMBER	SHAFT d inch	SHAFT d mm	HOUSING D inch	HOUSING D mm	THICKNESS B inch	THICKNESS B mm	WEIGHT pounds	WEIGHT kilograms	BORE D_1 inch	BORE D_1 mm	OD d_1 inch	OD d_1 mm
F-390416.2	0.633	16.080	1.575	40	0.041	1.030	0.018	0.008	0.633	16.080	1.575	400
AS 1730	0.669	17	1.181	30	0.039	1	0.009	0.004	0.669	17	1.181	30
GS 81103	0.669	17	1.181	30	0.108	2.750	0.02	0.009	0.709	18	1.181	30
LS 1730	0.669	17	1.181	30	0.108	2.750	0.02	0.009	0.669	17	1.181	30
WS 81103	0.669	17	1.181	30	0.108	2.750	0.02	0.009	0.669	17	1.181	30
TWA1120	0.688	17.463	1.250	31.750	0.032	0.810	0.007	0.003	0.688	17.463	1.250	31.750
TWB1120	0.688	17.463	1.250	31.750	0.063	1.600	0.015	0.007	0.688	17.463	1.250	31.750
TWC1120	0.688	17.463	1.250	31.750	0.092	2.337	0.022	0.010	0.688	17.463	1.250	31.750
TWD1120	0.688	17.463	1.250	31.750	0.126	3.200	0.031	0.014	0.688	17.463	1.250	31.750
FC68506	0.713	18.100	1.575	40	0.138	3.500	0.055	0.025	0.713	18.100	1.575	40
TWA1220	0.750	19.050	1.250	31.750	0.032	0.810	0.006	0.003	0.750	19.050	1.250	31.750
TWB1220	0.750	19.050	1.250	31.750	0.063	1.600	0.014	0.006	0.750	19.050	1.250	31.750
TWC1220	0.750	19.050	1.250	31.750	0.092	2.337	0.020	0.009	0.750	19.050	1.250	31.750
TWD1220	0.750	19.050	1.250	31.750	0.126	3.200	0.028	0.013	0.750	19.050	1.250	31.750
AS 2035	0.787	20	1.378	35	0.039	1	0.011	0.005	0.787	20	1.378	35
GS 81104	0.787	20	1.378	35	0.108	2.750	0.029	0.013	0.827	21	1.378	35
LS 2035	0.787	20	1.378	35	0.108	2.750	0.029	0.013	0.787	20	1.378	35
WS 81104	0.787	20	1.378	35	0.108	2.750	0.029	0.013	0.787	20	1.378	35
F-200665	0.787	20	1.378	35	0.142	3.600	0.011	0.004	0.787	20	1.378	35
FC67171	0.787	20	1.378	35	0.079	2	0.022	0.009	0.787	20	1.378	35
F-200664	0.787	20	1.448	36.780	0.118	3	0.012	0.005	0.787	20	1.448	36.780
FC67078.1	0.800	20.310	1.575	40	0.036	0.910	0.014	0.006	0.800	20.310	1.575	40
FC69086	0.811	20.590	1.358	34.49	0.051	1.300	0.013	0.006	0.811	20.590	1.358	34.490
F-391042	0.845	21.460	1.437	36.500	0.036	0.910	0.009	0.004	0.845	21.460	1.437	36.500
TWA1423	0.875	22.225	1.438	36.513	0.032	0.810	0.008	0.004	0.875	22.225	1.438	36.513
TWB1423	0.875	22.225	1.438	36.513	0.063	1.600	0.018	0.008	0.875	22.225	1.438	36.513
TWC1423	0.875	22.225	1.438	36.513	0.092	2.337	0.027	0.012	0.875	22.225	1.438	36.513
TWD1423	0.875	22.225	1.438	36.513	0.126	3.200	0.036	0.017	0.875	22.225	1.438	36.513
TWA1427	0.875	22.225	1.688	42.863	0.032	0.810	0.014	0.006	0.875	22.225	1.688	42.863
TWB1427	0.875	22.225	1.688	42.863	0.063	1.600	0.029	0.013	0.875	22.225	1.688	42.863
TWC1427	0.875	22.225	1.688	42.863	0.092	2.337	0.043	0.019	0.875	22.225	1.688	42.863
TWD1427	0.875	22.225	1.688	42.863	0.126	3.200	0.058	0.026	0.875	22.225	1.688	42.863
FC66830	0.880	22.350	1.505	38.230	0.106	2.690	0.013	0.006	0.880	22.350	1.505	38.230
FC67317	0.910	23.110	1.750	44.450	0.126	3.200	0.063	0.028	0.910	23.110	1.750	44.450
FC69012	0.949	24.110	1.777	45.140	0.032	0.810	0.015	0.007	0.949	24.110	1.777	45.140
FC67613	0.976	24.800	1.654	42	0.157	4	0.061	0.028	0.976	24.800	1.654	42
AS 2542	0.984	25	1.654	42	0.039	1	0.015	0.007	0.984	25	1.654	42
GS 81105	0.984	25	1.654	42	0.118	3	0.042	0.019	1.024	26	1.654	42
LS 2542	0.984	25	1.654	42	0.118	3	0.042	0.019	0.984	25	1.654	42
WS 81105	0.984	25	1.654	42	0.118	3	0.042	0.019	0.984	25	1.654	42
TWA1625	1.000	25.400	1.563	39.688	0.032	0.810	0.009	0.004	1.000	25.400	1.563	39.688
TWB1625	1.000	25.400	1.563	39.688	0.063	1.600	0.020	0.009	1.000	25.400	1.563	39.688
TWC1625	1.000	25.400	1.563	39.688	0.092	2.337	0.029	0.013	1.000	25.400	1.563	39.688
TWD1625	1.000	25.400	1.563	39.688	0.126	3.200	0.040	0.018	1.000	25.400	1.563	39.688
FC69442	1.000	25.400	1.563	39.688	0.126	3.200	0.037	0.017	1.000	25.400	1.563	39.688
FC68256	1.000	25.400	1.752	44.500	0.032	0.810	0.014	0.006	1.000	25.400	1.752	44.500

Thrust Washers
FLAT RACE THRUST WASHERS SORTED BY SHAFT DIMENSION

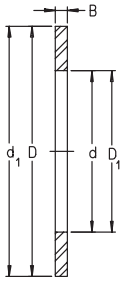

- Metric: AS, GS, LS, WS series
- Inch: TWA, TWB, TWC, TWD series
- Special Dimensions: F & FC
- Axial contact

For details on part numbers, descriptive suffixes and various technical references, please refer to front of this section.
For engineering or technical information contact your local sales representative or call Distributor Sales (800)523-6572.

PART NUMBER	SHAFT d inch	SHAFT d mm	HOUSING D inch	HOUSING D mm	THICKNESS B inch	THICKNESS B mm	WEIGHT pounds	WEIGHT kilograms	BORE D_1 inch	BORE D_1 mm	OD d_1 inch	OD d_1 mm
FC66961	1.002	25.450	1.552	39.420	0.032	0.810	0.009	0.004	1.002	25.450	1.552	39.420
FC67614	1.035	26.300	1.654	42	0.079	2	0.031	0.014	1.035	26.300	1.654	42
TWA1828	1.125	28.575	1.750	44.450	0.032	0.810	0.012	0.005	1.125	28.575	1.750	44.450
TWB1828	1.125	28.575	1.750	44.450	0.063	1.600	0.025	0.011	1.125	28.575	1.750	44.450
TWC1828	1.125	28.575	1.750	44.450	0.092	2.337	0.037	0.017	1.125	28.575	1.750	44.450
TWD1828	1.125	28.575	1.750	44.450	0.126	3.200	0.050	0.023	1.125	28.575	1.750	44.450
AS 3047	1.181	30	1.850	47	0.039	1	0.018	0.008	1.181	30	1.850	47
GS 81106	1.181	30	1.850	47	0.118	3	0.049	0.022	1.260	32	1.850	47
LS 3047	1.181	30	1.850	47	0.118	3	0.049	0.022	1.181	30	1.850	47
WS 81106	1.181	30	1.850	47	0.118	3	0.049	0.022	1.181	30	1.850	47
GS 812 06	1.181	30	2.047	52	0.630	16	0.099	0.045	1.260	32	2.047	52
WS 812 06	1.181	30	2.047	52	0.630	16	0.099	0.045	1.181	30	2.047	52
GS 893 06	1.181	30	2.362	60	0.246	6.250	0.209	0.095	1.260	32	2.362	60
WS 893 06	1.181	30	2.362	60	0.246	6.250	0.209	0.095	1.181	30	2.362	60
TWA2031	1.250	31.750	1.938	49.213	0.032	0.810	0.014	0.006	1.250	31.750	1.938	49.213
TWB2031	1.250	31.750	1.938	49.213	0.063	1.600	0.031	0.014	1.250	31.750	1.938	49.213
TWC2031	1.250	31.750	1.938	49.213	0.092	2.337	0.045	0.020	1.250	31.750	1.938	49.213
TWD2031	1.250	31.750	1.938	49.213	0.126	3.200	0.061	0.028	1.250	31.750	1.938	49.213
FC67342	1.287	32.690	1.740	44.200	0.095	2.410	0.02	0.009	1.287	32.69	1.740	44.200
TWA2233	1.375	34.925	2.063	52.388	0.032	0.810	0.015	0.007	1.375	34.925	2.063	52.388
TWB2233	1.375	34.925	2.063	52.388	0.063	1.600	0.033	0.015	1.375	34.925	2.063	52.388
TWC2233	1.375	34.925	2.063	52.388	0.092	2.337	0.048	0.022	1.375	34.925	2.063	52.388
TWD2233	1.375	34.925	2.063	52.388	0.126	3.200	0.066	0.030	1.375	34.925	2.063	52.388
AS 3552	1.378	35	2.047	52	0.039	1	0.020	0.009	1.378	35	2.047	52
GS 81107	1.378	35	2.047	52	0.138	3.5	0.064	0.029	1.457	37	2.047	52
LS 3552	1.378	35	2.047	52	0.138	3.5	0.064	0.029	1.378	35	2.047	52
WS 81107	1.378	35	2.047	52	0.138	3.5	0.064	0.029	1.378	35	2.047	52
FC68959	1.378	35	2.047	52	0.031	0.787	0.015	0.007	1.378	35	2.047	52
GS 812 07	1.378	35	2.441	62	0.709	18	0.168	0.076	1.457	37	2.441	62
WS 812 07	1.378	35	2.441	62	0.709	18	0.168	0.076	1.378	35	2.441	62
FC69635-501	1.378	35	2.441	62	0.098	2.5	0.082	0.037	1.457	37	2.441	62
FC69635-500	1.378	35	2.441	62	0.207	5.250	0.182	0.083	1.378	35	2.441	62
GS 893 07	1.378	35	2.677	68	0.276	7	0.295	0.134	1.457	37	2.677	68
WS 893 07	1.378	35	2.677	68	0.276	7	0.295	0.134	1.378	35	2.677	68
FC67362	1.380	35.056	1.730	43.950	0.041	1.050	0.009	0.004	1.380	35.056	1.730	43.950
FC69678.1	1.430	36.322	1.969	50	0.118	3	0.047	0.021	1.430	36.322	1.969	50
F205060	1.493	37.920	2.362	60	0.236	6	0.029	0.013	1.493	37.920	2.362	60
TWA2435	1.500	38.100	2.188	55.563	0.032	0.810	0.017	0.008	1.500	38.100	2.188	55.563
TWB2435	1.500	38.100	2.188	55.563	0.063	1.600	0.035	0.016	1.500	38.100	2.188	55.563
TWC2435	1.500	38.100	2.188	55.563	0.092	2.337	0.052	0.024	1.500	38.100	2.188	55.563
TWD2435	1.500	38.100	2.188	55.563	0.126	3.200	0.071	0.032	1.500	38.100	2.188	55.563
FC66560	1.500	38.100	2.305	58.547	0.095	2.410	0.064	0.029	1.500	38.100	2.305	58.547
AS 4060	1.575	40	2.362	60	0.039	1	0.026	0.012	1.575	40	2.362	60
GS 81108	1.575	40	2.362	60	0.138	3.5	0.088	0.040	1.654	42	2.362	60
LS 4060	1.575	40	2.362	60	0.138	3.5	0.088	0.040	1.575	40	2.362	60
WS 81108	1.575	40	2.362	60	0.138	3.5	0.088	0.040	1.575	40	2.362	60

Thrust Washers

FLAT RACE THRUST WASHERS SORTED BY SHAFT DIMENSION

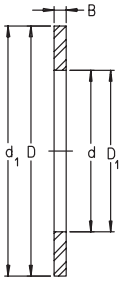

- Metric: AS, GS, LS, WS series
- Inch: TWA, TWB, TWC, TWD series
- Special Dimensions: F & FC
- Axial contact

For details on part numbers, descriptive suffixes and various technical references, please refer to front of this section.
For engineering or technical information contact your local sales representative or call Distributor Sales (800)523-6572.

PART NUMBER	SHAFT d inch	SHAFT d mm	HOUSING D inch	HOUSING D mm	THICKNESS B inch	THICKNESS B mm	WEIGHT pounds	WEIGHT kilograms	BORE D_1 inch	BORE D_1 mm	OD d_1 inch	OD d_1 mm
GS 812 08	1.575	40	2.677	68	0.748	19	0.185	0.084	1.654	42	2.677	68
WS 812 08	1.575	40	2.677	68	0.748	19	0.185	0.084	1.575	40	2.677	68
GS 893 08	1.575	40	3.071	78	0.295	7.5	0.426	0.193	1.654	42	3.071	78
WS 893 08	1.575	40	3.071	78	0.295	7.500	0.426	0.193	1.575	40	3.071	78
GS 874 08	1.575	40	3.543	90	0.325	8.250	0.684	0.310	1.654	42	3.543	90
WS 874 08	1.575	40	3.543	90	0.325	8.250	0.684	0.310	1.575	40	3.543	90
F-210510.1	1.577	40.050	2.181	55.400	0.114	2.900	0.025	0.011	1.577	40.050	2.181	55.400
F205061	1.691	42.950	2.480	63	0.041	1.050	0.028	0.013	1.691	42.950	2.480	63
FC67381.1	1.750	44.450	2.375	60.325	0.095	2.410	0.052	0.024	1.750	44.450	2.375	60.325
TWA2840	1.750	44.450	2.500	63.500	0.032	0.810	0.021	0.009	1.750	44.450	2.500	63.500
TWA2870	1.750	44.450	2.500	63.500	0.032	0.810	0.021	0.009	1.750	44.450	2.500	63.500
TWB2840	1.750	44.450	2.500	63.500	0.063	1.600	0.045	0.020	1.750	44.450	2.500	63.500
TWB2870	1.750	44.450	2.500	63.500	0.063	1.600	0.045	0.020	1.750	44.450	2.500	63.500
TWC2840	1.750	44.450	2.500	63.500	0.092	2.337	0.065	0.030	1.750	44.450	2.500	63.500
TWC2870	1.750	44.450	2.500	63.500	0.092	2.337	0.065	0.030	1.750	44.450	2.500	63.500
TWD2840	1.750	44.450	2.500	63.500	0.126	3.200	0.089	0.040	1.750	44.450	2.500	63.500
TWD2870	1.750	44.450	2.500	63.500	0.126	3.200	0.089	0.040	1.750	44.450	2.500	63.500
F-390079	1.750	44.450	2.500	63.500	0.032	0.810	0.021	0.009	1.750	44.450	2.500	63.500
FC66671	1.752	44.500	2.415	61.340	0.095	2.410	0.058	0.026	1.752	44.500	2.415	61.340
FC68999	1.756	44.610	2.999	76.170	0.040	1.010	0.051	0.023	1.756	44.610	2.999	76.170
AS 4565	1.772	45	2.559	65	0.039	1	0.029	0.013	1.772	45	2.559	65
GS 81109	1.772	45	2.559	65	0.158	4	0.110	0.050	1.850	47	2.559	65
LS 4565	1.772	45	2.559	65	0.158	4	0.110	0.050	1.772	45	2.559	65
WS 81109	1.772	45	2.559	65	0.158	4	0.110	0.050	1.772	45	2.559	65
GS 812 09	1.772	45	2.874	73	0.787	20	0.223	0.101	1.850	47	2.874	73
WS 812 09	1.772	45	2.874	73	0.787	20	0.223	0.101	1.772	45	2.874	73
GS 893 09	1.772	45	3.347	85	0.325	8.250	0.545	0.247	1.850	47	3.347	85
WS 893 09	1.772	45	3.347	85	0.325	8.250	0.545	0.247	1.772	45	3.347	85
GS 874 09	1.772	45	3.937	100	0.354	9	0.970	0.440	1.850	47	3.937	100
WS 874 09	1.772	45	3.937	100	0.354	9	0.970	0.440	1.772	45	3.937	100
AS 5070	1.969	50	2.756	70	0.039	1	0.031	0.014	1.969	50	2.756	70
GS 81110	1.969	50	2.756	70	0.158	4	0.121	0.055	2.047	52	2.756	70
LS 5070	1.969	50	2.756	70	0.158	4	0.121	0.055	1.969	50	2.756	70
WS 81110	1.969	50	2.756	70	0.158	4	0.121	0.055	1.969	50	2.756	70
GS 812 10	1.969	50	3.071	78	0.866	22	0.284	0.129	2.047	52	3.071	78
WS 812 10	1.969	50	3.071	78	0.866	22	0.284	0.129	1.969	50	3.071	78
GS 893 10	1.969	50	3.740	95	0.374	9.5	0.785	0.356	2.047	52	3.740	95
WS 893 10	1.969	50	3.740	95	0.374	9.5	0.785	0.356	1.969	50	3.740	95
GS 874 10	1.969	50	4.331	110	0.374	9.5	1.169	0.530	2.047	52	4.331	110
WS 874 10	1.969	50	4.331	110	0.374	9.5	1.169	0.530	1.969	50	4.331	110
TWA3244	2.000	50.800	2.750	69.850	0.032	0.810	0.023	0.011	2.000	50.800	2.750	69.850
TWB3244	2.000	50.800	2.750	69.850	0.063	1.600	0.050	0.023	2.000	50.800	2.750	69.850
TWC3244	2.000	50.800	2.750	69.850	0.092	2.337	0.073	0.033	2.000	50.800	2.750	69.850
TWD3244	2.000	50.800	2.750	69.850	0.126	3.200	0.100	0.045	2.000	50.800	2.750	69.850
FC68429	2.000	50.800	2.970	75.438	0.032	0.813	0.033	0.015	2.000	50.800	2.970	75.438
TWA3446	2.125	53.975	2.875	73.020	0.032	0.810	0.025	0.011	2.125	53.975	2.875	73.020

Thrust Washers

FLAT RACE THRUST WASHERS SORTED BY SHAFT DIMENSION

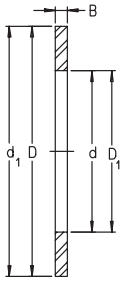

- Metric: AS, GS, LS, WS series
- Inch: TWA, TWB, TWC, TWD series
- Special Dimensions: F & FC
- Axial contact

For details on part numbers, descriptive suffixes and various technical references, please refer to front of this section.
For engineering or technical information contact your local sales representative or call Distributor Sales (800)523-6572.

PART NUMBER	SHAFT d inch	SHAFT d mm	HOUSING D inch	HOUSING D mm	THICKNESS B inch	THICKNESS B mm	WEIGHT pounds	WEIGHT kilograms	BORE D_1 inch	BORE D_1 mm	OD d_1 inch	OD d_1 mm
TWB3446	2.125	53.975	2.875	73.020	0.063	1.600	0.052	0.024	2.125	53.975	2.875	73.020
TWC3446	2.125	53.975	2.875	73.020	0.092	2.337	0.077	0.035	2.125	53.975	2.875	73.020
TWD3446	2.125	53.975	2.875	73.020	0.126	3.200	0.105	0.048	2.125	53.975	2.875	73.020
AS 5578	2.165	55	3.071	78	0.039	1	0.040	0.018	2.165	55	3.071	78
GS 81111	2.165	55	3.071	78	0.197	5	0.194	0.088	2.244	57	3.071	78
LS 5578	2.165	55	3.071	78	0.197	5	0.194	0.088	2.165	55	3.071	78
WS 81111	2.165	55	3.071	78	0.197	5	0.194	0.088	2.165	55	3.071	78
GS 812 11	2.165	55	3.543	90	0.984	25	0.443	0.201	2.244	57	3.543	90
WS 812 11	2.165	55	3.543	90	0.984	25	0.443	0.201	2.165	55	3.543	90
GS 893 11	2.165	55	4.134	105	0.413	10.5	1.069	0.485	2.244	57	4.134	105
WS 893 11	2.165	55	4.134	105	0.413	10.5	1.069	0.485	2.165	55	4.134	105
GS 874 11	2.165	55	4.724	120	0.413	10.5	1.539	0.698	2.244	57	4.724	120
WS 874 11	2.165	55	4.724	120	0.413	10.5	1.539	0.698	2.165	55	4.724	120
FC66137	2.183	55.450	3.005	76.330	0.134	3.400	0.050	0.022	2.183	55.450	3.005	76.330
FC66718	2.183	55.450	3.005	76.330	0.134	3.400	0.009	0.004	2.183	55.450	3.005	76.330
FC68883	2.244	57	3.209	81.500	0.157	4	0.181	0.082	2.244	57	3.209	81.5
TWA3648	2.250	57.150	3.000	76.200	0.032	0.810	0.026	0.012	2.250	57.150	3.000	76.200
TWB3648	2.250	57.150	3.000	76.200	0.063	1.600	0.055	0.025	2.250	57.150	3.000	76.200
TWC3648	2.250	57.150	3.000	76.200	0.092	2.337	0.081	0.037	2.250	57.150	3.000	76.200
TWD3648	2.250	57.150	3.000	76.200	0.126	3.200	0.110	0.050	2.250	57.150	3.000	76.200
FC66138	2.252	57.200	2.990	75.950	0.032	0.810	0.038	0.017	2.252	57.200	2.990	75.950
FC66505	2.252	57.200	2.990	75.950	0.032	0.810	0.004	0.002	2.252	57.200	2.990	75.950
AS 6085	2.362	60	3.347	85	0.039	1	0.049	0.022	2.362	60	3.347	85
GS 81112	2.362	60	3.347	85	0.187	4.750	0.214	0.097	2.441	62	3.347	85
LS 6085	2.362	60	3.347	85	0.187	4.750	0.214	0.097	2.362	60	3.347	85
WS 81112	2.362	60	3.347	85	0.187	4.750	0.214	0.097	2.362	60	3.347	85
GS 812 12	2.362	60	3.740	95	1.024	26	0.514	0.233	2.441	62	3.740	95
WS 812 12	2.362	60	3.740	95	1.024	26	0.514	0.233	2.362	60	3.740	95
GS 893 12	2.362	60	4.331	110	0.413	10.5	1.140	0.517	2.441	62	4.331	110
WS 893 12	2.362	60	4.331	110	0.413	10.5	1.140	0.517	2.362	60	4.331	110
GS 874 12	2.362	60	5.118	130	0.453	11.5	2.073	0.940	2.441	62	5.118	130
WS 874 12	2.362	60	5.118	130	0.453	11.5	2.073	0.940	2.362	60	5.118	130
GS 894 12	2.362	60	5.118	130	0.551	14	2.459	1.115	2.441	62	5.118	130
WS 894 12	2.362	60	5.118	130	0.551	14	2.459	1.115	2.362	60	5.118	130
FC66668	2.436	61.880	3.268	83	0.032	0.810	0.187	0.085	2.436	61.880	3.268	83
FC67976	2.480	63	3.375	85.720	0.268	6.800	0.067	0.030	2.480	63	3.375	85.720
TWA4052	2.500	63.500	3.250	82.550	0.032	0.810	0.028	0.013	2.500	63.500	3.250	82.550
TWB4052	2.500	63.500	3.250	82.550	0.063	1.600	0.060	0.027	2.500	63.500	3.250	82.550
TWC4052	2.500	63.500	3.250	82.550	0.092	2.337	0.088	0.040	2.500	63.500	3.250	82.550
TWD4052	2.500	63.500	3.250	82.550	0.126	3.200	0.121	0.055	2.500	63.500	3.250	82.550
FC66667	2.502	63.550	3.268	83	0.039	1	0.038	0.017	2.502	63.550	3.268	83
FC66140	2.510	63.760	3.620	91.950	0.032	0.810	0.047	0.021	2.510	63.760	3.620	91.950
AS 6590	2.559	65	3.543	90	0.039	1	0.053	0.024	2.559	65	3.543	90
GS 81113	2.559	65	3.543	90	0.207	5.250	0.254	0.115	2.638	67	3.543	90
LS 6590	2.559	65	3.543	90	0.207	5.250	0.254	0.115	2.559	65	3.543	90
WS 81113	2.559	65	3.543	90	0.207	5.250	0.254	0.115	2.559	65	3.543	90

Thrust Washers

FLAT RACE THRUST WASHERS SORTED BY SHAFT DIMENSION

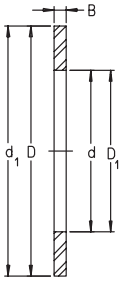

- Metric: AS, GS, LS, WS series
- Inch: TWA, TWB, TWC, TWD series
- Special Dimensions: F & FC
- Axial contact

For details on part numbers, descriptive suffixes and various technical references, please refer to front of this section.
For engineering or technical information contact your local sales representative or call Distributor Sales (800)523-6572.

PART NUMBER	SHAFT d inch	SHAFT d mm	HOUSING D inch	HOUSING D mm	THICKNESS B inch	THICKNESS B mm	WEIGHT pounds	WEIGHT kilograms	BORE D_1 inch	BORE D_1 mm	OD d_1 inch	OD d_1 mm
GS 812 13	2.559	65	3.937	100	1.063	27	0.591	0.268	2.638	67	3.937	100
WS 812 13	2.559	65	3.937	100	1.063	27	0.591	0.268	2.559	65	3.937	100
GS 893 13	2.559	65	4.528	115	0.413	10.5	1.180	0.535	2.638	67	4.528	115
WS 893 13	2.559	65	4.528	115	0.413	10.5	1.180	0.535	2.559	65	4.528	115
GS 874 13	2.559	65	5.512	140	0.472	12	2.514	1.140	2.677	68	5.512	140
WS 874 13	2.559	65	5.512	140	0.472	12	2.514	1.14	2.559	65	5.512	140
GS 894 13	2.559	65	5.512	140	0.591	15	3.087	1.4	2.677	68	5.512	140
WS 894 13	2.559	65	5.512	140	0.591	15	3.087	1.4	2.559	65	5.512	140
FC67083	2.677	68	3.937	100	0.039	1	0.064	0.029	2.677	68	3.937	100
FC67084	2.677	68	3.937	100	0.032	0.810	0.06	0.027	2.677	68	3.937	100
FC66720	2.683	68.150	3.626	92.100	0.138	3.5	0.023	0.010	2.683	68.150	3.626	92.100
FC66139	2.683	68.150	3.626	92.100	0.138	3.5	0.046	0.021	2.683	68.150	3.626	92.100
TWA4458	2.750	69.850	3.625	92.075	0.032	0.810	0.037	0.017	2.750	69.850	3.625	92.075
TWB4458	2.750	69.850	3.625	92.075	0.063	1.600	0.078	0.035	2.750	69.850	3.625	92.075
TWC4458	2.750	69.850	3.625	92.075	0.092	2.337	0.114	0.052	2.750	69.850	3.625	92.075
TWD4458	2.750	69.850	3.625	92.075	0.126	3.200	0.156	0.071	2.750	69.850	3.625	92.075
FC66507	2.752	69.900	3.620	91.950	0.032	0.810	0.007	0.003	2.752	69.900	3.620	91.950
AS 7095	2.756	70	3.740	95	0.039	1	0.055	0.025	2.756	70	3.740	95
GS 81114	2.756	70	3.740	95	0.207	5.250	0.271	0.123	2.835	72	3.740	95
LS 7095	2.756	70	3.740	95	0.207	5.250	0.271	0.123	2.756	70	3.740	95
WS 81114	2.756	70	3.740	95	0.207	5.250	0.271	0.123	2.756	70	3.740	95
GS 812 14	2.756	70	4.134	105	1.063	27	0.613	0.278	2.835	72	4.134	105
WS 812 14	2.756	70	4.134	105	1.063	27	0.613	0.278	2.756	70	4.134	105
GS 893 14	2.756	70	4.921	125	0.472	12	1.764	0.8	2.835	72	4.921	125
WS 893 14	2.756	70	4.921	125	0.472	12	1.764	0.8	2.756	70	4.921	125
GS 874 14	2.756	70	5.906	150	0.492	12.5	2.999	1.36	2.874	73	5.906	150
WS 874 14	2.756	70	5.906	150	0.492	12.5	2.999	1.36	2.756	70	5.906	150
GS 894 14	2.756	70	5.906	150	0.630	16	3.815	1.73	2.874	73	5.906	150
WS 894 14	2.756	70	5.906	150	0.630	16	3.815	1.73	2.756	70	5.906	150
AS 75100	2.953	75	3.937	100	0.039	1	0.06	0.027	2.953	75	3.937	100
GS 81115	2.953	75	3.937	100	0.226	5.750	0.313	0.142	3.032	77	3.937	100
LS 75100	2.953	75	3.937	100	0.226	5.750	0.313	0.142	2.953	75	3.937	100
WS 81115	2.953	75	3.937	100	0.226	5.750	0.313	0.142	2.953	75	3.937	100
GS 812 15	2.953	75	4.331	110	1.063	27	0.646	0.293	3.032	77	4.331	110
WS 812 15	2.953	75	4.331	110	1.063	27	0.646	0.293	2.953	75	4.331	110
GS 893 15	2.953	75	5.315	135	0.492	12.5	2.139	0.97	3.032	77	5.315	135
WS 893 15	2.953	75	5.315	135	0.492	12.5	2.139	0.97	2.953	75	5.315	135
GS 874 15	2.953	75	6.299	160	0.512	13	3.55	1.61	3.071	78	6.299	160
WS 874 15	2.953	75	6.299	160	0.512	13	3.55	1.61	2.953	75	6.299	160
GS 894 15	2.953	75	6.299	160	0.669	17	4.608	2.09	3.071	78	6.299	160
WS 894 15	2.953	75	6.299	160	0.669	17	4.608	2.09	2.953	75	6.299	160
TWA4860	3.000	76.200	3.750	95.250	0.032	0.810	0.033	0.015	3.000	76.200	3.750	95.250
TWB4860	3.000	76.200	3.750	95.250	0.063	1.600	0.071	0.032	3.000	76.200	3.750	95.250
TWC4860	3.000	76.200	3.750	95.250	0.092	2.337	0.104	0.047	3.000	76.200	3.750	95.250
TWD4860	3.000	76.200	3.750	95.250	0.126	3.200	0.142	0.064	3.000	76.200	3.750	95.250
F-390569	3.004	76.300	3.749	95.230	0.039	1	0.044	0.019	3.004	76.300	3.749	95.230

Thrust Washers

FLAT RACE THRUST WASHERS SORTED BY SHAFT DIMENSION

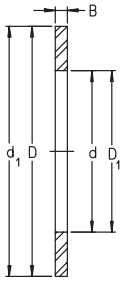

- Metric: AS, GS, LS, WS series
- Inch: TWA, TWB, TWC, TWD series
- Special Dimensions: F & FC
- Axial contact

For details on part numbers, descriptive suffixes and various technical references, please refer to front of this section.
For engineering or technical information contact your local sales representative or call Distributor Sales (800)523-6572.

PART NUMBER	SHAFT d inch	SHAFT d mm	HOUSING D inch	HOUSING D mm	THICKNESS B inch	THICKNESS B mm	WEIGHT pounds	WEIGHT kilograms	BORE D_1 inch	BORE D_1 mm	OD d_1 inch	OD d_1 mm
FC68400	3.049	77.450	3.756	95.400	0.077	1.950	0.08	0.036	3.049	77.450	3.756	95.400
FC68399A	3.075	78.100	3.833	97.350	0.069	1.740	0.078	0.035	3.075	78.100	3.833	97.350
FC68399C	3.075	78.100	3.833	97.350	0.071	1.800	0.081	0.036	3.075	78.100	3.833	97.350
FC68399D	3.075	78.100	3.833	97.350	0.072	1.830	0.082	0.037	3.075	78.100	3.833	97.350
FC68399E	3.075	78.100	3.833	97.350	0.073	1.860	0.083	0.037	3.075	78.100	3.833	97.350
FC68399F	3.075	78.100	3.833	97.350	0.074	1.890	0.085	0.038	3.075	78.100	3.833	97.350
FC68399G	3.075	78.100	3.833	97.350	0.076	1.920	0.086	0.039	3.075	78.100	3.833	97.350
FC68399H	3.075	78.100	3.833	97.350	0.077	1.950	0.087	0.039	3.075	78.100	3.833	97.350
FC69240.1	3.075	78.100	3.833	97.350	0.077	1.960	0.084	0.038	3.075	78.100	3.833	97.350
AS 80105	3.150	80	4.134	105	0.039	1	0.062	0.028	3.150	80	4.134	105
GS 81116	3.150	80	4.134	105	0.226	5.750	0.333	0.151	3.228	82	4.134	105
LS 80105	3.150	80	4.134	105	0.226	5.750	0.333	0.151	3.150	80	4.134	105
WS 81116	3.150	80	4.134	105	0.226	5.750	0.333	0.151	3.150	80	4.134	105
GS 812 16	3.150	80	4.528	115	1.102	28	0.734	0.333	3.228	82	4.528	115
WS 812 16	3.150	80	4.528	115	1.102	28	0.734	0.333	3.150	80	4.528	115
GS 893 16	3.150	80	5.512	140	0.492	12.5	2.249	1.020	3.228	82	5.512	140
WS 893 16	3.150	80	5.512	140	0.492	12.5	2.249	1.020	3.150	80	5.512	140
GS 874 16	3.150	80	6.693	170	0.571	14.5	4.900	2.222	3.268	83	6.693	170
WS 874 16	3.150	80	6.693	170	0.571	14.5	4.900	2.222	3.150	80	6.693	170
GS 894 16	3.150	80	6.693	170	0.709	18	5.513	2.500	3.268	83	6.693	170
WS 894 16	3.150	80	6.693	170	0.709	18	5.513	2.500	3.150	80	6.693	170
FC69629	3.150	80.010	4.249	107.927	0.096	2.440	0.17	0.077	3.150	80.010	4.249	107.927
TWA5266	3.250	82.550	4.125	104.775	0.032	0.810	0.043	0.019	3.250	82.550	4.125	104.775
TWB5266	3.250	82.550	4.125	104.775	0.063	1.600	0.090	0.041	3.250	82.550	4.125	104.775
TWC5266	3.250	82.550	4.125	104.775	0.092	2.337	0.132	0.060	3.250	82.550	4.125	104.775
TWD5266	3.250	82.550	4.125	104.775	0.126	3.200	0.181	0.082	3.250	82.550	4.125	104.775
AS 85110	3.347	85	4.331	110	0.039	1	0.064	0.029	3.347	85	4.331	110
GS 81117	3.347	85	4.331	110	0.226	5.750	0.351	0.159	3.425	87	4.331	110
LS 85110	3.347	85	4.331	110	0.226	5.750	0.351	0.159	3.347	85	4.331	110
WS 81117	3.347	85	4.331	110	0.226	5.750	0.351	0.159	3.347	85	4.331	110
GS 812 17	3.347	85	4.921	125	1.221	31	1.080	0.490	3.465	88	4.921	125
WS 812 17	3.347	85	4.921	125	1.221	31	1.080	0.490	3.347	85	4.921	125
GS 893 17	3.347	85	5.906	150	0.532	13.5	2.712	1.230	3.465	88	5.906	150
WS 893 17	3.347	85	5.906	150	0.532	13.5	2.712	1.230	3.347	85	5.906	150
GS 874 17	3.347	85	7.087	180	0.571	14.5	4.961	2.250	3.465	88	7.087	180
WS 874 17	3.347	85	7.087	180	0.571	14.5	4.961	2.250	3.347	85	7.087	180
GS 894 17	3.347	85	7.087	180	0.768	19.5	6.549	2.970	3.465	88	7.087	180
WS 894 17	3.347	85	7.087	180	0.768	19.5	6.549	2.970	3.347	85	7.087	180
AS 90120	3.543	90	4.724	120	0.039	1	0.086	0.039	3.543	90	4.724	120
GS 81118	3.543	90	4.724	120	0.256	6.5	0.516	0.234	3.622	92	4.724	120
LS 90120	3.543	90	4.724	120	0.256	6.5	0.516	0.234	3.543	90	4.724	120
WS 81118	3.543	90	4.724	120	0.256	6.5	0.516	0.234	3.543	90	4.724	120
GS 812 18	3.543	90	5.315	135	1.378	35	1.354	0.614	3.661	93	5.315	135
WS 812 18	3.543	90	5.315	135	1.378	35	1.354	0.614	3.543	90	5.315	135
GS 893 18	3.543	90	6.102	155	0.532	13.5	2.933	1.330	3.661	93	6.102	155
WS 893 18	3.543	90	6.102	155	0.532	13.5	2.933	1.330	3.543	90	6.102	155

Thrust Washers

FLAT RACE THRUST WASHERS SORTED BY SHAFT DIMENSION

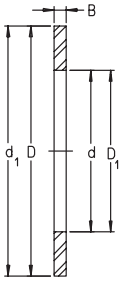

- Metric: AS, GS, LS, WS series
- Inch: TWA, TWB, TWC, TWD series
- Special Dimensions: F & FC
- Axial contact

For details on part numbers, descriptive suffixes and various technical references, please refer to front of this section.
For engineering or technical information contact your local sales representative or call Distributor Sales (800)523-6572.

PART NUMBER	SHAFT d inch	SHAFT d mm	HOUSING D inch	HOUSING D mm	THICKNESS B inch	THICKNESS B mm	WEIGHT pounds	WEIGHT kilograms	BORE D_1 inch	BORE D_1 mm	OD d_1 inch	OD d_1 mm
GS 874 18	3.543	90	7.480	190	0.630	16	6.086	2.760	3.661	93	7.480	190
WS 874 18	3.543	90	7.480	190	0.630	16	6.086	2.760	3.543	90	7.480	190
GS 894 18	3.543	90	7.480	190	0.787	20	7.607	3.450	3.661	93	7.480	190
WS 894 18	3.543	90	7.480	190	0.787	20	7.607	3.450	3.543	90	7.480	190
TWA6074	3.750	95.250	4.625	117.475	0.032	0.810	0.048	0.022	3.750	95.250	4.625	117.475
TWB6074	3.750	95.250	4.625	117.475	0.063	1.600	0.103	0.047	3.750	95.250	4.625	117.475
TWC6074	3.750	95.250	4.625	117.475	0.092	2.337	0.150	0.068	3.750	95.250	4.625	117.475
TWD6074	3.750	95.250	4.625	117.475	0.126	3.200	0.205	0.093	3.750	95.250	4.625	117.475
FC67298	3.898	99	5.984	152	0.062	1.570	0.283	0.128	3.898	99	5.984	152
AS 100135	3.937	100	5.315	135	0.039	1	0.110	0.050	3.937	100	5.315	135
GS 81120	3.937	100	5.315	135	0.276	7	0.772	0.350	4.016	102	5.315	135
LS 100135	3.937	100	5.315	135	0.276	7	0.772	0.350	3.937	100	5.315	135
WS 81120	3.937	100	5.315	135	0.276	7	0.772	0.350	3.937	100	5.315	135
GS 812 20	3.937	100	5.906	150	1.496	38	1.764	0.800	4.055	103	5.906	150
WS 812 20	3.937	100	5.906	150	1.496	38	1.764	0.800	3.937	100	5.906	150
GS 893 20	3.937	100	6.693	170	0.571	14.5	3.726	1.690	4.055	103	6.693	170
WS 893 20	3.937	100	6.693	170	0.571	14.5	3.726	1.690	3.937	100	6.693	170
GS 874 20	3.937	100	8.268	210	0.689	17.5	8.114	3.680	4.055	103	8.268	210
WS 874 20	3.937	100	8.268	210	0.689	17.5	8.114	3.680	3.937	100	8.268	210
GS 894 20	3.937	100	8.268	210	0.886	22.5	10.474	4.750	4.055	103	8.268	210
WS 894 20	3.937	100	8.268	210	0.886	22.5	10.474	4.750	3.937	100	8.268	210
TWA6681	4.125	104.775	5.063	128.588	0.032	0.810	0.056	0.025	4.125	104.775	5.063	128.588
TWB6681	4.125	104.775	5.063	128.588	0.063	1.600	0.121	0.055	4.125	104.775	5.063	128.588
TWC6681	4.125	104.775	5.063	128.588	0.092	2.337	0.176	0.080	4.125	104.775	5.063	128.588
TWD6681	4.125	104.775	5.063	128.588	0.126	3.200	0.241	0.109	4.125	104.775	5.063	128.588
AS 110145	4.331	110	5.709	145	0.039	1	0.121	0.055	4.331	110	5.709	145
GS 81122	4.331	110	5.709	145	0.276	7	0.849	0.385	4.409	112	5.709	145
LS 110145	4.331	110	5.709	145	0.276	7	0.849	0.385	4.331	110	5.709	145
WS 81122	4.331	110	5.709	145	0.276	7	0.849	0.385	4.331	110	5.709	145
GS 812 22	4.331	110	6.299	160	1.496	38	1.940	0.880	4.449	113	6.299	160
WS 812 22	4.331	110	6.299	160	1.496	38	1.940	0.880	4.331	110	6.299	160
GS 893 22	4.331	110	7.480	190	0.650	16.5	5.380	2.440	4.449	113	7.480	190
WS 893 22	4.331	110	7.480	190	0.650	16.5	5.380	2.440	4.331	110	7.480	190
GS 874 22	4.331	110	9.055	230	0.728	18.5	10.275	4.660	4.449	113	9.055	230
WS 874 22	4.331	110	9.055	230	0.728	18.5	10.275	4.660	4.331	110	9.055	230
GS 894 22	4.331	110	9.055	230	0.965	24.5	13.561	6.150	4.449	113	9.055	230
WS 894 22	4.331	110	9.055	230	0.965	24.5	13.561	6.150	4.331	110	9.055	230
AS 120155	4.724	120	6.102	155	0.039	1	0.130	0.059	4.724	120	6.102	155
GS 81124	4.724	120	6.102	155	0.276	7	0.915	0.415	4.803	122	6.102	155
LS 120155	4.724	120	6.102	155	0.276	7	0.915	0.415	4.724	120	6.102	155
WS 81124	4.724	120	6.102	155	0.276	7	0.915	0.415	4.724	120	6.102	155
GS 812 24	4.724	120	6.693	170	1.535	39	2.161	0.980	4.843	123	6.693	170
WS 812 24	4.724	120	6.693	170	1.535	39	2.161	0.980	4.724	120	6.693	170
GS 893 24	4.724	120	8.268	210	0.728	18.5	7.497	3.400	4.843	123	8.268	210
WS 893 24	4.724	120	8.268	210	0.728	18.5	7.497	3.400	4.724	120	8.268	210
GS 874 24	4.724	120	9.843	250	0.787	20	13.098	5.940	4.843	123	9.843	250

Thrust Washers

FLAT RACE THRUST WASHERS SORTED BY SHAFT DIMENSION

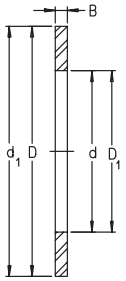

- Metric: AS, GS, LS, WS series
- Inch: TWA, TWB, TWC, TWD series
- Special Dimensions: F & FC
- Axial contact

For details on part numbers, descriptive suffixes and various technical references, please refer to front of this section.
For engineering or technical information contact your local sales representative or call Distributor Sales (800)523-6572.

PART NUMBER	SHAFT d inch	SHAFT d mm	HOUSING D inch	HOUSING D mm	THICKNESS B inch	THICKNESS B mm	WEIGHT pounds	WEIGHT kilograms	BORE D_1 inch	BORE D_1 mm	OD d_1 inch	OD d_1 mm
WS 874 24	4.724	120	9.843	250	0.787	20	13.098	5.940	4.724	120	9.843	250
GS 894 24	4.724	120	9.843	250	1.024	26	16.979	7.700	4.843	123	9.843	250
WS 894 24	4.724	120	9.843	250	1.024	26	16.979	7.700	4.724	120	9.843	250
AS 130170	5.118	130	6.693	170	0.039	1	0.143	0.065	5.118	130	6.693	170
GS 81126	5.118	130	6.693	170	0.354	9	1.462	0.663	5.197	132	6.693	170
LS 130170	5.118	130	6.693	170	0.354	9	1.462	0.663	5.118	130	6.693	170
WS 81126	5.118	130	6.693	170	0.354	9	1.462	0.663	5.118	130	6.693	170
GS 812 26	5.118	130	7.480	190	1.772	45	3.374	1.530	5.236	133	7.480	190
WS 812 26	5.118	130	7.480	190	1.772	45	3.374	1.530	5.118	130	7.362	187
GS 893 26	5.118	130	8.858	225	0.787	20	8.919	4.045	5.276	134	8.858	225
WS 893 26	5.118	130	8.858	225	0.787	20	8.919	4.045	5.118	130	8.858	225
GS 874 26	5.118	130	10.630	270	0.866	22	16.758	7.600	5.276	134	10.630	270
WS 874 26	5.118	130	10.630	270	0.866	22	16.758	7.600	5.118	130	10.630	270
GS 894 26	5.118	130	10.630	270	1.122	28.5	20.948	9.500	5.276	134	10.630	270
WS 894 26	5.118	130	10.630	270	1.122	28.5	20.948	9.500	5.118	130	10.630	270
55W07	5.502	139.751	6.570	166.878	0.126	3.200	0.353	0.160	5.502	139.751	6.570	166.878
AS 140180	5.512	140	7.087	180	0.039	1	0.174	0.079	5.512	140	7.087	180
GS 81128	5.512	140	7.087	180	0.374	9.5	1.652	0.749	5.591	142	7.087	180
LS 140180	5.512	140	7.087	180	0.374	9.5	1.652	0.749	5.512	140	7.087	180
WS 81128	5.512	140	7.087	180	0.374	9.5	1.652	0.749	5.512	140	7.008	178
GS 812 28	5.512	140	7.874	200	1.811	46	3.605	1.635	5.630	143	7.874	200
WS 812 28	5.512	140	7.874	200	1.811	46	3.605	1.635	5.512	140	7.756	197
GS 893 28	5.512	140	9.449	240	0.807	20.5	10.584	4.800	5.669	144	9.449	240
WS 893 28	5.512	140	9.449	240	0.807	20.5	10.584	4.800	5.512	140	9.449	240
GS 874 28	5.512	140	11.024	280	0.866	22	17.596	7.980	5.669	144	11.024	280
WS 874 28	5.512	140	11.024	280	0.866	22	17.596	7.980	5.512	140	11.024	280
GS 894 28	5.512	140	11.024	280	1.122	28.5	23.373	10.600	5.669	144	11.024	280
WS 894 28	5.512	140	11.024	280	1.122	28.5	23.373	10.600	5.512	140	11.024	280
AS 150190	5.906	150	7.480	190	0.039	1	0.185	0.084	5.906	150	7.480	190
GS 81130	5.906	150	7.480	190	0.374	9.5	1.755	0.796	5.984	152	7.480	190
LS 150190	5.906	150	7.480	190	0.374	9.5	1.755	0.796	5.906	150	7.480	190
WS 81130	5.906	150	7.480	190	0.374	9.5	1.755	0.796	5.906	150	7.402	188
GS 812 30	5.906	150	8.465	215	1.969	50	4.807	2.180	6.024	153	8.465	215
WS 812 30	5.906	150	8.465	215	1.969	50	4.807	2.180	5.906	150	8.347	212
GS 893 30	5.906	150	9.843	250	0.807	20.5	11.157	5.060	6.063	154	9.843	250
WS 893 30	5.906	150	9.843	250	0.807	20.5	11.157	5.060	5.906	150	9.843	250
GS 874 30	5.906	150	11.811	300	0.906	23	21.124	9.580	6.063	154	11.811	300
WS 874 30	5.906	150	11.811	300	0.906	23	21.124	9.580	5.906	150	11.811	300
GS 894 30	5.906	150	11.811	300	1.181	30	27.563	12.500	6.063	154	11.811	300
WS 894 30	5.906	150	11.811	300	1.181	30	27.563	12.500	5.906	150	11.811	300
AS 160200	6.299	160	7.874	200	0.039	1	0.196	0.089	6.299	160	7.874	200
GS 81132	6.299	160	7.874	200	0.374	9.5	1.857	0.842	6.378	162	7.874	200
LS 160200	6.299	160	7.874	200	0.374	9.5	1.857	0.842	6.299	160	7.874	200
WS 81132	6.299	160	7.874	200	0.374	9.5	1.857	0.842	6.299	160	7.795	198
GS 812 32	6.299	160	8.858	225	2.008	51	5.072	2.300	6.417	163	8.858	225
WS 812 32	6.299	160	8.858	225	2.008	51	5.072	2.300	6.299	160	8.740	222

Thrust Washers

FLAT RACE THRUST WASHERS SORTED BY SHAFT DIMENSION

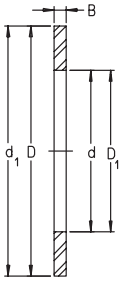

- Metric: AS, GS, LS, WS series
- Inch: TWA, TWB, TWC, TWD series
- Special Dimensions: F & FC
- Axial contact

For details on part numbers, descriptive suffixes and various technical references, please refer to front of this section.
For engineering or technical information contact your local sales representative or call Distributor Sales (800)523-6572.

PART NUMBER	SHAFT d inch	SHAFT d mm	HOUSING D inch	HOUSING D mm	THICKNESS B inch	THICKNESS B mm	WEIGHT pounds	WEIGHT kilograms	BORE D_1 inch	BORE D_1 mm	OD d_1 inch	OD d_1 mm
GS 893 32	6.299	160	10.630	270	0.906	23	14.840	6.730	6.457	164	10.630	270
WS 893 32	6.299	160	10.630	270	0.906	23	14.840	6.730	6.299	160	10.630	270
GS 874 32	6.299	160	12.598	320	1.004	25.5	26.681	12.100	6.457	164	12.598	320
WS 874 32	6.299	160	12.598	320	1.004	25.5	26.681	12.100	6.299	160	12.598	320
GS 894 32	6.299	160	12.598	320	1.240	31.5	32.634	14.800	6.457	164	12.598	320
WS 894 32	6.299	160	12.598	320	1.240	31.5	32.634	14.800	6.299	160	12.598	320
GS 811 34	6.693	170	8.465	215	0.394	10	2.426	1.100	6.772	172	8.465	215
WS 811 34	6.693	170	8.465	215	0.394	10	2.426	1.100	6.693	170	8.386	213
GS 812 34	6.693	170	9.449	240	2.165	55	6.395	2.900	6.811	173	9.449	240
WS 812 34	6.693	170	9.449	240	2.165	55	6.395	2.900	6.693	170	9.331	237
GS 893 34	6.693	170	11.024	280	0.906	23	15.501	7.030	6.850	174	11.024	280
WS 893 34	6.693	170	11.024	280	0.906	23	15.501	7.030	6.693	170	11.024	280
GS 874 34	6.693	170	13.386	340	1.063	27	31.973	14.500	6.850	174	13.386	340
WS 874 34	6.693	170	13.386	340	1.063	27	31.973	14.500	6.693	170	13.386	340
GS 894 34	6.693	170	13.386	340	1.358	34.5	40.793	18.500	6.850	174	13.386	340
WS 894 34	6.693	170	13.386	340	1.358	34.5	40.793	18.500	6.693	170	13.386	340
GS 811 36	7.087	180	8.858	225	0.394	10	2.470	1.120	7.205	183	8.858	225
WS 811 36	7.087	180	8.858	225	0.394	10	2.470	1.120	7.087	180	8.740	222
GS 812 36	7.087	180	9.843	250	2.205	56	6.902	3.130	7.205	183	9.843	250
WS 812 36	7.087	180	9.843	250	2.205	56	6.902	3.130	7.087	180	9.724	247
GS 893 36	7.087	180	11.811	300	0.965	24.5	19.184	8.700	7.244	184	11.811	300
WS 893 36	7.087	180	11.811	300	0.965	24.5	19.184	8.700	7.087	180	11.811	300
GS 874 36	7.087	180	14.173	360	1.122	28.5	37.706	17.100	7.244	184	14.173	360
WS 874 36	7.087	180	14.173	360	1.122	28.5	37.706	17.100	7.087	180	14.173	360
GS 894 36	7.087	180	14.173	360	1.437	36.5	46.967	21.300	7.244	184	14.173	360
WS 894 36	7.087	180	14.173	360	1.437	36.5	46.967	21.300	7.087	180	14.173	360
GS 811 38	7.480	190	9.449	240	0.433	11	3.197	1.450	7.598	193	9.449	240
WS 811 38	7.480	190	9.449	240	0.433	11	3.197	1.450	7.480	190	9.331	237
GS 812 38	7.480	190	10.630	270	2.441	62	8.456	3.835	7.638	194	10.630	270
WS 812 38	7.480	190	10.630	270	2.441	62	8.456	3.835	7.480	190	10.512	267
GS 893 38	7.480	190	12.598	320	1.024	26	23.439	10.630	7.677	195	12.598	320
WS 893 38	7.480	190	12.598	320	1.024	26	23.439	10.630	7.480	190	12.598	320
GS 874 38	7.480	190	14.961	380	1.161	29.5	43.659	19.800	7.677	195	14.961	380
WS 874 38	7.480	190	14.961	380	1.161	29.5	43.659	19.800	7.480	190	14.961	380
GS 894 38	7.480	190	14.961	380	1.516	38.5	56.448	25.600	7.677	195	14.961	380
WS 894 38	7.480	190	14.961	380	1.516	38.5	56.448	25.600	7.480	190	14.961	380
GS 811 40	7.874	200	9.843	250	0.433	11	3.33	1.510	7.992	203	9.843	250
WS 811 40	7.874	200	9.843	250	0.433	11	3.33	1.510	7.874	200	9.724	247
GS 812 40	7.874	200	11.024	280	2.441	62	9.724	4.410	8.032	204	11.024	280
WS 812 40	7.874	200	11.024	280	2.441	62	9.724	4.410	7.874	200	10.906	277
GS 893 40	7.874	200	13.386	340	1.122	28.5	27.717	12.570	8.071	205	13.386	340
WS 893 40	7.874	200	13.386	340	1.122	28.5	27.717	12.570	7.874	200	13.386	340
GS 874 40	7.874	200	15.748	400	1.221	31	50.715	23.000	8.071	205	15.748	400
WS 874 40	7.874	200	15.748	400	1.221	31	50.715	23.000	7.874	200	15.748	400
GS 894 40	7.874	200	15.748	400	1.614	41	64.607	29.300	8.071	205	15.748	400
WS 894 40	7.874	200	15.748	400	1.614	41	64.607	29.300	7.874	200	15.748	400

Thrust Washers

FLAT RACE THRUST WASHERS SORTED BY SHAFT DIMENSION

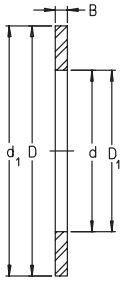

- Metric: AS, GS, LS, WS series
- Inch: TWA, TWB, TWC, TWD series
- Special Dimensions: F & FC
- Axial contact

For details on part numbers, descriptive suffixes and various technical references, please refer to front of this section.
For engineering or technical information contact your local sales representative or call Distributor Sales (800)523-6572.

PART NUMBER	SHAFT d inch	SHAFT d mm	HOUSING D inch	HOUSING D mm	THICKNESS B inch	THICKNESS B mm	WEIGHT pounds	WEIGHT kilograms	BORE D_1 inch	BORE D_1 mm	OD d_1 inch	OD d_1 mm
GS 811 44	8.661	220	10.630	270	0.433	11	3.506	1.590	8.780	223	10.630	270
WS 811 44	8.661	220	10.630	270	0.433	11	3.506	1.590	8.661	220	10.512	267
GS 812 44	8.661	220	11.811	300	2.480	63	10.474	4.750	8.819	224	11.811	300
WS 812 44	8.661	220	11.811	300	2.480	63	10.474	4.750	8.661	220	11.693	297
GS 894 44	8.661	220	16.535	420	1.614	41	71.001	32.200	8.858	225	16.535	420
WS 894 44	8.661	220	16.535	420	1.614	41	71.001	32.200	8.661	220	16.535	420
GS 811 48	9.449	240	11.811	300	0.532	13.5	5.667	2.570	9.567	243	11.811	300
WS 811 48	9.449	240	11.811	300	0.532	13.5	5.667	2.570	9.449	240	11.693	297
GS 812 48	9.449	240	13.386	340	3.071	78	17.971	8.150	9.606	244	13.386	340
WS 812 48	9.449	240	13.386	340	3.071	78	17.971	8.150	9.449	240	13.189	335
GS 894 48	9.449	240	17.323	440	1.614	41	75.632	34.300	9.646	245	17.323	440
WS 894 48	9.449	240	17.323	440	1.614	41	75.632	34.300	9.449	240	17.323	440
GS 811 52	10.236	260	12.598	320	0.532	13.5	6.097	2.765	10.354	263	12.598	320
WS 811 52	10.236	260	12.598	320	0.532	13.5	6.097	2.765	10.236	260	12.480	317
GS 812 52	10.236	260	14.173	360	3.110	79	19.625	8.900	10.394	264	14.173	360
WS 812 52	10.236	260	14.173	360	3.110	79	19.625	8.900	10.236	260	13.976	355
GS 894 52	10.236	260	18.898	480	1.732	44	97.571	44.250	10.433	265	18.898	480
WS 894 52	10.236	260	18.898	480	1.732	44	97.571	44.250	10.236	260	18.898	480
GS 811 56	11.024	280	13.780	350	0.610	15.5	8.048	3.650	11.142	283	13.780	350
WS 811 56	11.024	280	13.780	350	0.610	15.5	8.048	3.650	11.024	280	13.661	347
GS 812 56	11.024	280	14.961	380	3.150	80	21.499	9.750	11.181	284	14.961	380
WS 812 56	11.024	280	14.961	380	3.150	80	21.499	9.750	11.024	280	14.764	375
GS 894 56	11.024	280	20.472	520	1.909	48.5	122.598	55.600	11.221	285	20.472	520
WS 894 56	11.024	280	20.472	520	1.909	48.5	122.598	55.600	11.024	280	20.472	520
GS 811 60	11.811	300	14.961	380	0.728	18.5	13.054	5.920	11.969	304	14.961	380
WS 811 60	11.811	300	14.961	380	0.728	18.5	13.054	5.920	11.811	300	14.803	376
GS 812 60	11.811	300	16.535	420	3.740	95	33.516	15.200	11.969	304	16.535	420
WS 812 60	11.811	300	16.535	420	3.740	95	33.516	15.200	11.811	300	16.339	415
GS 894 60	11.811	300	21.260	540	1.909	48.5	176.731	80.150	12.008	305	21.260	540
WS 894 60	11.811	300	21.260	540	1.909	48.5	176.731	80.150	11.811	300	21.260	540
GS 811 64	12.598	320	15.748	400	0.748	19	14.002	6.350	12.756	324	15.748	400
WS 811 64	12.598	320	15.748	400	0.748	19	14.002	6.350	12.598	320	15.591	396
GS 812 64	12.598	320	17.323	440	3.740	95	35.170	15.950	12.795	325	17.323	440
WS 812 64	12.598	320	17.323	440	3.740	95	35.170	15.950	12.598	320	17.126	435
GS 811 68	13.386	340	16.535	420	0.768	19.5	15.369	6.970	13.543	344	16.535	420
WS 811 68	13.386	340	16.535	420	0.768	19.5	15.369	6.970	13.386	340	16.378	416
GS 812 68	13.386	340	18.110	460	3.780	96	39.139	17.750	13.583	345	18.110	460
WS 812 68	13.386	340	18.110	460	3.780	96	39.139	17.750	13.386	340	17.913	455
GS 811 72	14.173	360	17.323	440	0.787	20	15.380	6.975	14.331	364	17.323	440
WS 811 72	14.173	360	17.323	440	0.787	20	15.380	6.975	14.173	360	17.165	436
GS 812 72	14.173	360	19.685	500	4.331	110	53.361	24.200	14.370	365	19.685	500
WS 812 72	14.173	360	19.685	500	4.331	110	53.361	24.200	14.173	360	19.488	495
GS 811 76	14.961	380	18.110	460	0.787	20	17.442	7.910	15.118	384	18.110	460
WS 811 76	14.961	380	18.110	460	0.787	20	17.442	7.910	14.961	380	17.953	456
GS 812 76	14.961	380	20.472	520	4.409	112	57.771	26.200	15.158	385	20.472	520
WS 812 76	14.961	380	20.472	520	4.409	112	57.771	26.200	14.961	380	20.276	515

Thrust Washers

FLAT RACE THRUST WASHERS SORTED BY SHAFT DIMENSION

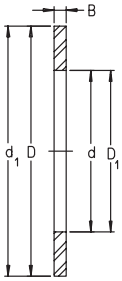

- Metric: AS, GS, LS, WS series
- Inch: TWA, TWB, TWC, TWD series
- Special Dimensions: F & FC
- Axial contact

For details on part numbers, descriptive suffixes and various technical references, please refer to front of this section.
For engineering or technical information contact your local sales representative or call Distributor Sales (800)523-6572.

PART NUMBER	SHAFT d inch	SHAFT d mm	HOUSING D inch	HOUSING D mm	THICKNESS B inch	THICKNESS B mm	WEIGHT pounds	WEIGHT kilograms	BORE D_1 inch	BORE D_1 mm	OD d_1 inch	OD d_1 mm
GS 811 80	15.748	400	18.898	480	0.787	20	18.213	8.260	15.906	404	18.898	480
WS 811 80	15.748	400	18.898	480	0.787	20	18.213	8.260	15.748	400	18.740	476
GS 812 80	15.748	400	21.260	540	4.409	112	60.197	27.300	15.945	405	21.260	540
WS 812 80	15.748	400	21.260	540	4.409	112	60.197	27.300	15.748	400	21.063	535
GS 811 84	16.535	420	19.685	500	0.787	20	19.073	8.650	16.693	424	19.685	500
WS 811 84	16.535	420	19.685	500	0.787	20	19.073	8.650	16.535	420	19.488	495
GS 812 84	16.535	420	22.835	580	5.118	130	76.734	34.800	16.732	425	22.835	580
WS 812 84	16.535	420	22.835	580	5.118	130	76.734	34.800	16.535	420	22.638	575
GS 811 88	17.323	440	21.260	540	0.945	24	30.760	13.950	17.480	444	21.260	540
WS 811 88	17.323	440	21.260	540	0.945	24	30.760	13.950	17.323	440	21.063	535
GS 812 88	17.323	440	23.622	600	5.118	130	89.303	40.500	17.520	445	23.622	600
WS 812 88	17.323	440	23.622	600	5.118	130	89.303	40.500	17.323	440	23.425	595
GS 811 92	18.110	460	22.047	560	0.945	24	32.171	14.590	18.268	464	22.047	560
WS 811 92	18.110	460	22.047	560	0.945	24	32.171	14.590	18.110	460	21.850	555
GS 812 92	18.110	460	24.409	620	5.118	130	98.784	44.800	18.307	465	24.409	620
WS 812 92	18.110	460	24.409	620	5.118	130	98.784	44.800	18.110	460	24.213	615
GS 811 96	18.898	480	22.835	580	0.945	24	33.296	15.100	19.055	484	22.835	580
WS 811 96	18.898	480	22.835	580	0.945	24	33.296	15.100	18.898	480	22.638	575
GS 812 96	18.898	480	25.591	650	5.315	135	104.186	47.250	19.095	485	25.591	650
WS 812 96	18.898	480	25.591	650	5.315	135	104.186	47.250	18.898	480	25.394	645
GS811/500	19.685	500	23.622	600	0.945	24	34.354	15.580	19.882	505	23.622	600
WS811/500	19.685	500	23.622	600	0.945	24	34.354	15.580	19.685	500	23.425	595
GS812/500	19.685	500	26.378	670	5.315	135	108.045	49	19.882	505	26.378	670
WS812/500	19.685	500	26.378	670	5.315	135	108.045	49	19.685	500	26.181	665
GS811/530	20.866	530	25.197	640	1.004	25.5	43.549	19.750	21.063	535	25.197	640
WS811/530	20.866	530	25.197	640	1.004	25.5	43.549	19.750	20.866	530	25.000	635
GS812/530	20.866	530	27.953	710	5.512	140	122.929	55.750	21.063	535	27.953	710
WS812/530	20.866	530	27.953	710	5.512	140	122.929	55.750	20.866	530	27.756	705
ASS560X604X2,3A	22.047	560	23.780	604	0.091	2.3	1.610	0.730	22.047	560	23.780	604
GS811/560	22.047	560	26.378	670	1.004	25.5	45.313	20.550	22.244	565	26.378	670
WS811/560	22.047	560	26.378	670	1.004	25.5	45.313	20.550	22.047	560	26.181	665
GS812/560	22.047	560	29.528	750	5.906	150	154.791	70.200	22.244	565	29.528	750
WS812/560	22.047	560	29.528	750	5.906	150	154.791	70.200	22.047	560	29.331	745
GS811/600	23.622	600	27.953	710	1.004	25.5	48.290	21.900	23.819	605	27.953	710
WS811/600	23.622	600	27.953	710	1.004	25.5	48.290	21.900	23.622	600	27.756	705
GS812/600	23.622	600	31.496	800	6.299	160	202.199	91.700	23.819	605	31.496	800
WS812/600	23.622	600	31.496	800	6.299	160	202.199	91.700	23.622	600	31.299	795

Roller Thrust Bearings
811 SERIES

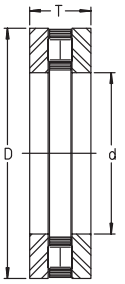

- Metric series
- Axial cylindrical roller bearings
- Cage assembly with washers
- High axial loads
- Speed limit shown is for oil lubrication

- Part numbers shown in bold may **not** be readily available, please call to check availability.

For details on part numbers, descriptive suffixes and various technical references, please refer to front of this section.
For engineering or technical information contact your local sales representative or call Distributor Sales (800)523-6572.

PART NUMBER	SHAFT d inch	SHAFT d mm	OD D inch	OD D mm	WIDTH T inch	WIDTH T mm	WEIGHT lbs	WEIGHT kg	DYN. CAP. AXIAL lbf	DYN. CAP. AXIAL N	STAT. CAP. AXIAL lbf	STAT. CAP. AXIAL N	SPEED LIMIT rpm
811 02 TN	0.591	15	1.102	28	0.354	9	0.053	0.024	3200	14400	6400	28500	13000
811 03 TN	0.669	17	1.181	30	0.354	9	0.060	0.027	3600	15900	7500	33500	12000
811 04 TN	0.787	20	1.378	35	0.394	10	0.082	0.037	5600	24900	11900	53000	10000
811 05 TN	0.984	25	1.654	42	0.433	11	0.117	0.053	7500	33500	17100	76000	8500
811 06 TN	1.181	30	1.850	47	0.433	11	0.126	0.057	8000	35500	19300	86000	7500
811 07 TN	1.378	35	2.047	52	0.472	12	0.161	0.073	8800	39000	22700	101000	6500
811 08 TN	1.575	40	2.362	60	0.512	13	0.232	0.105	12600	56000	33000	148000	6000
811 09 TN	1.772	45	2.559	65	0.551	14	0.287	0.13	13300	59000	37000	163000	5000
811 10 TN	1.969	50	2.756	70	0.551	14	0.309	0.14	13700	61000	40000	177000	4800
811 11 TN	2.165	55	3.071	78	0.630	16	0.481	0.218	20200	90000	67000	300000	4300
811 12 TN	2.362	60	3.346	85	0.669	17	0.587	0.266	23200	103000	71000	315000	4000
811 13 TN	2.559	65	3.543	90	0.709	18	0.684	0.31	24100	107000	76000	340000	3700
811 14 TN	2.756	70	3.740	95	0.709	18	0.732	0.332	25000	111000	82000	365000	3500
811 15 TN	2.953	75	3.937	100	0.748	19	0.867	0.393	24100	107000	79000	350000	3300
811 16 TN	3.150	80	4.134	105	0.748	19	0.882	0.4	23800	106000	79000	350000	3100
811 17 TN	3.347	85	4.331	110	0.748	19	0.926	0.42	25200	112000	87000	385000	3000
811 18 TN	3.543	90	4.724	120	0.866	22	1.367	0.62	32000	141000	105000	465000	2700
811 20 TN	3.937	100	5.315	135	0.984	25	2.095	0.95	45000	199000	146000	650000	2500
811 22 TN	4.331	110	5.709	145	0.984	25	2.293	1.04	47000	207000	157000	700000	2300
811 24 TN	4.724	120	6.102	155	0.984	25	2.470	1.12	48000	214000	171000	790000	2100
811 26 TN	5.118	130	6.693	170	1.181	30	3.682	1.67	56000	250000	202000	900000	1900
811 28 TN	5.512	140	7.087	180	1.220	31	4.190	1.9	58000	260000	216000	960000	1800
811 30 TN	5.906	150	7.480	190	1.220	31	4.454	2.02	61000	270000	229000	1020000	1700
811 32	6.299	160	7.874	200	1.220	31	4.827	2.189	61000	270000	236000	1050000	1600
811 34	6.693	170	8.465	215	1.339	34	6.505	2.95	81000	360000	310000	1380000	1500
811 36	7.087	180	8.858	225	1.339	34	6.703	3.04	76000	340000	292000	1300000	1400
811 38	7.480	190	9.449	240	1.457	37	8.467	3.84	87000	385000	337000	1500000	1300
811 40	7.874	200	9.843	250	1.457	37	8.820	4.00	88000	390000	348000	1550000	1300
811 44	8.661	220	10.630	270	1.457	37	9.923	4.50	94000	420000	389000	1730000	1200
811 48	9.449	240	11.811	300	1.772	45	15.986	7.25	135000	600000	562000	2500000	1100
811 52	10.236	260	12.598	320	1.772	45	17.265	7.83	139000	620000	596000	2650000	1000
811 56	11.024	280	13.780	350	2.087	53	22.712	10.30	193000	860000	821000	3650000	900
811 60	11.811	300	14.961	380	2.441	62	36.757	16.67	238000	1060000	1012000	4500000	850
811 64	12.598	320	15.748	400	2.480	63	39.293	17.82	247000	1100000	1068000	4750000	800
811 68	13.386	340	16.535	420	2.520	64	42.887	19.45	254000	1130000	1124000	5000000	750
811 72	14.173	360	17.323	440	2.559	65	42.998	19.50	256000	1140000	1147000	5100000	700
811 76	14.961	380	18.110	460	2.559	65	48.290	21.90	263000	1170000	1214000	5400000	700
811 80	15.748	400	18.898	480	2.559	65	50.583	22.94	270000	1200000	1281000	5700000	650
811 84	16.535	420	19.685	500	2.559	65	52.479	23.80	277000	1230000	1326000	5900000	650
811 88	17.323	440	21.260	540	3.150	80	86.921	39.42	400000	1780000	1844000	8200000	600
811 92	18.110	460	22.047	560	3.150	80	90.581	41.08	414000	1840000	1956000	8700000	550
811 96	18.898	480	22.835	580	3.150	80	94.264	42.75	418000	1860000	2001000	8900000	550
811/500	19.685	500	23.622	600	3.150	80	97.218	44.09	429000	1910000	2091000	9300000	500
811/530	20.866	530	25.197	640	3.346	85	122.333	55.48	481000	2140000	2361000	10500000	490
811/560	22.047	560	26.378	670	3.346	85	127.647	57.89	492000	2190000	2473000	11000000	470
811/600	23.622	600	27.953	710	3.346	85	136.159	61.75	501000	2230000	2585000	11500000	440

Roller Thrust Bearings
812 SERIES

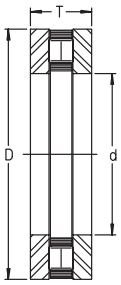

- Metric series
- Axial cylindrical roller bearings
- Cage assembly with washers
- High axial loads
- Speed limit shown is for oil lubrication

- Part numbers shown in bold may **not** be readily available, please call to check availability.

For details on part numbers, descriptive suffixes and various technical references, please refer to front of this section.
For engineering or technical information contact your local sales representative or call Distributor Sales (800)523-6572.

PART NUMBER	SHAFT d inch	SHAFT d mm	OD D inch	OD D mm	WIDTH T inch	WIDTH T mm	WEIGHT lbs	WEIGHT kg	DYN. CAP. lbf	DYN. CAP. kN	STAT. CAP. lbf	STAT. CAP. kN	SPEED LIMIT rpm
812 06 TN	1.181	30	2.047	52	0.630	16	0.271	0.123	14400	64	31700	141	7000
812 07 TN	1.378	35	2.441	62	0.709	18	0.430	0.195	18000	80	44700	199	6000
812 08 TN	1.575	40	2.677	68	0.748	19	0.549	0.249	24100	107	60000	265	5500
812 09 TN	1.772	45	2.874	73	0.787	20	0.633	0.287	23600	105	60000	265	4900
812 10 TN	1.969	50	3.071	78	0.866	22	0.785	0.356	26300	117	71000	315	4500
812 11 TN	2.165	55	3.543	90	0.984	25	1.252	0.568	34600	154	91000	405	4000
812 12 TN	2.362	60	3.740	95	1.024	26	1.416	0.642	38700	172	108000	480	3700
812 13 TN	2.559	65	3.937	100	1.063	27	1.590	0.721	39800	177	112000	500	3500
812 14 TN	2.756	70	4.134	105	1.063	27	1.693	0.768	42000	187	124000	550	3300
812 15 TN	2.953	75	4.331	110	1.063	27	1.764	0.800	38700	172	112000	500	3100
812 16 TN	3.150	80	4.528	115	1.102	28	1.985	0.900	45200	201	142000	630	3000
812 17 TN	3.347	85	4.921	125	1.220	31	2.778	1.260	48800	217	148000	660	2700
812 18 TN	3.543	90	5.315	135	1.378	35	3.903	1.770	65000	290	200000	890	2600
812 20 TN	3.937	100	5.906	150	1.496	38	4.851	2.200	76000	340	243000	1080	2300
812 22 TN	4.331	110	6.299	160	1.496	38	5.049	2.290	73000	325	232000	1030	2100
812 24 TN	4.724	120	6.693	170	1.535	39	5.601	2.540	76000	340	252000	1120	2000
812 26	5.118	130	7.480	190	1.772	45	9.270	4.204	108000	480	342000	1520	1800
812 28	5.512	140	7.874	200	1.811	46	10.070	4.567	100000	445	326000	1450	1700
812 30	5.906	150	8.465	215	1.969	50	12.979	5.886	133000	590	436000	1940	1600
812 32	6.299	160	8.858	225	2.008	51	13.678	6.203	135000	600	456000	2030	1500
812 34	6.693	170	9.449	240	2.165	55	16.956	7.690	153000	680	530000	2340	1400
812 36	7.087	180	9.843	250	2.205	56	18.169	8.240	155000	690	550000	2440	1300
812 38	7.480	190	10.630	270	2.441	62	22.932	10.400	198000	880	670000	3000	1300
812 40	7.874	200	11.024	280	2.441	62	26.262	11.910	202000	900	710000	3150	1200
812 44	8.661	220	11.811	300	2.480	63	28.334	12.850	211000	940	780000	3450	1100
812 48	9.449	240	13.386	340	3.071	78	48.400	21.950	308000	1370	1120000	5000	1000
812 52	10.236	260	14.173	360	3.110	79	52.700	23.900	324000	1440	1210000	5400	950
812 56	11.024	280	14.961	380	3.150	80	57.110	25.900	328000	1460	1260000	5600	850
812 60	11.811	300	16.535	420	3.740	95	89.413	40.550	434000	1930	1640000	7300	800
812 64	12.598	320	17.323	440	3.740	95	93.933	42.600	441000	1960	1710000	7600	750
812 68	13.386	340	18.110	460	3.780	96	103.084	46.750	463000	2060	1870000	8300	700
812 72	14.173	360	19.685	500	4.331	110	144.758	65.650	610000	2700	2380000	10600	650
812 76	14.961	380	20.472	520	4.409	112	154.571	70.100	620000	2750	2470000	11000	650
812 80	15.748	400	21.260	540	4.409	112	161.186	73.100	630000	2800	2560000	11400	600
812 84	16.535	420	22.835	580	5.118	130	210.798	95.600	790000	3500	3190000	14200	600
812 88	17.323	440	23.622	600	5.118	130	238.581	108.200	810000	3600	3330000	14800	550
812 92	18.110	460	24.409	620	5.118	130	259.749	117.800	820000	3650	3460000	15400	550
812 96	18.898	480	25.591	650	5.315	135	282.902	128.300	920000	4100	3820000	17000	500
812/500	19.685	500	26.378	670	5.315	135	293.265	133.000	930000	4150	3960000	17600	490
812/530	20.866	530	27.953	710	5.512	140	339.019	153.750	1070000	4750	4560000	20300	460
812/560	22.047	560	29.528	750	5.906	150	413.217	187.400	1090000	4850	4740000	21100	440
812/600	23.622	600	31.496	800	6.299	160	529.531	240.150	1240000	5500	5400000	24000	410

Roller Thrust Bearings
893 SERIES

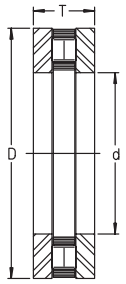

- Metric series
- Axial cylindrical roller bearings
- Cage assembly with washers
- Very high axial loads
- Speed limit shown is for oil lubrication

- Part numbers shown in bold may **not** be readily available, please call to check availability.

For details on part numbers, descriptive suffixes and various technical references, please refer to front of this section.
For engineering or technical information contact your local sales representative or call Distributor Sales (800)523-6572.

PART NUMBER	SHAFT d inch	SHAFT d mm	OD D inch	OD D mm	WIDTH T inch	WIDTH T mm	WEIGHT lbs	WEIGHT kg	DYN. CAP. lbf	DYN. CAP. kN	STAT. CAP. lbf	STAT. CAP. kN	SPEED LIMIT rpm
893 06 TN	1.181	30	2.362	60	0.709	18	0.529	0.240	15500	69	44500	197	6500
893 07 TN	1.378	35	2.677	68	0.787	20	0.750	0.340	18000	80	53000	237	5500
893 08 TN	1.575	40	3.071	78	0.866	22	1.067	0.484	27500	122	87000	385	4900
893 09 TN	1.772	45	3.346	85	0.945	24	1.356	0.615	31500	139	100000	445	4400
893 10 TN	1.969	50	3.740	95	1.063	27	1.956	0.887	37500	167	126000	560	4000
893 11 TN	2.165	55	4.134	105	1.181	30	2.602	1.180	41500	184	135000	600	3600
893 12 TN	2.362	60	4.331	110	1.181	30	2.778	1.260	44000	196	151000	670	3400
893 13 TN	2.559	65	4.528	115	1.181	30	2.933	1.330	43500	194	151000	670	3200
893 14 TN	2.756	70	4.921	125	1.339	34	4.013	1.820	54000	239	187000	830	3000
893 15 TN	2.953	75	5.315	135	1.417	36	4.917	2.230	64000	285	227000	1010	2700
893 16 TN	3.150	80	5.512	140	1.417	36	5.226	2.370	69000	305	250000	1110	2600
893 17	3.347	85	5.906	150	1.535	39	6.615	3.000	73000	325	255000	1140	2500
893 18	3.543	90	6.102	155	1.535	39	7.232	3.280	74000	330	270000	1200	2400
893 20 TN	3.937	100	6.693	170	1.654	42	8.952	4.060	85000	380	315000	1400	2100
893 22 M	4.331	110	7.480	190	1.890	48	13.296	6.030	112000	500	420000	1870	1900
893 24	4.724	120	8.268	210	2.126	54	18.787	8.520	144000	640	545000	2420	1700
893 26	5.118	130	8.858	225	2.283	58	22.050	10.000	160000	710	605000	2700	1600
893 28	5.512	140	9.449	240	2.362	60	26.438	11.990	184000	820	720000	3200	1500
893 30	5.906	150	9.843	250	2.362	60	27.849	12.630	189000	840	755000	3350	1400
893 32	6.299	160	10.630	270	2.638	67	36.625	16.610	218000	970	875000	3900	1300
893 34	6.693	170	11.024	280	2.638	67	38.279	17.360	225000	1000	901000	4050	1300
893 36	7.087	180	11.811	300	2.874	73	48.753	22.110	285000	1260	1145000	5100	1200
893 38	7.480	190	12.598	320	3.071	78	59.248	26.870	320000	1420	1280000	5700	1100
893 40	7.874	200	13.386	340	3.346	85	70.406	31.930	365000	1630	1485000	6600	1100

Metric Roller Thrust Bearing Assemblies & Components

- 811, 812 series, single row
- 874 series multi-row
- 893, 894 series, double row

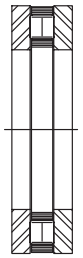

811 SHOWN
FOR REFERENCE

For details on part numbers, descriptive suffixes and various technical references, please refer to front of this section.
For engineering or technical information contact your local sales representative or call Distributor Sales (800)523-6572.

ASSEMBLY PART NUMBER	CAGE PART NUMBER	HOUSING WASHER PART NUMBER	SHAFT WASHER PART NUMBER
811 02 TN	K 811 02 TN	GS 811 02	WS 811 02
811 03 TN	K 811 03 TN	GS 811 03	WS 811 03
811 04 TN	K 811 04 TN	GS 811 04	WS 811 04
811 05 TN	K 811 05 TN	GS 811 05	WS 811 05
811 06 TN	K 811 06 TN	GS 811 06	WS 811 06
811 07 TN	K 811 07 TN	GS 811 07	WS 811 07
811 08 TN	K 811 08 TN	GS 811 08	WS 811 08
811 09 TN	K 811 09 TN	GS 811 09	WS 811 09
811 10 TN	K 811 10 TN	GS 811 10	WS 811 10
811 11 TN	K 811 11 TN	GS 811 11	WS 811 11
811 12 TN	K 811 12 TN	GS 811 12	WS 811 12
811 13 TN	K 811 13 TN	GS 811 13	WS 811 13
811 14 TN	K 811 14 TN	GS 811 14	WS 811 14
811 15 TN	K 811 15 TN	GS 811 15	WS 811 15
811 16 TN	K 811 16 TN	GS 811 16	WS 811 16
811 17 TN	K 811 17 TN	GS 811 17	WS 811 17
811 18 TN	K 811 18 TN	GS 811 18	WS 811 18
811 20 TN	K 811 20 TN	GS 811 20	WS 811 20
811 22 TN	K 811 22 TN	GS 811 22	WS 811 22
811 24 TN	K 811 24	GS 811 24	WS 811 24
811 26 TN	K 811 26	GS 811 26	WS 811 26
811 28 TN	K 811 28	GS 811 28	WS 811 28
811 30 TN	K 811 30	GS 811 30	WS 811 30
811 32	K 811 32	GS 811 32	WS 811 32
811 34	K 811 34	GS 811 34	WS 811 34
811 36	K 811 36	GS 811 36	WS 811 36
811 38	K 811 38	GS 811 38	WS 811 38
811 40	K 811 40	GS 811 40	WS 811 40
811 44	K 811 44	GS 811 44	WS 811 44
811 48	K 811 48	GS 811 48	WS 811 48
811 52	K 811 52	GS 811 52	WS 811 52
811 56	K 811 56	GS 811 56	WS 811 56
811 60	K 811 60	GS 811 60	WS 811 60
811 64	K 811 64	GS 811 64	WS 811 64
811 68	K 811 68	GS 811 68	WS 811 68
811 72	K 811 72	GS 811 72	WS 811 72
811 76	K 811 76	GS 811 76	WS 811 76
811 80	K 811 80	GS 811 80	WS 811 80
811 84	K 811 84	GS 811 84	WS 811 84
811 88	K 811 88	GS 811 88	WS 811 88
811 92	K 811 92	GS 811 92	WS 811 92
811 96	K 811 96	GS 811 96	WS 811 96
811/500	K811/500	GS811/500	WS811/500
811/530	K811/530	GS811/530	WS811/530
811/560	K811/560	GS811/560	WS811/560
811/600	K811/600	GS811/600	WS811/600
812 06 TN	K812 06 TN	GS 812 06	WS 812 06

Metric Roller Thrust Bearing Assemblies & Components

- 811, 812 series, single row
- 874 series multi-row
- 893, 894 series, double row

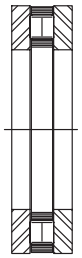

811 SHOWN
FOR REFERENCE

For details on part numbers, descriptive suffixes and various technical references, please refer to front of this section.
For engineering or technical information contact your local sales representative or call Distributor Sales (800)523-6572.

ASSEMBLY PART NUMBER	CAGE PART NUMBER	HOUSING WASHER PART NUMBER	SHAFT WASHER PART NUMBER
812 07 TN	K812 07 TN	GS 812 07	WS 812 07
812 08 TN	K812 0K8 TN	GS 812 08	WS 812 08
812 09 TN	K812 09 TN	GS 812 09	WS 812 09
812 10 TN	K812 10 TN	GS 812 10	WS 812 10
812 11 TN	K812 11 TN	GS 812 11	WS 812 11
812 12 TN	K812 12 TN	GS 812 12	WS 812 12
812 13 TN	K812 13 TN	GS 812 13	WS 812 13
812 14 TN	K812 14 TN	GS 812 14	WS 812 14
812 15 TN	K812 15 TN	GS 812 15	WS 812 15
812 16 TN	K812 16 TN	GS 812 16	WS 812 16
812 17 TN	K812 17 TN	GS 812 17	WS 812 17
812 18 TN	K812 1K8 TN	GS 812 18	WS 812 18
812 20 TN	K812 20 TN	GS 812 20	WS 812 20
812 22 TN	K812 22 TN	GS 812 22	WS 812 22
812 24 TN	K812 24 TN	GS 812 24	WS 812 24
812 26	K812 26	GS 812 26	WS 812 26
812 28	K812 2K8	GS 812 28	WS 812 28
812 30	K812 30	GS 812 30	WS 812 30
812 32	K812 32	GS 812 32	WS 812 32
812 34	K812 34	GS 812 34	WS 812 34
812 36	K812 36	GS 812 36	WS 812 36
812 38	K812 3K8	GS 812 38	WS 812 38
812 40	K812 40	GS 812 40	WS 812 40
812 44	K812 44	GS 812 44	WS 812 44
812 48	K812 4K8	GS 812 48	WS 812 48
812 52	K812 52	GS 812 52	WS 812 52
812 56	K812 56	GS 812 56	WS 812 56
812 60	K812 60	GS 812 60	WS 812 60
812 64	K812 64	GS 812 64	WS 812 64
812 68	K812 6K8	GS 812 68	WS 812 68
812 72	K812 72	GS 812 72	WS 812 72
812 76	K812 76	GS 812 76	WS 812 76
812 80	K812 K80	GS 812 80	WS 812 80
812 84	K812 K84	GS 812 84	WS 812 84
812 88	K812 K8K8	GS 812 88	WS 812 88
812 92	K812 92	GS 812 92	WS 812 92
812 96	K812 96	GS 812 96	WS 812 96
812/500	K812/500	GS812/500	WS812/500
812/530	K812/530	GS812/530	WS812/530
812/560	K812/560	GS812/560	WS812/560
812/600	K812/600	GS812/600	WS812/600
893 06 TN	K 893 06 TN	GS 893 06	WS 893 06
893 07 TN	K 893 07 TN	GS 893 07	wS 893 07
893 08 TN	K 893 08 TN	GS 893 08	WS 893 08
893 09 TN	K 893 09 TN	GS 893 09	WS 893 09
893 10 TN	K 893 10 TN	GS 893 10	WS 893 10
893 11 TN	K 893 11 TN	GS 893 11	WS 893 11

Metric Roller Thrust Bearing Assemblies & Components

- 811, 812 series, single row
- 874 series multi-row
- 893, 894 series, double row

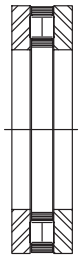

811 SHOWN FOR REFERENCE

For details on part numbers, descriptive suffixes and various technical references, please refer to front of this section.
For engineering or technical information contact your local sales representative or call Distributor Sales (800)523-6572.

ASSEMBLY PART NUMBER	CAGE PART NUMBER	HOUSING WASHER PART NUMBER	SHAFT WASHER PART NUMBER
893 12 TN	K 893 12 TN	GS 893 12	WS 893 12
893 13 TN	K 893 13 TN	GS 893 13	WS 893 13
893 14 TN	K 893 14 TN	GS 893 14	WS 893 14
893 15 TN	K 893 15 TN	GS 893 15	WS 893 15
893 16 TN	K 893 16 TN	GS 893 16	WS 893 16
893 17	K 893 17	GS 893 17	WS 893 17
893 18	K 893 18	GS 893 18	WS 893 18
893 20 TN	K 893 20	GS 893 20	WS 893 20
893 22	K 893 22	GS 893 22	WS 893 22
893 24	K 893 24	GS 893 24	WS 893 24
893 26	K 893 26	GS 893 26	WS 893 26
893 28	K 893 28	GS 893 28	WS 893 28
893 30	K 893 30	GS 893 30	WS 893 30
893 32	K 893 32	GS 893 32	WS 893 32
893 34	K 893 34	GS 893 34	WS 893 34
893 36	K 893 36	GS 893 36	WS 893 36
893 38	K 893 38	GS 893 38	WS 893 38
893 40	K 893 40	GS 893 40	WS 893 40

Piloted Thrust Bearings

AXW SERIES

- Consisting of AXK axial needle roller cage and centering spigot on washer for piloting cage
- Speed limit shown is for oil lubrication

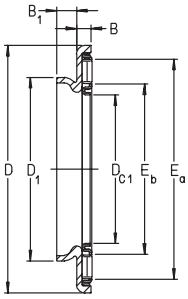

For details on part numbers, descriptive suffixes and various technical references, please refer to front of this section.
For engineering or technical information contact your local sales representative or call Distributor Sales (800)523-6572.

PART NUMBER	SHAFT D_{c1} inch	SHAFT D_{c1} mm	OD. D inch	OD D mm	WIDTH B_1 inch	WIDTH B_1 mm	WEIGHT lbs	WEIGHT g	DYN. CAP. C lbf	DYN. CAP. C kN	STAT. CAP. C_0 lbf	STAT. CAP. C_0 kN
AXW 10	0.394	10	1.063	27	0.126	3.2	.018	8.3	2,070	9.2	5,700	25.5
AXW 12	0.472	12	1.142	29	0.126	3.2	.020	9.1	2,230	9.9	6,500	29
AXW 15	0.591	15	1.221	31	0.126	3.2	.022	10	2,550	11.3	8,100	36
AXW 17	0.669	17	1.299	33	0.126	3.2	.024	11	2,700	11.9	8,900	39.5
AXW 20	0.787	20	1.496	38	0.126	3.2	.031	14	2,950	13.1	10,500	46.5
AXW 25	0.984	25	1.772	45	0.126	3.2	.044	20	3,300	14.7	13,000	58
AXW 30	1.181	30	1.969	50	0.126	3.2	.048	22	3,650	16.3	15,700	70
AXW 35	1.378	35	2.165	55	0.126	3.2	.060	27	4,000	17.8	18,200	81
AXW 40	1.575	40	2.480	63	0.165	4.2	.086	39	6,300	28	25,500	114
AXW 45	1.772	45	2.677	68	0.165	4.2	.095	43	6,700	30	29,000	128
AXW 50	1.969	50	2.874	73	0.165	4.2	.108	49	7,200	32	32,000	143

PART NUMBER	CENTER WASHER OD D_1 inch	CENTER WASHER OD D_1 mm	CENTER WASHER WIDTH B inch	CENTER WASHER WIDTH B mm	SPEED LIMIT rpm	INTERNAL RACEWAY DIA. E_b inch	INTERNAL RACEWAY DIA. E_b mm	EXTERNAL RACEWAY DIA. E_a inch	EXTERNAL RACEWAY DIA. E_a mm
AXW 10	0.551	14	0.118	3	16000	0.472	12	0.906	23
AXW 12	0.630	16	0.118	3	14000	0.551	14	0.984	25
AXW 15	0.827	21	0.138	3.5	13000	0.669	17	1.063	27
AXW 17	0.906	23	0.138	3.5	12000	0.748	19	1.142	29
AXW 20	1.024	26	0.138	3.5	10000	0.866	22	1.339	34
AXW 25	1.260	32	0.158	4	8000	1.142	29	1.614	41
AXW 30	1.457	37	0.158	4	7000	1.339	34	1.811	46
AXW 35	1.654	42	0.158	4	6500	1.535	39	2.008	51
AXW 40	1.850	47	0.158	4	5500	1.772	45	2.284	58
AXW 45	2.047	52	0.158	4	5000	1.969	50	2.480	63
AXW 50	2.284	58	0.177	4.5	4700	2.165	55	2.677	68

Cylindrical Roller Thrust Bearings
RCT SERIES

- Crane hook type
- Single direction
- Flat race
- Speed limit shown is for oil lubrication

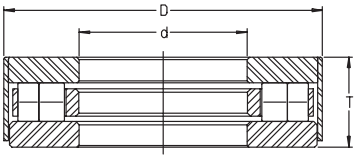

For details on part numbers, descriptive suffixes and various technical references, please refer to front of this section.
For engineering or technical information contact your local sales representative or call Distributor Sales (800)523-6572.

PART NUMBER	SHAFT d inch	SHAFT d mm	OD D inch	OD D mm	WIDTH T inch	WIDTH T mm	WEIGHT lbs	WEIGHT kg	DYN. CAP. lbf	DYN. CAP. kN	STAT. CAP. lbf	STAT. CAP. kN	SPEED LIMIT rpm
RCT11	1.625	41.275	3.093	78.562	0.812	20.625	1.001	0.454	20600	92	55000	243	3300
RCT16	1.938	49.213	3.246	82.448	0.812	20.625	0.979	0.444	24200	107	62000	275	2900
RCT17	2.000	50.800	3.952	100.380	1.000	25.400	2.073	0.940	37000	165	90000	400	2700
RCT19	2.250	57.150	4.000	101.600	1.000	25.400	1.949	0.884	38500	172	97000	435	2500
RCT20C	2.250	57.150	4.250	107.950	1.000	25.400	2.320	1.052	38500	172	97000	430	2500
RCT20B	2.313	58.738	4.265	108.331	1.005	25.527	2.304	1.045	38500	172	97000	430	2500
RCT23	2.750	69.850	4.750	120.650	1.000	25.400	2.675	1.213	41500	184	112000	500	2100
RCT24A	2.750	69.850	4.875	123.825	1.250	31.750	3.614	1.639	56000	248	142000	630	2000
RCT23B	2.813	71.438	4.750	120.650	1.000	25.400	2.613	1.185	41500	184	112000	500	2100
RCT27A	3.250	82.550	6.125	155.575	1.500	38.100	7.226	3.277	94000	420	260000	1170	1700
RCT27C	3.250	82.550	6.187	157.150	1.750	44.450	8.668	3.931	94000	420	260000	1170	1700
RCT27B	3.500	88.900	6.156	156.362	1.625	41.275	7.444	3.376	99000	440	280000	1250	1600
RCT28A	3.500	88.900	6.750	171.450	1.625	41.275	9.678	4.389	90000	400	285000	1280	1500
RCT30B	3.563	90.488	6.375	161.925	1.375	34.925	6.866	3.114	77000	340	234000	1040	1500
RCT34A	3.750	95.250	7.125	180.975	1.875	47.625	12.306	5.581	125000	560	390000	1740	1400
RCT35A	4.250	107.950	8.171	207.543	2.000	50.800	17.424	7.902	130000	580	435000	1940	1200
RCT38A	4.500	114.300	8.125	206.375	2.000	50.800	16.368	7.423	144000	640	510000	2260	1100
RCT39A	5.000	127.000	9.156	232.562	2.250	57.150	23.682	10.740	170000	750	630000	2800	1100
RCT44A	5.500	139.700	10.100	256.540	2.500	63.500	41.200	18.700	285000	1270	840000	3750	1000
RCT45B	5.563	141.288	11.500	292.100	2.000	50.800	36.283	16.455	265000	1180	1070000	4750	900
RCT45A	6.000	152.400	11.156	283.362	3.000	76.200	47.498	21.541	370000	1640	1070000	4750	900
RCT49A	6.813	173.038	12.750	323.850	2.500	63.500	51.994	23.580	380000	1680	1280000	5700	800
RCT52	8.438	214.313	14.500	368.300	3.000	76.200	74.692	33.874	445000	1970	1650000	7300	700
RCT54	9.313	236.538	16.500	419.100	3.000	76.200	99.681	45.207	395000	1750	1500000	6700	600

Cylindrical Roller Thrust Bearings

RT600 SERIES

- Medium cross section
- Single direction
- Flat race
- Available in self aligning RTW600 series
- Separable axial contact
- Speed limit shown is for oil lubrication

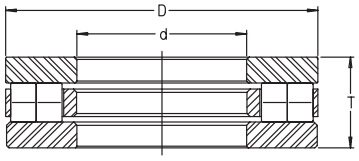

- Part numbers shown in bold may **not** be readily available, please call to check availability.

For details on part numbers, descriptive suffixes and various technical references, please refer to front of this section.
For engineering or technical information contact your local sales representative or call Distributor Sales (800)523-6572.

PART NUMBER	SHAFT d inch	SHAFT d mm	OD D inch	OD D mm	WIDTH T inch	WIDTH T mm	WEIGHT lbs	WEIGHT kg	DYN. CAP. lbf	DYN. CAP. kN	STAT. CAP. lbf	STAT. CAP. kN	SPEED LIMIT rpm
RT601	1.000	25.400	2.126	53.988	0.813	20.638	0.512	0.232	13100	58	24000	107	5500
RT602	1.063	26.988	2.126	53.988	0.812	20.625	0.494	0.224	13100	58	24000	107	5500
RT603	1.125	28.575	2.250	57.150	0.813	20.638	0.553	0.251	14100	63	27000	120	5500
RT604	1.188	30.163	2.250	57.150	0.813	20.637	0.531	0.241	14100	63	27000	120	5000
RT605	1.250	31.750	2.375	60.325	0.813	20.637	0.595	0.270	16000	71	32000	143	5000
RT606	1.313	33.338	2.375	60.325	0.813	20.637	0.571	0.259	16000	71	32000	143	5000
RT607	1.375	34.925	2.875	73.025	0.813	20.637	0.928	0.421	21900	98	51000	226	4300
RT608	1.438	36.513	2.875	73.025	0.812	20.625	0.904	0.410	21900	98	51000	226	4300
RT609	1.500	38.100	3.000	76.200	0.813	20.637	0.983	0.446	21300	95	49500	221	4100
RT610	1.563	39.688	3.000	76.200	0.812	20.625	0.955	0.433	20800	93	49500	221	3700
RT611	1.625	41.275	3.250	82.550	1.000	25.400	1.420	0.644	33500	148	75000	330	3700
RT612	1.688	42.863	3.250	82.550	1.000	25.400	1.385	0.628	33500	149	75000	330	3700
RT613	1.750	44.450	3.375	85.725	1.000	25.400	1.493	0.677	33000	147	75000	330	3500
RT614	1.813	46.038	3.375	85.725	1.000	25.400	1.453	0.659	33000	146	75000	330	3500
RT615	1.875	47.625	3.500	88.900	1.000	25.400	1.566	0.710	37500	166	90000	400	3400
RT616	1.938	49.213	3.500	88.900	1.000	25.400	1.524	0.691	37500	166	90000	400	3100
RT617	2.000	50.800	3.625	92.075	1.000	25.400	1.641	0.744	39000	173	95000	425	3200
RT618	2.125	53.975	3.750	95.250	1.000	25.400	1.713	0.777	43500	193	111000	495	3100
RT619	2.250	57.150	3.875	98.425	1.000	25.400	1.786	0.810	43500	193	111000	495	3100
RT620	2.375	60.325	4.000	101.600	1.000	25.400	1.859	0.843	40500	179	103000	460	2900
RT621	2.500	63.500	4.126	104.803	1.000	25.400	1.932	0.876	42500	189	111000	495	2800
RT622	2.625	66.675	4.343	110.300	1.000	25.400	2.145	0.973	44000	196	119000	530	2600
RT623	2.750	69.850	4.468	113.475	1.000	25.400	2.223	1.008	43500	194	119000	530	2500
RT624	3.000	76.200	4.719	119.870	1.000	25.400	2.381	1.080	49000	219	143000	640	2400
RT625	3.250	82.550	4.968	126.187	1.000	25.400	2.531	1.148	47000	209	135000	600	2300
RT626	3.500	88.900	5.220	132.575	1.000	25.400	2.690	1.220	48000	214	143000	640	2100

Cylindrical Roller Thrust Bearings
RTL SERIES

- Light cross section
- Single direction
- Flat race
- Separable axial contact
- Dimensionally interchangeable with D, FT and GT series
- Speed limit shown is for oil lubrication

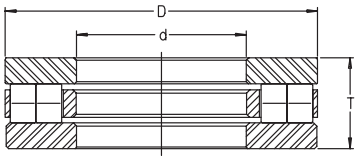

- Part numbers shown in bold may **not** be readily available, please call to check availability.

For details on part numbers, descriptive suffixes and various technical references, please refer to front of this section.
For engineering or technical information contact your local sales representative or call Distributor Sales (800)523-6572.

PART NUMBER	SHAFT d inch	SHAFT d mm	OD D inch	OD D mm	WIDTH T inch	WIDTH T mm	WEIGHT lbs	WEIGHT kg	DYN. CAP. lbf	DYN. CAP. kN	STAT. CAP. lbf	STAT. CAP. kN	SPEED LIMIT rpm
RTL7	0.875	22.225	1.844	46.838	0.625	15.875	0.295	0.134	7600	33.5	15000	67	5500
RTL8	0.938	23.813	1.844	46.838	0.625	15.875	0.282	0.128	7500	33.5	15000	67	5500
RTL9	1.000	25.400	1.969	50.013	0.625	15.875	0.322	0.146	7400	33	15000	67	5500
RTL10	1.063	26.988	1.969	50.013	0.625	15.875	0.306	0.139	7400	33	15000	67	5000
RTL11	1.125	28.575	2.094	53.181	0.625	15.875	0.351	0.159	8200	36.5	17600	78	4600
RTL12	1.188	30.163	2.094	53.181	0.625	15.875	0.333	0.151	8400	37.5	18000	80	4600
RTL13	1.250	31.750	2.344	59.531	0.625	15.875	0.441	0.200	9600	42.5	22000	98	4100
RTL14	1.313	33.338	2.344	59.531	0.625	15.875	0.423	0.192	9600	42.5	22000	98	4300
RTL15	1.375	34.925	2.469	62.713	0.625	15.875	0.472	0.214	10000	44.5	23600	105	3900
RTL16	1.438	36.513	2.469	62.713	0.625	15.875	0.452	0.205	10100	45	24000	107	4000
RTL17	1.500	38.100	2.594	65.881	0.625	15.875	0.503	0.228	10600	47	26000	116	3800
RTL18	1.563	39.688	2.594	65.881	0.625	15.875	0.481	0.218	10600	47	26000	116	3700
RTL19	1.625	41.275	2.969	75.413	0.813	20.650	0.900	0.408	10100	45	21900	97	3400
RTL20	1.688	42.863	2.969	75.413	0.813	20.650	0.871	0.395	17100	76	43000	192	3300
RTL21	1.750	44.450	3.094	78.588	0.813	20.637	0.948	0.430	20500	91	55000	243	3200
RTL22	1.813	46.038	3.094	78.588	0.813	20.650	0.917	0.416	20500	91	55000	243	3200
RTL23	1.875	47.625	3.219	81.763	0.813	20.650	0.999	0.453	10500	46.5	23500	104	3100
RTL24	1.938	49.213	3.219	81.763	0.813	20.650	0.964	0.437	21300	95	59000	260	3000
RTL25	2.000	50.800	3.344	84.938	0.813	20.637	2.399	1.088	21200	94	59000	260	2900
RTL27	2.125	53.975	3.594	91.288	0.813	20.650	1.226	0.556	29500	130	81000	360	2700
RTL28	2.188	55.563	3.594	91.288	0.813	20.650	1.186	0.538	29500	130	81000	360	2700
RTL29	2.250	57.150	3.719	94.463	0.813	20.650	1.279	0.580	29000	129	81000	360	2600
RTL31	2.375	60.325	3.844	97.638	0.813	20.650	1.332	0.604	30000	134	86000	385	2500
RTL32	2.438	61.913	3.844	97.638	0.813	20.650	1.288	0.584	30000	134	86000	385	2500
RTL33	2.500	63.500	3.969	100.813	0.813	20.637	1.385	0.628	32500	145	96000	430	2400
RTL35	2.625	66.675	4.344	110.338	1.000	25.400	2.148	0.974	33000	147	101000	450	2200
RTL37	2.750	69.850	4.469	113.513	1.000	25.400	2.225	1.009	35500	159	112000	495	2100
RTL41	3.000	76.200	4.719	119.863	1.000	25.400	2.379	1.079	39500	177	131000	580	2000
RTL43	3.250	82.550	4.969	126.213	1.000	25.400	2.534	1.149	40500	181	138000	610	1900
RTL44	3.500	88.900	5.219	132.563	1.000	25.400	2.688	1.219	37000	164	124000	550	1800

Cylindrical Roller Thrust Bearings

RTW600 SERIES

- Medium cross section
- Single direction
- Self aligning
- Static Alignment = ± 3.0º
- Separable axial contact
- Available as non aligning RT600 series
- Speed limit shown is for oil lubrication

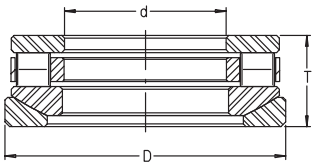

- Part numbers shown in bold may **not** be readily available, please call to check availability.

For details on part numbers, descriptive suffixes and various technical references, please refer to front of this section.
For engineering or technical information contact your local sales representative or call Distributor Sales (800)523-6572.

PART NUMBER	SHAFT d inch	SHAFT d mm	OD D inch	OD D mm	WIDTH T inch	WIDTH T mm	WEIGHT lbs	WEIGHT kg	DYN. CAP. lbf	DYN. CAP. kN	STAT. CAP. lbf	STAT. CAP. kN	SPEED LIMIT rpm
RTW601	1.000	25.400	2.251	57.168	1.062	26.975	0.725	0.329	13100	58	24000	107	5500
RTW602	1.060	26.924	2.251	57.168	1.062	26.975	0.703	0.319	13100	58	24000	107	5500
RTW603	1.125	28.575	2.375	60.325	1.062	26.975	0.781	0.354	14100	63	27000	120	5000
RTW604	1.188	30.163	2.375	60.325	1.062	26.975	0.756	0.343	14100	63	27000	120	5000
RTW605	1.250	31.750	2.500	63.500	1.063	26.988	0.838	0.380	16000	71	32000	143	4900
RTW606	1.313	33.338	2.500	63.500	1.062	26.975	0.800	0.363	16000	71	32000	143	4900
RTW607	1.375	34.925	3.000	76.200	1.062	26.975	1.270	0.576	21900	98	51000	226	4200
RTW608	1.438	36.513	3.000	76.200	1.602	40.691	1.868	0.847	21900	98	51000	226	4300
RTW609	1.500	38.100	3.125	79.375	1.062	26.975	1.343	0.609	21300	95	49500	221	4000
RTW610	1.563	39.688	3.125	79.375	1.062	26.975	1.308	0.593	20800	93	49500	221	3700
RTW611	1.625	41.275	3.375	85.725	1.312	33.325	1.929	0.875	33500	148	75000	330	3700
RTW612	1.688	42.863	3.376	85.748	1.313	33.338	1.887	0.856	33500	149	75000	330	3700
RTW613	1.750	44.450	3.500	88.900	1.312	33.325	2.026	0.919	33000	147	75000	330	3500
RTW614	1.813	46.038	3.500	88.900	1.312	33.325	1.978	0.897	33000	146	75000	330	3500
RTW615	1.875	47.625	3.625	92.075	1.312	33.325	2.123	0.963	37500	166	90000	400	3400
RTW616	1.938	49.213	3.625	92.075	1.312	33.325	2.070	0.939	37500	166	90000	400	3100
RTW617	2.000	50.800	3.750	95.250	1.312	33.325	2.220	1.007	39000	173	95000	425	3200
RTW618	2.125	53.975	3.875	98.425	1.312	33.325	2.317	1.051	43500	193	111000	495	3100
RTW619	2.250	57.150	4.000	101.600	1.312	33.325	2.412	1.094	43500	193	111000	495	3100
RTW620	2.375	60.325	4.125	104.775	1.312	33.325	2.509	1.138	40500	179	103000	460	2800
RTW621	2.500	63.500	4.250	107.950	1.312	33.325	2.606	1.182	42500	189	111000	495	2800
RTW622	2.625	66.675	4.530	115.062	1.312	33.325	3.008	1.364	44000	196	119000	530	2600
RTW623	2.750	69.850	4.655	118.237	1.313	33.338	3.113	1.412	43500	194	119000	530	2500
RTW624	3.000	76.200	4.969	126.213	1.312	33.325	3.462	1.570	49000	219	143000	640	2300
RTW625	3.250	82.550	5.220	132.585	1.313	33.338	3.682	1.670	47000	209	135000	600	2300
RTW626	3.500	88.900	5.468	138.875	1.313	33.338	3.894	1.766	48000	214	143000	640	2100

Axial Bearing Washers

ZS SERIES

- Metric center washers for thrust bearings
- Housing or shaft guided
- For double direction axial bearing combinations
- Suitable for AXK and K811

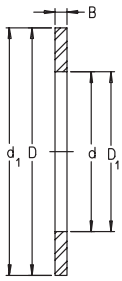

For details on part numbers, descriptive suffixes and various technical references, please refer to front of this section.
For engineering or technical information contact your local sales representative or call Distributor Sales (800)523-6572.

PART NUMBER	SHAFT d inch	SHAFT d mm	OD D inch	OD D mm	WIDTH B inch	WIDTH B mm	BEARING BORE FOR INNER CLAMPING inch	BEARING BORE FOR INNER CLAMPING mm	BEARING BORE FOR OUTER CLAMPING inch	BEARING BORE FOR INNER CLAMPING mm	WEIGHT lbs	WEIGHT kg
ZS 1127	0.433	11	1.063	27	0.217	5.5	0.591	15	–	–	0.046	0.021
ZS 1329	0.512	13	1.142	29	0.217	5.5	0.669	17	–	–	0.051	0.023
ZS 1634	0.630	16	1.339	34	0.217	5.5	0.787	20	0.591	15	0.068	0.031
ZS 2141	0.827	21	1.614	41	0.236	6	0.984	25	0.787	20	0.099	0.045
ZS 2646	1.024	26	1.811	46	0.276	7	1.181	30	0.984	25	0.132	0.06
ZS 3151	1.221	31	2.008	51	0.315	8	1.378	35	1.181	30	0.172	0.078
ZS 3159	1.221	31	2.323	59	0.315	8	1.575	40	–	–	0.276	0.125
ZS 3664	1.417	36	2.520	64	0.354	9	1.772	45	1.378	35	0.344	0.156
ZS 4169	1.614	41	2.717	69	0.394	10	1.969	50	1.575	40	0.421	0.191
ZS 4677	1.811	46	3.032	77	0.394	10	2.165	55	1.772	45	0.518	0.235
ZS 5184	2.008	51	3.307	84	0.453	11.5	2.362	60	1.969	50	0.697	0.316
ZS 5689	2.205	56	3.504	89	0.472	12	2.559	65	2.165	55	0.794	0.36
ZS 5694	2.205	56	3.701	94	0.492	12.5	2.756	70	–	–	0.97	0.44
ZS 6199	2.402	61	3.898	99	0.492	12.5	2.953	75	2.362	60	1.036	0.47
ZS 66104	2.598	66	4.095	104	0.492	12.5	3.150	80	2.559	65	1.103	0.5
ZS 71109	2.795	71	4.291	109	0.571	14.5	3.347	85	2.756	70	1.308	0.593
ZS 76119	2.992	76	4.685	119	0.630	16	3.543	90	2.953	75	1.777	0.806
ZS 86134	3.386	86	5.276	134	0.709	18	3.937	100	3.347	85	2.602	1.18
ZS 96144	3.780	96	5.669	144	0.787	20	4.331	110	–	–	3.153	1.43
ZS 101154	3.976	101	6.063	154	0.866	22	4.724	120	3.937	100	4.035	1.83
ZS 111169	4.370	111	6.654	169	0.866	22	5.118	130	4.331	110	4.873	2.21
ZS 121179	4.764	121	7.047	179	0.906	23	5.512	140	4.724	120	5.424	2.46
ZS 131189	5.158	131	7.441	189	0.945	24	5.906	150	5.118	130	6.042	2.74
ZS 141199	5.551	141	7.835	199	0.984	25	6.299	160	5.512	140	6.681	3.03
ZS 151214	5.945	151	8.425	214	1.063	27	–	–	5.906	150	8.445	3.83
ZS 161224	6.339	161	8.819	224	1.142	29	–	–	6.299	160	9.592	4.35

Axial Bearing Washers

ZS SERIES

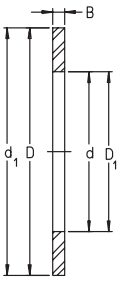

- Metric center washers for thrust bearings
- Housing or shaft guided
- For double direction axial bearing combinations
- Suitable for AXK and K811

For details on part numbers, descriptive suffixes and various technical references, please refer to front of this section.
For engineering or technical information contact your local sales representative or call Distributor Sales (800)523-6572.

BEARING FOR INNER CLAMPING	BEARING FOR OUTER CLAMPING	WASHER FOR INNER CLAMPING	WASHER FOR OUTER CLAMPING	BEARING FOR INNER CLAMPING	BEARING FOR OUTER CLAMPING	PART NUMBER
AXK 1528		GS 81102		K 81102 TN	K 81102 TN	ZS 1127
AXK 1730		GS 81103		K 81103 TN	K 81103 TN	ZS 1329
AXK 2035	AXK 1528	GS 81104	WS 81102	K 81104 TN	K 81104 TN	ZS 1634
AXK 2542	AXK 2035	GS 81105	WS 81104	K 81105 TN	K 81105 TN	ZS 2141
AXK 3047	AXK 2542	GS 81106	WS 81105	K 81106 TN	K 81106 TN	ZS 2646
AXK 3552	AXK 3047	GS 81107	WS 81106	K 81107 TN	K 81107 TN	ZS 3151
AXK 4060		GS 81108		K 81108 TN	K 81108 TN	ZS 3159
AXK 4565	AXK 3552	GS 81109	WS 81107	K 81109 TN	K 81109 TN	ZS 3664
AXK 5070	AXK 4060	GS 81110	WS 81108	K 81110 TN	K 81110 TN	ZS 4169
AXK 5578	AXK 4565	GS 81111	WS 81109	K 81111 TN	K 81111 TN	ZS 4677
AXK 6085	AXK 5070	GS 81112	WS 81110	K 81112 TN	K 81112 TN	ZS 5184
AXK 6590	AXK 5578	GS 81113	WS 81111	K 81113 TN	K 81113 TN	ZS 5689
AXK 7095		GS 81114		K 81114 TN	K 81114 TN	ZS 5694
AXK 75100	AXK 6085	GS 81115	WS 81112	K 81115 TN	K 81115 TN	ZS 6199
AXK 80105	AXK 6590	GS 81116	WS 81113	K 81116 TN	K 81116 TN	ZS 66104
AXK 85110	AXK 7095	GS 81117	WS 81114	K 81117 TN	K 81117 TN	ZS 71109
AXK 90120	AXK 75100	GS 81118	WS 81115	K 81118 TN	K 81118 TN	ZS 76119
AXK 100135	AXK 85110	GS 81120	WS 81117	K 81120 TN	K 81120 TN	ZS 86134
AXK 110145		GS 81122		K 81122 TN	K 81122 TN	ZS 96144
AXK 120155	AXK 100135	GS 81124	WS 81120	K 81124	K 81124	ZS 101154
AXK 130170	AXK 110145	GS 81126	WS 81122	K 81126	K 81126	ZS 111169
AXK 140180	AXK 120155	GS 81128	WS 81124	K 81128	K 81128	ZS 121179
AXK 150190	AXK 130170	GS 81130	WS 81126	K 81130	K 81130	ZS 131189
AXK 160200	AXK 140180	GS 81132	WS 81128	K 81132	K 81132	ZS 141199
	AXK 150190		WS 81130			ZS 151214
	AXK 160200		WS 81132			ZS 161224

NOTES

Section Contents
RADIAL BALL BEARINGS

BEARING SERIES	BEARING DESCRIPTION	PAGE
INFORMATION	BALL BEARING, GENERAL OVERVIEW	182
INFORMATION	MOUNTED UNIT, GENERAL OVERVIEW	183
P / N IDENTIFICATION	BALL BEARINGS	184
P / N IDENTIFICATION	MOUNTED UNITS	184
INTERCHANGE	BASIC MOUNTED UNIT INTERCHANGE LISTING	186
600	METRIC ISO MINIATURE DEEP GROOVE BALL	187
6000	METRIC ISO LIGHT SERIES DEEP GROOVE BALL	187
6200	METRIC ISO STANDARD SERIES DEEP GROOVE BALL	187
6300	METRIC ISO HEAVY SERIES DEEP GROOVE BALL	187
3200 J	METRIC ISO DOUBLE ROW STANDARD SERIES ANGULAR CONTACT BALL	191
3300 J	METRIC ISO DOUBLE ROW HEAVY SERIES ANGULAR CONTACT BALL	191
G52..2RSN	METRIC DOUBLE ROW CYLINDRICAL OD WITH SNAP RING GROOVES ANGULAR CONTACT BALL	193
7000BE2RS	METRIC ISO SINGLE ROW LIGHT SERIES 40 DEGREE ANGULAR CONTACT BALL	194
7200BE2RS	METRIC ISO SINGLE ROW STANDARD SERIES 40 DEGREE ANGULAR CONTACT BALL	194
7300BE2RS	METRIC ISO SINGLE ROW HEAVY SERIES 40 DEGREE ANGULAR CONTACT BALL	194
RAE..NPPNR	METRIC BORE ECONOMY SEAL ECCENTRIC LOCKING WITH CYLINDRICAL OD & SNAP RING BALL	195
2..KRR	METRIC BORE ECONOMY SEAL PRESS FIT MOUNT CYLINDRICAL OD BALL	196
E..KLLH	METRIC BORE LABYRINTH SEAL ECCENTRIC LOCKING COLLAR CYLINDRICAL OD BALL	197
E..KRR	METRIC BORE STANDARD SEAL ECCENTRIC LOCKING COLLAR CYLINDRICAL OD BALL	198
RAE..NPPFA106	METRIC BORE ECONOMY SEAL ECCENTRIC LOCKING WITH CYLINDRICAL OD	199
2..KXN	METRIC BORE EXTRA WIDE FOR OUTBOARD SEAL CYLINDRICAL OD BALL	200
RAE..NPPB	METRIC BORE ECONOMY SEAL ECCENTRIC LOCKING COLLAR INSERT BALL WITHOUT RELUBRICATION HOLE	201
GRA..NPPB	INCH BORE ECONOMY SEAL ECCENTRIC LOCKING COLLAR INSERT BALL	202
GRAE..NPPB	METRIC BORE ECONOMY SEAL ECCENTRIC LOCKING COLLAR INSERT BALL	202
GAY..NPPB	METRIC AND INCH BORE ECONOMY SEAL SET SCREW LOCKING INSERT BALL	203
G1..KRRB	INCH BORE STANDARD SEAL ECCENTRIC LOCKING COLLAR INSERT BALL	204
GE..KRRB	METRIC BORE STANDARD SEAL ECCENTRIC LOCKING COLLAR INSERT BALL	204
GY1..KRRB	INCH BORE STANDARD SEAL SETSCREW LOCKING INSERT BALL	205
GYE..KRRB	METRIC BORE STANDARD SEAL SETSCREW LOCKING INSERT BALL	205
RALE..NPPB	METRIC BORE ECONOMY SEAL LIGHT DUTY ECCENTRIC LOCKING COLLAR INSERT BALL	206
GE..KPPB3	METRIC BORE TRI-PLY SEAL ECCENTRIC LOCKING COLLAR INSERT BALL	207
GE..KLLHB	METRIC BORE LABYRINTH SEAL ECCENTRIC LOCKING COLLAR INSERT BALL	208
GNE..KRRB	METRIC BORE STANDARD SEAL HEAVY DUTY ECCENTRIC LOCKING COLLAR INSERT BALL	209
GLE..RRB	METRIC BORE STANDARD SEAL DRIVE SLOT LOCKING EXPANSION INSERT BALL	210
GSH..RRB	METRIC BORE STANDARD SEAL ADAPTER MOUNT LOCKING INSERT BALL	211
2..NPPB	METRIC BORE ECONOMY SEAL PRESS FIT MOUNT INSERT BALL	212
CR-B..	METRIC BORE ECONOMY SEAL ECCENTRIC LOCKING COLLAR FLANGED RUBBER OD BALL	213

Section Contents
RADIAL BALL BEARINGS

PASE	STANDARD HEIGHT ECONOMY SEAL ECCENTRIC LOCK PILLOW BLOCK	214
PASEY	STANDARD HEIGHT ECONOMY SEAL SETSCREW LOCK PILLOW BLOCK	216
PAK	LOW HEIGHT ECONOMY SEAL ECCENTRIC LOCK PILLOW BLOCK	218
PAKY	LOW HEIGHT ECONOMY SEAL SETSCREW LOCK PILLOW BLOCK	220
RASE	STANDARD HEIGHT STANDARD SEAL ECCENTRIC LOCK PILLOW BLOCK	222
RASEY	STANDARD HEIGHT STANDARD SEAL SETSCREW LOCK PILLOW BLOCK	224
RAK	LOW HEIGHT STANDARD SEAL ECCENTRIC LOCK PILLOW BLOCK	226
RAKY	LOW HEIGHT STANDARD SEAL SETSCREW LOCK PILLOW BLOCK	228
TASE	METRIC STANDARD HEIGHT TRI-PLY SEAL ECCENTRIC LOCK PILLOW BLOCK	230
LASE	METRIC STANDARD HEIGHT LABYRINTH SEAL ECCENTRIC LOCK PILLOW BLOCK	231
RASEA	METRIC STANDARD HEIGHT STANDARD SEAL ADAPTER MOUNTED PILLOW BLOCK	232
RASEL	METRIC STANDARD HEIGHT STANDARD SEAL DRIVE SLOT LOCKED EXPANSION TYPE PILLOW BLOCK	233
RSAO	METRIC STANDARD HEIGHT HEAVY SERIES ECCENTRIC LOCK PILLOW BLOCK	234
PSHE	METRIC ECONOMY SEAL ECCENTRIC LOCK TAPPED BASE PILLOW BLOCK	235
PSHEY	METRIC ECONOMY SEAL SETSCREW LOCK TAPPED BASE PILLOW BLOCK	236
RSHE	METRIC STANDARD SEAL ECCENTRIC LOCK TAPPED BASE PILLOW BLOCK	237
RSHEY	METRIC STANDARD SEAL SETSCREW LOCK TAPPED BASE PILLOW BLOCK	238
TSHE	METRIC TRI-PLY SEAL ECCENTRIC LOCK TAPPED BASE PILLOW BLOCK	239
PCJ	ECONOMY SEAL ECCENTRIC LOCK SQUARE FLANGE	240
PCJY	ECONOMY SEAL SETSCREW SQUARE FLANGE	242
RCJ	STANDARD SEAL ECCENTRIC LOCK SQUARE FLANGE	244
RCJY	STANDARD SEAL SETSCREW LOCK SQUARE FLANGE	246
TCJ	METRIC TRI-PLY SEAL ECCENTRIC LOCK SQUARE FLANGE	248
RCJL	METRIC STANDARD SEAL ECCENTRIC LOCK DRIVING SLOT EXPANSION TYPE SQUARE FLANGE	249
RCJO	METRIC STANDARD SEAL HEAVY SERIES ECCENTRIC LOCK SQUARE FLANGE	250
PCCJ	METRIC DOUBLE ROW ANGULAR CONTACT NON-SELF ALIGNING PILOTED FLANGE	251
PME	METRIC ECONOMY SEAL ECCENTRIC LOCK PILOTED SQUARE FLANGE	252
PMEY	METRIC ECONOMY SEAL SETSCREW LOCK PILOTED SQUARE FLANGE	253
RME	METRIC STANDARD SEAL ECCENTRIC LOCK PILOTED SQUARE FLANGE	254
RMEY	METRIC STANDARD SEAL SETSCREW LOCK PILOTED SQUARE FLANGE	255
TME	METRIC TRI-PLY SEAL ECCENTRIC LOCK PILOTED ROUND SQUARE FLANGE	256
RMEO	METRIC HEAVY SERIES STANDARD SEAL ECCENTRIC LOCK PILOTED ROUND SQUARE FLANGE	257
PCJT	ECONOMY SEAL ECCENTRIC LOCK OVAL FLANGE	258
PCJTY	ECONOMY SEAL SETSCREW OVAL FLANGE	260
RCJT	STANDARD SEAL ECCENTRIC LOCK OVAL FLANGE	262
RCJTY	STANDARD SEAL SETSCREW LOCK OVAL FLANGE	264
TCJT	METRIC TRI-PLY SEAL ECCENTRIC LOCK OVAL FLANGE	266
LCJT	METRIC LABYRINTH SEAL ECCENTRIC LOCK OVAL FLANGE	267

Section Contents
RADIAL BALL BEARINGS

RCJTL	METRIC STANDARD SEAL DRIVING SLOT LOCKED EXPANSION TYPE OVAL FLANGE	268
FLCTE	METRIC ECONOMY SEAL ECCENTRIC LOCK HEAVY DUTY OVAL FLANGE	269
GLCTE	METRIC ECONOMY SEAL ECCENTRIC LOCK HEAVY DUTY OVAL FLANGE	269
PCJTZ	METRIC ECONOMY SEAL ECCENTRIC LOCK PILOTED OVAL FLANGE	270
PCJTZY	METRIC ECONOMY SEAL SETSCREW LOCK PILOTED OVAL FLANGE	271
RCJTZ	METRIC STANDARD SEAL ECCENTRIC LOCK PILOTED OVAL FLANGE	272
RCJTZY	METRIC STANDARD SEAL SETSCREW LOCK PILOTED OVAL FLANGE	273
RCSM..	METRIC BORE ECONOMY SEAL ECCENTRIC LOCKING COLLAR CYLINDRICAL RUBBER OD BALL	274
RCSMF	METRIC ECONOMY SEAL ECCENTRIC LOCK WITH RUBBER INTERLINER STAMPED STEEL FLANGE	275
PTUE	METRIC SERIES ECONOMY SEALS ECCENTRIC LOCK ISO SLOT WIDTH TAKE UP	276
RTUE	METRIC SERIES STANDARD SEALS ECCENTRIC LOCK ISO SLOT WIDTH TAKE UP	277
RTUEY	METRIC SERIES STANDARD SEALS SETSCREW LOCK ISO SLOT WIDTH TAKE UP	278
TTUE	METRIC SERIES TRI-PLY SEALS ECCENTRIC LOCK ISO SLOT WIDTH TAKE UP	279
PSFT	METRIC SERIES ECONOMY SEAL ECCENTRIC LOCK PIVOTING TAKE UP	280
KSR..BO	INCH AND METRIC IDLER CHAIN SPROCKETS	282
KSR..KO	INCH AND METRIC IDLER CHAIN SPROCKETS	284
KSR..LO	INCH AND METRIC IDLER CHAIN SPROCKETS	284
RSR..	CABLE ROPE AND V-BELT IDLER PULLEY	286

General Information
RADIAL BALL BEARINGS

PRODUCT DESCRIPTION

INA Radial Ball Bearings

- Available in Conrad style ISO series for miniature, light and medium duty radial bearings.
- Available in Conrad style steel caged angular contact double row bearings.
- Available sealed, shielded or open.
- Available as standard duty insert ball bearings with eccentric collar or set screw locking.

INA Inch Mounted Units

- Uses standard duty (6200) inserts with economy P or standard R seals.
- Inserts available with eccentric locking collar or set screw locking.
- Housings are cast iron to **ABMA** dimensional standards.
- Available as standard and low height pillow blocks, 2 or 4 bolt flange units.

INA Metric Mounted Units

- Uses standard duty (6200) inserts with economy P or standard R seals.
- Inserts available with eccentric locking collar or set screw locking.
- Housings are cast iron to **ABMA** dimensional standards.
- Available as standard, low height or tapped base pillow blocks, 2 or 4 bolt flange units, round 4 bolt or two bolt piloted flange, and take up units.
- Idler sprockets and tensioner units also available for inch or metric equipment.

General Information
RADIAL BALL BEARINGS

PRODUCT DESCRIPTION

- Cast iron housing with ball bearing.
- Spherical interface between bearing and housing accommodates static misalignment of ± 2.5° with lubrication.
- Relubricable through housing.

HOUSING

- Standard material is grey cast iron as per ASTM A48 class 30 or equivalent (ductile iron available on request subject to minimum quantity.)
- Protection is from a durable powder coat finish. Green is the standard color.
- Housing threaded for standard SAE grease nipples. $^1/_4$-28 UNF for (03) and (04) housings $^1/_8$ NPT for all other sizes.
- Machined surfaces tolerances ± 0.25mm (0.010")

BEARING FEATURES

- Normal inch and metric shaft sizes.
- Fastened to shaft by eccentric locking collar or set screw. Drive pin, adapter sleeve.
- C3 clearance
- Supplied with initial fill of lithium based grease.

Standard tolerances for radial insert ball bearings

INNER RING					OUTER RING				
Nominal size d mm			1) Shaft µm		Nominal size D mm			2) Outside dia. µm	
over		inc.	min.	max.	over		inc.	min.	max.
12	—	18	0	+18	30	—	50	0	–11
18	—	24	0	+18	50	—	80	0	–13
24	—	30	0	+18	80	—	120	0	–15
30	—	40	0	+18	120	—	150	0	–18
40	—	50	0	+18	150	—	180	0	–25
50	—	60	0	+18	180	—	250	0	–30
60	—	90	0	+25					
90	—	120	0	+30					

1) Corresponds to the arithmetical mean of the largest and smallest single diameter (resulting from the two-point measurement.)

2) The smallest and largest value of the outside diameter on sealed bearings may deviate from the mean value by approximately 0.03 mm.

- Nylon 6.6 cage suitable for 120° C, 250° F operation.
- Variety of seal types to suit application. All types are typically of a three piece construction i.e. rubber sealing lip sandwiched between two pieces of zinc plated steel. The steel components protect the rubber against abrasive media and insure that the seal assembly is positively locked into the outer ring.

SHAFT FITS / LIMITING SPEEDS

For speeds up to the values listed in the dimension tables, the shaft should correspond to ISO tolerance limit h9. For higher speeds, shaft tolerance h5 is recommended and the INA Engineering Service should be contacted.

SHAFT SIZE mm.	10 INCL. 18	18 INCL. 30	30 INCL. 50	50 INCL. 80	80 INCL. 120
tolerance h9	0 -43	0 -52	0 -62	0 -74	0 -87
tolerance h6	0 -11	0 -13	0 -16	0 -19	0 -22
tolerance h5	0 -8	0 -9	0 -11	0 -13	0 -15

values in m (1µm = 0.001 mm)

Speed factors for insert bearings - guide values.

Seal type	Shaft tolerance	Load C/P	Speed factor n • d
L/P/R	h9	5 to 13	40,000
L/P/R	h9	>13	80,000
L/P/R	h6	>13	130,000
L/P/R	h5	>13	160,000
P3	h9	>13	25,000
Rubber interliner	h9	>13	50,000
GSH..RRB	h9	>13	200,000

Example:
GRAE 30 NPPB, shaft tolerance h6, load P 1300 N.

Load C/P = 19,500/1,300 > 13
Speed factor n • d = 130,000
Permissible speed n = 130,000/30
≈ 4,300 min^{-1}

Many factors influence the permissible speed (n) RPM including the capacity to load ratio (C/P) and the relative size in mm (d). These guidelines also show when the shaft tolerance must be restricted.

Part Number Identification
RADIAL BALL BEARINGS

INSERT BEARINGS

G1 103 K RRB

PREFIXES:

Basic Series & Additional Features

E	Metric Bore
G	Relubricable
1	Standard Series (200 Series Bearings Inch)
RA	Extended Inner Ring, One Side Only
RAL	One Side Only
Y, AY	Set Screw Locking Device Series
L	Inner ring extended both sides, drive slot on I/R
N	Heavy series
SH	Integral tapered adaptor sleeve

NUMBERS:

Last Three Numbers indicate shaft size first in inches, last two in sixteenths or directly in mm if 2 digits

015	15/16
103	1-3/16
203	2-3/16
25	25mm (metric)
40	40mm (metric)

ADDITIONAL FEATURES:

NPP	Two Seals (Non-Preloaded)
RR	Two Land Riding Rubber Seals
B	Spherical Outside Diameter
CC	Zinc Plated Flingers
LLH	Non contact labyrinth seal
NR	Snap ring groove
KPP3	Tri-ply seal

SUFFIXES:

Internal Construction

K	Conrad, Non-Filling Slot Type

HOUSING UNITS

R ASE Y 1

PREFIXES:

Bearing Seal Type

P	NPP Type Economy Seal
R	KRR Type Preloaded Seal
T	KPPB-3 Type Tri-ply Seal
L	KLLH Type Labyrinth Seal

HOUSING TYPE:

ASE	Standard Height Pillow Block
AK	Low Height Pillow Block
CJ	Four Bolt FLange
CJT	Two Bolt Flange
LCTE	Small Center Bolt Flange
CJTZ	Piloted Two Bolt Flange
ME	Round Piloted Four Bolt Flange
SFT	Pivoting Take Up
SHE	Tapped Base Pillow Block
TUE	Take Up
SAO	Heavy Series Pillow Block
CJO	Heavy Series Four Bolt Flange
MEO	Heavy Series Round Piloted Four Bolt Flange

NUMBERS:

Shaft

Fractional Inches Or Millimeters

SUFFIXES:

Locking Device

Blank	Eccentric Locking collar
Y	Set Screw

Part Number Identification
RADIAL BALL BEARINGS

IDLER SPROCKET

16 **LO** **06** **10** **20** **08**

16 – Shaft Diameter

06 – **Pitch** Sixteenths Of An Inch

20 – Number Of Teeth

10 – Chain Code (Width Index Or Appropriate Standard)

LO

LO	Inner Ring Extended Both Sides
BO	Eccentric Locking Collar Inner Ring Extended One Side
KO	Inner & Outer Rings Flush

08 – **MATERIAL CODE**

15	Material – Steel St 52 Tooth Flanks – Unhardened
08	Material – Sintered Iron C 10 Tooth Flanks – Unhardened HB $50^{\pm 5}$
16	Material – Steel C 45 Tooth Flanks – Hardened HRc $50^{\pm 5}$
09	Material – Sintered Iron D 30 Tooth Flanks – Hardened HB $125^{\pm 15}$
22	Material – Plastic PA Tooth Flanks – N/A

Prefix & Suffix Interchange Chart

For details on part numbers, descriptive suffixes and various technical references, please refer to front of this section.
For engineering or technical information contact your local sales representative or call Distributor Sales (800)523-6572.

INA			FAFNIR			DODGE			SKF			SEALMASTER			LINKBELT		
PRE	/	SUF	PRE	/	SUF	PRE	/	SUF	PRE	/	SUF	PRE	/	SUF	PRE	/	SUF
PASE			VAS			P2BSXV			SY	/	FM	VP	/	E	P3W		
PASEY			SAS			P2BSCV						VP					
PAK			VAK			P2BSXVB			SYH	/	FM				PL3Y	/	N
PAKY			SAK			P2BSCVB									PL3U	/	N
PCJ			[P]VCJ			F4BSXV			FY	/	FM	VF	/	E	F3W	/	U
PCJY			SCJ			F4BSCV						VF					
PCJT			VCJT			F2BSXV			FYT(B)	/	FM	VFT	/	E	FX3W	/	U
PCJTY			SCJT			F2BSCV									FX3S	/	E

INA			FAFNIR			DODGE			SKF			SEALMASTER			LINKBELT		
PRE	/	SUF	PRE	/	SUF	PRE	/	SUF	PRE	/	SUF	PRE	/	SUF	PRE	/	SUF
RASE			RAS			P2BSXR						NP	/	E	P3Y		
RASEY			YAS			P2BSC			SY	/	TM	NP					
RAK			RAK			P2BSXRB			SYH	/	WM	NPL	/	E	PL3Y		
RAKY			YAK			P2BSCB						NPL					
RCJ			RCJ			F4BSXR			FY	/	WM	RF	/	E	F3Y		
RCJY			YCJ			F4BSC			FY	/	TM	RF					
RCJT			RCJT			F2BSXR			FYT	/	WM	RFT	/	E	FX3Y		
RCJTY			YCJT			F2BSC			FYT	/	TM	RFT					

This interchange list is based on catalogs known to INA.
INA USA Corporation cannot assume responsibility for errors, inaccuracies or any damages arising from use of this data.
In case of doubt please contact an INA Sales Representative at a location nearest you.

Elges and Andrews are registered trademarks of INA USA Corporation
Permaglide is a registered trademark and a product of KOLBENSCHMIDT AG, Neckarsulm, also produced in Greensburg, Indiana, USA.
All other products and company names are trademarks or registered trademarks of their respective companies.

Ball Bearings
600 SERIES

- Metric series
- Conrad ball bearings
- Miniature, extra-light, light, medium series
- Available as open, shielded or sealed

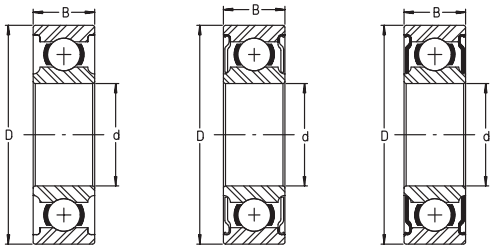

OPEN | 2Z SHIELDED | 2RS SEALED

For details on part numbers, descriptive suffixes and various technical references, please refer to front of this section.
For engineering or technical information contact your local sales representative or call Distributor Sales (800)523-6572.

PART NUMBER	SHAFT inch	SHAFT mm	OD inch	OD mm	WIDTH inch	WIDTH mm	WEIGHT lbs	WEIGHT g	DYN. CAP. lbf	DYN. CAP. N	STAT. CAP. lbf	STAT. CAP. N	SPEED LIMIT OIL rpm
626	0.2362	6	0.748	19	0.2362	6	0.019	8.4	530	2340	200	890	39000
626 2RS	0.2362	6	0.748	19	0.2362	6	0.019	8.4	530	2340	200	890	30000
6262Z	0.2362	6	0.748	19	0.2362	6	0.019	8.4	530	2340	200	890	39000
607	0.2756	7	0.748	19	0.2362	6	0.017	7.5	530	2360	205	910	40000
6072RS	0.2756	7	0.748	19	0.2362	6	0.017	7.5	530	2360	205	910	28000
6072Z	0.2756	7	0.748	19	0.2362	6	0.017	7.5	530	2360	205	910	40000
627	0.2756	7	0.8661	22	0.2756	7	0.029	13	730	3250	305	1350	37000
6272RS	0.2756	7	0.8661	22	0.2756	7	0.029	13	730	3250	305	1350	23000
6272Z	0.2756	7	0.8661	22	0.2756	7	0.029	13	730	3250	305	1350	37000
698	0.315	8	0.748	19	0.2362	6	0.016	7.3	500	2240	196	870	38000
6982Z	0.315	8	0.748	19	0.2362	6	0.016	7.3	500	2240	196	870	38000
608	0.315	8	0.8661	22	0.2756	7	0.026	12	760	3380	295	1320	37000
608RS	0.315	8	0.8661	22	0.2756	7	0.026	12	760	3380	295	1320	23000
6082Z	0.315	8	0.8661	22	0.2756	7	0.026	12	760	3380	295	1320	37000
628	0.315	8	0.9449	24	0.315	8	0.035	16	750	3350	315	1410	36000
6282RS	0.315	8	0.9449	24	0.315	8	0.035	16	750	3350	315	1410	22000
6282Z	0.315	8	0.9449	24	0.315	8	0.035	16	750	3350	315	1410	36000
699	0.3543	9	0.7874	20	0.2362	6	0.017	7.8	385	1710	166	740	37000
6992Z	0.3543	9	0.7874	20	0.2362	6	0.017	7.8	385	1710	166	740	37000
609	0.3543	9	0.9449	24	0.2756	7	0.031	14	780	3450	320	1430	36000
6092RS	0.3543	9	0.9449	24	0.2756	7	0.031	14	780	3450	320	1430	22000
6092Z	0.3543	9	0.9449	24	0.2756	7	0.031	14	780	3450	320	1430	36000
629	0.3543	9	1.0236	26	0.315	8	0.044	20	1020	4550	440	1960	35000
6292RS	0.3543	9	1.0236	26	0.315	8	0.044	20	1020	4550	440	1960	21000
6292Z	0.3543	9	1.0236	26	0.315	8	0.044	20	1020	4550	440	1960	35000
6000	0.3937	10	1.0236	26	0.315	8	0.042	19	1030	4600	440	1950	34000
60002RS	0.3937	10	1.0236	26	0.315	8	0.042	19	1030	4600	440	1950	21000
60002Z	0.3937	10	1.0236	26	0.315	8	0.042	19	1030	4600	440	1950	34000
6200	0.3937	10	1.1811	30	0.3543	9	0.071	32	1370	6100	580	2600	32000
62002RS	0.3937	10	1.1811	30	0.3543	9	0.071	32	1370	6100	580	2600	17000
62002Z	0.3937	10	1.1811	30	0.3543	9	0.071	32	1370	6100	580	2600	32000
6300	0.3937	10	1.378	35	0.4331	11	0.119	54	1750	7800	810	3600	28000
63002RS	0.3937	10	1.378	35	0.4331	11	0.119	54	1750	7800	810	3600	15000
63002Z	0.3937	10	1.378	35	0.4331	11	0.119	54	1750	7800	810	3600	28000
6001	0.4724	12	1.1024	28	0.315	8	0.049	22	1150	5100	530	2350	31000
60012RS	0.4724	12	1.1024	28	0.315	8	0.049	22	1150	5100	530	2350	18000
60012Z	0.4724	12	1.1024	28	0.315	8	0.049	22	1150	5100	530	2350	31000
6201	0.4724	12	1.2598	32	0.3937	10	0.082	37	1550	6900	670	3000	30000
62012RS	0.4724	12	1.2598	32	0.3937	10	0.082	37	1550	6900	670	3000	16000
62012Z	0.4724	12	1.2598	32	0.3937	10	0.082	37	1550	6900	670	3000	30000
6301	0.4724	12	1.4567	37	0.4724	12	0.135	61	2410	10700	1100	4900	26000
63012RS	0.4724	12	1.4567	37	0.4724	12	0.135	61	2410	10700	1100	4900	13000
63012Z	0.4724	12	1.4567	37	0.4724	12	0.135	61	2410	10700	1100	4900	26000
6002	0.5906	15	1.2598	32	0.3543	9	0.066	30	1260	5600	640	2850	30000
60022RS	0.5906	15	1.2598	32	0.3543	9	0.066	30	1260	5600	640	2850	15000
60022Z	0.5906	15	1.2598	32	0.3543	9	0.066	30	1260	5600	640	2850	30000

Ball Bearings

600 SERIES

- Metric series
- Conrad ball bearings
- Miniature, extra-light, light, medium series
- Available as open, shielded or sealed

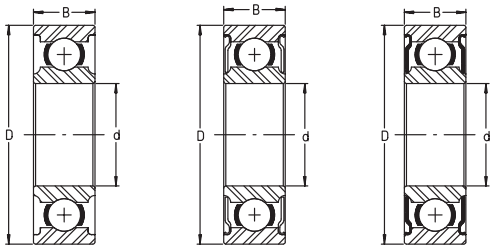

OPEN | 2Z SHIELDED | 2RS SEALED

For details on part numbers, descriptive suffixes and various technical references, please refer to front of this section.
For engineering or technical information contact your local sales representative or call Distributor Sales (800)523-6572.

PART NUMBER	SHAFT inch	SHAFT mm	OD inch	OD mm	WIDTH inch	WIDTH mm	WEIGHT lbs	WEIGHT g	DYN. CAP. lbf	DYN. CAP. N	STAT. CAP. lbf	STAT. CAP. N	SPEED LIMIT OIL rpm
6202	0.5906	15	1.378	35	0.4331	11	0.099	45	1730	7700	790	3500	26000
62022RS	0.5906	15	1.378	35	0.4331	11	0.099	45	1730	7700	790	3450	20000
62022Z	0.5906	15	1.378	35	0.4331	11	0.099	45	1730	7700	790	3450	26000
6302	0.5906	15	1.6535	42	0.5118	13	0.187	85	2550	11300	1190	5300	22000
63022RS	0.5906	15	1.6535	42	0.5118	13	0.187	85	2550	11300	1190	5300	12000
63022Z	0.5906	15	1.6535	42	0.5118	13	0.187	85	2550	11300	1190	5300	22000
6003	0.6693	17	1.378	35	0.3937	10	0.086	39	1300	5800	630	2800	28000
60032RS	0.6693	17	1.378	35	0.3937	10	0.086	39	1300	5800	630	2800	13000
60032Z	0.6693	17	1.378	35	0.3937	10	0.086	39	1300	5800	630	2800	28000
6203	0.6693	17	1.5748	40	0.4724	12	0.143	65	2160	9600	1010	4500	22000
62032RS	0.6693	17	1.5748	40	0.4724	12	0.143	65	2160	9600	1010	4500	12000
62032Z	0.6693	17	1.5748	40	0.4724	12	0.143	65	2160	9600	1010	4500	22000
6303	0.6693	17	1.8504	47	0.5512	14	0.245	111	3050	13500	1390	6200	19000
63032RS	0.6693	17	1.8504	47	0.5512	14	0.245	111	3050	13500	1390	6200	11000
63032Z	0.6693	17	1.8504	47	0.5512	14	0.245	111	3050	13500	1390	6200	19000
6004	0.7874	20	1.6535	42	0.4724	12	0.152	69	2110	9400	1120	5000	20000
60042RS	0.7874	20	1.6535	42	0.4724	12	0.152	69	2110	9400	1120	5000	11000
60042Z	0.7874	20	1.6535	42	0.4724	12	0.152	69	2110	9400	1120	5000	20000
6204	0.7874	20	1.8504	47	0.5512	14	0.243	110	2850	12700	1460	6500	18000
62042RS	0.7874	20	1.8504	47	0.5512	14	0.243	110	2850	12700	1460	6500	10000
62042Z	0.7874	20	1.8504	47	0.5512	14	0.243	110	2850	12700	1460	6500	18000
6304	0.7874	20	2.0472	52	0.5906	15	0.326	148	3550	15900	1750	7800	17000
63042RS	0.7874	20	2.0472	52	0.5906	15	0.326	148	3550	15900	1750	7800	9000
63042Z	0.7874	20	2.0472	52	0.5906	15	0.326	148	3550	15900	1750	7800	17000
6005	0.9843	25	1.8504	47	0.4724	12	0.176	80	2500	11200	1460	6500	18000
60052RS	0.9843	25	1.8504	47	0.4724	12	0.176	80	2500	11200	1460	6500	9500
60052Z	0.9843	25	1.8504	47	0.7087	18	0.176	80	2500	11200	1460	6500	18000
6205	0.9843	25	2.0472	52	0.5906	15	0.287	130	3150	14000	1750	7800	17000
62052RS	0.9843	25	2.0472	52	0.5906	15	0.287	130	3150	14000	1750	7800	9000
62052Z	0.9843	25	2.0472	52	0.5906	15	0.287	130	3150	14000	1750	7800	17000
6305	0.9843	25	2.4409	62	0.6693	17	0.512	232	4650	20600	2550	11300	14000
63052RS	0.9843	25	2.4409	62	0.6693	17	0.512	232	4650	20600	2550	11300	7500
63052Z	0.9843	25	2.4409	62	0.6693	17	0.512	232	4650	20600	2550	11300	14000
6006	1.1811	30	2.1654	55	0.5118	13	0.265	120	2950	13200	1870	8300	16000
60062RS	1.1811	30	2.1654	55	0.5118	13	0.265	120	2950	13200	1870	8300	8000
60062Z	1.1811	30	2.1654	55	0.5118	13	0.265	120	2950	13200	1870	8300	16000
6206	1.1811	30	2.4409	62	0.6299	16	0.441	200	4400	19500	2500	11200	14000
62062RS	1.1811	30	2.4409	62	0.6299	16	0.441	200	4400	19500	2500	11200	7500
62062Z	1.1811	30	2.4409	62	0.6299	16	0.441	200	4400	19500	2500	11200	14000
6306	1.1811	30	2.8346	72	0.748	19	0.772	350	6000	26500	3350	15000	12000
63062RS	1.1811	30	2.8346	72	0.748	19	0.772	350	6000	26500	3350	15000	6300
63062Z	1.1811	30	2.8346	72	0.748	19	0.772	350	6000	26500	3350	15000	12000
6007	1.378	35	2.4409	62	0.5512	14	0.333	151	3600	16000	2320	10300	14000
60072RS	1.378	35	2.4409	62	0.5512	14	0.333	151	3600	16000	2320	10300	7000
60072Z	1.378	35	2.4409	62	0.5512	14	0.333	151	3600	16000	2320	10300	14000
6207	1.378	35	2.8346	72	0.6693	17	0.639	290	5700	25500	3450	15300	12000

Ball Bearings
600 SERIES

- Metric series
- Conrad ball bearings
- Miniature, extra-light, light, medium series
- Available as open, shielded or sealed

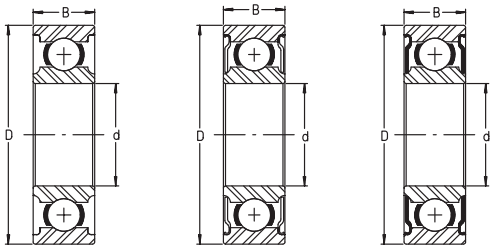

OPEN | 2Z SHIELDED | 2RS SEALED

For details on part numbers, descriptive suffixes and various technical references, please refer to front of this section.
For engineering or technical information contact your local sales representative or call Distributor Sales (800)523-6572.

PART NUMBER	SHAFT inch	SHAFT mm	OD inch	OD mm	WIDTH inch	WIDTH mm	WEIGHT lbs	WEIGHT g	DYN. CAP. lbf	DYN. CAP. N	STAT. CAP. lbf	STAT. CAP. N	SPEED LIMIT OIL rpm
62072RS	1.378	35	2.8346	72	0.6693	17	0.639	290	5700	25500	3450	15300	6300
62072Z	1.378	35	2.8346	72	0.6693	17	0.639	290	5700	25500	3450	15300	12000
6307	1.378	35	3.1496	80	0.8268	21	1.014	460	7500	33500	4300	19200	10000
63072RS	1.378	35	3.1496	80	0.8268	21	1.014	460	7500	33500	4300	19200	5600
63072Z	1.378	35	3.1496	80	0.8268	21	1.014	460	7500	33500	4300	19200	10000
6008	1.5748	40	2.6772	68	0.5906	15	0.419	190	3800	16800	2600	11500	13000
60082RS	1.5748	40	2.6772	68	0.5906	15	0.419	190	3800	16800	2600	11500	6300
60082Z	1.5748	40	2.6772	68	0.5906	15	0.419	190	3800	16800	2600	11500	13000
6208	1.5748	40	3.1496	80	0.7087	18	0.807	366	6500	29000	4000	17800	10000
62082RS	1.5748	40	3.1496	80	0.7087	18	0.807	366	6500	29000	4000	17800	5600
62082Z	1.5748	40	3.1496	80	0.7087	18	0.807	366	6500	29000	4000	17800	10000
6308	1.5748	40	3.5433	90	0.9055	23	1.389	630	10200	45500	5800	26000	9000
63082RS	1.5748	40	3.5433	90	0.9055	23	1.389	630	10200	45500	5800	26000	5000
63082Z	1.5748	40	3.5433	90	0.9055	23	1.389	630	10200	45500	5800	26000	9000
6009	1.7717	45	2.9528	75	0.6299	16	0.512	232	4650	20700	3250	14500	11000
60092RS	1.7717	45	2.9528	75	0.6299	16	0.512	232	4650	20700	3250	14500	5600
60092Z	1.7717	45	2.9528	75	0.6299	16	0.512	232	4650	20700	3250	14500	11000
6209	1.7717	45	3.3465	85	0.748	19	0.893	405	7300	32500	4600	20400	9500
62092RS	1.7717	45	3.3465	85	0.748	19	0.893	405	7300	32500	4600	20400	5300
62092Z	1.7717	45	3.3465	85	0.748	19	0.893	405	7300	32500	4600	20400	9500
6309	1.7717	45	3.937	100	0.9843	25	1.874	850	11900	53000	7100	31500	8000
63092RS	1.7717	45	3.937	100	0.9843	25	1.874	850	11900	53000	7100	31500	4500
63092Z	1.7717	45	3.937	100	0.9843	25	1.874	850	11900	53000	7100	31500	8000
6010	1.9685	50	3.1496	80	0.6299	16	0.576	261	4850	21600	3600	16000	10000
60102RS	1.9685	50	3.1496	80	0.6299	16	0.576	261	4850	21600	3600	16000	5300
60102Z	1.9685	50	3.1496	80	0.6299	16	0.576	261	4850	21600	3600	16000	10000
6210	1.9685	50	3.5433	90	0.7874	20	1.001	454	7900	35000	5200	23200	9000
62102RS	1.9685	50	3.5433	90	0.7874	20	1.001	454	7900	35000	5200	23200	4800
62102Z	1.9685	50	3.5433	90	0.7874	20	1.001	454	7900	35000	5200	23200	9000
6310	1.9685	50	4.3307	110	1.063	27	2.43	1102	13900	62000	8500	38000	7000
63102RS	1.9685	50	4.3307	110	1.063	27	2.43	1102	13900	62000	8500	38000	4000
63102Z	1.9685	50	4.3307	110	1.063	27	2.43	1102	13900	62000	8500	38000	7000
6011	2.1654	55	3.5433	90	0.7087	18	0.831	377	6300	28000	4750	21200	9000
60112RS	2.1654	55	3.5433	90	0.7087	18	0.831	377	6300	28000	4750	21200	4500
60112Z	2.1654	55	3.5433	90	0.7087	18	0.831	377	6300	28000	4750	21200	9000
6211	2.1654	55	3.937	100	0.8268	21	1.341	608	9700	43000	6500	29000	8000
62112RS	2.1654	55	3.937	100	0.8268	21	1.341	608	9700	43000	6500	29000	4300
62112Z	2.1654	55	3.937	100	0.8268	21	1.341	608	9700	43000	6500	29000	8000
6311	2.1654	55	4.7244	120	1.1417	29	3.065	1390	16500	73500	10400	46300	6300
63112RS	2.1654	55	4.7244	120	1.1417	29	3.065	1390	16500	73500	10400	46300	3600
63112Z	2.1654	55	4.7244	120	1.1417	29	3.065	1390	16500	73500	10400	46300	6300
6012	2.3622	60	3.7402	95	0.7087	18	0.904	410	6600	29500	5200	23200	8500
60122RS	2.3622	60	3.7402	95	0.7087	18	0.904	410	6600	29500	5200	23200	4300
60122Z	2.3622	60	3.7402	95	0.7087	18	0.904	410	6600	29500	5200	23200	8500
6212	2.3622	60	4.3307	110	0.8661	22	1.731	785	11700	52000	8100	36000	7000
62122RS	2.3622	60	4.3307	110	0.8661	22	1.731	785	11700	52000	8100	36000	4000

Ball Bearings

600 SERIES

- Metric series
- Conrad ball bearings
- Miniature, extra-light, light, medium series
- Available as open, shielded or sealed

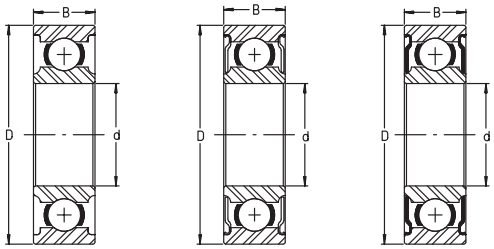

OPEN | 2Z SHIELDED | 2RS SEALED

For details on part numbers, descriptive suffixes and various technical references, please refer to front of this section.
For engineering or technical information contact your local sales representative or call Distributor Sales (800)523-6572.

PART NUMBER	SHAFT inch	SHAFT mm	OD inch	OD mm	WIDTH inch	WIDTH mm	WEIGHT lbs	WEIGHT g	DYN. CAP. lbf	DYN. CAP. N	STAT. CAP. lbf	STAT. CAP. N	SPEED LIMIT OIL rpm
62122Z	2.3622	60	4.3307	110	0.8661	22	1.731	785	11700	52000	8100	36000	7000
6312	2.3622	60	5.1181	130	1.2205	31	3.793	1720	18400	82000	11700	52000	6000
63122RS	2.3622	60	5.1181	130	1.2205	31	3.793	1720	18400	82000	11700	52000	3400
63122Z	2.3622	60	5.1181	130	1.2205	31	3.793	1720	18400	82000	11700	52000	6000
6013	2.5591	65	3.937	100	0.7087	18	0.961	436	6900	30500	5600	25000	7500
60132RS	2.5591	65	3.937	100	0.7087	18	0.961	436	6900	30500	5600	25000	4000
60132Z	2.5591	65	3.937	100	0.7087	18	0.961	436	6900	30500	5600	25000	7500
6213	2.5591	65	4.7244	120	0.9055	23	2.165	982	12800	57000	9000	40000	6300
62132RS	2.5591	65	4.7244	120	0.9055	23	2.165	982	12800	57000	9000	40000	3600
62132Z	2.5591	65	4.7244	120	0.9055	23	2.165	982	12800	57000	9000	40000	6300
6313	2.5591	65	5.5118	140	1.2992	33	4.697	2130	20900	93000	13500	60000	5300
63132RS	2.5591	65	5.5118	140	1.2992	33	4.697	2130	20900	93000	13500	60000	3000
63132Z	2.5591	65	5.5118	140	1.2992	33	4.697	2130	20900	93000	13500	60000	5300
6014	2.7559	70	4.3307	110	0.7874	20	1.33	603	8500	38000	7000	31000	7000
60142RS	2.7559	70	4.3307	110	0.7874	20	1.33	603	8500	38000	7000	31000	3600
60142Z	2.7559	70	4.3307	110	0.7874	20	1.33	603	8500	38000	7000	31000	7000
6214	2.7559	70	4.9213	125	0.9449	24	2.379	1079	13900	62000	9900	44000	6000
62142RS	2.7559	70	4.9213	125	0.9449	24	2.379	1079	13900	62000	9900	44000	3400
62142Z	2.7559	70	4.9213	125	0.9449	24	2.379	1079	13900	62000	9900	44000	6000
6314	2.7559	70	5.9055	150	1.378	35	5.799	2630	23400	104000	15300	68000	5000
63142RS	2.7559	70	5.9055	150	1.378	35	5.799	2630	23400	104000	15300	68000	2800
63142Z	2.7559	70	5.9055	150	1.378	35	5.799	2630	23400	104000	15300	68000	5000

Double Row Angular Contact Ball Bearings

3200 & 3300 SERIES

- Steel cage shown with suffix J
- 25° contact angle
- Available as open, shielded or sealed
- Optional plastic cage without suffix available on request

[1] 3200 plastic cage version with 14mm width

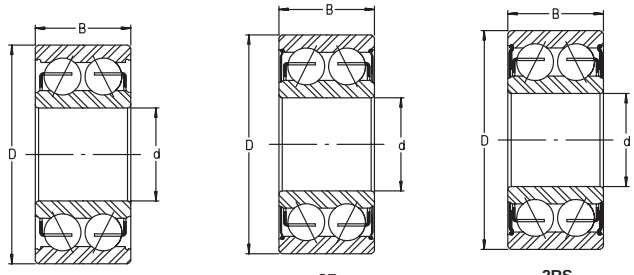

OPEN

2Z SHIELDED

2RS SEALED

For details on part numbers, descriptive suffixes and various technical references, please refer to front of this section.
For engineering or technical information contact your local sales representative or call Distributor Sales (800)523-6572.

PART NUMBER	SHAFT inch	SHAFT mm	OD inch	OD mm	WIDTH inch	WIDTH mm	WEIGHT lbs	WEIGHT kg	DYN. CAP. lbf	DYN. CAP. N	STAT. CAP. lbf	STAT. CAP. N	SPEED LIMIT GREASE rpm
3200J [1]	0.394	10	1.181	30	0.563	14.288	0.115	0.052	1600	6950	900	3800	16000
3200J2RS [1]	0.394	10	1.181	30	0.563	14.288	0.115	0.052	1600	6950	900	3800	16000
3200J2Z [1]	0.394	10	1.181	30	0.563	14.288	0.115	0.052	1600	6950	900	3800	16000
3201J	0.472	12	1.26	32	0.625	15.875	0.132	0.060	2100	9150	1100	5050	15000
3201J2RS	0.472	12	1.26	32	0.625	15.875	0.132	0.060	2100	9150	1100	5050	15000
3201J2Z	0.472	12	1.26	32	0.625	15.875	0.132	0.060	2100	9150	1100	5050	15000
3202J	0.591	15	1.378	35	0.625	15.875	0.154	0.070	2200	10000	1400	6050	14000
3202J2RS	0.591	15	1.378	35	0.625	15.875	0.154	0.070	2200	10000	1400	6050	14000
3202J2Z	0.591	15	1.378	35	0.625	15.875	0.154	0.070	2200	10000	1400	6050	14000
3203J	0.669	17	1.575	40	0.687	17.462	0.221	0.100	2900	12800	1800	8000	11000
3203J2RS	0.669	17	1.575	40	0.687	17.462	0.221	0.100	2900	12800	1800	8000	11000
3203J2Z	0.669	17	1.575	40	0.687	17.462	0.221	0.100	2900	12800	1800	8000	11000
3204J	0.787	20	1.85	47	0.813	20.638	0.364	0.165	4300	19000	2700	12100	10000
3204J2RS	0.787	20	1.85	47	0.813	20.638	0.397	0.180	4300	19000	2700	12100	10000
3204J2Z	0.787	20	1.85	47	0.813	20.638	0.397	0.180	4300	19000	2700	12100	10000
3205J	0.984	25	2.047	52	0.813	20.638	0.375	0.170	4600	20600	3200	14300	9000
3205J2RS	0.984	25	2.047	52	0.813	20.638	0.375	0.170	4600	20600	3200	14300	9000
3205J2Z	0.984	25	2.047	52	0.813	20.638	0.375	0.170	4600	20600	3200	14300	9000
3206J	1.181	30	2.441	62	0.937	23.812	0.662	0.300	5500	24400	4000	17600	7100
3206J2RS	1.181	30	2.441	62	0.937	23.812	0.662	0.300	5500	24400	4000	17600	7100
3206J2Z	1.181	30	2.441	62	0.937	23.812	0.662	0.300	5500	24400	4000	17600	7100
3207J	1.378	35	2.835	72	1.063	26.988	0.970	0.440	7400	32900	5500	24500	5600
3207J2RS	1.378	35	2.835	72	1.063	26.988	0.970	0.440	7400	32900	5500	24500	5600
3207J2Z	1.378	35	2.835	72	1.063	26.988	0.970	0.440	7400	32900	5500	24500	5600
3208J	1.575	40	3.15	80	1.187	30.162	1.345	0.610	9600	42500	7300	32400	5000
3208J2RS	1.575	40	3.15	80	1.187	30.162	1.345	0.610	9600	42500	7300	32400	5000
3208J2Z	1.575	40	3.15	80	1.187	30.162	1.345	0.610	9600	42500	7300	32400	5000
3209J	1.772	45	3.346	85	1.189	30.200	1.367	0.620	9000	40000	7300	32500	4800
3209J2RS	1.772	45	3.346	85	1.189	30.200	1.455	0.660	9000	40000	7300	32500	4800
3209J2Z	1.772	45	3.346	85	1.189	30.200	1.455	0.660	9000	40000	7300	32500	4800
3210J	1.969	50	3.543	90	1.189	30.200	1.521	0.690	9600	42500	8200	36500	4000
3210J2RS	1.969	50	3.543	90	1.189	30.200	1.610	0.730	9600	42500	8200	36500	4000
3210J2Z	1.969	50	3.543	90	1.189	30.200	1.610	0.730	9600	42500	8200	36500	4000
3211J	2.165	55	3.937	100	1.311	33.300	2.205	1.000	14800	66000	12400	55000	3800
3211J2RS	2.165	55	3.937	100	1.311	33.300	2.205	1.000	14800	66000	12400	55000	3800
3211J2Z	2.165	55	3.937	100	1.311	33.300	2.205	1.000	14800	66000	12400	55000	3800
3212J	2.362	60	4.331	110	1.438	36.513	2.977	1.350	16400	73000	13900	62000	3300
3212J2RS	2.362	60	4.331	110	1.438	36.513	2.977	1.350	16400	73000	13900	62000	3300
3212J2Z	2.362	60	4.331	110	1.438	36.513	2.977	1.350	16400	73000	13900	62000	3300
3302J	0.591	15	1.654	42	0.748	19	0.232	0.105	3200	14200	2000	8800	10000
3302J2RS	0.591	15	1.654	42	0.748	19	0.243	0.110	3200	14200	2000	8800	10000
3302J2Z	0.591	15	1.654	42	0.748	19	0.243	0.110	3200	14200	2000	8800	10000
3303J	0.669	17	1.85	47	0.874	22.200	0.287	0.130	4300	19000	2700	12100	9500
3303J2RS	0.669	17	1.85	47	0.874	22.200	0.309	0.140	4300	19000	2700	12100	9500
3303J2Z	0.669	17	1.85	47	0.874	22.200	0.309	0.140	4300	19000	2700	12100	9500
3304J	0.787	20	2.047	52	0.874	22.200	0.485	0.220	4300	19100	2800	12400	9000

Double Row Angular Contact Ball Bearings

3200 & 3300 SERIES

- Steel cage shown with suffix J
- 25° contact angle
- Available as open, shielded or sealed
- Optional plastic cage without suffix available on request

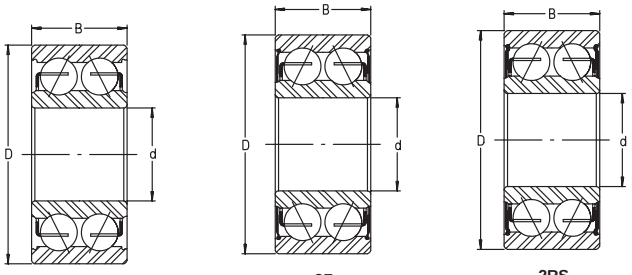

OPEN

2Z SHIELDED

2RS SEALED

For details on part numbers, descriptive suffixes and various technical references, please refer to front of this section.
For engineering or technical information contact your local sales representative or call Distributor Sales (800)523-6572.

PART NUMBER	SHAFT inch	SHAFT mm	OD inch	OD mm	WIDTH inch	WIDTH mm	WEIGHT lbs	WEIGHT kg	DYN. CAP. lbf	DYN. CAP. N	STAT. CAP. lbf	STAT. CAP. N	SPEED LIMIT GREASE rpm
3304J2RS	0.787	20	2.047	52	0.874	22.200	0.507	0.230	4300	19100	2800	12400	9000
3304J2Z	0.787	20	2.047	52	0.874	22.200	0.507	0.230	4300	19100	2800	12400	9000
3305J	0.984	25	2.441	62	1	25.400	0.750	0.340	6000	26500	4000	17900	7900
3305J2RS	0.984	25	2.441	62	1	25.400	0.772	0.350	6000	26500	4000	17900	7900
3305J2Z	0.984	25	2.441	62	1	25.400	0.772	0.350	6000	26500	4000	17900	7900
3306J	1.181	30	2.835	72	1.189	30.200	1.235	0.560	7400	33000	5500	24300	6200
3306J2RS	1.181	30	2.835	72	1.189	30.200	1.279	0.580	7400	33000	5500	24300	6200
3306J2Z	1.181	30	2.835	72	1.189	30.200	1.279	0.580	7400	33000	5500	24300	6200
3307J	1.378	35	3.15	80	1.375	34.925	1.654	0.750	10000	44500	7100	31500	5100
3307J2RS	1.378	35	3.15	80	1.375	34.925	1.720	0.780	10000	44500	7100	31500	5100
3307J2Z	1.378	35	3.15	80	1.375	34.925	1.720	0.780	10000	44500	7100	31500	5100
3308J	1.575	40	3.543	90	1.437	36.500	2.227	1.010	11100	49500	8200	36500	4700
3308J2RS	1.575	40	3.543	90	1.437	36.500	2.315	1.050	11100	49500	8200	36500	4700
3308J2Z	1.575	40	3.543	90	1.437	36.500	2.315	1.050	11100	49500	8200	36500	4700
3309J	1.772	45	3.937	100	1.563	39.700	3.131	1.420	14800	66000	11100	49500	4000
3309J2RS	1.772	45	3.937	100	1.563	39.700	3.087	1.400	14800	66000	11100	49500	4000
3309J2Z	1.772	45	3.937	100	1.563	39.700	3.131	1.420	14800	66000	11100	49500	4000
3310J	1.969	50	4.331	110	1.75	44.450	4.234	1.920	17800	79000	13500	60000	3200
3310J2RS	1.969	50	4.331	110	1.75	44.450	4.322	1.960	17800	79000	13500	60000	3200
3310J2Z	1.969	50	4.331	110	1.75	44.450	4.322	1.960	17800	79000	13500	60000	3200

Angular Contact Ball Bearings
G5200 SERIES

- Double row
- Snap ring grooves in outer ring
- Available with seals
- For sheave mounting

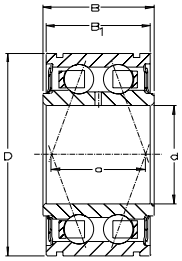

For details on part numbers, descriptive suffixes and various technical references, please refer to front of this section.
For engineering or technical information contact your local sales representative or call Distributor Sales (800)523-6572.

PART NUMBER	SHAFT d inch	SHAFT d mm	OD D inch	OD D mm	WIDTH OUTER B_1 inch	WIDTH OUTER B_1 mm	WIDTH INNER B_1 inch	WIDTH INNER B_1 mm	WEIGHT lbs	WEIGHT g	DYN. CAP. lbf	DYN. CAP. N	STAT. CAP. lbf	STAT. CAP. N	SPEED LIMIT GREASE rpm
G5205 2RSN	0.984	25	2.047	52	1.102	28	1.181	30	0.0594	27	4850	21600	3350	14900	9000
G5206 2RSN	1.181	30	2.441	62	1.260	32	1.339	34	0.88	400	6700	30000	4800	21400	7100
G5207 2RSN	1.378	35	2.835	72	1.339	34	1.417	36	1.298	590	8900	39500	6500	29000	5600
G5208 2RSN	1.575	40	3.150	80	1.417	36	1.496	38	1.54	700	11200	50000	8400	37500	5000

Angular Contact Ball Bearing
7000, 7200, & 7300 BE SERIES

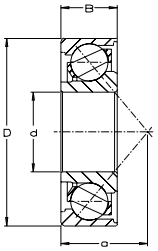

- Single row
- Available open, gap or contact seals
- Contact angle 40°
- Plastic retainer

For details on part numbers, descriptive suffixes and various technical references, please refer to front of this section.
For engineering or technical information contact your local sales representative or call Distributor Sales (800)523-6572.

INSERT	SHAFT d inch	SHAFT d mm	OD D inch	OD D mm	WIDTH B inch	WIDTH B mm	OFFSET a inch	OFFSET a mm	WEIGHT lbs	WEIGHT g	DYN. CAP. lbf	DYN. CAP. N	STAT. CAP. lbf	STAT. CAP. N	SPEED LIMIT rpm
7004BE2RS	0.787	20	1.654	42	0.472	12	0.768	19.5	0.154	70	3000	13300	1690	7500	9800
7005BE2RS	0.984	25	1.850	47	0.472	12	0.846	21.5	0.176	80	3350	14800	2090	9300	8000
7005BE2Z	0.984	25	1.850	47	0.472	12	0.846	21.5	0.176	80	3350	14800	2090	9300	11500
7006BE2RS	1.181	30	2.165	55	0.512	13	0.984	25	0.243	110	4150	18400	2750	12300	7000
7007BE2RS	1.378	35	2.441	62	0.551	14	1.102	28	0.309	140	5000	22400	3550	15900	6000
7008BE2RS	1.575	40	2.677	68	0.591	15	1.201	30.5	0.375	170	5800	26000	4200	18700	5600
7200BE	0.394	10	1.181	30	0.354	9	0.535	13.6	0.066	30	1750	7700	850	3680	22000
7200BE2RS	0.394	10	1.181	30	0.354	9	0.535	13.6	0.066	30	1750	7700	850	3680	15000
7200BE2Z	0.394	10	1.181	30	0.354	9	0.535	13.6	0.066	30	1750	7700	850	3680	22000
7201BE	0.472	12	1.260	32	0.394	10	0.591	15	0.088	40	1900	8400	960	4260	19000
7201BE2RS	0.472	12	1.260	32	0.394	10	0.591	15	0.088	40	1900	8400	960	4260	13500
7201BE2Z	0.472	12	1.260	32	0.394	10	0.591	15	0.088	40	1900	8400	960	4260	19000
7202BE	0.591	15	1.378	35	0.433	11	0.642	16.3	0.110	50	2300	10300	1200	5290	17000
7202BE2RS	0.591	15	1.378	35	0.433	11	0.642	16.3	0.110	50	2300	10300	1200	5290	12000
7203BE	0.669	17	1.575	40	0.472	12	0.728	18.5	0.154	70	2800	12500	1500	6700	15000
7203BE2RS	0.669	17	1.575	40	0.472	12	0.728	18.5	0.154	70	2800	12500	1500	6700	10000
7204BE	0.787	20	1.850	47	0.551	14	0.846	21.5	0.221	100	3900	17300	2140	9500	13000
7204BE2RS	0.787	20	1.850	47	0.551	14	0.846	21.5	0.221	100	3900	17300	2140	9500	9000
7204BE2Z	0.787	20	1.850	47	0.551	14	0.846	21.5	0.221	100	3900	17300	2140	9500	13000
7205BE	0.984	25	2.047	52	0.591	15	0.945	24	0.243	110	4450	20200	2650	11900	11000
7205BE2RS	0.984	25	2.047	52	0.591	15	0.945	24	0.243	110	4450	20200	2650	11900	7700
7206BE2RS	1.181	30	2.441	62	0.630	16	1.083	27.5	0.375	170	6200	27500	3800	16800	6300
7207BE	1.378	35	2.835	72	0.669	17	1.260	32	0.550	250	7800	34500	5300	23400	8000
7207BE2RS	1.378	35	2.835	72	0.669	17	1.260	32	0.550	250	7800	34500	5300	23400	5600
7208BE	1.575	40	3.150	80	0.709	18	1.378	35	0.772	350	8700	38500	6000	27000	7200
7208BE2RS	1.575	40	3.150	80	0.709	18	1.378	35	0.772	350	8700	38500	6000	27000	5000
7209BE	1.772	45	3.346	85	0.748	19	1.457	37	0.882	400	10100	45000	7300	32500	6700
7209BE2RS	1.772	45	3.346	85	0.748	19	1.457	37	0.882	400	10100	45000	7300	32500	4600
7210BE2RS	1.969	50	3.543	90	0.787	20	1.575	40	0.926	420	11100	49500	8100	36000	4200
7210BE2Z	1.969	50	3.543	90	0.787	20	1.575	40	0.926	420	11100	49500	8100	36000	6000
7212BE	2.362	60	4.331	110	0.866	22	1.910	48.5	1.742	790	14400	64000	11700	52000	5000
7212BE2RS	2.362	60	4.331	110	0.866	22	1.910	48.5	1.742	790	14400	64000	11700	52000	3500
7214BE2RS	2.756	70	4.921	125	0.945	24	2.087	53	2.337	1060	17000	75000	14300	63300	3000
7302BE	0.591	15	1.654	42	0.512	13	0.748	19	0.176	80	3330	14800	1760	7820	14500
7302BE2RS	0.591	15	1.654	42	0.512	13	0.748	19	0.176	80	3330	14800	1760	7820	10000
7304BE	0.787	20	2.047	52	0.591	15	0.925	23.5	0.309	140	4650	20600	2600	11600	12000
7304BE2RS	0.787	20	2.047	52	0.591	15	0.925	23.5	0.309	140	4650	20600	2600	11600	8400
7305BE2RS	0.984	25	2.441	62	0.669	17	27	27	0.397	180	6500	29000	3800	16800	6700

Radial Insert Ball Bearing
RAE..NPPNR SERIES

- Cylindrical OD
- Eccentric locking collar
- Standard P seals
- 2 snap ring grooves and 1 snap ring

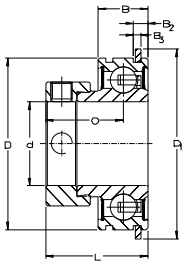

For details on part numbers, descriptive suffixes and various technical references, please refer to front of this section.
For engineering or technical information contact your local sales representative or call Distributor Sales (800)523-6572.

PART NUMBER	SHAFT d inch	SHAFT d inch	SHAFT d mm	D inch	D mm	B inch	B mm	B_2 inch	B_2 mm	B_3 inch	B_3 mm
RAE 20 NPPNR	-	0.787	20	1.85	47	0.551	14	0.141	3.580	0.044	1.120
RAE 25 NPPNR	-	0.984	25	2.047	52	0.591	15	0.141	3.580	0.044	1.120
RAE 30 NPPNR	-	1.181	30	2.441	62	0.709	18	0.196	4.980	0.067	1.700
RAE 35 NPPNR	-	1.378	35	2.835	72	0.748	19	0.196	4.980	0.067	1.700

CONTINUED FROM ABOVE

PART NUMBER	O inch	O mm	L inch	L mm	WGT. lbs	WGT. kg	DYN. CAP. lbf	DYN. CAP. N	STAT. CAP. lbf	STAT. CAP. N
RAE 20 NPPNR	0.925	23.500	1.221	31	0.35	0.16	2900	12800	1480	6600
RAE 25 NPPNR	0.925	23.500	1.221	31	0.55	0.25	3150	14000	1760	7800
RAE 30 NPPNR	1.051	26.700	1.406	35.700	0.68	0.31	4350	19500	2550	11300
RAE 35 NPPNR	1.158	29.400	1.532	38.900	1.06	0.48	5800	25500	3450	15300

Radial Ball Bearing
200 KRR SERIES

- Cylindrical OD
- Inner ring extended both sides
- Standard R seal
- Cylindrical bore per 6200 Series tolerance

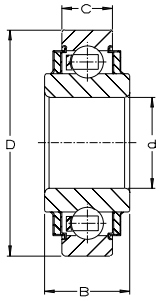

For details on part numbers, descriptive suffixes and various technical references, please refer to front of this section.
For engineering or technical information contact your local sales representative or call Distributor Sales (800)523-6572.

PART NUMBER	SHAFT d inch	SHAFT d mm	OD D inch	OD D mm	OUTER WIDTH C inch	OUTER WIDTH C mm	INNER WIDTH B inch	INNER WIDTH B mm	WGT. lbs	WGT. kg	DYN. CAP. lbf	DYN. CAP. N	STAT. CAP. lbf	STAT. CAP. N	SPEED LIMIT rpm
202 KRR	0.591	15	1.378	35	0.394	11	0.567	14.400	0.11	0.05	1710	7600	830	3700	14600
203 KRR	0.669	17	1.575	40	0.472	12	0.720	18.300	0.154	0.07	2150	9600	1070	4750	13000
204 KRR	0.787	20	1.850	47	0.551	14	0.697	17.700	0.265	0.12	2900	12800	1480	6600	11000
205 KRR	0.984	25	2.047	52	0.591	15	0.657	16.700	0.353	0.16	3150	14000	1750	7800	8800
206 KRR	1.811	30	2.441	62	0.630	16	0.772	19.600	0.529	0.24	4350	19500	2550	11300	7300
208 KRR	1.575	40	3.15	80	0.709	18	0.807	20.500	0.97	0.44	7300	32500	4450	19800	5500
209 KRR	1.772	45	3.346	85	0.748	19	1.039	26.400	1.169	0.53	7300	32500	4600	20400	4900
210 KRR	1.969	50	3.543	90	0.787	20	0.945	24	1.279	0.58	7900	35000	5200	23200	4400
212 KRR	2.362	60	4.331	110	0.866	22	1.181	30	2.426	1.1	11800	52000	8100	36000	3700

Radial Insert Ball Bearing
E..KLLH SERIES

- Cylindrical OD
- Eccentric locking collar
- Labyrinth seal
- Extended inner ring both sides

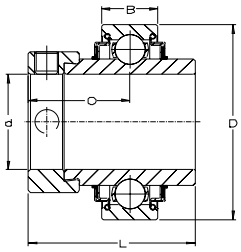

For details on part numbers, descriptive suffixes and various technical references, please refer to front of this section.
For engineering or technical information contact your local sales representative or call Distributor Sales (800)523-6572.

INSERT	SHAFT d inch	SHAFT d inch	SHAFT d mm	D inch	D mm	B inch	B mm	O inch	O mm	L inch	L mm	WGT. lbs	WGT. kg	DYN. CAP. lbf	DYN. CAP. N	STAT. CAP. lbf	STAT. CAP. N
E20 KLLH	-	0.787	20	1.850	47	0.551	14	1.047	26.6	1.720	43.700	0.44	0.2	2900	12800	1480	6600
E25 KLLH	-	0.984	25	2.047	52	0.591	15	1.059	26.9	1.748	44.400	0.55	0.25	3150	14000	1760	7800
E30 KLLH	-	1.181	30	2.441	62	0.709	18	1.185	30.1	1.906	48.400	0.84	0.38	4350	19500	2550	11300
E35 KLLH	-	1.378	35	2.835	72	0.748	19	1.272	32.3	2.012	51.100	1.21	0.55	5800	25500	3450	15300
E40 KLLH	-	1.575	40	3.150	80	0.827	21	1.374	34.9	2.217	56.300	1.63	0.74	7300	32500	4450	19800
E45 KLLH		1.772	45	3.346	85	0.866	22	1.374	34.9	2.217	56.300	1.79	0.81	7300	32500	4590	20400
E50 KLLH		1.969	50	3.543	90	0.866	22	1.500	38.1	2.469	62.700	2.21	1	7900	35000	5200	23200

Radial Insert Ball Bearings
E..KRR SERIES

- Cylindrical OD
- Eccentric locking collar
- Standard R seals

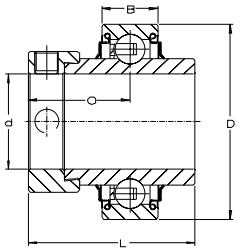

For details on part numbers, descriptive suffixes and various technical references, please refer to front of this section.
For engineering or technical information contact your local sales representative or call Distributor Sales (800)523-6572.

INSERT	SHAFT d inch	SHAFT d inch	SHAFT d mm	D inch	D mm	B inch	B mm	O inch	O mm	L inch	L mm	WGT. lbs	WGT. kg	DYN. CAP. lbf	DYN. CAP. N	STAT. CAP. lbf	STAT. CAP. N
E20 KRR	-	0.787	20	1.850	47	0.551	14	1.047	26.6	1.720	43.7	0.44	0.2	2900	12800	1480	6600
E25 KRR	-	0.984	25	2.047	52	0.591	15	1.059	26.9	1.748	44.4	0.55	0.25	3150	14000	1760	7800
E30 KRR	-	1.181	30	2.441	62	0.709	18	1.185	30.1	1.906	48.4	0.84	0.38	4350	19500	2550	11300
E45 KRR	-	1.772	45	3.346	85	0.866	22	1.374	34.9	2.217	56.3	1.79	0.81	7300	32500	4590	20400
E50 KRR	-	1.969	50	3.543	90	0.866	22	1.500	38.1	2.469	62.7	2.21	1	7900	35000	5200	23200
E60 KRR	-	2.362	60	4.331	110	0.945	24	1.843	46.8	3.063	77.8	4.06	1.84	11800	52000	8100	36000

Radial Insert Ball Bearing
RAE..NPPFA 106 SERIES

- Cylindrical OD
- Economy P seal
- Noise tested
- Eccentric locking collar

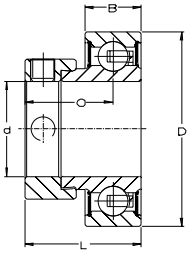

For details on part numbers, descriptive suffixes and various technical references, please refer to front of this section.
For engineering or technical information contact your local sales representative or call Distributor Sales (800)523-6572.

INSERT	SHAFT d inch	SHAFT d inch	SHAFT d mm	D inch	D mm	B inch	B mm	O inch	O mm	L inch	L mm	WGT. lbs	WGT. kg	DYN. CAP. lbf	DYN. CAP. N	STAT. CAP. lbf	STAT. CAP. N
RAE 20 NPPFA106	-	0.787	20	1.850	47	0.551	14	0.925	23.5	1.220	31	0.35	0.16	2900	12800	1480	6600
RAE 25 NPPFA106	-	0.984	25	2.047	52	0.591	15	0.925	23.5	1.220	31	0.42	0.19	3150	14000	1760	7800
RAE 30 NPPFA106	-	1.181	30	2.441	62	0.709	18	1.051	26.7	1.406	35.7	0.68	0.31	4350	19500	2550	11300
RAE 35 NPPFA106	-	1.378	35	2.835	72	0.748	19	1.157	29.4	1.531	38.9	1.06	0.48	5800	25500	3450	15300
RAE 40 NPPFA106	-	1.575	40	3.150	80	0.827	21	1.287	32.7	1.720	43.7	1.37	0.62	7300	32500	4450	19800
RAE 45 NPPFA106	-	1.772	45	3.346	85	0.866	22	1.287	32.7	1.720	43.7	1.52	0.69	7300	32500	4600	20400
RAE 50 NPPFA106	-	1.969	50	3.543	90	0.866	22	1.287	32.7	1.720	43.7	1.70	0.77	7900	35000	5200	23200

Radial Ball Bearings with Special Seals

200 KXN4 SERIES

- Spring-loaded rotary shaft seal
- Seal can withstand a pressure of 0.5 bar
- Snap ring groove to DIN5417

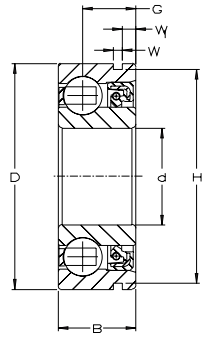

For details on part numbers, descriptive suffixes and various technical references, please refer to front of this section.
For engineering or technical information contact your local sales representative or call Distributor Sales (800)523-6572.

PART NUMBER	SHAFT d inch	SHAFT d mm	OD D inch	OD D mm	B inch	B mm	G inch	G mm	W inch	W mm
202 KXN4	0.591	15	1.378	35	0.433	11	0.315	8	0.081	2.06
203 KXN4	0.669	17	1.575	40	0.512	13	0.335	8.50	0.081	2.06
204 KXN4	0.787	20	1.850	47	0.591	15	0.374	9.50	0.097	2.46
205 KXN4	0.984	25	2.047	52	0.591	15	0.374	9.50	0.097	2.46
206 KXN4	1.181	30	2.441	62	0.669	17	0.413	10.50	0.129	3.28
207 KXN4	1.378	35	2.835	72	0.748	19	0.472	12	0.129	3.28
208 KXN4	1.575	40	3.150	80	0.787	20	0.472	12	0.129	3.28

CONTINUED FROM ABOVE

PART NUMBER	W_1 inch	W_1 mm	WGT. inch	WGT. mm	DYN. CAP. lbf	DYN. CAP. N	STAT. CAP. lbf	STAT. CAP. N	SPEED LIMIT rpm
202 KXN4	0.053	1.35	0.110	0.05	1710	7600	830	3700	4000
203 KXN4	0.053	1.35	0.154	0.07	2150	9600	1070	4750	3800
204 KXN4	0.053	1.35	0.397	0.18	2900	12800	1480	6600	3600
205 KXN4	0.053	1.35	0.309	0.14	3150	14000	1750	7800	3400
206 KXN4	0.075	1.90	0.507	0.23	4350	19500	2550	11300	3200
207 KXN4	0.075	1.90	0.750	0.34	5800	25500	3450	15300	2900
208 KXN4	0.075	1.90	0.882	0.40	7300	32500	4450	19800	2600

Radial Insert Ball Bearings
RAE..NPPB SERIES

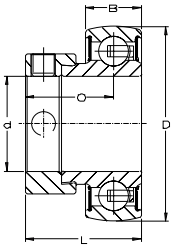

- Spherical OD
- Eccentric locking collar
- Economy P seals
- Inch and metric setscrews
- Without relubrication holes in outer ring

For details on part numbers, descriptive suffixes and various technical references, please refer to front of this section.
For engineering or technical information contact your local sales representative or call Distributor Sales (800)523-6572.

PART NUMBER	SHAFT d inch	SHAFT d inch	SHAFT d mm	D inch	D mm	B inch	B mm	O inch	O mm	L inch	L mm	WGT. lbs	WGT. kg	DYN. CAP. C lbf	DYN. CAP. C N	STAT. CAP. C_0 lbf	STAT. CAP. C_0 N
RAE12 NPPB	-	0.472	12	1.575	40	0.472	12	0.870	22.1	1.126	28.6	0.265	0.12	2150	9600	1070	4750
RAE 15 NPPB	-	0.591	15	1.575	40	0.472	12	0.870	22.1	1.126	28.6	0.265	0.12	2150	9600	1070	4750
RAE 17 NPPB	-	0.669	17	1.575	40	0.472	12	0.870	22.1	1.126	28.6	0.375	0.17	2150	9600	1070	4750
RAE 20 NPPB	-	0.787	20	1.850	47	0.551	14	0.925	23.5	1.221	31	0.353	0.16	2900	12800	1480	6600
RAE 25 NPPB	-	0.984	25	2.047	52	0.591	15	0.925	23.5	1.221	31	0.419	0.19	3150	14000	1760	7800
RAE 30 NPPB	-	1.181	30	2.441	62	0.709	18	1.051	26.7	1.406	35.7	0.684	0.31	4350	19500	2550	11300
RAE 35 NPPB	-	1.378	35	2.835	72	0.748	19	1.158	29.4	1.532	38.9	1.058	0.48	5800	25500	3450	15300
RAE 40 NPPB	-	1.575	40	3.150	80	0.827	21	1.287	32.7	1.721	43.7	1.367	0.62	7300	32500	4450	19800

Radial Insert Ball Bearings
GRAE..NPPB, GRA..NPPB SERIES

- Spherical OD
- Eccentric locking collar
- Economy P seals
- Inch and metric setscrews

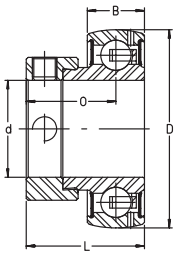

For details on part numbers, descriptive suffixes and various technical references, please refer to front of this section.
For engineering or technical information contact your local sales representative or call Distributor Sales (800)523-6572.

PART NUMBER	SHAFT d inch	SHAFT d inch	SHAFT d mm	D inch	D mm	B inch	B mm	O inch	O mm	L inch	L mm	WGT. lbs	WGT. kg	DYN. CAP. C lbf	DYN. CAP. C N	STAT. CAP. C_0 lbf	STAT. CAP. C_0 N
GRAE12 NPPB	-	0.472	12	1.575	40	0.472	12	0.870	22.1	1.126	28.6	0.265	0.12	2150	9600	1070	4750
GRA 008 NPPB	1/2	0.500	12.700	1.575	40	0.472	12	0.870	22.1	1.126	28.6	0.265	0.12	2150	9600	1070	4750
GRAE 15 NPPB	-	0.590	15	1.575	40	0.472	12	0.870	22.1	1.126	28.6	0.265	0.12	2150	9600	1070	4750
GRA 010 NPPB	5/8	0.625	15.875	1.575	40	0.472	12	0.870	22.1	1.126	28.6	0.265	0.12	2150	9600	1070	4750
GRAE 17 NPPB	-	0.669	17	1.575	40	0.472	12	0.870	22.1	1.126	28.6	0.375	0.17	2150	9600	1070	4750
GRA 012 NPPB	3/4	0.750	19.050	1.850	47	0.551	14	0.925	23.5	1.221	31	0.353	0.16	2900	12800	1480	6600
GRAE 20 NPPB	-	0.787	20	1.850	47	0.551	14	0.925	23.5	1.221	31	0.353	0.16	2900	12800	1480	6600
GRA 014 NPPB	7/8	0.875	22.225	2.047	52	0.591	15	0.925	23.5	1.221	31	0.419	0.19	3150	14000	1760	7800
GRAE 25 NPPB	-	0.984	25	2.047	52	0.591	15	0.925	23.5	1.221	31	0.419	0.19	3150	14000	1760	7800
GRA 100 NPPB	1	1	25.400	2.047	52	0.591	15	0.925	23.5	1.221	31	0.419	0.19	3150	14000	1760	7800
GRA 101 NPPB	1-1/16	1.062	26.988	2.441	62	0.709	18	1.051	26.7	1.406	35.7	0.684	0.31	4350	19500	2550	11300
GRA 102 NPPB	1-1/8	1.125	28.575	2.441	62	0.709	18	1.051	26.7	1.406	35.7	0.684	0.31	4350	19500	2550	11300
GRAE 30 NPPB	-	1.181	30	2.441	62	0.709	18	1.051	26.7	1.406	35.7	0.684	0.31	4350	19500	2550	11300
GRA 103 NPPB	1-3/16	1.187	30.162	2.441	62	0.709	18	1.051	26.7	1.406	35.7	0.684	0.31	4350	19500	2550	11300
GRA 104 NPPB-206	1-1/4	1.250	31.750	2.441	62	0.709	18	1.051	26.7	1.406	35.7	0.684	0.31	4350	19500	2550	11300
GRA 104 NPPB	1-1/4	1.250	31.750	2.835	72	0.748	19	1.158	29.4	1.532	38.9	1.058	0.48	5800	25500	3450	15300
GRA 106 NPPB	1-3/8	1.375	34.925	2.835	72	0.748	19	1.158	29.4	1.532	38.9	1.058	0.48	5800	25500	3450	15300
GRAE 35 NPPB	-	1.378	35	2.835	72	0.748	19	1.158	29.4	1.532	38.9	1.058	0.48	5800	25500	3450	15300
GRA 107 NPPB	1-7/16	1.437	36.512	2.835	72	0.748	19	1.158	29.4	1.532	38.9	1.058	0.48	5800	25500	3450	15300
GRA 108 NPPB	1-1/2	1.500	38.100	3.150	80	0.827	21	1.287	32.7	1.721	43.7	1.367	0.62	7300	32500	4450	19800
GRAE 40 NPPB	-	1.574	40	3.150	80	0.827	21	1.287	32.7	1.721	43.7	1.367	0.62	7300	32500	4450	19800
GRA 112 NPPB	1-3/4	1.750	44.450	3.347	85	0.866	22	1.287	32.7	1.721	43.7	1.521	0.69	7400	32500	4600	20400
GRAE 45 NPPB	-	1.771	45	3.347	85	0.866	22	1.287	32.7	1.721	43.7	1.521	0.69	7400	32500	4600	20400
GRA 115 NPPB	1-15/16	1.937	49.212	3.543	90	0.866	22	1.287	32.7	1.721	43.7	1.698	0.77	7900	35000	5200	23200
GRAE 50 NPPB	-	1.968	50	3.543	90	0.866	22	1.287	32.7	1.721	43.7	1.698	0.77	7900	35000	5200	23200
GRA 200 NPPB	2	2.000	50.800	3.937	100	0.984	25	1.433	36.4	1.906	48.4	1.786	0.81	9800	43500	6600	29000
GRAE55 NPPB	-	2.165	55	3.937	100	0.945	24	1.433	36.4	1.906	48.4	1.786	0.81	9800	43500	6600	29000
GRA 203 NPPB	2-3/16	2.187	55.562	3.937	100	0.984	25	1.433	36.4	1.906	48.4	1.786	0.81	9800	43500	6600	29000
GRAE 60 NPPB	-	2.362	60	4.331	110	0.945	24	1.559	39.6	2.091	53.1	3.087	1.4	11800	52000	8100	36000
GRA 207 NPPB	2-7/16	2.437	61.912	4.331	110	0.945	24	1.559	39.6	2.091	53.1	3.087	1.4	11800	52000	8100	36000

Radial Insert Ball Bearings

GAY..NPPB SERIES

- Spherical OD
- Set screw locking
- Economy P seals
- Inch and metric setscrews

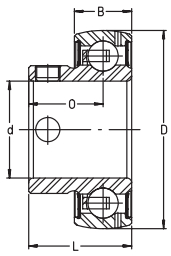

For details on part numbers, descriptive suffixes and various technical references, please refer to front of this section.
For engineering or technical information contact your local sales representative or call Distributor Sales (800)523-6572.

PART NUMBER	SHAFT d inch	SHAFT d inch	SHAFT d mm	D inch	D mm	B inch	B mm	O inch	O mm	L inch	L mm	WGT. lbs	WGT. kg	DYN. CAP. C lbf	DYN. CAP. C N	STAT. CAP. C_0 lbf	STAT. CAP. C_0 N
GAY008 NPPB	1/2	0.500	12.7	1.575	40	0.472	12	0.630	16	0.866	22	0.221	0.10	2150	9600	1070	4750
GAY15 NPPB	15	0.591	15	1.575	40	0.472	12	0.630	16	0.866	22	0.198	0.09	2150	9600	1070	4750
GAY010 NPPB	5/8	0.625	15.9	1.575	40	0.472	12	0.630	16	0.866	22	0.198	0.09	2150	9600	1070	4750
GAY17 NPPB	17	0.669	17	1.575	40	0.472	12	0.630	16	0.866	22	0.176	0.08	2150	9600	1070	4750
GAY012 NPPB	3/4	0.750	19.1	1.850	47	0.551	14	0.709	18	0.984	25	0.287	0.13	2900	12800	1480	6600
GAY20 NPPB	20	0.787	20	1.850	47	0.551	14	0.709	18	0.984	25	0.287	0.13	2900	12800	1480	6600
GAY014 NPPB	7/8	0.875	22.2	2.047	52	0.591	15	0.768	19.5	1.063	27	0.353	0.16	3150	14000	1760	7800
GAY25 NPPB	25	0.984	25	2.047	52	0.591	15	0.768	19.5	1.063	27	0.353	0.16	3150	14000	1760	7800
GAY100 NPPB	1	1	25.4	2.047	52	0.591	15	0.768	19.5	1.063	27	0.353	0.16	3150	14000	1760	7800
GAY30 NPPB	30	1.181	30	2.441	62	0.709	18	0.827	21	1.181	30	0.551	0.25	4350	19500	2550	11300
GAY103 NPPB	1-3/16	1.188	30.2	2.441	62	0.709	18	0.827	21	1.181	30	0.551	0.25	4350	19500	2550	11300
GAY104 NPPB	1-1/4	1.250	31.8	2.835	72	0.748	19	1.004	25.5	1.378	35	0.860	0.39	5800	25500	3450	15300
GAY35 NPPB	35	1.378	35	2.835	72	0.748	19	1.004	25.5	1.378	35	0.860	0.39	5800	25500	3450	15300
GAY107 NPPB	1-7/16	1.438	36.5	2.835	72	0.748	19	1.004	25.5	1.378	35	0.860	0.39	5800	25500	3450	15300
GAY108 NPPB	1-1/2	1.500	38.1	3.150	80	0.827	21	1.142	29	1.555	39.5	1.125	0.51	7300	32500	4450	19800
GAY40 NPPB	40	1.575	40	3.150	80	0.827	21	1.142	29	1.555	39.5	1.125	0.51	7300	32500	4450	19800
GAY112 NPPB	1-3/4	1.750	44.5	3.347	85	0.866	22	1.201	30.5	1.634	41.5	1.213	0.55	7400	32500	4600	20400
GAY45 NPPB	45	1.772	45	3.347	85	0.866	22	1.201	30.5	1.634	41.5	1.213	0.55	7400	32500	4600	20400
GAY115 NPPB	1-15/16	1.938	49.2	3.543	90	0.866	22	1.260	32	1.693	43	1.367	0.62	7900	35000	5200	23200
GAY50 NPPB	50	1.969	50	3.543	90	0.866	22	1.260	32	1.693	43	1.367	0.62	7900	35000	5200	23200

Radial Insert Ball Bearings

GE..KRRB, G1..KRRB SERIES

- Spherical OD
- Eccentric locking collar
- Standard R seals
- Inch and metric setscrews

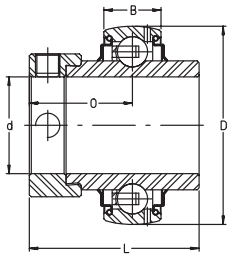

For details on part numbers, descriptive suffixes and various technical references, please refer to front of this section.
For engineering or technical information contact your local sales representative or call Distributor Sales (800)523-6572.

PART NUMBER	SHAFT d inch	SHAFT d inch	SHAFT d mm	D inch	D mm	B inch	B mm	O inch	O mm	L inch	L mm	WGT. lbs	WGT. kg	DYN. CAP. C lbf	DYN. CAP. C N	STAT. CAP. C_0 lbf	STAT. CAP. C_0 N
G1008 KRRB	1/2	0.500	12.7	1.575	40	0.472	12	0.921	23.4	1.469	37.3	0.375	0.17	2150	9600	1070	4750
GE15 KRRB	-	0.591	15	1.575	40	0.472	12	0.921	23.4	1.469	37.3	0.353	0.16	2150	9600	1070	4750
G1010 KRRB	5/8	0.625	15.9	1.575	40	0.472	12	0.921	23.4	1.469	37.3	0.353	0.16	2150	9600	1070	4750
GE17 KRRB	3/4	0.750	19.1	1.850	47	0.551	14	0.921	23.4	1.469	37.3	0.353	0.16	2150	9600	1070	4750
GE20 KRRB	-	0.787	20	1.850	47	0.551	14	1.047	26.6	1.721	43.7	0.441	0.20	2900	12800	1480	6600
G1014 KRRB	7/8	0.875	22.2	2.047	52	0.591	15	1.059	26.9	1.748	44.4	0.551	0.25	3150	14000	1760	7800
G1015 KRRB	15/16	0.938	23.8	2.047	52	0.591	15	1.059	26.9	1.748	44.4	0.551	0.25	3150	14000	1760	7800
GE25 KRRB	-	0.984	25	2.047	52	0.591	15	1.059	26.9	1.748	44.4	0.551	0.25	3150	14000	1760	7800
G1100 KRRB	1	1	25.4	2.047	52	0.591	15	1.059	26.9	1.748	44.4	0.551	0.25	3150	14000	1760	7800
G1102 KRRB	1-1/8	1.125	28.6	2.441	62	0.709	18	1.185	30.1	1.906	48.4	0.838	0.38	4350	19500	2550	11300
GE30 KRRB	-	1.181	30	2.441	62	0.709	18	1.185	30.1	1.906	48.4	0.838	0.38	4350	19500	2550	11300
G1103 KRRB	1-3/16	1.188	30.2	2.441	62	0.709	18	1.185	30.1	1.906	48.4	0.838	0.38	4350	19500	2550	11300
G1104 KRRB	1-1/4	1.250	31.8	2.835	72	0.748	19	1.272	32.3	2.012	51.1	1.213	0.55	5800	25500	3450	15300
G1106 KRRB	1-3/8	1.375	34.9	2.835	72	0.748	19	1.272	32.3	2.012	51.1	1.213	0.55	5800	25500	3450	15300
GE35 KRRB	-	1.378	35	2.835	72	0.748	19	1.272	32.3	2.012	51.1	1.213	0.55	5800	25500	3450	15300
G1107 KRRB	1-7/16	1.438	36.5	2.835	72	0.748	19	1.272	32.3	2.012	51.1	1.213	0.55	5800	25500	3450	15300
G1108 KRRB	1-1/2	1.500	38.1	3.150	80	0.827	21	1.374	34.9	2.217	56.3	1.632	0.74	7300	32500	4450	19800
GE40 KRRB	-	1.575	40	3.150	80	0.827	21	1.374	34.9	2.217	56.3	1.632	0.74	7300	32500	4450	19800
G1110 KRRB	1-5/8	1.625	41.3	3.347	85	0.866	22	1.374	34.9	2.217	56.3	1.786	0.81	7400	32500	4600	20400
G1111 KRRB	1-11/16	1.688	42.9	3.347	85	0.866	22	1.374	34.9	2.217	56.3	1.786	0.81	7400	32500	4600	20400
G1112 KRRB	1-3/4	1.750	44.5	3.347	85	0.866	22	1.374	34.9	2.217	56.3	1.786	0.81	7400	32500	4600	20400
GE45 KRRB	-	1.772	45	3.347	85	0.866	22	1.374	34.9	2.217	56.3	1.786	0.81	7400	32500	4600	20400
G1115 KRRB	1-15/16	1.938	49.2	3.543	90	0.866	22	1.500	38.1	2.469	62.7	2.205	1.00	7900	35000	5200	23200
GE50 KRRB	-	1.969	50	3.543	90	0.866	22	1.500	38.1	2.469	62.7	2.205	1.00	7900	35000	5200	23200
G1200 KRRB	2	2	50.8	3.937	100	0.984	25	1.717	43.6	2.811	71.4	3.087	1.40	9800	43500	6600	29000
GE55 KRRB	-	2.165	55	3.937	100	0.984	25	1.719	43.7	2.811	71.4	3.130	1.42	9800	43500	6600	29000
G1203 KRRB	2-3/16	2.188	55.6	3.937	100	0.984	25	1.717	43.6	2.811	71.4	3.131	1.42	9800	43500	6600	29000
GE60 KRRB	-	2.362	60	4.331	110	0.945	24	1.843	46.8	3.063	77.8	4.057	1.84	11800	52000	8100	36000
G1207 KRRB	2-7/16	2.438	61.9	4.331	110	0.945	24	1.843	46.8	3.063	77.8	4.057	1.84	11800	52000	8100	36000
GE65 KRRB	-	2.559	65	4.921	125	1.102	28	1.756	44.6	2.602	66.1	5.980	2.71	13950	62000	9900	44000
GE70 KRRB	-	2.756	70	4.921	125	1.102	28	1.756	44.6	2.602	66.1	5.400	2.45	13950	62000	9900	44000
GE75 KRRB	-	2.953	75	5.118	130	1.102	28	1.795	45.6	2.642	67.1	5.840	2.65	13950	62000	10000	44500
GE80 KRRB	-	3.150	80	5.512	140	1.181	30	1.874	47.6	2.795	71	6.500	2.95	16200	72000	12150	54000

Radial Insert Ball Bearings
GYE..KRRB, GY1..KRRB SERIES

- Spherical OD
- Eccentric locking collar
- Standard R seals
- Inch and metric setscrews

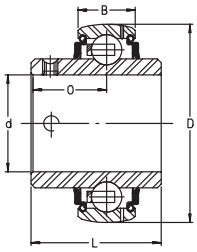

For details on part numbers, descriptive suffixes and various technical references, please refer to front of this section.
For engineering or technical information contact your local sales representative or call Distributor Sales (800)523-6572.

PART NUMBER	SHAFT d inch	SHAFT d inch	SHAFT d mm	D inch	D mm	B inch	B mm	O inch	O mm	L inch	L mm	WGT. lbs	WGT. kg	DYN. CAP. C lbf	DYN. CAP. C N	STAT. CAP. C_0 lbf	STAT. CAP. C_0 N
GY1008 KRRB	1/2	0.500	12.7	1.575	40	0.472	12	0.626	15.9	1.079	27.4	0.243	0.11	2150	9600	1070	4750
GYE15 KRRB	-	0.591	15	1.575	40	0.472	12	0.626	15.9	1.079	27.4	0.243	0.11	2150	9600	1070	4750
GY1010 KRRB	5/8	0.625	15.9	1.575	40	0.472	12	0.626	15.9	1.079	27.4	0.221	0.10	2150	9600	1070	4750
GYE17 KRRB	-	0.669	17	1.575	40	0.472	12	0.626	15.9	1.079	27.4	0.198	0.09	2150	9600	1070	4750
GY1012 KRRB	3/4	0.750	19.05	1.850	47	0.551	14	0.721	18.3	1.221	31	0.375	0.17	2900	12800	1480	6600
GYE20 KRRB	-	0.787	20	1.850	47	0.551	14	0.721	18.3	1.221	31	0.375	0.17	2900	12800	1480	6600
GY1014 KRRB	7/8	0.875	22.22	2.047	52	0.591	15	0.780	19.8	1.343	34.1	0.441	0.20	3150	14000	1760	7800
GY1015 KRRB	15/16	0.938	23.8	2.047	52	0.591	15	0.780	19.8	1.343	34.1	0.419	0.19	3150	14000	1760	7800
GYE25 KRRB	-	0.984	25	2.047	52	0.591	15	0.780	19.8	1.343	34.1	0.441	0.20	3150	14000	1760	7800
GY1100 KRRB	1	1	25.4	2.047	52	0.591	15	0.780	19.8	1.343	34.1	0.441	0.20	3150	14000	1760	7800
GY1102 KRRB	1-1/8	1.125	28.6	2.441	62	0.709	18	0.874	22.2	1.500	38.1	0.728	0.33	4350	19500	2550	11300
GYE30 KRRB	-	1.181	30	2.441	62	0.709	18	0.874	22.2	1.500	38.1	0.728	0.33	4350	19500	2550	11300
GY1103 KRRB	1-3/16	1.188	30.2	2.441	62	0.709	18	0.874	22.2	1.500	38.1	0.728	0.33	4350	19500	2550	11300
GY1104 KRRB-206	1-1/4	1.250	31.8	2.441	62	0.709	18	0.874	22.2	1.500	38.1	0.728	0.33	4350	19500	2550	11300
GY1104 KRRB	1-1/4	1.250	31.8	2.835	72	0.748	19	1.000	25.4	1.689	42.9	1.080	0.49	5800	25500	3450	15300
GY1106 KRRB	1-3/8	1.375	34.9	2.835	72	0.748	19	1.000	25.4	1.689	42.9	1.080	0.49	5800	25500	3450	15300
GYE35 KRRB	-	1.378	35	2.835	72	0.748	19	1.000	25.4	1.689	42.9	1.080	0.49	5800	25500	3450	15300
GY1107 KRRB	1-7/16	1.438	36.5	2.835	72	0.748	19	1.000	25.4	1.689	42.9	0.948	0.43	5800	25500	3450	15300
GY1108 KRRB	1-1/2	1.500	38.1	3.150	80	0.827	21	1.189	30.2	1.937	49.2	1.433	0.65	7300	32500	4450	19800
GYE40 KRRB	-	1.575	40	3.150	80	0.827	21	1.189	30.2	1.937	49.2	1.433	0.65	7300	32500	4450	19800
GY1110 KRRB	1-5/8	1.625	41.3	3.347	85	0.866	22	1.189	30.2	1.937	49.2	1.610	0.73	7400	32500	4600	20400
GY1111 KRRB	1-11/16	1.688	42.9	3.347	85	0.866	22	1.189	30.2	1.937	49.2	1.610	0.73	7400	32500	4600	20400
GY1112 KRRB	1-3/4	1.750	44.5	3.347	85	0.866	22	1.189	30.2	1.937	49.2	1.544	0.70	7400	32500	4600	20400
GYE45 KRRB	-	1.772	45	3.347	85	0.866	22	1.189	30.2	1.937	49.2	1.544	0.70	7400	32500	4600	20400
GY1115 KRRB	1-15/16	1.938	49.2	3.543	90	0.866	22	1.284	32.6	2.032	51.6	1.764	0.80	7900	35000	5200	23200
GYE50 KRRB	-	1.969	50	3.543	90	0.866	22	1.284	32.6	2.032	51.6	1.764	0.80	7900	35000	5200	23200
GY1200 KRRB	2	2	50.8	3.937	100	0.984	25	1.315	33.4	2.189	55.6	2.426	1.10	9800	43500	6600	29000
GYE55 KRRB	-	2.165	55	3.937	100	0.984	25	1.315	33.4	2.189	55.6	2.430	1.10	9800	43500	6600	29000
GY1203 KRRB	2-3/16	2.188	55.6	3.937	100	0.984	25	1.315	33.4	2.189	55.6	2.426	1.10	9800	43500	6600	29000
GYE60 KRRB	-	2.362	60	4.331	110	0.945	24	1.563	39.7	2.563	65.1	2.911	1.32	11800	52000	8100	36000
GY1207 KRRB	2-7/16	2.438	61.9	4.331	110	0.945	24	1.563	39.7	2.563	65.1	2.911	1.32	11800	52000	8100	36000
GYE65 KRRB	-	2.559	65	4.921	125	1.102	28	1.748	44.4	2.937	74.6	4.960	2.25	13950	62000	9900	44000
GYE70 KRRB	-	2.756	70	4.921	125	1.102	28	1.748	44.4	2.937	74.6	4.300	1.95	13950	62000	9900	44000
GYE75 KRRB	-	2.953	75	5.118	130	1.102	28	1.752	44.5	3.063	77.8	4.830	2.19	13950	62000	10000	44500
GYE80 KRRB	-	3.150	80	5.512	140	1.181	30	1.941	49.3	3.252	82.6	6.460	2.93	16200	72000	12150	54000
GYE90 KRRB	-	3.543	90	6.299	160	1.260	32	2.217	56.3	3.780	96	9.260	4.20	21600	96000	16200	72000

Radial Insert Ball Bearings
RALE SERIES

- Metric series
- Economy P seals
- Eccentric locking collar
- Light series - based on 6000 Series

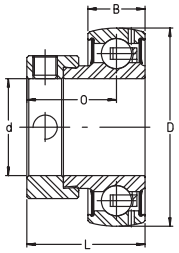

For details on part numbers, descriptive suffixes and various technical references, please refer to front of this section.
For engineering or technical information contact your local sales representative or call Distributor Sales (800)523-6572.

INSERT	SHAFT d inch	SHAFT d inch	SHAFT d mm	D inch	D mm	B inch	B mm	O inch	O mm	L inch	L mm	WGT. lbs	WGT. kg	DYN. CAP. lbf	DYN. CAP. N	STAT. CAP. lbf	STAT. CAP. N
RALE20NPPB	-	0.787	20	1.654	42	0.472	12	0.732	18.6	0.969	24.6	0.198	0.09	2100	9400	1125	5000
RALE25NPPB	-	0.984	25	1.850	47	0.472	12	0.764	19.4	1.000	25.4	0.265	0.12	2275	10100	1325	5900
RALE30NPPB	-	1.181	30	2.165	55	0.512	13	0.787	20	1.043	26.5	0.375	0.17	2970	13200	1870	8300

Radial Insert Ball Bearing

GE..KPPB-3 SERIES

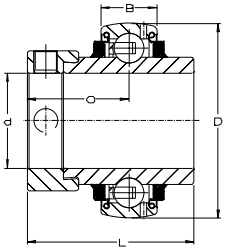

- Tri-ply lip seal
- Lower speeds due to higher friction
- For heavily contaminated conditions
- Spherical OD
- Eccentric locking collar

For details on part numbers, descriptive suffixes and various technical references, please refer to front of this section.
For engineering or technical information contact your local sales representative or call Distributor Sales (800)523-6572.

INSERT	SHAFT d inch	SHAFT d inch	SHAFT d mm	D inch	D mm	B inch	B mm	O inch	O mm	L inch	L mm	WGT. lbs	WGT. kg	DYN. CAP. lbf	DYN. CAP. N	STAT. CAP. lbf	STAT. CAP. N
GE20KPPB-3	-	0.787	20	1.850	47	0.551	14	1.047	26.6	1.720	43.7	0.44	0.2	2900	12800	1480	6600
GE25KPPB-3	-	0.984	25	2.047	52	0.591	15	1.059	26.9	1.748	44.4	0.55	0.25	3150	14000	1760	7800
GE30KPPB-3	-	1.181	30	2.441	62	0.709	18	1.185	30.1	1.906	48.4	0.86	0.39	4350	19500	2550	11300
GE35KPPB-3	-	1.378	35	2.835	72	0.748	19	1.272	32.3	2.012	51.1	1.23	0.56	5800	25500	3450	15300
GE40KPPB-3	-	1.575	40	3.150	80	0.827	21	1.374	34.9	2.217	56.3	1.70	0.77	7300	32500	4450	19800
GE45KPPB-3		1.772	45	3.346	85	0.866	22	1.374	34.9	2.217	56.3	1.90	0.86	7300	32500	4450	20400
GE50KPPB-3	-	1.969	50	3.543	90	0.866	22	1.500	38.1	2.469	62.7	2.34	1.06	7900	35000	5200	23200
GE55KPPB-3	-	2.165	55	3.937	100	0.984	25	1.719	43.7	2.811	71.4	3.13	1.42	9800	43500	6600	29000
GE60KPPB-3	-	2.362	60	4.331	110	0.945	24	1.843	46.8	3.063	77.8	4.06	1.84	11800	52000	8100	36000
GE65KPPB-3	-	2.559	65	4.921	125	1.102	28	1.756	44.6	2.602	66.1	5.98	2.71	13950	62000	9900	44000
GE70KPPB-3	-	2.756	70	4.921	125	1.102	28	1.756	44.6	2.602	66.1	5.40	2.45	13950	62000	9900	44000
GE75KPPB-3	-	2.953	75	5.118	130	1.102	28	1.795	45.6	2.642	67.1	5.84	2.65	13950	62000	10000	44500
GE80KPPB-3	-	3.150	80	5.512	140	1.181	30	1.874	47.6	2.795	71	6.50	2.95	16200	72000	12150	54000

Radial Insert Ball Bearing

GE..KLLHB SERIES

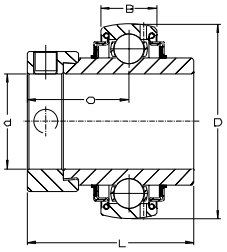

- Non-contact labyrinth seal
- Steel cage
- Suitable for higher temperatures
- Eccentric locking collar
- Spherical OD

For details on part numbers, descriptive suffixes and various technical references, please refer to front of this section.
For engineering or technical information contact your local sales representative or call Distributor Sales (800)523-6572.

INSERT	SHAFT d inch	SHAFT d inch	SHAFT d mm	D inch	D mm	B inch	B mm	O inch	O mm	L inch	L mm	WGT. lbs	WGT. kg	DYN. CAP. lbf	DYN. CAP. N	STAT. CAP. lbf	STAT. CAP. N
GE20 KLLHB	-	0.787	20	1.850	47	0.551	14	1.047	26.6	1.721	43.7	0.441	0.20	2900	12800	1480	6600
GE25 KLLHB	-	0.984	25	2.047	52	0.591	15	1.059	26.9	1.748	44.4	0.551	0.25	3150	14000	1760	7800
GE30 KLLHB	-	1.181	30	2.441	62	0.709	18	1.185	30.1	1.906	48.4	0.838	0.38	4350	19500	2550	11300
GE35 KLLHB	-	1.378	35	2.835	72	0.748	19	1.272	32.3	2.012	51.1	1.213	0.55	5800	25500	3450	15300
GE40 KLLHB	-	1.575	40	3.150	80	0.827	21	1.374	34.9	2.217	56.3	1.632	0.74	7300	32500	4450	19800
GE45 KLLHB	-	1.772	45	3.347	85	0.866	22	1.374	34.9	2.217	56.3	1.786	0.81	7400	32500	4600	20400
GE50 KLLHB	-	1.969	50	3.543	90	0.866	22	1.500	38.1	2.469	62.7	2.205	1.00	7900	35000	5200	23200

Radial Insert Ball Bearing
GNE..KRRB SERIES

- Spherical OD
- Eccentric locking collar
- Standard R seal
- Heavy series insert - based on 6300 Series

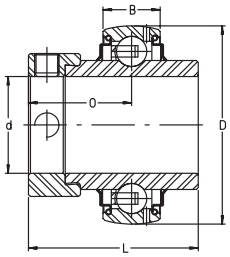

For details on part numbers, descriptive suffixes and various technical references, please refer to front of this section.
For engineering or technical information contact your local sales representative or call Distributor Sales (800)523-6572.

INSERT	SHAFT d inch	SHAFT d inch	SHAFT d mm	D inch	D mm	B inch	B mm	O inch	O mm	L inch	L mm	WGT. lbs	WGT. kg	DYN. CAP. lbf	DYN. CAP. N	STAT. CAP. lbf	STAT. CAP. N
GNE30 KRRB	-	1.181	30	2.835	72	0.787	20	1.280	32.500	1.969	50	1.19	0.54	6700	29500	3750	16700
GNE35 KRRB	-	1.378	35	3.150	80	0.866	22	1.311	33.300	2.031	51.600	1.61	0.73	8200	36500	4700	20900
GNE40 KRRB	-	1.575	40	3.543	90	0.906	23	1.441	36.600	2.150	54.600	2.40	1.09	10000	44500	5800	26000
GNE50 KRRB	-	1.969	50	4.331	110	1.142	29	1.657	42.100	2.626	66.700	4.12	1.87	13900	62000	8500	38000
GNE60 KRRB	-	2.362	60	5.118	130	1.299	33	1.787	45.400	2.693	68.400	6.55	2.97	18400	82000	11700	52000
GNE70 KRRB	-	2.756	70	5.906	150	1.457	37	1.945	49.400	2.969	75.400	9.64	4.37	23400	104000	15300	68000

Radial Insert Ball Bearing
GLE..KRRB SERIES

- Non-locating bearing to compensate for shaft expansion
- Used with mating drive pin radially located in shaft
- C4 radial internal clearance
- Spherical OD

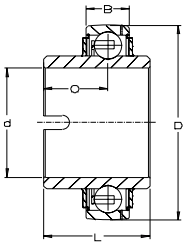

For details on part numbers, descriptive suffixes and various technical references, please refer to front of this section.
For engineering or technical information contact your local sales representative or call Distributor Sales (800)523-6572.

INSERT	SHAFT d inch	SHAFT d inch	SHAFT d mm	D inch	D mm	B inch	B mm	O inch	O mm	L inch	L mm	WGT. lbs	WGT. kg	DYN. CAP. lbf	DYN. CAP. N	STAT. CAP. lbf	STAT. CAP. N
GLE30 KRRB	-	1.181	30	2.441	62	0.709	18	0.866	22	1.437	36.5	0.66	0.30	4350	19500	2550	11300
GLE35 KRRB	-	1.378	35	2.835	72	0.748	19	0.866	22	1.484	37.7	0.95	0.43	5800	25500	3450	15300
GLE40 KRRB	-	1.575	40	3.150	80	0.827	21	1.063	27	1.689	42.9	1.28	0.58	7300	32500	4450	19800
GLE45 KRRB	-	1.772	45	3.347	85	0.866	22	1.004	25.5	1.689	42.9	1.46	0.66	7400	32500	4600	20400
GLE50 KRRB	-	1.969	50	3.543	90	0.866	22	1.189	30.2	1.937	49.2	1.68	0.76	7900	35000	5200	23200
GLE60 KRRB	-	2.362	60	4.331	110	0.945	24	1.469	37.3	2.437	61.9	3.35	1.52	11800	52000	8100	36000
GLE70 KRRB	-	2.756	70	4.921	125	1.102	28	1.622	41.2	2.685	68.2	4.96	2.25	13950	62000	9900	44000

Radial Insert Ball Bearing
GSH..RRB SERIES

- Integral adapter sleeve
- Shaft connected concentrically by interference fit
- Quieter running than normal radial insert ball bearings
- Narrow inner ring with standard R seal

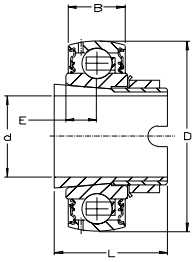

For details on part numbers, descriptive suffixes and various technical references, please refer to front of this section.
For engineering or technical information contact your local sales representative or call Distributor Sales (800)523-6572.

INSERT	SHAFT d inch	SHAFT d inch	SHAFT d mm	D inch	D mm	B inch	B mm	E inch	E mm	L inch	L mm	WGT. lbs	WGT. kg	DYN. CAP. lbf	DYN. CAP. N	STAT. CAP. lbf	STAT. CAP. N
GSH 20 RRB	-	0.787	20	1.850	47	0.551	14	0.295	7.5	1.102	28	0.31	0.14	2850	12700	1480	6600
GSH 25 RRB	-	0.984	25	2.047	52	0.591	15	0.295	7.5	1.102	28	0.38	0.17	3050	13600	1760	7800
GSH 30 RRB	-	1.181	30	2.441	62	0.709	18	0.354	9	1.260	32	0.60	0.27	4250	18900	2550	11300
GSH 35 RRB	-	1.378	35	2.835	72	0.748	19	0.374	9.5	1.339	34	0.95	0.43	5600	24900	3450	15300
GSH 40 RRB	-	1.575	40	3.150	80	0.827	21	0.433	11	1.496	38	1.19	0.54	6600	29500	4450	19800
GSH 50 RRB	-	1.969	50	3.543	90	0.866	22	0.433	11	1.575	40	1.41	0.64	7500	33000	1690	22900

Radial Insert Ball Bearing
200 NPPB SERIES

- Spherical OD
- Standard P seal
- Cylindrical bore and tolerances of 6200 Series

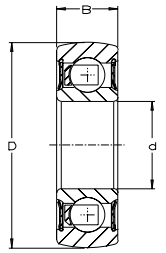

For details on part numbers, descriptive suffixes and various technical references, please refer to front of this section.
For engineering or technical information contact your local sales representative or call Distributor Sales (800)523-6572.

PART NUMBER	SHAFT d inch	SHAFT d mm	OD D inch	OD D mm	WIDTH B inch	WIDTH B mm	WEIGHT lbs	WEIGHT kg	DYN. CAP. lbf	DYN. CAP. N	STAT. CAP. lbf	STAT. CAP. N	SPEED LIMIT rpm
201 NPPB	0.472	12	1.260	32	0.394	10	0.088	0.04	1530	6800	690	3050	18300
203 NPPB	0.669	17	1.575	40	0.472	12	0.132	0.06	2150	9600	1070	4750	13000
204 NPPB	0.787	20	1.850	47	0.551	14	0.243	0.11	2900	12800	1480	6600	11000
205 NPPB	0.984	25	2.047	52	0.591	15	0.287	0.13	3150	14000	1750	7800	8800
206 NPPB	1.811	30	2.441	62	0.630	16	0.441	0.2	4350	19500	2550	11300	7300
208 NPPB	1.575	40	3.150	80	0.709	18	0.816	0.37	7300	32500	4450	19800	5500
209 NPPB	1.772	45	3.346	85	0.748	19	0.904	0.41	7300	32500	4600	20400	4900
210 NPPB	1.969	50	3.543	90	0.787	20	1.014	0.46	7900	35000	5200	23200	4400

Radial Insert Ball Bearing
CR-B SERIES

- Rubber interliner
- Eccentric locking collar
- Economy P seal

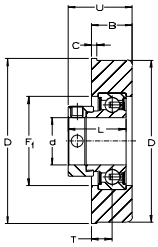

For details on part numbers, descriptive suffixes and various technical references, please refer to front of this section.
For engineering or technical information contact your local sales representative or call Distributor Sales (800)523-6572.

PART NUMBER	SHAFT d inch	SHAFT d inch	SHAFT d mm	D inch	D mm	D_1 inch	D_1 mm	B inch	B mm	C inch	C mm	F inch	F mm	WGT. lbs	WGT. kg
CR-B20/76	-	0.787	20	3.051	77.500	3.150	80	1.000	25.400	0.197	5	1.575	40	0.66	0.3
CR-B20/83	-	0.787	20	3.291	83.600	3.441	87.400	1.000	25.400	0.189	4.800	1.575	40	0.66	0.3
CR-B25/70	-	0.984	25	2.815	71.500	2.992	76	0.984	25	0.197	5	1.811	46	0.71	0.32
CR-B25/83	-	0.984	25	3.291	83.600	3.441	87.400	1.000	25.400	0.189	4.800	1.811	46	0.71	0.32
CR-B30/83	-	1.181	30	3.291	83.600	3.441	87.400	1.102	28	0.189	4.800	2.205	56	0.90	0.41
CR-B35/110	-	1.378	35	4.421	112.300	4.724	120	1.181	30	0.197	5	2.520	64	1.23	0.56

CONTINUED FROM ABOVE

PART NUMBER	L inch	L mm	T inch	T mm	U inch	U mm	INSERT	RUBBER INTERLINER	DYN. CAP. C lbf	DYN. CAP. C N	STAT. CAP. C_0 lbf	STAT. CAP. C_0 N	RUBBER INTERLINER CAPACITY Cg lbf	RUBBER INTERLINER CAPACITY Cg N
CR-B20/76	1.220	31	0.492	12.500	1.417	36	RAE 20 NPP	CR 47/76	2870	12800	1480	6600	170	750
CR-B20/83	1.220	31	0.500	12.700	1.425	36.200	RAE 20 NPP	CR 47/83	2870	12800	1480	6600	170	750
CR-B25/70	1.220	31	0.492	12.500	1.417	36	RAE 25 NPP	CR 52/70	3150	14000	1750	7800	225	1000
CR-B25/83	1.220	31	0.500	12.700	1.425	36.200	RAE 25 NPP	CR 52/83	3150	14000	1750	7800	225	1000
CR-B30/83	1.406	35.700	0.551	14	1.602	40.700	RAE 30 NPP	CR 62/83	4380	19500	2540	11300	315	1400
CR-B35/110	1.531	38.900	0.591	15	1.748	44.400	RAE 35 NPP	CR 72/110	5730	25500	3440	15300	335	1500

Pillow Block Housing
PASE SERIES

- Standard center height
- Eccentric locking collar
- Economy P seals
- Inch and metric sizes
- Set screws are metric for metric sizes
- Housing dimensions per ABMA standards

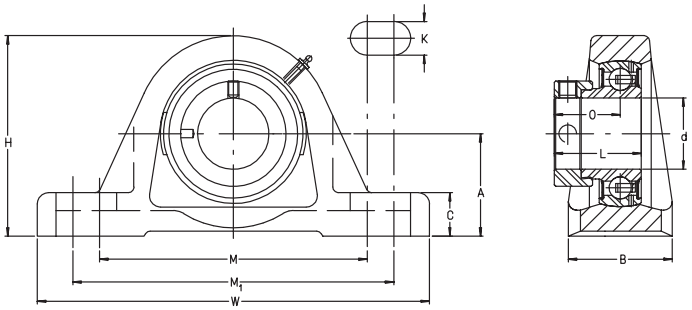

For details on part numbers, descriptive suffixes and various technical references, please refer to front of this section.
For engineering or technical information contact your local sales representative or call Distributor Sales (800)523-6572.

PART NUMBER	SHAFT d inch	SHAFT d inch	SHAFT d mm	A inch	A mm	M inch	M mm	M_1 inch	M_1 mm	K inch	K mm	WGT. lbs	WGT. kg	W inch	W mm
PASE 12	-	0.472	12	1.189	30.2	3.189	81	4.055	103	0.433	11	1.213	0.55	4.921	125
PASE 1/2	1/2	0.500	12.7	1.189	30.2	3.189	81	4.055	103	0.433	11	1.213	0.55	4.921	125
PASE 15	-	0.591	15	1.189	30.2	3.189	81	4.055	103	0.433	11	1.213	0.55	4.921	125
PASE 5/8	5/8	0.625	15.875	1.189	30.2	3.189	81	4.055	103	0.433	11	1.213	0.55	4.921	125
PASE 17	-	0.669	17	1.189	30.2	3.189	81	4.055	103	0.433	11	1.213	0.55	4.921	125
PASE 3/4	3/4	0.750	19.05	1.311	33.3	3.425	87	4.134	105	0.433	11	1.323	0.6	5.118	130
PASE 20	-	0.787	20	1.311	33.3	3.425	87	4.134	105	0.433	11	1.323	0.6	5.118	130
PASE 7/8	7/8	0.875	22.225	1.438	36.513	3.751	95.275	4.500	114.3	0.472	12	1.985	0.9	5.500	139.7
PASE 25	-	0.984	25	1.438	36.513	3.751	95.275	4.500	114.3	0.472	12	1.985	0.9	5.500	139.7
PASE 1	1	1	25.4	1.438	36.513	3.751	95.275	4.500	114.3	0.472	12	1.985	0.9	5.500	139.7
PASE 1-1/16	1-1/16	1.063	26.988	1.689	42.9	4.252	108	5	127	0.591	15	2.867	1.3	6.189	157.2
PASE 1-1/8	1-1/8	1.125	28.575	1.689	42.9	4.252	108	5	127	0.591	15	2.867	1.3	6.189	157.2
PASE 30	-	1.181	30	1.689	42.9	4.252	108	5	127	0.591	15	2.867	1.3	6.189	157.2
PASE 1-3/16	1-3/16	1.188	30.162	1.689	42.9	4.252	108	5	127	0.591	15	2.867	1.3	6.189	157.2
PASE 1-1/4-206	1-1/4-206	1.250	31.75	1.689	42.9	4.252	108	5	127	0.591	15	2.867	1.3	6.189	157.2
PASE 1-1/4	1-1/4	1.250	31.75	1.874	47.6	4.807	122.1	5.429	137.9	0.591	15	3.749	1.7	6.772	172
PASE 1-3/8	1-3/8	1.375	34.925	1.874	47.6	4.807	122.1	5.429	137.9	0.591	15	3.749	1.7	6.772	172
PASE 35	-	1.378	35	1.874	47.6	4.807	122.1	5.429	137.9	0.591	15	3.749	1.7	6.417	163
PASE 1-7/16	1-7/16	1.438	36.512	1.874	47.6	4.807	122.1	5.429	137.9	0.591	15	3.749	1.7	6.772	172
PASE 1-1/2	1-1/2	1.500	38.1	1.937	49.2	4.921	125	5.787	147	0.591	15	4.631	2.1	7.146	181.5
PASE 40	-	1.575	40	1.937	49.2	4.921	125	5.787	147	0.591	15	4.631	2.1	7.146	181.5
PASE 1-3/4	1-3/4	1.750	44.45	2.126	54	5.374	136.5	6.319	160.5	0.563	14.3	5.292	2.4	7.677	195
PASE 45	-	1.772	45	2.126	54	5.374	136.5	6.319	160.5	0.531	13.5	5.292	2.4	7.559	192
PASE 1-15/16	1-15/16	1.938	49.212	2.252	57.2	5.965	151.5	6.437	163.5	0.709	18	7.056	3.2	7.972	202.5
PASE 50	-	1.969	50	2.252	57.2	5.965	151.5	6.437	163.5	0.709	18	7.056	3.2	7.874	200
PASE 2	2	2	50.8	2.500	63.5	6.476	164.5	7.362	187	0.709	18	8.82	4	8.858	225
PASE 55	-	2.165	55	2.500	63.5	6.476	164.5	7.362	187	0.709	18	8.82	4	8.858	225
PASE 2-3/16	2-3/16	2.188	55.562	2.500	63.5	6.476	164.5	7.362	187	0.709	18	8.82	4	8.858	225
PASE 60	-	2.362	60	2.752	69.9	6.969	177	7.933	201.5	0.709	18	12.348	5.6	9.449	240
PASE 2-7/16	2-7/16	2.438	61.912	2.752	69.9	6.969	177	7.933	201.5	0.709	18	12.348	5.6	9.646	245

Pillow Block Housing
PASE SERIES

- Standard center height
- Eccentric locking collar
- Economy P seals
- Inch and metric sizes
- Set screws are metric for metric sizes
- Housing dimensions per ABMA standards

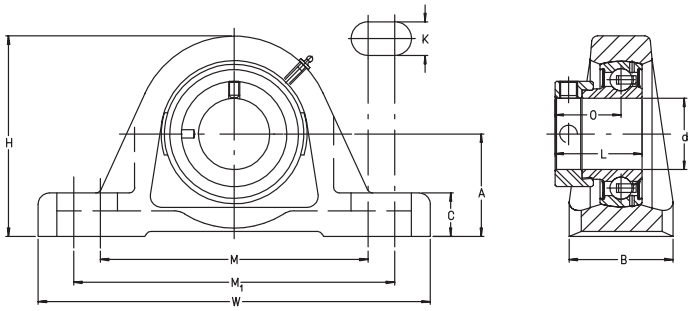

For details on part numbers, descriptive suffixes and various technical references, please refer to front of this section.
For engineering or technical information contact your local sales representative or call Distributor Sales (800)523-6572.

B inch	B mm	H inch	H mm	C inch	C mm	O inch	O mm	L inch	L mm	INSERT	HSG.	DYN. CAP. C lbf	DYN. CAP. C N	STAT. CAP. C_0 lbf	STAT. CAP. C_0 N	PART NUMBER
1.260	32	2.284	58	0.551	14	0.870	22.1	1.126	28.6	GRAE12 NPPB	ASE 03	2150	9600	1070	4750	PASE12
1.260	32	2.284	58	0.551	14	0.870	22.1	1.126	28.6	GRA 008 NPPB	ASE 03	2150	9600	1070	4750	PASE 1/2
1.260	32	2.284	58	0.551	14	0.870	22.1	1.126	28.6	GRAE 15 NPPB	ASE 03	2150	9600	1070	4750	PASE 15
1.260	32	2.284	58	0.551	14	0.870	22.1	1.126	28.6	GRA 010 NPPB	ASE 03	2150	9600	1070	4750	PASE 5/8
1.260	32	2.284	58	0.551	14	0.870	22.1	1.126	28.6	GRAE 17 NPPB	ASE 03	2150	9600	1070	4750	PASE 17
1.260	32	2.532	64.3	0.571	14.5	0.925	23.5	1.221	31	GRA 012 NPPB	ASE 04	2900	12800	1480	6600	PASE 3/4
1.260	32	2.520	64	0.571	14.5	0.925	23.5	1.221	31	GRAE 20 NPPB	ASE 04	2900	12800	1480	6600	PASE 20
1.457	37	2.813	71.438	0.610	15.5	0.925	23.5	1.221	31	GRA 014 NPPB	ASE 05	3150	14000	1760	7800	PASE 7/8
1.457	37	2.813	71.438	0.610	15.5	0.925	23.5	1.221	31	GRAE 25 NPPB	ASE 05	3150	14000	1760	7800	PASE 25
1.457	37	2.813	71.438	0.610	15.5	0.925	23.5	1.221	31	GRA 100 NPPB	ASE 05	3150	14000	1760	7800	PASE 1
1.673	42.5	3.284	83.4	0.709	18	1.051	26.7	1.406	35.7	GRA 101 NPPB	ASE 06	4350	19500	2550	11300	PASE 1-1/16
1.673	42.5	3.284	83.4	0.709	18	1.051	26.7	1.406	35.7	GRA 102 NPPB	ASE 06	4350	19500	2550	11300	PASE 1-1/8
1.673	42.5	3.284	83.4	0.709	18	1.051	26.7	1.406	35.7	GRAE 30 NPPB	ASE 06	4350	19500	2550	11300	PASE 30
1.673	42.5	3.284	83.4	0.709	18	1.051	26.7	1.406	35.7	GRA 103 NPPB	ASE 06	4350	19500	2550	11300	PASE 1-3/16
1.673	42.5	3.284	83.4	0.709	18	1.051	26.7	1.406	35.7	GRA 104 NPPB-206	ASE 06	4350	19500	2550	11300	PASE 1-1/4-206
1.831	46.5	3.689	93.7	0.748	19	1.158	29.4	1.532	38.9	GRA 104 NPPB	ASE 07	5800	25500	3450	15300	PASE 1-1/4
1.831	46.5	3.689	93.7	0.748	19	1.158	29.4	1.532	38.9	GRA 106 NPPB	ASE 07	5800	25500	3450	15300	PASE 1-3/8
1.772	45	3.661	93	0.748	19	1.158	29.4	1.532	38.9	GRAE 35 NPPB	ASE 07	5800	25500	3450	15300	PASE 35
1.831	46.5	3.689	93.7	0.748	19	1.158	29.4	1.532	38.9	GRA 107 NPPB	ASE 07	5800	25500	3450	15300	PASE 1-7/16
1.969	50	3.937	100	0.787	20	1.287	32.7	1.721	43.7	GRA 108 NPPB	ASE 08	7300	32500	4450	19800	PASE 1-1/2
1.969	50	3.937	100	0.787	20	1.287	32.7	1.721	43.7	GRAE 40 NPPB	ASE 08	7300	32500	4450	19800	PASE 40
2.039	51.8	4.213	107	0.866	22	1.287	32.7	1.721	43.7	GRA 112 NPPB	ASE 09	7400	32500	4600	20400	PASE 1-3/4
1.890	48	4.213	107	0.846	21.5	1.287	32.7	1.721	43.7	GRAE 45 NPPB	ASE 09	7400	32500	4600	20400	PASE 45
2.244	57	4.606	117	0.866	22	1.287	32.7	1.721	43.7	GRA 115 NPPB	ASE 10	7900	35000	5200	23200	PASE 1-15/16
2.126	54	4.528	115	0.846	21.5	1.287	32.7	1.721	43.7	GRAE 50 NPPB	ASE 10	7900	35000	5200	23200	PASE 50
2.461	62.5	4.980	126.5	0.984	25	1.433	36.4	1.906	48.4	GRA 200 NPPB	ASE 11	9800	43500	6600	29000	PASE 2
2.461	62.5	4.980	126.5	0.984	25	1.433	36.4	1.906	48.4	GRAE 55 NPPB	ASE 11	9800	43500	6600	29000	PASE 55
2.461	62.5	4.980	126.5	0.984	25	1.433	36.4	1.906	48.4	GRA 203 NPPB	ASE 11	9800	43500	6600	29000	PASE 2-3/16
2.362	60	5.512	140	0.984	25	1.559	39.6	2.091	53.1	GRAE 60 NPPB	ASE 12	11800	52000	8100	36000	PASE 60
2.559	65	5.512	140	1.102	28	1.559	39.6	2.091	53.1	GRA 207 NPPB	ASE 12	11800	52000	8100	36000	PASE 2-7/16

Pillow Block Housing
PASEY SERIES

- Standard center height
- Set screw shaft locking
- Economy P seals
- Inch and metric sizes
- Set screws are metric for metric sizes
- Housing dimensions per ABMA standards

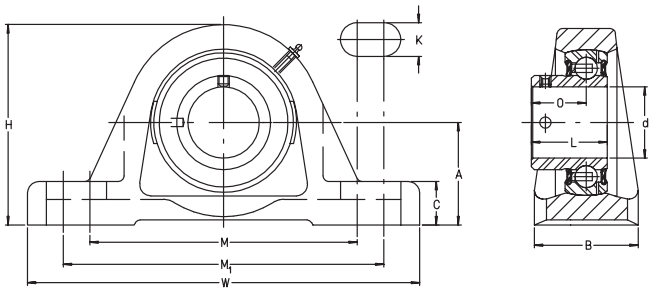

For details on part numbers, descriptive suffixes and various technical references, please refer to front of this section.
For engineering or technical information contact your local sales representative or call Distributor Sales (800)523-6572.

PART NUMBER	SHAFT d inch	SHAFT d inch	SHAFT d mm	A inch	A mm	M inch	M mm	M_1 inch	M_1 mm	K inch	K mm	WGT. lbs	WGT. kg	W inch	W mm
PASEY 12	-	0.472	12	1.189	30.2	3.189	81	4.055	103	0.433	11	1.213	0.55	4.921	125
PASEY 1/2	1/2	0.500	12.7	1.189	30.2	3.189	81	4.055	103	0.433	11	1.213	0.55	4.921	125
PASEY 15	-	0.591	15	1.189	30.2	3.189	81	4.055	103	0.433	11	1.213	0.55	4.921	125
PASEY 5/8	5/8	0.625	15.875	1.189	30.2	3.189	81	4.055	103	0.433	11	1.213	0.55	4.921	125
PASEY 17	-	0.669	17	1.189	30.2	3.189	81	4.055	103	0.433	11	1.213	0.55	4.921	125
PASEY 3/4	3/4	0.750	19.05	1.311	33.3	3.425	87	4.134	105	0.433	11	1.323	0.6	5.118	130
PASEY 20	-	0.787	20	1.311	33.3	3.425	87	4.134	105	0.433	11	1.323	0.6	5.118	130
PASEY 7/8	7/8	0.875	22.225	1.438	36.512	3.751	95.275	4.500	114.3	0.472	12	1.985	0.9	5.500	139.7
PASEY 25	-	0.984	25	1.438	36.512	3.751	95.275	4.500	114.3	0.472	12	1.985	0.9	5.500	139.7
PASEY 1	1	1	25.4	1.438	36.512	3.751	95.275	4.500	114.3	0.472	12	1.985	0.9	5.500	139.7
PASEY 30	-	1.181	30	1.689	42.9	4.252	108	5	127	0.591	15	2.867	1.3	6.189	157.2
PASEY 1-3/16	1-3/16	1.188	30.162	1.689	42.9	4.252	108	5	127	0.591	15	2.867	1.3	6.189	157.2
PASEY 1-1/4	1-1/4	1.250	31.75	1.874	47.6	4.807	122.1	5.429	137.9	0.591	15	3.749	1.7	6.772	172
PASEY 35	-	1.378	35	1.874	47.6	4.807	122.1	5.429	137.9	0.591	15	3.749	1.7	6.417	163
PASEY 1-7/16	1-7/16	1.438	36.512	1.874	47.6	4.807	122.1	5.429	137.9	0.591	15	3.749	1.7	6.772	172
PASEY 1-1/2	1-1/2	1.500	38.1	1.937	49.2	4.921	125	5.787	147	0.591	15	4.631	2.1	7.146	181.5
PASEY 40	-	1.575	40	1.937	49.2	4.921	125	5.787	147	0.591	15	4.631	2.1	7.146	181.5
PASEY 1-3/4	1-3/4	1.750	44.45	2.126	54	5.374	136.5	6.319	160.5	0.563	14.3	5.292	2.4	7.677	195
PASEY 45	-	1.772	45	2.126	54	5.374	136.5	6.319	160.5	0.531	13.5	5.292	2.4	7.559	192
PASEY 1-15/16	1-15/16	1.938	49.212	2.252	57.2	5.965	151.5	6.437	163.5	0.709	18	7.056	3.2	7.972	202.5
PASEY 50	-	1.969	50	2.252	57.2	5.965	151.5	6.437	163.5	0.709	18	7.056	3.2	7.874	200

Pillow Block Housing
PASEY SERIES

- Standard center height
- Set screw shaft locking
- Economy P seals
- Inch and metric sizes
- Set screws are metric for metric sizes
- Housing dimensions per ABMA standards

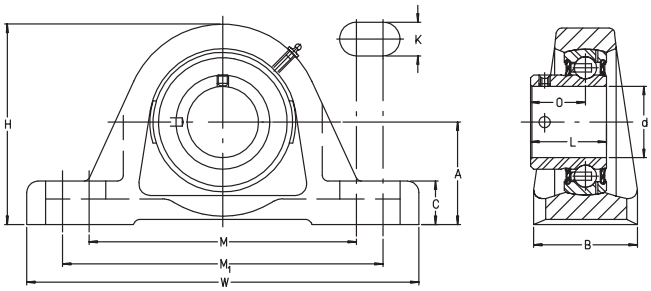

For details on part numbers, descriptive suffixes and various technical references, please refer to front of this section.
For engineering or technical information contact your local sales representative or call Distributor Sales (800)523-6572.

B inch	B mm	H inch	H mm	C inch	C mm	O inch	O mm	L inch	L mm	INSERT	HSG.	DYN. CAP. C lbf	DYN. CAP. C N	STAT. CAP. C_0 lbf	STAT. CAP. C_0 N	PART NUMBER
1.260	32	2.284	58	0.551	14	0.630	16	0.866	22	GAY12 NPPB	ASE 03	2150	9600	1070	4750	PASEY 12
1.260	32	2.284	58	0.551	14	0.630	16	0.866	22	GAY008 NPPB	ASE 03	2150	9600	1070	4750	PASEY 1/2
1.260	32	2.284	58	0.551	14	0.630	16	0.866	22	GAY15 NPPB	ASE 03	2150	9600	1070	4750	PASEY 15
1.260	32	2.284	58	0.551	14	0.630	16	0.866	22	GAY010 NPPB	ASE 03	2150	9600	1070	4750	PASEY 5/8
1.260	32	2.284	58	0.551	14	0.630	16	0.866	22	GAY17 NPPB	ASE 03	2150	9600	1070	4750	PASEY 17
1.260	32	2.532	64.3	0.571	14.5	0.709	18	0.984	25	GAY012 NPPB	ASE 04	2900	12800	1480	6600	PASEY 3/4
1.260	32	2.520	64	0.571	14.5	0.709	18	0.984	25	GAY20 NPPB	ASE 04	2900	12800	1480	6600	PASEY 20
1.457	37	2.813	71.438	0.610	15.5	0.768	19.5	1.063	27	GAY014 NPPB	ASE 05	3150	14000	1760	7800	PASEY 7/8
1.457	37	2.813	71.438	0.610	15.5	0.768	19.5	1.063	27	GAY25 NPPB	ASE 05	3150	14000	1760	7800	PASEY 25
1.457	37	2.813	71.438	0.610	15.5	0.768	19.5	1.063	27	GAY100 NPPB	ASE 05	3150	14000	1760	7800	PASEY 1
1.673	42.5	3.284	83.4	0.709	18	0.827	21	1.181	30	GAY30 NPPB	ASE 06	4350	19500	2550	11300	PASEY 30
1.673	42.5	3.284	83.4	0.709	18	0.827	21	1.181	30	GAY103 NPPB	ASE 06	4350	19500	2550	11300	PASEY 1-3/16
1.831	46.5	3.689	93.7	0.748	19	1.004	25.5	1.378	35	GAY104 NPPB	ASE 07	5800	25500	3450	15300	PASEY 1-1/4
1.772	45	3.661	93	0.748	19	1.004	25.5	1.378	35	GAY35 NPPB	ASE 07	5800	25500	3450	15300	PASEY 35
1.831	46.5	3.689	93.7	0.748	19	1.004	25.5	1.378	35	GAY107 NPPB	ASE 07	5800	25500	3450	15300	PASEY 1-7/16
1.969	50	3.937	100	0.787	20	1.142	29	1.555	39.5	GAY108 NPPB	ASE 08	7300	32500	4450	19800	PASEY 1-1/2
1.969	50	3.937	100	0.787	20	1.142	29	1.555	39.5	GAY40 NPPB	ASE 08	7300	32500	4450	19800	PASEY 40
2.039	51.8	4.213	107	0.866	22	1.201	30.5	1.634	41.5	GAY112 NPPB	ASE 09	7400	32500	4600	20400	PASEY 1-3/4
1.890	48	4.213	107	0.846	21.5	1.201	30.5	1.634	41.5	GAY45 NPPB	ASE 09	7400	32500	4600	20400	PASEY 45
2.244	57	4.606	117	0.866	22	1.260	32	1.693	43	GAY115 NPPB	ASE 10	7900	35000	5200	23200	PASEY 1-15/16
2.126	54	4.528	115	0.984	25	1.260	32	1.693	43	GAY50 NPPB	ASE 10	7900	35000	5200	23200	PASEY 50

Pillow Block Housing
PAK SERIES

- Low center height
- Eccentric locking collar
- Economy P seals
- Inch and metric sizes
- Set screws are metric for metric sizes
- Housing dimensions per ABMA standards

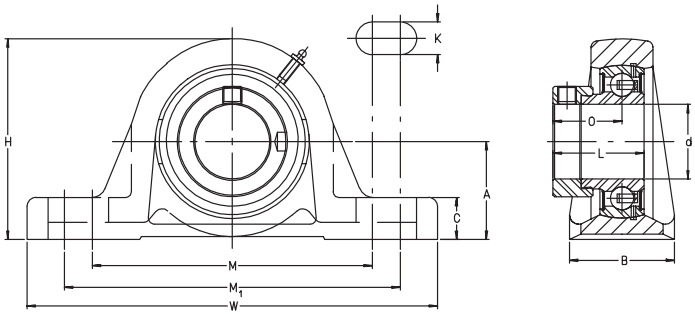

For details on part numbers, descriptive suffixes and various technical references, please refer to front of this section.
For engineering or technical information contact your local sales representative or call Distributor Sales (800)523-6572.

PART NUMBER	SHAFT d inch	SHAFT d inch	SHAFT d mm	A inch	A mm	M inch	M mm	M_1 inch	M_1 mm	K inch	K mm	WGT. lbs	WGT. kg	W inch	W mm
PAK 12	-	0.472	12	1.063	27	3.189	81	4.055	103	0.433	11	1.213	0.55	4.921	125
PAK 1/2	1/2	0.500	12.7	1.063	27	3.189	81	4.055	103	0.433	11	1.213	0.55	4.921	125
PAK 15	-	0.591	15	1.063	27	3.189	81	4.055	103	0.433	11	1.213	0.55	4.921	125
PAK 5/8	5/8	0.625	15.875	1.063	27	3.189	81	4.055	103	0.433	11	1.213	0.55	4.921	125
PAK 17	-	0.669	17	1.063	27	3.189	81	4.055	103	0.433	11	1.213	0.55	4.921	125
PAK 3/4	3/4	0.75	19.05	1.252	31.8	3.425	87	4.134	105	0.433	11	1.323	0.6	5.118	130
PAK 20	-	0.787	20	1.252	31.8	3.425	87	4.134	105	0.433	11	1.323	0.6	5.118	130
PAK 7/8	7/8	0.875	22.225	1.313	33.338	3.721	94.5	4.449	113	0.472	12	1.985	0.9	5.500	139.7
PAK 25	-	0.984	25	1.313	33.338	3.721	94.5	4.449	113	0.472	12	1.985	0.9	5.500	139.7
PAK 1	1	1	25.4	1.313	33.338	3.721	94.5	4.449	113	0.472	12	1.985	0.9	5.500	139.7
PAK 1-1/16	1-1/16	1.063	26.988	1.563	39.688	4.284	108.8	4.949	125.7	0.591	15	2.867	1.3	6.188	157.16
PAK 1-1/8	1-1/8	1.125	28.575	1.563	39.688	4.284	108.8	4.949	125.7	0.591	15	2.867	1.3	6.188	157.16
PAK 30	-	1.181	30	1.563	39.688	4.284	108.8	4.949	125.7	0.591	15	2.867	1.3	6.188	157.16
PAK 1-3/16	1-3/16	1.188	30.162	1.563	39.688	4.284	108.8	4.949	125.7	0.591	15	2.867	1.3	6.188	157.16
PAK 1-1/4-206	1-1/4-206	1.250	31.75	1.563	39.688	4.284	108.8	4.949	125.7	0.591	15	2.867	1.3	6.188	157.16
PAK 1-1/4	1-1/4	1.250	31.75	1.811	46	4.807	122.1	5.429	137.9	0.591	15	3.749	1.7	6.772	172
PAK 1-3/8	1-3/8	1.375	34.925	1.811	46	4.807	122.1	5.429	137.9	0.591	15	3.749	1.7	6.772	172
PAK 35	-	1.378	35	1.811	46	4.807	122.1	5.429	137.9	0.591	15	3.749	1.7	6.772	172
PAK 1-7/16	1-7/16	1.438	36.512	1.811	46	4.807	122.1	5.429	137.9	0.591	15	3.749	1.7	6.772	172
PAK 1-1/2	1-1/2	1.500	38.1	1.937	49.2	4.921	125	5.787	147	0.591	15	4.631	2.1	7.146	181.5
PAK 40	-	1.575	40	1.937	49.2	4.921	125	5.787	147	0.591	15	4.631	2.1	7.146	181.5
PAK 1-3/4	1-3/4	1.750	44.45	2.063	52.4	5.374	136.5	6.319	160.5	0.563	14.3	5.292	2.4	7.677	195
PAK 45	-	1.772	45	2.063	52.4	5.374	136.5	6.319	160.5	0.563	14.3	5.292	2.4	7.677	195
PAK 1-15/16	1-15/16	1.938	49.212	2.189	55.6	5.965	151.5	6.437	163.5	0.709	18	7.056	3.2	7.972	202.5
PAK 50	-	1.969	50	2.189	55.6	5.965	151.5	6.437	163.5	0.709	18	7.056	3.2	7.972	202.5
PAK 2	2	2	50.8	2.437	61.9	6.476	164.5	7.362	187	0.709	18	8.82	4	8.858	225
PAK 55	-	2.165	55	2.437	61.9	6.476	164.5	7.362	187	0.709	18	8.82	4	8.858	225
PAK 2-3/16	2-3/16	2.188	55.562	2.437	61.9	6.476	164.5	7.362	187	0.709	18	8.82	4	8.858	225
PAK 60	-	2.362	60	2.689	68.3	6.969	177	7.933	201.5	0.709	18	12.348	5.6	9.646	245
PAK 2-7/16	2-7/16	2.438	61.912	2.689	68.3	6.969	177	7.933	201.5	0.709	18	12.348	5.6	9.646	245

Pillow Block Housing
PAK SERIES

- Low center height
- Eccentric locking collar
- Economy P seals
- Inch and metric sizes
- Set screws are metric for metric sizes
- Housing dimensions per ABMA standards

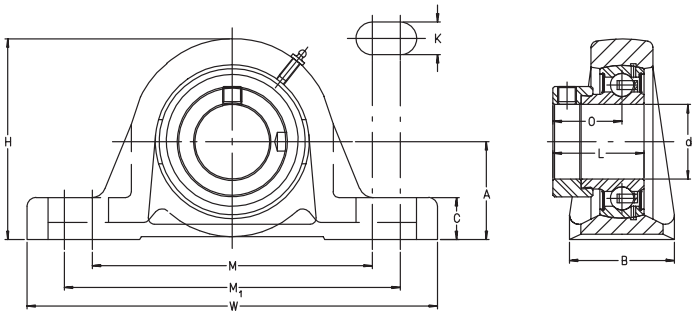

For details on part numbers, descriptive suffixes and various technical references, please refer to front of this section.
For engineering or technical information contact your local sales representative or call Distributor Sales (800)523-6572.

B inch	B mm	H inch	H mm	C inch	C mm	O inch	O mm	L inch	L mm	INSERT	HSG.	DYN. CAP. C lbf	DYN. CAP. C N	STAT. CAP. C_0 lbf	STAT. CAP. C_0 N	PART NUMBER
1.260	32	2.158	54.8	0.425	10.8	0.870	22.1	1.126	28.6	GRAE 12 NPPB	AK03	2150	9600	1070	4750	PAK 12
1.260	32	2.158	54.8	0.425	10.8	0.870	22.1	1.126	28.6	GRA008 NPPB	AK03	2150	9600	1070	4750	PAK 1/2
1.260	32	2.158	54.8	0.425	10.8	0.870	22.1	1.126	28.6	GRAE15 NPPB	AK03	2150	9600	1070	4750	PAK 15
1.260	32	2.158	54.8	0.425	10.8	0.870	22.1	1.126	28.6	GRA010 NPPB	AK03	2150	9600	1070	4750	PAK 5/8
1.260	32	2.158	54.8	0.425	10.8	0.870	22.1	1.126	28.6	GRAE17 NPPB	AK03	2150	9600	1070	4750	PAK 17
1.260	32	2.472	62.8	0.512	13	0.925	23.5	1.221	31	GRA012 NPPB	AK04	2900	12800	1480	6600	PAK 3/4
1.260	32	2.472	62.8	0.512	13	0.925	23.5	1.221	31	GRAE20 NPPB	AK04	2900	12800	1480	6600	PAK 20
1.457	37	2.688	68.263	0.563	14.288	0.925	23.5	1.221	31	GRA014 NPPB	AK05	3150	14000	1760	7800	PAK 7/8
1.457	37	2.688	68.263	0.563	14.288	0.925	23.5	1.221	31	GRAE25 NPPB	AK05	3150	14000	1760	7800	PAK 25
1.457	37	2.688	68.263	0.563	14.288	0.925	23.5	1.221	31	GRA100 NPPB	AK05	3150	14000	1760	7800	PAK 1
1.634	41.5	3.169	80.5	0.669	17	1.051	26.7	1.406	35.7	GRA101 NPPB	AK06	4350	19500	2550	11300	PAK 1-1/16
1.634	41.5	3.169	80.5	0.669	17	1.051	26.7	1.406	35.7	GRA102 NPPB	AK06	4350	19500	2550	11300	PAK 1-1/8
1.634	41.5	3.169	80.5	0.669	17	1.051	26.7	1.406	35.7	GRAE30 NPPB	AK06	4350	19500	2550	11300	PAK 30
1.634	41.5	3.169	80.5	0.669	17	1.051	26.7	1.406	35.7	GRA103 NPPB	AK06	4350	19500	2550	11300	PAK 1-3/16
1.634	41.5	3.169	80.5	0.669	17	1.051	26.7	1.406	35.7	GRA104 NPPB	AK06	4350	19500	2550	11300	PAK 1-1/4-206
1.831	46.5	3.626	92.1	0.685	17.4	1.158	29.4	1.532	38.9	GRA104 NPPB	AK07	5800	25500	3450	15300	PAK 1-1/4
1.831	46.5	3.626	92.1	0.685	17.4	1.158	29.4	1.532	38.9	GRA106 NPPB	AK07	5800	25500	3450	15300	PAK 1-3/8
1.831	46.5	3.626	92.1	0.685	17.4	1.158	29.4	1.532	38.9	GRAE35 NPPB	AK07	5800	25500	3450	15300	PAK 35
1.831	46.5	3.626	92.1	0.685	17.4	1.158	29.4	1.532	38.9	GRA107 NPPB	AK07	5800	25500	3450	15300	PAK 1-7/16
1.969	50	3.937	100	0.787	20	1.287	32.7	1.721	43.7	GRA108 NPPB	AK08	7300	32500	4450	19800	PAK 1-1/2
1.969	50	3.937	100	0.787	20	1.287	32.7	1.721	43.7	GRAE40 NPPB	AK08	7300	32500	4450	19800	PAK 40
2.028	51.5	4.15	105.4	0.803	20.4	1.287	32.7	1.721	43.7	GRA112 NPPB	AK09	7400	32500	4600	20400	PAK 1-3/4
2.028	51.5	4.15	105.4	0.803	20.4	1.287	32.7	1.721	43.7	GRAE45 NPPB	AK09	7400	32500	4600	20400	PAK 45
2.244	57	4.543	115.4	0.803	20.4	1.287	32.7	1.721	43.7	GRA115 NPPB	AK10	7900	35000	5200	23200	PAK 1-15/16
2.244	57	4.543	115.4	0.803	20.4	1.287	32.7	1.721	43.7	GRAE50 NPPB	AK10	7900	35000	5200	23200	PAK 50
2.461	62.5	4.917	124.9	0.921	23.4	1.433	36.4	1.906	48.4	GRA200 NPPB	AK11	9800	43500	6600	29000	PAK 2
2.461	62.5	4.917	124.9	0.921	23.4	1.433	36.4	1.906	48.4	GRAE 55 NPPB	AK11	9800	43500	6600	29000	PAK 55
2.461	62.5	4.917	124.9	0.921	23.4	1.433	36.4	1.906	48.4	GRA203 NPPB	AK11	9800	43500	6600	29000	PAK 2-3/16
2.559	65	5.449	138.4	1.039	26.4	1.559	39.6	2.091	53.1	GRAE60 NPPB	AK12	11800	52000	8100	36000	PAK 60
2.559	65	5.449	138.4	1.039	26.4	1.559	39.6	2.091	53.1	GRA207 NPPB	AK12	11800	52000	8100	36000	PAK 2-7/16

Pillow Block Housing
PAKY SERIES

- Low center height
- Set screw shaft locking
- Economy P seals
- Inch and metric sizes
- Set screws are metric for metric sizes
- Housing dimensions per ABMA standards

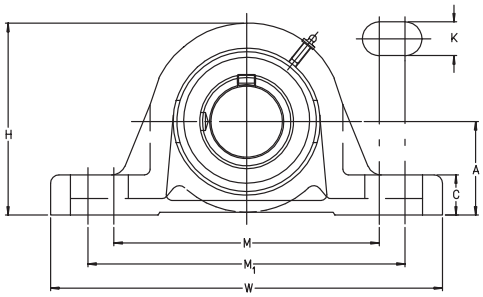

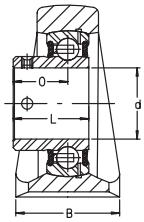

For details on part numbers, descriptive suffixes and various technical references, please refer to front of this section.
For engineering or technical information contact your local sales representative or call Distributor Sales (800)523-6572.

PART NUMBER	SHAFT d inch	SHAFT d inch	SHAFT d mm	A inch	A mm	M inch	M mm	M_1 inch	M_1 mm	K inch	K mm	WGT. lbs	WGT. kg	W inch	W mm
PAKY 12	-	0.472	12	1.063	27	3.189	81	4.055	103	0.433	11	1.213	0.55	4.921	125
PAKY 1/2	1/2	0.500	12.7	1.063	27	3.189	81	4.055	103	0.433	11	1.213	0.55	4.921	125
PAKY 15	-	0.591	15	1.063	27	3.189	81	4.055	103	0.433	11	1.213	0.55	4.921	125
PAKY 5/8	5/8	0.625	15.875	1.063	27	3.189	81	4.055	103	0.433	11	1.213	0.55	4.921	125
PAKY 17	-	0.669	17	1.063	27	3.189	81	4.055	103	0.433	11	1.213	0.55	4.921	125
PAKY 3/4	3/4	0.750	19.05	1.252	31.8	3.425	87	4.134	105	0.433	11	1.323	0.6	5.118	130
PAKY 20	-	0.787	20	1.252	31.8	3.425	87	4.134	105	0.433	11	1.323	0.6	5.118	130
PAKY 7/8	7/8	0.875	22.225	1.313	33.338	3.721	94.5	4.449	113	0.472	12	1.985	0.9	5.500	139.7
PAKY 25	-	0.984	25	1.313	33.338	3.721	94.5	4.449	113	0.472	12	1.985	0.9	5.500	139.7
PAKY 1	1	1	25.4	1.313	33.338	3.721	94.5	4.449	113	0.472	12	1.985	0.9	5.500	139.7
PAKY 30	-	1.181	30	1.563	39.688	4.284	108.8	4.949	125.7	0.591	15	2.867	1.3	6.188	157.16
PAKY 1-3/16	1-3/16	1.188	30.162	1.563	39.688	4.284	108.8	4.949	125.7	0.591	15	2.867	1.3	6.188	157.16
PAKY 1-1/4	1-1/4	1.250	31.75	1.811	46	4.807	122.1	5.429	137.9	0.591	15	3.749	1.7	6.772	172
PAKY 35	-	1.378	35	1.811	46	4.807	122.1	5.429	137.9	0.591	15	3.749	1.7	6.772	172
PAKY 1-7/16	1-7/16	1.438	36.512	1.811	46	4.807	122.1	5.429	137.9	0.591	15	3.749	1.7	6.772	172
PAKY 1-1/2	1-1/2	1.500	38.1	1.937	49.2	4.921	125	5.787	147	0.591	15	4.631	2.1	7.146	181.5
PAKY 40	-	1.575	40	1.937	49.2	4.921	125	5.787	147	0.591	15	4.631	2.1	7.146	181.5
PAKY 1-3/4	1-3/4	1.750	44.45	2.063	52.4	5.374	136.5	6.319	160.5	0.563	14.3	5.292	2.4	7.677	195
PAKY 45	-	1.772	45	2.063	52.4	5.374	136.5	6.319	160.5	0.563	14.3	5.292	2.4	7.677	195
PAKY 1-15/16	1-15/16	1.938	49.212	2.189	55.6	5.965	151.5	6.437	163.5	0.709	18	7.056	3.2	7.972	202.5
PAKY 50	-	1.969	50	2.189	55.6	5.965	151.5	6.437	163.5	0.709	18	7.056	3.2	7.972	202.5

Pillow Block Housing
PAKY SERIES

- Low center height
- Set screw shaft locking
- Economy P seals
- Inch and metric sizes
- Set screws are metric for metric sizes
- Housing dimensions per ABMA standards

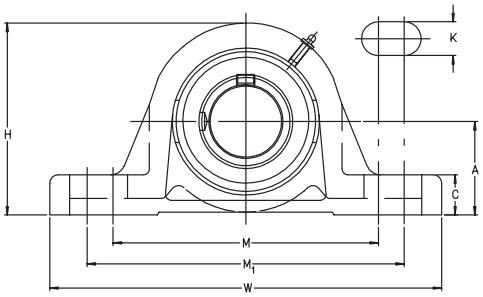

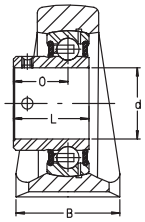

For details on part numbers, descriptive suffixes and various technical references, please refer to front of this section.
For engineering or technical information contact your local sales representative or call Distributor Sales (800)523-6572.

B inch	B mm	H inch	H mm	C inch	C mm	O inch	O mm	L inch	L mm	INSERT	HSG.	DYN. CAP. C lbf	DYN. CAP. C N	STAT. CAP. C_0 lbf	STAT. CAP. C_0 N	PART NUMBER
1.260	32	2.158	54.8	0.425	10.8	0.63	16	0.866	22	GAY 12 NPPB	AK 03	2150	9600	1070	4750	PAKY 12
1.260	32	2.158	54.8	0.425	10.8	0.63	16	0.866	22	GAY008 NPPB	AK 03	2150	9600	1070	4750	PAKY 1/2
1.260	32	2.158	54.8	0.425	10.8	0.63	16	0.866	22	GAY15 NPPB	AK 03	2150	9600	1070	4750	PAKY 15
1.260	32	2.158	54.8	0.425	10.8	0.63	16	0.866	22	GAY010 NPPB	AK 03	2150	9600	1070	4750	PAKY 5/8
1.260	32	2.158	54.8	0.425	10.8	0.63	16	0.866	22	GAY17 NPPB	AK 03	2150	9600	1070	4750	PAKY 17
1.260	32	2.472	62.8	0.512	13	0.709	18	0.984	25	GAY012 NPPB	AK 04	2900	12800	1480	6600	PAKY 3/4
1.260	32	2.472	62.8	0.512	13	0.709	18	0.984	25	GAY20 NPPB	AK 04	2900	12800	1480	6600	PAKY 20
1.457	37	2.688	68.262	0.563	14.287	0.768	19.5	1.063	27	GAY014 NPPB	AK 05	3150	14000	1760	7800	PAKY 7/8
1.457	37	2.688	68.262	0.563	14.287	0.768	19.5	1.063	27	GAY25 NPPB	AK 05	3150	14000	1760	7800	PAKY 25
1.457	37	2.688	68.262	0.563	14.287	0.768	19.5	1.063	27	GAY100 NPPB	AK 05	3150	14000	1760	7800	PAKY 1
1.634	41.5	3.169	80.5	0.669	17	0.827	21	1.181	30	GAY30 NPPB	AK 06	4350	19500	2550	11300	PAKY 30
1.634	41.5	3.169	80.5	0.669	17	0.827	21	1.181	30	GAY103 NPPB	AK 06	4350	19500	2550	11300	PAKY 1-3/16
1.831	46.5	3.626	92.1	0.685	17.4	1.004	25.5	1.378	35	GAY104 NPPB	AK 07	5800	25500	3450	15300	PAKY 1-1/4
1.831	46.5	3.626	92.1	0.685	17.4	1.004	25.5	1.378	35	GAY35 NPPB	AK 07	5800	25500	3450	15300	PAKY 35
1.831	46.5	3.626	92.1	0.685	17.4	1.004	25.5	1.378	35	GAY107 NPPB	AK 07	5800	25500	3450	15300	PAKY 1-7/16
1.969	50	3.937	100	0.787	20	1.142	29	1.555	39.5	GAY108 NPPB	AK 08	7300	32500	4450	19800	PAKY 1-1/2
1.969	50	3.937	100	0.787	20	1.142	29	1.555	39.5	GAY40 NPPB	AK 08	7300	32500	4450	19800	PAKY 40
2.028	51.5	4.150	105.4	0.803	20.4	1.201	30.5	1.634	41.5	GAY112 NPPB	AK 09	7400	32500	4600	20400	PAKY 1-3/4
2.028	51.5	4.150	105.4	0.803	20.4	1.201	30.5	1.634	41.5	GAY45 NPPB	AK 09	7400	32500	4600	20400	PAKY 45
2.244	57	4.543	115.4	0.803	20.4	1.260	32	1.693	43	GAY115 NPPB	AK 10	7900	35000	5200	23200	PAKY 1-15/16
2.244	57	4.543	115.4	0.803	20.4	1.260	32	1.693	43	GAY50 NPPB	AK 10	7900	35000	5200	23200	PAKY 50

Pillow Block Housing
RASE SERIES

- Standard center height
- Eccentric locking collar
- Standard R seals
- Inch and metric sizes
- Set screws are metric for metric sizes
- Housing dimensions per ABMA standards

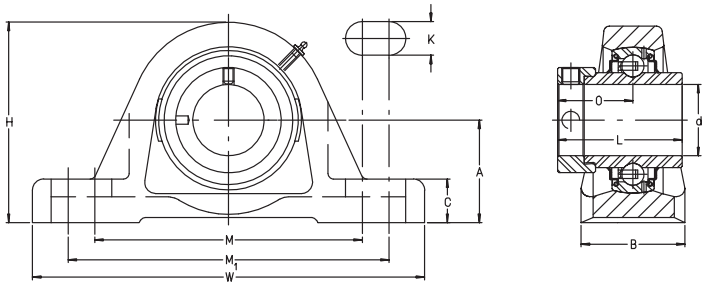

For details on part numbers, descriptive suffixes and various technical references, please refer to front of this section.
For engineering or technical information contact your local sales representative or call Distributor Sales (800)523-6572.

PART NUMBER	SHAFT d inch	SHAFT d inch	SHAFT d mm	A inch	A mm	M inch	M mm	M_1 inch	M_1 mm	K inch	K mm	WGT. lbs	WGT. kg	W inch	W mm
RASE 1/2	1/2	0.5	12.7	1.189	30.2	3.189	81	4.055	103	0.433	11	1.213	0.55	4.921	125
RASE 15	-	0.591	15	1.189	30.2	3.189	81	4.055	103	0.433	11	1.213	0.55	4.921	125
RASE 5/8	5/8	0.625	15.875	1.189	30.2	3.189	81	4.055	103	0.433	11	1.213	0.55	4.921	125
RASE 3/4	3/4	0.75	19.05	1.311	33.3	3.425	87	4.134	105	0.433	11	1.323	0.6	5.118	130
RASE 20	-	0.787	20	1.311	33.3	3.425	87	4.134	105	0.433	11	1.323	0.6	5.118	130
RASE 7/8	7/8	0.875	22.225	1.438	36.513	3.751	95.275	4.5	114.3	0.472	12	1.985	0.9	5.5	139.7
RASE 15/16	15/16	0.938	23.813	1.438	36.513	3.751	95.275	4.5	114.3	0.472	12	1.985	0.9	5.5	139.7
RASE 25	-	0.984	25	1.438	36.513	3.751	95.275	4.5	114.3	0.472	12	1.985	0.9	5.5	139.7
RASE 1	1	1	25.4	1.438	36.513	3.751	95.275	4.5	114.3	0.472	12	1.985	0.9	5.5	139.7
RASE 1-1/8	1-1/8	1.125	28.575	1.689	42.9	4.252	108	5	127	0.591	15	2.867	1.3	6.189	157.2
RASE 30	-	1.181	30	1.689	42.9	4.252	108	5	127	0.591	15	2.867	1.3	6.189	157.2
RASE 1-3/16	1-3/16	1.188	30.162	1.689	42.9	4.252	108	5	127	0.591	15	2.867	1.3	6.189	157.2
RASE 1-1/4	1-1/4	1.25	31.75	1.874	47.6	4.807	122.1	5.429	137.9	0.591	15	3.749	1.7	6.772	172
RASE 1-3/8	1-3/8	1.375	34.925	1.874	47.6	4.807	122.1	5.429	137.9	0.591	15	3.749	1.7	6.772	172
RASE 35	-	1.378	35	1.874	47.6	4.807	122.1	5.429	137.9	0.591	15	3.749	1.7	6.417	163
RASE 1-7/16	1-7/16	1.438	36.512	1.874	47.6	4.807	122.1	5.429	137.9	0.591	15	3.749	1.7	6.772	172
RASE 1-1/2	1-1/2	1.5	38.1	1.937	49.2	4.921	125	5.787	147	0.591	15	4.631	2.1	7.146	181.5
RASE 40	-	1.575	40	1.937	49.2	4.921	125	5.787	147	0.591	15	4.631	2.1	7.146	181.5
RASE 1-5/8	1-5/8	1.625	41.275	2.126	54	5.374	136.5	6.319	160.5	0.563	14.3	5.292	2.4	7.677	195
RASE 1-11/16	1-11/16	1.688	42.863	2.126	54	5.374	136.5	6.319	160.5	0.563	14.3	5.292	2.4	7.677	195
RASE 1-3/4	1-3/4	1.75	44.45	2.126	54	5.374	136.5	6.319	160.5	0.563	14.3	5.292	2.4	7.677	195
RASE 45	-	1.772	45	2.126	54	5.374	136.5	6.319	160.5	0.531	13.5	5.292	2.4	7.559	192
RASE 1-15/16	1-15/16	1.938	49.212	2.252	57.2	5.965	151.5	6.437	163.5	0.709	18	7.056	3.2	7.972	202.5
RASE 50	-	1.969	50	2.252	57.2	5.965	151.5	6.437	163.5	0.709	18	7.056	3.2	7.874	200
RASE 2	2	2	50.8	2.5	63.5	6.476	164.5	7.362	187	0.709	18	8.820	4	8.858	225
RASE 55	-	2.165	55	2.5	63.5	6.476	164.5	7.362	187	0.709	18	8.820	4	8.858	225
RASE 2-3/16	2-3/16	2.188	55.562	2.5	63.5	6.476	164.5	7.362	187	0.709	18	8.820	4	8.858	225
RASE 60	-	2.362	60	2.752	69.9	6.969	177	7.933	201.5	0.709	18	12.348	5.6	9.449	240
RASE 2-7/16	2-7/16	2.438	61.912	2.752	69.9	6.969	177	7.933	201.5	0.709	18	12.348	5.6	9.646	245
RASE 65	-	2.559	65	3.126	79.4	7.736	196.5	8.209	208.5	0.866	22	14.134	6.41	10.236	260
RASE 70	-	2.756	70	3.126	79.4	7.736	196.5	8.209	208.5	0.866	22	14.134	6.41	10.236	260
RASE 75	-	2.953	75	3.248	82.5	8.031	204	8.583	218	0.945	24	16.604	7.53	10.748	273
RASE 80	-	3.150	80	3.504	89	8.819	224	9.449	240	1.024	26	19.073	8.65	11.417	290

Pillow Block Housing
RASE SERIES

- Standard center height
- Eccentric locking collar
- Standard R seals
- Inch and metric sizes
- Set screws are metric for metric sizes
- Housing dimensions per ABMA standards

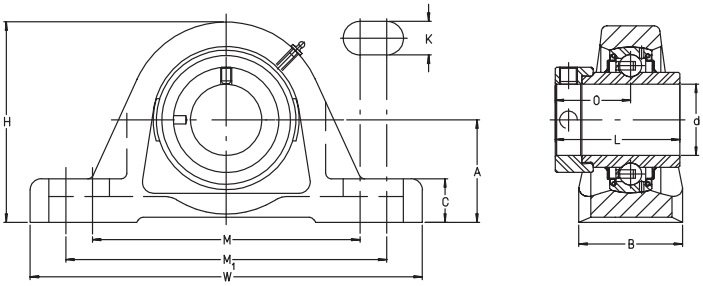

For details on part numbers, descriptive suffixes and various technical references, please refer to front of this section.
For engineering or technical information contact your local sales representative or call Distributor Sales (800)523-6572.

B inch	B mm	H inch	H mm	C inch	C mm	O inch	O mm	L inch	L mm	INSERT	HSG.	DYN. CAP. C lbf	DYN. CAP. C N	STAT. CAP. C_0 lbf	STAT. CAP. C_0 N	PART NUMBER
1.26	32	2.284	58	0.551	14	0.921	23.4	1.469	37.3	G1008 KRRB	ASE 03	2150	9600	1070	4750	RASE 1/2
1.26	32	2.284	58	0.551	14	0.921	23.4	1.469	37.3	GE15 KRRB	ASE 03	2150	9600	1070	4750	RASE 15
1.26	32	2.284	58	0.551	14	0.921	23.4	1.469	37.3	G1010 KRRB	ASE 03	2150	9600	1070	4750	RASE 5/8
1.26	32	2.532	64.3	0.571	14.5	1.047	26.6	1.721	43.7	G1012 KRRB	ASE 04	2900	12800	1480	6600	RASE 3/4
1.26	32	2.520	64	0.571	14.5	1.047	26.6	1.721	43.7	GE20 KRRB	ASE 04	2900	12800	1480	6600	RASE 20
1.457	37	2.813	71.438	0.61	15.5	1.059	26.9	1.748	44.4	G1014 KRRB	ASE 05	3150	14000	1760	7800	RASE 7/8
1.457	37	2.813	71.438	0.61	15.5	1.059	26.9	1.748	44.4	G1015 KRRB	ASE 06	3150	14000	1760	7800	RASE 15/16
1.457	37	2.813	71.438	0.61	15.5	1.059	26.9	1.748	44.4	GE25 KRRB	ASE 05	3150	14000	1760	7800	RASE 25
1.457	37	2.813	71.438	0.61	15.5	1.059	26.9	1.748	44.4	G1100 KRRB	ASE 05	3150	14000	1760	7800	RASE 1
1.673	42.5	3.284	83.4	0.709	18	1.185	30.1	1.906	48.4	G1102 KRRB	ASE 06	4350	19500	2550	11300	RASE 1-1/8
1.673	42.5	3.284	83.4	0.709	18	1.185	30.1	1.906	48.4	GE30 KRRB	ASE 06	4350	19500	2550	11300	RASE 30
1.673	42.5	3.284	83.4	0.709	18	1.185	30.1	1.906	48.4	G1103 KRRB	ASE 06	4350	19500	2550	11300	RASE 1-3/16
1.831	46.5	3.689	93.7	0.748	19	1.272	32.3	2.012	51.1	G1104 KRRB	ASE 07	5800	25500	3450	15300	RASE 1-1/4
1.831	46.5	3.689	93.7	0.748	19	1.272	32.3	2.012	51.1	G1106 KRRB	ASE 07	5800	25500	3450	15300	RASE 1-3/8
1.772	45	3.661	93	0.748	19	1.272	32.3	2.012	51.1	GE35 KRRB	ASE 07	5800	25500	3450	15300	RASE 35
1.831	46.5	3.689	93.7	0.748	19	1.272	32.3	2.012	51.1	G1107 KRRB	ASE 07	5800	25500	3450	15300	RASE 1-7/16
1.969	50	3.937	100	0.787	20	1.374	34.9	2.217	56.3	G1108 KRRB	ASE 08	7300	32500	4450	19800	RASE 1-1/2
1.969	50	3.937	100	0.787	20	1.374	34.9	2.217	56.3	GE40 KRRB	ASE 08	7300	32500	4450	19800	RASE 40
2.039	51.8	4.213	107	0.866	22	1.374	34.9	2.217	56.3	G1110 KRRB	ASE 09	7400	32500	4600	20400	RASE 1-5/8
2.039	51.8	4.213	107	0.866	22	1.374	34.9	2.217	56.3	G1111 KRRB	ASE 09	7400	32500	4600	20400	RASE 1-11/16
2.039	51.8	4.213	107	0.866	22	1.374	34.9	2.217	56.3	G1112 KRRB	ASE 09	7400	32500	4600	20400	RASE 1-3/4
1.890	48	4.213	107	0.846	21.5	1.374	34.9	2.217	56.3	GE45 KRRB	ASE 09	7400	32500	4600	20400	RASE 45
2.244	57	4.606	117	0.866	22	1.5	38.1	2.469	62.7	G1115 KRRB	ASE 10	7900	35000	5200	23200	RASE 1-15/16
2.126	54	4.528	115	0.846	21.5	1.5	38.1	2.469	62.7	GE50 KRRB	ASE 10	7900	35000	5200	23200	RASE 50
2.461	62.5	4.98	126.5	0.984	25	1.717	43.6	2.811	71.4	G1200 KRRB	ASE 11	9800	43500	6600	29000	RASE 2
2.461	62.5	4.98	126.5	0.984	25	1.717	43.6	2.811	71.4	GE55 KRRB	ASE 11	9800	43500	6600	29000	RASE 55
2.461	62.5	4.98	126.5	0.984	25	1.717	43.6	2.811	71.4	G1203 KRRB	ASE 11	9800	43500	6600	29000	RASE 2-3/16
2.362	60	5.512	140	0.984	25	1.843	46.8	3.063	77.8	GE60 KRRB	ASE 12	11800	52000	8100	36000	RASE 60
2.559	65	5.512	140	1.102	28	1.843	46.8	3.063	77.8	G1207 KRRB	ASE 12	11800	52000	8100	36000	RASE 2-7/16
2.559	65	6.142	156	1.083	27.5	1.756	44.6	2.602	66.1	GE65 KRRB	ASE 14	14000	62000	9900	44000	RASE 65
2.559	65	6.142	156	1.083	27.5	1.756	44.6	2.602	66.1	GE70 KRRB	ASE 14	14000	62000	9900	44000	RASE 70
2.598	66	6.457	164	1.083	27.5	1.795	45.6	2.642	67.1	GE75 KRRB	ASE 15	14000	62000	10100	44500	RASE 75
3.071	78	6.890	175	1.181	30	1.874	47.6	2.795	71	GE80 KRRB	ASE 16	16100	72000	12200	54000	RASE 80

Pillow Block Housing
RASEY SERIES

- Standard center height
- Set screw shaft locking
- Standard R seals
- Inch and metric sizes
- Set screws are metric for metric sizes
- Housing dimensions per ABMA standards

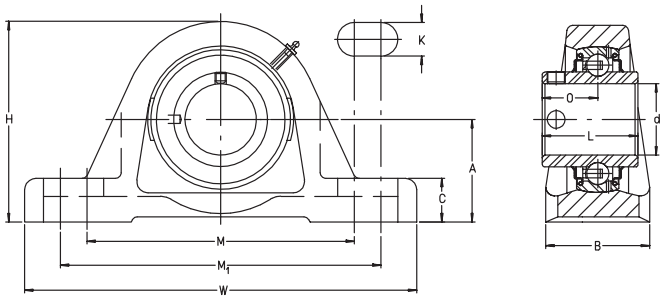

For details on part numbers, descriptive suffixes and various technical references, please refer to front of this section.
For engineering or technical information contact your local sales representative or call Distributor Sales (800)523-6572.

PART NUMBER	SHAFT d inch	SHAFT d inch	SHAFT d mm	A inch	A mm	M inch	M mm	M_1 inch	M_1 mm	K inch	K mm	WGT. lbs	WGT. kg	W inch	W mm
RASEY 1/2	1/2	0.500	12.7	1.189	30.2	3.189	81	4.055	103	0.433	11	1.21	0.55	4.921	125
RASEY 15	-	0.591	15	1.189	30.2	3.189	81	4.055	103	0.433	11	1.21	0.55	4.921	125
RASEY 5/8	5/8	0.025	15.875	1.189	30.2	3.189	81	4.055	103	0.433	11	1.21	0.55	4.921	125
RASEY 17	-	0.669	17	1.189	30.2	3.189	81	4.055	103	0.433	11	1.21	0.55	4.921	125
RASEY 3/4	3/4	0.750	19.1	1.311	33.3	3.425	87	4.134	105	0.433	11	1.32	0.6	5.118	130
RASEY 20	-	0.787	20	1.311	33.3	3.425	87	4.134	105	0.433	11	1.32	0.6	5.118	130
RASEY 7/8	7/8	0.875	22.2	1.438	36.5	3.751	95.3	4.500	114.3	0.472	12	1.99	0.9	5.500	139.7
RASEY 15/16	15/16	0.938	23.8	1.438	36.5	3.751	95.3	4.500	114.3	0.472	12	1.99	0.9	5.500	139.7
RASEY 25	-	0.984	25	1.438	36.5	3.751	95.3	4.500	114.3	0.472	12	1.99	0.9	5.500	139.7
RASEY 1	1	1	25.4	1.438	36.5	3.751	95.3	4.500	114.3	0.472	12	1.99	0.9	5.500	139.7
RASEY 1-1/8	1-1/8	1.125	28.6	1.689	42.9	4.252	108	5.000	127	0.591	15	2.87	1.3	6.189	157.2
RASEY 30	-	1.181	30	1.689	42.9	4.252	108	5.000	127	0.591	15	2.87	1.3	6.189	157.2
RASEY 1-3/16	1-3/16	1.188	30.2	1.689	42.9	4.252	108	5.000	127	0.591	15	2.87	1.3	6.189	157.2
RASEY 1-1/4-206	1-1/4	1.250	31.8	1.689	42.9	4.252	108	5.000	127	0.591	15	2.87	1.3	6.189	157.2
RASEY 1-1/4	1-1/4	1.250	31.8	1.874	47.6	4.807	122.1	5.429	137.9	0.591	15	3.75	1.7	6.772	172
RASEY 1-3/8	1-3/8	1.375	34.9	1.874	47.6	4.807	122.1	5.429	137.9	0.591	15	3.75	1.7	6.772	172
RASEY 35	-	1.378	35	1.874	47.6	4.807	122.1	5.429	137.9	0.591	15	3.75	1.7	6.417	163
RASEY 1-7/16	1-7/16	1.438	36.5	1.874	47.6	4.807	122.1	5.429	137.9	0.591	15	3.75	1.7	6.772	172
RASEY 1-1/2	1-1/2	1.500	38.1	1.937	49.2	4.921	125	5.787	147	0.591	15	4.63	2.1	7.146	181.5
RASEY 40	-	1.575	40	1.937	49.2	4.921	125	5.787	147	0.591	15	4.63	2.1	7.146	181.5
RASEY 1-5/8	1-5/8	1.625	41.3	2.126	54	5.374	136.5	6.319	160.5	0.563	14.3	5.29	2.4	7.677	195
RASEY 1-11/16	1-11/16	1.688	42.9	2.126	54	5.374	136.5	6.319	160.5	0.563	14.3	5.29	2.4	7.677	195
RASEY 1-3/4	1-3/4	1.750	44.5	2.126	54	5.374	136.5	6.319	160.5	0.563	14.3	5.29	2.4	7.677	195
RASEY 45	-	1.772	45	2.126	54	5.374	136.5	6.319	160.5	0.531	13.5	5.29	2.4	7.559	192
RASEY 1-15/16	1-15/16	1.938	49.2	2.252	57.2	5.965	151.5	6.437	163.5	0.709	18	7.06	3.2	7.972	202.5
RASEY 50	-	1.969	50	2.252	57.2	5.965	151.5	6.437	163.5	0.709	18	7.06	3.2	7.874	200
RASEY 2	2	2	50.8	2.500	63.5	6.476	164.5	7.362	187	0.709	18	8.82	4	8.858	225
RASEY 55	-	2.165	55	2.500	63.5	6.476	164.5	7.362	187	0.709	18	8.82	4	8.858	225
RASEY 2-3/16	2-3/16	2.188	55.6	2.500	63.5	6.476	164.5	7.362	187	0.709	18	8.82	4	8.858	225
RASEY 60	-	2.362	60	2.752	69.9	6.969	177	7.933	201.5	0.709	18	12.35	5.6	9.449	240
RASEY 2-7/16	2-7/16	2.438	61.9	2.752	69.9	6.969	177	7.933	201.5	0.709	18	12.35	5.6	9.646	245
RASEY 65	-	2.559	65	3.126	79.4	7.736	196.5	8.209	208.5	0.866	22	13.12	5.95	10.236	260
RASEY 70	-	2.756	70	3.126	79.4	7.736	196.5	8.209	208.5	0.866	22	12.46	5.65	10.236	260
RASEY 75	-	2.953	75	3.248	82.5	8.031	204	8.583	218	0.945	24	15.85	7.19	10.748	273
RASEY 80	-	3.150	80	3.504	89	8.819	224	9.449	240	1.024	26	19.03	8.63	11.417	290

Pillow Block Housing
RASEY SERIES

- Standard center height
- Set screw shaft locking
- Standard R seals
- Inch and metric sizes
- Set screws are metric for metric sizes
- Housing dimensions per ABMA standards

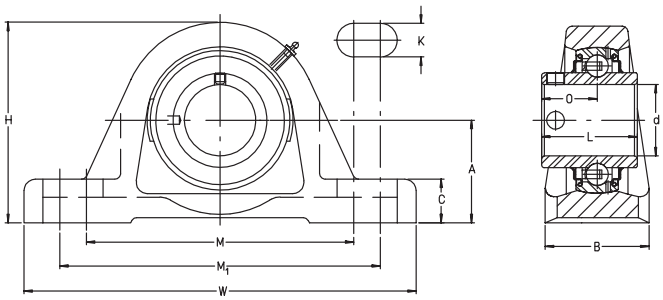

For details on part numbers, descriptive suffixes and various technical references, please refer to front of this section.
For engineering or technical information contact your local sales representative or call Distributor Sales (800)523-6572.

B inch	B mm	H inch	H mm	C inch	C mm	O inch	O mm	L inch	L mm	INSERT	HSG.	DYN. CAP. C lbf	DYN. CAP. C N	STAT. CAP. C_0 lbf	STAT. CAP. C_0 N	PART NUMBER
1.260	32	2.284	58	0.551	14	0.626	15.9	1.079	27.4	GY1008 KRRB	ASE 03	2150	9600	1070	4750	RASEY 1/2
1.260	32	2.284	58	0.551	14	0.626	15.9	1.079	27.4	GYE15 KRRB	ASE 03	2150	9600	1070	4750	RASEY 15
1.260	32	2.284	58	0.551	14	0.626	15.9	1.079	27.4	GY1010 KRRB	ASE 03	2150	9600	1070	4750	RASEY 5/8
1.260	32	2.284	58	0.551	14	0.626	15.9	1.079	27.4	GYE17 KRRB	ASE 03	2150	9600	1070	4750	RASEY 17
1.260	32	2.532	64.3	0.571	14.5	0.721	18.3	1.221	31	GY1012 KRRB	ASE 04	2900	12800	1480	6600	RASEY 3/4
1.260	32	2.520	64	0.571	14.5	0.721	18.3	1.221	31	GYE20 KRRB	ASE 04	2900	12800	1480	6600	RASEY 20
1.457	37	2.813	71.4	0.610	15.5	0.780	19.8	1.343	34.1	GY1014 KRRB	ASE 05	3150	14000	1760	7800	RASEY 7/8
1.457	37	2.813	71.4	0.610	15.5	0.780	19.8	1.343	34.1	GY1015 KRRB	ASE 05	3150	14000	1760	7800	RASEY 15/16
1.457	37	2.813	71.4	0.610	15.5	0.780	19.8	1.343	34.1	GYE25 KRRB	ASE 05	3150	14000	1760	7800	RASEY 25
1.457	37	2.813	71.4	0.610	15.5	0.780	19.8	1.343	34.1	GY1100 KRRB	ASE 05	3150	14000	1760	7800	RASEY 1
1.673	42.5	3.284	83.4	0.709	18	0.874	22.2	1.500	38.1	GY1102 KRRB	ASE 06	4350	19500	2550	11300	RASEY 1-1/8
1.673	42.5	3.284	83.4	0.709	18	0.874	22.2	1.500	38.1	GYE30 KRRB	ASE 06	4350	19500	2550	11300	RASEY 30
1.673	42.5	3.284	83.4	0.709	18	0.874	22.2	1.500	38.1	GY1103 KRRB	ASE 06	4350	19500	2550	11300	RASEY 1-3/16
1.673	42.5	3.284	83.4	0.709	18	0.874	22.2	1.500	38.1	GY1104 KRRB-206	ASE 06	4350	19500	2550	11300	RASEY 1-1/4-206
1.831	46.5	3.689	93.7	0.748	19	1	25.4	1.689	42.9	GY1104 KRRB	ASE 07	5800	25500	3450	15300	RASEY 1-1/4
1.831	46.5	3.689	93.7	0.748	19	1	25.4	1.689	42.9	GY1106 KRRB	ASE 07	5800	25500	3450	15300	RASEY 1-3/8
1.772	45	3.661	93	0.748	19	1	25.4	1.689	42.9	GYE35 KRRB	ASE 07	5800	25500	3450	15300	RASEY 35
1.831	46.5	3.689	93.7	0.748	19	1	25.4	1.689	42.9	GY1107 KRRB	ASE 07	5800	25500	3450	15300	RASEY 1-7/16
1.969	50	3.937	100	0.787	20	1.189	30.2	1.937	49.2	GY1108 KRRB	ASE 08	7300	32500	4450	19800	RASEY 1-1/2
1.969	50	3.937	100	0.787	20	1.189	30.2	1.937	49.2	GYE40 KRRB	ASE 08	7300	32500	4450	19800	RASEY 40
2.039	51.8	4.213	107	0.866	22	1.189	30.2	1.937	49.2	GY1110 KRRB	ASE 09	7400	32500	4600	20400	RASEY 1-5/8
2.039	51.8	4.213	107	0.866	22	1.189	30.2	1.937	49.2	GY1111 KRRB	ASE 09	7400	32500	4600	20400	RASEY 1-11/16
2.039	51.8	4.213	107	0.866	22	1.189	30.2	1.937	49.2	GY1112 KRRB	ASE 09	7400	32500	4600	20400	RASEY 1-3/4
1.890	48	4.213	107	0.846	21.5	1.189	30.2	1.937	49.2	GYE45 KRRB	ASE 09	7400	32500	4600	20400	RASEY 45
2.244	57	4.606	117	0.866	22	1.284	32.6	2.032	51.6	GY1115 KRRB	ASE 10	7900	35000	5200	23200	RASEY 1-15/16
2.126	54	4.528	115	0.846	21.5	1.284	32.6	2.032	51.6	GYE50 KRRB	ASE 10	7900	35000	5200	23200	RASEY 50
2.461	62.5	4.980	126.5	0.984	25	1.315	33.4	2.189	55.6	GY1200 KRRB	ASE 11	9800	43500	6600	29000	RASEY 2
2.461	62.5	4.980	126.5	0.984	25	1.315	33.4	2.189	55.6	GYE55 KRRB	ASE 11	9800	43500	6600	29000	RASEY 55
2.461	62.5	4.980	126.5	0.984	25	1.315	33.4	2.189	55.6	GY1203 KRRB	ASE 11	9800	43500	6600	29000	RASEY 2-3/16
2.362	60	5.512	140	0.984	25	1.563	39.7	2.563	65.1	GYE60 KRRB	ASE 12	11800	52000	8100	36000	RASEY 60
2.559	65	5.512	140	1.102	28	1.563	39.7	2.563	65.1	GY1207 KRRB	ASE 12	11800	52000	8100	36000	RASEY 2-7/16
2.559	65	6.142	156	1.083	27.5	1.748	44.4	2.937	74.6	GYE65 KRRB	ASE 14	14000	62000	9900	44000	RASEY 65
2.559	65	6.142	156	1.083	27.5	1.748	44.4	2.937	74.6	GYE70 KRRB	ASE 14	14000	62000	9900	44000	RASEY 70
2.756	70	6.457	164	1.142	29	1.752	44.5	3.063	77.8	GYE75 KRRB	ASE 15	14000	62000	10100	44500	RASEY 75
3.071	78	6.890	175	1.181	30	1.941	49.3	3.252	82.6	GYE80 KRRB	ASE 16	16100	72000	12200	54000	RASEY 80

Pillow Block Housings

RAK SERIES

- Low center height
- Eccentric locking collar
- Standard R seals
- Inch and metric sizes
- Set screws are metric for metric sizes
- Housing dimensions per ABMA standards

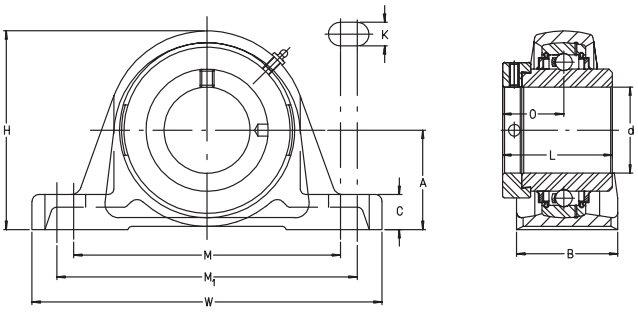

For details on part numbers, descriptive suffixes and various technical references, please refer to front of this section.
For engineering or technical information contact your local sales representative or call Distributor Sales (800)523-6572.

PART NUMBER	SHAFT d inch	SHAFT d inch	SHAFT d mm	A inch	A mm	M inch	M mm	M_1 inch	M_1 mm	K inch	K mm	WGT. lbs	WGT. kg	W inch	W mm
RAK 1/2	1/2	0.500	12.7	1.063	27	3.189	81	4.055	103	0.433	11	1.213	0.550	4.921	125
RAK 15	–	0.591	15	1.063	27	3.189	81	4.055	103	0.433	11	1.213	0.550	4.921	125
RAK 5/8	5/8	0.025	0.625	1.063	27	3.189	81	4.055	103	0.433	11	1.213	0.550	4.921	125
RAK 3/4	3/4	0.750	19.05	1.252	31.8	3.425	87	4.134	105	0.433	11	1.323	0.600	5.118	130
RAK 20	–	0.787	20	1.252	31.8	3.425	87	4.134	105	0.433	11	1.323	0.600	5.118	130
RAK 7/8	7/8	0.875	22.225	1.313	33.338	3.721	94.5	4.449	113	0.472	12	1.985	0.900	5.500	139.7
RAK 15/16	15/16	0.938	23.813	1.313	33.338	3.721	94.5	4.449	113	0.472	12	1.985	0.900	5.500	139.7
RAK 25	–	0.984	25	1.313	33.338	3.721	94.5	4.449	113	0.472	12	1.985	0.900	5.500	139.7
RAK 1	1	1.000	25.4	1.313	33.338	3.721	94.5	4.449	113	0.472	12	1.985	0.900	5.500	139.7
RAK 1–1/8	1–1/8	1.125	28.575	1.563	39.688	4.284	108.8	4.949	125.7	0.591	15	2.867	1.300	6.189	157.2
RAK 30	–	1.181	30	1.563	39.688	4.284	108.8	4.949	125.7	0.591	15	2.867	1.300	6.189	157.2
RAK 1–3/16	1–3/16	1.188	30.162	1.563	39.688	4.284	108.8	4.949	125.7	0.591	15	2.867	1.300	6.189	157.2
RAK 1–1/4	1–1/4	1.250	31.75	1.811	46	4.807	122.1	5.429	137.9	0.591	15	3.749	1.700	6.772	172
RAK 1–3/8	1–3/8	1.375	34.925	1.811	46	4.807	122.1	5.429	137.9	0.591	15	3.749	1.700	6.772	172
RAK 35	–	1.378	35	1.811	46	4.807	122.1	5.429	137.9	0.591	15	3.749	1.700	6.772	172
RAK 1–7/16	1–7/16	1.438	36.512	1.811	46	4.807	122.1	5.429	137.9	0.591	15	3.749	1.700	6.772	172
RAK 1–1/2	1–1/2	1.500	38.1	1.937	49.2	4.921	125	5.787	147	0.591	15	4.631	2.100	7.146	181.5
RAK 40	–	1.575	40	1.937	49.2	4.921	125	5.787	147	0.591	15	4.631	2.100	7.146	181.5
RAK 1–5/8	1–5/8	1.625	41.275	2.063	52.4	5.374	136.5	6.319	160.5	0.563	14.3	5.292	2.400	7.677	195
RAK 1–11/16	1–11/16	1.688	42.863	2.063	52.4	5.374	136.5	6.319	160.5	0.563	14.3	5.292	2.400	7.677	195
RAK 1–3/4	1–3/4	1.750	44.45	2.063	52.4	5.374	136.5	6.319	160.5	0.563	14.3	5.292	2.400	7.677	195
RAK 45	–	1.772	45	2.063	52.4	5.374	136.5	6.319	160.5	0.563	14.3	5.292	2.400	7.677	195
RAK 1–15/16	1–15/16	1.938	49.212	2.189	55.6	5.965	151.5	6.437	163.5	0.709	18	7.056	3.200	7.972	202.5
RAK 50	–	1.969	50	2.189	55.6	5.965	151.5	6.437	163.5	0.709	18	7.056	3.200	7.972	202.5
RAK 2	2	2.000	50.8	2.437	61.9	6.476	164.5	7.362	187	0.709	18	8.820	4.000	8.858	225
RAK 2–3/16	2–3/16	2.188	55.562	2.437	61.9	6.476	164.5	7.362	187	0.709	18	8.820	4.000	8.858	225
RAK 60	–	2.362	60	2.689	68.3	6.969	177	7.933	201.5	0.709	18	12.348	5.600	9.646	245
RAK 2–7/16	2–7/16	2.438	61.912	2.689	68.3	6.969	177	7.933	201.5	0.709	18	12.348	5.600	9.646	245

Pillow Block Housings

RAK SERIES

- Low center height
- Eccentric locking collar
- Standard R seals
- Inch and metric sizes
- Set screws are metric for metric sizes
- Housing dimensions per ABMA standards

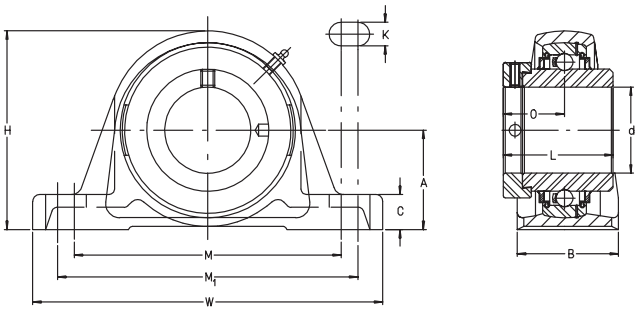

For details on part numbers, descriptive suffixes and various technical references, please refer to front of this section.
For engineering or technical information contact your local sales representative or call Distributor Sales (800)523-6572.

B inch	B mm	H inch	H mm	C inch	C mm	O inch	O mm	L inch	L mm	INSERT	HOUSING	DYN. CAP. C lbf	DYN. CAP. C N	STAT. CAP. C_0 lbf	STAT. CAP. C_0 N	PART NUMBER
1.260	32	2.158	54.8	0.425	10.8	0.921	23.4	1.469	37.3	G1008 KRRB	AK 03	2150	9600	1070	4750	RAK 1/2
1.260	32	2.158	54.8	0.425	10.8	0.921	23.4	1.469	37.3	GE15 KRRB	AK 03	2150	9600	1070	4750	RAK 15
1.260	32	2.158	54.8	0.425	10.8	0.921	23.4	1.469	37.3	G1010 KRRB	AK 03	2150	9600	1070	4750	RAK 5/8
1.260	32	2.158	54.8	0.425	10.8	0.921	23.4	1.469	37.3	GE17 KRRB	AK 03	2150	9600	1070	4750	RAK 3/4
1.260	32	2.472	62.8	0.512	13	1.047	26.6	1.721	43.7	GE20 KRRB	AK 04	2900	12800	1480	6600	RAK 20
1.457	37	2.688	68.263	0.563	14.288	1.059	26.9	1.748	44.4	G1014 KRRB	AK 05	3150	14000	1760	7800	RAK 7/8
1.457	37	2.688	68.263	0.563	14.288	1.059	26.9	1.748	44.4	G1015 KRRB	AK 05	3150	14000	1760	7800	RAK 15/16
1.457	37	2.688	68.263	0.563	14.288	1.059	26.9	1.748	44.4	GE25 KRRB	AK 05	3150	14000	1760	7800	RAK 25
1.457	37	2.688	68.263	0.563	14.288	1.059	26.9	1.748	44.4	G1100 KRRB	AK 05	3150	14000	1760	7800	RAK 1
1.634	41.5	3.169	80.5	0.669	17	1.185	30.1	1.906	48.4	G1102 KRRB	AK 06	4350	19500	2550	11300	RAK 1–1/8
1.634	41.5	3.169	80.5	0.669	17	1.185	30.1	1.906	48.4	GE30 KRRB	AK 06	4350	19500	2550	11300	RAK 30
1.634	41.5	3.169	80.5	0.669	17	1.185	30.1	1.906	48.4	G1103 KRRB	AK 06	4350	19500	2550	11300	RAK 1–3/16
1.831	46.5	3.626	92.1	0.685	17.4	1.272	32.3	2.012	51.1	G1104 KRRB	AK 07	5800	25500	3450	15300	RAK 1–1/4
1.831	46.5	3.626	92.1	0.685	17.4	1.272	32.3	2.012	51.1	G1106 KRRB	AK 07	5800	25500	3450	15300	RAK 1–3/8
1.831	46.5	3.626	92.1	0.685	17.4	1.272	32.3	2.012	51.1	GE35 KRRB	AK 07	5800	25500	3450	15300	RAK 35
1.831	46.5	3.626	92.1	0.685	17.4	1.272	32.3	2.012	51.1	G1107 KRRB	AK 07	5800	25500	3450	15300	RAK 1–7/16
1.969	50	3.937	100	0.787	20	1.374	34.9	2.217	56.3	G1108 KRRB	AK 08	7300	32500	4450	19800	RAK 1–1/2
1.969	50	3.937	100	0.787	20	1.374	34.9	2.217	56.3	GE40 KRRB	AK 08	7300	32500	4450	19800	RAK 40
2.028	51.5	4.150	105.4	0.803	20.4	1.374	34.9	2.217	56.3	G1110 KRRB	AK 09	7400	32500	4600	20400	RAK 1–5/8
2.028	51.5	4.150	105.4	0.803	20.4	1.374	34.9	2.217	56.3	G1111 KRRB	AK 09	7400	32500	4600	20400	RAK 1–11/16
2.028	51.5	4.150	105.4	0.803	20.4	1.374	34.9	2.217	56.3	G1112 KRRB	AK 09	7400	32500	4600	20400	RAK 1–3/4
2.028	51.5	4.150	105.4	0.803	20.4	1.374	34.9	2.217	56.3	GE45 KRRB	AK 09	7400	32500	4600	20400	RAK 45
2.244	57	4.543	115.4	0.803	20.4	1.500	38.1	2.469	62.7	G1115 KRRB	AK 10	7900	35000	5200	23200	RAK 1–15/16
2.244	57	4.543	115.4	0.803	20.4	1.500	38.1	2.469	62.7	GE50 KRRB	AK 10	7900	35000	5200	23200	RAK 50
2.461	62.5	4.917	124.9	0.921	23.4	1.717	43.6	2.811	71.4	G1200 KRRB	AK 11	9800	43500	6600	29000	RAK 2
2.461	62.5	4.917	124.9	0.921	23.4	1.717	43.6	2.811	71.4	G1203 KRRB	AK 11	9800	43500	6600	29000	RAK 2–3/16
2.559	65	5.449	138.4	1.039	26.4	1.843	46.8	3.063	77.8	GE60 KRRB	AK 12	11800	52000	8100	36000	RAK 60
2.559	65	5.449	138.4	1.039	26.4	1.843	46.8	3.063	77.8	G1207 KRRB	AK 12	11800	52000	8100	36000	RAK 2–7/16

Pillow Block Housing
RAKY SERIES

- Low center height
- Set screw shaft locking
- Standard R seals
- Inch and metric sizes
- Set screws are metric for metric sizes
- Housing dimensions per ABMA standards

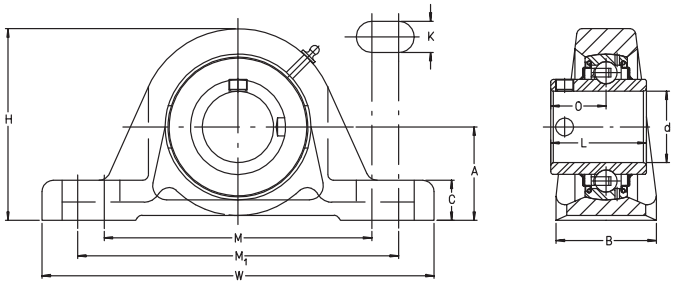

For details on part numbers, descriptive suffixes and various technical references, please refer to front of this section.
For engineering or technical information contact your local sales representative or call Distributor Sales (800)523-6572.

PART NUMBER	SHAFT d inch	SHAFT d inch	SHAFT d mm	A inch	A mm	M inch	M mm	M_1 inch	M_1 mm	K inch	K mm	WGT. lbs	WGT. kg
RAKY 1/2	1/2	0.500	12.7	1.063	27	3.189	81	4.055	103	0.433	11	1.213	0.550
RAKY 15	15	0.591	15	1.063	27	3.189	81	4.055	103	0.433	11	1.213	0.550
RAKY 5/8	5/8	0.625	15.875	1.063	27	3.189	81	4.055	103	0.433	11	1.213	0.550
RAKY 17	17	0.669	17	1.063	27	3.189	81	4.055	103	0.433	11	1.213	0.550
RAKY 3/4	3/4	0.750	19.1	1.252	31.8	3.425	87	4.134	105	0.433	11	1.323	0.600
RAKY 20	20	0.787	20	1.252	31.8	3.425	87	4.134	105	0.433	11	1.323	0.600
RAKY 7/8	7/8	0.875	22.2	1.313	33.3	3.721	94.5	4.449	113	0.472	12	1.985	0.900
RAKY 15/16	15/16	0.938	23.8	1.313	33.3	3.721	94.5	4.449	113	0.472	12	1.985	0.900
RAKY 25	25	0.984	25	1.313	33.3	3.721	94.5	4.449	113	0.472	12	1.985	0.900
RAKY 1	1	1.000	25.4	1.313	33.3	3.721	94.5	4.449	113	0.472	12	1.985	0.900
RAKY 1-1/8	1-1/8	1.125	28.6	1.563	39.7	4.284	108.8	4.949	125.7	0.591	15	2.867	1.300
RAKY 30	30	1.181	30	1.563	39.7	4.284	108.8	4.949	125.7	0.591	15	2.867	1.300
RAKY 1-3/16	1-3/16	1.188	30.2	1.563	39.7	4.284	108.8	4.949	125.7	0.591	15	2.867	1.300
RAKY 1-1/4-206	1-1/4-206	1.250	31.8	1.563	39.7	4.284	108.8	4.949	125.7	0.591	15	2.867	1.300
RAKY 1-1/4	1-1/4	1.250	31.8	1.811	46	4.807	122.1	5.429	137.9	0.591	15	3.749	1.700
RAKY 1-3/8	1-3/8	1.375	34.9	1.811	46	4.807	122.1	5.429	137.9	0.591	15	3.749	1.700
RAKY 35	35	1.378	35	1.811	46	4.807	122.1	5.429	137.9	0.591	15	3.749	1.700
RAKY 1-7/16	1-7/16	1.438	36.5	1.811	46	4.807	122.1	5.429	137.9	0.591	15	3.749	1.700
RAKY 1-1/2	1-1/2	1.500	38.1	1.937	49.2	4.921	125	5.787	147	0.591	15	4.631	2.100
RAKY 40	40	1.575	40	1.937	49.2	4.921	125	5.787	147	0.591	15	4.631	2.100
RAKY 1-5/8	1-5/8	1.625	41.3	2.063	52.4	5.374	136.5	6.319	160.5	0.563	14.3	5.292	2.400
RAKY 1-11/16	1-11/16	1.688	42.9	2.063	52.4	5.374	136.5	6.319	160.5	0.563	14.3	5.292	2.400
RAKY 1-3/4	1-3/4	1.750	44.5	2.063	52.4	5.374	136.5	6.319	160.5	0.563	14.3	5.292	2.400
RAKY 45	45	1.772	45	2.063	52.4	5.374	136.5	6.319	160.5	0.563	14.3	5.292	2.400
RAKY 1-15/16	1-15/16	1.938	49.2	2.189	55.6	5.965	151.5	6.437	163.5	0.709	18	7.056	3.200
RAKY 50	50	1.969	50	2.189	55.6	5.965	151.5	6.437	163.5	0.709	18	7.056	3.200
RAKY 2	2	2.000	50.8	2.437	61.9	6.476	164.5	7.362	187	0.709	18	8.820	4.000
RAKY 55	55	2.165	55	2.437	61.9	6.476	164.5	7.362	187	0.709	18	8.820	4.000
RAKY 2-3/16	2-3/16	2.188	55.6	2.437	61.9	6.476	164.5	7.362	187	0.709	18	8.820	4.000
RAKY 60	60	2.362	60	2.689	68.3	6.969	177	7.933	201.5	0.709	18	12.348	5.600
RAKY 2-7/16	2-7/16	2.438	61.9	2.689	68.3	6.969	177	7.933	201.5	0.709	18	12.348	5.600

Pillow Block Housing
RAKY SERIES

- Low center height
- Set screw shaft locking
- Standard R seals
- Inch and metric sizes
- Set screws are metric for metric sizes
- Housing dimensions per ABMA standards

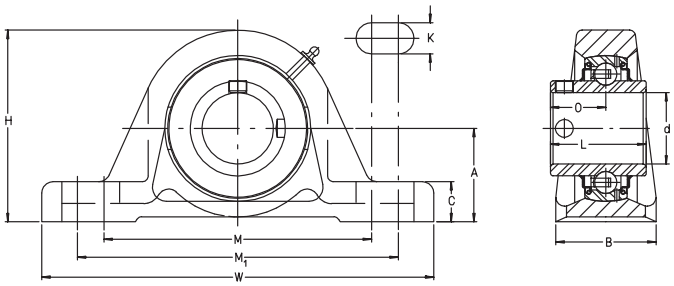

For details on part numbers, descriptive suffixes and various technical references, please refer to front of this section.
For engineering or technical information contact your local sales representative or call Distributor Sales (800)523-6572.

W inch	W mm	B inch	B mm	H inch	H mm	C inch	C mm	O inch	O mm	L inch	L mm	INSERT	HSG.	DYN. CAP. C lbf	DYN. CAP. C N	STAT. CAP. C_0 lbf	STAT. CAP. C_0 N	PART NUMBER
4.921	125	1.260	32	2.158	54.8	0.425	10.8	0.626	15.9	1.079	27.4	GY1008 KRRB	AK 03	2150	9600	1070	4750	RAKY 1/2
4.921	125	1.260	32	2.158	54.8	0.425	10.8	0.626	15.9	1.079	27.4	GYE15 KRRB	AK 03	2150	9600	1070	4750	RAKY 15
4.921	125	1.260	32	2.158	54.8	0.425	10.8	0.626	15.9	1.079	27.4	GY1010 KRRB	AK 03	2150	9600	1070	4750	RAKY 5/8
4.921	125	1.260	32	2.158	54.8	0.425	10.8	0.626	15.9	1.079	27.4	GYE17 KRRB	AK 03	2150	9600	1070	4750	RAKY 17
5.118	130	1.260	32	2.472	62.8	0.512	13	0.721	18.3	1.221	31	GY1012 KRRB	AK 04	2900	12800	2550	6600	RAKY 3/4
5.118	130	1.260	32	2.472	62.8	0.512	13	0.721	18.3	1.221	31	GYE20 KRRB	AK 04	2900	12800	2550	6600	RAKY 20
5.500	139.7	1.457	37	2.688	68.3	0.563	14.3	0.780	19.8	1.343	34.1	GY1014 KRRB	AK 05	3150	14000	1760	7800	RAKY 7/8
5.500	139.7	1.457	37	2.688	68.3	0.563	14.3	0.780	19.8	1.343	34.1	GY1015 KRRB	AK 05	3150	14000	1760	7800	RAKY 15/16
5.500	139.7	1.457	37	2.688	68.3	0.563	14.3	0.780	19.8	1.343	34.1	GYE25 KRRB	AK 05	3150	14000	1760	7800	RAKY 25
5.500	139.7	1.457	37	2.688	68.3	0.563	14.3	0.780	19.8	1.343	34.1	GY1100 KRRB	AK 05	3150	14000	1760	7800	RAKY 1
6.189	157.2	1.634	41.5	3.169	80.5	0.669	17	0.874	22.2	1.500	38.1	GY1102 KRRB	AK 06	4350	19500	2550	11300	RAKY 1-1/8
6.189	157.2	1.634	41.5	3.169	80.5	0.669	17	0.874	22.2	1.500	38.1	GYE30 KRRB	AK 06	4350	19500	2550	11300	RAKY 30
6.189	157.2	1.634	41.5	3.169	80.5	0.669	17	0.874	22.2	1.500	38.1	GY1103 KRRB	AK 06	4350	19500	2550	11300	RAKY 1-3/16
6.189	157.2	1.634	41.5	3.169	80.5	0.669	17	0.874	22.2	1.500	38.1	GY1104 KRRB-206	AK 06	4350	19500	2550	11300	RAKY 1-1/4-206
6.772	172	1.831	46.5	3.626	92.1	0.685	17.4	1.000	25.4	1.689	42.9	GY1104 KRRB	AK 07	5800	25500	3450	15300	RAKY 1-1/4
6.772	172	1.831	46.5	3.626	92.1	0.685	17.4	1.000	25.4	1.689	42.9	GY1106 KRRB	AK 07	5800	25500	3450	15300	RAKY 1-3/8
6.772	172	1.831	46.5	3.626	92.1	0.685	17.4	1.000	25.4	1.689	42.9	GYE35 KRRB	AK 07	5800	25500	3450	15300	RAKY 35
6.772	172	1.831	46.5	3.626	92.1	0.685	17.4	1.000	25.4	1.689	42.9	GY1107 KRRB	AK 07	5800	25500	3450	15300	RAKY 1-7/16
7.146	181.5	1.969	50	3.937	100	0.787	20	1.189	30.2	1.937	49.2	GY1108 KRRB	AK 08	7300	32500	4450	19800	RAKY 1-1/2
7.146	181.5	1.969	50	3.937	100	0.787	20	1.189	30.2	1.937	49.2	GYE40 KRRB	AK 08	7300	32500	4450	19800	RAKY 40
7.677	195	2.028	51.5	4.150	105.4	0.803	20.4	1.189	30.2	1.937	49.2	GY1110 KRRB	AK 09	7400	32500	4600	20400	RAKY 1-5/8
7.677	195	2.028	51.5	4.150	105.4	0.803	20.4	1.189	30.2	1.937	49.2	GY1111 KRRB	AK 09	7400	32500	4600	20400	RAKY 1-11/16
7.677	195	2.028	51.5	4.150	105.4	0.803	20.4	1.189	30.2	1.937	49.2	GY1112 KRRB	AK 09	7400	32500	4600	20400	RAKY 1-3/4
7.677	195	2.028	51.5	4.150	105.4	0.803	20.4	1.189	30.2	1.937	49.2	GYE45 KRRB	AK 09	7400	32500	4600	20400	RAKY 45
7.972	202.5	2.244	57	4.543	115.4	0.803	20.4	1.284	32.6	2.032	51.6	GY1115 KRRB	AK 10	7900	35000	5200	23200	RAKY 1-15/16
7.972	202.5	2.244	57	4.543	115.4	0.803	20.4	1.284	32.6	2.032	51.6	GYE50 KRRB	AK 10	7900	35000	5200	23200	RAKY 50
8.858	225	2.461	62.5	4.917	124.9	0.921	23.4	1.315	33.4	2.189	55.6	GY1200 KRRB	AK 11	9800	43500	6600	29000	RAKY 2
8.858	225	2.461	62.5	4.917	124.9	0.921	23.4	1.315	33.4	2.189	55.6	GYE55 KRRB	AK 11	9800	43500	6600	29000	RAKY 55
8.858	225	2.461	62.5	4.917	124.9	0.921	23.4	1.315	33.4	2.189	55.6	GY1203 KRRB	AK 11	9800	43500	6600	29000	RAKY 2-3/16
9.646	245	2.559	65	5.449	138.4	1.039	26.4	1.563	39.7	2.563	65.1	GYE60 KRRB	AK 12	11800	52000	8100	36000	RAKY 60
9.646	245	2.559	65	5.449	138.4	1.039	26.4	1.563	39.7	2.563	65.1	GY1207 KRRB	AK 12	11800	52000	8100	36000	RAKY 2-7/16

Pillow Block Housings
TASE SERIES

- Eccentric locking collar
- Tri-ply P3 seals
- Inner ring extended both sides
- Standard shaft height

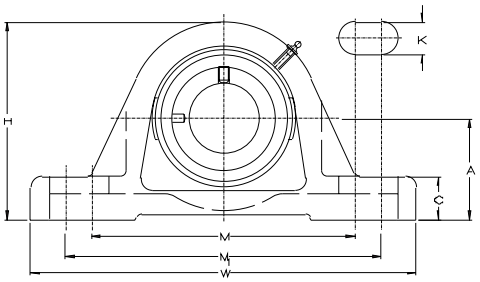

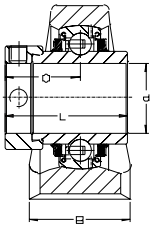

For details on part numbers, descriptive suffixes and various technical references, please refer to front of this section.
For engineering or technical information contact your local sales representative or call Distributor Sales (800)523-6572.

PART NUMBER	SHAFT d inch	SHAFT d inch	SHAFT d mm	A inch	A mm	M inch	M mm	M_1 inch	M_1 mm	K inch	K mm	WGT. lbs	WGT. kg	W inch	W mm
TASE 20	-	0.787	20	1.311	33.3	3.425	87	4.134	105	0.433	11	1.323	0.6	5.118	130
TASE 25	-	0.984	25	1.438	36.513	3.751	95.3	4.500	114.3	0.472	12	1.985	0.9	5.500	139.7
TASE 30	-	1.181	30	1.689	42.9	4.252	108	5.000	127	0.591	15	2.867	1.3	6.189	157.2
TASE 35	-	1.378	35	1.874	47.6	4.807	122.1	5.429	137.9	0.591	15	3.749	1.7	6.417	163
TASE 40	-	1.575	40	1.937	49.2	4.921	125	5.787	147	0.591	15	4.631	2.1	7.146	181.5
TASE 45	-	1.772	45	2.126	54	5.374	136.5	6.319	160.5	0.531	13.5	5.292	2.4	7.559	192
TASE 50	-	1.969	50	2.252	57.2	5.965	151.5	6.437	163.5	0.709	18	7.056	3.2	7.874	200
TASE 55	-	2.165	55	2.500	63.5	6.476	164.5	7.362	187	0.709	18	8.820	4	8.858	225
TASE 60	-	2.362	60	2.752	69.9	6.969	177	7.933	201.5	0.709	18	12.348	5.6	9.449	240
TASE 65	-	2.559	65	3.126	79.4	7.736	196.5	8.209	208.5	0.866	22	14.134	6.4	10.236	260
TASE 70	-	2.756	70	3.126	79.4	7.736	196.5	8.209	208.5	0.866	22	14.134	6.4	10.236	260
TASE 75	-	2.953	75	3.248	82.5	8.031	204	8.583	218	0.945	24	16.604	7.5	10.748	273
TASE 80	-	3.150	80	3.504	89	8.819	224	9.449	240	1.024	26	19.073	8.7	11.417	290

CONTINUED FROM ABOVE

PART NUMBER	B inch	B mm	H inch	H mm	C inch	C mm	O inch	O mm	L inch	L mm	INSERT	HSG.	DYN. CAP. C lbf	DYN. CAP. C N	STAT. CAP. C_0 lbf	STAT. CAP. C_0 N
TASE 20	1.260	32	2.520	64	0.571	14.5	1.047	26.6	1.721	43.7	GE20 KPPB-3	ASE 04	2900	12800	1480	6600
TASE 25	1.457	37	2.813	71.436	0.610	15.5	1.059	26.9	1.748	44.4	GE25 KPPB-3	ASE 05	3150	14000	1760	7800
TASE 30	1.673	42.5	3.284	83.4	0.709	18	1.185	30.1	1.906	48.4	GE30 KPPB-3	ASE 06	4350	19500	2550	11300
TASE 35	1.772	45	3.661	93	0.748	19	1.272	32.3	2.012	51.1	GE35 KPPB-3	ASE 07	5800	25500	3450	15300
TASE 40	1.969	50	3.937	100	0.787	20	1.374	34.9	2.217	56.3	GE40 KPPB-3	ASE 08	7300	32500	4450	19800
TASE 45	1.890	48	4.213	107	0.846	21.5	1.374	34.9	2.217	56.3	GE45 KPPB-3	ASE 09	7400	32500	4600	20400
TASE 50	2.126	54	4.528	115	0.846	21.5	1.500	38.1	2.469	62.7	GE50 KPPB-3	ASE 10	7900	35000	5200	23200
TASE 55	2.461	62.5	4.980	126.5	0.984	25	1.717	43.6	2.811	71.4	GE55 KPPB-3	ASE 11	9800	43500	6600	29000
TASE 60	2.362	60	5.512	140	0.984	25	1.843	46.8	3.063	77.8	GE60 KPPB-3	ASE 12	11800	52000	8100	36000
TASE 65	2.559	65	6.142	156	1.083	27.5	1.756	44.6	2.602	66.1	GE65 KPPB-3	ASE 14	14000	62000	9900	44000
TASE 70	2.559	65	6.142	156	1.083	27.5	1.756	44.6	2.602	66.1	GE70 KPPB-3	ASE 14	14000	62000	9900	44000
TASE 75	2.598	66	6.457	164	1.083	27.5	1.795	45.6	2.642	67.1	GE75 KPPB-3	ASE 15	14000	62000	10100	44500
TASE 80	3.071	78	6.890	175	1.181	30	1.874	47.6	2.795	71	GE80 KPPB-3	ASE 16	16100	72000	12200	54000

Pillow Block Housings
LASE SERIES

- Non-contact labyrinth seals
- Inner ring extended both sides
- Suitable for temperatures to 180° C
- Eccentric locking collar
- Standard shaft height

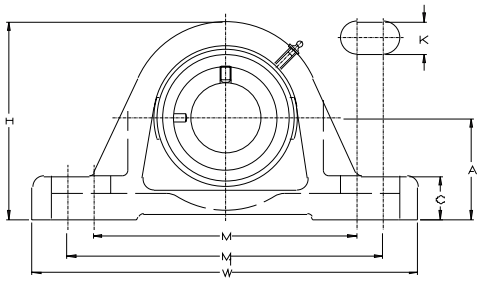

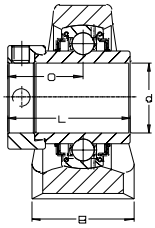

For details on part numbers, descriptive suffixes and various technical references, please refer to front of this section.
For engineering or technical information contact your local sales representative or call Distributor Sales (800)523-6572.

PART NUMBER	SHAFT d inch	SHAFT d inch	SHAFT d mm	A inch	A mm	M inch	M mm	M_1 inch	M_1 mm	K inch	K mm	WGT. lbs	WGT. kg	W inch	W mm
LASE 20	-	0.787	20	1.311	33.3	3.425	87	4.134	105	0.433	11	1.323	0.6	5.118	130
LASE 25	-	0.984	25	1.438	36.513	3.751	95.275	4.500	114.3	0.472	12	1.985	0.9	5.500	139.7
LASE 30	-	1.181	30	1.689	42.9	4.252	108	5.000	127	0.591	15	2.867	1.3	6.189	157.2
LASE 35	-	1.378	35	1.874	47.6	4.807	122.1	5.429	137.9	0.591	15	3.749	1.7	6.417	163
LASE 40	-	1.575	40	1.937	49.2	4.921	125	5.787	147	0.591	15	4.631	2.1	7.146	181.5
LASE 45	-	1.772	45	2.126	54	5.374	136.5	6.319	160.5	0.531	13.5	5.292	2.4	7.559	192
LASE 50	-	1.969	50	2.252	57.2	5.965	151.5	6.437	163.5	0.709	18	7.056	3.2	7.874	200

CONTINUED FROM ABOVE

PART NUMBER	B inch	B mm	H inch	H mm	C inch	C mm	O inch	O mm	L inch	L mm	INSERT	HSG.	DYN. CAP. C lbf	DYN. CAP. C N	STAT. CAP. C_0 lbf	STAT. CAP. C_0 N
LASE 20	1.260	32	2.520	64	0.571	14.5	1.047	26.6	1.721	43.7	GE20 KLLHB	ASE 04	2900	12800	1480	6600
LASE 25	1.457	37	2.813	71.436	0.610	15.5	1.059	26.9	1.748	44.4	GE25 KLLHB	ASE 05	3150	14000	1760	7800
LASE 30	1.673	42.5	3.284	83.4	0.709	18	1.185	30.1	1.906	48.4	GE30 KLLHB	ASE 06	4350	19500	2550	11300
LASE 35	1.772	45	3.661	93	0.748	19	1.272	32.3	2.012	51.1	GE35 KLLHB	ASE 07	5800	25500	3450	15300
LASE 40	1.969	50	3.937	100	0.787	20	1.374	34.9	2.217	56.3	GE40 KLLHB	ASE 08	7300	32500	4450	19800
LASE 45	1.890	48	4.213	107	0.846	21.5	1.374	34.9	2.217	56.3	GE45 KLLHB	ASE 09	7400	32500	4600	20400
LASE 50	2.126	54	4.528	115	0.846	21.5	1.500	38.1	2.469	62.7	GE50 KLLHB	ASE 10	7900	35000	5200	23200

Pillow Block Housing
RASEA SERIES

- Standard center height
- Eccentric locking collar
- Standard R seals
- Inch and metric sizes
- Set screws are metric for metric sizes
- Housing dimensions per ABMA standards

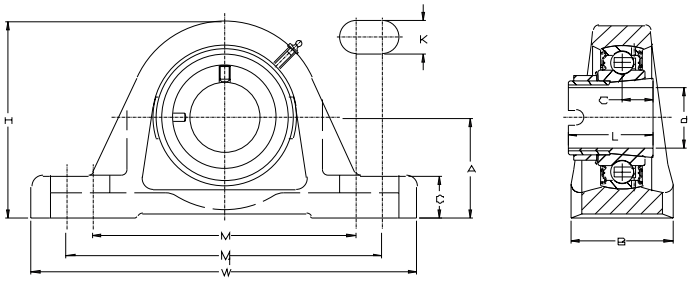

For details on part numbers, descriptive suffixes and various technical references, please refer to front of this section.
For engineering or technical information contact your local sales representative or call Distributor Sales (800)523-6572.

PART NUMBER	SHAFT d mm	SHAFT d inch	W mm	W inch	H mm	H inch	B mm	B inch	L mm	L inch	A mm	A inch	C mm	C inch
RASEA 20	20	0.787	130	5.118	64	2.520	32	1.260	28	1.102	33	1.311	15	0.571
RASEA 25	25	0.984	130	5.118	70	2.756	36	1.417	28	1.102	37	1.437	15	0.571
RASEA 30	30	1.181	158	6.220	82	3.228	40	1.575	32	1.260	43	1.689	17	0.669
RASEA 35	35	1.378	163	6.417	93	3.661	45	1.772	34	1.339	48	1.874	19	0.748
RASEA 40	40	1.575	179	7.047	99	3.898	48	1.890	38	1.496	49	1.937	19	0.748

CONTINUED FROM ABOVE

M mm	M inch	M_1 mm	M_1 inch	K mm	K inch	Q	C_r N	C_r lbf	C_{0r} N	C_{0r} lbf	MASS kg	MASS lbs	HOUSING	BEARING	PART NUMBER
89	3.504	105	4.134	11	0.433	R 1/8	12700	2800	6600	1500	0.51	1.125	GG ASE 04	GSH 20 RRB	RASEA 20
95	3.740	111	4.370	11	0.433	R 1/8	13600	3000	7800	1750	0.60	1.323	GG ASE 05	GSH 25 RRB	RASEA 25
110	4.331	126	4.961	14	0.551	R 1/8	18900	4200	11300	2500	1.00	2.205	GG ASE 06	GSH 30 RRB	RASEA 30
119	4.685	133	5.236	14	0.551	R 1/8	24900	6000	15300	3400	1.48	3.263	GG ASE 07	GSH 35 RRB	RASEA 35
126	4.961	150	5.906	14	0.551	R 1/8	29500	6600	19800	4400	1.71	3.771	GG ASE/AK 08	GSH 40 RRB	RASEA 40

Pillow Block Housings
RASEL SERIES

- Standard R seals
- Non-locating expansion bearing
- Drive slot inner ring

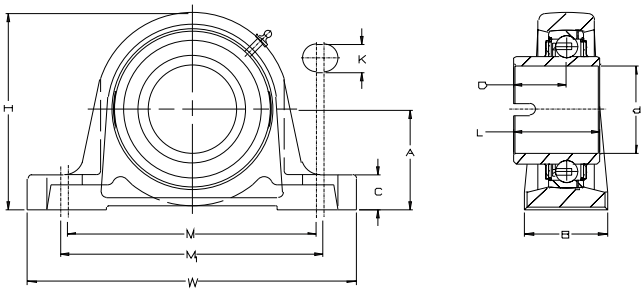

For details on part numbers, descriptive suffixes and various technical references, please refer to front of this section.
For engineering or technical information contact your local sales representative or call Distributor Sales (800)523-6572.

PART NUMBER	SHAFT d inch	SHAFT d inch	SHAFT d mm	A inch	A mm	M inch	M mm	M_1 inch	M_1 mm	K inch	K mm	WGT. lbs	WGT. kg	W inch	W mm
RASEL 30	-	1.181	30	1.689	42.9	4.252	108	5.000	127	0.591	15	2.867	1.3	6.189	157.2
RASEL 35	-	1.378	35	1.874	47.6	4.807	122.1	5.429	137.9	0.591	15	3.749	1.7	6.417	163
RASEL 40	-	1.575	40	1.937	49.2	4.921	125	5.787	147	0.591	15	4.631	2.1	7.146	181.5
RASEL 45	-	1.772	45	2.126	54	5.374	136.5	6.319	160.5	0.531	13.5	5.292	2.4	7.559	192
RASEL 50	-	1.969	50	2.252	57.2	5.965	151.5	6.437	163.5	0.709	18	7.056	3.2	7.874	200
RASEL 60	-	2.362	60	2.752	69.9	6.969	177	7.933	201.5	0.709	18	12.348	5.6	9.449	240
RASEL 70	-	2.756	70	3.126	79.4	7.736	196.5	8.209	208.5	0.866	22	14.134	6.4	10.236	260

CONTINUED FROM ABOVE

PART NUMBER	B inch	B mm	H inch	H mm	C inch	C mm	O inch	O mm	L inch	L mm	INSERT	HSG.	DYN. CAP. C lbf	DYN. CAP. C N	STAT. CAP. C_0 lbf	STAT. CAP. C_0 N
RASEL 30	1.673	42.5	3.284	83.4	0.709	18	0.866	22	1.906	48.4	GLE30 KRRB	ASE 06	4350	19500	2550	11300
RASEL 35	1.772	45	3.661	93.7	0.748	19	0.866	22	2.012	51.1	GLE35 KRRB	ASE 07	5800	25500	3450	15300
RASEL 40	1.969	50	3.937	100	0.787	20	1.063	27	2.217	56.3	GLE40 KRRB	ASE 08	7300	32500	4450	19800
RASEL 45	1.890	48	4.213	107	0.846	21.5	1.004	25.5	2.217	56.3	GLE45 KRRB	ASE 09	7400	32500	4600	20400
RASEL 50	2.126	54	4.606	115	0.846	21.5	1.189	30.2	2.469	62.7	GLE50 KRRB	ASE 10	7900	35000	5200	23200
RASEL 60	2.362	60	5.512	140	2.984	25	1.492	37.9	3.063	77.8	GLE60 KRRB	ASE 12	11800	52000	8100	36000
RASEL 70	2.559	65	6.142	156	1.083	27.5	1.622	41.2	2.602	66.1	GLE70 KRRB	ASE 14	14000	62000	9900	44000

Pillow Block Housings
RSAO SERIES

- Eccentric locking collar
- Standard R seals
- Inner ring extended both sides
- Heavy series - based on 6300 Series

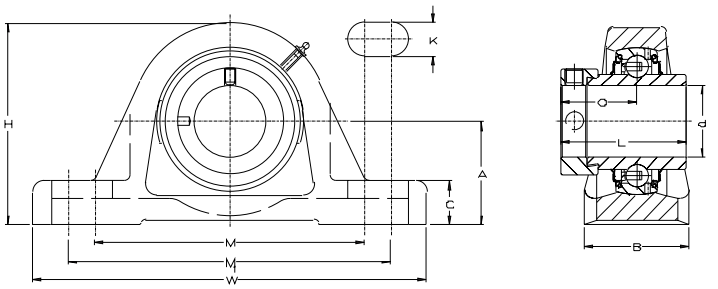

For details on part numbers, descriptive suffixes and various technical references, please refer to front of this section.
For engineering or technical information contact your local sales representative or call Distributor Sales (800)523-6572.

PART NUMBER	SHAFT d inch	SHAFT d inch	SHAFT d mm	A inch	A mm	M inch	M mm	M_1 inch	M_1 mm	K inch	K mm	WGT. lbs	WGT. kg	W inch	W mm
RSAO 30	-	1.181	30	1.969	50	5.394	137	5.630	143	0.689	17.5	3.97	1.8	7.087	180
RSAO 35	-	1.378	35	2.205	56	5.984	152	6.614	168	0.689	17.5	6.06	2.75	8.268	210
RSAO 40	-	1.575	40	2.362	60	6.299	160	7.087	180	0.689	17.5	7.01	3.18	8.661	220
RSAO 50	-	1.969	50	2.953	75	7.756	197	8.937	227	0.787	20	13.45	6.10	10.827	275
RSAO 60	-	2.362	60	3.346	85	9.331	237	10.354	263	0.984	25	19.85	9.00	12.992	330
RSAO 70	-	2.756	70	3.740	95	10.512	267	11.693	297	1.063	27	24.26	11.00	14.173	360

CONTINUED FROM ABOVE

PART NUMBER	B inch	B mm	H inch	H mm	C inch	C mm	O inch	O mm	L inch	L mm	INSERT	HSG.	DYN. CAP. C lbf	DYN. CAP. C N	STAT. CAP. C_0 lbf	STAT. CAP. C_0 N
RSAO 30	1.969	50	3.740	95	0.709	18	1.280	32.5	1.969	50	GNE30 KRRB	SAO 06	6700	29500	3750	16700
RSAO 35	2.205	56	4.173	106	0.787	20	1.315	33.4	2.031	51.6	GNE35 KRRB	SAO 07	8200	36500	4700	20900
RSAO 40	2.362	60	4.567	116	0.866	22	1.441	36.6	2.150	54.6	GNE40 KRRB	SAO 08	10000	44500	5800	26000
RSAO 50	2.953	75	5.630	143	1.063	27	1.657	42.1	2.626	66.7	GNE50 KRRB	SAO 10	13900	62000	8500	38000
RSAO 60	3.346	85	6.496	165	1.260	32	1.787	45.4	2.693	68.4	GNE60 KRRB	SAO 12	18400	82000	11700	52000
RSAO 70	3.543	90	7.362	187	1.378	35	1.945	49.4	2.969	75.4	GNE70 KRRB	SAO 14	23400	104000	15300	68000

Tapped Base Housing Units
PSHE SERIES

- Metric series
- Metric tapped base pillow block
- Economy P seals
- Eccentric locking collar

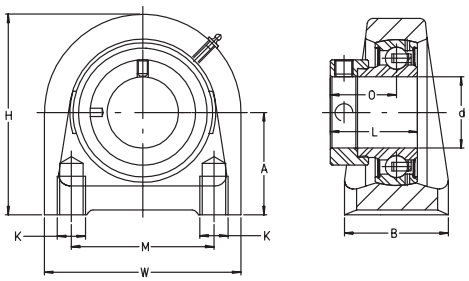

For details on part numbers, descriptive suffixes and various technical references, please refer to front of this section.
For engineering or technical information contact your local sales representative or call Distributor Sales (800)523-6572.

PART NUMBER	SHAFT d inch	SHAFT d mm	A inch	A mm	B inch	B mm	H inch	H mm	K THREADS	O inch	O mm	L inch	L mm
PSHE12	0.472	12	1.189	30.2	1.181	30	2.244	57	M 8	0.870	22.1	1.850	47.0
PSHE15	0.591	15	1.189	30.2	1.181	30	2.244	57	M 8	0.870	22.1	1.850	47.0
PSHE17	0.669	17	1.189	30.2	1.181	30	2.244	57	M 8	0.870	22.1	1.850	47.0
PSHE20	0.787	20	1.311	33.3	1.260	32	2.520	64	M 8	0.925	23.5	1.221	31.0
PSHE25	0.984	25	1.437	36.5	1.417	36	2.756	70	M 10	0.925	23.5	1.221	31.0
PSHE30	1.181	30	1.689	42.9	1.575	40	3.228	82	M 10	1.051	26.7	1.406	35.7
PSHE35	1.378	35	1.874	47.6	1.772	45	3.661	93	M 10	1.158	29.4	1.532	38.9
PSHE40	1.575	40	1.937	49.2	1.890	48	3.898	99	M12	1.287	32.7	1.721	43.7
PSHE45	1.772	45	2.126	54	1.890	48	4.016	102	M12	1.287	32.7	1.721	43.7
PSHE50	1.969	50	2.252	57.2	2.126	54	4.528	115	M 16	1.287	32.7	1.721	43.7
PSHE55	2.165	55	2.520	64	2.362	60	4.921	125	M 16	1.433	36.4	1.433	36.4

CONTINUED FROM ABOVE

PART NUMBER	M inch	M mm	W inch	W mm	WEIGHT lbs	WEIGHT kg	DYN. CAP. C lbf	DYN. CAP. C N	STAT. CAP. C_0 lbf	STAT. CAP. C_0 N	HOUSING	INSERT
PSHE12	1.850	47	2.480	63	0.970	0.44	2150	9600	1070	4750	SHE03	GRAE12NPPB
PSHE15	1.850	47	2.480	63	0.970	0.44	2150	9600	1070	4750	SHE03	GRAE15NPPB
PSHE17	1.850	47	2.480	63	0.970	0.44	2150	9600	1070	4750	SHE03	GRAE17NPPB
PSHE20	2.000	50.8	2.559	65	1.125	0.51	2900	12800	1480	6600	SHE04	GRAE20NPPB
PSHE25	2.000	50.8	2.756	70	1.323	0.60	3150	14000	1750	7800	SHE05	GRAE25NPPB
PSHE30	3.000	76.2	3.858	98	2.315	1.05	4400	19500	2550	11300	SHE06	GRAE30NPPB
PSHE35	3.252	82.6	4.055	103	3.175	1.44	5750	25500	3450	15300	SHE07	GRAE35NPPB
PSHE40	3.500	88.9	4.567	116	4.057	1.84	7300	32500	4450	19800	SHE08	GRAE40NPPB
PSHE45	3.752	95.3	4.724	120	4.719	2.14	7300	32500	4450	19800	SHE09	GRAE45NPPB
PSHE50	4.000	101.6	5.315	135	6.152	2.79	7850	35000	5200	23200	SHE10	GRAE50NPPB
PSHE55	4.646	118	5.906	150	6.417	2.91	9800	43500	6500	29000	SHE11	GRAE55NPPB

Housing Units
PSHEY SERIES

- Metric series
- Tapped base pillow block
- Economy seals
- Set screw locking

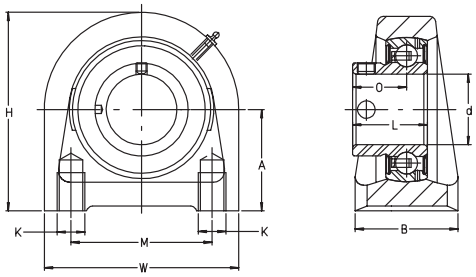

For details on part numbers, descriptive suffixes and various technical references, please refer to front of this section.
For engineering or technical information contact your local sales representative or call Distributor Sales (800)523-6572.

PART NUMBER	SHAFT d inch	SHAFT d mm	A inch	A mm	B inch	B mm	H inch	H mm	K THREADS	O inch	O mm	L inch	L mm
PSHEY20	0.787	20	1.311	33.3	1.260	32	2.520	64	M 8	0.709	18.000	0.984	25.000
PSHEY25	0.984	25	1.437	36.5	1.417	36	2.756	70	M 10	0.768	19.500	1.063	27.000
PSHEY30	1.181	30	1.689	42.9	1.575	40	3.228	82	M 10	1.185	30.100	1.181	30.000
PSHEY35	1.378	35	1.874	47.6	1.772	45	3.661	93	M 10	1.004	25.500	1.378	35.000
PSHEY40	1.575	40	1.937	49.2	1.890	48	3.898	99	M12	1.142	29.000	1.555	39.500
PSHEY45	1.772	45	2.126	54	1.890	48	4.016	102	M12	1.201	30.500	1.634	41.500
PSHEY50	1.969	50	2.252	57.2	2.126	54	4.528	115	M 16	1.260	32.000	1.693	43.000

CONTINUED FROM ABOVE

PART NUMBER	M inch	M mm	W inch	W mm	WEIGHT lbs	WEIGHT kg	DYN. CAP. C lbf	DYN. CAP. C N	STAT. CAP. C_0 lbf	STAT. CAP. C_0 N	HOUSING	INSERT
PSHEY20	2.000	50.8	2.559	65	1.191	0.540	2,900	12800	1,480	6600	SHE04	GAY20NPPB
PSHEY25	2.000	50.8	2.756	70	1.389	0.630	3,150	14000	1,750	7800	SHE05	GAY25NPPB
PSHEY30	3.000	76.2	3.858	98	2.448	1.110	4,400	19500	2,550	11300	SHE06	GAY30NPPB
PSHEY35	3.252	82.6	4.055	103	3.374	1.530	5,750	25500	3,450	15300	SHE07	GAY35NPPB
PSHEY40	3.500	88.9	4.567	116	3.815	1.730	7,300	32500	4,450	19800	SHE08	GAY40NPPB
PSHEY45	3.752	95.3	4.724	120	5.027	2.280	7,300	32500	4,450	19800	SHE09	GAY45NPPB
PSHEY50	4.000	101.6	5.315	135	6.483	2.940	7,850	35000	5,200	23200	SHE10	GAY50NPPB

Housing Units
RSHE SERIES

- Metric series
- Tapped base pillow block
- Standard seals
- Eccentric locking collar

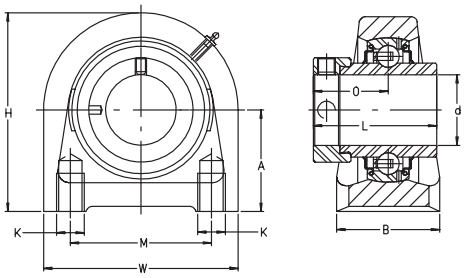

For details on part numbers, descriptive suffixes and various technical references, please refer to front of this section.
For engineering or technical information contact your local sales representative or call Distributor Sales (800)523-6572.

PART NUMBER	SHAFT d inch	SHAFT d mm	A inch	A mm	B inch	B mm	H inch	H mm	K THREADS	O inch	O mm	L inch	L mm
RSHE20	0.787	20	1.311	33.3	1.260	32	2.520	64	M 8	1.047	26.600	1.721	43.700
RSHE25	0.984	25	1.437	36.5	1.417	36	2.756	70	M 10	1.059	26.900	1.748	44.400
RSHE30	1.181	30	1.689	42.9	1.575	40	3.228	82	M 10	0.827	21.000	1.906	48.400
RSHE35	1.378	35	1.874	47.6	1.772	45	3.661	93	M 10	1.272	32.300	2.012	51.100
RSHE40	1.575	40	1.937	49.2	1.890	48	3.898	99	M12	1.374	34.900	2.217	56.300
RSHE45	1.772	45	2.126	54	1.890	48	4.213	107	M12	1.374	34.900	2.217	56.300
RSHE50	1.969	50	2.252	57.2	2.126	54	4.528	115	M 16	1.500	38.100	2.469	62.700

CONTINUED FROM ABOVE

PART NUMBER	M inch	M mm	W inch	W mm	WEIGHT lbs	WEIGHT kg	DYN. CAP. C lbf	DYN. CAP. C N	STAT. CAP. C_0 lbf	STAT. CAP. C_0 N	HOUSING	INSERT
RSHE20	2.000	50.8	2.559	65	1.213	0.550	2,900	12800	1,480	6600	SHE04	GE20KRRB
RSHE25	2.000	50.8	2.756	70	1.455	0.660	3,150	14000	1,750	7800	SHE05	GE25KRRB
RSHE30	3.000	76.2	3.858	98	2.470	1.120	4,400	19500	2,550	11300	SHE06	GE30KRRB
RSHE35	3.252	82.6	4.055	103	3.330	1.510	5,750	25500	3,450	15300	SHE07	GE35KRRB
RSHE40	3.500	88.9	4.567	116	4.322	1.960	7,300	32500	4,600	20400	SHE08	GE40KRRB
RSHE45	3.752	95.3	4.724	120	4.983	2.260	7,300	32500	4,600	20400	SHE09	GE45KRRB
RSHE50	4.000	101.6	5.315	135	6.659	3.020	7,850	35000	5,200	23200	SHE10	GE50KRRB

Housing Units
RSHEY SERIES

- Metric series
- Tapped base pillow block
- Standard seals
- Set screw locking

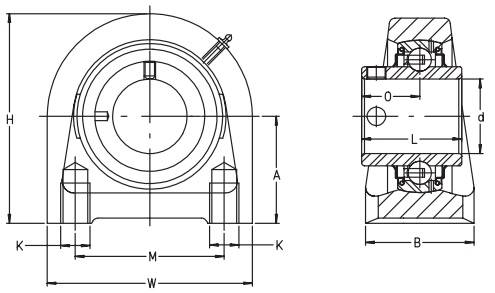

For details on part numbers, descriptive suffixes and various technical references, please refer to front of this section.
For engineering or technical information contact your local sales representative or call Distributor Sales (800)523-6572.

PART NUMBER	SHAFT d inch	SHAFT d mm	A inch	A mm	B inch	B mm	H inch	H mm	K THREADS	O inch	O mm	L inch	L mm
RSHEY20	0.787	20	1.311	33.3	1.260	32	2.520	64	M 8	0.721	18.300	0.984	25.000
RSHEY25	0.984	25	1.437	36.5	1.417	36	2.756	70	M 10	0.772	19.600	1.343	34.100
RSHEY30	1.181	30	1.689	42.9	1.575	40	3.228	82	M 10	0.874	22.200	1.500	38.100
RSHEY35	1.378	35	1.874	47.6	1.772	45	3.661	93	M 10	1.000	25.400	1.689	42.900
RSHEY40	1.575	40	1.937	49.2	1.890	48	3.898	99	M12	1.189	30.200	1.937	49.200
RSHEY45	1.772	45	2.126	54	1.890	48	4.213	107	M12	1.189	30.200	1.937	49.200
RSHEY50	1.969	50	2.252	57.2	2.126	54	4.528	115	M 16	1.284	32.600	2.032	51.600

CONTINUED FROM ABOVE

PART NUMBER	M inch	M mm	W inch	W mm	WEIGHT lbs	WEIGHT kg	DYN. CAP. C lbf	DYN. CAP. C N	STAT. CAP. C_0 lbf	STAT. CAP. C_0 N	HOUSING	INSERT
RSHEY20	2.000	50.8	2.559	65	1.279	0.580	2,900	12800	1,480	6600	SHE04	GYE20KRRB
RSHEY25	2.000	50.8	2.756	70	1.566	0.710	3,150	14000	1,750	7800	SHE05	GYE25KRRB
RSHEY30	3.000	76.2	3.858	98	2.580	1.170	4,400	19500	2,550	11300	SHE06	GYE30KRRB
RSHEY35	3.252	82.6	4.055	103	3.462	1.570	5,750	25500	3,450	15300	SHE07	GYE35KRRB
RSHEY40	3.500	88.9	4.567	116	4.123	1.870	7,300	32500	4,600	20400	SHE08	GYE40KRRB
RSHEY45	3.752	95.3	4.724	120	5.226	2.370	7,300	32500	4,600	20400	SHE09	GYE45KRRB
RSHEY50	4.000	101.6	5.315	135	6.593	2.990	7,850	35000	5,200	23200	SHE10	GYE50KRRB

Tapped Base Housing Units
TSHE SERIES

- Metric series
- Tapped base pillow
- Tri-ply P3 seals
- Eccentric locking collar
- Metric tapped balls

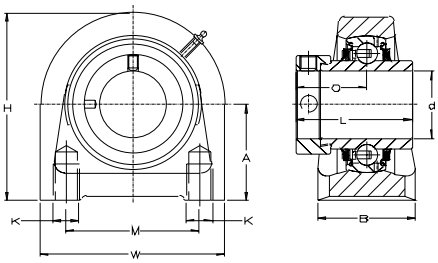

For details on part numbers, descriptive suffixes and various technical references, please refer to front of this section.
For engineering or technical information contact your local sales representative or call Distributor Sales (800)523-6572.

PART NUMBER	SHAFT d inch	SHAFT d mm	A inch	A mm	B inch	B mm	H inch	H mm	K inch	O inch	O mm	L inch	L mm
TSHE20	0.787	20	1.311	33.3	1.260	32	2.520	64	M 8	1.047	26.600	1.720	43.700
TSHE25	0.984	25	1.437	36.5	1.417	36	2.756	70	M 10	1.059	26.900	1.748	44.400
TSHE30	1.181	30	1.689	42.9	1.575	40	3.228	82	M 10	1.185	30.100	1.906	48.400
TSHE35	1.378	35	1.874	47.6	1.772	45	3.661	93	M 10	1.272	32.300	3.252	82.600
TSHE40	1.575	40	1.937	49.2	1.890	48	3.898	99	M12	1.374	34.900	2.217	56.300
TSHE45	1.772	45	2.126	54	1.890	48	4.016	102	M12	1.374	34.900	2.217	56.300
TSHE50	1.969	50	2.252	57.2	2.126	54	4.528	115	M 16	1.500	38.100	2.469	62.700
TSHE55	2.165	55	2.520	64	2.362	60	4.921	125	M 16	1.717	43.600	2.811	71.400
TSHE60	2.362	60	2.752	69.9	2.362	60	5.512	140	M 16	1.843	46.800	3.063	77.800

CONTINUED FROM ABOVE

PART NUMBER	M inch	M mm	W inch	W mm	WEIGHT lbs	WEIGHT kg	DYN. CAP. C lbf	DYN. CAP. C N	STAT. CAP. C_0 lbf	STAT. CAP. C_0 N	HOUSING	INSERT
TSHE20	2.000	50.8	2.559	65	1.21	0.55	2900	12800	1480	6600	SHE04	GE20KPPB3
TSHE25	2.000	50.8	2.756	70	1.46	0.66	3150	14000	1750	7800	SHE05	GE25KPPB3
TSHE30	3.000	76.2	3.858	98	2.49	1.13	4400	19500	2550	11300	SHE06	GE30KPPB3
TSHE35	3.252	82.6	4.055	103	3.35	1.52	5750	25500	3450	15300	SHE07	GE35KPPB3
TSHE40	3.500	88.9	4.567	116	4.39	1.99	7300	32500	4450	19800	SHE08	GE40KPPB3
TSHE45	3.752	95.3	4.724	120	5.09	2.31	7300	32500	4450	19800	SHE09	GE45KPPB3
TSHE50	4.000	101.6	5.315	135	6.79	3.08	7850	35000	5200	23200	SHE10	GE50KPPB3
TSHE55	4.646	118	5.906	150	7.92	3.59	9800	43500	6500	29000	SHE11	GE55KPPB3
TSHE60	4.646	118	5.906	150	10.01	4.54	11800	52000	8100	36000	SHE12	GE60KPPB3

Square Flange Housings
PCJ SERIES

- 4 bolt mounting
- Eccentric locking collar
- Economy P seals
- Inch and metric sizes
- Set screws are metric for metric sizes
- Housing dimensions per ABMA standards

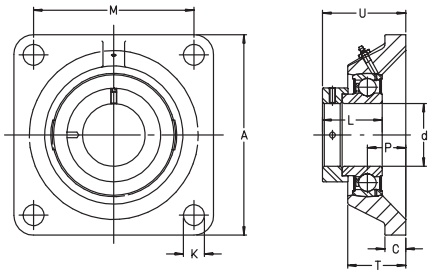

For details on part numbers, descriptive suffixes and various technical references, please refer to front of this section.
For engineering or technical information contact your local sales representative or call Distributor Sales (800)523-6572.

PART NUMBER	SHAFT d inch	SHAFT d inch	SHAFT d mm	A inch	A mm	C inch	C mm	K inch	K mm	L inch	L mm	M inch	M mm	WGT. lbs	WGT. kg
PCJ 12	-	0.472	12	2.992	76	0.394	10	0.453	11.5	1.126	28.6	2.126	54	1.103	0.5
PCJ 1/2	1/2	0.500	12.7	2.992	76	0.394	10	0.453	11.5	1.126	28.6	2.126	54	1.103	0.5
PCJ 15	-	0.591	15	2.992	76	0.394	10	0.453	11.5	1.126	28.6	2.126	54	1.103	0.5
PCJ 5/8	5/8	0.625	15.875	2.992	76	0.394	10	0.453	11.5	1.126	28.6	2.126	54	1.103	0.5
PCJ 17	-	0.669	17	2.992	76	0.394	10	0.453	11.5	1.126	28.6	2.126	54	1.103	0.5
PCJ 3/4	3/4	0.750	19.1	3.386	86	0.453	11.5	0.453	11.5	1.221	31	2.500	63.5	1.544	0.7
PCJ 20	-	0.787	20	3.386	86	0.394	10	0.453	11.5	1.221	31	2.500	63.5	1.544	0.7
PCJ 7/8	7/8	0.875	22.2	3.760	95.5	0.512	13	0.453	11.5	1.221	31	2.756	70	1.985	0.9
PCJ 25	-	0.984	25	3.740	95	0.433	11	0.453	11.5	1.221	31	2.756	70	1.985	0.9
PCJ 1	1	1.000	25.4	3.760	95.5	0.512	13	0.453	11.5	1.221	31	2.756	70	1.985	0.9
PCJ 1-1/16	1-1/16	1.063	26.9	4.272	108.5	0.512	13	0.453	11.5	1.406	35.7	3.248	82.5	2.867	1.3
PCJ 1-1/8	1-1/8	1.125	28.6	4.272	108.5	0.512	13	0.453	11.5	1.406	35.7	3.248	82.5	2.867	1.3
PCJ 30	-	1.181	30	4.252	108	0.472	12	0.453	11.5	1.406	35.7	3.248	82.5	2.867	1.3
PCJ 1-3/16	1-3/16	1.188	30.2	4.272	108.5	0.512	13	0.453	11.5	1.406	35.7	3.248	82.5	2.867	1.3
PCJ 1-1/4-206	1-1/4	1.250	31.8	4.272	108.5	0.512	13	0.453	11.5	1.406	35.7	3.248	82.5	2.867	1.3
PCJ 1-1/4	1-1/4	1.250	31.8	4.665	118.5	0.531	13.5	0.551	14	1.532	38.9	3.622	92	3.528	1.6
PCJ 1-3/8	1-3/8	1.375	34.9	4.665	118.5	0.531	13.5	0.551	14	1.532	38.9	3.622	92	3.528	1.6
PCJ 35	-	1.378	35	4.646	118	0.492	12.5	0.551	14	1.532	38.9	3.622	92	3.528	1.6
PCJ 1-7/16	1-7/16	1.438	36.5	4.665	118.5	0.531	13.5	0.551	14	1.532	38.9	3.622	92	3.528	1.6
PCJ 1-1/2	1-1/2	1.500	38.1	5.118	130	0.571	14.5	0.551	14	1.721	43.7	3.996	101.5	4.851	2.2
PCJ 40	-	1.575	40	5.118	130	0.512	13	0.551	14	1.721	43.7	3.996	101.5	4.851	2.2
PCJ 1-3/4	1-3/4	1.750	44.5	5.413	137.5	0.571	14.5	0.551	14	1.721	43.7	4.134	105	5.292	2.4
PCJ 45	-	1.772	45	5.413	137.5	0.512	13	0.551	14	1.721	43.7	4.134	105	5.292	2.4
PCJ 1-15/16	1-15/16	1.938	49.2	5.630	143	0.591	15	0.669	17	1.721	43.7	4.370	111	6.395	2.9
PCJ 50	-	1.969	50	5.630	143	0.512	13	0.551	14	1.721	43.7	4.370	111	6.395	2.9
PCJ 2	2	2.000	50.8	6.398	162.5	0.669	17	0.669	17	1.906	48.4	5.118	130	9.041	4.1
PCJ 55	-	2.165	55	6.398	162.5	0.669	17	0.669	17	1.906	48.4	5.118	130	9.041	4.1
PCJ 2-3/16	2-3/16	2.188	55.6	6.398	162.5	0.669	17	0.669	17	1.906	48.4	5.118	130	9.041	4.1
PCJ 60	-	2.362	60	6.890	175	0.630	16	0.709	18	2.091	53.1	5.630	143	11.025	5
PCJ 2-7/16	2-7/16	2.438	61.9	6.909	175.5	0.689	17.5	0.709	18	2.091	53.1	5.630	143	11.025	5

Square Flange Housings
PCJ SERIES

- 4 bolt mounting
- Eccentric locking collar
- Economy P seals
- Inch and metric sizes
- Set screws are metric for metric sizes
- Housing dimensions per ABMA standards

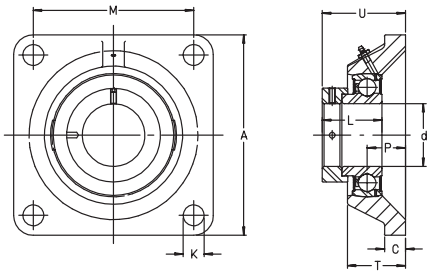

For details on part numbers, descriptive suffixes and various technical references, please refer to front of this section.
For engineering or technical information contact your local sales representative or call Distributor Sales (800)523-6572.

P inch	P mm	T inch	T mm	U inch	U mm	INSERT	HSG.	DYN. CAP. C lbf	DYN. CAP. C N	STAT. CAP. C_0 lbf	STAT. CAP. C_0 N	PART NUMBER
0.669	17	0.945	24	1.539	39.1	GRAE 12 NPPB	CJ 03	2150	9600	1070	4750	PCJ 12
0.669	17	0.945	24	1.539	39.1	GRA 008 NPPB	CJ 03	2150	9600	1070	4750	PCJ 1/2
0.669	17	0.945	24	1.539	39.1	GRAE 15 NPPB	CJ 03	2150	9600	1070	4750	PCJ 15
0.669	17	0.945	24	1.539	39.1	GRA 010 NPPB	CJ 03	2150	9600	1070	4750	PCJ 5/8
0.669	17	0.945	24	1.539	39.1	GRAE 17 NPPB	CJ 03	2150	9600	1070	4750	PCJ 17
0.748	19	1.142	29	1.673	42.5	GRA 012 NPPB	CJ 04	2900	12800	1480	6600	PCJ 3/4
0.748	19	1.142	29	1.673	42.5	GRAE 20 NPPB	CJ 04	2900	12800	1480	6600	PCJ 20
0.748	19	1.201	30.5	1.673	42.5	GRA 014 NPPB	CJ 05	3150	14000	1760	7800	PCJ 7/8
0.748	19	1.142	29	1.673	42.5	GRAE 25 NPPB	CJ 05	3150	14000	1760	7800	PCJ 25
0.748	19	1.201	30.5	1.673	42.5	GRA 100 NPPB	CJ 05	3150	14000	1760	7800	PCJ 1
0.787	20	1.260	32	1.839	46.7	GRA 101 NPPB	CJ 06	4350	19500	2550	11300	PCJ 1-1/16
0.787	20	1.260	32	1.839	46.7	GRA 102 NPPB	CJ 06	4350	19500	2550	11300	PCJ 1-1/8
0.787	20	1.142	29	1.839	46.7	GRAE 30 NPPB	CJ 06	4350	19500	2550	11300	PCJ 30
0.787	20	1.260	32	1.839	46.7	GRA 103 NPPB	CJ 06	4350	19500	2550	11300	PCJ 1-3/16
0.787	20	1.260	32	1.839	46.7	GRA 104 NPPB-206	CJ 06	4350	19500	2550	11300	PCJ 1-1/4-206
0.827	21	1.358	34.5	1.984	50.4	GRA 104 NPPB	CJ 07	5800	25500	3450	15300	PCJ 1-1/4
0.827	21	1.358	34.5	1.984	50.4	GRA 106 NPPB	CJ 07	5800	25500	3450	15300	PCJ 1-3/8
0.827	21	1.201	30.5	1.984	50.4	GRAE 35 NPPB	CJ 07	5800	25500	3450	15300	PCJ 35
0.827	21	1.358	34.5	1.984	50.4	GRA 107 NPPB	CJ 07	5800	25500	3450	15300	PCJ 1-7/16
0.945	24	1.496	38	2.232	56.7	GRA 108 NPPB	CJ 08	7300	32500	4450	19800	PCJ 1-1/2
0.945	24	1.358	34.5	2.232	56.7	GRAE 40 NPPB	CJ 08	7300	32500	4450	19800	PCJ 40
0.945	24	1.496	38	2.232	56.7	GRA 112 NPPB	CJ 09	7400	32500	4600	20400	PCJ 1-3/4
0.945	24	1.496	38	2.232	56.7	GRAE 45 NPPB	CJ 09	7400	32500	4600	20400	PCJ 45
1.102	28	1.654	42	2.390	60.7	GRA 115 NPPB	CJ 10	7900	35000	5200	23200	PCJ 1-15/16
1.102	28	1.535	39	2.390	60.7	GRAE 50 NPPB	CJ 10	7900	35000	5200	23200	PCJ 50
1.221	31	1.850	47	2.654	67.4	GRA 200 NPPB	CJ 11	9800	43500	6600	29000	PCJ 2
1.221	31	1.850	47	2.654	67.4	GRAE 55 NPPB	CJ 11	9800	43500	6600	29000	PCJ 55
1.221	31	1.850	47	2.654	67.4	GRA 203 NPPB	CJ 11	9800	43500	6600	29000	PCJ 2-3/16
1.339	34	1.811	46	2.898	73.6	GRAE 60 NPPB	CJ 12	11800	52000	8100	36000	PCJ 60
1.339	34	1.929	49	2.898	73.6	GRA 207 NPPB	CJ 12	11800	52000	8100	36000	PCJ 2-7/16

Square Flanged Housings
PCJY SERIES

- 4 bolt mounting
- Set screw shaft locking
- Economy P seals
- Inch and metric sizes
- Set screws are metric for metric sizes
- Housing dimensions per ABMA standards

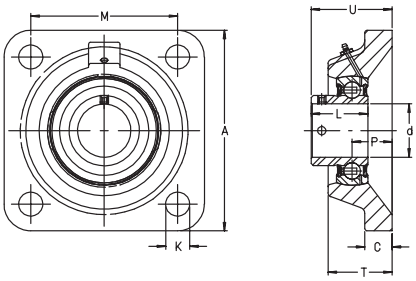

For details on part numbers, descriptive suffixes and various technical references, please refer to front of this section.
For engineering or technical information contact your local sales representative or call Distributor Sales (800)523-6572.

PART NUMBER	SHAFT d inch	SHAFT d inch	SHAFT d mm	A inch	A mm	C inch	C mm	K inch	K mm	L inch	L mm	M inch	M mm	WGT. lbs	WGT. kg
PCJY 12		0.472	12	2.992	76	0.394	10	0.453	11.5	0.866	22	2.126	54	1.103	0.5
PCJY 1/2	1/2	0.500	12.7	2.992	76	0.394	10	0.453	11.5	0.866	22	2.126	54	1.103	0.5
PCJY 15	-	0.591	15	2.992	76	0.394	10	0.453	11.5	0.866	22	2.126	54	1.103	0.5
PCJY 5/8	5/8	0.625	15.9	2.992	76	0.394	10	0.453	11.5	0.866	22	2.126	54	1.103	0.5
PCJY 17	-	0.669	17	2.992	76	0.394	10	0.453	11.5	0.866	22	2.126	54	1.103	0.5
PCJY 3/4	3/4	0.750	19.1	3.386	86	0.394	11.5	0.453	11.5	0.984	25	2.500	63.5	1.544	0.7
PCJY 20	-	0.787	20	3.386	86	0.453	10	0.453	11.5	0.984	25	2.500	63.5	1.544	0.7
PCJY 7/8	7/8	0.875	22.2	3.760	95.5	0.394	13	0.453	11.5	1.063	27	2.756	70	1.985	0.9
PCJY 25	-	0.984	25	3.740	95	0.512	11	0.453	11.5	1.063	27	2.756	70	1.985	0.9
PCJY 1	1	1.000	25.4	3.760	95.5	0.433	13	0.453	11.5	1.063	27	2.756	70	1.985	0.9
PCJY 30	-	1.181	30	4.252	108	0.512	12	0.453	11.5	1.181	30	3.248	82.5	2.867	1.3
PCJY 1-3/16	1-3/16	1.188	30.2	4.272	108.5	0.472	13	0.453	11.5	1.181	30	3.248	82.5	2.867	1.3
PCJY 1-1/4	1-1/4	1.250	31.8	4.665	118.5	0.512	13.5	0.551	14	1.378	35	3.622	92	3.528	1.6
PCJY 35	-	1.378	35	4.646	118	0.531	12.5	0.551	14	1.378	35	3.622	92	3.528	1.6
PCJY 1-7/16	1-7/16	1.438	36.5	4.665	118.5	0.492	13.5	0.551	14	1.378	35	3.622	92	3.528	1.6
PCJY 1-1/2	1-1/2	1.500	38.1	5.118	130	0.531	14.5	0.551	14	1.555	39.5	3.996	101.5	4.851	2.2
PCJY 40	-	1.575	40	5.118	130	0.571	13	0.551	14	1.555	39.5	3.996	101.5	4.851	2.2
PCJY 1-3/4	1-3/4	1.750	44.5	5.413	137.5	0.512	14.5	0.551	14	1.634	41.5	4.134	105	5.292	2.4
PCJY 45	-	1.772	45	5.413	137.5	0.571	13	0.551	14	1.634	41.5	4.134	105	5.292	2.4
PCJY 1-15/16	1-15/16	1.938	49.2	5.630	143	0.512	15	0.669	17	1.693	43	4.370	111	6.395	2.9
PCJY 50	50	1.969	50	5.630	143	0.591	13	0.551	14	1.693	43	4.370	111	6.395	2.9

Square Flanged Housings
PCJY SERIES

- 4 bolt mounting
- Set screw shaft locking
- Economy P seals
- Inch and metric sizes
- Set screws are metric for metric sizes
- Housing dimensions per ABMA standards

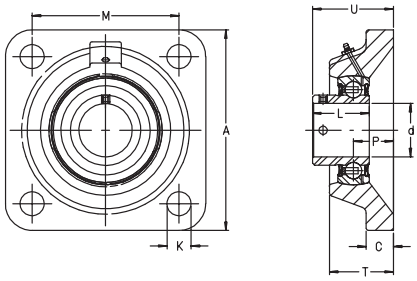

For details on part numbers, descriptive suffixes and various technical references, please refer to front of this section.
For engineering or technical information contact your local sales representative or call Distributor Sales (800)523-6572.

P inch	P mm	T inch	T mm	U inch	U mm	INSERT	HSG.	DYN. CAP. C lbf	DYN. CAP. C N	STAT. CAP. C_0 lbf	STAT. CAP. C_0 N	PART NUMBER
0.669	17	0.945	24	1.299	33	GAY12 NPPB	CJ 03	2150	9600	1070	4750	PCJY 12
0.669	17	0.945	24	1.299	33	GAY008 NPPB	CJ 03	2150	9600	1070	4750	PCJY 1/2
0.669	17	0.945	24	1.299	33	GAY15 NPPB	CJ 03	2150	9600	1070	4750	PCJY 15
0.669	17	0.945	24	1.299	33	GAY010 NPPB	CJ 03	2150	9600	1070	4750	PCJY 5/8
0.669	17	0.945	24	1.299	33	GAY17 NPPB	CJ 03	2150	9600	1070	4750	PCJY 17
0.748	19	1.161	29.5	1.457	37	GAY012 NPPB	CJ 04	2900	12800	1480	6600	PCJY 3/4
0.748	19	1.142	29	1.457	37	GAY20 NPPB	CJ 04	2900	12800	1480	6600	PCJY 20
0.748	19	1.201	30.5	1.516	38.5	GAY014 NPPB	CJ 05	3150	14000	1760	7800	PCJY 7/8
0.748	19	1.142	29	1.516	38.5	GAY25 NPPB	CJ 05	3150	14000	1760	7800	PCJY 25
0.748	19	1.201	30.5	1.516	38.5	GAY100 NPPB	CJ 05	3150	14000	1760	7800	PCJY 1
0.787	20	1.142	29	1.614	41	GAY30 NPPB	CJ 06	4350	19500	2550	11300	PCJY 30
0.787	20	1.260	32	1.614	41	GAY103 NPPB	CJ 06	4350	19500	2550	11300	PCJY 1-3/16
0.827	21	1.358	34.5	1.831	46.5	GAY104 NPPB	CJ 07	5800	25500	3450	15300	PCJY 1-1/4
0.827	21	1.201	30.5	1.831	46.5	GAY35 NPPB	CJ 07	5800	25500	3450	15300	PCJY 35
0.827	21	1.358	34.5	1.831	46.5	GAY107 NPPB	CJ 07	5800	25500	3450	15300	PCJY 1-7/16
0.945	24	1.496	38	2.087	53	GAY108 NPPB	CJ 08	7300	32500	4450	19800	PCJY 1-1/2
0.945	24	1.358	34.5	2.087	53	GAY40 NPPB	CJ 08	7300	32500	4450	19800	PCJY 40
0.945	24	1.496	38	2.146	54.5	GAY112 NPPB	CJ 09	7400	32500	4600	20400	PCJY 1-3/4
0.945	24	1.496	38	2.146	54.5	GAY45 NPPB	CJ 09	7400	32500	4600	20400	PCJY 45
1.102	28	1.654	42	2.362	60	GAY115 NPPB	CJ 10	7900	35000	5200	23200	PCJY 1-15/16
1.102	28	1.535	39	2.362	60	GAY50 NPPB	CJ 10	7900	35000	5200	23200	PCJY 50

Square Flange Housings
RCJ SERIES

- 4 bolt mounting
- Eccentric locking collar
- Standard R seals
- Inch and metric
- Set screws are metric for metric sizes
- Housing dimensions per ABMA standards

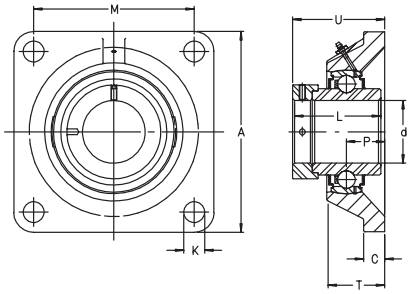

For details on part numbers, descriptive suffixes and various technical references, please refer to front of this section.
For engineering or technical information contact your local sales representative or call Distributor Sales (800)523-6572.

PART NUMBER	SHAFT d inch	SHAFT d inch	SHAFT d mm	A inch	A mm	C inch	C mm	K inch	K mm	L inch	L mm	M inch	M mm	WGT. lbs	WGT. kg
RCJ 1/2	1/2	0.500	12.7	2.992	76	0.394	10	0.453	11.5	1.469	37.3	2.126	54	1.103	0.5
RCJ 15	-	0.591	15	2.992	76	0.394	10	0.453	11.5	1.469	37.3	2.126	54	1.103	0.5
RCJ 5/8	5/8	0.625	15.9	2.992	76	0.394	10	0.453	11.5	1.469	37.3	2.126	54	1.103	0.5
RCJ 3/4	3/4	0.750	19.1	3.386	86	0.394	10	0.453	11.5	1.721	43.7	2.500	63.5	1.544	0.7
RCJ 20	-	0.787	20	3.386	86	0.453	11.5	0.453	11.5	1.721	43.7	2.500	63.5	1.544	0.7
RCJ 7/8	7/8	0.875	22.2	3.760	95.5	0.394	10	0.453	11.5	1.748	44.4	2.756	70	1.985	0.9
RCJ 15/16	15/16	0.938	23.8	3.760	95.5	0.512	13	0.453	11.5	1.748	44.4	2.756	70	1.985	0.9
RCJ 25	-	0.984	25	3.740	95	0.512	13	0.453	11.5	1.748	44.4	2.756	70	1.985	0.9
RCJ 1	1	1.000	25.4	3.760	95.5	0.433	11	0.453	11.5	1.748	44.4	2.756	70	1.985	0.9
RCJ 1-1/8	1-1/8	1.125	28.6	4.272	108.5	0.512	13	0.453	11.5	1.906	48.4	3.248	82.5	2.867	1.3
RCJ 30	-	1.181	30	4.252	108	0.512	13	0.453	11.5	1.906	48.4	3.248	82.5	2.867	1.3
RCJ 1-3/16	1-3/16	1.188	30.2	4.272	108.5	0.472	12	0.453	11.5	1.906	48.4	3.248	82.5	2.867	1.3
RCJ 1-1/4	1-1/4	1.250	31.8	4.665	118.5	0.512	13	0.551	14	2.012	51.1	3.622	92	3.528	1.6
RCJ 1-3/8	1-3/8	1.375	34.9	4.665	118.5	0.512	13	0.551	14	2.012	51.1	3.622	92	3.528	1.6
RCJ 35	-	1.378	35	4.646	118	0.531	13.5	0.551	14	2.012	51.1	3.622	92	3.528	1.6
RCJ 1-7/16	1-7/16	1.438	36.5	4.665	118.5	0.531	13.5	0.551	14	2.012	51.1	3.622	92	3.528	1.6
RCJ 1-1/2	1-1/2	1.500	38.1	5.118	130	0.492	12.5	0.551	14	2.217	56.3	3.996	101.5	4.851	2.2
RCJ 40	-	1.575	40	5.118	130	0.531	13.5	0.551	14	2.217	56.3	3.996	101.5	4.851	2.2
RCJ 1-5/8	1-5/8	1.625	41.3	5.413	137.5	0.571	14.5	0.551	14	2.217	56.3	4.134	105	5.292	2.4
RCJ 1-11/16	1-11/16	1.688	42.9	5.413	137.5	0.512	13	0.551	14	2.217	56.3	4.134	105	5.292	2.4
RCJ 1-3/4	1-3/4	1.750	44.5	5.413	137.5	0.571	14.5	0.551	14	2.217	56.3	4.134	105	5.292	2.4
RCJ 45	-	1.772	45	5.413	137.5	0.571	14.5	0.551	14	2.217	56.3	4.134	105	5.292	2.4
RCJ 1-15/16	1-15/16	1.938	49.2	5.630	143	0.571	14.5	0.669	17	2.469	62.7	4.370	111	6.395	2.9
RCJ 50	-	1.969	50	5.630	143	0.512	13	0.551	14	2.469	62.7	4.370	111	6.395	2.9
RCJ 2	2	2.000	50.8	6.398	162.5	0.591	15	0.669	17	2.811	71.4	5.118	130	9.041	4.1
RCJ 55	-	2.165	55	6.398	162.5	0.512	13	0.669	17	2.811	71.4	5.118	130	9.041	4.1
RCJ 2-3/16	2-3/16	2.188	55.6	6.398	162.5	0.669	17	0.669	17	2.811	71.4	5.118	130	9.041	4.1
RCJ 60	-	2.362	60	6.890	175	0.669	17	0.709	18	3.063	77.8	5.630	143	11.025	5
RCJ 2-7/16	2-7/16	2.438	61.9	6.890	175	0.669	17	0.709	18	3.063	77.8	5.630	143	11.025	5
RCJ 65	-	2.559	65	7.402	188	0.630	16	0.709	18	2.602	66.1	5.906	150	13.473	6.11
RCJ 70	-	2.756	70	7.402	188	0.689	17.5	0.709	18	2.602	66.1	5.906	150	13.010	5.9
RCJ 75	-	2.953	75	7.756	197	0.709	18	0.906	23	2.642	67.1	6.024	153	14.333	6.5
RCJ 80	-	3.150	80	7.756	197	0.709	18	0.906	23	2.795	71	6.024	153	13.010	6.9

Square Flange Housings
RCJ SERIES

- 4 bolt mounting
- Eccentric locking collar
- Standard R seals
- Inch and metric
- Set screws are metric for metric sizes
- Housing dimensions per ABMA standards

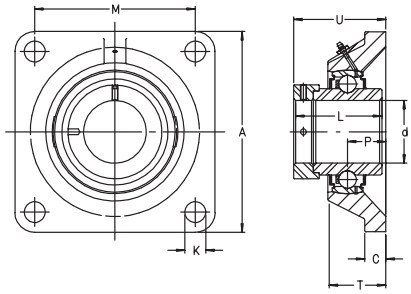

For details on part numbers, descriptive suffixes and various technical references, please refer to front of this section.
For engineering or technical information contact your local sales representative or call Distributor Sales (800)523-6572.

P inch	P mm	T inch	T mm	U inch	U mm	INSERT	HSG.	DYN. CAP. C lbf	DYN. CAP. C N	STAT. CAP. C_0 lbf	STAT. CAP. C_0 N	PART NUMBER
0.669	17	0.945	24	1.591	40.4	G1008 KRRB	CJ 03	2150	9600	1070	4750	RCJ 1/2
0.669	17	0.945	24	1.591	40.4	GE15 KRRB	CJ 03	2150	9600	1070	4750	RCJ 15
0.669	17	0.945	24	1.591	40.4	G1010 KRRB	CJ 03	2150	9600	1070	4750	RCJ 5/8
0.748	19	1.142	29	1.795	45.6	G1012 KRRB	CJ 04	2900	12800	1480	6600	RCJ 3/4
0.748	19	1.142	29	1.795	45.6	GE20 KRRB	CJ 04	2900	12800	1480	6600	RCJ 20
0.748	19	1.201	30.5	1.807	45.9	G1014 KRRB	CJ 05	3150	14000	1760	7800	RCJ 7/8
0.748	19	1.201	30.5	1.807	45.9	G1015KRRB	CJ 05	3150	14000	1760	7800	RCJ 15/16
0.748	19	1.142	29	1.807	45.9	GE25 KRRB	CJ 05	3150	14000	1760	7800	RCJ 25
0.748	19	1.201	30.5	1.807	45.9	G1100 KRRB	CJ 05	3150	14000	1760	7800	RCJ 1
0.787	20	1.260	32	1.972	50.1	G1102 KRRB	CJ 06	4350	19500	2550	11300	RCJ 1-1/8
0.787	20	1.142	29	1.972	50.1	GE30 KRRB	CJ 06	4350	19500	2550	11300	RCJ 30
0.787	20	1.260	32	1.972	50.1	G1103 KRRB	CJ 06	4350	19500	2550	11300	RCJ 1-3/16
0.827	21	1.358	34.5	2.098	53.3	G1104 KRRB	CJ 07	5800	25500	3450	15300	RCJ 1-1/4
0.827	21	1.358	34.5	2.098	53.3	G1106 KRRB	CJ 07	5800	25500	3450	15300	RCJ 1-3/8
0.827	21	1.201	30.5	2.098	53.3	GE35 KRRB	CJ 07	5800	25500	3450	15300	RCJ 35
0.827	21	1.358	34.5	2.098	53.3	G1107 KRRB	CJ 07	5800	25500	3450	15300	RCJ 1-7/16
0.945	24	1.496	38	2.319	58.9	G1108 KRRB	CJ 08	7300	32500	4450	19800	RCJ 1-1/2
0.945	24	1.358	34.5	2.319	58.9	GE40 KRRB	CJ 08	7300	32500	4450	19800	RCJ 40
0.945	24	1.496	38	2.319	58.9	G1110KRRB	CJ 09	7400	32500	4600	20400	RCJ 1-5/8
0.945	24	1.496	38	2.319	58.9	G1111KRRB	CJ 09	7400	32500	4600	20400	RCJ 1-11/16
0.945	24	1.496	38	2.319	58.9	G1112 KRRB	CJ 09	7400	32500	4600	20400	RCJ 1-3/4
0.945	24	1.496	38	2.319	58.9	GE45 KRRB	CJ 09	7400	32500	4600	20400	RCJ 45
1.102	28	1.654	42	2.602	66.1	G1115 KRRB	CJ 10	7900	35000	5200	23200	RCJ 1-15/16
1.102	28	1.535	39	2.602	66.1	GE50 KRRB	CJ 10	7900	35000	5200	23200	RCJ 50
1.221	31	1.850	47	2.937	74.6	G1200 KRRB	CJ 11	9800	43500	6600	29000	RCJ 2
1.220	31	1.850	47	2.937	74.6	GE55 KRRB	CJ 11	9800	43500	6600	29000	RCJ 55
1.221	31	1.850	47	2.937	74.6	G1203 KRRB	CJ 11	9800	43500	6600	29000	RCJ 2-3/16
1.339	34	1.811	46	3.181	80.8	GE60 KRRB	CJ 12	11800	52000	8100	36000	RCJ 60
1.339	34	1.929	49	3.181	80.8	G1207 KRRB	CJ 12	11800	52000	8100	36000	RCJ 2-7/16
1.496	38	2.047	52	3.252	82.6	GE65 KRRB	CJ14	14000	62000	9900	44000	RCJ 65
1.496	38	2.047	52	3.252	82.6	GE70 KRRB	CJ14	14000	62000	9900	44000	RCJ 70
1.626	41.3	2.244	57	3.421	86.9	GE75 KRRB	CJ15	14000	62000	10100	44500	RCJ 75
1.626	41.3	2.197	56	3.500	88.9	GE80 KRRB	CJ16	16100	72000	12200	54000	RCJ 80

Square Flanged Housings
RCJY SERIES

- Four bolt mounting
- Set screw shaft locking
- Standard R seals
- Inch and metric sizes
- Set screws are metric for metric sizes
- Housing dimensions per ABMA standards

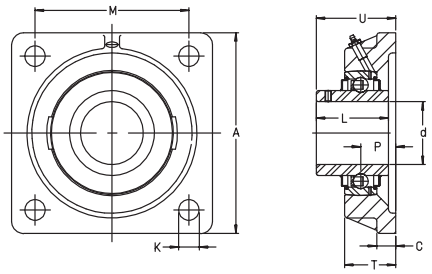

For details on part numbers, descriptive suffixes and various technical references, please refer to front of this section.
For engineering or technical information contact your local sales representative or call Distributor Sales (800)523-6572.

PART NUMBER	SHAFT d inch	SHAFT d inch	SHAFT d mm	A inch	A mm	C inch	C mm	K inch	K mm	L inch	L mm	M inch	M mm	WGT. lbs	WGT. kg
RCJY 1/2	1/2	0.500	12.7	2.992	76	0.394	10	0.453	11.5	1.079	27.4	2.126	54	1.103	0.5
RCJY 15	-	0.591	15	2.992	76	0.394	10	0.453	11.5	1.079	27.4	2.126	54	1.103	0.5
RCJY 5/8	5/8	0.625	15.9	2.992	76	0.394	10	0.453	11.5	1.079	27.4	2.126	54	1.103	0.5
RCJY 17	-	0.669	17	2.992	76	0.394	10	0.453	11.5	1.079	27.4	2.126	54	1.103	0.5
RCJY 3/4	3/4	0.750	19.05	3.386	86	0.453	11.5	0.453	11.5	1.221	31	2.500	63.5	1.544	0.7
RCJY 20	-	0.787	20	3.386	86	0.394	10	0.453	11.5	1.221	31	2.500	63.5	1.544	0.7
RCJY 7/8	7/8	0.875	22.2	3.760	95.5	0.512	13	0.453	11.5	1.343	34.1	2.756	70	1.985	0.9
RCJY 15/16	15/16	0.938	23.8	3.760	95.5	0.512	13	0.453	11.5	1.343	34.1	2.756	70	1.985	0.9
RCJY 25	-	0.984	25	3.740	95	0.433	11	0.453	11.5	1.343	34.1	2.756	70	1.985	0.9
RCJY 1	1	1.000	25.4	3.760	95.5	0.512	13	0.453	11.5	1.343	34.1	2.756	70	1.985	0.9
RCJY 1-1/8	1-1/8	1.125	28.6	4.272	108.5	0.512	13	0.453	11.5	1.500	38.1	3.248	82.5	2.867	1.3
RCJY 30	-	1.181	30	4.252	108	0.472	12	0.453	11.5	1.500	38.1	3.248	82.5	2.867	1.3
RCJY 1-3/16	1-3/16	1.188	30.2	4.272	108.5	0.512	13	0.453	11.5	1.500	38.1	3.248	82.5	2.867	1.3
RCJY 1-1/4-206	1-1/4	1.250	31.8	4.272	108.5	0.512	13	0.453	11.5	1.500	38.1	3.248	82.5	2.867	1.3
RCJY 1-1/4	1-1/4	1.250	31.8	4.665	118.5	0.531	13.5	0.551	14	1.689	42.9	3.622	92	3.528	1.6
RCJY 1-3/8	1-3/8	1.375	34.9	4.665	118.5	0.531	13.5	0.551	14	1.689	42.9	3.622	92	3.528	1.6
RCJY 35	-	1.378	35	4.646	118	0.492	12.5	0.551	14	1.689	42.9	3.622	92	3.528	1.6
RCJY 1-7/16	1-7/16	1.438	36.5	4.665	118.5	0.531	13.5	0.551	14	1.689	42.9	3.622	92	3.528	1.6
RCJY 1-1/2	1-1/2	1.500	38.1	5.118	130	0.571	14.5	0.551	14	1.937	49.2	3.996	101.5	4.851	2.2
RCJY 40	-	1.575	40	5.118	130	0.512	13	0.551	14	1.937	49.2	3.996	101.5	4.851	2.2
RCJY 1-5/8	1-5/8	1.625	41.3	5.413	137.5	0.571	14.5	0.551	14	1.937	49.2	4.134	105	5.292	2.4
RCJY 1-11/16	1-11/16	1.688	42.9	5.413	137.5	0.571	14.5	0.551	14	1.937	49.2	4.134	105	5.292	2.4
RCJY 1-3/4	1-3/4	1.750	44.5	5.413	137.5	0.571	14.5	0.551	14	1.937	49.2	4.134	105	5.292	2.4
RCJY 45	-	1.772	45	5.413	137.5	0.512	13	0.551	14	1.937	49.2	4.134	105	5.292	2.4
RCJY 1-15/16	1-15/16	1.938	49.2	5.630	143	0.591	15	0.669	17	2.032	51.6	4.370	111	6.395	2.9
RCJY 50	-	1.969	50	5.630	143	0.512	13	0.551	14	2.032	51.6	4.370	111	6.395	2.9
RCJY 2	2	2.000	50.8	6.398	162.5	0.669	17	0.669	17	2.189	55.6	5.118	130	9.041	4.1
RCJY 55	-	2.165	55	6.398	162.5	0.669	17	0.669	17	2.189	55.6	5.118	130	9.041	4.1
RCJY 2-3/16	2-3/16	2.188	55.6	6.398	162.5	0.669	17	0.669	17	2.189	55.6	5.118	130	9.041	4.1
RCJY 60	-	2.362	60	6.890	175	0.630	16	0.709	18	2.563	65.1	5.630	143	11.025	5
RCJY 2-7/16	2-7/16	2.438	61.9	6.909	175.5	0.689	17.5	0.709	18	2.563	65.1	5.630	143	11.025	5
RCJY 65	-	2.559	65	7.402	188	0.709	18	0.709	18	2.937	74.6	5.906	150	12.458	5.7
RCJY 70	-	2.756	70	7.402	188	0.709	18	0.709	18	2.937	74.6	5.906	150	11.797	5.4
RCJY 75	-	2.953	75	7.874	200	0.866	22	0.906	23	3.063	77.8	6.024	153	13.318	6
RCJY 80	-	3.150	80	7.756	197	0.787	20	0.906	23	3.252	82.6	6.024	153	15.038	6.8

Square Flanged Housings
RCJY SERIES

- Four bolt mounting
- Set screw shaft locking
- Standard R seals
- Inch and metric sizes
- Set screws are metric for metric sizes
- Housing dimensions per ABMA standards

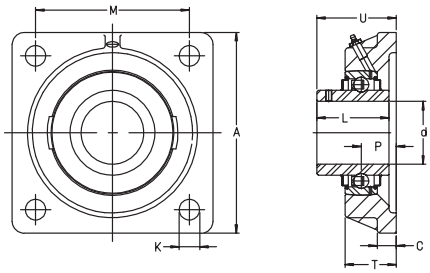

For details on part numbers, descriptive suffixes and various technical references, please refer to front of this section.
For engineering or technical information contact your local sales representative or call Distributor Sales (800)523-6572.

P inch	P mm	T inch	T mm	U inch	U mm	INSERT	HSG.	DYN. CAP. C lbf	DYN. CAP. C N	STAT. CAP. C_0 lbf	STAT. CAP. C_0 N	PART NUMBER
0.669	17	0.945	24	1.295	32.9	GY1008 KRRB	CJ 03	2150	9600	1070	4750	RCJY 1/2
0.669	17	0.945	24	1.295	32.9	GYE15 KRRB	CJ 03	2150	9600	1070	4750	RCJY 15
0.669	17	0.945	24	1.295	32.9	GY1010 KRRB	CJ 03	2150	9600	1070	4750	RCJY 5/8
0.669	17	0.945	24	1.295	32.9	GYE17 KRRB	CJ 03	2150	9600	1070	4750	RCJY 17
0.748	19	1.142	29	1.469	37.3	GY1012 KRRB	CJ 04	2900	12800	1480	6600	RCJY 3/4
0.748	19	1.142	29	1.469	37.3	GYE20 KRRB	CJ 04	2900	12800	1480	6600	RCJY 20
0.748	19	1.201	30.5	1.528	38.8	GY1014 KRRB	CJ 05	3150	14000	1760	7800	RCJY 7/8
0.748	19	1.201	30.5	1.528	38.8	GY1015 KRRB	CJ 05	3150	14000	1760	7800	RCJY 15/16
0.748	19	1.142	29	1.528	38.8	GYE25 KRRB	CJ 05	3150	14000	1760	7800	RCJY 25
0.748	19	1.201	30.5	1.528	38.8	GY1100 KRRB	CJ 05	3150	14000	1760	7800	RCJY 1
0.787	20	1.260	32	1.661	42.2	GY1102 KRRB	CJ 06	4350	19500	2550	11300	RCJY 1-1/8
0.787	20	1.142	29	1.661	42.2	GYE30 KRRB	CJ 06	4350	19500	2550	11300	RCJY 30
0.787	20	1.260	32	1.661	42.2	GY1103 KRRB	CJ 06	4350	19500	2550	11300	RCJY 1-3/16
0.787	20	1.260	32	1.661	42.2	GY1104 KRRB-206	CJ 06	4350	19500	2550	11300	RCJY 1-1/4-206
0.827	21	1.358	34.5	1.827	46.4	GY1104 KRRB	CJ 07	5800	25500	3450	15300	RCJY 1-1/4
0.827	21	1.358	34.5	1.827	46.4	GY1106 KRRB	CJ 07	5800	25500	3450	15300	RCJY 1-3/8
0.827	21	1.201	30.5	1.827	46.4	GYE35 KRRB	CJ 07	5800	25500	3450	15300	RCJY 35
0.827	21	1.358	34.5	1.827	46.4	GY1107 KRRB	CJ 07	5800	25500	3450	15300	RCJY 1-7/16
0.945	24	1.496	38	2.134	54.2	GY1108 KRRB	CJ 08	7300	32500	4450	19800	RCJY 1-1/2
0.945	24	1.358	34.5	2.134	54.2	GYE40 KRRB	CJ 08	7300	32500	4450	19800	RCJY 40
0.945	24	1.496	38	2.134	54.2	GY1110 KRRB	CJ 09	7400	32500	4600	20400	RCJY 1-5/8
0.945	24	1.496	38	2.134	54.2	GY1111 KRRB	CJ 09	7400	32500	4600	20400	RCJY 1-11/16
0.945	24	1.496	38	2.134	54.2	GY1112 KRRB	CJ 09	7400	32500	4600	20400	RCJY 1-3/4
0.945	24	1.496	38	2.134	54.2	GYE45 KRRB	CJ 09	7400	32500	4600	20400	RCJY 45
1.102	28	1.654	42	2.386	60.6	GY1115 KRRB	CJ 10	7900	35000	5200	23200	RCJY 1-15/16
1.102	28	1.535	39	2.386	60.6	GYE50 KRRB	CJ 10	7900	35000	5200	23200	RCJY 50
1.221	31	1.850	47	2.535	64.4	GY1200 KRRB	CJ 11	9800	43500	6600	29000	RCJY 2
1.221	31	1.850	47	2.535	64.4	GYE55 KRRB	CJ 11	9800	43500	6600	29000	RCJY 55
1.221	31	1.850	47	2.535	64.4	GY1203 KRRB	CJ 11	9800	43500	6600	29000	RCJY 2-3/16
1.339	34	1.811	46	2.902	73.7	GYE60 KRRB	CJ 12	11800	52000	8100	36000	RCJY 60
1.339	34	1.929	49	2.902	73.7	GY1207 KRRB	CJ 12	11800	52000	8100	36000	RCJY 2-7/16
1.496	38	2.047	52	3.244	82.4	GYE65 KRRB	CJ 14	14000	62000	9900	44000	RCJY 65
1.496	38	2.047	52	3.244	82.4	GYE70 KRRB	CJ 14	14000	62000	9900	44000	RCJY 70
1.626	41.3	2.244	57	3.378	85.8	GYE75KRRB	CJ 15	14000	62000	10100	44500	RCJY 75
1.626	41.3	2.197	56	3.567	90.6	GYE80 KRRB	CJ 16	16100	72000	12200	54000	RCJY 80

Square Flanged Housings
TCJ SERIES

- Four bolt mounting
- Tri-ply P3 seals
- Inner ring extended on both sides
- Eccentric locking collar

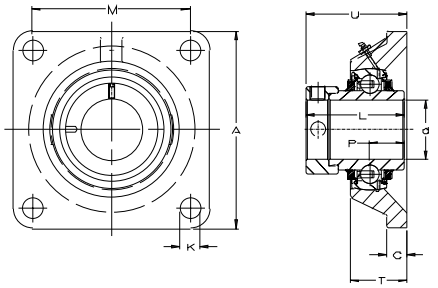

For details on part numbers, descriptive suffixes and various technical references, please refer to front of this section.
For engineering or technical information contact your local sales representative or call Distributor Sales (800)523-6572.

PART NUMBER	SHAFT d inch	SHAFT d mm	A inch	A mm	C inch	C mm	K inch	K mm	L inch	L mm	M inch	M mm	m lbs	m kg
TCJ 20	0.787	20	3.386	86	0.394	10	0.453	11.5	1.72	43.7	2.500	63.5	0.295	0.65
TCJ 25	0.984	25	3.740	95	0.433	11	0.453	11.5	1.748	44.4	2.756	70	0.372	0.82
TCJ 30	1.181	30	4.252	108	0.472	12	0.453	11.5	1.906	48.4	3.248	82.5	0.526	1.16
TCJ 35	1.378	35	4.646	118	0.492	12.5	0.551	14	2.012	51.1	3.622	92	0.667	1.47
TCJ 40	1.575	40	5.118	130	0.512	13	0.551	14	2.217	56.3	3.996	101.5	0.916	2.02
TCJ 45	1.772	45	5.394	137	0.512	13	0.551	14	2.217	56.3	4.134	105	1.048	2.31
TCJ 50	1.969	50	5.630	143	0.512	13	0.709	18	2.469	62.7	4.370	111	1.147	2.53
TCJ 55	2.165	55	6.378	162	0.591	15	0.709	18	2.811	71.4	5.118	130	1.619	3.57
TCJ 60	2.362	60	6.890	175	0.630	16	0.709	18	3.063	77.8	5.630	143	2.059	4.54
TCJ 65	2.559	65	7.402	188	0.709	18	0.709	18	2.602	66.1	5.906	150	2.771	6.11
TCJ 70	2.756	70	7.402	188	0.709	18	0.709	18	2.602	66.1	5.906	150	2.653	5.85
TCJ 75	2.953	75	7.756	197	0.787	20	0.906	23	2.642	67.1	6.024	153	2.948	6.50
TCJ 80	3.15	80	7.756	197	0.787	20	0.906	23	2.795	71	6.024	153	3.107	6.85

CONTINUED FROM ABOVE

PART NUMBER	P inch	P mm	Q	T inch	T mm	U inch	U mm	HOUSING	INSERT	DYN. C_r lbf	LOAD C_r N	STAT. $C0_r$ lbf	LOAD $C0_r$ N
TCJ 20	0.748	19	R 1/8	1.142	29.00	1.795	45.60	CJ 04	GE 20 KPPB 3	2880	12800	1490	6600
TCJ 25	0.748	19	R 1/8	1.142	29.00	1.807	45.90	CJ 05	GE 25 KPPB 3	3150	14000	1750	7800
TCJ 30	0.787	20	R 1/8	1.142	29.00	1.972	50.10	CJ 06	GE 30 KPPB 3	4400	19500	2550	11300
TCJ 35	0.827	21	R 1/8	1.201	30.50	2.098	53.30	CJ 07	GE 35 KPPB 3	5700	25500	3450	15300
TCJ 40	0.945	24	R 1/8	1.358	34.50	2.319	58.90	CJ 08	GE 40 KPPB 3	7300	32500	4450	19800
TCJ 45	0.945	24	R 1/8	1.378	35.00	2.319	58.90	CJ 09	GE 45 KPPB 3	7300	32500	4600	20400
TCJ 50	1.102	28	R 1/8	1.535	39.00	2.602	66.10	CJ 10	GE 50 KPPB 3	7900	35000	5200	23200
TCJ 55	1.220	31	R 1/8	1.713	43.50	2.937	74.60	CJ 11	GE 55 KPPB 3	9800	43500	6500	29000
TCJ 60	1.339	34	R 1/8	1.811	46.00	3.181	80.80	CJ 12	GE 60 KPPB 3	11500	52000	8100	36000
TCJ 65	1.496	38	R 1/8	2.047	52.00	3.252	82.60	CJ 14	GE 65 KPPB 3	14000	62000	9900	44000
TCJ 70	1.496	38	R 1/8	2.047	52.00	3.252	82.60	CJ 14	GE 70 KPPB 3	14000	62000	9900	44000
TCJ 75	1.626	41.3	R 1/8	2.197	55.80	3.421	86.90	CJ 15	GE 75 KPPB 3	14000	62000	10000	44500
TCJ 80	1.626	41.3	R 1/8	2.197	55.80	3.500	88.90	CJ 16	GE 80 KPPB 3	16000	72000	12000	54000

Square Flanged Housings
RCJL SERIES

- Four bolt mounting
- Metric series
- Non-locating/Expansion type
- Drive slot on inner ring
- Radial internal clearance C4.

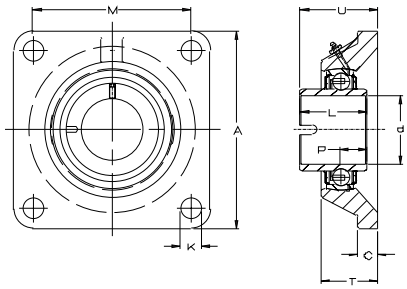

For details on part numbers, descriptive suffixes and various technical references, please refer to front of this section.
For engineering or technical information contact your local sales representative or call Distributor Sales (800)523-6572.

PART NUMBER	SHAFT d inch	SHAFT d inch	SHAFT d mm	A inch	A mm	C inch	C mm	K inch	K mm	L inch	L mm	M inch	M mm	WGT. lbs	WGT. kg
RCJL 30	-	1.181	30	4.252	108	0.472	12	0.453	11.5	1.437	36.5	3.248	82.5	2.38	1.08
RCJL 35	-	1.378	35	4.646	118	0.492	12.5	0.551	14	1.484	37.7	3.622	92	2.97	1.35
RCJL 40	-	1.575	40	5.118	130	0.472	12	0.551	14	1.689	42.9	3.996	101.5	4.09	1.86
RCJL 45	-	1.772	45	5.394	137	0.512	13	0.551	14	1.689	42.9	4.134	105	4.64	2.11
RCJL 50	-	1.969	50	5.630	143	0.512	13	0.709	18	1.937	49.2	4.370	111	5.04	2.29
RCJL 60	-	2.362	60	6.890	175	0.630	16	0.709	18	2.437	61.9	5.630	143	9.28	4.22
RCJL 70	-	2.756	70	7.402	188	0.709	18	0.709	18	2.685	68.2	5.906	150	12.43	5.65

CONTINUED FROM ABOVE

PART NUMBER	P inch	P mm	T inch	T mm	U inch	U mm	INSERT	HSG.	DYN. CAP. C lbf	DYN. CAP. C N	STAT. CAP. C_0 lbf	STAT. CAP. C_0 N
RCJL 30	0.787	20	1.142	29	1.654	42	GLE30 KRRB	CJ 06	4350	19500	2550	11300
RCJL 35	0.827	21	1.201	30.5	1.693	43	GLE35 KRRB	CJ 07	5800	25500	3450	15300
RCJL 40	0.945	24	1.358	34.5	2.008	51	GLE40 KRRB	CJ 08	7300	32500	4450	19800
RCJL 45	0.945	24	1.378	35	1.949	49.5	GLE45 KRRB	CJ 09	7400	32500	4600	20400
RCJL 50	1.102	28	1.535	39	2.291	58.2	GLE50 KRRB	CJ 10	7900	35000	5200	23200
RCJL 60	1.339	34	1.811	46	2.807	71.3	GLE60 KRRB	CJ 12	11800	52000	8100	36000
RCJL 70	1.496	38	2.047	52	3.118	79.2	GLE70 KRRB	CJ14	14000	62000	9900	44000

Square Flanged Housings
RCJO SERIES

- Four bolt mounting
- Standard R seals
- Inner ring extended both sides
- Eccentric locking collar
- Heavy series insert - based on 6300 Series

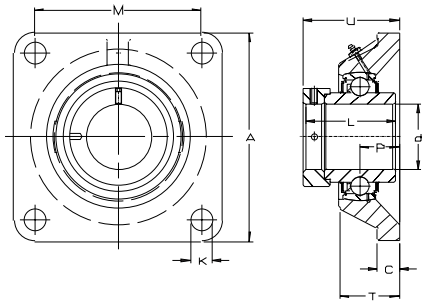

For details on part numbers, descriptive suffixes and various technical references, please refer to front of this section.
For engineering or technical information contact your local sales representative or call Distributor Sales (800)523-6572.

PART NUMBER	SHAFT d inch	SHAFT d inch	SHAFT d mm	A inch	A mm	C inch	C mm	K inch	K mm	L inch	L mm	M inch	M mm	WGT. lbs	WGT. kg
RCJO 30	-	1.181	30	4.921	125	0.591	15	0.571	14.5	1.969	50	3.740	95	3.86	1.8
RCJO 35	-	1.378	35	5.315	135	0.630	16	0.748	19	2.031	51.6	3.937	100	5.62	2.6
RCJO 40	-	1.575	40	5.906	150	0.669	17	0.748	19	2.150	54.6	4.409	112	6.84	3.1
RCJO 50	-	1.969	50	6.890	175	0.748	19	0.906	23	2.626	66.7	5.197	132	10.80	4.9
RCJO 60	-	2.362	60	7.677	195	0.866	22	0.906	23	2.693	68.4	5.906	150	14.99	6.8
RCJO 70	-	2.756	70	8.898	226	0.984	25	0.984	25	2.969	75.4	7.008	178	22.05	10

CONTINUED FROM ABOVE

PART NUMBER	P inch	P mm	T inch	T mm	U inch	U mm	INSERT	HSG.	DYN. CAP. C lbf	DYN. CAP. C N	STAT. CAP. C_0 lbf	STAT. CAP. C_0 N
RCJO 30	0.811	20.6	1.205	30.6	2.091	53.1	GNE30 KRRB	CJO 06	6700	29500	3750	16700
RCJO 35	0.787	20	1.220	31	2.102	53.4	GNE35 KRRB	CJO 07	8200	36500	4700	20900
RCJO 40	0.906	23	1.358	34.5	2.346	59.6	GNE40 KRRB	CJO 08	10000	44500	5800	26000
RCJO 50	1.102	28	1.673	42.5	2.760	70.1	GNE50 KRRB	CJO 10	13900	62000	8500	38000
RCJO 60	1.299	33	1.949	49.5	3.087	78.4	GNE60 KRRB	CJO 12	18400	82000	11700	52000
RCJO 70	1.417	36	2.146	54.5	3.362	85.4	GNE70 KRRB	CJO 14	23400	104000	15300	68000

Square Flanged Housed Units
PCCJ SERIES

- Four bolt flanged housed bearings
- Cast iron housing with centering spigot
- Double row angular contact ball bearing
- Standard P seals

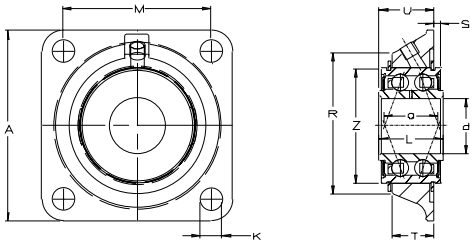

For details on part numbers, descriptive suffixes and various technical references, please refer to front of this section.
For engineering or technical information contact your local sales representative or call Distributor Sales (800)523-6572.

PART NUMBER	SHAFT d inch	SHAFT d inch	SHAFT d mm	A inch	A mm	A_1 inch	A_1 mm	K inch	K mm	L inch	L mm	M inch	M mm	A_2 inch	A_2 mm	WGT. lbs	WGT. kg
PCCJ25	-	0.984	25	3.740	95	0.472	12	0.453	11.5	1.181	30	2.756	70	0.461	11.7	1.742	0.79
PCCJ30	-	1.181	30	4.252	108	0.472	12	0.453	11.5	1.339	34	3.248	82.5	0.512	13	2.470	1.12
PCCJ35	-	1.378	35	4.646	118	0.551	14	0.551	14	1.417	36	3.622	92	0.551	14	3.263	1.48
PCCJ40	-	1.575	40	5.118	130	0.551	14	0.551	14	1.496	38	3.996	101.5	0.591	15	3.969	1.8

CONTINUED FROM ABOVE

PART NUMBER	Q	R mm max.	S inch	S mm	T inch	T mm	U inch	U mm	INSERT	HSG.	DYN. CAP. C lbf	DYN. CAP. C N	STAT. CAP. C_0 lbf	STAT. CAP. C_0 N
PCCJ25	M6	64	0.094	2.4	0.870	22.1	1.051	26.7	G5205 2RSN	CCJ05	4850	21600	3350	14900
PCCJ30	M6	76	0.126	3.2	0.945	24	1.169	29.7	G5206 2RSN	CCJ06	6700	30000	4800	21400
PCCJ35	M6	88	0.118	3	1.024	26	1.248	31.7	G5207 2RSN	CCJ07	8750	39000	6500	29000
PCCJ40	M6	98	0.126	3.2	1.102	28	1.327	33.7	G5208 2RSN	CCJ08	11200	50000	8400	37500

Round 4 Bolt Flange Units With Pilot

PME SERIES

- Metric series
- Pilot or centering spigot
- Cast iron housing
- Economy seals
- Eccentric locking collar

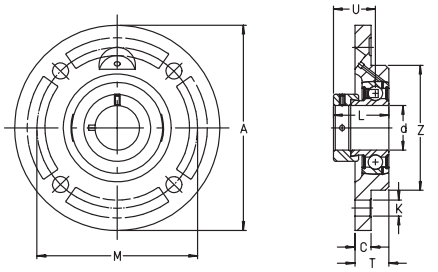

For details on part numbers, descriptive suffixes and various technical references, please refer to front of this section.
For engineering or technical information contact your local sales representative or call Distributor Sales (800)523-6572.

PART NUMBER	SHAFT d inch	SHAFT d mm	A inch	A mm	C inch	C mm	K inch	K mm	L inch	L mm	M inch	M mm	T inch	T mm
PME20	0.787	20	3.937	100	0.315	8	0.354	9	1.221	31	3.071	78	0.669	17
PME25	0.984	25	4.528	115	0.354	9	0.354	9	1.221	31	3.543	90	0.748	19
PME30	1.181	30	4.921	125	0.374	9.5	0.453	11.5	1.406	35.7	3.937	100	0.807	20.5
PME35	1.378	35	5.315	135	0.394	10	0.453	11.5	1.532	38.9	4.331	110	0.807	20.5
PME40	1.575	40	5.709	145	0.453	11.5	0.453	11.5	1.721	43.7	4.724	120	0.906	23
PME45	1.772	45	6.102	155	0.472	12	0.551	14	1.721	43.7	5.118	130	0.984	25
PME50	1.969	50	6.496	165	0.512	13	0.551	14	1.721	43.7	5.315	135	0.984	25

CONTINUED FROM ABOVE

PART NUMBER	U inch	U mm	Z inch	Z mm	DYN. CAP. C lbf	DYN. CAP. C N	STAT. CAP. C_0 lbf	STAT. CAP. C_0 N	WEIGHT lbs	WEIGHT kg	HOUSING	INSERT
PME20	0.847	21.5	2.441	62	2,900	12800	1,480	6600	1.169	0.53	ME04	GRAE20NPPB
PME25	0.827	21	2.756	70	3,150	14000	1,750	7800	1.632	0.74	ME05	GRAE25NPPB
PME30	0.972	24.7	3.150	80	4,400	19500	2,550	11300	2.139	0.97	ME06	GRAE30NPPB
PME35	1.118	28.4	3.543	90	5,700	25500	3,450	15300	2.800	1.27	ME07	GRAE35NPPB
PME40	0.854	21.7	3.937	100	7,300	32500	4,450	19800	3.572	1.62	ME08	GRAE40NPPB
PME45	1.209	30.7	4.134	105	7,300	32500	4,600	20400	4.256	1.93	ME09	GRAE45NPPB
PME50	1.248	31.7	4.331	110	7,900	35000	5,200	23200	5.072	2.30	ME10	GRAE50NPPB

Round 4 Bolt Flange Units With Pilot

PMEY SERIES

- Metric series
- Pilot or centering spigot
- Cast iron housing
- Economy seals
- Set screw locking

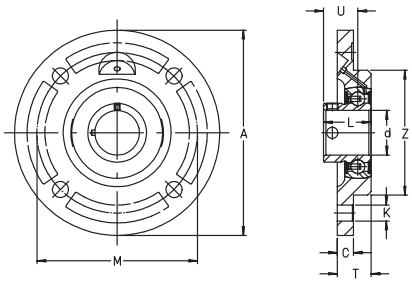

For details on part numbers, descriptive suffixes and various technical references, please refer to front of this section.
For engineering or technical information contact your local sales representative or call Distributor Sales (800)523-6572.

PART NUMBER	SHAFT d inch	SHAFT d mm	A inch	A mm	C inch	C mm	K inch	K mm	L inch	L mm	M inch	M mm	T inch	T mm
PMEY20	0.787	20	3.937	100	0.315	8	0.354	9	0.984	25	3.071	78	0.669	17
PMEY25	0.984	25	4.528	115	0.354	9	0.354	9	1.063	27	3.543	90	0.748	19
PMEY30	1.181	30	4.921	125	0.374	9.5	0.453	11.5	1.181	30	3.937	100	0.807	20.5
PMEY35	1.378	35	5.315	135	0.394	10	0.453	11.5	1.378	35	4.331	110	0.807	20.5
PMEY40	1.575	40	5.709	145	0.453	11.5	0.453	11.5	1.555	39.5	4.724	120	0.906	23
PMEY45	1.772	45	6.102	155	0.472	12	0.551	14	1.634	41.5	5.118	130	0.984	25
PMEY50	1.969	50	6.496	165	0.512	13	0.551	14	1.693	43	5.315	135	0.984	25

CONTINUED FROM ABOVE

PART NUMBER	U inch	U mm	Z inch	Z mm	DYN. CAP. C lbf	DYN. CAP. C N	STAT. CAP. C_0 lbf	STAT. CAP. C_0 N	WEIGHT lbs	WEIGHT kg	HOUSING	INSERT
PMEY20	0.610	15.5	2.441	62	2,900	12800	1,480	6600	1.455	0.66	ME04	GAY20NPPB
PMEY25	0.669	17	2.756	70	3,150	14000	1,750	7800	1.985	0.90	ME05	GAY25NPPB
PMEY30	0.748	19	3.150	80	4,400	19500	2,550	11300	2.007	0.91	ME06	GAY30NPPB
PMEY35	0.965	24.5	3.543	90	5,700	25500	3,450	15300	3.660	1.66	ME07	GAY35NPPB
PMEY40	0.689	17.5	3.937	100	7,300	32500	4,450	19800	4.697	2.13	ME08	GAY40NPPB
PMEY45	1.122	28.5	4.134	105	7,300	32500	4,600	20400	5.468	2.48	ME09	GAY45NPPB
PMEY50	1.221	31	4.331	110	7,900	35000	5,200	23200	6.439	2.92	ME10	GAY50NPPB

Round Flange Housings With Pilot
RME SERIES

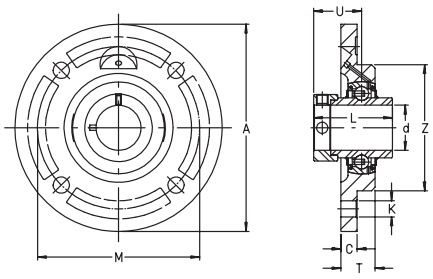

- Four bolt mounting
- Metric series
- Metric pilot or centering spigot
- Cast iron housing
- Standard seals
- Eccentric locking collar

For details on part numbers, descriptive suffixes and various technical references, please refer to front of this section.

For engineering or technical information contact your local sales representative or call Distributor Sales (800)523-6572.

PART NUMBER	SHAFT d inch	SHAFT d mm	A inch	A mm	C inch	C mm	K inch	K mm	L inch	L mm	M inch	M mm	T inch	T mm
RME20	0.787	20	3.937	100	0.315	8	0.354	9	1.721	43.7	3.071	78	0.669	17
RME25	0.984	25	4.528	115	0.354	9	0.354	9	1.748	44.4	3.543	90	0.748	19
RME30	1.181	30	4.921	125	0.374	9.5	0.453	11.5	1.906	48.4	3.937	100	0.807	20.5
RME35	1.378	35	5.315	135	0.394	10	0.453	11.5	2.012	51.1	4.331	110	0.807	20.5
RME40	1.575	40	5.709	145	0.453	11.5	0.453	11.5	2.217	56.3	4.724	120	0.906	23
RME45	1.772	45	6.102	155	0.472	12	0.551	14	2.217	56.3	5.118	130	0.984	25
RME50	1.969	50	6.496	165	0.512	13	0.551	14	2.469	62.7	5.315	135	0.984	25
RME55	2.165	55	7.283	185	0.591	15	0.709	18	2.811	71.4	5.906	150	1.083	27.5
RME65	2.559	65	8.465	215	0.709	18	0.709	18	2.602	66.1	6.969	177	1.260	32
RME70	2.756	70	8.465	215	0.709	18	0.709	18	2.602	66.1	6.969	177	1.260	32
RME75	2.953	75	8.661	220	0.709	18	0.709	18	2.642	67.1	7.244	184	1.260	32
RME80	3.150	80	8.661	220	0.709	18	0.709	18	2.795	71	7.244	184	1.220	31

CONTINUED FROM ABOVE

PART NUMBER	U inch	U mm	Z inch	Z mm	DYN. CAP. C lbf	DYN. CAP. C N	STAT. CAP. C_0 lbf	STAT. CAP. C_0 N	WEIGHT lbs	WEIGHT kg	HOUSING	INSERT
RME20	0.969	24.6	2.441	62	2900	12800	1480	6600	1.257	0.57	ME04	GE20KRRB
RME25	0.961	24.4	2.756	70	3150	14000	1750	7800	1.764	0.80	ME05	GE25KRRB
RME30	1.106	28.1	3.150	80	4400	19500	2550	11300	2.293	1.04	ME06	GE30KRRB
RME35	1.232	31.3	3.543	90	5700	25500	3450	15300	2.955	1.34	ME07	GE35KRRB
RME40	1.335	33.9	3.937	100	7300	32500	4450	19800	3.837	1.74	ME08	GE40KRRB
RME45	1.295	32.9	4.134	105	7300	32500	4600	20400	4.520	2.05	ME09	GE45KRRB
RME50	1.461	37.1	4.331	110	7900	35000	5200	23200	5.579	2.53	ME10	GE50KRRB
RME55	1.717	43.6	4.921	125	9800	43500	6500	29000	7.585	3.44	ME11	GE55KRRB
RME65	1.756	44.6	5.906	150	13950	62000	9900	44000	12.811	5.81	ME14	GE65KRRB
RME70	1.756	44.6	5.906	150	13950	62000	9900	44000	12.458	5.65	ME14	GE70KRRB
RME75	1.795	45.6	6.299	160	13950	62000	10000	44500	12.194	5.53	ME15	GE75KRRB
RME80	1.953	49.6	6.299	160	16200	72000	12000	54000	12.679	5.75	ME16	GE80KRRB

Round Flange Housings With Pilot
RMEY SERIES

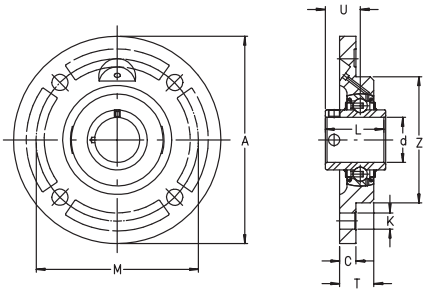

- Four bolt mounting
- Metric series
- Metric pilot or centering spigot
- Cast iron housing
- Standard seals
- Eccentric locking collar

For details on part numbers, descriptive suffixes and various technical references, please refer to front of this section.

For engineering or technical information contact your local sales representative or call Distributor Sales (800)523-6572.

PART NUMBER	SHAFT d inch	SHAFT d mm	A inch	A mm	C inch	C mm	K inch	K mm	L inch	L mm	M inch	M mm	T inch	T mm
RMEY20	0.787	20	3.937	100	0.315	8	0.354	9	1.221	31	3.071	78	0.669	17
RMEY25	0.984	25	4.528	115	0.354	9	0.354	9	1.343	34.1	3.543	90	0.748	19
RMEY30	1.181	30	4.921	125	0.374	9.5	0.453	11.5	1.500	38.1	3.937	100	0.807	20.5
RMEY35	1.378	35	5.315	135	0.394	10	0.453	11.5	1.689	42.9	4.331	110	0.807	20.5
RMEY40	1.575	40	5.709	145	0.453	11.5	0.453	11.5	1.937	49.2	4.724	120	0.906	23
RMEY45	1.772	45	6.102	155	0.472	12	0.551	14	1.937	49.2	5.118	130	0.984	25
RMEY50	1.969	50	6.496	165	0.512	13	0.551	14	2.032	51.6	5.315	135	0.984	25
RMEY55	2.165	55	7.283	185	0.591	15	0.709	18	2.189	55.6	5.906	150	1.083	27.5
RMEY60	2.362	60	7.677	195	0.630	16	0.709	18	2.563	65.1	6.299	160	1.142	29
RMEY65	2.559	65	8.465	215	0.709	18	0.709	18	2.937	74.6	6.969	177	1.260	32
RMEY70	2.756	70	8.465	215	0.709	18	0.709	18	2.937	74.6	6.969	177	1.260	32
RMEY75	2.953	75	8.661	220	0.709	18	0.709	18	3.063	77.8	7.244	184	1.260	32
RMEY80	3.150	80	8.661	220	0.709	18	0.709	18	3.252	82.6	7.244	184	1.220	31

CONTINUED FROM ABOVE

PART NUMBER	U inch	U mm	Z inch	Z mm	DYN. CAP. C lbf	DYN. CAP. C N	STAT. CAP. C_0 lbf	STAT. CAP. C_0 N	WEIGHT lbs	WEIGHT kg	HOUSING	INSERT
RMEY20	0.642	16.3	2.441	62	2900	12800	1480	6600	1.191	0.54	ME04	GYE20KRRB
RMEY25	0.681	17.3	2.756	70	3150	14000	1750	7800	1.654	0.75	ME05	GYE25KRRB
RMEY30	0.795	20.2	3.150	80	4400	19500	2550	11300	2.183	0.99	ME06	GYE30KRRB
RMEY35	0.961	24.4	3.543	90	5700	25500	3450	15300	2.822	1.28	ME07	GYE35KRRB
RMEY40	1.150	29.2	3.937	100	7300	32500	4450	19800	3.638	1.65	ME08	GYE40KRRB
RMEY45	1.110	28.2	4.134	105	7300	32500	4600	20400	4.278	1.94	ME09	GYE45KRRB
RMEY50	1.244	31.6	4.331	110	7900	35000	5200	23200	5.138	2.33	ME10	GYE50KRRB
RMEY55	1.315	33.4	4.921	125	9800	43500	6500	29000	6.725	3.05	ME11	GYE55KRRB
RMEY60	1.524	38.7	5.315	135	11700	52000	8100	36000	7.651	3.47	ME12	GYE60KRRB
RMEY65	1.748	44.4	5.906	150	14000	62000	9900	44000	11.797	5.35	ME14	GYE65KRRB
RMEY70	1.748	44.4	5.906	150	14000	62000	9900	44000	11.246	5.10	ME14	GYE70KRRB
RMEY75	1.752	44.5	6.299	160	14000	62000	9900	44000	11.444	5.19	ME15	GYE75KRRB
RMEY80	2.020	51.3	6.299	160	16200	72000	12000	54000	12.635	5.73	ME16	GYE80KRRB

Round Flange Units with Pilot

TME SERIES

- Four bolt mounting
- Metric series
- Metric pilot or centering spigot
- Tri-ply P3 seals
- Eccentric locking collar

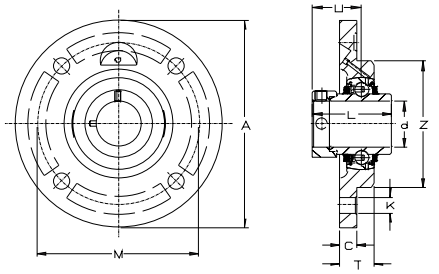

For details on part numbers, descriptive suffixes and various technical references, please refer to front of this section.
For engineering or technical information contact your local sales representative or call Distributor Sales (800)523-6572.

PART NUMBER	SHAFT d inch	SHAFT d mm	A inch	A mm	C inch	C mm	K inch	K mm	L inch	L mm	M inch	M mm	T inch	T mm
TME20	0.787	20	3.937	100	0.315	8	0.354	9	1.721	43.7	3.071	78	0.669	17
TME25	0.984	25	4.528	115	0.354	9	0.354	9	1.748	44.4	3.543	90	0.748	19
TME30	1.181	30	4.921	125	0.374	9.5	0.453	11.5	1.906	48.4	3.937	100	0.807	20.5
TME35	1.378	35	5.315	135	0.394	10	0.453	11.5	2.012	51.1	4.331	110	0.807	20.5
TME40	1.575	40	5.709	145	0.453	11.5	0.453	11.5	2.217	56.3	4.724	120	0.906	23
TME45	1.772	45	6.102	155	0.472	12	0.551	14	2.217	56.3	5.118	130	0.984	25
TME50	1.969	50	6.496	165	0.512	13	0.551	14	2.469	62.7	5.315	135	0.984	25
TME55	2.165	55	7.283	185	0.591	15	0.709	18	2.811	71.4	5.906	150	1.083	27.5
TME65	2.559	65	8.465	215	0.709	18	0.709	18	2.602	66.1	6.969	177	1.260	32
TME70	2.756	70	8.465	215	0.709	18	0.709	18	2.602	66.1	6.969	177	1.260	32
TME75	2.953	75	8.661	220	0.709	18	0.709	18	2.642	67.1	7.244	184	1.260	32
TME80	3.150	80	8.661	220	0.709	18	0.709	18	2.795	71	7.244	184	1.220	31

CONTINUED FROM ABOVE

PART NUMBER	U inch	U mm	Z inch	Z mm	DYN. CAP. C lbf	DYN. CAP. C N	STAT. CAP. C_0 lbf	STAT. CAP. C_0 N	WEIGHT lbs	WEIGHT kg	HOUSING	INSERT
TME20	0.969	24.6	2.441	62	2900	12800	1480	6600	1.257	0.57	ME04	GE20KPPB-3
TME25	0.961	24.4	2.756	70	3150	14000	1750	7800	1.764	0.80	ME05	GE25KPPB-3
TME30	1.106	28.1	3.150	80	4400	19500	2550	11300	2.293	1.04	ME06	GE30KPPB-3
TME35	1.232	31.3	3.543	90	5700	25500	3450	15300	2.955	1.34	ME07	GE35KPPB-3
TME40	1.335	33.9	3.937	100	7300	32500	4450	19800	3.837	1.74	ME08	GE40KPPB-3
TME45	1.295	32.9	4.134	105	7300	32500	4600	20400	4.520	2.05	ME09	GE45KPPB-3
TME50	1.461	37.1	4.331	110	7900	35000	5200	23200	5.579	2.53	ME10	GE50KPPB-3
TME55	1.717	43.6	4.921	125	9800	43500	6500	29000	7.585	3.44	ME11	GE55KPPB-3
TME65	1.756	44.6	5.906	150	13950	62000	9900	44000	12.811	5.81	ME14	GE65KPPB-3
TME70	1.756	44.6	5.906	150	13950	62000	9900	44000	12.458	5.65	ME14	GE70KPPB-3
TME75	1.795	45.6	6.299	160	13950	62000	10000	44500	12.194	5.53	ME15	GE75KPPB-3
TME80	1.953	49.6	6.299	160	16200	72000	12000	54000	12.679	5.75	ME16	GE80KPPB-3

Round Flange Units with Pilot
RMEO SERIES

- Four bolt mounting
- Metric series
- Metric pilot or centering spigot
- Standard R seals
- Eccentric locking collar
- Heavy series inserts - based on 6300 Series

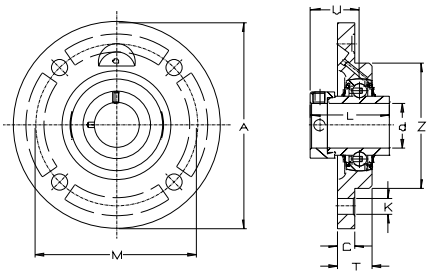

For details on part numbers, descriptive suffixes and various technical references, please refer to front of this section.
For engineering or technical information contact your local sales representative or call Distributor Sales (800)523-6572.

PART NUMBER	SHAFT d inch	SHAFT d mm	A inch	A mm	C inch	C mm	K inch	K mm	L inch	L mm	M inch	M mm	T inch	T mm
RMEO 30	1.181	30	6.378	162	0.591	15	0.571	14.5	1.969	50	5.276	134	0.906	23
RMEO 35	1.378	35	6.850	174	0.630	16	0.748	19	2.031	51.6	5.551	141	0.984	25
RMEO 40	1.575	40	7.638	194	0.669	17	0.748	19	2.150	54.6	6.220	158	1.063	27
RMEO 50	1.969	50	9.055	230	0.748	19	0.906	23	2.626	66.7	7.362	187	1.220	31
RMEO 60	2.362	60	10.079	256	0.866	22	0.906	23	2.693	68.4	8.346	212	1.417	36
RMEO 70	2.756	70	11.811	300	0.984	25	0.984	25	2.969	75.4	9.921	252	1.693	43

CONTINUED FROM ABOVE

PART NUMBER	U inch	U mm	Z inch	Z mm	DYN. CAP. C lbf	DYN. CAP. C N	STAT. CAP. C_0 lbf	STAT. CAP. C_0 N	WEIGHT lbs	WEIGHT kg	HOUSING	INSERT
RMEO 30	1.358	34.5	3.543	90	6700	29500	3750	16700	3.75	1.7	MEO 06	GNE30KRRB
RMEO 35	1.394	35.4	3.937	100	8200	36500	4700	20900	5.29	2.4	MEO 07	GNE35KRRB
RMEO 40	1.539	39.1	4.528	115	10000	44500	5800	26000	6.17	2.8	MEO 08	GNE40KRRB
RMEO 50	1.756	44.6	5.512	140	13900	62000	8500	38000	10.14	4.6	MEO 10	GNE50KRRB
RMEO 60	1.886	47.9	6.299	160	18400	82000	11700	52000	13.23	6.0	MEO 11	GNE60KRRB
RMEO 70	1.965	49.9	7.283	185	23400	104000	15300	68000	19.85	9.0	MEO 14	GNE70KRRB

Oval Flanged Housings
PCJT SERIES

- Two bolt mounting
- Eccentric locking collar
- Economy P seals
- Inch and metric sizes
- Set screws are metric for metric sizes
- Housing dimensions per ABMA standards

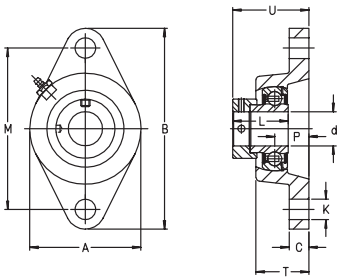

For details on part numbers, descriptive suffixes and various technical references, please refer to front of this section.
For engineering or technical information contact your local sales representative or call Distributor Sales (800)523-6572.

PART NUMBER	SHAFT d inch	SHAFT d inch	SHAFT d mm	A inch	A mm	B inch	B mm	C inch	C mm	K inch	K mm	L inch	L mm	M inch	M mm	WGT. lbs	WGT. kg
PCJT 12	-	0.472	12	2.244	57	3.898	99	0.394	10	0.453	11.5	1.126	28.6	3.012	76.5	0.882	0.4
PCJT 1/2	1/2	0.500	12.7	2.244	57	3.898	99	0.394	10	0.453	11.5	1.126	28.6	3.012	76.5	0.882	0.4
PCJT 15	-	0.591	15	2.244	57	3.898	99	0.394	10	0.453	11.5	1.126	28.6	3.012	76.5	0.882	0.4
PCJT 5/8	5/8	0.625	15.9	2.244	57	3.898	99	0.394	10	0.453	11.5	1.126	28.6	3.012	76.5	0.882	0.4
PCJT 17	-	0.669	17	2.244	57	3.898	99	0.394	10	0.453	11.5	1.126	28.6	3.012	76.5	0.882	0.4
PCJT 3/4	3/4	0.750	19.1	2.441	62	4.409	112	0.433	11	0.453	11.5	1.221	31	3.543	90	1.103	0.5
PCJT 20	-	0.787	20	2.402	61	4.409	112	0.394	10	0.453	11.5	1.221	31	3.543	90	1.103	0.5
PCJT 7/8	7/8	0.875	22.2	2.795	71	4.921	125	0.472	12	0.453	11.5	1.221	31	3.898	99	1.544	0.7
PCJT 25	-	0.984	25	2.756	70	4.882	124	0.433	11	0.453	11.5	1.221	31	3.898	99	1.544	0.7
PCJT 1	1	1.000	25.4	2.795	71	4.921	125	0.472	12	0.453	11.5	1.221	31	3.898	99	1.544	0.7
PCJT 1-1/16	1-1/16	1.063	26.9	3.169	80.5	5.591	142	0.512	13	0.453	11.5	1.406	35.7	4.587	116.5	2.205	1.0
PCJT 1-1/8	1-1/8	1.125	28.6	3.169	80.5	5.591	142	0.512	13	0.453	11.5	1.406	35.7	4.587	116.5	2.205	1.0
PCJT 30	-	1.181	30	3.150	80	5.591	142	0.472	12	0.453	11.5	1.406	35.7	4.587	116.5	2.205	1.0
PCJT 1-3/16	1-3/16	1.188	30.2	3.169	80.5	5.591	142	0.512	13	0.453	11.5	1.406	35.7	4.587	116.5	2.205	1.0
PCJT 1-1/4-206	1-1/4	1.250	31.8	3.169	80.5	5.591	142	0.512	13	0.453	11.5	1.406	35.7	4.587	116.5	2.205	1.0
PCJT 1-1/4	1-1/4	1.250	31.8	3.642	92.5	6.142	156	0.551	14	0.551	14	1.532	38.9	5.118	130	2.867	1.3
PCJT 1-3/8	1-3/8	1.375	34.9	3.642	92.5	6.142	156	0.551	14	0.551	14	1.532	38.9	5.118	130	2.867	1.3
PCJT 35	-	1.378	35	3.622	92	6.102	155	0.492	12.5	0.551	14	1.532	38.9	5.118	130	2.867	1.3
PCJT 1-7/16	1-7/16	1.438	36.5	3.642	92.5	6.142	156	0.551	14	0.551	14	1.532	38.9	5.118	130	2.867	1.3
PCJT 1-1/2	1-1/2	1.500	38.1	4.154	105.5	6.811	173	0.591	15	0.551	14	1.721	43.7	5.650	143.5	3.969	1.8
PCJT 40	-	1.575	40	4.134	105	6.772	172	0.512	13	0.551	14	1.721	43.7	5.650	143.5	3.969	1.8
PCJT 1-3/4	1-3/4	1.750	44.5	4.409	112	7.106	180.5	0.591	15	0.551	14	1.721	43.7	5.847	148.5	4.631	2.1
PCJT 45	-	1.772	45	4.409	112	7.106	180.5	0.512	13	0.551	14	1.721	43.7	5.847	148.5	4.631	2.1
PCJT 1-15/16	1-15/16	1.938	49.2	4.587	116.5	7.520	191	0.630	16	0.669	17	1.721	43.7	6.181	157	5.513	2.5
PCJT 50	-	1.969	50	4.567	116	7.480	190	0.512	13	0.709	18	1.721	43.7	6.181	157	5.513	2.5
PCJT 2	2	2.000	50.8	5.295	134.5	8.898	226	0.669	17	0.669	17	1.906	48.4	7.244	184	8.600	3.9
PCJT 55	-	2.165	55	5.295	134.5	8.898	226	0.669	17	0.669	17	1.906	48.4	7.244	184	8.600	3.9
PCJT 2-3/16	2-3/16	2.188	55.6	5.295	134.5	8.898	226	0.669	17	0.669	17	1.906	48.4	7.244	184	8.600	3.9
PCJT 60	-	2.362	60	5.433	138	9.370	238	0.630	16	0.709	18	2.091	53.1	7.953	202	9.482	4.3
PCJT 2-7/16	2-7/16	2.438	61.9	5.512	140	9.409	239	0.709	18	0.709	18	2.091	53.1	7.953	202	9.482	4.3

Oval Flanged Housings
PCJT SERIES

- Two bolt mounting
- Eccentric locking collar
- Economy P seals
- Inch and metric sizes
- Set screws are metric for metric sizes
- Housing dimensions per ABMA standards

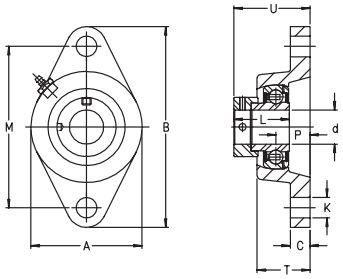

For details on part numbers, descriptive suffixes and various technical references, please refer to front of this section.
For engineering or technical information contact your local sales representative or call Distributor Sales (800)523-6572.

P inch	P mm	T inch	T mm	U inch	U mm	INSERT	HSG.	DYN. CAP. C lbf	DYN. CAP. C N	STAT. CAP. C_0 lbf	STAT. CAP. C_0 N	PART NUMBER
0.669	17	0.945	24	1.539	39.1	GRAE 12 NPPB	CJT 03	2150	9600	1070	4750	PCJT 12
0.669	17	0.945	24	1.539	39.1	GRA 008 NPPB	CJT 03	2150	9600	1070	4750	PCJT 1/2
0.669	17	0.945	24	1.539	39.1	GRAE 15 NPPB	CJT 03	2150	9600	1070	4750	PCJT 15
0.669	17	0.945	24	1.539	39.1	GRA 010 NPPB	CJT 03	2150	9600	1070	4750	PCJT 5/8
0.669	17	0.945	24	1.539	39.1	GRAE 17 NPPB	CJT 03	2150	9600	1070	4750	PCJT 17
0.748	19	1.161	29.5	1.673	42.5	GRA 012 NPPB	CJT 04	2900	12800	1480	6600	PCJT 3/4
0.748	19	1.102	28	1.673	42.5	GRAE 20 NPPB	CJT 04	2900	12800	1480	6600	PCJT 20
0.748	19	1.083	27.5	1.673	42.5	GRA 014 NPPB	CJT 05	3150	14000	1760	7800	PCJT 7/8
0.748	19	1.043	26.5	1.673	42.5	GRAE 25 NPPB	CJT 05	3150	14000	1760	7800	PCJT 25
0.748	19	1.083	27.5	1.673	42.5	GRA 100 NPPB	CJT 05	3150	14000	1760	7800	PCJT 1
0.787	20	1.280	32.5	1.839	46.7	GRA 101 NPPB	CJT 06	4350	19500	2550	11300	PCJT 1-1/16
0.787	20	1.280	32.5	1.839	46.7	GRA 102 NPPB	CJT 06	4350	19500	2550	11300	PCJT 1-1/8
0.787	20	1.142	29	1.839	46.7	GRAE 30 NPPB	CJT 06	4350	19500	2550	11300	PCJT 30
0.787	20	1.280	32.5	1.839	46.7	GRA 103 NPPB	CJT 06	4350	19500	2550	11300	PCJT 1-3/16
0.787	20	1.280	32.5	1.839	46.7	GRA 104 NPPB-206	CJT 06	4350	19500	2550	11300	PCJT 1-1/4-206
0.827	21	1.358	34.5	1.984	50.4	GRA 104 NPPB	CJT 07	5800	25500	3450	15300	PCJT 1-1/4
0.827	21	1.358	34.5	1.984	50.4	GRA 106 NPPB	CJT 07	5800	25500	3450	15300	PCJT 1-3/8
0.827	21	1.201	30.5	1.984	50.4	GRAE 35 NPPB	CJT 07	5800	25500	3450	15300	PCJT 35
0.827	21	1.358	34.5	1.984	50.4	GRA 107 NPPB	CJT 07	5800	25500	3450	15300	PCJT 1-7/16
0.945	24	1.496	38	2.232	56.7	GRA 108 NPPB	CJT 08	7300	32500	4450	19800	PCJT 1-1/2
0.945	24	1.358	34.5	2.232	56.7	GRAE 40 NPPB	CJT 08	7300	32500	4450	19800	PCJT 40
0.945	24	1.516	38.5	2.232	56.7	GRA 112 NPPB	CJT 09	7400	32500	4600	20400	PCJT 1-3/4
0.945	24	1.516	38.5	2.232	56.7	GRAE 45 NPPB	CJT 09	7400	32500	4600	20400	PCJT 45
1.102	28	1.693	43	2.390	60.7	GRA 115 NPPB	CJT 10	7900	35000	5200	23200	PCJT 1-15/16
1.102	28	1.535	39	2.390	60.7	GRAE 50 NPPB	CJT 10	7900	35000	5200	23200	PCJT 50
1.221	31	1.811	46	2.654	67.4	GRA 200 NPPB	CJT 11	9800	43500	6600	29000	PCJT 2
1.221	31	1.811	46	2.654	67.4	GRAE 55 NPPB	CJT 11	9800	43500	6600	29000	PCJT 55
1.221	31	1.811	46	2.654	67.4	GRA 203 NPPB	CJT 11	9800	43500	6600	29000	PCJT 2-3/16
1.339	34	1.949	50	2.898	73.6	GRAE 60 NPPB	CJT 12	11800	52000	8100	36000	PCJT 60
1.339	34	1.949	50	2.898	73.6	GRA 207 NPPB	CJT 12	11800	52000	8100	36000	PCJT 2-7/16

Oval Flanged Housings
PCJTY SERIES

- Two bolt mounting
- Set screw shaft locking
- Economy P seals
- Inch and metric sizes
- Set screws are metric for metric sizes
- Housing dimensions per ABMA standards

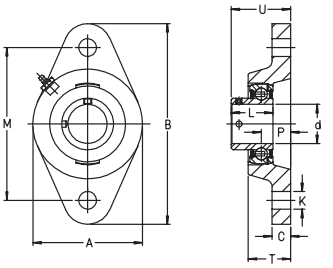

For details on part numbers, descriptive suffixes and various technical references, please refer to front of this section.
For engineering or technical information contact your local sales representative or call Distributor Sales (800)523-6572.

PART NUMBER	SHAFT d inch	SHAFT d inch	SHAFT d mm	A inch	A mm	B inch	B mm	C inch	C mm	K inch	K mm	L inch	L mm	M inch	M mm	WGT. lbs	WGT. kg
PCJTY 12	-	0.472	12	2.244	57	3.898	99	0.394	10	0.453	11.5	0.866	22	3.012	76.5	0.882	0.4
PCJTY 1/2	1/2	0.500	12.7	2.244	57	3.898	99	0.394	10	0.453	11.5	0.866	22	3.012	76.5	0.882	0.4
PCJTY 15	-	0.591	15	2.244	57	3.898	99	0.394	10	0.453	11.5	0.866	22	3.012	76.5	0.882	0.4
PCJTY 5/8	5/8	0.625	15.9	2.244	57	3.898	99	0.394	10	0.453	11.5	0.866	22	3.012	76.5	0.882	0.4
PCJTY 17	-	0.669	17	2.244	57	3.898	99	0.394	10	0.453	11.5	0.866	22	3.012	76.5	0.882	0.4
PCJTY 3/4	3/4	0.750	19.1	2.441	62	4.409	112	0.433	11	0.453	11.5	0.984	25	3.543	90	1.103	0.5
PCJTY 20	-	0.787	20	2.402	61	4.409	112	0.394	10	0.453	11.5	0.984	25	3.543	90	1.103	0.5
PCJTY 7/8	7/8	0.875	22.2	2.795	71	4.921	125	0.472	12	0.453	11.5	1.063	27	3.898	99	1.544	0.7
PCJTY 25	-	0.984	25	2.756	70	4.882	124	0.433	11	0.453	11.5	1.063	27	3.898	99	1.544	0.7
PCJTY 1	1	1.000	25.4	2.795	71	4.921	125	0.472	12	0.453	11.5	1.063	27	3.898	99	1.544	0.7
PCJTY 30	-	1.181	30	3.150	80	5.591	142	0.512	13	0.453	11.5	1.181	30	4.587	116.5	2.205	1.0
PCJTY 1-3/16	1-3/16	1.188	30.2	3.169	80.5	5.591	142	0.551	14	0.453	11.5	1.181	30	4.587	116.5	2.205	1.0
PCJTY 1-1/4	1-1/4	1.250	31.8	3.642	92.5	6.142	156	0.492	12.5	0.551	14	1.378	35	5.118	130	2.867	1.3
PCJTY 35	-	1.378	35	3.622	92	6.102	155	0.551	14	0.551	14	1.378	35	5.118	130	2.867	1.3
PCJTY 1-7/16	1-7/16	1.438	36.5	3.642	92.5	6.142	156	0.591	15	0.551	14	1.378	35	5.118	130	2.867	1.3
PCJTY 1-1/2	1-1/2	1.500	38.1	4.154	105.5	6.811	173	0.512	13	0.551	14	1.555	39.5	5.650	143.5	3.969	1.8
PCJTY 40	-	1.575	40	4.134	105	6.772	172	0.591	15	0.551	14	1.555	39.5	5.650	143.5	3.969	1.8
PCJTY 1-3/4	1-3/4	1.750	44.5	4.409	112	7.106	180.5	0.512	13	0.551	14	1.634	41.5	5.847	148.5	4.631	2.1
PCJTY 45	-	1.772	45	4.409	112	7.106	180.5	0.630	16	0.551	14	1.634	41.5	5.847	148.5	4.631	2.1
PCJTY 1-15/16	1-15/16	1.938	49.2	4.587	116.5	7.520	191	0.512	13	0.669	17	1.693	43	6.181	157	5.513	2.5
PCJTY 50	-	1.969	50	4.567	116	7.480	190	0.512	13	0.709	18	1.693	43	6.181	157	5.513	2.5

Oval Flanged Housings
PCJTY SERIES

- Two bolt mounting
- Set screw shaft locking
- Economy P seals
- Inch and metric sizes
- Set screws are metric for metric sizes
- Housing dimensions per ABMA standards

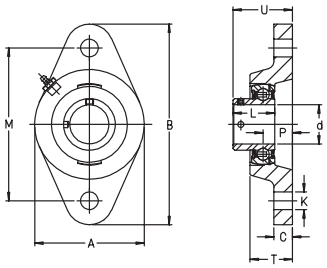

For details on part numbers, descriptive suffixes and various technical references, please refer to front of this section.
For engineering or technical information contact your local sales representative or call Distributor Sales (800)523-6572.

P inch	P mm	T inch	T mm	U inch	U mm	INSERT	HSG.	DYN. CAP. C lbf	DYN. CAP. C N	STAT. CAP. C_0 lbf	STAT. CAP. C_0 N	PART NUMBER
0.669	17	0.945	24	1.299	33	GAY12 NPPB	CJT 03	2150	9600	1070	4750	PCJTY 12
0.669	17	0.945	24	1.299	33	GAY008 NPPB	CJT 03	2150	9600	1070	4750	PCJTY 1/2
0.669	17	0.945	24	1.299	33	GAY15 NPPB	CJT 03	2150	9600	1070	4750	PCJTY 15
0.669	17	0.945	24	1.299	33	GAY010 NPPB	CJT 03	2150	9600	1070	4750	PCJTY 5/8
0.669	17	0.945	24	1.299	33	GAY17 NPPB	CJT 03	2150	9600	1070	4750	PCJTY 17
0.748	19	1.161	29.5	1.457	37	GAY012 NPPB	CJT 04	2900	12800	1480	6600	PCJTY 3/4
0.748	19	1.102	28	1.457	37	GAY20 NPPB	CJT 04	2900	12800	1480	6600	PCJTY 20
0.748	19	1.083	27.5	1.516	38.5	GAY014 NPPB	CJT 05	3150	14000	1760	7800	PCJTY 7/8
0.748	19	1.043	26.5	1.516	38.5	GAY25 NPPB	CJT 05	3150	14000	1760	7800	PCJTY 25
0.748	19	1.083	27.5	1.516	38.5	GAY100 NPPB	CJT 05	3150	14000	1760	7800	PCJTY 1
0.787	20	1.142	29	1.614	41	GAY30 NPPB	CJT 06	4350	19500	2550	11300	PCJTY 30
0.787	20	1.280	32.5	1.614	41	GAY103 NPPB	CJT 06	4350	19500	2550	11300	PCJTY 1-3/16
0.827	21	1.358	34.5	1.831	46.5	GAY104 NPPB	CJT 07	5800	25500	3450	15300	PCJTY 1-1/4
0.827	21	1.201	30.5	1.831	46.5	GAY35 NPPB	CJT 07	5800	25500	3450	15300	PCJTY 35
0.827	21	1.358	34.5	1.831	46.5	GAY107 NPPB	CJT 07	5800	25500	3450	15300	PCJTY 1-7/16
0.945	24	1.496	38	2.087	53	GAY108 NPPB	CJT 08	7300	32500	4450	19800	PCJTY 1-1/2
0.945	24	1.358	34.5	2.087	53	GAY40 NPPB	CJT 08	7300	32500	4450	19800	PCJTY 40
0.945	24	1.516	38.5	2.146	54.5	GAY112 NPPB	CJT 09	7400	32500	4600	20400	PCJTY 1-3/4
0.945	24	1.516	38.5	2.146	54.5	GAY45 NPPB	CJT 09	7400	32500	4600	20400	PCJTY 45
1.102	28	1.693	43	2.362	60	GAY115 NPPB	CJT 10	7900	35000	5200	23200	PCJTY 1-15/16
1.102	28	1.535	39	2.362	60	GAY50 NPPB	CJT 10	7900	35000	5200	23200	PCJTY 50

Oval Flanged Housings
RCJT SERIES

- Two bolt mounting
- Eccentric locking collar
- Standard R seals
- Inch and metric sizes
- Set screws are metric for metric sizes
- Housing dimensions per ABMA standards

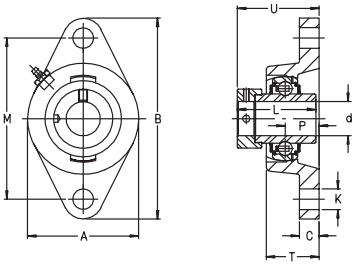

For details on part numbers, descriptive suffixes and various technical references, please refer to front of this section.
For engineering or technical information contact your local sales representative or call Distributor Sales (800)523-6572.

PART NUMBER	SHAFT d inch	SHAFT d inch	SHAFT d mm	A inch	A mm	B inch	B mm	C inch	C mm	K inch	K mm	L inch	L mm	M inch	M mm	WGT. lbs	WGT. kg
RCJT 1/2	1/2	0.500	12.7	2.244	57	3.898	99	0.394	10	0.453	11.5	1.469	37.3	3.012	76.5	0.882	0.4
RCJT 15	-	0.591	15	2.244	57	3.898	99	0.394	10	0.453	11.5	1.469	37.3	3.012	76.5	0.882	0.4
RCJT 5/8	5/8	0.625	15.9	2.244	57	3.898	99	0.394	10	0.453	11.5	1.469	37.3	3.012	76.5	0.882	0.4
RCJT 3/4	3/4	0.750	19.1	2.441	62	4.409	112	0.433	11	0.453	11.5	1.721	43.7	3.543	90	1.103	0.5
RCJT 20	-	0.787	20	2.402	61	4.409	112	0.394	10	0.453	11.5	1.721	43.7	3.543	90	1.103	0.5
RCJT 7/8	7/8	0.875	22.2	2.795	71	4.921	125	0.472	12	0.453	11.5	1.748	44.4	3.898	99	1.544	0.7
RCJT 15/16	15/16	0.938	23.8	2.795	71	4.921	125	0.472	12	0.453	11.5	1.748	44.4	3.898	99	1.544	0.7
RCJT 25	-	0.984	25	2.756	70	4.882	124	0.433	11	0.453	11.5	1.748	44.4	3.898	99	1.544	0.7
RCJT 1	1	1.000	25.4	2.795	71	4.921	125	0.472	12	0.453	11.5	1.748	44.4	3.898	99	1.544	0.7
RCJT 1-1/8	1-1/8	1.125	28.6	3.169	80.5	5.591	142	0.512	13	0.453	11.5	1.906	48.4	4.587	116.5	2.205	1
RCJT 30	-	1.181	30	3.150	80	5.591	142	0.472	12	0.453	11.5	1.906	48.4	4.587	116.5	2.205	1
RCJT 1-3/16	1-3/16	1.188	30.2	3.169	80.5	5.591	142	0.512	13	0.453	11.5	1.906	48.4	4.587	116.5	2.205	1
RCJT 1-1/4	1-1/4	1.250	31.8	3.642	92.5	6.142	156	0.551	14	0.551	14	2.012	51.1	5.118	130	2.867	1.3
RCJT 1-3/8	1-3/8	1.375	34.9	3.642	92.5	6.142	156	0.551	14	0.551	14	2.012	51.1	5.118	130	2.867	1.3
RCJT 35	-	1.378	35	3.622	92	6.102	155	0.492	12.5	0.551	14	2.012	51.1	5.118	130	2.867	1.3
RCJT 1-7/16	1-7/16	1.438	36.5	3.642	92.5	6.142	156	0.551	14	0.551	14	2.012	51.1	5.118	130	2.867	1.3
RCJT 1-1/2	1-1/2	1.500	38.1	4.154	105.5	6.811	173	0.591	15	0.551	14	2.217	56.3	5.650	143.5	3.969	1.8
RCJT 40	-	1.575	40	4.134	105	6.772	172	0.512	13	0.551	14	2.217	56.3	5.650	143.5	3.969	1.8
RCJT 1-5/8	1-5/8	1.625	41.3	4.409	112	7.106	180.5	0.591	15	0.551	14	2.217	56.3	5.847	148.5	4.631	2.1
RCJT 1-11/16	1-11/16	1.688	42.9	4.409	112	7.106	180.5	0.591	15	0.551	14	2.217	56.3	5.847	148.5	4.631	2.1
RCJT 1-3/4	1-3/4	1.750	44.5	4.409	112	7.106	180.5	0.591	15	0.551	14	2.217	56.3	5.847	148.5	4.631	2.1
RCJT 45	-	1.772	45	4.409	112	7.106	180.5	0.512	13	0.551	14	2.217	56.3	5.847	148.5	4.631	2.1
RCJT 1-15/16	1-15/16	1.938	49.2	4.587	116.5	7.520	191	0.630	16	0.669	17	2.469	62.7	6.181	157	5.513	2.5
RCJT 50	-	1.969	50	4.567	116	7.480	190	0.512	13	0.709	18	2.469	62.7	6.181	157	5.513	2.5
RCJT 2	2	2.000	50.8	5.295	134.5	8.898	226	0.669	17	0.669	17	2.811	71.4	7.244	184	8.600	3.9
RCJT 55	-	2.165	55	5.295	134.5	8.898	226	0.669	17	0.669	17	2.811	71.4	7.244	184	8.600	3.9
RCJT 2-3/16	2-3/16	2.188	55.6	5.295	134.5	8.898	226	0.669	17	0.669	17	2.811	71.4	7.244	184	8.600	3.9
RCJT 60	-	2.362	60	5.433	138	9.370	238	0.630	16	0.709	18	3.063	77.8	7.953	202	9.482	4.3
RCJT 2-7/16	2-7/16	2.438	61.9	5.512	140	9.409	239	0.709	18	0.709	18	3.063	77.8	7.953	202	9.482	4.3
RCJT 65	-	2.559	65	6.299	160	10.157	258	0.709	18	0.827	21	2.602	66.1	8.504	216	14.134	6.4
RCJT 70	-	2.756	70	6.299	160	10.157	258	0.709	18	0.827	21	2.602	66.1	8.504	216	13.561	6.2
RCJT 75	-	2.953	75	6.299	160	10.157	258	0.709	18	0.827	21	2.642	67.1	8.504	216	13.230	6

Oval Flanged Housings
RCJT SERIES

- Two bolt mounting
- Eccentric locking collar
- Standard R seals
- Inch and metric sizes
- Set screws are metric for metric sizes
- Housing dimensions per ABMA standards

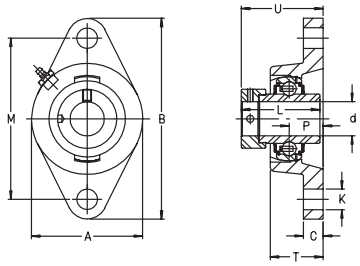

For details on part numbers, descriptive suffixes and various technical references, please refer to front of this section.
For engineering or technical information contact your local sales representative or call Distributor Sales (800)523-6572.

P inch	P mm	T inch	T mm	U inch	U mm	INSERT	HSG.	DYN. CAP. C lbf	DYN. CAP. C N	STAT. CAP. C_0 lbf	STAT. CAP. C_0 N	PART NUMBER
0.669	17	0.945	24	1.591	40.4	G1008 KRRB	CJT 03	2150	9600	1070	4750	RCJT 1/2
0.669	17	0.945	24	1.591	40.4	GE15 KRRB	CJT 03	2150	9600	1070	4750	RCJT 15
0.669	17	0.945	24	1.591	40.4	G1010 KRRB	CJT 03	2150	9600	1070	4750	RCJT 5/8
0.748	19	1.161	29.5	1.795	45.6	G1012 KRRB	CJT 04	2900	12800	1480	6600	RCJT 3/4
0.748	19	1.161	29.5	1.795	45.6	GE20 KRRB	CJT 04	2900	12800	1480	6600	RCJT 20
0.748	19	1.083	27.5	1.807	45.9	G1014 KRRB	CJT 05	3150	14000	1760	7800	RCJT 7/8
0.748	19	1.083	27.5	1.807	45.9	G1015KRRB	CJT 05	3150	14000	1760	7800	RCJT 15/16
0.748	19	1.043	26.5	1.807	45.9	GE25 KRRB	CJT 05	3150	14000	1760	7800	RCJT 25
0.748	19	1.083	27.5	1.807	45.9	G1100 KRRB	CJT 05	3150	14000	1760	7800	RCJT 1
0.787	20	1.280	32.5	1.972	50.1	G1102 KRRB	CJT 06	4350	19500	2550	11300	RCJT 1-1/8
0.787	20	1.142	29	1.972	50.1	GE30 KRRB	CJT 06	4350	19500	2550	11300	RCJT 30
0.787	20	1.280	32.5	1.972	50.1	G1103 KRRB	CJT 06	4350	19500	2550	11300	RCJT 1-3/16
0.827	21	1.358	34.5	2.098	53.3	G1104 KRRB	CJT 07	5800	25500	3450	15300	RCJT 1-1/4
0.827	21	1.358	34.5	2.098	53.3	G1106 KRRB	CJT 07	5800	25500	3450	15300	RCJT 1-3/8
0.827	21	1.201	30.5	2.098	53.3	GE35 KRRB	CJT 07	5800	25500	3450	15300	RCJT 35
0.827	21	1.358	34.5	2.098	53.3	G1107 KRRB	CJT 07	5800	25500	3450	15300	RCJT 1-7/16
0.945	24	1.496	38	2.319	58.9	G1108 KRRB	CJT 08	7300	32500	4450	19800	RCJT 1-1/2
0.945	24	1.358	34.5	2.319	58.9	GE40 KRRB	CJT 08	7300	32500	4450	19800	RCJT 40
0.945	24	1.516	38.5	2.319	58.9	G1110KRRB	CJT 09	7400	32500	4600	20400	RCJT 1-5/8
0.945	24	1.516	38.5	2.319	58.9	G1111KRRB	CJT 09	7400	32500	4600	20400	RCJT 1-11/16
0.945	24	1.516	38.5	2.319	58.9	G1112 KRRB	CJT 09	7400	32500	4600	20400	RCJT 1-3/4
0.945	24	1.516	38.5	2.319	58.9	GE45 KRRB	CJT 09	7400	32500	4600	20400	RCJT 45
1.102	28	1.693	43	2.602	66.1	G1115 KRRB	CJT 10	7900	35000	5200	23200	RCJT 1-15/16
1.102	28	1.693	43	2.602	66.1	GE50 KRRB	CJT 10	7900	35000	5200	23200	RCJT 50
1.221	31	1.535	39	2.937	74.6	G1200 KRRB	CJT 11	9800	43500	6600	29000	RCJT 2
1.221	31	1.811	46	2.937	74.6	GE55 KRRB	CJT 11	9800	43500	6600	29000	RCJT 55
1.221	31	1.811	46	2.937	74.6	G1203 KRRB	CJT 11	9800	43500	6600	29000	RCJT 2-3/16
1.339	34	1.949	49.5	3.181	80.8	GE60 KRRB	CJT 12	11800	52000	8100	36000	RCJT 60
1.339	34	1.949	49.5	3.181	80.8	G1207 KRRB	CJT 12	11800	52000	8100	36000	RCJT 2-7/16
1.496	38	1.811	46	3.252	82.6	GE65 KRRB	CJT 13/14	14000	62000	9900	44000	RCJT 65
1.496	38	2.244	57	3.252	82.6	GE70 KRRB	CJT 13/14	14000	62000	9900	44000	RCJT 70
1.496	38	2.244	57	3.291	83.6	GE75 KRRB	CJT 15	14000	62000	10100	44500	RCJT 75

Oval Flanged Housings
RCJTY SERIES

- Two bolt mounting
- Set screw shaft locking
- Standard R seals
- Inch and metric sizes
- Set screws are metric for metric sizes
- Housing dimensions per ABMA standards

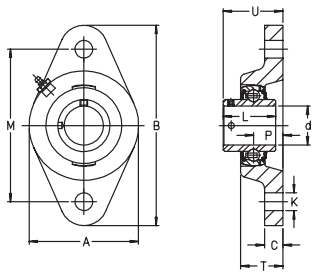

For details on part numbers, descriptive suffixes and various technical references, please refer to front of this section.
For engineering or technical information contact your local sales representative or call Distributor Sales (800)523-6572.

PART NUMBER	SHAFT d inch	SHAFT d inch	SHAFT d mm	A inch	A mm	B inch	B mm	C inch	C mm	K inch	K mm	L inch	L mm	M inch	M mm	WGT. lbs	WGT. kg
RCJTY 1/2	1/2	0.500	12.7	2.244	57	3.898	99	0.394	10	0.453	11.5	1.079	27.4	3.012	76.5	0.882	0.4
RCJTY 15	-	0.591	15	2.244	57	3.898	99	0.394	10	0.453	11.5	1.079	27.4	3.012	76.5	0.882	0.4
RCJTY 5/8	5/8	0.625	15.9	2.244	57	3.898	99	0.394	10	0.453	11.5	1.079	27.4	3.012	76.5	0.882	0.4
RCJTY 17	-	0.669	17	2.244	57	3.898	99	0.394	10	0.453	11.5	1.079	27.4	3.012	76.5	0.882	0.4
RCJTY 3/4	3/4	0.750	19.1	2.244	57	4.409	112	0.433	11	0.453	11.5	1.221	31	3.543	90	1.103	0.5
RCJTY 20	-	0.787	20	2.441	62	4.409	112	0.394	10	0.453	11.5	1.221	31	3.543	90	1.103	0.5
RCJTY 7/8	7/8	0.875	22.2	2.402	61	4.921	125	0.472	12	0.453	11.5	1.343	34.1	3.898	99	1.544	0.7
RCJTY 15/16	15/16	0.938	23.8	2.795	71	4.921	125	0.472	12	0.453	11.5	1.343	34.1	3.898	99	1.544	0.7
RCJTY 25	-	0.984	25	2.795	71	4.882	124	0.433	11	0.453	11.5	1.343	34.1	3.898	99	1.544	0.7
RCJTY 1	1	1.000	25.4	2.795	71	4.921	125	0.472	12	0.453	11.5	1.343	34.1	3.898	99	1.544	0.7
RCJTY 1-1/8	1-1/8	1.125	28.6	3.169	80.5	5.591	142	0.512	13	0.453	11.5	1.500	38.1	4.587	116.5	2.205	1.0
RCJTY 30	-	1.181	30	3.150	80	5.591	142	0.472	12	0.453	11.5	1.500	38.1	4.587	116.5	2.205	1.0
RCJTY 1-3/16	1-3/16	1.188	30.2	3.169	80.5	5.591	142	0.512	13	0.453	11.5	1.500	38.1	4.587	116.5	2.205	1.0
RCJTY 1-1/4-206	1-1/4	1.250	31.8	3.169	80.5	5.591	142	0.512	13	0.453	11.5	1.500	38.1	4.587	116.5	2.205	1.0
RCJTY 1-1/4	1-1/4	1.250	31.8	3.642	92.5	6.142	156	0.551	14	0.551	14	1.689	42.9	5.118	130	2.867	1.3
RCJTY 1-3/8	1-3/8	1.375	34.9	3.642	92.5	6.142	156	0.551	14	0.551	14	1.689	42.9	5.118	130	2.867	1.3
RCJTY 35	-	1.378	35	3.622	92	6.102	155	0.492	12.5	0.551	14	1.689	42.9	5.118	130	2.867	1.3
RCJTY 1-7/16	1-7/16	1.438	36.5	3.622	92	6.142	156	0.551	14	0.551	14	1.689	42.9	5.118	130	2.867	1.3
RCJTY 1-1/2	1-1/2	1.500	38.1	3.642	92.5	6.811	173	0.591	15	0.551	14	1.937	49.2	5.650	143.5	3.969	1.8
RCJTY 40	-	1.575	40	4.154	105.5	6.772	172	0.512	13	0.551	14	1.937	49.2	5.650	143.5	3.969	1.8
RCJTY 1-5/8	1-5/8	1.625	41.3	4.134	105	7.106	180.5	0.591	15	0.551	14	1.937	49.2	5.847	148.5	4.631	2.1
RCJTY 1-11/16	1-11/16	1.688	42.9	4.409	112	7.106	180.5	0.591	15	0.551	14	1.937	49.2	5.847	148.5	4.631	2.1
RCJTY 1-3/4	1-3/4	1.750	44.5	4.409	112	7.106	180.5	0.591	15	0.551	14	1.937	49.2	5.847	148.5	4.631	2.1
RCJTY 45	-	1.772	45	4.409	112	7.106	180.5	0.512	13	0.551	14	1.937	49.2	5.847	148.5	4.631	2.1
RCJTY 1-15/16	1-15/16	1.938	49.2	4.409	112	7.520	191	0.630	16	0.669	17	2.032	51.6	6.181	157	5.513	2.5
RCJTY 50	-	1.969	50	4.587	116.5	7.480	190	0.512	13	0.709	18	2.032	51.6	6.181	157	5.513	2.5
RCJTY 2	2	2.000	50.8	4.567	116	8.898	226	0.669	17	0.669	17	2.189	55.6	7.244	184	8.600	3.9
RCJTY 55		2.165	55	5.295	134.5	8.898	226	0.669	17	0.669	17	2.189	55.6	7.244	184	8.600	3.9
RCJTY 2-3/16	2-3/16	2.188	55.6	5.295	134.5	8.898	226	0.669	17	0.669	17	2.189	55.6	7.244	184	8.600	3.9
RCJTY 60	-	2.362	60	5.433	138	9.370	238	0.630	16	0.709	18	2.563	65.1	7.953	202	9.482	4.3
RCJTY 2-7/16	2-7/16	2.438	61.9	5.512	140	9.409	239	0.709	18	0.709	18	2.563	65.1	7.953	202	9.482	4.3
RCJTY 65		2.559	65	6.299	160	10.157	258	0.709	18	0.827	21	2.937	74.6	8.504	216	13.120	6.0
RCJTY 70		2.756	70	6.299	160	10.157	258	0.709	18	0.827	21	2.937	74.6	8.504	216	12.460	5.7
RCJTY 75		2.953	75	6.299	160	10.157	258	0.709	18	0.827	21	3.063	77.8	8.504	216	12.210	5.5

Oval Flanged Housings
RCJTY SERIES

- Two bolt mounting
- Set screw shaft locking
- Standard R seals
- Inch and metric sizes
- Set screws are metric for metric sizes
- Housing dimensions per ABMA standards

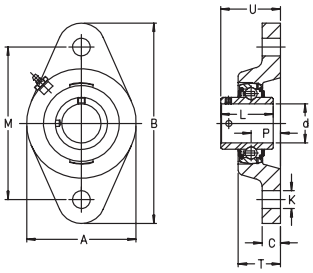

For details on part numbers, descriptive suffixes and various technical references, please refer to front of this section.
For engineering or technical information contact your local sales representative or call Distributor Sales (800)523-6572.

P inch	P mm	T inch	T mm	U inch	U mm	INSERT	HSG.	DYN. CAP. C lbf	DYN. CAP. C N	STAT. CAP. C_0 lbf	STAT. CAP. C_0 N	PART NUMBER
0.669	17	0.945	24	1.295	32.9	GY1008 KRRB	CJT 03	2150	9600	1070	4750	RCJTY 1/2
0.669	17	0.945	24	1.295	32.9	GYE15 KRRB	CJT 03	2150	9600	1070	4750	RCJTY 15
0.669	17	0.945	24	1.295	32.9	GY1010 KRRB	CJT 03	2150	9600	1070	4750	RCJTY 5/8
0.669	17	0.945	24	1.295	32.9	GYE17 KRRB	CJT 03	2150	9600	1070	4750	RCJTY 17
0.748	19	1.161	29.5	1.469	37.3	GY1012 KRRB	CJT 04	2900	12800	1480	6600	RCJTY 3/4
0.748	19	1.102	28	1.469	37.3	GYE20 KRRB	CJT 04	2900	12800	1480	6600	RCJTY 20
0.748	19	1.083	27.5	1.528	38.8	GY1014 KRRB	CJT 05	3150	14000	1760	7800	RCJTY 7/8
0.748	19	1.083	27.5	1.528	38.8	GY1015 KRRB	CJT 05	3150	14000	1760	7800	RCJTY 15/16
0.748	19	1.043	26.5	1.528	38.8	GYE25 KRRB	CJT 05	3150	14000	1760	7800	RCJTY 25
0.748	19	1.083	27.5	1.528	38.8	GY1100 KRRB	CJT 05	3150	14000	1760	7800	RCJTY 1
0.787	20	1.280	32.5	1.661	42.2	GY1102 KRRB	CJT 06	4350	19500	2550	11300	RCJTY 1-1/8
0.787	20	1.142	29	1.661	42.2	GYE30 KRRB	CJT 06	4350	19500	2550	11300	RCJTY 30
0.787	20	1.280	32.5	1.661	42.2	GY1103 KRRB	CJT 06	4350	19500	2550	11300	RCJTY 1-3/16
0.787	20	1.280	32.5	1.661	42.2	GY1104 KRRB-206	CJT 06	4350	19500	2550	11300	RCJTY 1-1/4-206
0.827	21	1.358	34.5	1.827	46.4	GY1104 KRRB	CJT 07	5800	25500	3450	15300	RCJTY 1-1/4
0.827	21	1.358	34.5	1.827	46.4	GY1106 KRRB	CJT 07	5800	25500	3450	15300	RCJTY 1-3/8
0.827	21	1.201	31	1.827	46.4	GYE35 KRRB	CJT 07	5800	25500	3450	15300	RCJTY 35
0.827	21	1.358	34.5	1.827	46.4	GY1107 KRRB	CJT 07	5800	25500	3450	15300	RCJTY 1-7/16
0.945	24	1.496	38	2.134	54.2	GY1108 KRRB	CJT 08	7300	32500	4450	19800	RCJTY 1-1/2
0.945	24	1.358	34.5	2.134	54.2	GYE40 KRRB	CJT 08	7300	32500	4450	19800	RCJTY 40
0.945	24	1.516	38.5	2.134	54.2	GY1110 KRRB	CJT 09	7400	32500	4600	20400	RCJTY 1-5/8
0.945	24	1.516	38.5	2.134	54.2	GY1111 KRRB	CJT 09	7400	32500	4600	20400	RCJTY 1-11/16
0.945	24	1.516	38.5	2.134	54.2	GY1112 KRRB	CJT 09	7400	32500	4600	20400	RCJTY 1-3/4
0.945	24	1.516	38.5	2.134	54.2	GYE45 KRRB	CJT 09	7400	32500	4600	20400	RCJTY 45
1.102	28	1.693	43	2.386	60.6	GY1115 KRRB	CJT 10	7900	35000	5200	23200	RCJTY 1-15/16
1.102	28	1.535	39	2.386	60.6	GYE50 KRRB	CJT 10	7900	35000	5200	23200	RCJTY 50
1.221	31	1.811	46	2.535	64.4	GY1200 KRRB	CJT 11	9800	43500	6600	29000	RCJTY 2
1.221	31	1.811	46	2.535	64.4	GYE55 KRRB	CJT 11	9800	43500	6600	29000	RCJTY 60
1.221	31	1.811	46	2.535	64.4	GY1203 KRRB	CJT 11	9800	43500	6600	29000	RCJTY 2-3/16
1.339	34	1.949	49.5	2.902	73.7	GYE60 KRRB	CJT 12	11800	52000	8100	36000	RCJTY 60
1.339	34	1.949	49.5	2.902	73.7	GY1207 KRRB	CJT 12	11800	52000	8100	36000	RCJTY 2-7/16
1.496	38	2.244	57	3.244	82.4	GYE65 KRRB	CJT 13/14	14000	62000	9900	44000	RCJTY 65
1.496	38	2.244	57	3.244	82.4	GYE70 KRRB	CJT 13/14	14000	62000	9900	44000	RCJTY 70
1.496	38	2.244	57	3.244	82.4	GYE75 KRRB	CJT 15	14000	62000	10100	44500	RCJTY 75

Oval Flanged Housings
TCJT SERIES

- Two bolt mounting
- Metric series
- Eccentric locking collar
- Tri-ply P3 seals
- Inner ring extended on both sides

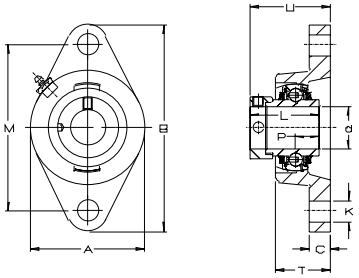

For details on part numbers, descriptive suffixes and various technical references, please refer to front of this section.
For engineering or technical information contact your local sales representative or call Distributor Sales (800)523-6572.

PART NUMBER	SHAFT d inch	SHAFT d inch	SHAFT d mm	A inch	A mm	B inch	B mm	C inch	C mm	K inch	K mm	L inch	L mm	M inch	M mm	WGT. lbs	WGT. kg
TCJT 20	-	0.787	20	2.402	61	4.409	112	0.394	10	0.453	11.5	1.721	43.7	3.543	90	1.103	0.5
TCJT 25	-	0.984	25	2.756	70	4.882	124	0.433	11	0.453	11.5	1.748	44.4	3.898	99	1.544	0.7
TCJT 30	-	1.181	30	3.150	80	5.591	142	0.472	12	0.453	11.5	1.906	48.4	4.587	116.5	2.205	1
TCJT 35	-	1.378	35	3.622	92	6.102	155	0.492	12.5	0.551	14	2.012	51.1	5.118	130	2.867	1.3
TCJT 40	-	1.575	40	4.134	105	6.772	172	0.512	13	0.551	14	2.217	56.3	5.650	143.5	3.969	1.8
TCJT 45	-	1.772	45	4.409	112	7.106	180.5	0.512	13	0.551	14	2.217	56.3	5.847	148.5	4.631	2.1
TCJT 50	-	1.969	50	4.567	116	7.480	190	0.512	13	0.709	18	2.469	62.7	6.181	157	5.513	2.5
TCJT 55	-	2.165	55	5.295	134.5	8.898	226	0.669	17	0.669	17	2.811	71.4	7.244	184	8.600	3.9
TCJT 60	-	2.362	60	5.433	138	9.370	238	0.630	16	0.709	18	3.063	77.8	7.953	202	9.482	4.3
TCJT 65	-	2.559	65	6.299	160	10.157	258	0.709	18	0.827	21	2.602	66.1	8.504	216	14.134	6.4
TCJT 70	-	2.756	70	6.299	160	10.157	258	0.709	18	0.827	21	2.602	66.1	8.504	216	13.561	6.2
TCJT 75	-	2.953	75	6.299	160	10.157	258	0.709	18	0.827	21	2.642	67.1	8.504	216	13.230	6

CONTINUED FROM ABOVE

PART NUMBER	P inch	P mm	T inch	T mm	U inch	U mm	INSERT	HSG.	DYN. CAP. C lbf	DYN. CAP. C N	STAT. CAP. C_0 lbf	STAT. CAP. C_0 N
TCJT 20	0.748	19	1.102	28	1.795	45.6	GE20 KPPB-3	CJT 04	2900	12800	1480	6600
TCJT 25	0.748	19	1.043	26.5	1.807	45.9	GE25 KPPB-3	CJT 05	3150	14000	1760	7800
TCJT 30	0.787	20	1.142	29	1.972	50.1	GE30 KPPB-3	CJT 06	4350	19500	2550	11300
TCJT 35	0.827	21	1.201	30.5	2.098	53.3	GE35 KPPB-3	CJT 07	5800	25500	3450	15300
TCJT 40	0.945	24	1.358	34.5	2.319	58.9	GE40 KPPB-3	CJT 08	7300	32500	4450	19800
TCJT 45	0.945	24	1.516	38.5	2.319	58.9	GE45 KPPB-3	CJT 09	7400	32500	4600	20400
TCJT 50	1.102	28	1.535	39	2.602	66.1	GE50 KPPB-3	CJT 10	7900	35000	5200	23200
TCJT 55	1.221	31	1.811	46	2.937	74.6	GE55 KPPB-3	CJT 11	9800	43500	6600	29000
TCJT 60	1.339	34	1.949	49.5	3.181	80.8	GE60 KPPB-3	CJT 12	11800	52000	8100	36000
TCJT 65	1.496	38	2.244	57	3.252	82.6	GE65 KPPB-3	CJT 13/14	14000	62000	9900	44000
TCJT 70	1.496	38	2.244	57	3.252	82.6	GE70 KPPB-3	CJT 13/14	14000	62000	9900	44000
TCJT 75	1.496	38	2.244	57	3.291	83.6	GE75 KPPB-3	CJT 15	14000	62000	10100	44500

Oval Flanged Housed Bearing Units

LCJT SERIES

- Two bolt flanged mounting
- Cast iron housing
- Eccentric locking collar
- Labyrinth type L seal

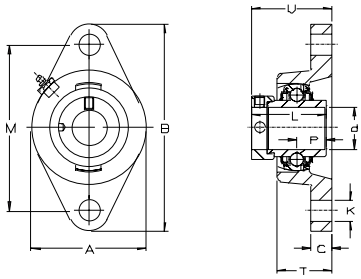

For details on part numbers, descriptive suffixes and various technical references, please refer to front of this section.
For engineering or technical information contact your local sales representative or call Distributor Sales (800)523-6572.

PART NUMBER	SHAFT d inch	SHAFT d inch	SHAFT d mm	A inch	A mm	B inch	B mm	C inch	C mm	K inch	K mm	L inch	L mm	M inch	M mm	WGT. lbs	WGT. kg
LCJT 20	-	0.787	20	2.441	62	4.409	112	0.394	10	0.453	11.5	1.721	43.7	3.543	90	1.103	0.5
LCJT 25	-	0.984	25	2.795	71	4.882	124	0.433	11	0.453	11.5	1.748	44.4	3.898	99	1.544	0.7
LCJT 30	-	1.181	30	3.150	80	5.591	142	0.472	12	0.453	11.5	1.906	48.4	4.587	116.5	2.205	1
LCJT 35	-	1.378	35	3.622	92	6.142	156	0.492	12.5	0.551	14	2.012	51.1	5.118	130	2.867	1.3
LCJT 40	-	1.575	40	4.134	105	6.772	172	0.512	13	0.551	14	2.217	56.3	5.65	143.5	3.969	1.8
LCJT 45	-	1.772	45	4.409	112	7.106	180.5	0.512	13	0.551	14	2.217	56.3	5.847	148.5	4.631	2.1
LCJT 50	-	1.969	50	4.567	116	7.520	191	0.512	13	0.709	18	2.469	62.7	6.181	157	5.513	2.5

CONTINUED FROM ABOVE

PART NUMBER	P inch	P mm	T inch	T mm	U inch	U mm	INSERT	HSG.	DYN. CAP. C lbf	DYN. CAP. C N	STAT. CAP. C_0 lbf	STAT. CAP. C_0 N
LCJT 20	0.748	19	1.102	28	1.795	45.6	GE20 KLLHB	CJT 04	2900	12800	1480	6600
LCJT 25	0.748	19	1.043	26.5	1.807	45.9	GE25 KLLHB	CJT 05	3150	14000	1760	7800
LCJT 30	0.787	20	1.142	29	1.972	50.1	GE30 KLLHB	CJT 06	4350	19500	2550	11300
LCJT 35	0.827	21	1.201	30.5	2.098	53.3	GE35 KLLHB	CJT 07	5800	25500	3450	15300
LCJT 40	0.945	24	1.358	34.5	2.319	58.9	GE40 KLLHB	CJT 08	7300	32500	4450	19800
LCJT 45	0.945	24	1.516	38.5	2.319	58.9	GE45 KLLHB	CJT 09	7400	32500	4600	20400
LCJT 50	1.102	28	1.535	39	2.602	66.1	GE50 KLLHB	CJT 10	7900	35000	5200	23200

Oval Flanged Housings
RCJTL SERIES

- Two bolt mounting
- Metric series
- Non-locating bearing
- R seals
- Radial internal clearance C4

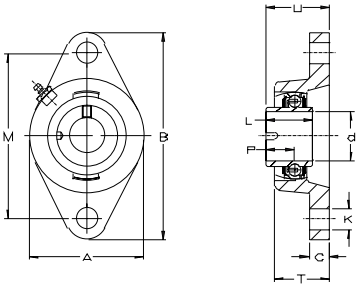

For details on part numbers, descriptive suffixes and various technical references, please refer to front of this section.
For engineering or technical information contact your local sales representative or call Distributor Sales (800)523-6572.

PART NUMBER	SHAFT d inch	SHAFT d inch	SHAFT d mm	A inch	A mm	B inch	B mm	C inch	C mm	K inch	K mm	L inch	L mm	M inch	M mm	WGT. lbs	WGT. kg
RCJTL 30	-	1.181	30	3.169	80.5	5.591	142	0.512	13	0.453	11.5	1.437	36.5	4.587	116.5	2.205	1.0
RCJTL 35	-	1.378	35	3.642	92.5	6.142	156	0.551	14	0.551	14	1.484	37.7	5.118	130	2.867	1.3
RCJTL 40	-	1.575	40	4.154	105.5	6.811	173	0.591	15	0.551	14	1.689	42.9	5.650	143.5	3.969	1.8
RCJTL 45	-	1.772	45	4.409	112	7.106	180.5	0.591	15	0.551	14	1.689	42.9	5.847	148.5	4.631	2.1
RCJTL 50	-	1.969	50	4.587	116.5	7.520	191	0.630	16	0.669	17	1.937	49.2	6.181	157	5.513	2.5
RCJTL 60	-	2.362	60	5.512	140	9.409	239	0.709	18	0.709	18	2.437	61.9	7.953	202	9.482	4.3
RCJTL 70	-	2.756	70	6.299	160	10.157	258	0.709	18	0.827	21	2.685	68.2	8.504	216	13.561	6.2

CONTINUED FROM ABOVE

PART NUMBER	P inch	P mm	T inch	T mm	U inch	U mm	INSERT	HSG.	DYN. CAP. C lbf	DYN. CAP. C N	STAT. CAP. C_0 lbf	STAT. CAP. C_0 N
RCJTL 30	0.787	20	1.280	32.5	1.732	44	GLE30 KRRB	CJT 06	4350	19500	2550	11300
RCJTL 35	0.827	21	1.358	34.5	1.693	43	GLE35 KRRB	CJT 07	5800	25500	3450	15300
RCJTL 40	0.945	24	1.496	38	2.008	51	GLE40 KRRB	CJT 08	7300	32500	4450	19800
RCJTL 45	0.945	24	1.516	38.5	1.949	49.5	GLE45 KRRB	CJT 09	7400	32500	4600	20400
RCJTL 50	1.102	28	1.693	43	2.291	58.2	GLE50 KRRB	CJT 10	7900	35000	5200	23200
RCJTL 60	1.339	34	1.949	49.5	2.807	71.3	GLE60 KRRB	CJT 12	11800	52000	8100	36000
RCJTL 70	1.496	38	2.244	57	3.118	79.2	GLE70 KRRB	CJT 13/14	14000	62000	9900	44000

Housing Units
FLCTE, GLCTE SERIES

- Metric
- Two bolt flange
- FL, Greased for life
- GL, Relubricable

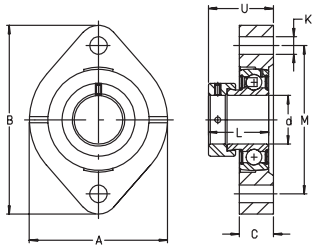

For details on part numbers, descriptive suffixes and various technical references, please refer to front of this section.
For engineering or technical information contact your local sales representative or call Distributor Sales (800)523-6572.

PART NUMBER	SHAFT inch	SHAFT mm	A inch	A mm	B inch	B mm	C inch	C mm	K inch	K mm
FLCTE30	1.181	30	3.307	84	4.429	112.5	0.807	20.5	0.453	11.5
FLCTE35	1.378	35	3.701	94	4.961	126	0.866	22	0.453	11.5
FLCTE40	1.575	40	3.937	100	5.906	150	0.945	24	0.551	14
GLCTE30	1.181	30	3.307	84	4.429	112.5	0.807	20.5	0.453	11.5
GLCTE35	1.378	35	3.701	94	4.961	126	0.866	22	0.453	11.5
GLCTE40	1.575	40	3.937	100	5.906	150	0.945	24	0.551	14

CONTINUED FROM ABOVE

PART NUMBER	L inch	L mm	M inch	M mm	U inch	U mm	WGT. lbs	WGT. kg	HOUSING.	INSERT
FLCTE30	1.406	35.7	3.563	90.5	1.500	38.1	1.676	0.76	LCTE06	RAE30NPPB
FLCTE35	1.532	38.9	3.937	100	1.646	41.8	2.249	1.02	LCTE07	RAE35NPPB
FLCTE40	1.721	43.7	4.685	119	1.819	46.2	2.800	1.27	LCTE08	RAE40NPPB
GLCTE30	1.406	35.7	3.563	90.5	1.500	38.1	1.676	0.76	GLCTE06	GRAE30NPPB
GLCTE35	1.532	38.9	3.937	100	1.646	41.8	2.249	1.02	GLCTE07	GRAE35NPPB
GLCTE40	1.721	43.7	4.685	119	1.819	46.2	2.800	1.27	GLCTE08	GRAE40NPPB

Housing Units
PCJTZ SERIES

- Metric series
- 2 bolt flange
- Housing pilot
- Economy seal
- Eccentric locking collar

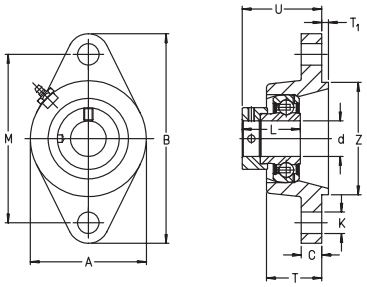

For details on part numbers, descriptive suffixes and various technical references, please refer to front of this section.
For engineering or technical information contact your local sales representative or call Distributor Sales (800)523-6572.

PART NUMBER	SHAFT d inch	SHAFT d mm	A inch	A mm	B inch	B mm	C inch	C mm	K inch	K mm	L inch	L mm	M inch	M mm	T inch	T mm
PCJTZ20	0.787	20	2.402	61	4.409	112	0.394	10	0.453	11.5	1.221	31	3.543	90	1.102	28
PCJTZ25	0.984	25	2.756	70	4.882	124	0.433	11	0.453	11.5	1.221	31	3.898	99	1.043	26.5
PCJTZ30	1.181	30	3.150	80	5.591	142	0.472	12	0.453	11.5	1.406	35.7	4.587	116.5	1.024	26
PCJTZ35	1.378	35	3.622	92	6.102	155	0.492	12.5	0.551	14.0	1.532	38.9	5.118	130	1.043	26.5
PCJTZ40	1.575	40	4.134	105	6.772	172	0.512	13	0.551	14.0	1.721	43.7	5.650	143.5	1.201	30.5
PCJTZ45	1.772	45	4.370	111	7.087	180	0.512	13	0.551	14.0	1.721	43.7	5.847	148.5	1.221	31
PCJTZ50	1.969	50	4.567	116	7.480	190	0.512	13	0.709	18.0	1.721	43.7	6.181	157	1.378	35

CONTINUED FROM ABOVE

PART NUMBER	T_1 inch	T_1 mm	U inch	U mm	Z inch	Z mm	DYN. CAP. C lbf	DYN. CAP. C N	STAT. CAP. C_0 lbf	STAT. CAP. C_0 N	WEIGHT lbs	WEIGHT kg	HOUSING	INSERT
PCJTZ20	0.138	3.5	1.673	42.5	2.165	55	2,900	12800	1,480	6600	1.080	0.490	CJTZ04	GRAE20NPPB
PCJTZ25	0.138	3.5	1.673	42.5	2.362	60	3,150	14000	1,750	7800	1.279	0.580	CJTZ05	GRAE25NPPB
PCJTZ30	0.118	3	1.937	49.2	3.150	80	4,400	19500	2,550	11300	1.830	0.830	CJTZ06	GRAE30NPPB
PCJTZ35	0.158	4	1.984	50.4	3.543	90	5,750	25500	3,450	15300	2.536	1.150	CJTZ07	GRAE35NPPB
PCJTZ40	0.158	4	2.232	56.7	3.937	100	7,300	32500	4,450	19800	3.462	1.570	CJTZ08	GRAE40NPPB
PCJTZ45	0.158	4	2.232	56.7	4.134	105	7,300	32500	4,600	20400	3.837	1.740	CJTZ09	GRAE45NPPB
PCJTZ50	0.158	4	2.390	60.7	4.134	105	7,850	35000	5,200	23200	4.366	1.980	CJTZ10	GRAE50NPPB

Housing Units
PCJTZY SERIES

- Metric series
- 2 bolt flange
- Housing pilot
- Economy seals
- Set screw locking

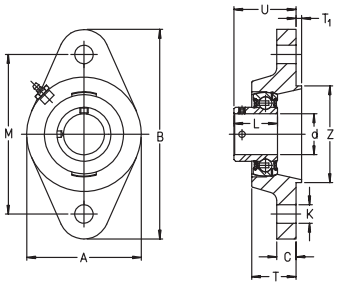

For details on part numbers, descriptive suffixes and various technical references, please refer to front of this section.
For engineering or technical information contact your local sales representative or call Distributor Sales (800)523-6572.

PART NUMBER	SHAFT d inch	SHAFT d mm	A inch	A mm	B inch	B mm	C inch	C mm	K inch	K mm	L inch	L mm	M inch	M mm	T inch	T mm
PCJTZY20	0.787	20	2.402	61	4.409	112	0.394	10	0.453	11.5	0.984	25	3.543	90	1.248	31.7
PCJTZY25	0.984	25	2.756	70	4.882	124	0.433	11	0.453	11.5	1.063	27	3.898	99	1.043	26.5
PCJTZY30	1.181	30	3.150	80	5.591	142	0.472	12	0.453	11.5	1.181	30	4.587	116.5	1.024	26
PCJTZY35	1.378	35	3.622	92	6.102	155	0.492	12.5	0.551	14.0	1.378	35	5.118	130	1.043	26.5
PCJTZY40	1.575	40	4.134	105	6.772	172	0.512	13	0.551	14.0	1.555	39.5	5.650	143.5	1.201	30.5
PCJTZY45	1.772	45	4.370	111	7.087	180	0.512	13	0.551	14.0	1.634	41.5	5.847	148.5	1.221	31
PCJTZY50	1.969	50	4.567	116	7.480	190	0.512	13	0.709	18.0	1.693	43	6.181	157	1.378	35

CONTINUED FROM ABOVE

PART NUMBER	T_1 inch	T_1 mm	U inch	U mm	Z inch	Z mm	DYN. CAP. C lbf	DYN. CAP. C N	STAT. CAP. C_0 lbf	STAT. CAP. C_0 N	WEIGHT lbs	WEIGHT kg	HOUSING	INSERT
PCJTZY20	0.138	3.5	1.457	37	2.165	55	2,900	12800	1,480	6600	1.014	0.460	CJTZ04	GAY20NPPB
PCJTZY25	0.138	3.5	1.516	38.5	2.362	60	3,150	14000	1,750	7800	1.103	0.500	CJTZ05	GAY25NPPB
PCJTZY30	0.118	3	1.614	41	3.150	80	4,400	19500	2,550	11300	1.698	0.770	CJTZ06	GAY30NPPB
PCJTZY35	0.158	4	1.831	46.5	3.543	90	5,750	25500	3,450	15300	2.337	1.060	CJTZ07	GAY35NPPB
PCJTZY40	0.158	4	2.087	53	3.937	100	7,300	32500	4,450	19800	3.219	1.460	CJTZ08	GAY40NPPB
PCJTZY45	0.158	4	2.146	54.5	4.134	105	7,300	32500	4,600	20400	3.528	1.600	CJTZ09	GAY45NPPB
PCJTZY50	0.158	4	2.362	60	4.134	105	7,850	35000	5,200	23200	4.035	1.830	CJTZ10	GAY50NPPB

Housing Units
RCJTZ SERIES

- Metric series
- 2 bolt flange
- Housing pilot
- Standard seals
- Eccentric locking collar

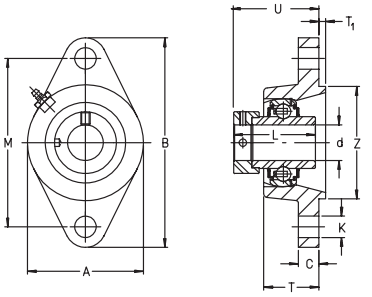

For details on part numbers, descriptive suffixes and various technical references, please refer to front of this section.
For engineering or technical information contact your local sales representative or call Distributor Sales (800)523-6572.

PART NUMBER	SHAFT d inch	SHAFT d mm	A inch	A mm	B inch	B mm	C inch	C mm	K inch	K mm	L inch	L mm	M inch	M mm	T inch	T mm
RCJTZ20	0.787	20	2.382	60.5	4.429	112.5	0.394	10	0.453	11.5	1.721	43.7	3.543	90	1.102	28
RCJTZ25	0.984	25	2.756	70	4.882	124	0.472	12	0.453	11.5	1.748	44.4	3.898	99	1.043	26.5
RCJTZ30	1.181	30	3.150	80	5.591	142	0.472	12	0.453	11.5	1.906	48.4	4.587	116.5	1.024	26
RCJTZ35	1.378	35	3.701	94	6.102	155	0.492	12.5	0.551	14.0	2.012	51.1	5.118	130	1.043	26.5
RCJTZ40	1.575	40	4.134	105	6.772	172	0.512	13	0.551	14.0	2.217	56.3	5.650	143.5	1.201	30.5
RCJTZ45	1.772	45	4.370	111	7.087	180	0.512	13	0.551	14.0	2.217	56.3	5.847	148.5	1.221	31
RCJTZ50	1.969	50	4.567	116	7.480	190	0.512	13	0.551	14.0	2.469	62.7	6.181	157	1.378	35

CONTINUED FROM ABOVE

PART NUMBER	T_1 inch	T_1 mm	U inch	U mm	Z inch	Z mm	DYN. CAP. C lbf	DYN. CAP. C N	STAT. CAP. C_0 lbf	STAT. CAP. C_0 N	WEIGHT lbs	WEIGHT kg	HOUSING	INSERT
RCJTZ20	0.138	3.5	1.780	45.2	2.165	55	2,900	12800	1,480	6600	1.169	0.530	CJTZ04	GE20KRRB
RCJTZ25	0.138	3.5	1.807	45.9	2.362	60	3,150	14000	1,750	7800	1.411	0.640	CJTZ05	GE25KRRB
RCJTZ30	0.118	3	1.854	47.1	3.150	80	4,400	19500	2,550	11300	1.985	0.900	CJTZ06	GE30KRRB
RCJTZ35	0.158	4	1.941	49.3	3.543	90	5,750	25500	3,450	15300	2.690	1.220	CJTZ07	GE35KRRB
RCJTZ40	0.158	4	2.161	54.9	3.937	100	7,300	32500	4,450	19800	3.726	1.690	CJTZ08	GE40KRRB
RCJTZ45	0.158	4	2.161	54.9	4.134	105	7,300	32500	4,600	20400	4.101	1.860	CJTZ09	GE45KRRB
RCJTZ50	0.158	4	2.445	62.1	4.134	105	7,850	35000	5,200	23200	4.873	2.210	CJTZ10	GE50KRRB

Housing Units
RCJTZY SERIES

- Metric series
- 2 bolt flange
- Housing pilot
- Standard seals
- Set screw locking

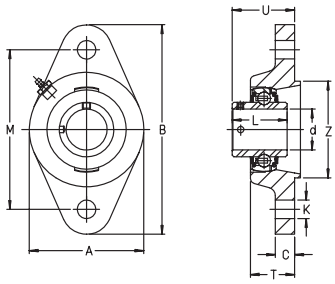

For details on part numbers, descriptive suffixes and various technical references, please refer to front of this section.
For engineering or technical information contact your local sales representative or call Distributor Sales (800)523-6572.

PART NUMBER	SHAFT d inch	SHAFT d mm	A inch	A mm	B inch	B mm	C inch	C mm	K inch	K mm	L inch	L mm	M inch	M mm	T inch	T mm
RCJTZY20	0.787	20	2.402	61	4.409	112	0.394	10	0.453	11.5	1.221	31	3.543	90	1.248	31.7
RCJTZY25	0.984	25	2.756	70	4.882	124	0.433	11	0.453	11.5	1.343	34.1	3.898	99	1.043	26.5
RCJTZY30	1.181	30	3.150	80	5.591	142	0.472	12	0.453	11.5	1.500	38.1	4.587	116.5	1.024	26
RCJTZY35	1.378	35	3.622	92	6.102	155	0.492	12.5	0.551	14.0	1.689	42.9	5.118	130	1.043	26.5
RCJTZY40	1.575	40	4.134	105	6.772	172	0.512	13	0.551	14.0	1.937	49.2	5.650	143.5	1.201	30.5
RCJTZY45	1.772	45	4.370	111	7.087	180	0.512	13	0.551	14.0	1.937	49.2	5.847	148.5	1.221	31
RCJTZY50	1.969	50	4.567	116	7.480	190	0.512	13	0.709	18.0	2.032	51.6	6.181	157	1.378	35

CONTINUED FROM ABOVE

PART NUMBER	T_1 inch	T_1 mm	U inch	U mm	Z inch	Z mm	DYN. CAP. C lbf	DYN. CAP. C N	STAT. CAP. C_0 lbf	STAT. CAP. C_0 N	WEIGHT lbs	WEIGHT kg	HOUSING	INSERT
RCJTZY20	0.138	3.5	1.469	37.3	2.165	55	2,900	12800	1,480	6600	1.103	0.500	CJTZ04	GYE20KRRB
RCJTZY25	0.138	3.5	1.528	38.8	2.362	60	3,150	14000	1,750	7800	1.301	0.590	CJTZ05	GYE25KRRB
RCJTZY30	0.118	3	1.661	42.2	3.150	80	4,400	19500	2,550	11300	1.698	0.770	CJTZ06	GYE30KRRB
RCJTZY35	0.158	4	1.906	48.4	3.543	90	5,750	25500	3,450	15300	2.558	1.160	CJTZ07	GYE35KRRB
RCJTZY40	0.158	4	2.134	54.2	3.937	100	7,300	32500	4,450	19800	3.528	1.600	CJTZ08	GYE40KRRB
RCJTZY45	0.158	4	2.134	54.2	4.134	105	7,300	32500	4,600	20400	3.859	1.750	CJTZ09	GYE45KRRB
RCJTZY50	0.158	4	2.386	60.6	4.134	105	7,850	35000	5,200	23200	4.873	2.210	CJTZ10	GYE50KRRB

Radial Insert Ball Bearings With Rubber Interliner

RCSMB SERIES

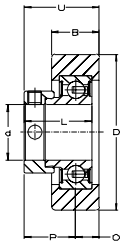

- Hardness of the interliner - 55° – 70° Shore A
- Economy P seals
- Cylindrical outside surface
- Eccentric locking collar

For details on part numbers, descriptive suffixes and various technical references, please refer to front of this section.
For engineering or technical information contact your local sales representative or call Distributor Sales (800)523-6572.

PART NUMBER	SHAFT d inch	SHAFT d inch	SHAFT d mm	D inch	D mm	B inch	B mm	U inch	U mm
RCSMB15/65	-	0.591	15	2.559	65	1.000	25.4	1.370	34.8
RCSMB17/65	-	0.669	17	2.559	65	1.000	25.4	1.370	34.8
RCSMB20/65	-	0.787	20	2.559	65	1.000	25.4	1.425	36.2
RCSMB25/65	-	0.984	25	2.559	65	1.000	25.4	1.425	36.2
RCSMA30/65	-	1.181	30	2.559	65	1.000	25.4	1.394	35.4

CONTINUED FROM ABOVE

PART NUMBER	L inch	L mm	INSERT	RUBBER LINER	DYN. CAP. C lbf	DYN. CAP. C N	STAT. CAP. C_0 lbf	STAT. CAP. C_0 N	RUBBER LINER CAPACITY lbf	RUBBER LINER CAPACITY N	WGT. lbs	WGT. kg
RCSMB15/65	1.126	28.6	RAE 15 NPP	RCSM 40/65	2150	9600	1070	4750	200	900	0.40	0.18
RCSMB17/65	1.126	28.6	RAE 17 NPP	RCSM 40/65	2150	9600	1070	4750	200	900	0.40	0.18
RCSMB20/65	1.220	31	RAE 20 NPP	RCSM 47/65	2870	12800	1480	6600	270	1200	0.49	0.22
RCSMB25/65	1.220	31	RAE 25 NPP	RCSM 52/65	3150	14000	1750	7800	315	1400	0.53	0.24
RCSMA30/65	1.043	26.5	RALE 30 NPP	RCSM 55/65	2950	13200	1860	8300	315	1400	0.71	0.32

Oval Flanged Housing Units With Rubber Interliner

RCSMF SERIES

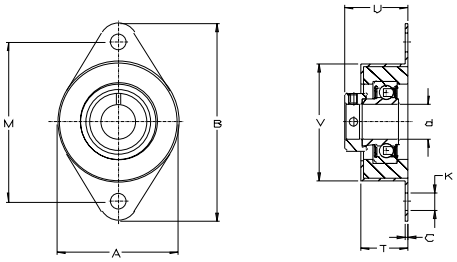

- 2 bolt mounting
- Metric series
- Sheet steel housing
- Standard R seals
- Eccentric locking collar

For details on part numbers, descriptive suffixes and various technical references, please refer to front of this section.
For engineering or technical information contact your local sales representative or call Distributor Sales (800)523-6572.

PART NUMBER	SHAFT d inch	SHAFT d mm	A inch	A mm	B inch	B mm	C inch	C mm	K inch	K mm	M inch	M mm	WGT. lbs	WGT. kg
RCSMF 12	0.472	12	2.756	70	4.488	114	0.059	1.5	0.413	10.5	3.622	92	0.60	0.27
RCSMF 15	0.591	15	2.756	70	4.488	114	0.059	1.5	0.413	10.5	3.622	92	0.60	0.27
RCSMF 17	0.669	17	2.756	70	4.488	114	0.059	1.5	0.413	10.5	3.622	92	0.60	0.27
RCSMF 20	0.787	20	2.756	70	4.488	114	0.059	1.5	0.413	10.5	3.622	92	0.71	0.32
RCSMF 25	0.984	25	2.756	70	4.488	114	0.059	1.5	0.413	10.5	3.622	92	0.73	0.33

CONTINUED FROM ABOVE

PART NUMBER	T inch	T mm	U inch	U mm	V inch	V mm	INSERT	RUBBER LINER	DYN. CAP. C lbf	DYN. CAP. C N	STAT. CAP. C_0 lbf	STAT. CAP. C_0 N	RUBBER INTERLINER Cg lbf	RUBBER INTERLINER Cg N
RCSMF 12	1.063	27	1.370	34.8	2.677	68	RAE 12 NPP	65 RCSMF	2150	9600	1070	4750	200	900
RCSMF 15	1.063	27	1.370	34.8	2.677	68	RAE 15 NPP	65 RCSMF	2150	9600	1070	4750	200	900
RCSMF 17	1.063	27	1.370	34.8	2.677	68	RAE 17 NPP	65 RCSMF	2150	9600	1070	4750	200	900
RCSMF 20	1.063	27	1.425	36.2	2.677	68	RAE 20 NPP	65 RCSMF	2900	12800	1480	6600	250	1100
RCSMF 25	1.063	27	1.425	36.2	2.677	68	RAE 25 NPP	65 RCSMF	3150	14000	1760	7800	320	1400

Take Up Units
PTUE SERIES

- Metric series
- ISO slot width
- Economy seals
- Eccentric locking collar

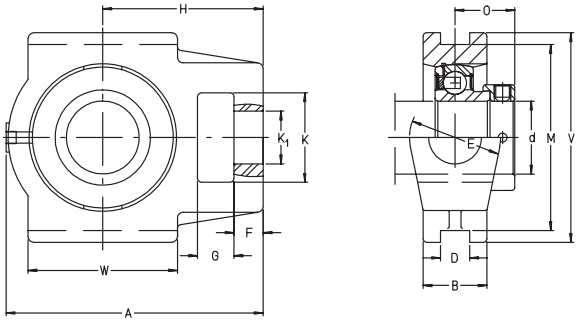

For details on part numbers, descriptive suffixes and various technical references, please refer to front of this section.
For engineering or technical information contact your local sales representative or call Distributor Sales (800)523-6572.

PART NUMBER	SHAFT d inch	SHAFT d mm	A inch	A mm	B inch	B mm	D inch	D mm	E inch	E mm	F inch	F mm	G inch	G mm	H inch	H mm	K inch	K mm
PTUE20	0.7874	20	3.7205	94.5	0.9843	25	0.4724	12	1.4567	37	0.3543	9	0.7087	18	2.3622	60	0.7480	19
PTUE25	0.9843	25	3.8780	98.5	0.9843	25	0.4724	12	1.4567	37	0.3937	10	0.7087	18	2.4409	62	0.7480	19
PTUE30	1.1811	30	4.5079	114.5	0.9843	25	0.4724	12	1.4567	37	0.3937	10	0.7087	18	2.7559	70	0.8661	22
PTUE35	1.3780	35	5.1772	131.5	1.1811	30	0.4724	12	1.5748	40	0.5118	13	0.7087	18	3.1496	80	0.8661	22
PTUE40	1.5748	40	5.5512	141	1.3780	35	0.6299	16	1.9685	50	0.6299	16	0.7874	20	3.4646	88	1.1417	29
PTUE45	1.7717	45	5.5512	141	1.3780	35	0.6299	16	1.9685	50	0.6299	16	0.7874	20	3.4646	88	1.1417	29
PTUE50	1.9685	50	5.8268	148	1.3780	35	0.6299	16	1.9685	50	0.6299	16	0.7874	20	3.5433	90	1.1417	29

CONTINUED FROM ABOVE

PART NUMBER	K_1 inch	K_1 mm	M inch	M mm	O inch	O mm	V inch	V mm	W inch	W mm	WGT. lbs	WGT. kg	DYN. CAP. C lbf	DYN. CAP. C N	STAT. CAP. C_0 lbf	STAT. CAP. C_0 N	HSG.	INSERT
PTUE20	1.2598	32	2.9921	76	0.9252	23.5	3.5433	90	1.9685	50	1.83	0.83	2,900	12800	1,480	6600	TUE04	GRAE20NPPB
PTUE25	1.2598	32	2.9921	76	0.9252	23.5	3.5433	90	1.9685	50	1.874	0.85	3,150	14000	1,750	7800	TUE05	GRAE25NPPB
PTUE30	1.4370	36.5	3.5039	89	1.0512	26.7	4.0157	102	2.2441	57	2.58	1.17	4,400	19500	2,550	11300	TUE06	GRAE30NPPB
PTUE35	1.4370	36.5	3.5039	89	1.1575	29.4	4.0157	102	2.4803	63	3.815	1.73	5,750	25500	3,450	15300	TUE07	GRAE35NPPB
PTUE40	1.9291	49	4.0157	102	1.2874	32.7	4.5276	115	3.2283	82	5.292	2.4	7,300	32500	4,450	19800	TUE08	GRAE40NPPB
PTUE45	1.9291	49	4.0157	102	1.2874	32.7	4.5276	115	3.2283	82	5.49	2.49	7,300	32500	4,600	20400	TUE09	GRAE45NPPB
PTUE50	1.9291	49	4.0157	102	1.2874	32.7	4.5276	115	3.3465	85	5.336	2.42	7,850	35000	5,200	23200	TUE10	GRAE50NPPB

Take Up Housing Units
RTUE SERIES

- Metric series
- ISO slot width
- Standard R seals
- Eccentric locking collar

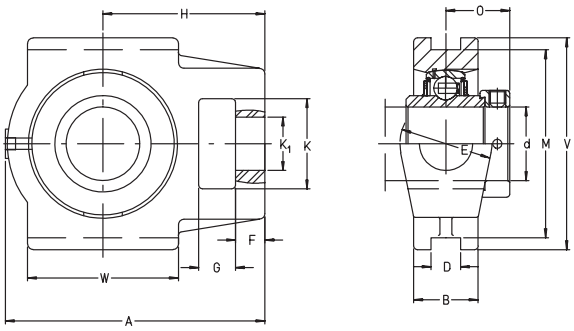

For details on part numbers, descriptive suffixes and various technical references, please refer to front of this section.
For engineering or technical information contact your local sales representative or call Distributor Sales (800)523-6572.

PART NUMBER	SHAFT d inch	SHAFT d mm	A inch	A mm	B inch	B mm	D inch	D mm	E inch	E mm	F inch	F mm	G inch	G mm	H inch	H mm	K inch	K mm
RTUE20	0.787	20	3.721	94.5	0.984	25	0.472	12	1.457	37	0.354	9	0.709	18	2.362	60	0.748	19
RTUE25	0.984	25	3.878	98.5	0.984	25	0.472	12	1.457	37	0.394	10	0.709	18	2.441	62	0.748	19
RTUE30	1.181	30	4.508	114.5	0.984	25	0.472	12	1.457	37	0.394	10	0.709	18	2.756	70	0.866	22
RTUE35	1.378	35	5.177	131.5	1.181	30	0.472	12	1.575	40	0.512	13	0.709	18	3.150	80	0.866	22
RTUE40	1.575	40	5.551	141	1.378	35	0.630	16	1.969	50	0.630	16	0.787	20	3.465	88	1.142	29
RTUE45	1.772	45	5.551	141	1.378	35	0.630	16	1.969	50	0.630	16	0.787	20	3.465	88	1.142	29
RTUE50	1.969	50	5.827	148	1.378	35	0.630	16	1.969	50	0.630	16	0.787	20	3.543	90	1.142	29
RTUE55	2.165	55	6.654	169	1.654	42	0.866	22	2.362	60	0.669	17	1.024	26	4.094	104	1.378	35
RTUE65	2.559	65	8.425	214	1.969	50	0.984	25	2.756	70	0.787	20	1.378	35	5.315	135	1.614	41
RTUE70	2.756	70	8.425	214	1.969	50	0.984	25	2.756	70	0.787	20	1.378	35	5.315	135	1.614	41
RTUE75	2.953	75	8.425	214	1.969	50	0.984	25	2.756	70	0.787	20	1.378	35	5.315	135	1.614	41
RTUE80	3.150	80	9.055	230	1.969	50	1.102	28	2.756	70	0.787	20	1.378	35	5.512	140	1.614	41

CONTINUED FROM ABOVE

PART NUMBER	K_1 inch	K_1 mm	M inch	M mm	O inch	O mm	V inch	V mm	W inch	W mm	WGT. lbs	WGT. kg	DYN. CAP. C lbf	DYN. CAP. C N	STAT. CAP. C_0 lbf	STAT. CAP. C_0 N	HSG.	INSERT
RTUE20	1.260	32	2.992	76	1.047	26.6	3.543	90	1.969	50	1.918	0.870	2900	12800	1480	6600	TUE 04	GE20KRRB
RTUE25	1.260	32	2.992	76	1.059	26.9	3.543	90	1.969	50	2.007	0.910	3150	14000	1750	7800	TUE 05	GE25KRRB
RTUE30	1.437	36.5	3.504	89	1.185	30.1	4.016	102	2.244	57	2.734	1.240	4400	19500	2550	11300	TUE 06	GE30KRRB
RTUE35	1.437	36.5	3.504	89	1.272	32.3	4.016	102	2.480	63	3.969	1.800	5750	25500	3450	15300	TUE 07	GE35KRRB
RTUE40	1.929	49	4.016	102	1.374	34.9	4.528	115	3.228	82	5.557	2.520	7300	32500	4450	19800	TUE 08	GE40KRRB
RTUE45	1.929	49	4.016	102	1.374	34.9	4.528	115	3.228	82	5.750	2.610	7300	32500	4600	20400	TUE 09	GE45KRRB
RTUE50	1.929	49	4.016	102	1.500	38.1	4.528	115	3.347	85	5.843	2.650	7850	35000	5200	23200	TUE 10	GE50KRRB
RTUE55	2.500	63.5	5.118	130	1.717	43.6	5.709	145	3.740	95	10.143	4.600	9800	43500	6500	29000	TUE 11	GE55KRRB
RTUE65	2.756	70	5.945	151	1.756	44.6	6.535	166	4.724	120	16.449	7.460	13950	62000	9900	44000	TUE 13/14	GE65KRRB
RTUE70	2.756	70	5.945	151	1.756	44.6	6.535	166	4.724	120	15.876	7.200	13950	62000	9900	44000	TUE 13/14	GE70KRRB
RTUE75	2.756	70	5.945	151	1.795	45.6	6.535	166	4.724	120	15.545	7.050	13950	62000	10000	44500	TUE 15	GE75KRRB
RTUE80	2.756	70	6.496	165	1.874	47.6	7.244	184	4.724	120	18.522	8.400	16200	72000	16200	72000	TUE 16	GE80KRRB

Take-up Housing Units
RTUEY SERIES

- Metric series
- Standard R seals
- ISO slot width
- Set screw locking

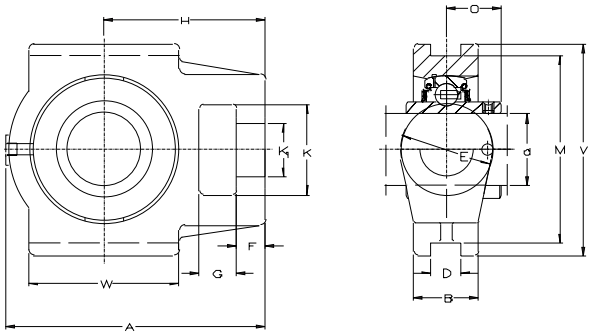

For details on part numbers, descriptive suffixes and various technical references, please refer to front of this section.
For engineering or technical information contact your local sales representative or call Distributor Sales (800)523-6572.

PART NUMBER	SHAFT d inch	SHAFT d mm	A inch	A mm	B inch	B mm	D inch	D mm	E inch	E mm	F inch	F mm	G inch	G mm	H inch	H mm	K inch	K mm
RTUEY 20	0.787	20	3.720	94.5	0.984	25	0.472	12	1.457	37	0.354	9	0.709	18	2.362	60	1.260	32
RTUEY 25	0.984	25	3.878	98.5	0.984	25	0.472	12	1.457	37	0.394	10	0.709	18	2.441	62	1.260	32
RTUEY 30	1.181	30	4.508	114.5	0.984	25	0.472	12	1.457	37	0.394	10	0.709	18	2.756	70	1.437	36.50
RTUEY 35	1.378	35	5.177	131.5	1.181	30	0.472	12	1.575	40	0.512	13	0.709	18	3.150	80	1.437	36.50
RTUEY 40	1.575	40	5.551	141	1.378	35	0.630	16	1.969	50	0.630	16	0.787	20	3.465	88	1.929	49
RTUEY 50	1.969	50	5.827	148	1.378	35	0.630	16	1.969	50	0.630	16	0.787	20	3.543	90	1.929	49
RTUEY 60	2.362	60	7.323	186	1.732	44	0.866	22	2.362	60	0.748	19	1.260	32	4.646	118	2.500	63.50
RTUEY 65	2.559	65	8.425	214	1.969	50	0.984	25	2.756	70	0.787	20	1.378	35	5.315	135	2.756	70
RTUEY 70	2.756	70	8.425	214	1.969	50	0.984	25	2.756	70	0.787	20	1.378	35	5.315	135	2.756	70
RTUEY 75	2.953	75	8.425	214	1.969	50	0.984	25	2.756	70	0.787	20	1.378	35	5.315	135	2.756	70
RTUEY 80	3.150	80	9.055	230	1.969	50	1.102	28	2.756	70	0.787	20	1.378	35	5.512	140	2.756	70

CONTINUED FROM ABOVE

PART NUMBER	K_1 inch	K_1 mm	M inch	M mm	O inch	O mm	V inch	V mm	W inch	W mm	WGT. lbs	WGT. kg	DYN. CAP. C lbf	DYN. CAP. C N	STAT. CAP. C_0 lbf	STAT. CAP. C_0 N	HSG.	INSERT
RTUEY 20	0.748	19	2.992	76	0.720	18.00	3.543	90	1.969	50	1.85	0.84	2880	12800	1485	6600	TUE 04	GYE 20 KRRB
RTUEY 25	0.748	19	2.992	76	0.780	19.00	3.543	90	1.969	50	1.90	0.86	3150	14000	1755	7800	TUE 05	GYE 25 KRRB
RTUEY 30	0.866	22	3.504	89	0.874	22.00	4.016	102	2.244	57	2.62	1.19	4400	19500	2540	11300	TUE 06	GYE 30 KRRB
RTUEY 35	0.866	22	3.504	89	1.000	25.00	4.016	102	2.480	63	3.84	1.74	5700	25500	3440	15300	TUE 07	GYE 35 KRRB
RTUEY 40	1.142	29	4.016	102	1.189	30.00	4.528	115	3.228	82	5.36	2.43	7300	32500	4455	19800	TUE 08	GYE 40 KRRB
RTUEY 50	1.142	29	4.016	102	1.283	32.00	4.528	115	3.346	85	5.40	2.45	7875	35000	5220	23200	TUE 10	GYE 50 KRRB
RTUEY 60	1.378	35	5.118	130	1.563	39.00	5.748	146	3.937	100	9.31	4.22	11700	52000	8100	36000	TUE 12	GYE 60 KRRB
RTUEY 65	1.614	41	5.945	151	1.748	44.40	6.535	166	4.724	120	15.44	7.00	13950	62000	9900	44000	TUE 13/14	GYE 65 KRRB
RTUEY 70	1.614	41	5.945	151	1.748	44.40	6.535	166	4.724	120	14.77	6.70	13950	62000	9900	44000	TUE 13/14	GYE 70 KRRB
RTUEY 75	1.614	41	5.945	151	1.752	44.50	6.535	166	4.724	120	14.53	6.59	13950	62000	10000	44500	TUE 15	GYE 75 KRRB
RTUEY 80	1.614	41	6.496	165	1.941	49.30	7.244	184	4.724	120	18.48	8.38	16200	72000	12150	54000	TUE 16	GYE 80 KRRB

Take Up Units
TTUE SERIES

- Metric series
- ISO slot width
- Tri-ply P3 seals
- Eccentric locking collar

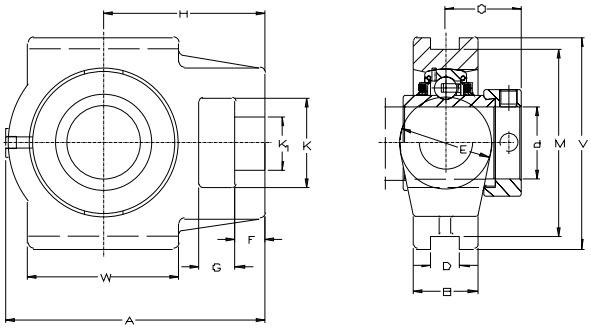

For details on part numbers, descriptive suffixes and various technical references, please refer to front of this section.
For engineering or technical information contact your local sales representative or call Distributor Sales (800)523-6572.

PART NUMBER	SHAFT d inch	SHAFT d mm	A inch	A mm	B inch	B mm	D inch	D mm	E inch	E mm	F inch	F mm	G inch	G mm	H inch	H mm	K inch	K mm
TTUE20	0.787	20	3.721	94.5	0.984	25	0.472	12	1.457	37	0.354	9	0.709	18	2.362	60	0.748	19
TTUE25	0.984	25	3.878	98.5	0.984	25	0.472	12	1.457	37	0.394	10	0.709	18	2.441	62	0.748	19
TTUE30	1.181	30	4.508	114.5	0.984	25	0.472	12	1.457	37	0.394	10	0.709	18	2.756	70	0.866	22
TTUE35	1.378	35	5.177	131.5	1.181	30	0.472	12	1.575	40	0.512	13	0.709	18	3.150	80	0.866	22
TTUE40	1.575	40	5.551	141	1.378	35	0.630	16	1.969	50	0.630	16	0.787	20	3.465	88	1.142	29
TTUE45	1.772	45	5.551	141	1.378	35	0.630	16	1.969	50	0.630	16	0.787	20	3.465	88	1.142	29
TTUE50	1.969	50	5.827	148	1.378	35	0.630	16	1.969	50	0.630	16	0.787	20	3.543	90	1.142	29
TTUE55	2.165	55	6.654	169	1.654	42	0.866	22	2.362	60	0.669	17	1.024	26	4.094	104	1.378	35
TTUE60	2.362	60	7.323	186	1.732	44	0.866	22	2.362	60	0.748	19	1.260	32	4.646	118	1.378	35
TTUE65	2.559	65	8.425	214	1.969	50	0.984	25	2.756	70	0.787	20	1.378	35	5.315	135	1.614	41
TTUE70	2.756	70	8.425	214	1.969	50	0.984	25	2.756	70	0.787	20	1.378	35	5.315	135	1.614	41
TTUE75	2.953	75	8.425	214	1.969	50	0.984	25	2.756	70	0.787	20	1.378	35	5.315	135	1.614	41
TTUE80	3.150	80	9.055	230	1.969	50	1.102	28	2.756	70	0.787	20	1.378	35	5.512	140	1.614	41

CONTINUED FROM ABOVE

PART NUMBER	K_1 inch	K_1 mm	M inch	M mm	O inch	O mm	V inch	V mm	W inch	W mm	WGT. lbs	WGT. kg	DYN. CAP. C lbf	DYN. CAP. C N	STAT. CAP. C_0 lbf	STAT. CAP. C_0 N	HSG.	INSERT
TTUE20	1.260	32	2.992	76	1.047	26.6	3.543	90	1.969	50	1.918	0.87	2900	12800	1480	6600	TUE 04	GE20KPPB-3
TTUE25	1.260	32	2.992	76	1.059	26.9	3.543	90	1.969	50	2.007	0.91	3150	14000	1750	7800	TUE 05	GE25KPPB-3
TTUE30	1.437	36.5	3.504	89	1.185	30.1	4.016	102	2.244	57	2.734	1.24	4400	19500	2550	11300	TUE 06	GE30KPPB-3
TTUE35	1.437	36.5	3.504	89	1.272	32.3	4.016	102	2.480	63	3.969	1.8	5750	25500	3450	15300	TUE 07	GE35KPPB-3
TTUE40	1.929	49	4.016	102	1.374	34.9	4.528	115	3.228	82	5.557	2.52	7300	32500	4450	19800	TUE 08	GE40KPPB-3
TTUE45	1.929	49	4.016	102	1.374	34.9	4.528	115	3.228	82	5.750	2.61	7300	32500	4600	20400	TUE 09	GE45KPPB-3
TTUE50	1.929	49	4.016	102	1.500	38.1	4.528	115	3.347	85	5.843	2.65	7850	35000	5200	23200	TUE 10	GE50KPPB-3
TTUE55	2.500	63.5	5.118	130	1.654	43.6	5.709	145	3.740	95	10.143	4.6	9800	43500	6500	29000	TUE 11	GE55KPPB-3
TTUE60	2.500	63.5	5.118	130	1.732	46.8	5.748	146	3.937	100	10.937	4.96	11700	52000	8000	36000	TUE 12	GE60KPPB-3
TTUE65	2.756	70	5.945	151	1.969	44.6	6.535	166	4.724	120	16.449	7.46	13950	62000	9900	44000	TUE 13/14	GE65KPPB-3
TTUE70	2.756	70	5.945	151	1.969	44.6	6.535	166	4.724	120	15.876	7.2	13950	62000	9900	44000	TUE 13/14	GE70KPPB-3
TTUE75	2.756	70	5.945	151	1.969	45.6	6.535	166	4.724	120	15.545	7.05	13950	62000	10000	44500	TUE 15	GE75KPPB-3
TTUE80	2.756	70	6.496	165	1.969	47.6	7.244	184	4.724	120	18.522	8.4	16200	72000	16200	72000	TUE 16	GE80KPPB-3

Housing Units
PSFT SERIES

- Metric series
- Pivoting 2 bolt flange take up unit
- Economy seals
- Eccentric locking collar

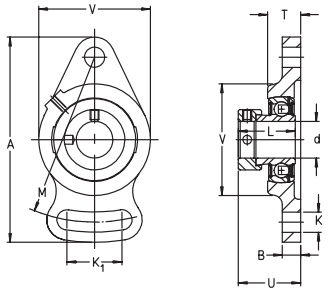

For details on part numbers, descriptive suffixes and various technical references, please refer to front of this section.
For engineering or technical information contact your local sales representative or call Distributor Sales (800)523-6572.

PART NUMBER	SHAFT d inch	SHAFT d mm	a inch	a mm	b inch	b mm	K inch	K mm	k1 inch	k1 mm	L inch	L mm	M inch	M mm
PSFT 20	0.787	20	4.409	112	0.394	10	0.453	11.5	1.181	30	1.221	31	3.543	90
PSFT 25	0.984	25	4.882	124	0.433	11	0.453	11.5	1.476	37.5	1.221	31	3.898	99
PSFT30	1.181	30	5.591	142	0.472	12	0.453	11.5	1.575	40	1.406	35.7	4.606	117
PSFT35	1.378	35	6.102	155	0.492	12.5	0.551	14	1.772	45	1.532	38.9	5.039	128

CONTINUED FROM ABOVE

PART NUMBER	T inch	T mm	U inch	U mm	V inch	V mm	WGT. lbs	WGT. kg	DYN. CAP. C lbf	DYN. CAP. C N	STAT. CAP. C_0 lbf	STAT. CAP. C_0 N	HSG.	INSERT
PSFT 20	0.709	18	1.339	34	2.402	61	1.985	0.9	2,900	12800	1,480	6600	SFT04	GRAE20NPPB
PSFT 25	0.787	20	1.417	36	2.756	70	1.235	0.56	3,150	14000	1,750	7800	SFT05	GRAE25NPPB
PSFT30	0.866	22	1.563	39.7	3.150	80	1.698	0.77	4,400	19500	2,550	11300	SFT06	GRAE30NPPB
PSFT35	0.984	25	1.752	44.5	3.543	90	2.426	1.1	5,750	25500	3,450	15300	SFT07	GRAE35NPPB

Sprockets
KSR..BO SERIES

- Eccentric collar shaft locking
- Available sprockets are steel, powdered iron or plastic

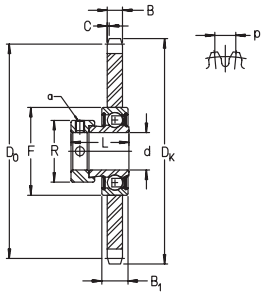

For details on part numbers, descriptive suffixes and various technical references, please refer to front of this section.
For engineering or technical information contact your local sales representative or call Distributor Sales (800)523-6572.

PART NUMBER	SHAFT d inch	SHAFT d mm	PITCH p inch	PITCH p inch	PITCH p mm	TEETH z qty	B inch	B mm	D_0 inch	D_0 mm	D_k inch	D_k mm	ANSI CHAIN REF
KSR15 BO 06 10 20 08	0.5906	15	3/8”	0.375	9.525	20	0.2047	5.2	2.3976	60.9	2.5591	65	
KSR15 BO 08 10 16 08	0.5906	15	1/2”	0.5	12.7	16	0.2756	7	2.563	65.1	2.7756	70.5	40
KSR15 BO 10 10 14 08	0.5906	15	5/8”	0.625	15.875	14	0.3425	8.7	2.8071	71.3	3.0709	78	40
KSR15 BO 12 10 13 08	0.5906	15	3/4”	0.75	19.05	13	0.4134	10.5	3.1339	79.6	3.4252	87	40
KSR20 BO 08 10 18 08	0.7874	20	1/2”	0.5	12.7	18	0.2756	7	2.878	73.1	3.0945	78.6	40
KSR20 BO 08 10 18 15	0.7874	20	1/2”	0.5	12.7	18	0.2756	7	2.878	73.1	3.0945	78.6	50
KSR20 BO 10 10 17 08	0.7874	20	5/8”	0.625	15.875	17	0.3425	8.7	3.3976	86.3	3.6654	93.1	50
KSR20 BO 10 10 17 15	0.7874	20	5/8”	0.625	15.875	17	0.3425	8.7	3.3976	86.3	3.6654	93.1	50
KSR20 BO 12 10 15 16	0.7874	20	3/4”	0.75	19.05	15	0.4134	10.5	3.6063	91.6	3.9055	99.2	60
KSR20 BO 16 10 10 15	0.7874	20	1”	1	25.4	10	0.6024	15.3	3.2402	82.3	3.5197	89.4	60
KSR20 BO 20 10 10 15	0.7874	20	1 1/4”	1.25	31.75	10	0.7087	18	4.0512	102.9	4.3937	111.6	80
KSR25 BO 08 10 19 08	0.9843	25	1/2”	0.5	12.7	19	0.2756	7	3.0354	77.1	3.248	82.5	80
KSR25 BO 16 10 17 15	0.9843	25	1”	1	25.4	17	0.6024	15.3	5.4409	138.2	5.878	149.3	80
KSR30 BO 16 10 15 15	1.1811	30	1”	1	25.4	15	0.6024	15.3	4.811	122.2	5.1575	131	100
KSR30 BO 24 10 15 15	1.1811	30	1 1/2”	1.5	38.1	15	0.8976	22.8	7.2126	183.2	7.8622	199.7	120

Sprockets
KSR..BO SERIES

- Eccentric collar shaft locking
- Available sprockets are steel, powdered iron or plastic

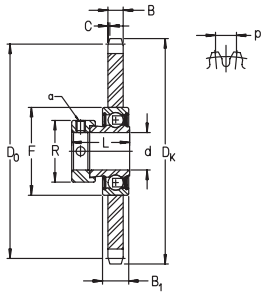

For details on part numbers, descriptive suffixes and various technical references, please refer to front of this section.
For engineering or technical information contact your local sales representative or call Distributor Sales (800)523-6572.

C_{min} inch	C_{min} mm	F inch	F mm	L inch	L mm	B_1 inch	B_1 mm	R_{max} inch	R_{max} mm	a inch	a mm	WGT. lbs	WGT. kg	DIN 8187 CHAIN	DIN 8188 CHAIN	PART NUMBER
0.0315	0.8	1.5748	40	1.126	28.6	0.4724	12	1.1024	28	0.1181	3	0.397	0.18	*		KSR15 BO 06 10 20 08
0.0433	1.1	1.5748	40	1.126	28.6	0.4724	12	1.1024	28	0.1181	3	0.463	0.21	*		KSR15 BO 08 10 16 08
0.0512	1.3	1.5748	40	1.1142	28.3	0.4724	12	1.1024	28	0.1181	3	0.573	0.26	*	*	KSR15 BO 10 10 14 08
0.0591	1.5	1.5748	40	1.126	28.6	0.4724	12	1.1024	28	0.1181	3	0.882	0.4	*	*	KSR15 BO 12 10 13 08
0.0433	1.1	1.8504	47	1.2205	31	0.5512	14	1.2992	33	0.1181	3	0.706	0.32	*	*	KSR20 BO 08 10 18 08
0.0433	1.1	1.8504	47	1.2205	31	0.5512	14	1.2992	33	0.1181	3	0.706	0.32	*	*	KSR20 BO 08 10 18 15
0.0512	1.3	1.8504	47	1.2205	31	0.5512	14	1.2992	33	0.1181	3	0.904	0.41	*	*	KSR20 BO 10 10 17 08
0.0512	1.3	1.8504	47	1.2205	31	0.5512	14	1.2992	33	0.1181	3	0.904	0.41	*	*	KSR20 BO 10 10 17 15
0.0591	1.5	1.8504	47	1.2205	31	0.5512	14	1.2992	33	0.1181	3	1.036	0.47	*	*	KSR20 BO 12 10 15 16
0.0787	2	1.8504	47	1.2205	31	0.5512	14	1.2992	33	0.1181	3	1.103	0.5	*		KSR20 BO 16 10 10 15
0.0984	2.5	1.8504	47	1.2205	31	0.5512	14	1.2992	33	0.1181	3	2.359	1.07	*	*	KSR20 BO 20 10 10 15
0.0433	1.1	2.0472	52	1.2205	31	0.5906	15	1.4764	37.5	0.1181	3	0.639	0.29	*	*	KSR25 BO 08 10 19 08
0.0787	2	2.0472	52	1.2205	31	0.5906	15	1.4764	37.5	0.1181	3	3.352	1.52	*		KSR25 BO 16 10 17 15
0.0787	2	2.4409	62	1.4055	35.7	0.7087	18	1.7323	44	0.1575	4	2.955	1.34	*		KSR30 BO 16 10 15 15
0.1299	3.3	2.4409	62	1.4055	35.7	0.7087	18	1.7323	44	0.1575	4	4.41	2	*	*	KSR30 BO 24 10 15 15

Sprockets

KSR..LO, KSR..KO SERIES

- Available sprockets are steel, powdered iron or plastic

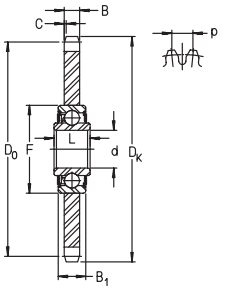

KSR..LO

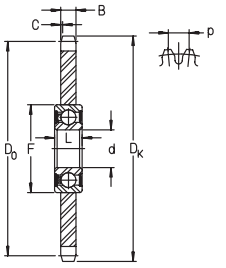

KSR..KO

For details on part numbers, descriptive suffixes and various technical references, please refer to front of this section.
For engineering or technical information contact your local sales representative or call Distributor Sales (800)523-6572.

PART NUMBER	SHAFT d inch	SHAFT d mm	PITCH p inch	PITCH p inch	PIT CH p mm	TEETH z qty	B inch	B mm	D_0 inch	D_0 mm	D_k inch	D_k mm	ANSI CHAIN REF
KSR 16 LO 06 10 20 08	0.630	16	3/8”	0.375	9.525	20	0.205	5.2	2.398	60.9	2.559	65	
KSR 16 LO 06 10 20 22	0.630	16	3/8”	0.375	9.525	20	0.205	5.2	2.398	60.9	2.559	65	
KSR 16 LO 08 10 16 08	0.630	16	1/2”	0.5	12.7	16	0.276	7	2.563	65.1	2.776	70.5	40
KSR 16 LO 08 10 16 22	0.630	16	1/2”	0.5	12.7	16	0.276	7	2.563	65.1	2.776	70.5	40
KSR 16 LO 08 10 18 08	0.630	16	1/2”	0.5	12.7	18	0.276	7	2.878	73.1	3.095	78.6	40
KSR 16 LO 08 10 18 09	0.630	16	1/2”	0.5	12.7	18	0.276	7	2.878	73.1	3.095	78.6	40
KSR 16 LO 08 10 18 16	0.630	16	1/2”	0.5	12.7	18	0.276	7	2.878	73.1	3.095	78.6	40
KSR 16 LO 08 10 18 22	0.630	16	1/2”	0.5	12.7	18	0.276	7	2.878	73.1	3.095	78.6	40
KSR 16 LO 10 10 14 08	0.630	16	5/8”	0.625	15.875	14	0.343	8.7	2.807	71.3	3.071	78	50
KSR 16 LO 10 10 14 22	0.630	16	5/8”	0.625	15.875	14	0.343	8.7	2.807	71.3	3.071	78	50
KSR 16 LO 10 10 17 08	0.630	16	5/8”	0.625	15.875	17	0.343	8.7	3.402	86.4	3.665	93.1	50
KSR 16 LO 10 10 17 09	0.630	16	5/8”	0.625	15.875	17	0.343	8.7	3.402	86.4	3.665	93.1	50
KSR 16 LO 10 10 17 22	0.630	16	5/8”	0.625	15.875	17	0.343	8.7	3.402	86.4	3.665	93.1	50
KSR 16 LO 12 10 13 08	0.630	16	3/4”	0.75	19.05	13	0.413	10.5	3.134	79.6	3.425	87	60
KSR 16 LO 12 10 13 22	0.630	16	3/4”	0.75	19.05	13	0.413	10.5	3.134	79.6	3.425	87	60
KSR 16 LO 12 10 15 08	0.630	16	3/4”	0.75	19.05	15	0.413	10.5	3.606	91.6	3.906	99.2	60
KSR 16 LO 12 10 15 09	0.630	16	3/4”	0.75	19.05	15	0.413	10.5	3.606	91.6	3.906	99.2	60
KSR 16 LO 12 10 15 22	0.630	16	3/4”	0.75	19.05	15	0.413	10.5	3.606	91.6	3.906	99.2	60
KSR 16 LO 12 10 17 15	0.630	16	3/4”	0.75	19.05	17	0.413	10.5	4.083	103.7	4.386	111.4	60
KSR 16 LO 12 10 20 15	0.630	16	3/4”	0.75	19.05	20	0.413	10.5	4.795	121.8	5.118	130	60
KSR 20 LO 16 10 12 15	0.787	20	1”	1	25.4	12	0.602	15.3	3.862	98.1	4.236	107.6	80
KSR 20 LO 16 10 12 16	0.787	20	1”	1	25.4	12	0.602	15.3	3.862	98.1	4.236	107.6	80
KSR 20 LO 16 10 12 22	0.787	20	1”	1	25.4	12	0.602	15.3	3.862	98.1	4.236	107.6	80
KSR 25 LO 20 10 09 16	0.984	25	1 1/4”	1.25	31.75	9	0.693	17.6	3.654	92.8	4.055	103	100
KSR 25 LO 20 10 13 15	0.984	25	1 1/4”	1.25	31.75	13	0.693	17.6	5.224	132.7	5.669	144	100
KSR 40 KO 08 20 38 15	1.575	40	1/2”	0.5	12.7	38	0.280	7.1	6.055	153.8	6.260	159	40
KSR 40 KO 10 20 30 15	1.575	40	5/8”	0.625	15.875	30	0.343	8.7	5.984	152	6.221	158	50

Sprockets

KSR..LO, KSR..KO SERIES

- Available sprockets are steel, powdered iron or plastic

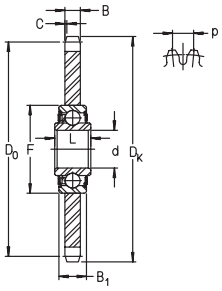

KSR..LO

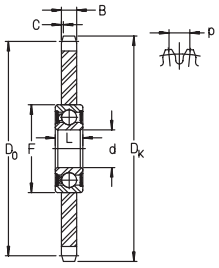

KSR..KO

For details on part numbers, descriptive suffixes and various technical references, please refer to front of this section.
For engineering or technical information contact your local sales representative or call Distributor Sales (800)523-6572.

C_{min} inch	C_{min} mm	F inch	F mm	L inch	L mm	B_1 inch	B_1 mm	R_{max} inch	R_{max} mm	WGT. lbs	WGT. kg	DIN 8187 CHAIN	DIN 8188 CHAIN	PART NUMBER
0.032	0.8	1.575	40	0.721	18.3	0.472	12			0.309	0.14	*		KSR 16 LO 06 10 20 08
0.032	0.8	1.575	40	0.721	18.3	0.709	18	1.890	48	0.221	0.1	*	*	KSR 16 LO 06 10 20 22
0.043	1.1	1.575	40	0.721	18.3	0.472	12			0.353	0.16	*	*	KSR 16 LO 08 10 16 08
0.043	1.1	1.575	40	0.721	18.3	0.713	18.1	1.890	48	0.221	0.1	*	*	KSR 16 LO 08 10 16 22
0.043	1.1	1.575	40	0.721	18.3	0.472	12			0.463	0.21	*	*	KSR 16 LO 08 10 18 08
0.043	1.1	1.575	40	0.721	18.3	0.472	12			0.463	0.21	*	*	KSR 16 LO 08 10 18 09
0.043	1.1	1.575	40	0.721	18.3	0.472	12			0.463	0.21	*	*	KSR 16 LO 08 10 18 16
0.043	1.1	1.575	40	0.721	18.3	0.709	18	1.890	48	0.331	0.15	*	*	KSR 16 LO 08 10 18 22
0.051	1.3	1.575	40	0.721	18.3	0.472	12			0.463	0.21	*	*	KSR 16 LO 10 10 14 08
0.051	1.3	1.575	40	0.721	18.3	0.713	18.1	1.890	48	0.463	0.21	*	*	KSR 16 LO 10 10 14 22
0.051	1.3	1.575	40	0.721	18.3	0.472	12			0.706	0.32	*	*	KSR 16 LO 10 10 17 08
0.051	1.3	1.575	40	0.721	18.3	0.472	12			0.706	0.32	*	*	KSR 16 LO 10 10 17 09
0.051	1.3	1.575	40	0.721	18.3	0.709	18	1.890	48	0.573	0.26	*	*	KSR 16 LO 10 10 17 22
0.059	1.5	1.575	40	0.721	18.3	0.472	12			0.728	0.33	*	*	KSR 16 LO 12 10 13 08
0.059	1.5	1.575	40	0.721	18.3	0.709	18	1.890	48	0.595	0.27	*		KSR 16 LO 12 10 13 22
0.059	1.5	1.575	40	0.721	18.3	0.472	12			0.926	0.42	*	*	KSR 16 LO 12 10 15 08
0.059	1.5	1.575	40	0.721	18.3	0.472	12			0.926	0.42	*	*	KSR 16 LO 12 10 15 09
0.059	1.5	1.575	40	0.721	18.3	0.709	18	1.890	48	0.794	0.36	*	*	KSR 16 LO 12 10 15 22
0.059	1.5	1.575	40	0.721	18.3	0.472	12			1.279	0.58	*	*	KSR 16 LO 12 10 17 15
0.059	1.5	1.575	40	0.721	18.3	0.472	12			1.896	0.86	*	*	KSR 16 LO 12 10 20 15
0.079	2	1.850	47	0.697	17.7	0.551	14			1.544	0.7	*		KSR 20 LO 16 10 12 15
0.079	2	1.850	47	0.697	17.7	0.551	14			1.544	0.7	*		KSR 20 LO 16 10 12 16
0.079	2	1.850	47	0.697	17.7	0.866	22	2.165	55	0.419	0.19	*	*	KSR 20 LO 16 10 12 22
0.098	2.5	2.047	52	0.827	21	0.591	15			1.764	0.8	*	*	KSR 25 LO 20 10 09 16
0.098	2.5	2.047	52	0.827	21	0.591	15			3.528	1.6	*	*	KSR 25 LO 20 10 13 15
0.039	1	3.150	80	0.709	18					2.205	1		*	KSR 40 KO 08 20 38 15
0.051	1.3	3.150	80	0.709	18					2.426	1.1	*	*	KSR 40 KO 10 20 30 15

Idler Pulleys
RSR SERIES

- Sheet steel construction for low weight
- Series A for V belts
- Series B for flat, round or wide V belts
- Series C and D for round belts, rope or steel cable

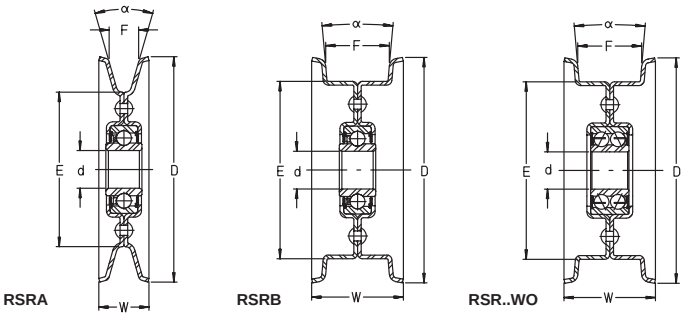

For details on part numbers, descriptive suffixes and various technical references, please refer to front of this section.
For engineering or technical information contact your local sales representative or call Distributor Sales (800)523-6572.

PART NUMBER	SHAFT d inch	SHAFT d mm	D inch	D mm	E inch	E mm	F inch	F mm	W inch	W mm	TYPE	ANGLE deg
RSR A 15 90 LO	0.591	15	3.543	90	2.425	61.6	0.488	12.4	0.787	20	A	32
RSR A 17 102 KO	0.669	17	4.015	102	2.787	70.8	0.5	12.7	0.866	22	A	34
RSR A 13 129 LO	0.512	13	5.078	129	2.901	73.7	0.87	22.1	1.252	31.8	A	32
RSR A 16 129 LO	0.630	16	5.078	129	2.901	73.7	0.87	22.1	1.252	31.8	A	32
RSR A 13 186 LO	0.512	13	7.322	186	5.149	130.8	0.87	22.1	1.252	31.8	A	32
RSR A 16 186 LO	0.630	16	7.322	186	5.149	130.8	0.87	22.1	1.252	31.8	A	32
RSR B 15 92 LO	0.591	15	3.622	92	3	76.2	0.874	22.2	1.22	31	B	10
RSR B 13 117 LO	0.512	13	4.606	117	3.976	101	1	25.4	1.417	36	B	10
RSR B 16 117 LO	0.630	16	4.606	117	3.976	101	1	25.4	1.417	36	B	10
RSR B 13 159 LO	0.512	13	6.259	159	5.5	139.7	1	25.4	1.437	36.5	B	10
RSR B 16 159 LO	0.630	16	6.259	159	5.5	139.7	1	25.4	1.437	36.5	B	10
RSR B 17 159 WO	0.669	17	6.259	159	5.5	139.7	1	25.4	1.437	36.5	B/WO	10
RSR B 13 222 LO	0.512	13	8.74	222	7.992	203	1.496	38	1.968	50	B	10
RSR B 16 222 LO	0.630	16	8.74	222	7.992	203	1.496	38	1.968	50	B	10
RSR B 17 222 WO	0.669	17	8.74	222	7.992	203	1.732	44	2.126	54	B/WO	10
RSR D 25 150 LO	0.984	25	6.063	154	5.236	133	0.669	17	0.944	24	D	_
RSR D 20 160 LO	0.787	20	6.133	155.8	5.374	136.5	0.531	13.5	0.689	17.5	D	_

Idler Pulleys
RSR SERIES

- Sheet steel construction for low weight
- Series A for V belts
- Series B for flat, round or wide V belts
- Series C and D for round belts, rope or steel cable

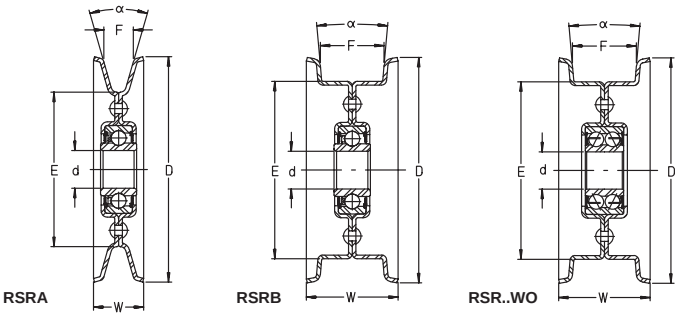

For details on part numbers, descriptive suffixes and various technical references, please refer to front of this section.
For engineering or technical information contact your local sales representative or call Distributor Sales (800)523-6572.

WGT. lbs	WGT. kg	FOR V-BELT SIZE TO DIN2215 (ISO/R434, ISO/R60 (DIN7753, ISO/R460	DYN. CAP. C lbf	DYN. CAP. C N	STAT. CAP. C_0 lbf	STAT. CAP. C_0 N	REFERENCE BEARING	PART NUMBER
0.53	0.24	8,10, (12	1710	7600	830	3700	202 KRR	RSR A 15 90 LO
0.93	0.42	8,10, (12	2150	9600	1070	4750	6203 2 RS	RSR A 17 102 KO
1.24	0.56	13,17, 20, 22	2150	9600	1070	4750	203 KRRAH05	RSR A 13 129 LO
1.19	0.54	13,17, 20, 22	2150	9600	1070	4750	203 KRRAH02	RSR A 16 129 LO
2.49	1.13	13,17, 20, 22	2150	9600	1070	4750	203 KRRAH05	RSR A 13 186 LO
2.45	1.11	13,17, 20, 22	2150	9600	1070	4750	203 KRRAH02	RSR A 16 186 LO
0.68	0.31		1710	7600	830	3700	202 KRR	RSR B 15 92 LO
1.1	0.5		2150	9600	1070	4750	203 KRRAH05	RSR B 13 117 LO
1.06	0.48		2150	9600	1070	4750	203 KRRAH02	RSR B 16 117 LO
1.76	0.8		2150	9600	1070	4750	203 KRRAH05	RSR B 13 159 LO
1.72	0.78		2150	9600	1070	4750	203 KRRAH02	RSR B 16 159 LO
1.48	0.67		3350	14800	2040	9100	3203 2 RS	RSR B 17 159 WO
3.24	1.47		2150	9600	1070	4750	203 KRRAH05	RSR B 13 222 LO
3.2	1.45		2150	9600	1070	4750	203 KRRAH02	RSR B 16 222 LO
3.31	1.5		3350	14800	2040	9100	3203 2 RS	RSR B 17 222 WO
1.83	0.83		3150	14000	1760	7800	205 KRR	RSR D 25 150 LO
1.65	0.75		2900	12800	1480	6600	204 KRR	RSR D 20 160 LO

NOTES

Section Contents
HIGH PRECISION BEARINGS

BEARING SERIES	BEARING DESCRIPTION	PAGE
INFORMATION	HIGH PRECISION BALL AND ROLLER BEARINGS	290
P / N IDENTIFICATION	HIGH PRECISION BALL AND ROLLER BEARINGS	291
ZKLN..PE	BALL SCREW SUPPORT - METRIC 60 DEGREE 2 ROW THRUST BALL	294
ZKLN	BALL SCREW SUPPORT - METRIC 60 DEGREE 2 ROW THRUST BALL	295
ZKLF..PE	BALL SCREW SUPPORT - METRIC FLANGED 60 DEGREE 2 ROW THRUST BALL	296
ZKLF	BALL SCREW SUPPORT - METRIC FLANGED 60 DEGREE 2 ROW THRUST BALL	297
DKLFA	BALL SCREW SUPPORT - METRIC FLANGED 60 DEGREE 3 ROW THRUST BALL	298
ZARN	BALL SCREW SUPPORT - METRIC COMBINATION RADIAL & THRUST ROLLER	300
ZARN..LTN	BALL SCREW SUPPORT - METRIC COMBINATION RADIAL & THRUST ROLLER	302
ZARF	BALL SCREW SUPPORT - METRIC FLANGED COMBINATION RADIAL & THRUST ROLLER	304
ZARF..LTN	BALL SCREW SUPPORT - METRIC FLANGED COMBINATION RADIAL & THRUST ROLLER	306
DRS	BALL SCREW SUPPORT - SEAL CARRIER AND SEAL FOR OUTBOARD SIDE OF ZARF SERIES	308
AM	METRIC AXIAL CLAMPING PRECISION LOCKNUT FOR THRUST BEARINGS	309
ZM	METRIC RADIALLY CLAMPING PRECISION LOCKNUT FOR THRUST BEARINGS	310
SX 01	METRIC ISO SERIES 18 CROSS ROLLER	312
YRT	ROTARY TABLE - METRIC FLANGED COMBINATION ROLLER	314
ZKLDF	ROTARY TABLE - METRIC FLANGED 60 DEGREE 2 ROW THRUST BALL	316
NKIA 59	METRIC ISO COMBINATION THRUST BALL AND RADIAL NEEDLE	317
NKIB 59	METRIC ISO COMBINATION 2 DIRECTION THRUST BALL AND RADIAL NEEDLE	318
NX	METRIC COMBINATION BANDED THRUST BALL AND RADIAL NEEDLE	319
NKX	METRIC COMBINATION THRUST BALL AND RADIAL NEEDLE	320
NKXR	METRIC COMBINATION THRUST ROLLER AND RADIAL NEEDLE	321

PRODUCT DESCRIPTION

INA Combination Axial Ball And Radial Needle Bearings

- Radial precision ground needle bearing designed on ISO series NA4900 cross section.
- Various axial ball thrust bearings for light to heavy thrust loads adds length to bearing and may increase the outside diameter.
- Designed for applications where the thrust load is secondary to the radial load.

INA Combination Axial And Radial Needle Bearings

- Radial precision ground needle bearing designed on ISO series NA4900 cross section.
- Axial cylindrical thrust bearing for heavy thrust loads based on series 81100.
- Designed for applications where axial preload is required.

INA Combination Bearings For Ball Screw Support

- Matched axial cylindrical roller thrust cages with radial needle support.
- Made to P4 (ABEC 7) runout values for thrust.
- Extremely high rigidity with easily repeatable preloads.
- Available with predrilled integral mounting flange for ease of assembly without increased tolerance stack up.
- Available with seal mounting accessories.

INA 60° Contact Angle Angular Contact Ball Thrust Bearings For Ball Screw Support

- Individual bearings consist of 2 rows as a back to back arrangement with a single outer ring.
- Available as 2 matched bearings for 4 row applications.
- Available as 3 row design with one piece outer ring for stretched or vertical screws.
- Made to P4 (ABEC 7) axial runout values or available as PE version with P5(ABEC 5) runout.
- Available with integral shields or seals.
- Available with predrilled integral mounting flange for ease of assembly without increased tolerance stack up.
- Allows for economical arrangements since seals and mounting flanges included, reducing the need for associated parts.

INA Precision Locknuts

- Metric thread locknuts for high axial clamping forces.
- Designed with large axial and radial cross section for increased rigidity.
- Available with radial clamping plugs or axial deflection beams for doubling the back off torque.

INA Rotary Table Bearings

- Specialty bearing series for machine tool rotary tables and robots.
- Available in P4 precision for rotary tables with flange designs similar to Ball Screw Support Bearings.

INA YRT Series Bearings

- Large, double direction axial bearings with a radial guidance bearing.
- Support load combinations consisting of axial and radial forces as well as tilting moments.
- Holes are provided in the outer and inner rings which are suitable for flange mounting.
- The bearing consists of two axial needle roller and cage assemblies which are matched to the rings in such a way that a predetermined axial preload is achieved.
- Made to P4 (ABEC 7) tolerances.

INA ZKLDF Series Bearings

- Axial angular contact ball bearings of series ZKLDF are double row angular contact ball bearings with a 60° contact angle set in an “O” arrangement.
- They can support load combinations consisting of axial and radial forces as well as tilting moments.
- Bearings of this series have gap seals on both sides.
- The two-piece inner ring is matched to the two ball cages and the outer ring for a defined preload.
- The dimensional tolerances are class P5 (ABEC 5) and the geometrical tolerances are class P4 (ABEC 7) to DIN 620.

Part Number Identification
HIGH PRECISION BEARINGS

AXIAL ANGULAR CONTACT BALL BEARINGS AND NEEDLE ROLLER / AXIAL CYLINDRICAL ROLLER BEARINGS METRIC SERIES

ZKLN, ZKLF, ZARN, ZARF DKLFA

ZKLN **4075** **TN**

ZKLN	Axial Angular Contact Ball Bearing, Double Direction
ZKLF	Axial Angular Contact Ball Bearing, Outer Ring Suitable for Flange Mounting
ZARN	Needle Roller / Axial Cylindrical Rollers Double Direction
ZARF	Needle Roller / Axial Cylindrical Rollers Double Direction, Outer Ring Suitable For Flange Mounting
DKLFA	Axial Angular Contact Ball Bearing, 3 Row, Double Direction, With Flange

First Half – Shaft In mm

Second Half – OD In mm

ZKL SUFFIXES

2RS	Two Contact Seals
2Z	2 Gap Seals
2AP	Matched Pairs For 4 Ball Row
PE	Economy Version, P5 Runout

ZAR SUFFIXES

TN	Plastic Cage
L	Stepped Extended Shaft Washer On 1 Side
PE	Economy Version, P5 Runout

ZARF COMBINATION SEALS METRIC SERIES

DRS

DRS **40115**

PREFIX

DRS	Seal Ring Kit For Use With ZARF Series Bearings

NUMBER

Shaft & OD, In Millimeters of mating ZARF Series Bearing

Part Number Identification
HIGH PRECISION BEARINGS

LOCKNUTS
METRIC SERIES

ZM, ZMA, AM

ZM **35/90**

ZM	Precision Locknut With Locking Pegs, Set Screws With Radial Tightening
ZMA	Heavy Series Of ZM
AM	Precision Locknut With Locking Segments, Set Screws With Axial Tightening

TWO DIGITS – Thread In mm
##/## – Thread / OD In mm

CROSSED ROLLER BEARINGS
METRIC SERIES

SX

SX **01** **18** ******

- SX – Type Of Bearing
- 01 – Raceway Design
- 18 – DIN Standard Dimension Series 18
- ** – Shaft per ISO Standards, in mm
  /6, /8 – 6, 8 mm
  00, 01, 02, 03 = 10, 12, 15, 17 mm
  04 – 10 = Number x 5

MACHINE TOOL
TURNTABLE BEARINGS
METRIC SERIES

YRT, ZKLDF

ZKLDF **395**

PREFIX

YRT	Combination of two axial needle roller bearings and one cylindrical radial bearing
ZKLDF	2 Row, 60° Contact Angle, Ball Type

NUMBER
Shaft Size In Millimeters

Part Number Identification
HIGH PRECISION BEARINGS

COMBINATION BEARINGS METRIC ISO SERIES

NKIA, NKIB

NKIA 59 04 P5

PREFIX

NKIA	Metric, Needle Radial, Ball Thrust, Single Direction
NKIB	Metric, Needle Radial, Ball Thrust Double Direction

59..	ISO Dimension Series

ISO SHAFT STANDARDS

00	10mm Shaft
01	12mm Shaft
02	15mm Shaft
03	17mm Shaft
04<	1/5 Shaft in mm

SUFFIX

P.	Precision Class
RR	Corrotect Plated
ISR	Inner Ring Oil Groove & Hole
S.	Heat Stabilized

COMBINATION RADIAL NEEDLE BEARING METRIC SERIES

NX, NKX, NKXR

NX 12 TN

PREFIX

NX	Axial Banded Ball With Needle Radial
NKX	Axial Three Piece Ball With Needle Radial
NKXR	Axial Needle Roller With Needle Radial

NUMBER

Nominal Shaft Diameter In Millimeters

SUFFIX

TN	Plastic Cage For NX & NKX Series
Z	Grease Shield Or Retaining Cap

Angular Contact Thrust Ball Bearings

ZKLN..PE SERIES

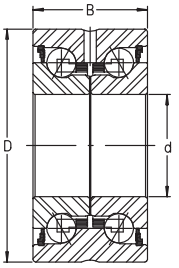

- Double row, 60 degree contact angle
- Sealed
- For most ball screw support
- P5 runout with increased diameter tolerances

For details on part numbers, descriptive suffixes and various technical references, please refer to front of this section.
For engineering or technical information contact your local sales representative or call Distributor Sales (800)523-6572.

PART NUMBER	SHAFT d inch	SHAFT d mm	OD D inch	OD D mm	WIDTH B inch	WIDTH B mm	WGT lbs	WGT kg	DYN. CAP. C lbf	DYN. CAP. C N	STAT. CAP. C_0 lbf	STAT. CAP. C_0 N
ZKLN 0624 2RS PE	0.236	6	0.945	24	0.591	15	0.066	0.03	1,550	6900	1,910	8500
ZKLN 1034 2RS PE	0.394	10	1.339	34	0.787	20	0.221	0.1	3,000	13400	4,250	18800
ZKLN 1242 2RS PE	0.472	12	1.654	42	0.984	25	0.441	0.2	3,800	17000	5,600	24700
ZKLN 1545 2RS PE	0.591	15	1.772	45	0.984	25	0.463	0.21	4,000	17900	6,300	28000
ZKLN 1747 2RS PE	0.669	17	1.850	47	0.984	25	0.485	0.22	4,250	18800	7,000	31000
F 822 17	0.669	17	1.850	47	1.181	30	0.617	0.28	5,800	26000	10,600	47000
F 822 20	0.787	20	1.850	47	1.181	30	0.573	0.26	5,800	26000	10,600	47000
ZKLN 2052 2RS PE	0.787	20	2.047	52	1.102	28	0.684	0.31	5,800	26000	10,600	47000
ZKLN 2557 2RS PE	0.984	25	2.244	57	1.102	28	0.75	0.34	6,200	27500	12,400	55000
F 822 25	0.984	25	2.441	62	1.181	30	1.014	0.46	6,500	29000	14,400	64000
ZKLN 3062 2RS PE	1.181	30	2.441	62	1.102	28	0.86	0.39	6,500	29000	14,400	64000
F 822 30	1.181	30	2.441	62	1.181	30	0.904	0.41	6,500	29000	14,400	64000
ZKLN 3572 2RS PE	1.378	35	2.835	72	1.339	34	1.125	0.51	9,200	41000	20,000	89000
ZKLN 4075 2RS PE	1.575	40	2.953	75	1.339	34	1.345	0.61	9,700	43000	22,700	101000
ZKLN 5090 2RS PE	1.969	50	3.543	90	1.339	34	1.94	0.88	10,500	46500	28,500	126000

CONTINUED FROM ABOVE

PART NUMBER	FRICTION in-lbf	FRICTION Nm	LOCKNUT	LOCKNUT TORQUE ft-lbf	LOCKNUT TORQUE Nm	SPEED LIMIT GREASE rpm
ZKLN 0624 2RS PE	0.35	0.04	ZM 06	1.48	2	6800
ZKLN 1034 2RS PE	1.06	0.12	ZM 10	4.43	6	4600
ZKLN 1242 2RS PE	1.42	0.16	ZM 12	5.9	8	3800
ZKLN 1545 2RS PE	1.77	0.2	ZM 15	7.38	10	3500
ZKLN 1747 2RS PE	2.12	0.24	ZM 17/AM 17	11.06	15	3300
F 822 17	2.66	0.3	ZM 17/AM 17	12.5	17	3000
F 822 20	2.66	0.3	ZM 20/AM 20	13.28	18	3000
ZKLN 2052 2RS PE	2.66	0.3	ZM 20/AM 20	13.28	18	3000
ZKLN 2557 2RS PE	3.54	0.4	ZM 25/AM 25	18.44	25	2600
F 822 25	4.43	0.5	ZM 25/AM 25	21.4	29	2200
ZKLN 3062 2RS PE	4.43	0.5	ZM 30/AM 30	23.6	32	2200
F 822 30	4.43	0.5	ZM 30/AM 30	23.6	32	2200
ZKLN 3572 2RS PE	5.31	0.6	ZM 35/AM 35	29.5	40	2000
ZKLN 4075 2RS PE	6.2	0.7	ZM 40/AM 40	40.6	55	1800
ZKLN 5090 2RS PE	7.97	0.9	ZM 50/AM 50	62.7	85	1500

PE versions are relaxed tolerances for ball screw supports
F 822 numbers match competitors paired bearings

Angular Contact Thrust Ball Bearings

ZKLN SERIES

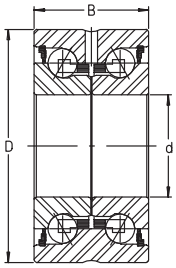

- Double row, 60 degree contact angle
- Sealed versions (2RS), also available shielded (2Z)
- For ball screw support
- P4 runout for highest precision

For details on part numbers, descriptive suffixes and various technical references, please refer to front of this section.
For engineering or technical information contact your local sales representative or call Distributor Sales (800)523-6572.

PART NUMBER	SHAFT d inch	SHAFT d mm	OD D inch	OD D mm	WIDTH B inch	WIDTH B mm	WGT lbs	WGT kg	DYN. CAP. C lbf	DYN. CAP. C N	STAT. CAP. C_0 lbf	STAT. CAP. C_0 N
ZKLN 0619 2Z	0.236	6	0.748	19	0.472	12	0.044	0.02	1,100	4900	1,400	6100
ZKLN 0624 2RS	0.236	6	0.945	24	0.591	15	0.066	0.03	1,550	6900	1,910	8500
ZKLN 0832 2RS	0.315	8	1.260	32	0.787	20	0.198	0.09	2,800	12500	3,650	16300
ZKLN 1034 2RS	0.394	10	1.339	34	0.787	20	0.221	0.1	3,000	13400	4,250	18800
ZKLN 1242 2RS	0.472	12	1.654	42	0.984	25	0.441	0.2	3,800	17000	5,600	24700
ZKLN 1545 2RS	0.591	15	1.772	45	0.984	25	0.463	0.21	4,000	17900	6,300	28000
ZKLN 1747 2RS	0.669	17	1.850	47	0.984	25	0.485	0.22	4,250	18800	7,000	31000
ZKLN 2052 2RS	0.787	20	2.047	52	1.102	28	0.684	0.31	5,800	26000	10,600	47000
ZKLN 2557 2RS	0.984	25	2.244	57	1.102	28	0.75	0.34	6,200	27500	12,400	55000
ZKLN 3062 2RS	1.181	30	2.441	62	1.102	28	0.86	0.39	6,500	29000	14,400	64000
ZKLN 3072 2RS	1.181	30	2.835	72	1.496	38	1.125	0.51	13,300	59000	24,300	108000
ZKLN 3572 2RS	1.378	35	2.835	72	1.339	34	1.125	0.51	9,200	41000	20,000	89000
ZKLN 4075 2RS	1.575	40	2.953	75	1.339	34	1.345	0.61	9,700	43000	22,700	101000
ZKLN 4090 2RS	1.575	40	3.543	90	1.811	46	2.095	0.95	16,200	72000	33,500	149000
ZKLN 5090 2RS	1.969	50	3.543	90	1.339	34	1.94	0.88	10,500	46500	28,500	126000
ZKLN 50110 2RS	1.969	50	4.331	110	2.126	54	5.513	2.5	25,500	113500	56,000	250000
ZKLN 60110 2Z	2.362	60	4.331	110	1.772	45	4.851	2.2	18,900	84000	48,000	214000
ZKLN 70120 2Z	2.756	70	4.724	120	1.772	45	5.292	2.4	19,800	88000	54,000	241000
ZKLN 80130 2Z	3.150	80	5.118	130	1.772	45	5.954	2.7	20,500	91000	60,000	265000
ZKLN 90150 2Z	3.543	90	5.906	150	2.165	55	9.923	4.5	30,500	135000	89,000	395000
ZKLN 100160 2Z	3.937	100	6.299	160	2.165	55	10.805	4.9	31,500	140000	98,000	435000

CONTINUED FROM ABOVE

PART NUMBER	FRICTION in-lbf	FRICTION Nm	LOCKNUT	LOCKNUT TORQUE ft-lbf	LOCKNUT TORQUE Nm	SPEED LIMIT GREASE rpm
ZKLN 0619 2Z	0.09	0.01	ZM 06	1.48	2	14000
ZKLN 0624 2RS	0.35	0.04	ZM 06	1.48	2	6800
ZKLN 0832 2RS	0.71	0.08	ZM 08	2.95	4	5100
ZKLN 1034 2RS	1.06	0.12	ZM 10	4.43	6	4600
ZKLN 1242 2RS	1.42	0.16	ZM 12	5.9	8	3800
ZKLN 1545 2RS	1.77	0.2	ZM 15	7.38	10	3500
ZKLN 1747 2RS	2.12	0.24	ZM 17/AM 17	11.06	15	3300
ZKLN 2052 2RS	2.66	0.3	ZM 20/AM 20	13.28	18	3000
ZKLN 2557 2RS	3.54	0.4	ZM 25/AM 25	18.44	25	2600
ZKLN 3062 2RS	4.43	0.5	ZM 30/AM 30	23.6	32	2200
ZKLN 3072 2RS	7.08	0.8	ZM 30/52 AM 30	47.9	65	2100
ZKLN 3572 2RS	5.31	0.6	ZM 35/AM 35	29.5	40	2000
ZKLN 4075 2RS	6.2	0.7	ZM 40/AM 40	40.6	55	1800
ZKLN 4090 2RS	11.5	1.3	ZMA 40/62/AM 40	81.1	110	1600
ZKLN 5090 2RS	7.97	0.9	ZM 50/AM 50	62.7	85	1500
ZKLN 50110 2RS	23.01	2.6	ZM 50/75/AM 50	110.6	150	2500
ZKLN 60110 2Z	8.85	1	ZMA 60/98 AM 60	73.8	100	2400
ZKLN 70120 2Z	10.62	1.2	ZMA 70/110 AM 70	95.9	130	2200
ZKLN 80130 2Z	12.39	1.4	ZMA 80/120	118.0	160	2100
ZKLN 90150 2Z	20.36	2.3	ZMA 90/130 AM 90	147.5	200	1800
ZKLN 100160 2Z	23.01	2.6	ZMA 100/140	184.4	250	1700

Angular Contact Thrust Ball Bearings

ZKLF..PE SERIES

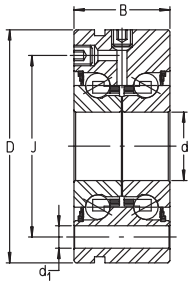

- Double row, 60 degree contact angle
- Sealed
- For most ball screw support
- With predrilled mounting flange
- P5 runout with increased diameter tolerances

For details on part numbers, descriptive suffixes and various technical references, please refer to front of this section.
For engineering or technical information contact your local sales representative or call Distributor Sales (800)523-6572.

PART NUMBER	SHAFT d inch	SHAFT d mm	OD D inch	OD D mm	WIDTH B inch	WIDTH B mm	WGT lbs	WGT kg	DYN. CAP. C lbf	DYN. CAP. C N	STAT. CAP. C_0 lbf	STAT. CAP. C_0 N
ZKLF 1255 2RS PE	0.472	12	2.165	55	0.984	25	0.82	0.37	3,800	17000	5,600	24700
ZKLF 1560 2RS PE	0.591	15	2.362	60	0.984	25	0.95	0.43	4,000	17900	6,300	28000
ZKLF 1762 2RS PE	0.669	17	2.441	62	0.984	25	0.99	0.45	4,250	18800	7,000	31000
ZKLF 2068 2RS PE	0.787	20	2.677	68	1.102	28	1.35	0.61	5,800	26000	10,600	47000
ZKLF 2575 2RS PE	0.984	25	2.953	75	1.102	28	1.59	0.72	6,200	27500	12,400	55000
ZKLF 3080 2RS PE	1.181	30	3.150	80	1.102	28	1.72	0.78	6,500	29000	14,400	64000
ZKLF 3590 2RS PE	1.378	35	3.543	90	1.339	34	2.49	1.13	9,200	41000	20,000	89000
ZKLF 40100 2RS PE	1.575	40	3.937	100	1.339	34	3.22	1.46	9,700	43000	22,700	101000
ZKLF 50115 2RS PE	1.969	50	4.528	115	1.339	34	4.10	1.86	10,500	46500	28,500	126000

CONTINUED FROM ABOVE

PART NUMBER	J inch	J mm	d_1 inch	d_1 mm	FRICTION in-lbf	FRICTION Nm	BOLTS SIZE & GRADE	BOLTS QTY.	LOCKNUT	LOCKNUT TORQUE ft-lbf	LOCKNUT TORQUE Nm	SPEED LIMIT rpm
ZKLF 1255 2RS PE	1.654	42	0.256	6.5	1.42	0.16	M6–10.9	3	ZM 12	5.9	8	3800
ZKLF 1560 2RS PE	1.811	46	0.256	6.5	1.77	0.2	M6–10.9	3	ZM 15	7.4	10	3500
ZKLF 1762 2RS PE	1.890	48	0.256	6.5	2.12	0.24	M6–10.9	3	ZM 17/AM 17	11.1	15	3300
ZKLF 2068 2RS PE	2.087	53	0.256	6.5	2.66	0.3	M6–10.9	4	ZM 20/AM 20	13.3	18	3000
ZKLF 2575 2RS PE	2.284	58	0.256	6.5	3.54	0.4	M6–10.9	4	ZM 25/AM 25	18.4	25	2600
ZKLF 3080 2RS PE	2.480	63	0.256	6.5	4.43	0.5	M6–10.9	6	ZM 30/AM 30	23.6	32	2200
ZKLF 3590 2RS PE	2.953	75	0.256	8.5	5.31	0.6	M8–10.9	4	ZM 35/AM 35	29.5	40	2000
ZKLF 40100 2RS PE	3.150	80	0.335	8.5	6.2	0.7	M8–10.9	4	ZM 40/AM 40	40.6	55	1800
ZKLF 50115 2RS PE	3.701	94	0.335	8.5	7.97	0.9	M8–10.9	6	ZM 50/AM 50	62.7	85	1500

Angular Contact Thrust Ball Bearings

ZKLF SERIES

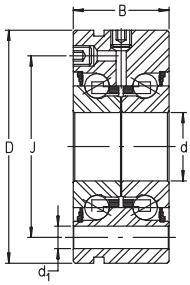

- Double row, 60 degree contact angle
- Sealed version (2RS), also available shielded (2Z)
- With predrilled mounting flange
- For ball screw support
- P4 runout for highest precision

For details on part numbers, descriptive suffixes and various technical references, please refer to front of this section.
For engineering or technical information contact your local sales representative or call Distributor Sales (800)523-6572.

PART NUMBER	SHAFT d inch	SHAFT d mm	OD D inch	OD D mm	WIDTH B inch	WIDTH B mm	WGT lbs	WGT kg	DYN. CAP. C lbf	DYN. CAP. C N	STAT. CAP. C_0 lbf	STAT. CAP. C_0 N	J inch	J mm
ZKLF 1255 2RS	0.472	12	2.165	55	0.984	25	0.82	0.37	3,800	17000	5,600	24700	1.654	42
ZKLF 1560 2RS	0.591	15	2.362	60	0.984	25	0.95	0.43	4,000	17900	6,300	28000	1.811	46
ZKLF 1762 2RS	0.669	17	2.441	62	0.984	25	0.99	0.45	4,250	18800	7,000	31000	1.89	48
ZKLF 2068 2RS	0.787	20	2.677	68	1.102	28	1.35	0.61	5,800	26000	10,600	47000	2.087	53
ZKLF 2575 2RS	0.984	25	2.953	75	1.102	28	1.59	0.72	6,200	27500	12,400	55000	2.284	58
ZKLF 3080 2RS	1.181	30	3.15	80	1.102	28	1.72	0.78	6,500	29000	14,400	64000	2.48	63
ZKLF 3590 2RS	1.378	35	3.543	90	1.339	34	2.49	1.13	9,200	41000	20,000	89000	2.953	75
ZKLF 40100 2RS	1.575	40	3.937	100	1.339	34	3.22	1.46	9,700	43000	22,700	101000	3.15	80
ZKLF 40115 2RS	1.575	40	4.528	115	1.811	46	5	2.2	16,200	72000	33,500	149000	3.701	94
ZKLF 50115 2RS	1.969	50	4.528	115	1.339	34	4.1	1.86	10,500	46500	28,500	126000	3.701	94
ZKLF 50140 2RS	1.969	50	5.512	140	2.126	54	10.36	4.7	25,500	113000	56,000	250000	4.449	113
ZKLF 60145 2Z	2.362	60	5.709	145	1.772	45	9.48	4.3	18,900	84000	48,000	214000	4.724	120
ZKLF 70155 2Z	2.756	70	6.102	155	1.772	45	10.81	4.9	19,800	88000	54,000	241000	5.118	130
ZKLF 80165 2Z	3.15	80	6.496	165	1.772	45	11.69	5.3	20,500	91000	60,000	265000	5.512	140
ZKLF 90190 2Z	3.543	90	7.48	190	2.165	55	19.18	8.7	30,500	135000	89,000	395000	6.496	165
ZKLF 100200 2Z	3.937	100	7.874	200	2.165	55	20.51	9.3	31,500	140000	98,000	435000	6.89	175

CONTINUED FROM ABOVE

PART NUMBER	d_1 inch	d_1 mm	FRICTION in-lbf	FRICTION Nm	BOLTS SIZE & GRADE	BOLTS QTY.	LOCKNUT	LOCKNUT TORQUE ft-lbf	LOCKNUT TORQUE Nm	SPEED LIMIT rpm
ZKLF 1255 2RS	0.256	6.5	1.42	0.16	M6–10.9	3	ZM 12	5.9	8	3800
ZKLF 1560 2RS	0.256	6.5	1.77	0.2	M6–10.9	3	ZM 15	7.4	10	3500
ZKLF 1762 2RS	0.256	6.5	2.12	0.24	M6–10.9	3	ZM 17/AM 17	11.1	15	3300
ZKLF 2068 2RS	0.256	6.5	2.66	0.3	M6–10.9	4	ZM 20/AM 20	13.3	18	3000
ZKLF 2575 2RS	0.256	6.5	3.54	0.4	M6–10.9	4	ZM 25/AM 25	18.4	25	2600
ZKLF 3080 2RS	0.256	6.5	4.43	0.5	M6–10.9	6	ZM 30/AM 30	23.6	32	2200
ZKLF 3590 2RS	0.256	8.5	5.31	0.6	M8–10.9	4	ZM 35/AM 35	29.5	40	2000
ZKLF 40100 2RS	0.335	8.5	6.2	0.7	M8–10.9	4	ZM 40/AM 40	40.6	55	1800
ZKLF 40115 2RS	0.335	8.5	11.5	1.3	M8–10.9	12	ZMA 40/65/AM 40	81.1	110	1600
ZKLF 50115 2RS	0.335	8.5	7.97	0.9	M8–10.9	6	ZM 50/AM 50	62.7	85	1500
ZKLF 50140 2RS	0.413	10.5	23.01	2.6	M10–10.9	12	ZMA 50/75/AM 50	110.6	150	2500
ZKLF 60145 2Z	0.335	8.5	8.85	1	M 8–8.8	8	ZMA 60/98 /AM60	73.76	100	2400
ZKLF 70155 2Z	0.335	8.5	10.62	1.2	M 8–8.8	8	ZMA 70/110 /AM70	95.89	130	2200
ZKLF 80165 2Z	0.335	8.5	12.39	1.4	M 8–8.8	8	ZMA 80/120	118.02	160	2100
ZKLF 90190 2Z	0.413	10.5	20.36	2.3	M 10–8.8	8	ZMA 90/130/AM90	147.52	200	1800
ZKLF 100200 2Z	0.413	10.5	23.01	2.6	M 10–8.8	8	ZMA 100/140	184.4	250	1700

Angular Contact Thrust Ball Bearings

DKLFA SERIES

- 3 row design, 60 degree contact angle
- Ball screw support and stretching
- With predrilled mounting flange
- Sealed

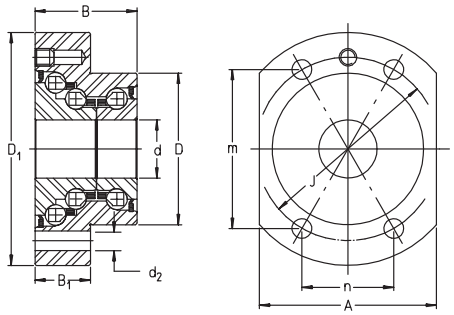

For details on part numbers, descriptive suffixes and various technical references, please refer to front of this section.
For engineering or technical information contact your local sales representative or call Distributor Sales (800)523-6572.

PART NUMBER	SHAFT d inch	SHAFT d mm	OD D inch	OD D mm	WIDTH B inch	WIDTH B mm	WGT lbs	WGT kg
DKLFA 1575 2RS	0.591	15	1.772	45	1.260	32	1.169	0.53
DKLFA 2080 2RS	0.787	20	2.047	52	1.378	35	1.544	0.7
DKLFA 2590 2RS	0.984	25	2.244	57	1.496	38	1.985	0.9
DKLFA 30100 2RS	1.181	30	2.441	62	1.496	38	2.205	1
DKLFA 40115 2RS	1.575	40	2.835	72	1.654	42	3.308	1.5

CONTINUED FROM ABOVE

PART NUMBER	INBOARD ROWS DYN. CAP. C lbf	INBOARD ROWS DYN. CAP. C N	INBOARD ROWS STAT. CAP. C_0 lbf	INBOARD ROWS STAT. CAP. C_0 N	OUTBOARD STRETCHING ROWS DYN. CAP. C lbf	OUTBOARD STRETCHING ROWS DYN. CAP. C N	OUTBOARD STRETCHING ROWS STAT. CAP. C_0 lbf	OUTBOARD STRETCHING ROWS STAT. CAP. C_0 N	SPEED LIMIT GREASE rpm
DKLFA 1575 2RS	4,000	17.9	6,300	28	8,300	37	18,700	83	2600
DKLFA 2080 2RS	5,800	26	10,600	47	10,000	44.5	24,700	110	2200
DKLFA 2590 2RS	6,200	27.5	12,400	55	11,700	52	32,500	144	2000
DKLFA 30100 2RS	6,500	29	14,400	64	12,400	55	37,000	165	1800
DKLFA 40115 2RS	9,700	43	22,700	101	16,400	73	51,000	227	1500

CONTINUED FROM ABOVE

PART NUMBER	D_1 inch	D_1 mm	B_1 inch	B_1 mm	J inch	J mm	d_2 inch	d_2 mm	m inch	m mm	n inch	n mm	A inch	A mm	THREAD	BOLT QTY.
DKLFA 1575 2RS	2.953	75	0.709	18	2.284	58	0.268	6.8	1.976	50.2	1.142	29	2.165	55	M6	4
DKLFA 2080 2RS	3.150	80	0.748	19	2.480	63	0.268	6.8	2.150	54.6	1.240	31.5	2.441	62	M6	4
DKLFA 2590 2RS	3.543	90	0.866	22	2.953	75	0.347	8.8	2.087	53	2.087	53	2.756	70	M8	6
DKLFA 30100 2RS	3.937	100	0.866	22	3.150	80	0.347	8.8	2.228	56.6	2.228	56.6	2.835	72	M8	6
DKLFA 40115 2RS	4.528	115	0.906	23	3.701	94	0.347	8.8	2.618	66.5	2.618	66.5	3.543	90	M8	6

Independent capacity values are given for the ball rows depending on the load direction.

Ball Screw Support Bearings

ZARN SERIES

- Combination double direction axial cylindrical roller and radial needle roller bearings
- Metric series
- P4 axial precision

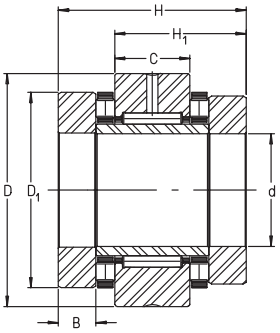

For details on part numbers, descriptive suffixes and various technical references, please refer to front of this section.
For engineering or technical information contact your local sales representative or call Distributor Sales (800)523-6572.

PART NUMBER	SHAFT d mm inch	OD D mm inch	WIDTH H mm inch	WEIGHT kg lbs	DYN. CAP. AXIAL N lbf	STAT. CAP. AXIAL N lbf	DYN. CAP. RADIAL N lbf	STAT. CAP. RADIAL N lbf
ZARN 1545 TN	15	45	40	0.34	24900	53000	13000	17500
ZARN 1545 TN	0.5906	1.7717	1.5748	0.7	5600	11900	2900	3900
ZARN 1747 TN	17	47	43	0.37	26000	57000	14000	19900
ZARN 1747 TN	0.6693	1.8504	1.6929	0.8	5800	12800	3100	4500
ZARN 2052 TN	20	52	46	0.41	33500	76000	14900	22400
ZARN 2052 TN	0.7874	2.0472	1.811	0.9	7500	17100	3300	5000
ZARN 2062 TN	20	62	60	0.87	64000	141000	22600	36000
ZARN 2062 TN	0.7874	2.4409	2.3622	1.9	14400	31700	5100	8100
ZARN 2572 TN	25	72	60	1.17	80000	199000	24300	41000
ZARN 2572 TN	0.9843	2.8346	2.3622	2.6	18000	44700	5500	9200
ZARN 2557 TN	25	57	50	0.53	35500	86000	22600	36000
ZARN 2557 TN	0.9843	2.2441	1.9685	1.2	8000	19300	5100	8100
ZARN 3080 TN	30	80	66	1.5	107000	265000	26000	47000
ZARN 3080 TN	1.1811	3.1496	2.5984	3.3	24100	59600	5800	10600
ZARN 3062 TN	30	62	50	0.6	39000	101000	24300	41500
ZARN 3062 TN	1.1811	2.4409	1.9685	1.3	8800	22700	5500	9300
ZARN 3585 TN	35	85	66	1.65	105000	265000	27500	53000
ZARN 3585 TN	1.378	3.3465	2.5984	3.6	23600	59600	6200	11900
ZARN 3570 TN	35	70	54	0.8	56000	148000	26000	47000
ZARN 3570 TN	1.378	2.7559	2.126	1.8	12600	33300	5800	10600
ZARN 4090 TN	40	90	75	2.09	117000	315000	38000	74000
ZARN 4090 TN	1.5748	3.5433	2.9528	4.6	26300	70800	8500	16600
ZARN 4075 TN	40	75	54	0.9	59000	163000	27500	53000
ZARN 4075 TN	1.5748	2.9528	2.126	2	13300	36600	6200	11900
ZARN 45105 TN	45	105	82	3.02	154000	405000	40000	82000
ZARN 45105 TN	1.7717	4.1339	3.2283	6.7	34600	91100	9000	18400
ZARN 4580 TN	45	80	60	1.12	61000	177000	38000	74000
ZARN 4580 TN	1.7717	3.1496	2.3622	2.5	13700	39800	8500	16600
ZARN 5090 TN	50	90	60	1.43	90000	300000	40000	82000
ZARN 5090 TN	1.9685	3.5433	2.3622	3.2	20200	67400	9000	18400
ZARN 50110 TN	50	110	82	3.3	172000	480000	42000	90000
ZARN 50110 TN	1.9685	4.3307	3.2283	7.3	38700	107900	9400	20200
ZARN 55115 TN	55	115	82	3.5	177000	500000	44000	98000
ZARN 55115 TN	2.1654	4.5276	3.2283	7.7	39800	112400	9900	22000
ZARN 60120 TN	60	120	82	3.7	187000	550000	44500	92000
ZARN 60120 TN	2.3622	4.7244	3.2283	8.2	42000	123700	10000	20700
ZARN 65125 TN	65	125	82	4	172000	500000	54000	104000
ZARN 65125 TN	2.5591	4.9213	3.2283	8.8	38700	112400	12100	23400
ZARN 70130 TN	70	130	82	4.1	201000	630000	56000	119000
ZARN 70130 TN	2.7559	5.1181	3.2283	9	45200	141600	12600	26800
ZARN 75155 TN	75	155	100	7.9	290000	890000	72000	132000
ZARN 75155 TN	2.9528	6.1024	3.937	17.4	65200	200100	16200	29700
ZARN 90180 TN	90	180	110	11.6	325000	1030000	98000	210000
ZARN 90180 TN	3.5433	7.0866	4.3307	25.6	73100	231600	22000	47200

Ball Screw Support Bearings

ZARN SERIES

- Combination double direction axial cylindrical roller and radial needle roller bearings
- Metric series
- P4 axial precision

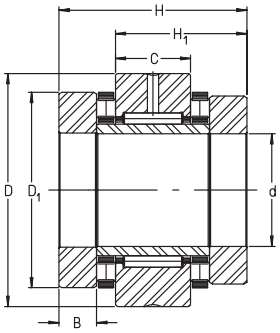

For details on part numbers, descriptive suffixes and various technical references, please refer to front of this section.
For engineering or technical information contact your local sales representative or call Distributor Sales (800)523-6572.

H_1 mm inch	C mm inch	D_1 mm inch	B mm inch	SPEED LIMIT OIL rpm	SPEED LIMIT GREASE rpm	BEARING FRICTION Nm in-lbf	LOCKNUT TORQUE Nm in-lbf	PART NUMBER
28	16	35	7.5	8500	2200	0.35	10	ZARN 1545 TN
1.1024	0.6299	1.378	0.2953	8500	2200	3.1	89	ZARN 1545 TN
29.5	16	38	9	7800	2100	0.4	12	ZARN 1747 TN
1.1614	0.6299	1.4961	0.3543	7800	2100	3.54	106	ZARN 1747 TN
31	16	42	10	7000	2000	0.5	18	ZARN 2052 TN
1.2205	0.6299	1.6535	0.3937	7000	2000	4.43	159	ZARN 2052 TN
40	20	52	12.5	6000	1500	1.3	38	ZARN 2062 TN
1.5748	0.7874	2.0472	0.4921	6000	1500	11.51	336	ZARN 2062 TN
40	20	62	12.5	4900	1400	1.6	55	ZARN 2572 TN
1.5748	0.7874	2.4409	0.4921	4900	1400	14.16	487	ZARN 2572 TN
35	20	47	10	6000	1900	0.55	25	ZARN 2557 TN
1.378	0.7874	1.8504	0.3937	6000	1900	4.87	221	ZARN 2557 TN
43	20	68	14	4400	1300	2.1	75	ZARN 3080 TN
1.6929	0.7874	2.6772	0.5512	4400	1300	18.59	664	ZARN 3080 TN
35	20	52	10	5500	1800	0.65	32	ZARN 3062 TN
1.378	0.7874	2.0472	0.3937	5500	1800	5.75	283	ZARN 3062 TN
43	20	73	14	4000	1250	2.3	100	ZARN 3585 TN
1.6929	0.7874	2.874	0.5512	4000	1250	20.36	885	ZARN 3585 TN
37	20	60	11	4800	1700	0.9	42	ZARN 3570 TN
1.4567	0.7874	2.3622	0.4331	4800	1700	7.97	372	ZARN 3570 TN
50	25	78	16	3700	1200	2.5	120	ZARN 4090 TN
1.9685	0.9843	3.0709	0.6299	3700	1200	22.13	1062	ZARN 4090 TN
37	20	65	11	4400	1600	1	55	ZARN 4075 TN
1.4567	0.7874	2.5591	0.4331	4400	1600	8.85	487	ZARN 4075 TN
53.5	25	90	17.5	3300	1150	3.5	150	ZARN 45105 TN
2.1063	0.9843	3.5433	0.689	3300	1150	30.98	1328	ZARN 45105 TN
42.5	25	70	11.5	4000	1500	1.2	65	ZARN 4580 TN
1.6732	0.9843	2.7559	0.4528	4000	1500	10.62	575	ZARN 4580 TN
42.5	25	78	11.5	3600	1200	2.2	85	ZARN 5090 TN
1.6732	0.9843	3.0709	0.4528	3600	1200	19.47	752	ZARN 5090 TN
53.5	25	95	17.5	3100	1100	3.8	180	ZARN 50110 TN
2.1063	0.9843	3.7402	0.689	3100	1100	33.63	1593	ZARN 50110 TN
53.5	25	100	17.5	2900	1000	4	220	ZARN 55115 TN
2.1063	0.9843	3.937	0.689	2900	1000	35.4	1947	ZARN 55115 TN
53.5	25	105	17.5	2700	950	4.2	250	ZARN 60120 TN
2.1063	0.9843	4.1339	0.689	2700	950	37.17	2213	ZARN 60120 TN
53.5	25	110	17.5	2600	900	3.9	270	ZARN 65125 TN
2.1063	0.9843	4.3307	0.689	2600	900	34.52	2390	ZARN 65125 TN
53.5	25	115	17.5	2400	800	4.8	330	ZARN 70130 TN
2.1063	0.9843	4.5276	0.689	2400	800	42.49	2921	ZARN 70130 TN
65	30	135	21	2100	700	8	580	ZARN 75155 TN
2.5591	1.1811	5.315	0.8268	2100	700	70.81	5134	ZARN 75155 TN
72.5	35	160	22.5	1800	700	10.5	960	ZARN 90180 TN
2.8543	1.378	6.2992	0.8858	1800	700	92.94	8497	ZARN 90180 TN

Ball Screw Support Bearings

ZARN..LTN SERIES

- Combination double direction axial cylindrical roller and radial needle roller bearings
- Extended shaft washer for DIN 3760 series metric seal
- Metric series
- P4 axial precision

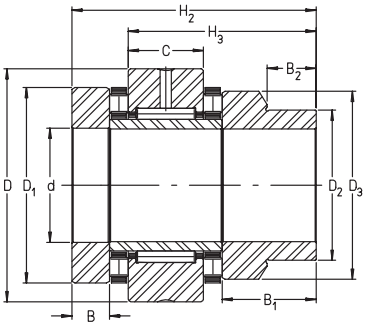

For details on part numbers, descriptive suffixes and various technical references, please refer to front of this section.
For engineering or technical information contact your local sales representative or call Distributor Sales (800)523-6572.

PART NUMBER	SHAFT d mm inch	OD D mm inch	WIDTH H_2 mm inch	WEIGHT kg lbs	DYN. CAP. AXIAL N lbf	STAT. CAP. AXIAL N lbf	DYN. CAP. RADIAL N lbf	STAT. CAP. RADIAL N lbf	H_3 mm inch	C mm inch
ZARN 1545 LTN	15	45	53	0.37	24900	53000	13000	17500	41	16
ZARN 1545 LTN	0.5906	1.7717	2.0866	0.82	5600	11900	2920	3930	1.6142	0.6299
ZARN 1747 LTN	17	47	57	0.41	26000	57000	14000	19900	43.5	16
ZARN 1747 LTN	0.6693	1.8504	2.2441	0.9	5850	12800	3150	4470	1.7126	0.6299
ZARN 2052 LTN	20	52	60	0.46	33500	76000	14900	22400	45	16
ZARN 2052 LTN	0.7874	2.0472	2.3622	1.01	7530	17100	3350	5040	1.7717	0.6299
ZARN 2062 LTN	20	62	75	0.99	64000	141000	22600	36000	55	20
ZARN 2062 LTN	0.7874	2.4409	2.9528	2.18	14400	32000	5080	8090	2.1654	0.7874
ZARN 2557 LTN	25	57	65	0.59	35500	86000	22600	36000	50	20
ZARN 2557 LTN	0.9843	2.2441	2.5591	1.3	8000	19000	5080	8090	1.9685	0.7874
ZARN 2572 LTN	25	72	75	1.32	80000	199000	24300	41000	55	20
ZARN 2572 LTN	0.9843	2.8346	2.9528	2.91	18000	45000	5460	9220	2.1654	0.7874
ZARN 3062 LTN	30	62	65	0.75	39000	101000	24300	41500	50	20
ZARN 3062 LTN	1.1811	2.4409	2.5591	1.65	8800	23000	5460	9330	1.9685	0.7874
ZARN 3080 LTN	30	80	82	1.7	107000	265000	26000	47000	59	20
ZARN 3080 LTN	1.1811	3.1496	3.2283	3.75	24100	60000	5850	10600	2.3228	0.7874
ZARN 3570 LTN	35	70	70	0.93	56000	148000	26000	47000	53	20
ZARN 3570 LTN	1.378	2.7559	2.7559	2.05	12600	33000	5850	10600	2.0866	0.7874
ZARN 3585 LTN	35	85	82	1.8	105000	265000	27500	53000	59	20
ZARN 3585 LTN	1.378	3.3465	3.2283	3.97	23600	60000	6180	11900	2.3228	0.7874
ZARN 4075 LTN	40	75	70	1	59000	163000	27500	53000	53	20
ZARN 4075 LTN	1.5748	2.9528	2.7559	2.21	13300	37000	6180	11900	2.0866	0.7874
ZARN 4090 LTN	40	90	93	2.39	117000	315000	38000	74000	68	25
ZARN 4090 LTN	1.5748	3.5433	3.6614	5.27	26300	71000	8540	16600	2.6772	0.9843
ZARN 4580 LTN	45	80	75	1.27	61000	177000	38000	74000	57.5	25
ZARN 4580 LTN	1.7717	3.1496	2.9528	2.8	13700	40000	8540	16600	2.2638	0.9843
ZARN 45105 LTN	45	105	103	3.42	154000	405000	40000	82000	74.5	25
ZARN 45105 LTN	1.7717	4.1339	4.0551	7.54	35000	91000	8990	18000	2.9331	0.9843
ZARN 5090 LTN	50	90	78	1.78	90000	300000	40000	82000	60.5	25
ZARN 5090 LTN	1.9685	3.5433	3.0709	3.92	20000	67000	8990	18000	2.3819	0.9843
ZARN 50110 LTN	50	110	103	3.75	172000	480000	42000	90000	74.5	25
ZARN 50110 LTN	1.9685	4.3307	4.0551	8.27	39000	108000	9440	20000	2.9331	0.9843
ZARN 55115 LTN	55	115	103	4	177000	500000	44000	98000	74.5	25
ZARN 55115 LTN	2.1654	4.5276	4.0551	8.82	40000	112000	9890	22000	2.9331	0.9843
ZARN 60120 LTN	60	120	103	4.85	187000	550000	44500	92000	74.5	25
ZARN 60120 LTN	2.3622	4.7244	4.0551	10.69	42000	124000	10000	21000	2.9331	0.9843
ZARN 65125 LTN	65	125	103	4.6	172000	500000	54000	104000	74.5	25
ZARN 65125 LTN	2.5591	4.9213	4.0551	10.14	39000	112000	12000	23000	2.9331	0.9843
ZARN 70130 LTN	70	130	103	4.85	201000	630000	56000	119000	74.5	25
ZARN 70130 LTN	2.7559	5.1181	4.0551	10.69	45000	142000	13000	27000	2.9331	0.9843
ZARN 75155 LTN	75	155	125	9.1	290000	890000	72000	132000	90	30
ZARN 75155 LTN	2.9528	6.1024	4.9213	20.07	65000	200000	16000	30000	3.5433	1.1811
ZARN 90180 LTN	90	180	135	13.05	325000	1030000	98000	210000	97.5	35
ZARN 90180 LTN	3.5433	7.0866	5.315	28.78	73000	232000	22000	47000	3.8386	1.378

Ball Screw Support Bearings

ZARN..LTN SERIES

- Combination double direction axial cylindrical roller and radial needle roller bearings
- Extended shaft washer for DIN 3760 series metric seal
- Metric series
- P4 axial precision

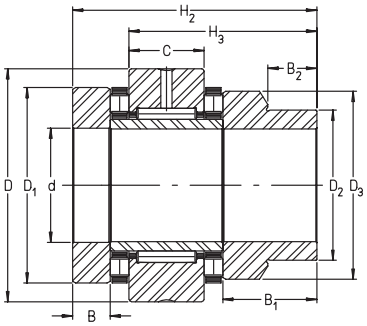

For details on part numbers, descriptive suffixes and various technical references, please refer to front of this section.
For engineering or technical information contact your local sales representative or call Distributor Sales (800)523-6572.

D_1 mm inch	D_2 mm inch	D_3 mm inch	B mm inch	B_1 mm inch	B_2 mm inch	SPEED LIMIT OIL rpm	SPEED LIMIT GREASE rpm	BEARING FRICTION Nm in-lbf	LOCKNUT TORQUE Nm ft-lbf	SEAL SIZE PER DIN3760	PART NUMBER
35	24	34	7.5	20.5	11	8500	2200	0.35	10	24x35x7	ZARN 1545 LTN
1.378	0.9449	1.3386	0.2953	0.8071	0.4331	8500	2200	3.1	7	24x35x7	ZARN 1545 LTN
38	28	38	9	23	11	7800	2100	0.4	12	28x40x7	ZARN 1747 LTN
1.4961	1.1024	1.4961	0.3543	0.9055	0.4331	7800	2100	3.5	9	28x40x7	ZARN 1747 LTN
42	30	40	10	24	11	7000	2000	0.5	18	30x42x7	ZARN 2052 LTN
1.6535	1.1811	1.5748	0.3937	0.9449	0.4331	7000	2000	4.4	13	30x42x7	ZARN 2052 LTN
52	40	50	12.5	27.5	11	6000	1500	1.3	38	40x52x7	ZARN 2062 LTN
2.0472	1.5748	1.9685	0.4921	1.0827	0.4331	6000	1500	11.5	28	40x52x7	ZARN 2062 LTN
47	36	45	10	25	11	6000	1900	0.55	25	36x47x7	ZARN 2557 LTN
1.8504	1.4173	1.7717	0.3937	0.9843	0.4331	6000	1900	4.9	18	36x47x7	ZARN 2557 LTN
62	48	60	12.5	27.5	11	4900	1400	1.6	55	48x62x8	ZARN 2572 LTN
2.4409	1.8898	2.3622	0.4921	1.0827	0.4331	4900	1400	14.2	41	48x62x8	ZARN 2572 LTN
52	40	50	10	25	11	5500	1800	0.65	32	40x52x7	ZARN 3062 LTN
2.0472	1.5748	1.9685	0.3937	0.9843	0.4331	5500	1800	5.8	24	40x52x7	ZARN 3062 LTN
68	52	66	14	30	12	4400	1300	2.1	75	52x68x8	ZARN 3080 LTN
2.6772	2.0472	2.5984	0.5512	1.1811	0.4724	4400	1300	18.6	55	52x68x8	ZARN 3080 LTN
60	45	58	11	27	12	4800	1700	0.9	42	45x60x8	ZARN 3570 LTN
2.3622	1.7717	2.2835	0.4331	1.063	0.4724	4800	1700	8	31	45x60x8	ZARN 3570 LTN
73	60	73	14	30	12	4000	1250	2.3	100	60x75x8	ZARN 3585 LTN
2.874	2.3622	2.874	0.5512	1.1811	0.4724	4000	1250	20.4	74	60x75x8	ZARN 3585 LTN
65	50	63	11	27	12	4400	1600	1	55	50x65x8	ZARN 4075 LTN
2.5591	1.9685	2.4803	0.4331	1.063	0.4724	4400	1600	8.9	41	50x65x8	ZARN 4075 LTN
78	60	78	16	34	12	3700	1200	2.5	120	60x80x8	ZARN 4090 LTN
3.0709	2.3622	3.0709	0.6299	1.3386	0.4724	3700	1200	22.1	89	60x80x8	ZARN 4090 LTN
70	56	68	11.5	26.5	12	4000	1500	1.2	65	56x70x8	ZARN 4580 LTN
2.7559	2.2047	2.6772	0.4528	1.0433	0.4724	4000	1500	10.6	48	56x70x8	ZARN 4580 LTN
90	70	88	17.5	38.5	14	3300	1150	3.5	150	70x90x10	ZARN 45105 LTN
3.5433	2.7559	3.4646	0.689	1.5157	0.5512	3300	1150	31	111	70x90x10	ZARN 45105 LTN
78	60	78	11.5	29.5	12	3600	1200	2.2	85	60x80x8	ZARN 5090 LTN
3.0709	2.3622	3.0709	0.4528	1.1614	0.4724	3600	1200	19.5	63	60x80x8	ZARN 5090 LTN
95	75	93	17.5	38.5	14	3100	1100	3.8	180	75x95x10	ZARN 50110 LTN
3.7402	2.9528	3.6614	0.689	1.5157	0.5512	3100	1100	33.6	133	75x95x10	ZARN 50110 LTN
100	80	98	17.5	38.5	14	2900	1000	4	220	80x100x10	ZARN 55115 LTN
3.937	3.1496	3.8583	0.689	1.5157	0.5512	2900	1000	35.4	162	80x100x10	ZARN 55115 LTN
105	90	105	17.5	38.5	16	2700	950	4.2	250	90x110x12	ZARN 60120 LTN
4.1339	3.5433	4.1339	0.689	1.5157	0.6299	2700	950	37.2	184	90x110x12	ZARN 60120 LTN
110	90	108	17.5	38.5	16	2600	900	3.9	270	90x110x12	ZARN 65125 LTN
4.3307	3.5433	4.252	0.689	1.5157	0.6299	2600	900	34.5	199	90x110x12	ZARN 65125 LTN
115	100	115	17.5	38.5	16	2400	800	4.8	330	100x120x12	ZARN 70130 LTN
4.5276	3.937	4.5276	0.689	1.5157	0.6299	2400	800	42.5	243	100x120x12	ZARN 70130 LTN
135	115	135	21	46	16	2100	700	8	580	115x140x12	ZARN 75155 LTN
5.315	4.5276	5.315	0.8268	1.811	0.6299	2100	700	70.8	428	115x140x12	ZARN 75155 LTN
160	130	158	22.5	47.5	16	1800	700	10.5	960	130x160x12	ZARN 90180 LTN
6.2992	5.1181	6.2205	0.8858	1.8701	0.6299	1800	700	92.9	708	130x160x12	ZARN 90180 LTN

Ball Screw Support Bearings

ZARF SERIES

- Combination double direction axial cylindrical roller and radial needle roller bearing
- Predrilled mounting flange
- Metric series
- P4 axial precision

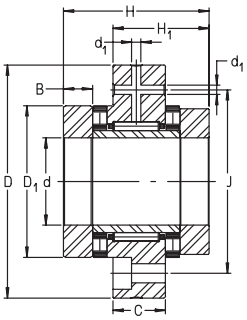

For details on part numbers, descriptive suffixes and various technical references, please refer to front of this section.
For engineering or technical information contact your local sales representative or call Distributor Sales (800)523-6572.

PART NUMBER	SHAFT d mm inch	OD D mm inch	WIDTH H mm inch	WEIGHT kg lbs	DYN. CAP. AXIAL N lbf	STAT. CAP. AXIAL N lbf	DYN. CAP. RADIAL N lbf	STAT. CAP. RADIAL N lbf	H_1 mm inch	C mm inch	D_1 mm inch
ZARF 1560 TN	15	60	40	0.42	24900	53000	13000	17500	26	14	35
ZARF 1560 TN	0.5906	2.3622	1.5748	0.926	5600	11900	2900	3900	1.0236	0.5512	1.378
ZARF 1762 TN	17	62	43	0.49	26000	57000	14000	19900	27.5	14	38
ZARF 1762 TN	0.6693	2.4409	1.6929	1.08	5800	12800	3100	4500	1.0827	0.5512	1.4961
ZARF 2068 TN	20	68	46	0.56	33500	76000	14900	22400	29	14	42
ZARF 2068 TN	0.7874	2.6772	1.811	1.235	7500	17100	3300	5000	1.1417	0.5512	1.6535
ZARF 2080 TN	20	80	60	1.1	64000	141000	22600	36000	38	18	52
ZARF 2080 TN	0.7874	3.1496	2.3622	2.426	14400	31700	5100	8100	1.4961	0.7087	2.0472
ZARF 2575 TN	25	75	50	0.78	35500	86000	22600	36000	33	18	47
ZARF 2575 TN	0.9843	2.9528	1.9685	1.72	8000	19300	5100	8100	1.2992	0.7087	1.8504
ZARF 2590 TN	25	90	60	1.6	80000	199000	24300	41500	38	18	62
ZARF 2590 TN	0.9843	3.5433	2.3622	3.528	18000	44700	5500	9300	1.4961	0.7087	2.4409
ZARF 3080 TN	30	80	50	0.85	39000	101000	24300	41500	33	18	52
ZARF 3080 TN	1.1811	3.1496	1.9685	1.874	8800	22700	5500	9300	1.2992	0.7087	2.0472
ZARF 3590 TN	35	90	54	1.12	56000	148000	26000	47000	35	18	60
ZARF 3590 TN	1.378	3.5433	2.126	2.47	12600	33300	5800	10600	1.378	0.7087	2.3622
ZARF 30105 TN	30	105	66	1.95	107000	265000	26000	47000	41	18	68
ZARF 30105 TN	1.1811	4.1339	2.5984	4.3	24100	59600	5800	10600	1.6142	0.7087	2.6772
ZARF 35110 TN	35	110	66	1.6	105000	265000	27500	53000	41	18	73
ZARF 35110 TN	1.378	4.3307	2.5984	3.528	23600	59600	6200	11900	1.6142	0.7087	2.874
ZARF 40100 TN	40	100	54	1.35	59000	163000	27500	53000	35	18	65
ZARF 40100 TN	1.5748	3.937	2.126	2.977	13300	36600	6200	11900	1.378	0.7087	2.5591
ZARF 40115 TN	40	115	75	2.7	117000	315000	38000	74000	47.5	22.5	78
ZARF 40115 TN	1.5748	4.5276	2.9528	5.954	26300	70800	8500	16600	1.8701	0.8858	3.0709
ZARF 45105 TN	45	105	60	1.7	61000	177000	38000	74000	40	22.5	70
ZARF 45105 TN	1.7717	4.1339	2.3622	3.749	13700	39800	8500	16600	1.5748	0.8858	2.7559
ZARF 45130 TN	45	130	82	3.9	154000	405000	40000	82000	51	22.5	90
ZARF 45130 TN	1.7717	5.1181	3.2283	8.6	34600	91100	9000	18400	2.0079	0.8858	3.5433
ZARF 50115 TN	50	115	60	2.1	90000	300000	40000	82000	40	22.5	78
ZARF 50115 TN	1.9685	4.5276	2.3622	4.631	20200	67400	9000	18400	1.5748	0.8858	3.0709
ZARF 50140 TN	50	140	82	4.2	172000	480000	42000	90000	51	22.5	95
ZARF 50140 TN	1.9685	5.5118	3.2283	9.261	38700	107900	9400	20200	2.0079	0.8858	3.7402
ZARF 55145 TN	55	145	82	4.5	177000	500000	44000	98000	51	22.5	100
ZARF 55145 TN	2.1654	5.7087	3.2283	9.923	39800	112400	9900	22000	2.0079	0.8858	3.937
ZARF 60150 TN	60	150	82	4.7	187000	550000	44500	92000	51	22.5	105
ZARF 60150 TN	2.3622	5.9055	3.2283	10.364	42000	123700	10000	20700	2.0079	0.8858	4.1339
ZARF 65155 TN	65	155	82	5.1	172000	500000	54000	104000	51	22.5	110
ZARF 65155 TN	2.5591	6.1024	3.2283	11.246	38700	112400	12100	23400	2.0079	0.8858	4.3307
ZARF 70160 TN	70	160	82	5.2	201000	630000	56000	119000	51	22.5	115
ZARF 70160 TN	2.7559	6.2992	3.2283	11.466	45200	141600	12600	26800	2.0079	0.8858	4.5276
ZARF 75185 TN	75	185	100	9.4	290000	890000	72000	132000	62	27	135
ZARF 75185 TN	2.9528	7.2835	3.937	20.727	65200	200100	16200	29700	2.4409	1.063	5.315
ZARF 90210 TN	90	210	110	13.7	300000	940000	98000	210000	69.5	32	160
ZARF 90210 TN	3.5433	8.2677	4.3307	30.209	67400	211300	22000	47200	2.7362	1.2598	6.2992

Ball Screw Support Bearings

ZARF SERIES

- Combination double direction axial cylindrical roller and radial needle roller bearing
- Predrilled mounting flange
- Metric series
- P4 axial precision

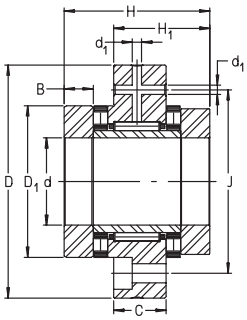

For details on part numbers, descriptive suffixes and various technical references, please refer to front of this section.
For engineering or technical information contact your local sales representative or call Distributor Sales (800)523-6572.

B mm inch	d_1 mm inch	J mm inch	SPEED LIMIT OIL rpm	SPEED LIMIT GREASE rpm	BEARING FRICTION Nm in-lbf	MTG. BOLT	BOLT HOLE QTY	LOCKNUT NUMBER	LOCKNUT TORQUE Nm ft-lbf	PART NUMBER
7.5	3.2	46	8500	2200	0.35	M6–10.9	6	ZMA 15/33	10	ZARF 1560 TN
0.2953	0.126	1.811	8500	2200	3.1	M6–10.9	6	ZMA 15/33	7	ZARF 1560 TN
9	3.2	48	7800	2100	0.4	M6–10.9	6	ZMA 17/38	12	ZARF 1762 TN
0.3543	0.126	1.8898	7800	2100	3.5	M6–10.9	6	ZMA 17/38	9	ZARF 1762 TN
10	3.2	53	7000	2000	0.5	M6–10.9	8	ZMA 20/38	18	ZARF 2068 TN
0.3937	0.126	2.0866	7000	2000	4.4	M6–10.9	8	ZMA 20/38	13	ZARF 2068 TN
12.5	3.2	63	6000	1500	1.3	M6–10.9	12	ZMA 20/52	38	ZARF 2080 TN
0.4921	0.126	2.4803	6000	1500	11.5	M6–10.9	12	ZMA 20/52	28	ZARF 2080 TN
10	3.2	58	6000	1900	0.55	M6–10.9	8	ZMA 25/45	25	ZARF 2575 TN
0.3937	0.126	2.2835	6000	1900	4.9	M6–10.9	8	ZMA 25/45	18	ZARF 2575 TN
12.5	3.2	73	4900	1400	1.6	M6–10.9	12	ZMA 25/58	55	ZARF 2590 TN
0.4921	0.126	2.874	4900	1400	14.2	M6–10.9	12	ZMA 25/58	41	ZARF 2590 TN
10	3.2	63	5500	1800	0.65	M6–10.9	12	ZMA 30/52	32	ZARF 3080 TN
0.3937	0.126	2.4803	5500	1800	5.8	M6–10.9	12	ZMA 30/52	24	ZARF 3080 TN
11	3.2	73	4800	1700	0.9	M6–10.9	12	ZMA 35/58	42	ZARF 3590 TN
0.4331	0.126	2.874	4800	1700	8	M6–10.9	12	ZMA 35/58	31	ZARF 3590 TN
14	3.2	85	4400	1300	2.1	M8–10.9	12	ZMA 30/65	75	ZARF 30105 TN
0.5512	0.126	3.3465	4400	1300	18.6	M8–10.9	12	ZMA 30/65	55	ZARF 30105 TN
14	3.2	88	4000	1250	2.3	M8–10.9	12	ZMA 35/70	100	ZARF 35110 TN
0.5512	0.126	3.4646	4000	1250	20.4	M8–10.9	12	ZMA 35/70	74	ZARF 35110 TN
11	3.2	80	4400	1600	1	M8–10.9	8	ZMA 40/62	55	ZARF 40100 TN
0.4331	0.126	3.1496	4400	1600	8.9	M8–10.9	8	ZMA 40/62	41	ZARF 40100 TN
16	6	94	3700	1200	2.5	M8–10.9	12	ZMA 40/75	120	ZARF 40115 TN
0.6299	0.2362	3.7008	3700	1200	22.1	M8–10.9	12	ZMA 40/75	89	ZARF 40115 TN
11.5	6	85	4000	1500	1.2	M8–10.9	8	ZMA 45/68	65	ZARF 45105 TN
0.4528	0.2362	3.3465	4000	1500	10.6	M8–10.9	8	ZMA 45/68	48	ZARF 45105 TN
17.5	6	105	3300	1150	3.5	M8–10.9	12	ZMA 45/85	150	ZARF 45130 TN
0.689	0.2362	4.1339	3300	1150	31	M8–10.9	12	ZMA 45/85	111	ZARF 45130 TN
11.5	6	94	3600	1200	2.2	M8–10.9	12	ZMA 50/75	85	ZARF 50115 TN
0.4528	0.2362	3.7008	3600	1200	19.5	M8–10.9	12	ZMA 50/75	63	ZARF 50115 TN
17.5	6	113	3100	1100	3.8	M10–10.9	12	ZMA 50/92	180	ZARF 50140 TN
0.689	0.2362	4.4488	3100	1100	33.6	M10–10.9	12	ZMA 50/92	133	ZARF 50140 TN
17.5	6	118	2900	1000	4	M10–10.9	12	ZMA 55/98	220	ZARF 55145 TN
0.689	0.2362	4.6457	2900	1000	35.4	M10–10.9	12	ZMA 55/98	162	ZARF 55145 TN
17.5	6	123	2700	950	4.2	M10–10.9	12	ZMA 60/98	250	ZARF 60150 TN
0.689	0.2362	4.8425	2700	950	37.2	M10–10.9	12	ZMA 60/98	184	ZARF 60150 TN
17.5	6	128	2600	900	3.9	M10–10.9	12	ZMA 65/105	270	ZARF 65155 TN
0.689	0.2362	5.0394	2600	900	34.5	M10–10.9	12	ZMA 65/105	199	ZARF 65155 TN
17.5	6	133	2400	800	4.8	M10–10.9	12	ZMA 70/110	330	ZARF 70160 TN
0.689	0.2362	5.2362	2400	800	42.5	M10–10.9	12	ZMA 70/110	243	ZARF 70160 TN
21	6	155	2100	700	8	M12–10.9	12	ZMA 75/125	580	ZARF 75185 TN
0.8268	0.2362	6.1024	2100	700	70.8	M12–10.9	12	ZMA 75/125	428	ZARF 75185 TN
22.5	8	180	1800	700	9.5	M12–10.9	16	ZMA 90/155	960	ZARF 90210 TN
0.8858	0.315	7.0866	1800	700	84.1	M12–10.9	16	ZMA 90/155	708	ZARF 90210 TN

Ball Screw Support Bearings

ZARF..LTN SERIES

- Combination double direction axial cylindrical roller and radial needle bearings
- Predrilled mounting flange
- Extended shaft washer for DIN 3760 metric series seal
- Metric series
- P4 axial precision

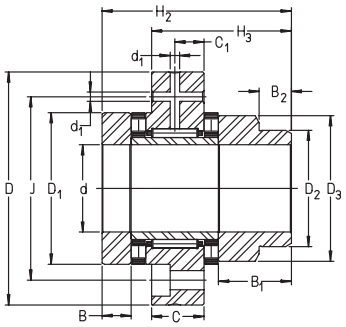

For details on part numbers, descriptive suffixes and various technical references, please refer to front of this section.
For engineering or technical information contact your local sales representative or call Distributor Sales (800)523-6572.

PART NUMBER	SHAFT d mm inch	OD D mm inch	WIDTH H_2 mm inch	WEIGHT kg lbs	DYN. CAP. AXIAL N lbf	STAT. CAP. AXIAL N lbf	DYN. CAP. RADIAL N lbf	STAT. CAP. RADIAL N lbf	H_3 mm inch	C mm inch	D_1 mm inch	D_2 mm inch	D_3 mm inch
ZARF 1560 LTN	15	60	53	0.45	24900	53000	13000	17500	39	14	35	24	34
ZARF 1560 LTN	0.5906	2.3622	2.0866	0.99	5600	11900	2900	3900	1.5354	0.5512	1.378	0.9449	1.3386
ZARF 1762 LTN	17	62	57	0.52	26000	57000	14000	19900	41.5	14	38	28	38
ZARF 1762 LTN	0.6693	2.4409	2.2441	1.15	5800	12800	3100	4500	1.6339	0.5512	1.4961	1.1024	1.4961
ZARF 2068 LTN	20	68	60	0.61	33500	76000	14900	22400	43	14	42	30	40
ZARF 2068 LTN	0.7874	2.6772	2.3622	1.35	7500	17100	3300	5000	1.6929	0.5512	1.6535	1.1811	1.5748
ZARF 2080 LTN	20	80	75	1.22	64000	141000	22600	36000	53	18	52	40	50
ZARF 2080 LTN	0.7874	3.1496	2.9528	2.69	14400	31700	5100	8100	2.0866	0.7087	2.0472	1.5748	1.9685
ZARF 2575 LTN	25	75	65	0.84	35500	86000	22600	36000	48	18	47	36	45
ZARF 2575 LTN	0.9843	2.9528	2.5591	1.85	8000	19300	5100	8100	1.8898	0.7087	1.8504	1.4173	1.7717
ZARF 2590 LTN	25	90	75	1.75	80000	199000	24300	41500	53	18	62	48	60
ZARF 2590 LTN	0.9843	3.5433	2.9528	3.86	18000	44700	5500	9300	2.0866	0.7087	2.4409	1.8898	2.3622
ZARF 3080 LTN	30	80	65	0.9	39000	101000	24300	41500	48	18	52	40	50
ZARF 3080 LTN	1.1811	3.1496	2.5591	1.98	8800	22700	5500	9300	1.8898	0.7087	2.0472	1.5748	1.9685
ZARF 3590 LTN	35	90	70	1.25	56000	148000	26000	47000	51	18	60	45	58
ZARF 3590 LTN	1.378	3.5433	2.7559	2.76	12600	33300	5800	10600	2.0079	0.7087	2.3622	1.7717	2.2835
ZARF 30105 LTN	30	105	82	2.15	107000	265000	26000	47000	57	18	68	52	66
ZARF 30105 LTN	1.1811	4.1339	3.2283	4.74	24100	59600	5800	10600	2.2441	0.7087	2.6772	2.0472	2.5984
ZARF 35110 LTN	35	110	82	1.85	105000	265000	27500	53000	57	18	73	60	73
ZARF 35110 LTN	1.378	4.3307	3.2283	4.08	23600	59600	6200	11900	2.2441	0.7087	2.874	2.3622	2.874
ZARF 40100 LTN	40	100	70	1.45	59000	163000	27500	53000	51	18	65	50	63
ZARF 40100 LTN	1.5748	3.937	2.7559	3.2	13300	36600	6200	11900	2.0079	0.7087	2.5591	1.9685	2.4803
ZARF 40115 LTN	40	115	93	3	117000	315000	38000	74000	65.5	22.5	78	60	78
ZARF 40115 LTN	1.5748	4.5276	3.6614	6.62	26300	70800	8500	16600	2.5787	0.8858	3.0709	2.3622	3.0709
ZARF 45105 LTN	45	105	75	1.85	61000	177000	38000	74000	55	22.5	70	56	68
ZARF 45105 LTN	1.7717	4.1339	2.9528	4.08	13700	39800	8500	16600	2.1654	0.8858	2.7559	2.2047	2.6772
ZARF 45130 LTN	45	130	103	4.3	154000	405000	40000	82000	72	22.5	90	70	88
ZARF 45130 LTN	1.7717	5.1181	4.0551	9.48	34600	91100	9000	18400	2.8346	0.8858	3.5433	2.7559	3.4646
ZARF 50115 LTN	50	115	78	2.45	90000	300000	40000	82000	58	22.5	78	60	78
ZARF 50115 LTN	1.9685	4.5276	3.0709	5.4	20200	67400	9000	18400	2.2835	0.8858	3.0709	2.3622	3.0709
ZARF 50140 LTN	50	140	103	4.65	172000	480000	42000	90000	72	22.5	95	75	93
ZARF 50140 LTN	1.9685	5.5118	4.0551	10.25	38700	107900	9400	20200	2.8346	0.8858	3.7402	2.9528	3.6614
ZARF 55145 LTN	55	145	103	5	177000	500000	44000	98000	72	22.5	100	80	98
ZARF 55145 LTN	2.1654	5.7087	4.0551	11.03	39800	112400	9900	22000	2.8346	0.8858	3.937	3.1496	3.8583
ZARF 60150 LTN	60	150	103	5.35	187000	550000	44500	92000	72	22.5	105	90	105
ZARF 60150 LTN	2.3622	5.9055	4.0551	11.8	42000	123700	10000	20700	2.8346	0.8858	4.1339	3.5433	4.1339
ZARF 65155 LTN	65	155	103	5.7	172000	500000	54000	104000	72	22.5	110	90	108
ZARF 65155 LTN	2.5591	6.1024	4.0551	12.57	38700	112400	12100	23400	2.8346	0.8858	4.3307	3.5433	4.252
ZARF 70160 LTN	70	160	103	5.95	201000	630000	56000	119000	72	22.5	115	100	115
ZARF 70160 LTN	2.7559	6.2992	4.0551	13.12	45200	141600	12600	26800	2.8346	0.8858	4.5276	3.937	4.5276
ZARF 75185 LTN	75	185	125	10.6	290000	890000	72000	132000	87	27	135	115	135
ZARF 75185 LTN	2.9528	7.2835	4.9213	23.37	65200	200100	16200	29700	3.4252	1.063	5.315	4.5276	5.315
ZARF 90210 LTN	90	210	135	15.1	325000	103000	98000	210000	94.5	32	160	130	158
ZARF 90210 LTN	3.5433	8.2677	5.315	33.3	73100	23200	22000	47200	3.7205	1.2598	6.2992	5.1181	6.2205

Ball Screw Support Bearings

ZARF..LTN SERIES

- Combination double direction axial cylindrical roller and radial needle bearings
- Predrilled mounting flange
- Extended shaft washer for DIN 3760 metric series seal
- Metric series
- P4 axial precision

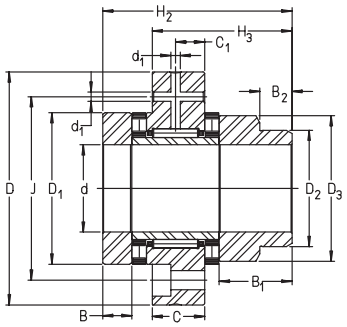

For details on part numbers, descriptive suffixes and various technical references, please refer to front of this section.
For engineering or technical information contact your local sales representative or call Distributor Sales (800)523-6572.

B mm inch	B_1 mm inch	B_2 mm inch	d_1 mm inch	J mm inch	SPEED LIMIT OIL rpm	SPEED LIMIT GREASE rpm	MTG. BOLT	BOLT QTY	LOCKNUT NUMBER	LOCKNUT TORQUE Nm ft-lbf	SEAL SIZE DIN3760	PART NUMBER
7.5	20.5	11	3.2	46	8500	2200	M6–10.9	6	ZMA 15/33	10	24x35x7	ZARF 1560 LTN
0.2953	0.8071	0.4331	0.126	1.811	8500	2200	M6–10.9	6	ZMA 15/33	7.4	24x35x7	ZARF 1560 LTN
9	23	11	3.2	48	8000	2100	M6–10.9	6	ZM 17	12	28x40x7	ZARF 1762 LTN
0.3543	0.9055	0.4331	0.126	1.8898	8000	2100	M6–10.9	6	ZM 17	8.9	28x40x7	ZARF 1762 LTN
10	24	11	3.2	53	7000	2000	M6–10.9	8	ZMA 20/38	18	30x42x7	ZARF 2068 LTN
0.3937	0.9449	0.4331	0.126	2.0866	7000	2000	M6–10.9	8	ZMA 20/38	13.3	30x42x7	ZARF 2068 LTN
12.5	27.5	11	3.2	63	6000	1500	M6–10.9	12	ZMA 20/52	38	40x52x7	ZARF 2080 LTN
0.4921	1.0827	0.4331	0.126	2.4803	6000	1500	M6–10.9	12	ZMA 20/52	28	40x52x7	ZARF 2080 LTN
10	25	11	3.2	58	6000	1900	M6–10.9	8	ZMA 25/45	25	36x47x7	ZARF 2575 LTN
0.3937	0.9843	0.4331	0.126	2.2835	6000	1900	M6–10.9	8	ZMA 25/45	18.4	36x47x7	ZARF 2575 LTN
12.5	27.5	11	3.2	73	4900	1400	M6–10.9	12	ZMA 25/58	55	48x62x8	ZARF 2590 LTN
0.4921	1.0827	0.4331	0.126	2.874	4900	1400	M6–10.9	12	ZMA 25/58	40.6	48x62x8	ZARF 2590 LTN
10	25	11	3.2	63	5500	1800	M6–10.9	12	ZMA 30/52	32	40x52x7	ZARF 3080 LTN
0.3937	0.9843	0.4331	0.126	2.4803	5500	1800	M6–10.9	12	ZMA 30/52	23.6	40x52x7	ZARF 3080 LTN
11	27	12	3.2	73	4800	1700	M6–10.9	12	ZMA 35/58	42	45x60x8	ZARF 3590 LTN
0.4331	1.063	0.4724	0.126	2.874	4800	1700	M6–10.9	12	ZMA 35/58	31	45x60x8	ZARF 3590 LTN
14	30	12	3.2	85	4400	1300	M8–10.9	12	ZMA 30/65	75	52x68x8	ZARF 30105 LTN
0.5512	1.1811	0.4724	0.126	3.3465	4400	1300	M8–10.9	12	ZMA 30/65	55.3	52x68x8	ZARF 30105 LTN
14	30	12	3.2	88	4000	1250	M8–10.9	12	ZMA 35/70	100	60x75x8	ZARF 35110 LTN
0.5512	1.1811	0.4724	0.126	3.4646	4000	1250	M8–10.9	12	ZMA 35/70	73.8	60x75x8	ZARF 35110 LTN
11	27	12	3.2	80	4400	1600	M8–10.9	8	ZMA 40/62	55	50x65x8	ZARF 40100 LTN
0.4331	1.063	0.4724	0.126	3.1496	4400	1600	M8–10.9	8	ZMA 40/62	40.6	50x65x8	ZARF 40100 LTN
16	34	12	6	94	3700	1200	M8–10.9	12	ZMA 40/75	120	60x80x8	ZARF 40115 LTN
0.6299	1.3386	0.4724	0.2362	3.7008	3700	1200	M8–10.9	12	ZMA 40/75	88.5	60x80x8	ZARF 40115 LTN
11.5	26.5	12	6	85	4000	1500	M8–10.9	8	ZMA 45/68	65	56x70x8	ZARF 45105 LTN
0.4528	1.0433	0.4724	0.2362	3.3465	4000	1500	M8–10.9	8	ZMA 45/68	47.9	56x70x8	ZARF 45105 LTN
17.5	38.5	14	6	105	3300	1150	M8–10.9	12	ZMA 45/85	150	70x90x10	ZARF 45130 LTN
0.689	1.5157	0.5512	0.2362	4.1339	3300	1150	M8–10.9	12	ZMA 45/85	110.6	70x90x10	ZARF 45130 LTN
11.5	29.5	12	6	94	3600	1200	M8–10.9	12	ZMA 50/75	85	60x80x8	ZARF 50115 LTN
0.4528	1.1614	0.4724	0.2362	3.7008	3600	1200	M8–10.9	12	ZMA 50/75	62.7	60x80x8	ZARF 50115 LTN
17.5	38.5	14	6	113	3100	1100	M10–10.9	12	ZMA 50/92	180	75x95x10	ZARF 50140 LTN
0.689	1.5157	0.5512	0.2362	4.4488	3100	1100	M10–10.9	12	ZMA 50/92	132.8	75x95x10	ZARF 50140 LTN
17.5	38.5	14	6	118	2900	1000	M10–10.9	12	ZMA 55/98	220	80x100x10	ZARF 55145 LTN
0.689	1.5157	0.5512	0.2362	4.6457	2900	1000	M10–10.9	12	ZMA 55/98	162.3	80x100x10	ZARF 55145 LTN
17.5	38.5	16	6	123	2700	950	M10–10.9	12	ZMA 60/98	250	90x110x12	ZARF 60150 LTN
0.689	1.5157	0.6299	0.2362	4.8425	2700	950	M10–10.9	12	ZMA 60/98	184.4	90x110x12	ZARF 60150 LTN
17.5	38.5	16	6	128	2600	900	M10–10.9	12	ZMA 65/105	270	90x110x12	ZARF 65155 LTN
0.689	1.5157	0.6299	0.2362	5.0394	2600	900	M10–10.9	12	ZMA 65/105	199.2	90x110x12	ZARF 65155 LTN
17.5	38.5	16	6	133	2400	800	M10–10.9	12	ZMA 70/110	330	100x120x12	ZARF 70160 LTN
0.689	1.5157	0.6299	0.2362	5.2362	2400	800	M10–10.9	12	ZMA 70/110	243.4	100x120x12	ZARF 70160 LTN
21	46	16	6	155	2100	700	M12–10.9	12	ZMA 75/125	580	115x140x12	ZARF 75185 LTN
0.8268	1.811	0.6299	0.2362	6.1024	2100	700	M12–10.9	12	ZMA 75/125	427.8	115x140x12	ZARF 75185 LTN
22.5	47.5	16	8	180	1800	700	M12–10.9	16	ZMA 90/155	960	130x160x12	ZARF 90210 LTN
0.8858	1.8701	0.6299	0.315	7.0866	1800	700	M12–10.9	16	ZMA 90/155	708.1	130x160x12	ZARF 90210 LTN

Seal Carriers & Seals

DRS SERIES

- Seal rings with mounting hardware for use with series ZARF..TN and ZARF..LTN ball screw support bearings

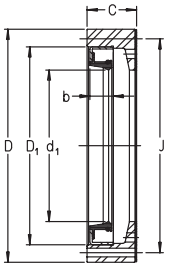

For details on part numbers, descriptive suffixes and various technical references, please refer to front of this section.
For engineering or technical information contact your local sales representative or call Distributor Sales (800)523-6572.

PART NUMBER	SHAFT d_1 mm inch	WIDTH C mm inch	OD D mm inch	J mm inch	D_1 mm inch	b mm inch	WEIGTH PER PIECE kg lbs	BOLT THREAD DIN 912	MATING BEARING
DRS 1560	35	14	60	52.4	45	7	0.16	M3x20	ZARF 1560 TN
DRS 1560	1.378	0.551	2.362	2.063	1.772	0.276	0.353	M3x20	ZARF 1560 TN
DRS 1762	38	15.5	62	54.4	45	7	0.18	M3x25	ZARF 1762 TN
DRS 1762	1.496	0.61	2.441	2.142	1.772	0.276	0.397	M3x25	ZARF 1762 TN
DRS 2068	42	17	68	60.4	55	8	0.11	M3x25	ZARF 2068 TN
DRS 2068	1.654	0.669	2.677	2.378	2.165	0.315	0.243	M3x25	ZARF 2068 TN
DRS 2080	52	22	80	73.4	68	8	0.2	M3x30	ZARF 2080 TN
DRS 2080	2.047	0.866	3.15	2.89	2.677	0.315	0.441	M3x30	ZARF 2080 TN
DRS 2575	47	17	75	67.4	62	6	0.16	M3x25	ZARF 2575 TN
DRS 2575	1.85	0.669	2.953	2.654	2.441	0.236	0.353	M3x25	ZARF 2575 TN
DRS 2590	62	22	90	81	75	10	0.3	M3x30	ZARF 2590 TN
DRS 2590	2.441	0.866	3.543	3.189	2.953	0.394	0.662	M3x30	ZARF 2590 TN
DRS 3080	52	17	80	73.4	68	8	0.15	M3x25	ZARF 3080 TN
DRS 3080	2.047	0.669	3.15	2.89	2.677	0.315	0.331	M3x25	ZARF 3080 TN
DRS 30105	68	25	105	95	85	10	0.35	M4x35	ZARF 30105 TN
DRS 30105	2.677	0.984	4.134	3.74	3.346	0.394	0.772	M4x35	ZARF 30105 TN
DRS 3590	60	19	90	80	72	8	0.15	M4x30	ZARF 3590 TN
DRS 3590	2.362	0.748	3.543	3.15	2.835	0.315	0.331	M4x30	ZARF 3590 TN
DRS 35110	73	25	110	101	95	10	0.3	M3x30	ZARF 35110 TN
DRS 35110	2.874	0.984	4.331	3.976	3.74	0.394	0.662	M3x30	ZARF 35110 TN
DRS 40100	65	19	100	90	80	8	0.25	M4x30	ZARF 40100 TN
DRS 40100	2.559	0.748	3.937	3.543	3.15	0.315	0.551	M4x30	ZARF 40100 TN
DRS 40115	78	27.5	115	106	100	10	0.5	M3x35	ZARF 40115 TN
DRS 40115	3.071	1.083	4.528	4.173	3.937	0.394	1.103	M3x35	ZARF 40115 TN
DRS 45105	70	20	105	95	85	8	0.3	M4x30	ZARF 45105 TN
DRS 45105	2.756	0.787	4.134	3.74	3.346	0.315	0.662	M4x30	ZARF 45105 TN
DRS 45130	90	31	130	120	110	12	0.7	M4x40	ZARF 45130 TN
DRS 45130	3.543	1.22	5.118	4.724	4.331	0.472	1.544	M4x40	ZARF 45130 TN
DRS 50115	78	20	115	106	100	10	0.2	M3x30	ZARF 50115 TN
DRS 50115	3.071	0.787	4.528	4.173	3.937	0.394	0.441	M3x30	ZARF 50115 TN
DRS 50140	95	30	140	127.5	115	13	0.8	M5x40	ZARF 50140 TN
DRS 50140	3.74	1.181	5.512	5.02	4.528	0.512	1.764	M5x40	ZARF 50140 TN
DRS 55145	100	30	145	132.5	120	12	0.9	M5x40	ZARF 55145 TN
DRS 55145	3.937	1.181	5.709	5.217	4.724	0.472	1.985	M5x40	ZARF 55145 TN
DRS 60150	105	30	150	137.5	125	12	0.9	M5x40	ZARF 60150 TN
DRS 60150	4.134	1.181	5.906	5.413	4.921	0.472	1.985	M5x40	ZARF 60150 TN
DRS 65155	110	30	155	142.5	130	12	1	M5x40	ZARF 65155 TN
DRS 65155	4.331	1.181	6.102	5.61	5.118	0.472	2.205	M5x40	ZARF 65155 TN
DRS 70160	115	30	160	147.5	135	13	1	M5x40	ZARF 70160 TN
DRS 70160	4.528	1.181	6.299	5.807	5.315	0.512	2.205	M5x40	ZARF 70160 TN
DRS 75185	135	36	185	172.5	160	15	1.8	M5x50	ZARF 75185 TN
DRS 75185	5.315	1.417	7.283	6.791	6.299	0.591	3.969	M5x50	ZARF 75185 TN
DRS 90210	160	38	210	194	180	15	2.7	M5x50	ZARF 90210
DRS 90210	6.299	1.496	8.268	7.638	7.087	0.591	5.954	M5x50	ZARF 90210

Locknuts
AM SERIES

- Axial set screws to prevent loss of preload
- Preloading axial bearings
- Metric series

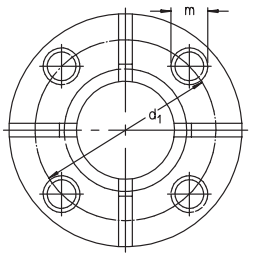

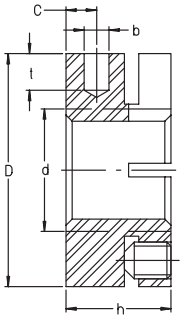

For details on part numbers, descriptive suffixes and various technical references, please refer to front of this section.
For engineering or technical information contact your local sales representative or call Distributor Sales (800)523-6572.

PART NUMBER	d inch	d mm	D inch	D mm	h inch	h mm	WGT lbs	WGT kg	b inch	b mm	t inch	t mm	d_1 inch	d_1 mm	c inch	c mm	m inch	m mm	FaB lbf	FaB kN
AM 15	0.591	M15 x 1	1.181	30	0.709	18	0.132	0.06	0.157	4	0.197	5	0.906	23	0.197	5	0.157	M4	22900	102
AM 17	0.669	M17 x 1	1.26	32	0.709	18	0.154	0.07	0.157	4	0.197	5	1.024	26	0.197	5	0.157	M4	27000	120
AM 20	0.787	M20 x 1	1.496	38	0.709	18	0.287	0.13	0.157	4	0.236	6	1.161	29.5	0.197	5	0.236	M6	32600	145
AM 25	0.984	M25 x 1.5	1.772	45	0.787	20	0.353	0.16	0.197	5	0.236	6	1.378	35	0.236	6	0.236	M6	46100	205
AM 30	1.181	M30 x 1.5	2.047	52	0.787	20	0.441	0.2	0.197	5	0.276	7	1.575	40	0.236	6	0.236	M6	55300	246
AM 35	1.378	M35 x 1.5	2.559	65	0.866	22	0.728	0.33	0.236	6	0.315	8	1.89	48	0.236	6	0.236	M6	74000	329
AM 40	1.575	M40 x 1.5	2.559	65	0.866	22	0.662	0.3	0.236	6	0.315	8	2.008	51	0.236	6	0.236	M6	78000	347
AM 45	1.772	M45 x 1.5	2.756	70	0.866	22	0.75	0.34	0.236	6	0.315	8	2.205	56	0.236	6	0.236	M6	80900	360
AM 50	1.969	M50 x 1.5	2.953	75	0.984	25	0.948	0.43	0.236	6	0.315	8	2.441	62	0.315	8	0.236	M6	101200	450
AM 60	2.362	M60 x 2	3.543	90	1.024	26	1.433	0.65	0.236	6	0.315	8	2.953	75	0.315	8	0.236	M6	123000	547

Locknuts
ZM SERIES

- Radial set screws to prevent loss of preload
- Preload for axial bearings
- Metric series

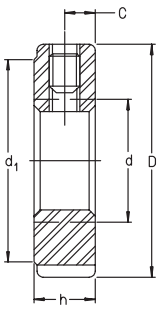

For details on part numbers, descriptive suffixes and various technical references, please refer to front of this section.
For engineering or technical information contact your local sales representative or call Distributor Sales (800)523-6572.

PART NUMBER	d inch	d mm	D inch	D mm	h inch	h mm	WGT lbs	WGT kg	d_1 inch	d_1 mm
ZM 06	0.2362	M 6 x 0.5	0.63	16	0.315	8	0.022	0.01	0.472	12
ZM 08	0.315	M 8 x 0.75	0.63	16	0.315	8	0.022	0.01	0.472	12
ZM 10	0.3937	M 10 x 1	0.709	18	0.315	8	0.022	0.01	0.551	14
ZM 12	0.4724	M 12 x 1	0.866	22	0.315	8	0.033	0.015	0.709	18
ZM 15	0.5906	M 15 x 1	0.984	25	0.315	8	0.04	0.018	0.827	21
ZMA 15/33	0.5906	M 15 x 1	1.299	33	0.63	16	0.176	0.08	1.102	28
ZM 17	0.6693	M 17 x 1	1.102	28	0.394	10	0.062	0.028	0.906	23
ZM 20	0.7874	M 20 x 1	1.26	32	0.394	10	0.077	0.035	1.063	27
ZMA 20/38	0.7874	M 20 x 1	1.496	38	0.787	20	0.265	0.12	1.299	33
ZM 25	0.9843	M 25 x 1.5	1.496	38	0.472	12	0.121	0.055	1.299	33
ZMA 25/45	0.9843	M 25 x 1.5	1.772	45	0.787	20	0.353	0.16	1.575	40
ZM 30	1.1811	M 30 x 1.5	1.772	45	0.472	12	0.165	0.075	1.575	40
ZMA 30/52	1.1811	M 30 x 1.5	2.047	52	0.866	22	0.485	0.22	1.85	47
ZM 35	1.378	M 35 x 1.5	2.047	52	0.472	12	0.218	0.099	1.85	47
ZMA 35/58	1.378	M 35 x 1.5	2.283	58	0.866	22	0.573	0.26	2.047	52
ZM 40	1.5748	M 40 x 1.5	2.283	58	0.551	14	0.309	0.14	2.047	52
ZMA 40/62	1.5748	M 40 x 1.5	2.441	62	0.866	22	0.595	0.27	2.205	56
ZM 45	1.7717	M 45 x 1.5	2.559	65	0.551	14	0.375	0.17	2.323	59
ZMA 45/68	1.7717	M 45 x 1.5	2.677	68	0.945	24	0.772	0.35	2.441	62
ZM 50	1.9685	M 50 x 1.5	2.756	70	0.551	14	0.419	0.19	2.52	64
ZMA 50/75	1.9685	M 50 x 1.5	2.953	75	0.984	25	0.948	0.43	2.677	68
ZM 55	2.1654	M 55 x 2	2.953	75	0.63	16	0.507	0.23	2.677	68
ZMA 55/98	2.1654	M 55 x 2	3.858	98	1.26	32	2.58	1.17	3.543	90
ZM 60	2.3622	M 60 x 2	3.15	80	0.63	16	0.551	0.25	2.874	73
ZMA 60/98	2.3622	M 60 x 2	3.858	98	1.26	32	2.359	1.07	3.543	90
ZM 65	2.5591	M 65 x 2	3.346	85	0.63	16	0.595	0.27	3.071	78
ZMA 65/105	2.5591	M 65 x 2	4.134	105	1.26	32	2.668	1.21	3.819	97
ZM 70	2.7559	M 70 x 2	3.622	92	0.709	18	0.794	0.36	3.346	85
ZMA 70/110	2.7559	M 70 x 2	4.331	110	1.378	35	3.087	1.4	4.016	102
ZM 75	2.9528	M 75 x 2	3.858	98	0.709	18	0.882	0.4	3.543	90
ZMA 75/125	2.9528	M 75 x 2	4.921	125	1.496	38	4.653	2.11	4.606	117
ZM 80	3.1496	M 80 x 2	4.134	105	0.709	18	1.014	0.46	3.74	95
ZM 85	3.3465	M 85 x 2	4.331	110	0.709	18	1.08	0.49	4.016	102
ZM 90	3.5433	M 90 x 2	4.724	120	0.787	20	1.544	0.7	4.252	108
ZMA 90/155	3.5433	M 90 x 2	6.102	155	1.496	38	7.409	3.36	5.748	146
ZM 100	3.937	M 100 x 2	5.118	130	0.787	20	1.698	0.77	4.724	120
ZM 105	4.1339	M 105 x 2	5.512	140	0.866	22	2.315	1.05	4.961	126
ZM 110	4.3307	M 110 x 2	5.709	145	0.866	22	2.403	1.09	5.236	133
ZM 115	4.5276	M 115 x 2	5.906	150	0.866	22	2.492	1.13	5.394	137
ZM 120	4.7244	M 120 x 2	6.102	155	0.945	24	2.822	1.28	5.433	138
ZM 125	4.9213	M 125 x 2	6.299	160	0.945	24	2.933	1.33	5.827	148
ZM 130	5.1181	M 130 x 2	6.496	165	0.945	24	2.999	1.36	5.866	149
ZM 140	5.5118	M 140 x 2	7.087	180	1.024	26	4.079	1.85	6.299	160
ZM 150	5.9055	M 150 x 2	7.677	195	1.024	26	4.939	2.24	6.732	171

Locknuts
ZM SERIES

- Radial set screws to prevent loss of preload
- Preload for axial bearings
- Metric series

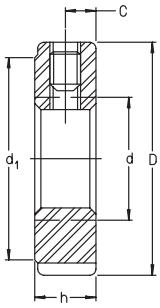

For details on part numbers, descriptive suffixes and various technical references, please refer to front of this section.
For engineering or technical information contact your local sales representative or call Distributor Sales (800)523-6572.

c inch	c mm	SET SCREW THREAD	GROOVE WIDTH inch	GROOVE WIDTH mm	GROOVE DEPTH inch	GROOVE DEPTH mm	FRACTURE LOAD lbf	FRACTURE LOAD kN	PART NUMBER
0.157	4	M4	0.118	3	0.079	2	3800	17	ZM 06
0.157	4	M4	0.118	3	0.079	2	5200	23	ZM 08
0.157	4	M4	0.118	3	0.079	2	7000	31	ZM 10
0.157	4	M4	0.118	3	0.079	2	8500	38	ZM 12
0.157	4	M4	0.118	3	0.079	2	11200	50	ZM 15
0.315	8	M5	0.157	4	0.079	2	23800	106	ZMA 15/33
0.197	5	M5	0.157	4	0.079	2	12800	57	ZM 17
0.197	5	M5	0.157	4	0.079	2	15500	69	ZM 20
0.394	10	M5	0.197	5	0.079	2	39100	174	ZMA 20/38
0.236	6	M6	0.197	5	0.079	2	20200	90	ZM 25
0.394	10	M6	0.197	5	0.079	2	47400	211	ZMA 25/45
0.236	6	M6	0.197	5	0.079	2	25200	112	ZM 30
0.433	11	M6	0.197	5	0.079	2	60700	270	ZMA 30/52
0.236	6	M6	0.197	5	0.079	2	30100	134	ZM 35
0.433	11	M6	0.236	6	0.098	2.5	67400	300	ZMA 35/58
0.276	7	M6	0.236	6	0.098	2.5	35300	157	ZM 40
0.433	11	M8	0.236	6	0.098	2.5	69700	310	ZMA 40/62
0.276	7	M6	0.236	6	0.098	2.5	40700	181	ZM 45
0.472	12	M8	0.236	6	0.098	2.5	80900	360	ZMA 45/68
0.276	7	M6	0.236	6	0.098	2.5	46100	205	ZM 50
0.492	12.5	M8	0.236	6	0.098	2.5	93300	415	ZMA 50/75
0.315	8	M6	0.276	7	0.118	3	51500	229	ZM 55
0.63	16	M8	0.315	8	0.138	3.5	139400	620	ZMA 55/98
0.315	8	M6	0.276	7	0.118	3	57300	255	ZM 60
0.63	16	M8	0.315	8	0.138	3.5	152900	680	ZMA 60/98
0.315	8	M6	0.276	7	0.118	3	62900	280	ZM 65
0.63	16	M8	0.315	8	0.138	3.5	168600	750	ZMA 65/105
0.354	9	M8	0.315	8	0.138	3.5	68600	305	ZM 70
0.689	17.5	M8	0.315	8	0.138	3.5	182100	810	ZMA 70/110
0.354	9	M8	0.315	8	0.138	3.5	74400	331	ZM 75
0.748	19	M8	0.315	8	0.138	3.5	197800	880	ZMA 75/125
0.354	9	M8	0.315	8	0.138	3.5	79800	355	ZM 80
0.354	9	M8	0.315	8	0.138	3.5	86600	385	ZM 85
0.394	10	M8	0.394	10	0.157	4	92200	410	ZM 90
0.748	19	M8	0.394	10	0.157	4	242800	1080	ZMA 90/155
0.394	10	M8	0.394	10	0.157	4	104500	465	ZM 100
0.433	11	M10	0.472	12	0.197	5	111300	495	ZM 105
0.433	11	M10	0.472	12	0.197	5	116900	520	ZM 110
0.433	11	M10	0.472	12	0.197	5	123700	550	ZM 115
0.472	12	M10	0.472	12	0.197	5	130400	580	ZM 120
0.472	12	M10	0.472	12	0.197	5	137100	610	ZM 125
0.472	12	M10	0.472	12	0.197	5	141600	630	ZM 130
0.512	13	M12	0.551	14	0.236	6	155100	690	ZM 140
0.512	13	M12	0.551	14	0.236	6	168600	750	ZM 150

Cross Roller Bearings
SX SERIES

● Cross roller bearings ISO series 18 (same envelope as 618 14 etc.)

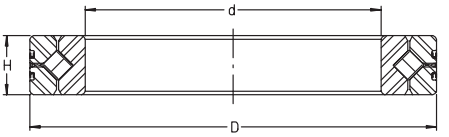

For details on part numbers, descriptive suffixes and various technical references, please refer to front of this section.
For engineering or technical information contact your local sales representative or call Distributor Sales (800)523-6572.

PART NUMBER	SHAFT d inch	SHAFT d mm	OD D inch	OD D mm	WIDTH H inch	WIDTH H mm	WGT lbs	WGT kg	DYN. CAP. AXIAL lbf	DYN. CAP. AXIAL kN	STAT. CAP. AXIAL lbf	STAT. CAP. AXIAL kN	SPEED LIMIT rpm
SX 01 18 14	2.756	70	3.543	90	0.394	10	0.662	0.3	4,050	18	13,500	60	955
SX 01 18 20	3.937	100	4.921	125	0.512	13	0.882	0.4	6,300	28	23,800	106	680
SX 01 18 24	4.724	120	5.906	150	0.630	16	1.764	0.8	9,200	41	34,500	153	565
SX 01 18 28	5.512	140	6.890	175	0.709	18	2.426	1.1	14,400	64	53,000	237	485
SX 01 18 32	6.299	160	7.874	200	0.787	20	3.749	1.7	15,500	69	61,000	272	425
SX 01 18 36	7.087	180	8.858	225	0.866	22	5.072	2.3	22,000	98	86,000	381	375
SX 01 18 40	7.874	200	9.843	250	0.945	24	6.836	3.1	23,800	106	96,000	425	340
SX 01 18 48	9.449	240	11.811	300	1.102	28	11.7	5.3	33,500	149	138,000	612	280
SX 01 18 60	11.811	300	14.961	380	1.496	38	26.5	12	55,000	245	231,000	1027	558
SX 01 18 68	13.386	340	16.535	420	1.496	38	29.8	13.5	60,000	265	260,000	1148	200
SX 01 18 80	15.748	400	19.685	500	1.811	46	52.9	24	87,000	385	380,000	1699	170
SX 01 18 /500	19.685	500	24.409	620	2.205	56	97.0	44	126,000	560	570,000	2538	135

Axial Radial Bearings for Rotary Tables

YRT SERIES

- Double direction
- Axially preloaded, radially preloaded
- Predrilled for flange mounting
- P4 precision

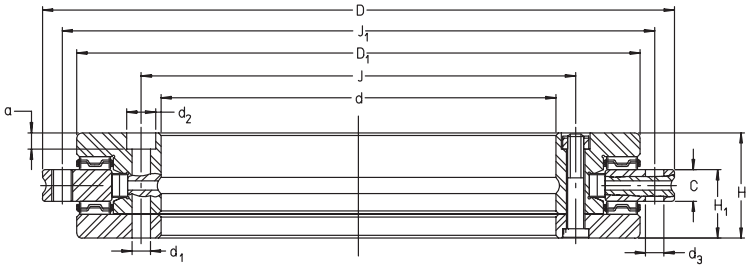

For details on part numbers, descriptive suffixes and various technical references, please refer to front of this section.
For engineering or technical information contact your local sales representative or call Distributor Sales (800)523-6572.

PART NUMBER	SHAFT d mm inch	OD D mm inch	WIDTH H mm inch	DYN. CAP AXIAL kN lbf	STAT. CAP. AXIAL kN lbf	DYN. CAP RADIAL kN lbf	STAT. CAP. RADIAL kN lbf	H_1 mm inch	C mm inch	D_1 mm inch	INNER BOLT CIRCLE J mm inch	OUTER BOLT CIRCLE J_1 mm inch	BOLT TORQUE Nm lbf-ft
YRT 80	80	146	35	38.5	158	36.5	47	23.35	12	130	92	138	8.5
YRT 80	3.15	5.748	1.378	8700	36000	8200	10600	0.919	0.472	5.118	3.622	5.433	6.3
YRT 100	100	185	38	72	370	54	115	25	12	160	112	170	8.5
YRT 100	3.937	7.283	1.496	16000	83000	12100	25900	0.984	0.472	6.299	4.409	6.693	6.3
YRT 120	120	210	40	79	430	70	148	26	12	184	135	195	14
YRT 120	4.724	8.268	1.575	18000	97000	15700	33000	1.024	0.472	7.244	5.315	7.677	10.3
YRT 150	150	240	40	85	510	77	179	26	12	214	165	225	14
YRT 150	5.906	9.449	1.575	19000	115000	17300	40000	1.024	0.472	8.425	6.496	8.858	10.3
YRT 180	180	280	43	92	580	83	208	29	15	244	194	260	14
YRT 180	7.087	11.024	1.693	21000	130000	18700	47000	1.142	0.591	9.606	7.638	10.236	10.3
YRT 200	200	300	45	98	650	88	235	30	15	274	215	285	14
YRT 200	7.874	11.811	1.772	22000	146000	20000	53000	1.181	0.591	10.787	8.465	11.22	10.3
YRT 260	260	385	55	109	810	101	305	36.5	18	345	280	365	34
YRT 260	10.236	15.157	2.165	25000	182000	23000	69000	1.437	0.709	13.583	11.024	14.37	25.1
YRT 325	325	450	60	186	1710	133	410	40	20	415	342	430	34
YRT 325	12.795	17.717	2.362	42000	384000	30000	92000	1.575	0.787	16.339	13.465	16.929	25.1
YRT 395	395	525	65	202	2010	146	495	42.5	20	486	415	505	34
YRT 395	15.551	20.669	2.559	45000	452000	33000	111000	1.673	0.787	19.134	16.339	19.882	25.1
YRT 460	460	600	70	217	2300	197	690	46	22	560	482	580	34
YRT 460	18.11	23.622	2.756	49000	517000	44000	155000	1.811	0.866	22.047	18.976	22.835	25.1
YRT 580	580	750	90	385	3550	215	830	60	30	700	610	720	68
YRT 580	22.835	29.528	3.543	87000	798000	48000	187000	2.362	1.181	27.559	24.016	28.346	50.2
YRT 650	650	870	122	495	5100	415	1520	78	34	800	680	830	116
YRT 650	25.591	34.252	4.803	111000	1147000	93000	342000	3.071	1.339	31.496	26.772	32.677	85.6
YRT 850	850	1095	124	560	6500	480	1990	80.5	37	1018	890	1055	284
YRT 850	33.465	43.11	4.882	126000	1461000	108000	447000	3.169	1.457	40.079	35.039	41.535	209.5
YRT 950	950	1200	132	1040	10300	600	2480	86	40	1130	990	1160	284
YRT 950	37.402	47.244	5.197	234000	2316000	135000	558000	3.386	1.575	44.488	38.976	45.669	209.5

Axial Radial Bearings for Rotary Tables

YRT SERIES

- Double direction
- Axially preloaded, radially preloaded
- Predrilled for flange mounting
- P4 precision

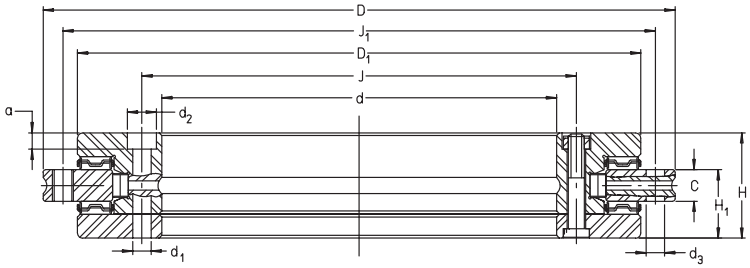

For details on part numbers, descriptive suffixes and various technical references, please refer to front of this section.
For engineering or technical information contact your local sales representative or call Distributor Sales (800)523-6572.

a mm inch	d1 mm inch	d2 mm inch	QTY ⋆	HOLE SPACING	d3 mm inch	QTY ⋆⋆	REMOVAL THREADS G	QTY	BEARING FRICTIONAL TORQUE Nm lbf-ft	RIGIDITY AXIAL N/µm lbf^6/in	RIGIDITY RADIAL N/µm lbf^6/in	RIGIDITY MOMENT Nm/mrad ftlbf/deg	WGT. kg lbs	SPEED LIMIT GREASE rpm	PART NUMBER
4	5.6	10	10	30°	4.6	12	–	–	3	500	1800	2500	2.4	350	YRT 80
0.157	0.22	0.394	10	30°	0.181	12	–	–	2.2	2.86	10.28	32200	5.29	350	YRT 80
5.4	5.6	10	16	20°	5.6	15	M5	3	3	800	2000	5000	4.1	280	YRT 100
0.213	0.22	0.394	16	20°	0.22	15	M5	3	2.2	4.57	11.42	64400	9.04	280	YRT 100
6.2	7	11	22	15°	7	21	M8	3	7	1000	2200	7000	5.3	230	YRT 120
0.244	0.276	0.433	22	15°	0.276	21	M8	3	5.2	5.71	12.56	90100	11.69	230	YRT 120
6.2	7	11	34	10°	7	33	M8	3	10	1500	2600	11000	6.2	210	YRT 150
0.244	0.276	0.433	34	10°	0.276	33	M8	3	7.4	8.57	14.85	141600	13.67	210	YRT 150
6.2	7	11	46	7.5°	7	45	M8	3	12	2200	3000	17000	7.7	190	YRT 180
0.244	0.276	0.433	46	7.5°	0.276	45	M8	3	8.9	12.56	17.13	218800	16.98	190	YRT 180
6.2	7	11	46	7.5°	7	45	M8	3	14	3000	3500	23000	9.7	170	YRT 200
0.244	0.276	0.433	46	7.5°	0.276	45	M8	3	10.3	17.13	19.99	296100	21.39	170	YRT 200
8.2	9.3	15	34	10°	9.3	33	M12	3	20	5500	4500	45000	18.3	130	YRT 260
0.323	0.366	0.591	34	10°	0.366	33	M12	3	14.8	31.41	25.7	579300	40.35	130	YRT 260
8.2	9.3	15	34	10°	9.3	33	M12	3	40	8500	5000	80000	25	110	YRT 325
0.323	0.366	0.591	34	10°	0.366	33	M12	3	29.5	48.54	28.55	1029800	55.13	110	YRT 325
8.2	9.3	15	46	7.5°	9.3	45	M12	3	55	12500	6000	130000	33	90	YRT 395
0.323	0.366	0.591	46	7.5°	0.366	45	M12	3	40.6	71.38	34.26	1673400	72.77	90	YRT 395
8.2	9.3	15	46	7.5°	9.3	45	M12	3	70	18000	7000	200000	45	80	YRT 460
0.323	0.366	0.591	46	7.5°	0.366	45	M12	3	51.6	102.79	39.97	2574500	99.23	80	YRT 460
11	11.4	18	46	7.5°	11.4	42	M12	6	140	30000	9000	380000	89	60	YRT 580
0.433	0.449	0.709	46	7.5°	0.449	42	M12	6	103.3	171.31	51.39	4891600	196.25	60	YRT 580
13	14	20	46	7.5°	14	42	M12	6	200	45000	10000	550000	170	55	YRT 650
0.512	0.551	0.787	46	7.5°	0.551	42	M12	6	147.5	256.97	57.1	7079900	374.85	55	YRT 650
17	18	26	58	6°	18	54	M16	6	300	80000	13000	1100000	253	40	YRT 850
0.669	0.709	1.024	58	6°	0.709	54	M16	6	221.3	456.83	74.24	14159800	557.87	40	YRT 850
17	18	26	58	6°	18	54	M16	6	–	100000	14000	1500000	312	40	YRT 950
0.669	0.709	1.024	58	6°	0.709	54	M16	6	–	571.04	79.95	19308800	687.96	40	YRT 950

Equal hold spacing includes
⋆ quantity of mounting holes – spacing includes two holes with retaining bolts for shipping
⋆⋆ equal hole spacing is sum of bolt holes and threaded removal holes

Rotary Table Bearings
ZKLDF SERIES

- Double direction axial angular contact ball bearings
- 60° contact angle with axial mounting bolt holes
- Bolt pattern matches YRT series
- Metric series

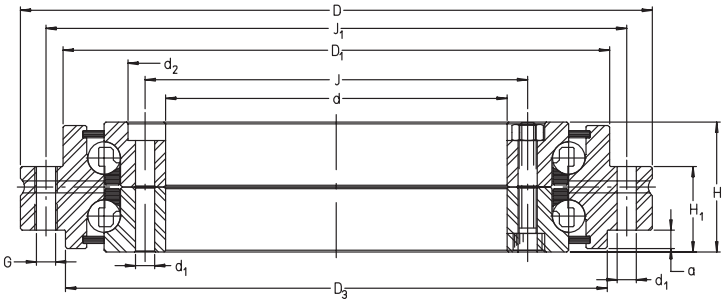

For details on part numbers, descriptive suffixes and various technical references, please refer to front of this section.
For engineering or technical information contact your local sales representative or call Distributor Sales (800)523-6572.

PART NUMBER	SHAFT d mm inch	OD D mm inch	WIDTH H mm inch	WEIGHT Kg lbs	DYN. CAP. AXIAL N lbf	STAT. CAP. AXIAL N lbf	H_1 mm inch	D_1 mm inch	D3 mm inch	INNER BOLT CIRCLE DIA. J mm inch	OUTER BOLT CIRCLE DIA. J_1 mm inch	HOLE DIA. d_1 mm inch
ZKLDF 100	100	185	38	4.5	51000	162000	25	160	158	112	170	5.6
ZKLDF 100	3.937	7.2835	1.496	9.9	11000	36000	0.984	6.299	6.22	4.409	6.693	0.22
ZKLDF 120	120	210	40	6	61000	207000	26	184	181	135	195	7
ZKLDF 120	4.7244	8.2677	1.575	13.2	14000	47000	1.024	7.244	7.126	5.315	7.677	0.276
ZKLDF 150	150	240	40	7.5	65000	247000	26	214	211	165	225	7
ZKLDF 150	5.9055	9.4488	1.575	16.5	15000	56000	1.024	8.425	8.307	6.496	8.858	0.276
ZKLDF 200	200	300	45	11	87000	365000	30	274	271	215	285	7
ZKLDF 200	7.874	11.811	1.772	24.3	20000	82000	1.181	10.787	10.669	8.465	11.22	0.276
ZKLDF 260	260	385	55	22	115000	540000	36.5	345	348	280	365	9.3
ZKLDF 260	10.2362	15.1575	2.165	48.5	26000	121000	1.437	13.583	13.701	11.024	14.37	0.366
ZKLDF 325	325	450	60	28	138000	720000	40	415	413	342	430	9.3
ZKLDF 325	12.7953	17.7165	2.362	61.7	31000	162000	1.575	16.339	16.26	13.465	16.929	0.366
ZKLDF 395	395	525	65	39	172000	960000	42.5	486	488	415	505	9.3
ZKLDF 395	15.5512	20.6693	2.559	86	39000	216000	1.673	19.134	19.213	16.339	19.882	0.366
ZKLDF 460	460	600	70	50	207000	1210000	46	560	563	482	580	9.3
ZKLDF 460	18.1102	23.622	2.756	110.3	47000	272000	1.811	22.047	22.165	18.976	22.835	0.366

CONTINUED FROM ABOVE

PART NUMBER	COUNTER BORE DIA. d_2 mm inch	a mm inch	HOLE SPACING	QTY. MOUNTING HOLES	QTY. SHIPPING SCREWS	THREADED HOLES G	QTY. THREADED HOLES G	BOLT TORQUE Nm inch-lbf	SPEED LIMIT OIL rpm	SPEED LIMIT GREASE rpm	FRICTION TORQUE Nm inch-lbf
ZKLDF 100	10	5.4	18X20º	15	3	M5	3	8.5	2100	1400	1.6
ZKLDF 100	0.394	0.213	18X20º	15	3	M5	3	75.2	2100	1400	14.2
ZKLDF 120	11	6.2	24X15º	21	3	M8	3	14	1800	1200	2
ZKLDF 120	0.433	0.244	24X15º	21	3	M8	3	123.9	1800	1200	17.7
ZKLDF 150	11	6.2	36X10º	33	3	M8	3	14	1500	1000	3
ZKLDF 150	0.433	0.244	36X10º	33	3	M8	3	123.9	1500	1000	26.6
ZKLDF 200	11	6.2	48X7.5º	45	3	M8	3	14	1200	800	4.5
ZKLDF 200	0.433	0.244	48X7.5º	45	3	M8	3	123.9	1200	800	39.8
ZKLDF 260	15	8.2	36X10º	33	3	M12	3	34	900	600	7.5
ZKLDF 260	0.591	0.323	36X10º	33	3	M12	3	300.9	900	600	66.4
ZKLDF 325	15	8.2	36X10º	33	3	M12	3	34	750	500	11
ZKLDF 325	0.591	0.323	36X10º	33	3	M12	3	300.9	750	500	97.4
ZKLDF 395	15	8.2	48X7.5º	45	3	M12	3	34	600	400	16
ZKLDF 395	0.591	0.323	48X7.5º	45	3	M12	3	300.9	600	400	141.6
ZKLDF 460	15	8.2	48X7.5º	45	3	M12	3	34	525	350	21
ZKLDF 460	0.591	0.323	48X7.5º	45	3	M12	3	300.9	525	350	185.9

Combination Bearings

NKIA SERIES

- Radial needle roller and single direction axial angular contact ball bearings
- Metric series
- Removeable inner ring

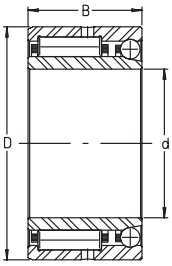

For details on part numbers, descriptive suffixes and various technical references, please refer to front of this section.
For engineering or technical information contact your local sales representative or call Distributor Sales (800)523-6572.

PART NUMBER	SHAFT d inch	SHAFT d mm	OD D inch	OD D mm	WIDTH B inch	WIDTH B mm	WGT. lbs	WGT. g	DYN. CAP. RADIAL lbf	DYN. CAP. RADIAL N	STAT. CAP. RADIAL lbf	STAT. CAP. RADIAL N	DYN. CAP. AXIAL lbf	DYN. CAP. AXIAL N	STAT. CAP. AXIAL lbf	STAT. CAP. AXIAL N	SPEED LIMIT rpm
NKIA 5901	0.472	12	0.945	24	0.630	16	0.088	40	1,710	7600	1,870	8300	485	2160	510	2250	24000
NKIA 5902	0.591	15	1.102	28	0.709	18	0.11	50	2,380	10600	3,050	13600	530	2340	620	2750	22000
NKIA 5903	0.669	17	1.181	30	0.709	18	0.123	56	2,470	11000	3,300	14600	560	2500	720	3200	21000
NKIA 5904	0.787	20	1.457	37	0.906	23	0.227	103	4,700	21000	5,700	25500	890	3950	1,090	4850	17000
NKIA 59/22	0.866	22	1.535	39	0.906	23	0.26	118	5,100	22800	6,600	29500	960	4250	1,260	5600	16000
NKIA 5905	0.984	25	1.654	42	0.906	23	0.287	130	5,300	23600	7,100	31500	980	4350	1,370	6100	15000
NKIA 5906	1.181	30	1.850	47	0.906	23	0.324	147	5,600	25000	8,000	35500	1,070	4750	1,640	7300	13000
NKIA 5907	1.378	35	2.165	55	1.063	27	0.536	243	7,100	31500	11,200	50000	1,350	6000	2,200	9800	11000
NKIA 5908	1.575	40	2.441	62	1.181	30	0.695	315	9,700	43000	15,100	67000	1,660	7400	2,850	12700	9500
NKIA 5909	1.772	45	2.677	68	1.181	30	0.827	375	10,100	45000	16,400	73000	1,730	7700	3,150	14000	8500
NKIA 5910	1.969	50	2.835	72	1.181	30	0.838	380	10,600	47000	18,000	80000	1,820	8100	3,600	15900	8000
NKIA 5911	2.165	55	3.150	80	1.339	34	1.213	550	13,000	58000	22,500	100000	2,180	9700	4,300	19200	7500
NKIA 5912	2.362	60	3.347	85	1.339	34	1.301	590	13,500	60000	24,300	108000	2,250	10000	4,700	20800	7000
NKIA 5913	2.559	65	3.543	90	1.339	34	1.4	635	13,700	61000	25,000	112000	2,320	10300	5,000	22300	6500
NKIA 5914	2.756	70	3.937	100	1.575	40	2.161	980	18,900	84000	35,000	156000	3,050	13500	6,500	29000	6000

Combination Bearings

NKIB SERIES

- Radial needle roller and double direction axial angular contact ball bearing
- Metric series
- Removeable inner rings

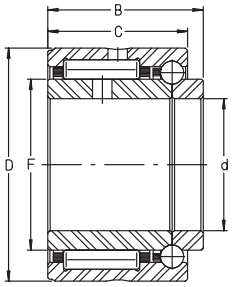

For details on part numbers, descriptive suffixes and various technical references, please refer to front of this section.
For engineering or technical information contact your local sales representative or call Distributor Sales (800)523-6572.

PART NUMBER	SHAFT d inch	SHAFT d mm	OD D inch	OD D mm	WIDTH B inch	WIDTH B mm	WIDTH C inch	WIDTH C mm	WGT. lbs	WGT. g
NKIB 5901	0.472	12	0.945	24	0.689	17.5	0.630	16	0.095	43
NKIB 5902	0.591	15	1.102	28	0.787	20	0.709	18	0.115	52
NKIB 5903	0.669	17	1.181	30	0.787	20	0.709	18	0.128	58
NKIB 5904	0.787	20	1.457	37	0.984	25	0.906	23	0.236	107
NKIB 59/22	0.866	22	1.535	39	0.984	25	0.906	23	0.269	122
NKIB 5905	0.984	25	1.654	42	0.984	25	0.906	23	0.295	134
NKIB 5906	1.181	30	1.850	47	0.984	25	0.906	23	0.333	151
NKIB 5907	1.378	35	2.165	55	1.181	30	1.063	27	0.545	247
NKIB 5908	1.575	40	2.441	62	1.339	34	1.181	30	0.706	320
NKIB 5909	1.772	45	2.677	68	1.339	34	1.181	30	0.838	380
NKIB 5910	1.969	50	2.835	72	1.339	34	1.181	30	0.849	385
NKIB 5911	2.165	55	3.150	80	1.496	38	1.339	34	1.224	555
NKIB 5912	2.362	60	3.347	85	1.496	38	1.339	34	1.312	595
NKIB 5913	2.559	65	3.543	90	1.496	38	1.339	34	1.411	640
NKIB 5914	2.756	70	3.937	100	1.772	45	1.575	40	2.172	985

CONTINUED FROM ABOVE

PART NUMBER	DYN. CAP. RADIAL lbf	DYN. CAP. RADIAL N	STAT. CAP. RADIAL lbf	STAT. CAP. RADIAL N	DYN. CAP. AXIAL lbf	DYN. CAP. AXIAL N	STAT. CAP. AXIAL lbf	STAT. CAP. AXIAL N	SPEED LIMIT rpm
NKIB 5901	1,710	7600	1,870	8300	485	2160	510	2250	24000
NKIB 5902	2,380	10600	3,050	13600	530	2340	620	2750	22000
NKIB 5903	2,470	11000	3,300	14600	560	2500	720	3200	21000
NKIB 5904	4,700	21000	5,700	25500	890	3950	1,090	4850	17000
NKIB 59/22	5,100	22800	6,600	29500	960	4250	1,260	5600	16000
NKIB 5905	5,300	23600	7,100	31500	980	4350	1,370	6100	15000
NKIB 5906	5,600	25000	8,000	35500	1,070	4750	1,640	7300	13000
NKIB 5907	7,100	31500	11,200	50000	1,350	6000	2,200	9800	11000
NKIB 5908	9,700	43000	15,100	67000	1,660	7400	2,850	12700	9500
NKIB 5909	10,100	45000	16,400	73000	1,730	7700	3,150	14000	8500
NKIB 5910	10,600	47000	18,000	80000	1,820	8100	3,600	15900	8000
NKIB 5911	13,000	58000	22,500	100000	2,180	9700	4,300	19200	7500
NKIB 5912	13,500	60000	24,300	108000	2,250	10000	4,700	20800	7000
NKIB 5913	13,700	61000	25,000	112000	2,320	10300	5,000	22300	6500
NKIB 5914	18,900	84000	35,000	156000	3,050	13500	6,500	29000	6000

Combination Bearings

NX SERIES

- Radial needle roller and axial banded ball bearing
- Metric series

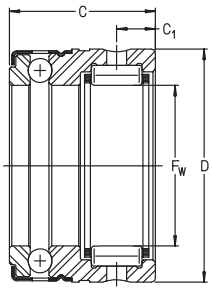

For details on part numbers, descriptive suffixes and various technical references, please refer to front of this section.
For engineering or technical information contact your local sales representative or call Distributor Sales (800)523-6572.

PART NUMBER	SHAFT F_w inch	SHAFT F_w mm	OD D inch	OD D mm	WIDTH C inch	WIDTH C mm	WGT. lbs	WGT. g
NX 7 TN	0.276	7	0.551	14	0.709	18	0.031	14
NX 10	0.394	10	0.748	19	0.709	18	0.055	25
NX 12	0.472	12	0.827	21	0.709	18	0.062	28
NX 15	0.591	15	0.945	24	1.102	28	0.106	48
NX 17	0.669	17	1.024	26	1.102	28	0.117	53
NX 20	0.787	20	1.181	30	1.102	28	0.15	68
NX 25	0.984	25	1.457	37	1.181	30	0.254	115
NX 30	1.181	30	1.654	42	1.181	30	0.287	130
NX 35	1.378	35	1.850	47	1.181	30	0.353	160

CONTINUED FROM ABOVE

PART NUMBER	DYN. CAP. RADIAL lbf	DYN. CAP. RADIAL N	STAT. CAP. RADIAL lbf	STAT. CAP. RADIAL N	DYN. CAP. AXIAL lbf	DYN. CAP. AXIAL N	STAT. CAP. AXIAL lbf	STAT. CAP. AXIAL N	OIL GROOVE CENTER C_1 inch	OIL GROOVE CENTER C_1 mm	SPEED LIMIT rpm	CORRECT SNAP RING
NX 7 TN	640	2850	600	2650	780	3450	1,030	4600	0.185	4.7	15000	WR 14
NX 10	1,000	4450	830	3700	1,150	5100	1,750	7800	0.185	4.7	11000	WR 19
NX 12	1,080	4800	970	4300	1,190	5300	2,000	8900	0.185	4.7	9500	WR 21
NX 15	2,410	10700	2,850	12700	1,370	6100	2,500	11200	0.315	8	8000	WR 24
NX 17	2,700	11900	3,350	15000	1,440	6400	2,800	12400	0.315	8	7500	WR 26
NX 20	2,900	13000	3,950	17500	1,730	7700	3,550	15800	0.315	8	6500	WR 30
NX 25	3,350	14900	5,000	22400	2,750	12200	5,800	26000	0.315	8	4900	WR 37
NX 30	5,100	22600	8,100	36000	2,900	12800	6,700	30000	0.394	10	4300	WR 42
NX 35	5,500	24300	9,300	41500	3,050	13600	7,900	35000	0.394	10	3700	WR 47

Combination Bearings

NKX SERIES

- Radial needle based on RNA49.. series
- Thrust ball based on 511.. series
- Per DIN 5429
- Available with grease retaining cap, suffix Z

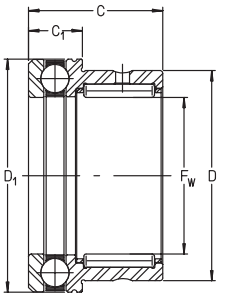

For details on part numbers, descriptive suffixes and various technical references, please refer to front of this section.
For engineering or technical information contact your local sales representative or call Distributor Sales (800)523-6572.

PART NUMBER	DIN 5429 PART NUMBER	SHAFT Fw inch	SHAFT Fw mm	OD D inch	OD D mm	WIDTH C inch	WIDTH C mm	WGT. lbs	WGT. g	D_1 max inch	D_1 max mm	C_1 inch	C_1 mm
NKX 10 TN	NAXK 10 TN	0.394	10	0.748	19	0.906	23	0.075	34	0.949	24.1	0.354	9
NKX 12	NAXK 12	0.472	12	0.827	21	0.906	23	0.084	38	1.028	26.1	0.354	9
NKX 15	NAXK 15	0.591	15	0.945	24	0.906	23	0.097	44	1.106	28.1	0.354	9
NKX 17	NAXK 17	0.669	17	1.024	26	0.984	25	0.117	53	1.185	30.1	0.354	9
NKX 20	NAXK 20	0.787	20	1.181	30	1.181	30	0.183	83	1.382	35.1	0.394	10
NKX 25	NAXK 25	0.984	25	1.457	37	1.181	30	0.276	125	1.658	42.1	0.433	11
NKX 30	NAXK 30	1.181	30	1.654	42	1.181	30	0.311	141	1.854	47.1	0.433	11
NKX 35	NAXK 35	1.378	35	1.850	47	1.181	30	0.359	163	2.051	52.1	0.472	12
NKX 40	NAXK 40	1.575	40	2.047	52	1.260	32	0.441	200	2.366	60.1	0.512	13
NKX 45	NAXK 45	1.772	45	2.284	58	1.260	32	0.556	252	2.567	65.2	0.551	14
NKX 50	NAXK 50	1.969	50	2.441	62	1.378	35	0.617	280	2.764	70.2	0.551	14
NKX 60	NAXK 60	2.362	60	2.835	72	1.575	40	0.794	360	3.354	85.2	0.669	17
NKX 70	NAXK 70	2.756	70	3.347	85	1.575	40	1.103	500	3.748	95.2	0.709	18

CONTINUED FROM ABOVE

PART NUMBER	DIN 5429 PART NUMBER	DYN. CAP. RADIAL lbf	DYN. CAP. RADIAL N	STAT. CAP. RADIAL lbf	STAT. CAP. RADIAL N	DYN. CAP. AXIAL lbf	DYN. CAP. AXIAL N	STAT. CAP. AXIAL lbf	STAT. CAP. AXIAL N	SPEED LIMIT OIL rpm
NKX 10 TN	NAXK 10 TN	1,390	6200	1,750	7800	2,250	10000	3,150	14000	12000
NKX 12	NAXK 12	2,020	9000	2,470	11000	2,320	10300	3,450	15400	11000
NKX 15	NAXK 15	2,410	10700	2,850	12700	2,360	10500	3,800	16800	9500
NKX 17	NAXK 17	2,700	11900	3,350	15000	2,430	10800	4,100	18200	8500
NKX 20	NAXK 20	3,700	16400	5,400	23800	3,200	14300	5,600	24700	7500
NKX 25	NAXK 25	4,250	18800	6,900	30500	4,400	19600	8,400	37500	6000
NKX 30	NAXK 30	5,100	22600	8,100	36000	4,600	20400	9,400	42000	5000
NKX 35	NAXK 35	5,500	24300	9,300	41500	4,750	21200	10,600	47000	4600
NKX 40	NAXK 40	5,800	26000	10,600	47000	6,100	27000	14,200	63000	4000
NKX 45	NAXK 45	6,200	27500	11,900	53000	6,300	28000	15,500	69000	3600
NKX 50	NAXK 50	8,500	38000	16,600	74000	6,500	29000	16,900	75000	3300
NKX 60	NAXK 60	9,400	42000	20,200	90000	9,300	41500	25,500	113000	2800
NKX 70	NAXK 70	10,000	44500	20,700	92000	9,700	43000	28,500	127000	2400

Combination Bearings

NKXR SERIES

- Radial needle based on RNA49.. series
- Thrust roller based on 811.. series
- Per DIN 5429
- Available with grease retaining cap, suffix Z

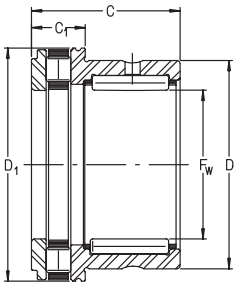

For details on part numbers, descriptive suffixes and various technical references, please refer to front of this section.
For engineering or technical information contact your local sales representative or call Distributor Sales (800)523-6572.

PART NUMBER	DIN 5429 PART NUMBER	SHAFT Fw inch	SHAFT Fw mm	OD D inch	OD D mm	WIDTH C inch	WIDTH C mm	WGT. lbs	WGT. g	D_1 max inch	D_1 max mm	C_1 inch	C_1 mm
NKXR 15	NAXR 15	0.591	15	0.945	24	0.906	23	0.093	42	1.106	28.1	0.354	9
NKXR 17	NAXR 17	0.669	17	1.024	26	0.984	25	0.11	50	1.185	30.1	0.354	9
NKXR 20	NAXR 20	0.787	20	1.181	30	1.181	30	0.176	80	1.382	35.1	0.394	10
NKXR 25	NAXR 25	0.984	25	1.457	37	1.181	30	0.265	120	1.658	42.1	0.433	11
NKXR 30	NAXR 30	1.181	30	1.654	42	1.181	30	0.298	135	1.854	47.1	0.433	11
NKXR 35	NAXR 35	1.378	35	1.850	47	1.181	30	0.346	157	2.051	52.1	0.472	12
NKXR 40	NAXR 40	1.575	40	2.047	52	1.260	32	0.45	204	2.366	60.1	0.512	13
NKXR 45	NAXR 45	1.772	45	2.284	58	1.260	32	0.538	244	2.567	65.2	0.551	14
NKXR 50	NAXR 50	1.969	50	2.441	62	1.378	35	0.591	268	2.764	70.2	0.551	14

CONTINUED FROM ABOVE

PART NUMBER	DIN 5429 PART NUMBER	DYN. CAP. RADIAL lbf	DYN. CAP. RADIAL N	STAT. CAP. RADIAL lbf	STAT. CAP. RADIAL N	DYN. CAP. AXIAL lbf	DYN. CAP. AXIAL N	STAT. CAP. AXIAL lbf	STAT. CAP. AXIAL N	SPEED LIMIT OIL rpm
NKXR 15	NAXR 15	2,410	10700	2,850	12700	3,250	14400	6,400	28500	13000
NKXR 17	NAXR 17	2,700	11900	3,350	15000	3,600	15900	7,500	33500	12000
NKXR 20	NAXR 20	3,700	16400	5,400	23800	5,600	24900	11,900	53000	10000
NKXR 25	NAXR 25	4,250	18800	6,900	30500	7,500	33500	17,100	76000	8500
NKXR 30	NAXR 30	5,100	22600	8,100	36000	8,000	35500	19,300	86000	7500
NKXR 35	NAXR 35	5,500	24300	9,300	41500	8,800	39000	22,700	101000	6500
NKXR 40	NAXR 40	5,800	26000	10,600	47000	12,600	56000	33,500	148000	6000
NKXR 45	NAXR 45	6,200	27500	11,900	53000	13,300	59000	36,500	163000	5000
NKXR 50	NAXR 50	8,500	38000	16,600	74000	13,700	61000	40,000	177000	4800

NOTES

Section Contents
CYLINDRICAL ROLLER BEARINGS

BEARING SERIES	BEARING DESCRIPTION	PAGE
INFORMATION	CYLINDRICAL ROLLER BEARING, GENERAL OVERVIEW	324
P / N IDENTIFICATION	CYLINDRICAL ROLLER BEARINGS	325
SL18	METRIC ISO SERIES 2 FLANGED INNER 1 ROW FULL COMPLEMENT ROLLER	326
SL18 22	METRIC ISO SERIES 2 FLANGED INNER 1 ROW FULL COMPLEMENT ROLLER	326
SL18 29	METRIC ISO SERIES 2 FLANGED INNER 1 ROW FULL COMPLEMENT ROLLER	326
SL18 30	METRIC ISO SERIES 2 FLANGED INNER 1 ROW FULL COMPLEMENT ROLLER	326
SL19 23	METRIC ISO SERIES 2 FLANGED OUTER 1 ROW FULL COMPLEMENT ROLLER	326
SL18 48	METRIC ISO SERIES 2 ROW SEMI-LOCATING FULL COMPLEMENT ROLLER	329
SL18 49	METRIC ISO SERIES 2 ROW SEMI-LOCATING FULL COMPLEMENT ROLLER	329
SL18 50	METRIC ISO SERIES 2 ROW SEMI-LOCATING FULL COMPLEMENT ROLLER	329
SL 02	METRIC ISO SERIES 2 ROW NON-LOCATING FULL COMPLEMENT ROLLER	330
SL01	METRIC ISO SERIES 2 ROW LOCATING FULL COMPLEMENT ROLLER	331
SL11	METRIC 3 ROW LOCATING FULL COMPLEMENT ROLLER	332
SL14	METRIC 3 ROW NON-LOCATING FULL COMPLEMENT ROLLER	333
SL12	METRIC 4 ROW LOCATING FULL COMPLEMENT ROLLER	334
SL15	METRIC 4 ROW NON-LOCATING FULL COMPLEMENT ROLLER	335
SL04	SHEAVE BEARINGS - METRIC 2 ROW LOCATING FULL COMPLEMENT ROLLER	336
SL05	METRIC SPHERICAL OD 2 ROW LOCATING FULL COMPLEMENT ROLLER	338
SL06	METRIC SPHERICAL OD 2 ROW NON-LOCATING FULL COMPLEMENT ROLLER	339
LSL	METRIC ISO SERIES 2 FLANGED OUTER 1 ROW DISK SEPARATED ROLLER	340
ZSL	METRIC ISO SERIES 2 FLANGED OUTER 1 ROW SPACER SEPARATED ROLLER	341
GG51	METRIC SPLIT DESIGN CAST IRON PILLOW BLOCKS FOR SERIES SL05 & SL06	342

General Information
CYLINDRICAL ROLLER BEARINGS

PRODUCT DESCRIPTION

INA Cylindrical Roller Bearings

- Metric full complement designs for maximum capacity
- Available in various ISO cross sections and design configurations including SL04 for sheaves with integral seals and snap ring grooves
- Available as fixed, float and semi–fixed designs with 1 to 5 row of rollers
- Available without outer ring for use in hardened housings or gear bores to maximize capacity and life
- Available with a disk or spacer element separator for maximum capacity and minimal friction, designed to eliminate retainer drag of traditional retainer designs
- Available with spherical OD and mating cast iron pillow blocks for static self aligning designs

Part Number Identification
CYLINDRICAL ROLLER BEARINGS

CYLINDRICAL ROLLER BEARING METRIC SERIES

SL

SL18 18 05 BR

SL01	2 Row Fixed
SL02	2 Row Float
SL04	2 Row Fixed
SL05	2 Row Fixed
SL06	2 Row Float
SL11	3 Row Fixed
SL12	4 Row Fixed
SL14	3 Row Float
SL15	3 Row Float
SL18	1 or 2 Row Semi-Fixed
SL19	1 Row Semi-Fixed
LSL19	1 Row Semi-Fixed
ZSL19	1 Row Semi-Fixed
RSL18	SL 18 Without Outer Ring

1st Digit ISO Width Series
2nd Digit ISO Diameter Series

1/5 Shaft In mm

SUFFIX

BR	Black Finished
RR	Corrotect Coated
C#	Radial Internal Clearance
P#	Increased Accuracy
P or PP	One Or Two Seals

BEARING HOUSINGS FOR ALIGNING CYLINDRICAL ROLLER BEARINGS METRIC SERIES

GG, FG

GG51 140

GG 51	Plummer Block Housing
FG	Flanged Housing

Sphere Bore In mm

Cylindrical Roller Bearings

SL18 18, SL18 22, SL18 29, SL18 30 & SL19 SERIES

- Metric series
- Single row
- Semi-locating
- SL18 – Double Flanged Inner Rings
- SL19 – Double Flanged Outer Rings

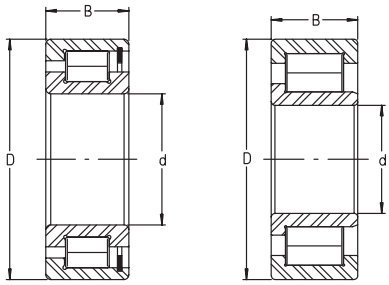

SL18 SL19

For details on part numbers, descriptive suffixes and various technical references, please refer to front of this section.
For engineering or technical information contact your local sales representative or call Distributor Sales (800)523-6572.

PART NUMBER	SHAFT d inch	SHAFT d mm	OUTER RING OD D inch	OUTER RING OD D mm	BEARING WIDTH B inch	BEARING WIDTH B mm	WEIGHT PER PIECE lbs	WEIGHT PER PIECE kg	DYN. CAP. C lbf	DYN. CAP C kN	STAT. CAP. C_0 lbf	STAT. CAP. C_0 kN	SPEED LIMIT OIL rpm
SL18 3004	0.787	20	1.654	42	0.630	16	0.243	0.11	6,200	27.5	6,000	26.5	10000
SL18 2204	0.787	20	1.850	47	0.709	18	0.353	0.16	9,200	41	8,400	37.5	9500
SL18 3005	0.984	25	1.850	47	0.630	16	0.265	0.12	7,100	31.5	7,300	32.5	9000
SL18 2205	0.984	25	2.047	52	0.709	18	0.397	0.18	10,300	46	10,100	45	8500
SL19 2305	0.984	25	2.441	62	0.945	24	0.816	0.37	14,200	63	12,800	57	7500
SL18 3006	1.181	30	2.165	55	0.748	19	0.441	0.2	9,100	40.5	9,700	43	7500
SL18 2206	1.181	30	2.441	62	0.787	20	0.662	0.3	13,700	61	14,200	63	7000
SL19 2306	1.181	30	2.835	72	1.063	27	1.235	0.56	19,600	87	19,100	85	6500
SL18 3007	1.378	35	2.441	62	0.787	20	0.573	0.26	11,100	49.5	12,400	55	6500
SL18 2207	1.378	35	2.835	72	0.906	23	0.97	0.44	17,100	76	17,300	77	6000
SL19 2307	1.378	35	3.150	80	1.221	31	1.632	0.74	25,500	113	25,000	112	5500
SL18 3008	1.575	40	2.677	68	0.827	21	0.684	0.31	13,300	59	15,300	68	6000
SL18 2208	1.575	40	3.150	80	0.906	23	1.213	0.55	18,900	84	20,000	89	5500
SL19 2308	1.575	40	3.543	90	1.299	33	2.227	1.01	34,000	152	35,000	155	5000
SL18 3009	1.772	45	2.953	75	0.906	23	0.882	0.4	14,200	63	17,100	76	5500
SL18 2209	1.772	45	3.347	85	0.906	23	1.301	0.59	19,800	88	21,600	96	5000
SL19 2309	1.772	45	3.937	100	1.417	36	3.021	1.37	36,500	162	37,000	165	4500
SL18 3010	1.969	50	3.150	80	0.906	23	0.948	0.43	17,300	77	20,700	92	5000
SL18 2210	1.969	50	3.543	90	0.906	23	1.411	0.64	21,400	95	24,500	109	4600
SL19 2310	1.969	50	4.331	110	1.575	40	3.991	1.81	46,000	205	48,500	215	4100
SL18 3011	2.165	55	3.543	90	1.024	26	1.411	0.64	23,600	105	30,000	134	4500
SL18 2211	2.165	55	3.937	100	0.984	25	1.918	0.87	27,500	122	32,500	145	4200
SL19 2311	2.165	55	4.724	120	1.693	43	5.027	2.28	54,000	242	57,000	255	3700
SL18 2912	2.362	60	3.347	85	0.630	16	0.639	0.29	12,100	54	16,600	74	4500
SL18 3012	2.362	60	3.740	95	1.024	26	1.521	0.69	24,300	108	31,500	141	4200
SL18 2212	2.362	60	4.331	110	1.102	28	2.602	1.18	34,000	152	40,000	179	3800
SL19 2312	2.362	60	5.118	130	1.811	46	6.35	2.88	58,000	260	63,000	280	3400
SL18 2913	2.559	65	3.543	90	0.630	16	0.684	0.31	12,800	57	18,200	81	4200
SL18 3013	2.559	65	3.937	100	1.024	26	1.61	0.73	25,500	113	34,500	154	3900
SL18 2213	2.559	65	4.724	120	1.221	31	3.462	1.57	40,000	177	48,000	213	3500
SL19 2313	2.559	65	5.512	140	1.890	48	7.762	3.52	71,000	315	80,000	355	3200
SL18 2914	2.756	70	3.937	100	0.748	19	1.08	0.49	17,100	76	24,300	108	3800
SL18 3014	2.756	70	4.331	110	1.181	30	2.249	1.02	30,000	134	38,500	171	3600
SL18 2214	2.756	70	4.921	125	1.221	31	3.66	1.66	41,000	183	51,000	226	3300
SL19 2314	2.756	70	5.906	150	2.008	51	9.548	4.33	78,000	345	88,000	390	2900
SL18 2915	2.953	75	4.134	105	0.748	19	1.147	0.52	17,500	78	26,000	116	3600
SL18 3015	2.953	75	4.528	115	1.181	30	2.337	1.06	31,500	141	42,500	188	3400
SL18 2215	2.953	75	5.118	130	1.221	31	3.859	1.75	42,500	190	54,000	239	3200
SL19 2315	2.953	75	6.299	160	2.165	55	11.7	5.3	92,000	410	107,000	475	2800
SL18 2916	3.150	80	4.331	110	0.748	19	1.213	0.55	18,200	81	27,500	123	3400
SL18 3016	3.150	80	4.921	125	1.339	34	3.153	1.43	39,000	173	50,000	224	3200
SL18 2216	3.150	80	5.512	140	1.299	33	4.741	2.15	50,000	223	63,000	280	2900
SL19 2316	3.150	80	6.693	170	2.284	58	13.9	6.32	108,000	480	126,000	560	2600
SL18 2917	3.347	85	4.724	120	0.866	22	1.786	0.81	22,900	102	35,000	155	3200
SL18 3017	3.347	85	5.118	130	1.339	34	3.33	1.51	40,000	178	53,000	235	3000

Cylindrical Roller Bearings

SL18 18, SL18 22, SL18 29, SL18 30 & SL19 SERIES

- Metric series
- Single row
- Semi-locating
- SL18 – Double Flanged Inner Rings
- SL19 – Double Flanged Outer Rings

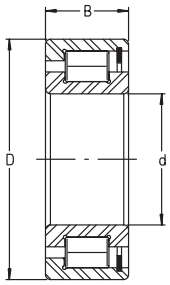

SL18

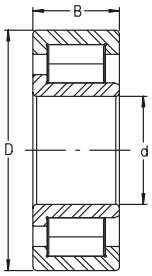

SL19

For details on part numbers, descriptive suffixes and various technical references, please refer to front of this section.
For engineering or technical information contact your local sales representative or call Distributor Sales (800)523-6572.

PART NUMBER	SHAFT d inch	SHAFT d mm	OUTER RING OD D inch	OUTER RING OD D mm	BEARING WIDTH B inch	BEARING WIDTH B mm	WEIGHT PER PIECE lbs	WEIGHT PER PIECE kg	DYN. CAP. C lbf	DYN. CAP C kN	STAT. CAP. C_0 lbf	STAT. CAP. C_0 kN	SPEED LIMIT OIL rpm
SL18 2217	3.347	85	5.906	150	1.417	36	6.042	2.74	57,000	255	72,000	320	2800
SL19 2317	3.347	85	7.087	180	2.362	60	16.2	7.34	115,000	510	139,000	620	2400
SL18 2918	3.543	90	4.921	125	0.866	22	1.852	0.84	23,800	106	37,000	165	3000
SL18 3018	3.543	90	5.512	140	1.457	37	4.344	1.97	46,500	207	63,000	280	2800
SL18 2218	3.543	90	6.299	160	1.575	40	7.673	3.48	64,000	285	82,000	365	2600
SL19 2318	3.543	90	7.480	190	2.520	64	19.5	8.83	126,000	560	148,000	660	2300
SL18 2919	3.740	95	5.118	130	0.866	22	1.896	0.86	25,500	114	38,500	172	2900
SL18 2219	3.740	95	6.693	170	1.693	43	9.195	4.17	75,000	335	97,000	430	2400
SL19 2319	3.740	95	7.874	200	2.638	67	22.5	10.2	130,000	580	162,000	720	2200
SL18 2920	3.937	100	5.512	140	0.945	24	2.514	1.14	29,500	132	44,500	199	2700
SL18 3020	3.937	100	5.906	150	1.457	37	4.741	2.15	49,000	218	69,000	305	2600
SL18 2220	3.937	100	7.087	180	1.811	46	11.3	5.13	88,000	390	117,000	520	2300
SL19 2320	3.937	100	8.465	215	2.874	73	28.7	13	160,000	710	193,000	860	2100
SL18 2922	4.331	110	5.906	150	0.945	24	2.712	1.23	31,000	137	48,000	213	2500
SL18 3022	4.331	110	6.693	170	1.772	45	7.718	3.5	64,000	285	89,000	395	2300
SL18 2222	4.331	110	7.874	200	2.087	53	16.0	7.24	102,000	455	133,000	590	2100
SL19 2322	4.331	110	9.449	240	3.150	80	37.5	17	189,000	840	218,000	970	1900
SL18 2924	4.724	120	6.496	165	1.063	27	3.815	1.73	39,500	176	64,000	285	2300
SL18 3024	4.724	120	7.087	180	1.811	46	8.379	3.8	67,000	300	98,000	435	2200
SL18 2224	4.724	120	8.465	215	2.284	58	20.0	9.08	119,000	530	164,000	730	1900
SL19 2324	4.724	120	10.236	260	3.386	86	49.2	22.3	223,000	990	275,000	1220	1700
SL18 2926	5.118	130	7.087	180	1.181	30	5.138	2.33	47,000	210	79,000	350	2100
SL18 3026	5.118	130	7.874	200	2.047	52	12.5	5.65	97,000	430	137,000	610	2000
SL18 2226	5.118	130	9.055	230	2.520	64	24.8	11.25	142,000	630	193,000	860	1800
SL18 2928	5.512	140	7.480	190	1.181	30	5.336	2.42	51,000	228	84,000	375	2000
SL18 3028	5.512	140	8.268	210	2.087	53	13.3	6.04	102,000	455	151,000	670	1900
SL18 2228	5.512	140	9.843	250	2.677	68	31.9	14.47	162,000	720	229,000	1020	1700
SL18 2930	5.906	150	8.268	210	1.417	36	8.313	3.77	69,000	305	110,000	490	1800
SL18 3030	5.906	150	8.858	225	2.205	56	16.2	7.33	107,000	475	157,000	700	1700
SL18 2230	5.906	150	10.630	270	2.874	73	40.6	18.43	187,000	830	265,000	1180	1500
SL18 2932	6.299	160	8.661	220	1.417	36	8.82	4	72,000	320	117,000	520	1700
SL18 3032	6.299	160	9.449	240	2.362	60	19.4	8.8	121,000	540	182,000	810	1600
SL18 2232	6.299	160	11.417	290	3.150	80	50.7	23	229,000	1020	330,000	1460	1400
SL18 2934	6.693	170	9.055	230	1.417	36	9.482	4.3	74,000	330	126,000	560	1600
SL18 3034	6.693	170	10.236	260	2.638	67	26.9	12.2	160,000	710	241,000	1070	1500
SL18 2234	6.693	170	12.205	310	3.386	86	63.2	28.65	255,000	1140	375,000	1660	1400
SL18 2936	7.087	180	9.843	250	1.654	42	13.7	6.2	92,000	410	155,000	690	1500
SL18 3036	7.087	180	11.024	280	2.913	74	35.5	16.1	184,000	820	285,000	1260	1400
SL18 2236	7.087	180	12.598	320	3.386	86	65.7	29.8	265,000	1180	395,000	1760	1300
SL18 2938	7.480	190	10.236	260	1.654	42	14.3	6.5	102,000	455	178,000	790	1400
SL18 3038	7.480	190	11.417	290	2.953	75	37.5	17	189,000	840	295,000	1320	1400
SL18 2238	7.480	190	13.386	340	3.622	92	78.6	35.65	290,000	1300	425,000	1900	1200
SL18 1840	7.874	200	9.843	250	0.945	24	5.667	2.57	40,000	178	72,000	320	1400
SL18 2940	7.874	200	11.024	280	1.890	48	20.1	9.1	124,000	550	211,000	940	1400
SL18 3040	7.874	200	12.205	310	3.228	82	48.1	21.8	216,000	960	345,000	1530	1300

Cylindrical Roller Bearings

SL18 18, SL18 22, SL18 29, SL18 30 & SL19 SERIES

- Metric series
- Single row
- Semi-locating
- SL18 – Double Flanged Inner Rings
- SL19 – Double Flanged Outer Rings

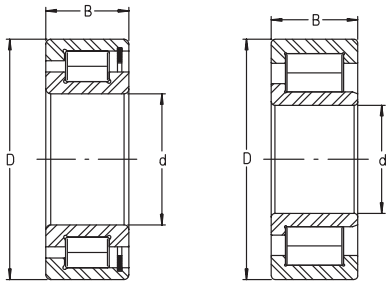

SL18 SL19

For details on part numbers, descriptive suffixes and various technical references, please refer to front of this section.
For engineering or technical information contact your local sales representative or call Distributor Sales (800)523-6572.

PART NUMBER	SHAFT d inch	SHAFT d mm	OUTER RING OD D inch	OUTER RING OD D mm	BEARING WIDTH B inch	BEARING WIDTH B mm	WEIGHT PER PIECE lbs	WEIGHT PER PIECE kg	DYN. CAP. C lbf	DYN. CAP C kN	STAT. CAP. C_0 lbf	STAT. CAP. C_0 kN	SPEED LIMIT OIL rpm
SL18 2240	7.874	200	14.173	360	3.858	98	95.1	43.12	320,000	1420	460,000	2040	1200
SL18 1844	8.661	220	10.63	270	0.945	24	6.174	2.8	42000	187	79000	350	1300
SL18 2944	8.661	220	11.811	300	1.890	48	21.8	9.9	128,000	570	234,000	1040	1200
SL18 3044	8.661	220	13.386	340	3.543	90	62.6	28.4	260,000	1150	405,000	1810	1200
SL18 1848	9.449	240	11.811	300	1.102	28	9.702	4.4	47500	212	91000	405	1200
SL18 2948	9.449	240	12.598	320	1.890	48	23.4	10.6	135,000	600	255,000	1130	1200
SL18 3048	9.449	240	14.173	360	3.622	92	68.1	30.9	270,000	1210	445,000	1990	1100
SL18 1852	10.236	260	12.598	320	1.102	28	10.4	4.71	50000	222	99000	440	1100
SL18 2952	10.236	260	14.173	360	2.362	60	40.8	18.5	178,000	790	330,000	1460	1000
SL18 3052	10.236	260	15.748	400	4.095	104	98.1	44.5	365,000	1620	570,000	2550	1000
SL18 1856	11.024	280	13.78	350	1.299	33	15.4	7	69000	305	135000	600	1000
SL18 2956	11.024	280	14.961	380	2.362	60	43.4	19.7	207,000	920	390,000	1740	1000
SL18 3056	11.024	280	16.535	420	4.173	106	105.8	48	375,000	1660	610,000	2700	950
SL18 1860	11.811	300	14.961	380	1.496	38	22.1	10	84000	375	164000	730	950
SL18 2960	11.811	300	16.535	420	2.835	72	68.8	31.2	265,000	1180	500,000	2230	900
SL18 3060	11.811	300	18.110	460	4.646	118	146.9	66.6	460,000	2040	750,000	3350	850
SL18 1864	12.598	320	15.748	400	1.496	38	23.4	10.6	87000	385	175000	780	900
SL18 2964	12.598	320	17.323	440	2.835	72	72.5	32.9	275,000	1220	530,000	2360	850
SL18 3064	12.598	320	18.898	480	4.764	121	158.1	71.7	470,000	2090	790,000	3500	800
SL18 1868	13.386	340	16.535	420	1.496	38	24.7	11.2	89000	395	184000	820	850
SL18 2968	13.386	340	18.110	460	2.835	72	76.5	34.7	285,000	1260	560,000	2500	800
SL18 3068	13.386	340	20.472	520	5.236	133	211.2	95.8	560,000	2490	930,000	4150	750
SL18 1872	14.173	360	17.323	440	1.496	38	25.8	11.7	92000	410	196000	870	800
SL18 2972	14.173	360	18.898	480	2.835	72	80.3	36.4	290,000	1290	600,000	2650	750
SL18 3072	14.173	360	21.260	540	5.276	134	222.7	101	570,000	2550	980,000	4350	700
SL18 1876	14.961	380	18.898	480	1.811	46	42.3	19.2	128000	570	260000	1150	750
SL18 2976	14.961	380	20.472	520	3.228	82	114.9	52.1	375,000	1670	740,000	3300	700
SL18 3076	14.961	380	22.047	560	5.315	135	233.7	106	600,000	2650	1,020,000	4550	700
SL18 1880	15.748	400	19.685	500	1.811	46	44.1	20	133000	590	275000	1220	700
SL18 2980	15.748	400	21.260	540	3.228	82	119.7	54.3	385,000	1720	790,000	3500	700
SL18 3080	15.748	400	23.622	600	5.827	148	308.7	140	700,000	3100	1,240,000	5500	650
SL18 1884	16.535	420	20.472	520	1.811	46	46.1	20.9	135000	600	285000	1260	700
SL18 2984	16.535	420	22.047	560	3.228	82	125.5	56.9	395,000	1750	810,000	3600	650
SL18 1888	17.323	440	21.26	540	1.811	46	48.1	21.8	137000	610	295000	1320	650
SL18 2988	17.323	440	23.622	600	3.740	95	172.2	78.1	480,000	2130	940,000	4200	600
SL18 1892	18.110	460	22.835	580	2.205	56	74.8	33.9	178000	790	375000	1660	600
SL18 2992	18.110	460	24.409	620	3.740	95	178.8	81.1	485,000	2160	980,000	4350	600
SL18 1896	18.898	480	23.622	600	2.205	56	77.6	35.2	180000	800	385000	1720	600
SL18 2996	18.898	480	25.591	650	3.937	100	208.8	94.7	550,000	2430	1,100,000	4900	550
SL18 18/500	19.685	500	24.409	620	2.205	56	80.5	36.5	184000	820	405000	1810	600
SL18 29/500	19.685	500	26.378	670	3.937	100	216.8	98.3	550,000	2460	1,150,000	5100	550

Cylindrical Roller Bearings

SL18 49, SL18 50 SERIES

- Double row
- Full complement for maximum capacity
- Semi-locating bearing

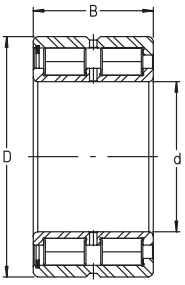

For details on part numbers, descriptive suffixes and various technical references, please refer to front of this section.
For engineering or technical information contact your local sales representative or call Distributor Sales (800)523-6572.

PART NUMBER	SHAFT d inch	SHAFT d mm	OD D inch	OD D mm	WIDTH B inch	WIDTH B mm	WEIGHT lbs	WEIGHT kg	DYN. CAP. C lbf	DYN. CAP C kN	STAT. CAP. C_0 lbf	STAT. CAP. C_0 kN	SPEED LIMIT OIL rpm
SL18 5004	0.787	20	1.654	42	1.181	30	0.441	0.2	10,700	47.5	11,900	53	10000
SL18 5005	0.984	25	1.850	47	1.181	30	0.507	0.23	12,100	54	14,600	65	9000
SL18 5006	1.181	30	2.165	55	1.339	34	0.772	0.35	15,700	70	19,300	86	7500
SL18 5007	1.378	35	2.441	62	1.417	36	1.014	0.46	19,100	85	24,500	109	6500
SL18 5008	1.575	40	2.677	68	1.496	38	1.235	0.56	22,700	101	30,500	136	6000
SL18 5009	1.772	45	2.953	75	1.575	40	1.566	0.71	24,300	108	34,000	151	5500
SL18 5010	1.969	50	3.150	80	1.575	40	1.676	0.76	29,500	131	41,500	184	5000
SL18 5011	2.165	55	3.543	90	1.811	46	2.558	1.16	40,000	179	61,000	270	4500
SL18 4912	2.362	60	3.347	85	0.984	25	1.058	0.48	15,100	67	26,000	115	4500
SL18 5012	2.362	60	3.740	95	1.811	46	2.734	1.24	41,500	184	63,000	280	4200
SL18 5013	2.559	65	3.937	100	1.811	46	2.911	1.32	43,500	194	70,000	310	3900
SL18 4914	2.756	70	3.937	100	1.181	30	1.72	0.78	23,200	103	40,000	178	3800
SL18 5014	2.756	70	4.331	110	2.126	54	4.079	1.85	51,000	229	76,000	340	3600
SL18 5015	2.953	75	4.528	115	2.126	54	4.256	1.93	54,000	242	84,000	375	3400
SL18 4916	3.150	80	4.331	110	1.181	30	1.94	0.88	24,500	109	44,500	199	3400
SL18 5016	3.150	80	4.921	125	2.362	60	5.711	2.59	66,000	295	101,000	450	3200
SL18 5017	3.347	85	5.118	130	2.362	60	5.998	2.72	69,000	305	106,000	470	3000
SL18 4918	3.543	90	4.921	125	1.378	35	2.977	1.35	33,500	149	63,000	280	3000
SL18 5018	3.543	90	5.512	140	2.638	67	7.982	3.62	80,000	355	126,000	560	2800
SL18 4920	3.937	100	5.512	140	1.575	40	4.3	1.95	43,000	191	83,000	370	2700
SL18 5020	3.937	100	5.906	150	2.638	67	8.688	3.94	84,000	375	137,000	610	2600
SL18 4922	4.331	110	5.906	150	1.575	40	4.741	2.15	44,500	198	90,000	400	2500
SL18 5022	4.331	110	6.693	170	3.150	80	13.9	6.32	110,000	490	178,000	790	2300
SL18 4924	4.724	120	6.496	165	1.772	45	6.505	2.95	50,000	222	99,000	440	2300
SL18 5024	4.724	120	7.087	180	3.150	80	14.9	6.77	117,000	520	196,000	870	2200
SL18 4926	5.118	130	7.087	180	1.969	50	8.71	3.95	58,000	260	115,000	510	2100
SL18 5026	5.118	130	7.874	200	3.740	95	22.5	10.2	166,000	740	275,000	1220	2000
SL18 4928	5.512	140	7.480	190	1.969	50	9.261	4.2	61,000	270	124,000	550	2000
SL18 5028	5.512	140	8.268	210	3.740	95	24.5	11.1	175,000	780	300,000	1340	1900
SL18 4930	5.906	150	8.268	210	2.362	60	14.7	6.65	92,000	410	184,000	820	1800
SL18 5030	5.906	150	8.858	225	3.937	100	29.3	13.3	182,000	810	315,000	1400	1700
SL18 4932	6.299	160	8.661	220	2.362	60	15.4	7	96,000	425	198,000	880	1700
SL18 4934	6.693	170	9.055	230	2.362	60	16.2	7.35	98,000	435	209,000	930	1600
SL18 4936	7.087	180	9.843	250	2.717	69	23.8	10.8	128,000	570	270,000	1200	1500
SL18 4938	7.480	190	10.236	260	2.717	69	24.7	11.2	130,000	580	285,000	1270	1400
SL18 4940	7.874	200	11.024	280	3.150	80	34.8	15.8	155,000	690	335,000	1480	1400
SL18 4944	8.661	220	11.811	300	3.150	80	37.9	17.2	162,000	720	355,000	1590	1200
SL18 4948	9.449	240	12.598	320	3.150	80	40.8	18.5	166,000	740	385,000	1710	1200
SL18 4952	10.236	260	14.173	360	3.937	100	70.6	32	250,000	1110	560,000	2490	1000
SL18 4956	11.024	280	14.961	380	3.937	100	75.0	34	260,000	1150	610,000	2700	1000
SL18 4960	11.811	300	16.535	420	4.646	118	116.9	53	370,000	1650	850,000	3800	900
SL18 4964	12.598	320	17.323	440	4.646	118	123.5	56	385,000	1720	920,000	4100	850
SL18 4968	13.386	340	18.110	460	4.646	118	130.1	59	400,000	1770	970,000	4300	800
SL18 4972	14.173	360	18.898	480	4.646	118	136.9	62.1	405,000	1810	1,010,000	4500	750
SL18 4976	14.961	380	20.472	520	5.512	140	203.7	92.4	510,000	2270	1,260,000	5600	700
SL18 4980	15.748	400	21.260	540	5.512	140	212.8	96.5	520,000	2330	1,330,000	5900	700

Cylindrical Roller Bearings

SL02 SERIES

- Double row
- Full complement for maximum capacity
- Non-locating bearing

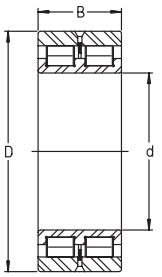

For details on part numbers, descriptive suffixes and various technical references, please refer to front of this section.
For engineering or technical information contact your local sales representative or call Distributor Sales (800)523-6572.

PART NUMBER	SHAFT d inch	SHAFT d mm	OD D inch	OD D mm	WIDTH B inch	WIDTH B mm	WEIGHT lbs	WEIGHT kg	DYN. CAP. C lbf	DYN. CAP C kN	STAT. CAP. C_0 lbf	STAT. CAP. C_0 kN	SPEED LIMIT OIL rpm
SL02 4912	2.362	60	3.347	85	0.984	25	1.036	0.47	15,100	67	26,000	115	4500
SL02 4914	2.756	70	3.937	100	1.181	30	1.654	0.75	23,200	103	40,000	178	3800
SL02 4916	3.150	80	4.331	110	1.181	30	1.874	0.85	24,500	109	44,500	199	3400
SL02 4918	3.543	90	4.921	125	1.378	35	2.867	1.3	33,500	149	63,000	280	3000
SL02 4920	3.937	100	5.512	140	1.575	40	4.19	1.9	43,000	191	83,000	370	2700
SL02 4922	4.331	110	5.906	150	1.575	40	4.631	2.1	44,500	198	90,000	400	2500
SL02 4924	4.724	120	6.496	165	1.772	45	6.284	2.85	50,000	222	99,000	440	2300
SL02 4926	5.118	130	7.087	180	1.969	50	8.379	3.8	58,000	260	115,000	510	2100
SL02 4928	5.512	140	7.480	190	1.969	50	9.041	4.1	61,000	270	124,000	550	2000
SL02 4830	5.906	150	7.480	190	1.575	40	6.174	2.8	52,000	231	119,000	530	1900
SL02 4930	5.906	150	8.268	210	2.362	60	14.2	6.45	92,000	410	184,000	820	1800
SL02 4832	6.299	160	7.874	200	1.575	40	6.615	3	53,000	237	126,000	560	1800
SL02 4932	6.299	160	8.661	220	2.362	60	15.0	6.8	96,000	425	198,000	880	1700
SL02 4834	6.693	170	8.465	215	1.772	45	8.71	3.95	58,000	260	135,000	600	1700
SL02 4934	6.693	170	9.055	230	2.362	60	15.7	7.1	98,000	435	209,000	930	1600
SL02 4836	7.087	180	8.858	225	1.772	45	9.151	4.15	61,000	270	144,000	640	1600
SL02 4936	7.087	180	9.843	250	2.717	69	23.2	10.5	128,000	570	270,000	1200	1500
SL02 4838	7.480	190	9.449	240	1.969	50	12.0	5.45	70,000	310	164,000	730	1500
SL02 4938	7.480	190	10.236	260	2.717	69	24.0	10.9	130,000	580	285,000	1270	1400
SL02 4840	7.874	200	9.843	250	1.969	50	12.6	5.7	72,000	320	173,000	770	1400
SL02 4940	7.874	200	11.024	280	3.150	80	33.7	15.3	155,000	690	335,000	1480	1400
SL02 4844	8.661	220	10.630	270	1.969	50	13.7	6.2	75,000	335	189,000	840	1300
SL02 4944	8.661	220	11.811	300	3.150	80	36.8	16.7	162,000	720	355,000	1590	1200
SL02 4848	9.449	240	11.811	300	2.362	60	21.8	9.9	112,000	500	275,000	1230	1200
SL02 4948	9.449	240	12.598	320	3.150	80	39.5	17.9	166,000	740	385,000	1710	1200
SL02 4852	10.236	260	12.598	320	2.362	60	23.4	10.6	119,000	530	300,000	1340	1100
SL02 4952	10.236	260	14.173	360	3.937	100	68.8	31.2	250,000	1110	560,000	2490	1000
SL02 4856	11.024	280	13.780	350	2.717	69	34.4	15.6	155,000	690	400,000	1790	1000
SL02 4956	11.024	280	14.961	380	3.937	100	73.0	33.1	260,000	1150	610,000	2700	1000
SL02 4860	11.811	300	14.961	380	3.150	80	48.5	22	184,000	820	470,000	2090	950
SL02 4960	11.811	300	16.535	420	4.646	118	114.4	51.9	370,000	1650	850,000	3800	900
SL02 4864	12.598	320	15.748	400	3.150	80	51.8	23.5	191,000	850	500,000	2240	900
SL02 4964	12.598	320	17.323	440	4.646	118	121.1	54.9	385,000	1720	920,000	4100	850
SL02 4868	13.386	340	16.535	420	3.150	80	55.1	25	196,000	870	530,000	2350	850
SL02 4968	13.386	340	18.110	460	4.646	118	127.4	57.8	400,000	1770	970,000	4300	800
SL02 4872	14.173	360	17.323	440	3.150	80	57.3	26	202,000	900	560,000	2500	800
SL02 4972	14.173	360	18.898	480	4.646	118	134.1	60.8	405,000	1810	1,010,000	4500	750
SL02 4876	14.961	380	18.898	480	3.937	100	97.0	44	295,000	1310	780,000	3450	750
SL02 4976	14.961	380	20.472	520	5.512	140	199.6	90.5	510,000	2270	1,260,000	5600	700
SL02 4880	15.748	400	19.685	500	3.937	100	101.0	45.8	300,000	1330	810,000	3600	700
SL02 4980	15.748	400	21.260	540	5.512	140	208.6	94.6	520,000	2330	1,330,000	5900	700

Cylindrical Roller Bearings

SL01 SERIES

- Double row
- Full complement for maximum capacity
- Locating bearing

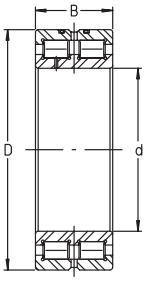

For details on part numbers, descriptive suffixes and various technical references, please refer to front of this section.
For engineering or technical information contact your local sales representative or call Distributor Sales (800)523-6572.

PART NUMBER	SHAFT d inch	SHAFT d mm	OD D inch	OD D mm	WIDTH B inch	WIDTH B mm	WEIGHT lbs	WEIGHT kg	DYN. CAP. C lbf	DYN. CAP C kN	STAT. CAP. C_0 lbf	STAT. CAP. C_0 kN	SPEED LIMIT OIL rpm
SL01 4912	2.362	60	3.347	85	0.984	25	1.08	0.49	15,100	67	26,000	115	4500
SL01 4914	2.756	70	3.937	100	1.181	30	1.72	0.78	23,200	103	40,000	178	3800
SL01 4916	3.150	80	4.331	110	1.181	30	1.94	0.88	24,500	109	44,500	199	3400
SL01 4918	3.543	90	4.921	125	1.378	35	2.977	1.35	33,500	149	63,000	280	3000
SL01 4920	3.937	100	5.512	140	1.575	40	4.3	1.95	43,000	191	83,000	370	2700
SL01 4922	4.331	110	5.906	150	1.575	40	4.741	2.15	44,500	198	90,000	400	2500
SL01 4924	4.724	120	6.496	165	1.772	45	6.505	2.95	50,000	222	99,000	440	2300
SL01 4926	5.118	130	7.087	180	1.969	50	8.71	3.95	58,000	260	115,000	510	2100
SL01 4928	5.512	140	7.480	190	1.969	50	9.261	4.2	61,000	270	124,000	550	2000
SL01 4830	5.906	150	7.480	190	1.575	40	6.395	2.9	52,000	231	119,000	530	1900
SL01 4930	5.906	150	8.268	210	2.362	60	14.7	6.65	92,000	410	184,000	820	1800
SL01 4832	6.299	160	7.874	200	1.575	40	6.836	3.1	53,000	237	126,000	560	1800
SL01 4932	6.299	160	8.661	220	2.362	60	15.4	7	96,000	425	198,000	880	1700
SL01 4834	6.693	170	8.465	215	1.772	45	9.041	4.1	58,000	260	135,000	600	1700
SL01 4934	6.693	170	9.055	230	2.362	60	16.2	7.35	98,000	435	209,000	930	1600
SL01 4836	7.087	180	8.858	225	1.772	45	9.482	4.3	61,000	270	144,000	640	1600
SL01 4936	7.087	180	9.843	250	2.717	69	23.8	10.8	128,000	570	270,000	1200	1500
SL01 4838	7.480	190	9.449	240	1.969	50	12.458	5.65	70,000	310	164,000	730	1500
SL01 4938	7.480	190	10.236	260	2.717	69	24.7	11.2	130,000	580	285,000	1270	1400
SL01 4840	7.874	200	9.843	250	1.969	50	13.01	5.9	72,000	320	173,000	770	1400
SL01 4940	7.874	200	11.024	280	3.150	80	34.8	15.8	155,000	690	335,000	1480	1400
SL01 4844	8.661	220	10.630	270	1.969	50	14.112	6.4	75,000	335	189,000	840	1300
SL01 4944	8.661	220	11.811	300	3.150	80	37.9	17.2	162,000	720	355,000	1590	1200
SL01 4848	9.449	240	11.811	300	2.362	60	22.05	10	112,000	500	275,000	1230	1200
SL01 4948	9.449	240	12.598	320	3.150	80	40.8	18.5	166,000	740	385,000	1710	1200
SL01 4852	10.236	260	12.598	320	2.362	60	24.255	11	119,000	530	300,000	1340	1100
SL01 4952	10.236	260	14.173	360	3.937	100	70.6	32	250,000	1110	560,000	2490	1000
SL01 4856	11.024	280	13.780	350	2.717	69	35.28	16	155,000	690	400,000	1790	1000
SL01 4956	11.024	280	14.961	380	3.937	100	75.0	34	260,000	1150	610,000	2700	1000
SL01 4860	11.811	300	14.961	380	3.150	80	50.715	23	184,000	820	470,000	2090	950
SL01 4960	11.811	300	16.535	420	4.646	118	116.9	53	370,000	1650	850,000	3800	900
SL01 4864	12.598	320	15.748	400	3.150	80	52.92	24	191,000	850	500,000	2240	900
SL01 4964	12.598	320	17.323	440	4.646	118	123.5	56	385,000	1720	920,000	4100	850
SL01 4868	13.386	340	16.535	420	3.150	80	56.228	25.5	196,000	870	530,000	2350	850
SL01 4968	13.386	340	18.110	460	4.646	118	130.1	59	400,000	1770	970,000	4300	800
SL01 4872	14.173	360	17.323	440	3.150	80	59.535	27	202,000	900	560,000	2500	800
SL01 4972	14.173	360	18.898	480	4.646	118	136.9	62.1	405,000	1810	1,010,000	4500	750
SL01 4876	14.961	380	18.898	480	3.937	100	100.328	45.5	295,000	1310	780,000	3450	750
SL01 4976	14.961	380	20.472	520	5.512	140	203.7	92.4	510,000	2270	1,260,000	5600	700
SL01 4880	15.748	400	19.685	500	3.937	100	102.533	46.5	300,000	1330	810,000	3600	700
SL01 4980	15.748	400	21.260	540	5.512	140	212.8	96.5	520,000	2330	1,330,000	5900	700

Cylindrical Roller Bearings

SL11 SERIES

- Triple row
- Locating bearing
- ISO diameter series 9

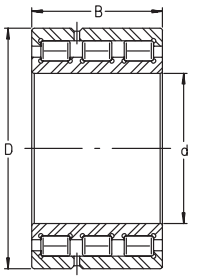

For details on part numbers, descriptive suffixes and various technical references, please refer to front of this section.
For engineering or technical information contact your local sales representative or call Distributor Sales (800)523-6572.

PART NUMBER	SHAFT d inch	SHAFT d mm	OUTER RING OD D inch	OUTER RING OD D mm	BEARING WIDTH B inch	BEARING WIDTH B mm	WEIGHT PER PIECE lbs	WEIGHT PER PIECE kg	DYN. CAP. C lbf	DYN. CAP C kN	STAT. CAP. C_0 lbf	STAT. CAP. C_0 kN	SPEED LIMIT OIL rpm
SL11 914	2.756	70	3.937	100	1.732	44	2.536	1.15	32,000	142	60,000	265	3800
SL11 916	3.150	80	4.331	110	1.732	44	2.844	1.29	33,500	150	67,000	300	3400
SL11 918	3.543	90	4.921	125	2.047	52	4.41	2	46,000	205	96,000	425	3000
SL11 920	3.937	100	5.512	140	2.323	59	6.395	2.9	58,000	260	124,000	550	2700
SL11 922	4.331	110	5.906	150	2.323	59	6.946	3.15	61,000	270	135,000	600	2500
SL11 924	4.724	120	6.496	165	2.598	66	9.482	4.3	69,000	305	148,000	660	2300
SL11 926	5.118	130	7.087	180	2.874	73	12.7	5.75	80,000	355	173,000	770	2100
SL11 928	5.512	140	7.480	190	2.874	73	13.5	6.1	83,000	370	187,000	830	2000
SL11 930	5.906	150	8.268	210	3.465	88	21.4	9.7	126,000	560	275,000	1230	1800
SL11 932	6.299	160	8.661	220	3.465	88	22.5	10.2	130,000	580	300,000	1330	1700
SL11 934	6.693	170	9.055	230	3.465	88	23.8	10.8	135,000	600	315,000	1390	1600
SL11 936	7.087	180	9.843	250	3.976	101	34.6	15.7	175,000	780	405,000	1810	1500
SL11 938	7.480	190	10.236	260	3.976	101	36.2	16.4	180,000	800	425,000	1900	1400
SL11 940	7.874	200	11.024	280	4.567	116	50.3	22.8	211,000	940	500,000	2220	1400

Cylindrical Roller Bearings

SL14 SERIES

- Triple row
- Non-locating bearing
- ISO diameter series 9

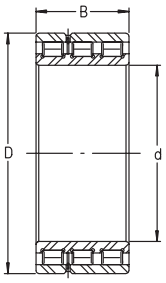

For details on part numbers, descriptive suffixes and various technical references, please refer to front of this section.
For engineering or technical information contact your local sales representative or call Distributor Sales (800)523-6572.

PART NUMBER	SHAFT d inch	SHAFT d mm	OUTER RING OD D inch	OUTER RING OD D mm	BEARING WIDTH B inch	BEARING WIDTH B mm	WEIGHT PER PIECE lbs	WEIGHT PER PIECE kg	DYN. CAP. C lbf	DYN. CAP C kN	STAT. CAP. C_0 lbf	STAT. CAP. C_0 kN	SPEED LIMIT OIL rpm
SL14 914	2.756	70	3.937	100	1.732	44	2.426	1.1	32,000	142	60,000	265	3800
SL14 916	3.150	80	4.331	110	1.732	44	2.756	1.25	33,500	150	67,000	300	3400
SL14 918	3.543	90	4.921	125	2.047	52	4.3	1.95	46,000	205	96,000	425	3000
SL14 920	3.937	100	5.512	140	2.323	59	6.284	2.85	58,000	260	124,000	550	2700
SL14 922	4.331	110	5.906	150	2.323	59	6.836	3.1	61,000	270	135,000	600	2500
SL14 924	4.724	120	6.496	165	2.598	66	9.261	4.2	69,000	305	148,000	660	2300
SL14 926	5.118	130	7.087	180	2.874	73	12.3	5.6	80,000	355	173,000	770	2100
SL14 928	5.512	140	7.480	190	2.874	73	13.2	6	83,000	370	187,000	830	2000
SL14 930	5.906	150	8.268	210	3.465	88	20.9	9.5	126,000	560	275,000	1230	1800
SL14 932	6.299	160	8.661	220	3.465	88	22.1	10	130,000	580	300,000	1330	1700
SL14 934	6.693	170	9.055	230	3.465	88	23.2	10.5	135,000	600	315,000	1390	1600
SL14 936	7.087	180	9.843	250	3.976	101	34.2	15.5	175,000	780	405,000	1810	1500
SL14 938	7.480	190	10.236	260	3.976	101	35.7	16.2	180,000	800	425,000	1900	1400
SL14 940	7.874	200	11.024	280	4.567	116	49.4	22.4	211,000	940	500,000	2220	1400

Cylindrical Roller Bearings

SL12 SERIES

- Quadruple row
- Locating bearing
- ISO diameter series 9

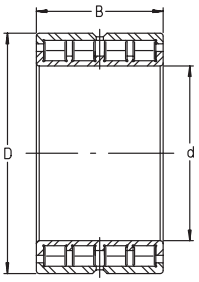

For details on part numbers, descriptive suffixes and various technical references, please refer to front of this section.
For engineering or technical information contact your local sales representative or call Distributor Sales (800)523-6572.

PART NUMBER	SHAFT d inch	SHAFT d mm	OUTER RING OD D inch	OUTER RING OD D mm	BEARING WIDTH B inch	BEARING WIDTH B mm	WEIGHT PER PIECE lbs	WEIGHT PER PIECE kg	DYN. CAP. C lbf	DYN. CAP C kN	STAT. CAP. C_0 lbf	STAT. CAP. C_0 kN	SPEED LIMIT OIL rpm
SL12 914	2.756	70	3.937	100	2.244	57	3.285	1.49	40,000	177	80,000	355	3800
SL12 916	3.150	80	4.331	110	2.244	57	3.638	1.65	42,500	188	89,000	395	3400
SL12 918	3.543	90	4.921	125	2.677	68	5.843	2.65	57,000	255	126,000	560	3000
SL12 920	3.937	100	5.512	140	3.071	78	8.489	3.85	73,000	325	166,000	740	2700
SL12 922	4.331	110	5.906	150	3.071	78	9.261	4.2	76,000	340	180,000	800	2500
SL12 924	4.724	120	6.496	165	3.425	87	12.5	5.65	85,000	380	198,000	880	2300
SL12 926	5.118	130	7.087	180	3.780	96	16.6	7.55	100,000	445	232,000	1030	2100
SL12 928	5.512	140	7.480	190	3.780	96	17.8	8.05	103,000	460	247,000	1100	2000
SL12 930	5.906	150	8.268	210	4.567	116	28.2	12.8	157,000	700	370,000	1640	1800
SL12 932	6.299	160	8.661	220	4.567	116	29.8	13.5	164,000	730	400,000	1770	1700
SL12 934	6.693	170	9.055	230	4.567	116	31.3	14.2	169,000	750	420,000	1860	1600
SL12 936	7.087	180	9.843	250	5.236	133	45.6	20.7	218,000	970	540,000	2410	1500
SL12 938	7.480	190	10.236	260	5.236	133	47.6	21.6	225,000	1000	570,000	2550	1400
SL12 940	7.874	200	11.024	280	5.984	152	65.9	29.9	265,000	1180	660,000	2950	1400

Cylindrical Roller Bearings

SL15 SERIES

- Quadruple row
- Non-locating bearing
- ISO diameter series 9

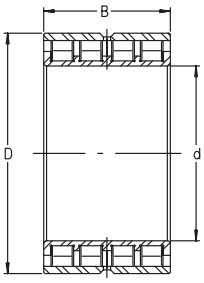

For details on part numbers, descriptive suffixes and various technical references, please refer to front of this section.
For engineering or technical information contact your local sales representative or call Distributor Sales (800)523-6572.

PART NUMBER	SHAFT d inch	SHAFT d mm	OUTER RING OD D inch	OUTER RING OD D mm	BEARING WIDTH B inch	BEARING WIDTH B mm	WEIGHT PER PIECE lbs	WEIGHT PER PIECE kg	DYN. CAP. C lbf	DYN. CAP C kN	STAT. CAP. C_0 lbf	STAT. CAP. C_0 kN	SPEED LIMIT OIL rpm
SL15 914	2.756	70	3.937	100	2.244	57	3.197	1.45	40,000	177	80,000	355	3800
SL15 916	3.150	80	4.331	110	2.244	57	3.528	1.6	42,500	188	89,000	395	3400
SL15 918	3.543	90	4.921	125	2.677	68	5.733	2.6	57,000	255	126,000	560	3000
SL15 920	3.937	100	5.512	140	3.071	78	8.379	3.8	73,000	325	166,000	740	2700
SL15 922	4.331	110	5.906	150	3.071	78	9.151	4.15	76,000	340	180,000	800	2500
SL15 924	4.724	120	6.496	165	3.425	87	12.2	5.55	85,000	380	198,000	880	2300
SL15 926	5.118	130	7.087	180	3.780	96	16.3	7.4	100,000	445	232,000	1030	2100
SL15 928	5.512	140	7.480	190	3.780	96	17.4	7.9	103,000	460	247,000	1100	2000
SL15 930	5.906	150	8.268	210	4.567	116	27.8	12.6	157,000	700	370,000	1640	1800
SL15 932	6.299	160	8.661	220	4.567	116	29.8	13.5	164,000	730	400,000	1770	1700
SL15 934	6.693	170	9.055	230	4.567	116	30.7	13.9	169,000	750	420,000	1860	1600
SL15 936	7.087	180	9.843	250	5.236	133	45.0	20.4	218,000	970	540,000	2410	1500
SL15 938	7.480	190	10.236	260	5.236	133	47.2	21.4	225,000	1000	570,000	2550	1400
SL15 940	7.874	200	11.024	280	5.984	152	64.8	29.4	265,000	1180	660,000	2950	1400

Cylindrical Roller Bearings

SL04 SERIES

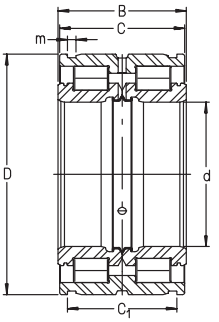

- Double row sheave bearings
- Single and double sealed versions are available with suffix P or PP
- Locating bearing
- External snap ring grooves
- Inner ring and outer ring oil holes

For details on part numbers, descriptive suffixes and various technical references, please refer to front of this section.
For engineering or technical information contact your local sales representative or call Distributor Sales (800)523-6572.

PART NUMBER	SHAFT d inch	SHAFT d mm	OD D inch	OD D mm	WIDTH INNER RING B inch	WIDTH INNER RING B mm	WIDTH OUTER RING C inch	WIDTH OUTER RING C mm	WEIGHT PER PIECE lbs	WEIGHT PER PIECE kg
SL04 5004	0.787	20	1.654	42	1.181	30	1.142	29	0.441	0.2
SL04 5005	0.984	25	1.850	47	1.181	30	1.142	29	0.529	0.24
SL04 5006	1.181	30	2.165	55	1.339	34	1.299	33	0.816	0.37
SL04 5007	1.378	35	2.441	62	1.417	36	1.378	35	1.058	0.48
SL04 5008	1.575	40	2.677	68	1.496	38	1.457	37	1.235	0.56
SL04 5009	1.772	45	2.953	75	1.575	40	1.535	39	1.544	0.7
SL04 5010	1.969	50	3.150	80	1.575	40	1.535	39	1.676	0.76
SL04 5011	2.165	55	3.543	90	1.811	46	1.772	45	2.602	1.18
SL04 5012	2.362	60	3.740	95	1.811	46	1.772	45	2.778	1.26
SL04 5013	2.559	65	3.937	100	1.811	46	1.772	45	2.933	1.33
SL04 5014	2.756	70	4.331	110	2.126	54	2.087	53	4.123	1.87
SL04 5015	2.953	75	4.528	115	2.126	54	2.087	53	4.322	1.96
SL04 5016	3.150	80	4.921	125	2.362	60	2.323	59	5.976	2.71
SL04 5017	3.347	85	5.118	130	2.362	60	2.323	59	6.24	2.83
SL04 5018	3.543	90	5.512	140	2.638	67	2.598	66	8.181	3.71
SL04 5019	3.740	95	5.709	145	2.638	67	2.598	66	8.555	3.88
SL04 5020	3.937	100	5.906	150	2.638	67	2.598	66	8.71	3.95
SL04 5022	4.331	110	6.693	170	3.150	80	3.110	79	14.49	6.57
SL04 5024	4.724	120	7.087	180	3.150	80	3.110	79	15.52	7.04
SL04 130	5.118	130	7.48	190	3.15	80	3.11	79	16.5	7.5
SL04 5026	5.118	130	7.874	200	3.740	95	3.701	94	23.15	10.5
SL04 140	5.512	140	7.874	200	3.15	80	3.11	79	17.6	8
SL04 5028	5.512	140	8.268	210	3.740	95	3.701	94	24.48	11.1
SL04 150	5.906	150	8.268	210	3.15	80	3.11	79	18.5	8.4
SL04 5030	5.906	150	8.858	225	3.937	100	3.898	99	29.33	13.3
SL04 160	6.299	160	8.661	220	3.15	80	3.11	79	19.4	8.8
SL04 5032	6.299	160	9.449	240	4.291	109	4.252	108	36.60	16.6
SL04 170	6.693	170	9.055	230	3.15	80	3.11	79	20.5	9.3
SL04 5034	6.693	170	10.236	260	4.803	122	4.764	121	49.83	22.6
SL04 180	7.087	180	9.449	240	3.15	80	3.11	79	21.6	9.8
SL04 5036	7.087	180	11.024	280	5.354	136	5.315	135	66.37	30.1
SL04 190	7.48	190	10.236	260	3.15	80	3.11	79	28.0	12.7
SL04 5038	7.480	190	11.417	290	5.354	136	5.315	135	69.46	31.5
SL04 200	7.874	200	10.63	270	3.15	80	3.11	79	29.1	13.2
SL04 5040	7.874	200	12.205	310	5.906	150	5.866	149	89.96	40.8
SL04 220	8.661	220	11.811	300	3.74	95	3.701	94	43.0	19.5
SL04 5044	8.661	220	13.386	340	6.299	160	6.260	159	115.76	52.5
SL04 240	9.449	240	12.598	320	3.74	95	3.701	94	46.3	21
SL04 5048	9.449	240	14.173	360	6.299	160	6.260	159	123.48	56
SL04 260	10.236	260	13.386	340	3.74	95	3.701	94	49.6	22.5
SL04 5052	10.236	260	15.748	400	7.480	190	7.441	189	186.32	84.5
SL04 280	11.024	280	14.173	360	3.74	95	3.701	94	52.9	24
SL04 5056	11.024	280	16.535	420	7.480	190	7.441	189	198.45	90
SL04 300	11.811	300	14.961	380	3.74	95	3.701	94	56.2	25.5
SL04 5060	11.811	300	18.110	460	8.583	218	8.504	216	277.83	126

Cylindrical Roller Bearings

SL04 SERIES

- Double row sheave bearings
- Single and double sealed versions are available with suffix P or PP
- Locating bearing
- External snap ring grooves
- Inner ring and outer ring oil holes

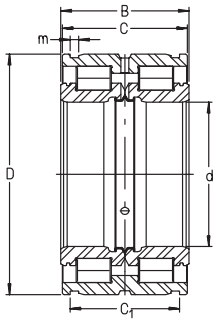

For details on part numbers, descriptive suffixes and various technical references, please refer to front of this section.
For engineering or technical information contact your local sales representative or call Distributor Sales (800)523-6572.

DYN. CAP. C lbf	DYN. CAP. C kN	STAT. CAP. C_0 lbf	STAT. CAP. C_0 kN	GROOVE C_1 inch	GROOVE C_1 mm	GROOVE WIDTH m inch	GROOVE WIDTH m mm	SNAP RING	SPEED LIMIT OIL rpm	PART NUMBER
9,300	41.5	11,200	50	0.972	24.7	0.071	1.8	WRE42	10000	SL04 5004
10,200	45.5	13,300	59	0.972	24.7	0.071	1.8	WRE47	9000	SL04 5005
11,700	52	15,500	69	1.110	28.2	0.083	2.1	WRE55	7500	SL04 5006
14,600	65	20,200	90	1.189	30.2	0.083	2.1	WRE62	6500	SL04 5007
18,400	82	25,500	113	1.268	32.2	0.106	2.7	WRE68	6000	SL04 5008
22,000	98	31,500	141	1.347	34.2	0.106	2.7	WRE75	5500	SL04 5009
23,200	103	34,500	154	1.347	34.2	0.106	2.7	WRE80	5000	SL04 5010
26,500	118	40,500	180	1.583	40.2	0.126	3.2	WRE90	4500	SL04 5011
27,500	123	44,000	195	1.583	40.2	0.126	3.2	WRE95	4200	SL04 5012
29,000	128	47,000	209	1.583	40.2	0.126	3.2	WRE100	3900	SL04 5013
38,500	172	61,000	270	1.898	48.2	0.165	4.2	WRE110	3600	SL04 5014
44,500	198	69,000	305	1.898	48.2	0.165	4.2	WRE115	3400	SL04 5015
46,500	206	75,000	335	2.134	54.2	0.165	4.2	WRE125	3200	SL04 5016
48,500	215	81,000	360	2.134	54.2	0.165	4.2	WRE130	3000	SL04 5017
70,000	310	117,000	520	2.331	59.2	0.165	4.2	WRE140	2800	SL04 5018
71,000	315	121,000	540	2.331	59.2	0.165	4.2	WRE145	2700	SL04 5019
74,000	330	124,000	550	2.331	59.2	0.165	4.2	WRE150	2600	SL04 5020
89,000	395	153,000	680	2.764	70.2	0.165	4.2	WRE170	2300	SL04 5022
92,000	410	166,000	740	2.803	71.2	0.165	4.2	WRE180	2200	SL04 5024
96,000	425	178,000	790	2.803	71.2	0.165	4.2	WRE190	2000	SL04 130
124,000	550	220,000	980	3.276	83.2	0.165	4.2	WRE200	2000	SL04 5026
100,000	445	189,000	840	2.803	71.2	0.165	4.2	WRE200	1900	SL04 140
142,000	630	250,000	1120	3.276	83.2	0.205	5.2	WRE210	1900	SL04 5028
105,000	465	207,000	920	2.803	71.2	0.205	5.2	WRE210	1800	SL04 150
160,000	710	285,000	1270	3.433	87.2	0.205	5.2	WRE225	1700	SL04 5030
108,000	480	218,000	970	2.803	71.2	0.205	5.2	WRE220	1700	SL04 160
166,000	740	310,000	1370	3.748	95.2	0.205	5.2	WRE240	1600	SL04 5032
110,000	490	232,000	1030	2.803	71.2	0.205	5.2	WRE230	1600	SL04 170
216,000	960	395,000	1760	4.221	107.2	0.205	5.2	WRE260	1500	SL04 5034
112,000	500	243,000	1080	2.803	71.2	0.205	5.2	WRE240	1500	SL04 180
255,000	1140	480,000	2140	4.654	118.2	0.205	5.2	WRE280	1400	SL04 5036
117,000	520	260,000	1160	2.882	73.2	0.205	5.2	WRE260	1400	SL04 190
265,000	1170	500,000	2230	4.654	118.2	0.205	5.2	WRE290	1400	SL04 5038
121,000	540	270,000	1210	2.882	73.2	0.205	5.2	WRE270	1400	SL04 200
310,000	1370	600,000	2650	5.047	128.2	0.248	6.3	WRE310	1300	SL04 5040
162,000	720	355,000	1590	3.276	83.2	0.205	5.2	WRE300	1200	SL04 220
355,000	1580	700,000	3100	5.441	138.2	0.248	6.3	WRE340	1200	SL04 5044
166,000	740	385,000	1710	3.276	83.2	0.248	6.3	WRE320	1200	SL04 240
370,000	1650	750,000	3350	5.441	138.2	0.248	6.3	WRE360	1100	SL04 5048
191,000	850	450,000	2010	3.276	83.2	0.248	6.3	WRE340	1100	SL04 260
540,000	2380	1,060,000	4700	6.386	162.2	0.248	6.3	WRE400	1000	SL04 5052
196,000	870	480,000	2130	3.276	83.2	0.248	6.3	WRE360	1000	SL04 280
580,000	2600	1,170,000	5200	6.425	163.2	0.287	7.3	WRE420	950	SL04 5056
202,000	900	510,000	2260	3.276	83.2	0.248	6.3	WRE380	950	SL04 300
670,000	3000	1,330,000	5900	7.291	185.2	0.287	7.3	WRE460	850	SL04 5060

Cylindrical Roller Bearings

SL05 SERIES

- Double row
- Locating bearing
- Spherical OD for static self aligning
- Used with GG51 or FG split housings

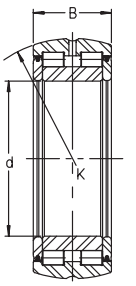

For details on part numbers, descriptive suffixes and various technical references, please refer to front of this section.
For engineering or technical information contact your local sales representative or call Distributor Sales (800)523-6572.

PART NUMBER	SHAFT d inch	SHAFT d mm	OUTER RING OD K inch	OUTER RING OD K mm	BEARING WIDTH B inch	BEARING WIDTH B mm	WEIGHT PER PIECE lbs	WEIGHT PER PIECE kg	DYN. CAP. C lbf	DYN. CAP C kN	STAT. CAP. C_0 lbf	STAT. CAP. C_0 kN	MATING HOUSING	SPEED LIMIT OIL rpm
SL05 016 E	3.150	80	4.724	120	1.772	45	3.749	1.7	38,500	172	67,000	300	GG 51 120	1300
SL05 018 E	3.543	90	5.512	140	1.969	50	6.174	2.8	49,000	219	83,000	370	GG 51 140	1200
SL05 020 E	3.937	100	5.906	150	2.165	55	7.277	3.3	63,000	280	110,000	490	GG 51 150	1100
SL05 022 E	4.331	110	6.693	170	2.362	60	10.8	4.9	76,000	340	139,000	620	GG 51 170	950
SL05 024 E	4.724	120	7.087	180	2.362	60	11.5	5.2	79,000	350	148,000	660	GG 51 180	850
SL05 026 E	5.118	130	7.874	200	2.559	65	16.3	7.4	98,000	435	182,000	810	GG 51 200	800
SL05 028 E	5.512	140	8.268	210	2.756	70	18.1	8.2	111,000	495	209,000	930	GG 51 210	750
SL05 030 E	5.906	150	8.858	225	2.953	75	22.1	10	121,000	540	229,000	1020	GG 51 225	700
SL05 032 E	6.299	160	9.449	240	3.543	90	30.2	13.7	148,000	660	285,000	1260	GG 51 240	650
SL05 034 E	6.693	170	10.236	260	3.740	95	38.4	17.4	171,000	760	320,000	1420	GG 51 260	600
SL05 036 E	7.087	180	11.024	280	3.937	100	48.7	22.1	178,000	790	340,000	1520	GG 51 280	550
SL05 038 E	7.480	190	11.417	290	4.331	110	55.3	25.1	214,000	950	415,000	1850	GG 51 290	550
SL05 040 E	7.874	200	12.205	310	4.528	115	67.3	30.5	241,000	1070	465,000	2060	GG 51 310	500
SL05 044 E	8.661	220	13.386	340	4.921	125	88.2	40	285,000	1260	550,000	2440	GG 51 340	460
SL05 048 E	9.449	240	14.173	360	5.118	130	97.0	44	295,000	1310	580,000	2600	GG 51 360	430

Cylindrical Roller Bearings

SL06 SERIES

- Double row
- Non-locating bearing
- Spherical OD for static self aligning
- Used with GG51 or FG split housings

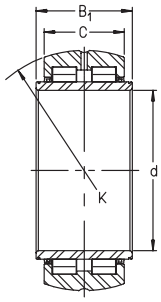

For details on part numbers, descriptive suffixes and various technical references, please refer to front of this section.
For engineering or technical information contact your local sales representative or call Distributor Sales (800)523-6572.

PART NUMBER	SHAFT d inch	SHAFT d mm	OD K inch	OD K mm	WIDTH B1 inch	WIDTH B1 mm	OUTER RING WIDTH C inch	OUTER RING WIDTH C mm	WEIGHT PER PIECE lbs	WEIGHT PER PIECE kg
SL06 016 E	3.150	80	4.724	120	2.165	55	1.772	45	3.969	1.8
SL06 018 E	3.543	90	5.512	140	2.362	60	1.969	50	6.505	2.95
SL06 020 E	3.937	100	5.906	150	2.559	65	2.165	55	7.607	3.45
SL06 022 E	4.331	110	6.693	170	2.953	75	2.362	60	11.5	5.2
SL06 024 E	4.724	120	7.087	180	2.953	75	2.362	60	12.1	5.5
SL06 026 E	5.118	130	7.874	200	3.150	80	2.559	65	17.2	7.8
SL06 028 E	5.512	140	8.268	210	3.347	85	2.756	70	18.9	8.55
SL06 030 E	5.906	150	8.858	225	3.543	90	2.953	75	23.2	10.5
SL06 032 E	6.299	160	9.449	240	4.331	110	3.543	90	31.5	14.3
SL06 034 E	6.693	170	10.236	260	4.528	115	3.740	95	39.9	18.1
SL06 036 E	7.087	180	11.024	280	4.724	120	3.937	100	50.7	23
SL06 038 E	7.480	190	11.417	290	5.315	135	4.331	110	58.4	26.5
SL06 040 E	7.874	200	12.205	310	5.512	140	4.528	115	70.6	32
SL06 044 E	8.661	220	13.386	340	5.906	150	4.921	125	92.6	42
SL06 048 E	9.449	240	14.173	360	6.102	155	5.118	130	101.4	46

CONTINUED FROM ABOVE

PART NUMBER	DYN. CAP. C lbf	DYN. CAP C kN	STAT. CAP. C_0 lbf	STAT. CAP. C_0 kN	AXIAL PLAY s inch	AXIAL PLAY s mm	MATING HOUSING	SPEED LIMIT OIL rpm
SL06 016 E	38,500	172	67,000	300	0.098	2.5	GG51120	1300
SL06 018 E	49,000	219	83,000	370	0.098	2.5	GG51140	1200
SL06 020 E	63,000	280	110,000	490	0.098	2.5	GG51150	1100
SL06 022 E	76,000	340	139,000	620	0.197	5	GG51170	950
SL06 024 E	79,000	350	148,000	660	0.197	5	GG51180	850
SL06 026 E	98,000	435	182,000	810	0.197	5	GG51200	800
SL06 028 E	111,000	495	209,000	930	0.197	5	GG51210	750
SL06 030 E	121,000	540	229,000	1020	0.197	5	GG51225	700
SL06 032 E	148,000	660	285,000	1260	0.295	7.5	GG51240	650
SL06 034 E	171,000	760	320,000	1420	0.295	7.5	GG51260	600
SL06 036 E	178,000	790	340,000	1520	0.295	7.5	GG51280	550
SL06 038 E	214,000	950	415,000	1850	0.394	10	GG51290	550
SL06 040 E	241,000	1070	465,000	2060	0.394	10	GG51310	500
SL06 044 E	285,000	1260	550,000	2440	0.394	10	GG51340	460
SL06 048 E	295,000	1310	580,000	2600	0.394	10	GG51360	430

Cylindrical Roller Bearings

LSL SERIES

- Semi-locating single row
- With brass disk separator
- Reduced friction
- Increased speed limit

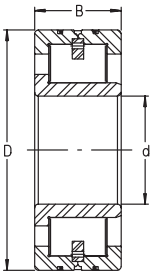

For details on part numbers, descriptive suffixes and various technical references, please refer to front of this section.
For engineering or technical information contact your local sales representative or call Distributor Sales (800)523-6572.

PART NUMBER	SHAFT d inch	SHAFT d mm	OD D inch	OD D mm	WIDTH B inch	WIDTH B mm	WEIGHT lbs	WEIGHT kg	DYN. CAP. C lbf	DYN. CAP C kN	STAT. CAP. C_0 lbf	STAT. CAP. C_0 kN	SPEED LIMIT OIL rpm
LSL19 2320	3.937	100	8.465	215	2.874	73	28.2	12.8	151,000	670	180,000	800	6500
LSL19 2322	4.331	110	9.449	240	3.150	80	38.1	17.3	178,000	790	211,000	940	5600
LSL19 2324	4.724	120	10.236	260	3.386	86	48.5	22	214,000	950	260,000	1150	5300
LSL19 2326	5.118	130	11.024	280	3.661	93	60.0	27.2	241,000	1070	290,000	1300	4900
LSL19 2328	5.512	140	11.811	300	4.016	102	75.0	34	270,000	1200	330,000	1470	4600
LSL19 2330	5.906	150	12.598	320	4.252	108	89.7	40.7	320,000	1420	400,000	1780	4200
LSL19 2332	6.299	160	13.386	340	4.488	114	106.0	48.05	360,000	1600	455,000	2020	3900
LSL19 2334	6.693	170	14.173	360	4.724	120	126.8	57.5	390,000	1740	500,000	2230	3800
LSL19 2336	7.087	180	14.961	380	4.961	126	148.6	67.4	415,000	1850	550,000	2440	3500
LSL19 2338	7.480	190	15.748	400	5.197	132	172.2	78.1	500,000	2230	660,000	2950	3400
LSL19 2340	7.874	200	16.535	420	5.433	138	196.9	89.3	530,000	2340	690,000	3050	3200
LSL19 2344	8.661	220	18.110	460	5.709	145	238.1	108	560,000	2500	720,000	3200	2900
LSL19 2348	9.449	240	19.685	500	6.102	155	305.6	138.6	620,000	2750	800,000	3550	2700
LSL19 2352	10.236	260	21.260	540	6.496	165	370.4	168	760,000	3400	990,000	4400	2400
LSL19 2356	11.024	280	22.835	580	6.890	175	455.6	206.6	830,000	3700	1,090,000	4850	2300
LSL19 2360	11.811	300	24.409	620	7.284	185	557.9	253	940,000	4200	1,260,000	5600	2200

Cylindrical Roller Bearings

ZSL SERIES

- Semi-locating single row
- With plastic roller separators
- Reduced friction
- Increased speed limit

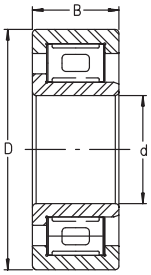

For details on part numbers, descriptive suffixes and various technical references, please refer to front of this section.
For engineering or technical information contact your local sales representative or call Distributor Sales (800)523-6572.

PART NUMBER	SHAFT d inch	SHAFT d mm	OD D inch	OD D mm	WIDTH B inch	WIDTH B mm	WEIGHT lbs	WEIGHT kg	DYN. CAP. C lbf	DYN. CAP C kN	STAT. CAP. C_0 lbf	STAT. CAP. C_0 kN	SPEED LIMIT OIL rpm
ZSL19 2305	0.984	25	2.441	62	0.945	24	0.794	0.36	13,700	61	12,400	55	16000
ZSL19 2306	1.181	30	2.835	72	1.063	27	1.213	0.55	18,900	84	18,200	81	14000
ZSL19 2307	1.378	35	3.150	80	1.221	31	1.588	0.72	23,800	106	23,400	104	12000
ZSL19 2308	1.575	40	3.543	90	1.299	33	2.205	1	32,000	143	32,500	144	11000
ZSL19 2309	1.772	45	3.937	100	1.417	36	2.955	1.34	34,500	153	36,000	160	10000
ZSL19 2310	1.969	50	4.331	110	1.575	40	3.881	1.76	44,000	196	45,500	202	9000
ZSL19 2311	2.165	55	4.724	120	1.693	43	4.895	2.22	51,000	228	53,000	236	80000
ZSL19 2312	2.362	60	5.118	130	1.811	46	6.218	2.82	55,000	244	58,000	260	7400
ZSL19 2313	2.559	65	5.512	140	1.890	48	7.585	3.44	67,000	300	74,000	330	6800
ZSL19 2314	2.756	70	5.906	150	2.008	51	9.415	4.27	73,000	325	81,000	360	6400
ZSL19 2315	2.953	75	6.299	160	2.165	55	11.466	5.2	88,000	390	99,000	440	6000
ZSL19 2316	3.150	80	6.693	170	2.284	58	13.671	6.2	101,000	450	115,000	510	5600
ZSL19 2317	3.347	85	7.087	180	2.362	60	15.942	7.23	109,000	485	128,000	570	5300
ZSL19 2318	3.543	90	7.480	190	2.520	64	19.184	8.7	119,000	530	137,000	610	5000
ZSL19 2319	3.740	95	7.874	200	2.638	67	22.050	10	126,000	560	151,000	670	4800
ZSL19 2320	3.937	100	8.465	215	2.874	73	28.004	12.7	151,000	670	180,000	800	4400
ZSL19 2322	4.331	110	9.449	240	3.150	80	36.383	16.5	180,000	800	205,000	910	4000
ZSL19 2324	4.724	120	10.236	260	3.386	86	48.290	21.9	214,000	950	260,000	1150	3700

Pillow Block Housings

GG SERIES

- Split design
- For aligning cylindrical roller bearings (Series SL05 & SL06)

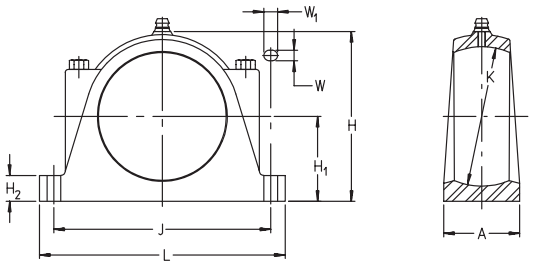

For details on part numbers, descriptive suffixes and various technical references, please refer to front of this section.
For engineering or technical information contact your local sales representative or call Distributor Sales (800)523-6572.

PART NUMBER	K mm	H inch	H mm	L inch	L mm	A inch	A mm	WGT. lbs	WGT. kg	H_1 inch	H_1 mm
GG 51 120	120	5.591	142	10.236	260	2.756	70	9.482	4.3	2.756	70
GG 51 140	140	6.89	175	11.417	290	3.15	80	16.097	7.3	3.543	90
GG 51 150	150	7.283	185	12.992	330	3.346	85	20.507	9.3	3.74	95
GG 51 170	170	8.189	208	13.78	350	3.543	90	24.917	11.3	4.134	105
GG 51 180	180	8.661	220	14.173	360	3.543	90	27.563	12.5	4.331	110
GG 51 200	200	9.646	245	16.535	420	4.528	115	45.203	20.5	4.921	125
GG 51 210	210	10.039	255	17.323	440	4.724	120	51.377	23.3	5.118	130
GG 51 225	225	10.827	275	18.11	460	5.118	130	63.945	29	5.512	140
GG 51 240	240	11.614	295	18.701	475	5.512	140	76.293	34.6	5.906	150
GG 51 260	260	12.795	325	20.669	525	5.906	150	94.815	43	6.299	160
GG 51 280	280	13.78	350	21.26	540	6.299	160	110.25	50	6.89	175
GG 51 290	290	14.173	360	22.638	575	6.693	170	132.3	60	7.087	180
GG 51 310	310	14.961	380	23.819	605	7.087	180	152.145	69	7.48	190
GG 51 340	340	16.339	415	25.197	640	7.48	190	171.99	78	8.268	210
GG 51 360	360	17.52	445	26.378	670	8.268	210	207.27	94	9.055	230

Pillow Block Housings

GG SERIES

- Split design
- For aligning cylindrical roller bearings (Series SL05 & SL06)

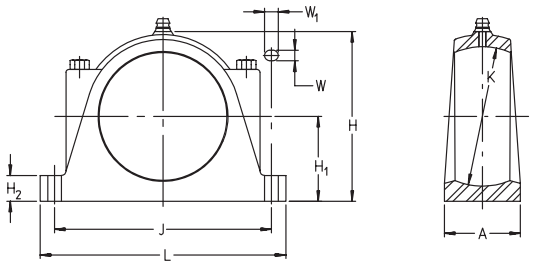

For details on part numbers, descriptive suffixes and various technical references, please refer to front of this section.
For engineering or technical information contact your local sales representative or call Distributor Sales (800)523-6572.

H_2 inch	H_2 mm	J inch	J mm	J_1* mm	W mm	W_1 mm	LOCATING PART NUMBER	NON-LOCATING PART NUMBER	PART NUMBER
0.984	25	8.661	220	–	18	21	SL05 016E	SL06 016E	GG 51 120
1.181	30	9.646	245	–	18	21	SL05 018E	SL06 018E	GG 51 140
1.575	40	11.024	280	–	22	26	SL05 020E	SL06 020E	GG 51 150
1.772	45	11.811	300	–	22	26	SL05 022E	SL06 022E	GG 51 170
1.772	45	12.205	310	–	22	26	SL05 024E	SL06 024E	GG 51 180
1.969	50	14.173	360	–	26	32	SL05 026E	SL06 026E	GG 51 200
1.969	50	14.764	375	–	26	32	SL05 028E	SL06 028E	GG 51 210
2.362	60	15.354	390	–	26	32	SL05 030E	SL06 030E	GG 51 225
2.362	60	15.945	405	–	26	32	SL05 032E	SL06 032E	GG 51 240
2.362	60	17.52	445	–	35	40	SL05 034E	SL06 034E	GG 51 260
2.559	65	18.11	460	–	35	40	SL05 036E	SL06 036E	GG 51 280
2.559	65	19.488	495	–	35	40	SL05 038E	SL06 038E	GG 51 290
2.756	70	20.472	520	–	35	40	SL05 040E	SL06 040E	GG 51 310
2.756	70	21.654	550	115	35	45	SL05 044E	SL06 044E	GG 51 340
2.953	75	22.638	575	130	35	45	SL05 048E	SL06 048E	GG 51 360

* Spacing for 4 hole mounting

NOTES

Section Contents
ROLLER CLUTCHES

BEARING SERIES	BEARING DESCRIPTION	PAGE
INFORMATION	ROLLER CLUTCH, GENERAL OVERVIEW	346
P / N IDENTIFICATION	ROLLER CLUTCHES	347
HF	METRIC DRAWN SHELL ROLLER CLUTCH WITH STAINLESS STEEL SPRINGS	348
HF..KF	METRIC DRAWN SHELL ROLLER CLUTCH WITH PLASTIC SPRINGS	348
HFZ	INCH DRAWN SHELL ROLLER CLUTCH WITH STAINLESS STEEL SPRINGS	348
HFZ..KF	INCH DRAWN SHELL ROLLER CLUTCH WITH PLASTIC SPRINGS	348
HFL	METRIC DRAWN SHELL ROLLER CLUTCH AND BEARING WITH STEEL SPRINGS	349
HFL..KF	METRIC DRAWN SHELL ROLLER CLUTCH AND BEARING WITH PLASTIC SPRINGS	349
HFLZ	INCH DRAWN SHELL ROLLER CLUTCH AND BEARING WITH STEEL SPRINGS	349
HF..R	METRIC DRAWN SHELL ROLLER CLUTCH WITH KNURLS FOR PLASTIC HOUSING	350
HFL..R	METRIC DRAWN SHELL ROLLER CLUTCH AND BEARING WITH KNURLS FOR PLASTIC	351

General Information
ROLLER CLUTCHES

PRODUCT DESCRIPTION

INA Drawn Shell Roller Clutches

- Designed with a deep drawn shell for minimal radial cross section
- Allows backstopping, indexing and free wheeling of shafts relative to housings
- Available in inch and metric shaft sizes
- Available with stainless steel or integral plastic springs
- Available with partial knurls on the OD for holding in plastic housings
- Available with integral bearings to accept radial loads

Part Number Identification
ROLLER CLUTCHES

DRAWN CUP ROLLER CLUTCHES AND BEARING ASSEMBLIES

HF, HFL, HFZ, HFLZ

HF **0306** **KF**

HF	Drawn Cup Roller Clutch Metric
HFL	Drawn Cup Roller Clutch & Bearing Assembly, Metric
HFZ	Drawn Cup Roller Clutch Inch
HFLZ	Drawn Cup Roller Clutch & Bearing Assembly, Inch

4 Digits	Shaft & Width In mm
6 Digits	Shaft, OD & Width In 16ths Of An Inch

NONE	Stainless Steel Springs
KF	Plastic Springs
R	Partially Knurled Outer Ring For Assembly In Plastic Housing

Drawn Cup Roller Clutches

HF, HF..KF, HFZ, HFZ..KF SERIES

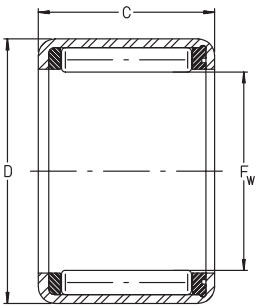

- Inch and metric
- Small radial cross sections – match shell bearings
- Transmit torque in one direction
- Overrun in opposite direction
- Accepts no radial loads
- Plastic cage with stainless steel springs
- Plastic cage and springs – suffix KF

For details on part numbers, descriptive suffixes and various technical references, please refer to front of this section.
For engineering or technical information contact your local sales representative or call Distributor Sales (800)523-6572.

PART NUMBER	SHAFT F_w inch	SHAFT F_w mm	OD D inch	OD D mm	WIDTH C inch	WIDTH C mm	WEIGHT lbs	WEIGHT g	TORQUE LIMIT in-lbf	TORQUE LIMIT Nm	SPEED LIMIT OUTER rpm	SPEED LIMIT SHAFT rpm
HF 0306 KF	0.118	3	0.256	6.5	0.236	6	0.002	1	1.6	0.18	8000	45000
HF 0406 KF	0.157	4	0.315	8	0.236	6	0.002	1	3.1	0.34	8000	34000
HF 0612	0.236	6	0.394	10	0.472	12	0.007	3	15.8	1.76	13000	23000
HF 0612 KF	0.236	6	0.394	10	0.472	12	0.007	3	15.8	1.76	13000	23000
HFZ 040708	0.25	6.35	0.438	11.112	0.5	12.7	0.009	4	18.6	2.1	12000	21000
HFZ 040708 KF	0.25	6.35	0.438	11.112	0.5	12.7	0.009	4	18.6	2.1	12000	21000
HF 0812	0.315	8	0.472	12	0.472	12	0.008	3.5	28.3	3.15	12000	17000
HF 0812 KF	0.315	8	0.472	12	0.472	12	0.008	3.5	28.3	3.15	12000	17000
HFZ 061008	0.375	9.525	0.625	15.875	0.5	12.7	0.021	9.7	50.4	5.7	12000	14000
HF 1012	0.394	10	0.551	14	0.472	12	0.009	4	47.6	5.3	11000	14000
HF 1012 KF	0.394	10	0.551	14	0.472	12	0.009	4	47.6	5.3	11000	14000
HF 1216	0.472	12	0.709	18	0.63	16	0.024	11	110	12.2	8000	11000
HFZ 081208	0.5	12.7	0.75	19.05	0.5	12.7	0.021	9.7	85.9	9.7	9000	11000
HF 1416	0.551	14	0.787	20	0.63	16	0.029	13	155	17.3	8000	9500
HFZ 101410	0.625	15.875	0.875	22.225	0.625	15.875	0.033	15	175.2	19.8	5000	8500
HF 1616	0.63	16	0.866	22	0.63	16	0.031	14	184	20.5	7500	8500
HF 1816	0.709	18	0.945	24	0.63	16	0.035	16	217	24.1	7500	7500
HF 2016	0.787	20	1.024	26	0.63	16	0.037	17	256	28.5	6500	7000
HF 2520	0.984	25	1.26	32	0.787	20	0.066	30	593	66	5500	5500
HFZ 162110	1	25.4	1.313	33.35	0.625	15.875	0.066	30	442.5	50	3000	5000
HF 3020	1.181	30	1.457	37	0.787	20	0.079	36	809	90	4500	4500
HF 3520	1.378	35	1.654	42	0.787	20	0.088	40	1087	121	3900	3900

Drawn Cup Roller Clutch And Bearing Assemblies

HFL, HFL..KF, HFLZ SERIES

- With bearing supports
- Inch and metric
- Accepts radial loads
- Plastic cage with stainless steel springs
- Plastic cage and springs – suffix KF

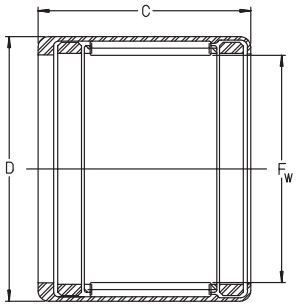

HFL, HFL..KF PLAIN BEARINGS

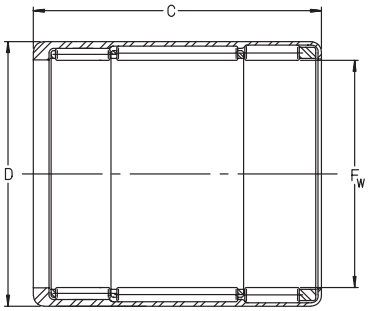

HFLZ, HFL, HFL..KF ROLLER BEARINGS

For details on part numbers, descriptive suffixes and various technical references, please refer to front of this section.
For engineering or technical information contact your local sales representative or call Distributor Sales (800)523-6572.

PLAIN BEARING SUPPORT																
PART NUMBER	SHAFT F_w inch	SHAFT F_w mm	OD D inch	OD D mm	WIDTH C inch	WIDTH C mm	WEIGHT lbs	WEIGHT g	TORQUE LIMIT in-lbf	TORQUE LIMIT Nm	LOAD LIMIT lbf	LOAD LIMIT N	LOAD SPEED LIMIT lbf/min	LOAD SPEED LIMIT N/min	SPEED LIMIT OUTER rpm	SPEED LIMIT SHAFT rpm
HFL 0308 KF	0.118	3	0.256	6.5	0.315	8	0.003	1.4	1.59	0.18	13	60	3600	16000	8000	45000
HFL 0408 KF	0.157	4	0.315	8	0.315	8	0.004	1.6	3.01	0.34	18	80	3600	16000	8000	34000
HFL 0615 KF	0.236	6	0.394	10	0.591	15	0.009	4	15.58	1.76	25	110	4050	18000	13000	23000
HFL 0615	0.236	6	0.394	10	0.591	15	0.009	4	15.58	1.76	25	110	4050	18000	13000	23000

ROLLING ELEMENT BEARING SUPPORT																
PART NUMBER	SHAFT F_w inch	SHAFT F_w mm	OD D inch	OD D mm	WIDTH C inch	WIDTH C mm	WEIGHT lbs	WEIGHT g	TORQUE LIMIT in-lbf	TORQUE LIMIT Nm	DYN. CAP. lbf	DYN. CAP. N	STAT. CAP. lbf	STAT. CAP. N	SPEED LIMIT OUTER rpm	SPEED LIMIT SHAFT rpm
HFL 0822 KF	0.315	8	0.472	12	0.866	22	0.015	7	27.9	3.15	910	4050	930	4150	12000	17000
HFL 0822	0.315	8	0.472	12	0.866	22	0.015	7	27.9	3.15	910	4050	930	4150	12000	17000
HFLZ 061014	0.375	9.525	0.625	15.875	0.875	22.225	0.031	14	50.4	5.7	1350	6000	1240	5500	12000	14000
HFL 1022 KF	0.394	10	0.551	14	0.866	22	0.018	8	46.9	5.3	970	4300	1050	4650	11000	14000
HFL 1022	0.394	10	0.551	14	0.866	22	0.018	8	46.9	5.3	970	4300	1050	4650	11000	14000
HFL 1226	0.472	12	0.709	18	1.024	26	0.04	18	108	12.2	1420	6300	1460	6500	8000	11000
HFLZ 081214	0.5	12.7	0.75	19.05	0.875	22.225	0.038	17	85.9	9.7	1480	6600	1550	6900	9000	11000
HFL 1426	0.551	14	0.787	20	1.024	26	0.044	20	153	17.3	1600	7100	1730	7700	8000	9500
HFLZ 101416	0.625	15.875	0.875	22.225	1	25.4	0.051	23	175.2	19.8	1720	7700	1890	8400	5000	8500
HFL 1626	0.63	16	0.866	22	1.024	26	0.049	22	181	20.5	1730	7700	2020	9000	7500	8500
HFL 1826	0.709	18	0.945	24	1.024	26	0.055	25	213	24.1	1870	8300	2320	10300	7500	7500
HFL 2026	0.787	20	1.024	26	1.024	26	0.06	27	252	28.5	2000	8900	2590	11500	6500	7000
HFL 2530	0.984	25	1.26	32	1.181	30	0.097	44	584	66	2450	10900	3170	14100	5500	5500
HFL 3030	1.181	30	1.457	37	1.181	30	0.112	51	797	90	2830	12600	3960	17600	4500	4500
HFL 3530	1.378	35	1.654	42	1.181	30	0.128	58	1071	121	2920	13000	4340	19300	3900	3900

Drawn Cup Roller Clutches

HF..R, HF..KF, HF..KFR SERIES

- Knurled OD for use with plastic housings – suffix R
- Metric
- Accepts no radial loads
- Plastic cage with stainless steel springs
- Plastic cage and springs – suffix KF

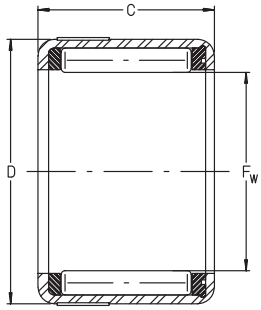

HF..R, HF..KFR

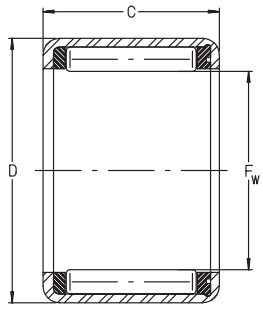

HF..KF

For details on part numbers, descriptive suffixes and various technical references, please refer to front of this section.
For engineering or technical information contact your local sales representative or call Distributor Sales (800)523-6572.

PART NUMBER	SHAFT F_w inch	SHAFT F_w mm	OD D inch	OD D mm	WIDTH C inch	WIDTH C mm	WEIGHT lbs	WEIGHT g	TORQUE LIMIT in-lbf	TORQUE LIMIT Nm	SPEED LIMIT OUTER rpm	SPEED LIMIT SHAFT rpm
HF 0306 KFR	0.118	3	0.256	6.5	0.236	6	0.002	1	0.53	0.06	8000	45000
HF 0406 KFR	0.157	4	0.315	8	0.236	6	0.002	1	0.89	0.1	8000	34000
HF 0606 KF	0.236	6	0.394	10	0.236	6	0.002	1	4.43	0.5	13000	23000
HF 0612 KFR	0.236	6	0.394	10	0.472	12	0.007	3	4.43	0.5	13000	23000
HF 0612 R	0.236	6	0.394	10	0.472	12	0.007	3	4.43	0.5	13000	23000
HF 0812 KFR	0.315	8	0.472	12	0.472	12	0.008	3.5	8.9	1	12000	17000
HF 0812 R	0.315	8	0.472	12	0.472	12	0.008	3.5	8.9	1	12000	17000
HF 1012 KFR	0.394	10	0.551	14	0.472	12	0.009	4	13.3	1.5	11000	14000
HF 1012 R	0.394	10	0.551	14	0.472	12	0.009	4	13.3	1.5	11000	14000

Drawn Cup Roller Clutch And Bearing Assemblies

HFL..R, HFL..KFR SERIES

- With bearing support
- Knurled OD for use with plastic housings – suffix R
- Metric
- Plastic cage with stainless steel springs
- Plastic cage and springs – suffix KF

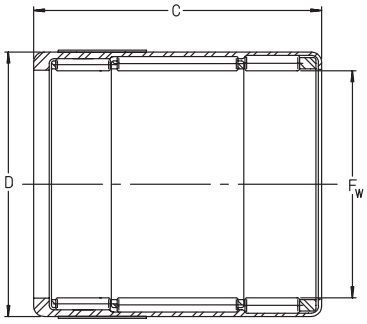

NARROW SERIES HAS ONE BEARING SUPPORT

For details on part numbers, descriptive suffixes and various technical references, please refer to front of this section.
For engineering or technical information contact your local sales representative or call Distributor Sales (800)523-6572.

PART NUMBER	SHAFT F_w inch	SHAFT F_w mm	OD D inch	OD D mm	WIDTH C inch	WIDTH C mm	WEIGHT lbs	WEIGHT g	TORQUE LIMIT in-lbf	TORQUE LIMIT Nm	LOAD LIMIT lbf	LOAD LIMIT N	LOAD SPEED LIMIT lbf/min	LOAD SPEED LIMIT N/min	SPEED LIMIT OUTER rpm	SPEED LIMIT SHAFT rpm
HFL 0308 KFR	0.118	3	0.256	6.5	0.315	8	0.003	1.4	0.53	0.06	13.5	60	3600	16000	8000	45000
HFL 0408 KFR	0.157	4	0.315	8	0.315	8	0.004	1.6	0.89	0.1	18	80	3600	16000	8000	34000
HFL 0606 KFR	0.236	6	0.394	10	0.236	6	0.004	1.6	4.43	0.5	9	40	940	4200	13000	23000
HFL 0615 KFR	0.236	6	0.394	10	0.591	15	0.009	4	4.43	0.5	24.7	110	4050	18000	13000	23000
HFL 0615 R	0.236	6	0.394	10	0.591	15	0.009	4	4.43	0.5	24.7	110	4050	18000	13000	23000
HFL 0806 KFR	0.315	8	0.472	12	0.236	6	0.005	2	6.2	0.7	12.1	54	940	4200	12000	17000
HFL 0822 KFR	0.315	8	0.472	12	0.866	22	0.015	7	8.85	1	157	700	7190	32000	12000	17000
HFL 0822 R	0.315	8	0.472	12	0.866	22	0.015	7	8.85	1	157	700	7190	32000	12000	17000
HFL 1022 KFR	0.394	10	0.551	14	0.866	22	0.018	8	13.28	1.5	180	800	7640	34000	11000	14000
HFL 1022 R	0.394	10	0.551	14	0.866	22	0.018	8	13.28	1.5	180	800	7640	34000	11000	14000

NOTES

Section Contents
SEALS, SNAP RINGS & ROLLERS

BEARING SERIES	BEARING DESCRIPTION	PAGE
INFORMATION	SEALS, SNAP RINGS & ROLLERS, GENERAL OVERVIEW	354
P / N IDENTIFICATION	SEALS, SNAP RINGS & ROLLERS	355
G	METRIC SINGLE LIP RUBBER SEALS	356
GR	METRIC SINGLE LIP RUBBER SEALS WITH STEEL OD	356
SD	METRIC DOUBLE LIP POLYURETHANE SEALS	358
WR	METRIC SHAFT RETAINING RINGS	360
WRE	METRIC HEAVY SERIES SHAFT RETAINING RINGS	363
BR	METRIC HOUSING RETAINING RINGS	364
NRA	ROUND END NEEDLE ROLLERS	367
NRB	FLAT END NEEDLE ROLLERS	367

General Information
SEALS, SNAP RINGS & ROLLERS

PRODUCT DESCRIPTION

INA Seals, Snap Rings and Rollers

- Complementary metric components for use with INA bearing products
- Seals available as single lip rubber or double lip plastic grease seals
- Double lip version available with garter spring
- Rollers available in inch or metric nominal sizes
- Roller diameter sorted to tolerance groups of 2 micrometers (0.00008 inch) for tolerance range of 10 micrometers (0.0004 inch)

Part Number Identification
SEALS, SNAP RINGS & ROLLERS

NEEDLE BEARING SEALS
METRIC SERIES

G, GR, SD

G **25** x **35** x **4** **AF**

PREFIX

G	Metric, Single Lip
GR	Metric, Single Lip With Steel OD
SD	Metric, Double Lip, Plastic Seal

Shaft In Millimeters

OD In Millimeters

Width In Millimeters

SUFFIX

AF	Garter Spring On Lip SD Series
FPM	Fluoro Rubber For G Series

NEEDLE BEARING SEALS
METRIC SERIES

BR, WR, WRE

BR **125**

PREFIX

BR	Internal Snap Ring
WR	External Snap Ring, Light Series
WRE	External Snap Ring, Heavy Series

Nominal Shaft Or Housing Diameter In Millimeters

NEEDLE ROLLERS

NRA, NRB

NRA **1 x 5.8**

NRA	Rounded Ends
NRB	Flat Ends

Diameter X Length In mm

Metric Seals

G SERIES

- Single lip NBR seals
- GR series interchangeable except with steel OD

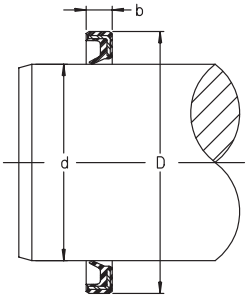

For details on part numbers, descriptive suffixes and various technical references, please refer to front of this section.
For engineering or technical information contact your local sales representative or call Distributor Sales (800)523-6572.

PART NUMBER	SHAFT DIA. d inch	SHAFT DIA. d mm	OD D inch	OD D mm	WIDTH b inch	WIDTH b mm	WEIGHT lbs	WEIGHT g
G 4x8x2	0.157	4	0.315	8	0.079	2	0.0004	0.18
G 5x9x2	0.197	5	0.354	9	0.079	2	0.0004	0.19
G 5x10x2	0.197	5	0.394	10	0.079	2	0.0005	0.22
G 6x10x2	0.236	6	0.394	10	0.079	2	0.0005	0.21
G 6x12x2	0.236	6	0.472	12	0.079	2	0.0008	0.38
G 7x11x2	0.276	7	0.433	11	0.079	2	0.0006	0.25
G 7x14x2	0.276	7	0.551	14	0.079	2	0.0011	0.52
G 8x12x3	0.315	8	0.472	12	0.118	3	0.0009	0.41
G 8x15x3	0.315	8	0.591	15	0.118	3	0.0014	0.65
G 9x13x3	0.354	9	0.512	13	0.118	3	0.0010	0.44
G 9x16x3	0.354	9	0.63	16	0.118	3	0.0015	0.69
G 10x14x3	0.394	10	0.551	14	0.118	3	0.0011	0.5
G 10x17x3	0.394	10	0.669	17	0.118	3	0.0020	0.9
G 12x16x3	0.472	12	0.63	16	0.118	3	0.0013	0.6
G 12x18x3	0.472	12	0.709	18	0.118	3	0.0020	0.9
G 12x19x3	0.472	12	0.748	19	0.118	3	0.0022	1
G 13x19x3	0.512	13	0.748	19	0.118	3	0.0020	0.9
G 14x20x3	0.551	14	0.787	20	0.118	3	0.0022	1
G 14x21x3	0.551	14	0.827	21	0.118	3	0.0024	1.1
G 14x22x3	0.551	14	0.866	22	0.118	3	0.0029	1.3
G 15x21x3	0.591	15	0.827	21	0.118	3	0.0022	1
G 15x23x3	0.591	15	0.906	23	0.118	3	0.0029	1.3
G 16x22x3	0.63	16	0.866	22	0.118	3	0.0029	1.3
G 16x24x3	0.63	16	0.945	24	0.118	3	0.0029	1.3
G 16x25x3	0.63	16	0.984	25	0.118	3	0.0035	1.6
G 17x23x3	0.669	17	0.906	23	0.118	3	0.0029	1.3
G 17x25x3	0.669	17	0.984	25	0.118	3	0.0033	1.5
G 18x24x3	0.709	18	0.945	24	0.118	3	0.0026	1.2
G 18x26x4	0.709	18	1.024	26	0.157	4	0.0040	1.8
G 19x27x4	0.748	19	1.063	27	0.157	4	0.0044	2
G 20x26x4	0.787	20	1.024	26	0.157	4	0.0040	1.8
G 20x28x4	0.787	20	1.102	28	0.157	4	0.0046	2.1
G 21x29x4	0.827	21	1.142	29	0.157	4	0.0049	2.2
G 22x28x4	0.866	22	1.102	28	0.157	4	0.0040	1.8
G 22x30x4	0.866	22	1.181	30	0.157	4	0.0049	2.2
G 24x32x4	0.945	24	1.26	32	0.157	4	0.0055	2.5
G 25x32x4	0.984	25	1.26	32	0.157	4	0.0051	2.3
G 25x33x4	0.984	25	1.299	33	0.157	4	0.0055	2.5
G 25x35x4	0.984	25	1.378	35	0.157	4	0.0057	2.6
G 26x34x4	1.024	26	1.339	34	0.157	4	0.0057	2.6
G 28x35x4	1.102	28	1.378	35	0.157	4	0.0053	2.4
G 28x37x4	1.102	28	1.457	37	0.157	4	0.0068	3.1
G 29x38x4	1.142	29	1.496	38	0.157	4	0.0071	3.2
G 30x37x4	1.181	30	1.457	37	0.157	4	0.0060	2.7
G 30x40x4	1.181	30	1.575	40	0.157	4	0.0079	3.6
G 32x42x4	1.26	32	1.654	42	0.157	4	0.0082	3.7

Metric Seals
G SERIES

- Single lip NBR seals
- GR series interchangeable except with steel OD

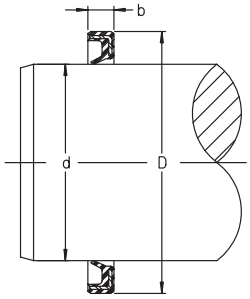

For details on part numbers, descriptive suffixes and various technical references, please refer to front of this section.
For engineering or technical information contact your local sales representative or call Distributor Sales (800)523-6572.

PART NUMBER	SHAFT DIA. d inch	SHAFT DIA. d mm	OD D inch	OD D mm	WIDTH b inch	WIDTH b mm	WEIGHT lbs	WEIGHT g
G 32x45x4	1.26	32	1.772	45	0.157	4	0.0112	5.1
G 35x42x4	1.378	35	1.654	42	0.157	4	0.0066	3
G 35x45x4	1.378	35	1.772	45	0.157	4	0.0090	4.1
G 37x47x4	1.457	37	1.85	47	0.157	4	0.0088	4
G 38x48x4	1.496	38	1.89	48	0.157	4	0.0097	4.4
G 40x47x4	1.575	40	1.85	47	0.157	4	0.0073	3.3
G 40x50x4	1.575	40	1.969	50	0.157	4	0.0101	4.6
G 40x52x5	1.575	40	2.047	52	0.197	5	0.0106	4.8
G 42x52x4	1.654	42	2.047	52	0.157	4	0.0104	4.7
G 43x53x4	1.693	43	2.087	53	0.157	4	0.0106	4.8
G 45x52x4	1.772	45	2.047	52	0.157	4	0.0084	3.8
G 45x55x4	1.772	45	2.165	55	0.157	4	0.0115	5.2
G 50x58x4	1.969	50	2.283	58	0.157	4	0.0099	4.5
G 50x62x5	1.969	50	2.441	62	0.197	5	0.0229	10.4
G 55x63x5	2.165	55	2.48	63	0.197	5	0.0157	7.1
G 70x78x5	2.756	70	3.071	78	0.197	5	0.0198	9

Metric Seals
SD SERIES

- Double lipped polyurethane seal

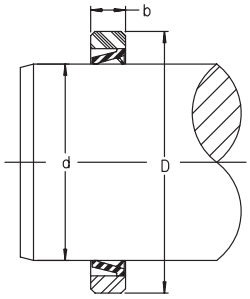

For details on part numbers, descriptive suffixes and various technical references, please refer to front of this section.
For engineering or technical information contact your local sales representative or call Distributor Sales (800)523-6572.

PART NUMBER	SHAFT d inch	SHAFT d mm	OD D inch	OD D mm	WIDTH b inch	WIDTH b mm	WEIGHT lbs	WEIGHT g
SD 8x15x3	0.315	8	0.591	15	0.118	3	0.001	0.4
SD 9x16x3	0.354	9	0.63	16	0.118	3	0.001	0.42
SD 10x17x3	0.394	10	0.669	17	0.118	3	0.001	0.44
SD 12x18x3	0.472	12	0.709	18	0.118	3	0.001	0.5
SD 12x19x3	0.472	12	0.748	19	0.118	3	0.001	0.6
SD 13x19x3	0.512	13	0.748	19	0.118	3	0.001	0.5
SD 14x20x3	0.551	14	0.787	20	0.118	3	0.001	0.5
SD 14x21x3	0.551	14	0.827	21	0.118	3	0.001	0.6
SD 14x22x3	0.551	14	0.866	22	0.118	3	0.002	0.7
SD 15x21x3	0.591	15	0.827	21	0.118	3	0.001	0.5
SD 15x23x3	0.591	15	0.906	23	0.118	3	0.002	0.7
SD 16x22x3	0.63	16	0.866	22	0.118	3	0.001	0.6
SD 16x24x3	0.63	16	0.945	24	0.118	3	0.002	0.8
SD 16x25x3	0.63	16	0.984	25	0.118	3	0.002	0.9
SD 17x23x3	0.669	17	0.906	23	0.118	3	0.001	0.6
SD 17x25x3	0.669	17	0.984	25	0.118	3	0.002	0.8
SD 18x24x3	0.709	18	0.945	24	0.118	3	0.001	0.6
SD 18x26x4	0.709	18	1.024	26	0.157	4	0.002	1.1
SD 19x27x4	0.748	19	1.063	27	0.157	4	0.002	1.1
SD 20x26x4	0.787	20	1.024	26	0.157	4	0.002	0.8
SD 20x28x4	0.787	20	1.102	28	0.157	4	0.002	1.1
SD 21x29x4	0.827	21	1.142	29	0.157	4	0.003	1.2
SD 22x28x4	0.866	22	1.102	28	0.157	4	0.002	0.9
SD 22x30x4	0.866	22	1.181	30	0.157	4	0.003	1.3
SD 24x32x4	0.945	24	1.26	32	0.157	4	0.003	1.4
SD 25x32x4	0.984	25	1.26	32	0.157	4	0.003	1.2
SD 25x33x4	0.984	25	1.299	33	0.157	4	0.003	1.3
SD 25x35x4	0.984	25	1.378	35	0.157	4	0.004	1.9
SD 26x34x4	1.024	26	1.339	34	0.157	4	0.003	1.4
SD 28x35x4	1.102	28	1.378	35	0.157	4	0.003	1.3
SD 28x37x4	1.102	28	1.457	37	0.157	4	0.004	1.9
SD 29x37x4	1.142	29	1.457	37	0.157	4	0.004	1.6
SD 29x38x4	1.142	29	1.496	38	0.157	4	0.004	1.9
SD 30x37x4	1.181	30	1.457	37	0.157	4	0.003	1.3
SD 30x40x4	1.181	30	1.575	40	0.157	4	0.005	2.1
SD 32x42x4	1.26	32	1.654	42	0.157	4	0.005	2.4
SD 32x45x4	1.26	32	1.772	45	0.157	4	0.008	3.6
SD 35x42x4	1.378	35	1.654	42	0.157	4	0.003	1.5
SD 35x45x4	1.378	35	1.772	45	0.157	4	0.006	2.5
SD 37x47x4	1.457	37	1.85	47	0.157	4	0.006	2.7
SD 38x48x4	1.496	38	1.89	48	0.157	4	0.006	2.8
SD 40x47x4	1.575	40	1.85	47	0.157	4	0.004	1.7
SD 40x50x4	1.575	40	1.969	50	0.157	4	0.006	2.9
SD 40x52x5	1.575	40	2.047	52	0.197	5	0.01	4.5
SD 42x52x4	1.654	42	2.047	52	0.157	4	0.007	3
SD 43x53x4	1.693	43	2.087	53	0.157	4	0.007	3.1

Metric Seals
SD SERIES

- Double lipped polyurethane seal

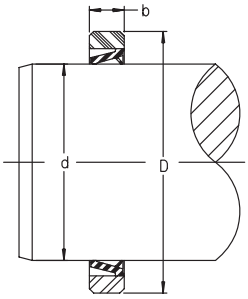

For details on part numbers, descriptive suffixes and various technical references, please refer to front of this section.
For engineering or technical information contact your local sales representative or call Distributor Sales (800)523-6572.

PART NUMBER	SHAFT d inch	SHAFT d mm	OD D inch	OD D mm	WIDTH b inch	WIDTH b mm	WEIGHT lbs	WEIGHT g
SD 45x52x4	1.772	45	2.047	52	0.157	4	0.004	1.9
SD 45x55x4	1.772	45	2.165	55	0.157	4	0.007	3.2
SD 50x58x4	1.969	50	2.283	58	0.157	4	0.005	2.4
SD 50x62x5	1.969	50	2.441	62	0.197	5	0.012	5.5

Shaft Snap Rings
WR SERIES

- Metric series

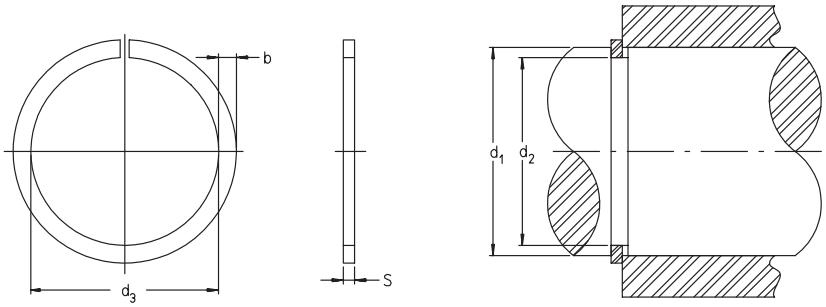

For details on part numbers, descriptive suffixes and various technical references, please refer to front of this section.
For engineering or technical information contact your local sales representative or call Distributor Sales (800)523-6572.

PART NUMBER	SHAFT DIA. d_1 inch	SHAFT DIA. d_1 mm	ID IN FREE STATE d_3 inch	ID IN FREE STATE d_3 mm	RADIAL SECTION b inch	RADIAL SECTION b mm	WIDTH s inch	WIDTH s mm	GROOVE DIA. d_2 inch	GROOVE DIA. d_2 mm	WEIGHT PER 1000 PIECES lbs	WEIGHT PER 1000 PIECES g	SPEED LIMIT rpm
WR 4	0.158	4	0.146	3.7	0.032	0.8	0.020	0.5	0.150	3.8	0.044	20	275000
WR 5	0.197	5	0.185	4.7	0.039	1	0.020	0.5	0.189	4.8	0.11	50	192000
WR 6	0.236	6	0.221	5.6	0.043	1.1	0.028	0.7	0.224	5.7	0.198	90	141000
WR 7	0.276	7	0.256	6.5	0.047	1.2	0.028	0.7	0.264	6.7	0.265	120	134000
WR 8	0.315	8	0.291	7.4	0.051	1.3	0.039	1	0.299	7.6	0.441	200	108000
WR 9	0.354	9	0.331	8.4	0.051	1.3	0.039	1	0.339	8.6	0.529	240	80000
WR 10	0.394	10	0.370	9.4	0.051	1.3	0.039	1	0.378	9.6	0.551	250	68000
WR 11	0.433	11	0.402	10.2	0.051	1.3	0.039	1	0.413	10.5	0.639	290	64000
WR 12	0.472	12	0.441	11.2	0.051	1.3	0.039	1	0.453	11.5	0.662	300	53000
WR 14	0.551	14	0.516	13.1	0.059	1.5	0.047	1.2	0.532	13.5	1.103	500	45000
WR 15	0.591	15	0.551	14	0.069	1.75	0.047	1.2	0.567	14.4	1.455	660	44000
WR 16	0.630	16	0.591	15	0.069	1.75	0.047	1.2	0.606	15.4	1.521	690	38000
WR 17	0.669	17	0.630	16	0.069	1.75	0.047	1.2	0.646	16.4	1.588	720	34000
WR 18	0.709	18	0.669	17	0.069	1.75	0.047	1.2	0.685	17.4	1.654	750	30000
WR 19	0.748	19	0.705	17.9	0.069	1.75	0.047	1.2	0.724	18.4	1.764	800	29000
WR 20	0.787	20	0.736	18.7	0.069	1.75	0.047	1.2	0.756	19.2	1.852	840	26000
WR 21	0.827	21	0.776	19.7	0.069	1.75	0.047	1.2	0.795	20.2	1.918	870	23000
WR 22	0.866	22	0.815	20.7	0.069	1.75	0.047	1.2	0.835	21.2	2.007	910	21000
WR 24	0.945	24	0.886	22.5	0.069	1.75	0.047	1.2	0.906	23	2.183	990	18000
WR 25	0.984	25	0.925	23.5	0.069	1.75	0.047	1.2	0.945	24	2.205	1000	16000
WR 26	1.024	26	0.965	24.5	0.069	1.75	0.047	1.2	0.984	25	2.426	1100	15000
WR 28	1.102	28	1.043	26.5	0.091	2.3	0.059	1.5	1.063	27	4.653	2110	15000
WR 29	1.142	29	1.083	27.5	0.091	2.3	0.059	1.5	1.102	28	4.851	2200	14000
WR 30	1.181	30	1.122	28.5	0.091	2.3	0.059	1.5	1.142	29	5.138	2330	13000
WR 32	1.260	32	1.189	30.2	0.091	2.3	0.059	1.5	1.213	30.8	5.314	2410	13000
WR 35	1.378	35	1.307	33.2	0.091	2.3	0.059	1.5	1.331	33.8	5.535	2510	11000
WR 37	1.457	37	1.386	35.2	0.091	2.3	0.059	1.5	1.409	35.8	5.998	2720	9200
WR 38	1.496	38	1.425	36.2	0.091	2.3	0.059	1.5	1.449	36.8	6.24	2830	8700
WR 40	1.575	40	1.488	37.8	0.091	2.3	0.059	1.5	1.516	38.5	6.417	2910	8100
WR 42	1.654	42	1.567	39.8	0.091	2.3	0.059	1.5	1.595	40.5	6.836	3100	7000
WR 43	1.693	43	1.606	40.8	0.091	2.3	0.059	1.5	1.634	41.5	7.166	3250	6800
WR 44	1.732	44	1.646	41.8	0.091	2.3	0.059	1.5	1.673	42.5	7.321	3320	6300
WR 45	1.772	45	1.685	42.8	0.091	2.3	0.059	1.5	1.713	43.5	7.475	3390	5800
WR 47	1.850	47	1.764	44.8	0.091	2.3	0.059	1.5	1.791	45.5	7.673	3480	5500
WR 50	1.969	50	1.882	47.8	0.091	2.3	0.059	1.5	1.909	48.5	8.225	3730	4800
WR 52	2.047	52	1.961	49.8	0.091	2.3	0.059	1.5	1.988	50.5	8.644	3920	4300
WR 55	2.165	55	2.071	52.6	0.091	2.3	0.059	1.5	2.106	53.5	9.063	4110	4400
WR 58	2.284	58	2.189	55.6	0.091	2.3	0.059	1.5	2.224	56.5	9.702	4400	3800
WR 60	2.362	60	2.268	57.6	0.091	2.3	0.059	1.5	2.303	58.5	10.03	4550	3500
WR 62	2.441	62	2.347	59.6	0.091	2.3	0.059	1.5	2.382	60.5	10.08	4570	3250
WR 63	2.480	63	2.386	60.6	0.091	2.3	0.059	1.5	2.421	61.5	10.10	4580	3100
WR 65	2.559	65	2.465	62.6	0.091	2.3	0.059	1.5	2.500	63.5	10.23	4640	2850
WR 68	2.677	68	2.575	65.4	0.110	2.8	0.079	2	2.606	66.2	18.94	8590	2950
WR 70	2.756	70	2.654	67.4	0.110	2.8	0.079	2	2.685	68.2	19.21	8710	2750
WR 72	2.835	72	2.732	69.4	0.110	2.8	0.079	2	2.764	70.2	19.40	8800	2550

Shaft Snap Rings
WR SERIES

- Metric series

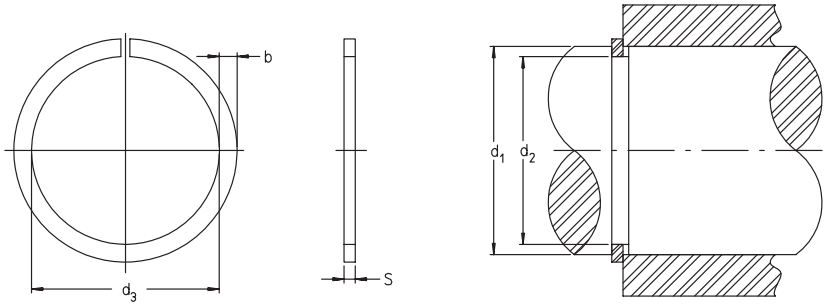

For details on part numbers, descriptive suffixes and various technical references, please refer to front of this section.
For engineering or technical information contact your local sales representative or call Distributor Sales (800)523-6572.

PART NUMBER	SHAFT DIA. d_1 inch	SHAFT DIA. d_1 mm	ID IN FREE STATE d_3 inch	ID IN FREE STATE d_3 mm	RADIAL SECTION b inch	RADIAL SECTION b mm	WIDTH s inch	WIDTH s mm	GROOVE DIA. d_2 inch	GROOVE DIA. d_2 mm	WEIGHT PER 1000 PIECES lbs	WEIGHT PER 1000 PIECES g	SPEED LIMIT rpm
WR 73	2.874	73	2.772	70.4	0.110	2.8	0.079	2	2.803	71.2	19.63	8900	2500
WR 75	2.953	75	2.850	72.4	0.110	2.8	0.079	2	2.882	73.2	20.55	9320	2300
WR 80	3.150	80	3.047	77.4	0.110	2.8	0.079	2	3.079	78.2	21.32	9670	1950
WR 85	3.347	85	3.228	82	0.134	3.4	0.098	2.5	3.268	83	35.28	16000	2300
WR 90	3.543	90	3.425	87	0.134	3.4	0.098	2.5	3.465	88	35.28	16000	2000
WR 95	3.740	95	3.622	92	0.134	3.4	0.098	2.5	3.661	93	40.13	18200	1750
WR 100	3.937	100	3.819	97	0.134	3.4	0.098	2.5	3.858	98	41.68	18900	1560
WR 105	4.134	105	4.004	101.7	0.134	3.4	0.098	2.5	4.043	102.7	45.64	20700	1390
WR 110	4.331	110	4.197	106.6	0.134	3.4	0.098	2.5	4.240	107.7	46.09	20900	1240
WR 115	4.528	115	4.394	111.6	0.134	3.4	0.098	2.5	4.437	112.7	48.73	22100	1100
WR 120	4.724	120	4.587	116.5	0.134	3.4	0.098	2.5	4.634	117.7	53.14	24100	1000
WR 125	4.921	125	4.780	121.4	0.134	3.4	0.098	2.5	4.831	122.7	55.35	25100	920
WR 130	5.118	130	4.972	126.3	0.134	3.4	0.098	2.5	5.028	127.7	58.65	26600	830
WR 135	5.315	135	5.158	131	0.158	4	0.098	2.5	5.213	132.4	66.59	30200	830
WR 140	5.512	140	5.350	135.9	0.158	4	0.098	2.5	5.409	137.4	68.58	31100	760
WR 145	5.709	145	5.547	140.9	0.158	4	0.098	2.5	5.606	142.4	71.88	32600	690
WR 150	5.906	150	5.740	145.8	0.158	4	0.098	2.5	5.803	147.4	72.32	32800	640
WR 155	6.102	155	5.937	150.8	0.158	4	0.098	2.5	6.000	152.4	76.51	34700	590
WR 160	6.299	160	6.130	155.7	0.158	4	0.098	2.5	6.197	157.4	80.70	36600	545
WR 165	6.496	165	6.327	160.7	0.158	4	0.098	2.5	6.394	162.4	82.47	37400	500
WR 170	6.693	170	6.520	165.6	0.158	4	0.098	2.5	6.591	167.4	84.89	38500	470
WR 175	6.890	175	6.717	170.6	0.158	4	0.098	2.5	6.787	172.4	86.88	39400	430
WR 180	7.087	180	6.898	175.2	0.197	5	0.118	3	6.969	177	135	61200	600
WR 185	7.284	185	7.091	180.1	0.197	5	0.118	3	7.165	182	141	63900	590
WR 190	7.480	190	7.287	185.1	0.197	5	0.118	3	7.362	187	145	65900	550
WR 195	7.677	195	7.484	190.1	0.197	5	0.118	3	7.559	192	149	67500	510
WR 200	7.874	200	7.677	195	0.197	5	0.118	3	7.756	197	151	68400	480
WR 210	8.268	210	8.067	204.9	0.197	5	0.118	3	8.150	207	159	72000	420
WR 220	8.661	220	8.457	214.8	0.197	5	0.118	3	8.543	217	168	76300	380
WR 225	8.858	225	8.654	219.8	0.197	5	0.118	3	8.740	222	172	78000	360
WR 230	9.055	230	8.847	224.7	0.197	5	0.118	3	8.937	227	176	79800	340
WR 240	9.449	240	9.236	234.6	0.197	5	0.118	3	9.331	237	180	81700	310
WR 260	10.236	260	9.937	252.4	0.295	7.5	0.158	4	10.039	255	395	179000	430
WR 265	10.433	265	10.134	257.4	0.295	7.5	0.158	4	10.236	260	408	185200	410
WR 270	10.630	270	10.327	262.3	0.295	7.5	0.158	4	10.433	265	436	197700	380
WR 280	11.024	280	10.717	272.2	0.295	7.5	0.158	4	10.827	275	438	198700	360
WR 285	11.221	285	10.913	277.2	0.295	7.5	0.158	4	11.024	280	440	199500	345
WR 290	11.417	290	11.106	282.1	0.295	7.5	0.158	4	11.221	285	453	205300	320
WR 300	11.811	300	11.500	292.1	0.295	7.5	0.158	4	11.614	295	472	214200	300
WR 305	12.008	305	11.697	297.1	0.295	7.5	0.158	4	11.811	300	484	219400	290
WR 310	12.205	310	11.890	302	0.295	7.5	0.158	4	12.008	305	492	223100	270
WR 320	12.598	320	12.280	311.9	0.295	7.5	0.158	4	12.402	315	497	225300	255
WR 330	12.992	330	12.665	321.7	0.295	7.5	0.158	4	12.795	325	504	228600	240
WR 340	13.386	340	13.055	331.6	0.295	7.5	0.158	4	13.189	335	528	239300	220
WR 350	13.780	350	13.445	341.5	0.295	7.5	0.158	4	13.583	345	554	251200	205

Shaft Snap Rings
WR SERIES

- Metric series

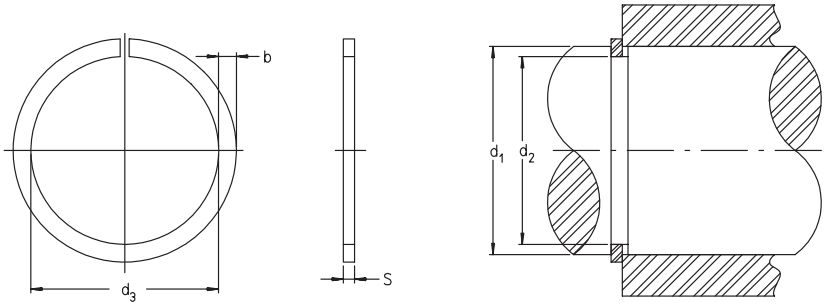

For details on part numbers, descriptive suffixes and various technical references, please refer to front of this section.
For engineering or technical information contact your local sales representative or call Distributor Sales (800)523-6572.

PART NUMBER	SHAFT DIA. d_1 inch	SHAFT DIA. d_1 mm	ID IN FREE STATE d_3 inch	ID IN FREE STATE d_3 mm	RADIAL SECTION b inch	RADIAL SECTION b mm	WIDTH s inch	WIDTH s mm	GROOVE DIA. d_2 inch	GROOVE DIA. d_2 mm	WEIGHT PER 1000 PIECES lbs	WEIGHT PER 1000 PIECES g	SPEED LIMIT rpm
WR 360	14.173	360	13.835	351.4	0.295	7.5	0.158	4	13.976	355	558	253100	195
WR 370	14.567	370	14.228	361.4	0.295	7.5	0.158	4	14.370	365	572	259200	180
WR 380	14.961	380	14.614	371.2	0.295	7.5	0.158	4	14.764	375	591	268000	170
WR 390	15.354	390	15.008	381.2	0.295	7.5	0.158	4	15.158	385	604	273900	160
WR 400	15.748	400	15.402	391.2	0.295	7.5	0.158	4	15.551	395	620	281100	145
WR 420	16.535	420	16.142	410	0.472	12	0.177	4.5	16.299	414	1191	540000	267
WR 460	18.110	460	17.697	449.5	0.472	12	0.177	4.5	17.874	454	1301	590000	224

Heavy Duty Shaft Snap Rings

WRE SERIES

- Metric series

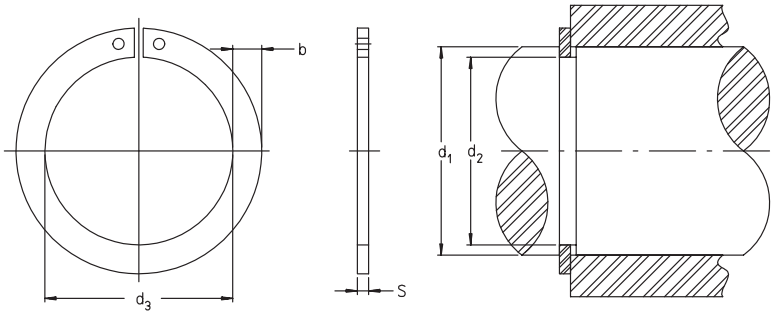

For details on part numbers, descriptive suffixes and various technical references, please refer to front of this section.
For engineering or technical information contact your local sales representative or call Distributor Sales (800)523-6572.

PART NUMBER	SHAFT DIA. d_1 inch	SHAFT DIA. d_1 mm	FREE ID d_3 inch	FREE ID d_3 mm	RADIAL SECTION b inch	RADIAL SECTION b mm	WIDTH s inch	WIDTH s mm	GROOVE DIA. d_2 inch	GROOVE DIA. d_2 mm	WEIGHT PER 1000 PIECES lbs	WEIGHT PER 1000 PIECES kg	SPEED LIMIT rpm
WRE 42	1.654	42	1.547	39.3	0.142	3.6	0.059	1.5	1.567	39.8	12.57	5.7	7680
WRE 47	1.850	47	1.744	44.3	0.142	3.6	0.059	1.5	1.764	44.8	14.00	6.35	5840
WRE 55	2.165	55	2.039	51.8	0.142	3.6	0.059	1.5	2.079	52.8	16.23	7.36	5660
WRE 62	2.441	62	2.315	58.8	0.142	3.6	0.059	1.5	2.354	59.8	18.21	8.26	4220
WRE 68	2.677	68	2.543	64.6	0.189	4.8	0.079	2	2.591	65.8	35.83	16.25	4710
WRE 75	2.953	75	2.819	71.6	0.189	4.8	0.079	2	2.866	72.8	39.43	17.88	3720
WRE 80	3.150	80	3.016	76.6	0.189	4.8	0.079	2	3.063	77.8	42.01	19.05	3180
WRE 90	3.543	90	3.398	86.3	0.228	5.8	0.098	2.5	3.457	87.8	71.60	32.47	3140
WRE 95	3.740	95	3.595	91.3	0.228	5.8	0.098	2.5	3.654	92.8	75.48	34.23	2760
WRE 100	3.937	100	3.776	95.9	0.228	5.8	0.098	2.5	3.835	97.4	79.56	36.08	2460
WRE 110	4.331	110	4.150	105.4	0.228	5.8	0.098	2.5	4.217	107.1	86.72	39.33	2090
WRE 115	4.528	115	4.347	110.4	0.228	5.8	0.098	2.5	4.413	112.1	90.60	41.09	1880
WRE 125	4.921	125	4.728	120.1	0.295	7.5	0.098	2.5	4.807	122.1	129	58.32	2080
WRE 130	5.118	130	4.917	124.9	0.295	7.5	0.098	2.5	5.004	127.1	133	60.5	1990
WRE 140	5.512	140	5.307	134.8	0.295	7.5	0.098	2.5	5.394	137	143	64.91	1660
WRE 145	5.709	145	5.504	139.8	0.295	7.5	0.098	2.5	5.591	142	148	67.18	1530
WRE 150	5.906	150	5.685	144.4	0.295	7.5	0.098	2.5	5.787	147	153	69.28	1530
WRE 160	6.299	160	6.067	154.1	0.295	7.5	0.098	2.5	6.181	157	163	73.7	1380
WRE 170	6.693	170	6.433	163.4	0.295	7.5	0.098	2.5	6.575	167	172	77.92	1330
WRE 180	7.087	180	6.811	173	0.386	9.8	0.118	3	6.929	176	289	131.09	1350
WRE 190	7.480	190	7.205	183	0.386	9.8	0.118	3	7.323	186	305	138.23	1190
WRE 200	7.874	200	7.579	192.5	0.386	9.8	0.118	3	7.717	196	320	145	1130
WRE 210	8.268	210	7.953	202	0.386	9.8	0.118	3	8.110	206	335	151.78	1080
WRE 220	8.661	220	8.347	212	0.386	9.8	0.118	3	8.504	216	350	158.91	960
WRE 225	8.858	225	8.543	217	0.472	12	0.118	3	8.701	221	443	200.88	1090
WRE 230	9.055	230	8.740	222	0.472	12	0.118	3	8.898	226	453	205.24	1030
WRE 240	9.449	240	9.114	231.5	0.472	12	0.118	3	9.291	236	471	213.54	990
WRE 260	10.236	260	9.823	249.5	0.551	14	0.158	4	10.000	254	792	359.35	950
WRE 270	10.630	270	10.197	259	0.551	14	0.158	4	10.394	264	821	372.25	910
WRE 280	11.024	280	10.591	269	0.551	14	0.158	4	10.787	274	851	385.84	840
WRE 290	11.417	290	10.984	279	0.551	14	0.158	4	11.181	284	881	399.43	770
WRE 300	11.811	300	11.358	288.5	0.551	14	0.158	4	11.575	294	909	412.33	740
WRE 310	12.205	310	11.732	298	0.638	16.2	0.158	4	11.969	304	1093	495.52	810
WRE 320	12.598	320	12.126	308	0.638	16.2	0.158	4	12.362	314	1127	511.24	750
WRE 340	13.386	340	12.894	327.5	0.638	16.2	0.158	4	13.150	334	1195	541.89	680
WRE 360	14.173	360	13.661	347	0.638	16.2	0.158	4	13.937	354	1262	572.55	610
WRE 380	14.961	380	14.370	365	0.638	16.2	0.158	4	14.724	374	1325	600.85	610
WRE 400	15.748	400	15.158	385	0.638	16.2	0.158	4	15.512	394	1433	650	540
WRE 420	16.535	420	15.945	405	0.787	20	0.177	4.5	16.260	413	2051	930	540
WRE 460	18.110	460	17.402	442	0.787	20	0.177	4.5	17.835	453	2229	1011	510

Housing Snap Rings
BR SERIES

- Metric series

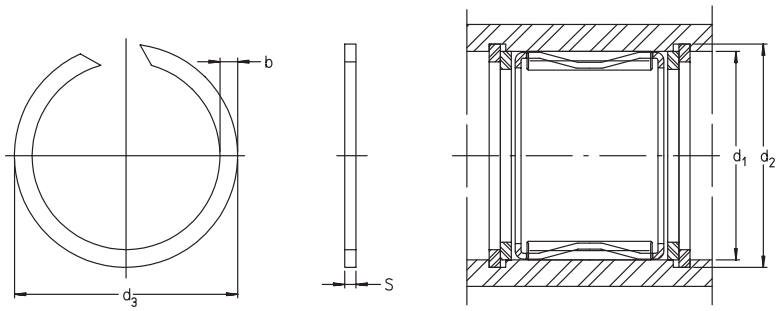

For details on part numbers, descriptive suffixes and various technical references, please refer to front of this section.
For engineering or technical information contact your local sales representative or call Distributor Sales (800)523-6572.

PART NUMBER	HSG BORE d_1 inch	HSG BORE d_1 mm	SNAP RING OD d_3 min. inch	SNAP RING OD d_3 min. mm	RADIAL SECTION b inch	RADIAL SECTION b mm	WIDTH s inch	WIDTH s mm	GROOVE DIA. d_2 inch	GROOVE DIA. d_2 mm	WEIGHT PER 1000 PIECES lbs	WEIGHT PER 1000 PIECES kg
BR 7	0.276	7	0.295	7.5	0.039	1	0.031	0.8	0.291	7.4	0.198	0.09
BR 8	0.315	8	0.335	8.5	0.039	1	0.031	0.8	0.331	8.4	0.221	0.1
BR 9	0.354	9	0.374	9.5	0.043	1.1	0.031	0.8	0.37	9.4	0.287	0.13
BR 10	0.394	10	0.417	10.6	0.047	1.2	0.031	0.8	0.413	10.5	0.331	0.15
BR 11	0.433	11	0.457	11.6	0.051	1.3	0.039	1	0.453	11.5	0.463	0.21
BR 12	0.472	12	0.5	12.7	0.051	1.3	0.039	1	0.492	12.5	0.551	0.25
BR 13	0.512	13	0.543	13.8	0.051	1.3	0.039	1	0.535	13.6	0.617	0.28
BR 14	0.551	14	0.583	14.8	0.051	1.3	0.039	1	0.575	14.6	0.684	0.31
BR 15	0.591	15	0.622	15.8	0.051	1.3	0.039	1	0.614	15.6	0.75	0.34
BR 16	0.63	16	0.661	16.8	0.069	1.75	0.047	1.2	0.654	16.6	1.169	0.53
BR 17	0.669	17	0.701	17.8	0.069	1.75	0.047	1.2	0.693	17.6	1.213	0.55
BR 18	0.709	18	0.744	18.9	0.069	1.75	0.047	1.2	0.732	18.6	1.499	0.68
BR 19	0.748	19	0.783	19.9	0.069	1.75	0.047	1.2	0.772	19.6	1.588	0.72
BR 20	0.787	20	0.827	21	0.069	1.75	0.047	1.2	0.811	20.6	1.676	0.76
BR 21	0.827	21	0.866	22	0.069	1.75	0.047	1.2	0.85	21.6	1.742	0.79
BR 22	0.866	22	0.906	23	0.069	1.75	0.047	1.2	0.89	22.6	1.786	0.81
BR 23	0.906	23	0.945	24	0.069	1.75	0.047	1.2	0.929	23.6	1.94	0.88
BR 24	0.945	24	0.992	25.2	0.069	1.75	0.047	1.2	0.976	24.8	1.985	0.9
BR 25	0.984	25	1.031	26.2	0.069	1.75	0.047	1.2	1.016	25.8	2.007	0.91
BR 26	1.024	26	1.071	27.2	0.069	1.75	0.047	1.2	1.055	26.8	2.161	0.98
BR 27	1.063	27	1.11	28.2	0.069	1.75	0.047	1.2	1.094	27.8	2.448	1.11
BR 28	1.102	28	1.15	29.2	0.069	1.75	0.047	1.2	1.134	28.8	2.492	1.13
BR 29	1.142	29	1.189	30.2	0.069	1.75	0.047	1.2	1.173	29.8	2.536	1.15
BR 30	1.181	30	1.236	31.4	0.091	2.3	0.059	1.5	1.22	31	4.41	2
BR 31	1.22	31	1.276	32.4	0.091	2.3	0.059	1.5	1.26	32	4.476	2.03
BR 32	1.26	32	1.315	33.4	0.091	2.3	0.059	1.5	1.299	33	4.653	2.11
BR 33	1.299	33	1.354	34.4	0.091	2.3	0.059	1.5	1.339	34	4.983	2.26
BR 34	1.339	34	1.394	35.4	0.091	2.3	0.059	1.5	1.378	35	5.16	2.34
BR 35	1.378	35	1.433	36.4	0.091	2.3	0.059	1.5	1.417	36	5.204	2.36
BR 37	1.457	37	1.528	38.8	0.091	2.3	0.059	1.5	1.504	38.2	5.579	2.53
BR 38	1.496	38	1.567	39.8	0.091	2.3	0.059	1.5	1.543	39.2	5.755	2.61
BR 39	1.535	39	1.606	40.8	0.091	2.3	0.059	1.5	1.583	40.2	5.887	2.67
BR 40	1.575	40	1.646	41.8	0.091	2.3	0.059	1.5	1.622	41.2	6.174	2.8
BR 42	1.654	42	1.724	43.8	0.091	2.3	0.059	1.5	1.701	43.2	6.439	2.92
BR 43	1.693	43	1.764	44.8	0.091	2.3	0.059	1.5	1.74	44.2	6.681	3.03
BR 44	1.732	44	1.803	45.8	0.091	2.3	0.059	1.5	1.78	45.2	6.858	3.11
BR 45	1.772	45	1.843	46.8	0.091	2.3	0.059	1.5	1.819	46.2	7.166	3.25
BR 46	1.811	46	1.882	47.8	0.091	2.3	0.059	1.5	1.858	47.2	7.232	3.28
BR 47	1.85	47	1.921	48.8	0.091	2.3	0.059	1.5	1.898	48.2	7.254	3.29
BR 48	1.89	48	1.961	49.8	0.091	2.3	0.059	1.5	1.937	49.2	7.607	3.45
BR 50	1.969	50	2.039	51.8	0.091	2.3	0.059	1.5	2.016	51.2	7.872	3.57
BR 52	2.047	52	2.138	54.3	0.091	2.3	0.059	1.5	2.106	53.5	7.894	3.58
BR 53	2.087	53	2.177	55.3	0.091	2.3	0.059	1.5	2.146	54.5	8.423	3.82
BR 55	2.165	55	2.256	57.3	0.091	2.3	0.059	1.5	2.224	56.5	8.666	3.93
BR 57	2.244	57	2.335	59.3	0.091	2.3	0.059	1.5	2.303	58.5	9.085	4.12

Housing Snap Rings
BR SERIES

- Metric series

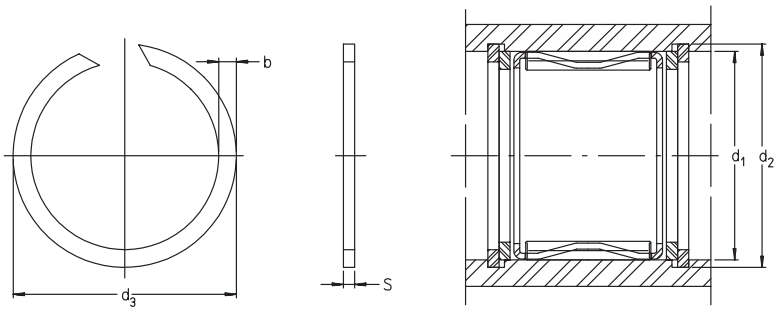

For details on part numbers, descriptive suffixes and various technical references, please refer to front of this section.
For engineering or technical information contact your local sales representative or call Distributor Sales (800)523-6572.

PART NUMBER	HSG BORE d_1 inch	HSG BORE d_1 mm	SNAP RING OD d_3 min. inch	SNAP RING OD d_3 min. mm	RADIAL SECTION b inch	RADIAL SECTION b mm	WIDTH s inch	WIDTH s mm	GROOVE DIA. d_2 inch	GROOVE DIA. d_2 mm	WEIGHT PER 1000 PIECES lbs	WEIGHT PER 1000 PIECES kg
BR 58	2.283	58	2.374	60.3	0.091	2.3	0.059	1.5	2.343	59.5	9.107	4.13
BR 60	2.362	60	2.453	62.3	0.091	2.3	0.059	1.5	2.421	61.5	9.437	4.28
BR 62	2.441	62	2.531	64.3	0.091	2.3	0.059	1.5	2.5	63.5	9.746	4.42
BR 63	2.48	63	2.571	65.3	0.091	2.3	0.059	1.5	2.539	64.5	9.923	4.5
BR 65	2.559	65	2.65	67.3	0.091	2.3	0.059	1.5	2.618	66.5	10.408	4.72
BR 68	2.677	68	2.768	70.3	0.091	2.3	0.059	1.5	2.736	69.5	10.805	4.9
BR 70	2.756	70	2.846	72.3	0.091	2.3	0.059	1.5	2.815	71.5	10.871	4.93
BR 72	2.835	72	2.937	74.6	0.11	2.8	0.079	2	2.906	73.8	18.72	8.49
BR 73	2.874	73	2.976	75.6	0.11	2.8	0.079	2	2.945	74.8	18.787	8.52
BR 74	2.913	74	3.016	76.6	0.11	2.8	0.079	2	2.984	75.8	18.963	8.6
BR 76	2.992	76	3.094	78.6	0.11	2.8	0.079	2	3.063	77.8	19.602	8.89
BR 78	3.071	78	3.173	80.6	0.11	2.8	0.079	2	3.142	79.8	19.955	9.05
BR 79	3.11	79	3.213	81.6	0.11	2.8	0.079	2	3.181	80.8	19.999	9.07
BR 80	3.15	80	3.252	82.6	0.11	2.8	0.079	2	3.22	81.8	20.33	9.22
BR 81	3.189	81	3.291	83.6	0.11	2.8	0.079	2	3.26	82.8	20.529	9.31
BR 82	3.228	82	3.331	84.6	0.11	2.8	0.079	2	3.299	83.8	20.837	9.45
BR 83	3.268	83	3.37	85.6	0.11	2.8	0.079	2	3.339	84.8	21.234	9.63
BR 86	3.386	86	3.488	88.6	0.11	2.8	0.079	2	3.457	87.8	21.852	9.91
BR 88	3.465	88	3.583	91	0.134	3.4	0.098	2.5	3.543	90	33.957	15.4
BR 90	3.543	90	3.661	93	0.134	3.4	0.098	2.5	3.622	92	34.398	15.6
BR 92	3.622	92	3.74	95	0.134	3.4	0.098	2.5	3.701	94	36.603	16.6
BR 93	3.661	93	3.78	96	0.134	3.4	0.098	2.5	3.74	95	37.044	16.8
BR 95	3.74	95	3.858	98	0.134	3.4	0.098	2.5	3.819	97	37.265	16.9
BR 97	3.819	97	3.937	100	0.134	3.4	0.098	2.5	3.898	99	37.706	17.1
BR 98	3.858	98	3.976	101	0.134	3.4	0.098	2.5	3.937	100	38.588	17.5
BR 100	3.937	100	4.067	103.3	0.134	3.4	0.098	2.5	4.028	102.3	39.47	17.9
BR 102	4.016	102	4.146	105.3	0.134	3.4	0.098	2.5	4.106	104.3	40.572	18.4
BR 103	4.055	103	4.185	106.3	0.134	3.4	0.098	2.5	4.146	105.3	40.793	18.5
BR 105	4.134	105	4.264	108.3	0.134	3.4	0.098	2.5	4.224	107.3	41.234	18.7
BR 107	4.213	107	4.343	110.3	0.134	3.4	0.098	2.5	4.303	109.3	42.116	19.1
BR 108	4.252	108	4.382	111.3	0.134	3.4	0.098	2.5	4.343	110.3	42.557	19.3
BR 110	4.331	110	4.465	113.4	0.134	3.4	0.098	2.5	4.421	112.3	43.659	19.8
BR 112	4.409	112	4.543	115.4	0.134	3.4	0.098	2.5	4.5	114.3	44.762	20.3
BR 113	4.449	113	4.583	116.4	0.134	3.4	0.098	2.5	4.539	115.3	45.203	20.5
BR 115	4.528	115	4.661	118.4	0.134	3.4	0.098	2.5	4.618	117.3	45.423	20.6
BR 117	4.606	117	4.74	120.4	0.134	3.4	0.098	2.5	4.697	119.3	45.864	20.8
BR 118	4.646	118	4.78	121.4	0.134	3.4	0.098	2.5	4.736	120.3	46.526	21.1
BR 120	4.724	120	4.866	123.6	0.134	3.4	0.098	2.5	4.815	122.3	47.187	21.4
BR 123	4.843	123	4.984	126.6	0.134	3.4	0.098	2.5	4.933	125.3	48.51	22
BR 125	4.921	125	5.063	128.6	0.134	3.4	0.098	2.5	5.012	127.3	49.613	22.5
BR 127	5	127	5.142	130.6	0.134	3.4	0.098	2.5	5.091	129.3	50.715	23
BR 130	5.118	130	5.264	133.7	0.134	3.4	0.098	2.5	5.209	132.3	51.597	23.4
BR 133	5.236	133	5.382	136.7	0.134	3.4	0.098	2.5	5.327	135.3	53.802	24.4
BR 135	5.315	135	5.461	138.7	0.134	3.4	0.098	2.5	5.406	137.3	55.125	25
BR 137	5.394	137	5.539	140.7	0.134	3.4	0.098	2.5	5.484	139.3	55.787	25.3

Housing Snap Rings
BR SERIES

- Metric series

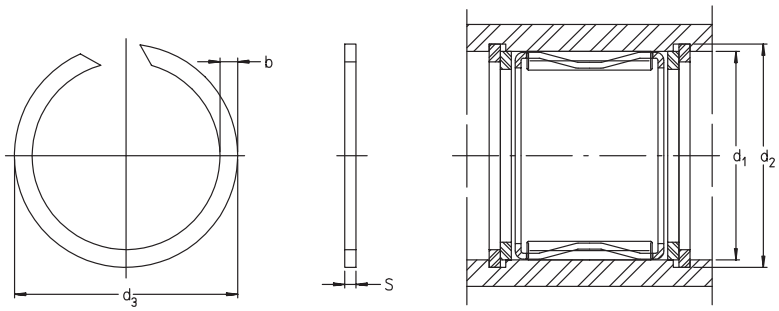

For details on part numbers, descriptive suffixes and various technical references, please refer to front of this section.
For engineering or technical information contact your local sales representative or call Distributor Sales (800)523-6572.

PART NUMBER	HSG BORE d_1 inch	HSG BORE d_1 mm	SNAP RING OD d_3 min. inch	SNAP RING OD d_3 min. mm	RADIAL SECTION b inch	RADIAL SECTION b mm	WIDTH s inch	WIDTH s mm	GROOVE DIA. d_2 inch	GROOVE DIA. d_2 mm	WEIGHT PER 1000 PIECES lbs	WEIGHT PER 1000 PIECES kg
BR 140	5.512	140	5.673	144.1	0.157	4	0.098	2.5	5.614	142.6	64.607	29.3
BR 143	5.63	143	5.791	147.1	0.157	4	0.098	2.5	5.732	145.6	66.371	30.1
BR 150	5.906	150	6.071	154.2	0.157	4	0.098	2.5	6.008	152.6	70.34	31.9
BR 153	6.024	153	6.189	157.2	0.157	4	0.098	2.5	6.126	155.6	71.883	32.6
BR 160	6.299	160	6.469	164.3	0.157	4	0.098	2.5	6.402	162.6	75.852	34.4
BR 163	6.417	163	6.587	167.3	0.157	4	0.098	2.5	6.52	165.6	76.293	34.6
BR 165	6.496	165	6.665	169.3	0.157	4	0.098	2.5	6.598	167.6	76.955	34.9
BR 170	6.693	170	6.866	174.4	0.157	4	0.098	2.5	6.795	172.6	79.821	36.2
BR 173	6.811	173	6.984	177.4	0.157	4	0.098	2.5	6.913	175.6	81.806	37.1
BR 175	6.89	175	7.063	179.4	0.157	4	0.098	2.5	6.992	177.6	82.247	37.3
BR 180	7.087	180	7.264	184.5	0.157	4	0.098	2.5	7.189	182.6	84.452	38.3
BR 183	7.205	183	7.382	187.5	0.157	4	0.098	2.5	7.307	185.6	90.405	41
BR 190	7.48	190	7.673	194.9	0.197	5	0.118	3	7.598	193	135.167	61.3
BR 195	7.677	195	7.87	199.9	0.197	5	0.118	3	7.795	198	135.828	61.6
BR 200	7.874	200	8.071	205	0.197	5	0.118	3	7.992	203	142.223	64.5
BR 205	8.071	205	8.268	210	0.197	5	0.118	3	8.189	208	146.412	66.4
BR 220	8.661	220	8.866	225.2	0.197	5	0.118	3	8.78	223	159.642	72.4
BR 230	9.055	230	9.264	235.3	0.197	5	0.118	3	9.173	233	165.816	75.2
BR 250	9.843	250	10.059	255.5	0.197	5	0.118	3	9.961	253	185.661	84.2
BR 270	10.63	270	10.933	277.7	0.295	7.5	0.157	4	10.827	275	383.67	174
BR 280	11.024	280	11.331	287.8	0.295	7.5	0.157	4	11.22	285	405.72	184
BR 300	11.811	300	12.122	307.9	0.295	7.5	0.157	4	12.008	305	432.18	196
BR 320	12.598	320	12.921	328.2	0.295	7.5	0.157	4	12.795	325	447.615	203
BR 325	12.795	325	13.118	333.2	0.295	7.5	0.157	4	12.992	330	454.23	206
BR 355	13.976	355	14.311	363.5	0.295	7.5	0.157	4	14.173	360	509.355	231
BR 375	14.764	375	15.102	383.6	0.295	7.5	0.157	4	14.961	380	529.2	240
BR 385	15.157	385	15.5	393.7	0.295	7.5	0.157	4	15.354	390	546.84	248
BR 395	15.551	395	15.898	403.8	0.295	7.5	0.157	4	15.748	400	566.685	257
BR 400	15.748	400	16.098	408.9	0.295	7.5	0.157	4	15.945	405	573.3	260
BR 420	16.535	420	16.894	429.1	0.295	7.5	0.157	4	16.732	425	610.785	277
BR 440	17.323	440	17.689	449.3	0.295	7.5	0.157	4	17.52	445	648.27	294

Needle Rollers

- Round and flat end

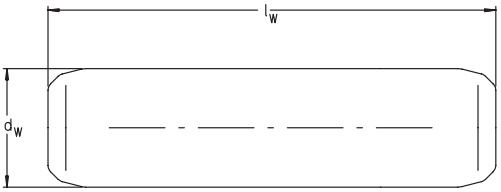

For details on part numbers, descriptive suffixes and various technical references, please refer to front of this section.
For engineering or technical information contact your local sales representative or call Distributor Sales (800)523-6572.

PART NUMBER	DIAMETER d_w inch	DIAMETER d_w mm	LENGTH l_w inch	LENGTH l_w mm	WEIGHT PER 1000 lbs	WEIGHT PER 1000 Kg
NRB 1x5.8	0.0394	1	0.2283	5.8	0.075	0.034
NRB 1x6.8	0.0394	1	0.2677	6.8	0.093	0.042
NRB 1x7.8	0.0394	1	0.3071	7.8	0.104	0.047
NRB 1x9.8	0.0394	1	0.3858	9.8	0.13	0.059
NRA 1.191x22	0.0469	1.191	0.8661	22	0.415	0.188
NRB 1.5x5.8	0.0591	1.5	0.2283	5.8	0.176	0.08
NRB 1.5x6.8	0.0591	1.5	0.2677	6.8	0.207	0.094
NRB 1.5x7.8	0.0591	1.5	0.3071	7.8	0.238	0.108
NRB1.5x8.3	0.0591	1.5	0.3268	8.3	0.265	0.12
NRB 1.5x9.8	0.0591	1.5	0.3858	9.8	0.3	0.136
NRB 1.5x11.8	0.0591	1.5	0.4646	11.8	0.362	0.164
NRB 1.5x13.8	0.0591	1.5	0.5433	13.8	0.421	0.191
NRBS 1.585x19.3	0.0624	1.585	0.7205	18.3	0.628	0.285
NRB 1.587x9.65	0.0625	1.587	0.3799	9.65	0.331	0.15
NRB 1.588x7.10	0.0625	1.588	0.2795	7.1	0.245	0.111
NRB 1.588x8	0.0625	1.588	0.315	8	0.276	0.125
NRB 1.588x14.4	0.0625	1.588	0.5669	14.4	0.496	0.225
NRBS 1.588x25.0	0.0625	1.588	0.9843	25	0.862	0.391
NRBS 1.588x27.1	0.0625	1.588	1.0669	27.1	0.935	0.424
NRB 1.664x10.6	0.0655	1.664	0.4173	10.6	0.401	0.182
NRBS 1.811x10.8	0.0713	1.811	0.4252	10.8	0.485	0.22
NRB 1.984x3.60	0.0781	1.984	0.1417	3.6	0.194	0.088
NRB 1.984x4.20	0.0781	1.984	0.1654	4.2	0.218	0.099
NRB 1.984x6.8	0.0781	1.984	0.2677	6.8	0.366	0.166
NRKS 1.984x9.27	0.0781	1.984	0.365	9.27	0.485	0.22
NRAS 1.984x19.0	0.0781	1.984	0.748	19	0.97	0.44
NRB 2x4.0	0.0787	2	0.1575	4	0.218	0.099
NRB 2x6.3	0.0787	2	0.248	6.3	0.309	0.14
NRB 2x7.8	0.0787	2	0.3071	7.8	0.419	0.19
NRB2x8.8	0.0787	2	0.3465	8.8	0.467	0.212
NRB 2x9.8	0.0787	2	0.3858	9.8	0.529	0.24
NRB 2x11.8	0.0787	2	0.4646	11.8	0.639	0.29
NRB 2x13.8	0.0787	2	0.5433	13.8	0.75	0.34
NRB 2x15.8	0.0787	2	0.622	15.8	0.86	0.39
NRB 2x17.8	0.0787	2	0.7008	17.8	0.97	0.44
NRB 2x19.8	0.0787	2	0.7795	19.8	1.08	0.49
NRB 2x21.8	0.0787	2	0.8583	21.8	1.191	0.54
NRB 2x22.55	0.0787	2	0.8878	22.55	1.235	0.56
NRA 2x23.8	0.0787	2	0.937	23.8	1.303	0.591
NRB 2.286x15.0	0.09	2.286	0.5906	15	1.058	0.48
NRB 2.398x14.3	0.0944	2.398	0.563	14.3	1.125	0.51
NRKS 2.40x9.91	0.0945	2.4	0.3902	9.91	0.781	0.354
NRB 2.5x6.8	0.0984	2.5	0.2677	6.8	0.582	0.264
NRB 2.5x7.8	0.0984	2.5	0.3071	7.8	0.662	0.3
NRB 2.5x9.8	0.0984	2.5	0.3858	9.8	0.838	0.38
NRB2.5x10.8	0.0984	2.5	0.4252	10.8	0.924	0.419

Needle Rollers

● Round and flat end

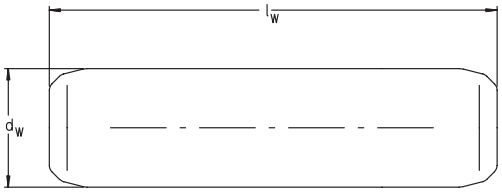

For details on part numbers, descriptive suffixes and various technical references, please refer to front of this section.
For engineering or technical information contact your local sales representative or call Distributor Sales (800)523-6572.

PART NUMBER	DIAMETER d_w inch	DIAMETER d_w mm	LENGTH l_w inch	LENGTH l_w mm	WEIGHT PER 1000 lbs	WEIGHT PER 1000 Kg
NRB 2.5x11.8	0.0984	2.5	0.4646	11.8	0.992	0.45
NRB 2.5x13.8	0.0984	2.5	0.5433	13.8	1.169	0.53
NRB 2.5x15.8	0.0984	2.5	0.622	15.8	1.345	0.61
NRB 2.5x17.8	0.0984	2.5	0.7008	17.8	1.521	0.69
NRB 2.5x19.8	0.0984	2.5	0.7795	19.8	1.676	0.76
NRB 2.5x21.8	0.0984	2.5	0.8583	21.8	1.852	0.84
NRB 2.5x23.8	0.0984	2.5	0.937	23.8	2.029	0.92
NRB 2.5x26.55	0.0984	2.5	1.0453	26.55	2.271	1.03
NRA 2.5x27.8	0.0984	2.5	1.0945	27.8	2.377	1.078
NRA 2.779x12.70	0.1094	2.779	0.5	12.7	1.343	0.609
NRB 3x6.3	0.1181	3	0.248	6.3	8.319	3.773
NRA 3x8.8	0.1181	3	0.3465	8.8	1.058	0.48
NRB 3x9.8	0.1181	3	0.3858	9.8	1.191	0.54
NRB 3x10.8	0.1181	3	0.4252	10.8	1.33	0.603
NRB 3x11.8	0.1181	3	0.4646	11.8	1.433	0.65
NRB 3x13.8	0.1181	3	0.5433	13.8	1.676	0.76
NRB 3x15.8	0.1181	3	0.622	15.8	1.918	0.87
NRA 3x16.2	0.1181	3	0.6378	16.2	1.996	0.905
NRB 3x17.8	0.1181	3	0.7008	17.8	2.183	0.99
NRB 3x19.8	0.1181	3	0.7795	19.8	2.426	1.1
NRB 3x21.8	0.1181	3	0.8583	21.8	2.668	1.21
NRB 3x23.8	0.1181	3	0.937	23.8	2.911	1.32
NRB 3x25.8	0.1181	3	1.0157	25.8	3.153	1.43
NRB 3x27.8	0.1181	3	1.0945	27.8	3.396	1.54
NRB 3x29.8	0.1181	3	1.1732	29.8	3.55	1.61
NRAS 3.175x7	0.125	3.175	0.2756	7	0.966	0.438
NRA 3.175x19.05	0.125	3.175	0.75	19.05	2.628	1.192
NRA 3.175x21.60	0.125	3.175	0.8504	21.6	2.979	1.351
NRB 3.5x11.8	0.1378	3.5	0.4646	11.8	2.007	0.91
NRB 3.5x13.8	0.1378	3.5	0.5433	13.8	2.315	1.05
NRB 3.5x15.8	0.1378	3.5	0.622	15.8	2.624	1.19
NRB 3.5x17.8	0.1378	3.5	0.7008	17.8	2.977	1.35
NRB 3.5x19.8	0.1378	3.5	0.7795	19.8	3.33	1.51
NRB 3.5x21.8	0.1378	3.5	0.8583	21.8	3.682	1.67
NRB 3.5x23.8	0.1378	3.5	0.937	23.8	4.079	1.85
NRB 3.5x25.8	0.1378	3.5	1.0157	25.8	4.322	1.96
NRB 3.5x27.8	0.1378	3.5	1.0945	27.8	4.631	2.1
NRB 3.5x29.8	0.1378	3.5	1.1732	29.8	4.961	2.25
NRB 3.5x34.8	0.1378	3.5	1.3701	34.8	5.843	2.65
NRA 3.616x17.8	0.1424	3.616	0.7008	17.8	2.205	1
NRBS 3.967x5.97	0.1562	3.967	0.235	5.97	1.286	0.583
NRBS 3.967x14.1	0.1562	3.967	0.5551	14.1	2.867	1.3
NRAS 3.967x16.6	0.1562	3.967	0.6559	16.66	3.588	1.627
NRAS 3.967x22.8	0.1562	3.967	0.9	22.86	4.922	2.232
NRB 4x5.5	0.1575	4	0.2165	5.5	1.191	0.54
NRB 4x11.8	0.1575	4	0.4646	11.8	2.558	1.16

Needle Rollers

● Round and flat end

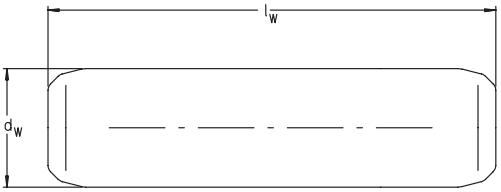

For details on part numbers, descriptive suffixes and various technical references, please refer to front of this section.
For engineering or technical information contact your local sales representative or call Distributor Sales (800)523-6572.

PART NUMBER	DIAMETER d_w inch	DIAMETER d_w mm	LENGTH l_w inch	LENGTH l_w mm	WEIGHT PER 1000 lbs	WEIGHT PER 1000 Kg
NRB 4x13.8	0.1575	4	0.5433	13.8	2.999	1.36
NRB 4x15.8	0.1575	4	0.622	15.8	3.418	1.55
NRB 4x17.8	0.1575	4	0.7008	17.8	3.859	1.75
NRB 4x19.8	0.1575	4	0.7795	19.8	4.3	1.95
NRB 4x21.8	0.1575	4	0.8583	21.8	4.719	2.14
NRB 4x23.8	0.1575	4	0.937	23.8	5.138	2.33
NRB 4x25.8	0.1575	4	1.0157	25.8	5.579	2.53
NRB 4x27.8	0.1575	4	1.0945	27.8	5.777	2.62
NRB 4x29.8	0.1575	4	1.1732	29.8	6.505	2.95
NRB 4x34.8	0.1575	4	1.3701	34.8	7.497	3.4
NRB 4x39.8	0.1575	4	1.5669	39.8	8.6	3.9
NRB 4.5x27.8	0.1772	4.5	1.0945	27.8	7.651	3.47
NRB 4.5x29.8	0.1772	4.5	1.1732	29.8	8.256	3.744
NRB 4.5x49.8	0.1772	4.5	1.9606	49.8	13.715	6.22
NRC 4.762x22.35	0.1875	4.762	0.8799	22.35	6.935	3.145
NRB 4.763x14.80	0.1875	4.763	0.5827	14.8	4.593	2.083
NRB 4.76x26	0.1875	4.763	1.0236	26	8.07	3.66
NRB 5x15.8	0.1969	5	0.622	15.8	5.358	2.43
NRB 5x19.8	0.1969	5	0.7795	19.8	6.681	3.03
NRB 5x21.8	0.1969	5	0.8583	21.8	7.409	3.36
NRB 5x23.8	0.1969	5	0.937	23.8	7.894	3.58
NRB 5x25.8	0.1969	5	1.0157	25.8	8.776	3.98
NRB 5x27.8	0.1969	5	1.0945	27.8	9.217	4.18
NRB 5x29.8	0.1969	5	1.1732	29.8	10.143	4.6
NRB 5x34.8	0.1969	5	1.3701	34.8	11.907	5.4
NRB 5x39.8	0.1969	5	1.5669	39.8	13.561	6.15
NRB 5x49.8	0.1969	5	1.9606	49.8	16.538	7.5
NRB 5.542x13.66	0.2182	5.542	0.5378	13.66	5.74	2.603
NRAS 5.905x25.4	0.2325	5.905	1	25.4	12.116	5.495
NRB 6x14.0	0.2362	6	0.5512	14	6.895	3.127
NRB 6x17.8	0.2362	6	0.7008	17.8	8.71	3.95
NRB 6x21.8	0.2362	6	0.8583	21.8	10.65	4.83
NRB 6x23.8	0.2362	6	0.937	23.8	11.642	5.28
NRB 6x25.8	0.2362	6	1.0157	25.8	12.613	5.72
NRA 6x34.8	0.2362	6	1.3701	34.8	17.139	7.773
NRB 6x39.8	0.2362	6	1.5669	39.8	19.47	8.83

NOTES

Section Contents
PLAIN BEARINGS & ROD ENDS

BEARING SERIES	BEARING DESCRIPTION	PAGE
INFORMATION	PERMAGLIDE PLAIN BEARING, GENERAL OVERVIEW	373
INFORMATION	ELGES SPHERICAL PLAIN BEARING, GENERAL OVERVIEW	375
INFORMATION	ELGES ROD ENDS, GENERAL OVERVIEW	375
P / N IDENTIFICATION	PERMAGLIDE PLAIN BEARINGS	376
P / N IDENTIFICATION	ELGES SPHERICAL PLAIN BEARINGS	378
P / N IDENTIFICATION	ELGES ROD ENDS	378
PAP	INTERCHANGE, METRIC PLAIN BEARINGS	382
PAPZ	INTERCHANGE, INCH PLAIN BEARINGS	383
PAW	INTERCHANGE, METRIC THRUST WASHERS	384
PAPZ..P10	INCH PERMAGLIDE PLAIN BEARINGS	386
PAP..P10	METRIC PERMAGLIDE PLAIN BEARINGS	390
PAP..P11	METRIC PERMAGLIDE PLAIN BEARINGS	392
PAF..P10	METRIC PERMAGLIDE FLANGED PLAIN BEARINGS	393
PAF..P11	METRIC PERMAGLIDE FLANGED PLAIN BEARINGS	394
PAW..P10	PERMAGLIDE THRUST WASHERS	395
PAS..P10	PERMAGLIDE STRIPS	396
PAS..P11	PERMAGLIDE STRIPS	397
PAP..P20	METRIC PERMAGLIDE PLAIN BEARINGS	399
PAW..P20	PERMAGLIDE THRUST WASHERS	400
PAS..P20	PERMAGLIDE STRIPS	401
PAS..P21	PERMAGLIDE STRIPS	402
PAS..P22	PERMAGLIDE STRIPS	403
GE..DO	ELGES METRIC DIN 648 SERIES E STEEL/STEEL SLIDING	404
GE..DO 2RS	ELGES METRIC DIN 648 SERIES E STEEL/STEEL SLIDING SEALED	404
GE..FO	ELGES METRIC DIN 648 SERIES G STEEL/STEEL SLIDING WIDE INNER	406
GE..FO 2RS	ELGES METRIC DIN 648 SERIES G STEEL/STEEL SLIDING WIDE INNER SEALED	406
GE..PB	ELGES METRIC DIN 648 SERIES K STEEL/BRONZE SLIDING	407
GE..LO	ELGES METRIC DIN 648 SERIES EW STEEL/STEEL SLIDING	408
GE..HO 2RS	ELGES METRIC STEEL/STEEL SLIDING EXTENDED INNER	409
GE..ZO	ELGES INCH STEEL/STEEL SLIDING	410
GE..ZO 2RS	ELGES INCH STEEL/STEEL SLIDING SEALED	411
GE..SX	ELGES METRIC STEEL/STEEL SLIDING ANGULAR CONTACT	412
GE..AX	ELGES METRIC STEEL/STEEL SLIDING THRUST CONTACT	414
GE..ZSX	ELGES INCH STEEL/STEEL SLIDING THRUST CONTACT	415
GE..UK	ELGES METRIC DIN 648 SERIES E MAINTENANCE FREE SLIDING	416
GE..UK 2RS	ELGES METRIC DIN 648 SERIES E MAINTENANCE FREE SLIDING SEALED	416
GE..DW	ELGES METRIC DIN 648 SERIES C MAINTENANCE FREE SLIDING	418
GE..FW	ELGES METRIC DIN 648 SERIES G MAINTENANCE FREE SLIDING	420
GE..PW	ELGES METRIC DIN 648 SERIES K MAINTENANCE FREE SLIDING	422

Section Contents
PLAIN BEARINGS & ROD ENDS

BEARING SERIES	BEARING DESCRIPTION	PAGE
GE..SW	ELGES METRIC MAINTENANCE FREE SLIDING ANGULAR CONTACT	424
GE..AW	ELGES METRIC MAINTENANCE FREE SLIDING THRUST CONTACT	426
GIR..DO	ELGES METRIC TO DIN 648 SERIES E FORM B STEEL/STEEL SLIDING INTERNAL THREAD	428
GAR..DO	ELGES METRIC TO DIN 648 SERIES E FORM A STEEL/STEEL SLIDING INTERNAL THREAD	429
GIHNK..LO	ELGES METRIC DIN 24338/ISO6982 STEEL/STEEL SLIDING CLAMPING THREAD	430
GIHOK..DO	ELGES METRIC DIN 24555 STEEL/STEEL SLIDING CLAMPING THREAD	431
GIHR..DO	ELGES METRIC STEEL/STEEL SLIDING HYDRAULIC SERIES	432
GK..DO	ELGES METRIC DIN648 SERIES E STEEL/STEEL SLIDING	433
GF..DO	ELGES METRIC DIN648 SERIES E STEEL/STEEL SLIDING; FOR WELDING	434
GIKMR..	ELGES METRIC DIN648 SERIES K STEEL/BRASS SLIDING	435
GAKMR..	ELGES METRIC DIN648 SERIES K STEEL/BRASS SLIDING EXTERNAL THREAD	436
GIKFR..PB	ELGES METRIC DIN648 SERIES K STEEL/BRONZE SLIDING INTERNAL THREAD	437
GAKFR..PB	ELGES METRIC DIN648 SERIES K STEEL/BRONZE SLIDING EXTERNAL THREAD	438
GIR..UK	ELGES METRIC DIN648 SERIES E MAINTENANCE FREE INTERNAL THREAD	439
GAR..UK	ELGES METRIC DIN648 SERIES E FORM A MAINTENANCE FREE EXTERNAL THREAD	440
GIKFR..PW	ELGES METRIC DIN648 SERIES K MAINTENANCE FREE INTERNAL THREAD	441
GIPFR..PW	ELGES METRIC DIN648 SERIES K MAINTENANCE FREE INTERNAL FINE PITCH THREAD	441
GAKFR..PW	ELGES METRIC DIN 648 SERIES K MAINTENANCE FREE EXTERNAL THREAD	442

Elges is a registered trademark of INA USA Corporation
Permaglide is a registered trademark and a product of KOLBENSCHMIDT AG,
Neckarsulm, also produced in Greensburg, Indiana, USA.

P10, P11 Maintenance–free

Structure

Permaglide P10 is a maintenance free bearing material which consists of three layers: steel backing, bronze layer and sliding layer. A 0.2 to 0.35 mm thick porous bronze layer (tin bronze or tin/lead bronze) is sintered onto the steel backing. In a rolling operation the pores of the bronze are completely filled with a mixture of polytetrafluoroethylene (PTFE) and lead (Pb). On top of the bronze layer there is a 0.01 to 0.03 mm thick sliding layer of polytetrafluoroethylene (PTFE) and lead (Pb). The steel backing and the sintered bronze skeleton give a very high compressive strength and provide good thermal conductivity for bearings manufactured from the Permaglide P10 material. The O.D., faces and butt joint of the plain bearings are coated with a tin flash for protection against corrosion.

Permaglide P11 also consists of three layers. It has a bronze backing instead of a steel backing. The structure of the porous bronze layer and the sliding layer is the same as the P10 material. The bronze backing gives the plain bearings of this material high corrosion resistance and good thermal conductivity.

Characteristics

- High pv value; values permissible in dry running:
  pv = 1.8 N/mm^2 x m/s (51390 psi x fpm) in continuous operation
  pv = 3.6 N/mm^2 x m/s (102780 psi x fpm) for short periods.
- High load carrying capacity; permissible static contact pressure 250 N/mm^2 (36258 psi)
- Sliding velocity up to 2 m/s (390 fpm)
- Good sliding properties (stick–slip virtually eliminated)
- Low coefficient of friction (0.03 to 0.25)
- Suitable for temperatures from
  –200 C to +280 C (–328 F to +536 F)
- Well suited for rotating and oscillating motion
- Low wear
- No welding tendency with metals
- Good embedding properties for dirt and foreign matter
- No absorption of water and therefore no swelling
- Chemically resistant because of suitable electro–plating on steel backing, faces and butt joint faces
- Electrically conductive, no electrostatic charging; advantageous for use with flammable and explosive media
- Low mass
- Minimum space requirement

P20, P21, P22 Low Maintenance

Structure

The low maintenance plain bearing materials P20, P21 and P22 consist of three layers: steel backing, bronze layer and a sliding layer. A 0.2 to 0.35 mm thick porous bronze layer (tin bronze or tin/lead bronze) is sintered onto the steel backing. The sliding layer consists of a mixture of polyvinylidenefluoride (PVDF), polytetrafluoroethylene (PTFE) and lead (Pb). In a rolling operation the pores of the bronze are completely filled with the mixture. The sliding layer on top of the bronze layer is a mixture of PVDF, PTFE and Pb. In P20 the sliding layer is 0.05 to 0.1 mm thick. The O.D., faces and butt joint of the plain bearings are coated with a tin flash for protection against corrosion.

P21 and P22 materials are structurally the same as P20 although their sliding layer is thicker. The sliding layer is between 0.15 and 0.4 mm thick making further machining of the bearing surface possible. For example, bearings already installed can be fine turned or reamed in order to correct misalignment of the housing bores or to provide bearings with a small radial internal clearance.

- P20 is ready for assembly and has lubrication pockets.
- P21 has a machining allowance and lubrication pockets.
- P22 has a machining allowance and is without lubrication pockets.

Characteristics

- pv value up to 3 N/mm^2 x m/s (85650 psi x fpm)
- High load carrying capacity; permissible static contact pressure 250 N/mm^2 (36258 psi)
- Sliding velocity up to 3 m/s (590 fpm)
- Low coefficient of friction (0.02 to 0.2)
- Suitable for temperatures from –40 C to +110 C (–40 F to +230 F), for short periods up to + 140 C (+ 284 F)
- Well suited for rotating and oscillating motion
- Low maintenance because of long relubrication intervals
- Low wear
- Good embedding properties for dirt and foreign matter
- Low sensitivity to edge loading
- No absorption of water

General Information
ELGES SPHERICAL PLAIN BEARINGS AND ROD ENDS

PRODUCT DESCRIPTION

Elges Spherical Plain Bearings

- Available as inch and metric series
- Available as steel on steel sliding for high shock load capacity
- Available as chrome on PTFE for maintenance free operation
- Many series available with seals for excluding contamination
- For operation in difficult applications for rolling bearings such as hydraulic cylinders, construction equipment, dredging and others

Elges Rod Ends

- Available as popular metric series
- Allows adjustments in equipment by self aligning and with threaded adapter lengths
- Available with weldable ends for hydraulic cylinders
- Available as standard duty and maintenance free designs
- Many series available with seals for excluding contamination

Part Number Identification
PERMAGLIDE® PLAIN BEARINGS

PERMAGLIDE PLAIN BEARINGS

PAP

PAP **10** **20** **P10**

PREFIX
PAP — Metric, Radial Plain Bearing

Shaft
In Millimeters

Width
In Millimeters

SUFFIX
P10 — Steel Backing, Maintenance-Free
P11 — Bronze Backing, Maintenance-Free
P20 — Low-Maintenance, Lube Pockets

PERMAGLIDE PLAIN BEARINGS

PAPZ

PAPZ **08** **12** **P10**

PREFIX
PAPZ — Inch, Radial Plain Bearing

Shaft
In Sixteenths Of An Inch

Width
In Sixteenths Of An Inch

SUFFIX
P10 — Steel Backing, Maintenance-Free

PERMAGLIDE FLANGED PLAIN BEARINGS

PAF

PAF **08** **095** **P10**

PREFIX
PAF — Metric, Flanged Plain Bearing

Shaft
In Millimeters

Width
In 1/10 Millimeter

SUFFIX
P10 — Steel Backing, Maintenance-Free

Part Number Identification
PERMAGLIDE® PLAIN BEARINGS

PERMAGLIDE THRUST WASHERS

PAW

PAW **10** **P10**

PREFIX
PAW — Metric, Thrust Washer

Shaft
In Millimeters

SUFFIX
P10 — Steel Backing, Maintenance-Free
P20 — Low-Maintenance, Lube Pockets

PERMAGLIDE STRIPS

PAS

PAS **15** **250** **P10**

PREFIX
PAS — Metric, Strip

Thickness
In 1/10 Millimeter

Width
In Millimeters

SUFFIX
P10 — Steel Backing, Maintenance-Free
P11 — Bronze Backing, Maintenance-Free
P20 — Low-Maintenance, Lube Pockets
P21 — Low-Maintenance, Lube Pockets, Machining Allowance
P22 — Low-Maintenance Machining Allowance

Part Number Identification

ELGES SPHERICAL PLAIN BEARINGS AND ROD ENDS

ELGES SPHERICAL PLAIN BEARINGS MAINTENANCE REQUIRED

GE

GE **35** **D** **O** **2RS**

- **GE**: Spherical Plain Bearing
- **35**: **Shaft** Millimeters; Shaft in 16th inch (ZO suffix)
- **D**:

D	Standard Metric
F	Wide Inner Ring
L	Inner Ring Extended On Both Sides
H	Inner Ring Extra Extended On Both Sides
Z	Standard Inch Sizes
PB	Steel/Bronze Sliding Surface, Bronze Outer Ring Pressed Around Inner Ring

SX	Angular Contact, Single Direction
AX	Thrust, Single Direction

- **O**: O — Steel/Steel Sliding Surfaces, Single Axial Split In Outer Ring
- **2RS**: 2 Seals

Part Number Identification
ELGES SPHERICAL PLAIN BEARINGS AND ROD ENDS

ELGES SPHERICAL PLAIN BEARINGS MAINTENANCE-FREE

GE

GE **35** **UK** **2RS**

- **GE** — Spherical Plain Bearing
- **35** — **Shaft** Millimeters
- **UK** — **RADIAL BEARINGS**
  - UK — Chrome/PTFE Sliding Surfaces, Outer Split Axially
  - DW — Chrome/PTFE Sliding Surfaces, Outer Split Axially
  - FW — Chrome/PTFE Sliding Surfaces, Wide Inner Ring, Larger Tilting Angle
  - PW — Steel/PTFE Sliding Surfaces, Outer Bronze Ring, Pressed Around Inner Ring
  - SW — Angular Contact, Chrome/PTFE Sliding Surfaces
  - AW — Axial, Chrome/PTFE Sliding Surfaces
- **2RS** — 2 Seals

ELGES ROD ENDS DIN648 SERIES E

GI, GA

GI **R** **35** **DO** **2RS**

- **GI** — GA External Threads; GI Internal Threads
- **R** — ##R Right Hand Threads; ##L Left Hand Threads
- **35** — **Shaft** Millimeters
- **DO** — **ROD END BEARINGS**
  - DO — Steel/Steel Sliding Surfaces, Requires Maintenance
  - UK — Chrome/PTFE Sliding Surfaces, Maintenance Free
- **2RS** — 2 Seals

Part Number Identification

ELGES SPHERICAL PLAIN BEARINGS AND ROD ENDS

ELGES HYDRAULIC ROD ENDS

GIHN, GIHO, GIHR

GIHN K 35 LO

GIHN	Internal Thread Rod End per DIN 24338
GIHO	Internal Threads per DIN 24555
GIHR	Short Internal Threads, (Reduce Length Style)

-K	Thread Clamping By Two Hex Socket Screws Arranged On Either Side Of The Thread

Shaft
In Millimeters

DO	Using GE..DO, Standard Inner Width
LO	Using GE..LO, Extended Inner Ring

ELGES HYDRAULIC ROD ENDS

GK, GF

GF 25 DO

GK	Circular Welding Face, With Centering Pin In Shank Bottom
GF	Rectangular Welding Face

Shaft
In Millimeters

ROD END SPHERICAL BEARING

DO	Steel On Steel Sliding per Series E DIN648

Part Number Identification

ELGES SPHERICAL PLAIN BEARINGS AND ROD ENDS

ELGES ROD ENDS
DIN648 SERIES K

GI, GA

GI KF R 25 PB

GI	External Threads
GA	Internal Threads

..KF..	Standard Thread
..PF..	Fine Pitch Thread To Fit Pneumatic Cylinders
..KM..	No Suffix, Steel/Brass, Requires Relubrication

..R	Right Hand Threads
..L	Left Hand Threads

Shaft
Millimeters

PW	Steel/PTFE Sliding Surfaces, Outer Bronze Ring Pressed Around Inner Ring
PB	Steel/Bronze Sliding Surface, Bronze Outer Ring Pressed Around Inner Ring

Interchange
Metric Plain Bearings
PAP..P10 SERIES

- Maintenance free

For details on part numbers, descriptive suffixes and various technical references, please refer to front of this section.
For engineering or technical information contact your local sales representative or call Distributor Sales (800)523-6572.

PERMAGLIDE			GARLOCK		
PAP	0203	P10	MB	0203	DU
PAP	0205	P10	MB	0205	DU
PAP	0303	P10	MB	0303	DU
PAP	0304	P10		NONE	
PAP	0305	P10	MB	0305	DU
PAP	0306	P10	MB	0306	DU
PAP	0403	P10	MB	0403	DU
PAP	0404	P10	MB	0404	DU
PAP	0406	P10	MB	0406	DU
PAP	0410	P10	MB	0410	DU
PAP	0505	P10	MB	0505	DU
PAP	0508	P10	MB	0508	DU
PAP	0510	P10	MB	0510	DU
PAP	0606	P10	MB	0606	DU
PAP	0608	P10	MB	0608	DU
PAP	0610	P10	MB	0610	DU
PAP	0710	P10	MB	0710	DU
PAP	0808	P10	MB	0808	DU
PAP	0810	P10	MB	0810	DU
PAP	0812	P10	MB	0812	DU
PAP	1008	P10	MB	1008	DU
PAP	1010	P10	MB	1010	DU
PAP	1012	P10	MB	1012	DU
PAP	1015	P10	MB	1015	DU
PAP	1020	P10	MB	1020	DU
PAP	1208	P10	MB	1208	DU
PAP	1210	P10	MB	1210	DU
PAP	1212	P10	MB	1212	DU
PAP	1215	P10	MB	1215	DU
PAP	1220	P10	MB	1220	DU
PAP	1225	P10	MB	1225	DU
PAP	1310	P10	MB	1310	DU
PAP	1410	P10	MB	1410	DU
PAP	1412	P10	MB	1412	DU
PAP	1415	P10	MB	1415	DU
PAP	1420	P10	MB	1420	DU
PAP	1425	P10	MB	1425	DU
PAP	1510	P10	MB	1510	DU
PAP	1512	P10	MB	1512	DU
PAP	1515	P10	MB	1515	DU
PAP	1520	P10	MB	1520	DU
PAP	1525	P10	MB	1525	DU
PAP	1610	P10	MB	1610	DU
PAP	1612	P10	MB	1612	DU
PAP	1615	P10	MB	1615	DU
PAP	1620	P10	MB	1620	DU
PAP	1625	P10	MB	1625	DU
PAP	1815	P10	MB	1815	DU
PAP	1820	P10	MB	1820	DU
PAP	1825	P10	MB	1825	DU
PAP	2010	P10	MB	2010	DU

PERMAGLIDE			GARLOCK		
PAP	2015	P10	MB	2015	DU
PAP	2020	P10	MB	2020	DU
PAP	2025	P10	MB	2025	DU
PAP	2030	P10	MB	2030	DU
PAP	2215	P10	MB	2215	DU
PAP	2220	P10	MB	2220	DU
PAP	2225	P10	MB	2225	DU
PAP	2230	P10	MB	2230	DU
PAP	2415	P10	MB	2415	DU
PAP	2420	P10	MB	2420	DU
PAP	2425	P10	MB	2425	DU
PAP	2430	P10	MB	2430	DU
PAP	2515	P10	MB	2515	DU
PAP	2520	P10	MB	2520	DU
PAP	2525	P10	MB	2525	DU
PAP	2530	P10	MB	2530	DU
PAP	2540	P10		NONE	
PAP	2550	P10	MB	2550	DU
PAP	2820	P10	MB	2820	DU
PAP	2830	P10	MB	2830	DU
PAP	3015	P10	MB	3015	DU
PAP	3020	P10	MB	3020	DU
PAP	3025	P10	MB	3025	DU
PAP	3030	P10	MB	3030	DU
PAP	3040	P10	MB	3040	DU
PAP	3230	P10	MB	3230	DU
PAP	3240	P10	MB	3240	DU
PAP	3520	P10	MB	3520	DU
PAP	3530	P10	MB	3530	DU
PAP	3540	P10	MB	3540	DU
PAP	3550	P10	MB	3550	DU
PAP	4020	P10	MB	4020	DU
PAP	4030	P10	MB	4030	DU
PAP	4040	P10	MB	4040	DU
PAP	4050	P10	MB	4050	DU
PAP	4530	P10	MB	4530	DU
PAP	4540	P10	MB	4540	DU
PAP	4550	P10	MB	4550	DU
PAP	5020	P10	MB	5020	DU
PAP	5030	P10	MB	5030	DU
PAP	5040	P10	MB	5040	DU
PAP	5060	P10	MB	5060	DU
PAP	5540	P10	MB	5540	DU
PAP	5560	P10	MB	5560	DU
PAP	6030	P10	MB	6030	DU
PAP	6040	P10	MB	6040	DU
PAP	6060	P10	MB	6060	DU
PAP	6070	P10	MB	6070	DU
PAP	6550	P10	MB	6550	DU
PAP	6560	P10		NONE	
PAP	6570	P10	MB	6570	DU

PERMAGLIDE			GARLOCK		
PAP	7040	P10	MB	7040	DU
PAP	7050	P10	MB	7050	DU
PAP	7070	P10	MB	7070	DU
PAP	7540	P10		NONE	
PAP	7550	P10		NONE	
PAP	7560	P10	MB	7560	DU
PAP	7580	P10	MB	7580	DU
PAP	8040	P10		NONE	
PAP	8060	P10	MB	8060	DU
PAP	8080	P10		NONE	
PAP	80100	P10	MB	80100	DU
PAP	8560	P10	MB	8560	DU
PAP	85100	P10	MB	85100	DU
PAP	9050	P10		NONE	
PAP	9060	P10	MB	9060	DU
PAP	90100	P10	MB	90100	DU
PAP	9560	P10	MB	9560	DU
PAP	95100	P10	MB	95100	DU
PAP	10060	P10	MB	10060	DU
PAP	100115	P10	MB	100115	DU
PAP	10560	P10	MB	10560	DU
PAP	105115	P10	MB	105115	DU
PAP	11060	P10	MB	11060	DU
PAP	110115	P10	MB	110115	DU
PAP	11550	P10	MB	11550	DU
PAP	11560	P10		NONE	
PAP	11570	P10	MB	11570	DU
PAP	12060	P10	MB	12060	DU
PAP	120100	P10	MB	120100	DU
PAP	125100	P10	MB	125100	DU
PAP	13060	P10	MB	13060	DU
PAP	130100	P10	MB	130100	DU
PAP	13560	P10	MB	13560	DU
PAP	13580	P10	MB	13580	DU
PAP	14060	P10	MB	14060	DU
PAP	140100	P10	MB	140100	DU
PAP	15060	P10	MB	15060	DU
PAP	15080	P10	MB	15080	DU
PAP	150100	P10	MB	150100	DU
PAP	16080	P10	MB	16080	DU
PAP	160100	P10	MB	160100	DU
PAP	180100	P10	MB	180100	DU
PAP	200100	P10	MB	200100	DU
PAP	220100	P10	MB	220100	DU
PAP	250100	P10	MB	250100	DU
PAP	300100	P10	MB	300100	DU

Permaglide is a registered trademark and a product of KOLBENSCHMIDT AG, Neckarsulm, also produced in Greensburg, Indiana, USA.
All other products and company names are trademarks or registered trademarks of their respective companies.

Interchange
Inch Plain Bearings
PAPZ..P10 SERIES

● Maintenance free

For details on part numbers, descriptive suffixes and various technical references, please refer to front of this section.
For engineering or technical information contact your local sales representative or call Distributor Sales (800)523-6572.

PERMAGLIDE			GARLOCK		
PAPZ	0303	P10	03	DU	03
PAPZ	0304	P10	03	DU	04
PAPZ	0306	P10	03	DU	06
PAPZ	0404	P10	04	DU	04
PAPZ	0406	P10	04	DU	06
PAPZ	0408	P10		NONE	
PAPZ	0506	P10	05	DU	06
PAPZ	0603	P10	06	DU	03
PAPZ	0604	P10	06	DU	04
PAPZ	0606	P10	06	DU	06
PAPZ	0608	P10	06	DU	08
PAPZ	0610	P10	06	DU	10
PAPZ	0612	P10	06	DU	12
PAPZ	0706	P10		NONE	
PAPZ	0708	P10	07	DU	08
PAPZ	0710	P10		NONE	
PAPZ	0712	P10	07	DU	12
PAPZ	0804	P10	08	DU	04
PAPZ	0806	P10	08	DU	06
PAPZ	0808	P10	08	DU	08
PAPZ	0810	P10	08	DU	10
PAPZ	0812	P10	08	DU	12
PAPZ	0814	P10	08	DU	14
PAPZ	0908	P10	09	DU	08
PAPZ	0912	P10	09	DU	12
PAPZ	1004	P10	10	DU	04
PAPZ	1008	P10	10	DU	08
PAPZ	1010	P10	10	DU	10
PAPZ	1012	P10	10	DU	12
PAPZ	1014	P10	10	DU	14
PAPZ	1204	P10	12	DU	04
PAPZ	1206	P10	12	DU	06
PAPZ	1208	P10	12	DU	08
PAPZ	1210	P10	12	DU	10
PAPZ	1212	P10	12	DU	12
PAPZ	1216	P10	12	DU	16
PAPZ	1412	P10	14	DU	12
PAPZ	1416	P10	14	DU	16
PAPZ	1608	P10	16	DU	08
PAPZ	1612	P10	16	DU	12
PAPZ	1616	P10	16	DU	16
PAPZ	1620	P10	16	DU	20
PAPZ	1624	P10	16	DU	24
PAPZ	1808	P10	18	DU	08
PAPZ	1812	P10	18	DU	12
PAPZ	1816	P10	18	DU	16
PAPZ	2012	P10	20	DU	12
PAPZ	2016	P10	20	DU	16

PERMAGLIDE			GARLOCK		
PAPZ	2020	P10	20	DU	20
PAPZ	2210	P10	22	DU	10
PAPZ	2216	P10	22	DU	16
PAPZ	2228	P10	22	DU	28
PAPZ	2416	P10	24	DU	16
PAPZ	2420	P10	24	DU	20
PAPZ	2424	P10	24	DU	24
PAPZ	2432	P10	24	DU	32
PAPZ	2616	P10	26	DU	16
PAPZ	2624	P10	26	DU	24
PAPZ	2816	P10	28	DU	16
PAPZ	2824	P10	28	DU	24
PAPZ	2832	P10	28	DU	32
PAPZ	3216	P10	32	DU	16
PAPZ	3224	P10	32	DU	24
PAPZ	3232	P10	32	DU	32
PAPZ	3240	P10	32	DU	40

Interchange
Metric Thrust Washers
PAW..P10 SERIES

- Maintenance free

For details on part numbers, descriptive suffixes and various technical references, please refer to front of this section.
For engineering or technical information contact your local sales representative or call Distributor Sales (800)523-6572.

PERMAGLIDE			GARLOCK		
PAW	10	P10	NONE		
PAW	12	P10	WC	10	DU
PAW	14	P10	WC	12	DU
PAW	16	P10	WC	14	DU
PAW	18	P10	WC	16	DU
PAW	20	P10	WC	18	DU
PAW	22	P10	WC	20	DU
PAW	26	P10	WC	24	DU
PAW	28	P10	WC	25	DU
PAW	32	P10	WC	30	DU
PAW	38	P10	WC	35	DU
PAW	42	P10	WC	40	DU
PAW	48	P10	WC	45	DU
PAW	52	P10	WC	50	DU
PAW	62	P10	NONE		

Permaglide Plain Bearings

PAPZ...P10 SERIES

- Inch dimensions
- Maintenance free
- Steel backing

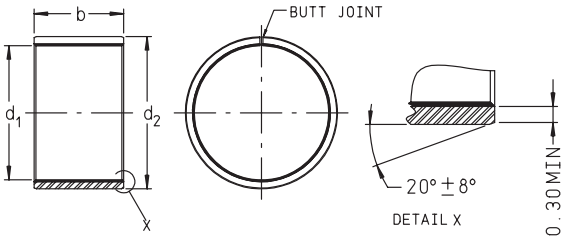

For details on part numbers, descriptive suffixes and various technical references, please refer to front of this section.
For engineering or technical information contact your local sales representative or call Distributor Sales (800)523-6572.

PART NUMBER	SHAFT d_1 inch	SHAFT d_1 mm	OD d_2 inch	OD d_2 mm	LENGTH b inch	LENGTH b mm	WEIGHT lbs	WEIGHT g
PAPZ 0303 P10	3/16	4.763	1/4	6.350	3/16	4.763	0.0011	0.5
PAPZ 0304 P10	3/16	4.763	1/4	6.350	1/4	6.350	0.0015	0.7
PAPZ 0306 P10	3/16	4.763	1/4	6.350	3/8	9.525	0.0022	1.0
PAPZ 0404 P10	1/4	6.350	5/16	7.938	1/4	6.350	0.0018	0.8
PAPZ 0406 P10	1/4	6.350	5/16	7.938	3/8	9.525	0.0029	1.3
PAPZ 0408 P10	1/4	6.350	5/16	7.938	1/2	12.700	0.0037	1.7
PAPZ 0506 P10	5/16	7.938	3/8	9.525	3/8	9.525	0.0035	1.6
PAPZ 0603 P10	3/8	9.525	15/32	11.906	3/16	4.763	0.0031	1.4
PAPZ 0604 P10	3/8	9.525	15/32	11.906	1/4	6.350	0.0042	1.9
PAPZ 0606 P10	3/8	9.525	15/32	11.906	3/8	9.525	0.0064	2.9
PAPZ 0608 P10	3/8	9.525	15/32	11.906	1/2	12.700	0.0084	3.8
PAPZ 0610 P10	3/8	9.525	15/32	11.906	5/8	15.875	0.0106	4.8
PAPZ 0612 P10	3/8	9.525	15/32	11.906	3/4	19.050	0.0128	5.8
PAPZ 0706 P10	7/16	11.113	17/32	13.494	3/8	9.525	0.0073	3.3
PAPZ 0708 P10	7/16	11.113	17/32	13.494	1/2	12.700	0.0097	4.4
PAPZ 0710 P10	7/16	11.113	17/32	13.494	5/8	15.875	0.0121	5.5
PAPZ 0712 P10	7/16	11.113	17/32	13.494	3/4	19.050	0.0145	6.6
PAPZ 0804 P10	1/2	12.700	19/32	15.081	1/4	6.350	0.0055	2.5
PAPZ 0806 P10	1/2	12.700	19/32	15.081	3/8	9.525	0.0081	3.7
PAPZ 0808 P10	1/2	12.700	19/32	15.081	1/2	12.700	0.0110	5.0
PAPZ 0810 P10	1/2	12.700	19/32	15.081	5/8	15.875	0.0137	6.2
PAPZ 0812 P10	1/2	12.700	19/32	15.081	3/4	19.050	0.0165	7.5
PAPZ 0814 P10	1/2	12.700	19/32	15.081	7/8	22.225	0.0192	8.7
PAPZ 0908 P10	9/16	14.288	21/32	16.669	1/2	12.700	0.0121	5.5
PAPZ 0912 P10	9/16	14.288	21/32	16.669	3/4	19.050	0.0183	8.3
PAPZ 1004 P10	5/8	15.875	23/32	18.256	1/4	6.350	0.0066	3.0
PAPZ 1008 P10	5/8	15.875	23/32	18.256	1/2	12.700	0.0134	6.1
PAPZ 1010 P10	5/8	15.875	23/32	18.256	5/8	15.875	0.0167	7.6
PAPZ 1012 P10	5/8	15.875	23/32	18.256	3/4	19.050	0.0203	9.2
PAPZ 1014 P10	5/8	15.875	23/32	18.256	7/8	22.225	0.0236	10.7
PAPZ 1204 P10	3/4	19.050	7/8	22.225	1/4	6.350	0.0108	4.9
PAPZ 1206 P10	3/4	19.050	7/8	22.225	3/8	9.525	0.0165	7.5
PAPZ 1208 P10	3/4	19.050	7/8	22.225	1/2	12.700	0.0218	9.9
PAPZ 1210 P10	3/4	19.050	7/8	22.225	5/8	15.875	0.0271	12.3
PAPZ 1212 P10	3/4	19.050	7/8	22.225	3/4	19.050	0.0326	14.8
PAPZ 1216 P10	3/4	19.050	7/8	22.225	1	25.400	0.0434	19.7
PAPZ 1412 P10	7/8	22.225	1	25.400	3/4	19.050	0.0377	17.1
PAPZ 1416 P10	7/8	22.225	1	25.400	1	25.400	0.0502	22.8
PAPZ 1608 P10	1	25.400	1-1/8	28.575	1/2	12.700	0.0284	12.9
PAPZ 1612 P10	1	25.400	1-1/8	28.575	3/4	19.050	0.0425	19.3
PAPZ 1616 P10	1	25.400	1-1/8	28.575	1	25.400	0.0568	25.8
PAPZ 1620 P10	1	25.400	1-1/8	28.575	1-1/4	31.750	0.0709	32.2
PAPZ 1624 P10	1	25.400	1-1/8	28.575	1-1/2	38.100	0.0852	38.7
PAPZ 1808 P10	1-1/8	28.575	1-9/32	32.544	1/2	12.700	0.0403	18.3
PAPZ 1812 P10	1-1/8	28.575	1-9/32	32.544	3/4	19.050	0.0604	27.4
PAPZ 1816 P10	1-1/8	28.575	1-9/32	32.544	1	25.400	0.0804	36.5

Permaglide Plain Bearings

PAPZ...P10 SERIES

- Inch dimensions
- Maintenance free
- Steel backing

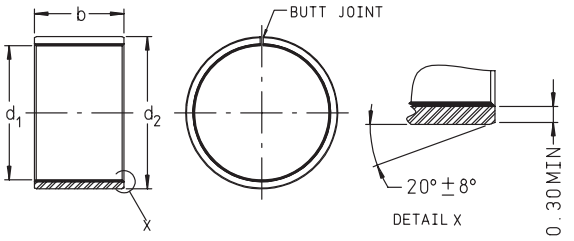

For details on part numbers, descriptive suffixes and various technical references, please refer to front of this section.
For engineering or technical information contact your local sales representative or call Distributor Sales (800)523-6572.

PART NUMBER	SHAFT d_1 inch	SHAFT d_1 mm	OD d_2 inch	OD d_2 mm	LENGTH b inch	LENGTH b mm	WEIGHT lbs	WEIGHT g
PAPZ 2012 P10	1-1/4	31.750	1-13/32	35.719	3/4	19.050	0.0665	30.2
PAPZ 2016 P10	1-1/4	31.750	1-13/32	35.719	1	25.400	0.0888	40.3
PAPZ 2020 P10	1-1/4	31.750	1-13/32	35.719	1-1/4	31.750	0.1111	50.4
PAPZ 2210 P10	1-3/8	34.925	1-17/32	38.894	5/8	15.875	0.0607	27.6
PAPZ 2216 P10	1-3/8	34.925	1-17/32	38.894	1	25.400	0.0972	44.1
PAPZ 2228 P10	1-3/8	34.925	1-17/32	38.894	1-3/4	44.450	0.1696	77.0
PAPZ 2416 P10	1-1/2	38.100	1-21/32	42.069	1	25.400	0.1057	48.0
PAPZ 2420 P10	1-1/2	38.100	1-21/32	42.069	1-1/4	31.750	0.1322	60.0
PAPZ 2424 P10	1-1/2	38.100	1-21/32	42.069	1-1/2	38.100	0.1586	72.0
PAPZ 2432 P10	1-1/2	38.100	1-21/32	42.069	2	50.800	0.2115	96.0
PAPZ 2616 P10	1-5/8	41.275	1-25/32	45.244	1	25.400	0.1145	52.0
PAPZ 2624 P10	1-5/8	41.275	1-25/32	45.244	1-1/2	38.100	0.1718	78.0
PAPZ 2816 P10	1-3/4	44.450	1-15/16	49.213	1	25.400	0.1476	67.0
PAPZ 2824 P10	1-3/4	44.450	1-15/16	49.213	1-1/2	38.100	0.2225	101.0
PAPZ 2832 P10	1-3/4	44.450	1-15/16	49.213	2	50.800	0.2952	134.0
PAPZ 3216 P10	2	50.800	2-3/16	55.563	1	25.400	0.1674	76.0
PAPZ 3224 P10	2	50.800	2-3/16	55.563	1-1/2	38.100	0.2511	114.0
PAPZ 3232 P10	2	50.800	2-3/16	55.563	2	50.800	0.3370	153.0
PAPZ 3240 P10	2	50.800	2-3/16	55.563	2-1/2	63.500	0.4207	191.0

Permaglide Plain Bearings

PAP...P10 SERIES

- Metric dimensions
- Maintenance free
- Steel backing
- Recommended Mounting Tolerances:
  Shaft – ID<5:h6, 5 ± ID<80:f7, 80 ± ID:h8
  Housing bore – OD ± 5.5:H6, 5.5<OD:H7

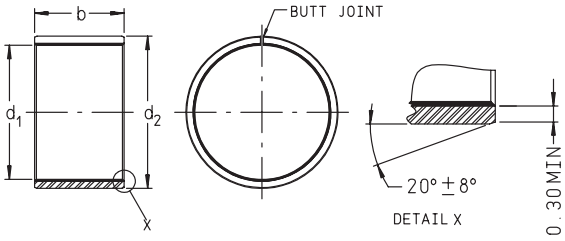

For details on part numbers, descriptive suffixes and various technical references, please refer to front of this section.
For engineering or technical information contact your local sales representative or call Distributor Sales (800)523-6572.

PART NUMBER	SHAFT d_1 inch	SHAFT d_1 mm	OD d_2 inch	OD d_2 mm	LENGTH b inch	LENGTH b mm	WEIGHT lbs	WEIGHT g
PAP 0203 P10	0.079	2	0.138	3.5	0.118	3	0.0004	0.20
PAP 0205 P10	0.079	2	0.138	3.5	0.197	5	0.0007	0.30
PAP 0303 P10	0.118	3	0.177	4.5	0.118	3	0.0004	0.19
PAP 0304 P10	0.118	3	0.177	4.5	0.157	4	0.0004	0.20
PAP 0305 P10	0.118	3	0.177	4.5	0.197	5	0.0007	0.32
PAP 0306 P10	0.118	3	0.177	4.5	0.236	6	0.0009	0.39
PAP 0403 P10	0.157	4	0.217	5.5	0.118	3	0.0005	0.24
PAP 0404 P10	0.157	4	0.217	5.5	0.157	4	0.0007	0.33
PAP 0406 P10	0.157	4	0.217	5.5	0.236	6	0.0013	0.60
PAP 0410 P10	0.157	4	0.217	5.5	0.394	10	0.0019	0.84
PAP 0505 P10	0.197	5	0.276	7	0.197	5	0.0016	0.71
PAP 0508 P10	0.197	5	0.276	7	0.315	8	0.0025	1.14
PAP 0510 P10	0.197	5	0.276	7	0.394	10	0.0031	1.43
PAP 0606 P10	0.236	6	0.315	8	0.236	6	0.0020	0.90
PAP 0608 P10	0.236	6	0.315	8	0.315	8	0.0031	1.40
PAP 0610 P10	0.236	6	0.315	8	0.394	10	0.0037	1.67
PAP 0710 P10	0.276	7	0.354	9	0.394	10	0.0040	1.80
PAP 0808 P10	0.315	8	0.394	10	0.315	8	0.0038	1.72
PAP 0810 P10	0.315	8	0.394	10	0.394	10	0.0046	2.10
PAP 0812 P10	0.315	8	0.394	10	0.472	12	0.0055	2.50
PAP 1008 P10	0.394	10	0.472	12	0.315	8	0.0044	2.00
PAP 1010 P10	0.394	10	0.472	12	0.394	10	0.0055	2.50
PAP 1012 P10	0.394	10	0.472	12	0.472	12	0.0064	2.90
PAP 1015 P10	0.394	10	0.472	12	0.591	15	0.0084	3.80
PAP 1020 P10	0.394	10	0.472	12	0.787	20	0.0116	5.28
PAP 1208 P10	0.472	12	0.551	14	0.315	8	0.0044	2.00
PAP 1210 P10	0.472	12	0.551	14	0.394	10	0.0066	3.00
PAP 1212 P10	0.472	12	0.551	14	0.472	12	0.0082	3.74
PAP 1215 P10	0.472	12	0.551	14	0.591	15	0.0103	4.68
PAP 1220 P10	0.472	12	0.551	14	0.787	20	0.0134	6.10
PAP 1225 P10	0.472	12	0.551	14	0.984	25	0.0167	7.60
PAP 1310 P10	0.512	13	0.591	15	0.394	10	0.0070	3.20
PAP 1410 P10	0.551	14	0.630	16	0.394	10	0.0077	3.50
PAP 1412 P10	0.551	14	0.630	16	0.472	12	0.0095	4.32
PAP 1415 P10	0.551	14	0.630	16	0.591	15	0.0119	5.40
PAP 1420 P10	0.551	14	0.630	16	0.787	20	0.0156	7.10
PAP 1425 P10	0.551	14	0.630	16	0.984	25	0.0194	8.80
PAP 1510 P10	0.591	15	0.669	17	0.394	10	0.0081	3.70
PAP 1512 P10	0.591	15	0.669	17	0.472	12	0.0099	4.50
PAP 1515 P10	0.591	15	0.669	17	0.591	15	0.0125	5.70
PAP 1520 P10	0.591	15	0.669	17	0.787	20	0.0167	7.60
PAP 1525 P10	0.591	15	0.669	17	0.984	25	0.0207	9.40
PAP 1610 P10	0.630	16	0.709	18	0.394	10	0.0088	4.00
PAP 1612 P10	0.630	16	0.709	18	0.472	12	0.0106	4.80
PAP 1615 P10	0.630	16	0.709	18	0.591	15	0.0134	6.10
PAP 1620 P10	0.630	16	0.709	18	0.787	20	0.0178	8.10

Permaglide Plain Bearings

PAP...P10 SERIES

- Metric dimensions
- Maintenance free
- Steel backing
- Recommended Mounting Tolerances:
  Shaft – ID<5:h6, 5 ± ID<80:f7, 80 ± ID:h8
  Housing bore – OD ± 5.5:H6, 5.5<OD:H7

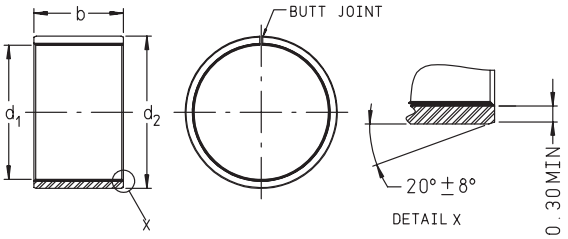

For details on part numbers, descriptive suffixes and various technical references, please refer to front of this section.
For engineering or technical information contact your local sales representative or call Distributor Sales (800)523-6572.

PART NUMBER	SHAFT d_1 inch	SHAFT d_1 mm	OD d_2 inch	OD d_2 mm	LENGTH b inch	LENGTH b mm	WEIGHT lbs	WEIGHT g
PAP 1625 P10	0.630	16	0.709	18	0.984	25	0.0222	10.10
PAP 1815 P10	0.709	18	0.787	20	0.591	15	0.0147	6.70
PAP 1820 P10	0.709	18	0.787	20	0.787	20	0.0196	8.90
PAP 1825 P10	0.709	18	0.787	20	0.984	25	0.0244	11.10
PAP 2010 P10	0.787	20	0.906	23	0.394	10	0.0169	7.70
PAP 2015 P10	0.787	20	0.906	23	0.591	15	0.0256	11.64
PAP 2020 P10	0.787	20	0.906	23	0.787	20	0.0332	15.10
PAP 2025 P10	0.787	20	0.906	23	0.984	25	0.0420	19.10
PAP 2030 P10	0.787	20	0.906	23	1.181	30	0.0506	23.00
PAP 2215 P10	0.866	22	0.984	25	0.591	15	0.0280	12.72
PAP 2220 P10	0.866	22	0.984	25	0.787	20	0.0365	16.60
PAP 2225 P10	0.866	22	0.984	25	0.984	25	0.0464	21.10
PAP 2230 P10	0.866	22	0.984	25	1.181	30	0.0554	25.20
PAP 2415 P10	0.945	24	1.063	27	0.591	15	0.0297	13.50
PAP 2420 P10	0.945	24	1.063	27	0.787	20	0.0394	17.90
PAP 2425 P10	0.945	24	1.063	27	0.984	25	0.0502	22.80
PAP 2430 P10	0.945	24	1.063	27	1.181	30	0.0596	27.10
PAP 2515 P10	0.984	25	1.102	28	0.591	15	0.0312	14.20
PAP 2520 P10	0.984	25	1.102	28	0.787	20	0.0418	19.00
PAP 2525 P10	0.984	25	1.102	28	0.984	25	0.0526	23.92
PAP 2530 P10	0.984	25	1.102	28	1.181	30	0.0625	28.40
PAP 2540 P10	0.984	25	1.102	28	1.575	40	0.0836	38.00
PAP 2550 P10	0.984	25	1.102	28	1.969	50	0.1049	47.70
PAP 2820 P10	1.102	28	1.260	32	0.787	20	0.0634	28.80
PAP 2830 P10	1.102	28	1.260	32	1.181	30	0.0968	44.00
PAP 3015 P10	1.181	30	1.339	34	0.591	15	0.0504	22.90
PAP 3020 P10	1.181	30	1.339	34	0.787	20	0.0680	30.90
PAP 3025 P10	1.181	30	1.339	34	0.984	25	0.0847	38.52
PAP 3030 P10	1.181	30	1.339	34	1.181	30	0.1014	46.10
PAP 3040 P10	1.181	30	1.339	34	1.575	40	0.1386	63.00
PAP 3230 P10	1.260	32	1.417	36	1.181	30	0.1076	48.90
PAP 3240 P10	1.260	32	1.417	36	1.575	40	0.1437	65.30
PAP 3520 P10	1.378	35	1.535	39	0.787	20	0.0779	35.40
PAP 3530 P10	1.378	35	1.535	39	1.181	30	0.1159	52.70
PAP 3540 P10	1.378	35	1.535	39	1.575	40	0.1558	70.80
PAP 3550 P10	1.378	35	1.535	39	1.969	50	0.1954	88.80
PAP 4020 P10	1.575	40	1.732	44	0.787	20	0.0880	40.00
PAP 4030 P10	1.575	40	1.732	44	1.181	30	0.1324	60.20
PAP 4040 P10	1.575	40	1.732	44	1.575	40	0.1782	81.00
PAP 4050 P10	1.575	40	1.732	44	1.969	50	0.2222	101.00
PAP 4530 P10	1.772	45	1.969	50	1.181	30	0.1896	86.20
PAP 4540 P10	1.772	45	1.969	50	1.575	40	0.2486	113.00
PAP 4550 P10	1.772	45	1.969	50	1.969	50	0.3157	143.50
PAP 5020 P10	1.969	50	2.165	55	0.787	20	0.1391	63.21
PAP 5030 P10	1.969	50	2.165	55	1.181	30	0.2090	95.00
PAP 5040 P10	1.969	50	2.165	55	1.575	40	0.2783	126.50

Permaglide Plain Bearings

PAP...P10 SERIES

- Metric dimensions
- Maintenance free
- Steel backing
- Recommended Mounting Tolerances:
  Shaft – ID<5:h6, 5 ± ID<80:f7, 80 ± ID:h8
  Housing bore – OD ± 5.5:H6, 5.5<OD:H7

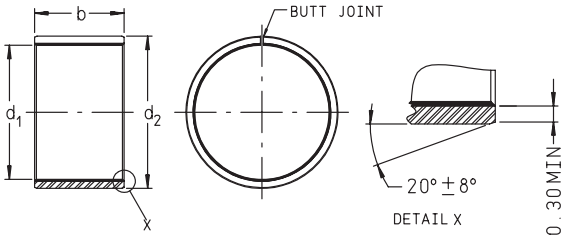

For details on part numbers, descriptive suffixes and various technical references, please refer to front of this section.
For engineering or technical information contact your local sales representative or call Distributor Sales (800)523-6572.

PART NUMBER	SHAFT d_1 inch	SHAFT d_1 mm	OD d_2 inch	OD d_2 mm	LENGTH b inch	LENGTH b mm	WEIGHT lbs	WEIGHT g
PAP 5060 P10	1.969	50	2.165	55	2.362	60	0.4136	188.00
PAP 5540 P10	2.165	55	2.362	60	1.575	40	0.3029	137.70
PAP 5560 P10	2.165	55	2.362	60	2.362	60	0.4554	207.00
PAP 6030 P10	2.362	60	2.559	65	1.181	30	0.2486	113.00
PAP 6040 P10	2.362	60	2.559	65	1.575	40	0.3293	149.70
PAP 6060 P10	2.362	60	2.559	65	2.362	60	0.4963	225.60
PAP 6070 P10	2.362	60	2.559	65	2.756	70	0.5819	264.50
PAP 6550 P10	2.559	65	2.756	70	1.969	50	0.4495	204.30
PAP 6560 P10	2.559	65	2.756	70	2.362	60	0.5368	244.00
PAP 6570 P10	2.559	65	2.756	70	2.756	70	0.6248	284.00
PAP 7040 P10	2.756	70	2.953	75	1.575	40	0.3828	174.00
PAP 7050 P10	2.756	70	2.953	75	1.969	50	0.4785	217.50
PAP 7070 P10	2.756	70	2.953	75	2.756	70	0.6710	305.00
PAP 7540 P10	2.953	75	3.150	80	1.575	40	0.4114	187.00
PAP 7550 P10	2.953	75	3.150	80	1.969	50	0.5133	233.30
PAP 7560 P10	2.953	75	3.150	80	2.362	60	0.6159	279.96
PAP 7580 P10	2.953	75	3.150	80	3.150	80	0.8230	374.10
PAP 8040 P10	3.150	80	3.346	85	1.575	40	0.4334	197.00
PAP 8060 P10	3.150	80	3.346	85	2.362	60	0.6534	297.00
PAP 8080 P10	3.150	80	3.346	85	3.150	80	0.8681	394.60
PAP 80100 P10	3.150	80	3.346	85	3.937	100	1.0824	492.00
PAP 8560 P10	3.346	85	3.543	90	2.362	60	0.6886	313.00
PAP 85100 P10	3.346	85	3.543	90	3.937	100	1.1550	525.00
PAP 9050 P10	3.543	90	3.740	95	1.969	50	0.6094	277.00
PAP 9060 P10	3.543	90	3.740	95	2.362	60	0.7326	333.00
PAP 90100 P10	3.543	90	3.740	95	3.937	100	1.2122	551.00
PAP 9560 P10	3.740	95	3.937	100	2.362	60	0.7722	351.00
PAP 95100 P10	3.740	95	3.937	100	3.937	100	1.2826	583.00
PAP 10060 P10	3.937	100	4.134	105	2.362	60	0.8536	388.00
PAP 100115 P10	3.937	100	4.134	105	4.528	115	1.6324	742.00
PAP 10560 P10	4.134	105	4.331	110	2.362	60	0.8140	370.00
PAP 105115 P10	4.134	105	4.331	110	4.528	115	1.5664	712.00
PAP 11060 P10	4.331	110	4.528	115	2.362	60	0.9020	410.00
PAP 110115 P10	4.331	110	4.528	115	4.528	115	1.7050	775.00
PAP 11550 P10	4.528	115	4.724	120	1.969	50	0.7700	350.00
PAP 11560 P10	4.528	115	4.724	120	2.362	60	0.8800	400.00
PAP 11570 P10	4.528	115	4.724	120	2.756	70	0.9900	450.00
PAP 12060 P10	4.724	120	4.921	125	2.362	60	0.9570	435.00
PAP 120100 P10	4.724	120	4.921	125	3.937	100	1.6060	730.00
PAP 125100 P10	4.921	125	5.118	130	3.937	100	1.6720	760.00
PAP 13060 P10	5.118	130	5.315	135	2.362	60	1.0340	470.00
PAP 130100 P10	5.118	130	5.315	135	3.937	100	1.7490	795.00
PAP 13560 P10	5.315	135	5.512	140	2.362	60	1.0780	490.00
PAP 13580 P10	5.315	135	5.512	140	3.150	80	1.4344	652.00
PAP 14060 P10	5.512	140	5.709	145	2.362	60	1.1330	515.00
PAP 140100 P10	5.512	140	5.709	145	3.937	100	1.8810	855.00

Permaglide Plain Bearings

PAP...P10 SERIES

- Metric dimensions
- Maintenance free
- Steel backing
- Recommended Mounting Tolerances:
  Shaft – ID<5:h6, 5 ± ID<80:f7, 80 ± ID:h8
  Housing bore – OD ± 5.5:H6, 5.5<OD:H7

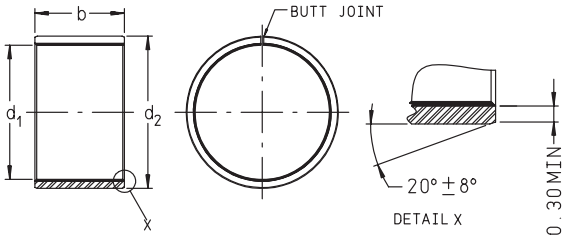

For details on part numbers, descriptive suffixes and various technical references, please refer to front of this section.
For engineering or technical information contact your local sales representative or call Distributor Sales (800)523-6572.

PART NUMBER	SHAFT d_1 inch	SHAFT d_1 mm	OD d_2 inch	OD d_2 mm	LENGTH b inch	LENGTH b mm	WEIGHT lbs	WEIGHT g
PAP 15060 P10	5.906	150	6.102	155	2.362	60	1.2100	550.00
PAP 15080 P10	5.906	150	6.102	155	3.150	80	1.6060	730.00
PAP 150100 P10	5.906	150	6.102	155	3.937	100	2.0130	915.00
PAP 16080 P10	6.299	160	6.496	165	3.150	80	1.7072	776.00
PAP 160100 P10	6.299	160	6.496	165	3.937	100	2.1340	970.00
PAP 180100 P10	7.087	180	7.283	185	3.937	100	2.4200	1,100.00
PAP 200100 P10	7.874	200	8.071	205	3.937	100	2.6840	1,220.00
PAP 220100 P10	8.661	220	8.858	225	3.937	100	2.9040	1,320.00
PAP 250100 P10	9.843	250	10.039	255	3.937	100	3.2890	1,495.00
PAP 300100 P10	11.811	300	12.008	305	3.937	100	3.8720	1,760.00

Permaglide Plain Bearings

PAP...P11 SERIES

- Metric dimensions
- Maintenance free
- Bronze backing
- Recommended Mounting Tolerances:
  Shaft – ID<80:f7, 80 ± ID:h8
  Housing bore – H7

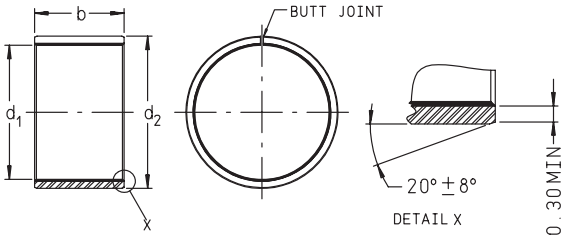

For details on part numbers, descriptive suffixes and various technical references, please refer to front of this section.
For engineering or technical information contact your local sales representative or call Distributor Sales (800)523-6572.

PART NUMBER	SHAFT d_1 inch	SHAFT d_1 mm	OD d_2 inch	OD d_2 mm	LENGTH b inch	LENGTH b mm	WEIGHT lbs	WEIGHT g
PAP 0406 P11	0.157	4	0.236	6	0.236	6	0.0018	0.8
PAP 0505 P11	0.197	5	0.276	7	0.197	5	0.0018	0.8
PAP 0606 P11	0.236	6	0.315	8	0.236	6	0.0024	1.1
PAP 0610 P11	0.236	6	0.315	8	0.394	10	0.0042	1.9
PAP 0808 P11	0.315	8	0.394	10	0.315	8	0.0040	1.8
PAP 0810 P11	0.315	8	0.394	10	0.394	10	0.0048	2.2
PAP 0812 P11	0.315	8	0.394	10	0.472	12	0.0059	2.7
PAP 1005 P11	0.394	10	0.472	12	0.197	5	0.0031	1.4
PAP 1010 P11	0.394	10	0.472	12	0.394	10	0.0059	2.7
PAP 1015 P11	0.394	10	0.472	12	0.591	15	0.0092	4.2
PAP 1020 P11	0.394	10	0.472	12	0.787	20	0.0123	5.6
PAP 1210 P11	0.472	12	0.551	14	0.394	10	0.0073	3.3
PAP 1212 P11	0.472	12	0.551	14	0.472	12	0.0090	4.1
PAP 1215 P11	0.472	12	0.551	14	0.591	15	0.0114	5.2
PAP 1220 P11	0.472	12	0.551	14	0.787	20	0.0152	6.9
PAP 1225 P11	0.472	12	0.551	14	0.984	25	0.0191	8.7
PAP 1415 P11	0.551	14	0.630	16	0.591	15	0.0132	6.0
PAP 1515 P11	0.591	15	0.669	17	0.591	15	0.0150	6.8
PAP 1525 P11	0.591	15	0.669	17	0.984	25	0.0227	10.3
PAP 1615 P11	0.630	16	0.709	18	0.591	15	0.0147	6.7
PAP 1625 P11	0.630	16	0.709	18	0.984	25	0.0242	11.0
PAP 1825 P11	0.709	18	0.787	20	0.984	25	0.0268	12.2
PAP 2015 P11	0.787	20	0.906	23	0.591	15	0.0293	13.3
PAP 2020 P11	0.787	20	0.906	23	0.787	20	0.0374	17.0
PAP 2025 P11	0.787	20	0.906	23	0.984	25	0.0469	21.3
PAP 2030 P11	0.787	20	0.906	23	1.181	30	0.0561	25.5
PAP 2215 P11	0.866	22	0.984	25	0.591	15	0.0345	15.7
PAP 2220 P11	0.866	22	0.984	25	0.787	20	0.0460	20.9
PAP 2225 P11	0.866	22	0.984	25	0.984	25	0.0583	26.5
PAP 2430 P11	0.945	24	1.063	27	1.181	30	0.0750	34.1
PAP 2525 P11	0.984	25	1.102	28	0.984	25	0.0647	29.4
PAP 2530 P11	0.984	25	1.102	28	1.181	30	0.0777	35.3
PAP 2830 P11	1.102	28	1.260	32	1.181	30	0.1012	46.0
PAP 3020 P11	1.181	30	1.339	34	0.787	20	0.0810	36.8
PAP 3030 P11	1.181	30	1.339	34	1.181	30	0.1214	55.2
PAP 3040 P11	1.181	30	1.339	34	1.575	40	0.1628	74.0
PAP 3520 P11	1.378	35	1.535	39	0.787	20	0.0972	44.2
PAP 3530 P11	1.378	35	1.535	39	1.181	30	0.1459	66.3
PAP 4050 P11	1.575	40	1.732	44	1.969	50	0.2609	118.6
PAP 4550 P11	1.772	45	1.969	50	1.969	50	0.4090	185.9
PAP 5030 P11	1.969	50	2.165	55	1.181	30	0.2955	134.3
PAP 5040 P11	1.969	50	2.165	55	1.575	40	0.3938	179.0
PAP 5060 P11	1.969	50	2.165	55	2.362	60	0.5920	269.1
PAP 5540 P11	2.165	55	2.362	60	1.575	40	0.3412	155.1
PAP 6040 P11	2.362	60	2.559	65	1.575	40	0.3705	168.4
PAP 6050 P11	2.362	60	2.559	65	1.969	50	0.4631	210.5

Permaglide Plain Bearings

PAP...P11 SERIES

- Metric dimensions
- Maintenance free
- Bronze backing
- Recommended Mounting Tolerances:
  Shaft – ID<80:f7, 80 ± ID:h8
  Housing bore – H7

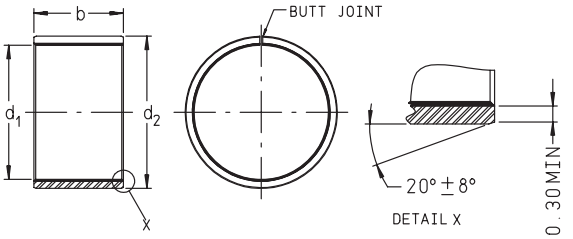

For details on part numbers, descriptive suffixes and various technical references, please refer to front of this section.
For engineering or technical information contact your local sales representative or call Distributor Sales (800)523-6572.

PART NUMBER	SHAFT d_1 inch	SHAFT d_1 mm	OD d_2 inch	OD d_2 mm	LENGTH b inch	LENGTH b mm	WEIGHT lbs	WEIGHT g
PAP 6060 P11	2.362	60	2.559	65	2.362	60	0.5557	252.6
PAP 6070 P11	2.362	60	2.559	65	2.756	70	0.6483	294.7
PAP 7050 P11	2.756	70	2.953	75	1.969	50	0.5379	244.5
PAP 7070 P11	2.756	70	2.953	75	2.756	70	0.7531	342.3
PAP 8060 P11	3.150	80	3.346	85	2.362	60	0.7313	332.4
PAP 80100 P11	3.150	80	3.346	85	3.937	100	1.2188	554.0
PAP 9060 P11	3.543	90	3.740	95	2.362	60	0.7766	353.0
PAP 90100 P11	3.543	90	3.740	95	3.937	100	1.2936	588.0
PAP 9560 P11	3.740	95	3.937	100	2.362	60	0.9460	430.0
PAP 10060 P11	3.937	100	4.134	105	2.362	60	0.9064	412.0
PAP 100115 P11	3.937	100	4.134	105	4.528	115	1.7380	790.0

Permaglide Flanged Plain Bearings

PAF...P10 SERIES

- Maintenance free
- Steel backing
- Recommended Mounting Tolerances:
  Shaft – f7
  Housing bore – H7

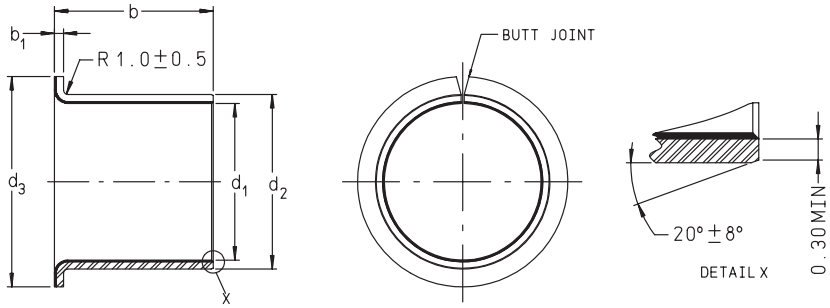

For details on part numbers, descriptive suffixes and various technical references, please refer to front of this section.
For engineering or technical information contact your local sales representative or call Distributor Sales (800)523-6572.

PART NUMBER	SHAFT d_1 inch	SHAFT d_1 mm	OD d_2 inch	OD d_2 mm	FLANGE WALL b_1 inch	FLANGE WALL b_1 mm	LENGTH b inch	LENGTH b mm	FLANGE DIA. d3 inch	FLANGE DIA. d3 mm	WEIGHT lbs	WEIGHT g
PAF 06040 P10	0.236	6	0.315	8	0.039	1	0.157	4	0.472	12	0.0019	0.9
PAF 06070 P10	0.236	6	0.315	8	0.039	1	0.276	7	0.472	12	0.0035	1.6
PAF 06080 P10	0.236	6	0.315	8	0.039	1	0.315	8	0.472	12	0.0037	1.7
PAF 08055 P10	0.315	8	0.394	10	0.039	1	0.217	5.5	0.591	15	0.0037	1.7
PAF 08075 P10	0.315	8	0.394	10	0.039	1	0.295	7.5	0.591	15	0.0046	2.1
PAF 08095 P10	0.315	8	0.394	10	0.039	1	0.374	9.5	0.591	15	0.0056	2.5
PAF 10070 P10	0.394	10	0.472	12	0.039	1	0.276	7	0.709	18	0.0055	2.5
PAF 10090 P10	0.394	10	0.472	12	0.039	1	0.354	9	0.709	18	0.0064	2.9
PAF 10120 P10	0.394	10	0.472	12	0.039	1	0.472	12	0.709	18	0.0084	3.8
PAF 10170 P10	0.394	10	0.472	12	0.039	1	0.669	17	0.709	18	0.0118	5.4
PAF 12070 P10	0.472	12	0.551	14	0.039	1	0.276	7	0.787	20	0.0066	3.0
PAF 12090 P10	0.472	12	0.551	14	0.039	1	0.354	9	0.787	20	0.0082	3.7
PAF 12120 P10	0.472	12	0.551	14	0.039	1	0.472	12	0.787	20	0.0103	4.7
PAF 12170 P10	0.472	12	0.551	14	0.039	1	0.669	17	0.787	20	0.0134	6.1
PAF 14120 P10	0.551	14	0.630	16	0.039	1	0.472	12	0.866	22	0.0118	5.4
PAF 14170 P10	0.551	14	0.630	16	0.039	1	0.669	17	0.866	22	0.0156	7.1
PAF 15090 P10	0.591	15	0.669	17	0.039	1	0.354	9	0.906	23	0.0097	4.4
PAF 15120 P10	0.591	15	0.669	17	0.039	1	0.472	12	0.906	23	0.0126	5.7
PAF 15170 P10	0.591	15	0.669	17	0.039	1	0.669	17	0.906	23	0.0170	7.7
PAF 16120 P10	0.630	16	0.709	18	0.039	1	0.472	12	0.945	24	0.0132	6.0
PAF 16170 P10	0.630	16	0.709	18	0.039	1	0.669	17	0.945	24	0.0183	8.3
PAF 18120 P10	0.709	18	0.787	20	0.039	1	0.472	12	1.024	26	0.0147	6.7
PAF 18170 P10	0.709	18	0.787	20	0.039	1	0.669	17	1.024	26	0.0196	8.9
PAF 18220 P10	0.709	18	0.787	20	0.039	1	0.866	22	1.024	26	0.0244	11.1
PAF 20115 P10	0.787	20	0.906	23	0.059	1.5	0.453	11.5	1.181	30	0.0255	11.6
PAF 20165 P10	0.787	20	0.906	23	0.059	1.5	0.650	16.5	1.181	30	0.0332	15.1
PAF 20215 P10	0.787	20	0.906	23	0.059	1.5	0.846	21.5	1.181	30	0.0420	19.1
PAF 25115 P10	0.984	25	1.102	28	0.059	1.5	0.453	11.5	1.378	35	0.0312	14.2
PAF 25165 P10	0.984	25	1.102	28	0.059	1.5	0.650	16.5	1.378	35	0.0418	19.0
PAF 25215 P10	0.984	25	1.102	28	0.059	1.5	0.846	21.5	1.378	35	0.0526	23.9
PAF 30160 P10	1.181	30	1.339	34	0.079	2	0.630	16	1.654	42	0.0680	30.9
PAF 30260 P10	1.181	30	1.339	34	0.079	2	1.024	26	1.654	42	0.1014	46.1
PAF 35160 P10	1.378	35	1.535	39	0.079	2	0.630	16	1.850	47	0.0779	35.4
PAF 35260 P10	1.378	35	1.535	39	0.079	2	1.024	26	1.850	47	0.1159	52.7
PAF 40260 P10	1.575	40	1.732	44	0.079	2	1.024	26	2.087	53	0.1320	60.0

Permaglide
Flanged Plain Bearings
PAF...P11 SERIES

- Maintenance free
- Bronze backing
- Recommended Mounting Tolerances:
  Shaft – f7
  Housing bore – H7

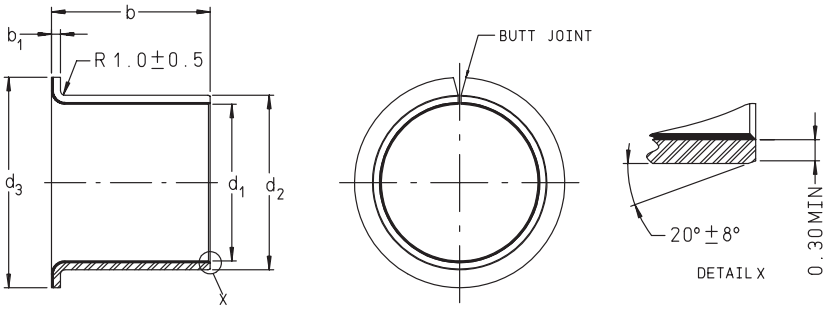

For details on part numbers, descriptive suffixes and various technical references, please refer to front of this section.
For engineering or technical information contact your local sales representative or call Distributor Sales (800)523-6572.

PART NUMBER	SHAFT d_1 inch	SHAFT d_1 mm	OD d_2 inch	OD d_2 mm	FLANGE WALL b_1 inch	FLANGE WALL b_1 mm	LENGTH b inch	LENGTH b mm	FLANGE DIA. d_3 inch	FLANGE DIA. d_3 mm	WEIGHT lbs	WEIGHT g
PAF 06080 P11	0.236	6	0.315	8	0.039	1	0.315	8	0.472	12	0.0037	1.7
PAF 08055 P11	0.315	8	0.394	10	0.039	1	0.217	5.5	0.591	15	0.0037	1.7
PAF 08095 P11	0.315	8	0.394	10	0.039	1	0.374	9.5	0.591	15	0.0056	2.5
PAF 10070 P11	0.394	10	0.472	12	0.039	1	0.276	7	0.709	18	0.0055	2.5
PAF 10120 P11	0.394	10	0.472	12	0.039	1	0.472	12	0.709	18	0.0084	3.8
PAF 10170 P11	0.394	10	0.472	12	0.039	1	0.669	17	0.709	18	0.0118	5.4
PAF 12070 P11	0.472	12	0.551	14	0.039	1	0.276	7	0.787	20	0.0066	3.0
PAF 12090 P11	0.472	12	0.551	14	0.039	1	0.354	9	0.787	20	0.0082	3.7
PAF 12120 P11	0.472	12	0.551	14	0.039	1	0.472	12	0.787	20	0.0103	4.7
PAF 15120 P11	0.591	15	0.669	17	0.039	1	0.472	12	0.906	23	0.0126	5.7
PAF 15170 P11	0.591	15	0.669	17	0.039	1	0.669	17	0.906	23	0.0170	7.7
PAF 16120 P11	0.630	16	0.709	18	0.039	1	0.472	12	0.945	24	0.0132	6.0
PAF 18100 P11	0.709	18	0.787	20	0.039	1	0.394	10	1.024	26	0.0110	5.0
PAF 18220 P11	0.709	18	0.787	20	0.039	1	0.866	22	1.024	26	0.0244	11.1
PAF 20115 P11	0.787	20	0.906	23	0.059	1.5	0.453	11.5	1.181	30	0.0256	11.6
PAF 20165 P11	0.787	20	0.906	23	0.059	1.5	0.650	16.5	1.181	30	0.0333	15.1
PAF 25215 P11	0.984	25	1.102	28	0.059	1.5	0.846	21.5	1.378	35	0.0526	23.9
PAF 30160 P11	1.181	30	1.339	34	0.079	2	0.630	16	1.654	42	0.0681	30.9
PAF 30260 P11	1.181	30	1.339	34	0.079	2	1.024	26	1.654	42	0.1015	46.1
PAF 35260 P11	1.378	35	1.535	39	0.079	2	1.024	26	1.850	47	0.1161	52.7
PAF 40260 P11	1.575	40	1.732	44	0.079	2	1.024	26	2.087	53	0.1300	59.0

Permaglide Thrust Washers

PAW...P10 SERIES

- Maintenance free
- Steel backing

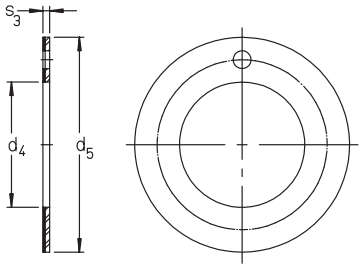

For details on part numbers, descriptive suffixes and various technical references, please refer to front of this section.
For engineering or technical information contact your local sales representative or call Distributor Sales (800)523-6572.

PART NUMBER	SHAFT d_4 inch	SHAFT d_4 mm	OD d_5 inch	OD d_5 mm	WALL s_3 inch	WALL s_3 mm	WEIGHT lbs	WEIGHT g
PAW 10 P10	0.394	10	0.787	20	0.059	1.5	0.0057	2.6
PAW 12 P10	0.472	12	0.945	24	0.059.	1.5	0.0084	3.8
PAW 14 P10	0.551	14	1.024	26	0.059	1.5	0.0088	4.0
PAW 16 P10	0.630	16	1.181	30	0.059	1.5	0.0121	5.5
PAW 18 P10	0.709	18	1.260	32	0.059	1.5	0.0132	6.0
PAW 20 P10	0.787	20	1.417	36	0.059	1.5	0.0176	8.0
PAW 22 P10	0.866	22	1.496	38	0.059	1.5	0.0187	8.5
PAW 26 P10	1.024	26	1.732	44	0.059	1.5	0.0244	11.1
PAW 28 P10	1.102	28	1.890	48	0.059	1.5	0.0293	13.3
PAW 32 P10	1.260	32	2.126	54	0.059	1.5	0.0359	16.3
PAW 38 P10	1.496	38	2.441	62	0.059	1.5	0.0462	21.0
PAW 42 P10	1.654	42	2.598	66	0.059	1.5	0.0484	22.0
PAW 48 P10	1.890	48	2.913	74	0.079	2	0.0810	36.8
PAW 52 P10	2.047	52	3.071	78	0.079	2	0.0854	38.8
PAW 62 P10	2.441	62	3.543	90	0.079	2	0.1074	48.8

Permaglide Strips

PAS...P10 SERIES

- Maintenance free
- Steel backing

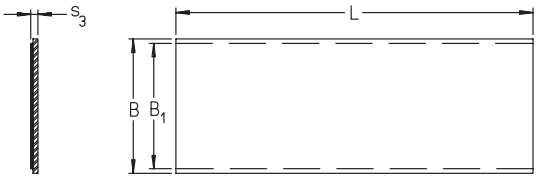

For details on part numbers, descriptive suffixes and various technical references, please refer to front of this section.
For engineering or technical information contact your local sales representative or call Distributor Sales (800)523-6572.

PART NUMBER	WALL s_3 inch	WALL s_3 mm	WIDTH B inch	WIDTH B mm	USABLE WIDTH B_1 inch	USABLE WIDTH B_1 mm	LENGTH L inch	LENGTH L mm	WEIGHT lbs	WEIGHT g
PAS 05180 P10	0.020	0.5	7.087	180	6.614	168	19.685	500	0.726	330
PAS 07180 P10	0.030	0.75	7.087	180	6.614	168	19.685	500	1.093	497
PAS 10250 P10	0.039	1	9.843	250	9.370	238	19.685	500	2.066	939
PAS 15250 P10	0.059	1.5	9.843	250	9.370	238	19.685	500	3.126	1421
PAS 20250 P10	0.079	2	9.843	250	9.370	238	19.685	500	4.211	1914
PAS 25250 P10	0.098	2.5	9.843	250	9.370	238	19.685	500	5.262	2392
PAS 30250 P10	0.120	3.06	9.843	250	9.370	238	19.685	500	6.468	2940

Permaglide Strips

PAS...P11 SERIES

- Maintenance free
- Bronze backing

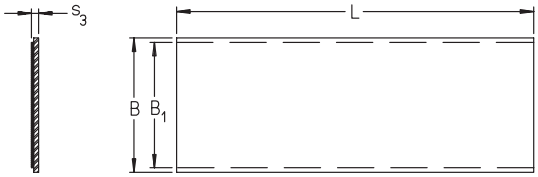

For details on part numbers, descriptive suffixes and various technical references, please refer to front of this section.
For engineering or technical information contact your local sales representative or call Distributor Sales (800)523-6572.

PART NUMBER	WALL s_3 inch	WALL s_3 mm	WIDTH B inch	WIDTH B mm	USABLE WIDTH B_1 inch	USABLE WIDTH B_1 mm	LENGTH L inch	LENGTH L mm	WEIGHT lbs	WEIGHT g
PAS 10160 P11	0.039	1	6.299	160	5.827	148	19.685	500	1.459	663
PAS 15180 P11	0.059	1.5	7.087	180	6.614	168	19.685	500	2.488	1131
PAS 20180 P11	0.079	2	7.087	180	6.614	168	19.685	500	3.351	1523
PAS 25180 P11	0.098	2.5	7.087	180	6.614	168	19.685	500	4.213	1915

Permaglide Plain Bearings

PAP...P20 SERIES

- Low maintenance
- Steel backing
- Recommended Mounting Tolerances:
  Shaft – h8
  Housing bore – H7

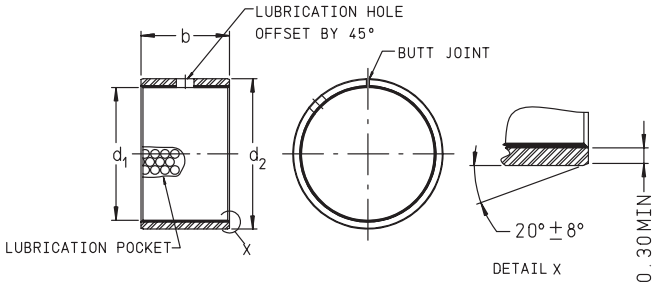

For details on part numbers, descriptive suffixes and various technical references, please refer to front of this section.
For engineering or technical information contact your local sales representative or call Distributor Sales (800)523-6572.

PART NUMBER	SHAFT d_1 inch	SHAFT d_1 mm	OD d_2 inch	OD d_2 mm	LENGTH b inch	LENGTH b mm	WEIGHT lbs	WEIGHT g
PAP 0808 P20	0.315	8	0.394	10	0.315	8	0.0035	1.60
PAP 0810 P20	0.315	8	0.394	10	0.394	10	0.0044	2.00
PAP 0812 P20	0.315	8	0.394	10	0.472	12	0.0053	2.40
PAP 1008 P20	0.394	10	0.472	12	0.315	8	0.0040	1.80
PAP 1010 P20	0.394	10	0.472	12	0.394	10	0.0051	2.30
PAP 1015 P20	0.394	10	0.472	12	0.591	15	0.0077	3.50
PAP 1210 P20	0.472	12	0.551	14	0.394	10	0.0066	3.00
PAP 1212 P20	0.472	12	0.551	14	0.472	12	0.0077	3.50
PAP 1215 P20	0.472	12	0.551	14	0.591	15	0.0097	4.40
PAP 1220 P20	0.472	12	0.551	14	0.787	20	0.0132	6.00
PAP 1420 P20	0.551	14	0.630	16	0.787	20	0.0147	6.70
PAP 1510 P20	0.591	15	0.669	17	0.394	10	0.0077	3.50
PAP 1515 P20	0.591	15	0.669	17	0.591	15	0.0117	5.30
PAP 1525 P20	0.591	15	0.669	17	0.984	25	0.0194	8.80
PAP 1612 P20	0.630	16	0.709	18	0.472	12	0.0099	4.50
PAP 1615 P20	0.630	16	0.709	18	0.591	15	0.0123	5.60
PAP 1620 P20	0.630	16	0.709	18	0.787	20	0.0165	7.50
PAP 1815 P20	0.709	18	0.787	20	0.591	15	0.0139	6.30
PAP 1820 P20	0.709	18	0.787	20	0.787	20	0.0187	8.50
PAP 2015 P20	0.787	20	0.906	23	0.591	15	0.0231	10.50
PAP 2020 P20	0.787	20	0.906	23	0.787	20	0.0308	14.00
PAP 2025 P20	0.787	20	0.906	23	0.984	25	0.0385	17.50
PAP 2030 P20	0.787	20	0.906	23	1.181	30	0.0506	23.00
PAP 2220 P20	0.866	22	0.984	25	0.787	20	0.0339	15.40
PAP 2420 P20	0.945	24	1.063	27	0.787	20	0.0396	18.00
PAP 2515 P20	0.984	25	1.102	28	0.591	15	0.0312	14.20
PAP 2520 P20	0.984	25	1.102	28	0.787	20	0.0418	19.00
PAP 2525 P20	0.984	25	1.102	28	0.984	25	0.0484	22.00
PAP 2530 P20	0.984	25	1.102	28	1.181	30	0.0581	26.40
PAP 2830 P20	1.102	28	1.260	32	1.181	30	0.0880	40.00
PAP 3020 P20	1.181	30	1.339	34	0.787	20	0.0629	28.60
PAP 3025 P20	1.181	30	1.339	34	0.984	25	0.0788	35.80
PAP 3030 P20	1.181	30	1.339	34	1.181	30	0.0944	42.90
PAP 3040 P20	1.181	30	1.339	34	1.575	40	0.1258	57.20
PAP 3230 P20	1.260	32	1.417	36	1.181	30	0.1056	48.00
PAP 3520 P20	1.378	35	1.535	39	0.787	20	0.0717	32.60
PAP 3530 P20	1.378	35	1.535	39	1.181	30	0.1078	49.00
PAP 3550 P20	1.378	35	1.535	39	1.969	50	0.1936	88.00
PAP 4020 P20	1.575	40	1.732	44	0.787	20	0.0821	37.30
PAP 4030 P20	1.575	40	1.732	44	1.181	30	0.1232	56.00
PAP 4040 P20	1.575	40	1.732	44	1.575	40	0.1643	74.70
PAP 4050 P20	1.575	40	1.732	44	1.969	50	0.2053	93.30
PAP 4550 P20	1.772	45	1.969	50	1.969	50	0.2922	132.80
PAP 5025 P20	1.969	50	2.165	55	0.984	25	0.1716	78.00
PAP 5040 P20	1.969	50	2.165	55	1.575	40	0.2587	117.60
PAP 5060 P20	1.969	50	2.165	55	2.362	60	0.3881	176.40

Permaglide Plain Bearings

PAP...P20 SERIES

- Low maintenance
- Steel backing
- Recommended Mounting Tolerances:
  Shaft – h8
  Housing bore – H7

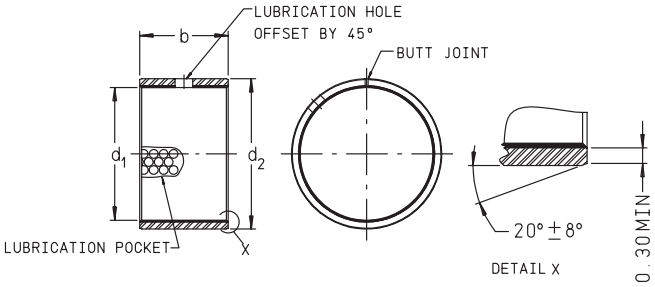

For details on part numbers, descriptive suffixes and various technical references, please refer to front of this section.
For engineering or technical information contact your local sales representative or call Distributor Sales (800)523-6572.

PART NUMBER	SHAFT d_1 inch	SHAFT d_1 mm	OD d_2 inch	OD d_2 mm	LENGTH b inch	LENGTH b mm	WEIGHT lbs	WEIGHT g
PAP 5540 P20	2.165	55	2.362	60	1.575	40	0.3014	137.00
PAP 6030 P20	2.362	60	2.559	65	1.181	30	0.2297	104.40
PAP 6040 P20	2.362	60	2.559	65	1.575	40	0.3062	139.20
PAP 6060 P20	2.362	60	2.559	65	2.362	60	0.4594	208.80
PAP 7050 P20	2.756	70	2.953	75	1.969	50	0.4440	201.80
PAP 7070 P20	2.756	70	2.953	75	2.756	70	0.6666	303.00
PAP 7540 P20	2.953	75	3.150	80	1.575	40	0.4048	184.00
PAP 7580 P20	2.953	75	3.150	80	3.150	80	0.8140	370.00
PAP 8040 P20	3.150	80	3.346	85	1.575	40	0.4041	183.70
PAP 8060 P20	3.150	80	3.346	85	2.362	60	0.6072	276.00
PAP 8080 P20	3.150	80	3.346	85	3.150	80	0.8083	367.40
PAP 9060 P20	3.543	90	3.740	95	2.362	60	0.6809	309.50
PAP 10050 P20	3.937	100	4.134	105	1.969	50	0.6279	285.40
PAP 10060 P20	3.937	100	4.134	105	2.362	60	0.7535	342.50

Permaglide Thrust Washers

PAW...P20 SERIES

- Low maintenance
- Steel backing

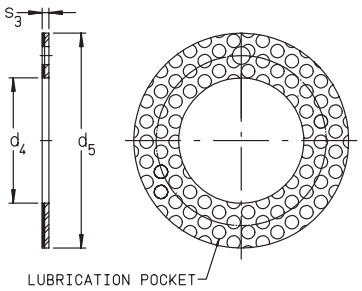

For details on part numbers, descriptive suffixes and various technical references, please refer to front of this section.
For engineering or technical information contact your local sales representative or call Distributor Sales (800)523-6572.

PART NUMBER	SHAFT d_4 inch	SHAFT d_4 mm	OD d_5 inch	OD d_5 mm	WALL s_3 inch	WALL s_3 mm	WEIGHT lbs	WEIGHT g
PAW 12 P20	0.472	12	0.945	24	0.020	1.5	0.0077	3.5
PAW 14 P20	0.551	14	1.024	26	0.059	1.5	0.0081	3.7
PAW 18 P20	0.709	18	1.260	32	0.059	1.5	0.0123	5.6
PAW 20 P20	0.787	20	1.417	36	0.059	1.5	0.0163	7.4
PAW 22 P20	0.866	22	1.496	38	0.059	1.5	0.0174	7.9
PAW 26 P20	1.023	26	1.732	44	0.059	1.5	0.0227	10.3
PAW 28 P20	1.1024	28	1.890	48	0.059	1.5	0.0273	12.4
PAW 32 P20	1.260	32	2.126	54	0.059	1.5	0.0334	15.2
PAW 38 P20	1.496	38	2.441	62	0.059	1.5	0.0429	19.5
PAW 42 P20	1.654	42	2.598	66	0.059	1.5	0.0458	20.8
PAW 48 P20	1.890	48	2.913	74	0.079	2.0	0.0768	34.9
PAW 52 P20	2.047	52	3.071	78	0.079	2.0	0.0794	36.1

Permaglide Strips

PAS...P20 SERIES

- Low maintenance
- Steel backing

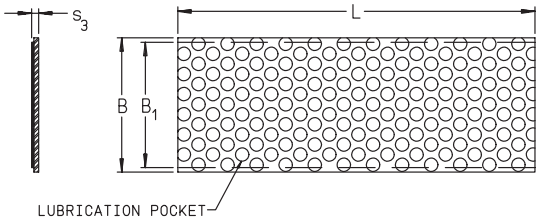

For details on part numbers, descriptive suffixes and various technical references, please refer to front of this section.
For engineering or technical information contact your local sales representative or call Distributor Sales (800)523-6572.

PART NUMBER	WALL s_3 inch	WALL s_3 mm	WIDTH B inch	WIDTH B mm	USABLE WIDTH B_1 inch	USABLE WIDTH B_1 mm	LENGTH L inch	LENGTH L mm	WEIGHT lbs	WEIGHT g
PAS 10180 P20	0.039	0.99	7.087	180	6.614	168	19.685	500	1.408	640
PAS 15180 P20	0.058	1.48	7.087	180	6.614	168	19.685	500	2.092	951
PAS 20180 P20	0.078	1.97	7.087	180	6.614	168	19.685	500	2.818	1281
PAS 25180 P20	0.097	2.46	7.087	180	6.614	168	19.685	500	3.524	1602

Permaglide Strips

PAS...P21 SERIES

- Low maintenance
- Steel backing
- Machining allowance with lubrication pockets

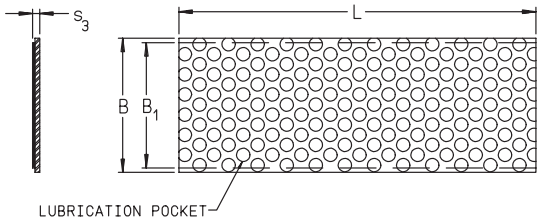

For details on part numbers, descriptive suffixes and various technical references, please refer to front of this section.
For engineering or technical information contact your local sales representative or call Distributor Sales (800)523-6572.

PART NUMBER	WALL s_3 inch	WALL s_3 mm	WIDTH B inch	WIDTH B mm	USABLE WIDTH B_1 inch	USABLE WIDTH B_1 mm	LENGTH L inch	LENGTH L mm	WEIGHT lbs	WEIGHT g
PAS 10180 P21	0.044	1.11	7.087	180	6.614	168	19.685	500	1.564	711
PAS 15180 P21	0.063	1.61	7.087	180	6.614	168	19.685	500	2.178	990
PAS 20180 P21	0.083	2.11	7.087	180	6.614	168	19.685	500	2.904	1320
PAS 25180 P21	0.104	2.63	7.087	180	6.614	168	19.685	500	3.610	1641

Permaglide Strips

PAS...P22 SERIES

- Low maintenance
- Steel backing
- Machining allowance without lubrication pockets

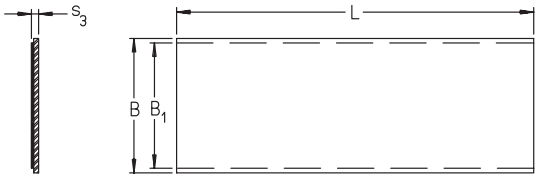

For details on part numbers, descriptive suffixes and various technical references, please refer to front of this section.
For engineering or technical information contact your local sales representative or call Distributor Sales (800)523-6572.

PART NUMBER	WALL s_3 inch	WALL s_3 mm	WIDTH B inch	WIDTH B mm	USABLE WIDTH B_1 inch	USABLE WIDTH B_1 mm	LENGTH L inch	LENGTH L mm	WEIGHT lbs	WEIGHT g
PAS 10180 P22	0.044	1.11	7.087	180	6.614	168	19.685	500	1.564	711
PAS 15180 P22	0.063	1.61	7.087	180	6.614	168	19.685	500	2.178	990
PAS 20180 P22	0.083	2.11	7.087	180	6.614	168	19.685	500	2.904	1320
PAS 25180 P22	0.104	2.63	7.087	180	6.614	168	19.685	500	3.610	1641

Elges
Radial Spherical Plain Bearings
GE..DO, GE..DO-2RS SERIES

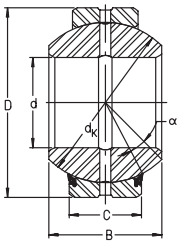

- Sliding contact surfaces: steel/steel
- Hardened inner and outer ring
- GE..DO 6-300 outer ring with single axial split
- GE..DO 320-1000 outer ring double split axially shipped with retaining rings

For details on part numbers, descriptive suffixes and various technical references, please refer to front of this section.
For engineering or technical information contact your local sales representative or call Distributor Sales (800)523-6572.

PART NUMBER	SHAFT d inch	SHAFT d mm	OD D inch	OD D mm	WIDTH B inch	WIDTH B mm	WIDTH C inch	WIDTH C mm	BALL DIA. d_K inch	BALL DIA. d_K mm	ANGLE alpha deg	WEIGHT lbs	WEIGHT kg	DYN. CAP. x1000 lbf	DYN. CAP. kN	STAT. CAP. x1000 lbf	STAT. CAP. kN
GE6DO	0.236	6	0.551	14	0.236	6	0.157	4	0.394	10	13	0.009	0.004	0.760	3.4	3.80	17
GE8DO	0.315	8	0.63	16	0.315	8	0.197	5	0.512	13	15	0.015	0.007	1.240	5.5	6.20	27.5
GE10DO	0.394	10	0.748	19	0.354	9	0.236	6	0.63	16	12	0.024	0.011	1.830	8.15	9.10	40.5
GE12DO	0.472	12	0.866	22	0.394	10	0.276	7	0.709	18	11	0.035	0.016	2.430	10.8	12.10	54
GE15DO	0.591	15	1.024	26	0.472	12	0.354	9	0.866	22	8	0.055	0.025	3.800	17	19.10	85
GE16DO	0.63	16	1.181	30	0.551	14	0.394	10	0.984	25	10	0.084	0.038	4.750	21.2	23.80	106
GE17DO	0.669	17	1.181	30	0.551	14	0.394	10	0.984	25	10	0.090	0.041	4.750	21.2	23.80	106
GE17DO2RS	0.669	17	1.181	30	0.551	14	0.394	10	0.984	25	10	0.090	0.041	4.75	21.2	23.80	106
GE20DO	0.787	20	1.378	35	0.63	16	0.472	12	1.142	29	9	0.135	0.061	6.700	30	33	146
GE20DO2RS	0.787	20	1.378	35	0.63	16	0.472	12	1.142	29	9	0.135	0.061	6.70	30	33.00	146
GE25DO	0.984	25	1.654	42	0.787	20	0.63	16	1.398	35.5	7	0.243	0.110	10.80	48	54	240
GE25DO2RS	0.984	25	1.654	42	0.787	20	0.63	16	1.398	35.5	7	0.243	0.110	10.80	48	54	240
GE30DO	1.181	30	1.85	47	0.866	22	0.709	18	1.602	40.7	6	0.309	0.140	13.90	62	70	310
GE30DO2RS	1.181	30	1.85	47	0.866	22	0.709	18	1.602	40.7	6	0.309	0.140	13.90	62	70	310
GE35DO	1.378	35	2.165	55	0.984	25	0.787	20	1.85	47	6	0.485	0.220	18.00	80	90	400
GE35DO2RS	1.378	35	2.165	55	0.984	25	0.787	20	1.85	47	6	0.485	0.220	18.00	80	90	400
GE40DO	1.575	40	2.441	62	1.102	28	0.866	22	2.087	53	7	0.662	0.300	22.50	100	112	500
GE40DO2RS	1.575	40	2.441	62	1.102	28	0.866	22	2.087	53	7	0.662	0.300	22.50	100	112	500
GE45DO	1.772	45	2.677	68	1.26	32	0.984	25	2.362	60	7	0.882	0.400	28.50	127	144	640
GE45DO2RS	1.772	45	2.677	68	1.26	32	0.984	25	2.362	60	7	0.882	0.400	28.50	127	144	640
GE50DO	1.969	50	2.953	75	1.378	35	1.102	28	2.598	66	6	1.191	0.540	35	156	175	780
GE50DO2RS	1.969	50	2.953	75	1.378	35	1.102	28	2.598	66	6	1.191	0.540	35	156	175	780
GE60DO	2.362	60	3.543	90	1.732	44	1.417	36	3.15	80	6	2.205	1.000	55	245	275	1220
GE60DO2RS	2.362	60	3.543	90	1.732	44	1.417	36	3.15	80	6	2.205	1.000	55	245	275	1220
GE70DO	2.756	70	4.134	105	1.929	49	1.575	40	3.622	92	6	3.308	1.500	71	315	350	1560
GE70DO2RS	2.756	70	4.134	105	1.929	49	1.575	40	3.622	92	6	3.308	1.500	71	315	350	1560
GE80D2RS	3.15	80	4.724	120	2.165	55	1.772	45	4.134	105	6	4.851	2.200	90	400	450	2000
GE80DO	3.15	80	4.724	120	2.165	55	1.772	45	4.134	105	6	4.851	2.200	90	400	450	2000
GE90DO	3.543	90	5.118	130	2.362	60	1.969	50	4.528	115	5	5.95	2.700	110	490	550	2450
GE90DO2RS	3.543	90	5.118	130	2.362	60	1.969	50	4.528	115	5	5.954	2.700	110	490	550	2450
GE100DO	3.937	100	5.906	150	2.756	70	2.165	55	5.118	130	7	9.48	4.300	137	610	690	3050
GE100DO2RS	3.937	100	5.906	150	2.756	70	2.165	55	5.118	130	7	9.482	4.300	137	610	690	3050
GE110DO	4.331	110	6.299	160	2.756	70	2.165	55	5.512	140	6	10.36	4.700	147	655	730	3250
GE110DO2RS	4.331	110	6.299	160	2.756	70	2.165	55	5.512	140	6	10.36	4.70	147	655	730	3250
GE120DO	4.724	120	7.087	180	3.346	85	2.756	70	6.299	160	6	17.64	8.00	214	950	1070	4750
GE120DO2RS	4.724	120	7.087	180	3.346	85	2.756	70	6.299	160	6	17.64	8.00	214	950	1070	4750
GE140DO	5.512	140	8.268	210	3.543	90	2.756	70	7.087	180	7	24.26	11.00	243	1080	1210	5400
GE140DO2RS	5.512	140	8.268	210	3.543	90	2.756	70	7.087	180	7	24.26	11.00	243	1080	1210	5400
GE160DO	6.299	160	9.055	230	4.134	105	3.15	80	7.874	200	8	29.77	13.50	310	1370	1530	6800
GE160DO2RS	6.299	160	9.055	230	4.134	105	3.15	80	7.874	200	8	29.77	13.50	310	1370	1530	6800
GE180DO	7.087	180	10.236	260	4.134	105	3.15	80	8.858	225	6	40.79	18.50	345	1530	1720	7650
GE180DO2RS	7.087	180	10.236	260	4.134	105	3.15	80	8.858	225	6	40.79	18.50	345	1530	1720	7650
GE200DO	7.874	200	11.417	290	5.118	130	3.937	100	9.843	250	7	61.74	28	475	2120	2380	10600
GE200DO2RS	7.874	200	11.417	290	5.118	130	3.937	100	9.843	250	7	61.74	28.00	475	2120	2380	10600
GE220DO2RS	8.661	220	12.598	320	5.315	135	3.937	100	10.827	275	8	78.28	35.50	520	2320	2600	11600
GE240DO2RS	9.449	240	13.386	340	5.512	140	3.937	100	11.811	300	8	88.20	40	570	2550	2850	12700

Elges
Radial Spherical Plain Bearings
GE..DO, GE..DO-2RS SERIES

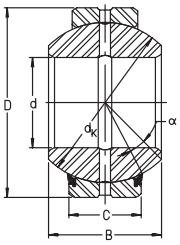

- Sliding contact surfaces: steel/steel
- Hardened inner and outer ring
- GE..DO 6-300 outer ring with single axial split
- GE..DO 320-1000 outer ring double split axially shipped with retaining rings

For details on part numbers, descriptive suffixes and various technical references, please refer to front of this section.
For engineering or technical information contact your local sales representative or call Distributor Sales (800)523-6572.

PART NUMBER	SHAFT d inch	SHAFT d mm	OD D inch	OD D mm	WIDTH B inch	WIDTH B mm	WIDTH C inch	WIDTH C mm	BALL DIA. d_K inch	BALL DIA. d_K mm	ANGLE alpha deg	WEIGHT lbs	WEIGHT kg	DYN. CAP. x1000 lbf	DYN. CAP. kN	STAT. CAP. x1000 lbf	STAT. CAP. kN
GE260DO2RS	10.236	260	14.567	370	5.906	150	4.331	110	12.795	325	7	110	50	690	3050	3450	15300
GE280DO2RS	11.024	280	15.748	400	6.102	155	4.724	120	13.78	350	6	141	64	800	3550	4050	18000
GE300DO2RS	11.811	300	16.929	430	6.496	165	4.724	120	14.764	375	7	165	75	850	3800	4250	19000
GE320DO	12.598	320	17.323	440	6.299	160	5.315	135	14.961	380	4	170	77	990	4400	4950	22000
GE340DO	13.386	340	18.11	460	6.299	160	5.315	135	15.748	400	3.8	181	82	1,050	4650	5200	23200
GE360DO	14.173	360	18.898	480	6.299	160	5.315	135	16.535	420	3.6	194	88	1,080	4800	5400	24000
GE380DO	14.961	380	20.472	520	7.48	190	6.299	160	17.717	450	4.1	280	127	1,420	6300	7100	31500
GE400DO	15.748	400	21.26	540	7.48	190	6.299	160	18.504	470	3.9	291	132	1,470	6550	7300	32500
GE420DO	16.535	420	22.047	560	7.48	190	6.299	160	19.291	490	3.7	320	145	1,530	6800	7800	34500
GE440DO	17.323	440	23.622	600	8.583	218	7.283	185	20.472	520	3.9	419	190	1,940	8650	9500	42300
GE460DO	18.11	460	24.409	620	8.583	218	7.283	185	21.26	540	3.7	441	200	2,020	9000	10100	45000
GE480DO	18.898	480	25.591	650	9.055	230	7.677	195	22.244	565	3.8	523	237	2,200	9800	11000	49000
GE500DO	19.685	500	26.378	670	9.055	230	7.677	195	23.031	585	3.6	538	244	2,290	10200	11500	51000
GE530DO	20.866	530	27.953	710	9.567	243	8.071	205	24.409	620	3.7	639	290	2,550	11400	12800	57000
GE560DO	22.047	560	29.528	750	10.157	258	8.465	215	25.787	655	4	750	340	2,850	12700	14400	64000
GE600DO	23.622	600	31.496	800	10.709	272	9.055	230	27.559	700	3.6	902	409	3,300	14600	16500	73500
GE630DO	24.803	630	33.465	850	11.811	300	10.236	260	29.134	740	3.3	1160	526	3,950	17600	19800	88000
GE670DO	26.378	670	35.433	900	12.126	308	10.236	260	30.906	785	337	1314	596	4,250	19000	21400	95000
GE710DO	27.953	710	37.402	950	12.795	325	10.827	275	32.677	830	3.7	1528	693	4,750	21200	15870	70600
GE750DO	29.528	750	39.37	1000	13.189	335	11.024	280	34.449	875	3.8	1729	784	5,100	22800	25600	114000
GE800DO	31.496	800	41.732	1060	13.976	355	11.811	300	36.614	930	3.6	2040	925	5,800	26000	29000	129000
GE850DO	33.465	850	44.094	1120	14.37	365	12.205	310	38.78	985	3.4	2326	1055	6,400	28500	32100	143000
GE900DO	35.433	900	46.457	1180	14.764	375	12.598	320	40.945	1040	3.2	2624	1190	7,000	31000	35100	156000
GE950DO	37.402	950	49.213	1250	15.748	400	13.386	340	43.307	1100	3.3	3140	1424	8,000	35500	39600	176000
GE1000DO	39.37	1000	51.969	1320	17.244	438	14.567	370	45.669	1160	3.5	3870	1755	9,100	40500	45900	204000

Elges
Radial Spherical Plain Bearings
GE..FO, GE..FO-2RS SERIES

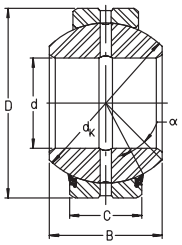

- Sliding contact surfaces: steel/steel
- Hardened inner and outer ring
- Wide inner ring with increased tilting angle
- Outer ring with single (axial) split

For details on part numbers, descriptive suffixes and various technical references, please refer to front of this section.
For engineering or technical information contact your local sales representative or call Distributor Sales (800)523-6572.

PART NUMBER	SHAFT d inch	SHAFT d mm	OD D inch	OD D mm	WIDTH B inch	WIDTH B mm	WIDTH C inch	WIDTH C mm	BALL DIA. d_K inch	BALL DIA. d_K mm	ANGLE alpha deg	WEIGHT lbs	WEIGHT kg	DYN. CAP. x1000 lbf	DYN. CAP. kN	STAT. CAP. x1000 lbf	STAT. CAP. kN
GE6FO	0.236	6	0.630	16	0.354	9	0.197	5	0.512	13	21	0.018	0.008	1.24	5.5	6.20	27.5
GE8FO	0.315	8	0.748	19	0.433	11	0.236	6	0.630	16	21	0.031	0.014	1.83	8.15	9.10	40.5
GE10FO	0.394	10	0.866	22	0.472	12	0.276	7	0.709	18	18	0.044	0.020	2.43	10.8	12.10	54
GE12FO	0.472	12	1.024	26	0.591	15	0.354	9	0.866	22	18	0.075	0.034	3.80	17	19.10	85
GE15FO2RS	0.591	15	1.181	30	0.630	16	0.394	10	0.984	25	16	0.101	0.046	4.75	21.2	23.80	106
GE17FO2RS	0.669	17	1.378	35	0.787	20	0.472	12	1.142	29	19	0.172	0.078	6.70	30	33	146
GE20FO2RS	0.787	20	1.654	42	0.984	25	0.630	16	1.398	35.5	17	0.331	0.150	10.80	48	54	240
GE25FO2RS	1.378	25	1.850	47	1.102	28	0.709	18	1.602	40.7	17	0.419	0.190	13.90	62	70	310
GE30FO2RS	1.181	30	2.165	55	1.260	32	0.787	20	1.850	47	17	0.639	0.290	18.00	80	90	400
GE35FO2RS	1.378	35	2.441	62	1.378	35	0.866	22	2.087	53	16	0.860	0.390	22.50	100	112	500
GE40FO2RS	1.575	40	2.677	68	1.575	40	0.984	25	2.362	60	17	1.147	0.520	28.50	127	144	640
GE45FO2RS	1.772	45	2.953	75	1.693	43	1.102	28	2.598	66	15	1.499	0.680	35	156	175	780
GE50FO2RS	1.969	50	3.543	90	2.205	56	1.417	36	3.150	80	17	3.087	1.400	55	245	275	1220
GE60FO2RS	2.362	60	4.134	105	2.480	63	1.575	40	3.622	92	17	4.410	2.000	71	315	350	1560
GE70FO2RS	2.756	70	4.724	120	2.756	70	1.772	45	4.134	105	16	6.395	2.900	90	400	450	2000
GE80FO2RS	3.150	80	5.118	130	2.953	75	1.969	50	4.528	115	14	7.718	3.500	110	490	550	2450
GE90FO2RS	3.543	90	5.906	150	3.347	85	2.165	55	5.118	130	15	11.907	5.400	137	610	690	3050
GE100FO2RS	3.937	100	6.299	160	3.347	85	2.165	55	5.512	140	14	13.010	5.900	147	655	730	3250
GE110FO2RS	4.331	110	7.087	180	3.937	100	2.756	70	6.299	160	12	21.389	9.700	214	950	1070	4750
GE120FO2RS	4.724	120	8.268	210	4.528	115	2.756	70	7.087	180	16	33.075	15	243	1080	1210	5400
GE140FO2RS	5.512	140	9.055	230	5.118	130	3.150	80	7.874	200	16	40.793	19	310	1370	1530	6800
GE160FO2RS	6.299	160	10.236	260	5.315	135	3.150	80	8.858	225	16	55.125	25	345	1530	1720	7650
GE180FO2RS	7.087	180	11.417	290	6.102	155	3.937	100	9.843	250	14	78.278	36	475	2120	2380	10600
GE200FO2RS	7.874	200	12.598	320	6.496	165	3.937	100	10.827	275	15	99.225	45	520	2320	2600	11600
GE220FO2RS	8.661	220	13.386	340	6.890	175	3.937	100	11.811	300	16	112.455	51	570	2550	2850	12700
GE240FO2RS	9.449	240	14.567	370	7.480	190	4.331	110	12.795	325	15	141.120	64	690	3050	3450	15300
GE260FO2RS	10.236	260	15.748	400	8.071	205	4.724	120	13.780	350	15	178.605	81	800	3550	4050	18000
GE280FO2RS	11.024	280	16.929	430	8.268	210	4.724	120	14.764	375	15	207.270	94	850	3800	4250	19000

Elges
Radial Spherical Plain Bearings
GE..PB SERIES

- DIN 648, dimension series K
- Sliding contact surfaces: steel/bronze

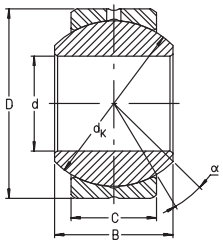

For details on part numbers, descriptive suffixes and various technical references, please refer to front of this section.
For engineering or technical information contact your local sales representative or call Distributor Sales (800)523-6572.

PART NUMBER	d inch	d mm	D inch	D mm	B inch	B mm	C inch	C mm	d_k inch	d_k mm	ALPHA deg	C lbf	C kN	C_0 lbf	C_0 kN	WGT. lbs	WGT kg
GE5PB	0.197	5	0.512	13	0.315	8	0.236	6	0.438	11.112	13	730	3.25	1,910	8.5	0.013	0.006
GE6PB	0.236	6	0.630	16	0.354	9	0.266	6.75	0.500	12.7	13	970	4.3	2,430	10.8	0.022	0.01
GE8PB	0.315	8	0.748	19	0.472	12	0.354	9	0.625	15.875	14	1,620	7.2	4,050	18	0.04	0.018
GE10PB	0.394	10	0.866	22	0.551	14	0.413	10.5	0.750	19.05	13	2,250	10	5,600	25	0.06	0.027
GE12PB	0.472	12	1.024	26	0.630	16	0.472	12	0.875	22.225	13	3,000	13.4	7,500	33.5	0.095	0.043
GE14PB	0.551	14	1.102	28	0.748	19	0.532	13.5	1.000	25.4	16	3,800	17	9,700	43	0.121	0.055
GE16PB	0.630	16	1.260	32	0.827	21	0.591	15	1.125	28.575	15	4,850	21.6	12,100	54	0.176	0.08
GE18PB	0.709	18	1.378	35	0.906	23	0.650	16.5	1.250	31.75	15	5,800	26	14,700	65.5	0.221	0.1
GE20PB	0.787	20	1.575	40	0.984	25	0.709	18	1.375	34.925	14	7,100	31.5	18,000	80	0.331	0.15
GE22PB	0.866	22	1.654	42	1.102	28	0.787	20	1.500	38.1	15	8,500	38	21,700	96.5	0.397	0.18
GE25PB	0.984	25	1.850	47	1.221	31	0.866	22	1.687	42.85	15	10,700	47.5	26,500	118	0.529	0.24
GE30PB	1.181	30	2.165	55	1.457	37	0.984	25	2.000	50.8	17	14,400	64	36,000	160	0.838	0.38

Elges
Radial Spherical Plain Bearings
GE..LO SERIES

- DIN 648, dimension series EW – ISO 6124/2
- Sliding contact surfaces: steel/steel

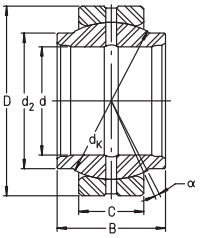

For details on part numbers, descriptive suffixes and various technical references, please refer to front of this section.
For engineering or technical information contact your local sales representative or call Distributor Sales (800)523-6572.

PART NUMBER	d inch	d mm	D inch	D mm	B inch	B mm	C inch	C mm
GE12LO	0.472	12	0.866	22	0.472	12	0.276	7
GE16LO	0.630	16	1.102	28	0.630	16	0.354	9
GE20LO	0.787	20	1.378	35	0.787	20	0.472	12
GE25LO	0.984	25	1.654	42	0.984	25	0.630	16
GE32LO	1.260	32	2.047	52	1.260	32	0.709	18
GE40LO	1.575	40	2.441	62	1.575	40	0.866	22
GE50LO	1.969	50	2.953	75	1.969	50	1.102	28
GE63LO	2.480	63	3.740	95	2.480	63	1.417	36
GE70LO	2.756	70	4.134	105	2.756	70	1.575	40
GE80LO	3.150	80	4.724	120	3.150	80	1.772	45
GE90LO	3.543	90	5.118	130	3.543	90	1.969	50
GE100LO	3.937	100	5.906	150	3.937	100	2.165	55
GE110LO	4.331	110	6.299	160	4.331	110	2.165	55
GE125LO	4.921	125	7.087	180	4.921	125	2.756	70
GE160LO	6.299	160	9.055	230	6.299	160	3.150	80
GE200LO	7.874	200	11.417	290	7.874	200	3.937	100
GE250LO	9.843	250	15.748	400	9.843	250	4.724	120
GE320LO	12.598	320	20.472	520	12.598	320	6.299	160

CONTINUED FROM ABOVE

PART NUMBER	d_k inch	d_k mm	d_2 inch	d_2 mm	WGT. lbs	WGT kg	ALPHA deg	C lbf	C kN	C_0 lbf	C_0 kN
GE12LO	0.709	18	0.610	15.5	0.044	0.02	4	2,430	10.8	12,100	54
GE16LO	0.906	23	0.787	20	0.066	0.03	4	3,950	17.6	19,800	88
GE20LO	1.142	29	0.984	25	0.154	0.07	4	6,700	30	33,000	146
GE25LO	1.398	35.5	1.181	30	0.265	0.12	4	10,800	48	54,000	240
GE32LO	1.732	44	1.496	38	0.441	0.2	4	15,100	67	75,000	335
GE40LO	2.087	53	1.811	46	0.75	0.34	4	22,500	100	112,000	500
GE50LO	2.598	66	2.244	57	1.235	0.56	4	35,000	156	175,000	780
GE63LO	3.268	83	2.815	71.5	2.646	1.2	4	57,000	255	285,000	1270
GE70LO	3.622	92	3.110	79	3.749	1.7	4	71,000	315	350,000	1560
GE80LO	4.134	105	3.583	91	5.292	2.4	4	90,000	400	450,000	2000
GE90LO	4.528	115	3.898	99	7.056	3.2	4	110,000	490	550,000	2450
GE100LO	5.118	130	4.449	113	10.58	4.8	4	137,000	610	690,000	3050
GE110LO	5.512	140	4.882	124	12.79	5.8	4	147,000	655	730,000	3250
GE125LO	6.299	160	5.433	138	18.74	8.5	4	214,000	950	1,070,000	4750
GE160LO	7.874	200	6.969	177	36.38	16.5	4	310,000	1370	1,530,000	6800
GE200LO	9.843	250	8.701	221	70.56	32	4	475,000	2120	2,380,000	10600
GE250LO	13.780	350	12.480	317	218.30	99	4	800,000	3550	4,050,000	18000
GE320LO	17.717	450	15.945	405	529.20	240	4	1,370,000	6100	6,900,000	30500

Elges
Radial Spherical Plain Bearings
GE..HO-2RS SERIES

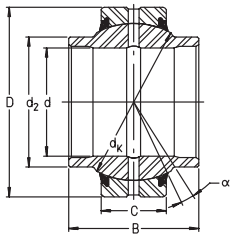

- Sliding contact surfaces: steel/steel
- Hardened inner and outer ring
- Extended inner ring for clevis mount
- Outer ring with single (axial) split

For details on part numbers, descriptive suffixes and various technical references, please refer to front of this section.
For engineering or technical information contact your local sales representative or call Distributor Sales (800)523-6572.

PART NUMBER	d inch	d mm	D inch	D mm	B inch	B mm	C inch	C mm
GE17HO2RS	0.669	17	1.181	30	0.827	21	0.394	10
GE20HO2RS	0.787	20	1.378	35	0.945	24	0.472	12
GE25HO2RS	0.984	25	1.654	42	1.142	29	0.630	16
GE30HO2RS	1.181	30	1.850	47	1.181	30	0.709	18
GE35HO2RS	1.378	35	2.165	55	1.378	35	0.787	20
GE40HO2RS	1.575	40	2.441	62	1.496	38	0.866	22
GE45HO2RS	1.772	45	2.677	68	1.575	40	0.984	25
GE50HO2RS	1.969	50	2.953	75	1.693	43	1.102	28
GE60HO2RS	2.362	60	3.543	90	2.126	54	1.417	36
GE70HO2RS	2.756	70	4.134	105	2.559	65	1.575	40
GE80HO2RS	3.150	80	4.724	120	2.913	74	1.772	45

CONTINUED FROM ABOVE

PART NUMBER	d_k inch	d_k mm	d_2 inch	d_2 mm	ALPHA deg	WGT. lbs	WGT kg	C lbf	C kN	C_0 lbf	C_0 kN
GE17HO2RS	0.984	25	0.827	21	3	0.088	0.04	4,750	21.2	23,800	106
GE20HO2RS	1.142	29	0.945	24	3	0.126	0.057	6,700	30	33,000	146
GE25HO2RS	1.398	35.5	1.142	29	3	0.221	0.1	10,800	48	54,000	240
GE30HO2RS	1.602	40.7	1.347	34.2	3	0.309	0.14	13,900	62	70,000	310
GE35HO2RS	1.850	47	1.575	40	3	0.529	0.24	18,000	80	90,000	400
GE40HO2RS	2.087	53	1.772	45	3	0.639	0.29	22,500	100	112,000	500
GE45HO2RS	2.362	60	2.028	51.5	3	0.948	0.43	28,500	127	144,000	640
GE50HO2RS	2.598	66	2.224	56.5	3	1.191	0.54	35,000	156	175,000	780
GE60HO2RS	3.150	80	2.665	67.7	3	2.426	1.1	55,000	245	275,000	1220
GE70HO2RS	3.622	92	3.071	78	3	3.528	1.6	71,000	315	350,000	1560
GE80HO2RS	4.134	105	3.543	90	3	5.292	2.4	90,000	400	450,000	2000

Elges
Radial Spherical Plain Bearings
GE..ZO SERIES

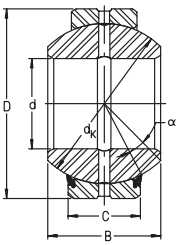

- Inch series
- Sliding contact surfaces: steel/steel
- Hardened inner and outer ring
- Outer ring with single (axial) split

For details on part numbers, descriptive suffixes and various technical references, please refer to front of this section.
For engineering or technical information contact your local sales representative or call Distributor Sales (800)523-6572.

PART NUMBER	SHAFT d inch	SHAFT d mm	OD D inch	OD D mm	WIDTH B inch	WIDTH B mm	WIDTH C inch	WIDTH C mm	BALL DIA. d_K inch	BALL DIA. d_K mm	ANGLE alpha deg	WGT lbs	WGT . kg	DYN. CAP. x1000 lbf	DYN CAP. kN	STAT. CAP. x1000 lbf	STAT. CAP. kN
GE12ZO	0.500	12.700	0.875	22.225	0.437	11.100	0.375	9.525	0.719	18.263	14	0.044	0.020	3.1	13.7	15.5	59
GE15ZO	0.625	15.875	1.063	26.988	0.547	13.894	0.469	11.913	0.899	22.835	14	0.079	0.036	5.0	22.0	25.0	110
GE19ZO	0.750	19.050	1.250	31.750	0.656	16.662	0.562	14.275	1.080	27.432	14	0.126	0.057	7.10	31.50	35	157
GE22ZO	0.875	22.225	1.438	36.513	0.765	19.431	0.656	16.662	1.258	31.953	14	0.193	0.088	9.60	42.50	48	213
GE25ZO	1.000	25.400	1.625	41.275	0.875	22.225	0.750	19.050	1.437	36.500	13	0.276	0.125	12.50	56	63	280
GE31ZO	1.250	31.750	2.000	50.800	1.093	27.762	0.937	23.800	1.795	45.593	13	0.516	0.234	19.50	87	98	435
GE34ZO	1.375	34.925	2.188	55.563	1.187	30.150	1.031	26.187	1.937	49.200	13	0.770	0.349	23.20	103	116	520
GE38ZO	1.500	38.100	2.438	61.913	1.312	33.325	1.125	28.575	2.155	54.737	13	0.934	0.424	28.00	125	141	630
GE44ZO	1.750	44.450	2.813	71.438	1.531	38.887	1.313	33.338	2.515	63.881	13	1.430	0.649	38.50	170	192	850
GE50ZO	2.000	50.800	3.188	80.963	1.750	44.450	1.500	38.100	2.875	73.025	12	2.070	0.939	50	223	250	1110
GE57ZO	2.250	57.150	3.563	90.488	1.969	50.013	1.688	42.863	3.235	82.169	12	2.920	1.324	63	280	315	1410
GE63ZO	2.500	63.500	3.938	100.013	2.187	55.550	1.875	47.625	3.590	91.186	12	4.090	1.855	78	345	390	1740
GE69ZO	2.750	69.850	4.375	111.125	2.406	61.112	2.063	52.388	3.950	100.330	12	5.380	2.440	95	420	475	2100
GE76ZO	3.000	76.200	4.750	120.650	2.625	66.675	2.250	57.150	4.312	109.525	12	6.870	3.116	113	500	560	2500
GE82ZO	3.250	82.550	5.125	130.175	2.844	72.238	2.438	61.913	4.675	118.745	12	8.630	3.914	132	590	660	2950
GE88ZO	3.500	88.900	5.500	139.700	3.062	77.775	2.625	66.675	5.040	128.016	11	10.650	4.830	154	680	770	3400
GE95ZO	3.750	95.250	5.875	149.225	3.281	83.337	2.813	71.438	5.390	136.906	11	12.950	5.873	176	780	880	3900
GE101ZO	4.000	101.600	6.250	158.750	3.500	88.900	3.000	76.200	5.750	146.050	11	15.590	7.070	200	890	1000	4450
GE114ZO	4.500	114.300	7.000	177.800	3.937	100.000	3.375	85.725	6.475	164.465	7	21.920	9.941	255	1130	1270	5600
GE127ZO	5.000	127.000	7.750	196.850	4.375	111.125	3.750	95.250	7.190	182.626	7	29.710	13.474	315	1390	1560	7000
GE152ZO	6.000	152.400	8.750	222.250	4.750	120.650	4.125	104.775	8.156	207.162	7	38.770	17.583	390	1740	1950	8700

Elges
Radial Spherical Plain Bearings
GE..ZO-2RS SERIES

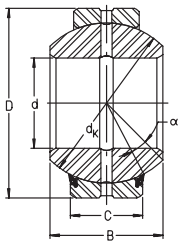

- Inch series, sealed
- Sliding contact surfaces: steel/steel
- Hardened inner and outer ring
- Outer ring with single (axial) split

For details on part numbers, descriptive suffixes and various technical references, please refer to front of this section.
For engineering or technical information contact your local sales representative or call Distributor Sales (800)523-6572.

PART NUMBER	SHAFT d inch	SHAFT d mm	OD D inch	OD D mm	WIDTH B inch	WIDTH B mm	WIDTH C inch	WIDTH C mm
GE19ZO 2RS	0.750	19.050	1.250	31.750	0.656	16.662	0.562	14.275
GE22ZO 2RS	0.875	22.225	1.438	36.513	0.765	19.431	0.656	16.662
GE25ZO 2RS	1.000	25.400	1.625	41.275	0.875	22.225	0.750	19.050
GE31ZO 2RS	1.250	31.750	2.000	50.800	1.093	27.762	0.937	23.800
GE34ZO 2RS	1.375	34.925	2.188	55.563	1.187	30.150	1.031	26.187
GE38ZO 2RS	1.500	38.100	2.438	61.913	1.312	33.325	1.125	28.575
GE44ZO 2RS	1.750	44.450	2.813	71.438	1.531	38.887	1.313	33.338
GE50ZO 2RS	2.000	50.800	3.188	80.963	1.750	44.450	1.500	38.100
GE57ZO 2RS	2.250	57.150	3.563	90.488	1.969	50.013	1.688	42.863
GE63ZO 2RS	2.500	63.500	3.938	100.013	2.187	55.550	1.875	47.625
GE69ZO 2RS	2.750	69.850	4.375	111.125	2.406	61.112	2.063	52.388
GE76ZO 2RS	3.000	76.200	4.750	120.650	2.625	66.675	2.250	57.150
GE82ZO 2RS	3.250	82.550	5.125	130.175	2.844	72.238	2.438	61.913
GE88ZO 2RS	3.500	88.900	5.500	139.700	3.062	77.775	2.625	66.675
GE95ZO 2RS	3.750	95.250	5.875	149.225	3.281	83.337	2.813	71.438
GE101ZO 2RS	4.000	101.600	6.250	158.750	3.500	88.900	3.000	76.200
GE114ZO 2RS	4.500	114.300	7.000	177.800	3.937	100.000	3.375	85.725
GE127ZO 2RS	5.000	127.000	7.750	196.850	4.375	111.125	3.750	95.250
GE152ZO 2RS	6.000	152.400	8.750	222.250	4.750	120.650	4.125	104.775

CONTINUED FROM ABOVE

PART NUMBER	BALL DIA. d_K inch	BALL DIA. d_K mm	ANGLE alpha deg	WGT lbs	WGT kg	DYN. CAP. x1000 lbf	DYN. CAP. kN	STAT. CAP. x1000 lbf	STAT. CAP. kN
GE19ZO 2RS	1.080	27.4	7	0.126	0.057	7.10	31.50	35	157
GE22ZO 2RS	1.258	32.0	7	0.193	0.088	9.60	42.50	48	213
GE25ZO 2RS	1.437	36.5	7	0.276	0.125	12.50	56	63	280
GE31ZO 2RS	1.795	45.6	7	0.516	0.234	19.50	87	98	435
GE34ZO 2RS	1.937	49.2	7	0.770	0.349	23.20	103	116	520
GE38ZO 2RS	2.155	54.7	7	0.934	0.424	28.00	125	141	630
GE44ZO 2RS	2.515	63.9	7	1.430	0.649	38.50	170	192	850
GE50ZO 2RS	2.875	73.0	7	2.070	0.939	50	223	250	1110
GE57ZO 2RS	3.235	82.2	7	2.920	1.324	63	280	315	1410
GE63ZO 2RS	3.590	91.2	7	4.090	1.855	78	345	390	1740
GE69ZO 2RS	3.950	100.3	7	5.380	2.440	95	420	475	2100
GE76ZO 2RS	4.312	109.5	7	6.870	3.116	113	500	560	2500
GE82ZO 2RS	4.675	118.7	7	8.630	3.914	132	590	660	2950
GE88ZO 2RS	5.040	128.0	7	10.650	4.830	154	680	770	3400
GE95ZO 2RS	5.390	136.9	7	12.950	5.873	176	780	880	3900
GE101ZO 2RS	5.750	146.1	7	15.590	7.070	200	890	1000	4450
GE114ZO 2RS	6.475	164.5	7	21.920	9.941	255	1130	1270	5600
GE127ZO 2RS	7.190	182.6	7	29.710	13.474	315	1390	1560	7000
GE152ZO 2RS	8.156	207.2	7	38.770	17.583	390	1740	1950	8700

Elges Angular Contact Spherical Plain Bearings

GE..SX SERIES

● Sliding contact surfaces: steel/steel

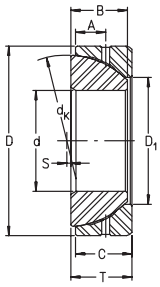

For details on part numbers, descriptive suffixes and various technical references, please refer to front of this section.
For engineering or technical information contact your local sales representative or call Distributor Sales (800)523-6572.

PART NUMBER	d inch	d mm	D inch	D mm	T inch	T mm	WGT. lbs	WGT kg	C lbf	C kN	C_0 lbf	C_0 kN	d_k inch	d_k mm
GE25SX	0.984	25	1.850	47	0.591	15	0.287	0.13	10,700	47.5	53,000	236	1.673	42.5
GE28SX	1.102	28	2.047	52	0.630	16	0.375	0.17	13,500	60	67,000	300	1.850	47
GE30SX	1.181	30	2.165	55	0.669	17	0.463	0.21	14,200	63	71,000	315	1.969	50
GE35SX	1.378	35	2.441	62	0.709	18	0.595	0.27	17,200	76.5	88,000	390	2.205	56
GE40SX	1.575	40	2.677	68	0.748	19	0.706	0.32	20,200	90	101,000	450	2.362	60
GE45SX	1.772	45	2.953	75	0.787	20	0.904	0.41	23,800	106	119,000	530	2.598	66
GE50SX	1.969	50	3.150	80	0.787	20	0.992	0.45	26,500	118	132,000	585	2.913	74
GE55SX	2.165	55	3.543	90	0.906	23	1.477	0.67	33,000	146	165,000	735	3.150	80
GE60SX	2.362	60	3.740	95	0.906	23	1.588	0.72	36,000	160	180,000	800	3.386	86
GE65SX	2.559	65	3.937	100	0.906	23	1.676	0.76	39,000	173	194,000	865	3.622	92
GE70SX	2.756	70	4.331	110	0.984	25	2.205	1	47,000	208	234,000	1040	4.016	102
GE80SX	3.150	80	4.921	125	1.102	28	3.308	1.5	56,000	250	280,000	1250	4.528	115
GE90SX	3.543	90	5.512	140	1.260	32	4.631	2.1	72,000	320	360,000	1600	5.118	130
GE100SX	3.937	100	5.906	150	1.260	32	5.072	2.3	78,000	345	395,000	1760	5.512	140
GE110SX	4.331	110	6.693	170	1.496	38	7.938	3.6	107,000	475	530,000	2360	6.299	160
GE120SX	4.724	120	7.087	180	1.496	38	8.600	3.9	115,000	510	570,000	2550	6.693	170
GE130SX	5.118	130	7.874	200	1.772	45	13.010	5.9	144,000	640	720,000	3200	7.480	190
GE140SX	5.512	140	8.268	210	1.772	45	13.892	6.3	153,000	680	780,000	3450	7.874	200
GE150SX	5.906	150	8.858	225	1.890	48	16.979	7.7	175,000	780	880,000	3900	8.386	213
GE160SX	6.299	160	9.449	240	2.008	51	20.727	9.4	202,000	900	1,010,000	4500	8.858	225
GE170SX	6.693	170	10.236	260	2.244	57	26.460	12	247,000	1100	1,240,000	5500	9.843	250
GE180SX	7.087	180	11.024	280	2.520	64	37.485	17	295,000	1320	1,510,000	6700	10.236	260
GE190SX	7.480	190	11.417	290	2.520	64	39.690	18	310,000	1370	1,560,000	6950	10.827	275
GE200SX	7.874	200	12.205	310	2.756	70	49.613	22.5	350,000	1560	1,750,000	7800	11.417	290

Elges Angular Contact Spherical Plain Bearings

GE..SX SERIES

- Sliding contact surfaces: steel/steel

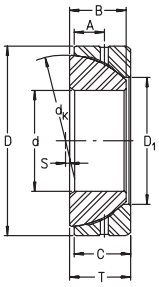

For details on part numbers, descriptive suffixes and various technical references, please refer to front of this section.
For engineering or technical information contact your local sales representative or call Distributor Sales (800)523-6572.

D_1 inch	D_1 mm	B inch	B mm	C inch	C mm	s inch	s mm	A inch	A mm	PART NUMBER
1.236	31.4	0.551	14	0.551	14	0.039	1	0.295	7.5	GE25SX
1.406	35.7	0.591	15	0.591	15	0.039	1	0.315	8	GE28SX
1.421	36.1	0.630	16	0.630	16	0.079	2	0.335	8.5	GE30SX
1.669	42.4	0.669	17	0.669	17	0.079	2	0.354	9	GE35SX
1.843	46.8	0.709	18	0.709	18	0.059	1.5	0.374	9.5	GE40SX
2.083	52.9	0.748	19	0.748	19	0.059	1.5	0.394	10	GE45SX
2.327	59.1	0.748	19	0.748	19	0.158	4	0.394	10	GE50SX
2.441	62	0.866	22	0.866	22	0.158	4	0.453	11.5	GE55SX
2.681	68.1	0.866	22	0.866	22	0.197	5	0.453	11.5	GE60SX
2.976	75.6	0.866	22	0.866	22	0.197	5	0.453	11.5	GE65SX
3.236	82.2	0.945	24	0.945	24	0.276	7	0.492	12.5	GE70SX
3.563	90.5	1.063	27	1.063	27	0.394	10	0.571	14.5	GE80SX
4.067	103.3	1.181	30	1.181	30	0.433	11	0.630	16	GE90SX
4.500	114.3	1.181	30	1.181	30	0.472	12	0.630	16	GE100SX
4.953	125.8	1.417	36	1.417	36	0.591	15	0.748	19	GE110SX
5.331	135.4	1.417	36	1.417	36	0.669	17	0.748	19	GE120SX
5.827	148	1.654	42	1.654	42	0.787	20	0.886	22.5	GE130SX
6.323	160.6	1.654	42	1.654	42	0.787	20	0.886	22.5	GE140SX
6.728	170.9	1.772	45	1.772	45	0.827	21	0.945	24	GE150SX
7.142	181.4	1.890	48	1.890	48	0.827	21	1.004	25.5	GE160SX
7.650	194.3	2.126	54	2.126	54	1.063	27	1.122	28.5	GE170SX
8.091	205.5	2.402	61	2.402	61	0.827	21	1.260	32	GE180SX
8.339	211.8	2.402	61	2.402	61	1.142	29	1.260	32	GE190SX
9.024	229.2	2.598	66	2.598	66	1.024	26	1.378	35	GE200SX

Elges Axial Spherical Plain Bearings

GE..AX SERIES

- Sliding contact surfaces: steel/steel

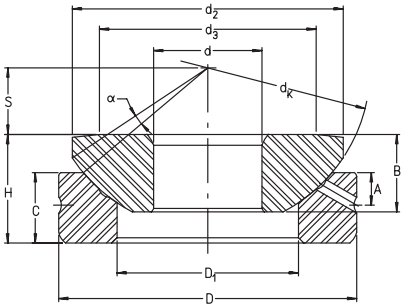

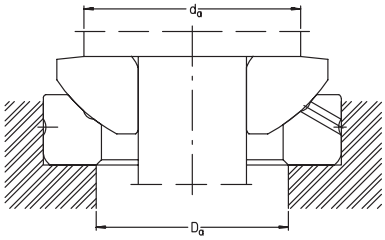

For details on part numbers, descriptive suffixes and various technical references, please refer to front of this section.
For engineering or technical information contact your local sales representative or call Distributor Sales (800)523-6572.

PART NUMBER	d inch	d mm	D inch	D mm	H inch	H mm	WGT. lbs	WGT kg	C lbf	C kN	C_0 lbf	C_0 kN	d_k inch	d_k mm	d_2 inch	d_2 mm
GE10AX	0.394	10	1.181	30	0.374	9.5	0.088	0.04	5,400	24	27,000	120	1.260	32	1.083	27.5
GE12AX	0.472	12	1.378	35	0.512	13	0.154	0.07	7,300	32.5	36,500	163	1.457	37	1.260	32
GE15AX	0.591	15	1.654	42	0.591	15	0.265	0.12	11,700	52	58,000	260	1.772	45	1.532	38.9
GE17AX	0.669	17	1.850	47	0.630	16	0.353	0.16	13,200	58.5	67,000	300	1.969	50	1.709	43.4
GE20AX	0.787	20	2.165	55	0.787	20	0.551	0.25	16,900	75	84,000	375	2.362	60	1.969	50
GE25AX	0.984	25	2.441	62	0.886	22.5	0.838	0.38	29,000	129	144,000	640	2.598	66	2.264	57.5
GE30AX	1.181	30	2.953	75	1.024	26	1.433	0.65	38,000	170	191,000	850	3.150	80	2.717	69
GE35AX	1.378	35	3.543	90	1.102	28	2.205	1	58,000	260	290,000	1290	3.858	98	3.307	84
GE40AX	1.575	40	4.134	105	1.260	32	3.528	1.6	84,000	375	420,000	1860	4.488	114	3.858	98
GE45AX	1.772	45	4.724	120	1.437	36.5	5.292	2.4	110,000	490	550,000	2450	5.118	130	4.409	112
GE50AX	1.969	50	5.118	130	1.673	42.5	7.277	3.3	147,000	655	730,000	3250	5.512	140	4.823	122.5
GE60AX	2.362	60	5.906	150	1.772	45	9.92	4.5	165,000	735	820,000	3650	6.299	160	5.512	140
GE70AX	2.756	70	6.299	160	1.969	50	12.13	5.5	180,000	800	910,000	4050	6.693	170	5.886	149.5
GE80AX	3.150	80	7.087	180	1.969	50	15.44	7	234,000	1040	1,170,000	5200	7.638	194	6.614	168
GE100AX	3.937	100	8.268	210	2.323	59	23.15	10.5	270,000	1200	1,350,000	6000	8.661	220	7.697	195.5
GE120AX	4.724	120	9.055	230	2.520	64	28.67	13	280,000	1250	1,390,000	6200	9.646	245	8.425	214
GE140AX	5.512	140	10.236	260	2.835	72	39.69	18	365,000	1630	1,830,000	8150	10.709	272	9.606	244
GE160AX	6.299	160	11.417	290	3.032	77	50.72	23	425,000	1900	2,140,000	9500	12.205	310	10.709	272
GE180AX	7.087	180	12.598	320	3.386	86	68.36	31	475,000	2120	2,380,000	10600	13.189	335	11.811	300
GE200AX	7.874	200	13.386	340	3.425	87	74.97	34	530,000	2360	2,650,000	11800	14.095	358	12.638	321

CONTINUED FROM ABOVE

PART NUMBER	d_3 inch	d_3 mm	D_1 inch	D_1 mm	B inch	B mm	C inch	C mm	s inch	s mm	A inch	A mm	ALPHA deg	d_a max. inch	d_a max. mm	D_a min. inch	D_a min. mm
GE10AX	0.827	21	0.650	16.5	0.311	7.9	0.236	6	0.276	7	0.118	3	10	0.827	21	0.728	18.5
GE12AX	0.945	24	0.768	19.5	0.366	9.3	0.354	9	0.315	8	0.158	4	9	0.945	24	0.847	21.5
GE15AX	1.142	29	0.945	24	0.421	10.7	0.433	11	0.394	10	0.197	5	7	1.142	29	1.024	26
GE17AX	1.339	34	1.102	28	0.453	11.5	0.453	11.5	0.433	11	0.197	5	6	1.339	34	1.201	30.5
GE20AX	1.575	40	1.319	33.5	0.563	14.3	0.512	13	0.492	12.5	0.236	6	6	1.575	40	1.496	38
GE25AX	1.772	45	1.358	34.5	0.630	16	0.669	17	0.551	14	0.236	6	7	1.772	45	1.535	39
GE30AX	2.205	56	1.732	44	0.709	18	0.768	19.5	0.689	17.5	0.315	8	6	2.205	56	1.929	49
GE35AX	2.598	66	2.047	52	0.866	22	0.787	20	0.866	22	0.315	8	6	2.598	66	2.244	57
GE40AX	3.071	78	2.323	59	1.063	27	0.866	22	0.965	24.5	0.354	9	6	3.071	78	2.520	64
GE45AX	3.504	89	2.677	68	1.221	31	0.984	25	1.083	27.5	0.433	11	6	3.504	89	2.913	74
GE50AX	3.858	98	2.717	69	1.319	33.5	1.260	32	1.181	30	0.394	10	5	3.858	98	2.953	75
GE60AX	4.252	108	3.386	86	1.457	37	1.299	33	1.378	35	0.492	12.5	7	4.252	108	3.622	92
GE70AX	4.764	121	3.740	95	1.575	40	1.417	36	1.378	35	0.532	13.5	6	4.764	121	4.016	102
GE80AX	5.118	130	4.252	108	1.654	42	1.417	36	1.673	42.5	0.571	14.5	6	5.118	130	4.528	115
GE100AX	6.102	155	5.236	133	1.969	50	1.654	42	1.772	45	0.591	15	7	6.102	155	5.551	141
GE120AX	6.693	170	6.063	154	2.047	52	1.772	45	2.067	52.5	0.650	16.5	8	6.693	170	6.378	162
GE140AX	7.795	198	6.929	176	2.402	61	1.969	50	2.067	52.5	0.906	23	6	7.795	198	7.362	187
GE160AX	8.386	213	7.835	199	2.559	65	2.047	52	2.559	65	0.906	23	7	8.386	213	8.307	211
GE180AX	9.449	240	8.819	224	2.756	70	2.362	60	2.658	67.5	1.024	26	8	9.449	240	9.291	236
GE200AX	10.433	265	9.685	246	2.913	74	2.362	60	2.756	70	1.063	27	8	10.433	265	10.197	259

Elges
Thrust Spherical Plain Bearings
GE..ZSX SERIES

- Inch series
- Sliding contact surfaces: steel/steel
- Hardened housing and shaft locating washers

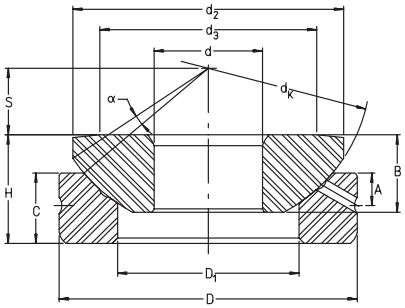

For details on part numbers, descriptive suffixes and various technical references, please refer to front of this section.
For engineering or technical information contact your local sales representative or call Distributor Sales (800)523-6572.

PART NUMBER	SHAFT d inch	SHAFT d mm	OD D inch	OD D mm	TOTAL WIDTH T inch	TOTAL WIDTH T mm	WIDTH B inch	WIDTH B mm	WIDTH C inch	WIDTH C mm
GE12ZSX	0.500	12.700	0.875	22.225	0.300	7.620	0.270	6.858	0.190	4.826
GE15ZSX	0.625	15.875	1.063	26.988	0.370	9.398	0.340	8.636	0.250	6.350
GE19ZSX	0.750	19.050	1.250	31.750	0.440	11.176	0.410	10.414	0.310	7.874
GE22ZSX	0.875	22.225	1.438	36.513	0.520	13.208	0.480	12.192	0.380	9.652
GE25ZSX	1.000	25.400	1.625	41.275	0.600	15.240	0.550	13.970	0.440	11.176
GE31ZSX	1.250	31.750	2.000	50.800	0.740	18.796	0.700	17.780	0.550	13.970
GE34ZSX	1.375	34.925	2.188	55.563	0.840	21.336	0.770	19.558	0.600	15.240
GE38ZSX	1.500	38.100	2.438	61.913	0.910	23.114	0.840	21.336	0.660	16.764
GE44ZSX	1.750	44.450	2.813	71.438	1.070	27.178	0.980	24.892	0.790	20.066
GE50ZSX	2.000	50.800	3.188	80.963	1.230	31.242	1.130	28.702	0.920	23.368
GE57ZSX	2.250	57.150	3.563	90.488	1.390	35.306	1.270	32.258	1.050	26.670
GE63ZSX	2.500	63.500	3.938	100.013	1.540	39.116	1.420	36.068	1.180	29.972
GE69ZSX	2.750	69.850	4.375	111.125	1.700	43.180	1.560	39.624	1.275	32.385
GE76ZSX	3.000	76.200	4.750	120.650	1.860	47.244	1.710	43.434	1.406	35.712
GE82ZSX	3.250	82.550	5.125	130.175	2.030	51.562	1.860	47.244	1.545	39.243
GE88ZSX	3.500	88.900	5.500	139.700	2.180	55.372	2.000	50.800	1.675	42.545
GE95ZSX	3.750	95.250	5.875	149.225	2.340	59.436	2.150	54.610	1.805	45.847
GE101ZSX	4.000	101.600	6.250	158.750	2.500	63.500	2.300	58.420	1.935	49.149
GE114ZSX	4.500	114.300	7.000	177.800	2.800	71.120	2.590	65.786	2.195	55.753
GE127ZSX	5.000	127.000	7.750	196.850	3.130	79.502	2.880	73.152	2.455	62.357
GE152ZSX	6.000	152.400	8.750	222.250	3.375	85.725	3.100	78.740	2.615	66.421

PART NUMBER	BALL DIA. d_K inch	BALL DIA. d_K mm	WEIGHT lbs	WEIGHT kg	DYN. CAP. x1000 lbf	DYN. CAP. kN	STAT. CAP. x1000 lbf	STAT. CAP. kN
GE12ZSX	0.719	18.263	0.029	0.013	1.68	7.50	8.40	37.50
GE15ZSX	0.899	22.835	0.056	0.025	2.75	12.30	13.90	62
GE19ZSX	1.080	27.432	0.083	0.038	4.15	18.40	20.60	92
GE22ZSX	1.258	31.953	0.110	0.050	5.90	26.00	29.50	131
GE25ZSX	1.437	36.500	0.188	0.085	7.80	34.50	39	173
GE31ZSX	1.795	45.593	0.351	0.159	12.20	54	61	270
GE34ZSX	1.937	49.200	0.470	0.213	14.30	64	72	320
GE38ZSX	2.155	54.737	0.662	0.300	17.50	78	88	390
GE44ZSX	2.515	63.881	1.010	0.458	24.50	109	122	540
GE50ZSX	2.875	73.025	1.480	0.671	32.50	145	163	730
GE57ZSX	3.235	82.169	2.090	0.948	42	186	209	930
GE63ZSX	3.590	91.186	2.490	1.129	52	232	260	1160
GE69ZSX	3.950	100.330	3.860	1.751	62	275	310	1380
GE76ZSX	4.312	109.525	6.670	3.025	75	330	375	1660
GE82ZSX	4.675	118.745	6.360	2.884	89	395	445	1980
GE88ZSX	5.040	128.016	7.870	3.569	104	465	520	2310
GE95ZSX	5.390	136.906	9.590	4.349	120	530	600	2650
GE101ZSX	5.750	146.050	11.56	5.243	137	610	690	3050
GE114ZSX	6.475	164.465	17.12	7.764	175	780	880	3900
GE127ZSX	7.190	182.626	24.40	11.07	218	970	1090	4850
GE152ZSX	8.156	207.162	38.34	17.39	265	1170	1310	5800

Elges
Radial Spherical Plain Bearings
GE..UK SERIES
GE..UK-2RS SERIES

- DIN 648, dimension series E – ISO 6124/1
- Sliding contact surfaces: hard chromium/PTFE
- Sliding contact surfaces available with: corrosion resistant steel/PTFE – suffix W1

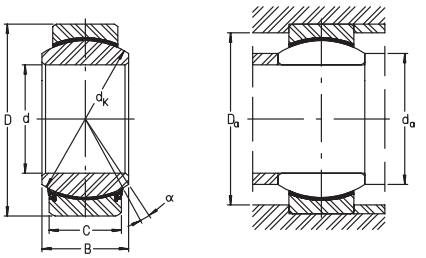

For details on part numbers, descriptive suffixes and various technical references, please refer to front of this section.
For engineering or technical information contact your local sales representative or call Distributor Sales (800)523-6572.

PART NUMBER	d inch	d mm	D inch	D mm	B inch	B mm	C inch	C mm	WGT. lbs	WGT kg
GE6UK	0.236	6	0.551	14	0.236	6	0.158	4	0.009	0.004
GE8UK	0.315	8	0.630	16	0.315	8	0.197	5	0.015	0.007
GE10UK	0.394	10	0.748	19	0.354	9	0.236	6	0.024	0.011
GE12UK	0.472	12	0.866	22	0.394	10	0.276	7	0.035	0.016
GE15UK	0.591	15	1.024	26	0.472	12	0.354	9	0.055	0.025
GE17UK	0.669	17	1.181	30	0.551	14	0.394	10	0.084	0.038
GE20UK	0.787	20	1.378	35	0.630	16	0.472	12	0.135	0.061
GE25UK	0.984	25	1.654	42	0.787	20	0.630	16	0.243	0.11
GE30UK	1.181	30	1.850	47	0.866	22	0.709	18	0.309	0.14
GE17UK2RS	0.669	17	1.181	30	0.551	14	0.394	10	0.084	0.038
GE20UK2RS	0.787	20	1.378	35	0.630	16	0.472	12	0.135	0.061
GE25UK2RS	0.984	25	1.654	42	0.787	20	0.630	16	0.243	0.11
GE30UK2RS	1.181	30	1.850	47	0.866	22	0.709	18	0.309	0.14
GE35UK2RS	1.378	35	2.165	55	0.984	25	0.787	20	0.485	0.22
GE40UK2RS	1.575	40	2.441	62	1.102	28	0.866	22	0.662	0.3
GE45UK2RS	1.772	45	2.677	68	1.260	32	0.984	25	0.882	0.4
GE50UK2RS	1.969	50	2.953	75	1.378	35	1.102	28	1.191	0.54
GE60UK2RS	2.362	60	3.543	90	1.732	44	1.417	36	2.205	1
GE70UK2RS	2.756	70	4.134	105	1.929	49	1.575	40	3.308	1.5
GE80UK2RS	3.150	80	4.724	120	2.165	55	1.772	45	4.851	2.2
GE90UK2RS	3.543	90	5.118	130	2.362	60	1.969	50	5.954	2.7
GE100UK2RS	3.937	100	5.906	150	2.756	70	2.165	55	9.482	4.3
GE110UK2RS	4.331	110	6.299	160	2.756	70	2.165	55	10.36	4.7
GE120UK2RS	4.724	120	7.087	180	3.347	85	2.756	70	17.64	8
GE140UK2RS	5.512	140	8.268	210	3.543	90	2.756	70	24.26	11
GE160UK2RS	6.299	160	9.055	230	4.134	105	3.150	80	29.77	13.5
GE180UK2RS	7.087	180	10.236	260	4.134	105	3.150	80	40.79	18.5
GE200UK2RS	7.874	200	11.417	290	5.118	130	3.937	100	61.74	28
GE220UK2RS	8.661	220	12.598	320	5.315	135	3.937	100	78.28	35.5
GE240UK2RS	9.449	240	13.386	340	5.512	140	3.937	100	88.20	40
GE260UK2RS	10.236	260	14.567	370	5.906	150	4.331	110	110.25	50
GE280UK2RS	11.024	280	15.748	400	6.102	155	4.724	120	141.12	64
GE300UK2RS	11.811	300	16.929	430	6.496	165	4.724	120	165.38	75

Elges
Radial Spherical Plain Bearings
GE..UK SERIES
GE..UK-2RS SERIES

- DIN 648, dimension series E – ISO 6124/1
- Sliding contact surfaces: hard chromium/PTFE
- Sliding contact surfaces available with: corrosion resistant steel/PTFE – suffix W1

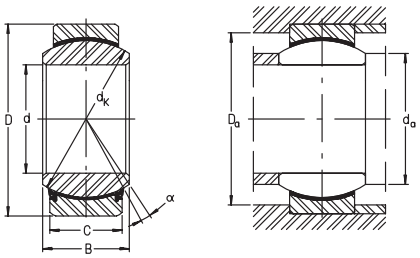

For details on part numbers, descriptive suffixes and various technical references, please refer to front of this section.
For engineering or technical information contact your local sales representative or call Distributor Sales (800)523-6572.

C lbf	C kN	C_0 lbf	C_0 kN	d_k inch	d_k mm	ALPHA deg	d_a max. inch	d_a max. mm	D_a min. inch	D_a min. mm	PART NUMBER
810	3.6	2,020	9	0.394	10	13	0.315	8	0.378	9.6	GE6UK
1,320	5.85	3,300	14.6	0.512	13	15	0.402	10.2	0.492	12.5	GE8UK
1,950	8.65	4,850	21.6	0.630	16	12	0.520	13.2	0.610	15.5	GE10UK
2,550	11.4	6,400	28.5	0.709	18	11	0.587	14.9	0.689	17.5	GE12UK
3,950	17.6	9,900	44	0.866	22	8	0.724	18.4	0.827	21	GE15UK
5,000	22.4	12,600	56	0.984	25	10	0.815	20.7	0.945	24	GE17UK
7,100	31.5	17,500	78	1.142	29	9	0.949	24.1	1.083	27.5	GE20UK
11,500	51	28,500	127	1.398	35.5	7	1.154	29.3	1.299	33	GE25UK
14,700	65.5	37,500	166	1.602	40.7	6	1.347	34.2	1.496	38	GE30UK
6,700	30	13,500	60	0.984	25	10	0.815	20.7	0.945	24	GE17UK2RS
9,300	41.5	18,700	83	1.142	29	9	0.949	24.1	1.083	27.5	GE20UK2RS
15,300	68	31,000	137	1.398	35.5	7	1.154	29.3	1.299	33	GE25UK2RS
19,800	88	39,500	176	1.602	40.7	6	1.347	34.2	1.496	38	GE30UK2RS
25,000	112	50,000	224	1.850	47	6	1.563	39.7	1.752	44.5	GE35UK2RS
31,500	140	63,000	280	2.087	53	7	1.772	45	2.008	51	GE40UK2RS
40,500	180	81,000	360	2.362	60	7	1.996	50.7	2.244	57	GE45UK2RS
49,500	220	99,000	440	2.598	66	6	2.201	55.9	2.480	63	GE50UK2RS
78,000	345	156,000	695	3.150	80	6	2.630	66.8	2.953	75	GE60UK2RS
99,000	440	198,000	880	3.622	92	6	3.063	77.8	3.425	87	GE70UK2RS
128,000	570	255,000	1140	4.134	105	6	3.520	89.4	3.898	99	GE80UK2RS
156,000	695	310,000	1370	4.528	115	5	3.862	98.1	4.252	108	GE90UK2RS
194,000	865	390,000	1730	5.118	130	7	4.311	109.5	4.843	123	GE100UK2RS
209,000	930	420,000	1860	5.512	140	6	4.772	121.2	5.276	134	GE110UK2RS
300,000	1340	610,000	2700	6.299	160	6	5.335	135.5	5.906	150	GE120UK2RS
335,000	1500	670,000	3000	7.087	180	7	6.134	155.8	6.811	173	GE140UK2RS
435,000	1930	850,000	3800	7.874	200	8	6.701	170.2	7.520	191	GE160UK2RS
485,000	2160	970,000	4300	8.858	225	6	7.831	198.9	8.622	219	GE180UK2RS
670,000	3000	1,350,000	6000	9.843	250	7	8.406	213.5	9.409	239	GE200UK2RS
750,000	3350	1,470,000	6550	10.827	275	8	9.429	239.5	10.512	267	GE220UK2RS
810,000	3600	1,620,000	7200	11.811	300	8	10.445	265.3	11.614	295	GE240UK2RS
970,000	4300	1,940,000	8650	12.795	325	7	11.350	288.3	12.559	319	GE260UK2RS
1,120,000	5000	2,250,000	10000	13.780	350	6	12.354	313.8	13.465	342	GE280UK2RS
1,210,000	5400	2,430,000	10800	14.764	375	7	13.256	336.7	14.567	370	GE300UK2RS

Elges
Radial Spherical Plain Bearings
GE..DW SERIES

- DIN 648, dimension series C – ISO 6124/3
- Sliding contact surfaces: hard chromium/PTFE

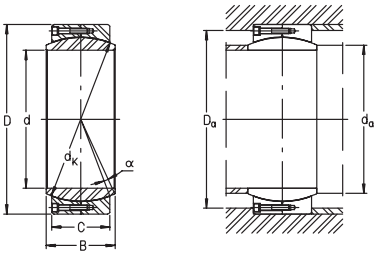

For details on part numbers, descriptive suffixes and various technical references, please refer to front of this section.
For engineering or technical information contact your local sales representative or call Distributor Sales (800)523-6572.

PART NUMBER	d inch	d mm	D inch	D mm	B inch	B mm	C inch	C mm	WGT. lbs	WGT kg
GE320DW	12.598	320	17.323	440	6.299	160	5.315	135	167.58	76
GE340DW	13.386	340	18.110	460	6.299	160	5.315	135	176.40	80
GE360DW	14.173	360	18.898	480	6.299	160	5.315	135	189.63	86
GE380DW	14.961	380	20.472	520	7.480	190	6.299	160	275.63	125
GE400DW	15.748	400	21.260	540	7.480	190	6.299	160	286.65	130
GE420DW	16.535	420	22.047	560	7.480	190	6.299	160	315.32	143
GE440DW	17.323	440	23.622	600	8.583	218	7.284	185	414.54	188
GE460DW	18.110	460	24.409	620	8.583	218	7.284	185	438.80	199
GE480DW	18.898	480	25.591	650	9.055	230	7.677	195	520.38	236
GE500DW	19.685	500	26.378	670	9.055	230	7.677	195	535.82	243
GE530DW	20.866	530	27.953	710	9.567	243	8.071	205	635.04	288
GE560DW	22.047	560	29.528	750	10.158	258	8.465	215	745.29	338
GE600DW	23.622	600	31.496	800	10.709	272	9.055	230	897.44	407

Elges
Radial Spherical Plain Bearings
GE..DW SERIES

- DIN 648, dimension series C – ISO 6124/3
- Sliding contact surfaces: hard chromium/PTFE

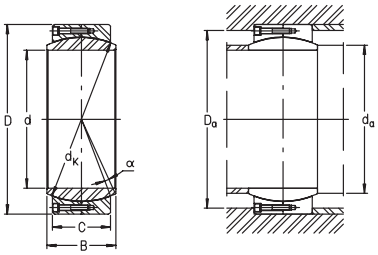

For details on part numbers, descriptive suffixes and various technical references, please refer to front of this section.
For engineering or technical information contact your local sales representative or call Distributor Sales (800)523-6572.

C x1000 lbf	C kN	C_0 x1000 lbf	C_0 kN	d_k inch	d_k mm	ALPHA deg	d_a max. inch	d_a max. mm	D_a min. inch	D_a min. mm	PART NUMBER
1730	7695	3450	15390	14.961	380	4	13.567	344.6	14.213	361	GE320DW
1820	8100	3650	16200	15.748	400	3.8	14.433	366.6	15.039	382	GE340DW
1910	8505	3800	17010	16.535	420	3.6	15.287	388.3	15.866	403	GE360DW
2430	10800	4850	21600	17.717	450	4.1	16.059	407.9	16.772	426	GE380DW
2550	11280	5100	22560	18.504	470	3.9	16.921	429.8	17.598	447	GE400DW
2650	11760	5300	23520	19.291	490	3.7	17.780	451.6	18.465	469	GE420DW
3250	14430	6500	28860	20.472	520	3.9	18.583	472	19.331	491	GE440DW
3350	14985	6700	29970	21.260	540	3.7	19.449	494	20.197	513	GE460DW
3700	16525	7400	33050	22.244	565	3.8	20.315	516	21.102	536	GE480DW
3850	17110	7700	34220	23.032	585	3.6	21.173	537.8	21.929	557	GE500DW
4300	19065	6300	28130	24.409	620	3.7	22.453	570.3	23.268	591	GE530DW
4750	21125	9500	42250	25.787	655	4	23.701	602	24.567	624	GE560DW
5400	24150	10900	48300	27.559	700	3.6	25.390	644.9	26.260	667	GE600DW

Elges
Radial Spherical Plain Bearings
GE..FW, GE..FW-2RS SERIES

- Metric
- DIN 648, dimension series G – ISO 6124/1
- Sliding contact surfaces: hard chromium/PTFE
- Matching dimensions with series GE..FO

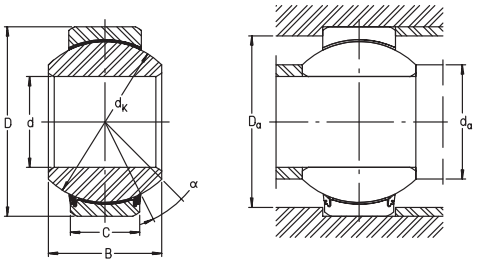

For details on part numbers, descriptive suffixes and various technical references, please refer to front of this section.
For engineering or technical information contact your local sales representative or call Distributor Sales (800)523-6572.

PART NUMBER	d inch	d mm	D inch	D mm	B inch	B mm	C inch	C mm	WGT. lbs	WGT kg
GE6FW	0.236	6	0.630	16	0.354	9	0.197	5	0.018	0.008
GE8FW	0.315	8	0.748	19	0.433	11	0.236	6	0.031	0.014
GE10FW	0.394	10	0.866	22	0.472	12	0.276	7	0.044	0.02
GE12FW	0.472	12	1.024	26	0.591	15	0.354	9	0.075	0.034
GE15FW	0.591	15	1.181	30	0.630	16	0.394	10	0.101	0.046
GE17FW	0.669	17	1.378	35	0.787	20	0.472	12	0.172	0.078
GE20FW	0.787	20	1.654	42	0.984	25	0.630	16	0.331	0.15
GE25FW	0.984	25	1.850	47	1.102	28	0.709	18	0.419	0.19
GE30FW2RS	1.181	30	2.165	55	1.260	32	0.787	20	0.639	0.29
GE35FW2RS	1.378	35	2.441	62	1.378	35	0.866	22	0.86	0.39
GE40FW2RS	1.575	40	2.677	68	1.575	40	0.984	25	1.147	0.52
GE45FW2RS	1.772	45	2.953	75	1.693	43	1.102	28	1.499	0.68
GE50FW2RS	1.969	50	3.543	90	2.205	56	1.417	36	3.087	1.4
GE60FW2RS	2.362	60	4.134	105	2.480	63	1.575	40	4.41	2
GE70FW2RS	2.756	70	4.724	120	2.756	70	1.772	45	6.395	2.9
GE80FW2RS	3.150	80	5.118	130	2.953	75	1.969	50	7.718	3.5
GE90FW2RS	3.543	90	5.906	150	3.347	85	2.165	55	11.91	5.4
GE100FW2RS	3.937	100	6.299	160	3.347	85	2.165	55	13.01	5.9
GE110FW2RS	4.331	110	7.087	180	3.937	100	2.756	70	21.39	9.7
GE120FW2RS	4.724	120	8.268	210	4.528	115	2.756	70	33.08	15
GE140FW2RS	5.512	140	9.055	230	5.118	130	3.150	80	40.79	18.5
GE160FW2RS	6.299	160	10.236	260	5.315	135	3.150	80	55.13	25
GE180FW2RS	7.087	180	11.417	290	6.102	155	3.937	100	78.28	35.5
GE200FW2RS	7.874	200	12.598	320	6.496	165	3.937	100	99.23	45
GE220FW2RS	8.661	220	13.386	340	6.890	175	3.937	100	112.46	51
GE240FW2RS	9.449	240	14.567	370	7.480	190	4.331	110	141.12	64
GE260FW2RS	10.236	260	15.748	400	8.071	205	4.724	120	178.61	81
GE280FW2RS	11.024	280	16.929	430	8.268	210	4.724	120	207.27	94

Elges
Radial Spherical Plain Bearings
GE..FW, GE..FW-2RS SERIES

- Metric
- DIN 648, dimension series G – ISO 6124/1
- Sliding contact surfaces: hard chromium/PTFE
- Matching dimensions with series GE..UK

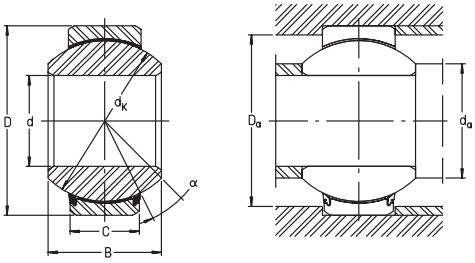

For details on part numbers, descriptive suffixes and various technical references, please refer to front of this section.
For engineering or technical information contact your local sales representative or call Distributor Sales (800)523-6572.

C lbf	C kN	C_0 lbf	C_0 kN	d_k inch	d_k mm	ALPHA deg	d_a max. inch	d_a max. mm	D_a min. inch	D_a min. mm	PART NUMBER
1,320	5.85	3,300	14.6	0.512	13	21	0.366	9.3	0.492	12.5	GE6FW
1,950	8.65	4,850	21.6	0.630	16	21	0.457	11.6	0.610	15.5	GE8FW
2,550	11.4	6,400	28.5	0.709	18	18	0.528	13.4	0.689	17.5	GE10FW
3,950	17.6	9,900	44	0.866	22	18	0.630	16	0.827	21	GE12FW
5,000	22.4	12,600	56	0.984	25	16	0.756	19.2	0.945	24	GE15FW
7,100	31.5	17,500	78	1.142	29	19	0.827	21	1.083	27.5	GE17FW
11,500	51	28,500	127	1.398	35.5	17	0.992	25.2	1.299	33	GE20FW
14,700	65.5	37,500	166	1.602	40.7	17	1.161	29.5	1.496	38	GE25FW
25,000	112	50,000	224	1.850	47	17	1.354	34.4	1.752	44.5	GE30FW2RS
31,500	140	63,000	280	2.087	53	16	1.563	39.7	2.008	51	GE35FW2RS
40,500	180	81,000	360	2.362	60	17	1.760	44.7	2.244	57	GE40FW2RS
49,500	220	99,000	440	2.598	66	15	1.969	50	2.480	63	GE45FW2RS
78,000	345	156,000	695	3.150	80	17	2.248	57.1	2.953	75	GE50FW2RS
99,000	440	198,000	880	3.622	92	17	2.638	67	3.425	87	GE60FW2RS
128,000	570	255,000	1140	4.134	105	16	3.079	78.2	3.898	99	GE70FW2RS
156,000	695	310,000	1370	4.528	115	14	3.429	87.1	4.252	108	GE80FW2RS
194,000	865	390,000	1730	5.118	130	15	3.870	98.3	4.843	123	GE90FW2RS
209,000	930	420,000	1860	5.512	140	14	4.378	111.2	5.276	134	GE100FW2RS
300,000	1340	610,000	2700	6.299	160	12	4.913	124.8	5.906	150	GE110FW2RS
335,000	1500	670,000	3000	7.087	180	16	5.449	138.4	6.811	173	GE120FW2RS
435,000	1930	850,000	3800	7.874	200	16	5.980	151.9	7.520	191	GE140FW2RS
485,000	2160	970,000	4300	8.858	225	16	7.087	180	8.622	219	GE160FW2RS
670,000	3000	1,350,000	6000	9.843	250	14	7.721	196.1	9.409	239	GE180FW2RS
750,000	3350	1,470,000	6550	10.827	275	15	8.661	220	10.512	267	GE200FW2RS
810,000	3600	1,620,000	7200	11.811	300	16	9.591	243.6	11.614	295	GE220FW2RS
970,000	4300	1,940,000	8650	12.795	325	15	10.378	263.6	12.559	319	GE240FW2RS
1,120,000	5000	2,250,000	10000	13.780	350	15	11.165	283.6	13.465	342	GE260FW2RS
1,210,000	5400	2,430,000	10800	14.764	375	15	12.228	310.6	14.567	370	GE280FW2RS

Elges
Radial Spherical Plain Bearings
GE..PW SERIES

- Metric
- DIN 648, dimension series K
- Maintenance free
- Sliding contact surfaces: steel/PTFE

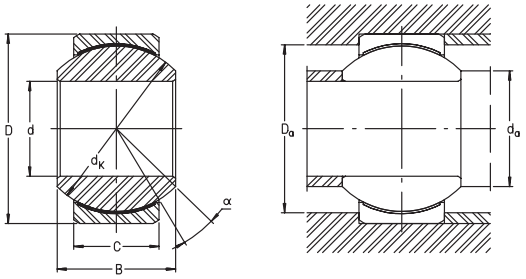

For details on part numbers, descriptive suffixes and various technical references, please refer to front of this section.
For engineering or technical information contact your local sales representative or call Distributor Sales (800)523-6572.

PART NUMBER	d inch	d mm	D inch	D mm	B inch	B mm	C inch	C mm	WGT. lbs	WGT kg
GE5PW	0.197	5	0.512	13	0.315	8	0.236	6	0.013	0.006
GE6PW	0.236	6	0.630	16	0.354	9	0.266	6.75	0.022	0.01
GE8PW	0.315	8	0.748	19	0.472	12	0.354	9	0.04	0.018
GE10PW	0.394	10	0.866	22	0.551	14	0.413	10.5	0.06	0.027
GE12PW	0.472	12	1.024	26	0.630	16	0.472	12	0.095	0.043
GE14PW	0.551	14	1.102	28	0.748	19	0.532	13.5	0.121	0.055
GE16PW	0.630	16	1.260	32	0.827	21	0.591	15	0.176	0.08
GE18PW	0.709	18	1.378	35	0.906	23	0.650	16.5	0.221	0.1
GE20PW	0.787	20	1.575	40	0.984	25	0.709	18	0.331	0.15
GE22PW	0.866	22	1.654	42	1.102	28	0.787	20	0.397	0.18
GE25PW	0.984	25	1.850	47	1.221	31	0.866	22	0.529	0.24
GE30PW	1.181	30	2.165	55	1.457	37	0.984	25	0.838	0.38

Elges
Radial Spherical Plain Bearings
GE..PW SERIES

- Metric
- DIN 648, dimension series K
- Maintenance free
- Sliding contact surfaces: steel/PTFE

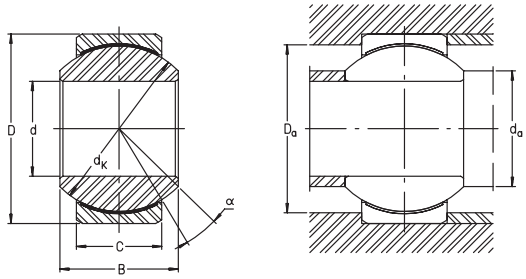

For details on part numbers, descriptive suffixes and various technical references, please refer to front of this section.
For engineering or technical information contact your local sales representative or call Distributor Sales (800)523-6572.

C lbf	C kN	C_0 lbf	C_0 kN	d_k inch	d_k mm	ALPHA deg	d_a max. inch	d_a max. mm	D_a min. inch	D_a min. mm	PART NUMBER
1,350	6	3,350	15	0.438	11.112	13	0.303	7.7	0.386	9.8	GE5PW
1,720	7.65	4,350	19.3	0.500	12.7	13	0.350	8.9	0.453	11.5	GE6PW
2,900	12.9	7,200	32	0.625	15.875	14	0.406	10.3	0.551	14	GE8PW
4,050	18	10,100	45	0.750	19.05	13	0.508	12.9	0.669	17	GE10PW
5,400	24	13,500	60	0.875	22.225	13	0.606	15.4	0.768	19.5	GE12PW
7,000	31	17,200	76.5	1.000	25.4	16	0.661	16.8	0.886	22.5	GE14PW
8,800	39	21,700	96.5	1.125	28.575	15	0.760	19.3	1.004	25.5	GE16PW
10,700	47.5	26,500	118	1.250	31.75	15	0.858	21.8	1.122	28.5	GE18PW
12,800	57	31,500	140	1.375	34.925	14	0.957	24.3	1.240	31.5	GE20PW
15,300	68	38,000	170	1.500	38.1	15	1.016	25.8	1.339	34	GE22PW
19,100	85	47,500	212	1.687	42.85	15	1.161	29.5	1.516	38.5	GE25PW
25,500	114	64,000	285	2.000	50.8	17	1.370	34.8	1.811	46	GE30PW

Elges Angular Contact Spherical Plain Bearings

GE..SW SERIES

- Sliding contact surfaces: hard chromium/PTFE

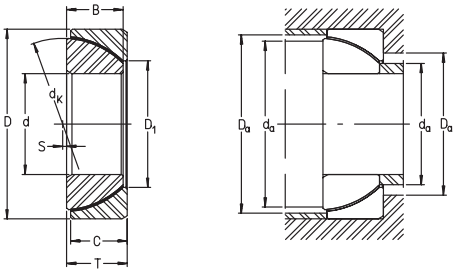

For details on part numbers, descriptive suffixes and various technical references, please refer to front of this section.
For engineering or technical information contact your local sales representative or call Distributor Sales (800)523-6572.

PART NUMBER	d inch	d mm	D inch	D mm	T inch	T mm	WGT. lbs	WGT kg	C lbf	C kN	C_0 lbf	C_0 kN	d_k inch	d_k mm	D_1 inch	D_1 mm
GE25SW	0.984	25	1.850	47	0.591	15	0.309	0.14	16,000	71	31,500	140	1.673	42.5	1.236	31.4
GE28SW	1.102	28	2.047	52	0.630	16	0.397	0.18	20,200	90	40,500	180	1.850	47	1.406	35.7
GE30SW	1.181	30	2.165	55	0.669	17	0.485	0.22	21,400	95	42,500	190	1.969	50	1.421	36.1
GE32SW	1.260	32	2.284	58	0.669	17	0.529	0.24	22,900	102	46,000	204	2.087	53	1.547	39.3
GE35SW	1.378	35	2.441	62	0.709	18	0.617	0.28	26,000	116	52,000	232	2.205	56	1.669	42.4
GE40SW	1.575	40	2.677	68	0.748	19	0.75	0.34	30,000	134	61,000	270	2.362	60	1.843	46.8
GE45SW	1.772	45	2.953	75	0.787	20	0.948	0.43	36,000	160	72,000	320	2.598	66	2.083	52.9
GE50SW	1.969	50	3.150	80	0.787	20	1.036	0.47	39,500	176	80,000	355	2.913	74	2.327	59.1
GE55SW	2.165	55	3.543	90	0.906	23	1.544	0.7	49,500	220	99,000	440	3.150	80	2.441	62
GE60SW	2.362	60	3.740	95	0.906	23	1.654	0.75	54,000	240	108,000	480	3.386	86	2.681	68.1
GE65SW	2.559	65	3.937	100	0.906	23	1.764	0.8	58,000	260	117,000	520	3.622	92	2.976	75.6
GE70SW	2.756	70	4.331	110	0.984	25	2.205	1	71,000	315	142,000	630	4.016	102	3.236	82.2
GE80SW	3.150	80	4.921	125	1.142	29	3.528	1.6	84,000	375	169,000	750	4.528	115	3.563	90.5
GE90SW	3.543	90	5.512	140	1.260	32	4.851	2.2	108,000	480	217,000	965	5.118	130	4.067	103.3
GE100SW	3.937	100	5.906	150	1.260	32	5.292	2.4	117,000	520	234,000	1040	5.512	140	4.500	114.3
GE110SW	4.331	110	6.693	170	1.496	38	8.16	3.7	160,000	710	320,000	1430	6.299	160	4.953	125.8
GE120SW	4.724	120	7.087	180	1.496	38	8.82	4	172,000	765	345,000	1530	6.693	170	5.331	135.4
GE130SW	5.118	130	7.874	200	1.772	45	13.23	6	217,000	965	435,000	1930	7.480	190	5.827	148
GE140SW	5.512	140	8.268	210	1.772	45	14.11	6.4	229,000	1020	460,000	2040	7.874	200	6.323	160.6
GE150SW	5.906	150	8.858	225	1.890	48	17.42	7.9	265,000	1180	530,000	2360	8.386	213	6.728	170.9
GE160SW	6.299	160	9.449	240	2.008	51	21.17	9.6	300,000	1340	610,000	2700	8.858	225	7.142	181.4
GE170SW	6.693	170	10.236	260	2.244	57	28.67	13	375,000	1660	750,000	3350	9.843	250	7.650	194.3
GE180SW	7.087	180	11.024	280	2.520	64	38.59	17.5	450,000	2000	900,000	4000	10.236	260	8.091	205.5
GE190SW	7.480	190	11.417	290	2.520	64	39.69	18	470,000	2080	930,000	4150	10.827	275	8.339	211.8
GE200SW	7.874	200	12.205	310	2.756	70	50.72	23	530,000	2360	1,070,000	4750	11.417	290	9.024	229.2

Elges Angular Contact Spherical Plain Bearings

GE..SW SERIES

- Sliding contact surfaces: hard chromium/PTFE

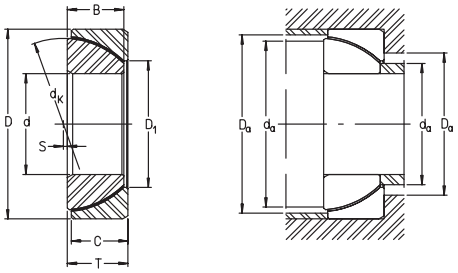

For details on part numbers, descriptive suffixes and various technical references, please refer to front of this section.
For engineering or technical information contact your local sales representative or call Distributor Sales (800)523-6572.

B inch	B mm	C inch	C mm	s inch	s mm	d_a max. inch	d_a max. mm	d_b max. inch	d_b max. mm	D_a min. inch	D_a min. mm	D_b min. inch	D_b min. mm	PART NUMBER
0.551	14	0.551	14	0.039	1	1.185	30.1	1.555	39.5	1.339	34	1.693	43	GE25SW
0.591	15	0.591	15	0.039	1	1.354	34.4	1.654	42	1.575	40	1.870	47.5	GE28SW
0.630	16	0.630	16	0.079	2	1.362	34.6	1.772	45	1.595	40.5	1.988	50.5	GE30SW
0.630	16	0.630	16	0.098	2.5	1.492	37.9	1.870	47.5	1.732	44	2.126	54	GE32SW
0.669	17	0.669	17	0.079	2	1.618	41.1	1.969	50	1.850	47	2.244	57	GE35SW
0.709	18	0.709	18	0.059	1.5	1.791	45.5	2.126	54	2.047	52	2.402	61	GE40SW
0.748	19	0.748	19	0.059	1.5	2.035	51.7	2.362	60	2.284	58	2.638	67	GE45SW
0.748	19	0.748	19	0.158	4	2.280	57.9	2.638	67	2.559	65	2.953	75	GE50SW
0.866	22	0.866	22	0.158	4	2.390	60.7	2.795	71	2.756	70	3.189	81	GE55SW
0.866	22	0.866	22	0.197	5	2.634	66.9	3.032	77	2.992	76	3.425	87	GE60SW
0.866	22	0.866	22	0.197	5	2.929	74.4	3.268	83	3.307	84	3.661	93	GE65SW
0.945	24	0.945	24	0.276	7	3.185	80.9	3.622	92	3.543	90	4.095	104	GE70SW
1.063	27	1.063	27	0.394	10	3.465	88	4.095	104	3.898	99	4.606	117	GE80SW
1.181	30	1.181	30	0.433	11	3.969	100.8	4.646	118	4.409	112	5.197	132	GE90SW
1.181	30	1.181	30	0.472	12	4.409	112	5.039	128	4.843	123	5.630	143	GE100SW
1.417	36	1.417	36	0.591	15	4.850	123.2	5.748	146	5.315	135	6.378	162	GE110SW
1.417	36	1.417	36	0.669	17	5.232	132.9	6.102	155	5.709	145	6.772	172	GE120SW
1.654	42	1.654	42	0.787	20	5.665	143.9	6.850	174	6.221	158	7.559	192	GE130SW
1.654	42	1.654	42	0.787	20	6.177	156.9	7.244	184	6.732	171	7.953	202	GE140SW
1.772	45	1.772	45	0.827	21	6.579	167.1	7.638	194	7.244	184	8.504	216	GE150SW
1.890	48	1.890	48	0.827	21	6.996	177.7	8.110	206	7.677	195	8.976	228	GE160SW
2.126	54	2.126	54	1.063	27	7.496	190.4	8.976	228	8.189	208	9.961	253	GE170SW
2.402	61	2.402	61	0.827	21	7.941	201.7	9.449	240	8.661	220	10.354	263	GE180SW
2.402	61	2.402	61	1.142	29	8.185	207.9	9.921	252	8.898	226	10.945	278	GE190SW
2.598	66	2.598	66	1.024	26	8.823	224.1	10.551	268	9.606	244	11.535	293	GE200SW

Elges Axial Spherical Plain Bearings

GE..AW SERIES

- Sliding contact surfaces: hard chromium/PTFE

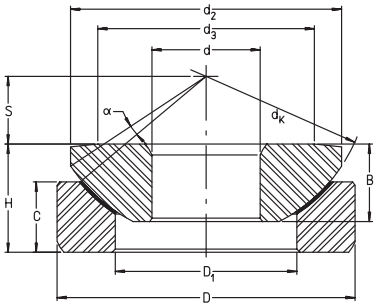

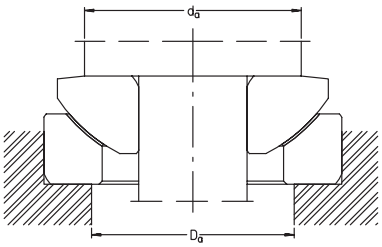

For details on part numbers, descriptive suffixes and various technical references, please refer to front of this section.
For engineering or technical information contact your local sales representative or call Distributor Sales (800)523-6572.

PART NUMBER	d inch	d mm	D inch	D mm	H inch	H mm	WGT. lbs	WGT kg	C x1000 lbf	C kN	C_0 x1000 lbf	C_0 kN	d_k inch	d_k mm	d_2 inch	d_2 mm
GE10AW	0.394	10	1.181	30	0.374	9.5	0.088	0.04	8.1	36	16.2	72	1.260	32	1.083	27.5
GE12AW	0.472	12	1.378	35	0.512	13	0.154	0.07	11	49	22	98	1.457	37	1.260	32
GE15AW	0.591	15	1.654	42	0.591	15	0.265	0.12	17.5	78	35	156	1.772	45	1.532	38.9
GE17AW	0.669	17	1.850	47	0.630	16	0.353	0.16	19.8	88	39.5	176	1.969	50	1.709	43.4
GE20AW	0.787	20	2.165	55	0.787	20	0.551	0.25	25	112	50	224	2.362	60	1.969	50
GE25AW	0.984	25	2.441	62	0.886	22.5	0.838	0.38	43.5	193	88	390	2.598	66	2.264	57.5
GE30AW	1.181	30	2.953	75	1.024	26	1.433	0.65	57	255	115	510	3.150	80	2.717	69
GE35AW	1.378	35	3.543	90	1.102	28	2.205	1	88	390	175	780	3.858	98	3.307	84
GE40AW	1.575	40	4.134	105	1.260	32	3.528	1.6	126	560	250	1120	4.488	114	3.858	98
GE45AW	1.772	45	4.724	120	1.437	36.5	5.292	2.4	165	735	330	1460	5.118	130	4.409	112
GE50AW	1.969	50	5.118	130	1.673	42.5	7.277	3.3	220	980	440	1960	5.512	140	4.823	122.5
GE60AW	2.362	60	5.906	150	1.772	45	9.923	4.5	247	1100	495	2200	6.299	160	5.512	140
GE70AW	2.756	70	6.299	160	1.969	50	12.13	5.5	270	1200	540	2400	6.693	170	5.886	149.5
GE80AW	3.150	80	7.087	180	1.969	50	15.44	7	350	1560	700	3100	7.638	194	6.614	168
GE100AW	3.937	100	8.268	210	2.323	59	23.15	10.5	405	1800	810	3600	8.661	220	7.697	195.5
GE120AW	4.724	120	9.055	230	2.520	64	28.67	13	420	1860	840	3750	9.646	245	8.425	214
GE140AW	5.512	140	10.236	260	2.835	72	39.69	18	550	2450	1100	4900	10.709	272	9.606	244
GE160AW	6.299	160	11.417	290	3.032	77	50.72	23	640	2850	1280	5700	12.205	310	10.709	272
GE180AW	7.087	180	12.598	320	3.386	86	68.36	31	720	3200	1440	6400	13.189	335	11.811	300
GE200AW	7.874	200	13.386	340	3.425	87	74.97	34	800	3550	1600	7100	14.095	358	12.638	321
GE220AW	8.661	220	14.567	370	3.819	97	98.12	44.5	990	4400	1980	8800	15.276	388	13.780	350
GE240AW	9.449	240	15.748	400	4.055	103	121.28	55	1170	5200	2340	10400	16.535	420	15.039	382
GE260AW	10.236	260	16.929	430	4.528	115	152.15	69	1210	5400	2430	10800	17.677	449	16.102	409
GE280AW	11.024	280	18.110	460	4.331	110	180.81	82	1910	8500	3800	17000	18.898	480	17.520	445
GE300AW	11.811	300	18.898	480	4.331	110	191.84	87	1940	8650	3900	17300	19.291	490	18.110	460
GE320AW	12.598	320	20.472	520	4.567	116	240.35	109	2380	10600	4750	21200	21.260	540	19.685	500
GE340AW	13.386	340	21.260	540	4.567	116	251.37	114	2650	11800	5300	23600	21.654	550	20.079	510
GE360AW	14.173	360	22.047	560	4.921	125	284.45	129	2850	12700	5700	25500	22.638	575	21.063	535

Elges Axial Spherical Plain Bearings

GE..AW SERIES

- Sliding contact surfaces: hard chromium/PTFE

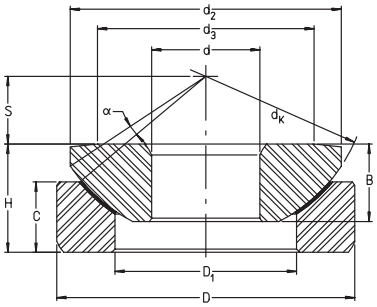

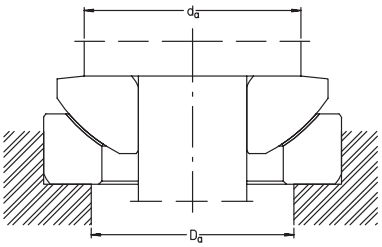

For details on part numbers, descriptive suffixes and various technical references, please refer to front of this section.
For engineering or technical information contact your local sales representative or call Distributor Sales (800)523-6572.

d_3 inch	d_3 mm	D_1 inch	D_1 mm	B inch	B mm	C inch	C mm	s inch	s mm	ALPHA deg	d_a inch	d_a mm	D_a min. inch	D_a min. mm	PART NUMBER
0.827	21	0.650	16.5	0.311	7.9	0.236	6	0.276	7	10	0.827	21	0.728	18.5	GE10AW
0.945	24	0.768	19.5	0.366	9.3	0.354	9	0.315	8	9	0.945	24	0.847	21.5	GE12AW
1.142	29	0.945	24	0.421	10.7	0.433	11	0.394	10	7	1.142	29	1.024	26	GE15AW
1.339	34	1.102	28	0.453	11.5	0.453	11.5	0.433	11	6	1.339	34	1.201	30.5	GE17AW
1.575	40	1.319	33.5	0.563	14.3	0.512	13	0.492	12.5	6	1.575	40	1.496	38	GE20AW
1.772	45	1.358	34.5	0.630	16	0.669	17	0.551	14	7	1.772	45	1.535	39	GE25AW
2.205	56	1.732	44	0.709	18	0.768	19.5	0.689	17.5	6	2.205	56	1.929	49	GE30AW
2.598	66	2.047	52	0.866	22	0.787	20	0.866	22	6	2.598	66	2.244	57	GE35AW
3.071	78	2.323	59	1.063	27	0.866	22	0.965	24.5	6	3.071	78	2.520	64	GE40AW
3.504	89	2.677	68	1.221	31	0.984	25	1.083	27.5	6	3.504	89	2.913	74	GE45AW
3.858	98	2.717	69	1.319	33.5	1.260	32	1.181	30	5	3.858	98	2.953	75	GE50AW
4.252	108	3.386	86	1.457	37	1.299	33	1.378	35	7	4.252	108	3.622	92	GE60AW
4.764	121	3.740	95	1.575	40	1.417	36	1.378	35	6	4.764	121	4.016	102	GE70AW
5.118	130	4.252	108	1.654	42	1.417	36	1.673	42.5	6	5.118	130	4.528	115	GE80AW
6.102	155	5.236	133	1.969	50	1.654	42	1.772	45	7	6.102	155	5.551	141	GE100AW
6.693	170	6.063	154	2.047	52	1.772	45	2.067	52.5	8	6.693	170	6.378	162	GE120AW
7.795	198	6.929	176	2.402	61	1.969	50	2.067	52.5	6	7.795	198	7.362	187	GE140AW
8.386	213	7.835	199	2.559	65	2.047	52	2.559	65	7	8.386	213	8.307	211	GE160AW
9.449	240	8.819	224	2.756	70	2.362	60	2.658	67.5	8	9.449	240	9.291	236	GE180AW
10.433	265	9.685	246	2.913	74	2.362	60	2.756	70	8	10.433	265	10.197	259	GE200AW
11.378	289	10.433	265	3.228	82	2.638	67	2.953	75	7	11.378	289	10.984	279	GE220AW
12.362	314	11.575	294	3.425	87	2.874	73	3.051	77.5	6	12.362	314	12.165	309	GE240AW
13.228	336	12.480	317	3.740	95	3.150	80	3.248	82.5	7	13.228	336	13.071	332	GE260AW
14.409	366	13.268	337	3.937	100	3.347	85	3.150	80	4	14.409	366	13.976	355	GE280AW
15.276	388	14.016	356	3.937	100	3.543	90	3.150	80	3.5	15.276	388	14.764	375	GE300AW
15.945	405	14.961	380	4.134	105	3.583	91	3.740	95	4	15.945	405	15.827	402	GE320AW
17.008	432	14.961	380	4.134	105	3.583	91	3.740	95	4	17.008	432	15.827	402	GE340AW
17.795	452	15.748	400	4.528	115	3.740	95	3.740	95	4	17.795	452	16.614	422	GE360AW

Elges Rod Ends

GIR..DO, GIR..DO-2RS SERIES

- Metric
- DIN 648, dimension series E Form B – ISO 6126
- Sliding contact surfaces: steel/steel
- Left hand thread is available on shank, order by replacing “R” with “L”
- Internal thread

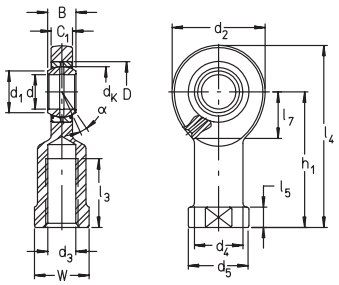

For details on part numbers, descriptive suffixes and various technical references, please refer to front of this section.
For engineering or technical information contact your local sales representative or call Distributor Sales (800)523-6572.

PART NUMBER	d inch	d mm	D inch	D mm	B inch	B mm	C lbf	C kN	C_0 lbf	C_0 kN	WGT. lbs	WGT kg	d_k inch	d_k mm	d_1 inch	d_1 mm	d_2 inch	d_2 mm	d_3
GIR6DO	0.236	6	0.551	14	0.236	6	760	3.4	1830	8.15	0.046	0.021	0.394	10	0.315	8	0.827	21	M6
GIR8DO	0.315	8	0.630	16	0.315	8	1240	5.5	2900	12.9	0.086	0.039	0.512	13	0.402	10.2	0.945	24	M8
GIR10DO	0.394	10	0.748	19	0.354	9	1830	8.15	3950	17.6	0.135	0.061	0.630	16	0.520	13.2	1.142	29	M10
GIR12DO	0.472	12	0.866	22	0.394	10	2430	10.8	5500	24.5	0.212	0.096	0.709	18	0.587	14.9	1.339	34	M12
GIR15DO	0.591	15	1.024	26	0.472	12	3800	17	8100	36	0.397	0.18	0.866	22	0.724	18.4	1.575	40	M14
GIR17DO	0.669	17	1.181	30	0.551	14	4750	21.2	10100	45	0.485	0.22	0.984	25	0.815	20.7	1.811	46	M16
GIR20DO	0.787	20	1.378	35	0.630	16	6700	30	13500	60	0.772	0.35	1.142	29	0.949	24.1	2.087	53	M20X1.5
GIR25DO2RS	0.984	25	1.654	42	0.787	20	10600	47	18700	83	1.411	0.64	1.398	35.5	1.154	29.3	2.520	64	M24X2
GIR30DO2RS	1.181	30	1.850	47	0.866	22	13900	62	24700	110	2.051	0.93	1.602	40.7	1.347	34.2	2.874	73	M30X2
GIR35DO2RS	1.378	35	2.165	55	0.984	25	18000	80	33000	146	2.867	1.3	1.850	47	1.563	39.7	3.228	82	M36X3
GIR40DO2RS	1.575	40	2.441	62	1.102	28	22500	100	40500	180	4.41	2	2.087	53	1.772	45	3.622	92	M39X3
GIR45DO2RS	1.772	45	2.677	68	1.260	32	28500	127	54000	240	5.513	2.5	2.362	60	1.996	50.7	4.016	102	M42X3
GIR50DO2RS	1.969	50	2.953	75	1.378	35	35000	156	65000	290	7.718	3.5	2.598	66	2.201	55.9	4.409	112	M45X3
GIR60DO2RS	2.362	60	3.543	90	1.732	44	55000	245	101000	450	12.13	5.5	3.150	80	2.630	66.8	5.315	135	M52X3
GIR70DO2RS	2.756	70	4.134	105	1.929	49	71000	315	137000	610	18.96	8.6	3.622	92	3.063	77.8	6.299	160	M56X4
GIR80DO2RS	3.150	80	4.724	120	2.165	55	90000	400	169000	750	26.46	12	4.134	105	3.520	89.4	7.087	180	M64X4

CONTINUED FROM ABOVE

PART NUMBER	d_4 inch	d_4 mm	h_1 inch	h_1 mm	C_1 inch	C_1 mm	ALPHA deg	l_3 inch	l_3 mm	l_4 inch	l_4 mm	l_5 inch	l_5 mm	l_7 inch	l_7 mm	d_5 inch	d_5 mm	W inch	W mm
GIR6DO	0.394	10	1.181	30	0.173	4.4	13	0.433	11	1.595	40.5	0.197	5	0.472	12	0.512	13	0.433	11
GIR8DO	0.492	12.5	1.417	36	0.236	6	15	0.591	15	1.890	48	0.197	5	0.551	14	0.630	16	0.551	14
GIR10DO	0.591	15	1.693	43	0.276	7	12	0.787	20	2.264	57.5	0.256	6.5	0.591	15	0.748	19	0.669	17
GIR12DO	0.689	17.5	1.969	50	0.315	8	11	0.906	23	2.638	67	0.256	6.5	0.709	18	0.866	22	0.748	19
GIR15DO	0.827	21	2.402	61	0.394	10	8	1.181	30	3.189	81	0.315	8	0.787	20	1.024	26	0.866	22
GIR17DO	0.945	24	2.638	67	0.433	11	10	1.339	34	3.543	90	0.394	10	0.906	23	1.181	30	1.063	27
GIR20DO	1.083	27.5	3.032	77	0.512	13	9	1.575	40	4.075	103.5	0.394	10	1.063	27	1.378	35	1.260	32
GIR25DO2RS	1.319	33.5	3.701	94	0.669	17	7	1.890	48	4.961	126	0.472	12	1.260	32	1.654	42	1.417	36
GIR30DO2RS	1.575	40	4.331	110	0.748	19	6	2.205	56	5.768	146.5	0.591	15	1.457	37	1.969	50	1.614	41
GIR35DO2RS	1.850	47	4.921	125	0.827	21	6	2.362	60	6.535	166	0.591	15	1.654	42	2.284	58	1.969	50
GIR40DO2RS	2.047	52	5.591	142	0.906	23	7	2.559	65	7.402	188	0.709	18	1.890	48	2.559	65	2.165	55
GIR45DO2RS	2.284	58	5.709	145	1.063	27	7	2.559	65	7.717	196	0.787	20	2.047	52	2.756	70	2.362	60
GIR50DO2RS	2.441	62	6.299	160	1.181	30	6	2.677	68	8.504	216	0.787	20	2.362	60	2.953	75	2.559	65
GIR60DO2RS	2.756	70	6.890	175	1.496	38	6	2.756	70	9.547	242.5	0.787	20	2.953	75	3.465	88	2.953	75
GIR70DO2RS	3.150	80	7.874	200	1.654	42	6	3.150	80	11.024	280	0.787	20	3.425	87	3.858	98	3.347	85
GIR80DO2RS	3.740	95	9.055	230	1.850	47	6	3.347	85	12.598	320	0.984	25	3.937	100	4.331	110	3.937	100

Elges Rod Ends

GAR..DO, GAR..DO-2RS SERIES

- Metric
- DIN 648, dimension series E Form A – ISO 6126
- Sliding contact surfaces: steel/steel
- Left hand thread is available on shank, order by replacing “R” with “L”
- External thread

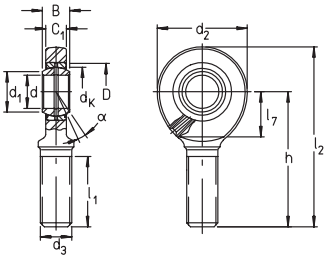

For details on part numbers, descriptive suffixes and various technical references, please refer to front of this section.
For engineering or technical information contact your local sales representative or call Distributor Sales (800)523-6572.

PART NUMBER	d inch	d mm	D inch	D mm	B inch	B mm	C lbf	C kN	C_0 lbf	C_0 kN	WGT. lbs	WGT kg	d_k inch	d_k mm	d_1 inch	d_1 mm
GAR6DO	0.236	6	0.551	14	0.236	6	760	3.4	1830	8.15	0.037	0.017	0.394	10	0.315	8
GAR8DO	0.315	8	0.630	16	0.315	8	1240	5.5	2900	12.9	0.064	0.029	0.512	13	0.402	10.2
GAR10DO	0.394	10	0.748	19	0.354	9	1830	8.15	3950	17.6	0.112	0.051	0.630	16	0.520	13.2
GAR12DO	0.472	12	0.866	22	0.394	10	2430	10.8	5500	24.5	0.19	0.086	0.709	18	0.587	14.9
GAR15DO	0.591	15	1.024	26	0.472	12	3800	17	8100	36	0.309	0.14	0.866	22	0.724	18.4
GAR17DO	0.669	17	1.181	30	0.551	14	4750	21.2	10100	45	0.419	0.19	0.984	25	0.815	20.7
GAR20DO2RS	0.787	20	1.378	35	0.630	16	6700	30	13500	60	0.684	0.31	1.142	29	0.949	24.1
GAR25DO2RS	0.984	25	1.654	42	0.787	20	10800	48	18700	83	1.235	0.56	1.398	35.5	1.154	29.3
GAR30DO2RS	1.181	30	1.850	47	0.866	22	13900	62	24700	110	1.962	0.89	1.602	40.7	1.347	34.2
GAR35DO2RS	1.378	35	2.165	55	0.984	25	18000	80	33000	146	3.087	1.4	1.850	47	1.563	39.7
GAR40DO2RS	1.575	40	2.441	62	1.102	28	22500	100	40500	180	3.969	1.8	2.087	53	1.772	45
GAR45DO2RS	1.772	45	2.677	68	1.260	32	28500	127	54000	240	5.733	2.6	2.362	60	1.996	50.7
GAR50DO2RS	1.969	50	2.953	75	1.378	35	35000	156	65000	290	7.497	3.4	2.598	66	2.201	55.9
GAR60DO2RS	2.362	60	3.543	90	1.732	44	55000	245	101000	450	13.01	5.9	3.150	80	2.630	66.8
GAR70DO2RS	2.756	70	4.134	105	1.929	49	71000	315	137000	610	18.08	8.2	3.622	92	3.063	77.8
GAR80DO2RS	3.150	80	4.724	120	2.165	55	90000	400	169000	750	26.46	12	4.134	105	3.520	89.4

CONTINUED FROM ABOVE

PART NUMBER	d_2 inch	d_2 mm	d_3	h inch	h mm	C_1 inch	C_1 mm	ALPHA deg	l_1 inch	l_1 mm	l_2 inch	l_2 mm	l_7 inch	l_7 mm
GAR6DO	0.827	21	M6	1.417	36	0.173	4.4	13	0.709	18	1.8307	46.5	0.472	12
GAR8DO	0.945	24	M8	1.654	42	0.236	6	15	0.866	22	2.126	54	0.551	14
GAR10DO	1.142	29	M10	1.890	48	0.276	7	12	1.024	26	2.4606	62.5	0.591	15
GAR12DO	1.339	34	M12	2.126	54	0.315	8	11	1.102	28	2.7953	71	0.709	18
GAR15DO	1.575	40	M14	2.480	63	0.394	10	8	1.339	34	3.2677	83	0.787	20
GAR17DO	1.811	46	M16	2.717	69	0.433	11	10	1.417	36	3.622	92	0.906	23
GAR20DO2RS	2.087	53	M20X1.5	3.071	78	0.512	13	9	1.693	43	4.1142	104.5	1.063	27
GAR25DO2RS	2.520	64	M24X2	3.701	94	0.669	17	7	2.087	53	16.7717	426	1.260	32
GAR30DO2RS	2.874	73	M30X2	4.331	110	0.748	19	6	2.559	65	5.7677	146.5	1.457	37
GAR35DO2RS	3.228	82	M36X3	5.512	140	0.827	21	6	3.228	82	7.126	181	1.654	42
GAR40DO2RS	3.622	92	M39X3	5.906	150	0.906	23	7	3.386	86	7.7165	196	1.890	48
GAR45DO2RS	4.016	102	M42X3	6.417	163	1.063	27	7	3.701	94	8.4252	214	2.047	52
GAR50DO2RS	4.409	112	M45X3	7.284	185	1.181	30	6	4.213	107	9.4882	241	2.362	60
GAR60DO2RS	5.315	135	M52X3	8.268	210	1.496	38	6	4.528	115	10.9252	277.5	2.953	75
GAR70DO2RS	6.299	160	M56X4	9.252	235	1.654	42	6	4.921	125	12.4016	315	3.307	84
GAR80DO2RS	7.087	180	M64X4	10.630	270	1.850	47	6	5.512	140	14.1732	360	3.937	100

Elges Hydraulic Rod Ends

GIHNK..LO SERIES

- DIN 24338 – ISO 6982 series
- Sliding contact surfaces: steel/steel
- With thread clamping screws

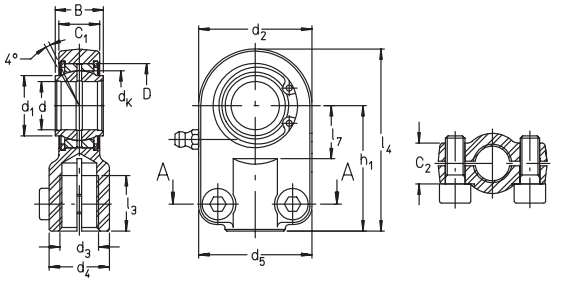

For details on part numbers, descriptive suffixes and various technical references, please refer to front of this section.
For engineering or technical information contact your local sales representative or call Distributor Sales (800)523-6572.

PART NUMBER	d inch	d mm	D inch	D mm	B inch	B mm	C lbf	C kN	C_0 lbf	C_0 kN	WGT. lbs	WGT kg	d_k inch	d_k mm	d_1 inch	d_1 mm	d_2 inch	d_2 mm	d_3
GIHNK 12 LO	0.472	12	0.866	22	0.472	12	2,430	10.8	5,500	24.5	0.221	0.1	0.709	18	0.610	15.5	1.260	32	M12X1.25
GIHNK 16 LO	0.630	16	1.102	28	0.630	16	3,950	17.6	8,200	36.5	0.441	0.2	0.906	23	0.787	20	1.575	40	M14X1.5
GIHNK 20 LO	0.787	20	1.378	35	0.787	20	6,700	30	10,800	48	0.882	0.4	1.142	29	0.984	25	1.850	47	M16X1.5
GIHNK 25 LO	0.984	25	1.654	42	0.984	25	10,800	48	17,500	78	1.455	0.66	1.398	35.5	1.201	30.5	2.284	58	M20X1.5
GIHNK 32 LO	1.260	32	2.047	52	1.260	32	15,100	67	25,500	114	2.646	1.2	1.732	44	1.496	38	2.756	70	M27X2
GIHNK 40 LO	1.575	40	2.441	62	1.575	40	22,500	100	46,000	204	4.631	2.1	2.087	53	1.811	46	3.504	89	M33X2
GIHNK 50 LO	1.969	50	2.953	75	1.969	50	35,000	156	70,000	310	9.702	4.4	2.598	66	2.244	57	4.252	108	M42X2
GIHNK 63 LO	2.480	63	3.740	95	2.480	63	57,000	255	97,000	430	16.76	7.6	3.268	83	2.815	71.5	5.197	132	M48X2
GIHNK 70 LO	2.756	70	4.134	105	2.756	70	71,000	315	121,000	540	20.95	9.5	3.622	92	3.110	79	6.102	155	M56X2
GIHNK 80 LO	3.150	80	4.724	120	3.150	80	90,000	400	156,000	695	31.97	14.5	4.134	105	3.583	91	6.614	168	M64X3
GIHNK 90 LO	3.543	90	5.118	130	3.543	90	110,000	490	169,000	750	37.49	17	4.528	115	3.898	99	7.284	185	M72X3
GIHNK 100 LO	3.937	100	5.906	150	3.937	100	137,000	610	238,000	1060	61.74	28	5.118	130	4.449	113	8.268	210	M80X3
GIHNK 110 LO	4.331	110	6.299	160	4.331	110	147,000	655	270,000	1200	70.56	32	5.512	140	4.882	124	9.252	235	M90X3
GIHNK 125 LO	4.921	125	7.087	180	4.921	125	214,000	950	320,000	1430	94.82	43	6.299	160	5.433	138	10.315	262	M100X3
GIHNK 160 LO	6.299	160	9.055	230	6.299	160	310,000	1370	495,000	2200	176.40	80	7.874	200	6.969	177	12.835	326	M125X4
GIHNK 200 LO	7.874	200	11.417	290	7.874	200	475,000	2120	820,000	3650	363.83	165	9.843	250	8.701	221	16.457	418	M160X4

CONTINUED FROM ABOVE

PART NUMBER	d_4 inch	d_4 mm	h_1 inch	h_1 mm	C_1 inch	C_1 mm	ALPHA deg	l_3 inch	l_3 mm	l_4 inch	l_4 mm	l_7 inch	l_7 mm	d_5 inch	d_5 mm	C_2 inch	C_2 mm	CLAMP BOLT	TORQUE Nm
GIHNK 12 LO	0.650	16.5	1.496	38	0.417	10.6	4	0.669	17	2.126	54	0.551	14	1.260	32	0.417	10.6	M5X12	8
GIHNK 16 LO	0.827	21	1.732	44	0.512	13	4	0.709	18	2.520	64	0.709	18	1.575	40	0.512	13	M6X16	13
GIHNK 20 LO	0.984	25	2.047	52	0.669	17	4	0.906	23	2.961	75.2	0.866	22	1.850	47	0.669	17	M8X20	32
GIHNK 25 LO	1.181	30	2.559	65	0.827	21	4	1.142	29	3.701	94	1.063	27	2.126	54	0.669	17	M8X20	32
GIHNK 32 LO	1.496	38	3.150	80	1.063	27	4	1.457	37	4.528	115	1.260	32	2.598	66	0.866	22	M10X25	64
GIHNK 40 LO	1.850	47	3.819	97	1.260	32	4	1.811	46	5.571	141.5	1.614	41	3.150	80	1.024	26	M10X25	64
GIHNK 50 LO	2.284	58	4.724	120	1.575	40	4	2.244	57	6.850	174	1.969	50	3.780	96	1.260	32	M12X30	110
GIHNK 63 LO	2.756	70	5.512	140	2.047	52	4	2.520	64	8.307	211	2.441	62	4.488	114	1.496	38	M12X35	80
GIHNK 70 LO	3.150	80	6.299	160	2.244	57	4	2.992	76	9.646	245	2.756	70	5.315	135	1.654	42	M16X40	195
GIHNK 80 LO	3.543	90	7.087	180	2.598	66	4	3.386	86	10.630	270	3.071	78	5.827	148	1.890	48	M16X45	195
GIHNK 90 LO	3.937	100	7.677	195	2.835	72	4	3.583	91	11.654	296	3.347	85	6.299	160	2.047	52	M16X50	195
GIHNK 100 LO	4.331	110	8.268	210	3.307	84	4	3.780	96	12.677	322	3.858	98	7.008	178	2.441	62	M20X60	385
GIHNK 110 LO	4.921	125	9.252	235	3.465	88	4	4.173	106	14.331	364	4.134	105	7.480	190	2.441	62	M20X60	385
GIHNK 125 LO	5.315	135	10.236	260	4.016	102	4	4.449	113	15.945	405	4.724	120	7.874	200	2.835	72	M20X70	385
GIHNK 160 LO	6.496	165	12.205	310	5.118	130	4	4.961	126	19.213	488	5.906	150	9.843	250	3.228	82	M24X80	660
GIHNK 200 LO	8.465	215	15.354	390	6.378	162	4	6.339	161	24.409	620	7.677	195	12.598	320	4.016	102	M30X100	1350

Elges Hydraulic Rod Ends

GIHOK..DO SERIES

- DIN 24 555 series
- Spherical plain bearing to DIN 648
- Sliding contact surfaces: steel/steel
- With thread clamping screws

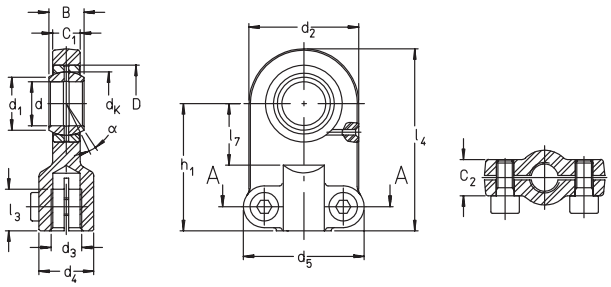

For details on part numbers, descriptive suffixes and various technical references, please refer to front of this section.
For engineering or technical information contact your local sales representative or call Distributor Sales (800)523-6572.

PART NUMBER	d inch	d mm	D inch	D mm	B inch	B mm	C lbf	C kN	C_0 lbf	C_0 kN	WGT. lbs	WGT kg	d_k inch	d_k mm	d_1 inch	d_1 mm	d_2 inch	d_2 mm	d_3
GIHO K 12 DO	0.472	12	0.866	22	0.394	10	2430	10.8	3800	17	0.331	0.15	0.709	18	0.591	15	1.260	32	M10X1.25
GIHO K 16 DO	0.630	16	1.181	30	0.551	14	4750	21.1	6400	28.5	0.551	0.25	0.984	25	0.787	20	1.654	42	M12X1.25
GIHO K 20 DO	0.787	20	1.378	35	0.630	16	6700	30	9600	42.5	0.948	0.43	1.142	29	0.945	24	1.969	50	M14X1.5
GIHO K 25 DO	0.984	25	1.654	42	0.787	20	10800	48	21800	97	1.61	0.73	1.398	35.5	1.142	29	1.654	42	M16X1.5
GIHO K 30 DO	1.181	30	1.850	47	0.866	22	13900	62	24300	108	2.867	1.3	1.602	40.7	1.339	34	2.992	76	M20X1.5
GIHO K 40 DO	1.575	40	2.441	62	1.102	28	22500	100	35000	156	5.072	2.3	2.087	53	1.772	45	3.780	96	M27X2
GIHO K 50 DO	1.969	50	2.953	75	1.378	35	35000	156	55000	245	9.702	4.4	2.598	66	2.165	55	4.567	116	M33X2

CONTINUED FROM ABOVE

PART NUMBER	d_4 inch	d_4 mm	h_1 inch	h_1 mm	C_1 inch	C_1 mm	ALPHA deg	l_3 inch	l_3 mm	l_4 inch	l_4 mm	l_7 inch	l_7 mm	d_5 inch	d_5 mm	C_2 inch	C_2 mm	CLAMP BOLT	TORQUE Nm
GIHO K 12 DO	0.669	17	1.654	42	0.315	8	3	0.591	15	2.284	58	0.709	18	1.575	40	0.512	13	M6	9.5
GIHO K 16 DO	0.827	21	1.890	48	0.433	11	3	0.669	17	2.717	69	0.866	22	1.772	45	0.512	13	M6	9.5
GIHO K 20 DO	0.984	25	2.284	58	0.512	13	3	0.748	19	3.268	83	1.102	28	2.165	55	0.669	17	M8	23
GIHO K 25 DO	1.181	30	2.677	68	0.669	17	3	0.906	23	3.898	99	1.339	34	2.441	62			M8	23
GIHO K 30 DO	1.417	36	3.347	85	0.748	19	3	1.142	29	4.843	123	1.496	38	3.150	80			M10	46
GIHO K 40 DO	1.772	45	4.134	105	0.906	23	3	1.457	37	6.024	153	1.890	48	3.543	90			M10	46
GIHO K 50 DO	2.165	55	5.118	130	1.181	30	3	1.811	46	7.402	188	2.441	62	4.134	105			M12	80

Elges Hydraulic Rod Ends

GIHR..DO SERIES

- Sliding contact surfaces: steel/steel
- Rod ends with clamping threaded socket are prefix GIRH-K and the bolts and tightening torques are shown.

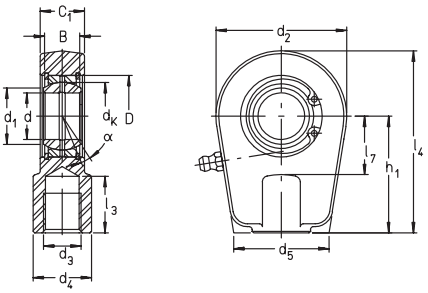

For details on part numbers, descriptive suffixes and various technical references, please refer to front of this section.
For engineering or technical information contact your local sales representative or call Distributor Sales (800)523-6572.

PART NUMBER	d	d	D	D	B	B	C	C	C_0	C_0	WGT.	WGT	d_k	d_k	d_1	d_1	d_2	d_2
	inch	mm	inch	mm	inch	mm	lbf	kN	lbf	kN	lbs	kg	inch	mm	inch	mm	inch	mm
GIHR 20 DO	0.787	20	1.378	35	0.630	16	6700	30	16200	72	0.948	0.43	1.142	29	0.949	24.1	2.205	56
GIHR 25 DO	0.984	25	1.654	42	0.787	20	10800	48	16200	72	1.058	0.48	1.398	35.5	1.154	29.3	2.205	56
GIHR 30 DO	1.181	30	1.850	47	0.866	22	13900	62	23800	106	1.632	0.74	1.602	40.7	1.347	34.2	2.520	64
GIHR 35 DO	1.378	35	2.165	55	0.984	25	18000	80	34500	153	2.646	1.2	1.850	47	1.563	39.7	3.071	78
GIHR 40 DO	1.575	40	2.441	62	1.102	28	22500	100	56000	250	4.41	2	2.087	53	1.772	45	3.701	94
GIHR 50 DO	1.969	50	2.953	75	1.378	35	35000	156	82000	365	8.379	3.8	2.598	66	2.201	55.9	4.567	116
GIHR 60 DO	2.362	60	3.543	90	1.732	44	55000	245	90000	400	11.91	5.4	3.150	80	2.630	66.8	5.118	130
GIHR 70 DO	2.756	70	4.134	105	1.929	49	71000	315	121000	540	18.74	8.5	3.622	92	3.063	77.8	6.063	154
GIHR 80 DO	3.150	80	4.724	120	2.165	55	90000	400	151000	670	26.46	12	4.134	105	3.520	89.4	6.929	176
GIHR 90 DO	3.543	90	5.118	130	2.362	60	110000	490	220000	980	47.41	21.5	4.528	115	3.862	98.1	8.110	206
GIHR 100 DO	3.937	100	5.906	150	2.756	70	137000	610	250000	1120	60.64	27.5	5.118	130	4.311	109.5	9.055	230
GIHR 110 DO	4.331	110	6.299	160	2.756	70	147000	655	380000	1700	89.30	40.5	5.512	140	4.772	121.2	10.433	265
GIHR 120 DO	4.724	120	7.087	180	3.347	85	214000	950	650000	2900	167.58	76	6.299	160	5.335	135.5	13.386	340

CONTINUED FROM ABOVE

PART NUMBER	d_3	d_4	d_4	h_1	h_1	ALPHA	l_3	l_3	l_4	l_4	l_7	l_7	d_5	d_5	C_1	C_1	GIHR-K BOLTS	GIHR-K TORQUE
		inch	mm	inch	mm	deg	inch	mm	inch	mm	inch	mm	inch	mm	inch	mm		Nm
GIHR 20 DO	M16X1.5	0.984	25	1.969	50	9	0.669	17	3.0709	78	0.984	25	1.614	41	0.748	19	M8X20	32
GIHR 25 DO	M16X1.5	0.984	25	1.969	50	7	0.669	17	3.071	78	0.984	25	1.614	41	0.906	23	M8X25	32
GIHR 30 DO	M22X1.5	1.260	32	2.362	60	6	0.906	23	3.622	92	1.181	30	1.811	46	1.102	28	M8X25	32
GIHR 35 DO	M28X1.5	1.575	40	2.756	70	6	1.142	29	4.291	109	1.496	38	2.284	58	1.181	30	M10X30	64
GIHR 40 DO	M35X1.5	1.929	49	3.347	85	7	1.417	36	5.197	132	1.772	45	2.598	66	1.378	35	M10X35	64
GIHR 50 DO	M45X1.5	2.402	61	4.134	105	6	1.811	46	6.417	163	2.165	55	3.465	88	1.575	40	M12X35	110
GIHR 60 DO	M58X1.5	2.953	75	5.118	130	6	2.323	59	7.874	200	2.559	65	3.543	90	1.969	50	M10X45	46
GIHR 70 DO	M65X1.5	3.386	86	5.906	150	6	2.598	66	9.134	232	2.953	75	3.937	100	2.165	55	M12X50	80
GIHR 80 DO	M80X2	4.016	102	6.693	170	6	3.189	81	10.433	265	3.150	80	4.921	125	2.362	60	M16X50	195
GIHR 90 DO	M100X2	4.882	124	8.268	210	5	3.976	101	12.717	323	3.543	90	5.748	146	2.559	65	M16X60	195
GIHR 100 DO	M110X2	5.433	138	9.252	235	7	4.370	111	14.173	360	4.134	105	6.535	166	2.756	70	M20X60	385
GIHR 110 DO	M120X3	5.984	152	10.433	265	6	4.921	125	16.043	407.5	4.528	115	7.480	190	3.150	80	M20X70	385
GIHR 120 DO	M130X3	6.772	172	12.205	310	6	5.315	135	19.291	490	5.512	140	8.543	217	3.543	90	M24X80	660

Elges Hydraulic Rod Ends

GK..DO SERIES

- DIN 648, dimension series E
- Sliding contact surfaces: steel/steel

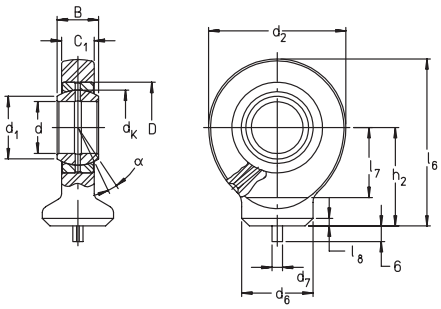

For details on part numbers, descriptive suffixes and various technical references, please refer to front of this section.
For engineering or technical information contact your local sales representative or call Distributor Sales (800)523-6572.

PART NUMBER	d inch	d mm	D inch	D mm	B inch	B mm	C lbf	C kN	C_0 lbf	C_0 kN	WGT. lbs	WGT kg	d_k inch	d_k mm	d_1 inch	d_1 mm
GK 10 DO	0.394	10	0.748	19	0.354	9	1,830	8.15	3,500	15.6	0.09	0.041	0.630	16	0.520	13.2
GK 12 DO	0.472	12	0.866	22	0.394	10	2,430	10.8	4,850	21.6	0.146	0.066	0.709	18	0.587	14.9
GK 15 DO	0.591	15	1.024	26	0.472	12	3,800	17	7,200	32	0.265	0.12	0.866	22	0.724	18.4
GK 17 DO	0.669	17	1.181	30	0.551	14	4,750	21.2	9,000	40	0.353	0.16	0.984	25	0.815	20.7
GK 20 DO	0.787	20	1.378	35	0.630	16	6,700	30	14,600	65	0.507	0.23	1.142	29	0.949	24.1
GK 25 DO	0.984	25	1.654	42	0.787	20	10,800	48	16,200	72	0.948	0.43	1.398	35.5	1.154	29.3
GK 30 DO	1.181	30	1.850	47	0.866	22	13,900	62	21,400	95	1.411	0.64	1.602	40.7	1.347	34.2
GK 35 DO	1.378	35	2.165	55	0.984	25	18,000	80	28,000	125	2.117	0.96	1.850	47	1.563	39.7
GK 40 DO	1.575	40	2.441	62	1.102	28	22,500	100	35,000	156	2.867	1.3	2.087	53	1.772	45
GK 45 DO	1.772	45	2.677	68	1.260	32	28,500	127	47,000	208	3.969	1.8	2.362	60	1.996	50.7
GK 50 DO	1.969	50	2.953	75	1.378	35	35,000	156	56,000	250	5.513	2.5	2.598	66	2.201	55.9
GK 60 DO	2.362	60	3.543	90	1.732	44	55,000	245	88,000	390	8.6	3.9	3.150	80	2.630	66.8
GK 70 DO	2.756	70	4.134	105	1.929	49	71,000	315	115,000	510	14.553	6.6	3.622	92	3.063	77.8
GK 80 DO	3.150	80	4.724	120	2.165	55	90,000	400	139,000	620	19.184	8.7	4.134	105	3.520	89.4

CONTINUED FROM ABOVE

PART NUMBER	d_2 inch	d_2 mm	d_6 inch	d_6 mm	h_2 inch	h_2 mm	C_1 inch	C_1 mm	ALPHA deg	l_6 inch	l_6 mm	l_7 inch	l_7 mm	l_8 inch	l_8 mm	d_7 inch	d_7 mm
GK 10 DO	1.142	29	0.591	15	0.945	24	0.276	7	12	1.516	38.5	0.591	15	0.079	2	0.118	3
GK 12 DO	1.339	34	0.689	17.5	1.063	27	0.315	8	11	1.732	44	0.709	18	0.079	2	0.118	3
GK 15 DO	1.575	40	0.827	21	1.221	31	0.394	10	8	2.008	51	0.787	20	0.098	2.5	0.158	4
GK 17 DO	1.811	46	0.945	24	1.378	35	0.433	11	10	2.284	58	0.906	23	0.118	3	0.158	4
GK 20 DO	2.087	53	1.083	27.5	1.496	38	0.512	13	9	2.539	64.5	1.063	27	0.118	3	0.158	4
GK 25 DO	2.520	64	1.319	33.5	1.772	45	0.669	17	7	3.032	77	1.260	32	0.158	4	0.158	4
GK 30 DO	2.874	73	1.575	40	2.008	51	0.748	19	6	3.445	87.5	1.457	37	0.158	4	0.158	4
GK 35 DO	3.228	82	1.850	47	2.402	61	0.827	21	6	4.016	102	1.654	42	0.158	4	0.158	4
GK 40 DO	3.622	92	2.047	52	2.717	69	0.906	23	7	4.528	115	1.890	48	0.197	5	0.158	4
GK 45 DO	4.016	102	2.284	58	3.032	77	1.063	27	7	5.039	128	2.047	52	0.197	5	0.236	6
GK 50 DO	4.409	112	2.441	62	3.465	88	1.181	30	6	5.669	144	2.362	60	0.236	6	0.236	6
GK 60 DO	5.315	135	2.756	70	3.937	100	1.496	38	6	6.595	167.5	2.953	75	0.315	8	0.236	6
GK 70 DO	6.299	160	3.150	80	4.528	115	1.654	42	6	7.677	195	3.425	87	0.394	10	0.236	6
GK 80 DO	7.087	180	3.740	95	5.551	141	1.850	47	6	9.095	231	3.937	100	0.394	10	0.236	6

Elges Hydraulic Rod Ends

GF..DO SERIES

- Sliding contact surfaces: steel/steel
- With rectangular face for welding
- Uses spherical bearing to DIN 648, series E

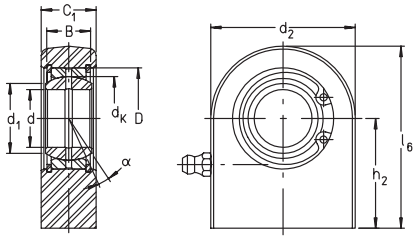

For details on part numbers, descriptive suffixes and various technical references, please refer to front of this section.
For engineering or technical information contact your local sales representative or call Distributor Sales (800)523-6572.

PART NUMBER	d inch	d mm	D inch	D mm	B inch	B mm	C lbf	C kN	C_0 lbf	C_0 kN	WGT. lbs	WGT kg	d_k inch	d_k mm
GF 20 DO	0.787	20	1.378	35	0.630	16	6,700	30	15,100	67	0.772	0.35	1.142	29
GF 25 DO	0.984	25	1.654	42	0.787	20	10,800	48	15,600	69.5	1.169	0.53	1.398	35.5
GF 30 DO	1.181	30	1.850	47	0.866	22	13,900	62	26,500	118	1.918	0.87	1.602	40.7
GF 35 DO	1.378	35	2.165	55	0.984	25	18,000	80	44,000	196	3.308	1.5	1.850	47
GF 40 DO	1.575	40	2.441	62	1.102	28	22,500	100	67,000	300	5.292	2.4	2.087	53
GF 45 DO	1.772	45	2.677	68	1.260	32	28,500	127	85,000	380	7.497	3.4	2.362	60
GF 50 DO	1.969	50	2.953	75	1.378	35	35,000	156	99,000	440	9.702	4.4	2.598	66
GF 60 DO	2.362	60	3.543	90	1.732	44	55,000	245	128,000	570	15.656	7.1	3.150	80
GF 70 DO	2.756	70	4.134	105	1.929	49	71,000	315	156,000	695	23.153	10.5	3.622	92
GF 80 DO	3.150	80	0.787	20	2.165	55	90,000	400	175,000	780	33.075	15	4.134	105
GF 90 DO	3.543	90	5.118	130	2.362	60	110,000	490	300,000	1340	51.818	23.5	4.528	115
GF 100 DO	3.937	100	5.906	150	2.756	70	137,000	610	335,000	1500	69.458	31.5	5.118	130
GF 110 DO	4.331	110	6.299	160	2.756	70	147,000	655	485,000	2160	105.84	48	5.512	140
GF 120 DO	4.724	120	7.087	180	3.347	85	214,000	950	730,000	3250	174.195	79	6.299	160

CONTINUED FROM ABOVE

PART NUMBER	d_1 inch	d_1 mm	d_2 inch	d_2 mm	h_2 inch	h_2 mm	C_1 nom. inch	C_1 nom. mm	C_1 max. inch	C_1 max. mm	ALPHA deg	l_6 inch	l_6 mm
GF 20 DO	0.949	24.10	1.969	50	1.496	38	0.748	19	0.787	20	9	2.480	63
GF 25 DO	1.154	29.30	2.165	55	1.772	45	0.906	23	0.945	24	7	2.854	72.5
GF 30 DO	1.347	34.20	2.559	65	2.008	51	1.102	28	1.142	29	6	3.287	83.5
GF 35 DO	1.563	39.70	3.268	83	2.402	61	1.181	30	1.221	31	6	4.035	102.5
GF 40 DO	1.772	45.00	3.937	100	2.717	69	1.378	35	1.437	36.5	7	4.685	119
GF 45 DO	1.996	50.70	4.331	110	3.032	77	1.575	40	1.634	41.5	7	5.197	132
GF 50 DO	2.201	55.90	4.843	123	3.465	88	1.575	40	1.634	41.5	6	5.886	149.5
GF 60 DO	2.630	66.80	5.512	140	3.937	100	1.969	50	2.067	52.5	6	6.693	170
GF 70 DO	3.063	77.80	6.457	164	4.528	115	2.165	55	2.284	58	6	7.756	197
GF 80 DO	3.520	89.40	7.087	180	5.551	141	2.362	60	2.480	63	6	9.095	231
GF 90 DO	3.862	98.10	8.898	226	5.906	150	2.559	65	2.717	69	5	10.354	263
GF 100 DO	4.311	109.50	9.843	250	6.693	170	2.756	70	2.913	74	7	11.614	295
GF 110 DO	4.772	121.20	11.614	295	7.284	185	3.150	80	3.347	85	6	13.091	332.5
GF 120 DO	5.335	135.50	14.173	360	8.268	210	3.543	90	3.740	95	6	15.354	390

Elges Rod Ends

GIKMR.. SERIES

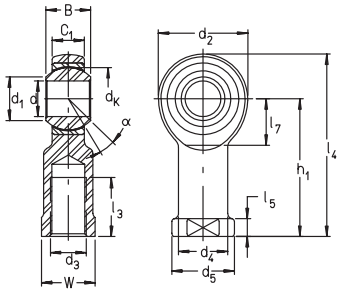

- DIN 648, dimension series K – ISO 6126
- Sliding contact surfaces: steel/brass
- Internal thread type
- Left hand thread is available on shank, order by replacing “R” with “L”
- Relubricate with funnel type grease nipple

- **Replaced by GIKFR..PB series**

For details on part numbers, descriptive suffixes and various technical references, please refer to front of this section.
For engineering or technical information contact your local sales representative or call Distributor Sales (800)523-6572.

PART NUMBER	d inch	d mm	B inch	B mm	C lbf	C kN	C_0 lbf	C_0 kN	WGT. lbs	WGT kg	d_k inch	d_k mm	d_1 inch	d_1 mm	d_2 inch	d_2 mm	d_3
GIKMR 5	0.197	5	0.315	8	730	3.25	1,280	5.7	0.035	0.016	0.438	11.112	0.303	7.7	0.709	18	M5
GIKMR 6	0.236	6	0.354	9	970	4.3	1,620	7.2	0.049	0.022	0.500	12.7	0.350	8.9	0.787	20	M6
GIKMR 8	0.315	8	0.472	12	1,620	7.2	2,600	11.6	0.104	0.047	0.625	15.875	0.406	10.3	0.945	24	M8
GIKMR 10	0.394	10	0.551	14	2,250	10	3,250	14.5	0.17	0.077	0.750	19.05	0.508	12.9	1.102	28	M10
GIKMR 12	0.472	12	0.630	16	3,000	13.4	3,800	17	0.221	0.1	0.875	22.225	0.606	15.4	1.260	32	M12

CONTINUED FROM ABOVE

PART NUMBER	d_4 inch	d_4 mm	d_5 inch	d_5 mm	h_1 inch	h_1 mm	C_1 inch	C_1 mm	W inch	W mm	ALPHA deg	l_3 inch	l_3 mm	l_4 inch	l_4 mm	l_5 inch	l_5 mm	l_7 inch	l_7 mm
GIKMR 5	0.335	8.5	0.433	11	1.063	27	0.236	6	0.354	9	13	0.394	10	1.417	36	0.158	4	0.394	10
GIKMR 6	0.394	10	0.512	13	1.181	30	0.266	6.75	0.433	11	13	0.472	12	1.575	40	0.197	5	0.433	11
GIKMR 8	0.492	12.5	0.630	16	1.417	36	0.354	9	0.512	13	13	0.630	16	1.890	48	0.197	5	0.512	13
GIKMR 10	0.591	15	0.748	19	1.693	43	0.413	10.5	0.669	17	13	0.787	20	2.244	57	0.256	6.5	0.591	15
GIKMR 12	0.689	17.5	0.866	22	1.969	50	0.472	12	0.748	19	13	0.866	22	2.598	66	0.256	6.5	0.669	17

Elges Rod Ends
GAKMR SERIES

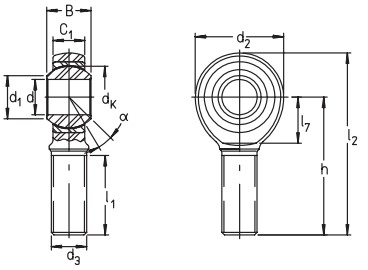

- DIN 648, dimension series K – ISO 6126
- Sliding contact surfaces: steel/brass
- External thread
- Left hand thread is available on shank, order by replacing “R” with “L”
- Relubricate with funnel type grease nipple

- **Replaced by GAKFR..PB series**

For details on part numbers, descriptive suffixes and various technical references, please refer to front of this section.
For engineering or technical information contact your local sales representative or call Distributor Sales (800)523-6572.

PART NUMBER	d inch	d mm	B inch	B mm	C lbf	C kN	C_0 lbf	C_0 kN	WGT. lbs	WGT kg	d_k inch	d_k mm
GAKMR 5	0.197	5	0.315	8	730	3.25	700	3.1	0.029	0.013	0.438	11.112
GAKMR 6	0.236	6	0.354	9	970	4.3	990	4.4	0.044	0.02	0.500	12.7
GAKMR 8	0.315	8	0.472	12	1,620	7.2	1,800	8	0.084	0.038	0.625	15.875
GAKMR 10	0.394	10	0.551	14	2,250	10	2,900	12.9	0.121	0.055	0.750	19.05
GAKMR 12	0.472	12	0.630	16	3,000	13.4	3,800	17	0.187	0.085	0.875	22.225

CONTINUED FROM ABOVE

PART NUMBER	d_1 inch	d_1 mm	d_2 inch	d_2 mm	d_3	h inch	h mm	C_1 inch	C_1 mm	ALPHA deg	l_1 inch	l_1 mm	l_2 inch	l_2 mm
GAKMR 5	0.303	7.7	0.709	18	M5	1.299	33	0.236	6	13	0.748	19	1.654	42
GAKMR 6	0.350	8.9	0.787	20	M6	1.417	36	0.266	6.75	13	0.827	21	1.811	46
GAKMR 8	0.406	10.3	0.945	24	M8	1.654	42	0.354	9	13	0.984	25	2.126	54
GAKMR 10	0.508	12.9	1.102	28	M10	1.890	48	0.413	10.5	13	1.102	28	2.441	62
GAKMR 12	0.606	15.4	1.260	32	M12	2.126	54	0.472	12	13	1.260	32	2.756	70

Elges Rod Ends

GIKFR..PB SERIES

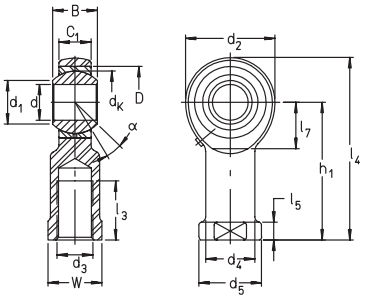

- DIN 648, dimension series K – ISO 6126
- Sliding contact surfaces: steel/bronze
- Internal thread type
- Left hand thread is available on shank, order by replacing “R” with “L”
- Relubricate with funnel type grease nipple

- **Replaces GIKMR.. series**

For details on part numbers, descriptive suffixes and various technical references, please refer to front of this section.
For engineering or technical information contact your local sales representative or call Distributor Sales (800)523-6572.

PART NUMBER	d inch	d mm	D inch	D mm	B inch	B mm	C lbf	C kN	C_0 lbf	C_0 kN	WGT. lbs	WGT kg	d_k inch	d_k mm	d_1 inch	d_1 mm	d_2 inch	d_2 mm	d_3
GIKFR 5 PB	0.197	5	0.512	13	0.315	8	730	3.25	1,280	5.7	0.035	0.016	0.4375	11.112	0.303	7.7	0.709	18	M5
GIKFR 6 PB	0.236	6	0.630	16	0.354	9	970	4.3	1,620	7.2	0.049	0.022	0.5	12.7	0.350	8.9	0.787	20	M6
GIKFR 8 PB	0.315	8	0.354	9	0.472	12	1,620	7.2	2,600	11.6	0.104	0.047	0.625	15.875	0.406	10.3	0.945	24	M8
GIKFR 10 PB	0.394	10	0.866	22	0.551	14	2,250	10	3,250	14.5	0.17	0.077	0.75	19.05	0.508	12.9	1.102	28	M10
GIKFR 12 PB	0.472	12	1.024	26	0.630	16	3,000	13.4	3,800	17	0.221	0.1	0.875	22.225	0.606	15.4	1.260	32	M12
GIKFR 14 PB	0.551	14	1.102	28	0.748	19	3,800	17	5,400	24	0.353	0.16	1	25.4	0.661	16.8	1.417	36	M14
GIKFR 16 PB	0.630	16	1.260	32	0.827	21	4,850	21.6	6,400	28.5	0.485	0.22	1.125	28.575	0.760	19.3	1.654	42	M16
GIKFR 18 PB	0.709	18	1.378	35	0.906	23	5,800	26	9,600	42.5	0.706	0.32	1.25	31.75	0.858	21.8	1.811	46	M18X1.5
GIKFR 20 PB	0.787	20	1.575	40	0.984	25	7,100	31.5	9,600	42.5	0.926	0.42	1.375	34.925	0.957	24.3	1.969	50	M20X1.5
GIKFR 22 PB	0.866	22	1.654	42	1.102	28	6,300	28	12,800	57	1.191	0.54	1.5	38.1	1.016	25.8	2.126	54	M22X1.5
GIKFR 25 PB	0.984	25	1.850	47	1.221	31	10,700	47.5	15,300	68	1.61	0.73	1.687	42.85	1.161	29.5	2.362	60	M24X2
GIKFR 30 PB	1.181	30	2.165	55	1.457	37	14,400	64	19,800	88	2.426	1.1	2	50.8	1.370	34.8	2.756	70	M30X2

CONTINUED FROM ABOVE

PART NUMBER	d_4 inch	d_4 mm	h_1 inch	h_1 mm	C_1 inch	C_1 mm	ALPHA deg	l_3 inch	l_3 mm	l_4 inch	l_4 mm	l_5 inch	l_5 mm	l_7 inch	l_7 mm	d_5 inch	d_5 mm	W inch	W mm
GIKFR 5 PB	0.335	8.5	1.063	27	0.236	6	13	0.394	10	1.417	36	0.158	4	0.394	10	0.433	11	0.354	9
GIKFR 6 PB	0.394	10	1.181	30	0.266	6.75	13	0.472	12	1.575	40	0.197	5	0.433	11	0.512	13	0.433	11
GIKFR 8 PB	0.492	12.5	1.417	36	0.354	9	14	0.630	16	1.890	48	0.197	5	0.512	13	0.630	16	0.551	14
GIKFR 10 PB	0.591	15	1.693	43	0.413	10.5	13	0.787	20	2.244	57	0.256	6.5	0.591	15	0.748	19	0.669	17
GIKFR 12 PB	0.689	17.5	1.969	50	0.472	12	13	0.866	22	2.598	66	0.256	6.5	0.669	17	0.866	22	0.748	19
GIKFR 14 PB	0.827	21	2.244	57	0.532	13.5	16	0.984	25	2.953	75	0.315	8	0.709	18	1.024	26	0.866	22
GIKFR 16 PB	0.866	22	2.520	64	0.591	15	15	1.102	28	3.347	85	0.315	8	0.906	23	1.102	28	0.866	22
GIKFR 18 PB	0.984	25	2.795	71	0.650	16.5	15	1.260	32	3.701	94	0.394	10	0.984	25	1.221	31	1.063	27
GIKFR 20 PB	1.083	27.5	3.032	77	0.709	18	14	1.299	33	4.016	102	0.394	10	1.024	26	1.378	35	1.181	30
GIKFR 22 PB	1.181	30	3.307	84	0.787	20	15	1.457	37	4.370	111	0.472	12	1.142	29	1.496	38	1.260	32
GIKFR 25 PB	1.319	33.5	3.701	94	0.866	22	15	1.654	42	4.882	124	0.472	12	1.260	32	1.654	42	1.417	36
GIKFR 30 PB	1.575	40	4.331	110	0.984	25	17	2.008	51	5.709	145	0.591	15	1.457	37	1.969	50	1.614	41

Elges Rod Ends

GAKFR..PB SERIES

- DIN 648, dimension series K – ISO 6126
- Sliding contact surfaces: steel/bronze
- External thread
- Left hand thread is available on shank, order by replacing “R” with “L”
- Relubricate with funnel type grease nipple

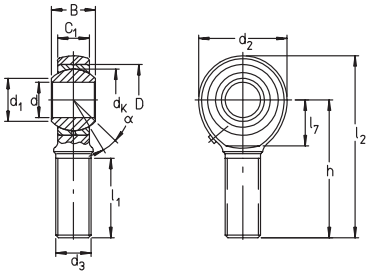

- **Replaces GAKMR.. series**

For details on part numbers, descriptive suffixes and various technical references, please refer to front of this section.
For engineering or technical information contact your local sales representative or call Distributor Sales (800)523-6572.

PART NUMBER	d inch	d mm	D inch	D mm	B inch	B mm	C lbf	C kN	C_0 lbf	C_0 kN	WGT. lbs	WGT kg	d_k inch	d_k mm
GAKFR 5 PB	0.197	5	0.512	13	0.315	8	730	3.25	700	3.1	0.029	0.013	0.4375	11.112
GAKFR 6 PB	0.236	6	0.630	16	0.354	9	970	4.3	990	4.4	0.044	0.02	0.5	12.7
GAKFR 8 PB	0.315	8	0.354	9	0.472	12	1620	7.2	1800	8	0.084	0.038	0.625	15.875
GAKFR 10 PB	0.394	10	0.866	22	0.551	14	2250	10	2900	12.9	0.121	0.055	0.75	19.05
GAKFR 12 PB	0.472	12	1.024	26	0.630	16	3000	13.4	3800	17	0.187	0.085	0.875	22.225
GAKFR 14 PB	0.551	14	1.102	28	0.748	19	3800	17	5400	24	0.309	0.14	1	25.4
GAKFR 16 PB	0.630	16	1.260	32	0.827	21	4850	21.6	6400	28.5	0.463	0.21	1.125	28.575
GAKFR 18 PB	0.709	18	1.378	35	0.906	23	5800	26	9600	42.5	0.617	0.28	1.25	31.75
GAKFR 20 PB	0.787	20	1.575	40	0.984	25	7100	31.5	9600	42.5	0.838	0.38	1.375	34.925
GAKFR 22 PB	0.866	22	1.654	42	1.102	28	8500	38	12800	57	1.058	0.48	1.5	38.1
GAKFR 25 PB	0.984	25	1.850	47	1.221	31	10700	47.5	15300	68	1.411	0.64	1.687	42.85
GAKFR 30 PB	1.181	30	2.165	55	1.457	37	14400	64	19800	88	2.426	1.1	2	50.8

CONTINUED FROM ABOVE

PART NUMBER	d_1 inch	d_1 mm	d_2 inch	d_2 mm	d_3	h inch	h mm	C_1 inch	C_1 mm	ALPHA deg	l_1 inch	l_1 mm	l_2 inch	l_2 mm	l_7 inch	l_7 mm
GAKFR 5 PB	0.303	7.7	0.709	18	M5	1.299	33	0.236	6	13	0.748	19	1.654	42		
GAKFR 6 PB	0.350	8.9	0.787	20	M6	1.417	36	0.266	6.75	13	0.827	21	1.811	46		
GAKFR 8 PB	0.406	10.3	0.945	24	M8	1.654	42	0.354	9	14	0.984	25	2.126	54		
GAKFR 10 PB	0.508	12.9	1.102	28	M10	1.890	48	0.413	10.5	13	1.102	28	2.441	62		
GAKFR 12 PB	0.606	15.4	1.260	32	M12	2.126	54	0.472	12	13	1.260	32	2.756	70		
GAKFR 14 PB	0.661	16.8	1.417	36	M14	2.362	60	0.532	13.5	16	1.417	36	3.071	78	0.709	18
GAKFR 16 PB	0.760	19.3	1.654	42	M16	2.598	66	0.591	15	15	1.457	37	3.425	87	0.906	23
GAKFR 18 PB	0.858	21.8	1.811	46	M18X1.5	2.835	72	0.650	16.5	15	1.614	41	3.740	95	0.984	25
GAKFR 20 PB	0.957	24.3	1.969	50	M20X1.5	3.071	78	0.709	18	14	1.772	45	4.055	103	1.024	26
GAKFR 22 PB	1.016	25.8	2.126	54	M22X1.5	3.307	84	0.787	20	15	1.890	48	4.370	111	1.142	29
GAKFR 25 PB	1.161	29.5	2.362	60	M24X2	3.701	94	0.866	22	15	2.165	55	4.882	124	1.260	32
GAKFR 30 PB	1.370	34.8	2.756	70	M30X2	4.331	110	0.984	25	17	2.598	66	5.709	145	1.457	37

Elges Rod Ends, Maintenance Free

GIR..UK, GIR..UK-2RS SERIES

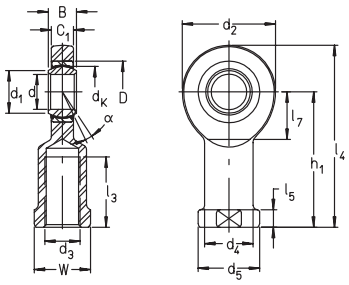

- DIN 648, dimension series E – ISO 6126
- Sliding contact surfaces: hard chrome/PTFE
- Internal thread
- Left hand thread is available on shank, order by replacing “R” with “L”

For details on part numbers, descriptive suffixes and various technical references, please refer to front of this section.
For engineering or technical information contact your local sales representative or call Distributor Sales (800)523-6572.

PART NUMBER	d inch	d mm	D inch	D mm	B inch	B mm	C lbf	C kN	C_0 lbf	C_0 kN	WGT. lbs	WGT kg	d_k inch	d_k mm	d_1 inch	d_1 mm	d_2 inch	d_2 mm
GIR 6 UK	0.236	6	0.551	14	0.236	6	810	3.6	1,830	8.15	0.046	0.021	0.394	10	0.315	8	0.827	21
GIR 8 UK	0.315	8	0.630	16	0.315	8	1,320	5.85	2,900	12.9	0.086	0.039	0.512	13	0.402	10.2	0.945	24
GIR 10 UK	0.394	10	0.748	19	0.354	9	1,950	8.65	3,950	17.6	0.135	0.061	0.630	16	0.520	13.2	1.142	29
GIR 12 UK	0.472	12	0.866	22	0.394	10	2,550	11.4	5,500	24.5	2.117	0.96	0.709	18	0.587	14.9	1.339	34
GIR 15 UK	0.591	15	1.024	26	0.472	12	3,950	17.6	8,100	36	0.397	0.18	0.866	22	0.724	18.4	1.575	40
GIR 17 UK	0.669	17	1.181	30	0.551	14	5,000	22.4	10,100	45	0.485	0.22	0.984	25	0.815	20.7	1.811	46
GIR 20 UK	0.787	20	1.378	35	0.630	16	7,100	31.5	13,500	60	0.772	0.35	1.142	29	0.949	24.1	2.087	53
GIR 25 UK	0.984	25	1.654	42	0.787	20	11,500	51	18,700	83	1.411	0.64	1.398	35.5	1.154	29.3	2.520	64
GIR 30 UK	1.181	30	1.850	47	0.866	22	15,000	66.5	24,700	110	2.051	0.93	1.602	40.7	1.347	34.2	2.874	73
GIR 35 UK2RS	1.378	35	2.165	55	0.984	25	25,000	112	33,000	146	2.867	1.3	1.850	47	1.563	39.7	3.228	82
GIR 40 UK2RS	1.575	40	2.441	62	1.102	28	31,500	140	40,500	180	4.41	2	2.087	53	1.772	45	3.622	92
GIR 45 UK2RS	1.772	45	2.677	68	1.260	32	40,500	180	54,000	240	5.513	2.5	2.362	60	1.996	50.7	4.016	102
GIR 50 UK2RS	1.969	50	2.953	75	1.378	35	49,500	220	65,000	290	7.718	3.5	2.598	66	2.201	55.9	4.409	112
GIR 60 UK2RS	2.362	60	3.543	90	1.732	44	78,000	345	101,000	450	12.128	5.5	3.150	80	2.630	66.8	5.315	135
GIR 70 UK2RS	2.756	70	4.134	105	1.929	49	99,000	440	137,000	610	18.963	8.6	3.622	92	3.063	77.8	6.299	160
GIR 80 UK2RS	3.150	80	4.724	120	2.165	55	128,000	570	169,000	750	26.46	12	4.134	105	3.520	89.4	7.087	180

CONTINUED FROM ABOVE

PART NUMBER	d_3	d_4 inch	d_4 mm	h_1 inch	h_1 mm	C_1 inch	C_1 mm	ALPHA deg	l_3 inch	l_3 mm	l_4 inch	l_4 mm	l_7 inch	l_7 mm	d_5 inch	d_5 mm	W inch	W mm
GIR 6 UK	M6	0.394	10	1.181	30	0.173	4.4	13	0.433	11	1.595	40.5	0.472	12	0.512	13	0.433	11
GIR 8 UK	M8	0.492	12.5	1.417	36	0.236	6	15	0.591	15	1.890	48	0.551	14	0.630	16	0.551	14
GIR 10 UK	M10	0.591	15	1.693	43	0.276	7	12	0.787	20	2.264	57.5	0.591	15	0.748	19	0.669	17
GIR 12 UK	M12	0.689	17.5	1.969	50	0.315	8	11	0.906	23	2.638	67	0.709	18	0.866	22	0.748	19
GIR 15 UK	M14	0.827	21	2.402	61	0.394	10	8	1.181	30	3.189	81	0.787	20	1.024	26	0.866	22
GIR 17 UK	M16	0.945	24	2.638	67	0.433	11	10	1.339	34	3.543	90	0.906	23	1.181	30	1.063	27
GIR 20 UK	M20X1.5	1.083	27.5	3.032	77	0.512	13	9	1.575	40	4.075	103.5	1.063	27	1.378	35	1.260	32
GIR 25 UK	M24X2	1.319	33.5	3.701	94	0.669	17	7	1.890	48	4.961	126	1.260	32	1.654	42	1.417	36
GIR 30 UK	M30X2	1.575	40	4.331	110	0.748	19	6	2.205	56	5.768	146.5	1.457	37	1.969	50	1.614	41
GIR 35 UK2RS	M36X3	1.850	47	4.921	125	0.827	21	6	2.362	60	6.535	166	1.654	42	2.284	58	1.969	50
GIR 40 UK2RS	M39X3	2.047	52	5.591	142	0.906	23	7	2.559	65	7.402	188	1.890	48	2.559	65	2.165	55
GIR 45 UK2RS	M42X3	2.284	58	5.709	145	1.063	27	7	2.559	65	7.717	196	2.047	52	2.756	70	2.362	60
GIR 50 UK2RS	M45X3	2.441	62	6.299	160	1.181	30	6	2.677	68	8.504	216	2.362	60	2.953	75	2.559	65
GIR 60 UK2RS	M52X3	2.756	70	6.890	175	1.496	38	6	2.756	70	9.547	242.5	2.953	75	3.465	88	2.953	75
GIR 70 UK2RS	M56X4	3.150	80	7.874	200	1.654	42	6	3.150	80	11.024	280	3.425	87	3.858	98	3.347	85
GIR 80 UK2RS	M64X4	3.740	95	9.055	230	1.850	47	6	3.347	85	12.598	320	3.937	100	4.331	110	3.937	100

Elges Rod Ends, Maintenance Free

GAR..UK, GAR..UK-2RS SERIES

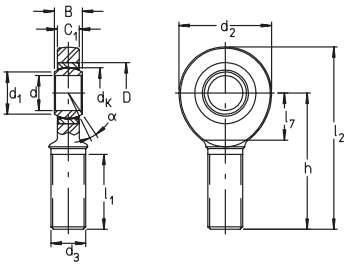

- DIN 648, dimension series E Form A – ISO 6126
- Sliding contact surfaces: hard chromium/PTFE
- External thread
- Left hand thread is available on shank, order by replacing “R” with “L”

For details on part numbers, descriptive suffixes and various technical references, please refer to front of this section.
For engineering or technical information contact your local sales representative or call Distributor Sales (800)523-6572.

PART NUMBER	d inch	d mm	D inch	D mm	B inch	B mm	C lbf	C kN	C_0 lbf	C_0 kN	WGT. lbs	WGT kg	d_k inch	d_k mm
GAR 6 UK	0.236	6	0.551	14	0.236	6	810	3.6	1,830	8.15	0.037	0.017	0.394	10
GAR 8 UK	0.315	8	0.630	16	0.315	8	1,320	5.85	2,900	12.9	0.064	0.029	0.512	13
GAR 10 UK	0.394	10	0.748	19	0.354	9	1,950	8.65	3,950	17.6	0.112	0.051	0.630	16
GAR 12 UK	0.472	12	0.866	22	0.394	10	2,550	11.4	5,500	24.5	0.19	0.086	0.709	18
GAR 15 UK	0.591	15	1.024	26	0.472	12	3,950	17.6	8,100	36	0.309	0.14	0.866	22
GAR 17 UK	0.669	17	1.181	30	0.551	14	5,000	22.4	10,100	45	0.419	0.19	0.984	25
GAR 20 UK	0.787	20	1.378	35	0.630	16	7,100	31.5	13,500	60	0.684	0.31	1.142	29
GAR 25 UK	0.984	25	1.654	42	0.787	20	11,500	51	18,700	83	1.235	0.56	1.398	35.5
GAR 30 UK	1.181	30	1.850	47	0.866	22	14,700	65.5	24,700	110	1.962	0.89	1.602	40.7
GAR 35 UK2RS	1.378	35	2.165	55	0.984	25	25,000	112	33,000	146	3.087	1.4	1.850	47
GAR 40 UK2RS	1.575	40	2.441	62	1.102	28	31,500	140	40,500	180	3.969	1.8	2.087	53
GAR 45 UK2RS	1.772	45	2.677	68	1.260	32	40,500	180	54,000	240	5.733	2.6	2.362	60
GAR 50 UK2RS	1.969	50	2.953	75	1.378	35	49,500	220	65,000	290	7.497	3.4	2.598	66
GAR 60 UK2RS	2.362	60	3.543	90	1.732	44	78,000	345	101,000	450	13.01	5.9	3.150	80
GAR 70 UK2RS	2.756	70	4.134	105	1.929	49	99,000	440	137,000	610	18.081	8.2	3.622	92
GAR 80 UK2RS	3.150	80	4.724	120	2.165	55	128,000	570	169,000	750	26.46	12	4.134	105

CONTINUED FROM ABOVE

PART NUMBER	d_1 inch	d_1 mm	d_2 inch	d_2 mm	d_3	h inch	h mm	C_1 inch	C_1 mm	ALPHA deg	l_1 inch	l_1 mm	l_2 inch	l_2 mm	l_7 inch	l_7 mm
GAR 6 UK	0.315	8	0.827	21	M6	1.417	36	0.173	4.4	13	0.709	18	1.831	46.5	0.472	12
GAR 8 UK	0.402	10.2	0.945	24	M8	1.654	42	0.236	6	15	0.866	22	2.126	54	0.551	14
GAR 10 UK	0.520	13.2	1.142	29	M10	1.890	48	0.276	7	12	1.024	26	2.461	62.5	0.591	15
GAR 12 UK	0.587	14.9	1.339	34	M12	2.126	54	0.315	8	11	1.102	28	2.795	71	0.709	18
GAR 15 UK	0.724	18.4	1.575	40	M14	2.480	63	0.394	10	8	1.339	34	3.268	83	0.787	20
GAR 17 UK	0.815	20.7	1.811	46	M16	2.717	69	0.433	11	10	1.417	36	3.622	92	0.906	23
GAR 20 UK	0.949	24.1	2.087	53	M20X1.5	3.071	78	0.512	13	9	1.693	43	4.114	104.5	1.063	27
GAR 25 UK	1.154	29.3	2.520	64	M24X2	3.701	94	0.669	17	7	2.087	53	4.961	126	1.260	32
GAR 30 UK	1.347	34.2	2.874	73	M30X2	4.331	110	0.748	19	6	2.559	65	5.768	146.5	1.457	37
GAR 35 UK2RS	1.563	39.7	3.228	82	M36X3	5.512	140	0.827	21	6	3.228	82	7.126	181	1.654	42
GAR 40 UK2RS	1.772	45	3.622	92	M39X3	5.906	150	0.906	23	7	3.386	86	7.717	196	1.890	48
GAR 45 UK2RS	1.996	50.7	4.016	102	M42X3	6.417	163	1.063	27	7	3.701	94	8.425	214	2.047	52
GAR 50 UK2RS	2.201	55.9	4.409	112	M45X3	7.284	185	1.181	30	6	4.213	107	9.488	241	2.362	60
GAR 60 UK2RS	2.630	66.8	5.315	135	M52X3	8.268	210	1.496	38	6	4.528	115	10.925	277.5	2.953	75
GAR 70 UK2RS	3.063	77.8	6.299	160	M56X4	9.252	235	1.654	42	6	4.921	125	12.402	315	3.307	84
GAR 80 UK2RS	3.520	89.4	7.087	180	M64X4	10.630	270	1.850	47	6	5.512	140	14.173	360	3.937	100

Elges Rod Ends, Maintenance Free

GIKFR..PW, GIPFR..PW SERIES

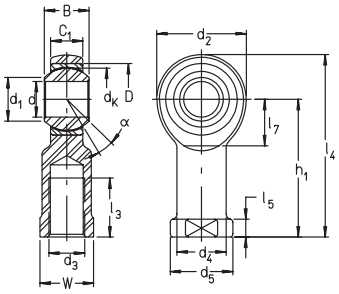

- DIN 648, dimension series K – ISO 6126
- Sliding contact surfaces: steel/PTFE Foil
- Internal thread
- Left hand thread is available on shank, order by replacing “R” with “L”
- GIPFR series has fine pitch threads to fit hydraulic cylinders to DIN 24335

For details on part numbers, descriptive suffixes and various technical references, please refer to front of this section.
For engineering or technical information contact your local sales representative or call Distributor Sales (800)523-6572.

PART NUMBER	d inch	d mm	D inch	D mm	B inch	B mm	C lbf	C kN	C_0 lbf	C_0 kN	WGT. lbs	WGT kg	d_k inch	d_k mm	d_1 inch	d_1 mm	d_2 inch	d_2 mm	d_3
GIKFR 5 PW	0.197	5	0.512	13	0.315	8	1,350	6	1,280	5.7	0.035	0.016	0.438	11.112	0.303	7.7	0.709	18	M5
GIPFR 5 PW	0.197	5	0.512	13	0.315	8	1,350	6	1,280	5.7	0.035	0.016	0.438	11.112	0.303	7.7	0.709	18	M4
GIKFR 6 PW	0.236	6	0.630	16	0.354	9	1,720	7.65	1,620	7.2	0.049	0.022	0.500	12.7	0.350	8.9	0.787	20	M6
GIKFR 8 PW	0.315	8	0.748	19	0.472	12	2,900	12.9	2,600	11.6	0.104	0.047	0.625	15.875	0.406	10.3	0.945	24	M8
GIKFR 10 PW	0.394	10	0.866	22	0.551	14	4,050	18	3,250	14.5	0.17	0.077	0.750	19.05	0.508	12.9	1.102	28	M10
GIPFR 10 PW	0.394	10	0.866	22	0.551	14	4,050	18	3,250	14.5	0.17	0.077	0.750	19.05	0.508	12.9	1.102	28	M10X1.25
GIKFR 12 PW	0.472	12	1.024	26	0.630	16	5,400	24	3,800	17	0.221	0.1	0.875	22.225	0.606	15.4	1.260	32	M12
GIPFR 12 PW	0.472	12	1.024	26	0.630	16	5,400	24	3,800	17	0.221	0.1	0.875	22.225	0.606	15.4	1.260	32	M12X1.25
GIKFR 14 PW	0.551	14	1.102	28	0.748	19	7,000	31	5,400	24	0.353	0.16	1.000	25.4	0.661	16.8	1.417	36	M14
GIKFR 16 PW	0.630	16	1.260	32	0.827	21	8,800	39	6,400	28.5	0.485	0.22	1.125	28.575	0.760	19.3	1.654	42	M16
GIPFR 16 PW	0.630	16	1.260	32	0.827	21	8,800	39	6,400	28.5	0.485	0.22	1.125	28.575	0.760	19.3	1.654	42	M16X1.5
GIKFR 18 PW	0.709	18	1.378	35	0.906	23	10,700	47.5	9,600	42.5	0.706	0.32	1.250	31.75	0.858	21.8	1.811	46	M18X1.5
GIKFR 20 PW	0.787	20	1.575	40	0.984	25	12,800	57	9,600	42.5	0.926	0.42	1.375	34.925	0.957	24.3	1.969	50	M20X1.5
GIKFR 22 PW	0.866	22	1.654	42	1.102	28	15,300	68	12,800	57	1.191	0.54	1.500	38.1	1.016	25.8	2.126	54	M22X1.5
GIKFR 25 PW	0.984	25	1.850	47	1.221	31	19,100	85	15,300	68	1.61	0.73	1.687	42.85	1.161	29.5	2.362	60	M24X2
GIKFR 30 PW	1.181	30	2.165	55	1.457	37	25,500	114	19,800	88	2.426	1.1	2.000	50.8	1.370	34.8	2.756	70	M30X2
GIPFR 30 PW	1.181	30	2.165	55	1.457	37	25,500	114	19,800	88	2.426	1.1	2.000	50.8	1.370	34.8	2.756	70	M27X2

CONTINUED FROM ABOVE

PART NUMBER	d_4 inch	d_4 mm	h_1 inch	h_1 mm	C_1 inch	C_1 mm	ALPHA deg	l_3 inch	l_3 mm	l_4 inch	l_4 mm	l_5 inch	l_5 mm	l_7 inch	l_7 mm	d_5 inch	d_5 mm	W inch	W mm
GIKFR 5 PW	0.335	8.5	1.063	27	0.236	6	13	0.394	10	1.417	36	0.158	4	0.394	10	0.433	11	0.354	9
GIPFR 5 PW	0.335	8.5	1.063	27	0.236	6	13	0.394	10	1.417	36	0.158	4	0.394	10	0.433	11	0.354	9
GIKFR 6 PW	0.394	10	1.181	30	0.266	6.75	13	0.472	12	1.575	40	0.197	5	0.433	11	0.512	13	0.433	11
GIKFR 8 PW	0.492	12.5	1.417	36	0.354	9	14	0.630	16	1.890	48	0.197	5	0.512	13	0.630	16	0.551	14
GIKFR 10 PW	0.591	15	1.693	43	0.413	10.5	13	0.787	20	2.244	57	0.256	6.5	0.591	15	0.748	19	0.669	17
GIPFR 10 PW	0.591	15	1.693	43	0.413	10.5	13	0.787	20	2.244	57	0.256	6.5	0.591	15	0.748	19	0.669	17
GIKFR 12 PW	0.689	17.5	1.969	50	0.472	12	13	0.866	22	2.598	66	0.256	6.5	0.669	17	0.866	22	0.748	19
GIPFR 12 PW	0.689	17.5	1.969	50	0.472	12	13	0.866	22	2.598	66	0.256	6.5	0.669	17	0.866	22	0.748	19
GIKFR 14 PW	0.827	21	2.244	57	0.532	13.5	16	0.984	25	2.953	75	0.315	8	0.709	18	1.024	26	0.866	22
GIKFR 16 PW	0.866	22	2.520	64	0.591	15	15	1.102	28	3.347	85	0.315	8	0.906	23	1.102	28	0.866	22
GIPFR 16 PW	0.866	22	2.520	64	0.591	15	15	1.102	28	3.347	85	0.315	8	0.906	23	1.102	28	0.866	22
GIKFR 18 PW	0.984	25	2.795	71	0.650	16.5	15	1.260	32	3.701	94	0.394	10	0.984	25	1.221	31	1.063	27
GIKFR 20 PW	1.083	27.5	3.032	77	0.709	18	14	1.299	33	4.016	102	0.394	10	1.024	26	1.378	35	1.181	30
GIKFR 22 PW	1.181	30	3.307	84	0.787	20	15	1.457	37	4.370	111	0.472	12	1.142	29	1.496	38	1.260	32
GIKFR 25 PW	1.319	33.5	3.701	94	0.866	22	15	1.654	42	4.882	124	0.472	12	1.260	32	1.654	42	1.417	36
GIKFR 30 PW	1.575	40	4.331	110	0.984	25	17	2.008	51	5.709	145	0.591	15	1.457	37	1.969	50	1.614	41
GIPFR 30 PW	1.575	40	4.331	110	0.984	25	17	2.008	51	5.709	145	0.591	15	1.457	37	1.969	50	1.614	41

Elges Rod Ends, Maintenance Free

GAKFR..PW SERIES

- DIN 648, dimension series K – ISO 6126
- Sliding contact surfaces: steel/PTFE
- External thread
- Left hand thread is available on shank, order by replacing “R” with “L”

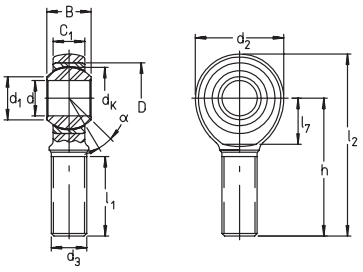

For details on part numbers, descriptive suffixes and various technical references, please refer to front of this section.
For engineering or technical information contact your local sales representative or call Distributor Sales (800)523-6572.

PART NUMBER	d inch	d mm	D inch	D mm	B inch	B mm	C lbf	C kN	C_0 lbf	C_0 kN	WGT. lbs	WGT kg	d_k inch	d_k mm
GAKFR 5 PW	0.1969	5	0.5118	13	0.315	8	1350	6	700	3.1	0.029	0.013	0.4375	11.112
GAKFR 6 PW	0.2362	6	0.6299	16	0.3543	9	1720	7.65	990	4.4	0.044	0.02	0.5	12.7
GAKFR 8 PW	0.315	8	0.748	19	0.4724	12	2900	12.9	1800	8	0.084	0.038	0.625	15.875
GAKFR 10 PW	0.3937	10	0.8661	22	0.5512	14	4050	18	2900	12.9	0.121	0.055	0.75	19.05
GAKFR 12 PW	0.4724	12	1.0236	26	0.6299	16	5400	24	3800	17	0.187	0.085	0.875	22.225
GAKFR 14 PW	0.5512	14	1.1024	28	0.748	19	7000	31	4700	21	0.309	0.14	1	25.4
GAKFR 16 PW	0.6299	16	1.2598	32	0.8268	21	8800	39	6400	28.5	0.463	0.21	1.125	28.575
GAKFR 18 PW	0.7087	18	1.378	35	0.9055	23	10700	47.5	9600	42.5	0.617	0.28	1.25	31.75
GAKFR 20 PW	0.7874	20	1.5748	40	0.9843	25	12800	57	9600	42.5	0.838	0.38	1.375	34.925
GAKFR 22 PW	0.8661	22	1.6535	42	1.1024	28	15300	68	12800	57	1.058	0.48	1.5	38.1
GAKFR 25 PW	0.9843	25	1.8504	47	1.2205	31	19100	85	15300	68	1.411	0.64	1.687	42.85
GAKFR 30 PW	1.1811	30	2.1654	55	1.4567	37	25500	114	19800	88	2.426	1.1	2	50.8

CONTINUED FROM ABOVE

PART NUMBER	d_1 inch	d_1 mm	d_2 inch	d_2 mm	d_3	h inch	h mm	C_1 inch	C_1 mm	ALPHA deg	l_1 inch	l_1 mm	l_2 inch	l_2 mm	l_7 inch	l_7 mm
GAKFR 5 PW	0.3031	7.7	0.7087	18	M5	1.2992	33	0.2362	6	13	0.748	19	1.6535	42		
GAKFR 6 PW	0.3504	8.9	0.7874	20	M6	1.4173	36	0.2657	6.75	13	0.8268	21	1.811	46		
GAKFR 8 PW	0.4055	10.3	0.9449	24	M8	1.6535	42	0.3543	9	14	0.9843	25	2.126	54		
GAKFR 10 PW	0.5079	12.9	1.1024	28	M10	1.8898	48	0.4134	10.5	13	1.1024	28	2.4409	62		
GAKFR 12 PW	0.6063	15.4	1.2598	32	M12	2.126	54	0.4724	12	13	1.2598	32	2.7559	70		
GAKFR 14 PW	0.6614	16.8	1.4173	36	M14	2.3622	60	0.5315	13.5	16	1.4173	36	3.0709	78	0.7087	18
GAKFR 16 PW	0.7598	19.3	1.6535	42	M16	2.5984	66	0.5906	15	15	1.4567	37	3.4252	87	0.9055	23
GAKFR 18 PW	0.8583	21.8	1.811	46	M18X1.5	2.8346	72	0.6496	16.5	15	1.6142	41	3.7402	95	0.9843	25
GAKFR 20 PW	0.9567	24.3	1.9685	50	M20X1.5	3.0709	78	0.7087	18	14	1.7717	45	4.0551	103	1.0236	26
GAKFR 22 PW	1.0157	25.8	2.126	54	M22X1.5	3.3071	84	0.7874	20	15	1.8898	48	4.3701	111	1.1417	29
GAKFR 25 PW	1.1614	29.5	2.3622	60	M24X2	3.7008	94	0.8661	22	15	2.1654	55	4.8819	124	1.2598	32
GAKFR 30 PW	1.3701	34.8	2.7559	70	M30X2	4.3307	110	0.9843	25	17	2.5984	66	5.7087	145	1.4567	37

NOTES

NOTES

Section Contents
LINEAR

BEARING SERIES	BEARING DESCRIPTION	PAGE
INFORMATION	LINEAR BEARINGS, GENERAL OVERVIEW	450
P / N IDENTIFICATION	LINEAR BEARINGS	460
COMPONENTS	LFS LINEAR BEARINGS	469
COMPONENTS	TS..W LINEAR BEARINGS	469
COMPONENTS	LFL LINEAR BEARINGS	469
COMPONENTS	LFCL LINEAR BEARINGS	469
COMPONENTS	LFR LINEAR BEARINGS	469
COMPONENTS	RUE LINEAR BEARINGS	469
COMPONENTS	KUSE LINEAR BEARINGS	469
COMPONENTS	KUVE LINEAR BEARINGS	469
COMPONENTS	KUVS LINEAR BEARINGS	469
COMPONENTS	KUE LINEAR BEARINGS	469
COMPONENTS	KUME LINEAR BEARINGS	469
RUE	LINEAR RECIRCULATING ROLLER BEARING AND GUIDEWAY ASSEMBLIES	470
RUE..H	LINEAR RECIRCULATING ROLLER BEARING AND GUIDEWAY ASSEMBLIES	472
RUKS	LOCKING ELEMENT	474
APLU	SHEET STEEL WIPER	476
BPLU	LUBRICATION ADAPTER PLATE	477
SMDE	MINIMAL QUANTITY LUBRICANT METERING UNIT	478
RUDS	DAMPING CARRIAGE	479
KUSE	LINEAR RECIRCULATING BALL BEARING AND GUIDEWAY ASSEMBLIES	480
KUSE..L	LINEAR RECIRCULATING BALL BEARING AND GUIDEWAY ASSEMBLIES	482
KUSE..H	LINEAR RECIRCULATING BALL BEARING AND GUIDEWAY ASSEMBLIES	484
KUSE..HL	LINEAR RECIRCULATING BALL BEARING AND GUIDEWAY ASSEMBLIES	486
APLSE	SHEET STEEL WIPER	488
AB KOL KWSE	COLLECTOR WIPER	489
BPLSE	LUBRICATION ADAPTER PLATE	490
FBALG KWSE	BELLOWS	491
KUVE	FOUR-ROW LINEAR RECIRCULATING BALL BEARING AND GUIDEWAY ASSEMBLY	492
KUVE..S,..SN, ..H	FOUR-ROW LINEAR RECIRCULATING BALL BEARING AND GUIDEWAY ASSEMBLY	494
KUVE..W,..WL	FOUR-ROW LINEAR RECIRCULATING BALL BEARING AND GUIDEWAY ASSEMBLY	496
KUE	LINEAR RECIRCULATING BALL BEARING AND GUIDEWAY ASSEMBLIES	498
KUE..H	LINEAR RECIRCULATING BALL BEARING AND GUIDEWAY ASSEMBLIES	500
APLE	SHEET STEEL WIPER	502
BPLE	LUBRICATION ADAPTER PLATE	503
FBALG KWE	BELLOWS	504
KUVS	LINEAR BALL BEARING UNITS	506
KWVK..AL	CARRIAGES	508
TKVD	GUIDEWAYS	508

Section Contents
LINEAR

BEARING SERIES	BEARING DESCRIPTION	PAGE
KUME	MINIATURE LINEAR RECIRCULATING BALL BEARING AND GUIDEWAY ASSEMBLIES	510
LFCL	TRACK ROLLER LINEAR GUIDANCE SYSTEMS WITH HOLLOW SECTION CARRIAGE	512
LFL..SF	TRACK ROLLER LINEAR GUIDANCE SYSTEMS WITH OPEN CARRIAGE	514
LFKL..SF	TRACK ROLLER LINEAR GUIDANCE SYSTEMS WITH COMPACT CARRIAGE	516
LFDL	TRACK ROLLER LINEAR GUIDANCE SYSTEMS WITH BOGIE CARRIAGE	518
LFR	TRACK ROLLERS	520
LFZ	BOLTS	521
LFE	BOLTS	522
LFZ..A1	BOLTS	523
LFS	GUIDEWAYS	524
LFS..C	GUIDEWAYS	524
LFS..F	GUIDEWAYS	524
LFS..M	GUIDEWAYS	526
LFS..N	GUIDEWAYS	526
LFS..CH	GUIDEWAYS	528
LFS..FH	GUIDEWAYS	528
LFS..R	CURVED GUIDEWAYS	530
TSNW	SHAFT AND SUPPORT RAIL UNITS	531
TSNW..G	SHAFT AND SUPPORT RAIL UNITS	532
TSUW	SHAFT AND SUPPORT RAIL UNITS	533
TSSW	SHAFT AND SUPPORT RAIL UNITS	534
TSMW	SHAFT AND SUPPORT RAIL UNITS	535
AB LFR	CAP WIPERS	536
AB W	LUBRICATION AND WIPER UNITS	536
ANS LFS	END PLATES	537
AB	LUBRICATION AND WIPER UNITS	538
ABAL	SIDE PLATES	538
PAH	END STOPS	539
KA LFS	END COVERS	540
NAD	GROOVE STRIPS	540
ABTKO LFKL	ADAPTER	541
KX	MAX³ INCH SELF-ALIGNING LINEAR BALL BEARINGS - CLOSED	542
KXO	MAX³ INCH SELF-ALIGNING LINEAR BALL BEARINGS - OPEN	542
KGX	MAX³ INCH SELF-ALIGNING LINEAR BALL BEARINGS - CLOSED WITH HOUSING	544
KGXO	MAX³ INCH SELF-ALIGNING LINEAR BALL BEARINGS - OPEN WITH HOUSING	544
KTX	TANDEM MAX³ INCH LINEAR BALL BEARINGS - CLOSED WITH HOUSING	546
KTXO	TANDEM MAX³ INCH LINEAR BALL BEARINGS - OPEN WITH HOUSING	546
KS	MAX³ METRIC SELF-ALIGNING LINEAR BALL BEARINGS - CLOSED	548
KSO	MAX³ METRIC SELF-ALIGNING LINEAR BALL BEARINGS - OPEN	548

Section Contents
LINEAR

BEARING SERIES	BEARING DESCRIPTION	PAGE
KGSG	MAX³ METRIC SELF-ALIGNING LINEAR BALL BEARINGS - CLOSED WITH CAST 2 BOLT HOUSING	550
KGSS	MAX³ METRIC SELF-ALIGNING LINEAR BALL BEARINGS - ADJ. CLEARANCE WITH CAST 2 BOLT HOUSING	550
KGSO	MAX³ METRIC SELF-ALIGNING LINEAR BALL BEARINGS - OPEN WITH CAST 2 BOLT HOUSING	550
KGSAG	MAX³ METRIC SELF-ALIGNING LINEAR BALL BEARINGS - CLOSED WITH CAST 4 BOLT HOUSING	552
KGSAS	MAX³ METRIC SELF-ALIGNING LINEAR BALL BEARINGS - ADJ. CLEARANCE WITH CAST 4 BOLT HOUSING	552
KGSAO	MAX³ METRIC SELF-ALIGNING LINEAR BALL BEARINGS - OPEN WITH CAST 4 BOLT HOUSING	552
KGSNG	MAX³ METRIC SELF-ALIGNING LINEAR BALL BEARINGS - CLOSED WITH EXTRUDED HOUSING	554
KGSNS	MAX³ METRIC SELF-ALIGNING LINEAR BALL BEARINGS - ADJ. CLEARANCE WITH EXTRUDED HOUSING	554
KGSNO	MAX³ METRIC SELF-ALIGNING LINEAR BALL BEARINGS - ADJ. CLEARANCE OPEN WITH EXTRUDED HOUSING	556
KGSNOS	MAX³ METRIC SELF-ALIGNING LINEAR BALL BEARINGS - OPEN WITH EXTRUDED HOUSING	556
KTSG	TANDEM MAX³ METRIC LINEAR BALL BEARINGS - CLOSED WITH EXTRUDED HOUSING	558
KTSS	TANDEM MAX³ METRIC LINEAR BALL BEARINGS - ADJUSTABLE CLEARANCE WITH EXTRUDED HOUSING	558
KTSO	TANDEM MAX³ METRIC LINEAR BALL BEARINGS - OPEN WITH EXTRUDED HOUSING	560
KTSOS	TANDEM MAX³ METRIC LINEAR BALL BEARINGS - ADJ. CLEARANCE WITH OPEN EXTRUDED HOUSING	560
KGSC	TANDEM MAX³ METRIC LINEAR BALL BEARINGS - OPEN WITH SIDE MOUNTED HOUSING	562
KGSCS	TANDEM MAX³ METRIC LINEAR BALL BEARINGS - ADJUSTABLE CLEARANCE WITH SIDE MOUNTED HOUSING	562
KTFS	TANDEM MAX³ METRIC LINEAR BALL BEARINGS - CLOSED WITH SIDE MOUNTED HOUSING	564
KH	LINEAR BALL BEARINGS	566
KGHK	LINEAR BALL BEARING AND HOUSING UNITS	568
KTHK	LINEAR BALL BEARING AND HOUSING UNITS	570
KGHW	LINEAR BALL BEARING AND HOUSING UNITS	572
KGHWT	LINEAR BALL BEARING AND HOUSING UNITS	574
KN	SELF-ALIGNING LINEAR BALL BEARINGS	576
KNO	SELF-ALIGNING LINEAR BALL BEARINGS, OPEN	576
KGN	SELF-ALIGNING LINEAR BALL BEARING AND HOUSING UNITS	578
KGNS	SELF-ALIGNING LINEAR BALL BEARING AND HOUSING UNITS	578
KGNO	SELF-ALIGNING LINEAR BALL BEARING AND HOUSING UNITS	580
KGNC	SELF-ALIGNING LINEAR BALL BEARING AND HOUSING UNITS	582

Section Contents
LINEAR

BEARING SERIES	BEARING DESCRIPTION	PAGE
KTN	TANDEM LINEAR BALL BEARING AND HOUSING UNITS	584
KTNO	TANDEM LINEAR BALL BEARING AND HOUSING UNITS - OPEN	586
KTFN	LINEAR BALL BEARING AND HOUSING UNITS	588
KB	LINEAR BALL BEARINGS	590
KBO	LINEAR BALL BEARINGS	590
KBS	LINEAR BALL BEARINGS	590
KGB	LINEAR BALL BEARING AND HOUSING UNITS	592
KGBO	LINEAR BALL BEARING AND HOUSING UNITS	592
KGBS	LINEAR BALL BEARING AND HOUSING UNITS	592
KGBA	LINEAR BALL BEARING AND HOUSING UNITS	594
KGBAO	LINEAR BALL BEARING AND HOUSING UNITS	594
KGBAS	LINEAR BALL BEARING AND HOUSING UNITS	594
KTB	LINEAR BALL BEARING AND HOUSING UNITS	596
KTBO	LINEAR BALL BEARING AND HOUSING UNITS	596
PAB	PERMAGLIDE LINEAR PLAIN BEARINGS	598
PAGBA	PERMAGLIDE LINEAR PLAIN BEARINGS	600
W	SHAFTS	602
WH	SHAFTS	604
TSNW	SHAFT AND SUPPORT RAIL UNITS	605
TSWW	SHAFT AND SUPPORT RAIL UNITS	605
TSUW	SHAFT AND SUPPORT RAIL UNITS	606
TSNW..G	SHAFT AND SUPPORT RAIL UNITS	607
TSSW	SHAFT AND SUPPORT RAIL UNITS	608
TSWWA	SHAFT AND SUPPORT RAIL UNITS	609
GWH..B	SHAFT SUPPORT BLOCKS	610
GWN..B	SHAFT SUPPORT BLOCKS	611
GW	SHAFT SUPPORT BLOCKS	612
TSN	SUPPORT RAILS	613
KBZ	LINEAR BALL BEARINGS	615
KBZ..OP	LINEAR BALL BEARINGS	616
KNZ	SELF ALIGNING LINEAR BALL BEARINGS	617
KNZ..OP	SELF ALIGNING LINEAR BALL BEARINGS	618
KGNZ	SELF ALIGNING MOUNTED UNITS	619
KGNZ..OP	SELF ALIGNING MOUNTED UNITS	620
KTNZ	SELF ALIGNING TANDEM MOUNTED UNITS	621
KTNZ..OP	SELF ALIGNING TANDEM MOUNTED UNITS	622
WZ	PRECISION GROUND SHAFTS	623
WZ..PDT	PRECISION GROUND SHAFTS	624
TSWZ	SHAFT SUPPORT RAILS	625

Section Contents
LINEAR

BEARING SERIES	BEARING DESCRIPTION	PAGE
TSWZ..PD	SHAFT SUPPORT RAILS	626
TSUZ	SHAFT SUPPORT RAILS	627
TSUZ..PD	SHAFT SUPPORT RAILS	628
MLFZ	RAIL	629
LFL	CARRIAGE	630
LFSB	RAIL	630
LFKL	CARRIAGE	631
MLF..ZR	LINEAR MODULAR UNIT WITH TRACK ROLLER GUIDANCE SYSTEM AND TOOTHED BELT DRIVE	632
MKUE..ZR	LINEAR MODULAR UNIT WITH RECIRCULATING BALL BEARING GUIDANCE SYSTEM AND TOOTHED BELT DRIVE	634
MKUE..KGT	LINEAR MODULAR UNIT WITH RECIRCULATING BALL BEARING GUIDANCE SYSTEM AND BALL SCREW DRIVE	636
RUS	LINEAR ROLLER BEARING BLOCK, WITH SEPARATOR	638
RUSZ	INCH LINEAR ROLLER BEARING BLOCK, WITH SEPARATOR	640
PR	LINEAR ROLLER BEARING BLOCK, FULL COMPLEMENT	642
VUS	ADJUSTING GIBS	644
RUSV	LINEAR ROLLER BEARINGS WITH INTEGRAL ADJUSTING GIB	646
RGT	PLANETARY ROLLER SCREW	648
KGS	ROLLED THREAD BALL SCREWS	658
KGF	FLANGED BALL NUT FOR BALL SCREWS	659
KGM	CYLINDRICAL BALL NUT FOR BALL SCREWS	660
KGS	ROLLED THREAD BALL SCREW - FORM D ENDS	661
KGS	ROLLED THREAD BALL SCREW - FORM W, N AND Z ENDS	662
BF	LINEAR FLAT STEEL CAGE & ROLLERS, SINGLE ROW	663
FF	LINEAR FLAT PLASTIC CAGE & ROLLERS, SINGLE ROW, SNAP CONNECTORS	663
H	LINEAR FLAT ALUMINUM CAGE & ROLLERS, SINGLE ROW	663
HR	LINEAR FLAT ALUMINUM & PLASTIC CAGE & CYLINDRICAL ROLLERS, SINGLE ROW	663
FF..ZW	LINEAR FLAT PLASTIC CAGE & ROLLERS, DOUBLE ROW, SNAP CONNECTORS	664
H..ZW	LINEAR FLAT ALUMINUM CAGE & ROLLERS, DOUBLE ROW	664
HR..ZW	LINEAR FLAT STEEL CAGE & ROLLERS, DOUBLE ROW	664
FFW	LINEAR FLAT PLASTIC CAGE & ROLLERS, DOUBLE ROW AT 90 DEGREE BEND, SNAP CONNECTORS	665
HRW	LINEAR FLAT STEEL CAGE & ROLLERS, DOUBLE ROW AT 90 DEGREE BEND	665
HW	LINEAR FLAT ALUMINUM CAGE & ROLLERS, DOUBLE ROW AT 90 DEGREE BEND	665

INTRODUCTION

Many years of field experience have contributed to the optimization of INA products and systems for linear movement to meet the high demands of modern machine design; they have the following advantages:

- Very low and uniform resistance to displacement, giving improved positioning and running accuracy;
- The negative influences due to shock loading which occur in conventional rolling element guidance systems as the elements enter the load zone are reduced in INA guidance systems by means of special design features.

INA linear guidance systems have extremely high precision and operate virtually wear-free due to their rolling motion so that their high accuracy is maintained throughout the operating life.

A wide range of linear guidance systems are available, each designed for maximum rigidity. By selecting the optimum type of guidance and preloading of linear bearings, virtually any rigidity requirement can be fulfilled.

INA linear products have an extremely high load carrying capacity due to their optimum use of available space and manufacturing quality. Guidance systems for almost all load carrying requirements can be produced from the comprehensive product range.

INA Linear Roller Bearing And Guideway Assemblies Series RUE

INA linear recirculating roller bearing and guideway assemblies of series RUE are high accuracy, ready-to-assemble linear guidance units which can take high loads. They have a full complement rolling element system which is preloaded as standard and allows high running and positioning accuracy.

The basic static and dynamic load ratings of RUE assemblies are nearly twice that of comparable ball and guideway assemblies.

The rigidity of recirculating roller bearing and guideway assemblies is considerably higher than that of ball bearing and guideway assemblies. While some competitors argue that the rigidity can be improved by means of high preloads on the recirculating ball system, this is entirely at the expense of the life.

The linear recirculating roller bearing and guideway assembly also has a high crash safety.

The carriage is sealed on all sides. As opposed to the competition, the whole body of the guideways is ground which provides optimum sealing.

When these assemblies are used in machine tools, brass closing plugs are particularly advantageous.

The RUE unit is interchangeable with the ball bearing and guideway assemblies of the same section height produced by our competitors but they have considerably higher load ratings and rigidity. Due to the technical advantages of the roller system, the next smallest RUE unit can often be used compared to ball bearing and guideway assemblies.

The carriage can be fixed from above or below with 6 screws. The guideway has twice as many screws as the guideways produced by the competitors. Recirculating roller bearing and guideway assemblies may be combined with the damping carriage RUDS to counteract vibration, giving the benefits of both a sliding and a rolling guidance system. Plastic deformation of the rolling elements no longer occurs as the smaller damping gap and the increased surface area of the damping carriage reduce the specific contact load considerably.

Linear Recirculating Ball Bearing And Guideway Assemblies Series KUSE

Six-track linear recirculating ball bearing and guideway assemblies of series KUSE have the highest load rating of any recirculating ball bearing guidance system with the same envelope dimensions, and allow very high accelerations and velocities. Linear ball bearing and guideway assemblies of series KUSE should be classified between the traditional linear ball bearing and linear roller bearing guideway assemblies.

Linear ball bearing and guideway assemblies of series KUSE derive their high load carrying capacity from the six tracks of preloaded balls. They can take loads from all directions and moments about all axes. The low friction characteristics of this new linear recirculating ball system allows very high accelerations and velocities.

Linear Ball Bearing And Guideway Assemblies Series KUVS

INA linear guidance systems with recirculating ball bearing units, series KUVS, are four row linear guidance systems. Two of the main features of these assemblies are wide support distances and adjustable bearing clearance.

Linear recirculating ball bearing units of series KUVS have a high load carrying capacity in spite of their small boundary dimensions. They run on guideways of series TKVD with raceways on one or both sides. These units can be screwed into a carriage KWVK..AL which can form a four row linear ball bearing and guideway assembly when combined with the TKVD guideways.

INA Linear Ball Bearing And Guideway Assemblies Series KUE

INA linear ball bearing and guideway assemblies are ready-to-assemble linear guidance systems. They consist of one or more carriages on a guideway TKD. Linear ball bearing and guideway assemblies of series KUE have a four point contact recirculating ball system.

Due to their special features, INA linear recirculating ball bearing and guideway assemblies can meet the demands of modern guidance designs:

- Accuracy
  INA linear ball bearing and guideway assemblies are extremely accurate rolling bearings. They are clearance-free and operate with extremely low friction and completely free from stick-slip.
- High load carrying capacity and rigidity
  INA linear ball bearing and guideway assemblies have an extremely high load carrying capacity and rigidity for their dimensions.
- Load directions
  INA recirculating linear ball bearings can take loads in all perpendicular directions and moments about all axes. They need only one guideway for fixing: counterstay designs are therefore superfluous.
- Low section height
  INA linear ball bearing and guideway assemblies have an extremely low section height. This allows a very compact design of guidance system.

In addition, KUE assemblies have the following important features:

- High running and positioning accuracy (clearance-free)
- High reliability
- Easy mounting
  INA linear ball bearing and guideway assemblies are supplied ready for assembly. This allows economical designs of guidance systems.
- Interchangeability
  The components of a linear ball bearing and guideway assembly can be interchanged within the same preload and accuracy class.

INA Track Roller Linear Guidance System Series LF

Due to its modern and innovative design, the INA track roller linear guidance system offers the following advantages:

- Straightforward modular design
  The modular construction of the INA track roller linear guidance system allows individual guidance elements to be combined as required. Depending on the requirements, complete units may be used or variants may be produced with single guideways on the inside or outside combined with different rollers.
- Robust, wear-resistant, reliable system
  Vertical and horizontal motion can be achieved even in contaminated environments. Reliable operation and a long operating life are ensured, together with low maintenance requirements.
- High load carrying capacity
  Loads can be taken from all directions and moments about all axes. Depending on the load case, different guidance elements with differing high load carrying capacities are available to the user.
- High accuracy
  Due to the production process, the guideways have a high accuracy, providing clearance-free and low-friction operation. LF systems can be used in any mounting position.
- Unlimited stroke at high traverse speeds
  The INA track roller linear guidance system allows linear motion of any length and speeds up to 10 m/s.
- Straightforward assembly
  INA track roller linear guidance systems are supplied ready for mounting. The user has the option, depending on the guideway type, of fixing from above or below. The premounted carriage can be set clearance-free. The system can be matched to the customer's specific requirements.
- High wear resistance due to the optimized profile of the track rollers and the rolled precision steel shafts hardened to HRC 60
- Long life
- The load carrying capacity can be considerably increased if required by adding more track rollers
- Relubrication facility
- The individual components are easily interchangeable
- Systems have low mass due to the use of anodized aluminium components
- Systems are also available in corrosion resistant and black anodized versions
- There are many potential applications in almost all areas
- The standard version is readily available from stock
- The track rollers are lubricated for life
- Various sealing options and accessories are available

INA Linear Ball Bearings
Series KH

INA linear ball bearings of series KH are linear recirculating ball bearing units of very small radial section height. They consist of a drawn and hardened outer cup and a plastic cage. The outer cup, cage and balls form a closed linear bearing which is ready to assemble. These units are suitable for applications where long travel distances, low space requirements and predominantly maintenance-free operation are required.

Linear ball bearings of series KH have the following advantages:

- Optimum price/performance ratio
- Very small radial section height
- Axial location is not required
- Double lip contact sealing rings on KH...P and KH...PP
- Optimum sealing
- Lubricant is retained in the bearing
- Relubrication via slots in the ball recirculation channel
- Long operating life
- Operating temperature up to 120°C
  Cage: polyamide 66-GK
  Sealing rings: polyester elastomer

INA ball bearings are superior bearings not only in terms of their resistance to temperature but also in their other features such as:

- Smooth running
- Load carrying capacity
- Rigidity

Good rigidity is achieved in all directions due to the uniform spacing of the rows.

INA Linear Ball Bearings
Series KN/KS MAX³

INA linear ball bearings of series KN, KNO, KS and KSO are linear recirculating ball bearing units which can compensate for misalignments due to their special design.

Linear ball bearings of this series consist of a cage and several load plates. The high-strength plastic cage guides the balls. The hardened load plates have a ground profile on the raceway side.

The KN/KS series offer:

- Ground races for smoothest operation
- Self aligning in any housing
- Completely interchangable with other standard makes
- Lower noise level
- Lighter weight
- Wiper seals float with the bearing
- Linear ball bearings KNO..PP with all-around sealing have additional reinforced longitudinal seals
- Cost effective bearings for round shaft rails

In addition, the KS offers:

- Larger load capability due to increased number of ball rows
- Greater misalignment capability
- Longer bearing life due to the internal lubrication resevoirs

INA Linear Ball Bearings
Series KB

INA linear ball bearings of series KB consist of a hardened and ground outer ring and a cage in which the balls are guided. The balls in the return zones are held in place by spring elements. This ensures that even heavily loaded or preloaded bearings have a uniform, low resistance to displacement.

INA linear ball bearings of closed (KB), adjustable (KBS) and open version (KBO) have 4 to 6 rows of balls to support the load and are used where high precision and load carrying capacity are required.

Linear ball bearings of series KBS have a split outer ring which allows the operating clearance to be adjusted.

Linear ball bearings of series KBO have a segment cut out of the outer ring:
they are suitable for applications with shafts with continuous support.

Linear ball bearings of series KB, KBS and KBO can be relubricated.

The ground outside diameter on the linear ball bearings series KB are suitable as raceways for rolling bearings so that bearing units for linear and rotary motion can be created.

The special recirculation design provides a uniform, low resistance to displacement with extremely smooth running even in highly loaded and preloaded linear ball bearings.

Bearings of series KB are completely interchangeable with the bearings of our competitors.

INA Shafts
Series W, WH, WZ

INA shafts of series W, WH and WZ are suitable for guidance systems with closed, protected linear bearing units and are used in a wide range of applications in the construction of equipment and automatic machinery.

- INA shafts are surface hardened, precision ground and made from high grade steels.
- High material quality
- High surface hardness and surface quality
- High dimensional and geometrical accuracy ensure excellent running characteristics.
- Steel shafts are available in standard lengths ex stock and can be cut to the customer’s requirements. They can be produced with various end configurations and other machined features.
- Special versions are available in other materials, e.g. corrosion-resistant steel.
- Shafts of 5 mm diameter are available in lengths up to about 3700 mm and shafts of 6 mm diameter and above in lengths up to about 4000 mm.
- INA can supply composite shafts where the length required exceeds the maximum single piece length.
- Special versions are available on request with other tolerances and special surface coatings and as unhardened shafts.

Shafts and support rails of series TSCW, TSNW, TSSW, TSUW, TSWW and TSWWA complete the INA linear range and remove the need for expensive, time consuming customer designs.

Support rails have the following advantages:

- They prevent flexing of the shaft
- They ensure correct functioning of the linear guidance system
- Low section height
- High rigidity

INA Linear Ball Bearings
Series KBZ

Linear ball bearings of series KBZ and KBZ..OP consist of a hardened and ground solid outer ring and a retainer. The outer ring is machined from high-carbon bearing steel. The retainer is manufactured from a high strength engineered resin. Series KBZ..OP have a segment removed from the outer ring for applications with supported shafts.

Series KNZ/KX MAX³

Linear ball bearings of series KNZ.. and KX.. consist of a precision molded retainer of a high strength engineered resin and hardened and ground bearing races. Series KNZ..OP.. and KXO.. bearings have a segment removed for applications requiring supported shafts.

The KNZ/KX series offer:

- Ground races for smoothest operation.
- Self Aligning in any housing.
- Completely interchangeable with other standard makes.
- Lower noise level.
- Lighter weight.
- Wiper seals float with the bearing.
- Cost effective bearings for round shaft rails.

In addition, the KX offers:

- Larger load capability due to increased number of ball rows
- Greater misalignment capability
- Longer bearing life due to the internal lubrication reservoirs

Linear Recirculating Ball Bearing And Guideway Assemblies
Series KUVE

The four-row linear recirculating ball bearing and guideway assembly KUVE comprises a total of six carriage cross-sections. The four rows of balls are preloaded. The unit has a high load carrying capacity; it can take loads from all directions and moments about all axes.

The special design of the recirculating ball system ensures low resistance to displacement and allows high velocities and accelerations.

Linear Modular Units
Series MLF

The linear modular unit MLF allows small to medium loads to be moved with a high positional accuracy at speeds up to 7.5m/s[1)] and with a maximum acceleration of 40m/s^2 [1)]. When combined with a suitable control drive, a high repeatability can be achieved, usually within ±0.08 mm.

The profiled support rails, which have high bending and torsional rigidity, allow the unit to operate without supports, even on longer modular units.

All the aluminium components are anodized.

A corrosion resistant execution is also available: suffix VA.

Design

- Profiled support rail LFS..M consisting of an anodized aluminium rail with hardened and ground steel rods inlaid on both sides. T-grooves provide various installation possibilities.
- Compact carriage in an enclosed design with integral toothed belt tensioner on both sides, lubrication and wiper unit. The carriage can be set clearance-free by means of two eccentric bolts.
- Return units with integral brush wipers and ball bearings which are lubricated for life.

Linear Modular Units
Series MKUE

INA linear ball bearing and guideway assemblies are used in the linear modular units series MKUE. They are preloaded and operate virtually free from stick-slip.

The guidance accuracy of MKUE linear modular units is increased by machining the guideway seating surfaces on the support rail.

The INA linear modular unit with recirculating ball guidance system allows medium to high loads to be moved quickly and with a very high guidance accuracy.

The drive is via either a toothed belt or a ball screw.

Maximum traverse speeds are:

Toothed belt drive 3 m/s
Ball screw drive 1.73m/s

When the toothed belt drive is combined with a suitable control drive, a high repeatability can be achieved, usually within ±0.08 mm.

The profiled support rails, which have high bending and torsional rigidity, allow the unit to operate without supports, even on longer units.

All the aluminium components are anodized.

Design

- Profiled support rail made from anodized aluminium with integral ball bearing and guideway assembly KUE. T-grooves provide various installation possibilities.

Linear Modular Unit MKUE 25 ZR..N

- Carriage with two T-grooves (with threaded holes if required) and integral belt tensioners on both ends
- Return unit with ball bearing lubricated for life.

Linear Modular Unit MKUE 25 KGT

- Carriage with threaded holes
- Preloaded double nut for leads of 5 and 10 mm. Accuracy 50 µm/300 mm
- INA axial angular contact ball bearings series ZKLF are used for the spindle bearing arrangements: the bearings are greased for life
- Bellows are used to protect the ball screw spindle and the KUE system.

[1)] These values are reduced when bellows are used.

INA Linear Roller Bearings
Series RUS

INA linear roller bearings are manufactured in several basic types and meet the highest technical demands. Linear recirculating roller bearing systems are suitable for linear guidance systems in machine tools where high guidance and positioning accuracy with long strokes are required.

Linear roller bearings have the following advantages:

- Very high accuracy
- Increased compressive rigidity
- High load carrying capacity
- High functional reliability
- Very low frictional values compared to other linear guidance systems
- Very smooth running due to the special design of the supporting elements with compensation for bounce

Due to their robustness, linear roller bearings of series PR are also suitable for use at high temperatures as well as for extremely high velocities and accelerations.

With INA linear roller bearings of series RUSV..KS, there is no need for a separate adjusting gib. This gives advantages including:

- Fewer components
- Low section height
- Quicker, simpler mounting

INA also supplies a setting device for exact, repeatable, quick and straightforward adjustment of preload in linear roller bearings.

INA Adjusting Gibs
Series VUS and VUSZ

INA Adjusting Gibs of series VUS and VUSZ are used for height adjustment or preloading of linear roller bearings. They consist of two ground wedges which are guided together by a central key. A plate fixed on one end face supports the adjusting screw and the locking screw. Lubrication ducts in the adjusting gibs allow for the lubrication of the linear bearings through the rolling element return zone in their supporting face.

INA Planetary Roller Screws Series RGT

The most significant advantage of these units over ball screws is the increased number of contact points per unit volume which provides a high load carrying capacity. The specific contact load of a roller screw drive is lower and the life longer compared to ball screw drives with the same dimensions.

Compared to the more widespread ball screw drives, planetary roller screws have greater rigidity, lower axial clearance and higher limiting speeds which are about three times those of ball screw drives. RGT units are very compact and robust, require only a small amount of space, and large ball screw drives can be replaced by small RGT units. Straightforward mounting and dismantling allow the nut to be mounted where access is difficult.

- Low sensitivity to shock loading
- High functional reliability under extreme conditions
- Extremely high displacement speeds
- Low internal friction — no stick-slip, high efficiency (up to 93%).

Excellent positioning and repeat accuracy throughout the operating life. Extremely accurate positioning is possible (2 µm) due to the small lead (1 mm) with very small advance movement. At high displacement speeds, a high positioning accuracy can be achieved with a large lead.

Special machining operations (e.g. shortening a spindle) can be quickly carried out.

The optimum solution for a particular application can be achieved with special setting of the nut e.g. reduction of the frictional moment.

INA planetary roller screws, Series RGT, basically consist of a screw (shaft) and a roller nut. Several planetary rollers are arranged parallel to the axis between the screw and the roller nut.

Roller Nut

The roller nut can be supplied split or as one piece. The two halves of the split roller nut **(9)**, see next page, are held together by the key **(7)**. During installation of the planetary roller screw the roller nut is preloaded. A shim **(8)** is used to control the preload. The one-piece roller nut cannot be preloaded.

Internally geared rings **(4)** are situated in the ends of the roller nut engaging with the external gearing provided at each end of the planetary rollers **(5)**. The spacing of the planetary rollers, is provided by the carrier plates **(3)** which also function as labyrinth seal. The plates are retained by the snap rings **(2)**.

Planetary Rollers

The planetary rollers **(5)** have a journal at each end which are guided by the holes of the carrier plates. The geared ends of the planetary rollers mesh with the internally geared rings in the nut. The planetary rollers have a single-start thread with a crowned flank. This allows the stresses created by the thread meshing to be distributed on larger ellipses which also reduce the harmful edge stresses. The planetary rollers rotate slip-free in the roller nut. They have no axial movement relative to the roller nut as the axial travel increments at the points of contact between both elements are equal.

Screw Shaft

Screws are manufactured from surface hardened, case hardening steel. The thread angle is 90 degrees. Screws in standard design are available with a nominal diameter d_0 from 5 mm to 20 mm. The standard ends configuration prescribes a straight journal on the floating side and provision for lock nut and driving system on the locating side. The screws are available in different lengths. Strokes from 25 mm to 1200 mm are possible, depending on the nominal diameter.

Screws with a nominal diameter d_0 between 24 and 63 mm are special designs. Their dimensions are pre-determined by the following dimension tables. The largest possible screw diameter d_0 is 250 mm.

All screws are available with custom tailored ends configuration.

Special Request Variations

INA planetary roller screws are available upon request in the following special designs:

- One-piece roller nut (not preloaded, higher load ratings, small axial clearance)
- Roller nut with flanges, middle or side flange

INA Planetary roller screws are also available upon request with:

- Left hand thread
- Inch pitch thread
- Hollow shaft

If aggressive media is acting on the planetary roller screw, corrosion resistant material should be chosen. Contact INA for details.

Wipers

If planetary roller screws are subject to heavy contamination, the roller nut can be equipped with wiper seals upon request.

DESIGN OF THE INA PLANETARY ROLLER SCREW WITH SPLIT ROLLER NUT

1	SCREW (SHAFT)
2	SNAP RING
3	CARRIER PLATE
4	INTERNALLY GEARED RING
5	PLANETARY ROLLER
6	LOCATING PIN
7	KEY
8	SHIM
9	ROLLER NUT

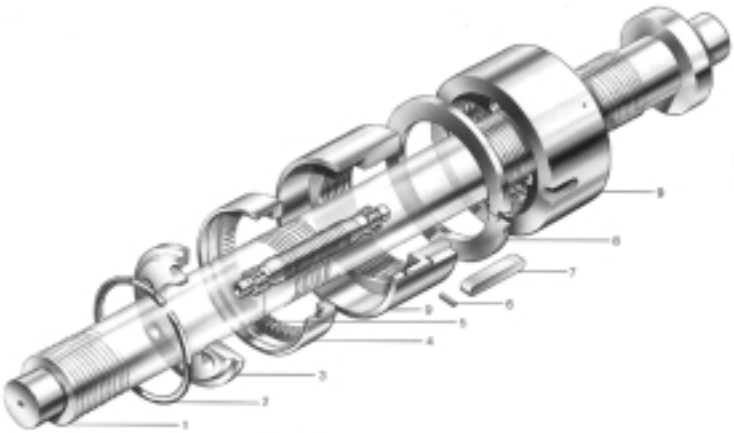

Part Number Identification
LINEAR

LINEAR RECIRCULATING ROLLER BEARING & GUIDEWAY ASSEMBLY

R U E 55 D H L OE W2 / 1000

- **R** — ROLLER
- **U** — RECIRCULATING
- **E** — UNIT
- **55** — RAIL SIZE (SYSTEM SIZE)
- **D** — DESIGN VERSION
- **H** — CARRIAGE CONFIGURATION
  - H Narrow, Mounting From The Top
  - — Standard, Flanged
- **L** — CARRIAGE LENGTH
  - L Long Version
  - — Standard Version
- **OE** — LUBRICATION SUFFIX
  - OE Oil
  - FE Grease
- **W2** — Number Of Carriages Per Assembly
- **1000** — Guideway Length In mm

Part Number Identification
LINEAR

LINEAR RECIRCULATING ROLLER BEARING & GUIDEWAY ASSEMBLY

K U S E 35 H L W2 V2 / 1740

BALL TYPE

RECIRCULATING

UNIT CONFIGURATION

—	2 Tracks
V	4 Tracks
S	6 Tracks
M	Miniature

UNIT

STANDARD RAIL SIZE (SYSTEM SIZE)

CARRIAGE CONFIGURATION

H	Narrow, Mounting From The Top
—	Standard, Flanged

CARRIAGE LENGTH

L	Long Version
—	Standard Version

Number Of Carriages Per Assembly

PRELOAD CLASS

Guideway Length In mm

Part Number Identification
LINEAR

LINEAR GUIDANCE SYSTEMS

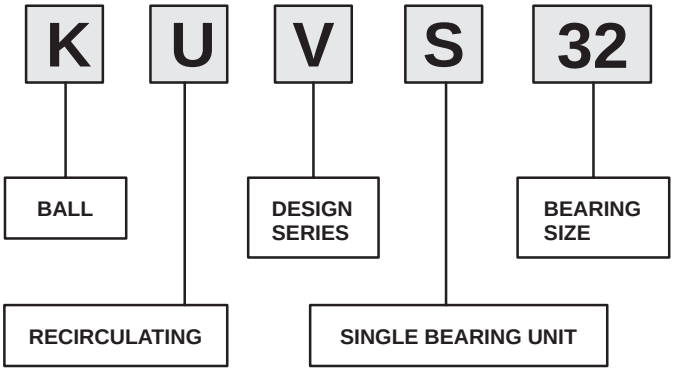

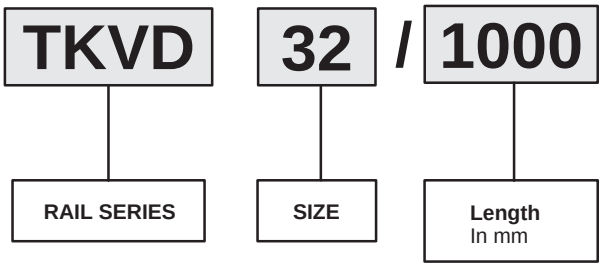

Part Number Identification
LINEAR

LF CARRIAGES & RAILS

LF K L 32 SF

SYSTEM TYPE

RAIL SIZE (CARRIAGE SIZE)

4 CONCENTRIC SCREWS
Not Adjustable

DESIGN CONFIGURATION

K	Wrap Around Style, With Front & Longitudinal Wipers
C	Hollow
—	Standard
D	Bogey Type (To Be Used In Curved Rails) Or Two Rollers / Cartridge
E	Single Roller Cartridge

CARRIAGE

K	Cartridge

LF S 32 NZZ / 1000

SYSTEM TYPE

RAIL WIDTH
In Millimeters

LENGTH
In Millimeters

DENOTES RAIL ONLY

RAIL CONFIGURATION

C	Hollow
F	Flat
N, NZZ	T-Bolt Mounting
M	Module
—	Standard
H	Half Rail
R	Curved Rail
ZZ	Wide Profile

Part Number Identification
LINEAR

MAX³ INCH & METRIC BEARINGS & HOUSING UNITS

K G X [ ] [ ] 16 PP

BALL

UNIT CONFIGURATION
- G Single Housed
- T Tandem Housed
- — Bearing Only

BEARING
- X Inch, Self-Aligning
- S Metric, Self-Aligning

HOUSING STYLE
- — Cast 2-Bolt Housing
- A Cast 4-Bolt Housing
- N Extruded Housing
- C Side Mount Housing

NOTE: *Extruded Housing Standard On Tandem Units*

DESIGN CONFIGURATION
- G Closed
- S Adjustable
- O Open

BORE
For X Series (Inch) 16ths Of An Inch
For S Series (Metric) In mm

SEALS
- P One Seal
- PP Two Seals
- — No Seals

METRIC HOUSING UNITS

K T N O S 40 PP AS

BALL

NUMBER OF BEARINGS IN HOUSING
- T 2
- G 1

BEARING USED
- H KH
- N KN
- B KB

HOUSING CONFIGURATION
- O Open
- C Side Mount

ADJUSTABLE CLEARANCE

Bearing bore
In mm

SEALS
- P One Seal
- PP 2 Seals
- — No Seals

RELUBRICATING FEATURE

Part Number Identification
LINEAR

INCH BEARINGS & HOUSING UNITS

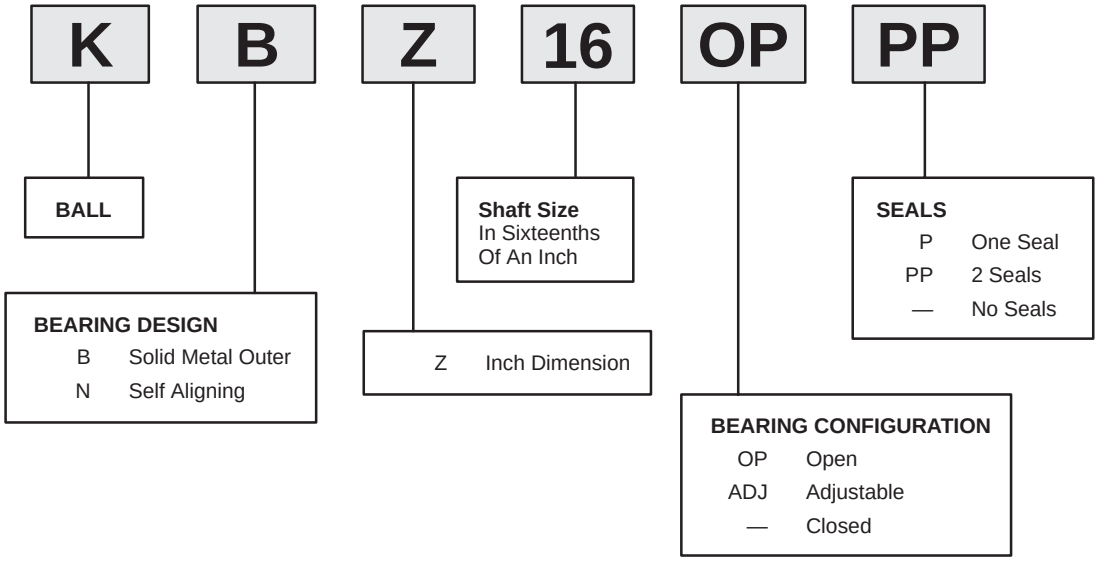

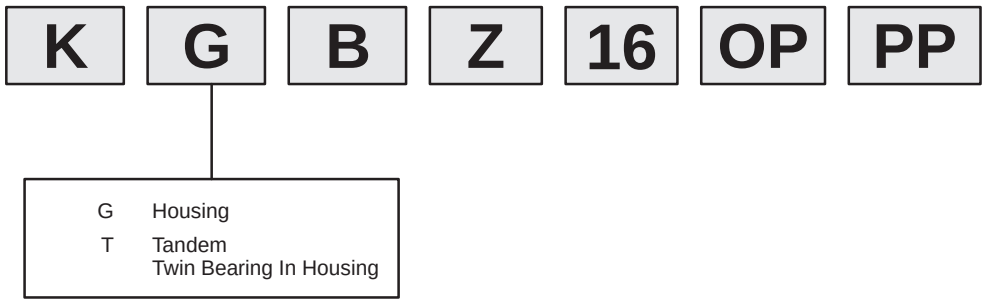

Part Number Identification
LINEAR

SHAFTS (METRIC & INCH)

W H 50 J5 [ ] x 1000

SHAFT

SHAFT SERIES
- M Metric
- Z Inch
- H Hollow, Metric

SHAFT OD (NOMINAL)
Millimeters

Inches

TOLERANCE CLASS
- — h6
- L Large
- S Small

MATERIAL
- — Induction Hardened Steel
- X46CR13 Stainless Steel

LENGTH
In mm Or Inches

SUPPORT RAILS (METRIC & INCH)

TS W W A 50 x 1000

SHAFT SUPPORT RAIL

ASSEMBLY WITH SHAFT
- W With Shaft
- — Rail Support Only

RAIL CONFIGURATION
- W Standard Height
- N Full Profile Body
- S Flange (Side) Mount
- U Low Profile (Bottom) Mount

CONFIGURATION
- A Narrow Body
- — Standard Body
- Z Inch Dimension

SHAFT DIAMETER
Millimeters

Sixteenths Of An Inch

OVERALL LENGTH
In mm For Metric Series,

Inch For Inch Series

Part Number Identification
LINEAR

METRIC BALL BUSHINGS

K B O 25 58 PP AS

- **K** — BALL
- **B** — BEARING DESIGN
  - B Solid Metal Outer, Ground
  - N Self Aligning
  - H Light Series, Drawn Shell Type
- **O** — BEARING CONFIGURATION
  - O Open
  - S Adjustable
  - — Closed
- **25** — Nominal Shaft In mm
- **58** — Overall Length In mm
- **PP** — SEALS
  - P One Seal
  - PP 2 Seals
  - — No Seals
- **AS** — With Lubrication Holes On Outer Ring

PLANETARY ROLLER SCREWS

RGT L B 8 2 100 / 150 R KL 10

- **RGT** — PLANETARY ROLLER SCREW
- **L** — SERIES
  - L Light
  - — Standard
- **B** — NUT CONFIGURATION
  - — Standard, Split Nut
  - B Solid Nut
- **8** — SCREW PITCH DIAMETER In Millimeters
- **2** — SCREW LEAD In Millimeters
- **100** — USABLE STROKE LENGTH In Millimeters
- **150** — OVERALL SCREW LENGTH In Millimeters
- **R** — RIGHT HAND THREAD
- **KL 10** — QUALITY CLASS

Part Number Identification
LINEAR

BALL NUTS

KGF N 20 05 - EE

SERIES
- KGF Flanged Ball Nut
- KGM Cylindrical Ball Nut

DESIGN
- D Per DIN 69051
- N Per INA Standard

NOMINAL PITCH DIA.
In Millimeters

LEAD
In Millimeters

SEALS
- Blank Without End Seals
- EE With End Seals

BALL SCREW SHAFT

KGS 20 05 - 050 - DW / 1250

SERIES
- KGS Ball Screw Shaft

NOMINAL PITCH DIA.
In Millimeters

LEAD
In Millimeters

LEAD ACCURACY
- 023 23 Micron/300 mm
- 050 50 Micron/300mm

END MACHINING OPTIONS
- Blank Form Z & Form Z
- DW Form D & Form W
- DN Form D & Form N
- DZ Form D & Form Z
- CS per customer specification

OVERALL SHAFT LENGTH
In Millimeters

BALL SCREW ASSEMBLY

KGT N 20 05 - 050 FM EE - DW / 1250

SERIES
- KGT Ball Screw Assembly

NUT DESIGN
- D Per DIN 69051
- N Per INA Standard

NOMINAL PITCH DIA.
In Millimeters

LEAD In Millimeters

LEAD ACCURACY
- 023 23 Micron/300 mm
- 050 50 Micron/300mm

NUT CONFIGURATION
- F Single Flanged Nut (1 KGF)
- M Single Cylindrical Nut (1 KGM)
- FM Double Preloaded Nut Unit (1 KGF 1 KGM)
- MM Double Preloaded Nut Unit (2 KGM)

NUT SEAL SUFFIX
- Blank Without End Seals
- EE With End Seals

END MACHINING OPTIONS
- Blank Form Z & Form Z
- DW Form D & Form W
- DN Form D & Form N
- DZ Form D & Form Z
- CS per customer specification

OVERALL SHAFT LENGTH
In Millimeters

Part Number Identification
LINEAR
COMPONENT / FAMILY

LFS, LFS..C, M, TS..W, LFL, LFCL, LFR..

COMPONENT	FAMILY					
	LFS	LFS..C,M	TS.W	LFL	LFCL	LFR..
Cap wiper	—	—	—	—	—	AB LFR
Lube & wiper unit	—	—	AB..W	AB/AB..LFL	—	AB..W
Side plates	—	—	—	ABAL	—	—
End stops	PAH	—	—	—	—	—
End plate	—	ANS LFS	—	—	—	—
End Cover	—	KA LFS..C,M,CH	—	—	KA LFS..CL	—
Cover strip	—	NAD	—	—	—	—
Measuring system	LMS	LMS	LMS	—	—	—

RUE, KUSE, KUVE, KUVS, KUE, KUME

COMPONENT	FAMILY					
	RUE	KUSE	KUVE	KUVS	KUE	KUME
Cap wiper	—	—	—	—	—	AB LFR
Closing plugs (plastic)	KA..TN	KA..TN	KA..TN	KA..TN	KA..TN	KA..TN
Closing plugs (brass)	KA..M	KA..M	—	—	KA..M	—
Mounting rail	MSX	MKSD	MKVD	—	MKD	MKMD
Hydraulic mounting device	MVH	—	—	—	—	—
Cover strip	ABDU	ADBSE	—	—	—	—
Sheet steel wiper	APLU	APLSE	APLVE	—	APLE	—
Spring loaded scraper	—	AB KOL KWSE	—	—	—	—
Braking element	RUKS..D	—	—	—	—	—
Lube adapter plate	BPLU	BLSE	—	—	BPLE	—
Grease lube adapter	—	SMAD KFE	SMAD KFE	—	SMAD KFE	—
Oil lube adapter	—	SMAD KOE	SMAD KOE	—	SMAD KOE	—
Lube metering unit	SMDE	—	—	—	—	—
Damping carriage	RUDS	—	—	—	—	—
Bellows	—	FBALG	—	—	FBALG	—

Linear Recirculating Roller Bearing And Guideway Assemblies

RUE..D, RUE..DL, RUE 65 L SERIES

For details on part numbers, descriptive suffixes and various technical references, please refer to front of this section.
For engineering or technical information contact your local sales representative or call Distributor Sales (800)523-6572 or Linear Sales (800)462-3399.

Linear roller bearing and guideway assembly Grease Lubrication PART NUMBER	Linear roller bearing and guideway assembly Oil Lubrication PART NUMBER	CARRIAGE [1] PART NUMBER	CARRIAGE MASS kg	GUIDEWAY PART NUMBER	GUIDEWAY MASS kg/m	GUIDEWAY Closing Plugs [2]	COVERING STRIP	L[3] mm	H mm	A mm	C[4] mm
RUE 35 D FE	RUE 35 D OE	RWU 35 D	2.0	TSX 35 D	5.9	KA 15	ADB 18	2960	48	100	120
RUE 35 D L FE	RUE 35 D L OE	RWU 35 D L	2.7	TSX 35 D	5.9	KA 15	ADB 18	2960	48	100	143
RUE 45 D FE	RUE 45 D OE	RWU 45 D	3.3	TSX 45 D	9.4	KA 20	ADB 23	2940	60	120	141
RUE 45 D L FE	RUE 45 D L OE	RWU 45 D L	4.4	TSX 45 D	9.4	KA 20	ADB 23	2940	60	120	175
RUE 55 D FE	RUE 55 D OE	RWU 55 D	5.6	TSX 55 D	13.3	KA 24	ADB 27	2520	70	140	170
RUE 55 D L FE	RUE 55 D L OE	RWU 55 D L	7.5	TSX 55 D	13.3	KA 24	ADB 27	2520	70	140	210
RUE 65 D L FE	RUE 65 D L OE	RWU 65 D L	14.4	TSX 65 D	21.5	KA 26	ADB 29	2520	90	170	252.8

RUE..D FE has lubrication nipple to DIN 71 412-A M8 ± 1.
RUE..D OE has connector with union nut similar to DIN 3 871-A.
RUE 25 available on request.
RUE..U: Linear roller bearing and guideway assembly with guideway for fixing from below, available on request.

1) Suffix FE for grease lubrication, suffix OE for oil lubrication.
2) Closing plugs KA..TN are included with the delivery.
3) Maximum length L of single-piece guideways, longer guideways are supplied as multi-piece guideways and are marked accordingly.
4) Minimum covered length for sealing the lubrication connections.
5) Dimensions C_5 and C_6 are dependent on the guideway length L.
6) Position of the lubrication hole in the adjacent construction.
7) Maximum diameter of the lubrication hole in the adjacent construction.
8) Maximum length of fixing screw: H_8 +3 mm.
9) If there is a possibility of settling, the fixing screws should be secured against rotation.

DIAMETERS AND TIGHTENING TORQUES FOR THREADS AND SCREWS [9]								
PART NUMBER	K_1 For screws to DIN 912-12.9		K_2 For screws to DIN 912-12.9		K_3 Through holes for screws to DIN 912-12.9		K_6 Through holes for screws to DIN 7 984-8.8	
		Nm max.		Nm max.		Nm max.		Nm max.
RUE 35 D	M8	41	M10	41	M8	41	M8	24
RUE 35 D L	M8	41	M10	41	M8	41	M8	24
RUE 45 D	M12	140	M12	83	M10	83	M10	48
RUE 45 D L	M12	140	M12	83	M10	83	M10	48
RUE 55 D	M14	220	M14	140	M12	140	M12	83
RUE 55 D L	M14	220	M14	140	M12	140	M12	83
RUE 65 L	M16	340	M16	220	M14	220	M14	130

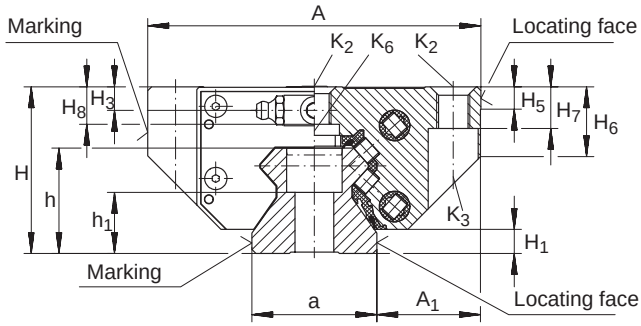

RUE..D

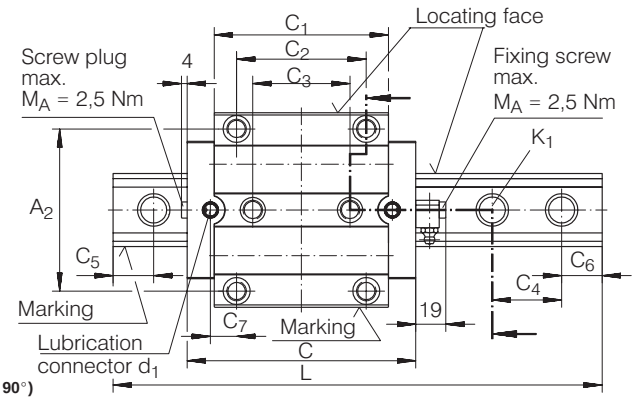

RUE..D
(View rotated through 90°)

A_1 mm	A_2 mm	a −0.005 −0.035 mm	C_1 mm	C_2 mm	C_3 mm	C_4 mm	C_5[5] min. mm	C_5[5] max. mm	C_6[5] min. mm	C_6[5] max. mm	C_7[6] mm	d_1[7] max. mm	H_1 mm	H_3 mm	H_5 mm	H_6 mm	H_7 mm	H_8[8] mm	h mm	h_1 mm
33	82	34	91.4	62	52	40	20	31	20	31	14.3	6	6.5	6.6	8	20	12	11.1	30	19
33	82	34	114.4	62	52	40	20	31	20	31	25.8	6	6.5	6.6	8	20	12	11.1	30	19
37.5	100	45	107.5	80	60	52.5	20	41	20	41	16.2	6	8.5	8.5	8	26	15	13.5	38	22
37.5	100	45	141.7	80	60	52.5	20	41	20	41	33.3	6	8.5	8.5	8	26	15	13.5	38	22
43.5	116	53	130.8	95	70	60	20	47	20	47	21.2	6	11	10	12	31	18	15.5	45	28
43.5	116	53	170.5	95	70	60	20	47	20	47	41	6	11	10	12	31	18	15.5	45	28
53.5	142	63	207.6	110	82	75	20	61	20	61	49	6	11	10.2	15	39.2	23	23	53.8	30.3

LOAD CARRYING CAPACITY TABLE					
PART NUMBER	BASIC LOAD RATINGS		MOMENT RATINGS		
	C kN	C_0 kN	M_{0x} Nm	M_{0y} Nm	M_{0z} Nm
RUE 35 D	59	134	990	2140	1925
RUE 35 D L	70	169	1255	3370	3035
RUE 45 D	92	205	1805	3870	3485
RUE 45 D L	115	275	2410	6770	6095
RUE 55 D	135	305	3130	7035	6335
RUE 55 D L	167	405	4120	12010	10815
RUE 65 D L	270	640	7600	24000	21500

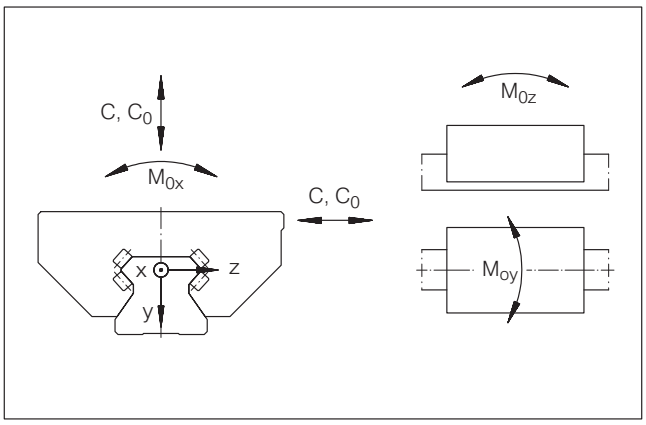

Load directions

Linear Recirculating Roller Bearing And Guideway Assemblies

RUE..D H, RUE..D HL SERIES

For details on part numbers, descriptive suffixes and various technical references, please refer to front of this section.
For engineering or technical information contact your local sales representative or call Distributor Sales (800)523-6572 or Linear Sales (800)462-3399.

Linear roller bearing and guideway assembly Grease Lubrication PART NUMBER	Linear roller bearing and guideway assembly Oil Lubrication PART NUMBER	CARRIAGE [1] PART NUMBER	CARRIAGE MASS kg	GUIDEWAY PART NUMBER	GUIDEWAY MASS kg/m	GUIDEWAY Closing Plugs [2]	COVERING STRIP	L[3] mm	H mm	A mm	C[4] mm
RUE 35 D H FE	RUE 35 D H OE	RWU 35 D H	1.7	TSX 35 D	5.9	KA 15	ADB 18	2960	55	70	120
RUE 35 D HL FE	RUE 35 D HL OE	RWU 35 D HL	2.4	TSX 35 D	5.9	KA 15	ADB 18	2960	55	70	143
RUE 45 D H FE	RUE 45 D H OE	RWU 45 D H	3.1	TSX 45 D	9.4	KA 20	ADB 23	2940	70	86	141
RUE 45 D HL FE	RUE 45 D HL OE	RWU 45 D HL	4.0	TSX 45 D	9.4	KA 20	ADB 23	2940	70	86	175
RUE 55 D H FE	RUE 55 D H OE	RWU 55 D H	5.3	TSX 55 D	13.3	KA 24	ADB 24	2520	80	100	170
RUE 55 D HL FE	RUE 55 D HL OE	RWU 55 D HL	6.7	TSX 55 D	13.3	KA 24	ADB 24	2520	80	100	210
RUE 65 D HL FE	RUE 65 D HL OE	RWU 65 D HL	13.6	TSX 65 D	21.5	KA 26	ADB 26	2 520	100	126	252.8

RUE..D H FE has lubrication nipple to DIN 71 412-A M8 ± 1.
RUE..D H OE has connector with union nut similar to DIN 3 871-A.
RUE..DU: Linear roller bearing and guideway assembly with guideway for fixing from below, available on request.

1) Suffix FE for grease lubrication, suffix OE for oil lubrication.
2) Closing plugs KA..TN are included with the delivery.
3) Maximum length L of single-piece guideways, longer guideways are supplied as multi-piece guideways and are marked accordingly.
4) Minimum covered length for sealing the lubrication connections.
5) Dimensions C_5 and C_6 are dependent on the guideway length L.
6) Position of the lubrication hole in the adjacent construction.
7) Maximum diameter of the lubrication hole in the adjacent construction.
8) If there is a possibility of settling, the fixing screws should be secured against rotation.

DIAMETERS AND TIGHTENING TORQUES FOR THREADS AND SCREWS [8]				
PART NUMBER	K_1 For screws to DIN 912-12.9		K_2 For screws to DIN 912-12.9	
		Nm max.		Nm max.
RUE 35 D H	M8	41	M8	41
RUE 35 D HL	M8	41	M8	41
RUE 45 D H	M12	140	M10	83
RUE 45 D HL	M12	140	M10	83
RUE 55 D H	M14	220	M12	140
RUE 55 D HL	M14	220	M12	140
RUE 65 D HL	M16	340	M14	220

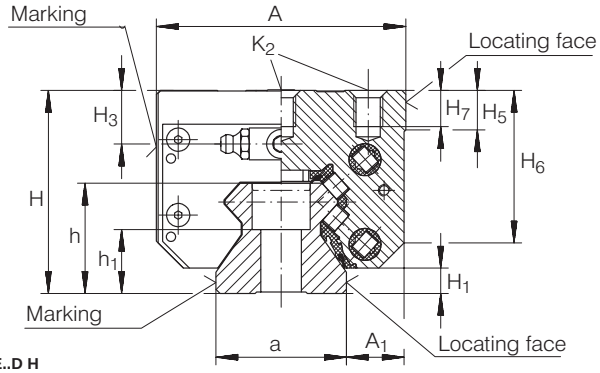

RUE..D H

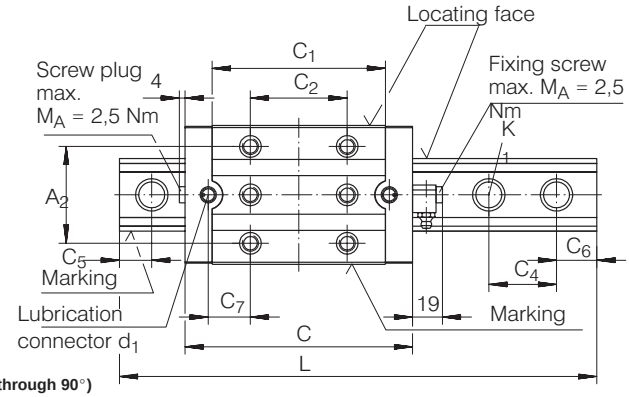

RUE..D H
(View rotated through 90°)

A_1 mm	A_2 mm	a −0.005 −0.035 mm	C_1 mm	C_2 mm	C_4 mm	C_5[5]) min. mm	C_5[5]) max. mm	C_6[5]) min. mm	C_6[5]) max. mm	C_7[6]) mm	d_1[7]) max. mm	H_1 mm	H_3 mm	H_5 mm	H_6 mm	H_7 mm	h mm	h_1 mm
18	50	34	91.4	50	40	20	31	20	31	20.3	6	6.5	13.6	10.8	41	10	30	19
18	50	34	114.4	72	40	20	31	20	31	20.8	6	6.5	13.6	10.8	41	10	30	19
20.5	60	45	107.5	60	52.5	20	41	20	41	26.2	6	8.5	18.5	13.7	52	12.5	38	22
20.5	60	45	141.7	80	52.5	20	41	20	41	33.3	6	8.5	18.5	13.7	52	12.5	38	22
23.5	75	53	130.8	75	60	20	47	20	47	31.2	6	11	20	16	61	15	45	28
23.5	75	53	170.5	95	60	20	47	20	47	41	6	11	20	16	61	15	45	28
31.5	76	63	207.6	120	75	20	61	20	61	43.8	6	11	20.2	15	71.2	20	53.8	30.3

LOAD CARRYING CAPACITY TABLE					
PART NUMBER	BASIC LOAD RATINGS		MOMENT RATINGS		
	C kN	C_0 kN	M_{0x} Nm	M_{0y} Nm	M_{0z} Nm
RUE 35 D H	59	134	990	2140	1925
RUE 35 D HL	70	169	1255	3370	3035
RUE 45 D H	92	205	1805	3870	3485
RUE 45 D HL	115	275	2410	6770	6095
RUE 55 D H	135	305	3130	7035	6335
RUE 55 D HL	167	405	4120	12010	10815
RUE 65 D HL	270	640	7600	24000	21500

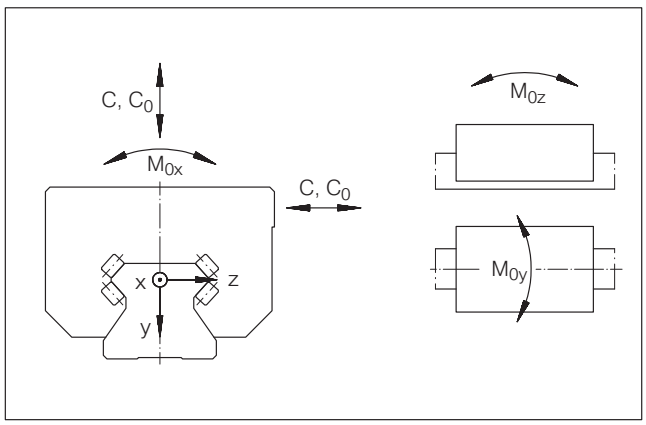

Load directions

Locking Element
RUKS..D SERIES

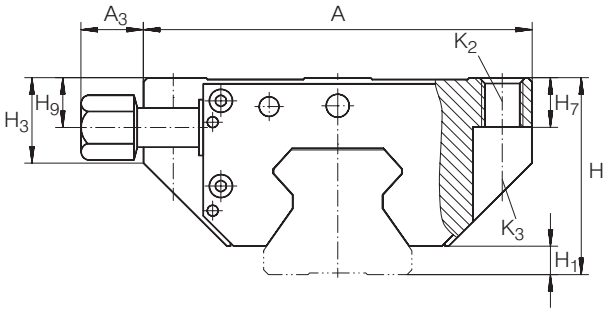

For details on part numbers, descriptive suffixes and various technical references, please refer to front of this section.
For engineering or technical information contact your local sales representative or call Distributor Sales (800)523-6572 or Linear Sales (800)462-3399.

PART NUMBER	MASS	A	H	C	A_2	A_3	C_1	C_2	C_3	C_7
	kg	mm	mm	mm	mm	mm	mm	mm	mm	mm
RUKS 35 D S	2.8	98	48	135	82	24.5	113	62	52	32
RUKS 35 D O	2.8	98	48	135	82	–	113	62	52	32
RUKS 35 DH S	2.8	68	55	135	50	34.5	113	50	–	38
RUKS 35 DH O	2.8	68	55	135	50	–	113	50	–	38
RUKS 45 D S	4.5	118	60	156	100	22	134	80	60	33.5
RUKS 45 D O	4.5	118	60	156	100	–	134	80	60	33.5
RUKS 45 DH S	4.5	84	70	156	60	39	134	60	–	43.5
RUKS 45 DH O	4.5	84	70	156	60	–	134	60	–	43.5
RUKS 55 D S	7.6	138	70	185	116	18.5	163	95	70	40.5
RUKS 55 D O	7.6	138	70	185	116	–	163	95	70	40.5
RUKS 55 DH S	7.6	98	80	185	75	38.5	163	75	–	50.5
RUKS 55 DH O	7.6	98	80	185	75	–	163	75	–	50.5

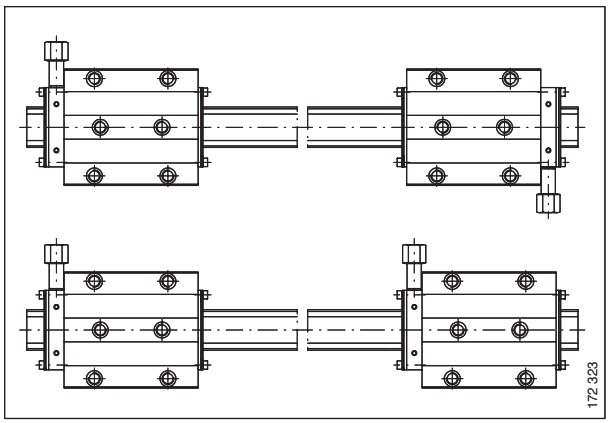

Position of oil connector, possible combinations

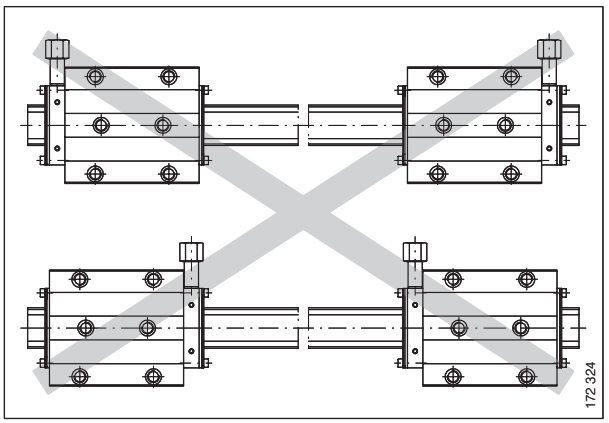

Position of oil connector, impermissible combinations

Locking Element
RUKS..D SERIES

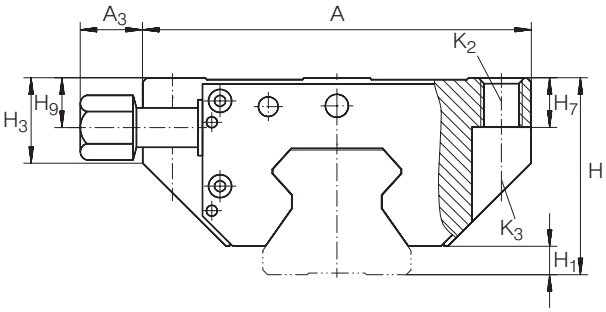

For details on part numbers, descriptive suffixes and various technical references, please refer to front of this section.
For engineering or technical information contact your local sales representative or call Distributor Sales (800)523-6572 or Linear Sales (800)462-3399.

d_1 max. mm	H_1 mm	H_3 mm	H_7 mm	H_9 mm	Suitable for guideway	K_2 For screws to DIN 912-12.9	K_2 max. Nm	K_3 Through hole for screws to DIN 912-12.9	K_3 max. Nm	PART NUMBER
6	6.5	21	12	13.2	TSX 35 D	M10	41	M8	41	RUKS 35 D S
6	6.5	21	12	–	TSX 35 D	M10	41	M8	41	RUKS 35 D O
6	6.5	42	10	20.2	TSX 35 D	M8	41	–	–	RUKS 35 DH S
6	6.5	42	10	–	TSX 35 D	M8	41	–	–	RUKS 35 DH O
6	8,5	27	15	15.6	TSX 45 D	M12	83	M10	83	RUKS 45 D S
6	8.5	27	15	–	TSX 45 D	M12	83	M10	83	RUKS 45 D O
6	8.5	53	10	25.6	TSX 45 D	M10	83	–	–	RUKS 45 DH S
6	8.5	53	10	–	TSX 45 D	M10	83	–	–	RUKS 45 DH O
6	11	32	18	18.8	TSX 55 D	M14	140	M12	140	RUKS 55 D S
6	11	32	18	–	TSX 55 D	M14	140	M12	140	RUKS 55 D O
6	11	62	15	28.8	TSX 55 D	M12	140	–	–	RUKS 55 DH S
6	11	62	15	–	TSX 55 D	M12	140	–	–	RUKS 55 DH O

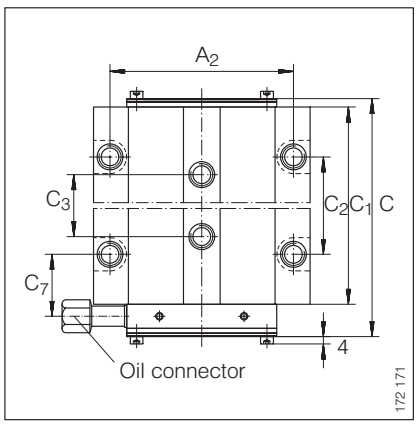

RUKS..D S

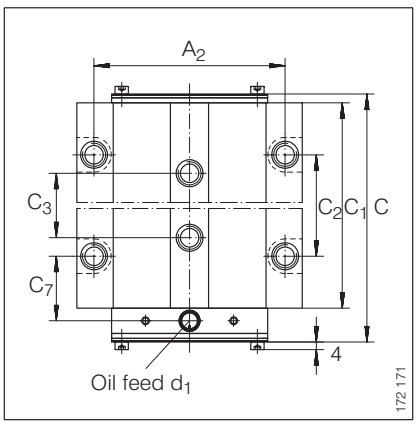

RUKS..D O

Sheet Steel Wiper
APLU SERIES

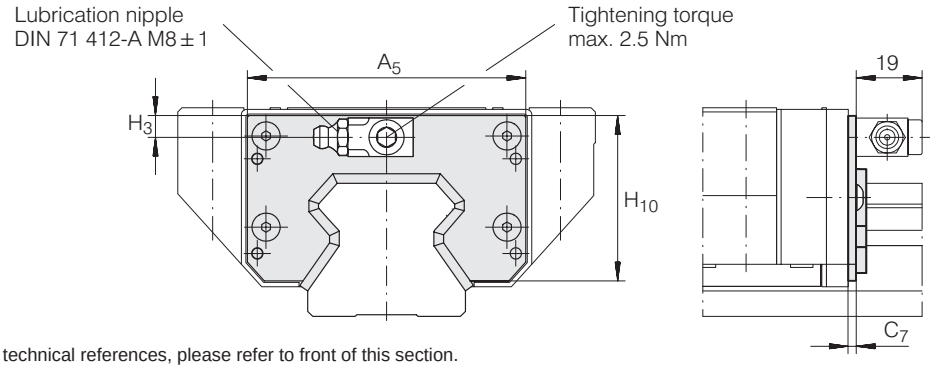

For details on part numbers, descriptive suffixes and various technical references, please refer to front of this section.
For engineering or technical information contact your local sales representative or call Distributor Sales (800)523-6572 or Linear Sales (800)462-3399.

PART NUMBER	MASS g	A_5 mm	H_3 mm	H_{10} mm	C_7 mm	Suitable for linear recirculating roller bearing and guideway assembly	
APLU 35 D	60	66.7	6.6	39.7	6.5	RUE 35 D	RUE 35 D L
			13.6			RUE 35 D H	RUE 35 D HL
APLU 45 D	75	81.5	8.5	49.3	6.5	RUE 45 D	RUE 45 D L
			18.5			RUE 45 D H	RUE 45 D HL
APLU 55 D	90	94.8	10	56.8	7.5	RUE 55 D	RUE 55 D L
			20			RUE 55 D H	RUE 55 D HL
APLU 65 D	105	120.3	10.2	76.2	6.3	–	RUE 65 D L
			20.2			–	RUE 65 D HL

Lubrication Adapter Plate
BPLU SERIES

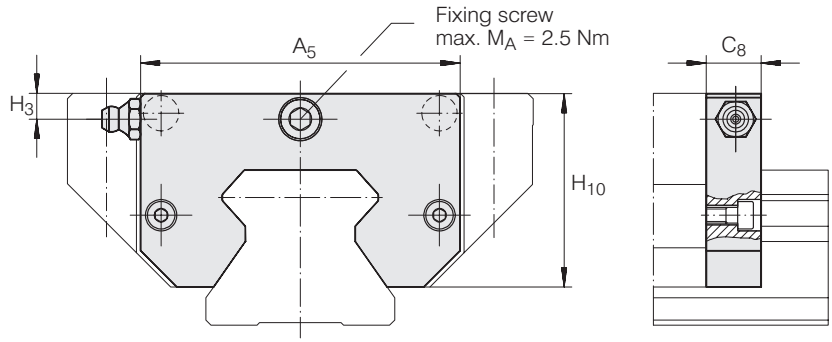

For details on part numbers, descriptive suffixes and various technical references, please refer to front of this section.
For engineering or technical information contact your local sales representative or call Distributor Sales (800)523-6572 or Linear Sales (800)462-3399.

PART NUMBER GREASE LUBRICATION	PART NUMBER OIL LUBRICATION	MASS g	A_5 mm	H_3 mm	H_{10} mm	C_8 mm	Suitable for linear recirculating roller bearing and guideway assembly	
BPLU 35 D FE	BPLU 35 D OE	95	66.7	7.5	39.7	14	RUE 35 D	RUE 35 D L
				11.5			RUE 35 D H	RUE 35 D HL
BPLU 45 D FE	BPLU 45 D OE	120	81.5	8	49.3	14	RUE 45 D	RUE 45 D L
				15			RUE 45 D H	RUE 45 D HL
BPLU 55 D FE	BPLU 55 D OE	150	94.8	10	56.8	14	RUE 55 D	RUE 55 D L
				20			RUE 55 D H	RUE 55 D HL
BPLU 65 D FE	BPLU 65 D OE	190	120.8	10.2	76.2	14	–	RUE 65 D L
				20.2			–	RUE 65 D HL

BPLU..D FE has lubrication nipple to DIN 71 412-A M8 ± 1.
BPLU..D OE has connector with union nut similar to DIN 3 871-A.
The lubrication nipple or connector can be replaced by a screw plug M8 ± 1.

In series RUE..D H and RUE..D HL, the lubrication nipple protrudes about 9 mm from the side of the carriage.

Minimal Quantity Lubricant Metering Unit
SMDE SERIES

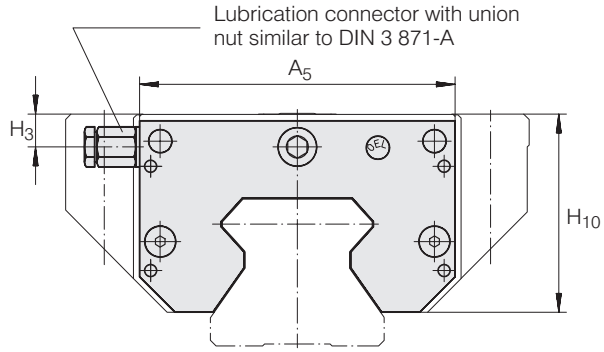

For details on part numbers, descriptive suffixes and various technical references, please refer to front of this section.
For engineering or technical information contact your local sales representative or call Distributor Sales (800)523-6572 or Linear Sales (800)462-3399.

PART NUMBER	MASS	A_5	H_3	H_{10}	C_7 with RUE..D RUE..D H	C_7 with RUE..L RUE..D HL	C_8	d_1 max	Suitable for linear recirculating roller bearing and guideway assembly	
	g	mm	mm	mm	mm	mm	mm	mm		
SMDE 35 D S	170	66.9	6.6	41.1	44	55.5	25	–	RUE 35 D	RUE 35 D L
SMDE 35 D O	170	66.9	–	41.1	37.2	48.7	25	6	RUE 35 D	RUE 35 D L
SMDE 35 D HS	200	66.9	13.6	48.1	50	50.5	25	–	RUE 35 D H	RUE 35 D HL
SMDE 35 D HO	200	66.9	–	48.1	43.2	43.7	25	6	RUE 35 D H	RUE 35 D HL
SMDE 45 D S	200	81.7	8.5	51.2	44.8	61.8	25	–	RUE 45 D	RUE 45 D L
SMDE 45 D O	200	81.7	–	51.2	38	55	25	6	RUE 45 D	RUE 45 D L
SMDE 45 D HS	260	81.7	18.5	61.2	54.8	61.8	25	–	RUE 45 D H	RUE 45 D HL
SMDE 45 D HO	260	81.7	–	61.2	48	55	25	6	RUE 45 D H	RUE 45 D HL
SMDE 55 D S	240	95	10	58.9	51.5	71.5	25	–	RUE 55 D	RUE 55 D L
SMDE 55 D O	240	95	–	58.9	44.7	64.7	25	6	RUE 55 D	RUE 55 D L
SMDE 55 D HS	340	95	20	68.9	61.5	71.5	25	–	RUE 55 D H	RUE 55 D HL
SMDE 55 D HO	340	95	–	68.9	54.7	64.7	25	6	RUE 55 D H	RUE 55 D HL
SMDE 65 D S	500	121	10.2	78.5	–	85	25	–	–	RUE 65 D L
SMDE 65 D O	500	121	10.2	78.5	–	78.2	25	6	–	RUE 65 D L
SMDE 65 D HS	500	121	20.2	88.5	–	80	25	–	–	RUE 65 D HL
SMDE 65 D HO	500	121	20.2	88.5	–	73.2	25	6	–	RUE 65 D HL

In series RUE..D H and RUE..D HL, the lubrication connector protrudes about 9 mm from the side of the carriage.

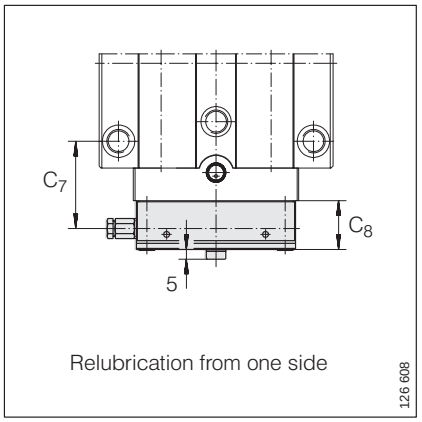

SMDE..D S

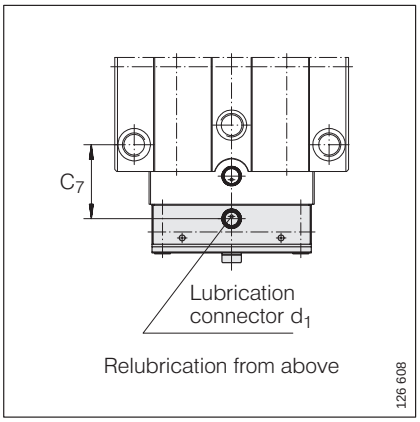

SMDE..D O

Damping Carriage
RUDS SERIES

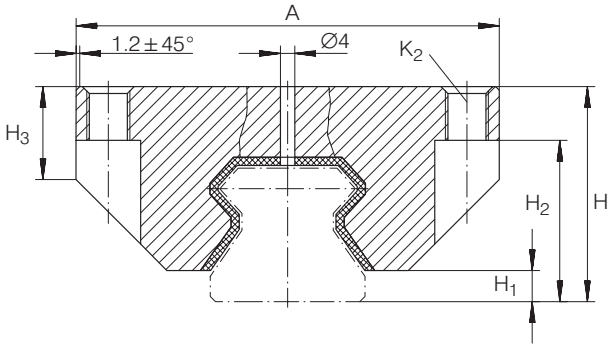

For details on part numbers, descriptive suffixes and various technical references, please refer to front of this section.
For engineering or technical information contact your local sales representative or call Distributor Sales (800)523-6572 or Linear Sales (800)462-3399.

PART NUMBER	MASS kg/100 mm	A mm	H mm	H_1 mm	H_2 mm	H_3 m	A_1 mm	C_1 mm	C_2 mm	C_3 mm	K_2 2)	3)	Suitable for linear recirculating roller bearing and guideway assembly	
RUDS 35 D	2.1	98	48	6.5	36	21	82	37.5	75	75	M10	M8	RUE 35 D	RUE 35 D L
RUDS 35 D H	1.8	68	55	6.5	–	42	50	37.5	75	75	M8	–	RUE 35 D H	RUE 35 D HL
RUDS 45 D	3.6	118	60	8.5	45	27	100	37.5	75	75	M12	M10	RUE 45 D	RUE 45 D L
RUDS 45 D H	3	84	70	8.5	–	53	60	37.5	75	75	M10	–	RUE 45 D H	RUE 45 D HL
RUDS 55 D	4.4	138	70	11	52	32	116	37.5	75	75	M14	M12	RUE 55 D	RUE 55 D L
RUDS 55 D H	3.7	98	80	11	–	62	75	37.5	75	75	M12	–	RUE 55 D H	RUE 55 D HL
RUDS 65 D	5	168	90	11	67	40.2	142	37.5	75	75	M16	M14	–	RUE 65 D L
RUDS 65 D H	4.6	124	100	11	–	72.2	76	37.5	75	75	M16	–	–	RUE 65 D HL

1) Standard lengths:
C = 150 mm, not RUDS 65
C = 225 mm, not RUDS 65
C = 300 mm,

2) For screws to DIN 912-12.9,
thread length for RUDS..D H: at least 1.25 · K_2

3) K_2 as through hole for screws to DIN 912-12.9,

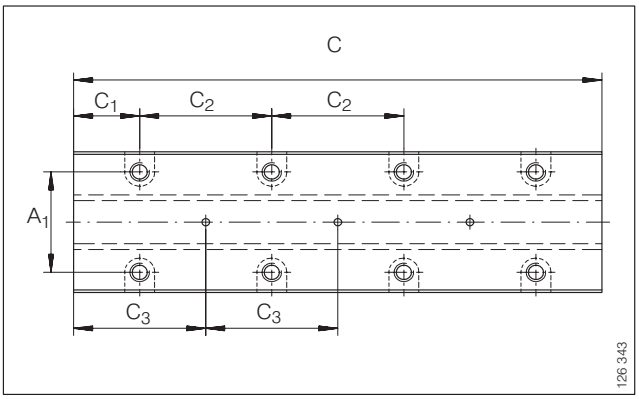

RUDS (View rotated through 90°)

Linear Recirculating Ball Bearing And Guideway Assemblies
KUSE SERIES

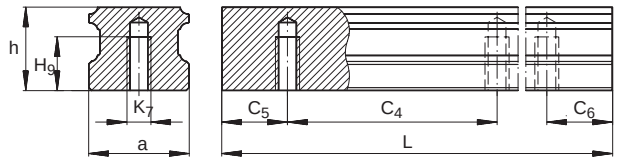

Guideway TKSD..U for mounting from below, suffix U (example: KUSE..U)

For details on part numbers, descriptive suffixes and various technical references, please refer to front of this section.
For engineering or technical information contact your local sales representative or call Distributor Sales (800)523-6572 or Linear Sales (800)462-3399.

DIMENSION TABLE · Dimensions in mm														
UNIT	CARRIAGE		GUIDEWAY				DIMENSIONS				MOUNTING DIMENSIONS			
PART NUMBER	PART NUMBER	MASS kg	PART NUMBER	MASS kg/m	CLOSING PLUGS	COVERING STRIP	L[1])	H	A	C[2])	A_1	A_2	a −0.005 −0.03	a_3
KUSE 20	KWSE 20	0.43	TKSD 20	2.3	KA 10 TN	ADB 13	1,980	30	63	71	21.5	53	20	5
KUSE 25	KWSE 25	0.6	TKSD 25	3.1	KA 11 TN	ADB 13	1,980	36	70	81.5	23.5	57	23	6.5
KUSE 30	KWSE 30	1.2	TKSD 30	4.4	KA 15 TN	ADB 18	2,000	42	90	91.2	31	72	28	9
KUSE 35	KWSE 35	1.5	TKSD 35	6.5	KA 15 TN	ADB 18	2,960	48	100	106.7	33	82	34	9
KUSE 45	KWSE 45	3.15	TKSD 45	11.3	KA 20 TN	ADB 23	2,940	60	120	136.5	37.5	100	45	10
KUSE 55	KWSE 55	4.9	TKSD 55	15.7	KA 24 TN	ADB 23	2,520	70	140	158	43.5	116	53	12

1) Maximum length L of single piece guideway;
longer guideways are supplied as multi-piece guideways and are marked accordingly.
2) Minimum covered length for sealing the lubrication connections.
3) Dimensions C_5 and C_6 are dependent on the guideway length L.
4) Position of the lubrication hole in the adjacent construction.
5) Maximum diameter of the lubrication hole in the adjacent construction.
6) When mounting from above: maximum length of fixing screw for the central fixing holes H_8 +3 mm.
7) If there is a possibility of settling, the fixing screws should be secured against rotation.

DIAMETERS AND TIGHTENING TORQUES FOR THREADS AND SCREWS[7])										
PART NUMBER	K_1 for screws to DIN 912-12.9		K_2 for screws to DIN 912-12.9		K_3 Through holes for screws to DIN 912-12.9		K_6 Through holes for screws to DIN 7 984-8.8		K_7 for screws to DIN 912-12.9	
		Nm max.		Nm max.		Nm max.		Nm max.		Nm max.
KUSE 20	M5	10	M6	10	M5	10	M5	5.8	M6	17
KUSE 25	M6	17	M8	24	M6	17	M6	10	M6	17
KUSE 30	M8	41	M10	41	M8	41	M8	24	M8	41
KUSE 35	M8	41	M10	41	M8	41	M8	24	M8	41
KUSE 45	M12	140	M12	83	M10	83	M10	48	M12	140
KUSE 55	M14	220	M14	140	M12	140	M12	83	M14	220

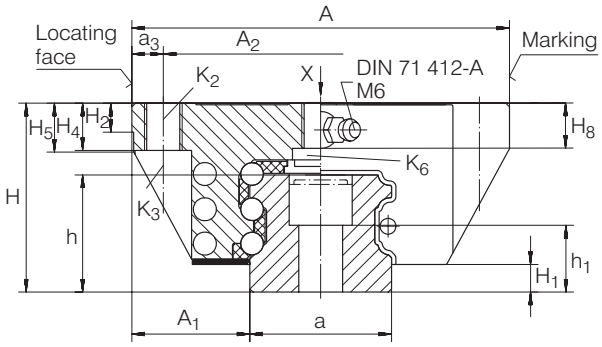

KUSE

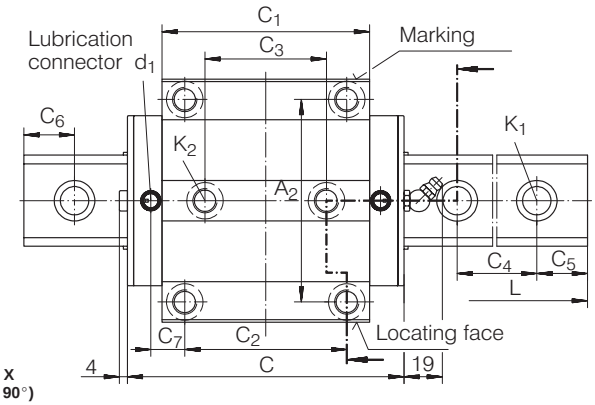

KUSE, plan view X (rotated through 90°)

C_1	C_2	C_3	C_4	C_5[3]		C_6[3]		C_7[4]	d_1[5]	H_1	H_2	H_4	H_5	H_8[6]	H_9	h	h_1
				min.	max.	min.	max.		max.								
52	40	35	60	20	53	20	53	9.8	3	4.6	5	10	10.4	7.2	10	18	10.3
60.5	45	40	60	20	53	20	53	12.8	3	5.2	5	10	9.5	9.5	12	21.7	12.7
67.2	52	44	80	20	71	20	71	12.6	4.5	5.5	6	12	11.9	10	15	25	14
77.7	62	52	80	20	71	20	71	11.7	4.5	6.6	6.5	13	13	12	15	29.7	18.7
102.5	80	60	105	20	94	20	94	15.8	6	8.6	9	15	15.5	15	20	37.2	21.2
117.7	95	70	120	20	107	20	107	19.2	6	10.8	12	18	18.6	17	22	44	27

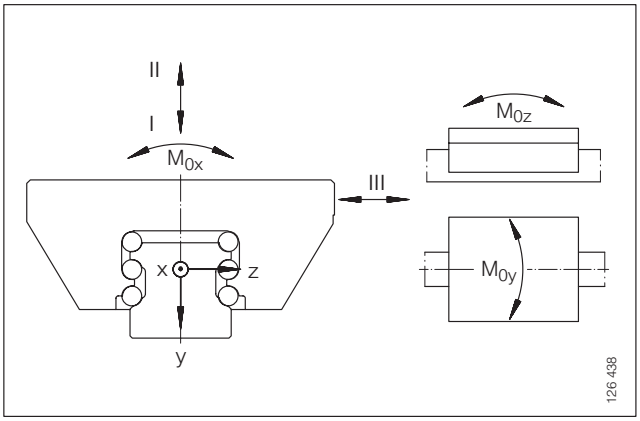

Load directions

LOAD CARRYING CAPACITY TABLE									
PART NUMBER	BASIC LOAD RATINGS						MOMENT RATINGS		
	LOAD DIRECTION I: COMPRESSIVE LOAD		LOAD DIRECTION II: TENSILE LOAD		LOAD DIRECTION III: LATERAL LOAD				
	C kN	C_0 kN	C kN	C_0 kN	C kN	C_0 kN	M_{0x} Nm	M_{0y} Nm	M_{0z} Nm
KUSE 20	22	52	17.5	33.5	16.3	36	358	333	303
KUSE 25	28	67	22.9	43	21.3	46	535	486	442
KUSE 30	40	80	33	60	30.5	64	896	762	694
KUSE 35	55	102	45	79	42	85	1,454	1,173	1,069
KUSE 45	80	174	65	117	59	126	2,794	2,237	2,037
KUSE 55	102	230	81	147	75	157	4,114	3,141	2,861

Linear Recirculating Ball Bearing And Guideway Assemblies
KUSE..L SERIES

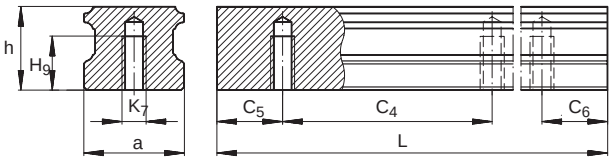

Guideway TKSD..U for mounting from below, suffix U (example: KUSE..U)

For details on part numbers, descriptive suffixes and various technical references, please refer to front of this section.
For engineering or technical information contact your local sales representative or call Distributor Sales (800)523-6572 or Linear Sales (800)462-3399.

DIMENSION TABLE · Dimensions in mm

UNIT	Carriage		GUIDEWAY				DIMENSIONS				MOUNTING DIMENSIONS			
PART NUMBER	PART NUMBER	MASS kg	PART NUMBER	MASS kg/m	CLOSING PLUGS	COVERING STRIP	L[1])	H	A	C[2])	A_1	A_2	a −0.005 −0.03	a_3
KUSE 20 L	KWSE 20 L	0.6	TKSD 20	2.3	KA 10 TN	ADB 13	1,980	30	63	90.8	21.5	53	20	5
KUSE 25 L	KWSE 25 L	0.82	TKSD 25	3.1	KA 11 TN	ADB 13	1,980	36	70	104	23.5	57	23	6.5
KUSE 30 L	KWSE 30 L	1.6	TKSD 30	4.4	KA 15 TN	ADB 18	2,000	42	90	118.7	31	72	28	9
KUSE 35 L	KWSE 35 L	2.1	TKSD 35	6.5	KA 15 TN	ADB 18	2,960	48	100	138.4	33	82	34	9
KUSE 45 L	KWSE 45 L	4.2	TKSD 45	11.3	KA 20 TN	ADB 23	2,940	60	120	172.2	37.5	100	45	10
KUSE 55 L	KWSE 55 L	6.6	TKSD 55	15.7	KA 24 TN	ADB 23	2,520	70	140	198	43.5	116	53	12

1) Maximum length L of single piece guideway;
longer guideways are supplied as multi-piece guideways and are marked accordingly.
2) Minimum covered length for sealing the lubrication connections.
3) Dimensions C_5 and C_6 are dependent on the guideway length L.
4) Position of the lubrication hole in the adjacent construction.
5) Maximum diameter of the lubrication hole in the adjacent construction.
6) When mounting from above: maximum length of fixing screw for the central fixing holes H_8 +3 mm.
7) If there is a possibility of settling, the fixing screws should be secured against rotation.

DIAMETERS AND TIGHTENING TORQUES FOR THREADS AND SCREWS[7])

PART NUMBER	K_1 for screws to DIN 912-12.9		K_2 for screws to DIN 912–12.9		K_3 Through holes for screws to DIN 912-12.9		K_6 Through holes for screws to DIN 7 984-8.8		K_7 for screws to DIN 912-12.9	
		Nm max.		Nm max.		Nm max.		Nm max.		Nm max.
KUSE 20 L	M5	10	M6	10	M5	10	M5	5.8	M6	17
KUSE 25 L	M6	17	M8	24	M6	17	M6	10	M6	17
KUSE 30 L	M8	41	M10	41	M8	41	M8	24	M8	41
KUSE 35 L	M8	41	M10	41	M8	41	M8	24	M8	41
KUSE 45 L	M12	140	M12	83	M10	83	M10	48	M12	140
KUSE 55 L	M14	220	M14	140	M12	140	M12	83	M14	220

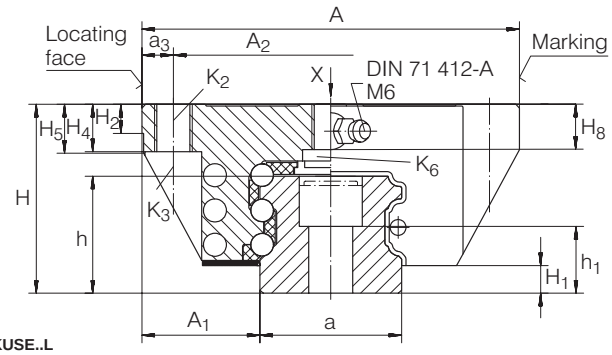

KUSE..L

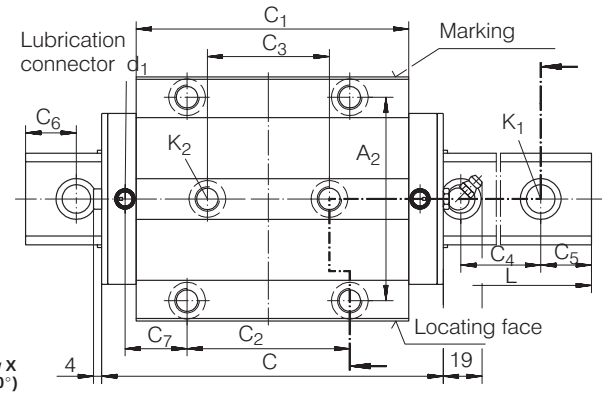

KUSE..L, plan view X (rotated through 90°)

C_1	C_2	C_3	C_4	C_5 3)		C_6 3}		C_7 4)	d_1 5)	H_1	H_2	H_4	H_5	H_8 6)	H_9	h	h_1
				min.	max.	min	max.		max.								
71.8	40	35	60	20	53	20	53	19.7	3	4.6	5	10	10.4	7.2	10	18	10.3
83	45	40	60	20	53	20	53	24	3	5.2	5	10	9.5	9.5	12	21.7	12.7
94.7	52	44	80	20	71	20	71	26.3	4.5	5.5	6	12	11.9	10	15	25	14
109.4	62	52	80	20	71	20	71	27.5	4.5	6.6	6.5	13	13	12	15	29.7	18.7
138.2	80	60	105	20	94	20	94	33.6	6	8.6	9	15	15.5	15	20	37.2	21.2
157.7	95	70	120	20	107	20	107	39.2	6	10.8	12	18	18.6	17	22	44	27

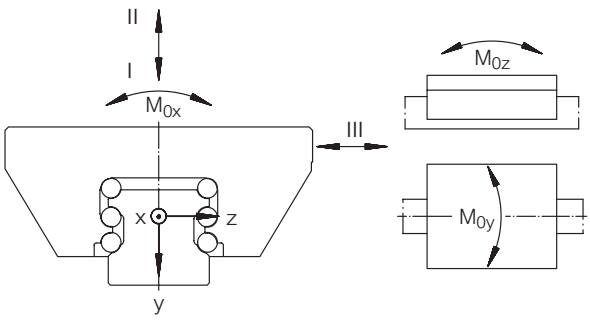

Load directions

LOAD CARRYING CAPACITY TABLE									
PART NUMBER	BASIC LOAD RATINGS						MOMENT RATINGS		
	LOAD DIRECTION I: COMPRESSIVE LOAD		LOAD DIRECTION II: TENSILE LOAD		LOAD DIRECTION III: LATERAL LOAD				
	C kN	C_0 kN	C kN	C_0 kN	C kN	C_0 kN	M_{0x} Nm	M_{0y} Nm	M_{0z} Nm
KUSE 20 L	28	72	22.2	46.5	18.9	50	494	619	564.6
KUSE 25 L	35.3	93.7	28.9	59.8	24.7	64	736	903	823
KUSE 30 L	51	113	42.4	84.3	36.5	90	1,265	1,478	1,346
KUSE 35 L	70	145	57.3	112.4	49.5	120	2,054	2,275	2,072
KUSE 45 L	98	236	79.3	159	69	170	3,792	4,011	3,654
KUSE 55 L	125.4	312	100.6	199.4	87	214	5,584	5,633	5,132

Linear Recirculating Ball Bearing And Guideway Assemblies
KUSE..H SERIES

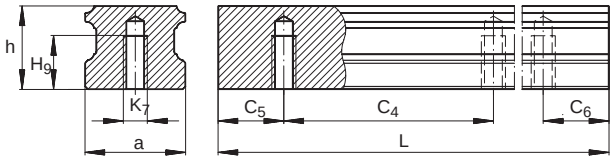

Guideway TKSD..U for mounting from below, suffix U (example: KUSE..U)

For details on part numbers, descriptive suffixes and various technical references, please refer to front of this section.
For engineering or technical information contact your local sales representative or call Distributor Sales (800)523-6572 or Linear Sales (800)462-3399.

DIMENSION TABLE · Dimensions in mm														
UNIT	CARRIAGE		GUIDEWAY				DIMENSIONS				MOUNTING DIMENSIONS			
PART NUMBER	PART NUMBER	MASS kg	PART NUMBER	Mass kg/m	CLOSING PLUGS	COVERING STRIP	L[1]	H	A	C[2]	A_1	A_2	a −0.005 −0.03	a_3
KUSE 20 H	KWSE 20 H	0.32	TKSD 20	2.3	KA 10 TN	ADB 13	1,980	30	44	71	12	32	20	6
KUSE 25 H	KWSE 25 H	0.5	TKSD 25	3.1	KA 11 TN	ADB 13	1,980	40	48	81.5	12.5	35	23	6.5
KUSE 30 H	KWSE 30 H	0.9	TKSD 30	4.4	KA 15 TN	ADB 18	2,000	45	60	91.2	16	40	28	10
KUSE 35 H	KWSE 35 H	1.3	TKSD 35	6.5	KA 15 TN	ADB 18	2,960	55	70	106.7	18	50	34	10
KUSE 45 H	KWSE 45 H	2.75	TKSD 45	11.3	KA 20 TN	ADB 23	2,940	70	86	136.5	20.5	60	45	13
KUSE 55 H	KWSE 55 H	4.5	TKSD 55	15.7	KA 24 TN	ADB 23	2,520	80	100	158	23.5	75	53	12.5

1) Maximum length L of single piece guideway;
longer guideways are supplied as multi-piece guideways and are marked accordingly.
2) Minimum covered length for sealing the lubrication connections.
3) Dimensions C_5 and C_6 are dependent on the guideway length L.
4) Position of the lubrication hole in the adjacent construction.
5) Maximum diameter of the lubrication hole in the adjacent construction.
6) If there is a possibility of settling, the fixing screws should be secured against rotation.

DIAMETERS AND TIGHTENING TORQUES FOR THREADS AND SCREWS[6]						
PART NUMBER	K_1 for screws to DIN 912-12.9		K_2 for screws to DIN 912-12.9		K_7 for screws to DIN 912-12.9	
		Nm max.		Nm max.		Nm max.
KUSE 20 H	M5	10	M5	10	M6	17
KUSE 25 H	M6	17	M6	17	M6	17
KUSE 30 H	M8	41	M8	41	M8	41
KUSE 35 H	M8	41	M8	41	M8	41
KUSE 45 H	M12	140	M10	83	M12	140
KUSE 55 H	M14	220	M12	140	M14	220

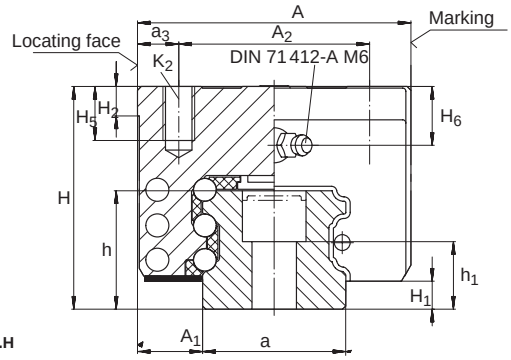

KUSE..H

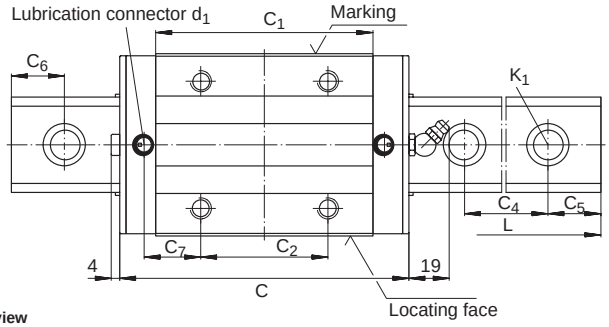

KUSE..H, plan view
(rotated through 90°)

C_1	C_2	C_4	C_5 3)		C_6 3)		C_7 4)	d_1 5)	H_1	H_2	H_5	H_6	H_9	h	h_1
			min.	max.	min.	max.		max.							
52	36	60	20	53	20	53	11.8	3	4.6	5	6.25	5.8	10	18	10.3
60.5	35	60	20	53	20	53	17.8	3	5.2	5	10	10	12	21.7	12.7
67.2	40	80	20	71	20	71	18.6	4.5	5.5	6	11	9.5	15	25	14
77.7	50	80	20	71	20	71	17.7	4.5	6.6	6.5	14	14.2	15	29.7	18.7
102.5	60	105	20	94	20	94	25.8	6	8.6	9	17	18.5	20	37.2	21.2
117.7	75	120	20	107	20	107	29.2	6	10.8	12	19	20	22	44	27

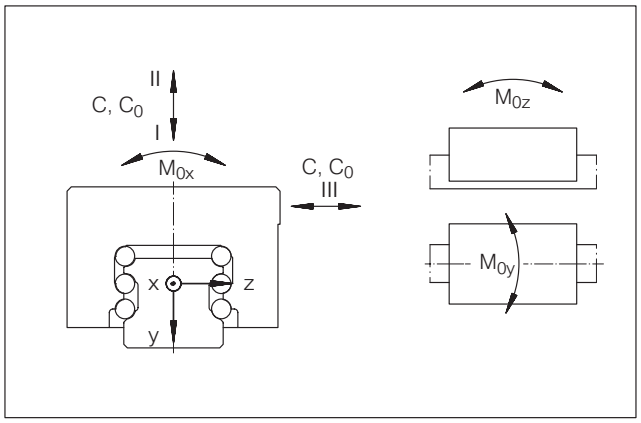

Load directions

LOAD CARRYING CAPACITY TABLE									
PART NUMBER	BASIC LOAD RATINGS						MOMENT RATINGS		
	LOAD DIRECTION I: COMPRESSIVE LOAD		LOAD DIRECTION II: TENSILE LOAD		LOAD DIRECTION III: LATERAL LOAD				
	C kN	C_0 kN	C kN	C_0 kN	C kN	C_0 kN	M_{0x} Nm	M_{0y} Nm	M_{0z} Nm
KUSE 20 H	22	52	17.5	33.5	16.3	36	358	333	303
KUSE 25 H	28	67	22.9	43	21.3	46	535	486	442
KUSE 30 H	40	80	33	60	30.5	64	896	762	694
KUSE 35 H	55	102	45	79	42	85	1,454	1,173	1,069
KUSE 45 H	80	174	65	117	59	126	2,794	2,237	2,037
KUSE 55 H	102	230	81	147	75	157	4,114	3,141	2,861

Linear Recirculating Ball Bearing And Guideway Assemblies
KUSE..HL SERIES

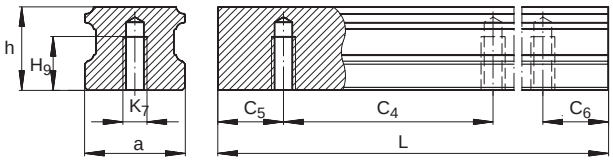

Guideway TKSD..U for mounting from below, suffix U (example: KUSE..U)

For details on part numbers, descriptive suffixes and various technical references, please refer to front of this section.
For engineering or technical information contact your local sales representative or call Distributor Sales (800)523-6572 or Linear Sales (800)462-3399.

DIMENSION TABLE · Dimensions in mm

UNIT	CARRIAGE		GUIDEWAY				DIMENSIONS				MOUNTING DIMENSIONS			
PART NUMBER	PART NUMBER	MASS kg	PART NUMBER	MASS kg/m	CLOSING PLUGS	COVERING STRIP	L[1])	H	A	C[2])	A_1	A_2	a −0.05 −0.03	a_3
KUSE 20 HL	KWSE 20 HL	0.44	TKSD 20	2.3	KA 10 TN	ADB 13	1,980	30	44	90.8	12	32	20	6
KUSE 25 HL	KWSE 25 HL	0.7	TKSD 25	3.15	KA 11 TN	ADB 13	1,980	40	48	104	12.5	35	23	6.5
KUSE 30 HL	KWSE 30 HL	1.2	TKSD 30	4.4	KA 15 TN	ADB 18	2,000	45	60	118.7	16	40	28	10
KUSE 35 HL	KWSE 35 HL	1.8	TKSD 35	6.5	KA 15 TN	ADB 18	2,960	55	70	138.4	18	50	34	10
KUSE 45 HL	KWSE 45 HL	3.7	TKSD 45	11.3	KA 20 TN	ADB 23	2,940	70	86	172.2	20.5	60	45	13
KUSE 55 HL	KWSE 55 HL	5.9	TKSD 55	15.7	KA 24 TN	ADB 23	2,520	80	100	198	23.5	75	53	12.5

1) Maximum length L of single piece guideway;
longer guideways are supplied as multi-piece guideways and are marked accordingly.
2) Minimum covered length for sealing the lubrication connections.
3) Dimensions C_5 and C_6 are dependent on the guideway length L.
4) Position of the lubrication hole in the adjacent construction.
5) Maximum diameter of the lubrication hole in the adjacent construction.
6) If there is a possibility of settling, the fixing screws should be secured against rotation.

DIAMETERS AND TIGHTENING TORQUES FOR THREADS AND SCREWS[6])

PART NUMBER	K_1 for screws to DIN 912-12.9		K_2 for screws to DIN 912-12.9		K_7 for screws to DIN 912-12.9	
		Nm max.		Nm max.		Nm max.
KUSE 20 HL	M5	10	M5	10	M6	17
KUSE 25 HL	M6	17	M6	17	M6	17
KUSE 30 HL	M8	41	M8	41	M8	41
KUSE 35 HL	M8	41	M8	41	M8	41
KUSE 45 HL	M12	140	M10	83	M12	140
KUSE 55 HL	M14	220	M12	140	M14	220

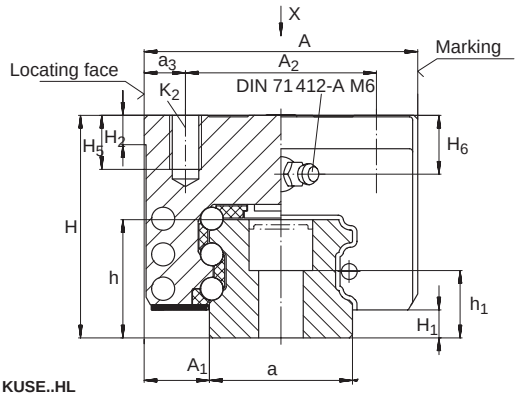

KUSE..HL

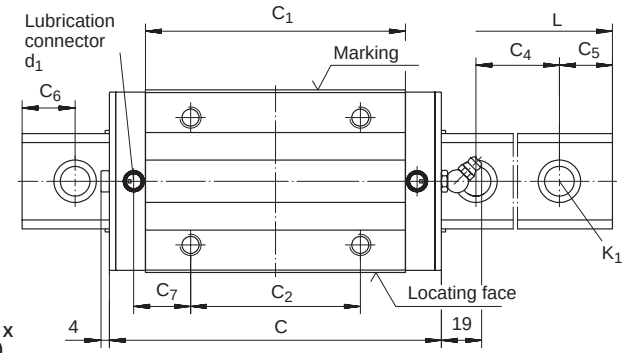

KUSE..HL, plan view X (rotated through 90°)

C_1	C_2	C_4	C_5 3)		C_6 3)		C_7 4)	d_1 5)	H_1	H_2	H_5	H_6	H_9	h	h_1
			min	max.	min.	max.		max.							
71.8	50	60	20	53	20	53	14.7	3	4.6	5	6.25	5.8	10	18	10.3
83	50	60	20	53	20	53	21.5	3	5.2	5	10	10	12	21.7	12.7
94.7	60	80	20	71	20	71	22.3	4.5	5.5	6	11	9.5	15	25	14
109.4	72	80	20	71	20	71	22.5	4.5	6.6	6.5	14	14.2	15	29.7	18.7
138.2	80	105	20	94	20	94	33.6	6	8.6	9	17	18.5	20	37.2	21.2
157.7	95	120	20	107	20	107	39.2	6	10.8	12	19	20	22	44	27

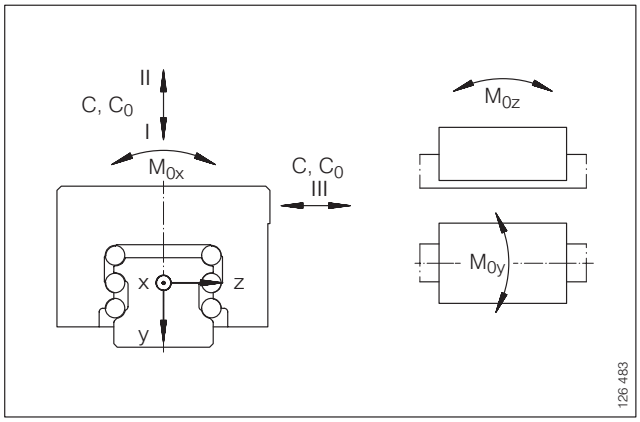

Load directions

LOAD CARRYING CAPACITY TABLE									
PART NUMBER	BASIC LOAD RATINGS						MOMENT RATINGS		
	LOAD DIRECTION I: COMPRESSIVE LOAD		LOAD DIRECTION II: TENSILE LOAD		LOAD DIRECTION III: LATERAL LOAD				
	C kN	C_0 kN	C kN	C_0 kN	C kN	C_0 kN	M_{0x} Nm	M_{0y} Nm	M_{0z} Nm
KUSE 20 HL	28	72	22.2	46.5	18.9	50	494	619	564
KUSE 25 HL	35.3	93.7	28.9	59.8	24.7	64	736	903	823
KUSE 30 HL	51	113	42.4	84.3	36.5	90	1,265	1,478	1,346
KUSE 35 HL	70	145	57.3	112.4	49.5	120	2,054	2,275	2,072
KUSE 45 HL	98	236	79.3	159	69	170	3,792	4,011	3,654
KUSE 55 HL	125.4	312	100.6	199.4	87	214	5,584	5,633	5,132

Sheet Steel Wiper
APLSE SERIES

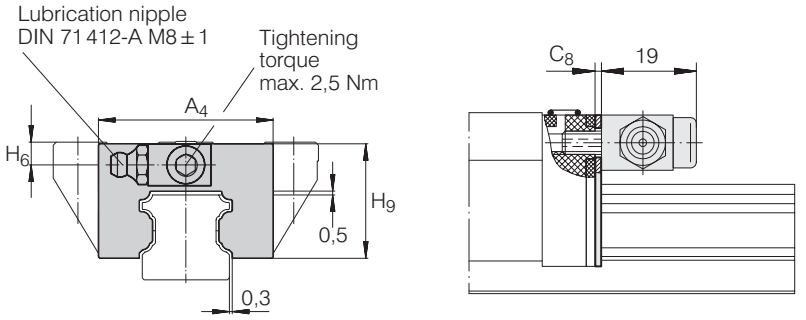

For details on part numbers, descriptive suffixes and various technical references, please refer to front of this section.
For engineering or technical information contact your local sales representative or call Distributor Sales (800)523-6572 or Linear Sales (800)462-3399.

DIMENSION TABLE · Dimensions in mm							
PART NUMBER	MASS	DIMENSIONS				SUITABLE FOR LINEAR RECIRCULATING BALL BEARING AND GUIDEWAY ASSEMBLY	
	g	A_4	H_9	C_8	H_6		
APLSE 20	26	42.8	24.9	0.8	5.8	KUSE 20	KUSE 20 L
					5.8	KUSE 20 H	KUSE 20 HL
APLSE 25	27	46	30.1	0.8	6	KUSE 25	KUSE 25 L
					10	KUSE 25 H	KUSE 25 HL
APLSE 30	31	58	35.8	0.8	6.5	KUSE 30	KUSE 30 L
					9.5	KUSE 30 H	KUSE 30 HL
APLSe 35	34	68	40.7	0.8	7.2	KUSE 35	KUSE 35 L
					14.2	KUSE 35 H	KUSE 35 HL
APLSE 45	40	84	50.7	0.8	8.5	KUSE 45	KUSE 45 L
					8.5	KUSE 45 H	KUSE 45 HL
APLSE 55	46	96.4	58.5	0.8	10	KUSE 55	KUSE 55 L
					20	KUSE 55 H	KUSE 55 HL

When fitting the wiper, it must be ensured that the gap between the guideway and the sheet steel wiper is of the correct size (see figure above).

Collector Wiper
AB KOL KWSE SERIES

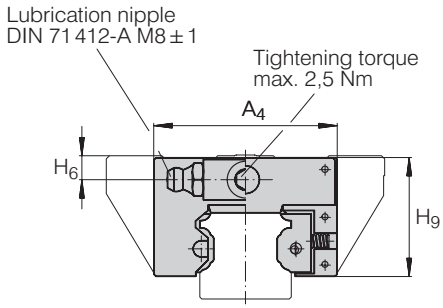

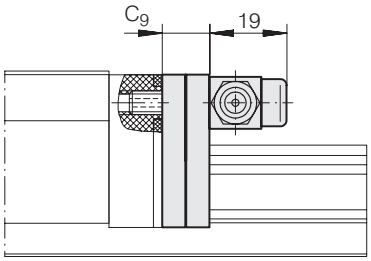

For details on part numbers, descriptive suffixes and various technical references, please refer to front of this section.
For engineering or technical information contact your local sales representative or call Distributor Sales (800)523-6572 or Linear Sales (800)462-3399.

DIMENSION TABLE · Dimensions in mm

PART NUMBER	MASS g	DIMENSIONS				SUITABLE FOR LINEAR RECIRCULATING BALL BEARING AND GUIDEWAY ASSEMBLY	
		A_4	H_9	C_9	H_6		
AB KOL KWSE 20	46	42.8	24.9	9	5.8	KUSE 20	KUSE 20 L
					5.8	KUSE 20 H	KUSE 20 HL
AB KOL KWSE 25	51	46	30.1	9	6	KUSE 25	KUSE 25 L
					10	KUSE 25 H	KUSE 25 HL
AB KOL KWSE 30	69	58	35.8	9	6.5	KUSE 30	KUSE 30 L
					9.5	KUSE 30 H	KUSE 30 HL
AB KOL KWSE 35	82	68	40.7	9	7.2	KUSE 35	KUSE 35 L
					14.2	KUSE 35 H	KUSE 35 HL
AB KOL KWSE 45	109	84	50.7	11	8.5	KUSE 45	KUSE 45 L
					18.5	KUSE 45 H	KUSE 45 HL
AB KOL KWSE 55	136	96.4	58.5	11	10	KUSE 55	KUSE 55 L
					20	KUSE 55 H	KUSE 55 HL

If the collector wiper AB KOL KWSE is used,
the covering strip ADBSE or closing plugs KA..M must be used.

Lubrication Adapter Plate
BPLSE SERIES

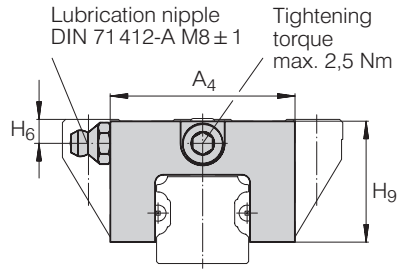

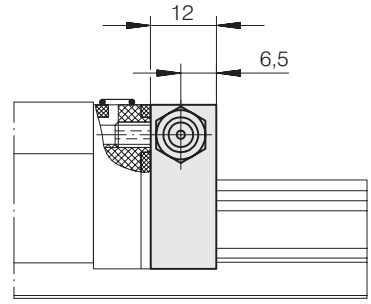

For details on part numbers, descriptive suffixes and various technical references, please refer to front of this section.
For engineering or technical information contact your local sales representative or call Distributor Sales (800)523-6572 or Linear Sales (800)462-3399.

DIMENSION TABLE · Dimensions in mm						
PART NUMBER	Mass	DIMENSIONS			SUITABLE FOR LINEAR RECIRCULATING BALL BEARING AND GUIDEWAY ASSEMBLY	
	g	A_4	H_9	H_6		
BPLSE 20	29	42.8	24.9	5.8	KUSE 20	KUSE 20 L
				5.8	KUSE 20 H	KUSE 20 HL
BPLSE 25	35	46	30.1	6	KUSE 25	KUSE 25 L
				10	KUSE 25 H	KUSE 25 HL
BPLSE 30	52	58	35.8	6.5	KUSE 30	KUSE 30 L
				9.5	KUSE 30 H	KUSE 30 HL
BPLSE 35	67	68	40.7	7.2	KUSE 35	KUSE 35 L
				14.2	KUSE 35 H	KUSE 35 HL
BPLSE 45	98	84	50.7	8.5	KUSE 45	KUSE 45 L
				18.5	KUSE 45 H	KUSE 45 HL
BPLSE 55	128	96.4	58.5	10	KUSE 55	KUSE 55 L
				20	KUSE 55 H	KUSE 55 HL

The lubrication nipple to DIN 71412-A M8 ± 1 can be replaced by a screw plug M8 ± 1.

Note:

In series KUSE..H and KUSE..HL. the lubrication nipple protrudes about 9 mm from the side of the carriage.

Bellows
FBALG KWSE SERIES

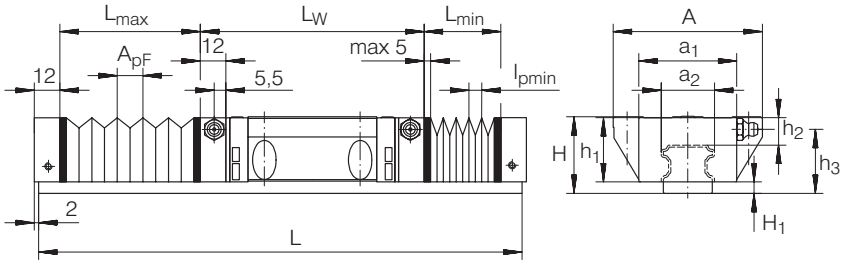

For details on part numbers, descriptive suffixes and various technical references, please refer to front of this section.
For engineering or technical information contact your local sales representative or call Distributor Sales (800)523-6572 or Linear Sales (800)462-3399.

Dimension table · Dimensions in mm

PART NUMBER	DIMENSIONS										SUITABLE FOR LINEAR RECIRCULATING BALL BEARING AND GUIDEWAY ASSEMBLY	
	A	a_1 1)	a_2	H	H_1	h_1	h_2	h_3	A_{pF} 2)	$l_{p\,min}$ 3)		
FBALG KWSE 20	63	42.8	21	30	4.8	24.9	11	24.2	14.5	2.5	KUSE 20	KUSE 20 L
	44			30							KUSE 20 H	KUSE 20 HL
FBALG KWSE 25	70	46	24	36	5.4	30.1	11	30	14.5	2.5	KUSE 25	KUSE 25 L
	48			40							KUSE 25 H	KUSE 25 HL
FBALG KWSE 30	90	58	29	42	5.7	35.8	14	35.5	18	2.5	KUSE 30	KUSE 30 L
	60			45							KUSE 30 H	KUSE 30 HL
FBALG KWSE 35	100	68	35	48	6.8	40.7	16	40.8	22.5	2.5	KUSE 35	KUSE 35 L
	70			55							KUSE 35 H	KUSE 35 HL
FBALG KWSE 45	120	84	46	60	8.8	50.7	19	51.5	27	2.5	KUSE 45	KUSE 45 L
	86			70							KUSE 45 H	KUSE 45 HL
FBALG KWSE 55	140	96.4	56	70	11	58.5	21	60	31.5	2.5	KUSE 55	KUSE 55 L
	100			80							KUSE 55 H	KUSE 55 HL

1) Maximum width of bellows in end gauge.
2) Expansion per pleat.
3) Compression per pleat.

Four-Row
Linear Recirculating Ball Bearing
And Guideway Assembly
KUVE, KUVE..L, KUVE..N SERIES

For details on part numbers, descriptive suffixes and various technical references, please refer to front of this section.
For engineering or technical information contact your local sales representative or call Distributor Sales (800)523-6572.

DIMENSION TABLE • Dimensions in mm

UNIT	CARRIAGE		GUIDEWAYS			DIMENSIONS				MOUNTING DIMENSIONS			
PART NUMBER	PART NUMBER	MASS kg	PART NUMBER	MASS kg/m	CLOSING PLUGS	L[1)]	H	A	C	A_1	A_2	a -0.005 -0.03	a_3
KUVE 15	KWVE 15	0.25	TKVD 15	1.5	KA 08 TN A	1200	24	47	55.6	16	38	15	4.5
KUVE 20	KWVE 20	0.58	TKVD 20	2.2	KA 10 TN A	1980	30	63	69.8	21.5	53	20	5
KUVE 20 L	KWVE 20 L	0.8	TKVD 20	2.2	KA 10 TN A	1980	30	63	87.3	21.5	53	20	5
KUVE 20 N	KWVE 20 N	0.47	TKVD 20	2.2	KA 10 TN A	1980	27	63	69.8	21.5	53	20	5
KUVE 25	KWVE 25	0.71	TKVD 25	2.7	KA 11 TN A	1980	36	70	81.7	23.5	57	23	6.5
KUVE 25 L	KWVE 25 L	1	TKVD 25	2.7	KA 11 TN A	1980	36	70	107.5	23.5	57	23	6.5
KUVE 25 N	KWVE 25 N	0.57	TKVD 25	2.7	KA 11 TN A	1980	31	70	81.7	23.5	57	23	6.5
KUVE 30	KWVE 30	1.4	TKVD 30	4.3	KA 15 TN A	2000	42	90	97.6	31	72	28	9
KUVE 30 L	KWVE 30 L	1.83	TKVD 30	4.3	KA 15 TN A	2000	42	90	122.6	31	72	28	9
KUVE 30 N	KWVE 30 N	1.12	TKVD 30	4.3	KA 15 TN A	2000	38	90	97.6	31	72	28	9
KUVE 35	KWVE 35	2.02	TKVD 35	5.7	KA 15 TN A	2960	48	100	110.4	33	82	34	9
KUVE 35 L	KWVE 35 L	2.71	TKVD 35	5.7	KA 15 TN A	2960	48	100	140.2	33	82	34	9
KUVE 35 N	KWVE 35 N	1.62	TKVD 35	5.7	KA 15 TN A	2960	44	100	110.4	33	82	34	9
KUVE 45	KWVE 45	3.75	TKVD 45	9.2	KA 20 TN A	2940	60	120	139	37.5	100	45	10
KUVE 45 L	KWVE 45 L	4.7	TKVD 45	9.2	KA 20 TN A	2940	60	120	167.5	37.5	100	45	10
KUVE 45 N	KWVE 45 N	3	TKVD 45	9.2	KA 20 TN A	2940	52	120	139	37.5	100	45	10

1) Maximum length L of single piece guideway;
longer guideways are supplied as multi-piece guideways and are marked accordingly.
2) Dimensions C_5 and C_5 are dependent on the guideway length L; see page NO TAG for calculation method.
3) When mounting from above: maximum length of fixing screw for the central fixing holes H_8 +3mm.
4) If there is a possibility of settling, the fixing screws should be secured against rotation.

DIAMETERS AND TIGHTENING TORQUES FOR THREADS AND SCREWS[4)]

PART NUMBER	K_1 For screws to DIN 912-12.9		K_2 For screws to DIN 912-12.9		K_3 Through holes for screws to DIN 912-12.9		K_6 Through holes for screws to DIN 7 984-8.8		K_6 Through holes for screws to DIN 912-12.9	
		Nm max.		Nm max.		Nm max.		Nm max.		Nm max.
KUVE 15	M4	5	M5	5.8	M4	5	M4	2.8	–	–
KUVE 20	M5	10	M6	10	M5	10	–	–	M5	10
KUVE 20 L	M5	10	M6	10	M5	10	–	–	M5	10
KUVE 20 N	M5	10	M6	10	M5	10	M5	5.8	–	–
KUVE 25	M6	17	M8	24	M6	17	–	–	M6	17
KUVE 25 L	M6	17	M8	24	M6	17	–	–	M6	17
KUVE 25 N	M6	17	M8	24	M6	17	M6	10	–	–
KUVE 30	M8	41	M10	41	M8	41	M8	24	–	–
KUVE 30 L	M8	41	M10	41	M8	41	M8	24	–	–
KUVE 30 N	M8	41	M10	41	M8	41	M8	24	–	–
KUVE 35	M8	41	M10	41	M8	41	–	–	M8	41
KUVE 35 L	M8	41	M10	41	M8	41	–	–	M8	41
KUVE 35 N	M8	41	M10	41	M8	41	M8	24	–	–
KUVE 45	M12	140	M12	83	M10	83	–	–	M10	83
KUVE 45 L	M12	140	M12	83	M10	83	–	–	M10	83
KUVE 45 N	M12	140	M12	83	M10	83	M10	48	–	–

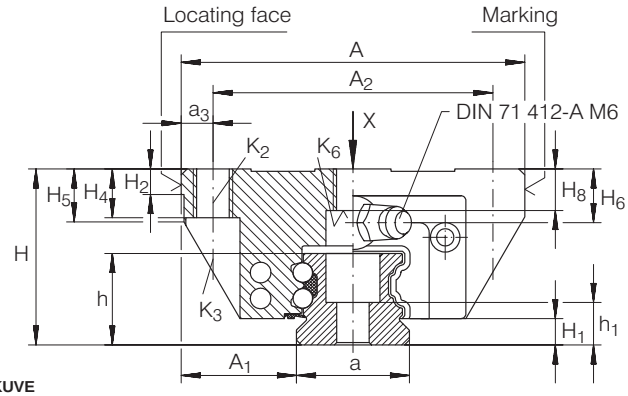

KUVE

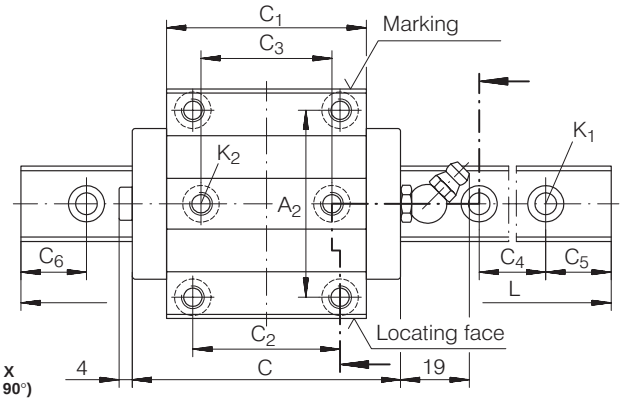

KUVE, plan view X
(rotated through 90°)

DIMENSION TABLE • Dimensions in mm															
MOUNTING DIMENSIONS															
C_1	C_2	C_3	C_4	C_5 2) min.	C_5 2) max.	C_6 2) min.	C_6 2) max.	H_1	H_2	H_4	H_5	H_6	H_8 3)	h	h_1
39.8	30	26	60	20	53	20	53	4.5	4.5	7.6	7.6	4	5.8	15.1	8.2
50.4	40	35	60	20	53	20	53	4.8	5	10	11	4.8	7.5	17	9.1
67.9	40	35	60	20	53	20	53	4.8	5	10	11	4.8	7.5	17	9.1
50.4	40	35	60	20	53	20	53	4.8	5	8	8.6	4.8	6	17	9.1
60.7	45	40	60	20	53	20	53	5.4	5	10	10,9	4.8	10	18.7	8.7
86.5	45	40	60	20	53	20	53	5.4	5	10	10.9	4.8	10	18.7	8.7
60.7	45	40	60	20	53	20	53	5.4	5	10	9.3	4.8	8	18.7	8.7
72	52	44	80	20	71	20	71	6.2	6	12	13.8	4.8	12	23.5	11.5
97	52	44	80	20	71	20	71	6.2	6	12	13.8	4.8	12	23.5	11.5
72	52	44	80	20	71	20	71	6.2	6	12	9.8	4.8	9	23.5	11.5
80	62	52	80	20	71	20	71	7	6.5	13	14.3	4.8	12	27	15
109.8	62	52	80	20	71	20	71	7	6.5	13	14.3	4.8	12	27	15
80	62	52	80	20	71	20	71	7	6.5	13	10.3	4.8	11.7	27	15
102.5	80	60	105	20	94	20	94	10	9	15	19.8	4.8	15	34.2	16.2
131.1	80	60	105	20	94	20	94	10	9	15	19.8	4.8	15	34.2	16.2
102.5	80	60	105	20	94	20	94	10	9	15	17.2	4.8	11	34.2	16.2

LOAD CARRYING CAPACITY TABLE					
PART NUMBER	BASIC LOAD RATINGS		MOMENT RATINGS		
	C kN	C_0 kN	M_{0x} Nm	M_{0y} Nm	M_{0z} Nm
KUVE 15	7.2	14.5	150	100	100
KUVE 20	13.1	27	332	240	240
KUVE 20 L	16.2	36.5	452	430	430
KUVE 20 N	13.1	27	332	240	240
KUVE 25	17.9	37	510	395	395
KUVE 25 L	23.4	54	745	825	825
KUVE 25 N	17.9	37	510	395	395
KUVE 30	27.5	55	970	700	700
KUVE 30 L	34.5	74	1310	1240	1240
KUVE 30 N	27.5	55	970	700	700
KUVE 35	38	72	1465	1020	1020
KUVE 35 L	47.5	100	2025	1890	1890
KUVE 35 N	38	72	1465	1020	1020
KUVE 45	69	141	3610	2485	2485
KUVE 45 L	82	181	4635	4000	4000
KUVE 45 N	69	141	3610	2485	2485

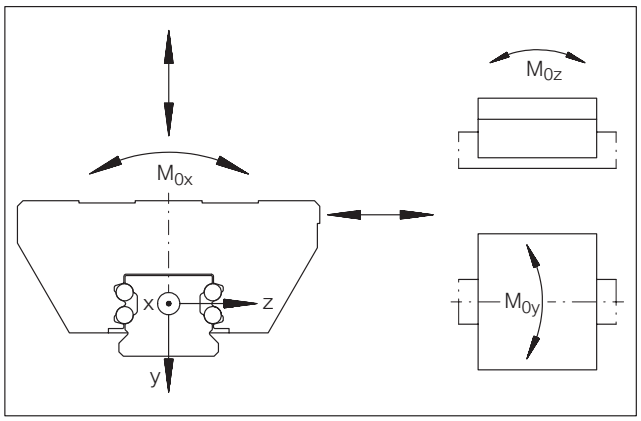

Load directions

Four-Row
Linear Recirculating Ball Bearing
And Guideway Assembly
KUVE..S, KUVE..SN, KUVE..H SERIES

For details on part numbers, descriptive suffixes and various technical references, please refer to front of this section.
For engineering or technical information contact your local sales representative or call Distributor Sales (800)523-6572.

DIMENSION TABLE • Dimensions in mm													
UNIT	CARRIAGE		GUIDEWAYS			DIMENSIONS				MOUNTING DIMENSIONS			
PART NUMBER	PART NUMBER	MASS kg	PART NUMBER	MASS kg/m	CLOSING PLUGS	L[1)]	H	A	C	A_1	A_2	a -0.005 -0.03	a_3
KUVE 15 S	KWVE 15 S	0.19	TKVD 15	1.5	KA 08 TN A	1200	24	34	55.6	9.5	26	15	4
KUVE 15 H	KWVE 15 H	0.23	TKVD 15	1.5	KA 08 TN A	1200	28	34	55.6	9.5	26	15	4
KUVE 20 S	KWVE 20 S	0.46	TKVD 20	2.2	KA 10 TN A	1980	30	44	69.8	12	32	20	6
KUVE 20 SN	KWVE 20 SN	0.36	TKVD 20	2.2	KA 10 TN A	1980	27	44	69.8	12	32	20	6
KUVE 25 S	KWVE 25 S	0.56	TKVD 25	2.7	KA 11 TN A	1980	36	48	81.7	12.5	35	23	6.5
KUVE 25 SN	KWVE 25 SN	0.45	TKVD 25	2.7	KA 11 TN A	1980	31	48	81.7	12.5	35	23	6.5
KUVE 25 H	KWVE 25 H	0.65	TKVD 25	2.7	KA 11 TN A	1980	40	48	81.7	12.5	35	23	6.5
KUVE 30 S	KWVE 30 S	1.09	TKVD 30	4.3	KA 15 TN A	2000	42	60	97.6	16	40	28	10
KUVE 30 SN	KWVE 30 SN	0.87	TKVD 30	4.3	KA 15 TN A	2000	38	60	97.6	16	40	28	10
KUVE 30 H	KWVE 30 H	1.27	TKVD 30	4.3	KA 15 TN A	2000	45	60	97.6	16	40	28	10
KUVE 35 S	KWVE 35 S	1.6	TKVD 35	5.7	KA 15 TN A	2960	48	70	110.4	18	50	34	10
KUVE 35 SN	KWVE 35 SN	1.27	TKVD 35	5.7	KA 15 TN A	2960	44	70	110.4	18	50	34	10
KUVE 35 H	KWVE 35 H	1.84	TKVD 35	5.7	KA 15 TN A	2960	55	70	110.4	18	50	34	10
KUVE 45 S	KWVE 45 S	2.8	TKVD 45	9.2	KA 20 TN A	2940	60	86	139	20.5	60	45	13
KUVE 45 SN	KWVE 45 SN	2.3	TKVD 45	9.2	KA 20 TN A	2940	52	86	139	20.5	60	45	13
KUVE 45 H	KWVE 45 H	3.5	TKVD 45	9.2	KA 20 TN A	2940	70	86	139	20.5	60	45	13

1) Maximum length L of single piece guideway;
longer guideways are supplied as multi-piece guideways and are marked accordingly.
2) Dimensions C_5 and C_5 are dependent on the guideway length L; see page NO TAG for calculation method.
3) When mounting from above: maximum length of fixing screw for the central fixing holes H_8 +3mm.
4) If there is a possibility of settling, the fixing screws should be secured against rotation.

DIAMETERS AND TIGHTENING TORQUES FOR THREADS AND SCREWS[4)]				
PART NUMBER	K_1 for screws to DIN 912-12.9		K_2 for screws to DIN 912-12.9	
		Nm max.		Nm max.
KUVE 15 S	M4	5	M4	5
KUVE 15 H	M4	5	M4	5
KUVE 20 S	M5	10	M5	10
KUVE 20 SN	M5	10	M5	10
KUVE 25 S	M6	17	M6	17
KUVE 25 SN	M6	17	M6	17
KUVE 25 H	M6	17	M6	17
KUVE 30 S	M8	41	M8	41
KUVE 30 SN	M8	41	M8	41
KUVE 30 H	M8	41	M8	41
KUVE 35 S	M8	41	M8	41
KUVE 35 SN	M8	41	M8	41
KUVE 35 H	M8	41	M8	41
KUVE 45 S	M12	140	M10	83
KUVE 45 SN	M12	140	M10	83
KUVE 45 H	M12	140	M10	83

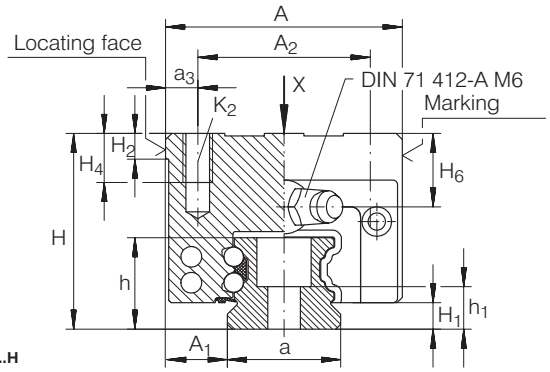

KUVE..H

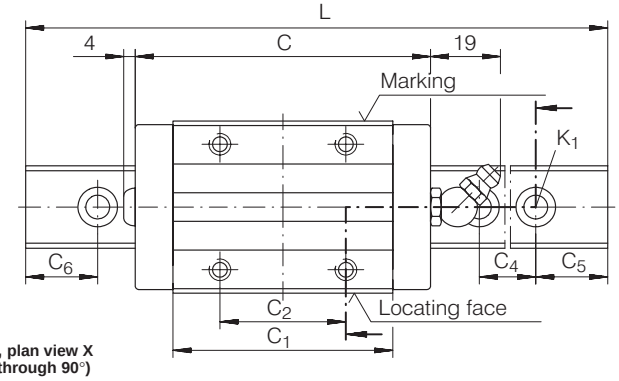

KUVE..H, plan view X
(rotated through 90°)

DIMENSION TABLE • Dimensions in mm												
MOUNTING DIMENSIONS												
C_1	C_2	C_4	C_5 2) min.	C_5 2) max.	C_6 2) min.	C_6 2) max.	H_1	H_2	H_4	H_6	h	h_1
39.8	26	60	20	53	20	53	4.5	4.5	6	4	15.1	8.2
39.8	26	60	20	53	20	53	4.5	4.5	6	8	15.1	8.2
50.4	36	60	20	53	20	53	4.8	5	7.5	8	17	9.1
50.4	36	60	20	53	20	53	4.8	5	7.5	5	17	9.1
60.7	35	60	20	53	20	53	5.4	5	10	11	18.7	8.7
60.7	35	60	20	53	20	53	5.4	5	8	6	18.7	8.7
60.7	35	60	20	53	20	53	5.4	5	10	15	18.7	8.7
72	40	80	20	71	20	71	6.2	6	13.5	11.25	23.5	11.5
72	40	80	20	71	20	71	6.2	6	11	7.25	23.5	11.5
72	40	80	20	71	20	71	6.2	6	13.5	14.25	23.5	11.5
80	50	80	20	71	20	71	7	6.5	13.5	12.3	27	15
80	50	80	20	71	20	71	7	6.5	13.5	8.3	27	15
80	50	80	20	71	20	71	7	6.5	13.5	19.3	27	15
102.5	60	105	20	94	20	94	10	9	17	16.5	34.2	16.2
102.5	60	105	20	94	20	94	10	9	16.5	8.5	34.2	16.2
102.5	60	105	20	94	20	94	10	9	17	26.5	34.2	16.2

LOAD CARRYING CAPACITY TABLE					
PART NUMBER	BASIC LOAD RATINGS		MOMENT RATINGS		
	C kN	C_0 kN	M_{0x} Nm	M_{0y} Nm	M_{0z} Nm
KUVE 15 S	7.2	14.5	150	100	100
KUVE 15 H	7.2	14.5	150	100	100
KUVE 20 S	13.1	27	332	240	240
KUVE 20 SN	13.1	27	332	240	240
KUVE 25 S	17.9	37	510	395	395
KUVE 25 SN	17.9	37	510	395	395
KUVE 25 H	17.9	37	510	395	395
KUVE 30 S	27.5	55	970	700	700
KUVE 30 SN	27,5	55	970	700	700
KUVE 30 H	27,5	55	970	700	700
KUVE 35 S	38	72	1465	1020	1020
KUVE 35 SN	38	72	1465	1020	1020
KUVE 35 H	38	72	1465	1020	1020
KUVE 45 S	69	141	3610	2485	2485
KUVE 45 SN	69	141	3610	2485	2485
KUVE 45 H	69	141	3610	2485	2485

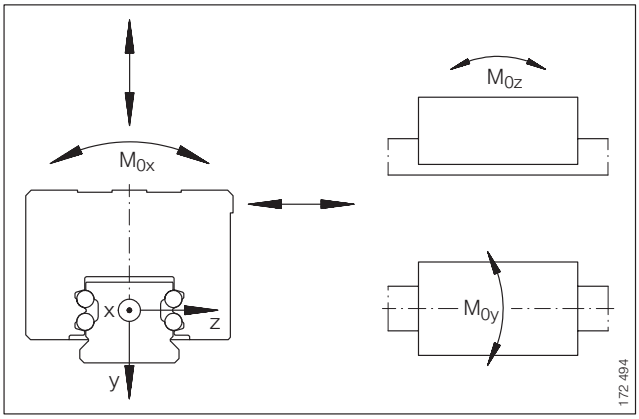

Load directions

Four-row Linear Recirculating Ball Bearing And Guideway Assembly

KUVE..W, KUVE..WL SERIES

For details on part numbers, descriptive suffixes and various technical references, please refer to front of this section.
For engineering or technical information contact your local sales representative or call Distributor Sales (800)523-6572 or Linear Sales (800)462-3399.

DIMENSION TABLE · Dimensions in mm													
UNIT	CARRIAGE		GUIDEWAY			DIMENSIONS				MOUNTING DIMENSIONS			
PART NUMBER	PART NUMBER	MASS kg	PART NUMBER	MASS kg/m	CLOSING PLUGS	L[1]	H	A	C	A_1	A_2	A_4	A_5
KUVE 20 W	KWVE 20 W	0.56	TKVD 20 W	5	KA 08..A	1,500	27	80	69.8	19	70	24	9
KUVE 25 WL	KWVE 25 WL	1.46	TKVD 25 W	9.4	KA 11..A	1,980	35	120	107.8	25.5	107	40	14.5
KUVE 30 W	KWVE 30 W	1.95	TKVD 30 W	13.6	KA 15..A	2,000	42	142	97.6	31	124	50	15
KUVE 35 WL	KWVE 35 WL	4.11	TKVD 35 W	17.4	KA 15..A	2,960	50	162	140.2	36	144	60	15

1) Maximum length L of single piece guideway;
longer guideways are supplied as multi-piece guideways and are marked accordingly.

2) Dimensions C_5 and C_6 are dependent on the guideway length L.

3) When mounting from above: maximum length of fixing screw for the central fixing holes H_8 +3 mm.

4) If there is a possibility of settling, the fixing screws should be secured against rotation.

DIAMETERS AND TIGHTENING TORQUES FOR THREADS AND SCREWS[5]										
PART NUMBER	K_1 for screws to DIN 912-12.9		K_2 for screws to DIN 912-12.9		K_3 for screws to DIN 912-12.9		K_6 for screws to DIN 7984–8.8		K_6 for screws to DIN 912-12.9	
		Nm max.		Nm max.		Nm max.		Nm max.		Nm max.
KUVE 20 W	M4	5	M6	10	M5	10	M5	5.8	–	–
KUVE 25 WL	M6	17	M8	24	M6	17	–	–	M6	17
KUVE 30 W	M8	41	M10	41	M8	41	M8	24	–	–
KUVE 35 WL	M8	41	M10	41	M8	41	–	–	M8	41

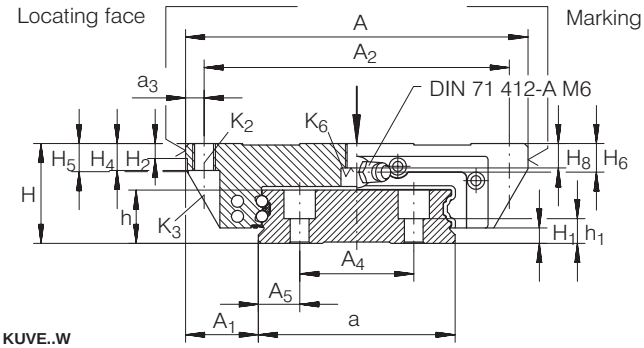

KUVE..W

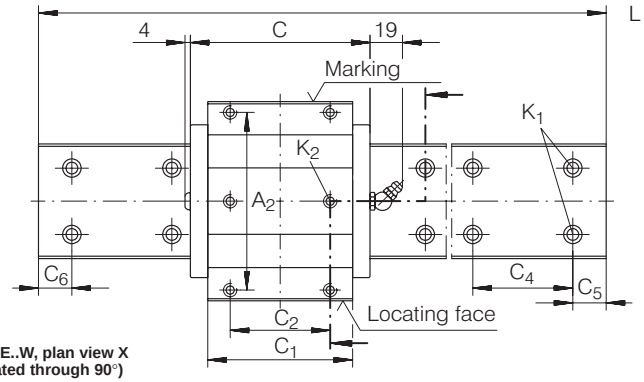

KUVE..W, plan view X
(rotated through 90°)

a −0.005 −0.030	a_3	C_1	C_2	C_4	C_5 2)		C_6 2)		H_1	H_2	H_4	H_5	H_6	H_8 3)	h	h_1
					min.	max.	min.	max.								
42	5	50.4	40	60	20	53	20	53	4.6	5	10	10.6	5	6	17	10
69	6.5	86.5	60	80	20	71	20	71	5.2	5	10	9.9	10	10	18.7	8.7
80	9	72	52	80	20	71	20	71	6	6	12	13.8	11.25	12	23.5	11.5
90	9	109.8	80	80	20	71	20	71	6.8	6.5	13	16.3	14.3	13	27	15

LOAD CARRYING CAPACITY TABLE					
PART NUMBER	BASIC LOAD RATINGS		MOMENT RATINGS		
	C kN	C_0 kN	M_{0x} Nm	M_{0y} Nm	M_{0z} Nm
KUVE 20 W	13.1	26.9	687	240	240
KUVE 25 WL	23.4	54	2,225	825	825
KUVE 30 W	27.5	55	2,660	700	700
KUVE 35 WL	47.5	100	5,550	1,890	1,890

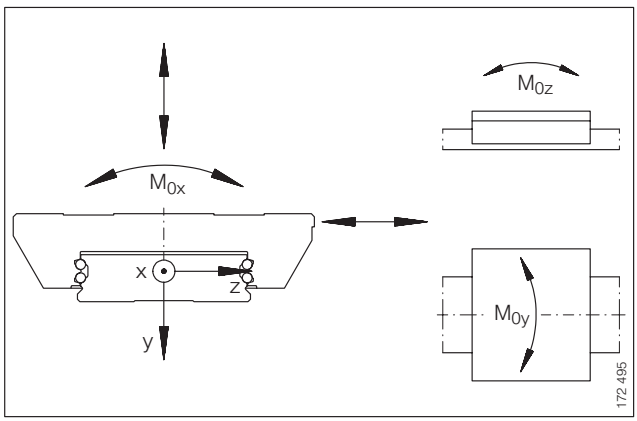

Load directions

Linear Recirculating Ball Bearing And Guideway Assemblies
KUE SERIES

For details on part numbers, descriptive suffixes and various technical references, please refer to front of this section.
For engineering or technical information contact your local sales representative or call Distributor Sales (800)523-6572 or Linear Sales (800)462-3399.

DIMENSION TABLE · Dimensions in mm												
UNIT	CARRIAGE		GUIDEWAY		DIMENSIONS				MOUNTING DIMENSIONS			
PART NUMBER	PART NUMBER	MASS kg	PART NUMBER	MASS kg/m	L[1])	H	A	C	A_1	A_2	a −0,004 −0,05	a_3
KUE 15	KWE 15	0.17	TKD 15	1.5	1,200	24	47	54.5	16	38	15	4.5
KUE 20	KWE 20	0.45	TKD 20	2.2	1,980	30	63	70.5	21.5	53	20	5
KUE 25	KWE 25	0.65	TKD 25	2.8	1,980	36	70	80.7	23.5	57	23	6.5
KUE 30	KWE 30	1.2	TKD 30	4.2	2,000	42	90	93	31	72	28	9
KUE 35	KWE 35	1.7	TKD 35	5.6	2,960	48	100	106.4	33	82	34	9

1) Maximum length L of single piece guideway; longer guideways are supplied as multi-piece guideways.
2) Dimensions C_5 and C_6 are dependent on the guideway length L.
3) Lubrication nipple with tapered head to DIN 71 412, except for KUE 15 (drive fit lubrication nipple).
4) A drive fit lubrication nipple and closing plug are supplied loose with the carriage.
5) If there is a possibility of settling, the fixing screws should be secured against rotation.

DIAMETERS AND TIGHTENING TORQUES FOR THREADS AND SCREWS[5])							
PART NUMBER	K_1 for screws to DIN 912-12.9		K_2 for screws to DIN 912-12.9		K_3 Through holes for screws to DIN 912-12.9		K_5[3]) Lubrication connector
		Nm max.		Nm max.		Nm max.	
KUE 15	M4	5	M5	5.8	M4	5	NIP A1[4])
KUE 20	M5	10	M6	10	M5	10	NIP KE M6
KUE 25	M6	17	M8	24	M6	17	NIP KE M6
KUE 30	M8	41	M10	41	M8	41	NIP KE M6
KuE 35	M8	41	M10	41	M8	41	NIP KE M6

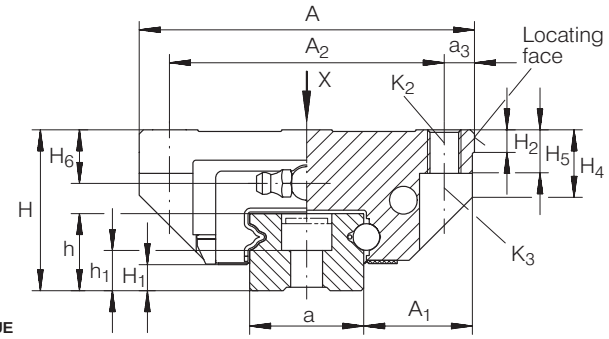

KUE

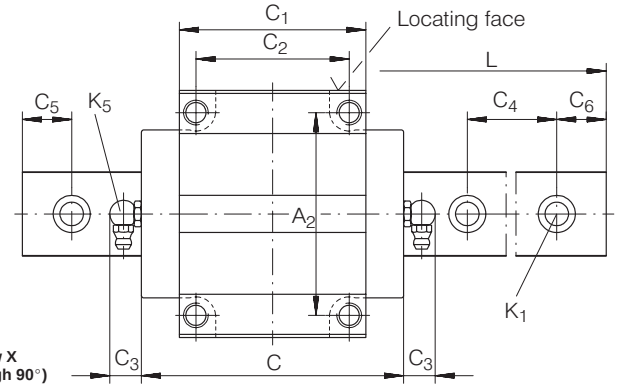

KUE, plan view X
(rotated through 90°)

															ACCESSORIES
C_1	C_2	C_3	C_4	C_5 2)		C_6 2)		H_1	H_2	H_4	H_5	H_6	h	h_1	CLOSING PLUGS
				min.	max.	min.	max.								
38.6	30	1.5	60	20	53	20	53	4.8	4.5	7.5	7	4	15	7.7	KA 08 TN
49.3	40	14	60	20	53	20	53	5	5	11.6	10	6.5	16.5	8.3	KA 10 TN
56.5	45	14	60	20	53	20	53	6.5	5	11.5	10	10	18	8.7	KA 11 TN
65.7	52	14	80	20	71	20	71	7	6	14.6	10	13	21.5	10	KA 15 TN
75.5	62	14	80	20	71	20	71	8	6.5	20.1	13	16	23	11.5	KA 15 TN

LOAD CARRYING CAPACITY TABLE					
PART NUMBER	BASIC LOAD RATINGS		MOMENT RATINGS		
	dyn. C kN	stat. C_0 kN	M_{0x} Nm	M_{0y} Nm	M_{0z} Nm
KUE 15	6,5	9.2	73	56	56
KUE 20	13.3	18	190	154	154
KUE 25	16.2	20.9	253	185	185
KUE 30	22.5	29.7	437	335	335
KUE 35	28	37	658	450	450

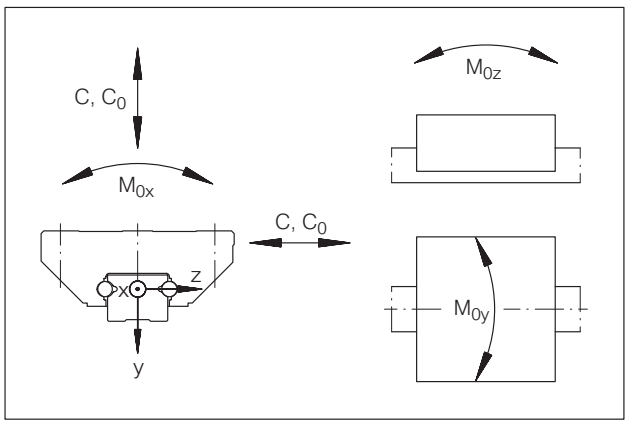

Load directions

Linear Recirculating Ball Bearing And Guideway Assemblies
KUE..H SERIES

For details on part numbers, descriptive suffixes and various technical references, please refer to front of this section.
For engineering or technical information contact your local sales representative or call Distributor Sales (800)523-6572 or Linear Sales (800)462-3399.

DIMENSION TABLE · Dimensions in mm												
Unit	CARRIAGE		GUIDEWAY		DIMENSIONS				MOUNTING DIMENSIONS			
PART NUMBER	PART NUMBER	MASS kg	PART NUMBER	MASS kg/m	L[1])	H	A	C	A_1	A_2	a −0.004 −0.05	a_3
KUE 15 H	KWE 15 H	0.17	TKD 15	1.5	1,200	28	34	54.5	9.5	26	15	4
KUE 20 H	KWE 20 H	0.35	TKD 20	2.2	1,980	30	44	70.5	12	32	20	6
KUE 25 H	KWE 25 H	0.55	TKD 25	2.8	1,980	40	48	80.7	12.5	35	23	6.5
KUE 30 H	KWE 30 H	0.9	TKD 30	4.2	2,000	45	60	93	16	40	28	10
KUE 35 H	KWE 35 H	1.46	TKD 35	5.6	2,960	55	70	106.4	18	50	34	10

1) Maximum length L of single piece guideway; longer guideways are supplied as multi-piece guideways.
2) Dimensions C_5 and C_6 are dependent on the guideway length L.
3) Maximum length of fixing screw.
4) Lubrication nipple with tapered head to DIN 71 412, except for KUE 15 H (drive fit lubrication nipple).
5) A drive fit lubrication nipple and closing plug are supplied loose with the carriage.
6) If there is a possibility of settling, the fixing screws should be secured against rotation.

DIAMETERS AND TIGHTENINGTORQUES FOR THREADS AND SCREWS[6])					
PART NUMBER	K_1 for screws to DIN 912-12.9		K_2 for screws to DIN 912-12.9		K_5[4]) Lubrication connector
		Nm max.		Nm max.	
KUE 15 H	M4	5	M4	5	NIP A1[5])
KUE 20 H	M5	10	M5	10	NIP KE M6
KUE 25 H	M6	17	M6	17	NIP KE M6
KUE 30 H	M8	41	M8	41	NIP KE M6
KuE 35 H	M8	41	M8	41	NIP KE M6

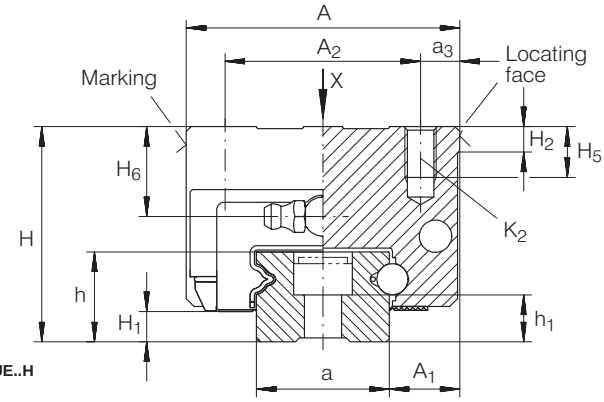

KUE..H

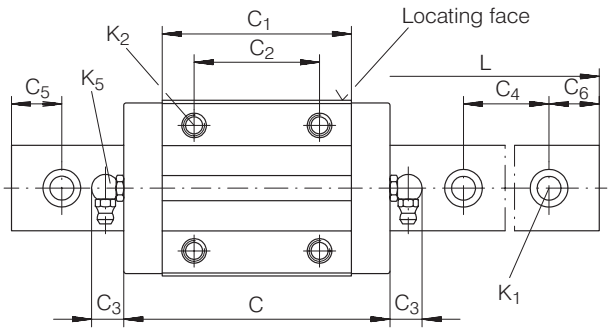

KUE, plan view X
(rotated through 90°)

														ACCESSORIES
C_1	C_2	C_3	C_4	C_5 2)		C_6 2)		H_1	H_2	H_5 3)	H_6	h	h_1	CLOSING PLUGS
				min.	max.	min.	max.							
38.6	26	1.5	60	20	53	20	53	4.8	4.5	5	8	15	7.7	KA 08 TN
49.3	36	14	60	20	53	20	53	5	5	6.25	6.5	16.5	8.3	KA 10 TN
56.5	35	14	60	20	53	20	53	6.5	5	8	14	18	8.7	KA 11 TN
65.7	40	14	80	20	71	20	71	7	6	10	16	21.5	10	KA 15 TN
75.5	50	14	80	20	71	20	71	8	6.5	12	23	23	11.5	KA 15 TN

LOAD CARRYING CAPACITY TABLE					
PART NUMBER	BASIC LOAD RATINGS		MOMENT RATINGS		
	dyn. C kN	stat. C_0 kN	M_{0x} Nm	M_{0y} Nm	M_{0z} Nm
KUE 15 H	6.5	9.2	73	56	56
KUE 20 H	13.3	18	190	154	154
KUE 25 H	16.2	20.9	253	185	185
KUE 30 H	22.5	29.7	437	335	335
KUE 35 H	28	37	658	450	450

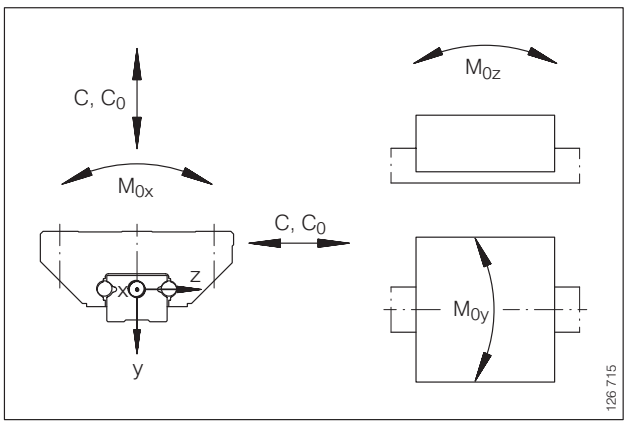

Load directions

Sheet Steel Wiper
APLE SERIES

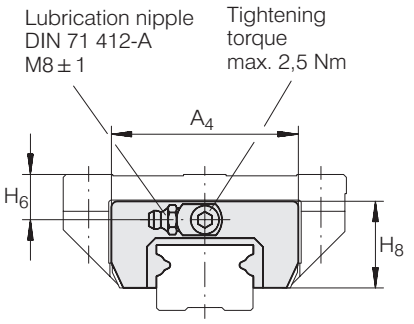

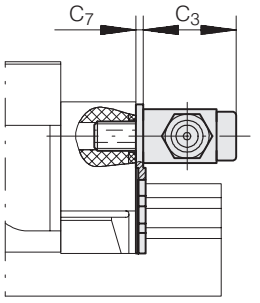

For details on part numbers, descriptive suffixes and various technical references, please refer to front of this section.
For engineering or technical information contact your local sales representative or call Distributor Sales (800)523-6572 or Linear Sales (800)462-3399.

DIMENSION TABLE · Dimensions in mm							
PART NUMBER	MASS	DIMENSIONS					SUITABLE FOR LINEAR RECIRCULATING BALL BEARING AND GUIDEWAY ASSEMBLY
	g	A_4	H_8	C_3	C_7	H_6	
APLE 20	35	40	24	19	1.2	6.5	KUE 20
						6.5	KUE 20 H
APLE 25	39	44	25.3	19	1.2	10	KUE 25
						14	KUE 25 H
APLE 30	43	55	28	19	1.2	13	KUE 30
						16	KUE 30 H
APLE 35	47	66	30.5	19	1.5	16	KUE 35
						23	KUE 35 H

1) When fitting the sheet steel wiper, it must be ensured that there is an even gap of ca. 0.1 mm between the guideway and the wiper.

Lubrication Adapter Plate
BPLE SERIES

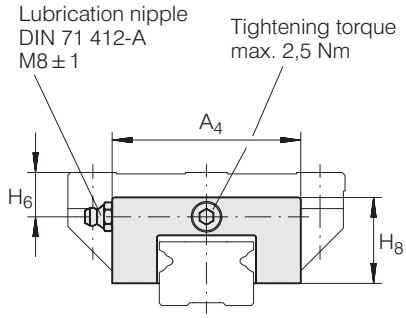

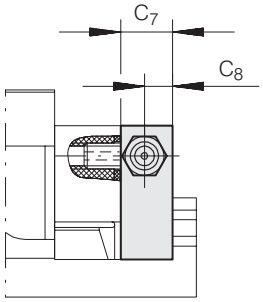

For details on part numbers, descriptive suffixes and various technical references, please refer to front of this section.
For engineering or technical information contact your local sales representative or call Distributor Sales (800)523-6572 or Linear Sales (800)462-3399.

DIMENSION TABLE · Dimensions in mm							
PART NUMBER	MASS	DIMENSIONS					SUITABLE FOR LINEAR RECIRCULATING BALL BEARING AND GUIDEWAY ASSEMBLY
	g	A_4	H_8	C_7	C_8	H_6	
BPLE 20	25	42	23.5	12	6.5	6.5	KUE 20
						6.5	KUE 20 H
BPLE 25	34	46.5	26	12	6.5	10	KUE 25
						14	KUE 25 H
BPLE 30	44	58	28	12	6.5	13	KUE 30
						16	KUE 30 H
BPLE 35	54	68	31	12	6.5	16	KUE 35
						23	KUE 35 H

The lubrication nipple to DIN 71 412-A M8 ± 1
can be replaced by a screw plug M8 ± 1.

Note:
In series KUE..H. the lubrication nipple protrudes about 9 mm
from the side of the carriage.

Bellows
FBALG KWE SERIES

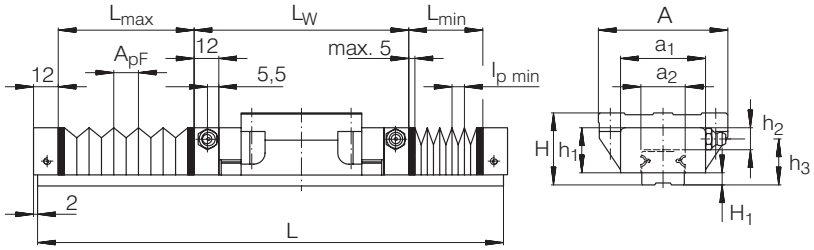

For details on part numbers, descriptive suffixes and various technical references, please refer to front of this section.
For engineering or technical information contact your local sales representative or call Distributor Sales (800)523-6572 or Linear Sales (800)462-3399.

DIMENSION TABLE · Dimensions in mm

PART NUMBER	DIMENSIONS										SUITABLE FOR LINEAR RECIRCULATING BALL BEARING AND GUIDEWAY ASSEMBLY
	A	a_1 1)	a_2	H	H_1	h_1	h_2	h_3	A_{pF} 2)	$l_{p\ min}$ 3)	
FBALG KWE 20	63	42	21	30	5.5	23.5	12	23.5	13	2.5	KUE 20
	44	42	21	30	5.5	23.5	12	23.5	13	2.5	KUE 20 H
FBALG KWE 25	70	46.5	24	36	6.5	26	14	26	13	2.5	KUE 25
	48	46.5	24	40	6.5	26	14	26	13	2.5	KUE 25 H
FBALG KWE 30	90	58	29	42	7.5	28	13.5	29	15.5	2.5	KUE 30
	60	58	29	45	7.5	28	13.5	29	15.5	2.5	KUE 30 H
FBALG KWE 35	100	68	35	48	8	31	15.5	32	19	2.5	KUE 35
	70	68	35	55	8	31	15.5	32	19	2.5	KUE 35 H

1) Maximum width of bellows in end gauge.
2) Expansion per pleat.
3) Compression per pleat.

Linear Ball Bearing Units
KUVS SERIES
Guideways
TKVD SERIES

For details on part numbers, descriptive suffixes and various technical references, please refer to front of this section.
For engineering or technical information contact your local sales representative or call Distributor Sales (800)523-6572 or Linear Sales (800)462-3399.

DIMENSION TABLE · Dimensions in mm															
LINEAR RECIRCULATING BALL BEARING UNITS		GUIDEWAYS			DIMENSIONS						MOUNTING DIMENSIONS				
PART NUMBER	MASS kg	PART NUMBER	MASS kg/m	CLOSING PLUGS	H	A	C	h	a	L[3])	A_1	A_2	A_3	A_4	A_5
KUVS 32	0.025	TKVD 32	2.3	KA 8 TN	11	51.6	47	10	31.8	2,000	9.9	5.5	40.6	18	6.9
KUVS 42	0.085	TKVD 42	5.54	KA 8 TN	19	75	71	18	42	2,000	16.5	10	55	24	9
KUVS 42	0.085	TKVD 14	1.45	KA 8 TN	15	30	71	14	13.5	1,500	16.5	10	16.2	6	–
KUVS 69	0.2	TKVD 69	12.42	KA 11 TN	25	114	96	24	69	2,000	22.5	13	88	40	14.5
KUVS 69	0.2	TKVD 19	2.66	KA 11 TN	20	42	96	19	19.5	2,000	22.5	13	22.2	8	–

1) For two linear ball bearing units with TKVD 32, TKVD 42 and TKVD 69 and for one linear ball bearing unit with TKVD 14 and TKVD 19.

2) The usable load carrying capacity is influenced by the connections between the guidance elements and the adjacent construction.

3) Maximum length L of a single piece guideway; longer guideways are supplied as multi-piece guideways and are marked accordingly.

4) Dimensions C_5 and C_6 are dependent on the length of the guideway;

5) If there is a possibility of settling, the fixing screws should be secured against rotation.

DIAMETERS AND TIGHTENING TORQUES FOR THREADS AND SCREWS[5])						
PART NUMBER	K_1 for screws to DIN 912-12.9		K_2 for screws to DIN 912-12.9		K_3 for screws to DIN 912-12.9	
		Nm max.		Nm max.		Nm max.
KUVS 32	M3	2.5	M3	1.5	–	–
KUVS 42	M3	2.5	M4	3	M3	2.5
KUVS 69	M5	10	M6	10	M5	10
KUVS 69	M5	10	M6	10	M5	10

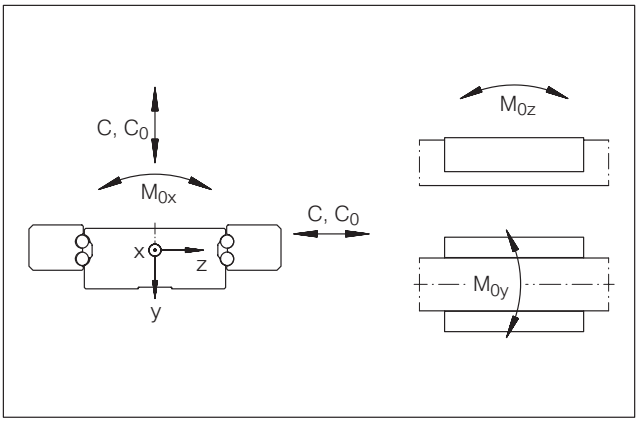

Load directions

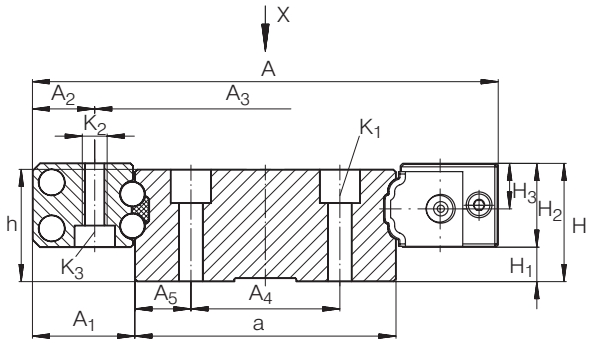

Two KUVS with TKVD 32, TKVD 42 and TKVD 69

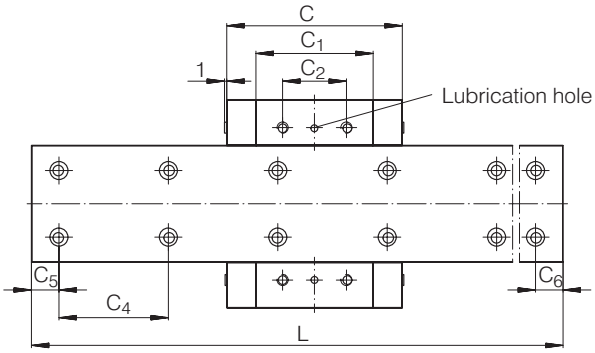

Plan view X (rotated through 90°)

										LOAD CARRYING CAPACITY[1)2)]				
										BASIC LOAD RATINGS		MOMENT RATINGS		
C_1	C_2	C_4	C_5[4)]		C_6[4)]		H_1	H_2	H_3	C	C_0	M_{0x}	M_{0y}	M_{0z}
			min.	max.	min.	max.				kN	kN	Nm	Nm	Nm
29.8	15	40	5	35	5	35	0.5	10.5	6	5.7	10.6	203	51	51
48.5	20	60	5	55	5	55	5.5	13.5	7.3	13.5	26	648	211	211
48.5	20	60	5	55	5	55	1.5	13.5	7.3	6.75	13	–	–	–
64	35	60	7	53	7	53	7.5	17.5	9.5	26	46.5	1,872	492	492
64	35	60	7	53	7	53	2.5	17.5	9.5	13	23.25	–	–	–

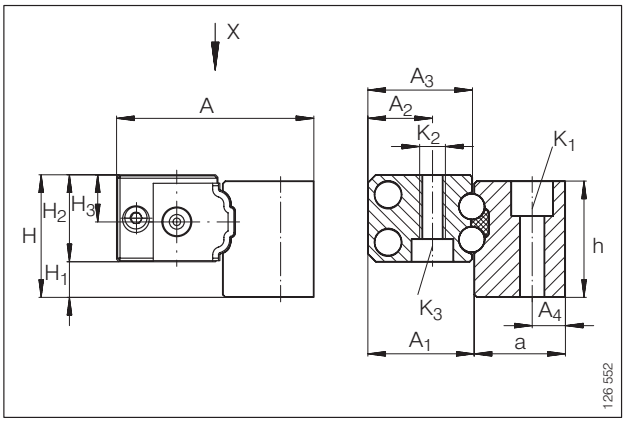

KUVS with TKVD 14. TKVD 19 (end view and cross section)

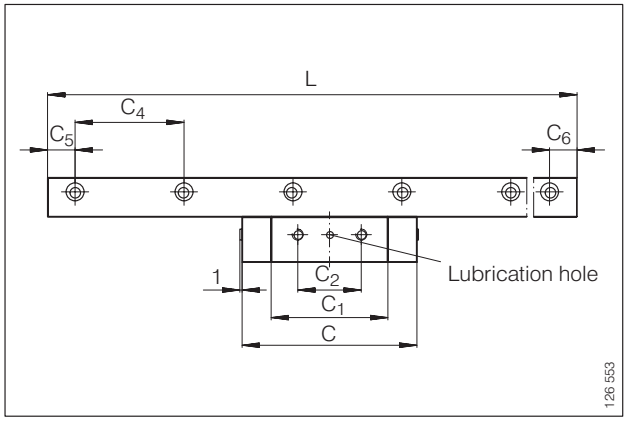

Plan view X (rotated through 90°)

Carriages
KWVK..AL SERIES
Guideways
TKVD SERIES

For details on part numbers, descriptive suffixes and various technical references, please refer to front of this section.
For engineering or technical information contact your local sales representative or call Distributor Sales (800)523-6572 or Linear Sales (800)462-3399.

DIMENSION TABLE · Dimensions in mm																		
CARRIAGES		GUIDEWAYS			DIMENSIONS						MOUNTING DIMENSIONS							
PART NUMBER	MASS kg	PART NUMBER	MASS kg/m	CLOSING PLUGS	H	A	C	h	a	L[2])	A_1	A_2	A_3	A_4	A_5	A_6	A_7	A_8
KWVK 32 AL	0.17	TKVD 32	2.3	KA 8 TN	26	62	50	10	31.8	2,000	15.1	10.7	40.6	18	6.9	51.6	–	–
KWVK 42 AL	0.45	TKVD 42	5.54	KA 8 TN	35	87	75	18	42	2,000	22.5	16	55	24	9	75	31	25
KWVK 69 AL	1.1	TKVD 69	12.42	KA 11 TN	47	130	100	24	69	2,000	30.5	21	88	40	14.5	114	42.5	45

1) The usable load carrying capacity is influenced by the connections between the guidance elements and the adjacent construction.

2) Maximum length L of a single piece guideway; longer guideways are supplied as multi-piece guideways and are marked accordingly.

3) Dimensions C_5 and C_6 are dependent on the length of the guideway.

4) If there is a possibility of settling, the fixing screws should be secured against rotation.

DIAMETERS AND TIGHTENING TORQUES FOR THREADS AND SCREWS[4])					
PART NUMBER	K_1 for screws to DIN 912-12.9		K_2 for screws to DIN 7 984-8.8		K_4 for screws to DIN 913
		Nm max.		Nm max.	
KWVK 32 AL	M3	2.5	M3	0.6	M3
KWVK 42 AL	M3	2.5	M4	2.1	M4
KWVK 69 AL	M5	10	M6	4.8	M6

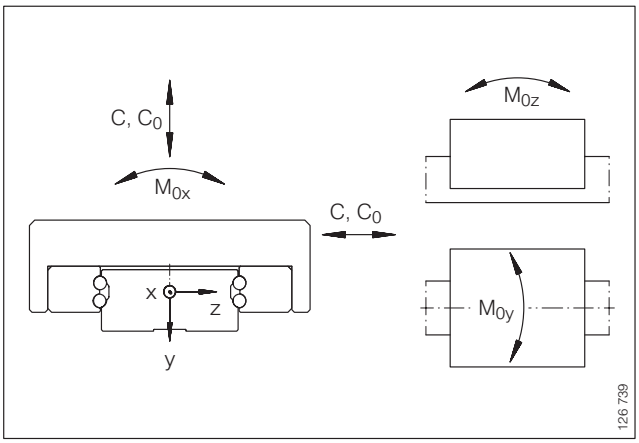

Load directions

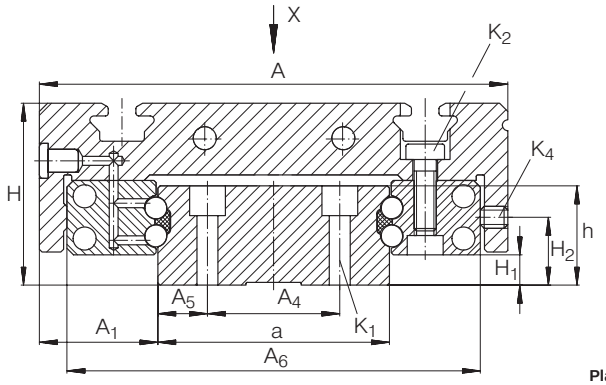

KWVK..AL on TKVD

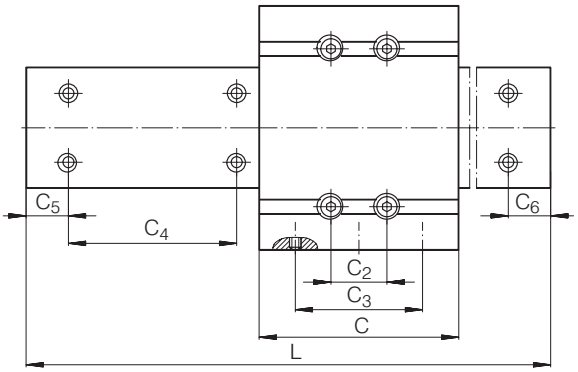

Plan view X
(rotated through 90°)

											LOAD CARRYING CAPACITY[1]				
											BASIC LOAD RATINGS		MOMENT RATINGS		
C_2	C_3	C_4	C_5[3]		C_6[3]		d	H_1	H_2	h_1	C	C_0	M_{0x}	M_{0y}	M_{0z}
			min.	max.	min.	max.					kN	kN	kN	kN	kN
15	25	40	5	35	5	35	4.2	0.5	6	7.5	5.7	10.6	203	51	51
20	40	60	5	55	5	55	4.2	5.5	12	8	13.5	26	648	211	211
35	55	60	7	53	7	53	4.2	7.5	17	11	26	46.5	1872	412	492

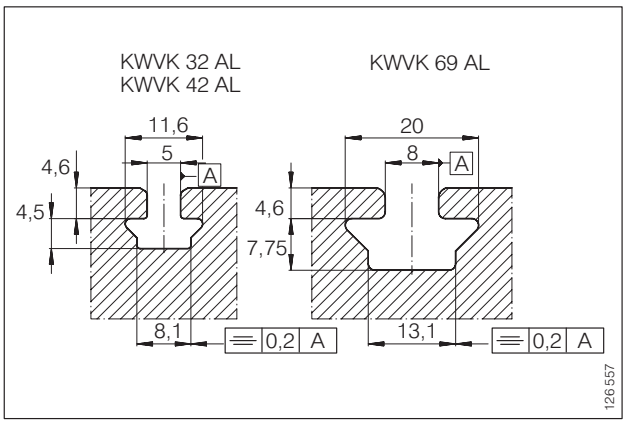

Detail X

KWVK 32 AL

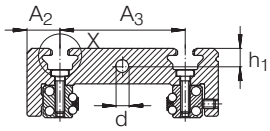

KWVK 42 AL

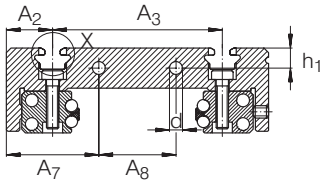

KWVK 69 AL

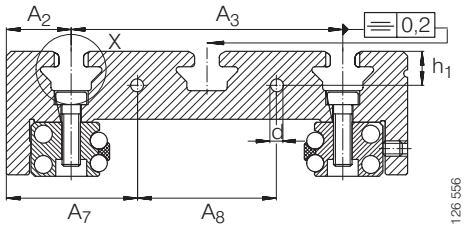

Cross-section of carriages KWVK..AL

Miniature Linear Recirculating Ball Bearing And Guideway Assemblies
KUME SERIES

For details on part numbers, descriptive suffixes and various technical references, please refer to front of this section.
For engineering or technical information contact your local sales representative or call Distributor Sales (800)523-6572 or Linear Sales (800)462-3399.

DIMENSION TABLE · Dimensions in mm													
UNIT	CARRIAGE		GUIDEWAY		CLOSING PLUG	DIMENSIONS				MOUNTING DIMENSIONS			
PART NUMBER	PART NUMBER	MASS kg	PART NUMBER	MASS kg/m		L[1])	H	A	C	A_1	A_2	a −0.005 −0.05	a_3
KUME 9	KWME 9	0.016	TKMD 9	0.31	–	280	10	20	29.15	5.5	15	9	2.5
KUME 12	KWME 12	0.036	TKMD 12	0.56	–	470	13	27	34.3	7.5	20	12	3.5
KUME 15	KWME 15	0.06	TKMD 15	1.1	KA 8 TN	1200	16	32	42	8.5	25	15	3.5

1) Maximum length L of single piece guideway;
longer guideways are supplied as multi-piece guideways and are marked accordingly.

2) Dimensions C_5 and C_6 are dependent on the guideway length.

3) If there is a possibility of settling, the fixing screws should be secured against rotation.

DIAMETERS AND TIGHTENING TORQUES FOR THREADS AND SCREWS[3])				
PART NUMBER	K_1 for screws to DIN 912-12.9		K_2 for screws to DIN 912-12.9	
		Nm max.		Nm max.
KUME 9	M2	1	M2	0.5
KUME 12	M3	2.5	M3	1.5
KUME 15	M3	2.5	M3	1.5

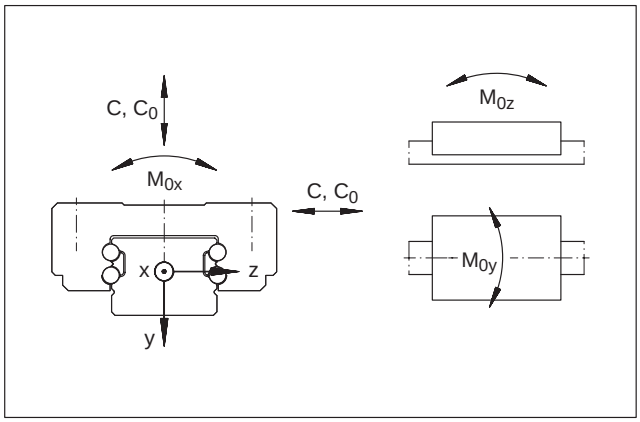

Load directions

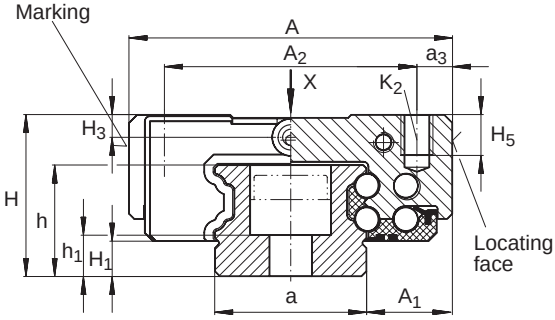

KUME 15

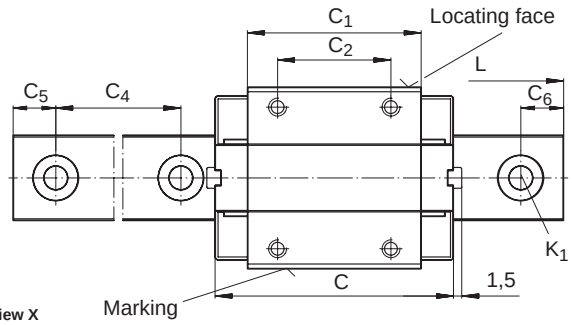

KUME 15, plan view X (rotated through 90°)

											LOAD CARRYING CAPACITY				
											BASIC LOAD RATINGS		MOMENT RATINGS		
C_1	C_2	C_4	C_5 2)		C_6 2)		H_1	H_5	h	h_1	C	C_0	M_{0x}	M_{0y}	M_{0z}
			min.	max.	min.	max.					N	N	Nm	Nm	Nm
18.35	13	20	5	15	5	15	2.25	2.5	5.5	2.5	1,340	2,060	8.8	5.8	5.8
22	15	25	5	20	5	20	3.05	3.5	7.5	3	2,150	3,200	20.8	11.3	11.3
30.6	20	40	6	34	6	34	3.5	4.0	11	4.1	3,750	6,800	65	33	33

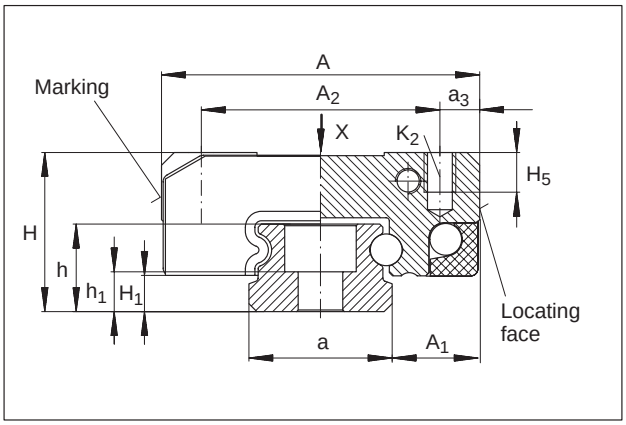

KUME 9, KUME 12

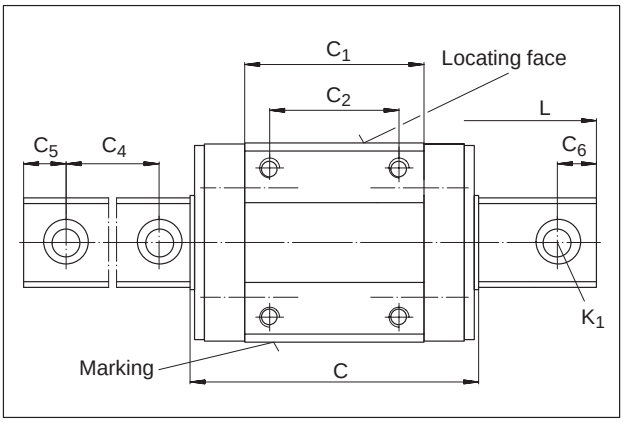

KUME 9, KUME 12, plan view X (rotated through 90°)

Track Roller Linear Guidance Systems With Hollow Section Carriage

LFCL SERIES

And Guideways

LFS,LFS..C,LFS..CE,LFS..N SERIES

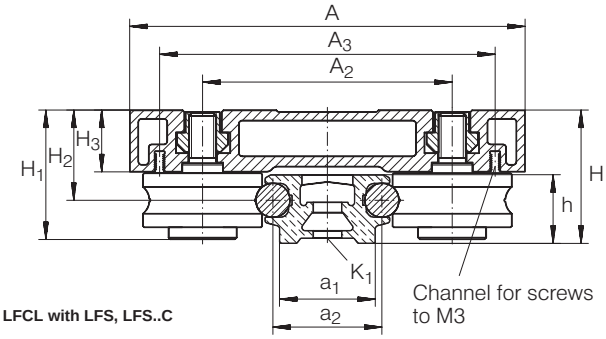

LFCL with LFS, LFS..C

For details on part numbers, descriptive suffixes and various technical references, please refer to front of this section.
For engineering or technical information contact your local sales representative or call Distributor Sales (800)523-6572 or Linear Sales (800)462-3399.

DIMENSION TABLE · Dimensions in mm

CARRIAGE[1])	MASS	CONTAINS TRACK ROLLER	GUIDEWAYS	MASS	DIMENSIONS						MOUNTING DIMENSIONS		
					CARRIAGE			GUIDEWAY					
					H	A	C	h	a	L[2])	A_1	A_2	A_3
	≈ g			≈ g/m									
LFCL 25	440	LFR 50/8 KDD	LFS 25	1,100	32	80	110	15	25	2,000	47	47	69
LFCL 25	440	LFR 50/8 KDD	LFS 25 N	1,000	32	80	110	15	25	2,000	47	47	69
LFCL 42	1,000	LFR 5201 KDD	LFS 42 C[1])	2,200	39	116	150	20	42	8,000	73	73	98.5
LFCL 42	1,000	LFR 5201 KDD	LFS 42 CE[1])	2,200	39	116	150	20	42	8,000	73	73	98.5
LFCL 86[7])	2,200	LFR 5301 KDD	LFS 86 C[1])	4,400	59	190	235	34	86	8,000	124	124	151.5

Corrosion-resistant executions: LFCL..VA, LFS..VA. Guideway without holes: LFS..OL.

1) The shape of the hollow sections is dependent on the size.
2) Maximum length of single-piece guideways, longer guideways are supplied as multi-piece guideways and are marked accordingly.
3) Dimensions C_5 and C_6 are dependent on the guideway length L.
4) For screws to DIN 912-8.8, washers to DIN 433 are required for maximum loading.
5) Recommended distance between screws.
6) For screws to DIN 931/933-8.8, special washers are included in the delivery.
7) Additional T-groove in center of carriage.
8) Load carrying capacity table is not valid for LFCL..VA and LFS..VA.

LOAD CARRYING CAPACITY TABLE[8])

PART NUMBER	LOADS				MOMENTS					
	$F_{y\,max}$ N	$F_{0y\,max}$ N	$F_{z\,max}$ N	$F_{0z\,max}$ N	$M_{x\,max}$ Nm	$M_{0x\,max}$ Nm	$M_{y\,max}$ Nm	$M_{0y\,max}$ Nm	$M_{z\,max}$ Nm	$M_{0z\,max}$ Nm
LFCL 25 with LFS 25	850	1,400	1,000	1,000	9	15	26	26	22	36
LFCL 25 with LFS 25 N	850	1,400	1,000	1,000	9	15	26	26	22	36
LFCL 42 with LFS 42 C	1,500	2,500	3,000	3,000	27	42	127	127	63	106
LFCL 42 with LFS 42 CE	1,500	2,500	3,500	3,500	27	42	148	148	63	106
LFCL 86 with LFS 86 C	2,400	4,000	4,500	4,500	74	124	360	360	192	320

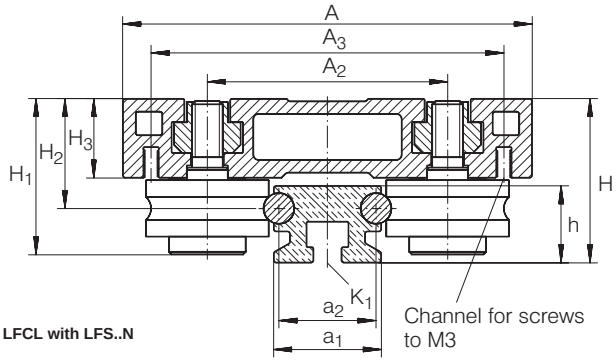

LFCL with LFS..N

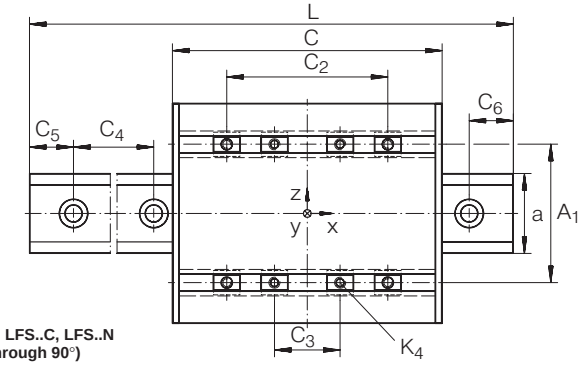

LFCL with LFS, LFS..C, LFS..N
(view rotated through 90°)

a_1	a_2	C_2	C_3		C_4	C_5[3]		C_6[3]		H_1	H_2	H_3	K_1[4]	K_4	MAXIMUM LENGTH OF MOUNTING SCREW FOR K_4
			min.	max.		min.	max.	min.	max.						
21	19	52	13	26	62.5	10	54	10	54	30.5	21.5	15.4	M5	M6	10
21	19	52	13	26	62.5[5]	–	–	–	–	30.5	21.5	15.4	M5[6]	M6	10
28	32	85	15	55	125	12	113	12	113	38.1	26.4	18	M8	M8	12
28	32	85	15	55	62.5	12	51	12	51	38.1	26.4	18	M8	M8	12
71	76	155	18	119	250	17	235	17	235	48.4	33.9	23.4	M12	M10	14

Track Roller Linear Guidance Systems With Open Carriage

LFL..SF SERIES

And Guideways

LFS, LFS..C, LFS..CE, LFS..N, LFS..NZZ, LFS..F, LFS..FE SERIES

For details on part numbers, descriptive suffixes and various technical references, please refer to front of this section.
For engineering or technical information contact your local sales representative or call Distributor Sales (800)523-6572 or Linear Sales (800)462-3399.

DIMENSION TABLE · Dimensions in mm

CARRIAGE	MASS	CONTAINS TRACK ROLLER	GUIDEWAYS	MASS	DIMENSIONS						MOUNTING DIMENSIONS				
					CARRIAGE			GUIDEWAY							
					H	A	C	h	a	L[1])	A_1	A_2	A_3	a_1	a_2
	≈g			≈g/m							±0.2				
LFL 20 SF	160	LFR 50/5 KDD-4	LFS 20	600	22	55	50	12.2	20	2,000	40	34	–[8])	17	16
LFL 32 SF	400	LFR 50/8 KDD	LFS 32 C	1,100	35.5	80	90	20	32	6,000	59	54	56	24	26
LFL 32 SF	400	LFR 50/8 KDD	LFS 32 CE	1,100	35.5	80	90	20	32	6,000	59	54	56	24	26
LFL 32 SF	400	LFR 50/8 KDD	LFS 32 F	1,000	25.5	80	90	10	32	4,000	59	54	56	–	26
LFL 32 SF	400	LFR 50/8 KDD	LFS 32 N	1,400	35.5	80	90	20	32	6,000	59	54	56	24	26
LFL 52 SF	1,000	LFR 5201 KDD	LFS 52 C	3,000	54.3	120	100	34	52	8,000	90	83	65	40	42
LFL 52 SF	1,000	LFR 5201 KDD	LFS 52 CE	3,000	54.3	120	100	34	52	8,000	90	83	65	40	42
LFL 52 SF	1,000	LFR 5201 KDD	LFS 52 F	3,000	44.2	120	100	18	52	4,000	90	83	65	–	42
LFL 52 SF	1,000	LFR 5201 KDD	LFS 52 NZZ	3,900	54.3	120	100	34	52	8,000	90	83	65	46.5	42
LFL 52 E SF	1,900	LFR 5301 KDD	LFS 52 CE	3,000	60.4	135	150	34	52	8,000	105	90	65	40	42
LFL 52 E SF	1,900	LFR 5301 KDD	LFS 52 FE	3,000	44.2	135	150	18	52	4,000	105	90	65	40	42
LFL 52 SF	1,000	LFR 5201 KDD	LFS 52	4,400	54.3	120	100	34	52	8,000	90	83	65	40	42
LFL 52 SF	1,000	LFR 5201 KDD	LFS 52 E	4,400	54.3	120	100	34	52	8,000	90	83	65	40	42

LOAD CARRYING CAPACITY TABLE[7])

PART NUMBER	LOADS				MOMENTS					
	$F_{y\,max}$ N	$F_{0y\,max}$ N	$F_{z\,max}$ N	$F_{0z\,max}$ N	$M_{x\,max}$ Nm	$M_{0x\,max}$ Nm	$M_{y\,max}$ Nm	$M_{0y\,max}$ Nm	$M_{z\,max}$ Nm	$M_{0z\,max}$ Nm
LFL 20 SF with LFS 20	400	660	700	700	4	6	8.6	8.6	4.8	8
LFL 32 SF with LFS 32 C	850	1,400	930	930	11	18	27	27	26	43
LFL 32 SF with LFS 32 CE	850	1,400	1,300	1,300	11	18	39	39	26	43
LFL 32 SF with LFS 32 F	850	1,400	1,000	1,000	11	18	30	30	26	43
LFL 32 SF with LFS 32 N	850	1,400	1,000	1,000	11	18	30	30	26	43
LFL 52 SF with LFS 52 C	1,500	2,500	2,000	2,000	33	52	60	60	47	78
LFL 52 SF with LFS 52 CE	1,500	2,500	3,500	3,500	33	52	105	105	47	78
LFL 52 SF with LFS 52 F	1,500	2,500	2,500	2,500	33	52	75	75	47	78
LFL 52 SF with LFS 52 NZZ	1,500	2,500	2,500	2,500	33	52	75	75	47	78
LFL 52 E SF with LFS 52 CE	2,400	4,000	4,000	4,000	51	84	208	208	126	210
LFL 52 E SF with LFS 52 FE	2,400	4,000	4,000	4,000	51	84	208	208	126	210

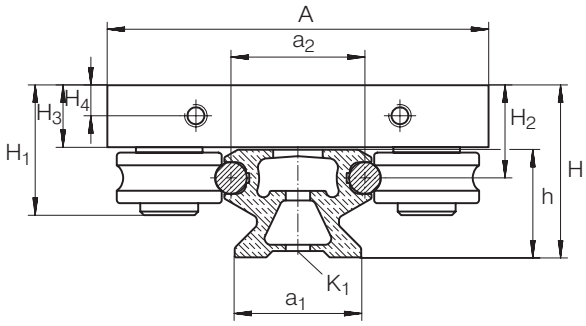

LFL..SF with LFS, LFS..C, LFS..CE

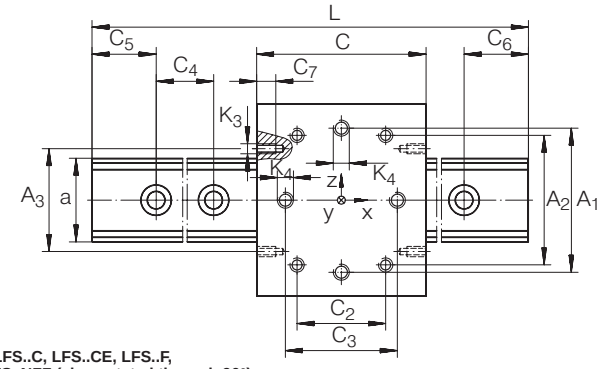

LFL..SF with LFS, LFS..C, LFS..CE, LFS..F, LFS..FE, LFS..N, LFS..NZZ (view rotated through 90°)

C_2	C_3	C_4	C_5 2)		C_6 2)		C_7	H_1	H_2	H_3	H_4	K_1 3)	K_3	K_4	M_A 4)	
	±0.2		min.	max.	min.	max.		max.							STANDARD Nm	CORROSION–RESISTANT Nm
24	38	62.5	9	54	9	54	–	20.5	13	9	–	M4	M3 8)	M5	2.5	2.5
60	70	125	11	116	11	116	7	31.9	20.4	14	7	M6	M6	M8	15	12
60	70	62.5	11	52	11	52	7	31.9	20.4	14	7	M6	M6	M8	15	12
60	70	125	11	116	11	116	7	31.9	20.4	14	7	M6 9)	M6	M8	15	12
60	70	125 5)	–	–	–	–	7	31.9	20.4	14	7	M6 6)	M6	M8	15	12
60	70	250	17	235	17	235	12	46.3	29.2	19.5	9.75	M10	M6	M10	40	23
60	70	125	17	110	17	110	12	46.3	29.2	19.5	9.75	M10	M6	M10	40	23
60	70	250	17	235	17	235	12	46.3	29.2	19.5	9.75	M10 9)	M6	M10	40	23
60	70	250 5)	–	–	–	–	12	46.3	29.2	19.5	9.75	M10 6)	M6	M10	40	23
105	110	125	17	110	17	110	12	53.7	35.2	24	12	M10	M6	M10	40	23
105	110	125	17	110	17	110	12	53.7	35.2	24	12	M10	M6	M10	40	23
60	70	250	17	235	17	235	12	53.5	29.2	19.5	9.75	M10	M6	M10	40	23
60	70	125	17	110	17	110	12	53.5	29.2	19.5	9.75	M10	M6	M10	40	23

Corrosion-resistant executions: LFL..VA, LFS..VA. Guideway without holes: LFS..OL.

1) Maximum length of single-piece guideways, longer guideways are supplied as multi-piece guideways and are marked accordingly.

2) Dimensions C_5 and C_6 are dependent on the guideway length L.

3) For screws to DIN 912-8.8, washers to DIN 433 are required for maximum loading.

4) Tightening torque for LFZ and LFE, bolts LFZ are supplied tightened to M_A.

5) Recommended distance between screws.

6) For screws to DIN 931/933-8.8, special washers are included in the delivery.

7) Load carrying capacity table is not valid for LFL..VA and LFS..VA.

8) Holes for mounting from below for AB LFL 20.

9) Countersink depth for screws to DIN 6 912.

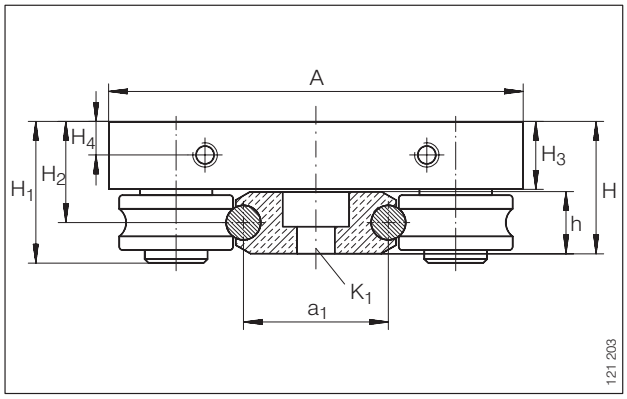

LFL..SF with LFS..F, LFS..FE

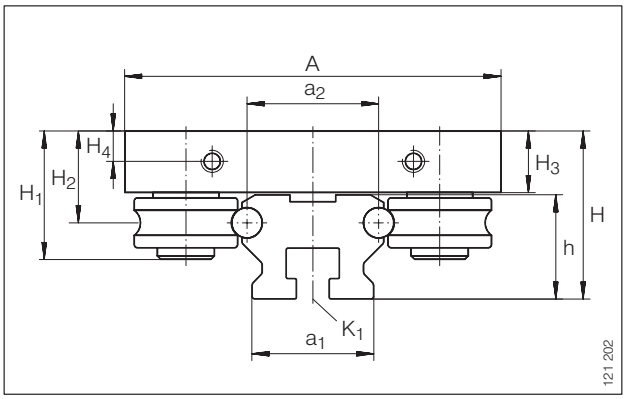

LFL..SF with LFS..N, LFS..NZZ

Track Roller Linear Guidance Systems With Compact Carriage

LFKL..SF SERIES

And Guideways

LFS, LFS..C, LFS..CE, LFS..CEE, LFS..F, LFS..FE, LFS..N, LFS..NZZ SERIES

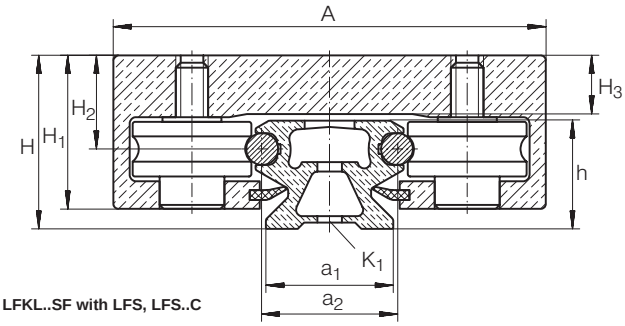

LFKL..SF with LFS, LFS..C

For details on part numbers, descriptive suffixes and various technical references, please refer to front of this section.
For engineering or technical information contact your local sales representative or call Distributor Sales (800)523-6572 or Linear Sales (800)462-3399.

DIMENSION TABLE · Dimensions in mm

CARRIAGE	MASS	CONTAINS TRACK ROLLER	GUIDEWAYS	MASS	DIMENSIONS						MOUNTING DIMENSIONS			
					CARRIAGE			GUIDEWAY						
					H	A	C	h	a	L[1])	A_1	A_2	a_1	a_2
	≈ g			≈ g/m										
LFKL 20 SF[5])	200	LFR 50/5 KDD-4	LFS 20	600	22	56	69	12.2	20	2,000	39	34	17	16
LFKL 25 SF[5])	300	LFR 50/5 KDD	LFS 25	1,100	25	65	85	15	25	2,000	50	40	21	19
LFKL 25 SF[5])	300	LFR 50/5 KDD	LFS 25 N	1,000	25	65	85	15	25	2,000	50	40	21	19
LFKL 32 SF	700	LFR 50/8 KDD	LFS 32 C	1,100	35.5	86	112	20	32	6,000	59	54	24	26
LFKL 32 SF	700	LFR 50/8 KDD	LFS 32 CE	1,100	35.5	86	112	20	32	6,000	59	54	24	26
LFKL 32 SF	700	LFR 50/8 KDD	LFS 32 F	1,000	25.5	86	112	10	32	4,000	59	54	–	26
LFKL 32 SF	700	LFR 50/8 KDD	LFS 32 N	1,400	35.5	86	112	20	32	6,000	59	54	24	26
LFKL 52 SF	1,500	LFR 5201 KDD	LFS 52 C	3,000	54.3	130	136	34	52	8,000	90	83	40	42
LFKL 52 SF	1,500	LFR 5201 KDD	LFS 52 CE	3,000	54.3	130	136	34	52	8,000	90	83	40	42
LFKL 52 SF	1,500	LFR 5201 KDD	LFS 52 F	3,000	38.2	130	136	18	52	4,000	90	83	–	42
LFKL 52 SF	1,500	LFR 5201 KDD	LFS 52 NZZ	3,900	54.3	130	136	34	52	8,000	90	83	46.5	42
LFKL 52 E SF	2,900	LFR 5301 KDD	LFS 52 CE	3,000	60.4	145	186	34	52	8,000	105	90	40	42
LFKL 52 E SF	2,900	LFR 5301 KDD	LFS 52 FE	3,000	38.2	145	186	18	52	4,000	105	90	–	42
LFKL 52 EE SF	3,900	LFR 5302 KDD	LFS 52 CEE	4,300	60.4	155	205	34	52	8,000	115	95.3	40	42

LOAD CARRYING CAPACITY TABLE[8])

PART NUMBER	LOADS				MOMENTS					
	$F_{y\,max}$ N	$F_{0y\,max}$ N	$F_{z\,max}$ N	$F_{0z\,max}$ N	$M_{x\,max}$ Nm	$M_{0x\,max}$ Nm	$M_{y\,max}$ Nm	$M_{0y\,max}$ Nm	$M_{z\,max}$ Nm	$M_{0z\,max}$ Nm
LFKL 20 SF with LFS 20	400	660	700	700	4	6	12	12	6.8	11.4
LFKL 25 SF with LFS 25	400	660	700	700	4	6	16	16	9	15
LFKL 25 SF with LFS 25 N	400	660	700	700	4	6	16	16	9	15
LFKL 32 SF with LFS 32 C	850	1,400	930	930	11	18	27	27	26	43
LFKL 32 SF with LFS 32 CE	850	1,400	1,300	1,300	11	18	39	39	26	43
LFKL 32 SF with LFS 32 F	850	1,400	1,000	1,000	11	18	30	30	26	43
LFKL 32 SF with LFS 32 N	850	1,400	1,000	1,000	11	18	30	30	26	43
LFKL 52 SF with LFS 52 C	1,500	2,500	2,000	2,000	33	52	60	60	47	78
LFKL 52 SF with LFS 52 CE	1,500	2,500	3,500	3,500	33	52	105	105	47	78
LFKL 52 SF with LFS 52 F	1,500	2,500	2,500	2,500	33	52	75	75	47	78
LFKL 52 SF with LFS 52 NZZ	1,500	2,500	2,500	2,500	33	52	75	75	47	78
LFKL 52 E SF with LFS 52 CE	2,400	4,000	4,000	4,000	51	84	208	208	126	210
LFKL 52 E SF with LFS 52 FE	2,400	4,000	4,500	4,500	51	84	236	236	126	210
LFKL 52 EE SF with LFS 52 CEE	4,800	8,000	6,500	6,500	101	166	390	390	288	480

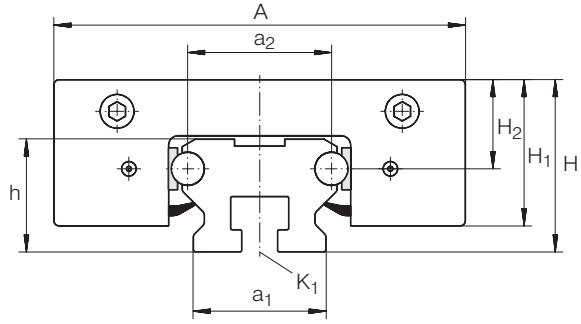

LFKL..SF with LFS..N

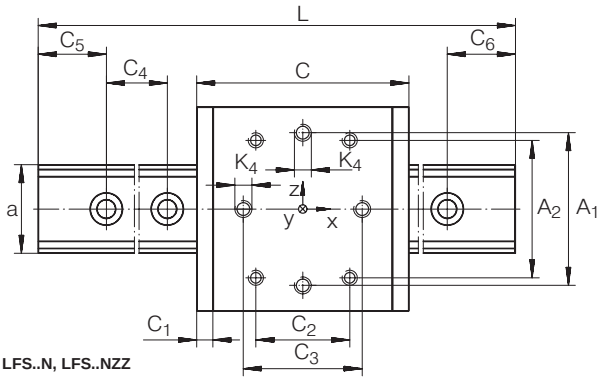

LFKL..SF with LFS, LFS..C, LFS..N, LFS..NZZ
(view rotated through 90°)

C_1	C_2	C_3	C_4	C_5 2)		C_6 3)		H_1	H_2	H_3	K_1 3)	K_4	M_A 4)	
				min.	max.	min.	max.						STANDARD Nm	CORROSION-RESISTANT Nm
5	34	49	62.5	9	54	9	54	20.5	13	8.7	M4	M5	2.5	2.5
5	45	60	62.5	10	54	10	54	23.5	14.4	9	M5	M5	2.5	2.5
5	45	60	62.5 6)	–	–	–	–	23.5	14.4	9	M5 7)	M5	2.5	2.5
7	60	70	125	11	116	11	116	32	20.5	14	M6	M8	15	12
7	60	70	62.5	11	52	11	52	32	20.5	14	M6	M8	15	12
7	60	70	125	11	116	11	116	32	20.5	14	M6 8)	M8	15	12
7	60	70	125 6)	–	–	–	–	32	20.5	14	M6 7)	M8	15	12
10	60	70	250	17	235	17	235	46.1	29.2	19.4	M10	M10	40	23
10	60	70	125	17	110	17	110	46.1	29.2	19.4	M10	M10	40	23
10	60	70	250	17	235	17	235	46.1	29.2	19.4	M10	M10	40	23
10	60	70	250 6)	–	–	–	–	46.1	29.2	19.4	M10 7)	M10	40	23
10	105	110	125	17	110	17	110	53.8	35.3	24	M10	M10	40	23
10	105	110	125	17	110	17	110	53.8	35.3	24	M10 8)	M10	40	23
10	120	140	62.5	17	49	17	49	55	35.3	24	M10	M12	70	39

Corrosion-resistant executions: LFKL..VA, LFS..VA.
Guideway without holes: LFS..OL.

1) Maximum length of single-piece guideways, longer guideways are supplied as multi-piece guideways and are marked accordingly.

2) Dimensions C_5 and C_6 are dependent on the guideway length L

3) For screws to DIN 912-8.8, washers to DIN 433 are required for maximum loading; for guideways LFS..F and LFS..FE, countersink depth for screws to DIN 6 912.

4) Tightening torque for track roller bolts, concentric bolts supplied tightened to M_A.

5) Without lubricating nipples, relubrication possible via end face holes.

6) Recommended distance between screws.

7) For screws to DIN 931/933-8.8, special washers are included in the delivery.

8) Load carrying capacity table is not valid for LFKL..VA and LFS..VA.

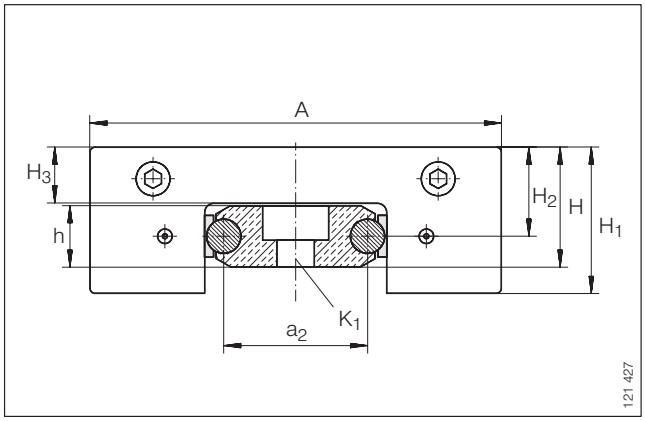

LFKL..SF with LFS..F

Track Roller Linear Guidance Systems With Bogie Carriage
LFDL SERIES
And Guideways
LFS..R SERIES

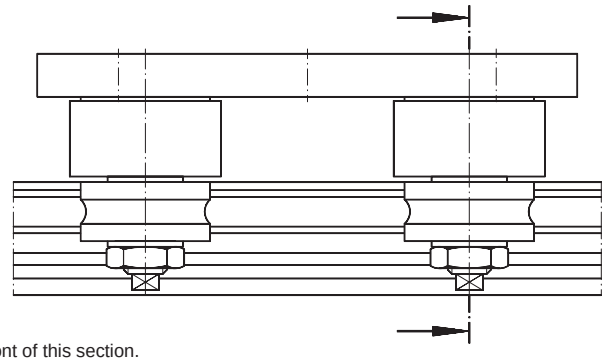

LFDL with LFS..R

For details on part numbers, descriptive suffixes and various technical references, please refer to front of this section.
For engineering or technical information contact your local sales representative or call Distributor Sales (800)523-6572 or Linear Sales (800)462-3399.

DIMENSION TABLE · Dimensions in mm										
CARRIAGE	MASS	CONTAINS TRACK ROLLER	GUIDEWAYS	MASS	DIMENSIONS					
			CURVED ELEMENT		CARRIAGE			GUIDEWAY		
					H	A	C	h	a	β
	≈ g			≈ g						
LFDL 32	1,500	LFR 50/8 KDD	LFS 32 R-100/ 90	500	43.5	80	100	20	32	90●
LFDL 32	1,500	LFR 50/8 KDD	LFS 32 R-100/180	1,000	43.5	80	100	20	32	180●
LFDL 32	1,500	LFR 50/8 KDD	LFS 32 R-100/360	2,000	43.5	80	100	20	32	360●
LFDL 32	1,500	LFR 50/8 KDD	LFS 32 R-300/ 90	1,700	43.5	80	100	20	32	90●
LFDL 32	1,500	LFR 50/8 KDD	LFS 32 R-300/180	3,400	43.5	80	100	20	32	180●
LFDL 32	1,500	LFR 50/8 KDD	LFS 32 R-300/360	6,800	43.5	80	100	20	32	360●
LFDL 32	1,500	LFR 50/8 KDD	LFS 32 R-500/ 90	2,900	43.5	80	100	20	32	90●
LFDL 32	1 500	LFR 50/8 KDD	LFS 32 R-500/180	5,800	43.5	80	100	20	32	180●
LFDL 32	1 500	LFR 50/8 KDD	LFS 32 R-500/360	11,600	43.5	80	100	20	32	360●
LFDL 52	1,500	LFR 5201 KDD	LFS 52 R-150/ 90	2,000	66.1	120	150	34	52	90●
LFDL 52	2,500	LFR 5201 KDD	LFS 52 R-150/180	4,000	66.1	120	150	34	52	180●
LFDL 52	2,500	LFR 5201 KDD	LFS 52 R-150/360	8,000	66.1	120	150	34	52	360●
LFDL 52	2,500	LFR 5201 KDD	LFS 52 R-300/ 90	4,500	66.1	120	150	34	52	90●
LFDL 52	2,500	LFR 5201 KDD	LFS 52 R-300/180	9,000	66.1	120	150	34	52	180●
LFDL 52	2,500	LFR 5201 KDD	LFS 52 R-300/360	18,000	66.1	120	150	34	52	360●
LFDL 52	2,500	LFR 5201 KDD	LFS 52 R-500/ 90	7,800	66.1	120	150	34	52	90●
LFDL 52	2,500	LFR 5201 KDD	LFS 52 R-500/180	15,600	66.1	120	150	34	52	180●
LFDL 52	2,500	LFR 5201 KDD	LFS 52 R-500/360	31,200	66.1	120	150	34	52	360●

Corrosion-resistant executions: LFDL..VA, LFS..R VA. Guideway without holes: LFS..R OL.

1) For screws to DIN 912-8.8.

2) Number of holes on reference circle r_1.

3) Tightening torque for bolts LFZ and LFE, bolts LFZ are supplied tightened to M_A.

LOAD CARRYING CAPACITY TABLE										
PART NUMBER	LOADS				MOMENTS					
	$F_{y\,max}$ N	$F_{0y\,max}$ N	$F_{z\,max}$ N	$F_{0z\,max}$ N	$M_{x\,max}$ Nm	$M_{0x\,max}$ Nm	$M_{y\,max}$ Nm	$M_{0y\,max}$ Nm	$M_{z\,max}$ Nm	$M_{0z\,max}$ Nm
LFDL 32 with LFS 32 R-100/ 90	850	1,400	1,000	1,000	11	18	13	13	11	18
LFDL 32 with LFS 32 R-100/180	850	1,400	1,000	1,000	11	18	13	13	11	18
LFDL 32 with LFS 32 R-300/ 90	850	1,400	1,000	1,000	11	18	13	13	11	18
LFDL 32 with LFS 32 R-300/180	850	1,400	1,000	1,000	11	18	13	13	11	18
LFDL 32 with LFS 32 R-500/ 90	850	1,400	1,000	1,000	11	18	13	13	11	18
LFDL 32 with LFS 32 R-500/180	850	1,400	1,000	1,000	11	18	13	13	11	18
LFDL 52 with LFS 52 R-150/ 90	1,500	2,500	2,500	2,500	31	31	41	41	25	25
LFDL 52 with LFS 52 R-150/180	1,500	2,500	2,500	2,500	31	31	41	41	25	25
LFDL 52 with LFS 52 R-300/ 90	1,500	2,500	2,500	2,500	31	31	41	41	25	25
LFDL 52 with LFS 52 R-300/180	1,500	2,500	2,500	2,500	31	31	41	41	25	25
LFDL 52 with LFS 52 R-500/ 90	1,500	2,500	2,500	2,500	31	31	41	41	25	25
LFDL 52 with LFS 52 R-500/180	1,500	2,500	2,500	2,500	31	31	41	41	25	25

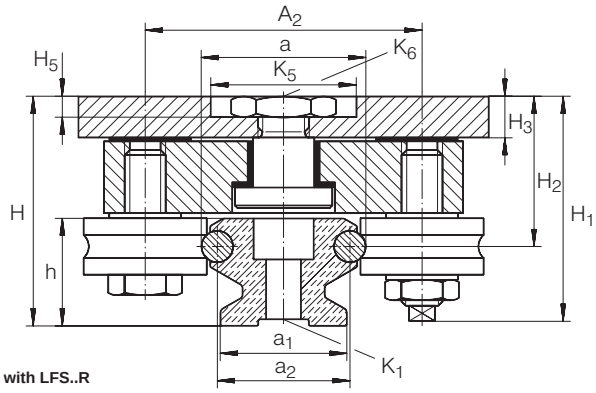

LFDL with LFS..R

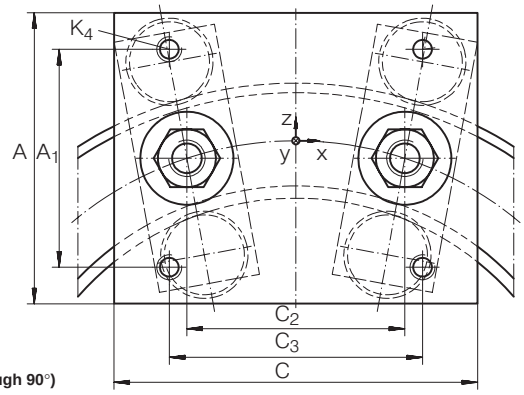

LFDL with LFS..R
(view rotated through 90°)

MOUNTING DIMENSIONS

A_1	A_2	a_1	a_2	C_2	C_3	H_1	H_2	H_3	H_5	K_1 1)	K_4	K_5	K_6	x 2)	r_1	α	α/2	M_A 3) STANDARD Nm	M_A 3) CORROSION RESISTANT Nm
60	54	24	26	60	70	43	29.2	9	5	M6	M8	30	M10	3	84	30	15	15	12
60	54	24	26	60	70	43	29.2	9	5	M6	M8	30	M10	6	84	30	15	15	12
60	54	24	26	60	70	43	29.2	9	5	M6	M8	30	M10	12	84	30	–	15	12
60	54	24	26	60	70	43	29.2	9	5	M6	M8	30	M10	4	284	22.5	11.25	15	12
60	54	24	26	60	70	43	29.2	9	5	M6	M8	30	M10	8	284	22.5	11.25	15	12
60	54	24	26	60	70	43	29.2	9	5	M6	M8	30	M10	12	284	22.5	–	15	12
60	54	24	26	60	70	43	29.2	9	5	M6	M8	30	M10	5	484	18	9	15	12
60	54	24	26	60	70	43	29.2	9	5	M6	M8	30	M10	10	484	18	9	15	12
60	54	24	26	60	70	43	29.2	9	5	M6	M8	30	M10	12	484	18	–	15	12
90	83	40	42	76	90	65.3	41	11	6	M10	M10	34	M12	3	124	30	15	40	23
90	83	40	42	76	90	65.3	41	11	6	M10	M10	34	M12	6	124	30	15	40	23
90	83	40	42	76	90	65.3	41	11	6	M10	M10	34	M12	12	124	30	–	40	23
90	83	40	42	76	90	65.3	41	11	6	M10	M10	34	M12	4	274	22.5	11.25	40	23
90	83	40	42	76	90	65.3	41	11	6	M10	M10	34	M12	8	274	22.5	11.25	40	23
90	83	40	42	76	90	65.3	41	11	6	M10	M10	34	M12	12	274	22.5	–	40	23
90	83	40	42	76	90	65.3	41	11	6	M10	M10	34	M12	5	474	18	9	40	23
90	83	40	42	76	90	65.3	41	11	6	M10	M10	34	M12	10	474	18	9	40	23
90	83	40	42	76	90	65.3	41	11	6	M10	M10	34	M12	12	474	18	–	40	23

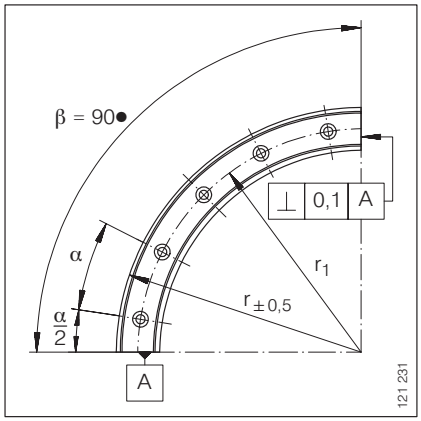

LFS..R-../90

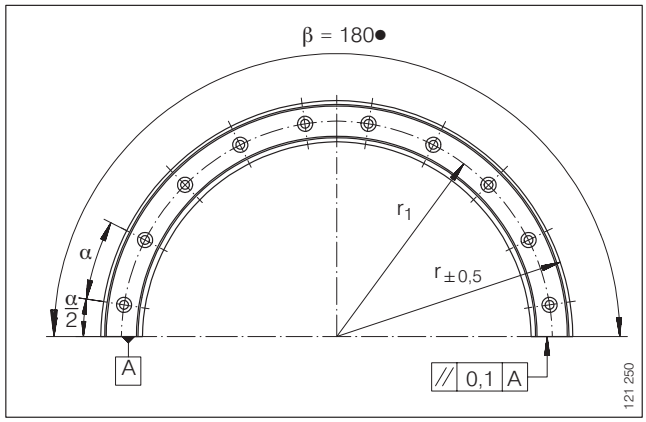

LFS..R-../180

Track Rollers
LFR SERIES

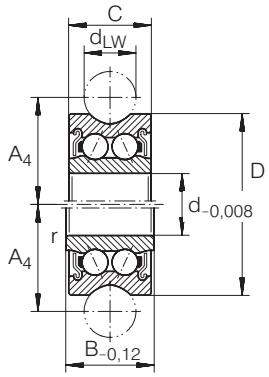

For details on part numbers, descriptive suffixes and various technical references, please refer to front of this section.
For engineering or technical information contact your local sales representative or call Distributor Sales (800)523-6572 or Linear Sales (800)462-3399.

DIMENSION TABLE – TRACK ROLLER · Dimensions in mm													
PART NUMBER		MASS	DIMENSIONS							BASIC LOAD RATINGS			
										AS TRACK ROLLER			
		≈ g	A_4	B	C	D	d	d_{LW}	r to DIN 620	dyn. C_w (10^5m) N	stat. C_{0w} N	F_{rperm} N	F_{0rperm} N
LFR 50/5	KDD-4	10	9	8	7	16	5	4	0.2	1,200	860	1,300	1,780
LFR 50/5	KDD	10	10.5	8	7	17	5	6	0.2	1,270	890	1,300	1,780
LFR 50/8	KDD	20	14	–	11	24	8	6	0.3	3,670	2,280	1,300	4,560
LFR 5201	KDD	80	20.65	–	15.9	35	12	10	0.6	8,500	5,100	5,100	10,200
LFR 5301	KDD	100	24	–	19	42	12	10	0.6	13,000	7,700	7,500	14,200
LFR 5201-12	KDD	80	21.75	–	15.9	35	12	12	0.6	8,400	5,000	5,100	10,000
LFR 5302	KDD	170	26.65	–	19	47	15	10	1	16,200	9 200	6 200	18 400
LFR 5204-16	KDD	230	31.5	22.6	20.6	52	20	16	1	16,800	9,500	12,100	16,600
LFR 5206-20	KDD	250	41	25.8	23.8	72	25	20	1	24,500	16,600	20,700	33,200
LFR 5206-25	KDD	250	43.5	25.8	23.8	72	25	25	1	29,200	16,400	23,100	32,800
LFR 5207-30	KDD	660	51	29	27	80	30	30	1	38,000	20,800	21,400	36,200
LFR 5208-40	KDD	1,360	62.5	38	36	98	40	40	1.1	54,800	29,000	55,000	58,000

Track rollers LFR with an outside diameter of 52 mm or greater can be relubricated through the inner ring.

Track rollers in corrosion-resistant execution: LFR..NPP VA.

1) Available on request.

Bolts
LFZ SERIES

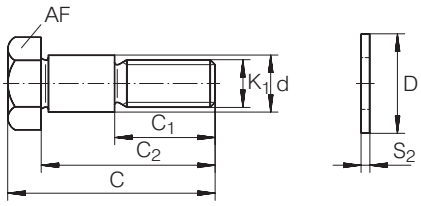

For details on part numbers, descriptive suffixes and various technical references, please refer to front of this section.
For engineering or technical information contact your local sales representative or call Distributor Sales (800)523-6572 or Linear Sales (800)462-3399.

DIMENSION TABLE – CONCENTRIC BOLTS · Dimensions in mm

PART NUMBER	MASS ≈ g	DIMENSIONS								SUITABLE FOR TRACK ROLLER
		C	C_1	C_2	D	d	K_1	S_2	AF	
LFZ 5[1])	10	19.5	9.5	16	–[1])	5	M4	–[1])	3[2])	LFR 50/5..-4
LFZ 5[1])	10	19.5	9.5	16	–[1])	5	M4	–[1])	3[2])	LFR 50/5
LFZ 8	20	28.3	14	24.3	14	8	M8	1	13	LFR 50/8
LFZ 12	40	43	22	36	21	12	M10	1.8	17	LFR 5201
LFZ 12/M12	60	50.8	24	43.8	19	12	M12	1.8	17	LFR 5301
LFZ 15	60	50.8	26	43.8	21	15	M12	1.8	19	LFR 5302

Concentric bolts in corrosion-resistant execution: LFZ..VA.
Washers included in the delivery.

[1]) No washers required.
[2]) Hexagonal socket. Outside diameter of head 10 mm.

Bolts
LFE SERIES

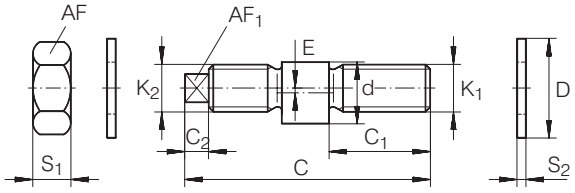

For details on part numbers, descriptive suffixes and various technical references, please refer to front of this section.
For engineering or technical information contact your local sales representative or call Distributor Sales (800)523-6572 or Linear Sales (800)462-3399.

DIMENSION TABLE – ECCENTRIC BOLTS · Dimensions in mm

PART NUMBER	MASS ≈ g	DIMENSIONS												SUITABLE FOR TRACK ROLLER
		C	C_2	C_1	D	d	E	K_1	K_2	S_1	S_2	AF	AF_1	
LFE 5-0.5[1])	10	20.5	–	9	–[1])	5	0.5	M4	M4	2.9	–[1])	7	2[2])	LFR 50/5..-4
LFE 5-0.5[1])	10	20.5	–	9	–[1])	5	0.5	M4	M4	2.9	–[1])	7	2[2])	LFR 50/5
LFE 8-1	20	33.2	3.5	13.7	14	8	1	M8	M8 × 0.75	4	1	13	5	LFR 50/8
LFE 12-1	40	50	5	19.5	21	12	1	M10	M10	8	1.8	17	6	LFR 5201
LFE 12-1/M12	60	57	5	24	19	12	1	M12	M12	6.5	1.8	17	6	LFR 5301
LFE 15-1	60	57	5	24	21	15	1	M12	M12	6.5	1.8	19	6	LFR 5302

Eccentric bolts in corrosion-resistant execution: LFE..VA.
The nut and washer are included in the delivery.

1) No washers required.
2) Hexagonal socket.

Bolts

LFZ..A1, LFE..A1 SERIES

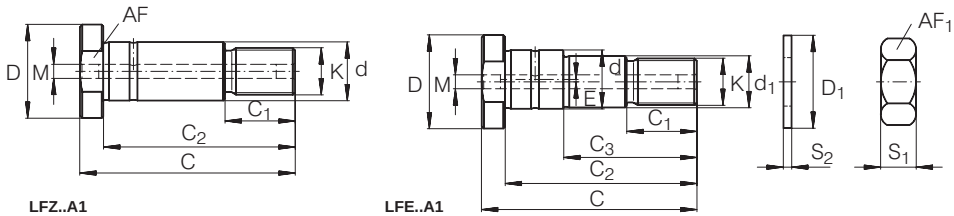

For details on part numbers, descriptive suffixes and various technical references, please refer to front of this section.
For engineering or technical information contact your local sales representative or call Distributor Sales (800)523-6572 or Linear Sales (800)462-3399.

DIMENSION TABLE · Dimensions in mm																	
PART NUMBER	MASS	DIMENSIONS															SUITABLE FOR TRACK ROLLER
	g	d	C	C_1	C_2	C_3	D	D_1	d_1 h9	E	K	M	S_1	S_2	AF	AF_1	
LFZ 12× 45 A1	40	12	50	16	45	–	20	21	–	–	M10×1.5	–	8	2	17	17	LFR 5201-12 KDD
LFE 12× 45 A1	40	12	50	16	45	30	20	21	10	0.75	M10×1.5	–	8	2	17	17	LFR 5201-12 KDD
LFZ 20× 67 A1	200	20	75	23	67	–	30	30	–	–	M16×1.5	5.9	13	3	27	24	LFR 5204-16 KDD
LFE 20× 67 A1	200	20	75	23	67	45	30	30	17	1	M16×1.5	5.9	13	3	27	24	LFR 5204-16 KDD
LFZ 25× 82 A1	400	25	92	30	82	–	40	37	–	–	M20×1.5	5.9	16	3	36	30	LFR 5206-20, 25 KDD
LFE 25× 82 A1	400	25	92	30	82	57	40	37	22	1	M20×1.5	5.9	16	3	36	30	LFR 5206-20 25 KDD
LFZ 30× 95 A1	620	30	107	32	95	–	45	44	–	–	M24×1.5	5.9	19	4	41	36	LFR 5207-30 KDD
LFE 30× 95 A1	620	30	107	32	95	67	45	44	27	1	M24×1.5	5.9	19	4	41	36	LFR 5207-30 KDD
LFZ 40×107 A1	1,100	40	117	42	107	–	55	56	36	–	M30×1.5	5.9	24	4	46	46	LFR 5208-40
LFE 40×107 A1	1,100	40	117	42	107	72	55	56	36	1	M30×1.5	5.9	24	4	46	46	LFR 5208-40

Bolts LFZ 40..A1 and LFE 40..A1 suitable for track roller LFR 5208 are available on request.
Bolts in corrosion-resistant execution: suffix VA.
The nut and washer are included in the delivery.

Guideways
LFS, LFS..C..,LFS..F.. SERIES

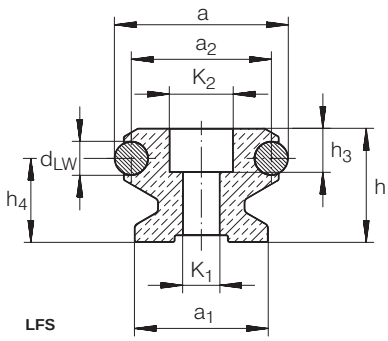

For details on part numbers, descriptive suffixes and various technical references, please refer to front of this section.
For engineering or technical information contact your local sales representative or call Distributor Sales (800)523-6572 or Linear Sales (800)462-3399.

DIMENSION TABLE · Dimensions in mm

PART NUMBER	MASS	DIMENSIONS			MOUNTING DIMENSIONS							
		a	h	L[1])	a_1	a_2	C_4	C_5[2])		C_6[2])		d_{LW}
	≈g/m							min.	max.	min.	max.	
LFS 20	600	20	12.2	2,000	17	16	62.5	9	54	9	54	4
LFS 25	1,100	25	15	2,000	21	19	62.5	10	54	10	54	6
LFS 32	1,600	32	20	6,000	24	26	125	11	116	11	116	6
LFS 32 E	1,600	32	20	6,000	24	26	62.5	11	52	11	52	6
LFS 32 C[4])	1,100	32	20	6,000	24	26	125	11	116	11	116	6
LFS 32 CE[4])	1,100	32	20	6,000	24	26	62.5	11	52	11	52	6
LFS 32 F	1,000	32	10	4,000	–	26	125	11	116	11	116	6
LFS 42 C[4])	2,200	42	20	8,000	28	32	125	12	113	12	113	10
LFS 42 CE[4])	2,200	42	20	8,000	28	32	62.5	12	51	12	51	10
LFS 42 F	1,000	42	15	4,000	–	32	125	12	51	12	51	10
LFS 52	4,400	52	34	8,000	40	42	250	17	235	17	235	10
LFS 52 E	4,400	52	34	8,000	40	42	125	17	110	17	110	10
LFS 52 EE	4,400	52	34	8,000	40	42	62.5	17	49	17	49	10
LFS 52 C[4])	3,000	52	34	8,000	40	42	250	17	235	17	235	10
LFS 52 CE[4])	3,000	52	34	8,000	40	42	125	17	110	17	110	10
LFS 52 CEE[4])	3,000	52	34	8,000	40	42	62.5	17	49	17	49	10
LFS 52 F	3,000	52	18	4,000	–	42	250	17	235	17	235	10
LFS 52 FE	3,000	52	18	4,000	–	42	125	17	110	17	110	10
LFS 86 C[4])	4,400	86	34	8,000	71	76	250	17	235	17	235	10
LFS 86 CE[4])	4,400	86	34	8,000	71	76	125	17	110	17	110	10

Guideway in corrosion-resistant execution: LFS..VA.
Guideways LFS, LFS..C and LFS..F available without holes: LFS..OL, LFS..C OL, LFS..F OL.

1) Maximum length of single-piece guideways,
longer guideways are supplied as multi-piece guideways and are marked accordingly.

2) Dimensions C_5 and C_6 are dependent on the guideway length L.

3) For maximum loading F_z or F_{0z}, washers to DIN 433 are required.

4) The shape of the hollow sections is dependent on the size.

5) Countersink depth for screws to DIN 6 912.

6) If washers to DIN 433 are used, screws to DIN 6 912 are recommended.

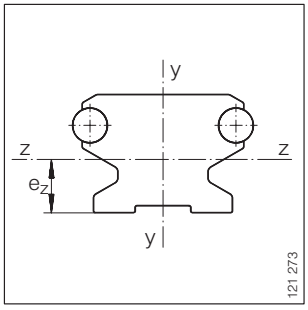

Neutral axes

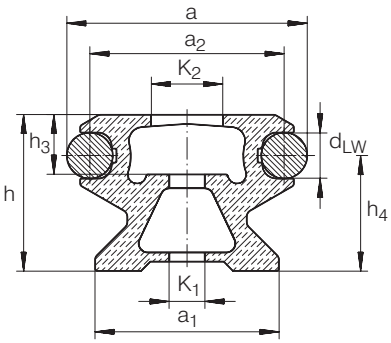

LFS..C

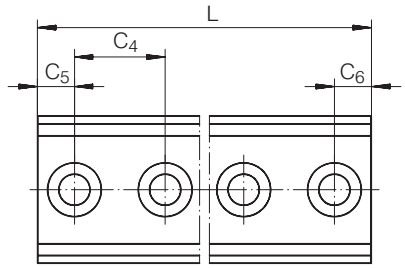

LFS, LFS..C, LFS..F
(view rotated through 90°)

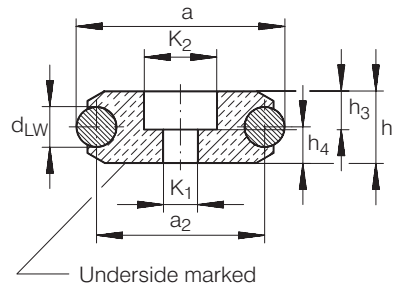

LFS..F

				MODULUS OF ELASTICITY	SURFACE DATA					
					CROSS-SECTIONAL AREA	NEUTRAL AXIS				
						y-y		z-z		
h_4	h_3	K_1[3])	K_2			I_y	W_y	e_z	I_z	W_z
				N/mm²	mm²	mm⁴	mm³	mm	mm⁴	mm³
9	4.6	4.5	8	72,000	165	3,065	362	6.4	2,053	324
10.6	6.5	5.5	10	72,000	237	6,390	608	7.5	4,510	600
15	8	6.6	12	72,000	440	20,100	1,440	10.4	14,100	1,360
15	8	6.6	12	72,000	440	20,100	1,440	10.4	14,100	1,360
15	8	6.5	12	72,000	261	18,305	1,165	10.1	10,072	995
15	8	6.5	12	72,000	261	18,305	1,165	10.1	10,072	995
5	6.5[5])	6.5	12	72,000	230	11,300	810	5	2,190	438
12.6	8[6])	9	15	72,000	358	33,929	1,858	10.1	14,052	1,391
12.6	8[6])	9	15	72,000	358	33,929	1,858	10.1	14,052	1,391
7.5	7[5])	9	15	72,000	370	29,280	1,864	7.5	16,200	2,160
25.1	13	11	19	72,000	1,170	138,624	5,878	17.8	113,037	6,350
25.1	13	11	19	72,000	1,170	138,624	5,878	17.8	113,037	6,350
25.1	15	11	19	72,000	1,170	138,624	5,878	17.8	113,037	6,350
25.1	13	11	19	72,000	649	113,821	4,896	17.1	74,878	4,378
25.1	13	11	19	72,000	649	113,821	4,896	17.1	74,878	4,378
25.1	13	11	19	72,000	649	113,821	4,896	17.1	74,878	4,378
9	10[5])	11	19	72,000	670	84,000	3,610	9	19,900	2,211
9	10[5])	11	19	72,000	670	84,000	3,610	9	19,900	2,211
25.1	13[6])	13	21	72,000	1,185	613,720	16,587	17.5	155,160	8,866
25.1	13[6])	13	21	72,000	1,185	613,720	16,587	17.5	155,160	8,866

Guideways
LFS..N, LFS..NZZ, LFS..M, LFS..ZZ SERIES

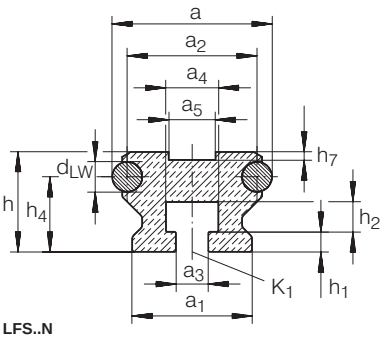

LFS..N

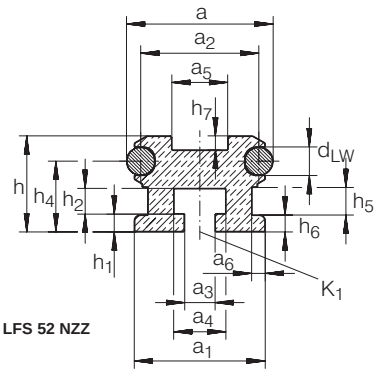

LFS 52 NZZ

For details on part numbers, descriptive suffixes and various technical references, please refer to front of this section.
For engineering or technical information contact your local sales representative or call Distributor Sales (800)523-6572 or Linear Sales (800)462-3399.

DIMENSION TABLE · Dimensions in mm

PART NUMBER	MASS	DIMENSIONS			MOUNTING DIMENSIONS											
	≈ g/m	a	h	L[1]	a_1	a_2	a_3[2]	a_4	a_5	a_6	a_7	C_4[3]	d_{LW}	h_1	h_2	h_3
LFS 25 N	1,000	25	15	2,000	21	19	5.5	8.2	–	–	–	62.5	6	3	5	–
LFS 25 M	3,500	25	46	2,000	56	19	–	26.5	5.2	30	–	–	6	–	22	–
LFS 32 N	1,400	32	20	6,000	24	26	6.5	10.5	10.5	–	–	125	6	4	6	–
LFS 32 M	6,400	32	66.5	6,000	75	26	–	–	10.2	43	–	–	6	–	25	–
LFS 52 NZZ	3,900	52	34	8,000	46.5	42	11	18.5	18.5	4.7	–	250	10	6.4	9	–
LFS 52 M	11,200	52	98.6	8,000	112	42	18	44	10.2	80	52	–	10	–	25	–
LFS 120 ZZ	7,900	120	25	6,000	100	110	–	–	18	68	28	250[5]	10	–	–	13

Guideway in corrosion-resistant execution: LFS..VA.

Guideway LFS 120 NZZ available without holes: LFS 120 NZZ OL.

1) Maximum length of single-piece guideways, longer guideways are supplied as multi-piece guideways and are marked accordingly.

2) For screws to DIN 931/933-8.8, special washers are included in the delivery for guideways LFS..N and LFS 52 NZZ.

3) Recommended distance between screws.

4) Core hole M8 centrally, distance from bottom edge of guideway: 57.5 mm.

5) $C_{5\,min}$, $C_{6\,min}$ = 17 mm, $C_{5\,max}$, $C_{6\,max}$ = 235 mm.

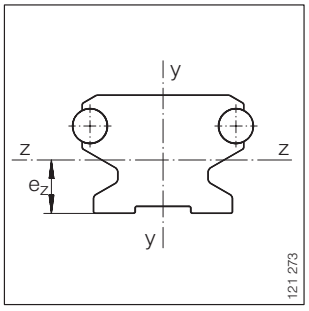

Neutral axes

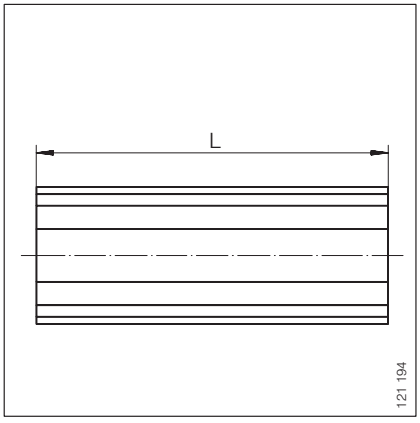

LFS..N, LFS 52 NZZ
(view rotated through 90●)

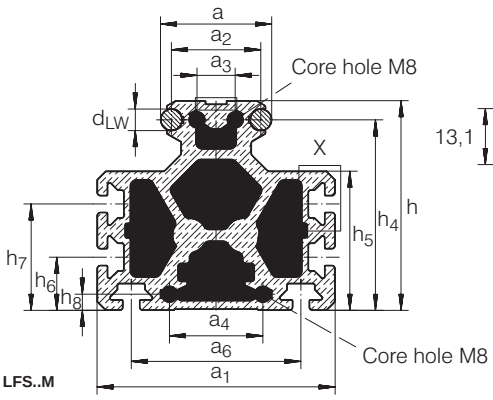

LFS..M

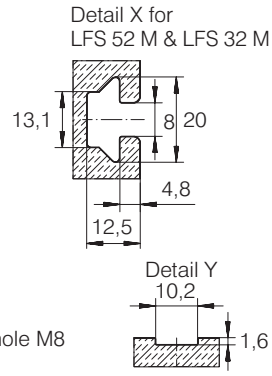

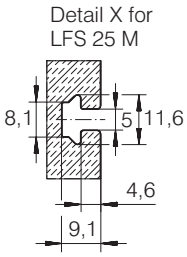

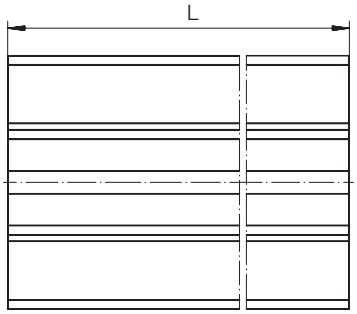

LFS..M (view rotated through 90°)

							MODULUS OF ELASTICITY	SURFACE DATA					
								CROSS-SECTIONAL AREA	NEUTRAL AXIS				
									y-y		z-z		
h_4	h_5	h_6	h_7	h_8	K_1	K_2	N/mm²	mm²	I_y mm⁴	W_y mm³	e_z mm	I_z mm⁴	W_z mm³
10.6	–	–	–	–	M5	–	72,000	192	5,980	570	8	4,420	530
41.6	31.5	–	1.6	–	–	–	72,000	1,156	314,429	11,230	19.4	186,693	9,623
15	–	–	1.6	–	M6	–	72,000	360	19,600	1,400	11.1	12,600	1,135
61	47	–	1.6	–	–	–	72,000	2,206	1,000,234	26,672	36.8	762,105	20,707
25.1	10	6	5	–	M10	–	72,000	994	170,350	7,327	16.8	82,786	4,927.
89.7	65.4	–	1.8	7.5	–	–	72,000	3,691	3,717,250	66,380	42.6	3,014,470	55,462
16.1	–	–	2.5	7.5	∅ 11	∅ 19	72,000	2,468	2,330,980	40,751	12.5	117,074	9,365

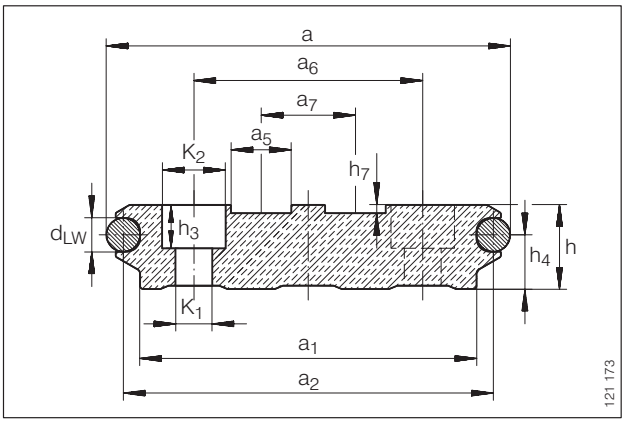

LFS 120 ZZ

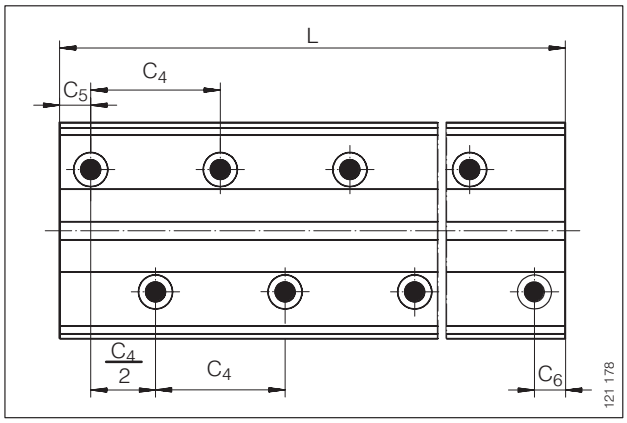

LFS 120 ZZ[5])
(view rotated through 90●)

Guideways
LFS..CH, LFS..FH SERIES

For details on part numbers, descriptive suffixes and various technical references, please refer to front of this section.
For engineering or technical information contact your local sales representative or call Distributor Sales (800)523-6572 or Linear Sales (800)462-3399.

DIMENSION TABLE · Dimensions in mm												
PART NUMBER	MASS	DIMENSIONS			MOUNTING DIMENSIONS							
		a	h	L[1]	a_1	a_2	a_6	C_4	C_5[2]		C_6[2]	
	≈g/m								min.	max.	min.	max.
LFS 32 CH	900	26	20	4,000	24	23	13	125	11	116	11	116
LFS 32 CHE	900	26	20	4,000	24	23	13	62.5	11	52	11	52
LFS 32 FH	800	26	10	4,000	–	23	13	125	11	116	11	116
LFS 32 FHE	800	26	10	4,000	–	23	13	62.5	11	52	11	52
LFS 52 CH	2,100	42	34	8,000	36	37	21	250	17	235	17	235
LFS 52 CHE	2,100	42	34	8,000	36	37	21	125	17	110	17	110
LFS 52 CHEE	2,100	42	34	8,000	36	37	21	62.5	17	49	17	49
LFS 52 FH	2,300	42	18	8,000	–	37	21	250	17	235	17	235
LFS 52 FHE	2,300	42	18	8,000	–	37	21	125	17	110	17	110
LFS 52 FHEE	2,300	42	18	8,000	–	37	21	62.5	17	49	17	49

Guideway in corrosion-resistant execution: LFS..VA.

Guideways LFS..CH and LFS..FH available without holes: LFS..CH OL, LFS..FH OL.

1) Maximum length of single-piece guideways, longer guideways are supplied as multi-piece guideways and are marked accordingly.

2) Dimensions C_5 and C_6 are dependent on the guideway length L.

3) For screws to DIN 912-8.8, washers to DIN 433 are required for maximum loading.

4) Countersink depth for screws to DIN 6 912.

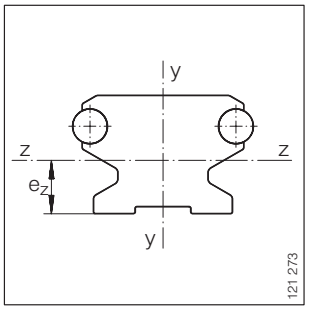

Neutral axes

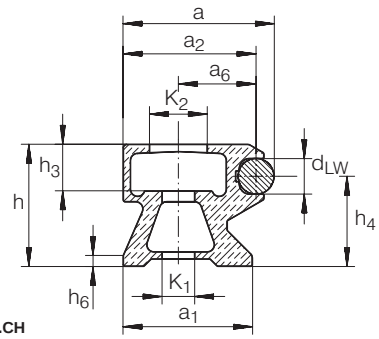

LFS..CH

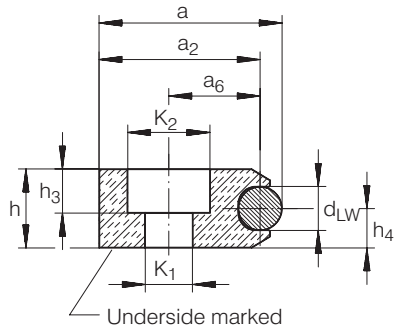

LFS..FH

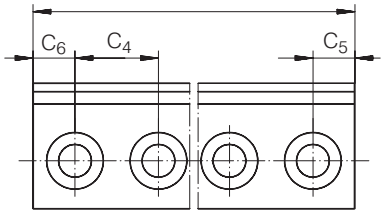

LFS..CH, LFS..FH
view rotated through 90°)

						MODULUS OF ELASTICITY	SURFACE DATA					
							CROSS-SECTIONAL AREA	NEUTRAL AXIS				
								y-y		z-z		
d_{LW}	h_3	h_4	h_6	K_1 3)	K_2	N/mm²	mm²	I_y mm⁴	W_y mm³	e_z mm	I_z mm⁴	W_z mm³
6	8	15	2	6.5	12	72,000	220	12,374	1,267	11.4	9,118	799
6	8	15	2	6.5	12	72,000	220	12,374	1,267	11.4	9,118	799
6	6.5	5	–	6.5	12	72,000	216	8,681	790	5	1,897	379
6	6.5	5	–	6.5	12	72,000	216	8,681	790	5	1,897	379
10	13	25.1	3	11	19	72,000	555	75,367	4,558	16	62,469	3,904
10	13	25.1	8	11	19	72,000	555	75,367	4,558	16	62,469	3,904
10	13	25.1	8	11	19	72,000	555	75,367	4,558	16	62,469	3,904
10	10 4)	9	–	11	19	72,000	629	66,642	3,765	9	17,798	1,977
10	10 4)	9	–	11	19	72,000	629	66,642	3,765	9	17,798	1,977
10	10 4)	9	–	11	19	72,000	629	66,642	3,765	9	17,798	1,977

Curved Guideways
LFS..R SERIES

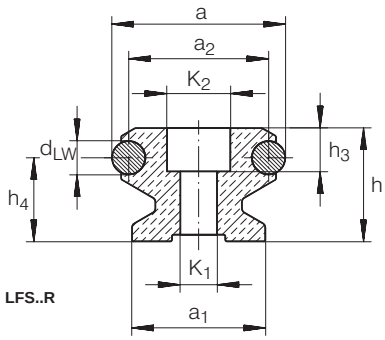

LFS..R

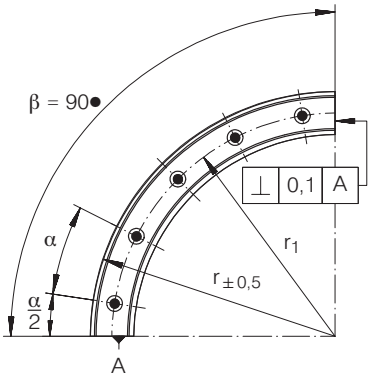

LFS..R

For details on part numbers, descriptive suffixes and various technical references, please refer to front of this section.
For engineering or technical information contact your local sales representative or call Distributor Sales (800)523-6572 or Linear Sales (800)462-3399.

DIMENSION TABLE · Dimensions in mm

PART NUMBER	MASS	DIMENSIONS														
CURVED ELEMENT	g	a	h	β	a_1	a_2	d_{LW}	h_3	h_4	K_1 1)	K_2	x 2)	r	r_1	α	α/2
LFS 32 R 100/ 90	500	32	20	90●	24	26	6	6.5	15	6.5	12	3	100	84	30	15
LFS 32 R 100/180	1,000	32	20	180●	24	26	6	6.5	15	6.5	12	6	100	84	30	15
LFS 32 R 100/360	2,000	32	20	360●	24	26	6	6.5	15	6.5	12	12	100	84	30	–
LFS 32 R 300/ 90	1,700	32	20	90●	24	26	6	6.5	15	6.5	12	4	300	284	22.5	11.25
LFS 32 R 300/180	3,400	32	20	180●	24	26	6	6.5	15	6.5	12	8	300	284	22.5	11.25
LFS 32 R 300/360	6,800	32	20	360●	24	26	6	6.5	15	6.5	12	12	300	284	22.5	–
LFS 32 R 500/ 90	2,900	32	20	90●	24	26	6	6.5	15	6.5	12	5	500	484	18	9
LFS 32 R 500/180	5,800	32	20	180●	24	26	6	6.5	15	6.5	12	10	500	484	18	9
LFS 32 R 500/360	11,600	32	20	360●	24	26	6	6.5	15	6.5	12	12	500	484	18	–
LFS 52 R 150/ 90	2,000	52	34	90●	40	42	10	13	25.1	11	19	3	150	124	30	15
LFS 52 R 150/180	4,000	52	34	180●	40	42	10	13	25.1	11	19	6	150	124	30	15
LFS 52 R 150/360	8,000	52	34	360●	40	42	10	13	25.1	11	19	12	150	124	30	–
LFS 52 R 300/ 90	4,500	52	34	90●	40	42	10	13	25.1	11	19	4	300	274	22.5	11.25
LFS 52 R 300/180	9,000	52	34	180●	40	42	10	13	25.1	11	19	8	300	274	22.5	11.25
LFS 52 R 300/360	9,000	52	34	360●	40	42	10	13	25.1	11	19	12	300	274	22.5	–
LFS 52 R 500/ 90	7,800	52	34	90●	40	42	10	13	25.1	11	19	5	500	474	18	9
LFS 52 R 500/180	15,600	52	34	180●	40	42	10	13	25.1	11	19	10	500	474	18	9
LFS 52 R 500/360	15,600	52	34	360●	40	42	10	13	25.1	11	19	12	500	474	18	–

Guideway LFS..R in corrosion-resistant execution: LFS..R VA.
Guideway LFS..R without holes: LFS..R OL.

1) For screws to DIN 912-8.8.

2) Number of holes on curved section r_1.

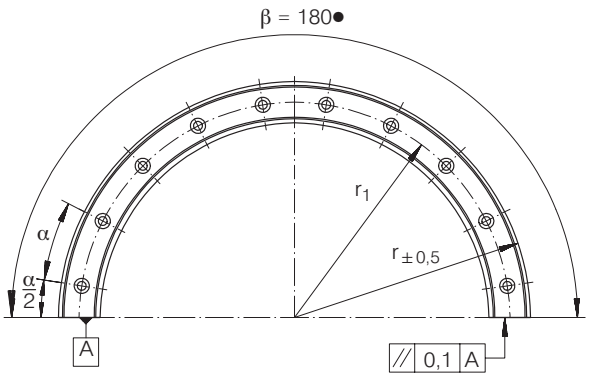

LFS..R../180

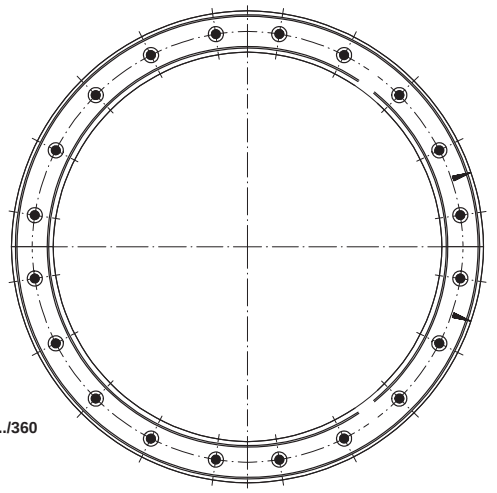

LFS..R../360

Shaft And Support Rail Units
TSNW SERIES

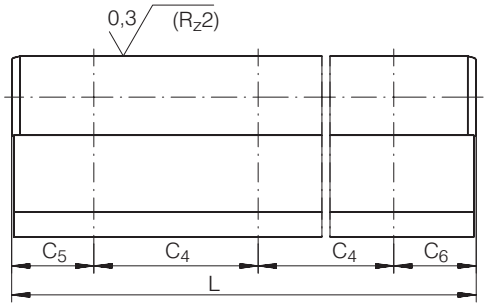

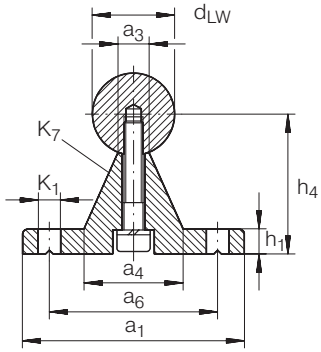

For details on part numbers, descriptive suffixes and various technical references, please refer to front of this section.
For engineering or technical information contact your local sales representative or call Distributor Sales (800)523-6572 or Linear Sales (800)462-3399.

DIMENSION TABLE · Dimensions in mm

SHAFT DIAMETER d_{LW} h6	PART NUMBER	MASS kg/m	DIMENSIONS a_1	h_4[1] ±0.02	L[2] ±3	MOUNTING DIMENSIONS a_3	a_4	a_6	C_4	C_5/C_6[3] min.	C_5/C_6[3] max.	h_1	K_1[4]	K_7 DIN 6 912
12	TSNW 12	1.67	40	22	6,000	5.4	15	29	75	20	69	5	4.5	M4 ×20
16	TSNW 16	2.95	45	26	6,000	7	19	33	100	20	93	5	5.5	M5 ×20
20	TSNW 20	3.95	52	32	6,000	8.1	23	37	100	20	92	6	6.6	M6 ×25
25	TSNW 25	5.6	57	36	6,000	10.3	26	42	120	20	110	6	6.6	M8 ×30
30	TSNW 30	7.88	69	42	6,000	11	29	51	150	20	139	7	9	M10 ×35
40	TSNW 40	12.83	73	50	6,000	15	36	55	200	20	189	8	9	M10 ×40
50	TSNW 50	19.38	84	60	6,000	19	40	63	200	20	188	9	11	M12 ×45

1) With reference to the nominal shaft diameter, measured while clamped.
2) Maximum length of single-piece units, longer units are supplied as several pieces. Depending on the length of the shaft and support rail unit, the support rail is composed of several pieces.
3) Dimensions C_5 and C_6 are dependent on the length of the shaft and support rail unit.
4) For fixing screws to DIN 6 912 and spring washers to DIN 7 980.

Shaft And Support Rail Units

TSNW..G4 d ≦ 25mm,

TSNW..G5 d > 25mm SERIES

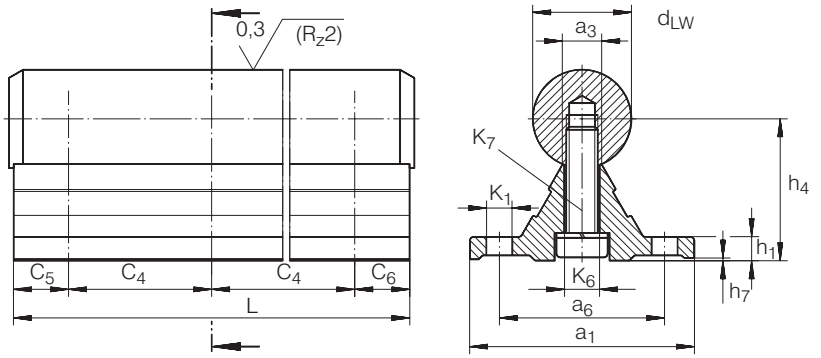

For details on part numbers, descriptive suffixes and various technical references, please refer to front of this section.
For engineering or technical information contact your local sales representative or call Distributor Sales (800)523-6572 or Linear Sales (800)462-3399.

DIMENSION TABLE · Dimensions in mm

SHAFT DIAMETER d_{LW}	PART NUMBER	MASS	DIMENSIONS			MOUNTING DIMENSIONS										
h6		kg/m	a_1	h_4 1)	L 2) ±2	a_3	a_6	C_4	C_5/C_6 3) min.	C_5/C_6 3) max.	h_1	h_7	K_1 4)	K_6	K_7 DIN 6 912	ACCURACY CLASS 5)
12	TSNW 12 G4	1.6	40	$22^{\pm 0.1}$	4,000	5	29	75	20	69	5	0.2	4.5	4.5	M4 ×18	G4 0.03
16	TSNW 16 G4	2.5	45	$26^{\pm 0.1}$	4,000	6.8	33	100	20	93	5	0.2	5.5	5.5	M5 ×20	G4 0.03
20	TSNW 20 G4	3.8	52	$32^{\pm 0.1}$	4,000	7.8	37	100	20	92	6	0.2	6.6	6.6	M6 ×25	G4 0.03
25	TSNW 25 G4	5.3	57	$36^{\pm 0.1}$	4,000	9.8	42	120	20	110	6	0.3	6.6	9	M8 ×30	G4 0.03
30	TSNW 30 G5	7.5	69	$42^{\pm 0.15}$	4,000	11	51	150	20	139	7	0.3	9	11	M10×35	G5 0.04
40	TSNW 40 G5	12.4	73	$50^{\pm 0.15}$	4,000	14.5	55	200	20	189	8	0.3	9	11	M10×40	G5 0.04
50	TSNW 50 G5	18.9	84	$60^{\pm 0.15}$	4,000	18.5	63	200	20	188	9	0.3	11	13.5	M12×45	G5 0.05

1) With reference to the nominal shaft diameter, measured while clamped.

2) Maximum length of single-piece units, the shaft protrudes beyond the support rail by about 2.5 mm at each end; longer units are supplied as several pieces.

3) Dimensions C_5 and C_6 are dependent on the length of the shaft and support rail unit.

4) For fixing screws to DIN 6 912 and spring washers to DIN 7 980.

5) Value for the maximum variation of dimension h_4, measured on the same rail over a distance of 1 000 mm.

Shaft And Support Rail Units
TSUW SERIES

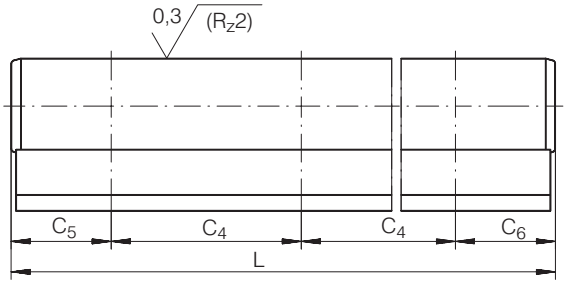

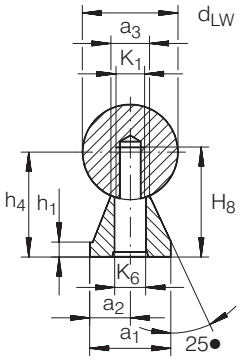

For details on part numbers, descriptive suffixes and various technical references, please refer to front of this section.
For engineering or technical information contact your local sales representative or call Distributor Sales (800)523-6572 or Linear Sales (800)462-3399.

DIMENSION TABLE · Dimensions in mm														
SHAFT DIAMETER d_{LW}	PART NUMBER	MASS	DIMENSIONS			MOUNTING DIMENSIONS								
			a_1	h_4 1)	L 2)	a_2 3)	a_3	C_4	C_5/C_6 4)	C_5/C_6 4)	h_1	K_1	K_6	H_8
h6		kg/m		±0.02	±3				min.	max.				
12	TSUW 12	1.1	11	14.5	6,000	5.5	5.4	75	20	70	3	M4	4.5	16
16	TSUW 16	1.88	14	18	6,000	7	7	75	20	70	3	M5	5.5	19
20	TSUW 20	2.92	17	22	6,000	8.5	8.1	75	20	69	3	M6	6.6	23
25	TSUW 25	4.42	21	26	6,000	10.5	10.3	75	20	68	3	M8	9	28.5
30	TSUW 30	6.22	23	30	6,000	11.5	11	100	20	92	3	M10	11	32
40	TSUW 40	11.03	30	39	6,000	15	15	100	20	91	4	M12	13.5	39.5
50	TSUW 50	16.98	35	46	6,000	17.5	19	100	20	90	5	M14	15.5	46

1) With reference to the nominal shaft diameter, measured while clamped.

2) Maximum length of single-piece units (TSUW 12: L = 1600 ±1.2 mm), longer units are supplied as several pieces.
Depending on the length of the shaft and support rail unit, the support rail is composed of several pieces.

3) Available on request with a_2 ±0.02.

4) Dimensions C_5 and C_6 are dependent on the length of the shaft and support rail unit.

Shaft and Support Rail Units
TSSW SERIES

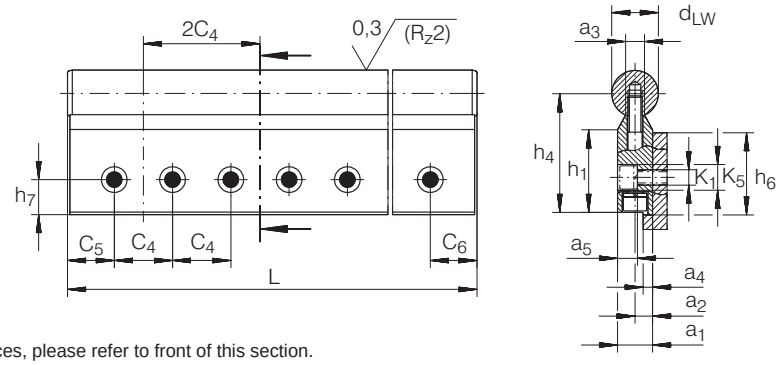

For details on part numbers, descriptive suffixes and various technical references, please refer to front of this section.
For engineering or technical information contact your local sales representative or call Distributor Sales (800)523-6572 or Linear Sales (800)462-3399.

DIMENSION TABLE · Dimensions in mm																	
SHAFT DIAMETER D_{LW}	PART NUMBER	MASS	DIMENSIONS			MOUNTING DIMENSIONS											
			a_1	h_4 1)	L 2)	a_2 1)	a_3	a_4	a_5 3)	C_4	C_5/C_6 4)	C_5/C_6 4)	h_1	h_6	h_7	K_1 3)	K_5 3)
h6		kg/m		±0.01	±3	±0.012					min.	max.			±0.15		
20	TSSW 20	4.12	15	52	6,000	7.5	8.1	4	8.5	50	20	42	36.5	30	15	6.6	11
25	TSSW 25	5.98	20	62	6,000	10	10.3	5.5	11	60	20	50	38.5	36	18	9	15
30	TSSW 30	8.68	25	72	6,000	12.5	11	7	13.5	75	20	64	43	42	21	11	18
40	TSSW 40	14.3	30	88	6,000	15	15	8.5	16	100	20	88	53	50	25	13.5	20
50	TSSW 50	21.47	35	105	6,000	17.5	19	9	18.5	100	20	86	64.5	60	30	15.5	24

1) With reference to the nominal shaft diameter, measured while clamped.
2) Maximum length of single-piece units, longer units are supplied as several pieces.
Depending on the length of the shaft and support rail unit, the support rail is composed of several pieces.
3) For fixing screws to DIN 912-8.8 and spring washers to DIN 7 980.
4) Dimensions C_5 and C_6 are dependent on the length of the shaft and support rail unit

Shaft And Support Rail Units
TSMW SERIES

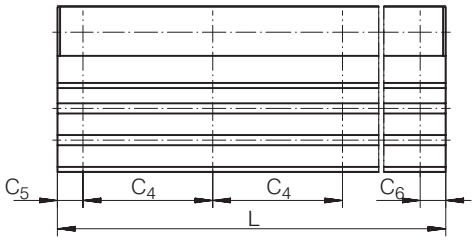

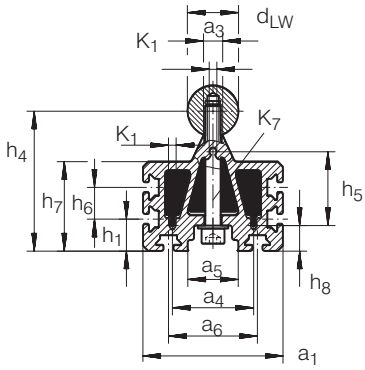

For details on part numbers, descriptive suffixes and various technical references, please refer to front of this section.
For engineering or technical information contact your local sales representative or call Distributor Sales (800)523-6572 or Linear Sales (800)462-3399.

DIMENSION TABLE · Dimensions in mm

SHAFT DIAMETER d_{LW}	PART NUMBER	MASS	DIMENSIONS																
			a_1	h_4 1)	L 2)	a_3	a_4	a_5	a_6	C_4	C_5/ C_6 4)	C_5/ C_6 4)	h_1	h_5	h_6	h_7	h_8	K_1	K_7
h6		kg/m			±3						min.	max.							
20	TSMW 20	6.3	65	65	6,000	7.8	30	14	40	75	20	42	25	29	–	44	18	4.65	M6
25	TSMW 25	8.9	75	75	6,000	10	40	18	45	75	20	50	25	34	–	47	18	4.65	M8
30	TSMW 30	12.3	90	90	6,000	11	50	32	60	100	20	64	25	43	–	57	20	5.5	M10
40	TSMW 40 3)	20.3	110	110	6,000	14.5	64	40	70	100	20	88	25	58	25	70	20	5.5	M12

1) With reference to the nominal shaft diameter, measured while clamped.
2) Maximum length of single-piece units, longer units are supplied as several pieces.
Shaft and support rail units up to the maximum length are supplied with a single-piece support rail.
3) Available on request.
4) Dimensions C_5 and C_6 are dependent on the length of the shaft and support rail unit

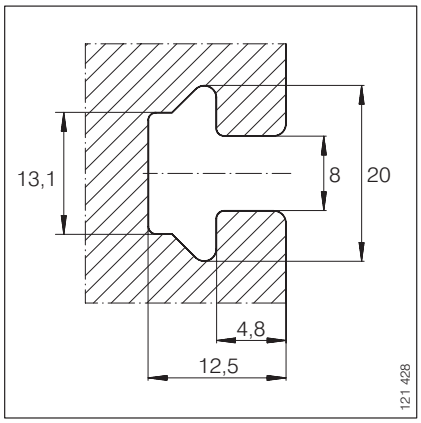

T-grooves

Lubrication And Wiper Units
AB W SERIES
Cap Wipers
AB LFR, AB LFL SERIES

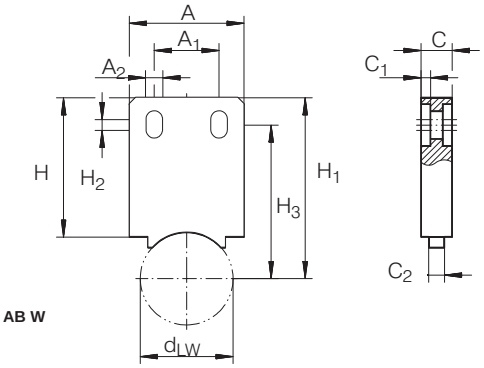

For details on part numbers, descriptive suffixes and various technical references, please refer to front of this section.
For engineering or technical information contact your local sales representative or call Distributor Sales (800)523-6572 or Linear Sales (800)462-3399.

DIMENSION TABLE · Dimensions in mm													
PART NUMBER	MASS	DIMENSIONS											SUITABLE FOR TRACK ROLLER LFR
		d_{Lw}	A	C	H	A_1	A_2	C_1	C_2	H_1	H_2	H_3	
	kg					± 0.1							
AB W 10	0.03	10	22.5	10	45	10	4.5	3	5	49	4	40.3	LFR 5201-10 KDD
AB W 12	0.03	12	22.5	10	45	10	4.5	3	5	51	4	42.3	LFR 5201-12 KDD
AB W 16	0.03	16	22.5	10	45	10	4.5	3	5	52	4	43.3	LFR 5204-16 KDD
AB W 20	0.03	20	22.5	10	45	10	4.5	3	5	54	4	45.3	LFR 5206-20 KDD
AB W 25	0.03	25	37	10	45	21	5.5	3	5	54	3.5	45.3	LFR 5206-25 KDD
AB W 30	0.03	30	37	10	45	21	5.5	3	5	59	3.5	50.3	LFR 5207-30 KDD
AB W 40	0.03	40	37	10	45	21	5.5	3	5	71	3.5	62.3	LFR 5208-40 KDD

DIMENSION TABLE · Dimensions in mm												
PART NUMBER	MASS	DIMENSIONS									SUITABLE FOR	
		A_1	A_3	A_4	A_5	C_1	C_2	H_1	K_4	K_5	TRACK ROLLER	CARRIAGE
	≈ g						± 0.1			+0.1		
AB LFL 20	9	21.3	16.5	10.8	1	50	42.5	11.5	M3	10	LFR 50/..4	LFL 20
AB LFL 20	9	21.3	16.5	10.8	1	50	42.5	11.5	M3	10	LFR 50/5	–
AB LFR 50/8	20	31.6	25.9	15.6	2	51	28.5	15	M3	15	LFR 50/8	LFCL 25
AB LFR 5201	20	43.3	33.4	22.3	2	56	40	21.3	M3	20	LFR 5201	–
AB LFR 5201-LFCL	20	43.3	33.4	22.3	2	56	40	19.8	M3	20	–	LFCL 42
AB LFR 5301	30	50	38.7	26	2	76	46	25	M3	20	LFR 5301	LFCL 86
AB LFR 5302[1])	–	–	–	–	–	–	–	–	–	–	LFR 5302	–

[1]) Please consult INA engineering service.

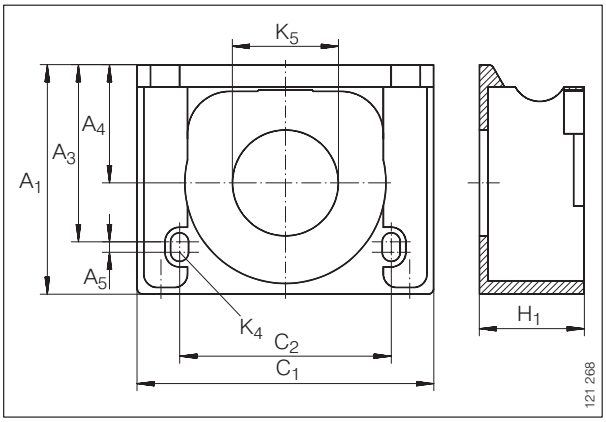

AB LFR

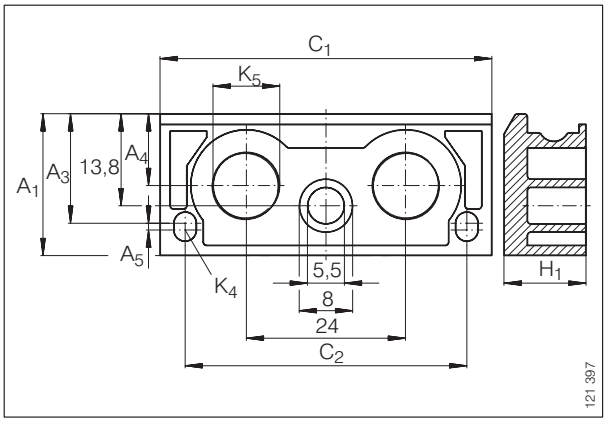

AB LFL 20

End Plates
ANS LFS SERIES

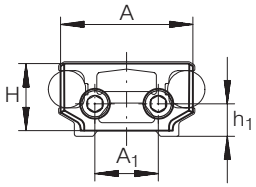

ANS LFS 42 C
ANS LFS 120

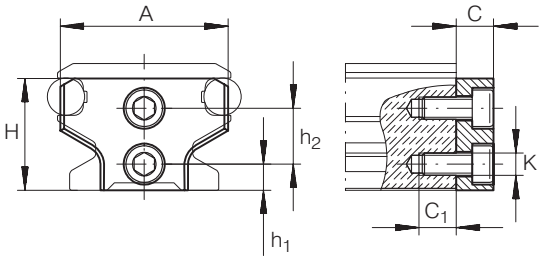

ANS LFS 25
ANS LFS 32
ANS LFS 52

For details on part numbers, descriptive suffixes and various technical references, please refer to front of this section.
For engineering or technical information contact your local sales representative or call Distributor Sales (800)523-6572 or Linear Sales (800)462-3399.

DIMENSION TABLE · Dimensions in mm

PART NUMBER	DIMENSIONS									SUITABLE FOR GUIDEWAY
	A	A_1	A_2	C	C_1	H	h_1	h_2	K	
ANS LFS 20	14.5	–	–	6	12	11	6.2	–	M5	LFS 20
ANS LFS 25	20	–	–	5	7	14	4	7	M3	LFS 25
ANS LFS 32	30	–	–	6	7	20	5	10	M4	LFS 32
ANS LFS 32 F	26	11	–	6	7	9	5	–	M4	LFS 32 F
ANS LFS 32 FH	22	9	9	6	7	9	5	–	M3	LFS 32 FH
ANS LFS 32 N	26	11	–	6	7	9	15	–	M4	LFS 32 N
ANS LFS 42 C	35.5	17	–	8	7	18	8	–	M4	LFS 42 C
ANS LFS 52	45	–	–	10	10	30	7	15	M6	LFS 52
ANS LFS 52 F	42	21	–	8	10	16	9	–	M5	LFS 52 F
ANS LFS 52 FH	37	6.5	21	8	10	16	9	–	M5	LFS 52 FH
ANS LFS 52 NZZ	42	21	–	8	10	16	24	–	M4	LFS 52 NZZ
ANS LFS 86C	80	54	–	8	10	30	17.5	–	M5	LFS 86 C
ANS LFS 120	114	80	–	5	10	16	8	–	M6	LFS 120

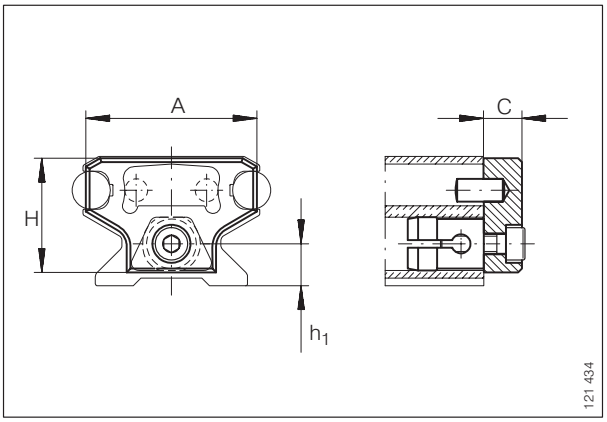

ANS LFS 52 C

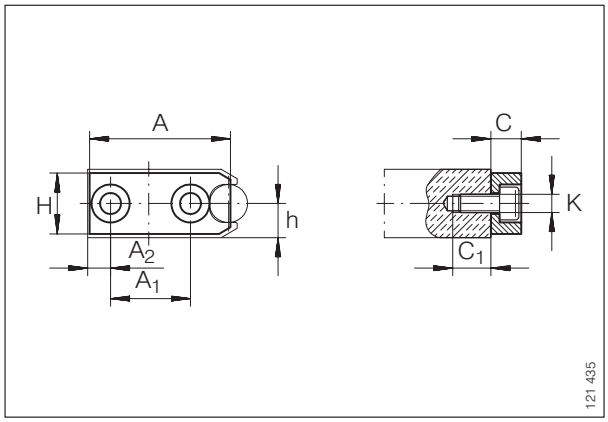

ANS LFS..FH

Lubrication And Wiper Units
AB SERIES
Side Plates
ABAL SERIES

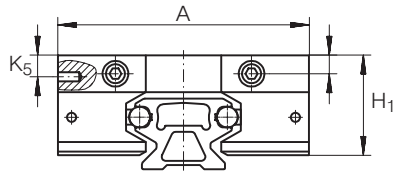

AB

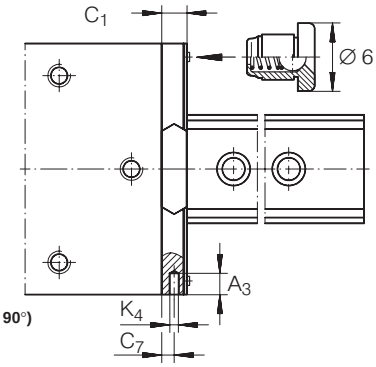

AB
(view rotated through 90°)

For details on part numbers, descriptive suffixes and various technical references, please refer to front of this section.
For engineering or technical information contact your local sales representative or call Distributor Sales (800)523-6572 or Linear Sales (800)462-3399.

DIMENSION TABLE · Dimensions in mm										
PART NUMBER	MASS	DIMENSIONS								SUITABLE FOR TRACK ROLLER
	≈ g	A	A_3	C_1	C_7	H_1	H_4	H_5	K_4 for screws to DIN 7 972	
AB 32	30	80	6	11	5	32	7	7	St 2.9	LFL 32
AB 32	30	80	6	11	5	32	7	7	St 2.9	LFDL 32
AB 52	100	120	20	18	8.5	49.5	9.5	15	St 4.8	LFL 52
AB 52	100	120	20	18	8.5	49.5	9.5	15	St 4.8	LFDL 52
AB 52/1	130	135	20	18	8.5	55	12	20.6	St 4.8	LFL 52 E

DIMENSION TABLE · Dimensions in mm							
PART NUMBER	MASS	DIMENSIONS					SUITABLE FOR CARRIAGE
	≈ g	A	A_1	C	C_7	H_1	
ABAL 32	30	86	3	112	100	32	LFL 32
ABAL 52	40	130	5	136	117	49.5	LFL 52
ABAL 52/1	50	145	5	186	167	55	LFL 52 E

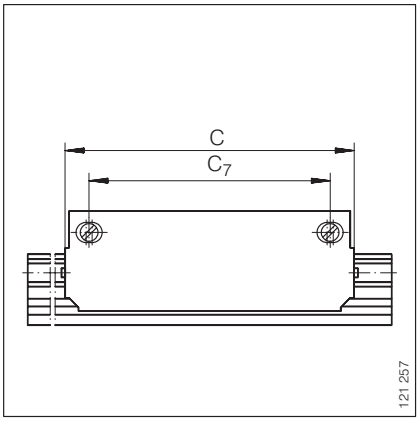

ABAL

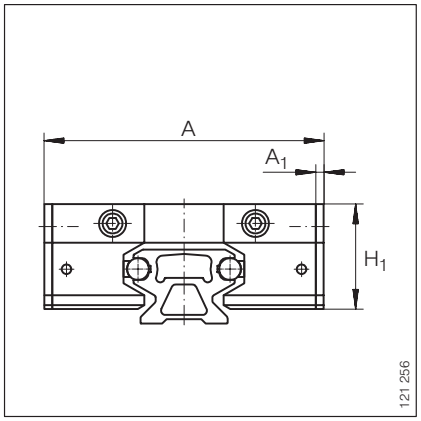

ABAL

End Stops
PAH, PASTP SERIES

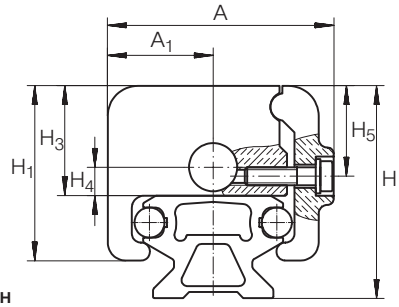

PAH

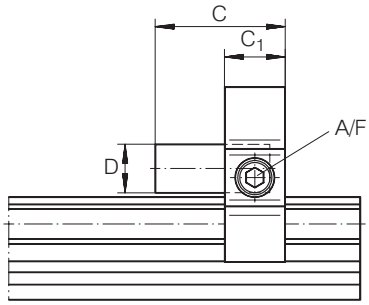

PAH

For details on part numbers, descriptive suffixes and various technical references, please refer to front of this section.
For engineering or technical information contact your local sales representative or call Distributor Sales (800)523-6572 or Linear Sales (800)462-3399.

DIMENSION TABLE · Dimensions in mm													
PART NUMBER	MASS	DIMENSIONS											SUITABLE FOR GUIDEWAY
	≈ g	A	A_1	C	C_1	D	H	H_1	H_3	H_4	H_5	A/F	
PAH 32	50	46	21	30	15	10	39	32	19	7	14	5	LFS 32 C, N
PAH 52	170	75	35	43	20	16	70.5	58	36.5	9.5	30	6	LFS 52 C, NZZ

DIMENSION TABLE · Dimensions in mm						
PART NUMBER	MASS	DIMENSIONS				SUITABLE FOR GUIDEWAY
	≈ g	D	H_3	K_5	H	
PASTP 20	8	20	7	M5	22.2	LFS 20
PASTP 25	8	20	7	M5	25	LFS 25
PASTP 32	10	16	11	M6	31	LFS 32
PASTP 42	10	16	11	M6	31	LFS 42 C
PASTP 52	10	20	11	M8	45	LFS 52
PASTP 86	10	20	11	M8	45	LFS 86 C

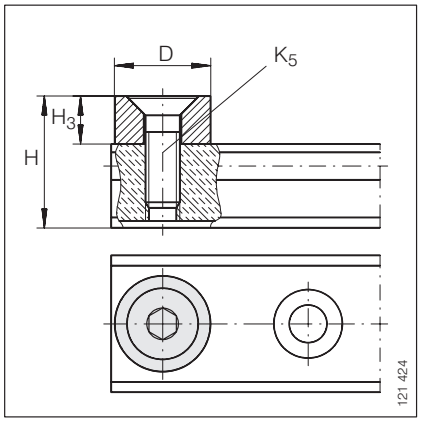

PASTP

Groove Strips
NAD SERIES
End Covers
KA LFS..C, KA LFS..M SERIES

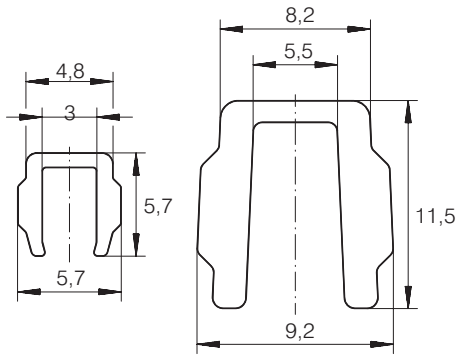

NAD

For details on part numbers, descriptive suffixes and various technical references, please refer to front of this section.
For engineering or technical information contact your local sales representative or call Distributor Sales (800)523-6572 or Linear Sales (800)462-3399.

DIMENSION TABLE · Dimensions in mm		
PART NUMBER	MASS ≈ g/m	SUITABLE FOR GUIDEWAY
NAD 5 × 5,7	12	LFS 25 M
NAD 8 × 11,5	27	LFS 32 M
NAD 8 × 11,5	27	LFS 52 M

DIMENSION TABLE · Dimensions in mm							
PART NUMBER	MASS	DIMENSIONS					SUITABLE FOR GUIDEWAY
	≈ g	a_8	a_9	c_1	h_8	h_9	
KA LFS 25 M	10	24.4	55.4	3	45.4	30.9	LFS 25 M
KA LFS 32 C	10	31.4	23.4	3	19.4	–	LFS 32 C
KA LFS 32 M	12	31.4	74.4	3	59.9	46.4	LFS 32 M
KA LFS 42 C	12	41.4	27.4	3	19.4	–	LFS 42 C
KA LFS 52 C	13	51.6	39.4	3	33.4	–	LFS 52 C
KA LFS 52 M	15	51.6	111.4	4	98	64.8	LFS 52 M
KA LFS 86 C	15	85.6	70.4	4	33.4	–	LFS 86 C

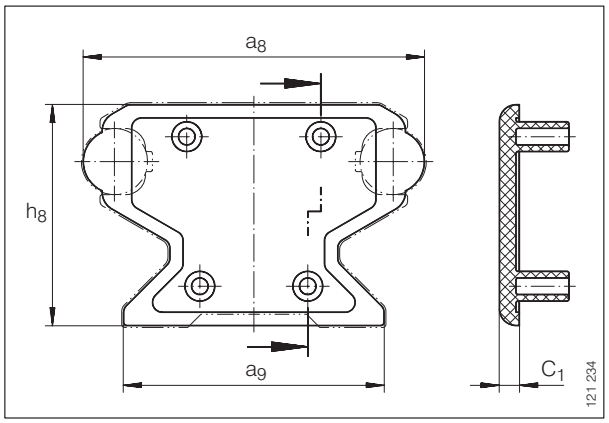

KA LFS..C

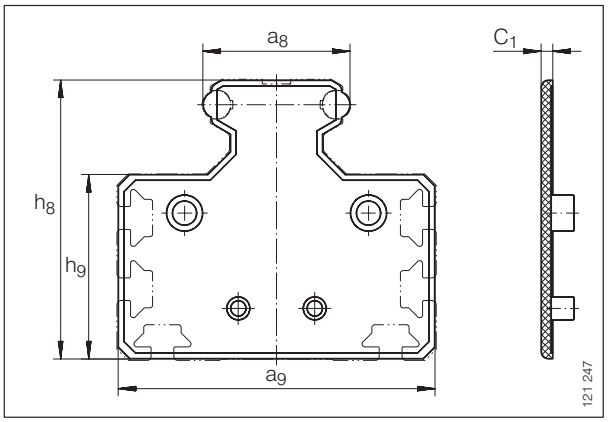

KA LFS..M

Adapter
ABTKO LFKL SERIES

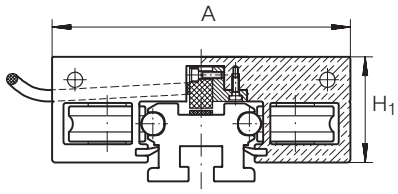

ABTKO LFKL

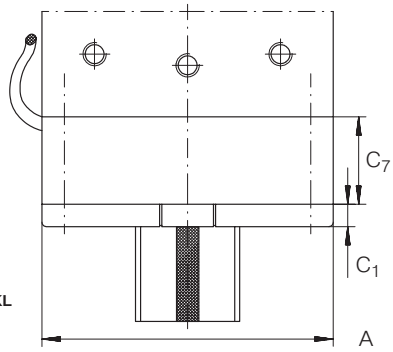

ABTKO LFKL

For details on part numbers, descriptive suffixes and various technical references, please refer to front of this section.
For engineering or technical information contact your local sales representative or call Distributor Sales (800)523-6572 or Linear Sales (800)462-3399.

DIMENSION TABLE · Dimensions in mm

PART NUMBER	MASS ≈ g	DIMENSIONS				SUITABLE FOR CARRIAGE
		A	H_1	C_7	C_1	
ABTKO LFKL 32	200	86	32	39	7	LFKL 32
ABTKO LFKL 52	400	130	46.1	39	10	LFKL 52
ABTKO LFKL 52 E	500	145	53.8	39	10	LFKL 52 E
ABTKO LFKL 52 EE	500	155	55	39	10	LFKL 52 EE

Self-Aligning Linear Ball Bearings

KX, KX..PP,
KXO, KXO..PP SERIES

- MAX³ Maximum Performance
- Closed and open
- With gap seal or contact seal on both sides

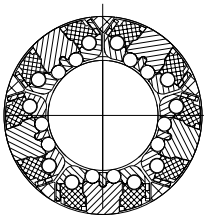

KX, KX..PP

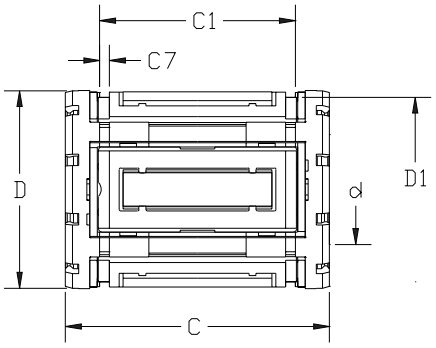

For details on part numbers, descriptive suffixes and various technical references, please refer to front of this section.
For engineering or technical information contact your local sales representative or call Distributor Sales (800)523-6572.

DIMENSION TABLE • Inch Dimensions

SHAFT DIAMETER	PART NUMBER[1)]	WEIGHT lbs	DIMENSIONS d	D	C
1/2	KX 08	0.0430	$0.500_{-0.005}$	0.875	$1.250_{-0.020}$
	KXO 08	0.0317	$0.500_{-0.005}$	0.875	$1.250_{-0.020}$
5/8	KX 10	0.0875	$0.625_{-0.005}$	1.125	$1.500_{-0.020}$
	KXO 10	0.0719	$0.625_{-0.005}$	1.125	$1.500_{-0.020}$
3/4	KX 12	0.1155	$0.750_{-0.005}$	1.250	$1.625_{-0.020}$
	KXO 12	0.0948	$0.750_{-0.005}$	1.250	$1.625_{-0.020}$
1	KX 16	0.2425	$1.000_{-0.005}$	1.563	$2.250_{-0.020}$
	KXO 16	0.1962	$1.000_{-0.005}$	1.563	$2.250_{-0.020}$
1 1/4	KX 20	0.4861	$1.250_{-0.006}$	2.000	$2.625_{-0.025}$
	KXO 20	0.3933	$1.250_{-0.006}$	2.000	$2.625_{-0.025}$
1 1/2	KX 24	0.7749	$1.500_{-0.006}$	2.375	$3.000_{-0.030}$
	KXO 24	0.6283	$1.500_{-0.006}$	2.375	$3.000_{-0.030}$
2	KX 32	1.5139	$2.000_{-0.008}$	3.000	$4.000_{-0.040}$
	KXO 32	1.2269	$2.000_{-0.008}$	3.000	$4.000_{-0.040}$

1) Linear ball bearings sealed on both sides: suffix “PP”.
2) Load ratings apply only for hardened (670 to 840 HV) and ground shaft raceways.
3) Load rating in main load direction.
4) Load ratings to ISO/C 14 728-1 (maximum values).

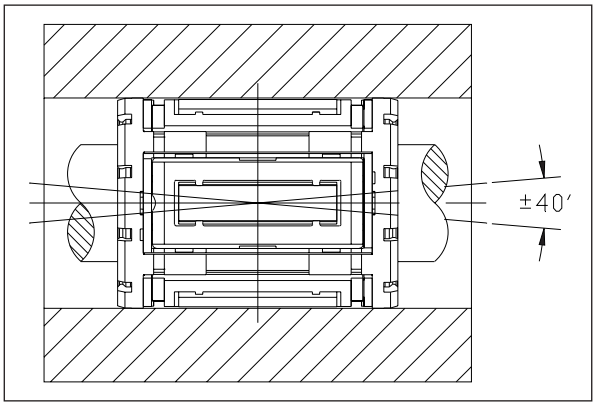

Misalignment compensation ±40'

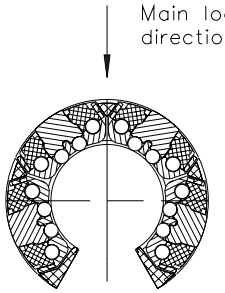

KXO, KXO..PP
Main load direction[4)]

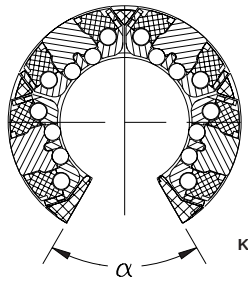

KXO, KXO..PP

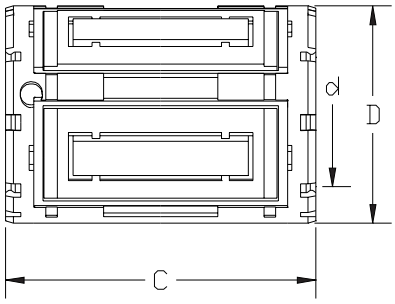

DIMENSION TABLE • Inch Dimensions											
MOUNTING DIMENSION							NUMBER OF BALL ROWS	LOAD RATINGS[2)4)]		ACCESSORIES	SHAFT DIAMETER
D_1	C_7	C_1	α deg.	d_1	t	S		DYN. C_0 lbf	STAT. C_0 lbf	SUITABLE SNAP RINGS TO N1400	
0.821	0.046	$1.032_{-0.020}$	-	-	-	-	6	275	200	$^1/_2$ x .035	$^1/_2$
-	-	$1.032_{-0.020}$	60	0.136	-	0.625	4	260[3)]	190[3)]	$^1/_2$ x .035	
1.059	0.056	$1.112_{-0.020}$	-	-	-	-	10	290	260	$^5/_8$ x .035	$^5/_8$
-	-	$1.112_{-0.020}$	60	0.105	0.039	0.125	8	290[3)]	260[3)]	$^5/_8$ x .035	
1.176	0.056	$1.272_{-0.020}$	-	-	-	-	10	430	370	$^3/_4$ x .042	$^3/_4$
-	-	$1.272_{-0.020}$	60	0.136	0.059	0.125	8	430[3)]	370[3)]	$^3/_4$ x .042	
1.469	0.068	$1.886_{-0.020}$	-	-	-	-	10	810	720	1 x .042	1
-	-	$1.886_{-0.020}$	64	0.136	0.047	0.125	8	810[3)]	720[3)]	1 x .042	
1.886	0.068	$2.011_{-0.025}$	-	-	-	-	10	1490	1190	$^{11}/_4$ x .050	$^{11}/_4$
-	-	$2.011_{-0.025}$	64	0.201	0.090	0.188	8	1490[3)]	1190[3)]	$^{11}/_4$ x .050	
2.239	0.086	$2.422_{-0.030}$	-	-	-	-	10	2090	1550	$^{11}/_2$ x .050	$^{11}/_2$
-	-	$2.422_{-0.030}$	64	0.201	0.090	0.188	8	2090[3)]	1550[3)]	$^{11}/_2$ x .050	
2.838	0.103	$3.206_{-0.040}$	-	-	-	-	10	3500	2750	2 x .062	2
-	-	$3.206_{-0.040}$	60	0.265	0.090	0.312	8	3500[3)]	2750[3)]	2 x .062	

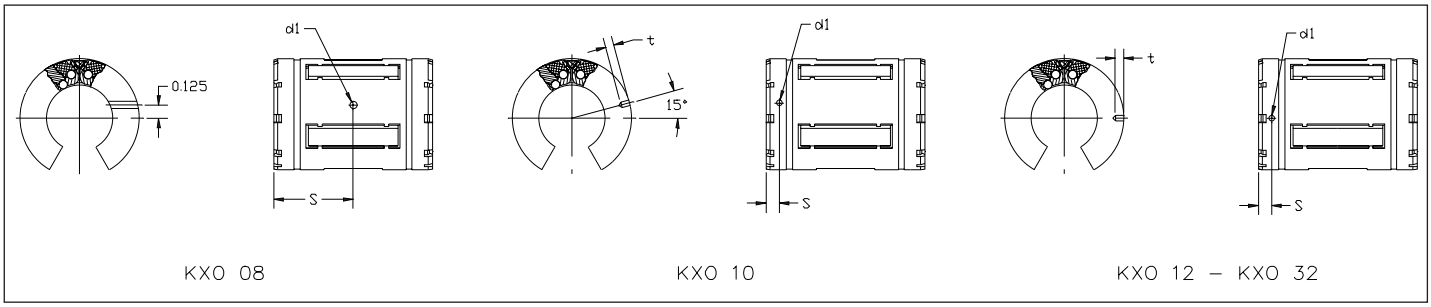

Location holes

Self-Aligning Mounted Units
KGX, KGX..PP,
KGXO, KGXO..PP SERIES

- MAX³ Maximum Performance
- Closed and open
- Linear ball bearing with gap seal or contact seal on both sides

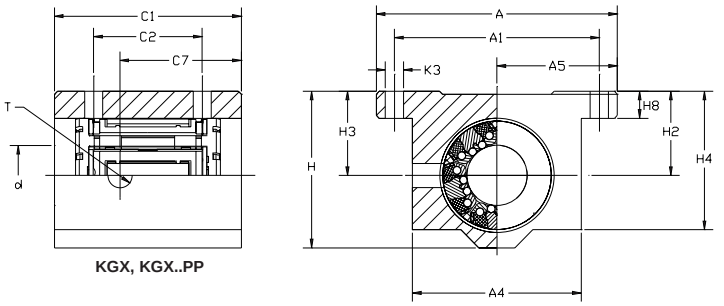

KGX, KGX..PP

For details on part numbers, descriptive suffixes and various technical references, please refer to front of this section.
For engineering or technical information contact your local sales representative or call Distributor Sales (800)523-6572.

DIMENSION TABLE • Inch Dimensions

SHAFT DIAMETER	PART NUMBER[1)]	WEIGHT lbs	d	DIMENSIONS A	C_1	H	MOUNTING DIMENSIONS A_4	A_5 ±0.001	A_6	A_7
1/2	KGX 08	0.249	0.500	2.000	1.688	1.250	1.375	1.000	-	-
	KGXO 08	0.216	0.500	2.000	1.500	1.100	-	1.000	0.688	0.905
5/8	KGX 10	0.464	0.625	2.500	1.938	1.625	1.750	1.250	-	-
	KGXO 10	0.395	0.625	2.500	1.750	1.375	-	1.250	0.875	1.095
3/4	KGX 12	0.581	0.750	2.750	2.063	1.750	1.875	1.375	-	-
	KGXO 12	0.495	0.750	2.750	1.875	1.535	-	1.375	0.937	1.161
1	KGX 16	1.213	1.000	3.250	2.813	2.188	2.375	1.625	-	-
	KGXO 16	1.053	1.000	3.250	2.625	1.975	-	1.625	1.188	1.457
1 1/4	KGX 20	2.430	1.250	4.000	3.625	2.813	3.000	2.000	-	-
	KGXO 20	2.104	1.250	4.000	3.375	2.458	-	2.000	1.500	1.831
1 1/2	KGX 24	3.573	1.500	4.750	4.000	3.250	3.500	2.375	-	-
	KGXO 24	3.154	1.500	4.750	3.750	2.910	-	2.375	1.750	2.087
2	KGX 32	7.196	2.000	6.000	5.000	4.063	4.500	3.000	-	-
	KGXO 32	6.306	2.000	6.000	4.750	3.660	-	3.000	2.250	2.638

1) Linear ball bearings sealed on both sides: suffix “PP”.
2) Load ratings apply only for hardened (670 to 840 HV) and ground shaft raceways.
3) Load rating in main load direction.
4) Load ratings to ISO/C 14 728-1 (maximum values).

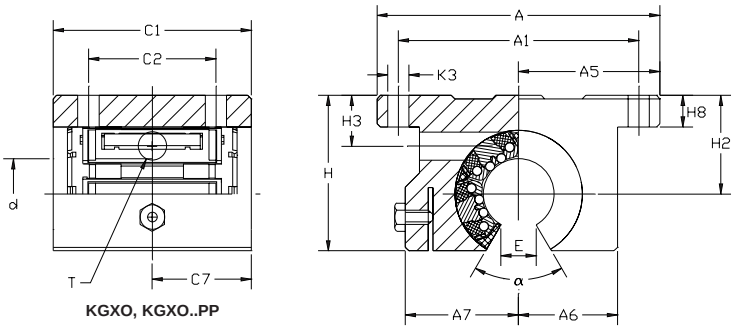

KGXO, KGXO..PP

DIMENSION TABLE • Inch Dimensions													
MOUNTING DIMENSIONS											LOAD RATINGS[2)4)]		SHAFT DIAMETER
C_7	H_2 ±0.001	H_3	H_4	H_8	T	E	α deg.	A_1 ±0.01	C_2 ±0.01	K_3	dyn. C lbf	stat. C_0 lbf	
0.844	0.687	0.690	1.125	0.250	NIP A1	-	-	1.688	1.000	0.156	275	200	1/2
0.520	0.687	0.370	-	0.250	NIP A1	0.313	60	1.688	1.000	0.156	260[3)]	190[3)]	
1.260	0.875	0.700	1.437	0.281	1/4-28	-	-	2.125	1.125	0.188	290	260	5/8
0.875	0.875	0.450	-	0.281	1/4-28	0.375	60	2.125	1.130	0.188	290[3)]	260[3)]	
1.340	0.937	0.937	1.563	0.313	1/4-28	-	-	2.375	1.250	0.188	430	370	3/4
0.937	0.937	0.510	-	0.313	1/4-28	0.438	60	2.375	1.250	0.188	430[3)]	370[3)]	
1.950	1.187	1.187	1.938	0.375	1/4-28	-	-	2.875	1.750	0.218	810	720	1
1.312	1.187	0.730	-	0.375	1/4-28	0.563	60	2.875	1.750	0.218	810[3)]	720[3)]	
2.430	1.500	1.500	2.500	0.437	1/4-28	-	-	3.500	2.000	0.218	1490	1190	11/4
1.688	1.500	0.800	-	0.437	1/4-28	0.625	60	3.500	2.000	0.218	1490[3)]	1190[3)]	
2.750	1.750	1.750	2.875	0.500	1/4-28	-	-	4.125	2.500	0.281	2090	1550	11/2
1.875	1.750	0.840	-	0.500	1/4-28	0.750	60	4.125	2.500	0.281	2090[3)]	1550[3)]	
3.420	2.125	2.125	3.625	0.625	1/4-28	-	-	5.250	3.250	0.406	3500	2750	2
2.375	2.125	1.100	-	0.625	1/4-28	1.000	60	5.250	3.250	0.406	3500[3)]	2750[3)]	

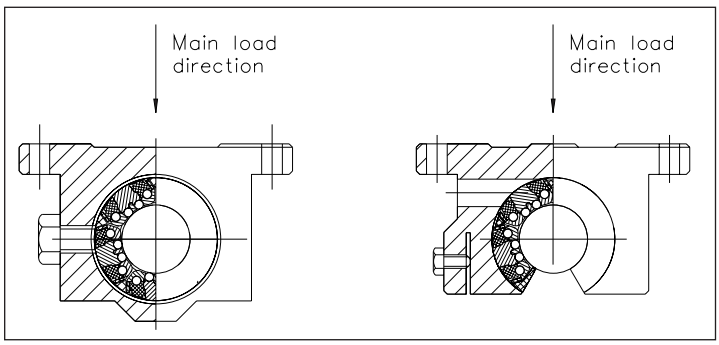

KGX, KGX..PP, KGXO, KGXO..PP
Main load direction[4)]

Self-Aligning Tandem Mounted Units

KTX, KTX..PP, KTXO, KTXO..PP SERIES

- MAX³ Maximum Performance
- Closed and open
- Linear ball bearing with gap seal or contact seal on both sides

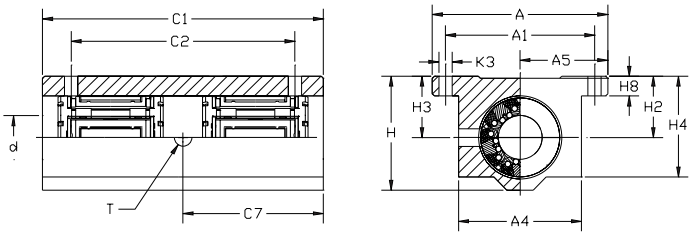

KTX, KTX..PP

For details on part numbers, descriptive suffixes and various technical references, please refer to front of this section.
For engineering or technical information contact your local sales representative or call Distributor Sales (800)523-6572.

DIMENSION TABLE • Inch Dimensions

SHAFT DIAMETER	PART NUMBER[1)]	WEIGHT lbs	d	DIMENSIONS A	DIMENSIONS C_1	DIMENSIONS H	MOUNTING DIMENSIONS A_4	MOUNTING DIMENSIONS A_5 ±0.001	MOUNTING DIMENSIONS A_6	MOUNTING DIMENSIONS A_7
1/2	KTX 08	0.443	0.500	2.000	3.50	1.250	1.375	1.000	-	-
	KTXO 08	0.369	0.500	2.000	3.50	1.100	-	1.000	0.688	0.905
5/8	KTX 10	1.065	0.625	2.500	4.00	1.625	1.750	1.250	-	-
	KTXO 10	0.887	0.625	2.500	4.00	1.375	-	1.250	0.875	1.095
3/4	KTX 12	1.253	0.750	2.750	4.50	1.750	1.875	1.375	-	-
	KTXO 12	1.071	0.750	2.750	4.50	1.535	-	1.375	0.937	1.161
1	KTX 16	2.597	1.000	3.250	6.00	2.188	2.375	1.625	-	-
	KTXO 16	2.228	1.000	3.250	6.00	1.975	-	1.625	1.188	1.457
1 1/4	KTX 20	5.529	1.250	4.000	7.50	2.813	3.000	2.000	-	-
	KTXO 20	4.774	1.250	4.000	7.50	2.485	-	2.000	1.500	1.831
1 1/2	KTX 24	8.316	1.500	4.750	9.00	3.250	3.500	2.375	-	-
	KTXO 24	7.378	1.500	4.750	9.00	2.910	-	2.375	1.750	2.087

1) Linear ball bearings sealed on both sides: suffix “PP”.
2) Load ratings apply only for hardened (670 to 840 HV) and ground shaft raceways.
3) Load rating in main load direction.
4) Load ratings to ISO/C 14 728-1 (maximum values).

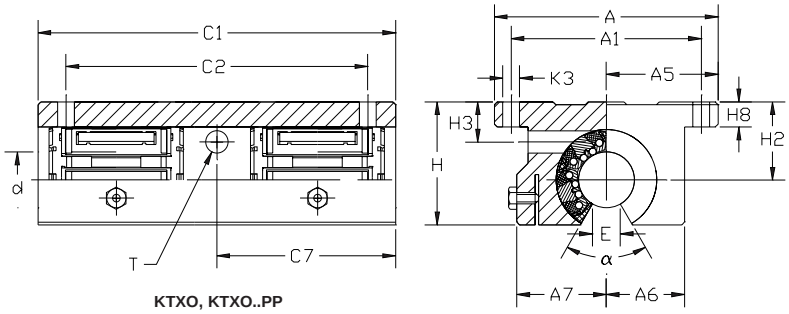

KTXO, KTXO..PP

DIMENSION TABLE • Inch Dimensions													
MOUNTING DIMENSIONS											LOAD RATINGS[2)4)]		SHAFT DIAMETER
C_7	H_2 ±0.001	H_3	H_4	H_8	T	E	α deg.	A_1 ±0.01	C_2 ±0.01	K_3	dyn. C lbf	stat. C lbf	
1.750	0.687	0.687	1.125	0.250	NIP A1	-	-	1.688	2.500	0.156	550	400	1/2
1.750	0.687	0.370	-	0.250	NIP A1	0.313	60	1.688	2.500	0.156	520[3)]	380[3)]	
2.000	0.875	0.875	1.437	0.281	1/4-28	-	-	2.125	3.000	0.188	580	520	5/8
2.000	0.875	0.450	-	0.281	1/4-28	0.375	60	2.125	3.000	0.188	580[3)]	520[3)]	
2.250	0.937	0.937	1.563	0.313	1/4-28	-	-	2.375	3.500	0.188	860	740	3/4
2.250	0.937	0.510	-	0.313	1/4-28	0.438	60	2.375	3.500	0.188	860[3)]	740[3)]	
3.000	1.187	1.187	1.938	0.375	1/4-28	-	-	2.875	4.500	0.218	1620	1440	1
3.000	1.187	0.730	-	0.375	1/4-28	0.563	60	2.875	4.500	0.218	1620[3)]	1440[3)]	
3.750	1.500	1.500	2.500	0.437	1/4-28	-	-	3.500	5.500	0.218	3000	2380	11/4
3.750	1.500	0.800	-	0.437	1/4-28	0.625	60	3.500	5.500	0.218	3000[3)]	2380[3)]	
4.500	1.750	1.750	2.875	0.500	1/4-28	-	-	4.125	6.500	0.281	4200	3100	11/2
4.500	1.750	0.800	-	0.500	1/4-28	0.750	60	4.125	6.500	0.281	4200[3)]	3100[3)]	

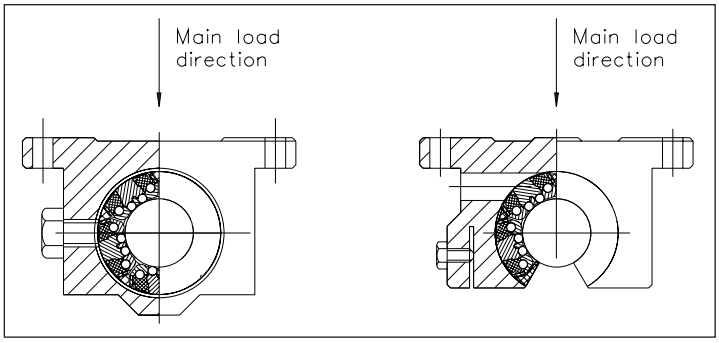

KTX, KTX..PP, KTXO, KTXO..PP
Main load direction[4)]

Self-Aligning Linear Ball Bearings

KS, KS..PP,
KSO, KSO..PP SERIES

- MAX³ Maximum Performance
- Light range - metric sizes
- Closed and open designs
- Gap seals or contact seals on both sides

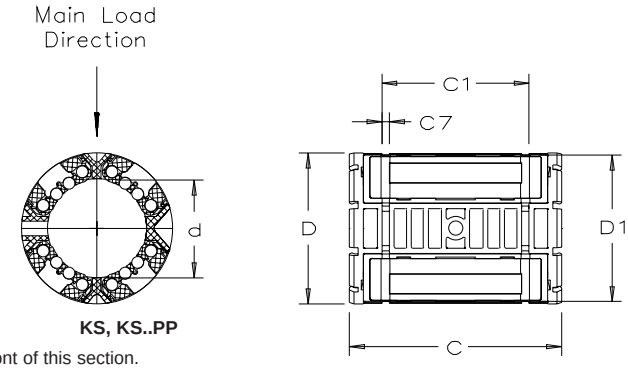

KS, KS..PP

For details on part numbers, descriptive suffixes and various technical references, please refer to front of this section.
For engineering or technical information contact your local sales representative or call Distributor Sales (800)523-6572.

DIMENSION TABLE • Dimensions in mm

SHAFT DIAMETER d	PART NUMBER[1]	MASS ≈kg	DIMENSIONS d	D	C	MOUNTING DIMENSIONS A_6[2]	C_1 H13
12	KS 12	0.018	12	22	32	-	22.6
	KSO 12	0.013	12	22	32	7.6	-
16	KS 16	0.028	16	26	36	-	24.6
	KSO 16	0.019	16	26	36	10.1	-
20	KS 20	0.051	20	32	45	-	31.2
	KSO 20	0.038	20	32	45	10	-
25	KS 25	0.102	25	40	58	-	43.7
	KSO 25	0.075	25	40	58	12.5	-
30	KS 30	0.172	30	47	68	-	51.7
	KSO 30	0.135	30	47	68	14.3	-
40	KS 40	0.335	40	62	80	-	60.3
	KSO 40	0.259	40	62	80	18.2	-
50	KS 50	0.589	50	75	100	-	77.3
	KSO 50	0.454	50	75	100	22.7	-

1) Linear ball bearings sealed on both sides: suffix “PP”.
2) Dimension A_6 on diameter d.
3) Hole arrangement symmetrical with bearing width C.
4) The basic load ratings apply only for hardened (670 to 840 HV) and ground shaft raceways. Basic load ratings in accordance with DIN 636-1.
5) Basic load rating in main load direction.

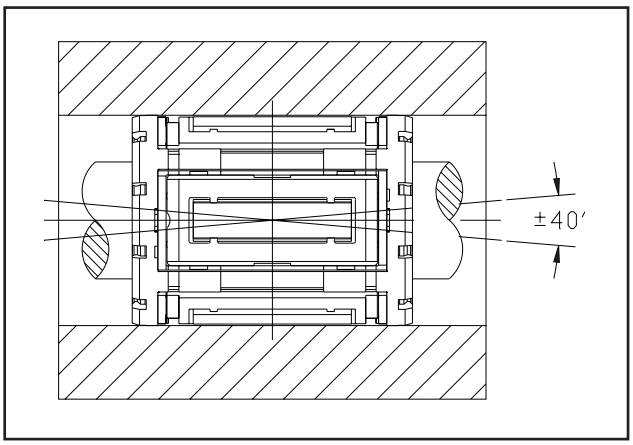

Compensation of misalignment ±40'

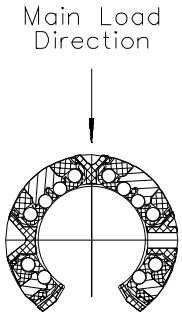

KSO, KSO..PP

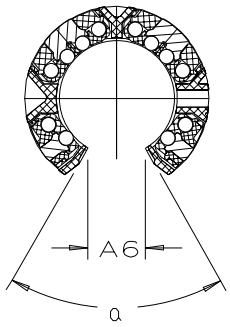

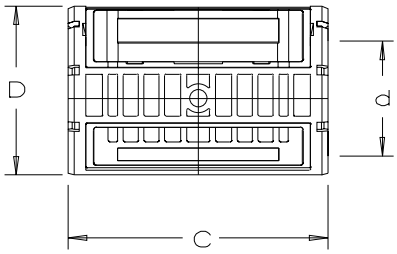

DIMENSION TABLE • Dimensions in mm										
MOUNTING DIMENSIONS						BALL ROWS	BASIC LOAD RATINGS 4)5)		ACCESSORIES	
C_7	D_1	H_{10}	K_1 3)	K_4 3)	α DEGREES	QUANTITY	dyn. C_{max} N	stat. C_{0max} N	SUITABLE SNAP RING TO DIN 471	SHAFT DIAMETER d
1.3	21	-	3	-	-	8	900	810	22x1.2	12
-	-	-	3	3	78	6	900	810	-	
1.3	25	-	3	-	-	8	1,430	1,160	27x1.2	16
-	-	-	3	3	78	6	1,430	1,160	-	
1.6	30.7	-	3	-	-	8	2,200	1,730	33x1.5	20
-	-	-	3	3	60	6	2,200	1,730	-	
1.85	38	-	3.5	-	-	8	3,950	3,250	42x1.75	25
-	-	1.5	3.5	3	60	6	3,950	3,250	-	
1.85	44.7	-	3.5	-	-	8	5,900	4,500	48x1.75	30
-	-	2	3.5	3	57	6	5,900	4,500	-	
2.15	59.4	-	3.5	-	-	8	10,200	7,200	63x2	40
-	-	1.5	3.5	3	54	6	10,200	7,200	-	
2.65	71.4	-	4.5	-	-	8	15,100	10,400	75x2.5	50
-	-	2.5	4.5	5	54	6	15,100	10,400	-	

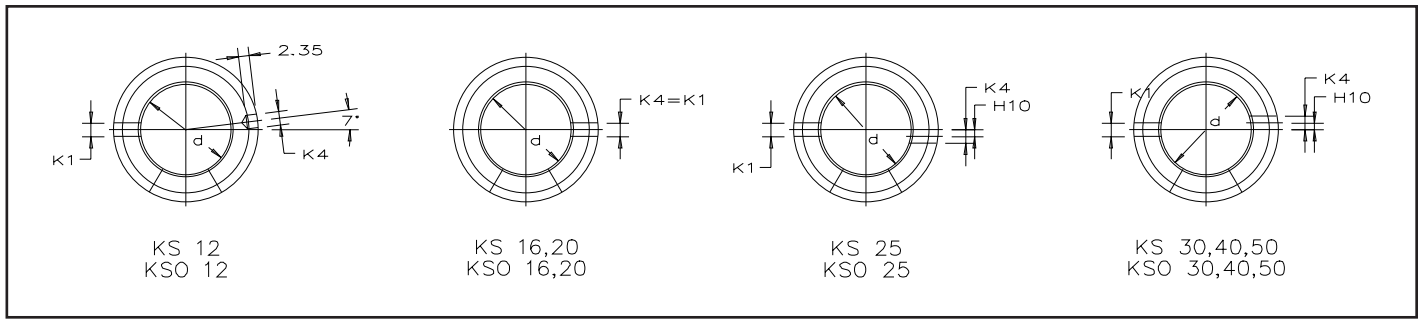

Fixing holes

Linear Ball Bearings
KGSG..PP, KGSS..PP, KGSO..PP SERIES

- MAX³ Maximum Performance
- Closed and open designs
- Contact seals on both sides

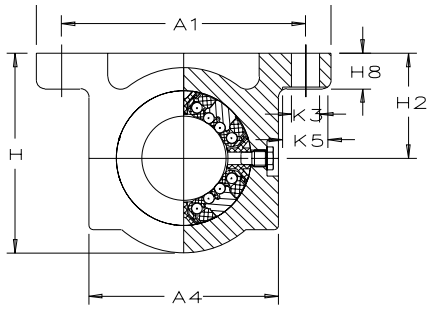

KGSG..PP

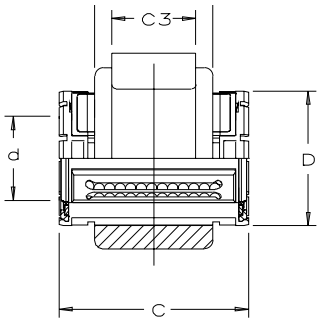

For details on part numbers, descriptive suffixes and various technical references, please refer to front of this section.
For engineering or technical information contact your local sales representative or call Distributor Sales (800)523-6572.

DIMENSION TABLE • Dimensions in mm

SHAFT DIAMETER	PART NUMBER	MASS	DIMENSIONS				MOUNTING DIMENSIONS		
			d	A	C	H	A_1	A_4	A_6 1)
d		≈kg					±0.15		
12	KGSG 12 PP	0.08	12	52	32	35.8	42	31.6	-
	KGSS 12 PP	0.08	12	52	32	35.8	42	31.6	-
	KGSO 12 PP	0.07	12	52	32	-	42	31.6	7.6
16	KGSG 16 PP	0.13	16	56	36	37.5	46	35	-
	KGSS 16 PP	0.13	16	56	36	37.5	46	35	-
	KGSO 16 PP	0.12	16	56	36	-	46	35	10.1
20	KGSG 20 PP	0.27	20	70	45	47.5	58	45	-
	KGSS 20 PP	0.27	20	70	45	47.5	58	45	-
	KGSO 20 PP	0.23	20	70	45	-	58	45	10
25	KGSG 25 PP	0.51	25	80	58	57.5	68	55	-
	KGSS 25 PP	0.51	25	80	58	57.5	68	55	-
	KGSO 25 PP	0.44	25	80	58	-	68	55	12.5
30	KGSG 30 PP	0.83	30	88	68	66.5	76	63	-
	KGSS 30 PP	0.83	30	88	68	66.5	76	63	-
	KGSO 30 PP	0.73	30	88	68	-	76	63	13.6
40	KGSG 40 PP	1.21	40	108	80	83.5	94	77	-
	KGSS 40 PP	1.21	40	108	80	83.5	94	77	-
	KGSO 40 PP	1.05	40	108	80	-	94	77	18.2
50	KGSG 50 PP	2.53	50	135	100	98	116	96	-
	KGSS 50 PP	2.53	50	135	100	98	116	96	-
	KGSO 50 PP	1.98	50	135	100	-	116	96	22.7

1) Dimensions A_6 on diameter d.
2) For fixing screws to EN ISO 4762-8.8.
If there is a possibility of settling, the fixing screws should be secured against rotation.
3) The basic load ratings apply only to hardened (670 to 840 HV) and ground shaft raceways.
Basic load ratings in accordance with DIN 636-1.

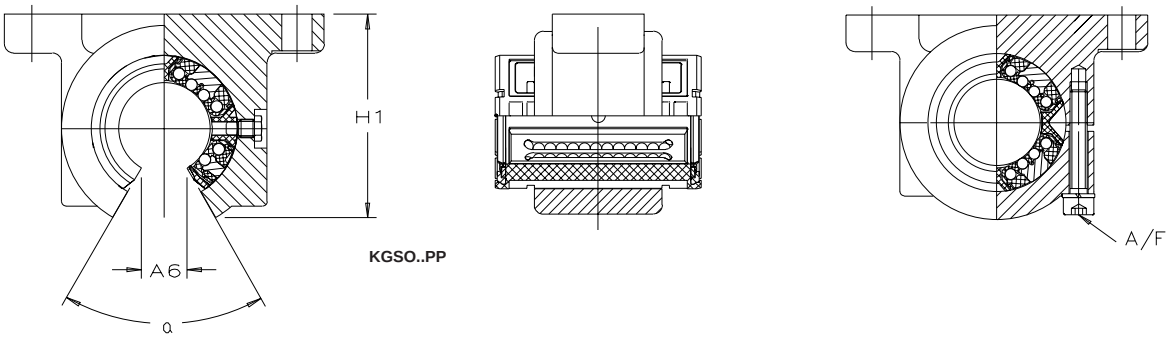

KGSO..PP

DIMENSION TABLE • Dimensions in mm													
MOUNTING DIMENSIONS										BALL ROWS QUANTITY	BASIC LOAD RATINGS[3]		SHAFT DIAMETER
C_1	C_3	D	H_1	H_2 ±0.015	H_8	K_3[2]	K_5[2]	α Degrees	A/F		dyn. C_{max} N	stat. C_{0max} N	
20	12	22	-	20	6	5.5	10	-	-	8	900	810	12
20	12	22	-	20	6	5.5	10	-	2	8	900	810	
20	12	22	32.3	20	6	5.5	10	78	-	6	900	810	
22	15	26	-	20	6	5.5	10	-	-	8	1,430	1,160	16
22	15	26	-	20	6	5.5	10	-	2	8	1,430	1,160	
22	15	26	33.6	20	6	5.5	10	78	-	6	1,430	1,160	
28	20	32	-	25	8	6.6	11	-	-	8	2,200	1,730	20
28	20	32	-	25	8	6.6	11	-	3	8	2,200	1,730	
28	20	32	44.5	25	8	6.6	11	60	-	6	2,200	1,730	
40	28	40	-	30	10	6.6	11	-	-	8	3,950	3,250	25
40	28	40	-	30	10	6.6	11	-	3	8	3,950	3,250	
40	28	40	53.8	30	10	6.6	11	60	-	6	3,950	3,250	
48	32	47	-	35	10	6.6	11	-	-	8	5,900	4,500	30
48	32	47	-	35	10	6.6	11	-	4	8	5,900	4,500	
48	32	47	63.1	35	10	6.6	11	54	-	6	5,900	4,500	
56	40	62	-	45	12	9	15	-	-	8	10,200	7,200	40
56	40	62	-	45	12	9	15	-	4	8	10,200	7,200	
56	40	62	79.3	45	12	9	15	54	-	6	10,200	7,200	
72	52	75	-	50	14	11	18	-	-	8	15,100	10,400	50
72	52	75	-	50	14	11	18	-	5	8	15,100	10,400	
72	52	75	92.8	50	14	11	18	54	-	6	15,100	10,400	

Linear Ball Bearing Units
KGSAG..PP, KGSAS..PP, KGSAO..PP SERIES

- MAX³ Maximum Performance
- Closed and open designs
- Contact seals on both sides

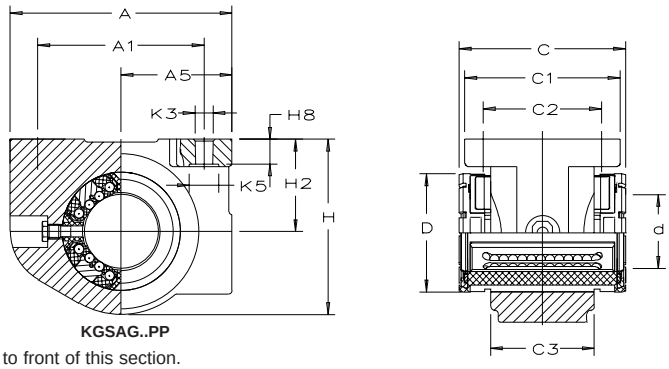

KGSAG..PP

For details on part numbers, descriptive suffixes and various technical references, please refer to front of this section.
For engineering or technical information contact your local sales representative or call Distributor Sales (800)523-6572.

DIMENSION TABLE • Dimensions in mm

SHAFT DIAMETER d	PART NUMBER	MASS ≈kg	DIMENSIONS				MOUNTING DIMENSIONS		
			d	A	C	H	A_1 ±0.15	A_5	A_6 1)
12	KGSAG 12 PP	0.06	12	42	32	34	32	21	-
	KGSAS 12 PP	0.06	12	42	32	34	32	21	-
	KGSAO 12 PP	0.05	12	42	32	-	32	21	7.6
16	KGSAG 16 PP	0.11	16	50	36	41	40	25	-
	KGSAS 16 PP	0.11	16	50	36	41	40	25	-
	KGSAO 16 PP	0.1	16	50	36	-	40	25	10.1
20	KGSAG 20 PP	0.17	20	60	45	47.5	45	30	-
	KGSAS 20 PP	0.17	20	60	45	47.5	45	30	-
	KGSAO 20 PP	0.15	20	60	45	-	45	30	10
25	KGSAG 25 PP	0.34	25	74	58	60	60	37	-
	KGSAS 25 PP	0.34	25	74	58	60	60	37	-
	KGSAO 25 PP	0.3	25	74	58	-	60	37	12.5
30	KGSAG 30 PP	0.54	30	84	68	67	68	42	-
	KGSAS 30 PP	0.54	30	84	68	67	68	42	-
	KGSAO 30 PP	0.48	30	84	68	-	68	42	13.6
40	KGSAG 40 PP	0.98	40	108	80	87	86	54	-
	KGSAS 40 PP	0.98	40	108	80	87	86	54	-
	KGSAO 40 PP	0.84	40	108	80	-	86	54	18.2
50	KGSAG 50 PP	1.63	50	130	100	98	108	65	-
	KGSAS 50 PP	1.63	50	130	100	98	108	65	-
	KGSAO 50 PP	1.17	50	130	100	-	108	65	22.7

1) Dimensions A_6 on diameter d.
2) For fixing screws to EN ISO 4762-8.8.
If there is a possibility of settling, the fixing screws should be secured against rotation.
3) The basic load ratings apply only to hardened (670 to 840 HV) and ground shaft raceways.
Basic load ratings in accordance with DIN 636-1.

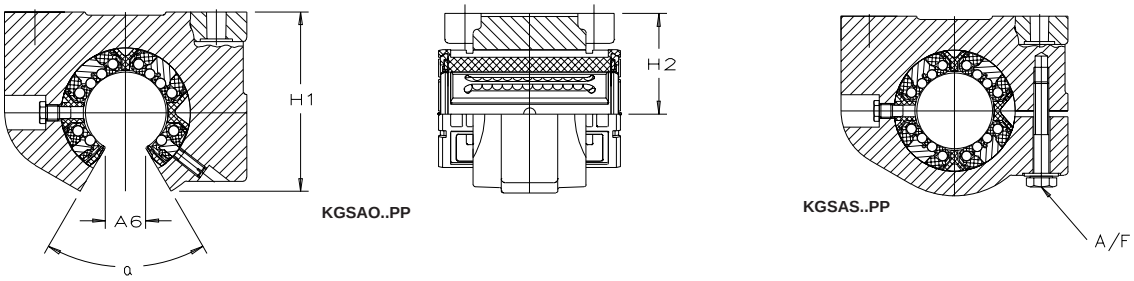

KGSAO..PP

KGSAS..PP

DIMENSION TABLE • Dimensions in mm														
MOUNTING DIMENSIONS											BALL ROWS	BASIC LOAD RATINGS[3)]		SHAFT DIAMETER
C_1	C_2 ±0.015	C_3	D h5	H_1	H_2 ±0.01	H_8 -0.5	K_3[2)]	K_5[2)]	α Degrees	A/F	QUANTITY	dyn. C_{max} N	stat. C_{0max} N	d
32	23	20	22	-	18	4.8	4.7	8	-	-	8	900	810	12
32	23	20	22	-	18	4.8	4.7	8	-	7	8	900	810	
32	23	20	22	30.4	18	4.8	4.7	8	78	-	6	900	810	
35	26	22	26	-	22	5.4	4.7	8	-	-	8	1,430	1,160	16
35	26	22	26	-	22	5.4	4.7	8	-	7	8	1,430	1,160	
35	26	22	26	36.8	22	5.4	4.7	8	78	-	6	1,430	1,160	
42	32	28	32	-	25	6.7	4.7	8	-	-	8	2,200	1,730	20
42	32	28	32	-	25	6.7	4.7	8	-	7	8	2,200	1,730	
42	32	28	32	44.5	25	6.7	4.7	8	60	-	6	2,200	1,730	
54	40	40	40	-	30	7.8	5.7	10	-	-	8	3,950	3,250	25
54	40	40	40	-	30	7.8	5.7	10	-	8	8	3,950	3,250	
54	40	40	40	56	30	7.8	5.7	10	60	-	6	3,950	3,250	
60	45	48	47	-	35	8.7	6.8	11	-	-	8	5,900	4,500	30
60	45	48	47	-	35	8.7	6.8	11	-	10	8	5,900	4,500	
60	45	48	47	63.5	35	8.7	6.8	11	54	-	6	5,900	4,500	
78	58	56	62	-	45	11	9.2	15	-	-	8	10,200	7,200	40
78	58	56	62	-	45	11	9.2	15	-	13	8	10,200	7,200	
78	58	56	62	82.4	45	11	9.2	15	54	-	6	10,200	7,200	
70	50	72	75	-	50	12.5	9.2	15	-	-	8	15,100	10,400	50
70	50	72	75	-	50	12.5	9.2	15	-	13	8	15,100	10,400	
70	50	72	75	92.8	50	12.5	9.2	15	54	-	6	15,100	10,400	

Linear Ball Bearing Units
KGSNG..PP AS, KGSNS..PP AS SERIES

- MAX3 Maximum Performance
- Light range - metric sizes
- Sealed, greased with relubrication facility

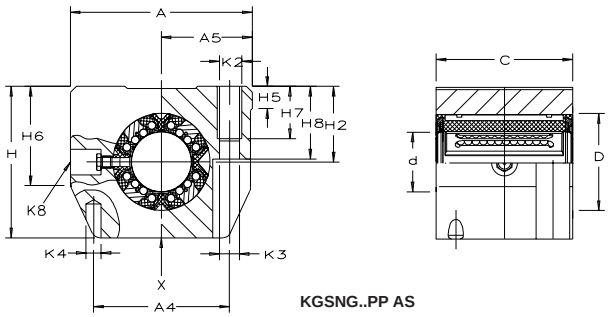

KGSNG..PP AS

For details on part numbers, descriptive suffixes and various technical references, please refer to front of this section.
For engineering or technical information contact your local sales representative or call Distributor Sales (800)523-6572.

DIMENSION TABLE • Dimensions in mm

SHAFT DIAMETER d	PART NUMBER	MASS ≈kg	DIMENSIONS				MOUNTING DIMENSIONS				
			d	A	C	H	A_1 ±0.15	A_4	A_5 ±0.01	C_2 1) ±0.15	D
12	KGSNG 12 PP AS	0.1	12	43	32	35	32	34	21.5	23	22
	KGSNS 12 PP AS	0.1	12	43	32	35	32	34	21.5	23	22
16	KGSNG 16 PP AS	0.17	16	53	37	42	40	40	26.5	26	26
	KGSNS 16 PP AS	0.17	16	53	37	42	40	40	26.5	26	26
20	KGSNG 20 PP AS	0.27	20	60	45	50	45	44	30	32	32
	KGSNS 20 PP AS	0.27	20	60	45	50	45	44	30	32	32
25	KGSNG 25 PP AS	0.56	25	78	58	60	60	59.4	39	40	40
	KGSNS 25 PP AS	0.56	25	78	58	60	60	59.4	39	40	40
30	KGSNG 30 PP AS	0.83	30	87	68	70	68	63	43.5	45	47
	KGSNS 30 PP AS	0.83	30	87	68	70	68	63	43.5	45	47
40	KGSNG 40 PP AS	1.55	40	108	80	90	86	76	54	58	62
	KGSNS 40 PP AS	1.55	40	108	80	90	86	76	54	58	62
50	KGSNG 50 PP AS	2.7	50	132	100	105	108	90	66	50	75
	KGSNS 50 PP AS	2.7	50	132	100	105	108	90	66	50	75

1) Dimension C_2 and lubrication hole symmetrical with bearing width C.
2) For fixing screws to EN ISO 4762-8.8.
If there is a possibility of settling, the fixing screws should be secured against rotation.
3) Centring for dowel hole.
4) The basic load ratings apply only to hardened (670 to 840

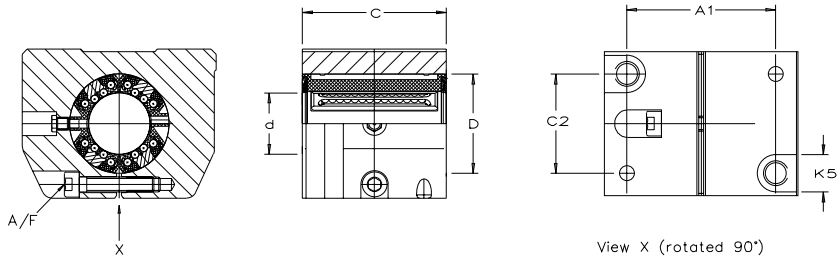

KGSNS..PP AS

DIMENSION TABLE • Dimensions in mm														
MOUNTING DIMENSIONS											BALL ROWS QUANTITY	BASIC LOAD RATINGS[3]		SHAFT DIAMETER
H_2 +0.008 -0.016	H_5	H_6	H_7	H_8	K_2	K_3[2]	K_4[3]	K_5[2]	K_8[1]	A/F		dyn. C_{max} N	stat. C_{0max} N	d
18	5.4	25.3	11	16.5	M 5	4.3	4	8	NIP 4 MZ	-	8	900	810	12
18	5.4	25.3	11	16.5	M 5	4.3	4	8	NIP 4 MZ	2.5	8	900	810	
22	6.9	28	13	21	M 6	5.3	4	10	NIP 4 MZ	-	8	1,430	1,160	16
22	6.9	28	13	21	M 6	5.3	4	10	NIP 4 MZ	3	8	1,430	1,160	
25	7.4	32.8	18	24	M 8	6.6	5	11	NIP 4 MZ	-	8	2,200	1,730	20
25	7.4	32.8	18	24	M 8	6.6	5	11	NIP 4 MZ	4	8	2,200	1,730	
30	8.3	40	22	29	M10	8.4	6	15	NIP 5 MZ	-	8	3,950	3,250	25
30	8.3	40	22	29	M10	8.4	6	15	NIP 5 MZ	5	8	3,950	3,250	
35	9.3	44.7	22	34	M10	8.4	6	15	NIP 5 MZ	-	8	5,900	4,500	30
35	9.3	44.7	22	34	M10	8.4	6	15	NIP 5 MZ	5	8	5,900	4,500	
45	11.7	55.9	26	44	M12	10.5	8	18	NIP 5 MZ	-	8	10,200	7,200	40
45	11.7	55.9	26	44	M12	10.5	8	18	NIP 5 MZ	6	8	10,200	7,200	
50	10.6	60	35	49	M16	13.5	10	20	NIP 6 MZ	-	8	15,100	10,400	50
50	10.6	60	35	49	M16	13.5	10	20	NIP 6 MZ	8	8	15,100	10,400	

Linear Ball Bearing Units
KGSNO..PP AS, KGSNOS..PP AS SERIES

- MAX³ Maximum Performance
- Light range - metric sizes
- Sealed, greased with relubrication facility

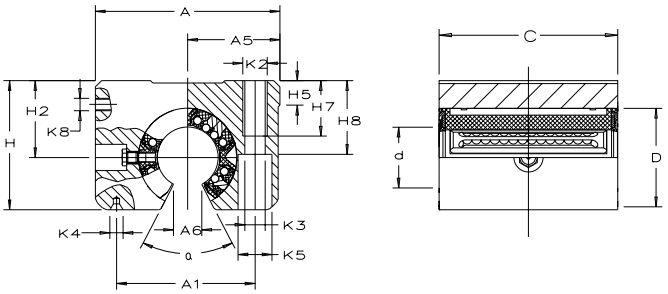

KGSNO..PP AS

For details on part numbers, descriptive suffixes and various technical references, please refer to front of this section.
For engineering or technical information contact your local sales representative or call Distributor Sales (800)523-6572.

DIMENSION TABLE • Dimensions in mm

SHAFT DIAMETER d	PART NUMBER	MASS ≈kg	DIMENSIONS d	A	C	H	MOUNTING DIMENSIONS A_1 ±0.15	A_5 ±0.01	A_6 1)	C_2 2) ±0.15	D
12	KGSNO 12 PP AS	0.09	12	43	32	28	32	21.5	7.6	23	22
	KGSNOS 12 PP AS	0.09	12	43	32	28	32	21.5	7.6	23	22
16	KGSNO 16 PP AS	0.15	16	53	37	35	40	26.5	8.9	26	26
	KGSNOS 16 PP AS	0.15	16	53	37	35	40	26.5	8.9	26	26
20	KGSNO 20 PP AS	0.25	20	60	45	42	45	30	9.2	32	32
	KGSNOS 20 PP AS	0.25	20	60	45	42	45	30	9.2	32	32
25	KGSNO 25 PP AS	0.52	25	78	58	51	60	39	11.9	40	40
	KGSNOS 25 PP AS	0.52	25	78	58	51	60	39	11.9	40	40
30	KGSNO 30 PP AS	0.76	30	87	68	60	68	43.5	14.3	45	47
	KGSNOS 30 PP AS	0.76	30	87	68	60	68	43.5	14.3	45	47
40	KGSNO 40 PP AS	1.4	40	108	80	77	86	54	18.8	58	62
	KGSNOS 40 PP AS	1.4	40	108	80	77	86	54	18.8	58	62
50	KGSNO 50 PP AS	2.4	50	132	100	88	108	66	22.7	50	75
	KGSNOS 50 PP AS	2.4	50	132	100	88	108	66	22.7	50	75

1) Dimension A_6 on diameter C.
2) Dimension C_2 and lurication hole symmetrical with bearings width C.
3) For fixing screws to EN ISO 4762-8.8.
If there is a possibility of settling, the fixing screws should be secured against rotation.
4) The basic load ratings apply only to hardened (670 to 840 HV) and ground shaft raceways.
5) Centring hole to DIN 332, type A.

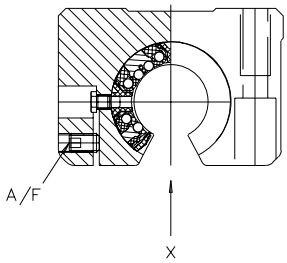

KGSNOS..PP AS

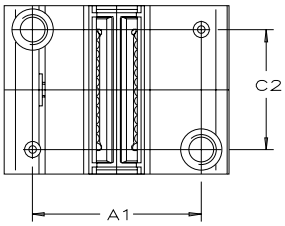

View X (rotated 90°)

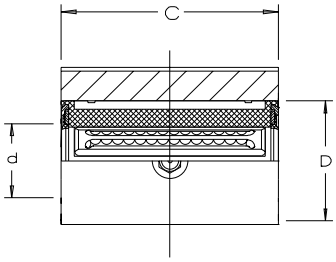

DIMENSION TABLE • Dimensions in mm														
MOUNTING DIMENSIONS											BALL ROWS QUANTITY	BASIC LOAD RATINGS[3]		SHAFT DIAMETER
H_2 +0.008 -0.016	H_5	H_7	H_8	K_2	K_3[3]	K_4[5]	K_5[3]	K_8[2]	A/F	α Degrees		dyn. C_{max} N	stat. C_{0max} N	d
18	6.1	11	16.5	M 5	4.3	1.6 x 3.35	8	NIP 4 MZ	-	78	6	900	810	12
18	6.1	11	16.5	M 5	4.3	1.6 x 3.35	8	NIP 4 MZ	2.5	78	6	900	810	
22	7.5	13	21	M 6	5.3	1.6 x 3.35	10	NIP 4 MZ	-	68	6	1,430	1,160	16
22	7.5	13	21	M 6	5.3	1.6 x 3.35	10	NIP 4 MZ	2.5	68	6	1,430	1,160	
25	8	18	24	M 8	6.6	2 x 4.25	11	NIP 4 MZ	-	55	6	2,200	1,730	20
25	8	18	24	M 8	6.6	2 x 4.25	11	NIP 4 MZ	2.5	55	6	2,200	1,730	
30	8.8	22	29	M10	8.4	2.5 x 5.3	15	NIP 5 MZ	-	57	6	3,950	3,250	25
30	8.8	22	29	M10	8.4	2.5 x 5.3	15	NIP 5 MZ	3	57	6	3,950	3,250	
35	9.7	22	34	M10	8.4	2.5 x 5.3	15	NIP 5 MZ	-	57	6	5,900	4,500	30
35	9.7	22	34	M10	8.4	2.5 x 5.3	15	NIP 5 MZ	3	57	6	5,900	4,500	
45	12.4	26	44	M12	10.5	3.15 x 6.7	18	NIP 5 MZ	-	56	6	10,200	7,200	40
45	12.4	26	44	M12	10.5	3.15 x 6.7	18	NIP 5 MZ	4	56	6	10,200	7,200	
50	11.1	35	49	M16	13.5	4 x 8.5	20	NIP 6 MZ	-	54	6	15,100	10,400	50
50	11.1	35	49	M16	13.5	4 x 8.5	20	NIP 6 MZ	5	54	6	15,100	10,400	

Linear Ball Bearing Units
KTSG..PP AS, KTSS..PP AS SERIES

- MAX³ Maximum Performance
- Closed and open designs
- Contact seals on both sides

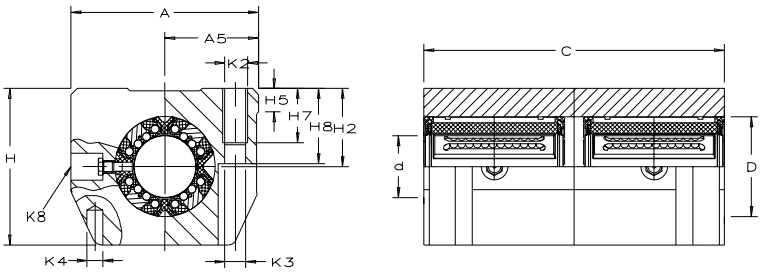

KTSG..PP AS

For details on part numbers, descriptive suffixes and various technical references, please refer to front of this section.
For engineering or technical information contact your local sales representative or call Distributor Sales (800)523-6572.

DIMENSION TABLE • Dimensions in mm

SHAFT DIAMETER d	PART NUMBER	MASS ≈kg	DIMENSIONS				MOUNTING DIMENSIONS				
			d	A	C	H	A_1 ±0.15	A_5 ±0.01	C_2 1) ±0.15	C_3 1)	D
12	KTSG 12 PP AS	0.21	12	43	70	35	32	21.5	56	24	22
	KTSS 12 PP AS	0.21	12	43	70	35	32	21.5	56	24	22
16	KTSG 16 PP AS	0.38	16	53	78	42	40	26.5	64	26	26
	KTSS 16 PP AS	0.38	16	53	78	42	40	26.5	64	26	26
20	KTSG 20 PP AS	0.55	20	60	96	50	45	30	76	33	32
	KTSS 20 PP AS	0.55	20	60	96	50	45	30	76	33	32
25	KTSG 25 PP AS	1.13	25	78	122	60	60	39	94	44	40
	KTSS 25 PP AS	1.13	25	78	122	60	60	39	94	44	40
30	KTSG 30 PP AS	1.78	30	87	142	70	68	43.5	106	54	47
	KTSS 30 PP AS	1.78	30	87	142	70	68	43.5	106	54	47

1) Dimensions and lubrication hole symmetrical with bearing width C.
2) For fixing screws to EN ISO 4762-8.8.
If there is a possibility of settling, the fixing screws should be secured against rotation.
3) Centring for dowel hole.
4) Lubrication nipple.
5) The basic load ratings apply only to hardened (670 to 840 HV) and ground shaft raceways.
Basic load ratings in accordance with DIN 636-1.

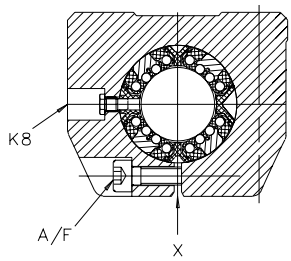

KTSS..PP AS
(same dimensions as KTSG..PP AS)

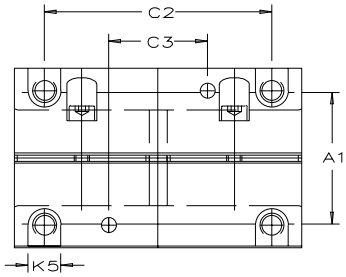

View X (rotated 90°)

DIMENSION TABLE • Dimensions in mm														
MOUNTING DIMENSIONS											BALL ROWS QUANTITY	BASIC LOAD RATINGS[3]		SHAFT DIAMETER
H_2 +0.008 -0.016	H_5	H_6	H_7	H_8	K_2	K_3[2]	K_4[3]	K_5[2]	K_8[4]	A/F		dyn. C_{max} N	stat. C_{0max} N	d
18	6	25.3	11	16.5	M 5	4.3	4	8	NIP 4 MZ	-	8	1,460	1,620	12
18	6	25.3	11	16.5	M 5	4.3	4	8	NIP 4 MZ	2.5	8	1,460	1,620	
22	7.5	28	13	21	M 6	5.3	4	10	NIP 4 MZ	-	8	2,330	2,320	16
22	7.5	28	13	21	M 6	5.3	4	10	NIP 4 MZ	3	8	2,330	2,320	
25	8	32.8	18	24	M 8	6.6	5	11	NIP 4 MZ	-	8	3,650	3,450	20
25	8	32.8	18	24	M 8	6.6	5	11	NIP 4 MZ	4	8	3,650	3,450	
30	9	40	22	29	M10	8.4	6	15	NIP 5 MZ	-	8	6,400	6,500	25
30	9	40	22	29	M10	8.4	6	15	NIP 5 MZ	5	8	6,400	6,500	
35	10	44.7	22	34	M10	8.4	6	15	NIP 5 MZ	-	8	9,600	9,000	30
35	10	44.7	22	34	M10	8.4	6	15	NIP 5 MZ	5	8	9,600	9,000	

Linear Ball Bearing Units
KTSO..PP AS, KTSOS..PP AS SERIES

- MAX³ Maximum Performance
- Open design
- Contact seals on both sides

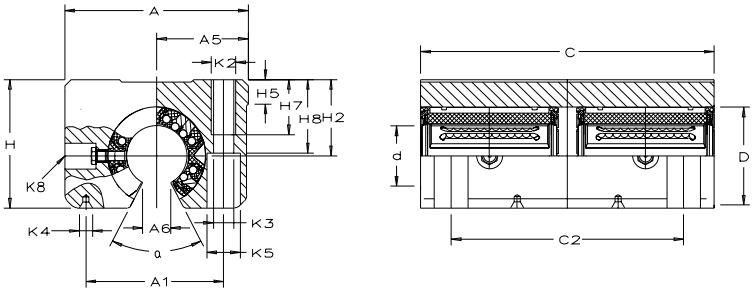

KTSO..PP AS

For details on part numbers, descriptive suffixes and various technical references, please refer to front of this section.
For engineering or technical information contact your local sales representative or call Distributor Sales (800)523-6572.

DIMENSION TABLE • Dimensions in mm

SHAFT DIAMETER d	PART NUMBER	MASS ≈kg	DIMENSIONS d	A	C	H	MOUNTING DIMENSIONS A_1 ±0.15	A_5 ±0.01	A_6 1)	C_2 2) ±0.15	C_3 2)	D
12	KTSO 12 PP AS	0.118	12	43	70	28	32	21.5	6.5	56	24	22
	KTSOS 12 PP AS	0.18	12	43	70	28	32	21.5	6.5	56	24	22
16	KTSO 16 PP AS	0.34	16	53	78	35	40	26.5	8.9	64	26	26
	KTSOS 16 PP AS	0.34	16	53	78	35	40	26.5	8.9	64	26	26
20	KTSO 20 PP AS	0.51	20	60	96	42	45	30	9.2	76	33	32
	KTSOS 20 PP AS	0.51	20	60	96	42	45	30	9.2	76	33	32
25	KTSO 25 PP AS	1.03	25	78	122	51	60	39	11.9	94	44	40
	KTSOS 25 PP AS	1.03	25	78	122	51	60	39	11.9	94	44	40
30	KTSO 30 PP AS	1.8	30	87	142	60	68	43.5	14.3	106	54	47
	KTSOS 30 PP AS	1.8	30	87	142	60	68	43.5	14.3	106	54	47

1) Dimensions A_6 on diameter d.
2) Dimensions and lubrication hole symmetrical with bearing width C.
3) For fixing screws to EN ISO 4762-8.8.
If there is a possibility of settling, the fixing screws should be secured against rotation.
4) Lubrication nipple.
5) The basic load ratings apply only to hardened (670 to 840 HV) and ground shaft raceways.
Basic load ratings in accordance with DIN 636-1.
6) Centring hole to DIN 332, type A.

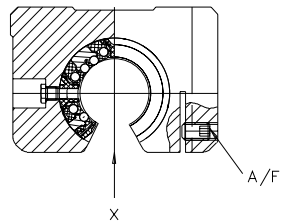

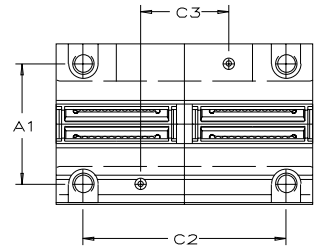

View X (rotated 90°)

KTSOS..PP AS
(Same dimensions as KTSO..PP AS)

DIMENSION TABLE • Dimensions in mm														
MOUNTING DIMENSIONS											BALL ROWS QUANTITY	BASIC LOAD RATINGS[3]		SHAFT DIAMETER
H_2 +0.008 -0.016	H_5	H_7	H_8	K_2	K_3[3]	K_4[6]	K_5[3]	K_8[4]	A/F	α Degrees		dyn. C_{max} N	stat. C_{0max} N	d
18	6.1	11	16.5	M 5	4.3	1.6 x 3.35	8	NIP 4 MZ	-	66	6	1,460	1,620	12
18	6.1	11	16.5	M 5	4.3	1.6 x 3.35	8	NIP 4 MZ	2.5	66	6	1,460	1,620	
22	7.5	13	21	M 6	5.3	1.6 x 3.35	10	NIP 4 MZ	-	68	6	2,330	2,320	16
22	7.5	13	21	M 6	5.3	1.6 x 3.35	10	NIP 4 MZ	2.5	68	6	2,330	2,320	
25	8	18	24	M 8	6.6	2.0 x 4.25	11	NIP 4 MZ	-	55	6	3,650	3,450	20
25	8	18	24	M 8	6.6	2.0 x 4.25	11	NIP 4 MZ	2.5	55	6	3,650	3,450	
30	8.8	22	29	M10	8.4	2.5 x 5.3	15	NIP 5 MZ	-	57	6	6,400	6,500	25
30	8.8	22	29	M10	8.4	2.5 x 5.3	15	NIP 5 MZ	3	57	6	6,400	6,500	
35	9.7	22	34	M10	8.4	2.5 x 5.3	15	NIP 5 MZ	-	57	6	9,600	9,000	30
35	9.7	22	34	M10	8.4	2.5 x 5.3	15	NIP 5 MZ	3	57	6	9,600	9,000	

Linear Ball Bearing Units
KGSC..PP AS, KGSCS..PP AS SERIES

- MAX³ Maximum Performance
- Light range - metric sizes
- Sealed, greased with relubrication facility

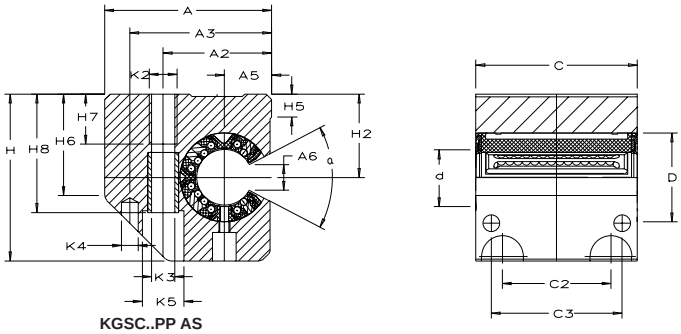

KGSC..PP AS

For details on part numbers, descriptive suffixes and various technical references, please refer to front of this section.
For engineering or technical information contact your local sales representative or call Distributor Sales (800)523-6572.

DIMENSION TABLE • Dimensions in mm

SHAFT DIAMETER d	PART NUMBER	MASS ≈kg	DIMENSIONS d	A	C	H	A_2 ±0.15	MOUNTING DIMENSIONS A_3	A_5 ±0.01	A_6 1)	C_2 2) ±0.15	C_3 2)
20	KGSC 20 PP AS	0.35	20	60	47	60	39	51	17	9.2	30	36
	KGSCS 20 PP AS	0.35	20	60	47	60	39	51	17	9.2	30	36
25	KGSC 25 PP AS	0.68	25	75	58	72	49	64	21	12	36	45
	KGSCS 25 PP AS	0.68	25	75	58	72	49	64	21	12	36	45
30	KGSC 30 PP AS	1	30	86	68	82	59	76	25	14.3	42	52
	KGSCS 30 PP AS	1	30	86	68	82	59	76	25	14.3	42	52
40	KGSC 40 PP AS	1.8	40	110	80	100	75	97	32	18.8	48	60
	KGSCS 40 PP AS	1.8	40	110	80	100	75	97	32	18.8	48	60
50	KGSC 50 PP AS	2.9	50	127	100	115	88	109	38	22.7	62	80
	KGSCS 50 PP AS	2.9	50	127	100	115	88	109	38	22.7	62	80

1) Dimension A_6 on diameter d.
2) Dimension C_2 and lubrication hole symmetrical with bearing width C.
3) Centring for dowel hole.
4) For fixing screws to EN ISO 4762-8.8.
If there is a possibility of settling, the fixing screws should be secured against rotation.
5) The basic load ratings apply only to hardened (670 to 840 HV) and ground shaft raceways.

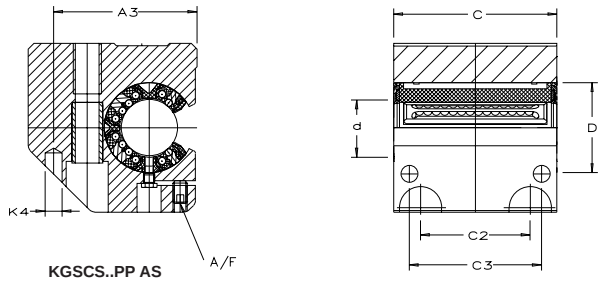

KGSCS..PP AS

DIMENSION TABLE • Dimensions in mm																
MOUNTING DIMENSIONS													BALL ROWS	BASIC LOAD RATINGS[3]		SHAFT DIAMETER
D	H_2 +0.008 -0.016	H_5	H_6	H_7	H_8	K_2	K_3[3]	K_4[4]	K_5[3]	K_8[2]	A/F	α Degrees	QUANTITY	dyn. C_{max} N	stat. C_{0max} N	d
32	30	8.3	37.5	18	42.6	M10	8.4	6	15	NIP 4 MZ	-	55	6	2,200	1,730	20
32	30	8.3	37.5	18	42.6	M10	8.4	6	15	NIP 4 MZ	2.5	55	6	2,200	1,730	
40	35	8.2	45	22	50.6	M12	10.5	8	18	NIP 5 MZ	-	57	6	3,950	3,250	25
40	35	8.2	45	22	50.6	M12	10.5	8	18	NIP 5 MZ	3	57	6	3,950	3,250	
47	40	9	52	29	55.6	M16	13.5	10	20	NIP 5 MZ	-	57	6	5,900	4,500	30
47	40	9	52	29	55.6	M16	13.5	10	20	NIP 5 MZ	3	57	6	5,900	4,500	
62	45	9.5	60	36	67.6	M20	15.5	12	24	NIP 5 MZ	-	56	6	10,200	7,200	40
62	45	9.5	60	36	67.6	M20	15.5	12	24	NIP 5 MZ	4	56	6	10,200	7,200	
75	50	8.6	70	36	78.8	M20	17.5	12	26	NIP 6 MZ	-	54	6	15,100	10,400	50
75	50	8.6	70	36	78.8	M20	17.5	12	26	NIP 6 MZ	5	54	6	15,100	10,400	

Linear Ball Bearing Units
KTFS..PP AS SERIES

- MAX3 Maximum Performance
- Light range - metric sizes
- Sealed, greased with relubrication facility

For details on part numbers, descriptive suffixes and various technical references, please refer to front of this section.
For engineering or technical information contact your local sales representative or call Distributor Sales (800)523-6572.

DIMENSION TABLE • Dimensions in mm											
SHAFT DIAMETER d	PART NUMBER	MASS ≈kg	DIMENSIONS				MOUNTING DIMENSIONS				
			d	A	C	H	A_1 ±0.15	C_1	C_3	C_7	D
12	KTFS 12 PP AS	0.2	12	41	70	34	32	40	10	35	22
16	KTFS 16 PP AS	0.3	16	50	78	40	38	50	10	39	26
20	KTFS 20 PP AS	0.5	20	60	96	50	45	60	10	48	32
25	KTFS 25 PP AS	1	25	74	122	60	56	73	10	61	40
30	KTFS 30 PP AS	1.4	30	84	142	70	64	82	10	71	47

1) Recommendation: locating bore D_1 H7.
2) The basic load ratings apply only to hardened (670 to 840 HV) and ground shaft raceways.

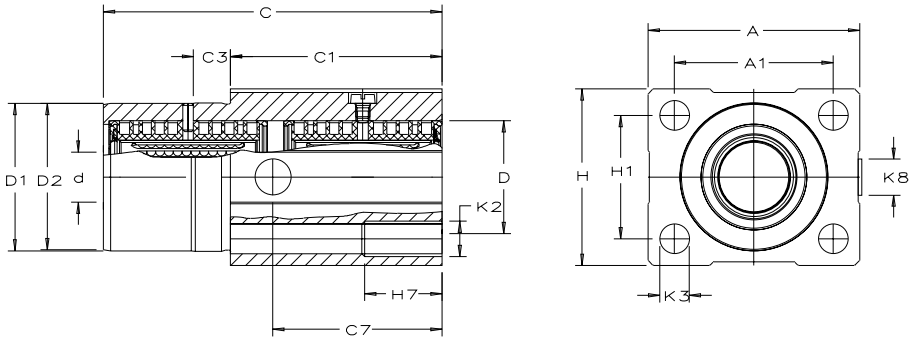

KTFS..PP AS

DIMENSION TABLE • Dimensions in mm										
MOUNTING DIMENSIONS							BALL ROWS QUANTITY	BASIC LOAD RATINGS[3)]		SHAFT DIAMETER
D_1[1)] g7	D_2 -0.1 -0.3	H_1 ±0.15	H_7	K_2	K_3	K_8		dyn. C_{max} N	stat. C_{0max} N	d
30	30	24	13	M 6	5.3	M8x1	8	1,460	1,620	12
35	35	28	18	M 8	6.6	M8x1	8	2,330	2,320	16
42	42	35	22	M10	8.4	M8x1	8	3,650	3,450	20
52	52	42	26	M12	10.5	M8x1	8	6,400	6,500	25
61	61	50	35	M16	13.5	M8x1	8	9,600	9,000	30

Linear Ball Bearings

KH SERIES

- Compact Range
- With Relubrication Facility

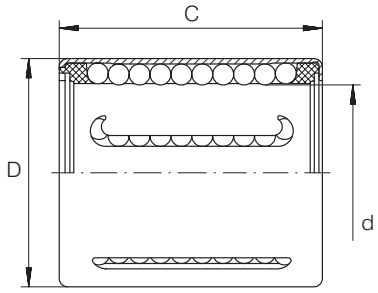

KH

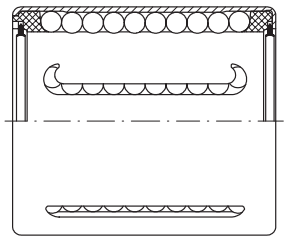

KH..PP

For details on part numbers, descriptive suffixes and various technical references, please refer to front of this section.
For engineering or technical information contact your local sales representative or call Distributor Sales (800)523-6572 or Linear Sales (800)462-3399.

DIMENSION TABLE · Dimensions in mm

SHAFT DIA.	PART NUMBER[1]	MASS	DIMENSIONS			MOUNTING DIMENSIONS		BASIC LOAD RATINGS[2]			
		g	d	D	C	C_7	K_8	dyn. C_{min} N	stat. $C_{0\,min}$ N	dyn. C_{max} N	stat. $C_{0\,max}$ N
6	KH 0622	7	6	12	22	4	2	340	239	390	340
8	KH 0824	12	8	15	24	6	2	410	280	475	400
10	KH 1026	14.5	10	17	26	6	2.5	510	370	590	520
12	KH 1228	18.5	12	19	28	6	2.5	670	510	800	740
14	KH 1428	20.5	14	21	28	6	2.5	690	520	830	760
16	KH 1630	27.5	16	24	30	7	2.5	890	620	1,060	910
20	KH 2030	32.5	20	28	30	7	2.5	1,110	790	1,170	1,010
25	KH 2540	66	25	35	40	8	2.5	2,280	1,670	2,420	2,130
30	KH 3050	95	30	40	50	8	2.5	3,300	2,700	3,300	3,100
40	KH 4060	182	40	52	60	9	2.5	5,300	4,450	5,300	4,950
50	KH 5070	252	50	62	70	9	2.5	6,800	6,300	6,800	7,000

[1]) Linear ball bearings sealed on both sides: suffix “PP”.
[2]) The basic load ratings are only valid for hardened (670 to 840 HV) and ground shaft raceways.

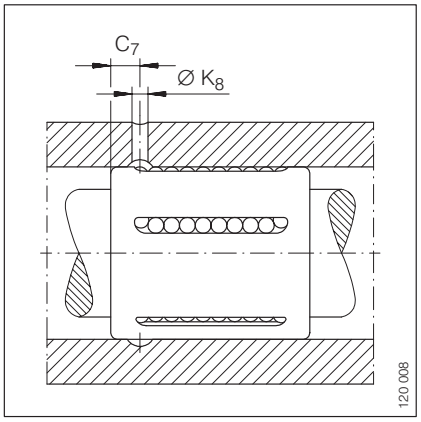

Linear Ball Bearing And Housing Units

KGHK..B PP AS SERIES

- Compact Range
- Sealed, Greased, With Relubrication Facility

For details on part numbers, descriptive suffixes and various technical references, please refer to front of this section.
For engineering or technical information contact your local sales representative or call Distributor Sales (800)523-6572 or Linear Sales (800)462-3399.

DIMENSION TABLE · Dimensions in mm									
SHAFT DIAMETER	PART NUMBER	MASS	DIMENSIONS				MOUNTING DIMENSIONS		
			d	A	C	H	A_1	A_4	C_7
		kg					±0.15		
6	KGHK 06 B PP AS	0.04	6	32	22	27	23	25	4
8	KGHK 08 B PP AS	0.05	8	32	24	27	23	25	5
10	KGHK 10 B PP AS	0.07	10	40	26	33	29	32	5
12	KGHK 12 B PP AS	0.08	12	40	28	33	29	32	5.5
14	KGHK 14 B PP AS	0.1	14	43	28	36.5	34	34	5.5
16	KGHK 16 B PP AS	0.11	16	43	30	36.5	34	34	6
20	KGHK 20 B PP AS	0.15	20	53	30	42.5	40	40	6
25	KGHK 25 B PP AS	0.27	25	60	40	52.5	48	44	8
30	KGHK 30 B PP AS	0.4	30	67	50	60	53	49.5	9
40	KGHK 40 B PP AS	0.75	40	87	60	73.5	69	63	10
50	KGHK 50 B PP AS	1.25	50	103	70	92	82	74	12

1) For fixing screws to DIN 912-8.8 and spring washer to DIN 7 980.
2) Lubrication nipple.
3) The basic load ratings are only valid for hardened (670 to 840 HV) and ground shaft raceways.

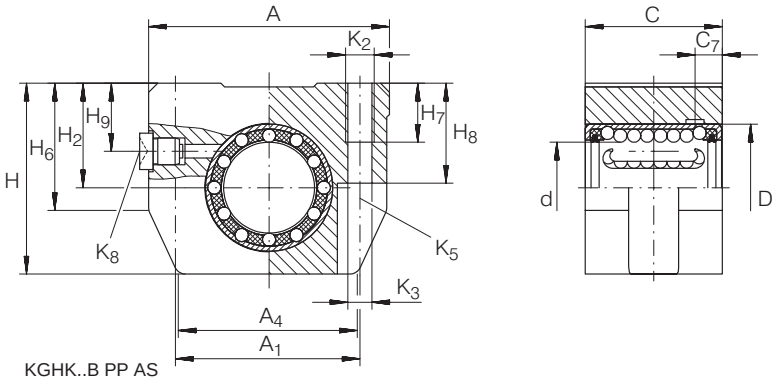

KGHK..B PP AS

										BASIC LOAD RATINGS[3])		SHAFT DIAMETER
D	H_2 +0.010 −0.014	H_6	H_7	H_8	H_9	K_2	K_3[1])	K_5[1])	K_8[2])	dyn. C N	stat. C_0 N	
12	13	19.5	9	13	9	M4	3.4	M3	NIP A1	340	239	6
15	14	19.5	9	13	9	M4	3.4	M3	NIP A1	410	280	8
17	16	24	11	16	11	M5	4.3	M4	NIP A1	510	370	10
19	17	24	11	16	11	M5	4.3	M4	NIP A1	670	510	12
21	18	26.8	11	18	13	M5	4.3	M4	NIP A1	690	520	14
24	19	26.8	11	18	13	M5	4.3	M4	NIP A1	890	620	16
28	23	28.5	13	22	15	M6	5.3	M5	NIP A2	1,110	790	20
35	27	35.5	18	26	17.5	M8	6.6	M6	NIP A2	2,280	1,670	25
40	30	41.5	18	29	18	M8	6.6	M6	NIP A2	3,300	2,700	30
52	39	48	22	38	23	M10	8.4	M8	NIP A2	5,300	4,450	40
62	47	61	26	46	28	M12	10.5	M10	NIP A2	6,800	6,300	50

Linear Ball Bearing And Housing Units

KTHK..B PP AS SERIES

- Compact Range
- Sealed, Greased, With Relubrication Facility

For details on part numbers, descriptive suffixes and various technical references, please refer to front of this section.
For engineering or technical information contact your local sales representative or call Distributor Sales (800)523-6572 or Linear Sales (800)462-3399.

DIMENSION TABLE · Dimensions in mm									
SHAFT DIAMETER	PART NUMBER	MASS	DIMENSIONS				MOUNTING DIMENSIONS		
			d	A	C	H	A_1	A_4	C_2[1])
		kg					±0.15		±0.15
12	KTHK 12 B PP AS	0.17	12	40	60	33	29	32	35
16	KTHK 16 B PP AS	0.23	16	43	65	36.5	34	34	40
20	KTHK 20 B PP AS	0.32	20	53	65	42.5	40	40	45
25	KTHK 25 B PP AS	0.58	25	60	85	52.5	48	44	55
30	KTHK 30 B PP AS	0.85	30	67	105	60	53	49.6	70
40	KTHK 40 B PP AS	1.6	40	87	125	73.5	69	63	85
50	KTHK 50 B PP AS	2.7	50	103	145	92	82	74	100

1) Dimension C_2 and lubrication hole centered on bearing width C.
2) For fixing screws to DIN 912-8.8 and spring washer to DIN 7980.
3) Lubrication nipple.
4) The basic load ratings are only valid for hardened (670 to 840 HV) and ground shaft raceways and uniform loading on both the linear ball bearings.

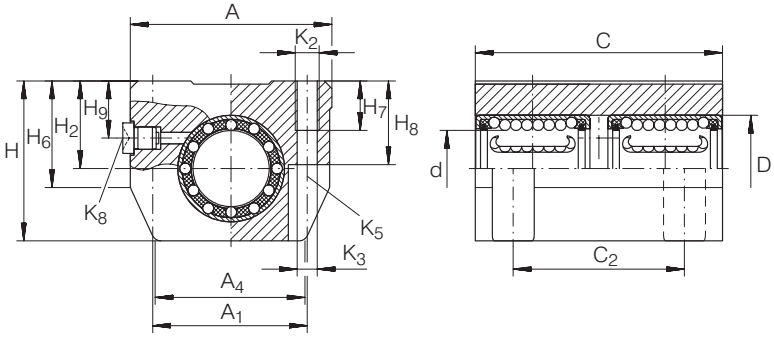

KTHK..B PP AS

										BASIC LOAD RATINGS[4]		SHAFT DIAMETER
D	H_2 +0.010 −0.014	H_6	H_7	H_8	H_9	K_2	K_3[2]	K_5[2]	K_8[3]	dyn. C N	stat. C_0 N	
19	17	24	11	16	11	M5	4.3	M4	NIP A1	1,090	1,020	12
24	19	26.8	11	18	13	M5	4.3	M4	NIP A1	1,440	1,240	16
28	23	28.5	13	22	15	M6	5.3	M5	NIP A2	1,800	1,580	20
35	27	35.5	18	26	17.5	M8	6.6	M6	NIP A2	3,700	3,350	25
40	30	41.5	18	29	18	M8	6.6	M6	NIP A2	5,400	5,400	30
52	39	48	22	38	22	M10	8.4	M8	NIP A2	8,600	8,900	40
62	47	61	26	46	26	M12	10.5	M10	NIP M8x1	11,000	12,600	50

Linear Ball Bearing And Housing Units

KGHW..PP SERIES

- Adjusting Range
- Sealed, Greased

For details on part numbers, descriptive suffixes and various technical references, please refer to front of this section.
For engineering or technical information contact your local sales representative or call Distributor Sales (800)523-6572 or Linear Sales (800)462-3399.

DIMENSION TABLE · Dimensions in mm						
SHAFT DIAMETER	PART NUMBER	MASS	DIMENSIONS			
			d	A	C	H
		kg		±0.5		
16	KGHW 16 PP	0.2	16	85.7	30	43.2
20	KGHW 20 PP	0.25	20	85.7	30	43.2
25	KGHW 25 PP	0.39	25	108	40	56.5

1) The basic load ratings are only valid for hardened (670 to 840 HV) and ground shaft raceways.

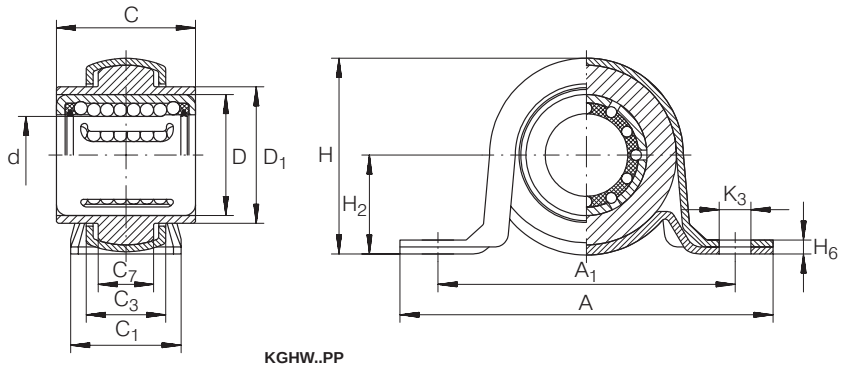

KGHW..PP

MOUNTING DIMENSIONS									BASIC LOAD RATINGS[1])		SHAFT DIAMETER
A_1 ±0.25	C_1	C_3	C_7	D	D_1	H_2 ±0.2	H_6	K_3	dyn. C N	stat. C_0 N	
68.3	25.4	18.8	13.2	24	32	22.2	3	9.5	890	620	16
68.3	25.4	18.8	13.2	28	32	22.2	3	9.5	1,110	790	20
86	32	23.5	14.5	35	39.5	28.6	4	11.5	2,280	1,670	25

Linear Ball Bearing And Housing Units

KGHWT..PP SERIES

- Adjusting Range
- Sealed, Greased

For details on part numbers, descriptive suffixes and various technical references, please refer to front of this section.
For engineering or technical information contact your local sales representative or call Distributor Sales (800)523-6572 or Linear Sales (800)462-3399.

DIMENSION TABLE · Dimensions in mm						
SHAFT DIAMETER	PART NUMBER	MASS	DIMENSIONS			
		kg	d	A	C	H
16	KGHWT 16 PP	0.19	16	81	30	58.7
20	KGHWT 20 PP	0.18	20	81	30	58.7
25	KGHWT 25 PP	0.28	25	90.5	40	66

1) The basic load ratings are only valid for hardened (670 to 840 HV) and ground shaft raceways.

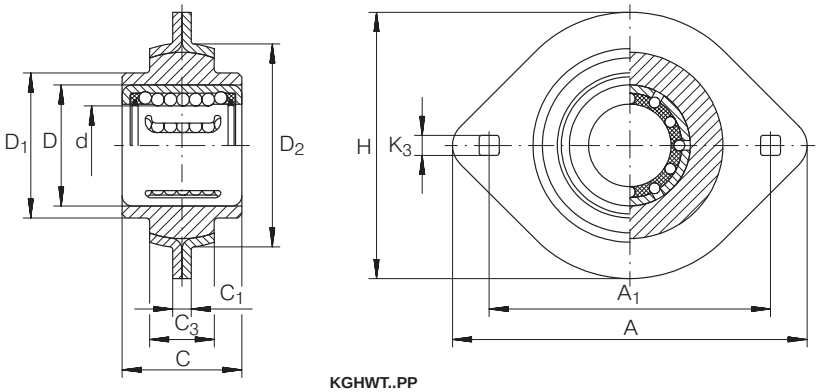

KGHWT..PP

MOUNTING DIMENSIONS							BASIC LOAD RATINGS[1])		SHAFT DIAMETER
A_1 ±0.15	C_1 ±0.5	C_3 +1	D	D_1	D_2	K_3	dyn. C N	stat. C_0 N	
63.5	4	14	24	30	44	7	890	620	16
63.5	4	14	28	32	44	7	1,110	790	20
71.5	4.4	16	35	40	51	8.7	2,280	1,670	25

Linear Ball Bearings
KN, KNO SERIES

- Light Range
- With Relubrication Facility

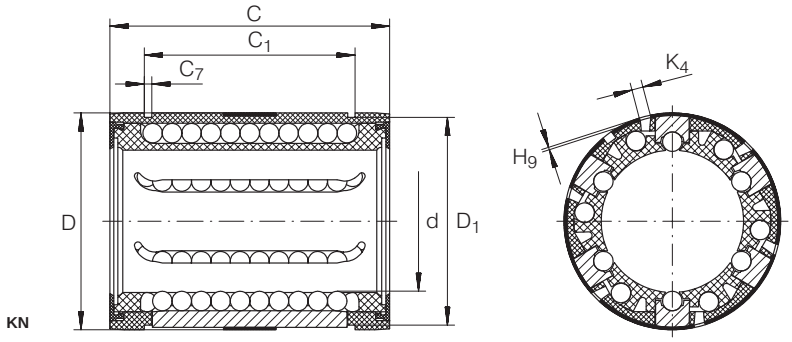

For details on part numbers, descriptive suffixes and various technical references, please refer to front of this section.
For engineering or technical information contact your local sales representative or call Distributor Sales (800)523-6572 or Linear Sales (800)462-3399.

DIMENSION TABLE · Dimensions in mm

SHAFT DIAMETER	PART NUMBER		MASS	DIMENSIONS			MOUNTING DIMENSIONS			
			kg	d	D	C	A_6 2)	C_1 H13	C_7	D_1
12	KN 1232		0.02	12	22	32	–	22.6	1.3	21
		KNO 1232	0.02	12	22	32	6.5	–	–	–
16	KN 1636		0.03	16	26	36	–	24.6	1.3	25
		KNO 1636	0.02	16	26	36	9	–	–	–
20	KN 2045		0.06	20	32	45	–	31.2	1.6	30.7
		KNO 2045	0.05	20	32	45	9	–	–	–
25	KN 2558		0.13	25	40	58	–	43.7	1.85	38
		KNO 2558	0.11	25	40	58	11.5	–	–	–
30	KN 3068		0.19	30	47	68	–	51.7	1.85	44.7
		KNO 3068	0.16	30	47	68	14	–	–	–
40	KN 4080		0.35	40	62	80	–	60.3	2.15	59.4
		KNO 4080	0.3	40	62	80	19	–	–	–
50	KN 50100		0.56	50	75	100	–	77.3	2.65	71.4
		KNO 50100	0.47	50	75	100	22.5	–	–	–

1) Linear ball bearings sealed on both sides: suffix “PP”.
2) Dimension A_6 on diameter d.
3) Hole position centered on bearing width C.
4) The basic load ratings are only valid for hardened (670 to 840 HV) and ground shaft raceways.
5) Basic load rating in main load direction.

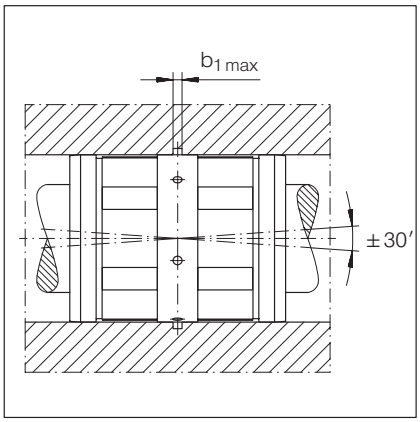

Misalignment compensation ±30′

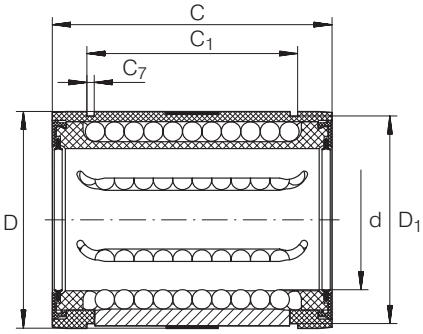

KN..PP

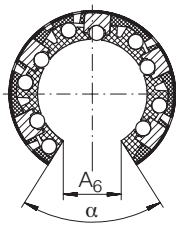

KNO, KNO..PP

										ACCESSORIES	
				MOUNTING DIMENSION	BALL ROWS	BASIC LOAD RATINGS[4]				SUITABLE CIRCLIPS TO DIN 471	SHAFT DIAMETER
H_9	H_{10}	K_4[3]	α Grad	$b_{1\ max.}$	NUMBER	dyn. C_{min} N	stat. $C_{0\ min}$ N	dyn. C_{max} N	stat. $C_{0\ max}$ N		
0.7	–	3	–	1.5	5	730	510	870	740	22 × 1.2	12
0.7	–	3	66	1.5	4	–	–	840[5]	640[5]	–	
0.7	–	3	–	1.5	5	870	620	1,040	910	26 × 1.2	16
0.7	–	3	68	1.5	4	–	–	1,000[5]	750[5]	–	
0.9	–	3	–	2.5	6	1,730	1,230	1,830	1,570	32 × 1.5	20
0.9	–	3	55	2.5	5	–	–	1,740[5]	1,240[5]	–	
1.4	–	3	–	2.5	6	3,100	2,220	3,250	2,850	42 × 1.75	25
1.4	1.5	3	57	2.5	5	–	–	3,100[5]	2,260[5]	–	
2.2	–	3	–	2.5	6	3,750	2,850	3,950	3,650	48 × 1.75	30
2.2	2	3	57	2.5	5	–	–	3,750[5]	2,850[5]	–	
2.2	–	3	–	3	6	6,900	4,900	7,300	6,300	63 × 2	40
2.2	1.5	3	56	3	5	–	–	6,900[5]	4,900[5]	–	
2.3	–	5	–	3	6	10,000	7,200	10,600	9,200	75 × 2.5	50
2.3	2.5	5	54	3	5	–	–	10,000[5]	7,200[5]	–	

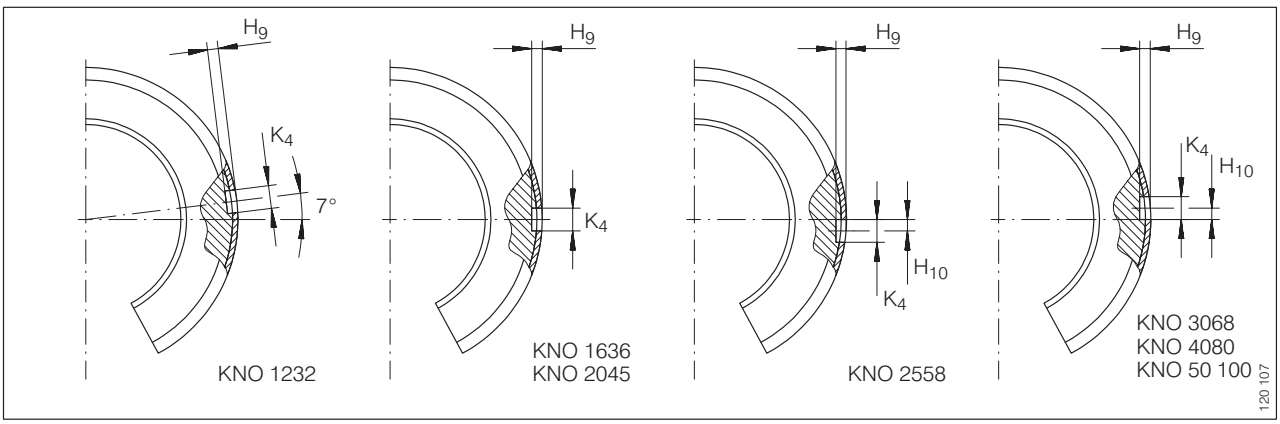

Fixing holes

Linear Ball Bearing And Housing Units

KGN..B PP AS, KGNS..B PP AS SERIES

- Light range
- Sealed, Greased, With Relubrication Facility

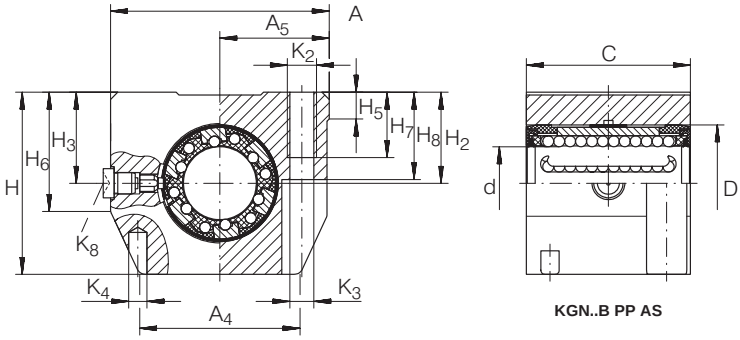

KGN..B PP AS

For details on part numbers, descriptive suffixes and various technical references, please refer to front of this section.
For engineering or technical information contact your local sales representative or call Distributor Sales (800)523-6572 or Linear Sales (800)462-3399.

DIMENSION TABLE · Dimensions in mm

SHAFT DIAMETER	PART NUMBER	MASS	Dimensions				MOUNTING DIMENSIONS				
			d	A	C	H	A_1	A_4	A_5	C_2 [1]	D
		kg							±0.01		
12	KGN 12 B PP AS	0.1	12	43	32	35	$32^{\pm 0.15}$	34	21.5	$23^{\pm 0.15}$	22
	KGNS 12 B PP AS	0.1	12	43	32	35	$32^{\pm 0.15}$	34	21.5	$23^{\pm 0.15}$	22
16	KGN 16 B PP AS	0.17	16	53	37	42	$40^{\pm 0.15}$	40	26.5	$26^{\pm 0.15}$	26
	KGNS 16 B PP AS	0.17	16	53	37	42	$40^{\pm 0.15}$	40	26.5	$26^{\pm 0.15}$	26
20	KGN 20 B PP AS	0.27	20	60	45	50	$45^{\pm 0.15}$	44	30	$32^{\pm 0.15}$	32
	KGNS 20 B PP AS	0.27	20	60	45	50	$45^{\pm 0.15}$	44	30	$32^{\pm 0.15}$	32
25	KGN 25 B PP AS	0.56	25	78	58	60	$60^{\pm 0.15}$	59.5	39	$40^{\pm 0.15}$	40
	KGNS 25 B PP AS	0.56	25	78	58	60	$60^{\pm 0.15}$	59.5	39	$40^{\pm 0.15}$	40
30	KGN 30 B PP AS	0.83	30	87	68	70	$68^{\pm 0.15}$	63	43.5	$45^{\pm 0.15}$	47
	KGNS 30 B PP AS	0.83	30	87	68	70	$68^{\pm 0.15}$	63	43.5	$45^{\pm 0.15}$	47
40	KGN 40 B PP AS	1.55	40	108	80	90	$86^{\pm 0.15}$	76	54	$58^{\pm 0.15}$	62
	KGNS 40 B PP AS	1.55	40	108	80	90	$86^{\pm 0.15}$	76	54	$58^{\pm 0.15}$	62
50	KGN 50 B PP AS	2.7	50	132	100	105	$108^{\pm 0.2}$	90	66	$50^{\pm 0.2}$	75
	KGNS 50 B PP AS	2.7	50	132	100	105	$108^{\pm 0.2}$	90	66	$50^{\pm 0.2}$	75

1) Dimension C_2 and lubrication hole centered on bearing width C.
2) For fixing screws to DIN 912-8.8 and spring washer to DIN 7980.
3) Centring for dowel hole.
4) Lubrication nipple.
5) The basic load ratings are only valid for hardened (670 to 840 HV) and ground shaft raceways.

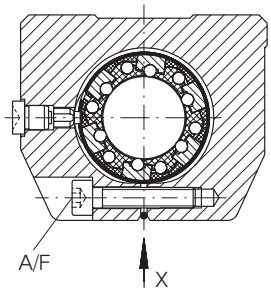

KGNS..B PP AS

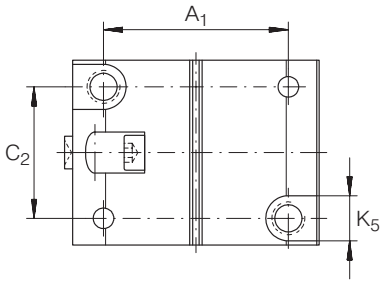

View X

												BALL ROWS	BASIC LOAD RATINGS[5]		SHAFT DIAMETER
H_2 +0.008 −0.016	H_3	H_5	H_6	H_7	H_8	K_2	K_3[2]	K_4[3]	K_5[2]	K_8[1][4]	A/F	NUMBER	dyn. C N	stat. C_0 N	
18	18	6	25.5	11	16.5	M5	4.3	4	8	NIP A1	–	5	780	560	12
18	18	6	25.5	11	16.5	M5	4.3	4	8	NIP A1	2.5	5	780	560	
22	22	7	28	13	21	M6	5.3	4	10	NIP A1	–	5	1,000	750	16
22	22	7	28	13	21	M6	5.3	4	10	NIP A1	3	5	1,000	750	
25	25	7.5	33	18	24	M8	6.6	5	11	NIP A1	–	6	1,740	1,240	20
25	25	7.5	33	18	24	M8	6.6	5	11	NIP A1	4	6	1,740	1,240	
30	30	8.5	40	22	29	M10	8.4	6	15	NIP A2	–	6	3,100	2,230	25
30	30	8.5	40	22	29	M10	8.4	6	15	NIP A2	5	6	3,100	2,230	
35	35	9.5	44.5	22	34	M10	8.4	6	15	NIP A2	–	6	3,800	2,900	30
35	35	9.5	44.5	22	34	M10	8.4	6	15	NIP A2	5	6	3,800	2,900	
45	45	11	56	26	44	M12	10.5	8	18	NIP A2	–	6	6,900	4,950	40
45	45	11	56	26	44	M12	10.5	8	18	NIP A2	6	6	6,900	4,950	
50	50	11	60	35	49	M16	13.5	10	20	NIP A2	–	6	10,100	7,300	50
50	50	11	60	35	49	M16	13.5	10	20	NIP A2	8	6	10,100	7,300	

Linear Ball Bearing And Housing Units

KGNO..PP AS, KGNOS..PP AS SERIES

- Light Range
- Sealed, Greased, With Relubrication Facility

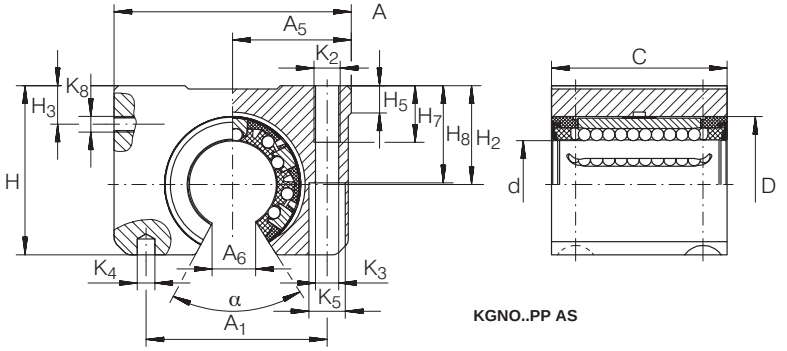

KGNO..PP AS

For details on part numbers, descriptive suffixes and various technical references, please refer to front of this section.
For engineering or technical information contact your local sales representative or call Distributor Sales (800)523-6572 or Linear Sales (800)462-3399.

DIMENSION TABLE · Dimensions in mm

SHAFT DIAMETER	PART NUMBER	MASS	DIMENSIONS				MOUNTING DIMENSIONS					
		kg	d	A	C	H	A_1	A_5 ±0.01	A_6 1)	C_2 2)	D	H_2 +0.008 −0.016
12	KGNO 12 PP AS	0.09	12	43	32	28	$32^{\pm 0.15}$	21.5	6.5	$23^{\pm 0.15}$	22	18
	KGNOS 12 PP AS	0.09	12	43	32	28	$32^{\pm 0.15}$	21.5	6.5	$23^{\pm 0.15}$	22	18
16	KGNO 16 PP AS	0.15	16	53	37	35	$40^{\pm 0.15}$	26.5	9	$26^{\pm 0.15}$	26	22
	KGNOS 16 PP AS	0.15	16	53	37	35	$40^{\pm 0.15}$	26.5	9	$26^{\pm 0.15}$	26	22
20	KGNO 20 PP AS	0,25	20	60	45	42	$45^{\pm 0,15}$	30	9	$32^{\pm 0,15}$	32	25
	KGNOS 20 PP AS	0.25	20	60	45	42	$45^{\pm 0.15}$	30	9	$32^{\pm 0.15}$	32	25
25	KGNO 25 PP AS	0.52	25	78	58	51	$60^{\pm 0.15}$	39	11.5	$40^{\pm 0.15}$	40	30
	KGNOS 25 PP AS	0.52	25	78	58	51	$60^{\pm 0.15}$	39	11.5	$40^{\pm 0.15}$	40	30
30	KGNO 30 PP AS	0.76	30	87	68	60	$68^{\pm 0.15}$	43.5	14	$45^{\pm 0.15}$	47	35
	KGNOS 30 PP AS	0.76	30	87	68	60	$68^{\pm 0.15}$	43.5	14	$45^{\pm 0.15}$	47	35
40	KGNO 40 PP AS	1.4	40	108	80	77	$86^{\pm 0.15}$	54	19	$58^{\pm 0.15}$	62	45
	KGNOS 40 PP AS	1.4	40	108	80	77	$86^{\pm 0.15}$	54	19	$58^{\pm 0.15}$	62	45
50	KGNO 50 PP AS	2.4	50	132	100	88	$108^{\pm 0.2}$	66	22.5	$50^{\pm 0.2}$	75	50
	KGNOS 50 PP AS	2.4	50	132	100	88	$108^{\pm 0.2}$	66	22.5	$50^{\pm 0.2}$	75	50

In the interim, linear ball bearing and housing units KGNO..PP AS and KGNOS..PP AS with profile grooves will still be supplied.

1) Dimension A_6 on diameter d.

2) Dimension C_2 and lubrication hole centered on bearing width C.

3) For fixing screws to DIN 912-8.8 and spring washer to DIN 7 980.

4) Centring for dowel hole.

5) The basic load ratings are only valid for hardened (670 to 840 HV) and ground shaft raceways.

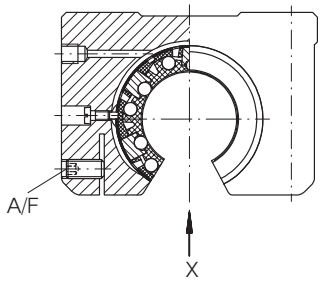

KGNOS..PP AS

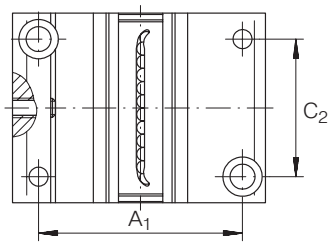

View X

											BALL ROWS	BASIC LOAD RATINGS[5]		SHAFT DIAMETER
H_3	H_5	H_7	H_8	K_2	K_3[3]	K_4[4]	K_5[3]	K_8[2]	A/F	α Grad	NUMBER	dyn. C N	stat. C_0 N	
8	6	11	16.5	M5	4.3	4	8	M6	–	66	4	840	640	12
8	6	11	16.5	M5	4.3	4	8	M6	2.5	66	4	840	640	
10	7.5	13	21	M6	5.3	4	10	M6	–	68	4	1,000	750	16
10	7.5	13	21	M6	5.3	4	10	M6	2.5	68	4	1,000	750	
11	8	18	24	M8	6.6	5	11	M6	–	55	5	1,740	1,240	20
11	8	18	24	M8	6.6	5	11	M6	2.5	55	5	1,740	1,240	
12.5	9	22	29	M10	8.4	6	15	M8×1	–	57	5	3,100	2,260	25
12.5	9	22	29	M10	8.4	6	15	M8×1	3	57	5	3,100	2,260	
14	9.5	22	34	M10	8.4	6	15	M8×1	–	57	5	3,750	2,850	30
14	9.5	22	34	M10	8.4	6	15	M8×1	3	57	5	3,750	2,850	
17.5	12	26	44	M12	10.5	8	18	M8×1	–	56	5	6,900	4,900	40
17.5	12	26	44	M12	10.5	8	18	M8×1	4	56	5	6,900	4,900	
17.5	12	35	49	M16	13.5	10	20	M8×1	–	54	5	10,000	7,200	50
17.5	12	35	49	M16	13.5	10	20	M8×1	5	54	5	10,000	7,200	

Linear Ball Bearing And Housing Units

KGNC..PP AS, KGNCS..PP AS SERIES

- Light Range
- Sealed, Greased,With Relubrication Facility

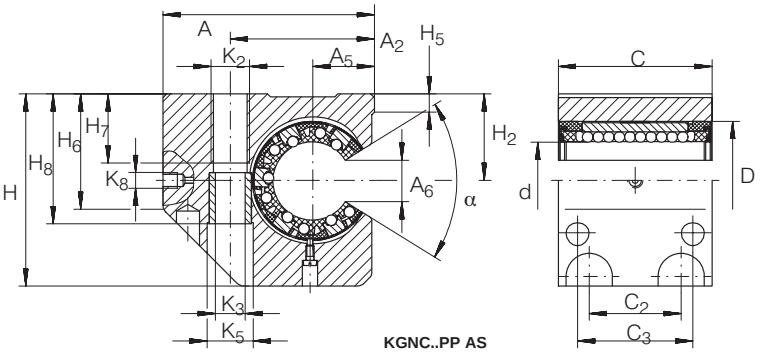

KGNC..PP AS

For details on part numbers, descriptive suffixes and various technical references, please refer to front of this section.
For engineering or technical information contact your local sales representative or call Distributor Sales (800)523-6572 or Linear Sales (800)462-3399.

DIMENSION TABLE · Dimensions in mm

SHAFT DIAMETER	PART NUMBER	MASS	DIMENSIONS				MOUNTING DIMENSIONS						
			d	A	C	H	A_2	A_3	A_5	A_6 1)	C_2 2)	C_3 2)	D
		kg					±0.15		±0.01		±0.15		
20	KGNC 20 PP AS	0.35	20	60	47	60	39	51	17	9	30	36	32
	KGNCS 20 PP AS	0.35	20	60	47	60	39	51	17	9	30	36	32
25	KGNC 25 PP AS	0.68	25	75	58	72	49	64	21	11.5	36	45	40
	KGNCS 25 PP AS	0.68	25	75	58	72	49	64	21	11.5	36	45	40
30	KGNC 30 PP AS	1	30	86	68	82	59	76	25	14	42	52	47
	KGNCS 30 PP AS	1	30	86	68	82	59	76	25	14	42	52	47
40	KGNC 40 PP AS	1.8	40	110	80	100	75	97	32	19	48	60	62
	KGNCS 40 PP AS	1.8	40	110	80	100	75	97	32	19	48	60	62
50	KGNC 50 PP AS	2.9	50	127	100	115	88	109	38	22.5	62	80	75
	KGNCS 50 PP AS	2.9	50	127	100	115	88	109	38	22.5	62	80	75

In the interim, linear ball bearing and housing units KGNC..PP AS and KGNCS..PP AS with profile grooves will still be supplied.

1) Dimension A_6 on diameter d.

2) Dimension C_2,, C_3 and lubrication hole centered on bearing width C.

3) Centring for dowel hole.

4) For fixing screws to DIN 912-8.8 and spring washer to DIN 7980.

5) The basic load ratings are only valid for hardened (670 to 840 HV) and ground shaft raceways.

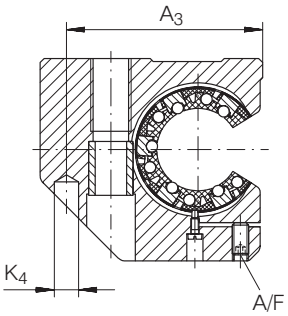

KGNCS..PP AS

												BALL ROWS	BASIC LOAD RATINGS[5]		SHAFT DIAMETER
H_2 +0.008 −0.016	H_5	H_6	H_7	H_8	K_2	K_3[3]	K_4[4]	K_5[3]	K_8[2]	A/F	α Grad	NUMBER	dyn. C N	stat. C_0 N	
30	8	37.5	18	42.5	M10	8.4	6	15	M6	–	55	5	1,740	1,240	20
30	8	37.5	18	42.5	M10	8.4	6	15	M6	2.5	55	5	1,740	1,240	
35	8	45	22	50.5	M12	10.5	8	18	M8 × 1	–	57	5	3,100	2,269	25
35	8	45	22	50.5	M12	10.5	8	18	M8 × 1	3	57	5	3,100	2,260	
40	9	52	29	55.5	M16	13.5	10	20	M8 × 1	–	57	5	3,750	2,850	30
40	9	52	29	55.5	M16	13.5	10	20	M8 × 1	3	57	5	3,750	2,850	
45	9	60	36	67.5	M20	15.5	12	24	M8 × 1	–	56	5	6,900	4,900	40
45	9	60	36	67.5	M20	15.5	12	24	M8 × 1	4	56	5	6,900	4,900	
50	9	70	36	79	M20	17.5	12	26	M8 × 1	–	54	5	10,000	7,200	50
50	9	70	36	79	M20	17.5	12	26	M8 × 1	5	54	5	10,000	7,200	

Linear Ball Bearing And Housing Units

KTN..B PP AS,

KTNS..B PP AS SERIES

- Light Range
- Sealed, Greased, With Relubrication Facility

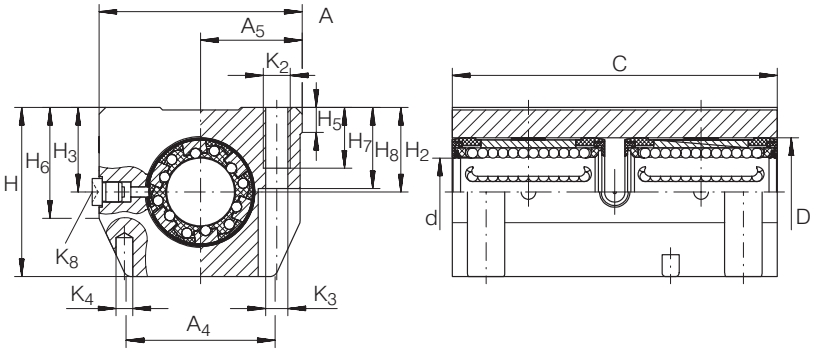

For details on part numbers, descriptive suffixes and various technical references, please refer to front of this section.
For engineering or technical information contact your local sales representative or call Distributor Sales (800)523-6572 or Linear Sales (800)462-3399.

DIMENSION TABLE · Dimensions in mm

SHAFT DIAMETER	PART NUMBER	MASS	DIMENSIONS				MOUNTING DIMENSIONS					
			d	A	C	H	A_1	A_4	A_5	C_2 1)	C_3 1)	D
		kg							±0.01			
12	KTN 12 B PP AS	0.21	12	43	70	35	$32^{\pm 0.15}$	34	21.5	$56^{\pm 0.15}$	24	22
	KTNS 12 B PP AS	0.21	12	43	70	35	$32^{\pm 0.15}$	34	21.5	$56^{\pm 0.15}$	24	22
16	KTN 16 B PP AS	0.35	16	53	78	42	$40^{\pm 0.15}$	40	26.5	$64^{\pm 0.15}$	26	26
	KTNS 16 B PP AS	0.35	16	53	78	42	$40^{\pm 0.15}$	40	26.5	$64^{\pm 0.15}$	26	26
20	KTN 20 B PP AS	0.56	20	60	96	50	$45^{\pm 0.15}$	44	30	$76^{\pm 0.15}$	33	32
	KTNS 20 B PP AS	0.56	20	60	96	50	$45^{\pm 0.15}$	44	30	$76^{\pm 0.15}$	33	32
25	KTN 25 B PP AS	1.15	25	78	122	60	$60^{\pm 0.15}$	59.5	39	$94^{\pm 0.2}$	44	40
	KTNS 25 B PP AS	1.15	25	78	122	60	$60^{\pm 0.15}$	59.5	39	$94^{\pm 0.2}$	44	40
30	KTN 30 B PP AS	1.7	30	87	142	70	$68^{\pm 0.15}$	63	43.5	$106^{\pm 0.2}$	54	47
	KTNS 30 B PP AS	1.7	30	87	142	70	$68^{\pm 0.15}$	63	43.5	$106^{\pm 0.2}$	54	47

In the interim, linear ball bearing and housing units KTN..B PP AS and KTNS..B PP AS with profile grooves will still be supplied.

1) Dimension C_2, C_3 and lubrication hole centered on bearing width C.

2) For fixing screws to DIN 912-8.8 and spring washer to DIN 7980.

3) Centring for dowel hole.

4) Lubrication nipple.

5) The basic load ratings are only valid for hardened (670 to 840 HV) and ground shaft raceways.

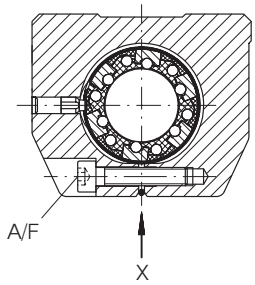

KTNS..B PP AS

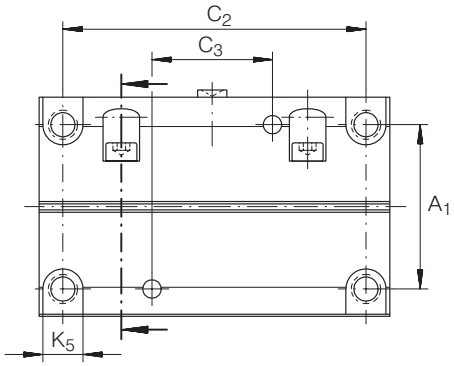

View X (rotated through 90°)

												BALL ROWS	BASIC LOAD RATINGS[5]		SHAFT DIAMETER
H_2 +0.008 −0.016	H_3	H_5	H_6	H_7	H_8	K_2	K_3[2]	K_4[3]	K_5[2]	K_8[4]	A/F	NUMBER	dyn. C N	stat. C_0 N	
18	18	6	25.6	11	16.5	M5	4.3	4	8	NIP A1	–	5	1,270	1,110	12
18	18	6	25.6	11	16.5	M5	4.3	4	8	NIP A1	2.5	5	1,270	1,110	
22	22	7	28	13	21	M6	5.3	4	10	NIP A1	–	5	1,620	1,500	16
22	22	7	28	13	21	M6	5.3	4	10	NIP A1	3	5	1,620	1,500	
25	25	7.5	33	18	24	M8	6.6	5	11	NIP A1	–	6	2,850	2,480	20
25	25	7.5	33	18	24	M8	6.6	5	11	NIP A1	4	6	2,850	2,480	
30	30	8.5	40	22	29	M10	8.4	6	15	NIP A2	–	6	5,000	4,450	25
30	30	8.5	40	22	29	M10	8.4	6	15	NIP A2	5	6	5,000	4,450	
35	35	9.5	44.5	22	34	M10	8.4	6	15	NIP A2	–	6	6,100	5,800	30
35	35	9.5	44.5	22	34	M10	8.4	6	15	NIP A2	5	6	6,100	5,800	

Linear Ball Bearing And Housing Units

KTNO..PP AS,

KTNOS..PP AS SERIES

- Light Range
- Sealed, Greased, With Relubrication Facility

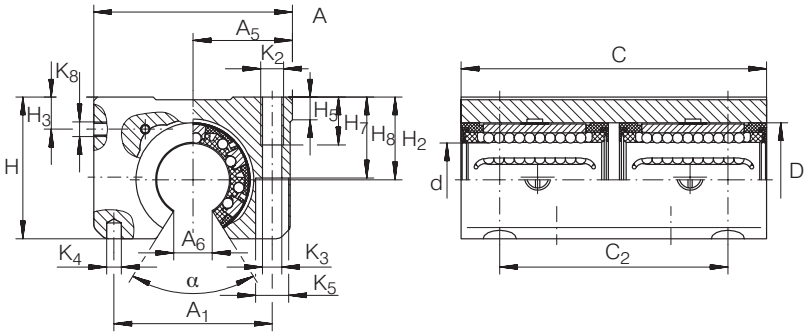

For details on part numbers, descriptive suffixes and various technical references, please refer to front of this section.
For engineering or technical information contact your local sales representative or call Distributor Sales (800)523-6572 or Linear Sales (800)462-3399.

DIMENSION TABLE · Dimensions in mm

SHAFT DIAMETER	PART NUMBER	MASS	DIMENSIONS				MOUNTING DIMENSIONS						
		kg	d	A	C	H	A_1	A_5 ±0.01	A_6 1)	C_2 2)	C_3 2)	D	H_2 +0.008 −0.016
12	KTNO 12 PP AS	0.19	12	43	70	28	$32^{\pm 0.15}$	21.5	6.5	$56^{\pm 0.15}$	24	22	18
	KTNOS 12 PP AS	0.19	12	43	70	28	$32^{\pm 0.15}$	21.5	6.5	$56^{\pm 0.15}$	24	22	18
16	KTNO 16 PP AS	0.31	16	53	78	35	$40^{\pm 0.15}$	26.5	9	$64^{\pm 0.15}$	26	26	22
	KTNOS 16 PP AS	0.31	16	53	78	35	$40^{\pm 0.15}$	26.5	9	$64^{\pm 0.15}$	26	26	22
20	KTNO 20 PP AS	0.52	20	60	96	42	$45^{\pm 0.15}$	30	9	$76^{\pm 0.15}$	33	32	25
	KTNOS 20 PP AS	0.52	20	60	96	42	$45^{\pm 0.15}$	30	9	$76^{\pm 0.15}$	33	32	25
25	KTNO 25 PP AS	1.06	25	78	122	51	$60^{\pm 0.15}$	39	11.5	$94^{\pm 0.2}$	44	40	30
	KTNOS 25 PP AS	1.06	25	78	122	51	$60^{\pm 0.15}$	39	11.5	$94^{\pm 0.2}$	44	40	30
30	KTNO 30 PP AS	1.55	30	87	142	60	$68^{\pm 0.15}$	43.5	14	$106^{\pm 0.2}$	54	47	35
	KTNOS 30 PP AS	1.55	30	87	142	60	$68^{\pm 0.15}$	43.5	14	$106^{\pm 0.2}$	54	47	35

In the interim. linear ball bearing and housing units KTNO..PP AS and KTNOS..PP AS with profile grooves will still be supplied.

1) Dimension A_6 on diameter d.

2) Dimension C_2, C_3 and lubrication hole centered on bearing width C.

3) For fixing screws to DIN 912-8.8 and spring washer to DIN 7 980.

4) Centring for dowel hole.

5) The basic load ratings are only valid for hardened (670 to 840 HV) and ground shaft raceways.

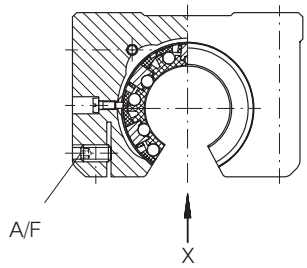

KTNOS..PP AS

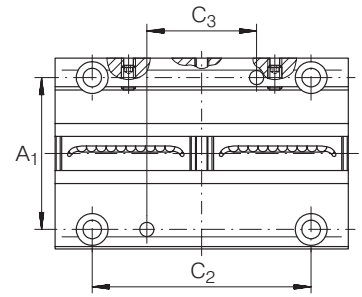

View X (rotated through 90°)

											BALL ROWS	BASIC LOAD RATINGS[5]		SHAFT DIAMETER
H_3	H_5	H_7	H_8	K_2	K_3[3]	K_4[4]	K_5[3]	K_8[2]	A/F	α Grad	NUMBER	dyn. C N	stat. C_0 N	
8	6	11	16.5	M5	4.3	4	8	M6	–	66	4	1,370	1,270	12
8	6	11	16.5	M5	4.3	4	8	M6	2.5	66	4	1,370	1,270	
10	7.5	13	21	M6	5.3	4	10	M6	–	68	4	1,620	1,500	16
10	7.5	13	21	M6	5.3	4	10	M6	2.5	68	4	1,620	1,500	
11	8	18	24	M8	6.6	5	11	M6	–	55	5	2,850	2,480	20
11	8	18	24	M8	6.6	5	11	M6	2.5	55	5	2,850	2,480	
12.5	9	22	29	M10	8.4	6	15	M8×1	–	57	5	5,100	4,550	25
12.5	9	22	29	M10	8.4	6	15	M8×1	3	57	5	5,100	4,550	
14	9.5	22	34	M10	8.4	6	15	M8×1	–	57	5	6,100	5,700	30
14	9.5	22	34	M10	8.4	6	15	M8×1	3	57	5	6,100	5,700	

Linear Ball Bearing And Housing Units

KTFN..PP AS SERIES

- Light Range
- Sealed, Greased, With Relubrication Facility

For details on part numbers, descriptive suffixes and various technical references, please refer to front of this section.
For engineering or technical information contact your local sales representative or call Distributor Sales (800)523-6572 or Linear Sales (800)462-3399.

DIMENSION TABLE · Dimensions in mm										
SHAFT DIAMETER	PART NUMBER	MASS	DIMENSIONS				MOUNTING DIMENSIONS			
		kg	d	A	C	H	A_1 ±0.15	C_1	C_3	C_7
12	KTFN 12 PP AS	0.2	12	42	70	34	32	46	10	35
16	KTFN 16 PP AS	0.3	16	50	78	40	38	50	10	39
20	KTFN 20 PP AS	0.5	20	60	96	50	45	60	10	48
25	KTFN 25 PP AS	1	25	74	122	60	56	73	10	61
30	KTFN 30 PP AS	1.4	30	84	142	70	64	82	10	71

1) Recommended tolerance for housing bore: D_1 H7.
2) The basic load ratings are only valid for hardened (670 to 840 HV) and ground shaft raceways.

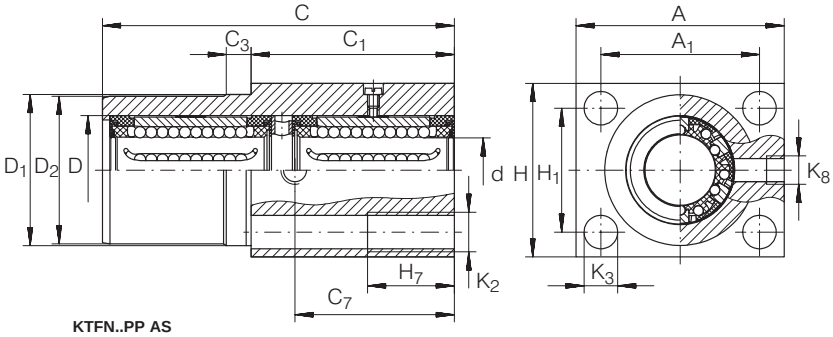

KTFN..PP AS

								BALL ROWS	BASIC LOAD RATINGS[2])		SHAFT DIAMETER
D	D_1[1]) g7	D_2 −0.1 −0.3	H_1 ±0.15	H_7	K_2	K_3	K_8	NUMBER	dyn. C N	stat. C_0 N	
22	30	30	24	13	M6	5.3	M8×1	5	1,270	1,110	12
26	35	35	28	18	M8	6.6	M8×1	5	1,620	1,500	16
32	42	42	35	22	M10	8.4	M8×1	6	2,850	2,480	20
40	52	52	42	26	M12	10.5	M8×1	6	5,000	4,450	25
47	61	61	50	35	M16	13.5	M8×1	6	6,100	5,800	30

Linear Ball Bearings
KB, KBS, KBO SERIES

● Heavy Range

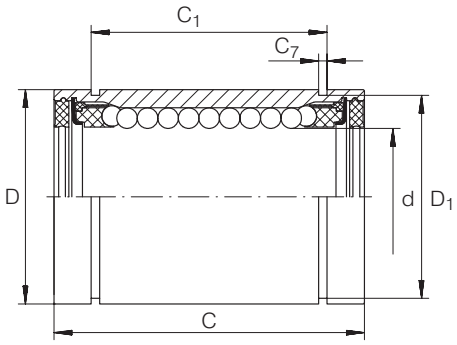

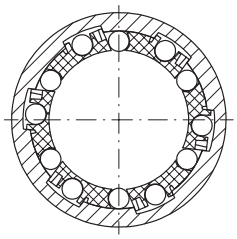

For details on part numbers, descriptive suffixes and various technical references, please refer to front of this section.
For engineering or technical information contact your local sales representative or call Distributor Sales (800)523-6572 or Linear Sales (800)462-3399.

DIMENSION TABLE · Dimensions in mm

SHAFT DIAMETER	PART NUMBER			MASS	DIMENSIONS			MOUNTING DIMENSIONS	
					d Deviations[2]	D[2]	C	A_6[3]	C_1
				kg		h5	h12		H13
12	KB 1232		–	0.04		22	32	–	22.6
	–	KBS 1232	–	0.04	$12^{+0.008}$	22	32	–	22.6
	–	–	KBO 1232	0.03		22	32	7.7	22.6
16	KB 1636	–	–	0.05		26	36	–	24.6
	–	KBS 1636	–	0.05	$16^{+0.009}_{-0.001}$	26	36	–	24.6
	–	–	KBO 1636	0.04		26	36	10.1	24.6
20	KB 2045	–	–	0.09		32	45	–	31.2
	–	KBS 2045	–	0.09	$20^{+0.009}_{-0.001}$	32	45	–	31.2
	–	–	KBO 2045	0.07		32	45	10	31.2
25	KB 2558	–	–	0.19		40	58	–	43.7
	–	KBS 2558	–	0.19	$25^{+0.011}_{-0.001}$	40	58	–	43.7
	–	–	KBO 2558	0.15		40	58	12.5	43.7
30	KB 3068	–	–	0.3		47	68	–	51.7
	–	KBS 3068	–	0.3	$30^{+0.011}_{-0.001}$	47	68	–	51.7
	–	–	KBO 3068	0.24		47	68	13.6	51.7
40	KB 4080	–	–	0.6		62	80	–	60.3
	–	KBS 4080	–	0.6	$40^{+0.013}_{-0.002}$	62	80	–	60.3
	–	–	KBO 4080	0.52		62	80	18.2	60.3
50	KB 50100	–	–	1		75	100	–	77.3
	–	KBS 50100	–	1	$50^{+0.013}_{-0.002}$	75	100	–	77.3
	–	–	KBO 50100	0.85		75	100	22.7	77.3

1) Linear ball bearings sealed on both sides: suffix “PP”.
Linear ball bearings with relubrication facility: suffix “AS”.

2) The tolerances are valid for series KB.

3) Dimension A_6 on diameter d.

4) Groove dimensions suitable for circlips to DIN 471.

5) Bore position centered on bearing width C.

6) The basic load ratings are only valid for hardened (670 to 840 HV) and ground shaft raceways.

7) Basic load rating in main load direction.

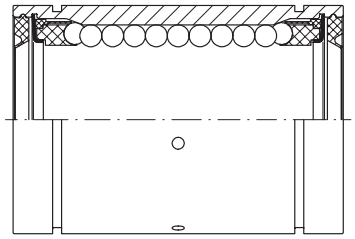

KB..PP AS

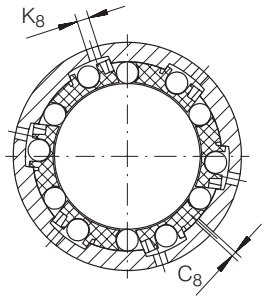

KBS..AS, KBS..PP AS

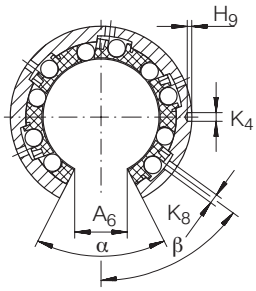

KBO..AS, KBO..PP AS

								BALL ROWS	BASIC LOAD RATINGS[6]				SHAFT DIAMETER
C_7[4]	C_8	D_1[4]	H_9	K_4[5]	K_8	α Grad	β Grad	NUMBER	dyn. C_{min} N	stat. $C_{0\,min}$ N	dyn. C_{max} N	stat. $C_{0\,max}$ N	
1.3	–	21	–	–	1.5	–	–	5	540	385	640	570	12
1.3	1	21	–	–	1.5	–	–	5	540	385	640	570	
1.3	–	21	1.2	2.2	1.5	78	64	4	–	–	600[7]	445[7]	
1.3	–	24.9	–	–	2	–	–	5	710	530	840	780	16
1.3	1	24.9	–	–	2	–	–	5	710	530	840	780	
1.3	–	24.9	1.2	2.2	2	78	64	4	–	–	800[7]	620[7]	
1.6	–	30.3	–	–	2	–	–	6	1,570	1,230	1,660	1,570	20
1.6	1	30.3	–	–	2	–	–	6	1,570	1,230	1,660	1,570	
1.6	–	30.3	1.2	2.2	2	60	52	5	–	–	1,600[7]	1,280[7]	
1.85	–	37.5	–	–	2.5	–	–	6	2,800	2,220	2,950	2,850	25
1.85	1	37.5	–	–	2.5	–	–	6	2,800	2,220	2,950	2,850	
1.85	–	37.5	1.5	3	2.5	60	53	5	–	–	2,850[7]	2,330[7]	
1.85	–	44.5	–	–	2.5	–	–	6	3,600	2,850	3,800	3,600	30
1.85	1	44.5	–	–	2.5	–	–	6	3,600	2,850	3,800	3,600	
1.85	–	44.5	1.5	3	2.5	54	55	5	–	–	3,700[7]	3,000[7]	
2.15	–	59	–	–	3	–	–	6	6,000	4,400	6,400	5,600	40
2.15	1	59	–	–	3	–	–	6	6,000	4,400	6,400	5,600	
2.15	–	59	1.5	3	3	54	54	5	–	–	6,100[7]	4,600[7]	
2.65	–	72	–	–	4	–	–	6	8,700	6,300	9,200	8,000	50
2.65	1	72	–	–	4	–	–	6	8,700	6,300	9,200	8,000	
2.65	–	72	1.5	3	4	54	54	5	–	–	8,900[7]	6,600[7]	

Linear Ball Bearing And Housing Units

KGB..PP AS, KGBS..PP AS, KGBO..PP AS SERIES

- Heavy Range
- Sealed, Greased, With Relubrication Facility

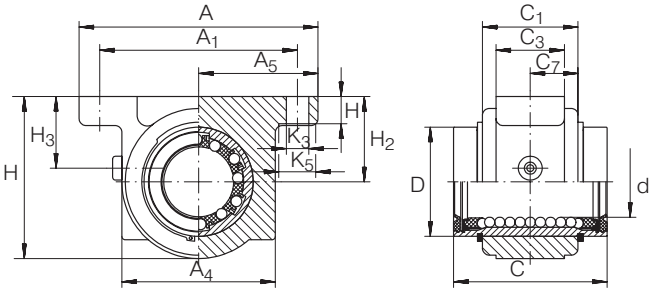

KGB..PP AS

For details on part numbers, descriptive suffixes and various technical references, please refer to front of this section.
For engineering or technical information contact your local sales representative or call Distributor Sales (800)523-6572 or Linear Sales (800)462-3399.

DIMENSION TABLE · Dimensions in mm

SHAFT DIAMETER	PART NUMBER			MASS	DIMENSIONS				MOUNTING DIMENSIONS		
				kg	d Deviations[1])	A	C h12	H	A_1	A_4	A_5
12	KGB 1232 PP AS	–	–	0.1	$12^{+0.008}$	52	32	35.8	$42^{\pm 0.15}$	31.6	$26^{\pm 0.02}$
	–	KGBS 1232 PP AS	–	0.1		52	32	35.8	$42^{\pm 0.15}$	31.6	$26^{\pm 0.02}$
	–	–	KGBO 1232 PP AS	0.09		52	32	–	$42^{\pm 0.15}$	31.6	$26^{\pm 0.02}$
16	KGB 1636 PP AS	–	–	0.14	$16^{+0.009}_{-0.001}$	56	36	37.5	$46^{\pm 0.15}$	35	$28^{\pm 0.02}$
	–	KGBS 1636 PP AS	–	0.14		56	36	37.5	$46^{\pm 0.15}$	35	$28^{\pm 0.02}$
	–	–	KGBO 1636 PP AS	0.12		56	36	–	$46^{\pm 0.15}$	35	$28^{\pm 0.02}$
20	KGB 2045 PP AS	–	–	0.3	$20^{+0.009}_{-0.001}$	70	45	48	$58^{\pm 0.15}$	46	$35^{\pm 0.02}$
	–	KGBS 2045 PP AS	–	0.3		70	45	48	$58^{\pm 0.15}$	46	$35^{\pm 0.02}$
	–	–	KGBO 2045 PP AS	0.25		70	45	–	$58^{\pm 0.15}$	46	$35^{\pm 0.02}$
25	KGB 2558 PP AS	–	–	0.58	$25^{+0.011}_{-0.001}$	80	58	58	$68^{\pm 0.15}$	56	$40^{\pm 0.02}$
	–	KGBS 2558 PP AS	–	0.58		80	58	58	$68^{\pm 0.15}$	56	$40^{\pm 0.02}$
	–	–	KGBO 2558 PP AS	0.49		80	58	–	$68^{\pm 0.15}$	56	$40^{\pm 0.02}$
30	KGB 3068 PP AS	–	–	0.9	$30^{+0.011}_{-0.001}$	88	68	67	$76^{\pm 0.2}$	64	$44^{\pm 0.02}$
	–	KGBS 3068 PP AS	–	0.9		88	68	67	$76^{\pm 0.2}$	64	$44^{\pm 0.02}$
	–	–	KGBO 3068 PP AS	0.78		88	68	–	$76^{\pm 0.2}$	64	$44^{\pm 0.02}$
40	KGB 4080 PP AS	–	–	1.43	$40^{+0.013}_{-0.002}$	108	80	83.5	$94^{\pm 0.2}$	77	$54^{\pm 0.02}$
	–	KGBS 4080 PP AS	–	1.43		108	80	83.5	$94^{\pm 0.2}$	77	$54^{\pm 0.02}$
	–	–	KGBO 4080 PP AS	1.28		108	80	–	$94^{\pm 0.2}$	77	$54^{\pm 0.02}$
50	KGB 50100 PP AS	–	–	2.78	$50^{+0.013}_{-0.002}$	135	100	98	$116^{\pm 0.2}$	96	$67.5^{\pm 0.05}$
	–	KGBS 50100 PP AS	–	2.78		135	100	98	$116^{\pm 0.2}$	96	$67.5^{\pm 0.05}$
	–	–	KGBO 50100 PP AS	2.46		135	100	–	$116^{\pm 0.2}$	96	$67.5^{\pm 0.05}$

1) The tolerances are valid for series KGB..PP AS only.
2) Dimension A_6 on diameter d.
3) For fixing screws to DIN 912-8.8 and spring washer to DIN 7980.
5) The basic load ratings are only valid for hardened (670 to 840 HV) and ground shaft raceways.

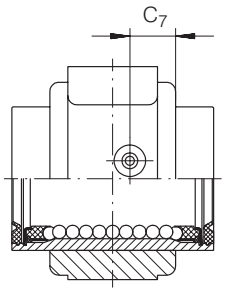

KGBO..PP AS

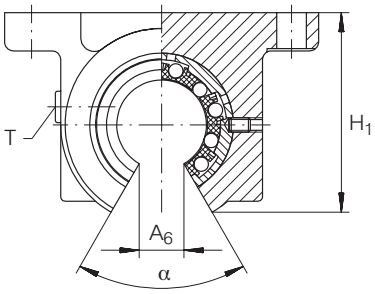

KGBO, KGBO..PP AS

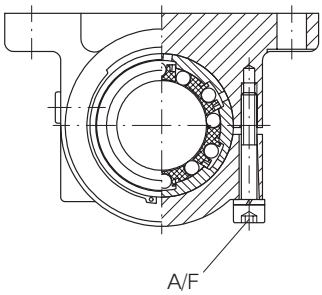

KGBS, KGBS..PP AS

													INA LUBRICATION NIPPLE[4] T	BALL ROWS	BASIC LOAD RATINGS[5]		SHAFT DIAMETER
A_6[2]	C_1	C_3	C_7	D[1] h5	H_1	H_2 ±0.015	H_3	H_8	K_3[3]	K_5[3]	α Grad	A/F		NUMBER	dyn. C N	stat. C_0 N	
–	20	12	10	22	–	20	15	6	5.5	10	–	–	NIP A1	5	540	385	12
–	20	12	10	22	–	20	15	6	5.5	10	–	2	NIP A1	5	540	385	12
7.7	20	12	7	22	32	20	15	6	5.5	10	78	–	NIP A1	4	600	445	
–	22	15	11	26	–	20	15	6	5.5	10	–	–	NIP A1	5	710	530	16
–	22	15	11	26	–	20	15	6	5.5	10	–	2	NIP A1	5	710	530	
10.1	22	15	7	26	33.5	20	15	6	5.5	10	78	–	NIP A1	4	800	620	
–	28	20	14	32	–	25	21	8	6.6	11	–	–	NIP A1	6	1,570	1,230	20
–	28	20	14	32	–	25	21	8	6.6	11	–	3	NIP A1	6	1,570	1,230	
10	28	20	10	32	45	25	21	8	6.6	11	60	–	NIP A1	5	1,600	1,280	
–	40	28	20	40	–	30	23	10	6.6	11	–	–	NIP A1	6	2,800	2,220	25
–	40	28	20	40	–	30	23	10	6.6	11	–	3	NIP A1	6	2,800	2,220	
12.5	40	28	15	40	54.5	30	23	10	6.6	11	60	–	NIP A1	5	2,850	2,330	
–	48	32	24	47	–	35	25	10	6.6	11	–	–	NIP A2	6	3,600	2,850	30
–	48	32	24	47	–	35	25	10	6.6	11	–	4	NIP A2	6	3,600	2,850	
13.6	48	32	19	47	63.5	35	25	10	6.6	11	54	–	NIP A2	5	3,700	3,000	
–	56	40	28	62	–	45	30	12	9	15	–	–	NIP A2	6	6,000	4,400	40
–	56	40	28	62	–	45	30	12	9	15	–	4	NIP A2	6	6,000	4,400	
18.2	56	40	23	62	79.5	45	30	12	9	15	54	–	NIP A2	5	6,100	4,600	
–	72	52	36	75	–	50	34	14	11	18	–	–	NIP A2	6	8,700	6,300	50
–	72	52	36	75	–	50	34	14	11	18	–	5	NIP A2	6	8,700	6,300	
22.7	72	52	28	75	93	50	34	14	11	18	54	–	NIP A2	5	8,900	6,600	

Linear Ball Bearing And Housing Units

KGBA..PP AS, KGBAS..PP AS, KGBAO..PP AS SERIES

- Heavy Range
- Sealed, Greased, With Relubrication Facility

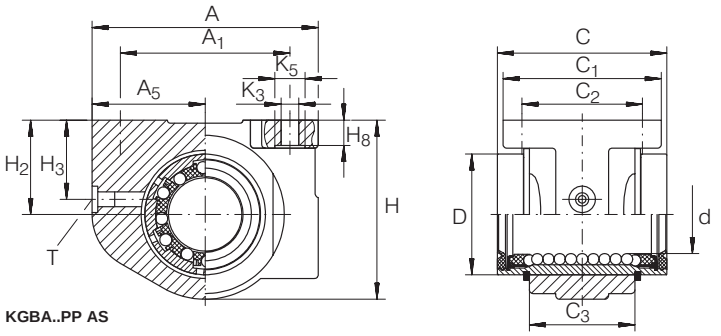

KGBA..PP AS

For details on part numbers, descriptive suffixes and various technical references, please refer to front of this section.
For engineering or technical information contact your local sales representative or call Distributor Sales (800)523-6572 or Linear Sales (800)462-3399.

DIMENSION TABLE · Dimensions in mm

SHAFT DIAMETER	PART NUMBER			MASS	DIMENSIONS				MOUNTING DIMENSIONS	
				kg	d Deviations[1]	A	C h12	H	A_1	A_5
12	KGBA 1232 PP AS	–	–	0.08	$12^{+0.008}$	42	32	34	$32^{\pm 0.15}$	$21^{\pm 0.01}$
	–	KGBAS 1232 PP AS	–	0.08		42	32	34	$32^{\pm 0.15}$	$21^{\pm 0.01}$
	–	–	KGBAO 1232 PP AS	0.07		42	32	–	$32^{\pm 0.15}$	$21^{\pm 0.01}$
16	KGBA 1636 PP AS	–	–	0.12	$16^{+0.009}_{-0.001}$	50	36	41	$40^{\pm 0.15}$	$25^{\pm 0.01}$
	–	KGBAS 1636 PP AS	–	0.12		50	36	41	$40^{\pm 0.15}$	$25^{\pm 0.01}$
	–	–	KGBAO 1636 PP AS	0.1		50	36	–	$40^{\pm 0.15}$	$25^{\pm 0.01}$
20	KGBA 2045 PP AS	–	–	0.2	$20^{+0.009}_{-0.001}$	60	45	47.5	$45^{\pm 0.15}$	$30^{\pm 0.01}$
	–	KGBAS 2045 PP AS	–	0.2		60	45	47.5	$45^{\pm 0.15}$	$30^{\pm 0.01}$
	–	–	KGBAO 2045 PP AS	0.17		60	45	–	$45^{\pm 0.15}$	$30^{\pm 0.01}$
25	KGBA 2558 PP AS	–	–	0.41	$25^{+0.011}_{-0.001}$	74	58	60	$60^{\pm 0.2}$	$37^{\pm 0.01}$
	–	KGBAS 2558 PP AS	–	0.41		74	58	60	$60^{\pm 0.2}$	$37^{\pm 0.01}$
	–	–	KGBAO 2558 PP AS	0.35		74	58	–	$60^{\pm 0.2}$	$37^{\pm 0.01}$
30	KGBA 3068 PP AS	–	–	0.61	$30^{+0.011}_{-0.001}$	84	68	67	$68^{\pm 0.2}$	$42^{\pm 0.01}$
	–	KGBAS 3068 PP AS	–	0.61		84	68	67	$68^{\pm 0.2}$	$42^{\pm 0.01}$
	–	–	KGBAO 3068 PP AS	0.53		84	68	–	$68^{\pm 0.2}$	$42^{\pm 0.01}$
40	KGBA 4080 PP AS	–	–	1.2	$40^{+0.013}_{-0.002}$	108	80	87	$86^{\pm 0.2}$	$54^{\pm 0.015}$
	–	KGBAS 4080 PP AS	–	1.2		108	80	87	$86^{\pm 0.2}$	$54^{\pm 0.015}$
	–	–	KGBAO 4080 PP AS	1.07		108	80	–	$86^{\pm 0.2}$	$54^{\pm 0.015}$
50	KGBA 50100 PP AS	–	–	1.88	$50^{+0.013}_{-0.002}$	130	100	98	$108^{\pm 0.2}$	$65^{\pm 0.015}$
	–	KGBAS 50100 PP AS	–	1.88		130	100	98	$108^{\pm 0.2}$	$65^{\pm 0.015}$
	–	–	KGBAO 50100 PP AS	1.65		130	100	–	$108^{\pm 0.2}$	$65^{\pm 0.015}$

1) The tolerances are valid for series KGBA..PP AS only.
2) Dimension A_6 on diameter d.
3) For fixing screws to DIN 912-8.8 and spring washer to DIN 7 980.
5) The basic load ratings are only valid for hardened (670 to 840 HV) and ground shaft raceways.

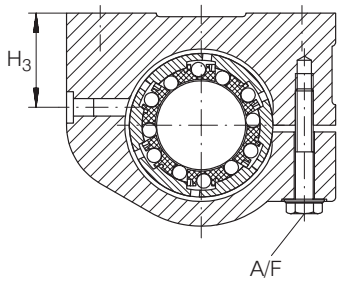

KGBAS.PP AS

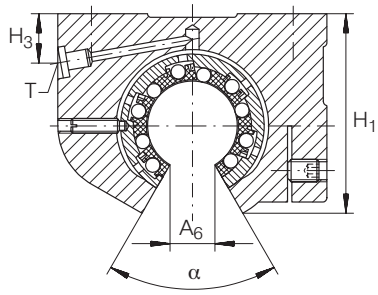

KGBAO..PP AS

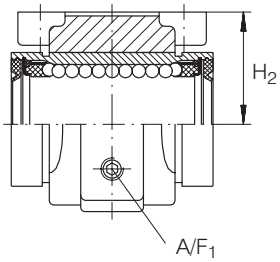

KGBAO..PP AS

														INA LUBRICATION NIPPLE	BALL ROWS	BASIC LOAD RATINGS[5]		SHAFT DIAMETER
A_6[2]	C_1	C_2	C_3	D[1] h5	H_1	H_2[1]	H_3	H_8 −0.5	K_3[3]	K_5[3]	α Grad	A/F	A/F_1	T	NUMBER	dyn. C N	stat. C_0 N	
–	32	$23^{\pm 0,15}$	20	22	–	$18^{\pm 0,01}$	15	4,8	4,7	8	–	–	–	NIP A1	5	540	385	12
–	32	$23^{\pm 0.15}$	20	22	–	$18^{\pm 0.01}$	15	4.8	4.7	8	–	7	–	NIP A1	5	540	385	12
7.7	32	$23^{\pm 0.15}$	20	22	30.5	$18^{\pm 0.01}$	7.8	4.8	4.7	8	78	–	2	NIP A1	4	600	445	
–	35	$26^{\pm 0.15}$	22	26	–	$22^{\pm 0.01}$	15	5.4	4.7	8	–	–	–	NIP A1	5	710	530	16
–	35	$26^{\pm 0.15}$	22	26	–	$22^{\pm 0.01}$	15	5.4	4.7	8	–	7	–	NIP A1	5	710	530	
10.1	35	$26^{\pm 0.15}$	22	26	37	$22^{\pm 0.01}$	10	5.4	4.7	8	78	–	2.5	NIP A1	4	800	620	
–	42	$32^{\pm 0.15}$	28	32	–	$25^{\pm 0.01}$	21	6.7	4.7	8	–	–	–	NIP A1	6	1,570	1,230	20
–	42	$32^{\pm 0.15}$	28	32	–	$25^{\pm 0.01}$	21	6.7	4.7	8	–	7	–	NIP A1	6	1,570	1,230	
10	42	$32^{\pm 0.15}$	28	32	44.5	$25^{\pm 0.01}$	11	6.7	4.7	8	60	–	2.5	NIP A1	5	1,600	1,280	
–	54	$40^{\pm 0.2}$	40	40	–	$30^{\pm 0.01}$	23	7.8	5.7	10	–	–	–	NIP A1	6	2,800	2,220	25
–	54	$40^{\pm 0.2}$	40	40	–	$30^{\pm 0.01}$	23	7.8	5.7	10	–	8	–	NIP A1	6	2,800	2,220	
12.5	54	$40^{\pm 0.2}$	40	40	56	$30^{\pm 0.01}$	13	7.8	5.7	10	60	–	3	NIP A1	5	2,850	2,330	
–	60	$45^{\pm 0.2}$	48	47	–	$35^{\pm 0.01}$	25	8.7	6.8	11	–	–	–	NIP A2	6	3,600	2,850	30
–	60	$45^{\pm 0.2}$	48	47	–	$35^{\pm 0.01}$	25	8.7	6.8	11	–	10	–	NIP A2	6	3,600	2,850	
13.6	60	$45^{\pm 0.2}$	48	47	63.5	$35^{\pm 0.01}$	14	8.7	6.8	11	54	–	3	NIP A2	5	3,700	3,000	
–	78	$58^{\pm 0.2}$	56	62	–	$45^{\pm 0.01}$	30	11	9.2	15	–	–	–	NIP A2	6	6,000	4,400	40
–	78	$58^{\pm 0.2}$	56	62	–	$45^{\pm 0.01}$	30	11	9.2	15	–	13	–	NIP A2	6	6,000	4,400	
18.2	78	$58^{\pm 0.2}$	56	62	82.5	$45^{\pm 0.01}$	18	11	9.2	15	54	–	4	NIP A2	5	6,100	4,600	
–	70	$50^{\pm 0.2}$	72	75	–	$50^{\pm 0.015}$	34	12.5	9.2	15	–	–	–	NIP A2	6	8,700	6,300	50
–	70	$50^{\pm 0.2}$	72	75	–	$50^{\pm 0.015}$	34	12.5	9.2	15	–	13	–	NIP A2	6	8,700	6,300	
22.7	70	$50^{\pm 0.2}$	72	75	93	$50^{\pm 0.015}$	19	12.5	9.2	15	54	–	4	NIP A2	5	8,900	6,600	

Linear Ball Bearing And Housing Units

KTB..B PP AS, KTBO..PP AS SERIES

- Heavy Range
- Sealed, Greased, With Relubrication Facility

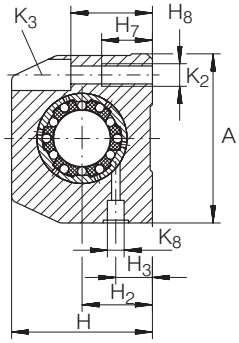

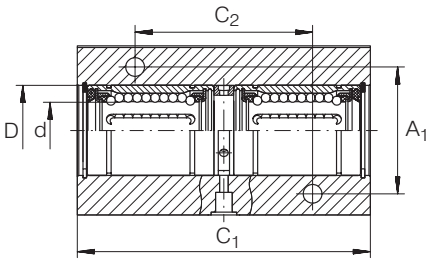

KTB..B PP AS

For details on part numbers, descriptive suffixes and various technical references, please refer to front of this section.
For engineering or technical information contact your local sales representative or call Distributor Sales (800)523-6572 or Linear Sales (800)462-3399.

DIMENSION TABLE · Dimensions in mm

SHAFT DIAMETER	PART NUMBER		MASS	DIMENSIONS			MOUNTING DIMENSIONS				
			kg	d Deviations[1]	A	H	A_1	A_6[2]	C_1	C_2	D
12	KTB 12 B PP AS	–	0.31	$12^{+0.008}$	43	35	$30^{\pm 0.15}$	–	76	$40^{\pm 0.15}$	22
	–	KTBO 12 PP AS	0.26		42	30	$30^{\pm 0.15}$	7.7	76	$40^{\pm 0.15}$	22
16	KTB 16 B PP AS	–	0.46	$16^{+0.009}_{-0.001}$	53	42	$36^{\pm 0.15}$	–	84	$45^{\pm 0.15}$	26
	–	KTBO 16 PP AS	0.36		50	35	$36^{\pm 0.15}$	10.1	84	$45^{\pm 0.15}$	26
20	KTB 20 B PP AS	–	0.8	$20^{+0.009}_{-0.001}$	60	50	$45^{\pm 0.15}$	–	104	$55^{\pm 0.15}$	32
	–	KTBO 20 PP AS	0.62		60	42	$45^{\pm 0.15}$	10	104	$55^{\pm 0.15}$	32
25	KTB 25 B PP AS	–	1.49	$25^{+0.011}_{-0.001}$	78	60	$54^{\pm 0.15}$	–	130	$70^{\pm 0.2}$	40
	–	KTBO 25 PP AS	1.18		74	51	$54^{\pm 0.15}$	12.5	130	$70^{\pm 0.2}$	40
30	KTB 30 B PP AS	–	2.3	$30^{+0.011}_{-0.001}$	87	70	$62^{\pm 0.15}$	–	152	$85^{\pm 0.2}$	47
	–	KTBO 30 PP AS	1.84		84	60	$62^{\pm 0.15}$	13.6	152	$85^{\pm 0.2}$	47

1) The tolerances are valid for series KTB..B PP AS only.
2) Dimension A_6 on diameter d.
3) The basic load ratings are only valid for hardened (670 to 840 HV) and ground shaft raceways and uniform loading on both the linear ball bearings.

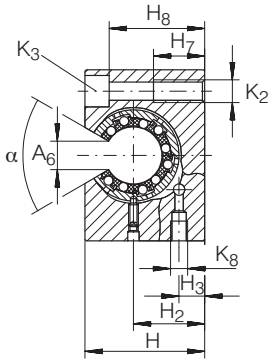

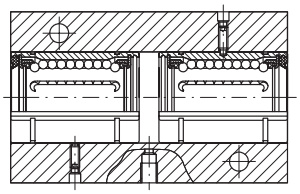

KTBO..PP AS

							K3 FOR FIXING SCREWS		BASIC LOAD RATINGS3)		SHAFT DIAMETER
H2 ±0.015	H3	H7	H8	K2	K8	α Grad	DIN 912	DIN 6 912	dyn. C N	stat. C0 N	
18	10	13	28	M6	NIP A1	–	M5	–	880	770	12
18	6	13	24.5	M6	M6	78	–	M5	980	890	
22	12	13	35	M6	NIP A1	–	M5	–	1,150	1,060	16
22	8	13	29.5	M6	M6	78	–	M5	1,290	1,240	
25	13	18	37	M8	NIP A1	–	M6	–	2,550	2,450	20
25	9	18	35.5	M8	M6	60	–	M6	2,600	2,550	
30	15	22	49	M10	NIP A2	–	M8	–	4,550	4,450	25
30	9	22	43	M10	M8×1	60	–	M8	4,650	4,650	
35	16	26	52	M12	NIP A2	–	M10	–	5,900	5,700	30
35	11	26	50.5	M12	M8×1	54	–	M10	6,000	6,000	

Permaglide® Linear Plain Bearings

PAB..PP AS,

PABO..PP AS SERIES

- Plain Bearing Range
- Sealed, Greased, With Relubrication Facility

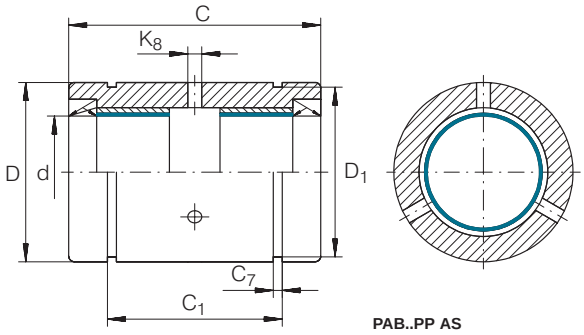

PAB..PP AS

For details on part numbers, descriptive suffixes and various technical references, please refer to front of this section.
For engineering or technical information contact your local sales representative or call Distributor Sales (800)523-6572 or Linear Sales (800)462-3399.

DIMENSION TABLE · Dimensions in mm

SHAFT DIAMETER	PART NUMBER		MASS	DIMENSIONS		
				d	D[1]	C
			kg		h7	h12
12	PAB 1232 PP AS		0.026	12	22	32
		PABO 1232 PP AS	0.021	12	22	32
16	PAB 1636 PP AS		0.034	16	26	36
		PABO 1636 PP AS	0.028	16	26	36
20	PAB 2045 PP AS		0.068	20	32	45
		PABO 2045 PP AS	0.058	20	32	45
25	PAB 2558 PP AS		0.132	25	40	58
		PABO 2558 PP AS	0.113	25	40	58
30	PAB 3068 PP AS		0.169	30	47	68
		PABO 3068 PP AS	0.143	30	47	68
40	PAB 4080 PP AS		0.426	40	62	80
		PABO 4080 PP AS	0.362	40	62	80
50	PAB 50100 PP AS		0.773	50	75	100
		PABO 50100 PP AS	0.657	50	75	100

1) The tolerances are valid for series PAB..PP AS only.
2) Bores and grooves centered on bearing width C.
3) Groove dimensions suitable for circlips to DIN 471.
4) Dimension A_6 on diameter d.
5) The basic static load ratings stated here are not valid if the above elements are fitted in housings – as shown on the following pages.

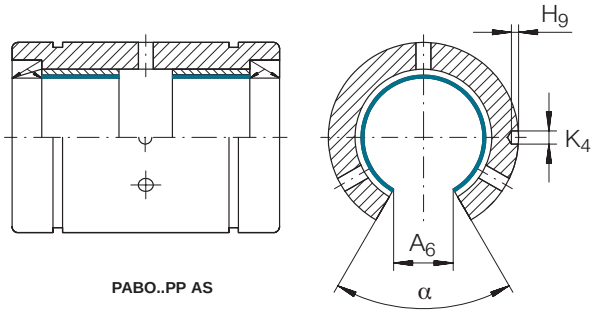

PABO..PP AS

MOUNTING DIMENSIONS								BASIC LOAD RATINGS[5]	SHAFT DIAMETER
C_1[2] H13	C_7[3] H13	D_1	A_6[4]	H_9	K_4[3]	K_8[3] H13	α Grad	stat. C_0 N	
22.6	1.3	21	–	–	–	2.5	–	60,000	12
22.6	1.3	21	7.7	1.2	2.2	2.5	78	60,000	
24.6	1.3	24.9	–	–	–	2.5	–	96,000	16
24.6	1.3	24.9	10.1	1.2	2.2	2.5	78	96,000	
31.2	1.6	30.3	–	–	–	2.5	–	150,000	20
31.2	1.6	30.3	10	1.2	2.2	2.5	60	150,000	
43.7	1.85	37.5	–	–	–	2.5	–	250,000	25
43.7	1.85	37.5	12.5	1.5	3	2.5	60	250,000	
51.7	1.85	44.5	–	–	–	3	–	375,000	30
51.7	1.85	44.5	13.6	1.5	3	3	54	375 000	
60.3	2.15	59	–	–	–	3	–	600,000	40
60.3	2.15	59	18.2	1.5	3	3	54	600,000	
77.3	2.65	72	–	–	–	4	–	1,000,000	50
77.3	2.65	72	22.7	1.5	3	4	54	1,000,000	

Permaglide® Linear Plain Bearing Units

PAGBA..PP AS, PAGBAO..PP AS SERIES

- Plain Bearing Range
- Sealed, Greased, With Relubrication Facility

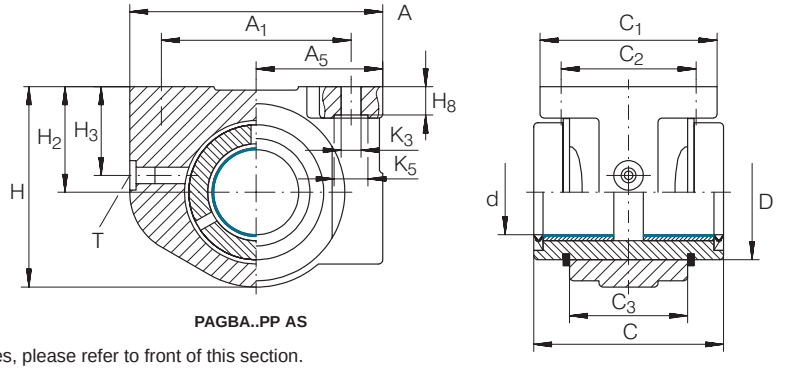

PAGBA..PP AS

For details on part numbers, descriptive suffixes and various technical references, please refer to front of this section.
For engineering or technical information contact your local sales representative or call Distributor Sales (800)523-6572 or Linear Sales (800)462-3399.

DIMENSION TABLE · Dimensions in mm

SHAFT DIAMETER	PART NUMBER		MASS	DIMENSIONS				MOUNTING DIMENSIONS		
				d	A	C	H	A_1	A_5	A_6[1]
			kg			h12				
12	PAGBA 1232 PP AS	–	0.07	12	42	32	34	$32^{\pm 0.15}$	$21^{\pm 0.01}$	–
	–	PAGBAO 1232 PP AS	0.06	12	42	32	–	$32^{\pm 0.15}$	21	7.7
16	PAGBA 1636 PP AS	–	0.1	16	50	36	41	$40^{\pm 0.15}$	$25^{\pm 0.01}$	–
	–	PAGBAO 1636 PP AS	0.09	16	50	36	–	$40^{\pm 0.15}$	25	10.1
20	PAGBA 2045 PP AS	–	0.18	20	60	45	47.5	$45^{\pm 0.15}$	$30^{\pm 0.01}$	–
	–	PAGBAO 2045 PP AS	0.16	20	60	45	–	$45^{\pm 0.15}$	30	10
25	PAGBA 2558 PP AS	–	0.35	25	74	58	60	$60^{\pm 0.2}$	$37^{\pm 0.01}$	–
	–	PAGBAO 2558 PP AS	0.31	25	74	58	–	$60^{\pm 0.2}$	37	12.5
30	PAGBA 3068 PP AS	–	0.48	30	84	68	67	$68^{\pm 0.2}$	$42^{\pm 0.01}$	–
	–	PAGBAO 3068 PP AS	0.43	30	84	68	–	$68^{\pm 0.2}$	42	13.6
40	PAGBA 4080 PP AS	–	1.07	40	108	80	87	$86^{\pm 0.2}$	$54^{\pm 0.015}$	–
	–	PAGBAO 4080 PP AS	0.91	40	108	80	–	$86^{\pm 0.2}$	54	18.2
50	PAGBA 50100 PP AS	–	1.65	50	130	100	98	$108^{\pm 0.2}$	$65^{\pm 0.015}$	–
	–	PAGBAO 50100 PP AS	1.46	50	130	100	–	$108^{\pm 0.2}$	65	22.7

1) Dimension A_6 on diameter d.
2) The tolerances are valid for series PAGBA..PP AS only.
3) For fixing screws to DIN 912-8.8 and spring washer to DIN 7 980.

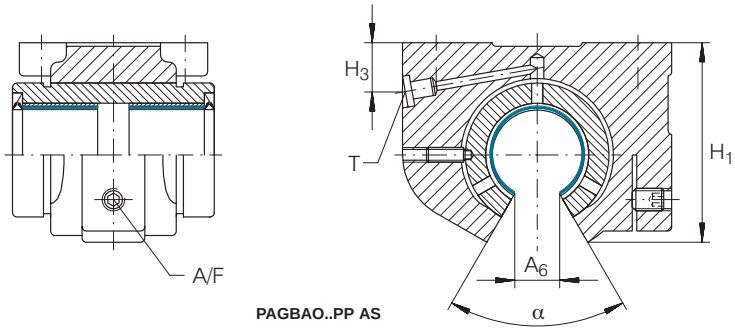

PAGBAO..PP AS

C_1	C_2	C_3	$D^{2)}$ h7	H_1	H_2	H_3	H_8 −0.5	$K_3^{3)}$	$K_5^{3)}$	A/F	α Grad	INA LUBRICATION NIPPLE[4)] T	SHAFT DIAMETER
32	$23^{\pm 0.15}$	20	22	–	$18^{\pm 0.01}$	15	4.8	4.7	8	–	–	NIP A1	12
32	$23^{\pm 0.15}$	20	22	30.5	18	7.8	4.8	4.7	8	2	78	NIP A1	
35	$26^{\pm 0.15}$	22	26	–	$22^{\pm 0.01}$	15	5.4	4.7	8	–	–	NIP A1	16
35	$26^{\pm 0.15}$	22	26	36.8	22	10	5.4	4.7	8	2.5	78	NIP A1	
42	$32^{\pm 0.15}$	28	32	–	$25^{\pm 0.01}$	21	6.7	4.7	8	–	–	NIP A1	20
42	$32^{\pm 0.15}$	28	32	44.5	25	11	6.7	4.7	8	2.5	60	NIP A1	
54	$40^{\pm 0.2}$	40	40	–	$30^{\pm 0.01}$	23	7.8	5.7	10	–	–	NIP A1	25
54	$40^{\pm 0.2}$	40	40	56	30	13	7.8	5.7	10	3	60	NIP A1	
60	$45^{\pm 0.2}$	48	47	–	$35^{\pm 0.01}$	25	8.7	6.8	11	–	–	NIP A2	30
60	$45^{\pm 0.2}$	48	47	63.5	35	14	8.7	6.8	11	3	54	NIP A2	
78	$58^{\pm 0.2}$	56	62	–	$45^{\pm 0.01}$	30	11	9.2	15	–	–	NIP A2	40
78	$58^{\pm 0.2}$	56	62	82.4	45	18	11	9.2	15	4	54	NIP A2	
70	$50^{\pm 0.2}$	72	75	–	$50^{\pm 0.015}$	34	12.5	9.2	15	–	–	NIP A2	50
70	$50^{\pm 0.2}$	72	75	92.8	50	19	12.5	9.2	15	4	54	NIP A2	

Shafts
W SERIES

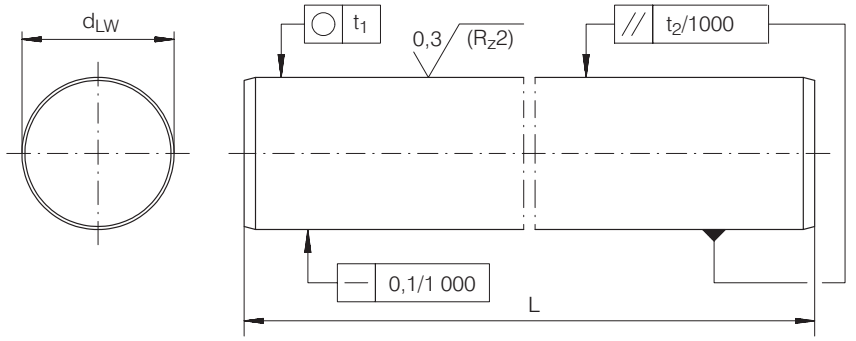

For details on part numbers, descriptive suffixes and various technical references, please refer to front of this section.
For engineering or technical information contact your local sales representative or call Distributor Sales (800)523-6572 or Linear Sales (800)462-3399.

DIMENSION TABLE · Dimensions in mm

SHAFT DIAMETER d_{LW}	PART NUMBER	MASS kg/m	LENGTH L_{max}	TOLERANCES IN µm: STANDARD TOLERANCE h6	TOLERANCES IN µm: SPECIAL TOLERANCES[1] j5	TOLERANCES IN µm: SPECIAL TOLERANCES[1] f7	ROUNDNESS t_1 µm	PARALLELISM t_2[2] µm	SURFACE HARDNESS DEPTH RHT[3] min.
5	W 5	0.15	3,600	0–8	–	–	4	5	0.4
6	W 6	0.22	4,000	0–8	–	–	4	5	0.4
8	W 8	0.39	4,000	0–9	–	–	4	6	0.4
10	W 10	0.61	6,000	0–9	–	–	4	6	0.4
12	W 12	0.89	6,000	0–11	+5–3	–16–34	5	8	0.6
14	W 14	1.21	6,000	0–11	+5–3	–16–34	5	8	0.6
15	W 15	1.37	6,000	0–11	–	–16–34	5	8	0.6
16	W 16	1.57	6,000	0–11	+5–3	–16–34	5	8	0.6
18	W 18	1.98	6,000	0–11	–	–16–34	5	8	0.6
20	W 20	2.45	6,000	0–13	+5–4	–20–41	6	9	0.9
24	W 24	3.55	6,000	0–13	–	–	6	9	0.9
25	W 25	3.83	6,000	0–13	+5–4	–20–41	6	9	0.9
30	W 30	5.51	6,000	0–13	+5–4	–20–41	6	9	0.9
32	W 32	6.3	6,000	0–16	–	–25–50	7	11	1.5
40	W 40	9.8	6,000	0–16	+6–5	–	7	11	1.5
50	W 50	15.3	6,000	0–16	+6–5	–	7	11	1.5
60	W 60	22.1	6,000	0–19	–	–	8	13	2.2
80	W 80	39.2	6,000	0–19	–	–	8	13	2.2

[1]) Only for shafts made from quenched and tempered steel.
[2]) Measured diameter variation.
[3]) According to DIN 6 773, Part 3.

Recommended Threaded Holes

Recommended threaded holes for shafts W

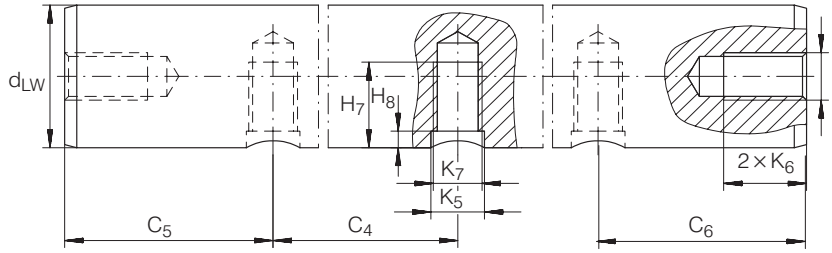

For details on part numbers, descriptive suffixes and various technical references, please refer to front of this section.
For engineering or technical information contact your local sales representative or call Distributor Sales (800)523-6572 or Linear Sales (800)462-3399.

DIMENSION TABLE · Dimensions in mm

PART NUMBER[1])	AXIAL THREAD										RADIAL THREAD DIMENSIONS								
	K_6										C_4			C_{5min}, C_{6min}[2]) HOLE PATTERN 03	C_{5min}, C_{6min}[2]) HOLE PATTERN 04–05	H_7	H_8	K_5	K_7
W 5																			
W 6																			
W 8	M3																		
W 10	M3	M4																	
W 12		M4	M5								75		120	10		8	2	5	M4
W 14		M4	M5	M6															
W 15			M5	M6	M8														
W 16			M5	M6	M8						75	100	150	10		9	2,5	6	M5
W 18				M6	M8	M10													
W 20													150	10		9	2.5	6	M5
				M6	M8	M10					75	100	150	15		11	3	7	M6
W 24					M8	M10	M12												
W 25													150	15	$3 \times K_6 + K_7$	11	3	7	M6
					M8	M10	M12				75	120	200	15		15	3	9	M8
W 30													150	15		11	3	7	M6
						M10	M12	M16			100	150	200	20		17	3.5	11	M10
W 32						M10	M12	M16											
W 40						M10	M12	M16			150	200	300	20		19	4	11	M10
						M10	M12	M16			100			20		21	4	13	M12
W 50													150	20		19	4	11	M10
							M12	M16	M20			200	300	20		21	4	13	M12
							M12	M16	M20		100			20		25	4	15	M14
W 60								M16	M20	M24									
W 80								M16	M20	M24									

[2]) The dimensions C_5 and C_6 are dependent on the length of the shaft.
The axial threaded holes should be taken into consideration when using hole patterns 04 and 05.

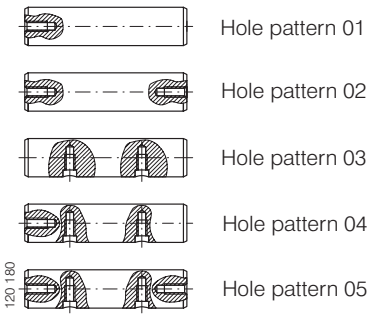

Shafts
WH SERIES

● Hollow shafts

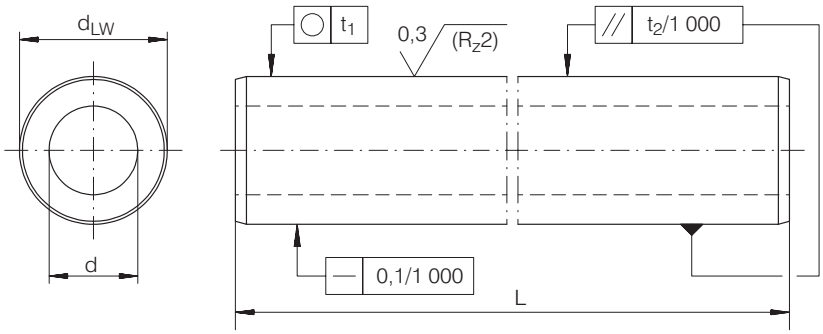

For details on part numbers, descriptive suffixes and various technical references, please refer to front of this section.
For engineering or technical information contact your local sales representative or call Distributor Sales (800)523-6572 or Linear Sales (800)462-3399.

DIMENSION TABLE · Dimensions in mm								
SHAFT DIAMETER d_{LW}	PART NUMBER	MASS kg/m	Length L	INSIDE DIAMETER d[1])	TOLERANCES IN MM D h7	ROUNDNESS t_1 µm	PARALLELISM t_2[2]) µm	SURFACE HARDNESS DEPTH Rht[3]) min.
20	WH 20	1.25	6,000	14	0–21	6	9	0.9
25	WH 25	2.35	6,000	15.6	0–21	6	9	0.9
30	WH 30	3.5	6,000	18.2	0–21	6	9	0.9
40	WH 40	4.99	6,000	28.1	0–25	7	11	1.5
50	WH 50	9.97	6,000	29.7	0–25	7	11	1.5
60	WH 60	14.2	6,000	36	0–30	8	13	2.2
80	WH 80	19.5	6,000	56.9	0–30	8	13	2.2

1) Wall thickness tolerance of initial material: ±4%.
2) Measured diameter variation.
3) According to DIN 6 773. Part 3.

Shaft And Support Rail Units

TSWW, TSNW SERIES

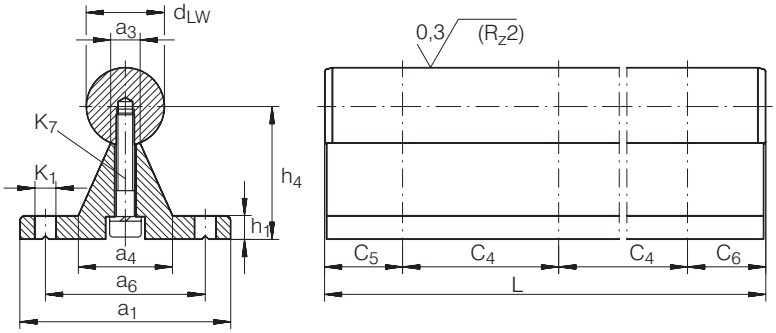

For details on part numbers, descriptive suffixes and various technical references, please refer to front of this section.
For engineering or technical information contact your local sales representative or call Distributor Sales (800)523-6572 or Linear Sales (800)462-3399.

DIMENSION TABLE · Dimensions in mm

SHAFT DIAMETER d_{LW}	PART NUMBER	MASS	DIMENSIONS			MOUNTING DIMENSIONS								
			a_1	h_4[1]	L[2]	a_3	a_4	a_6	C_4	C_5/C_6[3]	C_5/C_6[3]	h_1	K_1[4]	K_7
h6		kg/m		±0.02	±3					min.	max.			DIN 6 912
12	TSWW 12	1.67	40	22	6,000	6	19.5	29	120	20	114	5	4.5	M4 ×20
	TSNW 12	1.67	40	22	6,000	5.4	15	29	75	20	69	5	4.5	M4 ×20
16	TSWW 16	3.15	54	32	6,000	7.5	24.2	41	150	20	143	6	5.5	M5 ×30
	TSNW 16	2.95	45	26	6,000	7	19	33	100	20	93	5	5.5	M5 ×20
20	TSWW 20	4.03	54	34.02	6,000	7.5	24.2	41	150	20	143	6	5.5	M5 ×30
	TSNW 20	3.95	52	32	6,000	8.1	23	37	100	20	92	6	6.6	M6 ×25
25	TSWW 25	5.9	65	39.66	6,000	10	29.8	51	150	20	142	6	6.6	M6 ×35
	TSNW 25	5.6	57	36	6,000	10.3	26	42	120	20	110	6	6.6	M8 ×30
30	TSWW 30	7.58	65	42.19	6,000	10	29.8	51	150	20	142	6	6.6	M6 ×35
	TSNW 30	7.88	69	42	6,000	11	29	51	150	20	139	7	9	M10 ×35
40	TSWW 40	14.25	85	60	6,000	17	46	65	150	20	139	10	9	M10 ×50
	TSNW 40	12.83	73	50	6,000	15	36	55	200	20	189	8	9	M10 ×40
50	TSWW 50	19.75	85	65.05	6,000	17	46	65	150	20	139	10	9	M10 ×50
	TSNW 50	19.38	84	60	6,000	19	40	63	200	20	188	9	11	M12 ×45

1) With reference to the nominal shaft diameter. measured while clamped.

2) Maximum length of single piece shaft and support rail units:
Depending on the length of the shaft and support rail unit,
the rail is composed of several individual sections.

3) The dimensions C_5 and C_6 are dependent on the length of the shaft and support rail unit.

4) TSWW: for fixing screws to DIN 912 or DIN 933 (TSWW 12, DIN 6 912)
and spring washer or washer to DIN 7 980 or DIN 125.
TSNW: for fixing screws to DIN 6 912 and spring washer to DIN 7 980.

Shaft And Support Rail Unit
TSUW SERIES

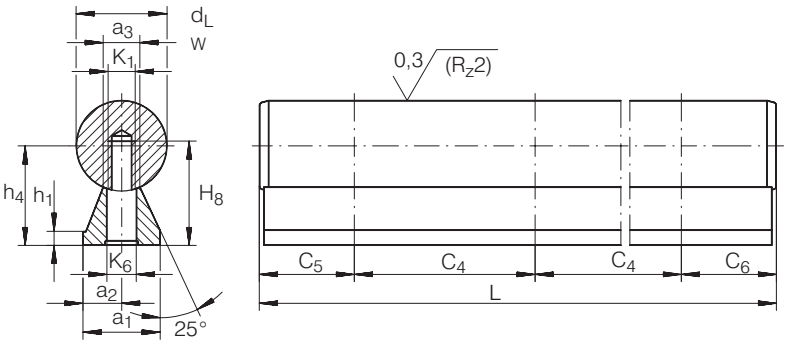

For details on part numbers, descriptive suffixes and various technical references, please refer to front of this section.
For engineering or technical information contact your local sales representative or call Distributor Sales (800)523-6572 or Linear Sales (800)462-3399.

DIMENSION TABLE · Dimensions in mm

SHAFT DIAMETER d_{LW}	PART NUMBER	MASS	DIMENSIONS			MOUNTING DIMENSIONS								
			a_1	h_4[1]	L[2]	a_2[3]	a_3	C_4	C_5/C_6[4]	C_5/C_6[4]	h_1	K_1	K_6	H_8
h6		kg/m		±0.02	±3				min.	max.				
12	TSUW 12	1.1	11	14.5	6,000	5.5	5.4	75	20	70	3	M4	4.5	16
16	TSUW 16	1.88	14	18	6,000	7	7	75	20	70	3	M5	5.5	19
20	TSUW 20	2.92	17	22	6,000	8.5	8.1	75	20	69	3	M6	6.6	23
25	TSUW 25	4.42	21	26	6,000	10.5	10.3	75	20	68	3	M8	9	28.5
30	TSUW 30	6.22	23	30	6,000	11.5	11	100	20	92	3	M10	11	32
40	TSUW 40	11.03	30	39	6,000	15	15	100	20	91	4	M12	13.5	39.5
50	TSUW 50	16.98	35	46	6,000	17.5	19	100	20	90	5	M14	15.5	46

1) With reference to the nominal shaft diameter, measured while clamped.

2) Maximum length of single piece shaft and support rail units (TSUW 12: L = 1,600 ±1.2 mm);
Depending on the length of the shaft and support rail unit,
the rail is composed of several individual sections.

3) Available on request with a_2 ±0.02.

4) The dimensions C_5 and C_6 are dependent on the length of the shaft and support rail unit.

Shaft And Support Rail Units

TSNW..G4 d ≦ 25 mm, TSNW..G5 d > 25 mm SERIES

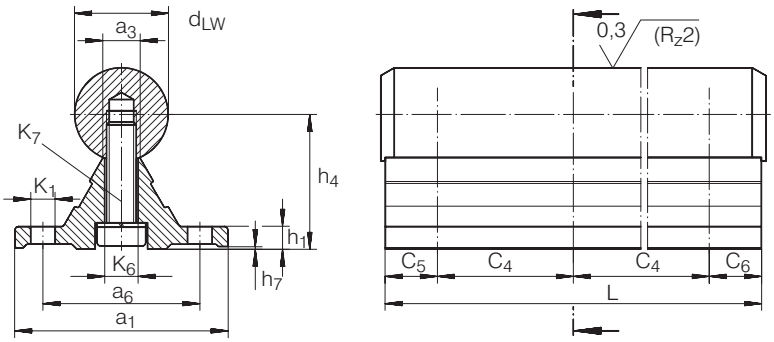

For details on part numbers, descriptive suffixes and various technical references, please refer to front of this section.
For engineering or technical information contact your local sales representative or call Distributor Sales (800)523-6572 or Linear Sales (800)462-3399.

DIMENSION TABLE · Dimensions in mm

SHAFT DIAMETER d_{LW}	PART NUMBER	MASS	DIMENSIONS			MOUNTING DIMENSIONS										
			a_1	h_4 1)	L 2)	a_3	a_6	C_4	C_5/C_6 3)	C_5/C_6 3)	h_1	h_7	K_1 4)	K_6	K_7	ACCURACY CLASS 5)
h6		kg/m			±2				min.	max.					DIN 6 912	
12	TSNW 12 G4	1.6	40	$22^{\pm 0.1}$	4,000	5	29	75	20	69	5	0.2	4.5	4.5	M4 ×18	G4 0.03
16	TSNW 16 G4	2.5	45	$26^{\pm 0.1}$	4,000	6.8	33	100	20	93	5	0.2	5.5	5.5	M5 ×20	G4 0.03
20	TSNW 20 G4	3.8	52	$32^{\pm 0.1}$	4,000	7.8	37	100	20	92	6	0.2	6.6	6.6	M6 ×25	G4 0.03
25	TSNW 25 G4	5.3	57	$36^{\pm 0.1}$	4,000	9.8	42	120	20	110	6	0.3	6.6	9	M8 ×30	G4 0.03
30	TSNW 30 G5	7.5	69	$42^{\pm 0.15}$	4,000	11	51	150	20	139	7	0.3	9	11	M10×35	G5 0.04
40	TSNW 40 G5	12.4	73	$50^{\pm 0.15}$	4,000	14.5	55	200	20	189	8	0.3	9	11	M10×40	G5 0.04
50	TSNW 50 G5	18.9	84	$60^{\pm 0.15}$	4,000	18.5	63	200	20	188	9	0.3	11	13.5	M12×45	G5 0.05

1) With reference to the nominal shaft diameter, measured while clamped.

2) Maximum length of single piece shaft and support rail units:
the shaft is longer than the support rail by 2.5 mm at each end.

3) The dimensions C_5 and C_6 are dependent on the length of the shaft and support rail unit.

4) For fixing screws to DIN 6 912 and spring washer to DIN 7 980.

5) Maximum variation of dimension h_4, measured on the same rail over a distance of 1,000 mm.

Shaft And Support Rail Unit
TSSW SERIES

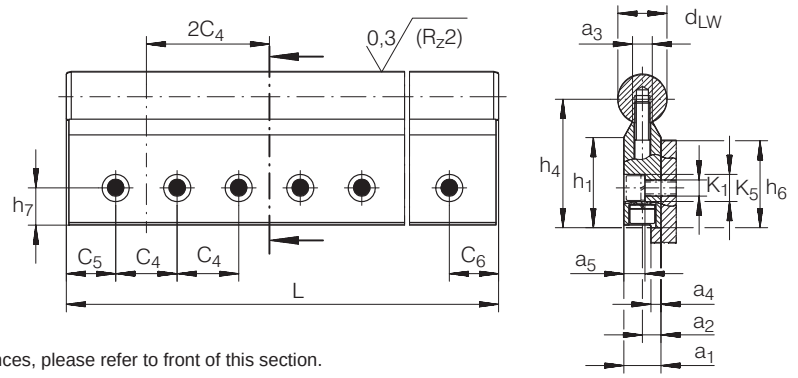

For details on part numbers, descriptive suffixes and various technical references, please refer to front of this section.
For engineering or technical information contact your local sales representative or call Distributor Sales (800)523-6572 or Linear Sales (800)462-3399.

DIMENSION TABLE · Dimensions in mm

SHAFT DIAMETER d_{LW}	PART NUMBER	MASS	DIMENSIONS			MOUNTING DIMENSIONS											
			a_1	h_4 1)	L 2)	a_2 1)	a_3	a_4	a_5 3)	C_4	C_5/C_6 4)	C_5/C_6 4)	h_1	h_6	h_7	K_1 3)	K_5 3)
h6		kg/m		± 0.01	± 3	± 0.012					min.	max.			± 0.15		
20	TSSW 20	4.12	15	52	6,000	7.5	8.1	4	8.5	50	20	42	36.5	30	15	6.6	11
25	TSSW 25	5.98	20	62	6,000	10	10.3	5.5	11	60	20	50	38.5	36	18	9	15
30	TSSW 30	8.68	25	72	6,000	12.5	11	7	13.5	75	20	64	43	42	21	11	18
40	TSSW 40	14.3	30	88	6,000	15	15	8.5	16	100	20	88	53	50	25	13.5	20
50	TSSW 50	21.47	35	105	6,000	17.5	19	9	18.5	100	20	86	64.5	60	30	15.5	24

1) With reference to the nominal shaft diameter, measured while clamped.
2) Maximum length of single piece shaft and support rail units.
Depending on the length of the shaft and support rail unit, the rail is composed of several individual sections.
3) For fixing screws to DIN 912-8.8 and spring washer to DIN 7 980.
4) The dimensions C_5 and C_6 are dependent on the length of the shaft and support rail unit.

Shaft And Support Rail Unit
TSWWA SERIES

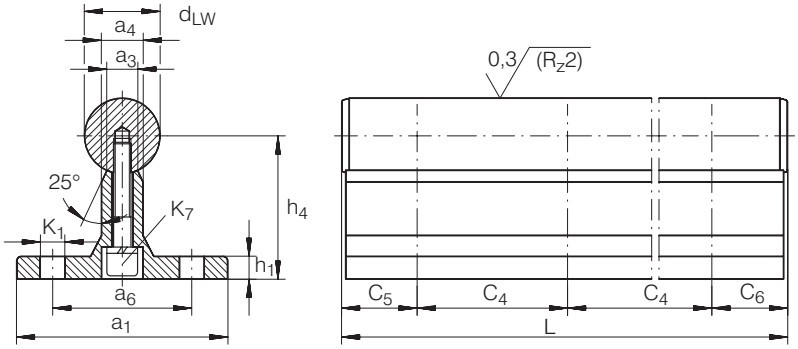

For details on part numbers, descriptive suffixes and various technical references, please refer to front of this section.
For engineering or technical information contact your local sales representative or call Distributor Sales (800)523-6572 or Linear Sales (800)462-3399.

DIMENSION TABLE · Dimensions in mm

SHAFT DIAMETER d_{LW}	PART NUMBER	MASS	DIMENSIONS			MOUNTING DIMENSIONS							
			a_1	h_4[1]	L[2]	a_3	a_4	a_6	C_4	C_5/C_6[3]	C_5/C_6[3]	h_1	K_1[4]
h6		kg/m		±0.02	±3					min.	max.		
12	TSWWA 12	1.93	43	28	6,000	5.4	9	29	75	20	69	5	4.5
16	TSWWA 16	2.8	48	30	6,000	7	10	33	100	20	93	5	5.5
20	TSWWA 20	4.12	56	38	6,000	8.1	11	37	100	20	92	6	6.6
25	TSWWA 25	5.83	60	42	6,000	10.3	14	42	120	20	110	6	6.6
30	TSWWA 30	8.5	74	53	6,000	11	14	51	150	20	139	8	9
40	TSWWA 40	13.33	78	60	6,000	15	18	55	200	20	189	8	9
50	TSWWA 50	20.33	90	75	6,000	19	22	63	200	20	188	10	11

1) With reference to the nominal shaft diameter, measured while clamped.

2) Maximum length of single piece shaft and support rail units.
Depending on the length of the shaft and support rail unit, the rail is composed of several individual sections.

3) The dimensions C_5 and C_6 are dependent on the length of the shaft and support rail unit.

4) For fixing screws to DIN 912 or DIN 933
and spring washer or washer to DIN 7 980 or DIN 125.

Shaft Support Blocks
GWH..B SERIES

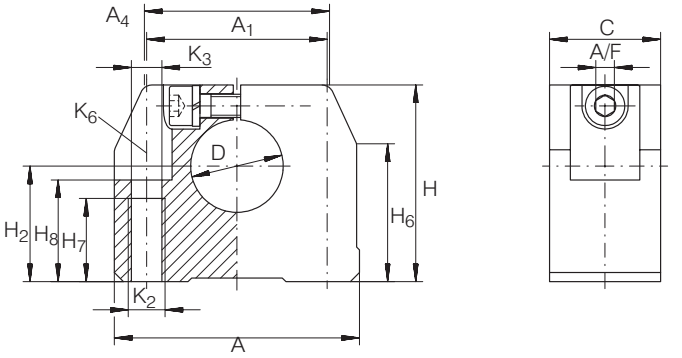

For details on part numbers, descriptive suffixes and various technical references, please refer to front of this section.
For engineering or technical information contact your local sales representative or call Distributor Sales (800)523-6572 or Linear Sales (800)462-3399.

DIMENSION TABLE · Dimensions in mm

SHAFT DIAMETER	PART NUMBER	MASS	DIMENSIONS				MOUNTING DIMENSIONS									
			D	A	C	H	A_1	A_4	H_2	H_6	H_7	H_8	K_2	K_3[1]	K_6[1]	A/F
		kg	H8				±0.15		±0.01							
6	GWH 06 B	0.03	6	32	16	27	22	25	15	19.5	11	13	M5	4.3	M4	2.5
8	GWH 08 B	0.03	8	32	16	27	22	25	16	19.5	11	13	M5	4.3	M4	2.5
10	GWH 10 B	0.05	10	40	18	33	27	32	18	24	13	16	M6	5.3	M5	3
12	GWH 12 B	0.05	12	40	18	33	27	32	19	24	13	16	M6	5.3	M5	3
14	GWH 14 B	0.07	14	43	20	36.5	32	34	20	25.5	13	18	M6	5.3	M5	3
16	GWH 16 B	0.07	16	43	20	36.5	32	34	22	25.5	13	18	M6	5.3	M5	3
20	GWH 20 B	0.12	20	53	24	42.5	39	40	25	28	18	22	M8	6.6	M6	4
25	GWH 25 B	0.17	25	60	28	52.5	44	44	31	33	22	26	M10	8.4	M8	5
30	GWH 30 B	0.22	30	67	30	60	49	49.5	34	41.5	22	29	M10	8.4	M8	5
40	GWH 40 B	0.48	40	87	40	79.5	66	63	42	44.5	26	38	M12	10.5	M10	6
50	GWH 50 B	0.82	50	103	50	92	80	74	50	61	34	46	M16	13.5	M12	8

In the interim, shaft support blocks GWH..B with profile grooves will still be supplied.

[1]) For fixing screws to DIN 912-8.8 and spring washer to DIN 7980.

Shaft Support Blocks
GWN..B SERIES

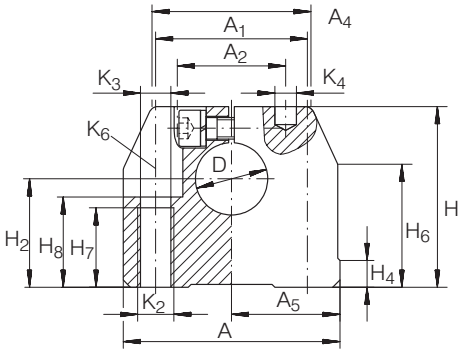

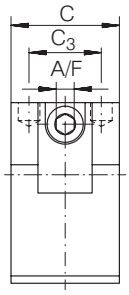

For details on part numbers, descriptive suffixes and various technical references, please refer to front of this section.
For engineering or technical information contact your local sales representative or call Distributor Sales (800)523-6572 or Linear Sales (800)462-3399.

DIMENSION TABLE · Dimensions in mm

SHAFT DIAMETER	PART NUMBER	MASS	DIMENSIONS				MOUNTING DIMENSIONS														
			D	A	C	H	A_1	A_2	A_4	A_5	C_3	H_2	H_4	H_6	H_7	H_8	K_2	K_3	K_4	K_6[1]	A/F
		kg	H8							±0.01		±0.01									
12	GWN 12 B	0.06	12	43	20	35	30 ±0.15	20	34	21.5	13	20	5.5	26.5	13	16.5	M6	5.3	4	M5	3
16	GWN 16 B	0.1	16	53	24	42	38 ±0.15	26	40	26.5	16	25	7	29.5	18	21	M8	6.6	5	M6	4
20	GWN 20 B	0.17	20	60	30	50	42 ±0.15	30	44	30	20	30	7.5	34	22	25	M10	8.4	6	M8	5
25	GWN 25 B	0.33	25	78	38	60	56 ±0.15	40	59.5	39	25	35	8.5	41.5	26	30	M12	10.5	8	M10	6
30	GWN 30 B	0.45	30	87	40	70	64 ±0.15	45	63	43.5	26	40	9.5	46	26	34	M12	10.5	8	M10	6
40	GWN 40 B	0.85	40	108	48	90	82 ±0.15	65	76	54	32	50	11	57.5	34	44	M16	13.5	10	M12	8
50	GWN 50 B	1.4	50	132	58	105	100 ±0.2	70	90	66	36	60	11	62	43	49	M20	17.5	12	M16	10

In the interim, shaft support blocks GWN..B with profile grooves will still be supplied.

1) For fixing screws to DIN 912-8.8 and spring washer to DIN 7980.

Shaft Support Blocks
GW, GWA SERIES

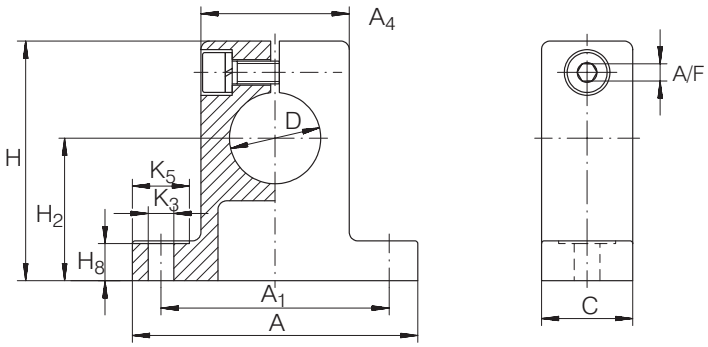

For details on part numbers, descriptive suffixes and various technical references, please refer to front of this section.
For engineering or technical information contact your local sales representative or call Distributor Sales (800)523-6572 or Linear Sales (800)462-3399.

DIMENSION TABLE · Dimensions in mm

SHAFT DIAMETER	PART NUMBER	MASS	DIMENSIONS				MOUNTING DIMENSIONS						
			D	A	C	H	A_1	A_4	H_2	H_8	K_3[1])	K_5[1])	A/F
		kg							±0.015				
10	GW 10	0.03	10	37	11	30	$28^{\pm 0.15}$	18	17	5	3.4	8	2.5
	GWA 10	0.03	10	37	11	30	$28^{\pm 0.15}$	18	17	5	4.5	9	2.5
12	GW 12	0.04	12	42	12	35	$32^{\pm 0.15}$	20	20	5.5	4.5	10	3
	GWA 12	0.04	12	42	12	35	$32^{\pm 0.15}$	20	20	5.5	5.5	11	3
14	GW 14	0.06	14	46	14	38	$36^{\pm 0.15}$	23	22	6	4.5	10	3
	GWA 14	0.06	14	46	14	38	$36^{\pm 0.15}$	23	22	6	5.5	11	3
16	GW 16	0.08	16	50	16	42	$40^{\pm 0.15}$	26	25	6.5	4.5	10	3
	GWA 16	0.08	16	50	16	42	$40^{\pm 0.15}$	26	25	6.5	5.5	11	3
20	GW 20	0.15	20	60	20	50	$45^{\pm 0.15}$	32	30	7.5	4.5	10	3
	GWA 20	0.15	20	60	20	50	$45^{\pm 0.15}$	32	30	8	5.5	11	3
25	GW 25	0.26	25	74	25	58	$60^{\pm 0.15}$	38	35	8.5	5.5	11	4
	GWA 25	0.26	25	74	25	58	$60^{\pm 0.15}$	38	35	9	6.6	13	4
30	GW 30	0.38	30	84	28	68	$68^{\pm 0.2}$	45	40	9.5	6.6	13	5
	GWA 30	0.38	30	84	28	68	$68^{\pm 0.2}$	45	40	10	9	18	5
40	GW 40	0.67	40	108	32	86	$86^{\pm 0.2}$	56	50	12	9	18	6
	GWA 40	0.67	40	108	32	86	$86^{\pm 0.2}$	56	50	12	11	22	6
50	GW 50	1.38	50	130	40	100	$108^{\pm 0.2}$	80	60	14	9	18	6
	GWA 50	1.38	50	130	40	100	$108^{\pm 0.2}$	80	60	14	11	22	6

[1]) For fixing screws to DIN 912-8.8 and spring washer to DIN 7 980.

Support Rails

TSN..G G4 d ≦ 25 mm,
TSN..G G5 d > 25 mm,
TSN..G4 d ≦ 25 mm,
TSN..G5 d > 25 mm SERIES

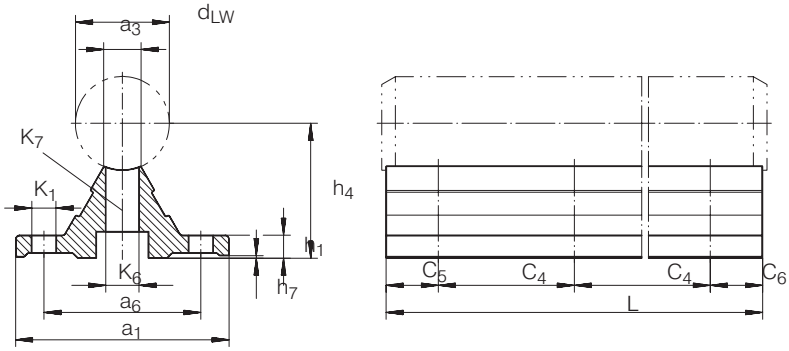

For details on part numbers, descriptive suffixes and various technical references, please refer to front of this section.
For engineering or technical information contact your local sales representative or call Distributor Sales (800)523-6572 or Linear Sales (800)462-3399.

DIMENSION TABLE · Dimensions in mm

SHAFT DIAMETER d_{LW}	PART NUMBER	MASS	DIMENSIONS			MOUNTING DIMENSIONS										
			a_1	h_4 1)	L 2)	a_3	a_6	C_4	C_5/C_6 3)		h_1	h_7	K_1 4)	K_6	K_7	ACCURACY CLASS 5)
h6		kg/m			± 2				min.	max.					DIN 6 912	
12	TSN 12 G G4	0.72	40	22 ± 0.1	4,000	5	29	75	20	69	5	0.2	4.5	4.5	M4 × 18	G4 0.03
	TSN 12 G4	0.72	40	22 ± 0.1	4,000	5	–	–	–	–	5	0.2	–	–	M4 × 18	G4 0.03
16	TSN 16 G G4	0.88	45	26 ± 0.1	4,000	6.8	33	100	20	93	5	0.2	5.5	5.5	M5 × 20	G4 0.03
	TSN 16 G4	0.93	45	26 ± 0.1	4,000	6.8	–	–	–	–	5	0.2	–	–	M5 × 20	G4 0.03
20	TSN 20 G G4	1.28	52	32 ± 0.1	4,000	7.8	37	100	20	92	6	0.2	6.6	6.6	M6 × 25	G4 0.03
	TSN 20 G4	1.35	52	32 ± 0.1	4,000	7.8	–	–	–	–	6	0.2	–	–	M6 × 25	G4 0.03
25	TSN 25 G G4	1.43	57	36 ± 0.1	4,000	9.8	42	120	20	110	6	0.3	6.6	9	M8 × 30	G4 0.03
	TSN 25 G4	1.47	57	36 ± 0.1	4,000	9.8	–	–	–	–	6	0.3	–	–	M8 × 30	G4 0.03
30	TSN 30 G G5	1.9	69	42 ± 0.15	4,000	11	51	150	20	119	7	0.3	9	11	M10 × 35	G5 0.04
	TSN 30 G5	1.99	69	42 ± 0.15	4,000	11	–	–	–	–	7	0.3	–	–	M10 × 35	G5 0.04
40	TSN 40 G G5	2.53	73	50 ± 0.15	4,000	14.5	55	200	20	189	8	0.3	9	11	M10 × 40	G5 0.04
	TSN 40 G5	2.6	73	50 ± 0.15	4,000	14.5	–	–	–	–	8	0.3	–	–	M10 × 40	G5 0.04
50	TSN 50 G G5	3.46	84	60 ± 0.15	4,000	18.5	63	200	20	188	9	0.3	11	13.5	M12 × 45	G5 0.05
	TSN 50 G5	3.6	84	60 ± 0.15	4,000	18.5	–	–	–	–	9	0.3	–	–	M12 × 45	G5 0.05

1) With reference to the nominal shaft diameter, measured while clamped.
2) Maximum length of support rail.
3) The dimensions C_5 and C_6 are dependent on the length of the shaft and support rail unit.
4) For fixing screws to DIN 6 912 and spring washer to DIN 7 980.
5) Maximum variation of dimension h_4, measured on the same rail over a distance of 1,000 mm.

Support Rails
TSN..G SERIES

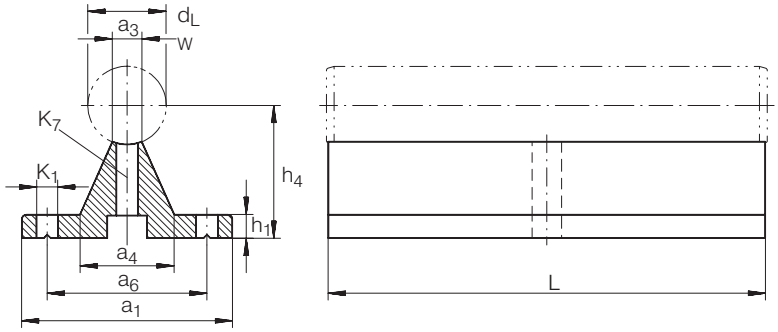

For details on part numbers, descriptive suffixes and various technical references, please refer to front of this section.
For engineering or technical information contact your local sales representative or call Distributor Sales (800)523-6572 or Linear Sales (800)462-3399.

DIMENSION TABLE · Dimensions in mm

SHAFT DIAMETER d_{LW}	PART NUMBER	MASS	DIMENSIONS		MOUNTING DIMENSIONS					
			a_1	h_4 1)	a_3	a_6	L	h_1	K_1 2)	K_7
h6		kg								DIN 6 912
12	TSN 1250 G	0.04	40	$22^{\pm 0.02}$	5.4	29	50	5	4.5	M4 ×20
16	TSN 1660 G	0.07	45	$26^{\pm 0.02}$	7	33	60	5	5.5	M5 ×20
20	TSN 2070 G	0.1	52	$32^{\pm 0.02}$	8.1	37	70	6	6.6	M6 ×25
25	TSN 2580 G	0.15	57	$36^{\pm 0.02}$	10.3	42	80	6	6.6	M8 ×30
30	TSN 3090 G	0.19	69	$42^{\pm 0.02}$	11	51	90	7	9	M10×35
40	TSN 40120 G	0.3	73	$50^{\pm 0.02}$	15	55	120	8	9	M10×40
50	TSN 50150 G	0.6	84	$60^{\pm 0.02}$	19	63	150	9	11	M12×45

1) With reference to the nominal shaft diameter, measured while clamped.
2) For fixing screws to DIN 6 912 and spring washer to DIN 7 980.

Linear Ball Bearings
KBZ..(PP) SERIES

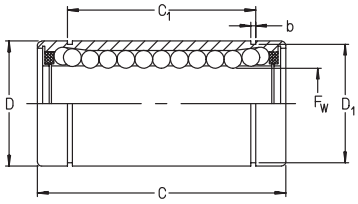

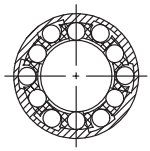

For details on part numbers, descriptive suffixes and various technical references, please refer to front of this section.
For engineering or technical information contact your local sales representative or call Distributor Sales (800)523-6572 or Linear Sales (800)462-3399.

PART NUMBER576	SEAL SUFFIX	SHAFT DIA. inch	WGT. lbs.	F_W inch	D inch	C inch	D_1 inch	b inch	C_1 inch	NO. BALL ROWS	LOAD RATINGS dyn. lbf.
KBZ 04	PP	1/4	0.02	0.250	0.500	0.750	0.469	0.039	0.511	4	48
KBZ 06	PP	3/8	0.03	0.375	0.625	0.875	0.588	0.039	0.636	4	54
KBZ 08	PP	1/2	0.08	0.500	0.875	1.250	0.821	0.046	0.963	4	158
KBZ 10	PP	5/8	0.17	0.625	1.125	1.500	1.059	0.056	1.104	4	231
KBZ 12	PP	3/4	0.21	0.750	1.250	1.625	1.176	0.056	1.166	5	287
KBZ 16	PP	1	0.66	1.000	1.563	2.250	1.469	0.068	1.755	6	417
KBZ 20	PP	1–1/4	0.97	1.250	2.000	2.625	1.886	0.068	2.005	6	668
KBZ 24	PP	1–1/2	1.48	1.500	2.375	3.000	2.239	0.086	2.412	6	972
KBZ 32	PP	2	2.51	2.000	3.000	4.000	2.838	0.103	3.192	6	1800

The dynamic load rating is based on a travel life expectancy of 2 x 10^6 inches.

Linear Ball Bearings
KBZ..OP (PP) SERIES

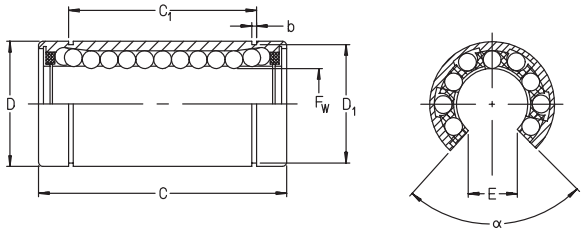

For details on part numbers, descriptive suffixes and various technical references, please refer to front of this section.
For engineering or technical information contact your local sales representative or call Distributor Sales (800)523-6572 or Linear Sales (800)462-3399.

PART NUMBER	SEAL SUFFIX	SHAFT DIA. inch	WGT. lbs.	F_w Nom. Dim. inch	D Nom. Dim. inch	C Nom. Dim. inch	D_1 inch	b inch	C_1 Nom. Dim. inch	E inch	a deg	NO. BALL ROWS	LOAD RATINGS dyn. lbf.
KBZ 08 OP	PP	1/2	0.06	0.500	0.875	1.250	0.821	0.046	0.963	0.313	80	3	158
KBZ 10 OP	PP	5/8	0.13	0.625	1.125	1.500	1.059	0.056	1.104	0.375	80	3	231
KBZ 12 OP	PP	3/4	0.17	0.750	1.250	1.625	1.176	0.056	1.166	0.438	60	4	259
KBZ 16 OP	PP	1	0.37	1.000	1.563	2.250	1.469	0.068	1.755	0.563	50	5	346
KBZ 20 OP	PP	1–1/4	1.26	1.250	2.000	2.625	1.886	0.068	2.005	0.625	50	5	555
KBZ 24 OP	PP	1–1/2	1.26	1.500	2.375	3.000	2.239	0.086	2.412	0.750	50	5	817
KBZ 32 OP	PP	2	2.16	2.000	3.000	4.000	2.838	0.103	3.192	1.000	50	5	1490

The dynamic load rating is based on a travel life expectancy of 2 x 10^6 inches.

Self Aligning Linear Ball Bearings
KNZ..(PP) SERIES

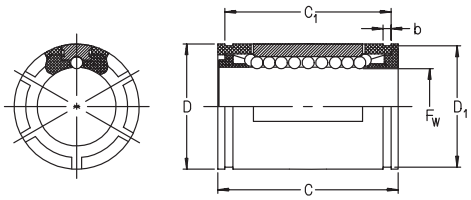

For details on part numbers, descriptive suffixes and various technical references, please refer to front of this section.
For engineering or technical information contact your local sales representative or call Distributor Sales (800)523-6572 or Linear Sales (800)462-3399.

PART NUMBER	SEAL SUFFIX	SHAFT DIA. inch	WGT. lbs.	F_w inch	D inch	C inch	D_1 inch	b inch	C_1 inch	NO. BALL ROWS	LOAD RATINGS dyn. lbf.	LOAD RATINGS stat. lbf.
KNZ 04	PP	1/4	0.008	0.250	0.500	0.750	0.469	0.039	0.515	4	50	30
KNZ 06	PP	3/8	0.013	0.375	0.625	0.875	0.588	0.039	0.703	4	80	40
KNZ 08	PP	1/2	0.042	0.500	0.875	1.250	0.821	0.046	1.032	4	200	110
KNZ 10	PP	5/8	0.101	0.625	1.125	1.500	1.059	0.056	1.112	5	340	190
KNZ 12	PP	3/4	0.123	0.750	1.250	1.625	1.176	0.056	1.272	6	480	270
KNZ 16	PP	1	0.265	1.000	1.563	2.250	1.469	0.068	1.886	6	840	490
KNZ 20	PP	1–1/4	0.485	1.250	2.000	2.625	1.886	0.068	2.011	6	1270	710
KNZ 24	PP	1–1/2	0.750	1.500	2.375	3.000	2.239	0.086	2.422	6	1600	850
KNZ 32	PP	2	1.400	2.000	3.000	4.000	2.838	0.103	3.206	6	2600	1460

The dynamic load rating is based on a travel life expectancy of 2 x 10^6 inches.

Self Aligning Linear Ball Bearings
KNZ..OP (PP) SERIES

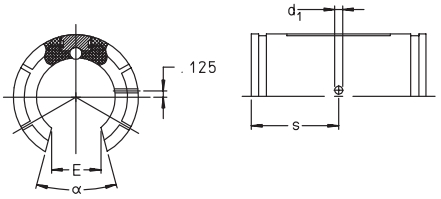

KNZ 08 OP

For details on part numbers, descriptive suffixes and various technical references, please refer to front of this section.
For engineering or technical information contact your local sales representative or call Distributor Sales (800)523-6572 or Linear Sales (800)462-3399.

PART NUMBER	SEAL SUFFIX	SHAFT DIA. inch	WGT. lbs.	F_w inch	D inch	C inch	D_1 inch	b inch	C_1 inch	C_2 inch	E inch	a deg	d_1 inch	t inch	s inch	NO. BALL ROWS	LOAD RTGS. dyn. lbf.	LOAD RTGS. stat. lbf.
KNZ 08 OP	PP	1/2	0.033	0.500	0.875	1.250	0.821	0.046	1.032	0.063	0.313	30	0.136	—	0.625	3	200	110
KNZ 10 OP	PP	5/8	0.082	0.625	1.125	1.500	1.059	0.056	1.112	0.125	0.375	30	0.105	0.039	0.125	4	390	230
KNZ 12 OP	PP	3/4	0.101	0.750	1.250	1.625	1.176	0.056	1.272	0.125	0.438	30	0.136	0.059	0.125	5	480	280
KNZ 16 OP	PP	1	0.220	1.000	1.563	2.250	1.469	0.068	1.886	0.125	0.563	30	0.136	0.047	0.125	5	870	500
KNZ 20 OP	PP	1–1/4	0.400	1.250	2.000	2.625	1.886	0.068	2.011	0.188	0.625	30	0.201	0.090	0.188	5	1300	730
KNZ 24 OP	PP	1–1/2	0.620	1.500	2.375	3.000	2.239	0.086	2.422	0.188	0.750	30	0.201	0.090	0.188	5	1630	870
KNZ 32 OP	PP	2	1.158	2.000	3.000	4.000	2.838	0.103	3.206	0.312	1.000	30	0.265	—	0.312	5	2650	1490

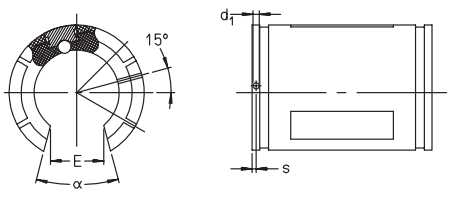

KNZ 10 OP

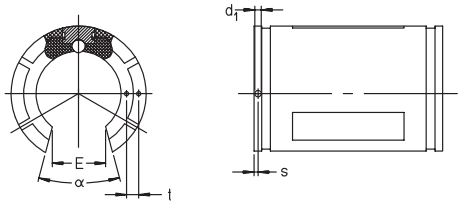

KNZ 12-32 OP

Self Aligning Mounted Units
KGNZ..PP SERIES

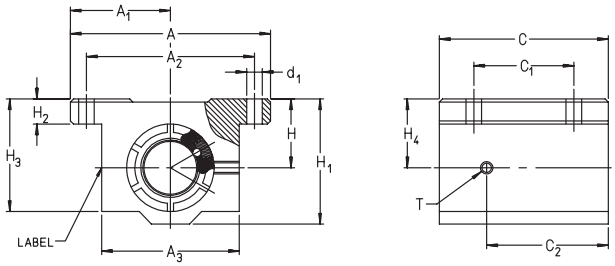

For details on part numbers, descriptive suffixes and various technical references, please refer to front of this section.
For engineering or technical information contact your local sales representative or call Distributor Sales (800)523-6572 or Linear Sales (800)462-3399.

PART NUMBER	SEAL SUFFIX	SHAFT DIA. inch	WGT. lbs.	d inch	A inch	C inch	A_1 ±.001 inch	H ±.001 inch	A_3 inch	H_1 inch	H_2 inch
KGNZ 04	PP	1/4	0.1	0.25	1.63	1.188	0.813	0.437	1.000	0.813	0.188
KGNZ 06	PP	3/8	0.14	0.375	1.75	1.313	0.875	0.500	1.125	0.938	0.188
KGNZ 08	PP	1/2	0.29	0.500	2.00	1.688	1.000	0.687	1.375	1.250	0.250
KGNZ 10	PP	5/8	0.53	0.625	2.50	1.938	1.250	0.875	1.750	1.625	0.281
KGNZ 12	PP	3/4	0.64	0.750	2.75	2.063	1.375	0.937	1.875	1.750	0.313
KGNZ 16	PP	1	1.36	1.000	3.25	2.813	1.625	1.187	2.375	2.188	0.375
KGNZ 20	PP	1–1/4	2.86	1.250	4.00	3.625	2.000	1.500	3.000	2.813	0.437
KGNZ 24	PP	1–1/2	4.19	1.500	4.75	4.000	2.375	1.750	3.500	3.250	0.500
KGNZ 32	PP	2	7.92	2.000	6.00	5.000	3.000	2.125	4.500	4.063	0.625

PART NUMBER	SEAL SUFFIX	SHAFT DIA. inch	H_3 inch	C_2 inch	H_4 inch	T inch	A_2 ±.01 inch	C_1 ±.01 inch	d_1 inch	DYN. LOAD C lbf	STAT. LOAD C_0 lbf
KGNZ 04	PP	1/4	0.750	0.590	0.437	NIP A1	1.312	0.750	0.156	50	30
KGNZ 06	PP	3/8	0.875	0.660	0.500	NIP A1	1.437	0.875	0.156	80	40
KGNZ 08	PP	1/2	1.125	0.844	0.690	NIP A1	1.688	1.000	0.156	200	110
KGNZ 10	PP	5/8	1.437	1.260	0.700	1/4–28	2.125	1.125	0.188	340	190
KGNZ 12	PP	3/4	1.563	1.340	0.937	1/4–28	2.375	1.250	0.188	480	270
KGNZ 16	PP	1	1.938	1.950	1.187	1/4–28	2.875	1.750	0.218	840	490
KGNZ 20	PP	1–1/4	2.500	2.430	1.500	1/4–28	3.500	2.000	0.218	1270	710
KGNZ 24	PP	1–1/2	2.875	2.750	1.750	1/4–28	4.125	2.500	0.281	1600	850
KGNZ 32	PP	2	3.625	3.420	2.125	1/4–28	5.250	3.250	0.406	2600	1460

Self Aligning Mounted Units
KGNZ..OP PP SERIES

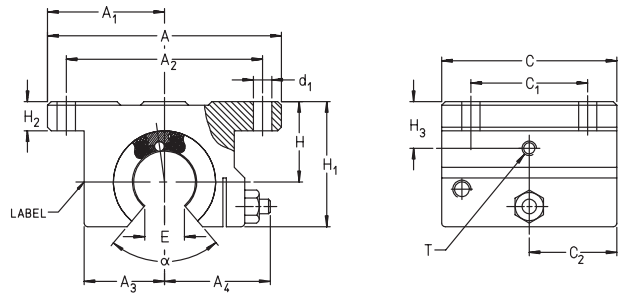

For details on part numbers, descriptive suffixes and various technical references, please refer to front of this section.
For engineering or technical information contact your local sales representative or call Distributor Sales (800)523-6572 or Linear Sales (800)462-3399.

PART NUMBER	SEAL SUFFIX	SHAFT DIA. inch	WGT. lbs.	d inch	A inch	C inch	A_1 ±.001 inch	H ±.001 inch	A_3 inch	A_4 inch	H_1 inch	H_2 inch
KGNZ OP 08	PP	1/2	0.22	0.500	2.000	1.500	1.000	0.687	0.688	0.905	1.100	0.250
KGNZ OP 10	PP	5/8	0.41	0.625	2.500	1.750	1.250	0.875	0.875	1.095	1.375	0.281
KGNZ OP 12	PP	3/4	0.52	0.750	2.750	1.875	1.375	0.937	0.937	1.161	1.535	0.313
KGNZ OP 16	PP	1	1.17	1.000	3.250	2.625	1.625	1.187	1.188	1.457	1.975	0.375
KGNZ OP 20	PP	1–1/4	2.38	1.250	4.000	3.375	2.000	1.500	1.500	1.831	2.485	0.437
KGNZ OP 24	PP	1–1/2	3.57	1.500	4.750	3.750	2.375	1.750	1.750	2.087	2.910	0.500
KGNZ OP 32	PP	2	6.38	2.000	6.000	4.750	3.000	2.125	2.250	2.638	3.660	0.625

PART NUMBER	SEAL SUFFIX	SHAFT DIA. inch	H_3 inch	C_2 inch	T inch	E inch	∝ deg	A_2 ±.01 inch	C_1 ±.01 inch	d_1 inch	DYN. LOAD C lbf	STAT. LOAD C_0 lbf
KGNZ OP 08	PP	1/2	0.370	0.520	NIP A1	0.313	30	1.688	1.00	0.156	200	110
KGNZ OP 10	PP	5/8	0.450	0.875	1/4-28	0.375	30	2.125	1.13	0.188	390	230
KGNZ OP 12	PP	3/4	0.510	0.937	1/4-28	0.438	30	2.375	1.25	0.188	480	280
KGNZ OP 16	PP	1	0.730	1.312	1/4-28	0.563	30	2.875	1.75	0.218	870	500
KGNZ OP 20	PP	1–1/4	0.800	1.688	1/4-28	0.625	30	3.500	2.00	0.218	1300	730
KGNZ OP 24	PP	1–1/2	0.840	1.875	1/4-28	0.750	30	4.125	2.50	0.281	1630	870
KGNZ OP 32	PP	2	1.100	2.375	1/4-28	1.000	30	5.250	3.25	0.406	2650	1490

Self Aligning Tandem Mounted Units
KTNZ..PP SERIES

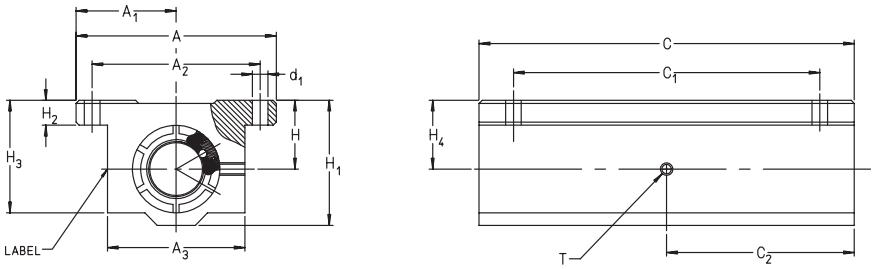

For details on part numbers, descriptive suffixes and various technical references, please refer to front of this section.
For engineering or technical information contact your local sales representative or call Distributor Sales (800)523-6572 or Linear Sales (800)462-3399.

PART NUMBER	SEAL SUFFIX	SHAFT DIA. inch	WGT. lbs.	d inch	A inch	C inch	A_1 ±.001 inch	H ±.001 inch	A_3 inch	H_1 inch	H_2 inch
KTNZ 04	PP	1/4	0.21	0.250	1.63	2.50	0.813	0.437	1.000	0.813	0.188
KTNZ 06	PP	3/8	0.27	0.375	1.75	2.75	0.875	0.500	1.125	0.938	0.188
KTNZ 08	PP	1/2	0.51	0.500	2.00	3.50	1.000	0.687	1.375	1.250	0.250
KTNZ 10	PP	5/8	0.97	0.625	2.50	4.00	1.250	0.875	1.750	1.625	0.281
KTNZ 12	PP	3/4	1.25	0.750	2.75	4.50	1.375	0.937	1.875	1.750	0.313
KTNZ 16	PP	1	2.58	1.000	3.25	6.00	1.625	1.187	2.375	2.188	0.375
KTNZ 20	PP	1–1/4	4.94	1.250	4.00	7.50	2.000	1.500	3.000	2.813	0.437
KTNZ 24	PP	1–1/2	7.73	1.500	4.75	9.00	2.375	1.750	3.500	3.250	0.500

PART NUMBER	SEAL SUFFIX	SHAFT DIA. inch	H_3 inch	C_2 inch	H_4 inch	T inch	A_2 ±.01 inch	C_1 ±.01 inch	d_1 inch	DYN. LOAD C lbf	STAT. LOAD C_0 lbf
KTNZ 04	PP	1/4	0.750	1.250	0.437	NIP A1	1.312	2.000	0.156	80	60
KTNZ 06	PP	3/8	0.875	1.375	0.500	NIP A1	1.437	2.250	0.156	130	80
KTNZ 08	PP	1/2	1.125	1.750	0.687	NIP A1	1.688	2.500	0.156	320	220
KTNZ 10	PP	5/8	1.437	2.000	0.875	1/4-28	2.125	3.000	0.188	550	380
KTNZ 12	PP	3/4	1.563	2.250	0.937	1/4-28	2.375	3.500	0.188	780	540
KTNZ 16	PP	1	1.938	3.000	1.187	1/4-28	2.875	4.500	0.218	1360	980
KTNZ 20	PP	1–1/4	2.500	3.750	1.500	1/4-28	3.500	5.500	0.218	2060	1420
KTNZ 24	PP	1–1/2	2.875	4.500	1.750	1/4-28	4.125	6.500	0.281	2600	1700

Self Aligning Tandem Mounted Units
KTNZ..OP PP SERIES

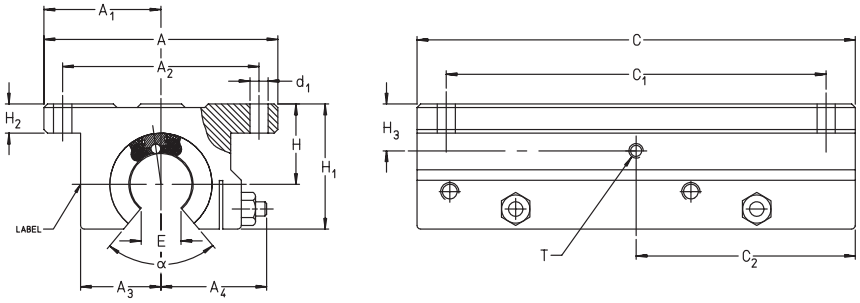

For details on part numbers, descriptive suffixes and various technical references, please refer to front of this section.
For engineering or technical information contact your local sales representative or call Distributor Sales (800)523-6572 or Linear Sales (800)462-3399.

PART NUMBER	SEAL SUFFIX	SHAFT DIA. inch	WGT. lbs.	d inch	A inch	C inch	A_1 ±.001 inch	H ±.001 inch	A_3 inch	A_4 inch	H_1 inch	H_2 inch
KTNZ 08 OP	PP	1/2	0.49	0.500	2.000	3.50	1.000	0.687	0.688	0.905	1.100	0.250
KTNZ 10 OP	PP	5/8	0.90	0.625	2.500	4.00	1.250	0.875	0.875	1.095	1.375	0.281
KTNZ 12 OP	PP	3/4	1.15	0.750	2.750	4.50	1.375	0.937	0.937	1.161	1.535	0.313
KTNZ 16 OP	PP	1	2.38	1.000	3.250	6.00	1.625	1.187	1.188	1.457	1.975	0.375
KTNZ 20 OP	PP	1–1/4	4.61	1.250	4.000	7.50	2.000	1.500	1.500	1.831	2.485	0.437
KTNZ 24 OP	PP	1–1/2	7.28	1.500	4.750	9.00	2.375	1.750	1.750	2.087	2.910	0.500

PART NUMBER	SEAL SUFFIX	SHAFT DIA. inch	H_3 inch	C_2 inch	T inch	E inch	∝ deg	A_2 ±.01 inch	C_1 ±.01 inch	d_1 inch	DYN. LOAD C lbf	STAT. LOAD C_0 lbf
KTNZ 08 OP	PP	1/2	0.370	1.75	NIP A1	0.313	30	1.688	2.50	0.156	320	220
KTNZ 10 OP	PP	5/8	0.450	2.00	1/4–28	0.375	30	2.125	3.00	0.188	630	460
KTNZ 12 OP	PP	3/4	0.510	2.25	1/4–28	0.438	30	2.375	3.50	0.188	780	560
KTNZ 16 OP	PP	1	0.730	3.00	1/4–28	0.563	30	2.875	4.50	0.218	1410	1000
KTNZ 20 OP	PP	1–1/4	0.800	3.75	1/4–28	0.625	30	3.500	5.50	0.218	2110	1460
KTNZ 24 OP	PP	1–1/2	0.800	4.50	1/4–28	0.750	30	4.125	6.50	0.281	2650	1740

Precision Ground Shafts
WZ, WZ..X46CR13 SERIES

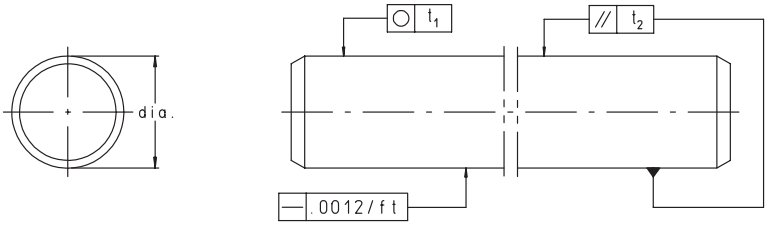

For details on part numbers, descriptive suffixes and various technical references, please refer to front of this section.
For engineering or technical information contact your local sales representative or call Distributor Sales (800)523-6572 or Linear Sales (800)462-3399.

PART NUMBER STANDARD "L" CLASS	PART NUMBER STANDARD "S" CLASS	PART NUMBER STAINLESS STEEL	SHAFT DIA. nom inch	ROUNDNESS t_1 inch	TAPER t_2 1) inch	HARDNESS DEPTH min inch	SURFACE FINISHING max
WZ1/4″L	WZ1/4″S	—	1/4	0.0002	0.0002	0.016	RMS 12
WZ3/8″L	WZ3/8″S	WZ3/8″X46CR13L	3/8	0.0002	0.0002	0.016	RMS 12
WZ1/2″L	WZ1/2″S	WZ1/2″X46CR13L	1/2	0.0002	0.0002	0.024	RMS 12
WZ5/8″L	WZ5/8″S	WZ5/8″X46CR13L	5/8	0.0002	0.0003	0.024	RMS 12
WZ3/4″L	WZ3/4″S	WZ3/4″X46CR13L	3/4	0.0002	0.0004	0.035	RMS 12
WZ1″L	WZ1″S	WZ1″X46CR13L	1	0.0002	0.0004	0.035	RMS 12
WZ1–1/8″L	—	—	1-1/8	0.0002	0.0004	0.035	RMS 12
WZ1–1/4″L	WZ1–1/4″S	—	1-1/4	0.0002	0.0004	0.059	RMS 12
WZ1–1/2″L	WZ1–1/2″S	WZ1–1/2″X46CR13L	1-1/2	0.0002	0.0004	0.059	RMS 12
WZ2″L	WZ2″S	—	2	0.0003	0.0004	0.087	RMS 12

1) Measurement of diameter difference

Precision Ground Shafts

WZ..PDT, WZ..X46CR13 PDT SERIES

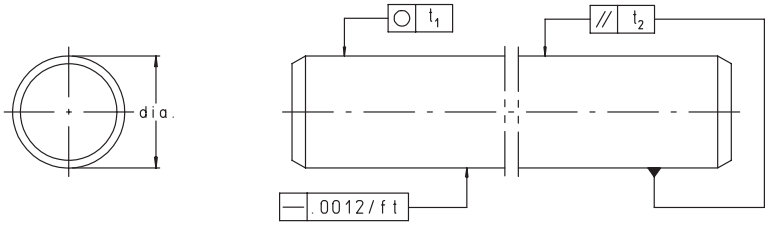

For details on part numbers, descriptive suffixes and various technical references, please refer to front of this section.
For engineering or technical information contact your local sales representative or call Distributor Sales (800)523-6572 or Linear Sales (800)462-3399.

PART NUMBER STANDARD	PART NUMBER STAINLESS STEEL	SHAFT DIA. nom inch	HOLE SPACING X	THREAD SIZE d
WZ1/2″PDT	WZ1/2″X46CR13PDT	1/2	4	6–32
WZ5/8″PDT	—	5/8	4	8–32
WZ3/4″PDT	WZ0–3/4″X46CR13PDT	3/4	6	10–32
WZ1″PDT	WZ1–0/0″X46CR13PDT	1	6	1/4–20
WZ1–1/4″PDT	—	1-1/4	6	5/16–18
WZ1–1/2″PDT	WZ1–1/2″X46CR13PDT	1-1/2	8	3/8–16
WZ2″PDT	—	2	8	1/2–13

Please specify distance from shaft end to first hole with order

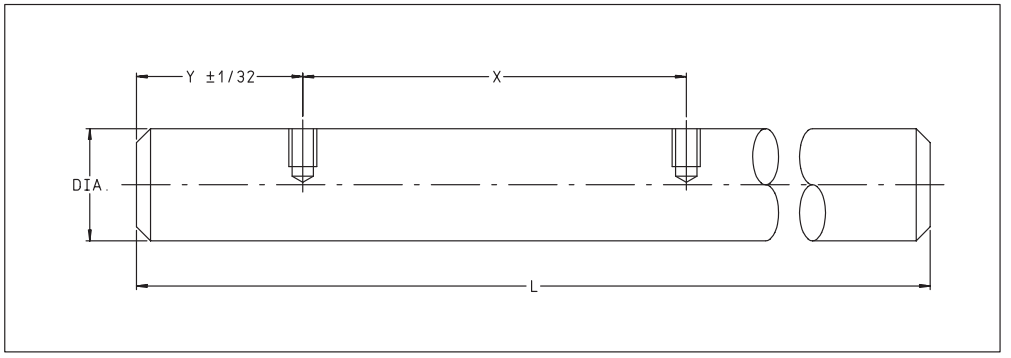

Shaft Support Rails
TSWZ SERIES

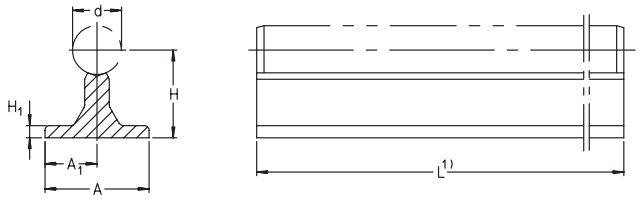

For details on part numbers, descriptive suffixes and various technical references, please refer to front of this section.
For engineering or technical information contact your local sales representative or call Distributor Sales (800)523-6572 or Linear Sales (800)462-3399.

PART NUMBER	SHAFT DIA. inch	WGT. lbsft	A inch	H 2) ± .002 inch	H_1 inch	A_1 3) ± .002 inch
TSWZ 08	1/2	0.60	1.50	1.125	0.188	0.750
TSWZ 10	5/8	0.78	1.63	1.125	0.250	0.813
TSWZ 12	3/4	1.01	1.75	1.500	0.250	0.875
TSWZ 16	1	1.37	2.13	1.750	0.250	1.063
TSWZ 20	1-1/4	1.98	2.50	2.125	0.313	1.250
TSWZ 24	1-1/2	3.03	3.00	2.500	0.375	1.500
TSWZ 32	2	4.80	3.75	3.250	0.500	1.875

1) Maximum length L = 48 inches
2) With reference to the nominal shaft diameter, measured while clamped.

Shaft Support Rails
TSWZ..PD SERIES

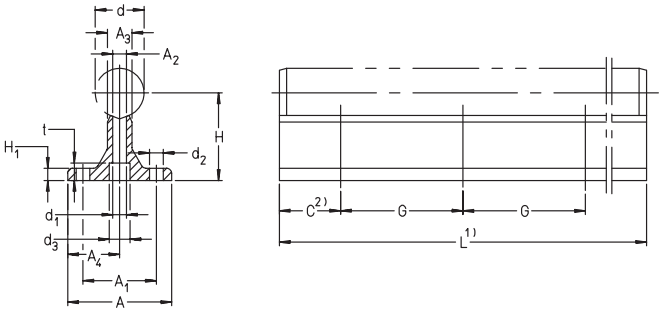

For details on part numbers, descriptive suffixes and various technical references, please refer to front of this section.
For engineering or technical information contact your local sales representative or call Distributor Sales (800)523-6572 or Linear Sales (800)462-3399.

PART NUMBER	SHAFT DIA. inch	WGT. lbs.	A inch	H 3) inch	H_1 inch	A_2 inch	A_3 inch	A_1 inch	d_3 inch	t inch	d_1 inch	d_2 inch	A_4 inch	G inch
TSWZ 08 PD	1/2	0.60	1.50	1.125	0.188	0.208	0.250	0.750	0.281	0.150	0.169	0.169	1.000	4
TSWZ 10 PD	5/8	0.78	1.63	1.125	0.250	0.251	0.313	0.813	0.312	0.180	0.193	0.193	1.125	4
TSWZ 12 PD	3/4	1.01	1.75	1.500	0.250	0.294	0.375	0.875	0.375	0.220	0.221	0.221	1.250	6
TSWZ 16 PD	1	1.37	2.13	1.750	0.250	0.379	0.500	1.063	0.437	0.272	0.281	0.281	1.500	6
TSWZ 20 PD	1-1/4	1.98	2.50	2.125	0.313	0.465	0.563	1.250	0.531	0.325	0.343	0.343	1.875	6
TSWZ 24 PD	1-1/2	3.03	3.00	2.500	0.375	0.550	0.688	1.500	0.625	0.390	0.406	0.343	2.250	8
TSWZ 32 PD	2	4.80	3.75	3.250	0.500	0.721	0.875	1.875	0.812	0.540	0.531	0.406	2.750	8

1) Maximum length L = 48 inches
2) The dimension C is dependent on the length of the support rail. It should always be equal at both ends.
3) With reference to the nominal shaft diameter, measured while clamped.

Shaft Support Rails
TSUZ SERIES

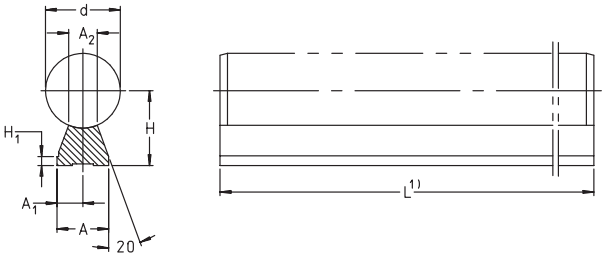

For details on part numbers, descriptive suffixes and various technical references, please refer to front of this section.
For engineering or technical information contact your local sales representative or call Distributor Sales (800)523-6572 or Linear Sales (800)462-3399.

PART NUMBER	SHAFT DIA. inch	WGT. lbsft	d inch	A inch	H 2) ± .002 inch	H_1 inch	A_1 3) ± .002 inch	A_2 inch
TSUZ 08	1/2	0.11	0.50	0.37	0.562	0.120	0.185	0.216
TSUZ 10	5/8	0.17	0.63	0.45	0.687	0.120	0.225	0.269
TSUZ 12	3/4	0.20	0.75	0.51	0.750	0.120	0.225	0.317
TSUZ 16	1	0.35	1.00	0.69	1.000	0.120	0.345	0.422
TSUZ 20	1-1/4	0.44	1.25	0.78	1.187	0.200	0.390	0.523
TSUZ 24	1-1/2	0.58	1.50	0.93	1.375	0.200	0.465	0.625
TSUZ 32	2	0.89	2.00	1.18	1.750	0.250	0.590	0.824

1) Maximum length L = 48 inches.
2) With reference to the nominal shaft diameter, measured while clamped.

Shaft Support Rails
TSUZ..PD SERIES

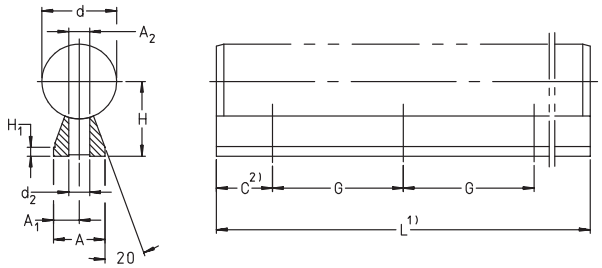

For details on part numbers, descriptive suffixes and various technical references, please refer to front of this section.
For engineering or technical information contact your local sales representative or call Distributor Sales (800)523-6572 or Linear Sales (800)462-3399.

PART NUMBER	SHAFT DIA. inch	WGT. lbs/ft	d inch	A inch	H_3 inch	H_1 inch	A_1 4) inch	A_2 inch	d_2 inch	G inch
TSUZ 08 PD	1/2	0.11	0.50	0.37	0.562	0.120	0.185	0.216	0.169	4
TSUZ 10 PD	5/8	0.17	0.63	0.45	0.687	0.120	0.225	0.269	0.193	4
TSUZ 12 PD	3/4	0.20	0.75	0.51	0.750	0.120	0.255	0.317	0.221	6
TSUZ 16 PD	1	0.35	1.00	0.69	1.000	0.120	0.345	0.422	0.281	6
TSUZ 20 PD	1-1/4	0.44	1.25	0.78	1.187	0.200	0.390	0.523	0.343	6
TSUZ 24 PD	1-1/2	0.58	1.50	0.93	1.375	0.200	0.465	0.623	0.406	8
TSUZ 32 PD	2	0.89	2.00	1.18	1.750	0.250	0.590	0.824	0.531	8

1) Maximum length L = 48 inches.
2) The dimension C is dependent on the length of the support rail. It should always be equal at both ends.
3) With reference to the nominal shaft diameter, measured while clamped.

Unitized Compact System
MLFZ SERIES
Rail, Integral Design Carriage

For details on part numbers, descriptive suffixes and various technical references, please refer to front of this section.
For engineering or technical information contact your local sales representative or call Distributor Sales (800)523-6572 or Linear Sales (800)462-3399.

DIMENSION TABLE – Dimensions in mm																			
PART NUMBER	B	B_1	B_2	B_3	D_1	H	H_1	H_2	H_3	H_4	H_5	K_1	L	L_1	L_3	L_4	L_5	O	T
MLFZ 20 MI	31.75	19	31.75	19	–	31.8	20.8	–	–	–	–	#6-32	63.5	–	–	–	–	–	–
MLFZ 28 ZR	44.45	31.75	44.45	31.8	26	44.5	33.5	12.7	19.05	9.53	19.05	–	114.3	60	33.88	25.4	8.46	6-32	1.19

PART NUMBER	WEIGHTS			ALLOWABLE LOADS N				ALLOWABLE MOMENTS Nm						MOMENT OF INERTIA		BELT TYPE
	Go g	G100 g	Gc g	Fy	Foy	Fz	Foz	Mx	Mox	My	Moy	Mz	Moz	Iy mm^4	Iz mm^4	
MLFZ 20 MI	185	121	105	350	350	300	650	2	2.9	3.5	5.8	5.9	5.9	11950	31880	–
MLFZ 28 ZR	720	215	192	350	350	300	650	3.3	4.9	3.5	5.8	5.9	5.9	62300	159900	16T5

1. For maximum lengths please contact factory.
2. Custom carriages can be provided to suit individual requirements.
3. Load ratings valid for fully supported elements.
4. Load ratings not valid for corrosion resistant series.

MLFZ 20

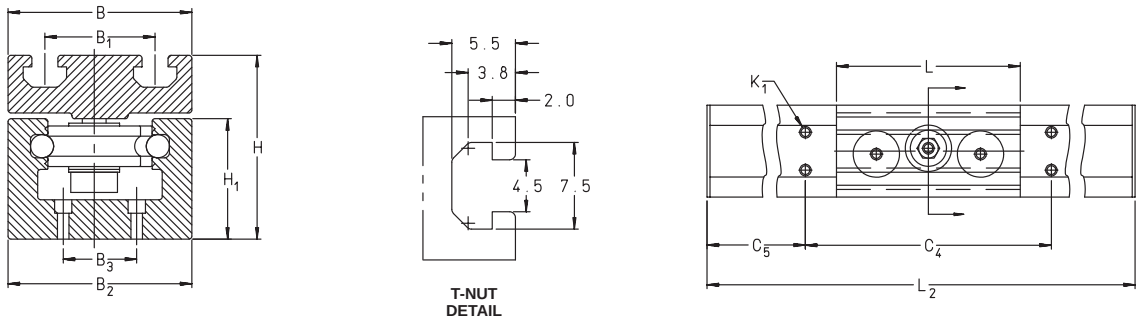

MLFZ 28

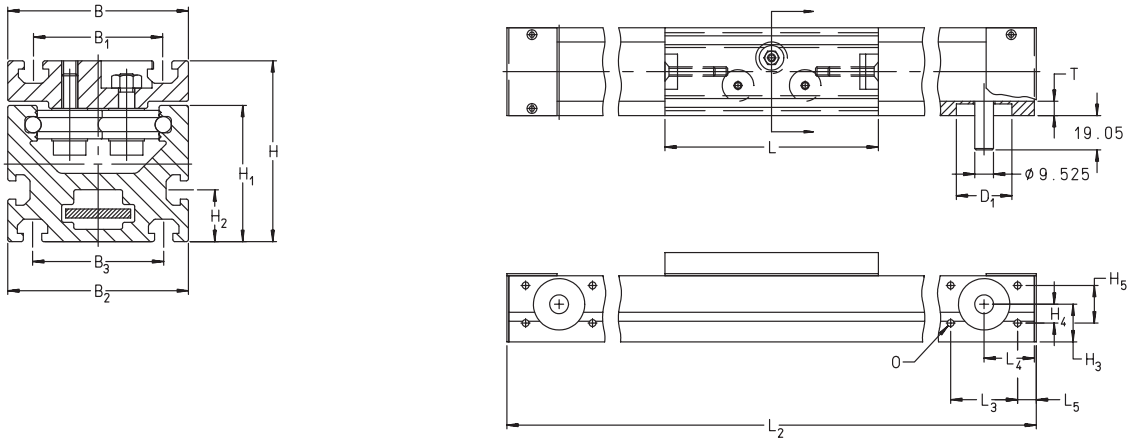

Beam Rail
LFSB SERIES
Standard Carriage
LFL SERIES

For details on part numbers, descriptive suffixes and various technical references, please refer to front of this section.
For engineering or technical information contact your local sales representative or call Distributor Sales (800)523-6572 or Linear Sales (800)462-3399.

DIMENSION TABLE – Dimensions in mm

PART NUMBER RAIL	WEIGHT	PART NUMBER CARRIAGE	WEIGHT	DIMENSIONS						LOAD CALCULATIONS								
				CARRIAGE			RAIL			LOAD CURVE 3)	ALLOWABLE LOADS		ALLOWABLE MOMENTS			MOMENT OF INERTIA	
				H	A	C	h	a	L 2)		Fy	Fz	Mx	My	Mz	Iy	Iz
	g/m		g								N	N	Nm	Nm	Nm	mm^4	mm^4
LFSB 32	9970	LFL 90-80	400	135.6	80	90	120.2	32	4000	2	850	1000	11	30	26	1.485×10^6	4.72×10^6
LFSB 52	18600	LFL 100-120	1000	177.4	120	100	157.2	52	4000	3	1500	2500	33	75	47	5.25×10^6	15.9×10^6
LFSB 52	18600	LFL 150-155	1900	183.4	135	150	157.2	52	4000	4	2400	4500	51	105	126	5.25×10^6	15.9×10^6

MOUNTING DIMENSIONS – Dimensions in mm

PART NUMBER RAIL	WEIGHT g/m	PART NUMBER CARRIAGE	A_1	A_2	A_3	a_1	a_2	C_1	C_2	C_3	H_1	H_2	H_3	H_4	h_5	K_3	K_4
LFSB 32	9970	LFL 90-80	59	54	56	63.5	26	7	60	70	35	20.4	14	7	101.6	M6	M8
LFSB 52	18600	LFL 100-120	90	83	65	88.9	42	12	60	70	53.5	29.2	19.5	9.75	127	M6	M10
LFSB 52	18600	LFL 150-135	105	90	65	88.9	42	12	105	110	59	35.2	24	12	127	M6	M10

1. The beam rail is designed as a rigid, light weight beam, suitable for end mounting.
2. Contact factory for longer lengths.
3. Not valid for corrosion resistant series.

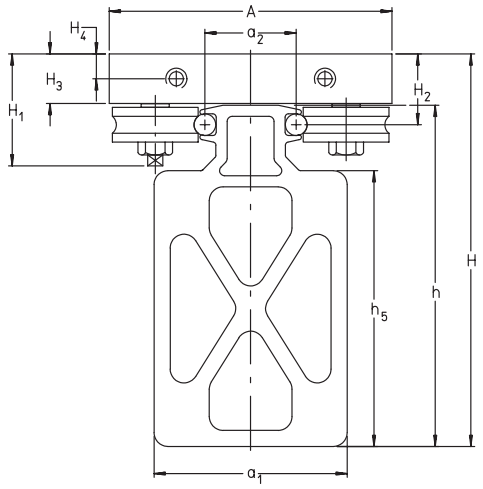

LFSB with LFL

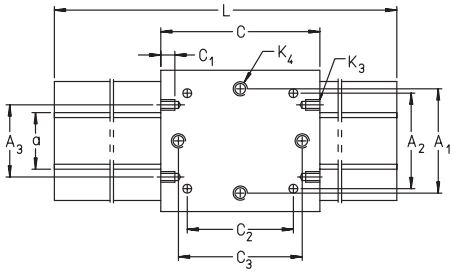

TOP VIEW

Beam Rail
LFSB SERIES
Enclosed, Sealed Carriage
LFKL SERIES

For details on part numbers, descriptive suffixes and various technical references, please refer to front of this section.
For engineering or technical information contact your local sales representative or call Distributor Sales (800)523-6572 or Linear Sales (800)462-3399.

DIMENSION TABLE – Dimensions in mm

PART NUMBER RAIL	WEIGHT	PART NUMBER CARRIAGE	WEIGHT	DIMENSIONS						LOAD CALCULATIONS								
				CARRIAGE			RAIL			LOAD CURVE 4)	ALLOWABLE LOADS		ALLOWABLE MOMENTS			MOMENT OF INERTIA	
				H	A	C	h	a	L 2)		Fy	Fz	Mx	My	Mz	Iy	Iz
	g/m		g								N	N	Nm	Nm	Nm	mm^4	mm^4
LFSB 32	9970	LFKL 112-86	700	135.7	86	112	120.2	32	4000	2	850	1000	11	30	26	1.485×10^6	4.72×10^6
LFSB 52	18600	LFKL 136-130	1500	177.2	130	136	157.2	52	4000	3	1500	2500	33	75	47	5.25×10^6	15.9×10^6
LFSB 52	18600	LFKL 186-145	2900	183.5	145	186	157.2	52	4000	4	2400	4500	51	105	126	5.25×10^6	15.9×10^6
LFSB 52	18600	LFKL 205-155	3900	183.5	155	205	157.2	52	4000	5	4800	8000	101	480	288	5.25×10^6	15.9×10^6

MOUNTING DIMENSIONS – Dimensions in mm

PART NUMBER RAIL	WEIGHT g/m	PART NUMBER CARRIAGE	A_1	A_2	a_1	a_2	C_1	C_2	C_3	H_1	H_2	H_3	h_5	K_4	K_5
LFSB 32	1000	LFKL 112-86	59	54	63.5	26	7	60	70	32	20.3	14	101.6	M8	18
LFSB 52	3000	LFKL 136-130	90	83	88.9	42	10	60	70	46.1	29	19.5	127	M10	30
LFSB 52	3000	LFKL 186-145	105	90	88.9	42	10	105	110	53.8	35.3	24	127	M10	30
LFSB 52	3000	LFKL 205-155	115	95	112	42	10	120	140	55	35.3	24	127	M12	34

1. Rail end support mounting holes can be provided to suit individual requirements.
2. Enclosed carriages are provided with felt shaft wipers with provision for lubrication, and a running bottom sealing element.
3. Contact factory for longer lengths.
4. Not valid for corrosion resistant series.

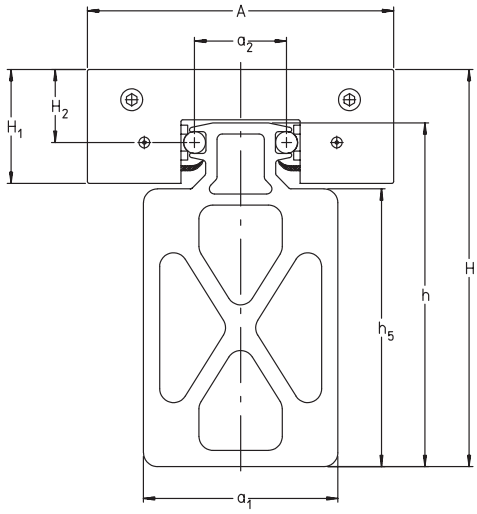

LFSB with LFKL

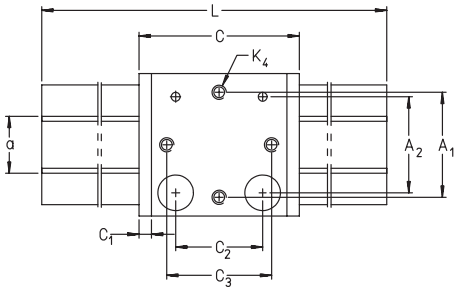

TOP VIEW

Linear Modular Unit With Track Roller Guidance System And Toothed Belt Drive

MLF..ZR SERIES

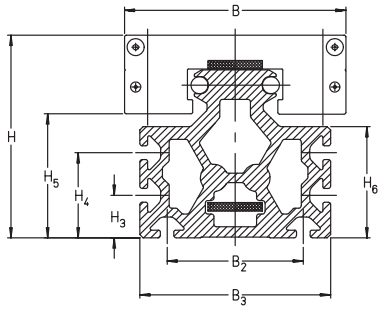

A–A

For details on part numbers, descriptive suffixes and various technical references, please refer to front of this section.
For engineering or technical information contact your local sales representative or call Distributor Sales (800)523-6572 or Linear Sales (800)462-3399.

DIMENSION TABLE · Dimensions in mm

PART NUMBER	DIMENSIONS																			
	L	B	H	L_1 ±0.1	B_1 ±0.1	O	H_1	H_2	B_2	B_3	H_3	H_4	H_5	H_6	L_3	O_1	D	D_1 G7	D_2	T ±0.1
MLF 32 086 ZR	155	86	82	50	59	M8	40	81.5	43	75	25	–	50	47	80	M6	80	70	61	2.3
MLF 52 130 ZR	200	130	119	55	90	M10	57.7	117.75	80	112	25	50	72.8	65.4	115.4	M8	115	95	76	3.5
MLF 52 145 ZR	245	145	125	80	105	M10	57.7	117.75	80	112	25	50	71.2	65.4	115.4	M8	115	95	76	3.5
MLF 52 155 ZR	260	155	125	90	115	M12	57.7	117.75	80	112	25	50	70	65.4	115.4	M8	115	95	76	3.5

TOOTHED BELT / GEAR WHEELS

	TOOTHED BELT TYPE	PERMISSIBLE TOOTHED BELT DRIVE FORCE N	MASS kg/m	DISPLACEMENT mm/rev.	MASS MOMENT OF INERTIA OF BOTH GEAR WHEELS $kg \cdot m^2$
MLF 32 086 ZR	20 AT 5	640	0.068	175	$2.2 \cdot 10^{-4}$
MLF 52 130 ZR	32 AT 10	1750	0.2	270	$12.6 \cdot 10^{-4}$
MLF 52 145 ZR	32 AT 10	1750	0.2	270	$12.6 \cdot 10^{-4}$
MLF 52 155 ZR	32 AT 10	1750	0.2	270	$12.6 \cdot 10^{-4}$

1) When using standard brush wipers:
L_2=Stroke+L+2xS
The additional factor S represents a security which is dependent on the specific application and must be at least 85 mm;
Stroke in mm
When using bellows: L_2=Stroke x 1.4+L+2xS
The factor of 1.4 accounts for the compressed length of the bellows.
Maximum length of profiled support rail L_2=6000 mm (longer profiled support rails available on request)

2) Total weight $G_{tot} = G_0 + \frac{G_{100} \text{ x (Stroke +2xS)}}{100}$ [kg]

When using bellows:

Total weight $G_{tot} = G_0 + \frac{G_{100} \text{ x Stroke x 1.4}}{100}$ [kg]

3) G_0 =weight of unit for stroke length 0

4) G_{100} =weight of unit per 100 mm stroke of the carriage

5) G_{LFKL} =weight of moving mass of the carriage

6) Values for individual loads and with complete support for underside of the unit. These must be reduced for combined loading.

Mounting dimensions

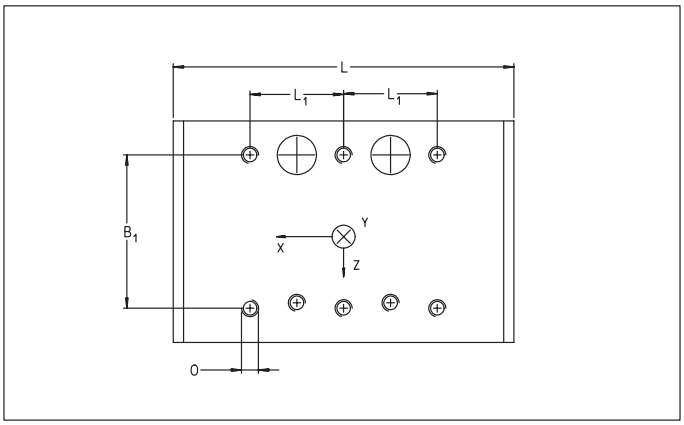

Carriage

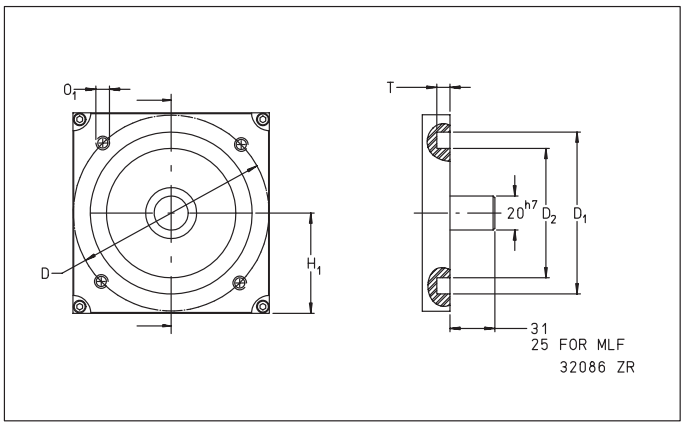

Coupling/Coupling Housing

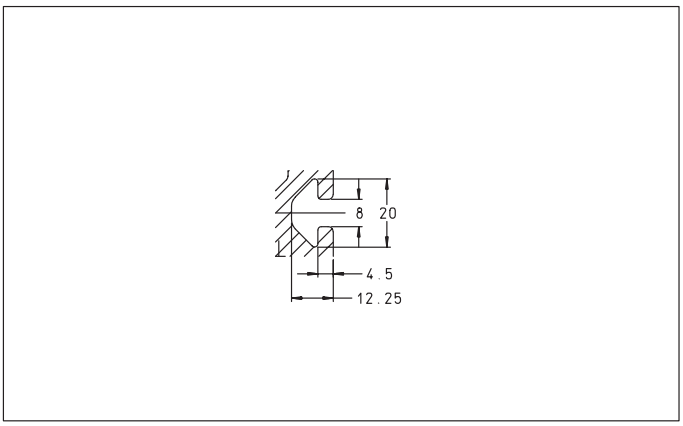

T–grooves

Linear Modular Unit With Track Roller Guidance System And Toothed Belt Drive

MLF..ZR SERIES

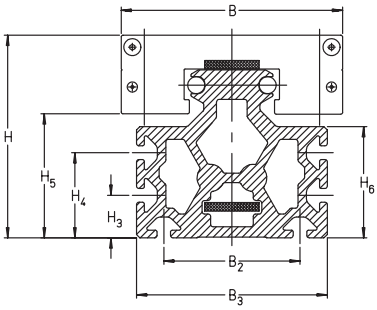

A–A

For details on part numbers, descriptive suffixes and various technical references, please refer to front of this section.
For engineering or technical information contact your local sales representative or call Distributor Sales (800)523-6572 or Linear Sales (800)462-3399.

MASS[2]			PERMISSIBLE LOADS[6]				PERMISSIBLE MOMENTS[6]						GEOMETRICAL MOMENTS OF INERTIA cm^4	
G_0[3] kg	G_{100}[4] kg	G_{LFKL}[5] kg	F_{yperm} N	F_{oyperm} N	F_{zperm} N	F_{ozperm} N	M_{xperm} Nm	M_{oxperm} Nm	M_{yperm} Nm	M_{oyperm} Nm	M_{zperm} Nm	M_{ozperm} Nm	Iy	Iz
4.8	0.6	0.8	850	1400	1000	1000	11	18	30	30	26	43	100	76
12	1.28	2	1500	2500	3500	3500	33	52	105	105	47	78	392	304
13.9	1.28	3.2	2400	4000	4500	4500	51	84	236	236	126	210	392	304
15.7	1.28	5	4800	7900	8000	8000	101	166	480	480	288	474	392	304

MLF 52130 ZR AR

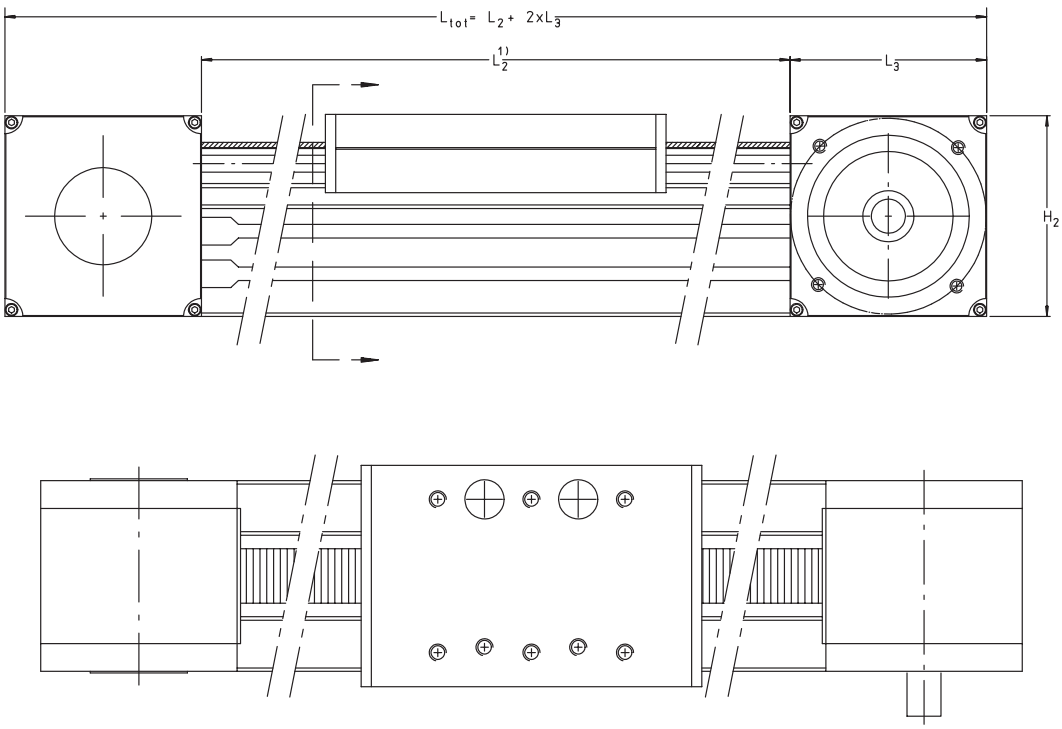

Linear Modular Unit With Recirculating Ball Bearing Guidance System And Toothed Belt Drive

MKUE..ZR..N SERIES

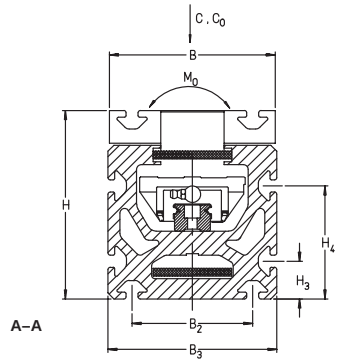

For details on part numbers, descriptive suffixes and various technical references, please refer to front of this section.
For engineering or technical information contact your local sales representative or call Distributor Sales (800)523-6572 or Linear Sales (800)462-3399.

DIMENSION TABLE · Dimensions in mm

PART NUMBER	DIMENSIONS															
	L	B	H	B_1 ±0.2	H_1	H_2	L_1 ±0.1	H_3	H_4	B_2	B_3	O	D	D_1 G7	D_2	T ±0.1
MKUE 25 ZR..N	250	110	125	80	57.7	115.5	263	25	75	80	112	M8	115	95	76	3.5

TOOTHED BELT / GEAR WHEELS

	TOOTHED BELT TYPE	PERMISSIBLE TOOTHED BELT DRIVE FORCE N	MASS kg/m	DISPLACEMENT mm/rev.	MASS MOMENT OF INERTIA OF BOTH GEAR WHEELS $kg \cdot m^2$
MKUE 25 ZR..N	50 AT 10	1880	0.315	250	$30.6 \cdot 10^{-4}$

1) L_2=Stroke+L_1+2xS
The additional factor S represents a security which is dependent on the specific application and must be at least 85 mm;
Stroke in mm
Maximum length of profiled support rail L_2=4000 mm (longer profiled support rails available on request)

2) Total weight $G_{tot} = G_0 + \frac{G_{100} \times (\text{Stroke} + 2xS)}{100}$ [kg]

3) G_0 =weight of unit for stroke length 0

4) G_{100} =weight of unit per 100 mm stroke of the carriage

5) G_{MKWE}=weight of moving mass of the carriage

6) Values with complete support for underside of the unit

Mounting dimensions

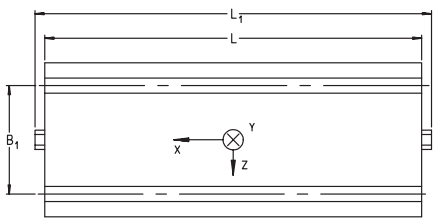

STANDARD CARRIAGE WITH T-GROOVES

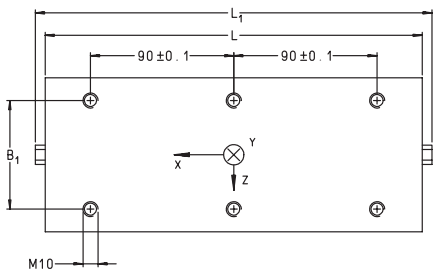

(CARRIAGE AVAILABLE WITH HOLES)

Carriage

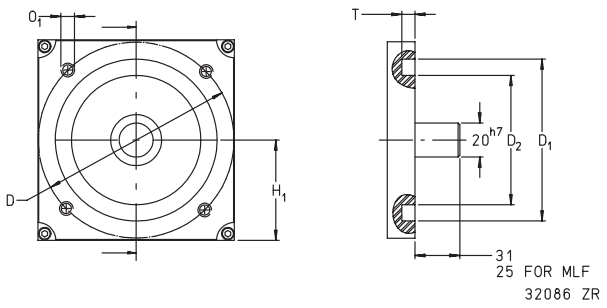

Coupling/Coupling Housing

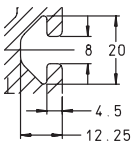

T–grooves

Linear Modular Unit With Recirculating Ball Bearing Guidance System And Toothed Belt Drive

MKUE..ZR..N SERIES

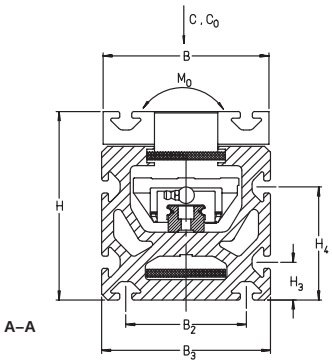

For details on part numbers, descriptive suffixes and various technical references, please refer to front of this section.
For engineering or technical information contact your local sales representative or call Distributor Sales (800)523-6572 or Linear Sales (800)462-3399.

MASS[2]			BASIC LOAD RATINGS[6]		PERMISSIBLE STATIC MOMENT[6]	GEOMETRICAL MOMENTS OF INERTIA cm^4	
G_O[3] kg	G_{100}[4] kg	G_{MKWE}[5] kg	C kN	C_0 kN	M_0 STATIC Nm	Iy	Iz
16.2	1.66	3,8	26.3	41.8	411	733	517

MKUE 25 ZR AR N

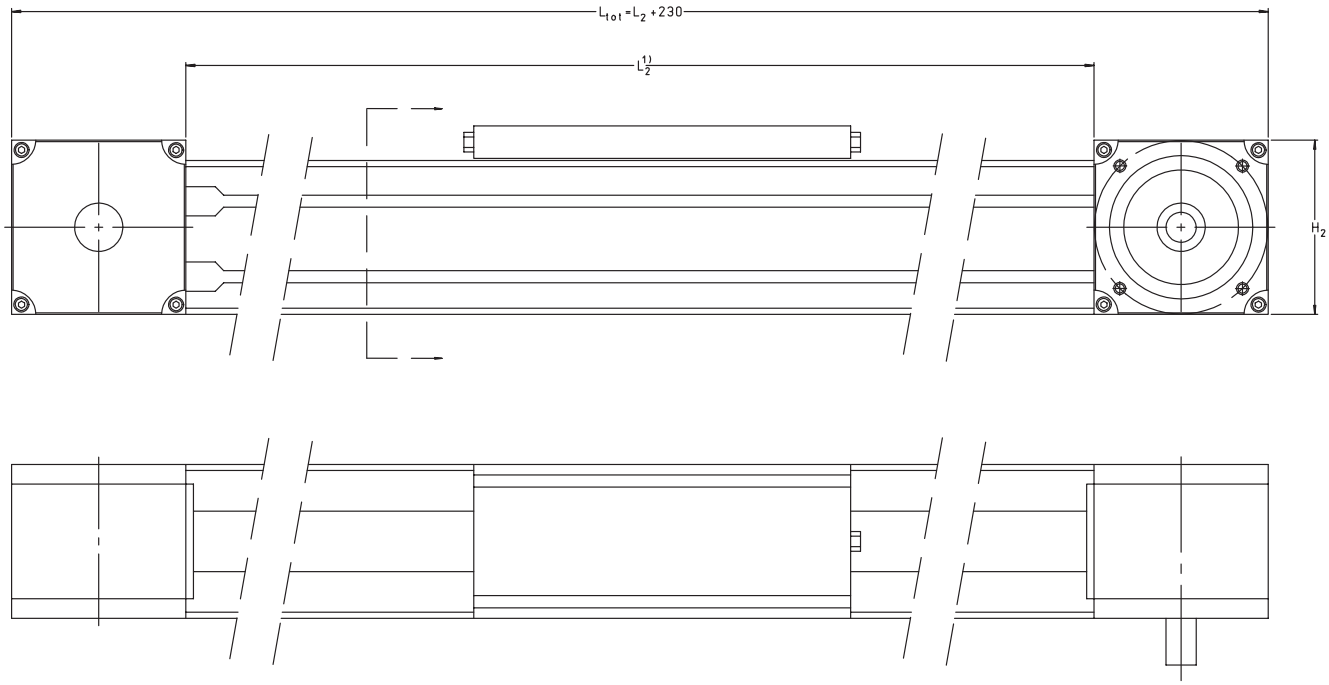

Linear Modular Unit With Recirculating Ball Bearing Guidance System And Ball Screw Drive

MKUE..KGT SERIES

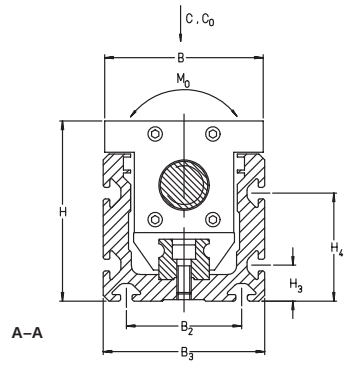

For details on part numbers, descriptive suffixes and various technical references, please refer to front of this section.
For engineering or technical information contact your local sales representative or call Distributor Sales (800)523-6572 or Linear Sales (800)462-3399.

DIMENSION TABLE · Dimensions in mm

PART NUMBER	SPINDLE	DIMENSIONS													
	$d_0xP^{7)}$	L	B	H	L_1 ±0.1	B_1 ±0.1	O	d ∅h6	H_1	H_2	L_3	L_4	H_3	H_4	B_2
MKUE 25 KGT 5	32X5	200	110	125	55	80	M10	19	80	124.5	39	67	25	75	80
MKUE 25 KGT 10	32X10	200	110	125	55	80	M10	19	80	124.5	39	67	25	75	80
MKUE 25 KGT 40	32X40	200	110	125	55	80	M10	19	80	124.5	39	67	25	75	80

1) L_2=Stroke × 1.2 + L +2×S
S=spindle lead P;stroke in mm
Maximum length of profiled Support rail L_2 = 4000 mm (longer profiled support rails available on request).
Modular units with a stroke length over 1200 mm can be fitted with movable spindle supports.

2) Total weight $G_{tot} = G_0 + \frac{G_{100} \text{ x Stroke x } 1.2}{100}$ [kg]

3) G_0 = weight of unit for stroke length 0

4) G_{100} = wieght of unit per 100 mm stroke of the carriage

5) G_{MKWE}= weight of moving mass of the carriage

6) Values with complete support for underside of the unit

7) d_0 × P = nominal spindle diameter×spindle lead

Mounting dimensions

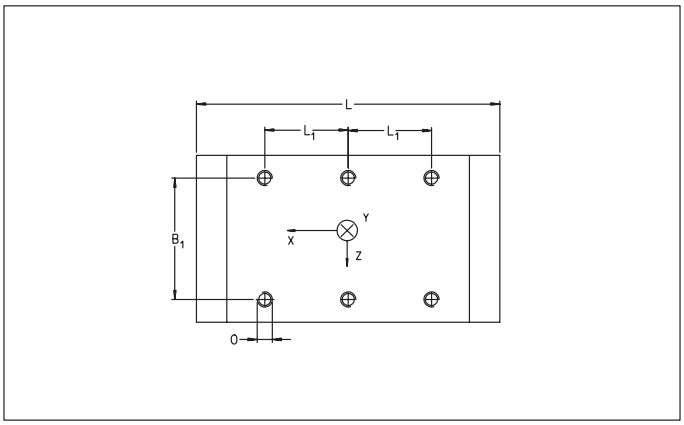

Carriage

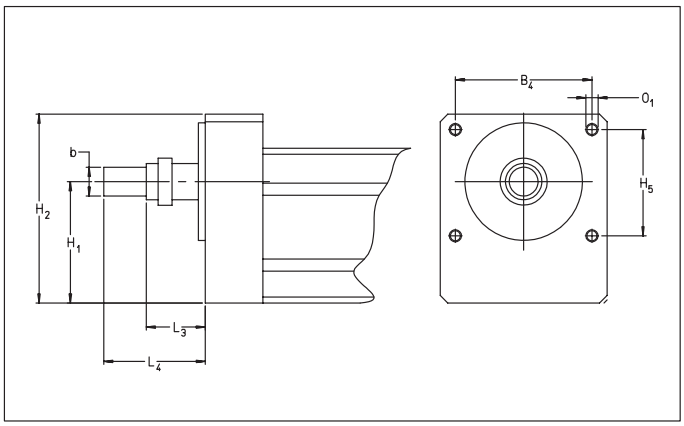

Coupling/Coupling Housing

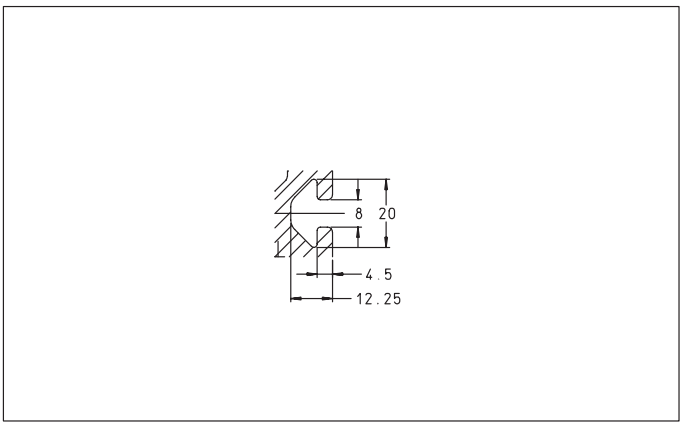

T–grooves

Linear Modular Unit With Recirculating Ball Bearing Guidance System And Ball Screw Drive

MKUE..KGT SERIES

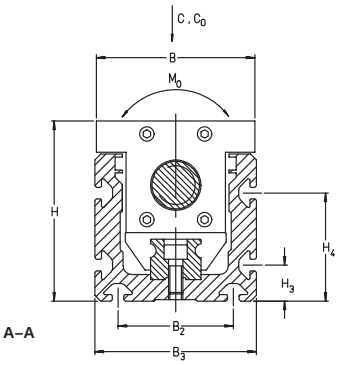

For details on part numbers, descriptive suffixes and various technical references, please refer to front of this section.
For engineering or technical information contact your local sales representative or call Distributor Sales (800)523-6572 or Linear Sales (800)462-3399.

				MASS[2]			BASIC LOAD RATINGS[6]		PERMISSIBLE STATIC MOMENT[6]	GEOMETRICAL MOMENTS OF INERTIA cm^4	
B_3	H_5	B_4	O_1	G_O[3] kg	G_{100}[4] kg	G_{MKWE}[5] kg	C kN	C_0 kN	M_0 STATIC Nm	Iy	Iz
112	70	90	M8	17.4	2	4.3	26.3	41.8	411	717	408
112	70	90	M8	17.4	2	4.3	26.3	41.8	411	717	408
112	70	90	M8	17.4	2	4.3	26.3	41.8	411	717	408

MKUE 25 KGT 10

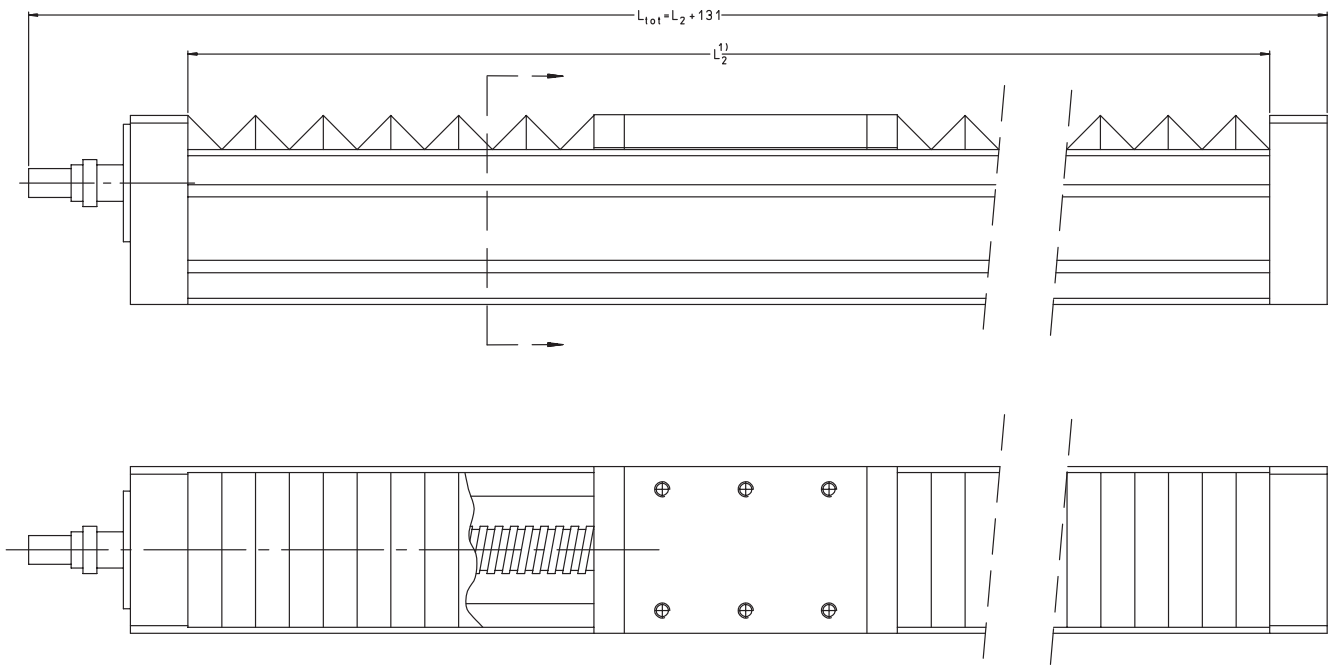

Linear Roller Bearings
RUS, RUS..KS SERIES

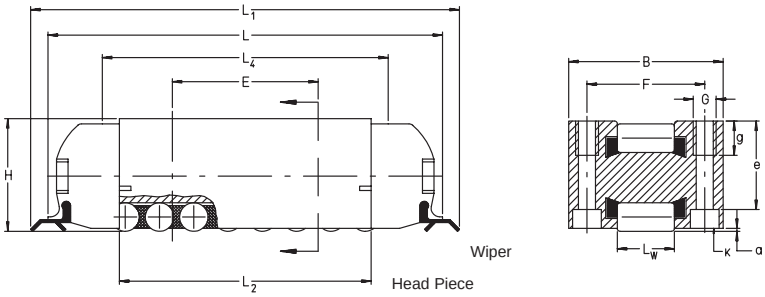

RUS 19 069 to RUS 38 206

For details on part numbers, descriptive suffixes and various technical references, please refer to front of this section.
For engineering or technical information contact your local sales representative or call Distributor Sales (800)523-6572 or Linear Sales (800)462-3399.

DIMENSION TABLE · Dimensions in mm

PART NUMBER		MASS	DIMENSIONS							
		kg	H	L	B	L_1	L_2	L_3	L_W	a
RUS 19 069		0.16	19	69	27	75	44	–	10	0.2
	RUS 19 069 KS	0.19	19	–	27	–	44	76	10	0.2
RUS 19 105		0.27	19	105	27	111	78.5	–	10	0.2
	RUS 19 105 KS	0.29	19	–	27	–	78.5	112	10	0.2
RUS 26 086		0.41	26	86	40	92	53	–	14	0.2
	RUS 26 086 KS	0.49	26	–	40	–	53	92	14	0.2
RUS 26 102		0.53	26	102	40	108	69	–	14	0.2
	RUS 26 102 KS	0.61	26	–	40	–	69	108	14	0.2
RUS 26 126		0.70	26	126	40	132	93	–	14	0.2
	RUS 26 126 KS	0.78	26	–	40	–	93	132	14	0.2
RUS 38 134		1.27	38	133	52	133	85	–	20	0.2
	RUS 38 134 KS	1.53	38	–	52	–	85	136	20	0.2
RUS 38 206		2.28	38	206	52	206	158	–	20	0.2
	RUS 38 206 KS	2.53	38	–	52	–	158	209	20	0.2
RUS 65 210		7.5	65	211	76	234	134	–	30	0.5
RUS 85 280*)		16	85	281	104	303	185	–	40	0.5

1) If the lubricating nipple is replaced by tube or pipe connections, the thread length must not exceed 6 mm.
2) Minimum length to be supported
3) UG guideway for RUS 85 280 available on request
*) Available on request

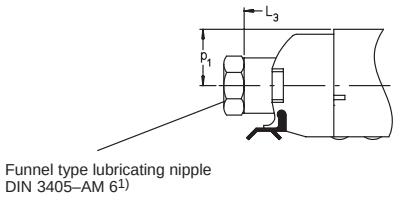

RUS 19 069 KS to RUS 38 206 KS

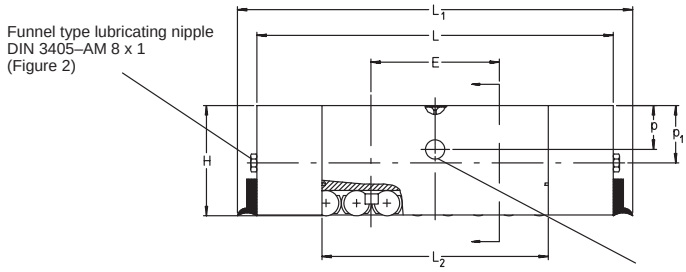

RUS 65 210 and RUS 85 280

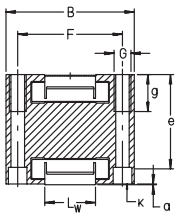

Hole for funnel type lubricating nipple
DIN 3405-D6 on both sides
(Figure 1)

BASIC LOAD RATINGS		MOUNTING DIMENSIONS								K FOR FIXING SCREWS TO DIN 912	MATCHING ADJUSTING GIBS	MATCHING GUIDEWAYS
dyn. C N	stat. C_0 N	L_4[2)]	E ±0.1	F ±0.1	G	e	g	p	p_1			
42,000	33,000	50	25.5	20.6	M4	15.5	6	–	–	M3	VUS 19 069	UG 6628 UV 5323 UFA 3210 UFK 3210 UFB 4710
42,000	33,000	50	25.5	20.6	M4	15.5	6	–	10	M3	VUS 19 069	
68,000	61,000	85	50	20.6	M4	15.5	6	–	–	M3	VUS 19 105	
68,000	61,000	85	50	20.6	M4	15.5	6	–	10	M3	VUS 19 105	
76,000	56,000	63	28	30	M6	21	10	–	–	M4	VUS 26 086	UG 9741 UV 7532 UFA 4710 UFK 4710 UFB 6412
76,000	56,000	63	28	30	M6	21	10	–	13.5	M4	VUS 26 086	
95,000	75,000	79	44	30	M6	21	10	–	–	M4	VUS 26 102	
95,000	75,000	79	44	30	M6	21	10	–	13.5	M4	VUS 26 102	
122,000	103,000	103	68	30	M6	21	10	–	–	M4	VUS 26 126	
122,000	103,000	103	68	30	M6	21	10	–	13.5	M4	VUS 26 126	
179,000	133,000	100	51	41	M8	31	14	–	–	M6	VUS 38 134	UG 12 553 UV 9542 UFA 6412 UFK 6412 UFB 7812
179,000	133,000	100	51	41	M8	31	14	–	19.5	M6	VUS 38 134	
305,000	265,000	172	102	41	M8	31	14	–	–	M6	VUS 38 206	
305,000	265,000	172	102	41	M8	31	14	–	19.5	M6	VUS 38 206	
465,000	345,000	–	76	62	M10	55	22	26	34	M8	VUS 65 210	UG 16 260 UV 13 863 UFA 8815 UFK 8815 UFB 10 615
840,000	620,000	–	101.5	82.5	M14	73	30	33	45	M10	VUS 85 280	UG....[3)] UV 16 977 UFA 11 518 UFK 11 518 UFB 14 0185

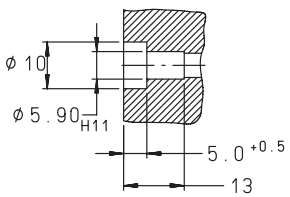

Figure 1

Lubrication holes are provided on both sides for funnel type grease nipples DIN 3405-D6 (supplied with the bearing) or either tube or pipe connection. If no lubrication connection is to be provided the holes should be plugged with the lubricating nipples.

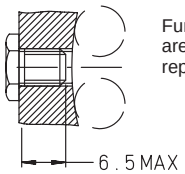

Figure 2

Funnel type lubricating nipples DIN 3405-AM 8x1 are mounted in the head pieces. They can be replaced by tube or pipe connections.

Linear Roller Bearings
RUSZ, RUSZ..KS SERIES

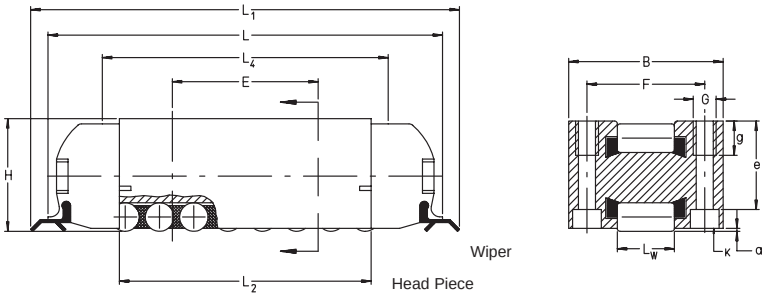

RUS 19 069 to RUS 38 206

For details on part numbers, descriptive suffixes and various technical references, please refer to front of this section.
For engineering or technical information contact your local sales representative or call Distributor Sales (800)523-6572 or Linear Sales (800)462-3399.

DIMENSION TABLE · Dimensions in mm

PART NUMBER	DIMENSIONS							
	H	L	B	L_1	L_2	L_3	L_W	a
RUSZ 12044	19.05	69	25.4	75	44	–	10	0.2
RUSZ 18059	28.57	94	38.1	100	60	–	14	0.2
RUSZ 24084	38.1	133	50.8	133	85	–	20	0.2
RUSZ 12044 KS	19.05	69	25.4	75	44	76	10	0.2
RUSZ 18059 KS	28.57	94	38.1	100	60	132	14	0.2
RUSZ 24084 KS	38.1	133	50.8	133	85	136	20	0.2

1) If the lubricating nipple is replaced by tube or pipe connections, the thread length must not exceed 6 mm.

2) Minimum length to be supported

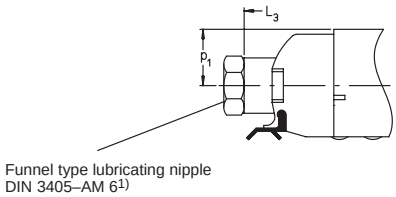

RUS 19 069 KS to RUS 38 206 KS

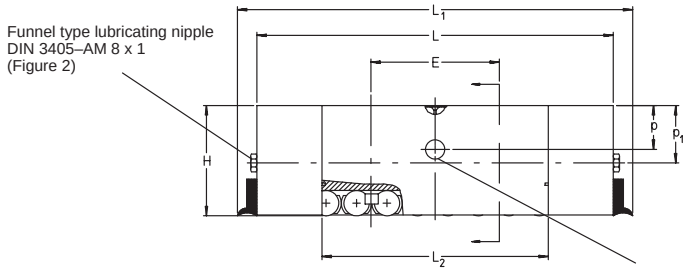

RUS 65 210 and RUS 85 280

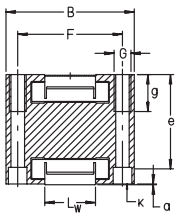

Hole for funnel type lubricating nipple
DIN 3405-D6 on both sides
(Figure 1)

BASIC LOAD RATINGS		MOUNTING DIMENSIONS								K FOR FIXING SCREWS TO DIN 912	MATCHING ADJUSTING GIBS	MATCHING GUIDEWAYS
dyn. C N	stat. C_0 N	L_4[2)]	E ±0.1	F ±0.1	G	e	g	p	p_1			
42000	33000	50	25.5	20.6	–	15.5	–	–	–	M3x22	VUSZ 12044	UG6628 UV5323 UFA/UFK3210 UFB4710
86000	65000	71	38	31	–	23.6	–	–	–	M4x30	VUSZ 18059	UG9745 UV7532 UFA/UFK4710 UFB6412
179000	133000	100	51	41	–	32.1	–	–	–	M5x45	VUSZ 24084	UG12553 UV9542 UFA/UFK6412 UFB7812
42000	33000	50	25.5	20.6	–	15.5	–	–	–	M3x22	VUSZ 12044	UG6628 UV5323 UFA/UFK3210 UFB4710
86000	65000	71	38	31	–	23.6	–	–	–	M4x30	VUSZ 18059	UG9745 UV7532 UFA/UFK4710 UFB6412
179000	133000	100	51	41	–	32.1	–	–	–	M5x45	VUSZ 24084	UG12553 UV9542 UFA/UFK6412 UFB7812

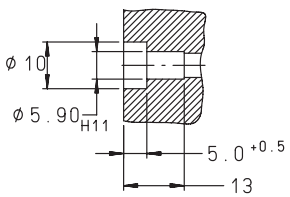

Figure 1

Lubrication holes are provided on both sides for funnel type grease nipples DIN 3405-D6 (supplied with the bearing) or either tube or pipe connection. If no lubrication connection is to be provided the holes should be plugged with the lubricating nipples.

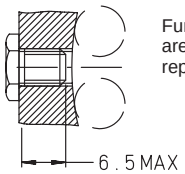

Figure 2

Funnel type lubricating nipples DIN 3405-AM 8x1 are mounted in the head pieces. They can be replaced by tube or pipe connections.

Linear Roller Bearings
PR SERIES

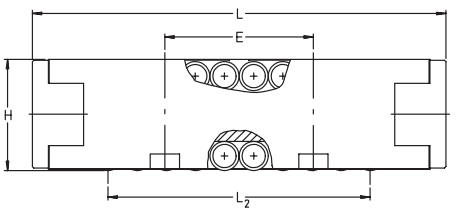

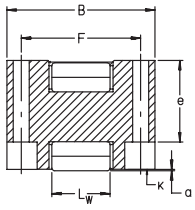

For details on part numbers, descriptive suffixes and various technical references, please refer to front of this section.
For engineering or technical information contact your local sales representative or call Distributor Sales (800)523-6572 or Linear Sales (800)462-3399.

DIMENSION TABLE · Dimensions in mm

PART NUMBER	MASS	DIMENSIONS					
	kg	H	L	B	L_2	L_W	a
PR 14 032	0.095	14.285	51	22.23	31	9	0.2
PR 14 044	0.2	19.05	69	25.4	42	10	0.35
PR 14 061	0.65	28.57	96	38.1	58.5	16	0.35
PR 14 089	1.75	38.1	142	50.8	90	20	0.4
PR 14 135	5.65	57.15	196	76.2	126	30	0.5
PR 14 182	13.25	76.2	264	101.6	167	40	0.6

1) UG guideway for PR 14 182 available on request
2) Not available from stock. Please check delivery time.

Ordering examples:

Linear roller bearing PR 14 061
with a tolerance for the nominal height H of –10 to –15 µm:
PR 14 061 –10 –15

Linear roller bearing PR 14 135
with a tolerance for the nominal height H of –10 to –20 µm:
PR 14 135 –10 –20

Linear Roller Bearings
PR SERIES

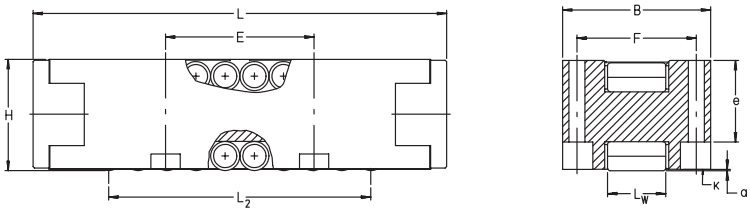

For details on part numbers, descriptive suffixes and various technical references, please refer to front of this section.
For engineering or technical information contact your local sales representative or call Distributor Sales (800)523-6572 or Linear Sales (800)462-3399.

BASIC LOAD RATINGS		MOUNTING DIMENSIONS			K FOR FIXING SCREWS TO DIN 912	MATCHING ADJUSTING GIBS	MATCHING GUIDEWAYS	
dyn. C N	stat. C_0 N	E ±0.1	F ±0.1	e				
21,700	17,600	19	17.1	10	M2.5	–	UG 6628 UV 5323	UFA 3210 UFK 3210
44,000	37,500	25.5	20.6	14	M3	VUSZ 12 044	UG 6628 UV 5323	UFA 3210 UFK 3210 UFB 4710
107,000	86,000	38	31	20.8	M4	VUSZ 18 059	UG 9741 UV 7532	UFA 4710 UFK 4710 UFB 6412
205,000	171,000	51	41	28	M5	VUSZ 24 084	UG 12 553 UV 9542	UFA 6412 UFK 6412 UFB 7812
435,000	345,000	76.2	62	42	M6	VUSZ 36 135[2)]	UG 16 260 UV 13 863	UFA 8815 UFK 8815 UFB 10 615
790,000	620,000	101.6	82.5	56	M8	VUSZ 48 182[2)]	UG....[1)] UV 16 977	UFA 11 518 UFK 11 518 UFB 14 018

Adjusting Gibs

VUS, METRIC SIZES SERIES

VUSZ, INCH SIZES SERIES

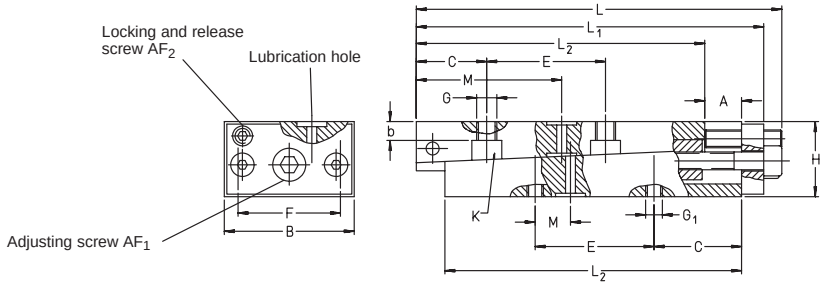

For details on part numbers, descriptive suffixes and various technical references, please refer to front of this section.
For engineering or technical information contact your local sales representative or call Distributor Sales (800)523-6572 or Linear Sales (800)462-3399.

DIMENSION TABLE · Dimensions in mm										
PART NUMBER	MASS	DIMENSIONS			MOUNTING DIMENSIONS					
		B	H	L	L_1	L_2	E	F	b	C
	kg		min.	max.	max.		±0.1	±0.1		
VUS 19 069	0.24	26.5	16	78	73	62	25.5	20.6	4	16.5
VUS 19 105	0.32	26.5	16	123	119	100	50	20.6	3.5	25
VUS 26 086	0.6	39.5	25	97	89	75	28	30	6	20.5
VUS 26 102	0.71	39.5	25	113	105	91	44	30	6	20.5
VUS 26 126	0.9	39.5	25	137	129	115	68	30	6	20.5
VUS 38 134	1.47	51.5	30	141	131	115	51	41	7	28
VUS 38 206	2.1	51.5	25	250	240	200	102	41	5	49

DIMENSION TABLE · Dimensions in mm										
PART NUMBER	MASS	DIMENSIONS			MOUNTING DIMENSIONS					
		B	H	L	L_1	L_2	E	F	b	C
	kg		min.	max.	max.		±0.1	±0.1		
VUSZ 12 044	0.19	25	16	78	73	62	25.5	19[1)]	4	16.5
VUSZ 18 059	0.63	37.6	25	107	99	85	38	31	6	20.5
VUSZ 24 084	1.38	50	30	141	131	115	51	41	7	28

1) Distance between the mounting holes in the top wedge of the gib; deviates from the bottom wedge

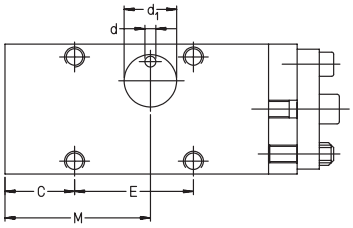

Top View

DIMENSION TABLE · Dimensions in mm										
					G_1, K FOR FIXING SCREW TO DIN 912	HEIGHT CHANGE		ADJUSTING SCREW	LOCKING AND RELEASE SCREW	MATCHING LINEAR ROLLER BEARINGS
M	d	d_1	A max.	G		ΔH max.	PER SCREW ROTATION	AF_1	AF_2	
16.5	3.5	12	7	M 4	M 3	0.35	0.035	3	2	RUS 19 069
29	3.5	12	15	M 4	M 3	0.5	0.023	3	2.5	RUS 19 105
19.5	5	16	8	M 6	M 4	0.4	0.05	6	3	RUS 26 086
27.5	5	16	8	M 6	M 4	0.4	0.05	6	3	RUS 26 102
39.5	5	16	8	M 6	M 4	0.4	0.05	6	3	RUS 26 126
30.5	5	22	8	M 8	M 6	0.4	0.062	8	4	RUS 38 134
61	5	22	30	–	M 6	1	0.05	8	5	RUS 38 206

DIMENSION TABLE · Dimensions in mm										
					G_1, K FOR FIXING SCREW TO DIN 912	HEIGHT CHANGE		ADJUSTING SCREW	LOCKING AND RELEASE SCREW	MATCHING LINEAR ROLLER BEARINGS
M	d	d_1	A max.	G		ΔH max.	PER SCREW ROTATION	AF_1	AF_2	
16.5	3.5	12	7	–	M 3	0.35	0.035	3	2	PR 14 044
20	5	16	8	–	M 4	0.4	0.05	6	3	PR 14 061
30.5	5	22	8	–	M 5	0.4	0.062	8	4	PR 14 089

Linear Roller Bearings With Integral Adjusting Gib
RUSV..KS SERIES

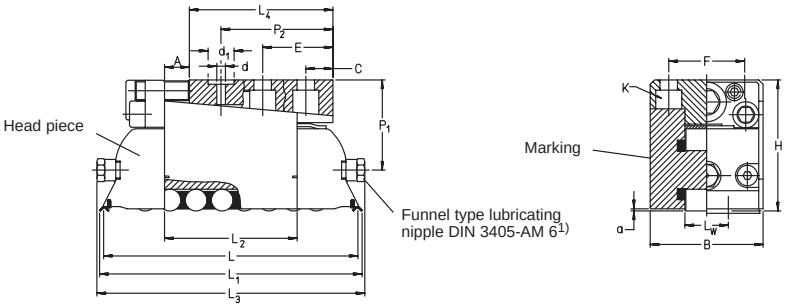

For details on part numbers, descriptive suffixes and various technical references, please refer to front of this section.
For engineering or technical information contact your local sales representative or call Distributor Sales (800)523-6572 or Linear Sales (800)462-3399.

DIMENSION TABLE · Dimensions in mm

PART NUMBER	MASS	DIMENSIONS										BASIC LOAD RATINGS	
		H	L	B	L_W	a	L_1	L_2	L_3	L_4	d_1	dyn.	stat.
	kg						≈					C N	C_0 N
RUSV 30 069 KS	0.32	30	69	27	10	0.3	75	43.5	82	45	12	42,000	33,000
RUSV 30 105 KS	0.46	30	105	27	10	0.3	111	78.5	117	79	12	68,000	61,000
RUSV 42 086 KS	0.81	42	86	40	14	0.3	92	52.4	98	54	16	76,000	56,000
RUSV 42 102 KS	0.99	42	102	40	14	0.3	108	68.4	114	70	16	95,000	75,000
RUSV 42 126 KS	1.26	42	126	40	14	0.3	132	92.4	138	94	16	122,000	103,000
RUSV 60 134 KS	2.25	60	134	52	20	0.3	133	85	143	86	22	179,000	133,000
RUSV 60 206 KS	3.47	60	206	52	20	0.3	206	158	216	159	22	305,000	265,000

1) If the lubricating nipple is replaced by tube or pipe connections, the thread length must not exceed 6mm.

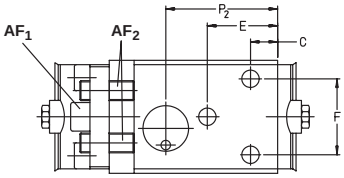

TOP VIEW

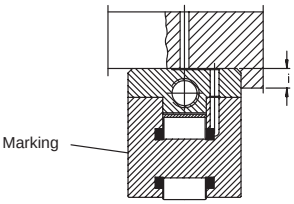

DIMENSION TABLE · Dimensions in mm															
MOUNTING DIMENSIONS									ADJUSTING SCREW	LOCKING AND RELEASE SCREW	HEIGHT CHANGE			MATCHING LINEAR ROLLER BEARINGS	MATCHING GUIDEWAY
C	E	F	i	P_1	P_2	P_3	d	K	AF_1	AF_2	A max.	ΔH max.	PER SCREW ROTATION		
5	25	19	4	21	33	9	2.5	M 4	3	2	7	0.37	0.035	RUS 19 069 KS	UG 6628
5	45	19	4	21	53	9	2.5	M 4	3	2	7	0.37	0.023	RUS 19 105 KS	UV 5323
															UFA 3210
															UFK 3210
															UFB 4710
8	23	26	6	29.5	38	14.5	3	M 6	6	3	10	0.52	0.05	RUS 26 086 KS	UG 9741
8	38	26	6	29.5	53	14.5	3	M 6	6	3	10	0.52	0.05	RUS 26 102 KS	UV 7532
8	58	26	6	29.5	73	14.5	3	M 6	6	3	10	0.52	0.05	RUS 26 126 KS	UFA 4710
															UFK 4710
															UFB 6412
10	45	35	8	41.5	65	18	4	M 8	8	4	15	0.78	0.062	RUS 38 134 KS	UG 12 553
10	115	35	8	41.5	145	18	4	M 8	8	4	15	0.78	0.05	RUS 38 206 KS	UV 9542
															UFA 6412
															UFK 6412
															UFB 7812

Planetary Roller Screw
RGT SERIES

- Split roller nut, preloaded
- Standard ends configuration

For details on part numbers, descriptive suffixes and various technical references, please refer to front of this section.
For engineering or technical information contact your local sales representative or call Distributor Sales (800)523-6572 or Linear Sales (800)462-3399.

DIMENSION TABLE · Dimensions in mm																
NOMINAL DIAMETER	PART NUMBER	PITCH	STROKE	MASS	DIMENSIONS – SCREW SHAFT											
d_0	d_0	P	H	kg	d_1 ISO h6	d_2	d_3 –0.005	d_4	d_5 ISO h6	l_0	l_1	l_2	l_3	l_4	l_5
5	RGT 5.	1.	25	0.084	5	M6X0.5	6	10	4	113	11	22	34	75	14
	RGT 5.	1.	50	0.088	5	M6X0.5	6	10	4	138	11	22	34	100	14
	RGT 5.	1.	75	0.092	5	M6X0.5	6	10	4	163	11	22	34	125	14
	RGT 5.	1.	100	0.096	5	M6X0.5	6	10	4	188	11	22	34	150	14
8	RGT 8.	1.	25	0.11	5	M6X0.5	6	10	6	120	11	22	34	82	16
	RGT 8.	1.	50	0.121	5	M6X0.5	6	10	6	145	11	22	34	107	16
	RGT 8.	1.	100	0.141	5	M6X0.5	6	10	6	195	11	22	34	157	16
	RGT 8.	1.	150	0.16	5	M6X0.5	6	10	6	245	11	22	34	207	16
	RGT 8.	1.	200	0.18	5	M6X0.5	6	10	6	295	11	22	34	257	16
	RGT 8.	2.	25	0.11	5	M6X0.5	6	10	6	120	11	22	34	82	16
	RGT 8.	2.	50	0.121	5	M6X0.5	6	10	6	145	11	22	34	107	16
	RGT 8.	2.	100	0.141	5	M6X0.5	6	10	6	195	11	22	34	157	16
	RGT 8.	2.	150	0.16	5	M6X0.5	6	10	6	245	11	22	34	207	16
	RGT 8.	2.	200	0.18	5	M6X0.5	6	10	6	295	11	22	34	257	16
	RGT 8.	4.	25	0.11	5	M6X0.5	6	10	6	120	11	22	34	82	16
	RGT 8.	4.	50	0.121	5	M6X0.5	6	10	6	145	11	22	34	107	16
	RGT 8.	4.	100	0.141	5	M6X0.5	6	10	6	195	11	22	34	157	16
	RGT 8.	4.	150	0.16	5	M6X0.5	6	10	6	245	11	22	34	207	16
	RGT 8.	4.	200	0.18	5	M6X0.5	6	10	6	295	11	22	34	257	16
	RGT 8.	5.	25	0.11	5	M6X0.5	6	10	6	120	11	22	34	82	16
	RGT 8.	5.	50	0.121	5	M6X0.5	6	10	6	145	11	22	34	107	16
	RGT 8.	5.	100	0.141	5	M6X0.5	6	10	6	195	11	22	34	157	16
	RGT 8.	5.	150	0.16	5	M6X0.5	6	10	6	245	11	22	34	207	16
	RGT 8.	5.	200	0.18	5	M6X0.5	6	10	6	295	11	22	34	257	16

1) Limiting speed of the planetary roller screw. Critical speed n_{max} and limiting speed of the rolling bearings should be considered.

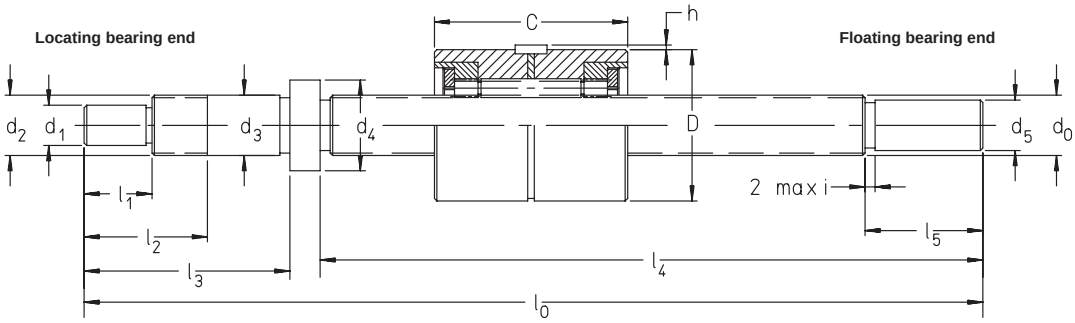

NUT			KEY TO DIN 6885	LOAD RATINGS		SPRINGS RATIO	LIMITING SPEED[1)]	LOCATING BEARING	FLOATING BEARING	SEAL	LOCK NUT
D ISO g6	h	C h12		dyn. C N	stat. C_0 N	C_K $N^{2/3}$ / µm	$n_{g\ grease}$ rpm				
19	1.3	31	3X3X10	5,300	5,400	27	6,000	ZKLN0624.2RS	HK0408TN	G4X8X2	ZM06
19	1.3	31	3X3X10	5,300	5,400	27	6,000	ZKLN0624.2RS	HK0408TN	G4X8X2	ZM06
19	1.3	31	3X3X10	5,300	5,400	27	6,000	ZKLN0624.2RS	HK0408TN	G4X8X2	ZM06
19	1.3	31	3X3X10	5,300	5,400	27	6,000	ZKLN0624.2RS	HK0408TN	G4X8X2	ZM06
21	1.3	31	3X3X10	3,100	3,950	31	5,800	ZKLN0624.2RS	NK6/10TN	G6X12X2	ZM06
21	1.3	31	3X3X10	3,100	3,950	31	5,800	ZKLN0624.2RS	NK6/10TN	G6X12X2	ZM06
21	1.3	31	3X3X10	3,100	3,950	31	5,800	ZKLN0624.2RS	NK6/10TN	G6X12X2	ZM06
21	1.3	31	3X3X10	3,100	3,950	31	5,800	ZKLN0624.2RS	NK6/10TN	G6X12X2	ZM06
21	1.3	31	3X3X10	3,100	3,950	31	5,800	ZKLN0624.2RS	NK6/10TN	G6X12X2	ZM06
21	1.3	31	3X3X10	6,200	4,550	21	5,800	ZKLN0624.2RS	NK6/10TN	G6X12X2	ZM06
21	1.3	31	3X3X10	6,200	4,550	21	5,800	ZKLN0624.2RS	NK6/10TN	G6X12X2	ZM06
21	1.3	31	3X3X10	6,200	4,550	21	5,800	ZKLN0624.2RS	NK6/10TN	G6X12X2	ZM06
21	1.3	31	3X3X10	6,200	4,550	21	5,800	ZKLN0624.2RS	NK6/10TN	G6X12X2	ZM06
21	1.3	31	3X3X10	6,200	4,550	21	5,800	ZKLN0624.2RS	NK6/10TN	G6X12X2	ZM06
21	1.3	31	3X3X10	12,200	4,800	15	5,800	ZKLN0624.2RS	NK6/10TN	G6X12X2	ZM06
21	1.3	31	3X3X10	12,200	4,800	15	5,800	ZKLN0624.2RS	NK6/10TN	G6X12X2	ZM06
21	1.3	31	3X3X10	12,200	4,800	15	5,800	ZKLN0624.2RS	NK6/10TN	G6X12X2	ZM06
21	1.3	31	3X3X10	12,200	4,800	15	5,800	ZKLN0624.2RS	NK6/10TN	G6X12X2	ZM06
21	1.3	31	3X3X10	12,200	4,800	15	5,800	ZKLN0624.2RS	NK6/10TN	G6X12X2	ZM06
21	1.3	31	3X3X10	15,200	4,800	13	5,800	ZKLN0624.2RS	NK6/10TN	G6X12X2	ZM06
21	1.3	31	3X3X10	15,200	4,800	13	5,800	ZKLN0624.2RS	NK6/10TN	G6X12X2	ZM06
21	1.3	31	3X3X10	15,200	4,800	13	5,800	ZKLN0624.2RS	NK6/10TN	G6X12X2	ZM06
21	1.3	31	3X3X10	15,200	4,800	13	5,800	ZKLN0624.2RS	NK6/10TN	G6X12X2	ZM06
21	1.3	31	3X3X10	15,200	4,800	13	5,800	ZKLN0624.2RS	NK6/10TN	G6X12X2	ZM06

Planetary Roller Screw
RGT SERIES

- Split roller nut, preloaded
- Standard ends configuration

For details on part numbers, descriptive suffixes and various technical references, please refer to front of this section.
For engineering or technical information contact your local sales representative or call Distributor Sales (800)523-6572 or Linear Sales (800)462-3399.

DIMENSION TABLE (Contd.) · Dimensions in mm																
NOMINAL DIAMETER	PART NUMBER	PITCH	STROKE	MASS	DIMENSIONS – SCREW SHAFT											
d_0	d_0	P	H	kg	d_1 ISO h6	d_2	d_3 –0.005	d_4	d_5 ISO h6	l_0	l_1	l_2	l_3	l_4	l_5
12	RGT 12.	1.	100	0.293	10	M12X1	12	18	10	220	20	33	53	161	20
	RGT 12.	1.	200	0.382	10	M12X1	12	18	10	320	20	33	53	261	20
	RGT 12.	1.	300	0.47	10	M12X1	12	18	10	420	20	33	53	361	20
	RGT 12.	1.	400	0.559	10	M12X1	12	18	10	520	20	33	53	461	20
	RGT 12.	1.	500	0.648	10	M12X1	12	18	10	620	20	33	53	561	20
	RGT 12.	2.	100	0.293	10	M12X1	12	18	10	220	20	33	53	161	20
	RGT 12.	2.	200	0.382	10	M12X1	12	18	10	320	20	33	53	261	20
	RGT 12.	2.	300	0.47	10	M12X1	12	18	10	420	20	33	53	361	20
	RGT 12.	2.	400	0.559	10	M12X1	12	18	10	520	20	33	53	461	20
	RGT 12.	2.	500	0.648	10	M12X1	12	18	10	620	20	33	53	561	20
	RGT 12.	4.	100	0.293	10	M12X1	12	18	10	220	20	33	53	161	20
	RGT 12.	4.	200	0.382	10	M12X1	12	18	10	320	20	33	53	261	20
	RGT 12.	4.	300	0.47	10	M12X1	12	18	10	420	20	33	53	361	20
	RGT 12.	4.	400	0.559	10	M12X1	12	18	10	520	20	33	53	461	20
	RGT 12.	4.	500	0.648	10	M12X1	12	18	10	620	20	33	53	561	20
	RGT 12.	5.	100	0.293	10	M12X1	12	18	10	220	20	33	53	161	20
	RGT 12.	5.	200	0.382	10	M12X1	12	18	10	320	20	33	53	261	20
	RGT 12.	5.	300	0.47	10	M12X1	12	18	10	420	20	33	53	361	20
	RGT 12.	5.	400	0.559	10	M12X1	12	18	10	520	20	33	53	461	20
	RGT 12.	5.	500	0.648	10	M12X1	12	18	10	620	20	33	53	561	20

1) Limiting speed of the planetary roller screw. Critical speed n_{max} and limiting speed of the rolling bearings should be considered.

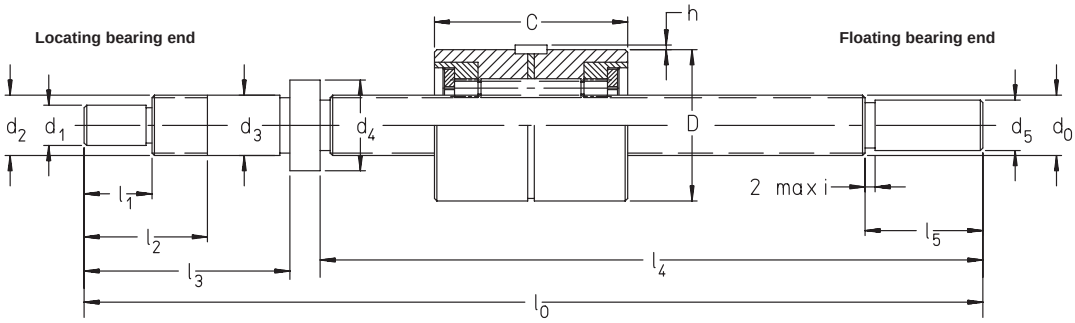

NUT			KEY TO DIN 6885	LOAD RATINGS		SPRING RATIO	LIMITING SPEED[1)]	LOCATING BEARING		FLOATING BEARING	SEAL	LOCK NUT
D ISO g6	h	C h12		dyn. C N	stat. C_0 N	C_K $N^{2/3}$ / µm	$n_{g\ grease}$ rpm					
32	1.7	31	4X4X14	3,700	6,400	38	5,600	ZKLN1242.2RS	ZKLF1255.2RS	NK10/12TN	G10X17X3	ZM12
32	1.7	31	4X4X14	3,700	6,400	38	5,600	ZKLN1242.2RS	ZKLF1255.2RS	NK10/12TN	G10X17X3	ZM12
32	1.7	31	4X4X14	3,700	6,400	38	5,600	ZKLN1242.2RS	ZKLF1255.2RS	NK10/12TN	G10X17X3	ZM12
32	1.7	31	4X4X14	3,700	6,400	38	5,600	ZKLN1242.2RS	ZKLF1255.2RS	NK10/12TN	G10X17X3	ZM12
32	1.7	31	4X4X14	3,700	6,400	38	5,600	ZKLN1242.2RS	ZKLF1255.2RS	NK10/12TN	G10X17X3	ZM12
26	2	31	4X4X14	4,900	5,000	27	5,600	ZKLN1242.2RS	ZKLF1255.2RS	NK10/12TN	G10X17X3	ZM12
26	2	31	4X4X14	4,900	5,000	27	5,600	ZKLN1242.2RS	ZKLF1255.2RS	NK10/12TN	G10X17X3	ZM12
26	2	31	4X4X14	4,900	5,000	27	5,600	ZKLN1242.2RS	ZKLF1255.2RS	NK10/12TN	G10X17X3	ZM12
26	2	31	4X4X14	4,900	5,000	27	5,600	ZKLN1242.2RS	ZKLF1255.2RS	NK10/12TN	G10X17X3	ZM12
26	2	31	4X4X14	4,900	5,000	27	5,600	ZKLN1242.2RS	ZKLF1255.2RS	NK10/12TN	G10X17X3	ZM12
26	2	31	4X4X14	9,700	5,500	19	5,600	ZKLN1242.2RS	ZKLF1255.2RS	NK10/12TN	G10X17X3	ZM12
26	2	31	4X4X14	9,700	5,500	19	5,600	ZKLN1242.2RS	ZKLF1255.2RS	NK10/12TN	G10X17X3	ZM12
26	2	31	4X4X14	9,700	5,500	19	5,600	ZKLN1242.2RS	ZKLF1255.2RS	NK10/12TN	G10X17X3	ZM12
26	2	31	4X4X14	9,700	5,500	19	5,600	ZKLN1242.2RS	ZKLF1255.2RS	NK10/12TN	G10X17X3	ZM12
26	2	31	4X4X14	9,700	5,500	19	5,600	ZKLN1242.2RS	ZKLF1255.2RS	NK10/12TN	G10X17X3	ZM12
26	2	31	4X4X14	12,100	5,500	17	5,600	ZKLN1242.2RS	ZKLF1255.2RS	NK10/12TN	G10X17X3	ZM12
26	2	31	4X4X14	12,100	5,500	17	5,600	ZKLN1242.2RS	ZKLF1255.2RS	NK10/12TN	G10X17X3	ZM12
26	2	31	4X4X14	12,100	5,500	17	5,600	ZKLN1242.2RS	ZKLF1255.2RS	NK10/12TN	G10X17X3	ZM12
26	2	31	4X4X14	12,100	5,500	17	5,600	ZKLN1242.2RS	ZKLF1255.2RS	NK10/12TN	G10X17X3	ZM12
26	2	31	4X4X14	12,100	5,500	17	5,600	ZKLN1242.2RS	ZKLF1255.2RS	NK10/12TN	G10X17X3	ZM12

Planetary Roller Screw
RGT SERIES

- Split roller nut, preloaded
- Standard ends configuration

For details on part numbers, descriptive suffixes and various technical references, please refer to front of this section.
For engineering or technical information contact your local sales representative or call Distributor Sales (800)523-6572 or Linear Sales (800)462-3399.

DIMENSION TABLE (Contd.) · Dimensions in mm

NOMINAL DIAMETER d_0	PART NUMBER d_0	PITCH P	STROKE H	MASS kg	DIMENSIONS – SCREW SHAFT d_1 ISO h6	d_2	d_3 –0.005	d_4	d_5 ISO h6	l_0	l_1	l_2	l_3	l_4	l_5
15	RGT 15.	2.	100	0.501	12	M15X1	15	22	12	224	20	31	53	165	20
	RGT 15.	2.	200	0.64	12	M15X1	15	22	12	324	20	31	53	265	20
	RGT 15.	2.	300	0.779	12	M15X1	15	22	12	424	20	31	53	365	20
	RGT 15.	2.	400	0.917	12	M15X1	15	22	12	524	20	31	53	465	20
	RGT 15.	2.	500	1.056	12	M15X1	15	22	12	624	20	31	53	565	20
	RGT 15.	2.	600	1.195	12	M15X1	15	22	12	724	20	31	53	665	20
	RGT 15.	4.	100	0.501	12	M15X1	15	22	12	224	20	31	53	165	20
	RGT 15.	4.	200	0.64	12	M15X1	15	22	12	324	20	31	53	265	20
	RGT 15.	4.	300	0.779	12	M15X1	15	22	12	424	20	31	53	365	20
	RGT 15.	4.	400	0.917	12	M15X1	15	22	12	524	20	31	53	465	20
	RGT 15.	4.	500	1.056	12	M15X1	15	22	12	624	20	31	53	565	20
	RGT 15.	4.	600	1.195	12	M15X1	15	22	12	724	20	31	53	665	20
	RGT 15.	5.	100	0.501	12	M15X1	15	22	12	224	20	31	53	165	20
	RGT 15.	5.	200	0.64	12	M15X1	15	22	12	324	20	31	53	265	20
	RGT 15.	5.	300	0.779	12	M15X1	15	22	12	424	20	31	53	365	20
	RGT 15.	5.	400	0.917	12	M15X1	15	22	12	524	20	31	53	465	20
	RGT 15.	5.	500	1.056	12	M15X1	15	22	12	624	20	31	53	565	20
	RGT 15.	5.	600	1.195	12	M15X1	15	22	12	724	20	31	53	665	20

1) Limiting speed of the planetary roller screw. Critical speed n_{max} and limiting speed of the rolling bearings should be considered.

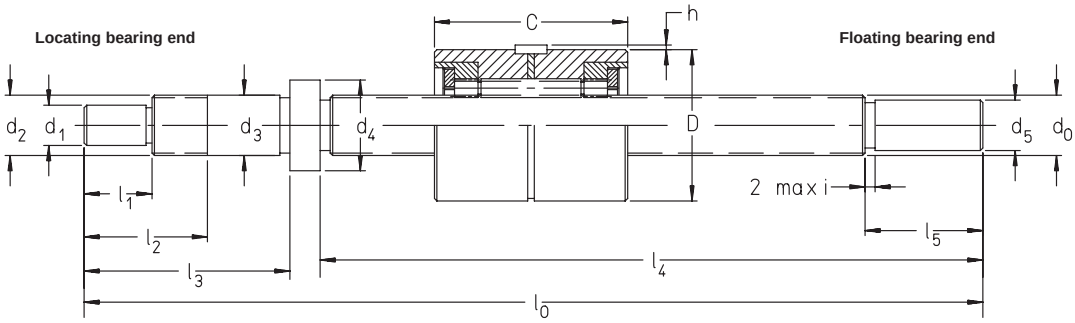

NUT			KEY TO DIN 6885	BASIC LOAD RATINGS		SPRING RATIO	LIMITING SPEED[1)]	LOCATING BEARING		FLOATING BEARING	SEAL	LOCK NUT
D ISO g6	h	C h12		dyn. C N	stat. C_0 N	C_K $N^{2/3}$ / µm	$n_{g\ grease}$ rpm					
34	1.7	35	4X4X14	6,100	8,000	34	5,500	ZKLN1545.2RS	ZKLF1560.2RS	NK12/12TN	G12X19X3	ZM15
34	1.7	35	4X4X14	6,100	8,000	34	5,500	ZKLN1545.2RS	ZKLF1560.2RS	NK12/12TN	G12X19X3	ZM15
34	1.7	35	4X4X14	6,100	8,000	34	5,500	ZKLN1545.2RS	ZKLF1560.2RS	NK12/12TN	G12X19X3	ZM15
34	1.7	35	4X4X14	6,100	8,000	34	5,500	ZKLN1545.2RS	ZKLF1560.2RS	NK12/12TN	G12X19X3	ZM15
34	1.7	35	4X4X14	6,100	8,000	34	5,500	ZKLN1545.2RS	ZKLF1560.2RS	NK12/12TN	G12X19X3	ZM15
34	1.7	35	4X4X14	6,100	8,000	34	5,500	ZKLN1545.2RS	ZKLF1560.2RS	NK12/12TN	G12X19X3	ZM15
34	1.7	35	4X4X14	12,200	8,900	24	5,500	ZKLN1545.2RS	ZKLF1560.2RS	NK12/12TN	G12X19X3	ZM15
34	1.7	35	4X4X14	12,200	8,900	24	5,500	ZKLN1545.2RS	ZKLF1560.2RS	NK12/12TN	G12X19X3	ZM15
34	1.7	35	4X4X14	12,200	8,900	24	5,500	ZKLN1545.2RS	ZKLF1560.2RS	NK12/12TN	G12X19X3	ZM15
34	1.7	35	4X4X14	12,200	8,900	24	5,500	ZKLN1545.2RS	ZKLF1560.2RS	NK12/12TN	G12X19X3	ZM15
34	1.7	35	4X4X14	12,200	8,900	24	5,500	ZKLN1545.2RS	ZKLF1560.2RS	NK12/12TN	G12X19X3	ZM15
34	1.7	35	4X4X14	12,200	8,900	24	5,500	ZKLN1545.2RS	ZKLF1560.2RS	NK12/12TN	G12X19X3	ZM15
34	1.7	35	4X4X14	15,200	9,100	21	5,500	ZKLN1545.2RS	ZKLF1560.2RS	NK12/12TN	G12X19X3	ZM15
34	1.7	35	4X4X14	15,200	9,100	21	5,500	ZKLN1545.2RS	ZKLF1560.2RS	NK12/12TN	G12X19X3	ZM15
34	1.7	35	4X4X14	15,200	9,100	21	5,500	ZKLN1545.2RS	ZKLF1560.2RS	NK12/12TN	G12X19X3	ZM15
34	1.7	35	4X4X14	15,200	9,100	21	5,500	ZKLN1545.2RS	ZKLF1560.2RS	NK12/12TN	G12X19X3	ZM15
34	1.7	35	4X4X14	15,200	9,100	21	5,500	ZKLN1545.2RS	ZKLF1560.2RS	NK12/12TN	G12X19X3	ZM15
34	1.7	35	4X4X14	15,200	9,100	21	5,500	ZKLN1545.2RS	ZKLF1560.2RS	NK12/12TN	G12X19X3	ZM15

Planetary Roller Screw
RGT SERIES

- Split roller nut, preloaded
- Standard ends configuration

For details on part numbers, descriptive suffixes and various technical references, please refer to front of this section.
For engineering or technical information contact your local sales representative or call Distributor Sales (800)523-6572 or Linear Sales (800)462-3399.

DIMENSION TABLE (Contd.) · Dimensions in mm

NOMINAL DIAMETER	PART NUMBER	PITCH	STROKE	MASS	DIMENSIONS – SCREW SHAFT										
d_0	d_0	P	H	kg	d_1 ISO h6	d_2	d_3 –0.005	d_4	d_5 ISO h6	l_0	l_1	l_2	l_3	l_4	l_5
20	RGT 20.	2.	400	1.713	12	M15X1	15	22	12	546	20	31	53	487	20
	RGT 20.	2.	500	1.96	12	M15X1	15	22	12	646	20	31	53	587	20
	RGT 20.	2.	600	2.207	12	M15X1	15	22	12	746	20	31	53	687	20
	RGT 20.	2.	800	2.7	12	M15X1	15	22	12	946	20	31	53	887	20
	RGT 20.	2.	1000	3.193	12	M15X1	15	22	12	1146	20	31	53	1087	20
	RGT 20.	2.	1200	3.686	12	M15X1	15	22	12	1346	20	31	53	1287	20
	RGT 20.	4.	400	1.713	12	M15X1	15	22	12	546	20	31	53	487	20
	RGT 20.	4.	500	1.96	12	M15X1	15	22	12	646	20	31	53	587	20
	RGT 20.	4.	600	2.207	12	M15X1	15	22	12	746	20	31	53	687	20
	RGT 20.	4.	800	2.7	12	M15X1	15	22	12	946	20	31	53	887	20
	RGT 20.	4.	1000	3.193	12	M15X1	15	22	12	1146	20	31	53	1087	20
	RGT 20.	4.	1200	3.686	12	M15X1	15	22	12	1346	20	31	53	1287	20
	RGT 20.	5.	400	1.713	12	M15X1	15	22	12	546	20	31	53	487	20
	RGT 20.	5.	500	1.96	12	M15X1	15	22	12	646	20	31	53	587	20
	RGT 20.	5.	600	2.207	12	M15X1	15	22	12	746	20	31	53	687	20
	RGT 20.	5.	800	2.7	12	M15X1	15	22	12	946	20	31	53	887	20
	RGT 20.	5.	1000	3.193	12	M15X1	15	22	12	1146	20	31	53	1087	20
	RGT 20.	5.	1200	3.686	12	M15X1	15	22	12	1346	20	31	53	1287	20
	RGT 20.	6.	400	1.713	12	M15X1	15	22	12	546	20	31	53	487	20
	RGT 20.	6.	500	1.96	12	M15X1	15	22	12	646	20	31	53	587	20
	RGT 20.	6.	600	2.207	12	M15X1	15	22	12	746	20	31	53	687	20
	RGT 20.	6.	800	2.7	12	M15X1	15	22	12	946	20	31	53	887	20
	RGT 20.	6.	1000	3.193	12	M15X1	15	22	12	1146	20	31	53	1087	20
	RGT 20.	6.	1200	3.686	12	M15X1	15	22	12	1346	20	31	53	1287	20

1) Limiting speed of the planetary roller screw. Critical speed n_{max} and limiting speed of the rolling bearings should be considered.

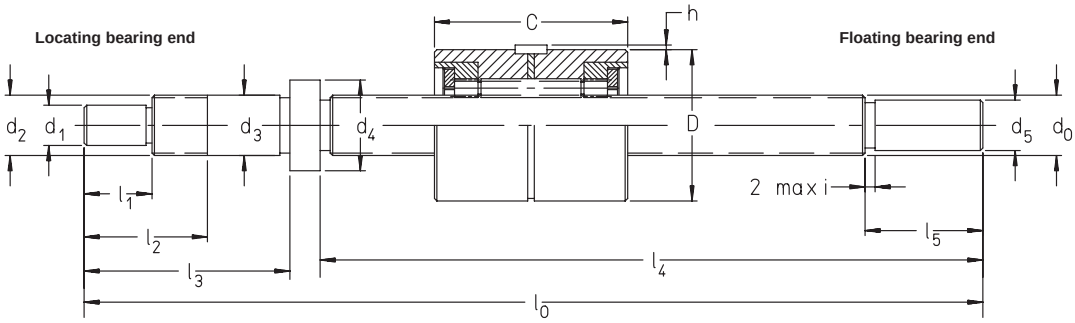

NUT			KEY TO DIN 6885	LOAD RATINGS		SPRING RATIO	LIMITING SPEED[1)]	LOCATING BEARING		FLOATING BEARING	SEAL	LOCK NUT
D ISO g6	h	C h12		dyn. C N	stat. C_0 N	C_K $N^{2/3}$ / µm	$n_{g\ grease}$ rpm					
42	1.7	55	4X4X18	10,900	21,800	61	5,200	ZKLN1545.2RS	ZKLF1560.2RS	NK12/12TN	G12X19X3	ZM15
42	1.7	55	4X4X18	10,900	21,800	61	5,200	ZKLN1545.2RS	ZKLF1560.2RS	NK12/12TN	G12X19X3	ZM15
42	1.7	55	4X4X18	10,900	21,800	61	5,200	ZKLN1545.2RS	ZKLF1560.2RS	NK12/12TN	G12X19X3	ZM15
42	1.7	55	4X4X18	10,900	21,800	61	5,200	ZKLN1545.2RS	ZKLF1560.2RS	NK12/12TN	G12X19X3	ZM15
42	1.7	55	4X4X18	10,900	21,800	61	5,200	ZKLN1545.2RS	ZKLF1560.2RS	NK12/12TN	G12X19X3	ZM15
42	1.7	55	4X4X18	10,900	21,800	61	5,200	ZKLN1545.2RS	ZKLF1560.2RS	NK12/12TN	G12X19X3	ZM15
42	1.7	55	4X4X18	21,700	25,000	42	5,200	ZKLN1545.2RS	ZKLF1560.2RS	NK12/12TN	G12X19X3	ZM15
42	1.7	55	4X4X18	21,700	25,000	42	5,200	ZKLN1545.2RS	ZKLF1560.2RS	NK12/12TN	G12X19X3	ZM15
42	1.7	55	4X4X18	21,700	25,000	42	5,200	ZKLN1545.2RS	ZKLF1560.2RS	NK12/12TN	G12X19X3	ZM15
42	1.7	55	4X4X18	21,700	25,000	42	5,200	ZKLN1545.2RS	ZKLF1560.2RS	NK12/12TN	G12X19X3	ZM15
42	1.7	55	4X4X18	21,700	25,000	42	5,200	ZKLN1545.2RS	ZKLF1560.2RS	NK12/12TN	G12X19X3	ZM15
42	1.7	55	4X4X18	21,700	25,000	42	5,200	ZKLN1545.2RS	ZKLF1560.2RS	NK12/12TN	G12X19X3	ZM15
42	1.7	55	4X4X18	27,000	26,000	38	5,200	ZKLN1545.2RS	ZKLF1560.2RS	NK12/12TN	G12X19X3	ZM15
42	1.7	55	4X4X18	27,000	26,000	38	5,200	ZKLN1545.2RS	ZKLF1560.2RS	NK12/12TN	G12X19X3	ZM15
42	1.7	55	4X4X18	27,000	26,000	38	5,200	ZKLN1545.2RS	ZKLF1560.2RS	NK12/12TN	G12X19X3	ZM15
42	1.7	55	4X4X18	27,000	26,000	38	5,200	ZKLN1545.2RS	ZKLF1560.2RS	NK12/12TN	G12X19X3	ZM15
42	1.7	55	4X4X18	27,000	26,000	38	5,200	ZKLN1545.2RS	ZKLF1560.2RS	NK12/12TN	G12X19X3	ZM15
42	1.7	55	4X4X18	27,000	26,000	38	5,200	ZKLN1545.2RS	ZKLF1560.2RS	NK12/12TN	G12X19X3	ZM15
42	1.7	55	4X4X18	32,500	26,500	34	5,200	ZKLN1545.2RS	ZKLF1560.2RS	NK12/12TN	G12X19X3	ZM15
42	1.7	55	4X4X18	32,500	26,500	34	5,200	ZKLN1545.2RS	ZKLF1560.2RS	NK12/12TN	G12X19X3	ZM15
42	1.7	55	4X4X18	32,500	26,500	34	5,200	ZKLN1545.2RS	ZKLF1560.2RS	NK12/12TN	G12X19X3	ZM15
42	1.7	55	4X4X18	32,500	26,500	34	5,200	ZKLN1545.2RS	ZKLF1560.2RS	NK12/12TN	G12X19X3	ZM15
42	1.7	55	4X4X18	32,500	26,500	34	5,200	ZKLN1545.2RS	ZKLF1560.2RS	NK12/12TN	G12X19X3	ZM15
42	1.7	55	4X4X18	32,500	26,500	34	5,200	ZKLN1545.2RS	ZKLF1560.2RS	NK12/12TN	G12X19X3	ZM15

Planetary Roller Screw
RGT SERIES

- Split roller nut, preloaded
- Special ends configuration*)

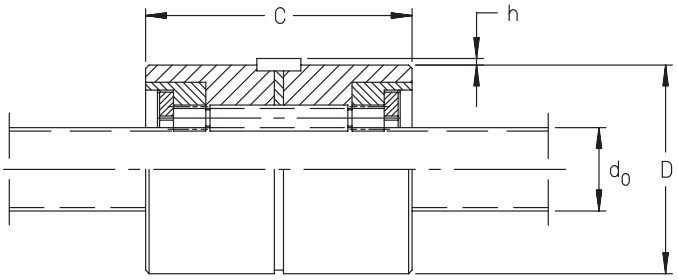

For details on part numbers, descriptive suffixes and various technical references, please refer to front of this section.
For engineering or technical information contact your local sales representative or call Distributor Sales (800)523-6572 or Linear Sales (800)462-3399.

DIMENSION TABLE · Dimensions in mm

NOMINAL DIAMETER	PART NUMBER		PITCH	NUT DIMENSIONS			KEY TO DIN 6885	SPRING RATIO	LIMITING SPEED[1)]	LOAD RATINGS	
				D	h	C				dyn.	stat.
d_0		d_0	P	ISO g6		h12		C_K N$^{2/3}$ / µm	$n_{g\ grease}$ rpm	C N	C_0 N
24	RGT	24.	2	48	1.7	55	4X4X18	75	5,000	13,200	32,000
	RGT	24.	4	48	1.7	55	4X4X18	52	5,000	26,000	37,500
	RGT	24.	5	48	1.7	55	4X4X18	46	5,000	32,500	39,000
	RGT	24.	6	48	1.7	55	4X4X18	42	5,000	39,000	40,000
27	RGT	27.	2	55	1.7	55	4X4X18	76	4,900	13,400	35,000
	RGT	27.	4	55	1.7	55	4X4X18	53	4,900	26,500	41,500
	RGT	27.	5	55	1.7	55	4X4X18	47	4,900	33,000	43,000
	RGT	27.	6	55	1.7	55	4X4X18	43	4,900	39,500	44,500
	RGT	27.	8	55	1.7	55	4X4X18	37	4,900	53,000	45,500
30	RGT	30.	2	62	1.7	55	5X5X22	78	4,700	13,500	38,000
	RGT	30.	4	62	1.7	55	5X5X22	54	4,700	27,000	45,000
	RGT	30.	5	62	1.7	55	5X5X22	48	4,700	33,500	47,000
	RGT	30.	6	62	1.7	55	5X5X22	44	4,700	40,000	48,500
	RGT	30.	8	62	1.7	55	5X5X22	38	4,700	53,000	50,000
36	RGT	36.	2	75	1.7	68	5X5X22	108	4,400	18,300	65,000
	RGT	36.	4	75	1.7	68	5X5X22	74	4,400	36,000	78,000
	RGT	36.	5	75	1.7	68	5X5X22	65	4,400	45,000	82,000
	RGT	36.	6	75	1.7	68	5X5X22	59	4,400	54,000	85,000
	RGT	36.	8	75	1.7	68	5X5X22	51	4,400	72,000	89,000
39	RGT	39.	2	80	1.7	72	5X5X25	117	4,200	19,800	76,000
	RGT	39.	4	80	1.7	72	5X5X25	80	4,200	39,500	92,000
	RGT	39.	5	80	1.7	72	5X5X25	71	4,200	49,000	97,000
	RGT	39.	10	80	1.7	72	5X5X25	56	4,200	97,000	109,000
48	RGT	48.	5	96	2.7	95	6X6X40	91	3,800	62,000	155,000
	RGT	48.	10	96	2.7	95	6X6X40	63	3,800	124,000	178,000
63	RGT	63.	5	118	3.5	115	8X7X45	116	3,000	78,000	250,000
	RGT	63.	10	118	3.5	115	8X7X45	80	3,000	155,000	295,000

1) Limiting speed of the planetary roller screw. Critical speed n_{max} and limiting speed of the rolling bearings should be considered.

*) Available on request.

Planetary Roller Screw
RGT SERIES

- One–piece roller nut, not preloaded
- Special ends configuration*)

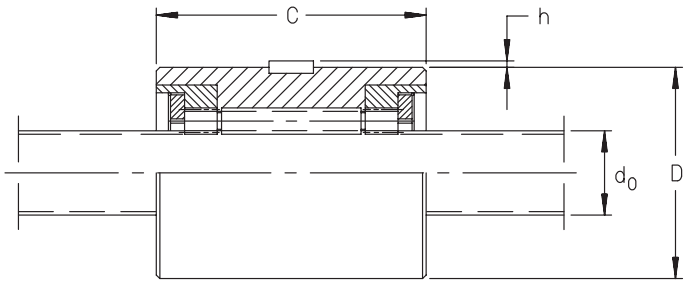

For details on part numbers, descriptive suffixes and various technical references, please refer to front of this section.
For engineering or technical information contact your local sales representative or call Distributor Sales (800)523-6572 or Linear Sales (800)462-3399.

DIMENSION TABLE · Dimensions in mm

NOMINAL DIAMETER	PART NUMBER		PITCH	NUT DIMENSIONS			KEY TO DIN 6885	SPRING RATIO	LIMITING SPEED[1)]	LOAD RATINGS	
				D	h	C		C_K	$n_{g\ grease}$	dyn.	stat.
d_0		d_0	P	ISO g6		h12		$N^{2/3}$ / µm	rpm	C N	C_0 N
24	RGT	24.	2	48	1.7	55	4X4X18	124	5,000	22,400	69,000
	RGT	24.	4	48	1.7	55	4X4X18	86	5,000	44,500	80,000
	RGT	24.	5	48	1.7	55	4X4X18	64	5,000	55,000	83,000
	RGT	24.	6	48	1.7	55	4X4X18	69	5,000	66,000	85,000
27	RGT	27.	2	55	1.7	55	4X4X18	127	4,900	22,700	75,000
	RGT	27.	4	55	1.7	55	4X4X18	87	4,900	45,000	88,000
	RGT	27.	5	55	1.7	55	4X4X18	78	4,900	56,000	92,000
	RGT	27.	6	55	1.7	55	4X4X18	71	4,900	67,000	94,000
	RGT	27.	8	55	1.7	55	4X4X18	61	4,900	89,000	98,000
30	RGT	30.	2	62	1.7	55	5X5X22	130	4,700	23,000	81,000
	RGT	30.	4	62	1.7	55	5X5X22	89	4,700	45,500	96,000
	RGT	30.	5	62	1.7	55	5X5X22	79	4,700	57,000	100,000
	RGT	30.	6	62	1.7	55	5X5X22	72	4,700	68,000	103,000
	RGT	30.	8	62	1.7	55	5X5X22	62	4,700	90,000	107,000
36	RGT	36.	2	75	1.7	68	5X5X22	176	4,400	31,000	136,000
	RGT	36.	4	75	1.7	68	5X5X22	121	4,400	61,000	165,000
	RGT	36.	5	75	1.7	68	5X5X22	107	4,400	76,000	173,000
	RGT	36.	6	75	1.7	68	5X5X22	97	4,400	91,000	179,000
	RGT	36.	8	75	1.7	68	5X5X22	84	4,400	121,000	188,000
39	RGT	39.	2	80	1.7	72	5X5X25	191	4,200	33,000	159,000
	RGT	39.	4	80	1.7	72	5X5X25	131	4,200	66,000	193,000
	RGT	39.	5	80	1.7	72	5X5X25	116	4,200	82,000	203,000
	RGT	39.	10	80	1.7	72	5X5X25	91	4,200	163,000	228,000
48	RGT	48.	5	96	2.7	95	6X6X40	148	3,800	104,000	320,000
	RGT	48.	10	96	2.7	95	6X6X40	103	3,800	206,000	370,000
63	RGT	63.	5	118	3.5	115	8X7X45	188	3,000	129,000	520,000
	RGT	63.	10	118	3.5	115	8X7X45	129	3,000	255,000	610,000

1) Limiting speed of the planetary roller screw. Critical speed n_{max} and limiting speed of the rolling bearings should be considered.
*) Available on request.

Rolled Ball Screws

SERIES KGS

- Metric dimensions
- High strength steel Cf53 (SAE1055)
- Induction hardened to 60 HRC
- Gothic arch thread form

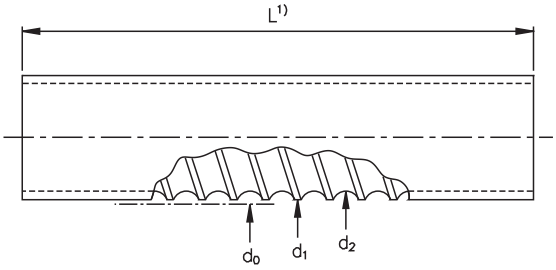

For details on part numbers, descriptive suffixes and various technical references, please refer to front of this section.
For engineering or technical information contact your local sales representative or call Distributor Sales (800)523-6572.

NOMINAL PITCH DIAMETER d_0	DESIGNATION	ACCURACY CLASS (µm/300 mm)	d_0 mm	Lead P mm	d_1 mm	d_2 mm	NUMBER OF STARTS	L_{max} 1) mm	MASS (kg/m)
16	KGS 1605	23 / 50	16	5	15.5	12.9	1	5600	1.26
	KGS 1610	23 / 50	16	10	15.4	13.0	2	5600	1.26
20	KGS 2005	23 / 50	20	5	19.5	16.9	1	5600	2.04
	KGS 2020	23 / 50	20	20	19.5	16.9	4	5600	2.07
	KGS 2050	23 / 50	20	50	19.1	16.5	5	5600	2.04
25	KGS 2505	23 / 50	25	5	24.5	21.9	1	5600	3.33
	KGS 2510	23 / 50	25	10	24.5	21.9	1	5600	3.33
	KGS 2520	23 / 50	25	20	24.6	22.0	4	5600	3.33
	KGS 2525	23 / 50	25	25	24.5	22.0	5	5600	3.33
	KGS 2550	23 / 50	25	50	24.5	21.5	5	5600	3.33
32	KGS 3205	23 / 50	32	5	31.5	28.9	1	5600	5.61
	KGS 3210	23 / 50	32	10	31.7	27.3	1	5600	5.60
	KGS 3220	23 / 50	32	20	31.7	27.9	2	5600	5.61
	KGS 3240	23 / 50	32	40	30.9	28.3	4	5600	5.61
40	KGS 4005	23 / 50	40	5	39.5	36.9	1	5600	9.03
	KGS 4010	23 / 50	40	10	39.5	34.1	2	5600	8.33
	KGS 4020	23 / 50	40	20	39.7	35.9	2	5600	9.01
	KGS 4040	23 / 50	40	40	38.9	36.3	4	5600	9.01
50	KGS 5010	50	50	10	49.5	44.1	1	5600	13.48
	KGS 5020	50	50	20	49.5	44.1	2	5600	13.50
63	KGS 6310	50	63	10	62.5	57.1	1	5600	22.04
	KGS 6320	50	63	20	62.5	57.1	2	5600	22.03

Flanged Ball Nuts
SERIES KGF

- Metric dimensions
- Flange mounting
- Optimized internal ball return systems
- Buna contact seals
- Threaded lubrication port
- 3000 rpm speed limit

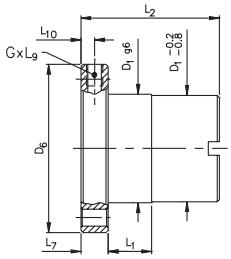

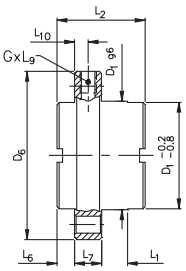

For details on part numbers, descriptive suffixes and various technical references, please refer to front of this section.
For engineering or technical information contact your local sales representative or call Distributor Sales (800)523-6572.

NOMINAL PITCH DIAMETER d_0	DESIGNATION d_0 LEAD	SEAL SUFFIX	FORM	HOLE PATTERN	D_1 mm	D_4 mm	D_5 mm	D_6 mm	L_1 mm	L_2 mm	L_6 mm	L_7 mm	L_8 mm	L_9 mm	L_{10} mm	LUBE HOLE G	AXIAL BACKLASH MAX	LOAD RATINGS DYN C (kN)	LOAD RATINGS STAT C (kN)
16	KGF D 16 05	EE	E	1	28	38	5.5	48	10	42	-	10	40	10	5	M6	0.08	12.0	12.7
	KGF D 16 10	EE	E	1	28	38	5.5	48	10	55	-	10	40	10	5	M6	0.08	23.0	26.0
20	KGF N 20 05	EE	E	3	32	45	7	55	8	44	-	12	-	8	6	M6	0.08	14.0	17.0
	KGF N 20 20	EE	S	3	35	50	7	62	4	30	8	10	-	8	5	M6	0.08	12.0	19.2
	KGF N 20 50	EE	S	3	35	50	7	62	10	56	9	10	-	8	5	M6	0.15	18.0	22.0
25	KGF D 25 05	EE	E	1	40	51	6.6	62	10	42	-	10	48	10	5	M6	0.08	15.0	22.4
	KGF D 25 10	EE	E	1	40	51	6.6	62	16	55	-	10	48	10	5	M6	0.08	17.5	25.0
	KGF D 25 20	EE	S	1	40	51	6.6	62	4	35	10.5	10	48	8	5	M6	0.15	19.0	23.5
	KGF D 25 25	EE	S	1	40	51	6.6	62	9	35	8	10	-[1]	8	5	M6	0.08	21.0	31.0
	KGF D 25 50	EE	S	1	40	51	6.6	62	10	58	10.5	10	48	8	5	M6	0.15	22.5	29.0
32	KGF N 32 05	EE	E	3	45	58	7	70	10	59	-	16	-	8	8	M6	0.08	24.0	49.0
	KGF N 32 10	EE	E	3	53	68	7	80	10	73	-	16	-	8	8	M8x1	0.08	44.0	53.0
	KGF D 32 20	EE	E	1	53	65	9	80	16	80	-	12	62	10	6	M6	0.08	42.5	61.0
	KGF N 32 40	EE	S	3	53	68	7	80	14	45	7.5	16	-	10	8	M6	0.08	17.0	32.0
40	KGF D 40 05	EE	E	2	63	78	9	93	10	57	-	14	70	10	7	M6	0.08	26.0	63.5
	KGF D 40 10	EE	E	2	63	78	9	95	16	71	-	14	70	10	7	M8x1	0.08	50.0	70.0
	KGF D 40 20	EE	E	2	63	78	9	93	16	80	-	14	70	10	7	M8x1	0.08	44.5	77.0
	KGF D 40 40	EE	S	2	63	78	9	93	16	85	7.5	14	-[1]	10	7	M8x1	0.08	42.0	93.0
50	KGF D 50 10	EE	E	2	75	93	11	110	16	95	-	16	85	10	8	M8x1	0.08	78.0	153.0
	KGF D 50 20	EE	E	2	85	103	11	125	22	95	-	18	95	10	9	M8x1	0.08	82.0	137.0
63	KGF D 63 10	EE	E	2	90	108	11	125	16	97	-	18	95	10	9	M8x1	0.08	86.0	200.0
	KGF D 63 20	EE	E	2	95	115	13.5	135	25	99	-	20	100	10	10	M8x1	0.08	85.0	170.0

Notes
1) Round flange.

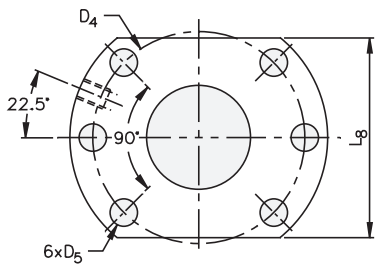

Hole pattern 1

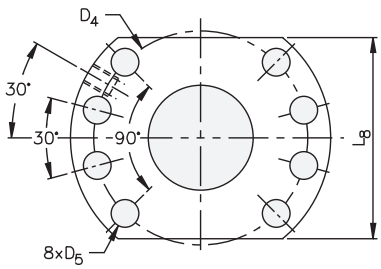

Hole pattern 2

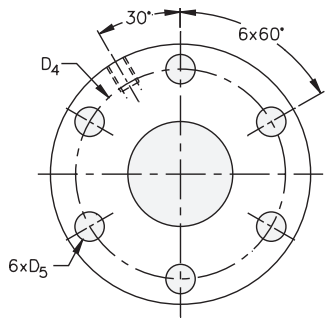

Hole Pattern 3

Cylindrical Ball Nuts
SERIES KGM

- Metric dimensions
- Cylindrical mounting
- Optimized internal ball return systems
- Buna contact seals
- Radial lubrication hole and groove
- 3000 rpm speed limit

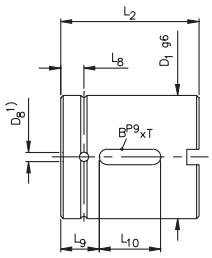

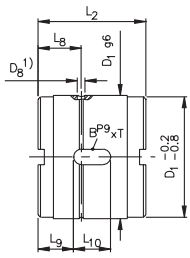

For details on part numbers, descriptive suffixes and various technical references, please refer to front of this section.
For engineering or technical information contact your local sales representative or call Distributor Sales (800)523-6572.

NOMINAL PITCH DIAMETER d_0	DESIGNATION d_0 LEAD	SEAL SUFFIX	FORM	D_1 mm	D_8 1) mm	L_2 mm	L_8 mm	L_9 mm	L_{10} mm	BxT	AXIAL BACKLASH MAX	LOAD RATINGS DYN C (kN)	LOAD RATINGS STAT C (kN)
16	KGM D 16 05	EE	E	28	3	34	7	7	20	5x2	0.08	12.5	12.7
	KGM D 16 10	EE	E	28	3	50	7	15	20	5x2	0.08	23.0	26.0
20	KGM N 20 05	EE	E	32	3	34	7	7	20	5x2	0.08	14.0	17.0
	KGM N 20 20	EE	S	35	1.5	30	11.5	9	12	5x3	0.08	12.0	19.2
	KGM N 20 50	EE	S	35	1.5	56	16	18	20	5x3	0.15	18.0	22.0
25	KGM D 25 05	EE	E	40	3	34	7	7	20	5x2	0.08	15.0	22.4
	KGM D 25 10	EE	E	40	3	45	7.5	12.5	20	5x2	0.08	17.5	25.0
	KGM D 25 20	EE	S	40	1.5	35	14	11.5	12	5x3	0.15	19.0	23.5
	KGM D 25 25	EE	S	40	1.5	35	11.5	11	13	5x3	0.08	21.0	31.0
	KGM D 25 50	EE	S	40	1.5	58	17	19	20	5x3	0.15	22.5	29.0
32	KGM N 32 05	EE	E	45	3	45	7.5	8	30	6x2.5	0.08	24.0	49.0
	KGM N 32 10	EE	E	53	4	60	10	15	30	6x2.5	0.08	44.0	53.0
	KGM N 32 20	EE	E	53	3	70	7.5	20	30	6x2.5	0.08	42.5	61.0
	KGM N 32 40	EE	S	53 2)	1.5	45	13	10	25	6x4	0.08	17.0	32.0
40	KGM D 40 05	EE	E	63	3	45	7.5	8	30	6x2.5	0.08	26.0	63.5
	KGM D 40 10	EE	E	63	4	60	10	15	30	6x2.5	0.08	50.0	70.0
	KGM D 40 20	EE	E	63	3	70	7.5	20	30	6x2.5	0.08	44.5	77.0
	KGM D 40 40	EE	S	63	1.5	85	15	27.5	30	6x3.5	0.08	42.0	93.0
50	KGM D 50 10	EE	E	75	4	82	11	23	36	6x2,5	0.08	78.0	153.0
	KGM N 50 20	EE	E	85	4	82	10	23	36	6x2,5	0.08	82.0	137.0
63	KGM D 63 10	EE	E	90	4	82	11	23	36	6x2.5	0.08	86.0	200.0
	KGM D 63 20	EE	E	95	4	82	10	23	36	6x2.5	0.08	85.0	170.0

Notes
1) Position of lubrication hole not defined on circumference.
2) D1 -0.2/-0.8 is D1 -1/-1.5

Standard Screw Ends
FORM D

- “Fixed” drive end support configuration
- Designed for INA ballscrew support bearings and locknuts
- Locknut threads to 6g tolerance class
- Standard metric keyways

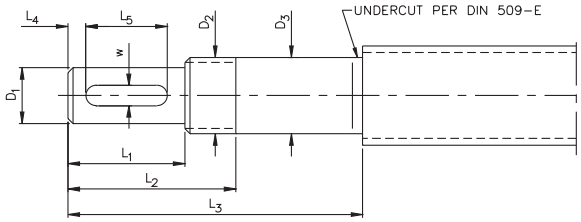

For details on part numbers, descriptive suffixes and various technical references, please refer to front of this section.
For engineering or technical information contact your local sales representative or call Distributor Sales (800)523-6572.

NOMINAL PITCH DIAMETER d_0	D_1^{k6} mm	D_2 mm	D_3^{k6} mm	L_1 mm	L_2 mm	L_3 mm	L_4 mm	KEYWAY TO DIN 6885 w x depth x L_6
16	9	M12x1	12	20	30	55	2.5	3 x 1.8 x 16
20	11	M15x1	15	23	33	58	3.5	4 x 2.5 x 16
25	14	M20x1	20	30	42	70	4	5 x 3 x 22
32	19	M25x1.5	25	40	54	82	6	6 x 3.5 x 28
40	24	M30x1.5	30	50	64	92	7	8 x 4 x 36

NOMINAL PITCH DIAMETER d_0	D_4 mm	D_5 mm	D_6 mm	D_7 mm	L_6 mm	L_7 mm	N x S mm	BEARING		LOCKNUT	MAX. AXIAL LOAD (kN)
16	55	42	22	42	8	25	3 x M6	ZKLF 1255.2RS	ZKLN 1242.2RS	ZM12	12
20	60	46	25	45	8	25	3 x M6	ZKLF 1560.2RS	ZKLN 1545.2RS	ZM15	14
25	68	53	32	52	10	28	4 x M6	ZKLF 2068.2RS	ZKLN 2052.2RS	ZM20	16
32	75	58	38	57	12	28	4 x M6	ZKLF 2575.2RS	ZKLN 2557.2RS	ZM25	20
40	80	63	45	62	12	28	6 x M6	ZKLF 3080.2RS	ZKLN 3062.2RS	ZM30	22

Notes
Bearings and locknut must be ordered separately. For more information, see INA publication ZAE.

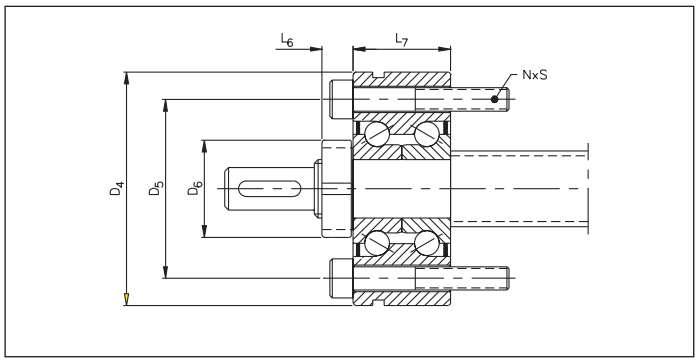

Form D with 2KLF and 2M

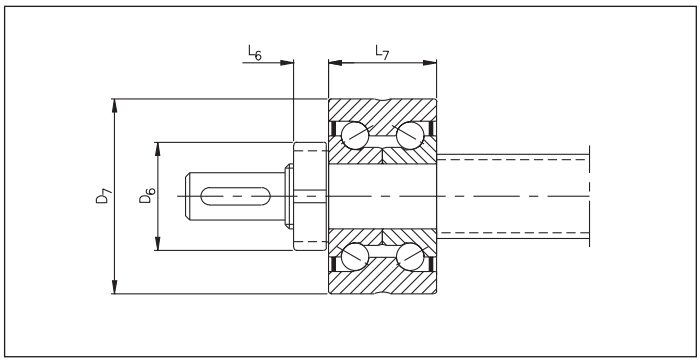

Form D with 2KLN and 2M

Standard Screw Ends
FORM W AND N AND Z

- Radial end support configurations W & N
- Designed for INA bearings and retaining rings
- Form Z - cut and chamfer only

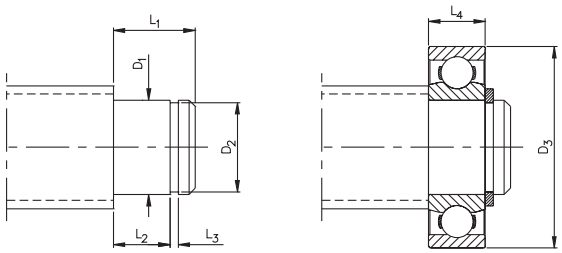

Form W

For details on part numbers, descriptive suffixes and various technical references, please refer to front of this section.
For engineering or technical information contact your local sales representative or call Distributor Sales (800)523-6572.

Form W

NOMINAL PITCH DIAMETER d_0	D_1^{k6} mm	D_2 mm	D_3 mm	L_1 mm	L_2 mm	L_3 mm	L_4 mm	BEARING	SHAFT RING PER DIN 471
16	12	11.5	28	12	8	1.1	8	6001 2RS	12x1
20	15	14.2	32	13	9	1.3	9	6002 2RS	15x1
25	20	18.8	42	16	12	1.3	12	6004 2RS	20x1.2
32	25	23.7	52	20	15	1.3	15	6205 2RS	25x1.2
40	30	28.6	62	21	16	1.6	16	6206 2RS	30x1.5
50	40	38.5	80	25	18	1.85	18	6208 2RS	40x1.75
63	55	52	100	29	21	2.15	21	6211 2RS	55x2

Notes
Bearings must be ordered separately. For more information, see INA publication 517.
Shaft rings not included.

Form N

NOMINAL PITCH DIAMETER d_0	D_1^{k6} mm	D_2 mm	D_3 mm	L_1 mm	L_2 mm	L_3 mm	L_4 mm	INA NEEDLE ROLLER BEARING	INA SNAP RING
16	12	11.5	24	18	14	1.1	13	NA 4901 2RS	WR 12
20	15	14.4	28	18	14	1.3	13	NA 4902 2RS	WR 15
25	20	19.2	37	22	18	1.3	17	NA 4904 2RS	WR 20
32	25	24	42	23	18	1.3	17	NA 4905 2RS	WR 25
40	30	29	47	23	18	1.6	17	NA 4906 2RS	WR 30
50	40	38.5	62	30	23	1.6	22	NA 4908 2RS	WR 40
63	50	48.5	62	30.5	23	1.6	22	NA 4910 2RS	WR 50

Notes
Bearings must be ordered separately. For more information, see INA publication 517.
Shaft rings not included.

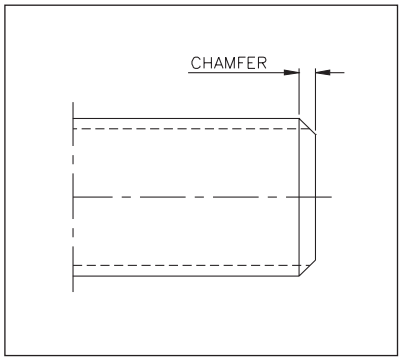

Form Z

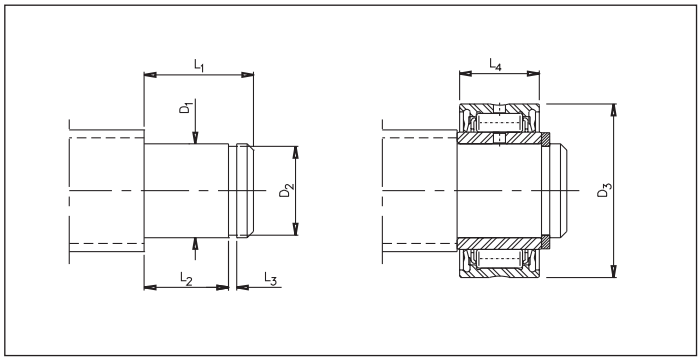

Form N

INA-HYDREL
Flat Cage Assemblies
FF, H, BF, HR SERIES

- Single row

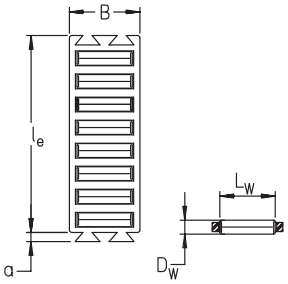

FF SERIES

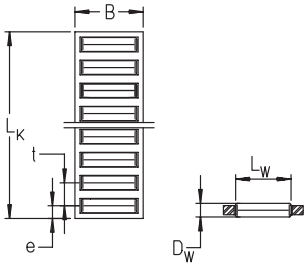

H, BF SERIES

For details on part numbers, descriptive suffixes and various technical references, please refer to front of this section.
For engineering or technical information contact your local sales representative or call Distributor Sales (800)523-6572 or Linear Sales (800)462-3399.

PART NUMBER				WGT.	B	D_W	L_W	t	e	a	L_K max.	l_3	Z_e ROLLERS PER CAGE	DYN. LOAD PER 10 ROLLERS C	STAT. LOAD PER 10 ROLLERS C_0
				g/L_K=1000 mm	mm	mm	mm	mm	mm	mm	mm	mm	Number	N	N
FF2010	–	–	–	46	10	2	6.8	–	–	2	–	32	7	11800	28000
–	H10	–	–	63	10	2	6.8	4.5	3.5	–	3000	–	–	11800	28000
FF2515	–	–	–	84	15	2.5	9.8	–	–	2.5	–	45	8	21200	52000
–	H15	–	–	120	15	2.5	9.8	5	3.5	–	3000	–	–	21200	52000
FF3020	–	–	–	148	20	3	13.8	–	–	3	–	60	9	35500	88000
–	H20	–	–	202	20	3	13.8	6	4.5	–	3000	–	–	35500	88000
–	–	BF3020	–	342	20	3	15.8	6	4.5	–	2000	–	–	39500	102000
FF3525	–	–	–	221	25	3.5	17.8	–	–	3	–	75	10	53000	132000
–	H25	–	–	294	25	3.5	17.8	7	5	–	3000	–	–	53000	132000
–	–	BF5015	–	375	15	5	11.8	8	5.5	–	2000	–	–	60000	123000
–	–	BF5023	–	530	23	5	19.8	8	5.5	–	2000	–	–	91000	211000
–	–	BF5032	–	722	32	5	27.8	8	5.5	–	2000	–	–	119000	300000
–	–	–	HR50	105	10.5	5	5	10	6.5	–	3000	–	–	30000	51000
–	–	BF7028	–	875	28	7	24	11	7.5	–	2000	–	–	165000	365000
–	–	BF7035	–	1080	35	7	30	11	7.5	–	2000	–	–	197000	455000
–	–	–	HR70	295	17	7	10	13	8.5	–	3000	–	–	82000	148000
–	–	–	HR100	598	24	10	14	17	10	–	3000	–	–	169000	295000
–	–	BF12022	–	1220	22	12	18	16	10	–	2000	–	–	260000	460000
–	–	BF12040	–	1970	40	12	36	16	10	–	2000	–	–	455000	930000

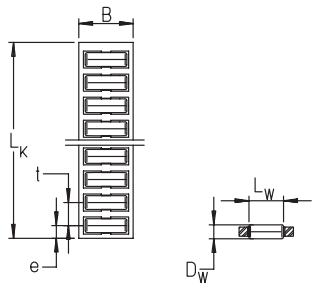

HR SERIES

Products and company names are trademarks or registered trademarks of their respective companies.

INA-HYDREL
Flat Cage Assemblies
FF..ZW, H..ZW, HR..ZW SERIES

- Double row

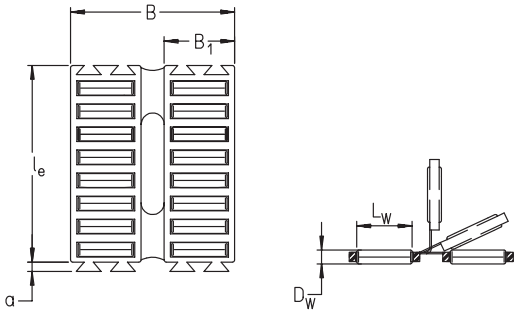

FF..ZW SERIES

For details on part numbers, descriptive suffixes and various technical references, please refer to front of this section.
For engineering or technical information contact your local sales representative or call Distributor Sales (800)523-6572 or Linear Sales (800)462-3399.

PART NUMBER			WGT.	B	B_1	D_w	L_w	t	e	a	L_k max.	l_3	Z_e ROLLERS PER CAGE	DYN. LOAD PER 10 ROLLERS C	STAT. LOAD PER 10 ROLLERS C_0
			g/L_K=1000 mm	mm	mm	mm	mm	mm	mm	mm	mm	mm	Number	N	N
FF 2025 ZWA	–	–	94	25	10	2	6.8	–	–	2	–	32	7	20200	56000
–	H 24 ZW	–	138	24	10.5	2	6.8	4.5	3.5	–	3000	–	–	20200	56000
FF 2535 ZW	–	–	182	35	15	2.5	9.8	–	–	2.4	–	45	8	36500	103000
–	H 34 ZW	–	239	33.5	14.3	2.5	9.8	5.5	4	–	3000	–	–	36500	103000
FF 3045 ZW	–	–	315	45	20	3	13.8	–	–	3	–	60	9	61000	177000
–	H 44 ZW	–	408	44	19	3	13.8	6	4.5	–	3000	–	–	61000	177000
FF 3555 ZW	–	–	464	55	25	3.5	17.8	–	–	3.2	–	75	10	90000	265000
–	H 55 ZW	–	598	55	24	3.5	17.8	7	5	–	3000	–	–	90000	265000
–	–	HR 50 ZW	215	24	10.5	5	5	10	6.5	–	3000	–	–	51000	101000
–	–	HR 70 ZW	602	40	17	7	10	13	8.5	–	3000	–	–	141000	295000
–	–	HR 100 ZW	1233	55	24	10	14	17	10	–	3000	–	–	290000	590000

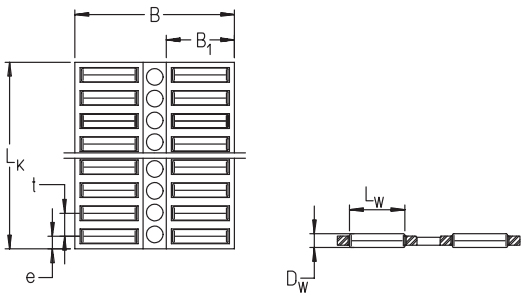

H..ZW SERIES

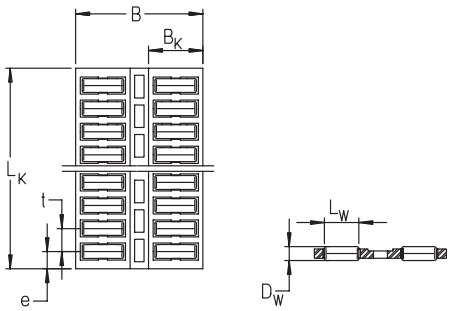

HR..ZW SERIES

INA-HYDREL
Angled Flat Cage Assemblies
FFW, HW, HRW SERIES

- Double row with 90° bend

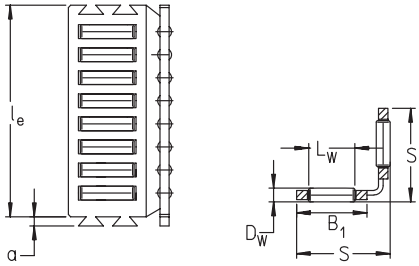

FFW SERIES

For details on part numbers, descriptive suffixes and various technical references, please refer to front of this section.
For engineering or technical information contact your local sales representative or call Distributor Sales (800)523-6572 or Linear Sales (800)462-3399.

PART NUMBER			WGT.	S	B_1	D_W	L_W	t	e	a	L_k max.	l_3	Z_e ROLLERS PER CAGE	DYN. LOAD PER 10 ROLLERS C	STAT. LOAD PER 10 ROLLERS C_0
			g/L_K=1000 mm	mm	mm	mm	mm	mm	mm	mm	mm	mm	Number	N	N
	HW10	–	219	10	8	2	4.8	4	3	–	1000	–	–	10700	27400
FFW 2025 ZWA	–	–	94	15	10	2	6.8	–	–	2	–	32	7	14300	40000
–	HW15	–	138	15	10.5	2	6.8	4.5	3.5	–	3000	–	–	14300	40000
FFW 2535	–	–	182	20.5	15	2.5	9.8	–	–	2.4	–	45	8	25500	73000
–	HW20	–	239	20	14.3	2.5	9.8	5.5	4	–	3000	–	–	25500	73000
FFW 3045	–	–	315	26	20	3	13.8	–	–	3	–	60	9	43000	125000
–	HW25	–	408	25	19	3	13.8	6	4.5	–	3000	–	–	43000	125000
FFW 3555	–	–	464	31.5	25	3.5	17.8	–	–	3.2	–	75	10	64000	187000
–	HW30	–	598	30	24	3.5	17.8	7	5	–	3000	–	–	64000	187000
–	–	HRW 50	215	15.5	10.5	5	5	10	6.5	–	3000	–	–	36500	72000
–	–	HRW 70	602	25	17	7	10	13	8.5	–	3000	–	–	99000	209000
–	–	HRW100	1233	34	24	10	14	17	10	–	3000	–	–	205000	415000

The basic load ratings are valid for the condition that the two sections of the cage are symmetrical to the load direction (see diagram below).

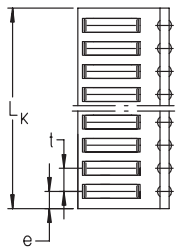

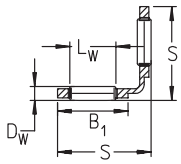

HW SERIES

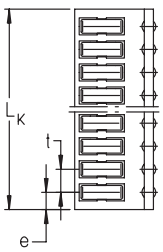

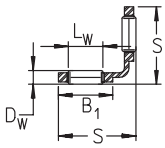

HRW SERIES

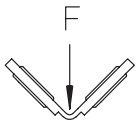

LOAD DIRECTION

NOTES

Section Contents
THIN SECTION, SLEWING RINGS & OTHER PRODUCTS

BEARING SERIES	BEARING DESCRIPTION	PAGE
INFORMATION	THIN SECTION, SLEWING RING & OTHER, GENERAL OVERVIEW	668
P / N IDENTIFICATION	THIN SECTION, SLEWING RING & OTHER	669
CSC	INCH THIN SECTION DEEP GROOVE BALL	671
CSE	INCH THIN SECTION ANGULAR CONTACT BALL	674
CSX	INCH THIN SECTION 4 POINT CONTACT BALL	676
CSCU..2RS	INCH THIN SECTION SEALED DEEP GROOVE BALL	678
CSXU..2RS	INCH THIN SECTION SEALED 4 POINT CONTACT BALL	678
VLA 20	SLEWING RING EXTERNAL GEAR LIGHT SERIES 4 POINT CONTACT BALL	679
VLI 20	SLEWING RING INTERNAL GEAR LIGHT SERIES 4 POINT CONTACT BALL	680
VLU 20	SLEWING RING NO GEAR LIGHT SERIES 4 POINT CONTACT BALL	681
VSA 20	SLEWING RING EXTERNAL GEAR STANDARD SERIES 4 POINT CONTACT BALL	682
VSI 20	SLEWING RING INTERNAL GEAR STANDARD SERIES 4 POINT CONTACT BALL	683
VSU 20	SLEWING RING NO GEAR STANDARD SERIES 4 POINT CONTACT BALL	684
VSA 25	SLEWING RING EXTERNAL GEAR STANDARD SERIES 4 POINT CONTACT BALL	685
VSI 25	SLEWING RING INTERNAL GEAR STANDARD SERIES 4 POINT CONTACT BALL	686
VSU 25	SLEWING RING NO GEAR STANDARD SERIES 4 POINT CONTACT BALL	687
VA 20	SLEWING RING EXTERNAL GEAR 4 POINT CONTACT BALL	688
VI 20	SLEWING RING INTERNAL GEAR 4 POINT CONTACT BALL	689
VU 20	SLEWING RING NO GEAR 4 POINT CONTACT BALL	690
XSA 14	SLEWING RING EXTERNAL GEAR STANDARD SERIES CROSS ROLLER	691
XSI 14	SLEWING RING INTERNAL GEAR STANDARD SERIES CROSS ROLLER	692
XSU 14	SLEWING RING NO GEAR STANDARD SERIES CROSS ROLLER	693
XA	SLEWING RING EXTERNAL GEAR CROSS ROLLER	694
XI	SLEWING RING INTERNAL GEAR CROSS ROLLER	695
XU	SLEWING RING NO GEAR CROSS ROLLER	696
WGTR	ROLLING MILL BACK UP ROLLERS	697
RLB	TENSIONER-LEVELER BACK UP ROLLERS	697
T.AR	TANDEM CYLINDRICAL ROLLER THRUST BEARINGS	698
M & V GUIDEWAYS	GUIDEWAYS FOR USE WITH FLAT CAGES	698
CONNECTING RODS	CONNECTING RODS FOR CRANKSHAFT TO PISTON ASSEMBLIES	699
RTL	ROTOR BEARINGS	699

General Information
THIN SECTION, SLEWING RINGS & OTHER PRODUCTS

PRODUCT DESCRIPTION

INA Thin Section Bearings

- Inch size series of constant cross section bearings (radial cross section is equal to axial cross section).
- Available in conrad radial, angular contact and four point contact designs.

INA Radial Ball Bearings, Type C

- Radial ball bearings (type C) are single row ball bearings. The depth of the raceway groove is about 25% of the ball diameter and includes a snap cage.

Four Point Contact Ball Bearings, Type X

- Four point contact ball bearings (type X) are single row angular contact ball bearings which can support axial loads in both directions.
- The raceways have a Gothic arch on the inner and outer ring with a contact angle of 30°. A snap cage keeps the balls apart.
- Four point contact ball bearings support moment loads as well as combined loads or pure radial and axial loads.

Angular Contact Ball Bearings, Type E

- Angular contact ball bearings of type E are self-retaining and have a contact angle α of 30°.
- The outer ring has one shoulder of larger diameter, which allows an optimum number of balls to be inserted in the bearing.

INA Slewing Rings

- Available with an outside diameter up to 1200 mm for nearly all applications.
- INA slewing rings include:
  - closing plug and safety dowel in one bearing ring
  - plastic spacers or plastic cages
  - seals
  - initial greasing
  - lubricating nipples
- Bearings are available with gear teeth on the outer ring or inner ring or without gear teeth (shown in the designation by A, I and U respectively).
- The bearing rings have through holes or threaded holes for mounting screws.
- Slewing rings can be used at operating temperatures from –25°C to +80°C.

Four Point Contact Bearings, Series V

- INA four point contact bearings can safely support medium axial, radial and tilting moment loads.
- Due to their more straightforward design, bearings of series VL.20 and VS.20 are suitable where the accuracy requirements are not so high.
- The permissible circumferential speed is 4 m/s or 5.2 m/s for short periods of time.

Crossed Roller Bearings, Series X

- INA crossed roller bearings are preloaded as standard.
- They are used when higher accuracy and rigidity of the bearing arrangement are required.
- They are suitable for applications where high radial forces and medium axial and tilting moment loads act on the bearing arrangement.
- The permissible circumferential speed is 2 m/s or 2.6 m/s for short periods of time.

Part Number Identification

THIN SECTION, SLEWING RINGS & OTHER PRODUCTS

THIN SECTION BALL BEARINGS INCH SERIES

CS

CS C A 040

PREFIX
CS Thin Section Series

CONTACT TYPE
E Angular Contact
C Radial Contact
X 4 Point Contact

CROSS SECTION HEIGHT
AA = 3/16″
A = 1/4″
B = 5/16″
C = 3/8″
D = 1/2″
F = 3/4″
G = 1″
U Non Square Section For Seals

NOMINAL SHAFT
Diameter In Tenths Of Inches

SUFFIX
2RS Increased Width With Two Seals

Part Number Identification

THIN SECTION, SLEWING RINGS & OTHER PRODUCTS

SLEWING RINGS

V A 20 0414 N ZT

V	Four Point Contact Ball Bearing
VL	Light Series 20 (Four Point Contact Ball Bearing)
VS	Series 20 (Four Point Contact Ball Bearing)
DV	Four Point Contact Bearing Insert Elements (4-p-elements)
X	Crossed Roller Bearing
XS	Series 14 (Crossed Roller Bearing)

A	External Geared
I	Internal Geared
U	Without Gear
E	Insert Element

Ball Or Roller Diameter

Pitch Circle Diameter

GEAR TEETH

N	Normalized
V	Toughened
H	Hardened

ZT	With Piloting Surface
RM	Reduced Friction For Series VL 20 & VS 20
RL 1,2,3	Reduced Clearance For VL 20
RL 1,2	Reduced Clearance For VS 20
VSP	Preloaded
KK	Cam Cage For DVE
KF	Flat Cage For DVE
KB	Strip Cage For DVE

Thin Section Conrad Ball Bearings

CSC SERIES

- Symmetric cross section thin section ball bearings
- Conrad type for radial loads
- Inch series

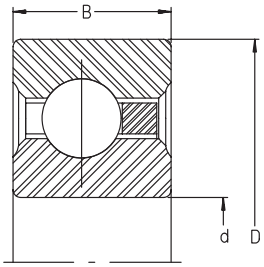

For details on part numbers, descriptive suffixes and various technical references, please refer to front of this section.
For engineering or technical information contact your local sales representative or call Distributor Sales (800)523-6572.

PART NUMBER	SHAFT d inch	SHAFT d mm	OD D inch	OD D mm	WIDTH B inch	WIDTH B mm	DYNAMIC CAPACITY lbf	DYNAMIC CAPACITY N	WEIGHT lbs	WEIGHT kg
CSCA010	1	25.4	1.375	34.925	0.1875	4.763	140	620	0.026	0.012
CSCA015	1.5	38.1	1.875	47.625	0.1875	4.763	190	850	0.039	0.018
CSCA020	2	50.8	2.5	63.5	0.25	6.35	310	1380	0.1	0.045
CSCA025	2.5	63.5	3	76.2	0.25	6.35	360	1600	0.13	0.059
CSCA030	3	76.2	3.5	88.9	0.25	6.35	400	1780	0.15	0.068
CSCA035	3.5	88.9	4	101.6	0.25	6.35	430	1910	0.18	0.082
CSCA040	4	101.6	4.5	114.3	0.25	6.35	480	2140	0.19	0.086
CSCA042	4.25	107.95	4.75	120.65	0.25	6.35	500	2220	0.2	0.091
CSCA045	4.5	114.3	5	127	0.25	6.35	510	2270	0.22	0.1
CSCA047	4.75	120.65	5.25	133.35	0.25	6.35	530	2360	0.23	0.104
CSCA050	5	127	5.5	139.7	0.25	6.35	540	2400	0.24	0.109
CSCA055	5.5	139.7	6	152.4	0.25	6.35	580	2580	0.25	0.113
CSCA060	6	152.4	6.5	165.1	0.25	6.35	610	2710	0.28	0.127
CSCA065	6.5	165.1	7	177.8	0.25	6.35	640	2850	0.3	0.136
CSCA070	7	177.8	7.5	190.5	0.25	6.35	680	3020	0.31	0.141
CSCA075	7.5	190.5	8	203.2	0.25	6.35	710	3160	0.34	0.154
CSCA080	8	203.2	8.5	215.9	0.25	6.35	740	3290	0.38	0.172
CSCA090	9	228.6	9.5	241.3	0.25	6.35	800	3560	0.44	0.2
CSCA100	10	254	10.5	266.7	0.25	6.35	860	3830	0.5	0.227
CSCA110	11	279.4	11.5	292.1	0.25	6.35	910	4050	0.52	0.236
CSCA120	12	304.8	12.5	317.5	0.25	6.35	970	4310	0.56	0.254
CSCB020	2	50.8	2.625	66.675	0.3125	7.938	440	1960	0.16	0.073
CSCB025	2.5	63.5	3.125	79.375	0.3125	7.938	510	2270	0.2	0.091
CSCB030	3	76.2	3.625	92.075	0.3125	7.938	560	2490	0.24	0.109
CSCB035	3.5	88.9	4.125	104.775	0.3125	7.938	610	2710	0.27	0.122
CSCB040	4	101.6	4.625	117.475	0.3125	7.938	680	3020	0.3	0.136
CSCB042	4.25	107.95	4.875	123.825	0.3125	7.938	690	3070	0.31	0.141
CSCB045	4.5	114.3	5.125	130.175	0.3125	7.938	720	3200	0.33	0.15
CSCB050	5	127	5.625	142.875	0.3125	7.938	770	3420	0.38	0.172
CSCB055	5.5	139.7	6.125	155.575	0.3125	7.938	820	3650	0.41	0.186
CSCB060	6	152.4	6.625	168.275	0.3125	7.938	870	3870	0.44	0.2
CSCB065	6.5	165.1	7.125	180.975	0.3125	7.938	910	4050	0.47	0.213
CSCB080	8	203.2	8.625	219.075	0.3125	7.938	1040	4630	0.57	0.259
CSCC040	4	101.6	4.75	120.65	0.375	9.525	860	3830	0.45	0.204
CSCC042	4.25	107.95	5	127	0.375	9.525	900	4000	0.47	0.213
CSCC045	4.5	114.3	5.25	133.35	0.375	9.525	920	4090	0.48	0.218
CSCC047	4.75	120.65	5.5	139.7	0.375	9.525	950	4230	0.5	0.227
CSCC050	5	127	5.75	146.05	0.375	9.525	990	4400	0.58	0.263
CSCC055	5.5	139.7	6.25	158.75	0.375	9.525	1050	4670	0.59	0.268
CSCC060	6	152.4	6.75	171.45	0.375	9.525	1100	4890	0.63	0.286
CSCC065	6.5	165.1	7.25	184.15	0.375	9.525	1150	5120	0.68	0.308
CSCC070	7	177.8	7.75	196.85	0.375	9.525	1210	5380	0.73	0.331
CSCC075	7.5	190.5	8.25	209.55	0.375	9.525	1260	5600	0.78	0.354
CSCC080	8	203.2	8.75	222.25	0.375	9.525	1320	5870	0.84	0.381
CSCC090	9	228.6	9.75	247.65	0.375	9.525	1440	6410	0.94	0.426
CSCC100	10	254	10.75	273.05	0.375	9.525	1490	6630	1.06	0.481

Thin Section Conrad Ball Bearings

CSC SERIES

- Symmetric cross section thin section ball bearings
- Conrad type for radial loads
- Inch series

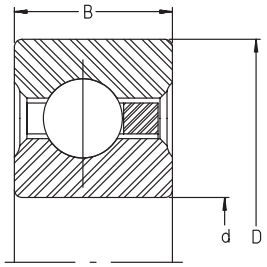

For details on part numbers, descriptive suffixes and various technical references, please refer to front of this section.
For engineering or technical information contact your local sales representative or call Distributor Sales (800)523-6572.

PART NUMBER	SHAFT d inch	SHAFT d mm	OD D inch	OD D mm	WIDTH B inch	WIDTH B mm	DYNAMIC CAPACITY lbf	DYNAMIC CAPACITY N	WEIGHT lbs	WEIGHT kg
CSCC110	11	279.4	11.75	298.45	0.375	9.525	1610	7160	1.16	0.526
CSCC120	12	304.8	12.75	323.85	0.375	9.525	1720	7650	1.25	0.567
CSCD040	4	101.6	5	127	0.5	12.7	1330	5920	0.78	0.354
CSCD042	4.25	107.95	5.25	133.35	0.5	12.7	1390	6180	0.88	0.399
CSCD045	4.5	114.3	5.5	139.7	0.5	12.7	1450	6450	0.88	0.399
CSCD047	4.75	120.65	5.75	146.05	0.5	12.7	1460	6490	0.94	0.426
CSCD050	5	127	6	152.4	0.5	12.7	1510	6720	1	0.454
CSCD055	5.5	139.7	6.5	165.1	0.5	12.7	1630	7250	1.06	0.481
CSCD060	6	152.4	7	177.8	0.5	12.7	1700	7560	1.16	0.526
CSCD065	6.5	165.1	7.5	190.5	0.5	12.7	1820	8100	1.22	0.553
CSCD070	7	177.8	8	203.2	0.5	12.7	1880	8360	1.31	0.594
CSCD075	7.5	190.5	8.5	215.9	0.5	12.7	2000	8900	1.41	0.639
CSCD080	8	203.2	9	228.6	0.5	12.7	2060	9160	1.53	0.694
CSCD090	9	228.6	10	254	0.5	12.7	2240	9960	1.72	0.78
CSCD100	10	254	11	279.4	0.5	12.7	2360	10500	1.88	0.853
CSCD110	11	279.4	12	304.8	0.5	12.7	2540	11300	2.06	0.934
CSCD120	12	304.8	13	330.2	0.5	12.7	2660	11830	2.25	1.02
CSCF040	4	101.6	5.5	139.7	0.75	19.05	2680	11920	1.9	0.862
CSCF042	4.25	107.95	5.75	146.05	0.75	19.05	2750	12230	2	0.907
CSCF045	4.5	114.3	6	152.4	0.75	19.05	2820	12540	2.1	0.952
CSCF047	4.75	120.65	6.25	158.75	0.75	19.05	2950	13120	2.2	0.998
CSCF050	5	127	6.5	165.1	0.75	19.05	3020	13430	2.3	1.043
CSCF055	5.5	139.7	7	177.8	0.75	19.05	3220	14320	2.5	1.134
CSCF060	6	152.4	7.5	190.5	0.75	19.05	3350	14900	2.7	1.224
CSCF065	6.5	165.1	8	203.2	0.75	19.05	3550	15790	2.9	1.315
CSCF075	7.5	190.5	9	228.6	0.75	19.05	3820	16990	3.4	1.542
CSCF080	8	203.2	9.5	241.3	0.75	19.05	4020	17880	3.5	1.587
CSCF090	9	228.6	10.5	266.7	0.75	19.05	4290	19080	3.9	1.769
CSCF100	10	254	11.5	292.1	0.75	19.05	4630	20590	4.3	1.95
CSCF110	11	279.4	12.5	317.5	0.75	19.05	4890	21750	4.8	2.177
CSCF120	12	304.8	13.5	342.9	0.75	19.05	5160	22950	5.2	2.358
CSCF140	14	355.6	15.5	393.7	0.75	19.05	5700	25350	6	2.721
CSCG042	4.25	107.95	6.25	158.75	1	25.4	4430	19700	3.8	1.723
CSCG047	4.75	120.65	6.75	171.45	1	25.4	4870	21660	4.1	1.859
CSCG050	5	127	7	177.8	1	25.4	5020	22330	4.3	1.95
CSCG055	5.5	139.7	7.5	190.5	1	25.4	5240	23310	4.7	2.132
CSCG060	6	152.4	8	203.2	1	25.4	5610	24950	5.1	2.313
CSCG065	6.5	165.1	8.5	215.9	1	25.4	5760	25620	5.4	2.449
CSCG070	7	177.8	9	228.6	1	25.4	6120	27220	5.8	2.63
CSCG075	7.5	190.5	9.5	241.3	1	25.4	6270	27890	6.1	2.766
CSCG080	8	203.2	10	254	1	25.4	6640	29530	6.5	2.948
CSCG090	9	228.6	11	279.4	1	25.4	7080	31490	7.2	3.265
CSCG100	10	254	12	304.8	1	25.4	7530	33490	7.9	3.583
CSCG110	11	279.4	13	330.2	1	25.4	8040	35760	8.6	3.9
CSCG120	12	304.8	14	355.6	1	25.4	8490	37760	9.3	4.218
CSCG140	14	355.6	16	406.4	1	25.4	9300	41370	10.8	4.898

Thin Section
Conrad Ball Bearings
CSC SERIES

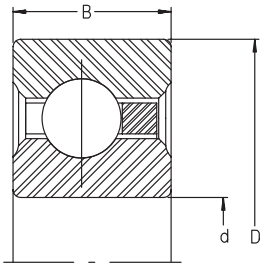

- Symmetric cross section thin section ball bearings
- Conrad type for radial loads
- Inch series

For details on part numbers, descriptive suffixes and various technical references, please refer to front of this section.
For engineering or technical information contact your local sales representative or call Distributor Sales (800)523-6572.

PART NUMBER	SHAFT d inch	SHAFT d mm	OD D inch	OD D mm	WIDTH B inch	WIDTH B mm	DYNAMIC CAPACITY lbf	DYNAMIC CAPACITY N	WEIGHT lbs	WEIGHT kg
CSCG160	16	406.4	18	457.2	1	25.4	10100	44920	12.3	5.578
CSCG180	18	457.2	20	508	1	25.4	10900	48480	13.7	6.213
CSCG200	20	508	22	558.8	1	25.4	11700	52040	18.8	8.526
CSCG250	25	635	27	685.8	1	25.4	13400	59600	19.5	8.844
CSCG300	30	762	32	812.8	1	25.4	15100	67160	23.3	10.567

Thin Section Angular Contact Ball Bearings

CSE SERIES

- Symmetric cross section angular contact ball bearings
- Inch series

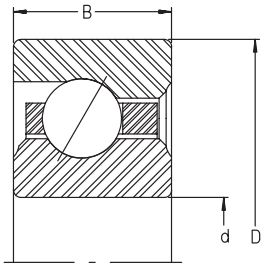

For details on part numbers, descriptive suffixes and various technical references, please refer to front of this section.
For engineering or technical information contact your local sales representative or call Distributor Sales (800)523-6572.

PART NUMBER	SHAFT d inch	SHAFT d mm	OD D inch	OD D mm	WIDTH B inch	WIDTH B mm	DYNAMIC CAPACITY lbf	DYNAMIC CAPACITY N	WEIGHT lbs	WEIGHT kg
CSEA010	1	25.4	1.375	34.93	0.1875	4.76	150	670	0.025	0.011
CSEA015	1.5	38.1	1.875	47.63	0.1875	4.76	200	890	0.038	0.017
CSEA020	2	50.8	2.5	63.5	0.25	6.35	320	1420	0.1	0.045
CSEA025	2.5	63.5	3	76.2	0.25	6.35	380	1690	0.12	0.054
CSEA030	3	76.2	3.5	88.9	0.25	6.35	420	1870	0.14	0.063
CSEA035	3.5	88.9	4	101.6	0.25	6.35	460	2050	0.17	0.077
CSEA040	4	101.6	4.5	114.3	0.25	6.35	500	2220	0.19	0.086
CSEA045	4.25	107.95	4.75	120.65	0.25	6.35	510	2270	0.2	0.091
CSEA050	4.5	114.3	5	127	0.25	6.35	530	2360	0.21	0.095
CSEA047	4.75	120.65	5.25	133.35	0.25	6.35	560	2490	0.22	0.1
CSEA050	5	127	5.5	139.7	0.25	6.35	570	2540	0.23	0.104
CSEA060	6	152.4	6.5	165.1	0.25	6.35	640	2850	0.28	0.127
CSEA065	6.5	165.1	7	177.8	0.25	6.35	680	3020	0.3	0.136
CSEA075	7.5	190.5	8	203.2	0.25	6.35	740	3290	0.34	0.154
CSEA100	10	254	10.5	266.7	0.25	6.35	890	3960	0.45	0.204
CSEB020	2	50.8	2.625	66.68	0.3125	7.94	460	2050	0.15	0.068
CSEB025	2.5	63.5	3.125	79.38	0.3125	7.94	530	2360	0.19	0.086
CSEB030	3	76.2	3.625	92.08	0.3125	7.94	600	2670	0.22	0.1
CSEB035	3.5	88.9	4.125	104.78	0.3125	7.94	650	2890	0.27	0.122
CSEB040	4	101.6	4.625	117.48	0.3125	7.94	710	3160	0.3	0.136
CSEB042	4.25	107.95	4.875	123.83	0.3125	7.94	730	3250	0.31	0.141
CSEB060	6	152.4	6.625	168.28	0.3125	7.94	910	4050	0.44	0.2
CSEB065	6.5	165.1	7.125	180.98	0.3125	7.94	960	4270	0.47	0.213
CSEB090	9	228.6	9.625	244.48	0.3125	7.94	1180	5250	0.64	0.29
CSEC040	4	101.6	4.75	120.65	0.375	9.53	930	4140	0.44	0.2
CSEC040	4.5	114.3	5.25	133.35	0.375	9.53	1010	4490	0.49	0.222
CSEC047	4.75	120.65	5.5	139.7	0.375	9.53	1050	4670	0.51	0.231
CSEC050	5	127	5.75	146.05	0.375	9.53	1080	4800	0.54	0.245
CSEC055	5.5	139.7	6.25	158.75	0.375	9.53	1140	5070	0.58	0.263
CSEC060	6	152.4	6.75	171.45	0.375	9.53	1210	5380	0.64	0.29
CSEC070	7	177.8	7.75	196.85	0.375	9.53	1320	5870	0.74	0.336
CSEC075	7.5	190.5	8.25	209.55	0.375	9.53	1380	6140	0.78	0.354
CSEC110	11	279.4	11.75	298.45	0.375	9.53	1780	7920	1.14	0.517
CSED040	4	101.6	5	127	0.5	12.7	1390	6180	0.8	0.363
CSED042	4.25	107.95	5.25	133.35	0.5	12.7	1450	6450	0.84	0.381
CSED045	4.5	114.3	5.5	139.7	0.5	12.7	1510	6720	0.88	0.399
CSED047	4.75	120.65	5.75	146.05	0.5	12.7	1570	6980	0.93	0.422
CSED050	5	127	6	152.4	0.5	12.7	1630	7250	0.98	0.444
CSED055	5.5	139.7	6.5	165.1	0.5	12.7	1700	7560	1.06	0.481
CSED060	6	152.4	7	177.8	0.5	12.7	1820	8100	1.15	0.522
CSED065	6.5	165.1	7.5	190.5	0.5	12.7	1880	8360	1.24	0.562
CSED070	7	177.8	8	203.2	0.5	12.7	2000	8900	1.33	0.603
CDED075	7.5	190.5	8.5	215.9	0.5	12.7	2060	9160	1.42	0.644
CSED080	8	203.2	9	228.6	0.5	12.7	2180	9700	1.52	0.689
CSED090	9	228.6	10	254	0.5	12.7	2300	10230	1.69	0.766
CSEF047	4.75	120.65	6.25	158.75	0.75	19.05	3150	14010	2.26	1.025

Thin Section Angular Contact Ball Bearings

CSE SERIES

- Symmetric cross section angular contact ball bearings
- Inch series

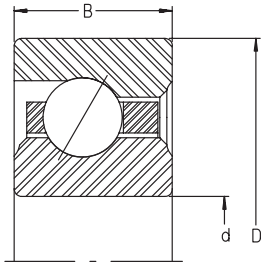

For details on part numbers, descriptive suffixes and various technical references, please refer to front of this section.
For engineering or technical information contact your local sales representative or call Distributor Sales (800)523-6572.

PART NUMBER	SHAFT d inch	SHAFT d mm	OD D inch	OD D mm	WIDTH B inch	WIDTH B mm	DYNAMIC CAPACITY lbf	DYNAMIC CAPACITY N	WEIGHT lbs	WEIGHT kg
CSEF055	5.5	139.7	7	177.8	0.75	19.05	3420	15210	2.59	1.175
CSEF060	6	152.4	7.5	190.5	0.75	19.05	3620	16100	2.72	1.234
CSEF065	6.5	165.1	8	203.2	0.75	19.05	3750	16680	2.94	1.333
CSEF075	7.5	190.5	9	228.6	0.75	19.05	4090	18190	3.39	1.537
CSEF080	8	203.2	9.5	241.3	0.75	19.05	4290	19080	3.61	1.637
CSEF090	9	228.6	10.5	266.7	0.75	19.05	4630	20590	3.95	1.791
CSEF100	10	254	11.5	292.1	0.75	19.05	4890	21750	4.4	1.995
CSEF120	12	304.8	13.5	342.9	0.75	19.05	5500	24460	5.2	2.358
CSEG042	4.25	107.95	6.25	158.75	1	25.4	4360	19390	3.83	1.737
CSEG060	6	152.4	8	203.2	1	25.4	5830	25930	5.07	2.299
CSEG065	6.5	165.1	8.5	215.9	1	25.4	6120	27220	5.41	2.454
CSEG075	7.5	190.5	9.5	241.3	1	25.4	6640	29530	6.2	2.812
CSEG080	8	203.2	10	254	1	25.4	6940	30870	6.54	2.966
CSEG090	9	228.6	11	279.4	1	25.4	7450	33140	7.22	3.274
CSEG120	12	304.8	14	355.6	1	25.4	8860	39410	9.47	4.295
CSEG140	14	355.6	16	406.4	1	25.4	9740	43320	10.9	4.943
CSEG160	16	406.4	18	457.2	1	25.4	10600	47150	12.4	5.624
CSEG180	18	457.2	20	508	1	25.4	11400	50710	13.8	6.259
CSEG200	20	508	22	558.8	1	25.4	12300	54710	15.2	6.893
CSEG250	25	635	27	685.8	1	25.4	14100	62720	18.8	8.526
CSEG300	30	762	32	812.8	1	25.4	15900	70720	22.5	10.204

Thin Section
4 Point Contact Ball Bearings
CSX SERIES

- Symmetric cross section 4 point contact ball bearings
- Inch series

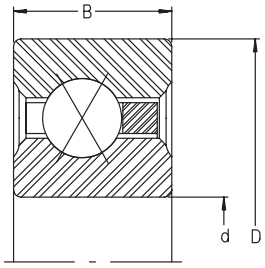

For details on part numbers, descriptive suffixes and various technical references, please refer to front of this section.
For engineering or technical information contact your local sales representative or call Distributor Sales (800)523-6572.

PART NUMBER	SHAFT d inch	SHAFT d mm	OD D inch	OD D mm	WIDTH B inch	WIDTH B mm	DYNAMIC CAPACITY lbf	DYNAMIC CAPACITY N	WEIGHT lbs	WEIGHT kg
CSXA010	1	25.4	1.375	34.925	0.1875	4.763	140	620	0.026	0.012
CSXA015	1.5	38.1	1.875	47.625	0.1875	4.763	190	850	0.039	0.018
CSXA020	2	50.8	2.5	63.5	0.25	6.35	310	1380	0.1	0.045
CSXA025	2.5	63.5	3	76.2	0.25	6.35	360	1600	0.13	0.059
CSXA030	3	76.2	3.5	88.9	0.25	6.35	400	1780	0.15	0.068
CSXA035	3.5	88.9	4	101.6	0.25	6.35	430	1910	0.18	0.082
CSXA040	4	101.6	4.5	114.3	0.25	6.35	480	2140	0.19	0.086
CSXA042	4.25	107.95	4.75	120.65	0.25	6.35	500	2220	0.2	0.091
CSXA045	4.5	114.3	5	127	0.25	6.35	510	2270	0.22	0.1
CSXA047	4.75	120.65	5.25	133.35	0.25	6.35	530	2360	0.23	0.104
CSXA050	5	127	5.5	139.7	0.25	6.35	540	2400	0.24	0.109
CSXA055	5.5	139.7	6	152.4	0.25	6.35	580	2580	0.25	0.113
CSXA060	6	152.4	6.5	165.1	0.25	6.35	610	2710	0.28	0.127
CSXA065	6.5	165.1	7	177.8	0.25	6.35	640	2850	0.3	0.136
CSXA070	7	177.8	7.5	190.5	0.25	6.35	680	3020	0.31	0.141
CSXA120	12	304.8	12.5	317.5	0.25	6.35	970	4310	0.56	0.254
CSXB020	2	50.8	2.625	66.675	0.3125	7.938	440	1960	0.16	0.073
CSXB025	2.5	63.5	3.125	79.375	0.3125	7.938	510	2270	0.19	0.086
CSXB030	3	76.2	3.625	92.075	0.3125	7.938	560	2490	0.24	0.109
CSXB035	3.5	88.9	4.125	104.775	0.3125	7.938	610	2710	0.27	0.122
CSXB040	4	101.6	4.625	117.475	0.3125	7.938	680	3020	0.3	0.136
CSXB042	4.25	107.95	4.875	123.825	0.3125	7.938	690	3070	0.31	0.141
CSXB045	4.5	114.3	5.125	130.175	0.3125	7.938	720	3200	0.33	0.15
CSXB055	5.5	139.7	6.125	155.575	0.3125	7.938	820	3650	0.41	0.186
CSXB060	6	152.4	6.625	168.275	0.3125	7.938	870	3870	0.44	0.2
CSXB065	6.5	165.1	7.125	180.975	0.3125	7.938	910	4050	0.47	0.213
CSXB070	7	177.8	7.625	193.675	0.3125	7.938	960	4270	0.5	0.227
CSXB075	7.5	190.5	8.125	206.375	0.3125	7.938	1000	4450	0.53	0.24
CSXB080	8	203.2	8.625	219.075	0.3125	7.938	1040	4630	0.57	0.259
CSXB090	9	228.6	9.625	244.475	0.3125	7.938	1130	5030	0.66	0.299
CSXB160	16	406.4	16.625	422.275	0.3125	7.938	1630	7300	1.2	0.544
CSXC040	4	101.6	4.75	120.65	0.375	9.525	860	3830	0.45	0.204
CSXC045	4.5	114.3	5.25	133.35	0.375	9.525	920	4090	0.48	0.218
CSXC050	5	127	5.75	146.05	0.375	9.525	990	4400	0.58	0.263
CSXC055	5.5	139.7	6.25	158.75	0.375	9.525	1050	4670	0.59	0.268
CSXC060	6	152.4	6.75	171.45	0.375	9.525	1100	4890	0.63	0.286
CSXC065	6.5	165.1	7.25	184.15	0.375	9.525	1150	5100	0.68	0.308
CSXC070	7	177.8	7.75	196.85	0.375	9.525	1210	5400	0.73	0.331
CSXC080	8	203.2	8.75	222.25	0.375	9.525	1320	5900	0.84	0.381
CSXC090	9	228.6	9.75	247.65	0.375	9.525	1440	6400	0.94	0.426
CSXC100	10	254	10.75	273.05	0.375	9.525	1490	6600	1.06	0.481
CSXC110	11	279.4	11.75	298.45	0.375	9.525	1610	7200	1.16	0.526
CSXC120	12	304.8	12.75	323.85	0.375	9.525	1720	7700	1.25	0.567
CSXC160	16	406.4	16.75	425.45	0.375	9.525	2070	9200	1.73	0.785
CSXD040	4	101.6	5	127	0.5	12.7	1330	5900	0.78	0.354
CSXD042	4.25	107.95	5.25	133.35	0.5	12.7	1390	6200	0.83	0.376

Thin Section
4 Point Contact Ball Bearings
CSX SERIES

- Symmetric cross section 4 point contact ball bearings
- Inch series

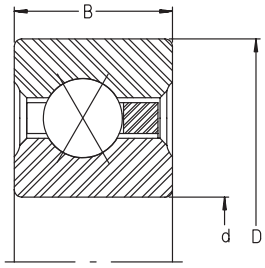

For details on part numbers, descriptive suffixes and various technical references, please refer to front of this section.
For engineering or technical information contact your local sales representative or call Distributor Sales (800)523-6572.

PART NUMBER	SHAFT d inch	SHAFT d mm	OD D inch	OD D mm	WIDTH B inch	WIDTH B mm	DYNAMIC CAPACITY lbf	DYNAMIC CAPACITY N	WEIGHT lbs	WEIGHT kg
CSXD045	4.5	114.3	5.5	139.7	0.5	12.7	1450	6400	0.88	0.399
CSXD050	5	127	6	152.4	0.5	12.7	1510	6700	1	0.454
CSXD055	5.5	139.7	6.5	165.1	0.5	12.7	1630	7300	1.06	0.481
CSXD060	6	152.4	7	177.8	0.5	12.7	1700	7600	1.16	0.526
CSXD065	6.5	165.1	7.5	190.5	0.5	12.7	1820	8100	1.22	0.553
CSXD070	7	177.8	8	203.2	0.5	12.7	1880	8400	1.31	0.594
CSXD075	7.5	190.5	8.5	215.9	0.5	12.7	2000	8900	1.41	0.639
CSXD080	8	203.2	9	228.6	0.5	12.7	2060	9200	1.53	0.694
CSXD090	9	228.6	10	254	0.5	12.7	2240	10000	1.72	0.78
CSXD100	10	254	11	279.4	0.5	12.7	2360	10500	1.88	0.853
CSXD110	11	279.4	12	304.8	0.5	12.7	2540	11300	2.06	0.934
CSXD120	12	304.8	13	330.2	0.5	12.7	2660	11800	2.25	1.02
CSXD140	14	355.6	15	381	0.5	12.7	2970	13200	2.73	1.238
CSXD180	18	457.2	19	482.6	0.5	12.7	3450	15300	3.48	1.578
CSXD250	25	635	26	660.4	0.5	12.7	4300	19100	4.79	2.172
CSXF040	4	101.6	5.5	139.7	0.75	19.05	2680	11900	1.9	0.862
CSXF045	4.5	114.3	6	152.4	0.75	19.05	2820	12500	2.1	0.952
CSXF047	4.75	120.65	6.25	158.75	0.75	19.05	2950	13100	2.2	0.998
CSXF050	5	127	6.5	165.1	0.75	19.05	3020	13400	2.3	1.043
CSXF055	5.5	139.7	7	177.8	0.75	19.05	3220	14300	2.5	1.134
CSXF060	6	152.4	7.5	190.5	0.75	19.05	3350	14900	2.7	1.224
CSXF065	6.5	165.1	8	203.2	0.75	19.05	3550	15800	2.9	1.315
CSXF075	7.5	190.5	9	228.6	0.75	19.05	3820	17000	3.4	1.542
CSXF080	8	203.2	9.5	241.3	0.75	19.05	4020	17900	3.5	1.587
CSXF090	9	228.6	10.5	266.7	0.75	19.05	4290	19100	3.9	1.769
CSXF100	10	254	11.5	292.1	0.75	19.05	4630	20600	4.3	1.95
CSXF110	11	279.4	12.5	317.5	0.75	19.05	4890	21800	4.8	2.177
CSXF120	12	304.8	13.5	342.9	0.75	19.05	5160	23000	5.2	2.358
CSXF140	14	355.6	15.5	393.7	0.75	19.05	5700	25400	6	2.721
CSXG045	4.5	114.3	6.5	165.1	1	25.4	4650	20700	4	1.814
CSXG050	5	127	7	177.8	1	25.4	5020	22300	4.3	1.95
CSXG060	6	152.4	8	203.2	1	25.4	5610	25000	5.1	2.313
CSXG070	7	177.8	9	228.6	1	25.4	6120	27200	5.8	2.63
CSXG075	7.5	190.5	9.5	241.3	1	25.4	6270	27900	6.1	2.766
CSXG080	8	203.2	10	254	1	25.4	6640	29500	6.5	2.948
CSXG090	9	228.6	11	279.4	1	25.4	7080	31500	7.2	3.265
CSXG100	10	254	12	304.8	1	25.4	7530	33500	7.9	3.583
CSXG110	11	279.4	13	330.2	1	25.4	8040	35800	8.6	3.9
CSXG120	12	304.8	14	355.6	1	25.4	8490	37800	9.3	4.218
CSXG140	14	355.6	16	406.4	1	25.4	9300	41400	10.8	4.898
CSXG160	16	406.4	18	457.2	1	25.4	10100	44900	12.3	5.578
CSXG180	18	457.2	20	508	1	25.4	10900	48500	13.7	6.213
CSXG200	20	508	22	558.8	1	25.4	11700	52000	18.8	8.526
CSXG250	25	635	27	685.8	1	25.4	13400	59600	19.5	8.844
CSXG300	30	762	32	812.8	1	25.4	15100	67200	23.3	10.567
CSXG350	35	889	37	939.8	1	25.4	16700	74300	27.1	12.29

Thin Section, 4 Point Contact Ball Bearings With Seals

CSXU SERIES

- Inch series

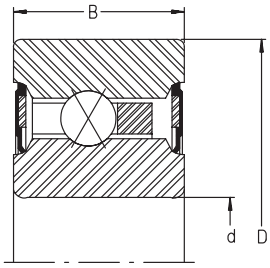

For details on part numbers, descriptive suffixes and various technical references, please refer to front of this section.
For engineering or technical information contact your local sales representative or call Distributor Sales (800)523-6572.

PART NUMBER	SHAFT d inch	SHAFT d mm	OD D inch	OD D mm	WIDTH B inch	WIDTH B mm	DYNAMIC CAPACITY lbf	DYNAMIC CAPACITY N	WEIGHT lbs	WEIGHT kg
CSXU0402RS	4	101.6	4.75	120.65	0.5	12.7	860	3820	0.55	0.250
CSXU0452RS	4.5	114.3	5.25	133.35	0.5	12.7	920	4090	0.61	0.277
CSXU0502RS	5	127	5.75	146.05	0.5	12.7	990	4400	0.68	0.308
CSXU0652RS	6.5	165.1	7.25	184.15	0.5	12.7	1100	4890	0.87	0.395
CSXU0752RS	7.5	190.5	8.25	209.55	0.5	12.7	1210	5380	0.99	0.449
CSXU0802RS	8	203.2	8.75	222.25	0.5	12.7	1320	5870	1.06	0.481
CSXU0902RS	9	228.6	9.75	247.65	0.5	12.7	1440	6410	1.18	0.535
CSXU1002RS	10	254	10.75	273.05	0.5	12.7	1490	6630	1.31	0.594
CSXU1102RS	11	279.4	11.75	298.45	0.5	12.7	1610	7160	1.43	0.649

Thin Section, Conrad Ball Bearings With Seals

CSCU SERIES

- Inch series

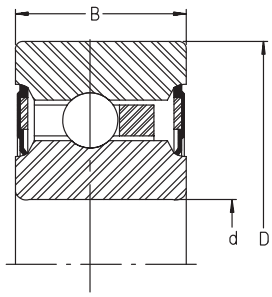

For details on part numbers, descriptive suffixes and various technical references, please refer to front of this section.
For engineering or technical information contact your local sales representative or call Distributor Sales (800)523-6572.

PART NUMBER	SHAFT d inch	SHAFT d mm	OD D inch	OD D mm	WIDTH B inch	WIDTH B mm	DYNAMIC CAPACITY lbf	DYNAMIC CAPACITY N	WEIGHT lbs	WEIGHT kg
CSCU0402RS	4	101.6	4.75	120.65	0.5	12.7	860	3820	0.55	0.250
CSCU0452RS	4.5	114.3	5.25	133.35	0.5	12.7	920	4090	0.61	0.277
CSCU0502RS	5	127	5.75	146.05	0.5	12.7	990	4400	0.68	0.308
CSCU0652RS	6.5	165.1	7.25	184.15	0.5	12.7	1100	4890	0.87	0.395
CSCU0752RS	7.5	190.5	8.25	209.55	0.5	12.7	1210	5380	0.99	0.449
CSCU0802RS	8	203.2	8.75	222.25	0.5	12.7	1320	5870	1.06	0.481
CSCU0902RS	9	228.6	9.75	247.65	0.5	12.7	1440	6410	1.18	0.535
CSCU1002RS	10	254	10.75	273.05	0.5	12.7	1490	6630	1.31	0.594
CSCU1102RS	11	279.4	11.75	298.45	0.5	12.7	1610	7160	1.43	0.649

Slewing Ring Bearings
VLA SERIES

- Light series 20
- With external gear teeth – metric module
- Four point contact ball type

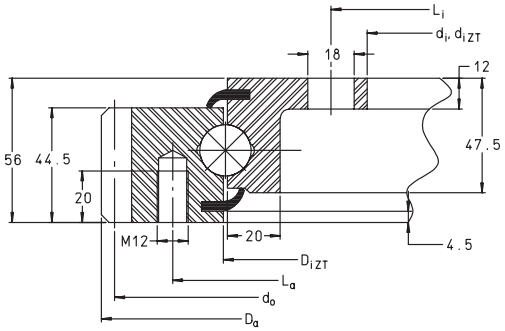

For details on part numbers, descriptive suffixes and various technical references, please refer to front of this section.
For engineering or technical information contact your local sales representative or call Distributor Sales (800)523-6572.

PART NUMBER	d_i inch	d_i mm	$d_{i\,ZT}$ mm	D_a inch	D_a mm	$D_{i\,ZT}$ mm	WGT. lbs	WGT. kg	L_a inch	L_a mm	n_a	L_i inch	L_i mm	n_i
VLA20 0414 N	11.969	304	306	19.815	503.3	417	65.0	29.5	17.913	455	10	13.071	332	12
VLA20 0544 N	17.087	434	436	25.209	640.3	547	91.5	41.5	23.032	585	14	18.189	462	14
VLA20 0644 N	21.024	534	536	29.224	742.3	647	106.9	48.5	26.969	685	16	22.126	562	16
VLA20 0744 N	24.961	634	636	32.996	838.1	747	120.2	54.5	30.906	785	18	26.063	662	16
VLA20 0844 N	28.898	734	736	37.406	950.1	847	144.4	65.5	34.843	885	18	30.000	762	18
VLA20 0944 N	32.835	834	836	41.185	1046.1	947	157.7	71.5	38.780	985	20	33.937	862	20
VLA20 1094 N	38.740	984	986	47.169	1198.1	1097	184.1	83.5	44.685	1135	22	39.843	1012	20

CONTINUED FROM ABOVE

PART NUMBER	RAD. LOAD LIMIT lbf	RAD. LOAD LIMIT kN	d_0 inch	d_0 mm	m	z	$F_{z\,norm}$ lbf	$F_{z\,norm}$ kN	$F_{z\,max}$ lbf	$F_{z\,max}$ kN	AXIAL DYN. CAP. lbf	AXIAL DYN. CAP. kN	AXIAL STAT. CAP. lbf	AXIAL STAT. CAP. kN	RAD. DYN. CAP. lbf.	RAD. DYN. CAP. kN	RAD. STAT. CAP. lbf	RAD. STAT. CAP. kN
VLA20 0414 N	9300	41.3	19.5	495	5	99	3600	15.9	5300	23.6	38000	169	66000	295	25000	111	24700	110
VLA20 0544 N	13000	57.8	24.8	630	6	105	4800	21.3	7100	31.5	42500	188	87000	385	27500	123	32500	145
VLA20 0644 N	14900	66.1	28.8	732	6	122	4800	21.3	7100	31.5	45000	200	102000	455	29500	131	38500	171
VLA20 0744 N	16700	74.3	32.6	828	6	138	4800	21.3	7100	31.5	47500	211	119000	530	31000	138	44500	198
VLA20 0844 N	16700	74.3	36.9	936	8	117	6400	28.3	9400	42	50000	222	135000	600	32500	145	50000	224
VLA20 0944 N	18600	82.6	40.6	1032	8	129	6400	28.3	9400	42	52000	231	151000	670	34000	151	56000	250
VLA20 1094 N	20400	90.9	46.6	1184	8	148	6400	28.3	9400	42	55000	244	173000	770	36000	160	65000	290

Slewing Ring Bearings
VLI SERIES

- Light series 20
- With internal gear teeth – metric module
- Four point contact ball type

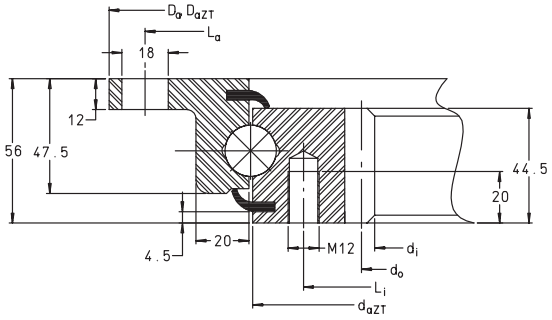

For details on part numbers, descriptive suffixes and various technical references, please refer to front of this section.
For engineering or technical information contact your local sales representative or call Distributor Sales (800)523-6572.

PART NUMBER	d_i inch	d_i mm	D_a inch	D_a mm	$D_{a\,ZT}$ mm	$d_{a\,ZT}$ mm	WGT. lbs	WGT. kg	L_a inch	L_a mm	n_a	L_i inch	L_i mm	n_i
VLI200414N	12.795	325	20.394	518	516	411	60.6	27.5	19.291	490	8	14.764	375	12
VLI200544N	17.480	444	25.512	648	646	541	83.8	38	24.409	620	10	19.882	505	16
VLI200644N	21.496	546	29.449	748	746	641	99.2	45	28.347	720	12	23.819	605	18
VLI200744N	25.512	648	33.386	848	846	741	113.6	51.5	32.284	820	12	27.756	705	20
VLI200844N	28.976	736	37.323	948	946	841	135.6	61.5	36.221	920	14	31.693	805	20
VLI200944N	33.071	840	41.260	1048	1046	941	148.8	67.5	40.158	1020	16	35.630	905	22
VLI201094N	38.740	984	47.165	1198	1196	1091	179.7	81.5	46.063	1170	16	41.535	1055	24

CONTINUED FROM ABOVE

PART NUMBER	MAX. RAD. LOAD LIMIT lbf	MAX. RAD. LOAD LIMIT kN	d_0 inch	d_0 mm	m	z	$F_{z\,norm}$ TOOTH FORCE lbf	$F_{z\,norm}$ TOOTH FORCE kN	$F_{z\,max}$ TOOTH FORCE lbf	$F_{z\,max}$ TOOTH FORCE kN	AXIAL DYN. CAP. lbf	AXIAL DYN. CAP. kN	AXIAL STAT. CAP. lbf	AXIAL STAT. CAP. kN	RAD. DYN. CAP. lbf.	RAD. DYN. CAP. kN	RAD. STAT. CAP. lbf	RAD. STAT. CAP. kN
VLI200414N	11,200	49.6	13.189	335	5	67	4,000	17.7	5,900	26.2	38,000	169	66,000	295	25,000	111	24,700	110
VLI200544N	14,900	66.1	17.953	456	6	76	5,300	23.7	7,900	35	42,500	188	87,000	385	27,500	123	32,500	145
VLI200644N	16,700	74.3	21.969	558	6	93	5,300	23.7	7,900	35	45,000	200	102,000	455	29,500	131	38,500	171
VLI200744N	18,600	82.6	25.984	660	6	110	5,300	23.7	7,900	35	47,500	211	119,000	530	31,000	138	44,500	198
VLI200844N	18,600	82.6	29.606	752	8	94	7,100	31.4	10,500	46.7	50,000	222	135,000	600	32,500	145	50,000	224
VLI200944N	20,400	90.9	33.701	856	8	107	7,100	31.4	10,500	46.7	52,000	231	151,000	670	34,000	151	56,000	250
VLI201094N	22,300	99.1	39.370	1000	8	125	7,100	31.4	10,500	46.7	55,000	244	173,000	770	36,000	160	65,000	290

Slewing Ring Bearings
VLU SERIES

- Light series 20
- Without gear teeth
- Four point contact ball type

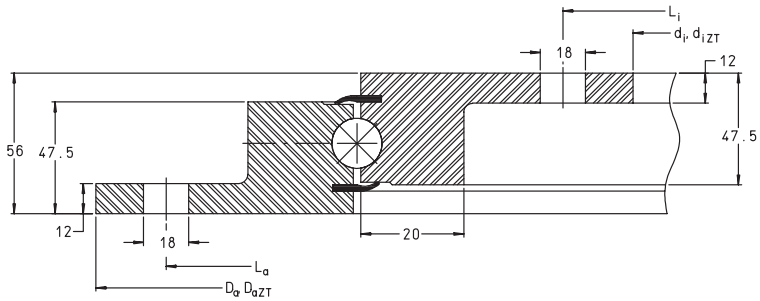

For details on part numbers, descriptive suffixes and various technical references, please refer to front of this section.
For engineering or technical information contact your local sales representative or call Distributor Sales (800)523-6572.

PART NUMBER	d_i inch	d_i mm	$d_{i\,ZT}$ mm	D_a inch	D_a mm	$D_{a\,ZT}$ mm	WGT. lbs	WGT. kg	L_a inch	L_a mm	n_a
VLU20 0414	11.969	304	306	20.394	518	516	51.8	23.5	19.291	490	8
VLU20 0544	17.087	434	436	25.512	648	646	68.4	31	24.409	620	10
VLU20 0644	21.024	534	536	29.449	748	746	80.5	36.5	28.347	720	12
VLU20 0744	24.961	634	636	33.386	848	846	93.7	42.5	32.284	820	12
VLU20 0844	28.898	734	736	37.323	948	946	105.8	48	36.221	920	14
VLU20 0944	32.835	834	836	41.260	1048	1046	119.1	54	40.158	1020	16
VLU20 1094	38.740	984	986	47.165	1198	1196	137.8	62.5	46.063	1170	16

CONTINUED FROM ABOVE

PART NUMBER	L_i inch	L_i mm	n_i	$F_{r\,max}$ lbf	$F_{r\,max}$ kN	AXIAL DYN. CAP. lbf	AXIAL DYN. CAP. kN	AXIAL STAT. CAP. lbf	AXIAL STAT. CAP. kN	RAD. DYN. CAP. lbf.	RAD. DYN. CAP. kN	RAD. STAT. CAP. lbf	RAD. STAT. CAP. kN
VLU20 0414	13.071	332	12	12,400	55	38,000	169	66,000	295	25,000	111	24,700	110
VLU20 0544	18.189	462	14	16,300	72.5	42,500	188	87,000	385	27,500	123	32,500	145
VLU20 0644	22.126	562	16	19,200	85.5	45,000	200	102,000	455	29,500	131	38,500	171
VLU20 0744	26.063	662	16	21,000	93.6	47,500	211	119,000	530	31,000	138	44,500	198
VLU20 0844	30.000	762	18	24,600	109.2	50,000	222	135,000	600	32,500	145	50,000	224
VLU20 0944	33.937	862	20	28,000	124.8	52,000	231	151,000	670	34,000	151	56,000	250
VLU20 1094	39.843	1012	20	28,000	124.8	55,000	244	173,000	770	36,000	160	65,000	290

Slewing Ring Bearings
VSA SERIES

- Standard series 20
- With external gear teeth – metric module
- four point contact ball type

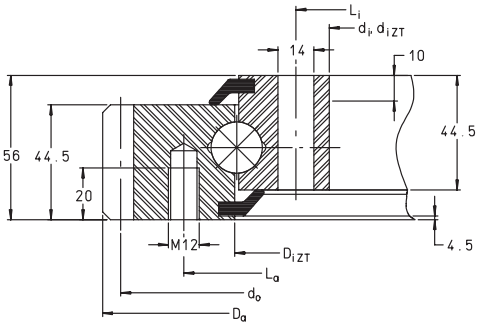

For details on part numbers, descriptive suffixes and various technical references, please refer to front of this section.
For engineering or technical information contact your local sales representative or call Distributor Sales (800)523-6572.

PART NUMBER	d_i inch	d_i mm	$d_{i\,ZT}$ mm	D_a inch	D_a mm	$D_{i\,ZT}$ mm	WGT. lbs	WGT. kg	L_a inch	L_a mm	n_a	L_i inch	L_i mm	n_i	RAD. LOAD LIMIT lbf	RAD. LOAD LIMIT kN
VSA20 0414N	13.465	342	344	19.815	503.3	417	68.4	31	17.913	455	20	14.488	368	24	18,600	82.6
VSA20 0544N	18.583	472	474	25.209	640.3	547	94.8	43	23.032	585	28	19.606	498	32	26,000	115.6
VSA20 0644N	22.520	572	574	29.224	742.3	647	114.7	52	26.969	685	32	23.543	598	36	29,500	132.2
VSA20 0744N	26.457	672	674	32.996	838.1	747	130.1	59	30.906	785	36	27.480	698	40	33,500	148.7
VSA20 0844N	30.394	772	774	37.406	950.1	847	156.6	71	34.843	885	36	31.417	798	40	33,500	148.7
VSA20 0944N	34.331	872	874	41.185	1046.1	947	169.8	77	38.780	985	40	35.354	898	44	37,000	165.2
VSA20 1094N	40.236	1022	1024	47.169	1198.1	1097	200.7	91	44.685	1135	44	41.260	1048	48	41,000	181.7

CONTINUED FROM ABOVE

PART NUMBER	d_0 inch	d_0 mm	m	z	$F_{z\,norm}$ TOOTH FORCE lbf	$F_{z\,norm}$ TOOTH FORCE kN	$F_{z\,max}$ TOOTH FORCE lbf	$F_{z\,max}$ TOOTH FORCE kN	AXIAL DYN. CAP. lbf	AXIAL DYN. CAP. kN	AXIAL STAT. CAP. lbf	AXIAL STAT. CAP. kN	RAD. DYN. CAP. lbf.	RAD. DYN. CAP. kN	RAD. STAT. CAP. lbf	RAD. STAT. CAP. kN
VSA20 0414N	19.488	495	5	99	3,600	15.9	5,300	23.6	38,000	169	126,000	560	25,000	111	56,000	248
VSA20 0544N	24.803	630	6	105	4,800	21.3	7,100	31.5	42,500	188	166,000	740	27,500	123	73,000	325
VSA20 0644N	28.819	732	6	122	4,800	21.3	7,100	31.5	45,000	200	198,000	880	29,500	131	87,000	385
VSA20 0744N	32.598	828	6	138	4,800	21.3	7,100	31.5	47,500	211	227,000	1010	31,000	138	100,000	445
VSA20 0844N	36.850	936	8	117	6,400	28.3	9,400	42	50,000	222	260,000	1150	32,500	145	115,000	510
VSA20 0944N	40.630	1032	8	129	6,400	28.3	9,400	42	52,000	231	290,000	1280	34,000	151	128,000	570
VSA20 1094N	46.614	1184	8	148	6,400	28.3	9,400	42	55,000	244	335,000	1490	36,000	160	148,000	660

Slewing Ring Bearings
VSI SERIES

- Standard series 20
- With internal gear teeth – metric module
- Four point contact ball type

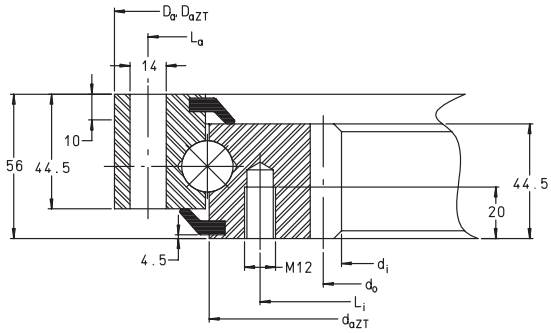

For details on part numbers, descriptive suffixes and various technical references, please refer to front of this section.
For engineering or technical information contact your local sales representative or call Distributor Sales (800)523-6572.

PART NUMBER	d_i inch	d_i mm	D_a inch	D_a mm	$D_{a\,ZT}$ mm	$d_{a\,ZT}$ mm	WGT. lbs	WGT. kg	L_a inch	L_a mm	n_a	L_i inch	L_i mm	n_i	MAX. RAD. LOAD LIMIT lbf	MAX. RAD. LOAD LIMIT kN
VSI20 0414 N	9.252	235	19.134	486	484	411	68.4	31	18.110	460	24	14.764	375	24	22,300	99.1
VSI20 0544 N	17.480	444	24.252	616	614	541	92.6	42	23.228	590	32	19.882	505	32	29,500	132.2
VSI20 0644 N	21.496	546	28.189	716	714	641	110.3	50	27.165	690	36	23.819	605	36	33,500	148.7
VSI20 0744 N	25.512	648	32.126	816	814	741	127.9	58	31.102	790	40	27.756	705	40	37,000	165.2
VSI20 0844 N	28.976	736	36.063	916	914	841	152.1	69	35.039	890	40	31.693	805	40	37,000	165.2
VSI20 0944 N	37.008	940	40.000	1016	1014	941	167.6	76	38.976	990	44	35.630	905	44	41,000	181.7
VSI20 1094 N	38.740	984	45.906	1166	1164	1091	200.7	91	44.882	1140	48	41.535	1055	48	44,500	198.2

CONTINUED FROM ABOVE

PART NUMBER	d_0 inch	d_0 mm	m	z	$F_{z\,norm}$ TOOTH FORCE lbf	$F_{z\,norm}$ TOOTH FORCE kN	$F_{z\,max}$ TOOTH FORCE lbf	$F_{z\,max}$ TOOTH FORCE kN	AXIAL DYN. CAP. lbf	AXIAL DYN. CAP. kN	AXIAL STAT. CAP. lbf	AXIAL STAT. CAP. kN	RAD. DYN. CAP. lbf.	RAD. DYN. CAP. kN	RAD. STAT. CAP. lbf	RAD. STAT. CAP. kN
VSI20 0414 N	13.189	335	5	67	4,000	17.7	5,900	26.2	38,000	169	126,000	560	25,000	111	56,000	248
VSI20 0544 N	17.953	456	6	76	5,300	23.7	7,900	35	42,500	188	166,000	740	27,500	123	73,000	325
VSI20 0644 N	21.969	558	6	93	5,300	23.7	7,900	35	45,000	200	198,000	880	29,500	131	64,000	285
VSI20 0744 N	25.984	660	6	110	5,300	23.7	7,900	35	47,500	211	227,000	1010	31,000	138	100,000	445
VSI20 0844 N	29.606	752	8	94	7,100	31.4	10,500	46.7	50,000	222	260,000	1150	32,500	145	115,000	510
VSI20 0944 N	33.701	856	8	107	7,100	31.4	10,500	46.7	52,000	231	290,000	1280	34,000	151	128,000	570
VSI20 1094 N	39.370	1000	8	125	7,100	31.4	10,500	46.7	55,000	244	335,000	1490	36,000	160	148,000	660

Slewing Ring Bearings
VSU SERIES

- Standard series 20
- Without gear teeth
- Four point contact ball type

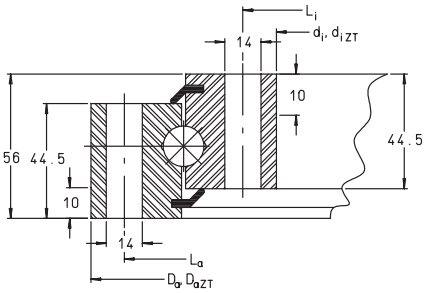

For details on part numbers, descriptive suffixes and various technical references, please refer to front of this section.
For engineering or technical information contact your local sales representative or call Distributor Sales (800)523-6572.

PART NUMBER	d_i inch	d_i mm	$d_{i\,ZT}$ mm	D_a inch	D_a mm	$D_{a\,ZT}$ mm	WGT. lbs	WGT. kg	L_a inch	L_a mm	n_a
VSU20 0414	13.465	342	344	19.134	486	484	63.9	29	18.110	460	24
VSU20 0544	18.583	472	474	24.252	616	614	81.6	37	23.228	590	32
VSU20 0644	22.520	572	574	28.189	716	714	97.0	44	27.165	690	36
VSU20 0744	26.457	672	674	32.126	816	814	114.7	52	31.102	790	40
VSU20 0844	30.394	772	774	36.063	916	914	132.3	60	35.039	890	40
VSU20 0944	34.331	872	874	40.000	1016	1014	147.7	67	38.976	990	44
VSU20 1094	40.236	1022	1024	45.906	1166	1164	169.8	77	44.882	1140	48

CONTINUED FROM ABOVE

PART NUMBER	L_i inch	L_i mm	n_i	$F_{r\,max}$ lbf	$F_{r\,max}$ kN	AXIAL DYN. CAP. lbf	AXIAL DYN. CAP. kN	AXIAL STAT. CAP. lbf	AXIAL STAT. CAP. kN	RAD. DYN. CAP. lbf.	RAD. DYN. CAP. kN	RAD. STAT. CAP. lbf	RAD. STAT. CAP. kN
VSU20 0414	14.488	368	24	22,300	99.1	38,000	169	126,000	560	25,000	111	56,000	248
VSU20 0544	19.606	498	32	29,500	132.2	42,500	188	166,000	740	27,500	123	73,000	325
VSU20 0644	23.543	598	36	33,500	148.7	45,000	200	198,000	880	29,500	131	87,000	385
VSU20 0744	27.480	698	40	37,000	165.2	47,500	211	227,000	1010	31,000	138	100,000	445
VSU20 0844	31.417	798	40	37,000	165.2	50,000	222	260,000	1150	32,500	145	115,000	510
VSU20 0944	35.354	898	44	41,000	181.7	52,000	231	290,000	1280	34,000	151	128,000	570
VSU20 1094	41.260	1048	48	44,500	198.2	55,000	244	335,000	1490	36,000	160	148,000	660

Slewing Ring Bearings
VSA SERIES

- With external gear teeth – metric module
- Four point contact ball type

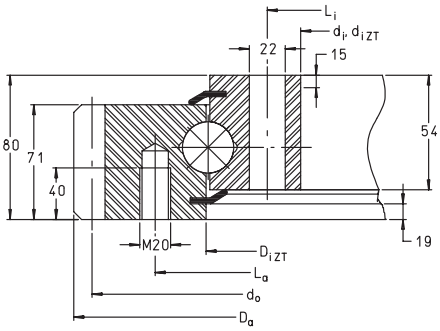

For details on part numbers, descriptive suffixes and various technical references, please refer to front of this section.
For engineering or technical information contact your local sales representative or call Distributor Sales (800)523-6572.

PART NUMBER	d_i inch	d_i mm	$d_{i\,ZT}$ mm	D_a inch	D_a mm	$D_{i\,ZT}$ mm	WGT. lbs	WGT. kg	L_a inch	L_a mm	n_a	L_i inch	L_i mm	n_i	RAD. LOAD LIMIT lbf	RAD. LOAD LIMIT kN
VSA25 0755 N	25.787	655	657	35.354	898	755	282.2	128	32.126	816	24	27.362	695	24	65,000	290.4
VSA25 0855 N	29.724	755	757	39.252	997	855	319.7	145	36.063	916	28	31.299	795	28	76,000	338.8
VSA25 0955 N	33.661	855	857	43.150	1096	955	341.8	155	40.000	1016	30	35.236	895	30	82,000	363
VSA25 1055 N	37.598	955	957	47.165	1198	1055	377.1	171	43.937	1116	30	39.173	995	30	82,000	363

CONTINUED FROM ABOVE

PART NUMBER	d_0 inch	d_0 mm	m	z	$F_{z\,norm}$ TOOTH FORCE lbf	$F_{z\,norm}$ TOOTH FORCE kN	$F_{z\,max}$ TOOTH FORCE lbf	$F_{z\,max}$ TOOTH FORCE kN	AXIAL DYN. CAP. lbf	AXIAL DYN. CAP. kN	AXIAL STAT. CAP. lbf	AXIAL STAT. CAP. kN	RAD. DYN. CAP. lbf.	RAD. DYN. CAP. kN	RAD. STAT. CAP. lbf	RAD. STAT. CAP. kN
VSA25 0755 N	34.724	882	9	98	12,400	55.1	18,000	80.2	103,000	460	510,000	2250	67,000	300	227,000	1010
VSA25 0855 N	38.622	981	9	109	12,400	55.1	18,000	80.2	109,000	485	570,000	2550	71,000	315	260,000	1150
VSA25 0955 N	42.520	1080	9	120	12,400	55.1	18,000	80.2	112,000	500	640,000	2850	74,000	330	290,000	1280
VSA25 1055 N	46.457	1180	10	118	13,800	61.2	20,000	89	117,000	520	710,000	3150	76,000	340	315,000	1410

Slewing Ring Bearings
VSI SERIES

- With internal gear teeth – metric module
- Four point contact ball type

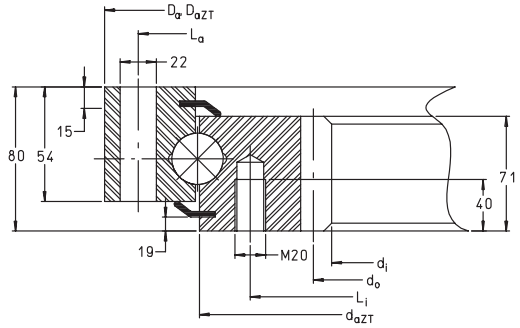

For details on part numbers, descriptive suffixes and various technical references, please refer to front of this section.
For engineering or technical information contact your local sales representative or call Distributor Sales (800)523-6572.

PART NUMBER	d_i inch	d_i mm	D_a inch	D_a mm	$D_{a\,ZT}$ mm	$d_{a\,ZT}$ mm	WGT. lbs	WGT. kg	L_a inch	L_a mm	L_i inch	L_i mm	n_a	MAX. RAD. LOAD LIMIT lbf	MAX. RAD. LOAD LIMIT kN
VSI25 0755 N	24.016	610	33.661	855	853	755	262.4	119	32.087	815	27.323	694	24	65,000	290.4
VSI25 0855 N	27.953	710	37.598	955	953	855	302.1	137	36.024	915	31.260	794	28	76,000	338.8
VSI25 0955 N	31.890	810	41.535	1055	1053	955	328.5	149	39.961	1015	35.197	894	30	82,000	363.3
VSI25 1055 N	35.827	910	45.472	1155	1153	1055	363.8	165	43.898	1115	39.134	994	30	82,000	363.3

CONTINUED FROM ABOVE

PART NUMBER	d_0 inch	d_0 mm	m	z	$F_{z\,norm}$ TOOTH FORCE lbf	$F_{z\,norm}$ TOOTH FORCE kN	$F_{z\,max}$ TOOTH FORCE lbf	$F_{z\,max}$ TOOTH FORCE kN	AXIAL DYN. CAP. lbf	AXIAL DYN. CAP. kN	AXIAL STAT. CAP. lbf	AXIAL STAT. CAP. kN	RAD. DYN. CAP. lbf.	RAD. DYN. CAP. kN	RAD. STAT. CAP. lbf	RAD. STAT. CAP. kN
VSI25 0755 N	24.803	630	10	63	15,300	68	22,200	98.9	103,000	460	510,000	2250	67,000	300	227,000	1010
VSI25 0855 N	28.740	730	10	73	15,300	68	22,200	98.9	109,000	485	570,000	2550	71,000	315	260,000	1150
VSI25 0955 N	32.677	830	10	83	15,300	68	22,200	98.9	112,000	500	640,000	2850	74,000	330	290,000	1280
VSI25 1055 N	36.614	930	10	93	15,300	68	22,200	98.9	117,000	520	710,000	3150	76,000	340	315,000	1410

Slewing Ring Bearings
VSU SERIES

- Without gear teeth
- Four point contact ball type
- 25mm ball series

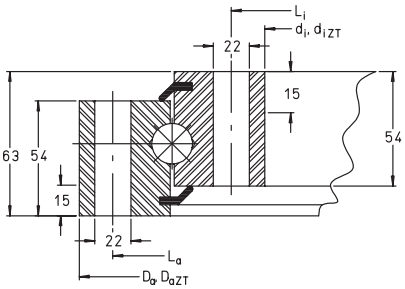

For details on part numbers, descriptive suffixes and various technical references, please refer to front of this section.
For engineering or technical information contact your local sales representative or call Distributor Sales (800)523-6572.

PART NUMBER	d_i inch	d_i mm	$d_{i\,ZT}$ mm	D_a inch	D_a mm	$D_{a\,ZT}$ mm	D_i inch	D_i mm	d_a inch	d_a mm	WGT. lbs	WGT. kg	L_a inch	L_a mm	n_a
VSU25 0755	25.787	655	657	33.661	855	853	29.646	753	29.803	757	198.5	90	32.087	815	24
VSU25 0855	29.724	755	757	37.598	955	953	33.583	853	33.740	857	222.7	101	36.024	915	28
VSU25 0955	33.661	855	857	41.535	1055	1053	37.520	953	37.677	957	253.6	115	39.961	1015	30
VSU25 1055	37.598	955	957	45.472	1155	1153	41.457	1053	41.614	1057	282.2	128	43.898	1115	30

CONTINUED FROM ABOVE

PART NUMBER	L_i inch	L_i mm	n_B	$F_{r\,max}$ lbf	$F_{r\,max}$ kN	AXIAL DYN. CAP. lbf	AXIAL DYN. CAP. kN	AXIAL STAT. CAP. lbf	AXIAL STAT. CAP. kN	RAD. DYN. CAP. lbf.	RAD. DYN. CAP. kN	RAD. STAT. CAP. lbf	RAD. STAT. CAP. kN
VSU25 0755	27.362	695	24	65,000	290.4	103,000	460	510,000	2250	67,000	300	227,000	1010
VSU25 0855	31.299	795	28	76,000	338.8	109,000	485	570,000	2550	71,000	315	260,000	1150
VSU25 0955	35.236	895	30	82,000	363.3	112,000	500	640,000	2850	74,000	330	290,000	1280
VSU25 1055	39.173	995	30	82,000	363.3	117,000	520	710,000	3150	76,000	340	315,000	1410

Slewing Ring Bearings
VA SERIES

- With external gear teeth – metric module
- Four point contact ball type
- Tables and drawing do not give details of each part
- Contact Engineering Department for aid in design

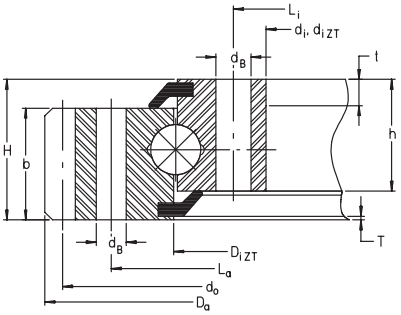

FOR REFERENCE ONLY. SHAPE MAY DIFFER

For details on part numbers, descriptive suffixes and various technical references, please refer to front of this section.
For engineering or technical information contact your local sales representative or call Distributor Sales (800)523-6572.

PART NUMBER	PART NUMBER	d_i inch	d_i mm	$d_{i\,ZT}$ mm	D_a inch	D_a mm	$D_{i\,ZT}$ mm	H inch	H mm	h inch	h mm	T inch	T mm
VA 140188V	F153515.1	5.315	135		10.211	259.36		1.378	35	1.1811	30	0.1575	4
VA 160235N		6.7323	171	173	12.5433	318.6	236	1.5748	40	1.378	35	0.0866	2.2
VA 160302N	F150431	9.4488	240		15.1181	384		1.2598	32	1.1811	30	0.1575	4
VA 250309N		9.252	235	237	16.0787	408.4	310	2.3622	60	2.0669	52.5	0.1181	3
VA 300475N		15.0394	382	384	23.5512	598.2	475	2.5591	65	2.3622	60	0.0984	2.5
VA 220596N		20.0787	510	512	28.0394	712.2	597	2.1654	55	1.8898	48	0.0984	2.5
VA 300685N		22.7165	577	579	32.6732	829.9	685	2.6772	68	2.4016	61	0.0984	2.5
VA 300980N	F97110	34.252	870		45.0394	1144		3.937	100	3.5433	90	0.5118	13

CONTINUED FROM ABOVE

PART NUMBER	PART NUMBER	t inch	t mm	RAD. LOAD LIMIT lbf	RAD. LOAD LIMIT kN	d_0 inch	d_0 mm	m	z	b inch	b mm	$F_{z\,norm}$ TOOTH FORCE lbf	$F_{z\,norm}$ TOOTH FORCE kN	$F_{z\,max}$ TOOTH FORCE lbf	$F_{z\,max}$ TOOTH FORCE kN	WGT. lbs	WGT. kg
VA 140188V	F153515.1	0.3937	10	10100	44.8	9.7638	248	4	62	1.0236	26	2340	10.4	3450	15.3	16.538	7.5
VA 160235N		0.2362	6	11200	49.6	12.2835	312	4	78	1.378	35	2470	11	3600	16.1	28.665	13
VA 160302N	F150431	0.7087	18	18600	82.6	14.8031	376	4	94	1.1811	30	2470	11	3600	16.1	29.988	13.6
VA 250309N		0.315	8	22300	99.1	15.748	400	5	80	2.0669	52.5	2900	12.9	4250	18.8	65.048	29.5
VA 300475N		0.3543	9	45500	201.6	23.1496	588	6	98	2.3622	60	5600	24.8	8100	36.1	141.12	64
VA 220596N		0.315	8	42000	187.2	27.6378	702	6	117	1.8898	48	5600	24.8	8100	36.1	136.71	62
VA 300685N		0.3937	10	65000	290.4	32.126	816	8	102	2.4016	61	7400	33.1	10800	48.2	246.96	112
VA 300980N	F97110	0.3937	10	98000	435.6	44.1732	1122	11	102	2.6772	68	14500	64.5	21100	93.8	507.15	230

CONTINUED FROM ABOVE

PART NUMBER	PART NUMBER	L_a inch	L_a mm	n_a	L_i inch	L_i mm	n_i	d_B inch	d_B mm	AXIAL DYN. CAP. lbf	AXIAL DYN. CAP. kN	AXIAL STAT. CAP. lbf	AXIAL STAT. CAP. kN	RAD. DYN. CAP. lbf.	RAD. DYN. CAP. kN	RAD. STAT. CAP. lbf	RAD. STAT. CAP. kN
VA 140188V	F153515.1	8.7402	222	16	6.063	154	16			26500	118	92000	410	17300	77	41500	185
VA 160235N		10.8268	275	12	7.6772	195	12	0.5118	13	34500	153	78000	345	22700	101	35000	156
VA 160302N	F150431	13.5039	343	20	10.315	262	20			38000	168	100000	445	24700	110	45000	200
VA 250309N		14.1339	359	24	10.1969	259	24	0.5118	13	73000	325	146000	650	48500	215	66000	295
VA 300475N		21.2598	540	36	16.1417	410	36	0.6299	16	105000	465	290000	1280	69000	305	128000	570
VA 220596N		25.5906	650	24	21.3386	542	24	0.7087	18	79000	350	270000	1210	51000	228	124000	550
VA 300685N		29.6457	753	24	24.2913	617	24	0.8661	22	119000	530	485000	2160	79000	350	218000	970
VA 300980N	F97110	41.3386	1050	26	35.8268	910	36	0.8661	22	137000	610	690000	3090	90000	400	315000	1390

Slewing Ring Bearings
VI SERIES

- With internal gear teeth – metric module
- Four point contact ball type
- Tables and drawing do not give details of each part
- Contact Engineering Department for aid in design

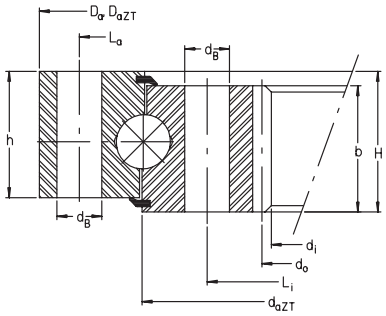

FOR REFERENCE ONLY. SHAPE MAY DIFFER

For details on part numbers, descriptive suffixes and various technical references, please refer to front of this section.
For engineering or technical information contact your local sales representative or call Distributor Sales (800)523-6572.

PART NUMBER	PART NUMBER	d_i inch	d_i mm	D_a inch	D_a mm	$D_{a\,ZT}$ mm	$d_{a\,ZT}$ mm	H inch	H mm	h inch	h mm	WGT. lbs	WGT. kg
VI 160288 N		8.504	216	13.386	340	338	287	1.535	39	1.339	34	26.5	12
VI 140326 V	F79832	9.843	250	15.039	382			2.323	59			39.7	18
VI 160420 N		13.071	332	19.134	486	484	419	1.535	39	1.339	34	52.9	24
VI 250489 N		15.118	384	22.126	562	560	488	2.165	55	1.969	50	94.8	43
VI 200575 N		18.189	462	25.866	657	655	574	2.165	55	1.693	43	121.3	55
VI 250635 N		19.843	504	28.425	722	720	634	2.323	59	2.047	52	154.4	70
VI 300720 N		22.992	584	31.969	812	810	720	2.677	68	2.402	61	220.5	100
VI 200897 N		30.551	776	38.425	976	974	896	2.362	60	1.693	43	198.5	90

CONTINUED FROM ABOVE

PART NUMBER	PART NUMBER	L_a inch	L_a mm	n_a	L_i inch	L_i mm	n_i	d_B inch	d_B mm	MAX. RAD. LOAD LIMIT lbf	MAX. RAD. LOAD LIMIT kN	d_0 inch	d_0 mm	m	z
VI 160288 N		12.756	324	20	9.921	252	20	0.354	9	7,900	35	8.819	224	4	56
VI 140326 V	F79832	14.252	362	8	11.417	290	8			5,000	22.4	10.059	255.5	3.5	73
VI 160420 N		18.189	462	16	14.882	378	16	0.551	14	14,900	66.1	13.386	340	4	85
VI 250489 N		21.181	538	40	17.323	440	40	0.551	14	37,000	165.2	15.591	396	6	66
VI 200575 N		24.606	625	16	20.669	525	16	0.709	18	28,000	124.8	18.661	474	6	79
VI 250635 N		27.165	690	24	22.835	580	24	0.709	18	42,000	187.2	20.472	520	8	65
VI 300720 N		30.709	780	40	25.984	660	40	0.709	18	70,000	312	23.622	600	8	75
VI 200897 N		37.165	944	32	33.465	850	32	0.709	18	56,000	249.6	31.181	792	8	99

CONTINUED FROM ABOVE

PART NUMBER	PART NUMBER	b inch	b mm	$F_{z\,norm}$ TOOTH FORCE lbf	$F_{z\,norm}$ TOOTH FORCE kN	$F_{z\,max}$ TOOTH FORCE lbf	$F_{z\,max}$ TOOTH FORCE kN	AXIAL DYN. CAP. lbf	AXIAL DYN. CAP. kN	AXIAL STAT. CAP. lbf	AXIAL STAT. CAP. kN	RAD. DYN. CAP. lbf.	RAD. DYN. CAP. kN	RAD. STAT. CAP. lbf	RAD. STAT. CAP. kN
VI 160288 N		1.339	34	2,750	12.3	4,000	17.8	37,000	165	94,000	420	24,300	108	42,500	190
VI 140326 V	F79832	1.575	40	2,430	10.8	3,600	16.1	18,700	83	46,500	206	17,500	78	20,900	93
VI 160420 N		1.339	34	2,750	12.3	4,000	17.8	43,000	191	139,000	620	28,000	125	62,000	275
VI 250489 N		1.969	50	6,200	27.6	9,000	40.1	89,000	395	232,000	1030	57,000	255	105,000	465
VI 200575 N		1.890	48	6,200	27.6	9,000	40.1	66,000	295	255,000	1140	43,500	193	115,000	510
VI 250635 N		2.047	52	9,000	39.9	13,000	58	98,000	435	300,000	1340	64,000	285	135,000	600
VI 300720 N		2.402	61	10,500	46.8	15,300	68	121,000	540	435,000	1940	80,000	355	196,000	870
VI 200897 N		2.087	53	9,100	40.6	13,300	59.1	79,000	350	405,000	1810	51,000	228	175,000	780

Slewing Ring Bearings
VU SERIES

- Without gear teeth
- Four point contact ball type
- Tables and drawing do not give details of each part
- Contact Engineering Department for aid in design

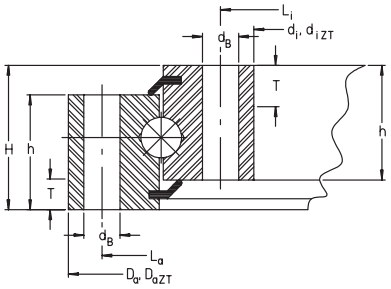

FOR REFERENCE ONLY. SHAPE MAY DIFFER

For details on part numbers, descriptive suffixes and various technical references, please refer to front of this section.
For engineering or technical information contact your local sales representative or call Distributor Sales (800)523-6572.

PART NUMBER	PART NUMBER	d_i inch	d_i mm	$d_{i\,ZT}$ mm	D_a inch	D_a mm	$D_{a\,ZT}$ mm	H inch	H mm	h inch	h mm	L_a inch	L_a mm	n_a	L_i inch	L_i mm	n_i
VU200405		13.228	336	338	18.661	474	472	1.811	46	1.614	41	17.717	450	30	14.173	360	30
VU250433		13.543	344	346	20.551	522	520	2.165	55	1.969	50	19.291	490	20	14.803	376	20
VU300574		18.425	468	470	26.772	680	879	2.677	68	2.402	61	25.197	640	20	20.000	508	20
VU360680		23.032	585	567	31.299	795	793	3.110	79	2.835	72	29.724	755	30	23.819	605	30
VU400785		26.378	670	672	35.433	900	898	3.504	89	3.110	79	33.858	860	36	27.953	710	36
VU360980		34.252	870	872	42.913	1090	1088	3.110	79	2.835	72	41.339	1050	44	35.827	910	44
VU201125		41.575	1056	1058	47.008	1194	1192	2.205	56	1.811	46	46.063	1170	80	42.520	1080	80
VU140179		4.902	124.5	126.5	9.213	234	232	1.378	35	1.181	30	8.425	214	12	5.689	144.5	12
VU200220		5.433	138	140	11.890	302	300	1.811	46	1.614	41	10.630	270	10	6.693	170	10
VU130225	F151733	7.874	200	237.6	11.417	290	–	0.945	24	0.945	24	10.630	270	6	–	–	–
VU200260		7.520	191		12.953	329	327	1.811	46	1.614	41	12.008	305	20	8.465	215	20
VU140325		10.630	270	272	14.961	380	378	1.378	35	1.181	30	14.173	360	24	11.417	290	24
VU250380		10.827	275	277	19.095	485	483	2.165	55	1.969	50	17.835	453	16	12.087	307	16

CONTINUED FROM ABOVE

PART NUMBER	PART NUMBER	WGT. lbs	WGT. kg	d_b inch	d_b mm	$F_{r\,max}$ lbf	$F_{r\,max}$ kN	AXIAL DYN. CAP. lbf	AXIAL DYN. CAP. kN	AXIAL STAT. CAP. lbf	AXIAL STAT. CAP. kN	RADIAL DYN. CAP. lbf	RADIAL DYN. CAP. kN	RADIAL STAT. CAP. lbf	RADIAL STAT. CAP. kN
VU200405		55.1	25	0.551	14	28,000	123.9	58,000	260	182,000	810	38,000	169	81,000	360
VU250433		90.4	41	0.709	18	35,000	156	83,000	370	205,000	910	55,000	243	92,000	410
VU300574		180.8	82	0.866	22	54,000	242	111,000	495	345,000	1540	73,000	325	155,000	690
VU360680		264.6	120	0.866	22	82,000	363	144,000	640	510,000	2260	93,000	415	229,000	1020
VU400785		341.8	155	0.866	22	98,000	435.6	171,000	760	700,000	3100	111,000	495	315,000	1390
VU360980		357.2	162	0.866	22	120,000	532.4	164,000	730	730,000	3250	108,000	480	330,000	1470
VU201125		156.6	71	0.551	14	74,000	330.4	85,000	380	500,000	2240	56,000	248	227,000	1010
VU140179		15.4	7	0.433	11	7,600	33.6	26,000	115	57,000	255	16,900	75	25,500	114
VU200220		35.3	16	0.709	18	17,500	78	45,000	201	98,000	435	29,500	132	44,500	197
VU130225	F151733	13.2	6			4,450	19.8	11,000	49	19,600	87	10,300	46	8,900	39.5
VU200260		33.1	15	0.551	14	18,600	82.6	49,000	217	117,000	520	32,000	143	52,000	233
VU140325		26.5	12	0.433	11	15,100	67.2	33,000	146	103,000	460	21,400	95	47,000	208
VU250380		97.0	44	0.709	18	28,000	124.8	79,000	350	180,000	800	52,000	230	81,000	360

Slewing Ring Bearings
XSA SERIES

- With external metric module gear teeth
- Crossed roller type
- 14mm roller diameter

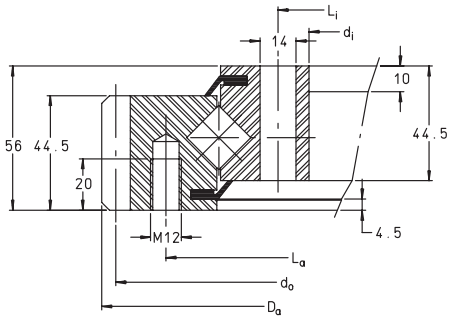

For details on part numbers, descriptive suffixes and various technical references, please refer to front of this section.
For engineering or technical information contact your local sales representative or call Distributor Sales (800)523-6572.

PART NUMBER	d_i inch	d_i mm	D_a inch	D_a mm	L_a inch	L_a mm	n_a	L_i inch	L_i mm	n_i	WGT. lbs	WGT. kg
XSA14 0414N	13.543	344	19.815	503.3	17.913	455	20	14.488	368	24	70.6	32
XSA14 0544N	18.661	474	25.209	640.3	23.032	585	28	19.606	498	32	97.0	44
XSA14 0644N	22.598	574	29.224	742.3	26.969	685	32	23.543	598	36	114.7	52
XSA14 0744N	26.535	674	32.996	838.1	30.906	785	36	27.480	698	40	130.1	59
XSA14 0844N	30.472	774	37.406	950.1	34.843	885	36	31.417	798	40	156.6	71
XSA14 0944N	34.409	874	41.185	1046.1	38.780	985	40	35.354	898	44	169.8	77
XSA14 1094N	40.315	1024	47.169	1198.1	44.685	1135	44	41.260	1048	48	200.7	91

CONTINUED FROM ABOVE

PART NUMBER	RAD. LOAD LIMIT lbf	RAD. LOAD LIMIT kN	d_0 inch	d_0 mm	m	z	AXIAL DYN. CAP. lbf	AXIAL DYN. CAP. kN	AXIAL STAT. CAP. lbf	AXIAL STAT. CAP. kN	RAD. DYN. CAP. lbf.	RAD. DYN. CAP. kN	RAD. STAT. CAP. lbf	RAD. STAT. CAP. kN
XSA14 0414N	18,600	82.6	19.488	495	5	99	51,000	229	117,000	520	33,000	146	56,000	250
XSA14 0544N	26,000	115.6	24.803	630	6	105	61,000	270	153,000	680	38,000	170	74,000	330
XSA14 0644N	29,500	132.2	28.819	732	6	122	65,000	290	180,000	800	41,500	185	89,000	395
XSA14 0744N	33,500	148.7	32.598	828	6	138	71,000	315	209,000	930	45,000	200	102,000	455
XSA14 0844N	33,500	148.7	36.850	936	8	117	76,000	340	236,000	1050	48,500	215	115,000	510
XSA14 0944N	37,000	165.2	40.630	1032	8	129	81,000	360	265,000	1170	51,000	227	130,000	580
XSA14 1094N	41,000	181.7	46.614	1184	8	148	88,000	390	305,000	1360	55,000	246	151,000	670

Slewing Ring Bearings
XSI SERIES

- With internal metric module gear teeth
- Crossed roller type
- 14mm roller diameter

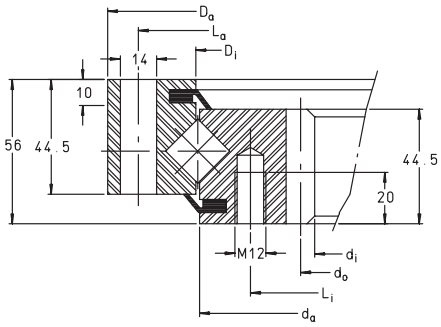

For details on part numbers, descriptive suffixes and various technical references, please refer to front of this section.
For engineering or technical information contact your local sales representative or call Distributor Sales (800)523-6572.

PART NUMBER	d_i inch	d_i mm	D_a inch	D_a mm	D_i inch	D_i mm	d_a inch	d_a mm	WGT. lbs	WGT. kg	L_a inch	L_a mm	n_a	L_i inch	L_i mm	n_i
XSI14 0414 N	12.795	325	19.055	484	16.339	415	16.181	411	68.355	31	18.110	460	24	14.764	375	24
XSI14 0544 N	17.480	444	24.173	614	21.457	545	21.299	541	94.815	43	23.228	590	32	19.882	505	32
XSI14 0644 N	21.496	546	28.110	714	25.394	645	25.236	641	110.25	50	27.165	690	36	23.819	605	36
XSI14 0744 N	25.512	648	32.047	814	29.331	745	29.173	741	127.89	58	31.102	790	40	27.756	705	40
XSI14 0844 N	28.976	736	35.984	914	33.268	845	33.110	841	152.145	69	35.039	890	40	31.693	805	40
XSI14 0944 N	33.071	840	39.921	1014	37.205	945	37.047	941	167.58	76	38.976	990	44	35.630	905	44
XSI14 1094 N	38.740	984	45.827	1164	43.110	1095	42.953	1091	200.655	91	44.882	1140	48	41.535	1055	48

CONTINUED FROM ABOVE

PART NUMBER	RAD. LOAD LIMIT lbf	RAD. LOAD LIMIT kN	d_0 inch	d_0 mm	m	z	AXIAL DYN. CAP. lbf	AXIAL DYN. CAP. kN	AXIAL STAT. CAP. lbf	AXIAL STAT. CAP. kN	RAD. DYN. CAP. lbf.	RAD. DYN. CAP. kN	RAD. STAT. CAP. lbf	RAD. STAT. CAP. kN
XSI14 0414 N	22,300	99.1	13.189	335	5	67	51,000	229	117,000	520	33,000	146	56,000	250
XSI14 0544 N	29,500	132.2	17.953	456	6	76	61,000	270	153,000	680	38,000	170	74,000	330
XSI14 0644 N	33,500	148.7	21.969	558	6	93	65,000	290	180,000	800	41,500	185	89,000	395
XSI14 0744 N	37,000	165.2	25.984	660	6	110	71,000	315	209,000	930	45,000	200	102,000	455
XSI14 0844 N	37,000	165.2	29.606	752	8	94	76,000	340	236,000	1050	48,500	215	115,000	510
XSI14 0944 N	41,000	181.7	33.701	856	8	107	81,000	360	265,000	1170	51,000	227	130,000	580
XSI14 1094 N	44,500	198.2	39.370	1000	8	125	88,000	390	305,000	1360	55,000	246	151,000	670

Slewing Ring Bearings
XSU SERIES

- Without gear teeth
- Crossed roller type
- 14mm roller diameter

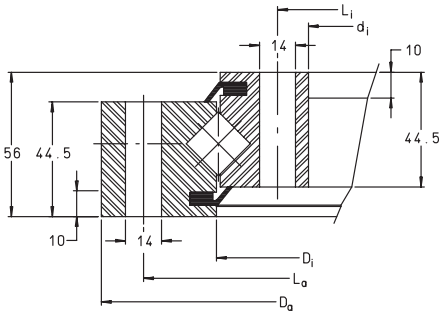

For details on part numbers, descriptive suffixes and various technical references, please refer to front of this section.
For engineering or technical information contact your local sales representative or call Distributor Sales (800)523-6572.

PART NUMBER	d_i inch	d_i mm	D_a inch	D_a mm	D_i inch	d_a mm	L_a inch	L_a mm	n_a	L_i inch	L_i mm	n_i
XSU 140414	13.543	344	19.055	484	415	413	18.110	460	24	14.488	368	24
XSU 140544	18.661	474	24.173	614	545	543	23.228	590	32	19.606	498	32
XSU 140644	22.598	574	28.110	714	645	643	27.165	690	36	23.543	598	36
XSU 140744	26.535	674	32.047	814	745	743	31.102	790	40	27.480	698	40
XSU 140844	30.472	774	35.984	914	845	843	35.039	890	40	31.417	798	40
XSU 140944	34.409	874	39.921	1014	945	943	38.976	990	44	35.354	898	44
XSU 141094	40.315	1024	45.827	1164	1095	1093	44.882	1140	48	41.260	1048	48

CONTINUED FROM ABOVE

PART NUMBER	WGT. lbs	WGT. kg	$F_{r\,max}$ lbf	$F_{r\,max}$ kN	AXIAL DYN. CAP. lbf	AXIAL DYN. CAP. kN	AXIAL STAT. CAP. lbf	AXIAL STAT. CAP. kN	RAD. DYN. CAP. lbf.	RAD. DYN. CAP. kN	RAD. STAT. CAP. lbf	RAD. STAT. CAP. kN
XSU 140414	61.7	28	22,300	99.1	51,000	229	117,000	520	33,000	146	56,000	250
XSU 140544	83.8	38	29,500	132.2	61,000	270	153,000	680	38,000	170	74,000	330
XSU 140644	97.0	44	33,500	148.7	65,000	290	180,000	800	41,500	185	89,000	395
XSU 140744	114.7	52	37,000	165.2	71,000	315	209,000	930	45,000	200	102,000	455
XSU 140844	132.3	60	37,000	165.2	76,000	340	236,000	1050	48,500	215	115,000	510
XSU 140944	147.7	67	41,000	181.7	81,000	360	265,000	1170	51,000	227	130,000	580
XSU 141094	169.8	77	44,500	198.2	88,000	390	305,000	1360	55,000	246	151,000	670

Slewing Ring Bearings
XA SERIES

- With external metric module gear teeth
- Crossed roller type
- Sealed
- Tables and drawing do not give details of each part
- Contact Engineering Department for aid in design

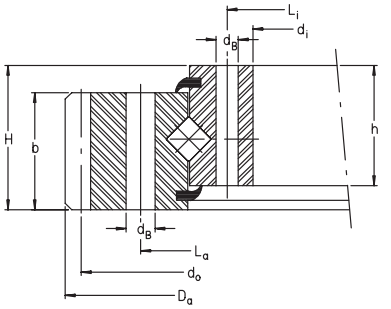

FOR REFERENCE ONLY. SHAPE MAY DIFFER

For details on part numbers, descriptive suffixes and various technical references, please refer to front of this section.
For engineering or technical information contact your local sales representative or call Distributor Sales (800)523-6572.

PART NUMBER	PART NUMBER	d_i inch	d_i mm	D_a inch	D_a mm	H inch	H mm	h inch	h mm	WGT. lbs	WGT. kg	L_a inch	L_a mm	n_a	L_i inch	L_i mm	n_i	d_B inch	d_B mm
XA 120235 N		6.732	171	12.551	318.8	1.575	40	1.378	35	29.3	13.3	10.827	275	12	7.677	195	12	0.512	13
XA 180309 N		9.252	235	16.079	408.4	2.362	60	2.067	52.5	66.2	30	14.134	359	24	10.197	259	24	0.512	13
XA 200352 H	F98937	14.724	374	18.189	462	2.323	59	2.126	54	77.2	35	16.024	407	24	11.732	298	24	0.551	14
XA 160407 N		13.189	335	19.815	503.3	1.969	50	1.772	45	72.8	33	17.913	455	30	14.134	359	30	0.512	13
XA 240574 N	F151682	18.898	480	27.362	695	3.032	77	2.520	64	185.2	84	25.197	640	18	20.000	508	18	0.709	18
XA 200720 N		24.803	630	33.240	844.3	2.323	59	2.047	52	191.8	87	30.709	780	30	26.063	662	30	0.709	18
XA 200810 N	F97948	28.740	730	37.953	964	3.543	90	2.953	75	348.4	158	34.252	870	24	30.000	762	24	–	–
XA 280995 N		34.724	882	45.591	1158	3.268	83	2.874	73	467.5	212	42.047	1068	40	36.299	922	40	0.866	22

CONTINUED FROM ABOVE

PART NUMBER	PART NUMBER	RAD. LOAD LIMIT lbf	RAD. LOAD LIMIT kN	d_0 inch	d_0 mm	m	z	b inch	b mm	AXIAL DYN. CAP. lbf	AXIAL DYN. CAP. kN	AXIAL STAT. CAP. lbf	AXIAL STAT. CAP. kN	RAD. DYN. CAP. lbf.	RAD. DYN. CAP. kN	RAD. STAT. CAP. lbf	RAD. STAT. CAP. kN
XA 120235 N		11,200	49.6	12.284	312	4	78	1.378	35	30,500	135	53,000	235	19,300	86	26,000	115
XA 180309 N		22,300	99.1	15.748	400	5	80	2.067	52.5	61,000	270	99,000	440	38,500	172	48,500	215
XA 200352 H	F98937	22,300	99.1	17.717	450	6	75	1.181	30	75,000	335	162,000	720	48,000	214	80,000	355
XA 160407 N		28,000	123.9	19.488	495	5	99	1.772	45	61,000	270	124,000	550	38,500	172	61,000	270
XA 240574 N	F151682	31,500	140.4	26.969	685	5	137	1.654	42	128,000	570	280,000	1250	81,000	360	137,000	610
XA 200720 N		53,000	234	32.835	834	6	139	2.047	52	112,000	500	285,000	1260	71,000	315	139,000	620
XA 200810 N	F97948	42,000	187.2	37.165	944	8	118	2.874	73	119,000	530	320,000	1420	75,000	335	148,000	660
XA 280995 N		109,000	484	44.882	1140	10	114	2.874	73	209,000	930	510,000	2280	133,000	590	275,000	1220

Slewing Ring Bearings
XI SERIES

- With internal metric module gear teeth
- Crossed roller type
- Sealed
- Tables and drawing do not give details of each part
- Contact Engineering Department for aid in design

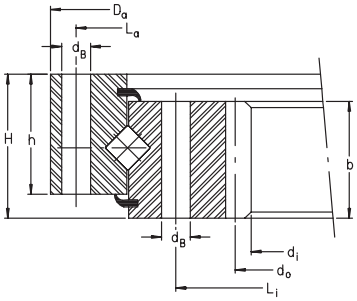

FOR REFERENCE ONLY. SHAPE MAY DIFFER

For details on part numbers, descriptive suffixes and various technical references, please refer to front of this section.
For engineering or technical information contact your local sales representative or call Distributor Sales (800)523-6572.

PART NUMBER	d_i inch	d_i mm	D_a inch	D_a mm	H inch	H mm	h inch	h mm	WGT. lbs	WGT. kg	L_a inch	L_a mm	n_a	L_i inch	L_i mm	n_i	d_B inch	d_B mm
XI 120288 N	8.504	216	13.386	340	1.496	38	1.299	33	26.5	12	12.756	324	20	9.921	252	20	0.354	9
XI 120321 V	10.126	257.2	15.079	383	1.496	38	1.299	33	33.1	15	14.055	357	20	11.299	287	20	–	–
XI 120420 N	13.071	332	19.134	486	1.535	39	1.339	34	50.7	23	18.189	462	16	14.882	378	16	0.551	14
XI 160489 N	15.118	384	22.126	562	1.772	45	1.575	40	77.2	35	21.181	538	40	17.323	440	40	0.551	14
XI 180635 N	19.843	504	28.425	722	2.126	54	1.850	47	147.7	67	27.165	690	24	22.835	580	24	0.709	18
XI 200720 N	22.992	584	31.969	812	2.284	58	2.008	51	185.2	84	30.709	780	40	25.984	660	40	0.709	18
XI 180865 N	28.976	736	33.543	852	2.126	54	1.850	47	205.1	93	36.221	920	20	31.890	810	20	0.709	18
XI 201100 N	37.402	950	47.244	1200	2.756	70	2.126	54	330.8	150	45.669	1160	30	40.945	1040	30	0.866	22

CONTINUED FROM ABOVE

PART NUMBER	RAD. LOAD LIMIT lbf	RAD. LOAD LIMIT kN	d_0 inch	d_0 mm	m	z	b inch	b mm	AXIAL DYN. CAP. lbf	AXIAL DYN. CAP. kN	AXIAL STAT. CAP. lbf	AXIAL STAT. CAP. kN	RAD. DYN. CAP. lbf.	RAD. DYN. CAP. kN	RAD. STAT. CAP. lbf	RAD. STAT. CAP. kN
XI 120288 N	7,900	35	8.819	224	4	56	1.339	34	33,500	150	65,000	290	21,400	95	31,500	141
XI 120321 V	12,600	56	10.276	261	3	87	1.339	34	36,500	163	72,000	320	23,400	104	35,500	157
XI 120420 N	14,900	66.1	13.386	340	4	85	1.339	34	42,500	189	94,000	420	27,000	120	46,500	206
XI 160489 N	29,000	130	15.591	396	6	66	1.575	40	67,000	300	119,000	530	43,000	192	58,000	260
XI 180635 N	42,000	187.2	20.472	520	8	65	1.850	47	91,000	405	202,000	900	58,000	260	99,000	440
XI 200720 N	58,000	260	23.622	600	8	75	2.008	51	112,000	500	238,000	1060	71,000	315	117,000	520
XI 180865 N	35,000	156	29.606	752	8	94	1.850	47	108,000	480	275,000	1230	69,000	305	135,000	600
XI 201100 N	82,000	363	38.189	970	10	97	2.362	60	142,000	630	360,000	1610	90,000	400	178,000	790

Slewing Ring Bearings
XU SERIES

- Without gear teeth
- Crossed roller type
- Tables and drawing do not give details of each part
- Contact Engineering Department for aid in design

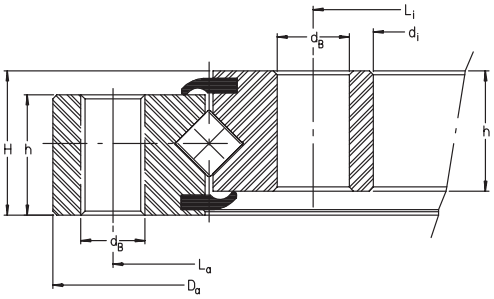

FOR REFERENCE ONLY. SHAPE MAY DIFFER

For details on part numbers, descriptive suffixes and various technical references, please refer to front of this section.
For engineering or technical information contact your local sales representative or call Distributor Sales (800)523-6572.

PART NUMBER	PART NUMBER	d_i inch	d_i mm	D_a inch	D_a mm	H inch	H mm	h inch	h mm	L_a inch	L_a mm	n_a	L_i inch	L_i mm	n_i
XU 050077	F152053.1	1.575	40	4.409	112	0.866	22	0.827	21	3.819	97	6	2.205	56	6
XU 060094	F151798.1	2.244	57	5.512	140	1.024	26	0.984	25	4.724	120	6	2.756	70	6
XU 060111	F98565	3.000	76.2	5.740	145.79	0.625	15.87	–	–	5.240	133.1	8	3.500	88.9	8
XU 080120	F151799.1	2.717	69	6.693	170	1.181	30	1.142	29	5.827	148	6	3.543	90	6
XU 080149	F98865	4.000	101.6	7.750	196.85	0.875	22.22	0.875	22.22	7.000	177.8	16	4.559	115.8	16
XU 120179		4.902	124.5	9.213	234	1.378	35	1.181	30	8.425	214	12	5.689	144.5	12
XU120222	F152473	5.512	140	11.811	300	1.417	36	1.181	30	10.630	270	12	6.693	170	12
XU160260		7.520	191	12.953	329	1.811	46	1.614	41	12.008	305	20	8.465	215	20
XU080264	F151264	8.500	215.9	12.250	311.15	1.000	25.4	1.000	25.4	11.626	295.3	12	9.126	231.8	12
XU160405		13.228	336	18.661	474	1.811	46	1.614	41	17.717	450	30	14.173	360	30
XU080430	F154119	14.961	380	18.898	480	1.024	26	1.024	26	18.189	462	20	15.669	398	20
XU300515		15.118	384	25.433	646	3.386	86	3.110	79	23.543	598	18	17.008	432	18
XU280680		22.244	565	31.299	795	3.110	79	2.835	72	29.724	755	30	23.819	605	30
XU300785		26.378	670	35.433	900	3.386	86	3.110	79	33.858	860	36	27.953	710	36
XU260980		34.252	870	42.913	1090	3.110	79	2.717	69	41.339	1050	44	35.827	910	44

CONTINUED FROM ABOVE

PART NUMBER	PART NUMBER	WGT. lbs	WGT. kg	d_B inch	d_B mm	$F_{r\,max}$ lbf	$F_{r\,max}$ kN	AXIAL DYN. CAP. lbf	AXIAL DYN. CAP. kN	AXIAL STAT. CAP. lbf	AXIAL STAT. CAP. kN	RAD. DYN. CAP. lbf.	RAD. DYN. CAP. kN	RAD. STAT. CAP. lbf	RAD. STAT. CAP. kN
XU 050077	F152053.1	3.087	1.4	0.260	6.6	1,300	5.8	5,000	22.4	6,500	29	3,200	14.3	3,200	14.2
XU 060094	F151798.1	5.292	2.4	0.354	9	2,070	9.2	7,300	32.5	8,400	37.5	4,650	20.7	4,150	18.4
XU 060111	F98565	2.646	1.2	0.236	6	1,730	7.7	8,100	36	10,000	44.5	5,100	22.8	4,850	21.5
XU 080120	F151799.1	88.20	40	0.354	9	2,360	10.5	12,600	56	11,900	53	8,000	35.5	5,800	26
XU 080149	F98865	7.94	3.6	0.272	6.9	3,450	15.4	14,200	63	14,800	66	9,000	40	7,300	32.5
XU 120179		15.44	7	0.433	11	7,600	33.6	26,500	118	40,000	179	16,900	75	19,800	88
XU120222	F152473	26.5	12	0.709	18	14,700	65.5	30,000	133	62,000	275	19,100	85	29,500	131
XU160260		35.3	16	0.551	14	18,600	82.6	47,500	212	79,000	350	30,500	135	39,000	173
XU080264	F151264	15.2	6.9	0.343	8.7	4,700	21	19,100	85	26,500	117	12,100	54	12,800	57
XU160405		55.1	25	0.551	14	28,000	123.9	61,000	270	124,000	550	38,500	172	61,000	270
XU080430	F154119	26.5	12	0.354	9	7,900	35	24,700	110	63,000	280	15,700	70	31,000	138
XU300515		253.6	115	1.024	26	70,000	313.2	162,000	720	310,000	1370	102,000	455	151,000	670
XU280680		264.6	120	0.866	22	82,000	363	169,000	750	350,000	1560	108,000	480	171,000	760
XU300785		341.8	155	0.866	22	98,000	435.6	202,000	900	470,000	2090	128,000	570	232,000	1030
XU260980		348.4	158	0.866	22	120,000	532.4	189,000	840	490,000	2180	119,000	530	241,000	1070

Rolling Mill Backing Bearing
WGTR SERIES

This is a special category for which drawings, application data and specifications are available upon request.

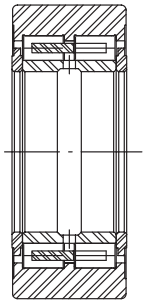

For details on part numbers, descriptive suffixes and various technical references, please refer to front of this section.
For engineering or technical information contact your local sales representative or call Distributor Sales (800)523-6572.

PART NUMBER
WGTR 25 x 55 x 31.2
WGTR x 36 x 80 x 40
WGTR x 55 x 120 x 52
WGTR x 55 x 120 x 64
WGTR x 70 x 160 x 75
WGTR x 70 x 160 x 90
WGTR x 100 x 225 x 96
WGTR x 100 x 225 x 120
WGTR x 130300.02 x 150
WGTR x 130 x300.02 x 172.65
WGTR x 180 x 406.04 x 171.04
WGTR x 180 x 406.4 x 224
WGTR x 200 x 460 x 171
WGTR x 200 x 460 x 241

Tensioner – Leveler Backup Rollers
RLB SERIES

This is a special category for which drawings, application data and specifications are available upon request.

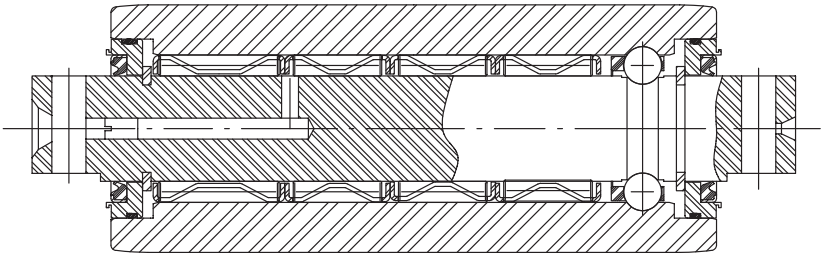

For details on part numbers, descriptive suffixes and various technical references, please refer to front of this section.
For engineering or technical information contact your local sales representative or call Distributor Sales (800)523-6572.

Tandem Cylindrical Roller Thrust Bearing

TAR SERIES

This is a special category for which drawings, application data and specifications are available upon request.

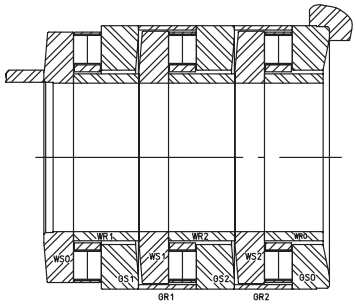

For details on part numbers, descriptive suffixes and various technical references, please refer to front of this section.
For engineering or technical information contact your local sales representative or call Distributor Sales (800)523-6572.

HYDREL/EGIS Guideways

M & V SERIES

- Standard quality: Q10

This is a special category for which drawings, application data and specifications are available upon request.

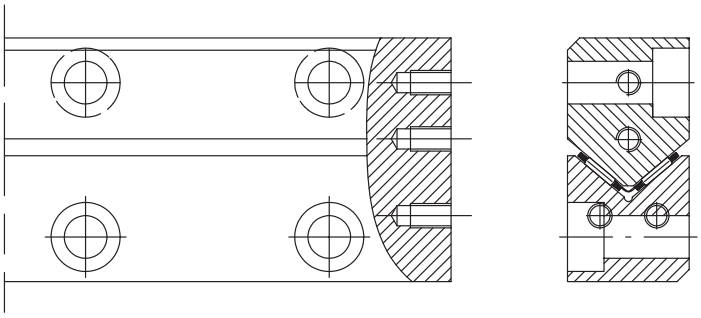

For details on part numbers, descriptive suffixes and various technical references, please refer to front of this section.
For engineering or technical information contact your local sales representative or call Distributor Sales (800)523-6572.

Products and company names are trademarks or registered trademarks of their respective companies.

Connecting Rods

This is a special category for which drawings, application data and specifications are available upon request.

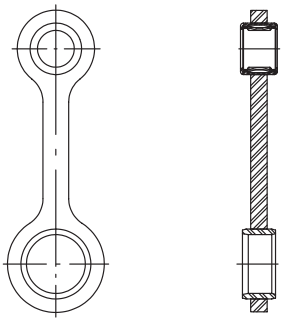

For details on part numbers, descriptive suffixes and various technical references, please refer to front of this section.
For engineering or technical information contact your local sales representative or call Distributor Sales (800)523-6572.

Rotor Bearings

RTL SERIES

This is a special category for which drawings, application data and specifications are available upon request.

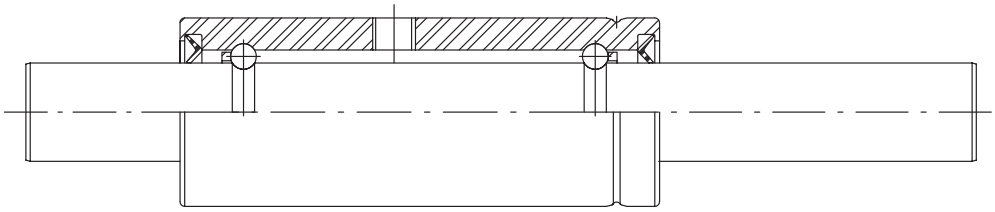

For details on part numbers, descriptive suffixes and various technical references, please refer to front of this section.
For engineering or technical information contact your local sales representative or call Distributor Sales (800)523-6572.

NOTES

Index

BEARING SERIES	BEARING DESCRIPTION	SECTION NAME	PAGE
1000	METRIC HEAVY SERIES 3 PIECE BALL	THRUST BEARINGS	139
1900	METRIC MEDIUM SERIES DOUBLE DIRECTION BALL	THRUST BEARINGS	140
2..KRR	METRIC BORE ECONOMY SEAL PRESS FIT MOUNT CYLINDRICAL OD BALL	BALL BEARINGS	196
2..KXN	METRIC BORE EXTRA WIDE FOR OUTBOARD SEAL CYLINDRICAL OD BALL	BALL BEARINGS	200
2..NPPB	METRIC BORE ECONOMY SEAL PRESS FIT MOUNT INSERT BALL	BALL BEARINGS	212
2000	INCH LIGHT/MEDIUM 3 PIECE BALL	THRUST BEARINGS	118
2900	METRIC LIGHT SERIES 3 PIECE BALL	THRUST BEARINGS	119
3200 J	METRIC ISO DOUBLE ROW STANDARD SERIES ANGULAR CONTACT BALL	BALL BEARINGS	191
3300 J	METRIC ISO DOUBLE ROW HEAVY SERIES ANGULAR CONTACT BALL	BALL BEARINGS	191
3900	METRIC MEDIUM SERIES 3 PIECE BALL	THRUST BEARINGS	140
4100	METRIC MEDIUM SERIES SELF ALIGNING SEAT 3 PIECE BALL	THRUST BEARINGS	120
4100AW	METRIC SELF ALIGNING SEATS	THRUST BEARINGS	121
4400	INCH MEDIUM SERIES 3 PIECE BALL	THRUST BEARINGS	122
500	METRIC HEAVY SERIES SELF ALIGNING SEAT 3 PIECE BALL	THRUST BEARINGS	138
51100	METRIC ISO LIGHT SERIES 3 PIECE BALL	THRUST BEARINGS	124
51200	METRIC ISO MEDIUM SERIES 3 PIECE BALL	THRUST BEARINGS	125
52200	METRIC ISO LIGHT SERIES DOUBLE DIRECTION BALL	THRUST BEARINGS	126
52300	METRIC ISO MEDIUM SERIES DOUBLE DIRECTION BALL	THRUST BEARINGS	126
600	METRIC ISO MINIATURE CONRAD BALL	BALL BEARINGS	187
6000	METRIC ISO LIGHT SERIES CONRAD BALL	BALL BEARINGS	187
6200	METRIC ISO STANDARD SERIES CONRAD BALL	BALL BEARINGS	187
6300	METRIC ISO HEAVY SERIES CONRAD BALL	BALL BEARINGS	187
7000BE2RS	METRIC ISO SINGLE ROW LIGHT SERIES 40 DEGREE ANGULAR CONTACT BALL	BALL BEARINGS	194
7200BE2RS	METRIC ISO SINGLE ROW STANDARD SERIES 40 DEGREE ANGULAR CONTACT BALL	BALL BEARINGS	194
7300BE2RS	METRIC ISO SINGLE ROW HEAVY SERIES 40 DEGREE ANGULAR CONTACT BALL	BALL BEARINGS	194
800	METRIC MEDIUM SERIES DOUBLE DIRECTION SELF ALIGNING BALL	THRUST BEARINGS	140
81100	METRIC ISO LIGHT SERIES CYLINDRICAL ROLLER	THRUST BEARINGS	164
81200	METRIC ISO MEDIUM SERIES CYLINDRICAL ROLLER	THRUST BEARINGS	165
87400	METRIC ISO HEAVY MULTIPLE ROLLER POCKET SERIES CYLINDRICAL ROLLER	THRUST BEARINGS	141
89300	METRIC ISO 2 ROW POCKET SERIES CYLINDRICAL ROLLER	THRUST BEARINGS	166
900	METRIC MEDIUM SERIES 3 PIECE BALL	THRUST BEARINGS	127
AB	LUBRICATION AND WIPER UNITS	LINEAR	538
AB KOL KWSE	COLLECTOR WIPER	LINEAR	489
AB LFR	CAP WIPERS	LINEAR	536
AB W	LUBRICATION AND WIPER UNITS	LINEAR	536
ABAL	SIDE PLATES	LINEAR	538
ABTKO LFKL	ADAPTER	LINEAR	541
AM	METRIC AXIAL CLAMPING PRECISION LOCKNUT FOR THRUST BEARINGS	HIGH PRECISION	309
ANS LFS	END PLATES	LINEAR	537
APLE	SHEET STEEL WIPER	LINEAR	502

Index

BEARING SERIES	BEARING DESCRIPTION	SECTION NAME	PAGE
APLSE	SHEET STEEL WIPER	LINEAR	488
APLU	SHEET STEEL WIPER	LINEAR	476
AS	METRIC DUAL PURPOSE 1mm ROLLER WASHER	THRUST BEARINGS	152
AXK	METRIC CAGE AND NEEDLE ASSEMBLY	THRUST BEARINGS	156
AXW	METRIC PILOTED THRUST RACE	THRUST BEARINGS	170
B	INCH BANDED BALL THRUST BEARING	THRUST BEARINGS	128
BCE	CLOSED END INCH CAGED SHELL	NEEDLE BEARINGS	7
BCH..P	CLOSED END SEALED INCH CAGED SHELL	NEEDLE BEARINGS	12
BEARING SELECTOR	BALL AND ROLLER THRUST BEARING SIZE SELECTOR SORTED BY SHAFT	THRUST BEARINGS	95
BF	LINEAR FLAT STEEL CAGE & ROLLERS, SINGLE ROW	LINEAR	663
BK	CLOSED END METRIC CAGED SHELL	NEEDLE BEARINGS	7
BK..RS	CLOSED END SEALED METRIC CAGED SHELL	NEEDLE BEARINGS	12
BPLE	LUBRICATION ADAPTER PLATE	LINEAR	503
BPLSE	LUBRICATION ADAPTER PLATE	LINEAR	490
BPLU	LUBRICATION ADAPTER PLATE	LINEAR	477
BR	METRIC HOUSING RETAINING RINGS	SEALS, SNAP RINGS & ROLLERS	364
C	INCH CAGE AND ROLLER ASSEMBLIES	NEEDLE BEARINGS	17
CAGE & BALL	INCH AND METRIC THRUST CAGE AND BALL ASSEMBLIES	THRUST BEARINGS	144
CAGE SELECTOR	INCH AND METRIC THRUST CAGE AND ROLLER ASSEMBLIES	THRUST BEARINGS	146
CF	STUD TYPE INCH FULL COMPLEMENT NEEDLE CAM FOLLOWER	CAM FOLLOWERS	83
CF..PP	STUD TYPE INCH SEALED FULL COMPLEMENT NEEDLE CAM FOLLOWER	CAM FOLLOWERS	83
CFE	STUD TYPE INCH FULL COMPLEMENT NEEDLE CAM FOLLOWER	CAM FOLLOWERS	83
COMPONENT	METRIC ISO SERIES COMPONENT BREAK DOWN FOR K8 WS & GS	THRUST BEARINGS	167
COMPONENTS	LFS LINEAR BEARINGS	LINEAR	469
COMPONENTS	TS..W LINEAR BEARINGS	LINEAR	469
COMPONENTS	LFL LINEAR BEARINGS	LINEAR	469
COMPONENTS	LFCL LINEAR BEARINGS	LINEAR	469
COMPONENTS	LFR LINEAR BEARINGS	LINEAR	469
COMPONENTS	RUE LINEAR BEARINGS	LINEAR	469
COMPONENTS	KUSE LINEAR BEARINGS	LINEAR	469
COMPONENTS	KUVE LINEAR BEARINGS	LINEAR	469
COMPONENTS	KUVS LINEAR BEARINGS	LINEAR	469
COMPONENTS	KUE LINEAR BEARINGS	LINEAR	469
COMPONENTS	KUME LINEAR BEARINGS	LINEAR	469
CONNECTING RODS	CONNECTING RODS FOR CRANKSHAFT TO PISTON ASSEMBLIES	THIN SECTION, SLEWING RING & OTHER	699
CR-B..	METRIC BORE ECONOMY SEAL ECCENTRIC LOCKING COLLAR FLANGED RUBBER OD BALL	BALL BEARINGS	213
CS	CLOSED END INCH MECHANICALLY RETAINED FULL COMPLEMENT SHELL	NEEDLE BEARINGS	16

Index

BEARING SERIES	BEARING DESCRIPTION	SECTION NAME	PAGE
CSC	INCH THIN SECTION DEEP GROOVE BALL	THIN SECTION, SLEWING RING & OTHER	671
CSCU..2RS	INCH THIN SECTION SEALED DEEP GROOVE BALL	THIN SECTION, SLEWING RING & OTHER	678
CSE	INCH THIN SECTION ANGULAR CONTACT BALL	THIN SECTION, SLEWING RING & OTHER	620
CSE	INCH THIN SECTION ANGULAR CONTACT BALL	THIN SECTION, SLEWING RING & OTHER	674
CSN	CLOSED END INCH GREASE RETAINED FULL COMPLEMENT SHELL	NEEDLE BEARINGS	15
CSX	INCH THIN SECTION 4 POINT CONTACT BALL	THIN SECTION, SLEWING RING & OTHER	676
CSXU..2RS	INCH THIN SECTION SEALED 4 POINT CONTACT BALL	THIN SECTION, SLEWING RING & OTHER	678
D	INCH BANDED BALL THRUST BEARING	THRUST BEARINGS	129
DKLFA	BALL SCREW SUPPORT - METRIC FLANGED 60 DEGREE 3 ROW THRUST BALL	HIGH PRECISION	298
DL	METRIC LIGHT SERIES 3 PIECE BALL	THRUST BEARINGS	130
DM	METRIC MEDIUM SERIES 3 PIECE BALL	THRUST BEARINGS	140
DRS	BALL SCREW SUPPORT - SEAL CARRIER AND SEAL FOR OUTBOARD SIDE OF ZARF SERIES	HIGH PRECISION	308
E..KLLH	METRIC BORE LABYRINTH SEAL ECCENTRIC LOCKING COLLAR CYLINDRICAL OD BALL	BALL BEARINGS	197
E..KRR	METRIC BORE STANDARD SEAL ECCENTRIC LOCKING COLLAR CYLINDRICAL OD BALL	BALL BEARINGS	198
EW	INCH LIGHT SERIES FLAT RACE BALL THRUST BEARING	THRUST BEARINGS	131
FBALG KWE	BELLOWS	LINEAR	504
FBALG KWSE	BELLOWS	LINEAR	491
FF	LINEAR FLAT PLASTIC CAGE & ROLLERS, SINGLE ROW, SNAP CONNECTORS	LINEAR	663
FF..ZW	LINEAR FLAT PLASTIC CAGE & ROLLERS, DOUBLE ROW, SNAP CONNECTORS	LINEAR	664
FFW	LINEAR FLAT PLASTIC CAGE & ROLLERS, DOUBLE ROW AT 90 DEGREE BEND, SNAP CONNECTORS	LINEAR	665
FLCTE	METRIC ECONOMY SEAL ECCENTRIC LOCK HEAVY DUTY OVAL FLANGE	BALL BEARINGS	244
FT	INCH MEDIUM SERIES FLAT RACE BALL	THRUST BEARINGS	132
FTO	INCH LIGHT SERIES FLAT RACE BALL	THRUST BEARINGS	133
G	METRIC SINGLE LIP RUBBER SEALS	SEALS, SNAP RINGS & ROLLERS	356
G1..KRRB	INCH BORE STANDARD SEAL ECCENTRIC LOCKING COLLAR INSERT BALL	BALL BEARINGS	203
G52..2RSN	METRIC DOUBLE ROW CYLINDRICAL OD WITH SNAP RING GROOVES ANGULAR CONTACT BALL	BALL BEARINGS	193
GAKFR..PB	ELGES METRIC DIN648 SERIES K STEEL/BRONZE SLIDING EXTERNAL THREAD	PLAIN BEARINGS & ROD ENDS	438
GAKFR..PW	ELGES METRIC DIN 648 SERIES K MAINTENANCE FREE EXTERNAL THREAD	PLAIN BEARINGS & ROD ENDS	442

Index

BEARING SERIES	BEARING DESCRIPTION	SECTION NAME	PAGE
GAKMR..	ELGES METRIC DIN648 SERIES K STEEL/BRASS SLIDING EXTERNAL THREAD	PLAIN BEARINGS & ROD ENDS	436
GAR..DO	ELGES METRIC TO DIN 648 SERIES E FORM A STEEL/STEEL SLIDING INTERNAL THREAD	PLAIN BEARINGS & ROD ENDS	429
GAR..UK	ELGES METRIC DIN648 SERIES E FORM A MAINTENANCE FREE EXTERNAL THREAD	PLAIN BEARINGS & ROD ENDS	440
GAY..NPPB	METRIC AND INCH BORE ECONOMY SEAL SET SCREW LOCKING INSERT BALL	BALL BEARINGS	202
GE..AW	ELGES METRIC MAINTENANCE FREE SLIDING THRUST CONTACT	PLAIN BEARINGS & ROD ENDS	426
GE..AX	ELGES METRIC STEEL/STEEL SLIDING THRUST CONTACT	PLAIN BEARINGS & ROD ENDS	414
GE..DO	ELGES METRIC DIN 648 SERIES E STEEL/STEEL SLIDING	PLAIN BEARINGS & ROD ENDS	404
GE..DO 2RS	ELGES METRIC DIN 648 SERIES E STEEL/STEEL SLIDING SEALED	PLAIN BEARINGS & ROD ENDS	404
GE..DW	ELGES METRIC DIN 648 SERIES C MAINTENANCE FREE SLIDING	PLAIN BEARINGS & ROD ENDS	418
GE..FO	ELGES METRIC DIN648 SERIES G STEEL/STEEL SLIDING WIDE INNER	PLAIN BEARINGS & ROD ENDS	406
GE..FO 2RS	ELGES METRIC DIN 648 SERIES G STEEL/STEEL SLIDING WIDE INNER SEALED	PLAIN BEARINGS & ROD ENDS	406
GE..FW	ELGES METRIC DIN 648 SERIES G MAINTENANCE FREE SLIDING	PLAIN BEARINGS & ROD ENDS	420
GE..HO 2RS	ELGES METRIC STEEL/STEEL SLIDING EXTENDED INNER	PLAIN BEARINGS & ROD ENDS	409
GE..KLLHB	METRIC BORE LABYRINTH SEAL ECCENTRIC LOCKING COLLAR INSERT BALL	BALL BEARINGS	208
GE..KPPB3	METRIC BORE TRI-PLY SEAL ECCENTRIC LOCKING COLLAR INSERT BALL	BALL BEARINGS	207
GE..KRRB	METRIC BORE STANDARD SEAL ECCENTRIC LOCKING COLLAR INSERT BALL	BALL BEARINGS	203
GE..LO	ELGES METRIC DIN 648 SERIES EW STEEL/STEEL SLIDING	PLAIN BEARINGS & ROD ENDS	408
GE..PB	ELGES METRIC DIN 648 SERIES K STEEL/BRONZE SLIDING	PLAIN BEARINGS & ROD ENDS	407
GE..PW	ELGES METRIC DIN 648 SERIES K MAINTENANCE FREE SLIDING	PLAIN BEARINGS & ROD ENDS	422
GE..SW	ELGES METRIC MAINTENANCE FREE SLIDING ANGULAR CONTACT	PLAIN BEARINGS & ROD ENDS	424
GE..SX	ELGES METRIC STEEL/STEEL SLIDING ANGULAR CONTACT	PLAIN BEARINGS & ROD ENDS	412
GE..UK	ELGES METRIC DIN 648 SERIES E MAINTENANCE FREE SLIDING	PLAIN BEARINGS & ROD ENDS	416
GE..UK 2RS	ELGES METRIC DIN 648 SERIES E MAINTENANCE FREE SLIDING SEALED	PLAIN BEARINGS & ROD ENDS	416
GE..ZO	ELGES INCH STEEL/STEEL SLIDING	PLAIN BEARINGS & ROD ENDS	410
GE..ZO 2RS	ELGES INCH STEEL/STEEL SLIDING SEALED	PLAIN BEARINGS & ROD ENDS	411
GE..ZSX	ELGES INCH STEEL/STEEL SLIDING THRUST CONTACT	PLAIN BEARINGS & ROD ENDS	415
GF..DO	ELGES METRIC DIN648 SERIES E STEEL/STEEL SLIDING; FOR WELDING	PLAIN BEARINGS & ROD ENDS	434
GG51	METRIC SPLIT DESIGN CAST IRON PILLOW BLOCKS FOR SERIES SL05 & SL06	CYLINDRICALS	342
GIHNK..LO	ELGES METRIC DIN 24338/ISO6982 STEEL/STEEL SLIDING CLAMPING THREAD	PLAIN BEARINGS & ROD ENDS	430
GIHOK..DO	ELGES METRIC DIN 24555 STEEL/STEEL SLIDING CLAMPING THREAD	PLAIN BEARINGS & ROD ENDS	431
GIHR..DO	ELGES METRIC STEEL/STEEL SLIDING HYDRAULIC SERIES	PLAIN BEARINGS & ROD ENDS	432
GIKFR..PB	ELGES METRIC DIN648 SERIES K STEEL/BRONZE SLIDING INTERNAL THREAD	PLAIN BEARINGS & ROD ENDS	437
GIKFR..PW	ELGES METRIC DIN648 SERIES K MAINTENANCE FREE INTERNAL THREAD	PLAIN BEARINGS & ROD ENDS	441
GIKMR..	ELGES METRIC DIN648 SERIES K STEEL/BRASS SLIDING	PLAIN BEARINGS & ROD ENDS	435
GIPFR..PW	ELGES METRIC DIN648 SERIES K MAINTENANCE FREE INTERNAL FINE PITCH THREAD	PLAIN BEARINGS & ROD ENDS	441
GIR..DO	ELGES METRIC TO DIN 648 SERIES E FORM B STEEL/STEEL SLIDING INTERNAL THREAD	PLAIN BEARINGS & ROD ENDS	428
GIR..UK	ELGES METRIC DIN648 SERIES E MAINTENANCE FREE INTERNAL THREAD	PLAIN BEARINGS & ROD ENDS	439

Index

BEARING SERIES	BEARING DESCRIPTION	SECTION NAME	PAGE
GK..DO	ELGES METRIC DIN648 SERIES E STEEL/STEEL SLIDING	PLAIN BEARINGS & ROD ENDS	433
GLCTE	METRIC ECONOMY SEAL ECCENTRIC LOCK HEAVY DUTY OVAL FLANGE	BALL BEARINGS	244
GLE..RRB	METRIC BORE STANDARD SEAL DRIVE SLOT LOCKING EXPANSION INSERT BALL	BALL BEARINGS	210
GNE..KRRB	METRIC BORE STANDARD SEAL HEAVY DUTY ECCENTRIC LOCKING COLLAR INSERT BALL	BALL BEARINGS	209
GR	METRIC SINGLE LIP RUBBER SEALS WITH STEEL OD	SEALS, SNAP RINGS & ROLLERS	356
GRA..NPPB	INCH BORE ECONOMY SEAL ECCENTRIC LOCKING COLLAR INSERT BALL	BALL BEARINGS	200
GRAE..NPPB	METRIC BORE ECONOMY SEAL ECCENTRIC LOCKING COLLAR INSERT BALL	BALL BEARINGS	200
GS	METRIC ISO HOUSING PILOTED ROLLER WASHER	THRUST BEARINGS	152
GSH..RRB	METRIC BORE STANDARD SEAL ADAPTER MOUNT LOCKING INSERT BALL	BALL BEARINGS	211
GT	INCH MEDIUM SERIES 3 PIECE BALL	THRUST BEARINGS	134
GW	SHAFT SUPPORT BLOCKS	LINEAR	612
GWH..B	SHAFT SUPPORT BLOCKS	LINEAR	610
GWN..B	SHAFT SUPPORT BLOCKS	LINEAR	611
GY1..KRRB	INCH BORE STANDARD SEAL SETSCREW LOCKING INSERT BALL	BALL BEARINGS	204
GYE..KRRB	METRIC BORE STANDARD SEAL SETSCREW LOCKING INSERT BALL	BALL BEARINGS	204
H	LINEAR FLAT ALUMINUM CAGE & ROLLERS, SINGLE ROW	LINEAR	663
H..ZW	LINEAR FLAT ALUMINUM CAGE & ROLLERS, DOUBLE ROW	LINEAR	664
HF	METRIC DRAWN SHELL ROLLER CLUTCH WITH STAINLESS STEEL SPRINGS	CLUTCHES	348
HF..KF	METRIC DRAWN SHELL ROLLER CLUTCH WITH PLASTIC SPRINGS	CLUTCHES	348
HF..R	METRIC DRAWN SHELL ROLLER CLUTCH WITH KNURLS FOR PLASTIC HOUSING	CLUTCHES	350
HFL	METRIC DRAWN SHELL ROLLER CLUTCH AND BEARING WITH STEEL SPRINGS	CLUTCHES	349
HFL..KF	METRIC DRAWN SHELL ROLLER CLUTCH AND BEARING WITH PLASTIC SPRINGS	CLUTCHES	349
HFL..R	METRIC DRAWN SHELL ROLLER CLUTCH AND BEARING WITH KNURLS FOR PLASTIC	CLUTCHES	351
HFLZ	INCH DRAWN SHELL ROLLER CLUTCH AND BEARING WITH STEEL SPRINGS	CLUTCHES	349
HFZ	INCH DRAWN SHELL ROLLER CLUTCH WITH STAINLESS STEEL SPRINGS	CLUTCHES	348
HFZ..KF	INCH DRAWN SHELL ROLLER CLUTCH WITH PLASTIC SPRINGS	CLUTCHES	348
HK	OPEN END METRIC CAGED SHELL	NEEDLE BEARINGS	7
HK..2RS	OPEN END SEALED METRIC CAGED SHELL	NEEDLE BEARINGS	12
HR	LINEAR FLAT ALUMINUM & PLASTIC CAGE & CYLINDRICAL ROLLERS, SINGLE ROW	LINEAR	608
HR	LINEAR FLAT ALUMINUM & PLASTIC CAGE & CYLINDRICAL ROLLERS, SINGLE ROW	LINEAR	663
HR..ZW	LINEAR FLAT STEEL CAGE & ROLLERS, DOUBLE ROW	LINEAR	609
HR..ZW	LINEAR FLAT STEEL CAGE & ROLLERS, DOUBLE ROW	LINEAR	664
HRW	LINEAR FLAT STEEL CAGE & ROLLERS, DOUBLE ROW AT 90 DEGREE BEND	LINEAR	610
HRW	LINEAR FLAT STEEL CAGE & ROLLERS, DOUBLE ROW AT 90 DEGREE BEND	LINEAR	665
HW	INCH HEAVY SERIES 3 PIECE BALL	THRUST BEARINGS	138
HW	LINEAR FLAT ALUMINUM CAGE & ROLLERS, DOUBLE ROW AT 90 DEGREE BEND	LINEAR	665
INFORMATION	NEEDLE BEARING, GENERAL OVERVIEW	NEEDLE BEARINGS	2
INFORMATION	CAM FOLLOWER, GENERAL OVERVIEW	CAM FOLLOWERS	52

Index

BEARING SERIES	BEARING DESCRIPTION	SECTION NAME	PAGE
INFORMATION	TRACK ROLLER, GENERAL OVERVIEW	CAM FOLLOWERS	52
INFORMATION	THRUST BEARING, GENERAL OVERVIEW	THRUST BEARINGS	87
INFORMATION	BALL BEARING, GENERAL OVERVIEW	BALL BEARINGS	182
INFORMATION	MOUNTED UNIT, GENERAL OVERVIEW	BALL BEARINGS	183
INFORMATION	HIGH PRECISION BALL AND ROLLER BEARINGS	HIGH PRECISION	290
INFORMATION	CYLINDRICAL ROLLER BEARING, GENERAL OVERVIEW	CYLINDRICALS	324
INFORMATION	ROLLER CLUTCH, GENERAL OVERVIEW	CLUTCHES	346
INFORMATION	SEALS, SNAP RINGS & ROLLERS, GENERAL OVERVIEW	SEALS, SNAP RINGS & ROLLERS	354
INFORMATION	PERMAGLIDE PLAIN BEARING, GENERAL OVERVIEW	PLAIN BEARINGS & ROD ENDS	373
INFORMATION	ELGES SPHERICAL PLAIN BEARING, GENERAL OVERVIEW	PLAIN BEARINGS & ROD ENDS	375
INFORMATION	ELGES ROD ENDS, GENERAL OVERVIEW	PLAIN BEARINGS & ROD ENDS	375
INFORMATION	LINEAR BEARINGS, GENERAL OVERVIEW	LINEAR	450
INFORMATION	THIN SECTION, SLEWING RING & OTHER, GENERAL OVERVIEW	THIN SECTION, SLEWING RING & OTHER	668
INTERCHANGE	BASIC MOUNTED UNIT INTERCHANGE LISTING	BALL BEARINGS	186
IR	METRIC PRECISION GROUND NEEDLE BEARING INNER RINGS	NEEDLE BEARINGS	42
K	METRIC CAGE AND ROLLER ASSEMBLIES	NEEDLE BEARINGS	17
K81100	METRIC ISO CAGE AND ROLLER ASSEMBLY	THRUST BEARINGS	146
K81200	METRIC ISO CAGE AND ROLLER ASSEMBLY	THRUST BEARINGS	146
K87400	METRIC ISO CAGE AND ROLLER ASSEMBLY	THRUST BEARINGS	147
K89300	METRIC ISO CAGE AND ROLLER ASSEMBLY	THRUST BEARINGS	146
K89400	METRIC ISO CAGE AND ROLLER ASSEMBLY	THRUST BEARINGS	147
KA LFS	END COVERS	LINEAR	540
KB	LINEAR BALL BEARINGS	LINEAR	590
KBK	WRIST PIN CAGE AND ROLLER ASSEMBLIES	NEEDLE BEARINGS	25
KBO	LINEAR BALL BEARINGS	LINEAR	590
KBS	LINEAR BALL BEARINGS	LINEAR	590
KBZ	LINEAR BALL BEARINGS	LINEAR	615
KBZ..OP	LINEAR BALL BEARINGS	LINEAR	616
KGB	LINEAR BALL BEARING AND HOUSING UNITS	LINEAR	592
KGBA	LINEAR BALL BEARING AND HOUSING UNITS	LINEAR	594
KGBAO	LINEAR BALL BEARING AND HOUSING UNITS	LINEAR	594
KGBAS	LINEAR BALL BEARING AND HOUSING UNITS	LINEAR	594
KGBO	LINEAR BALL BEARING AND HOUSING UNITS	LINEAR	592
KGBS	LINEAR BALL BEARING AND HOUSING UNITS	LINEAR	592
KGF	FLANGED BALL NUT FOR BALL SCREWS	LINEAR	659
KGHK	LINEAR BALL BEARING AND HOUSING UNITS	LINEAR	568

Index

BEARING SERIES	BEARING DESCRIPTION	SECTION NAME	PAGE
KGHW	LINEAR BALL BEARING AND HOUSING UNITS	LINEAR	572
KGHWT	LINEAR BALL BEARING AND HOUSING UNITS	LINEAR	574
KGM	CYLINDRICAL BALL NUT FOR BALL SCREWS	LINEAR	660
KGN	SELF-ALIGNING LINEAR BALL BEARING AND HOUSING UNITS	LINEAR	578
KGNC	SELF-ALIGNING LINEAR BALL BEARING AND HOUSING UNITS	LINEAR	582
KGNO	SELF-ALIGNING LINEAR BALL BEARING AND HOUSING UNITS	LINEAR	580
KGNS	SELF-ALIGNING LINEAR BALL BEARING AND HOUSING UNITS	LINEAR	578
KGNZ	SELF ALIGNING MOUNTED UNITS	LINEAR	619
KGNZ..OP	SELF ALIGNING MOUNTED UNITS	LINEAR	620
KGS	ROLLED THREAD BALL SCREWS	LINEAR	658
KGS	ROLLED THREAD BALL SCREW - FORM D ENDS	LINEAR	661
KGS	ROLLED THREAD BALL SCREW - FORM W, N AND Z ENDS	LINEAR	662
KGSAG	MAX³ METRIC SELF-ALIGNING LINEAR BALL BEARINGS - CLOSED WITH CAST 4 BOLT HOUSING	LINEAR	552
KGSAO	MAX³ METRIC SELF-ALIGNING LINEAR BALL BEARINGS - OPEN WITH CAST 4 BOLT HOUSING	LINEAR	552
KGSAS	MAX³ METRIC SELF-ALIGNING LINEAR BALL BEARINGS - ADJ. CLEARANCE WITH CAST 4 BOLT HOUSING	LINEAR	552
KGSC	TANDEM MAX³ METRIC LINEAR BALL BEARINGS - OPEN WITH SIDE MOUNTED HOUSING	LINEAR	562
KGSCS	TANDEM MAX³ METRIC LINEAR BALL BEARINGS - ADJUSTABLE CLEARANCE WITH SIDE MOUNTED HOUSING	LINEAR	562
KGSG	MAX³ METRIC SELF-ALIGNING LINEAR BALL BEARINGS - CLOSED WITH CAST 2 BOLT HOUSING	LINEAR	550
KGSNG	MAX³ METRIC SELF-ALIGNING LINEAR BALL BEARINGS - CLOSED WITH EXTRUDED HOUSING	LINEAR	554
KGSNO	MAX³ METRIC SELF-ALIGNING LINEAR BALL BEARINGS - ADJ. CLEARANCE OPEN WITH EXTRUDED HOUSING	LINEAR	556
KGSNOS	MAX³ METRIC SELF-ALIGNING LINEAR BALL BEARINGS - OPEN WITH EXTRUDED HOUSING	LINEAR	556
KGSNS	MAX³ METRIC SELF-ALIGNING LINEAR BALL BEARINGS - ADJ. CLEARANCE WITH EXTRUDED HOUSING	LINEAR	554
KGSO	MAX³ METRIC SELF-ALIGNING LINEAR BALL BEARINGS - OPEN WITH CAST 2 BOLT HOUSING	LINEAR	550
KGSS	MAX³ METRIC SELF-ALIGNING LINEAR BALL BEARINGS - ADJ. CLEARANCE WITH CAST 2 BOLT HOUSING	LINEAR	550
KGX	MAX³ INCH SELF-ALIGNING LINEAR BALL BEARINGS - CLOSED WITH HOUSING	LINEAR	544
KGXO	MAX³ INCH SELF-ALIGNING LINEAR BALL BEARINGS - OPEN WITH HOUSING	LINEAR	544
KH	LINEAR BALL BEARINGS	LINEAR	566

Index

BEARING SERIES	BEARING DESCRIPTION	SECTION NAME	PAGE
KN	SELF-ALIGNING LINEAR BALL BEARINGS	LINEAR	576
KNO	SELF-ALIGNING LINEAR BALL BEARINGS, OPEN	LINEAR	576
KNZ	SELF ALIGNING LINEAR BALL BEARINGS	LINEAR	617
KNZ..OP	SELF ALIGNING LINEAR BALL BEARINGS	LINEAR	618
KR	STUD TYPE METRIC CAGED NEEDLE CAM FOLLOWER	CAM FOLLOWERS	79
KR..PP	STUD TYPE METRIC SEALED CAGED NEEDLE CAM FOLLOWER	CAM FOLLOWERS	79
KRV	STUD TYPE METRIC FULL COMPLEMENT NEEDLE CAM FOLLOWER	CAM FOLLOWERS	80
KRV..PP	STUD TYPE METRIC SEALED FULL COMPLEMENT NEEDLE CAM FOLLOWER	CAM FOLLOWERS	80
KS	MAX³ METRIC SELF-ALIGNING LINEAR BALL BEARINGS - CLOSED	LINEAR	548
KSO	MAX³ METRIC SELF-ALIGNING LINEAR BALL BEARINGS - OPEN	LINEAR	548
KSR..BO	INCH AND METRIC IDLER CHAIN SPROCKETS	BALL BEARINGS	252
KSR..KO	INCH AND METRIC IDLER CHAIN SPROCKETS	BALL BEARINGS	254
KSR..LO	INCH AND METRIC IDLER CHAIN SPROCKETS	BALL BEARINGS	254
KTB	LINEAR BALL BEARING AND HOUSING UNITS	LINEAR	596
KTBO	LINEAR BALL BEARING AND HOUSING UNITS	LINEAR	596
KTFN	LINEAR BALL BEARING AND HOUSING UNITS	LINEAR	588
KTFS	TANDEM MAX³ METRIC LINEAR BALL BEARINGS - CLOSED WITH SIDE MOUNTED HOUSING	LINEAR	564
KTHK	LINEAR BALL BEARING AND HOUSING UNITS	LINEAR	570
KTN	TANDEM LINEAR BALL BEARING AND HOUSING UNITS	LINEAR	584
KTNO	TANDEM LINEAR BALL BEARING AND HOUSING UNITS - OPEN	LINEAR	586
KTNZ	SELF ALIGNING TANDEM MOUNTED UNITS	LINEAR	621
KTNZ..OP	SELF ALIGNING TANDEM MOUNTED UNITS	LINEAR	622
KTSG	TANDEM MAX³ METRIC LINEAR BALL BEARINGS - CLOSED WITH EXTRUDED HOUSING	LINEAR	558
KTSO	TANDEM MAX³ METRIC LINEAR BALL BEARINGS - OPEN WITH EXTRUDED HOUSING	LINEAR	560
KTSOS	TANDEM MAX³ METRIC LINEAR BALL BEARINGS - ADJ. CLEARANCE WITH OPEN EXTRUDED HOUSING	LINEAR	560
KTSS	TANDEM MAX³ METRIC LINEAR BALL BEARINGS - ADJUSTABLE CLEARANCE WITH EXTRUDED HOUSING	LINEAR	558
KTX	TANDEM MAX³ INCH LINEAR BALL BEARINGS - CLOSED WITH HOUSING	LINEAR	546
KTXO	TANDEM MAX³ INCH LINEAR BALL BEARINGS - OPEN WITH HOUSING	LINEAR	546
KUE	LINEAR RECIRCULATING BALL BEARING AND GUIDEWAY ASSEMBLIES	LINEAR	498
KUE..H	LINEAR RECIRCULATING BALL BEARING AND GUIDEWAY ASSEMBLIES	LINEAR	500
KUME	MINIATURE LINEAR RECIRCULATING BALL BEARING AND GUIDEWAY ASSEMBLIES	LINEAR	510
KUSE	LINEAR RECIRCULATING BALL BEARING AND GUIDEWAY ASSEMBLIES	LINEAR	480
KUSE..H	LINEAR RECIRCULATING BALL BEARING AND GUIDEWAY ASSEMBLIES	LINEAR	484
KUSE..HL	LINEAR RECIRCULATING BALL BEARING AND GUIDEWAY ASSEMBLIES	LINEAR	486
KUSE..L	LINEAR RECIRCULATING BALL BEARING AND GUIDEWAY ASSEMBLIES	LINEAR	482

Index

BEARING SERIES	BEARING DESCRIPTION	SECTION NAME	PAGE
KUVE	FOUR-ROW LINEAR RECIRCULATING BALL BEARING AND GUIDEWAY ASSEMBLY	LINEAR	492
KUVE..S	FOUR-ROW LINEAR RECIRCULATING BALL BEARING AND GUIDEWAY ASSEMBLY	LINEAR	468
KUVE..S,..SN, ..H	FOUR-ROW LINEAR RECIRCULATING BALL BEARING AND GUIDEWAY ASSEMBLY	LINEAR	494
KUVE..W	FOUR-ROW LINEAR RECIRCULATING BALL BEARING AND GUIDEWAY ASSEMBLY	LINEAR	470
KUVE..W,..WL	FOUR-ROW LINEAR RECIRCULATING BALL BEARING AND GUIDEWAY ASSEMBLY	LINEAR	496
KUVS	LINEAR BALL BEARING UNITS	LINEAR	506
KWVK..AL	CARRIAGES	LINEAR	508
KX	MAX³ INCH SELF-ALIGNING LINEAR BALL BEARINGS - CLOSED	LINEAR	542
KXO	MAX³ INCH SELF-ALIGNING LINEAR BALL BEARINGS - OPEN	LINEAR	542
KZK	CRANK PIN CAGE AND ROLLER ASSEMBLIES	NEEDLE BEARINGS	26
LASE	METRIC STANDARD HEIGHT LABYRINTH SEAL ECCENTRIC LOCK PILLOW BLOCK	BALL BEARINGS	231
LFCL	TRACK ROLLER LINEAR GUIDANCE SYSTEMS WITH HOLLOW SECTION CARRIAGE	LINEAR	512
LFDL	TRACK ROLLER LINEAR GUIDANCE SYSTEMS WITH BOGIE CARRIAGE	LINEAR	518
LFE	BOLTS	LINEAR	522
LFKL	CARRIAGE	LINEAR	631
LFKL..SF	TRACK ROLLER LINEAR GUIDANCE SYSTEMS WITH COMPACT CARRIAGE	LINEAR	516
LFL	CARRIAGE	LINEAR	630
LFL..SF	TRACK ROLLER LINEAR GUIDANCE SYSTEMS WITH OPEN CARRIAGE	LINEAR	514
LFR	TRACK ROLLERS	LINEAR	520
LFS	GUIDEWAYS	LINEAR	524
LFS..C	GUIDEWAYS	LINEAR	524
LFS..CH	GUIDEWAYS	LINEAR	528
LFS..F	GUIDEWAYS	LINEAR	524
LFS..FH	GUIDEWAYS	LINEAR	528
LFS..M	GUIDEWAYS	LINEAR	526
LFS..N	GUIDEWAYS	LINEAR	526
LFS..R	CURVED GUIDEWAYS	LINEAR	530
LFSB	RAIL	LINEAR	630
LFZ	BOLTS	LINEAR	521
LFZ..A1	BOLTS	LINEAR	523
LR	METRIC GROUND INNER RINGS	NEEDLE BEARINGS	47
LR2..NPPU	YOKE TYPE METRIC SEALED SINGLE ROW BALL TRACK ROLLER	CAM FOLLOWERS	74
LR2..RRU	YOKE TYPE METRIC SEALED SINGLE ROW BALL TRACK ROLLER	CAM FOLLOWERS	76
LR5..KDDU	YOKE TYPE METRIC SHIELDED DOUBLE ROW BALL TRACK ROLLER	CAM FOLLOWERS	70
LR5..NPPU	YOKE TYPE METRIC SEALED DOUBLE ROW BALL TRACK ROLLER	CAM FOLLOWERS	70
LR6..KDDU	YOKE TYPE METRIC SHIELDED SINGLE ROW BALL TRACK ROLLER	CAM FOLLOWERS	74
LR6..NPPU	YOKE TYPE METRIC SEALED SINGLE ROW BALL TRACK ROLLER	CAM FOLLOWERS	74
LS	METRIC DUAL PURPOSE WIDE ROLLER WASHER	THRUST BEARINGS	152
LSL	METRIC ISO SERIES 2 FLANGED OUTER 1 ROW DISK SEPARATED ROLLER	CYLINDRICALS	340

Index

BEARING SERIES	BEARING DESCRIPTION	SECTION NAME	PAGE
M & V GUIDEWAYS	GUIDEWAYS FOR USE WITH FLAT CAGES	THIN SECTION, SLEWING RING & OTHER	698
MKUE..KGT	LINEAR MODULAR UNIT WITH RECIRCULATING BALL BEARING GUIDANCE SYSTEM AND BALL SCREW DRIVE	LINEAR	636
MKUE..ZR	LINEAR MODULAR UNIT WITH RECIRCULATING BALL BEARING GUIDANCE SYSTEM AND TOOTHED BELT DRIVE	LINEAR	634
MLF..ZR	LINEAR MODULAR UNIT WITH TRACK ROLLER GUIDANCE SYSTEM AND TOOTHED BELT DRIVE	LINEAR	632
MLFZ	RAIL	LINEAR	629
MW	INCH MEDIUM SERIES 3 PIECE BALL	THRUST BEARINGS	140
NA22..2RS	YOKE TYPE METRIC SEALED NEEDLE TRACK ROLLER	CAM FOLLOWERS	68
NA48	METRIC ISO SERIES 48 PRECISION GROUND NEEDLE	NEEDLE BEARINGS	31
NA49	METRIC ISO SERIES 49 PRECISION GROUND NEEDLE	NEEDLE BEARINGS	28
NA49..2RS	METRIC ISO SERIES 49 SEALED PRECISION GROUND NEEDLE	NEEDLE BEARINGS	32
NA69	METRIC ISO SERIES 69 PRECISION GROUND NEEDLE	NEEDLE BEARINGS	28
NAD	GROOVE STRIPS	LINEAR	540
NAO	METRIC SEPARABLE PRECISION GROUND NEEDLE	NEEDLE BEARINGS	27
NATR	YOKE TYPE METRIC CAGED NEEDLE TRACK ROLLER	CAM FOLLOWERS	62
NATR..PP	YOKE TYPE METRIC SEALED CAGED NEEDLE TRACK ROLLER	CAM FOLLOWERS	62
NATV	YOKE TYPE METRIC FULL COMPLEMENT NEEDLE TRACK ROLLER	CAM FOLLOWERS	63
NATV..PP	YOKE TYPE METRIC SEALED FULL COMPLEMENT NEEDLE TRACK ROLLER	CAM FOLLOWERS	63
NCS	INCH PRECISION GROUND NEEDLE BEARINGS WITHOUT INNER	NEEDLE BEARINGS	35
NIP	GREASE NIPPLES FOR CAM FOLLOWERS	CAM FOLLOWERS	78
NK	METRIC SERIES NKI PRECISION GROUND NEEDLE BEARINGS WITHOUT INNER	NEEDLE BEARINGS	35
NKI	METRIC SERIES NKI PRECISION GROUND NEEDLE	NEEDLE BEARINGS	28
NKIA 59	METRIC ISO COMBINATION THRUST BALL AND RADIAL NEEDLE	HIGH PRECISION	317
NKIB 59	METRIC ISO COMBINATION 2 DIRECTION THRUST BALL AND RADIAL NEEDLE	HIGH PRECISION	318
NKIS	METRIC SERIES NKIS PRECISION GROUND NEEDLE	NEEDLE BEARINGS	29
NKS	METRIC SERIES NKIS PRECISION GROUND NEEDLE BEARINGS WITHOUT INNER	NEEDLE BEARINGS	35
NKX	METRIC COMBINATION THRUST BALL AND RADIAL NEEDLE	HIGH PRECISION	320
NKXR	METRIC COMBINATION THRUST ROLLER AND RADIAL NEEDLE	HIGH PRECISION	321
NNTR..2Z	YOKE TYPE METRIC SHIELDED CYLINDRICAL ROLLER TRACK ROLLER	CAM FOLLOWERS	66
NNTR..2ZL	YOKE TYPE METRIC SEALED CYLINDRICAL ROLLER TRACK ROLLER	CAM FOLLOWERS	66
NON-SERIES	MISCELLANEOUS BALL & ROLLER THRUST BEARING DIMENSIONS	THRUST BEARINGS	138
NRA	ROUND END NEEDLE ROLLERS	SEALS, SNAP RINGS & ROLLERS	367
NRB	FLAT END NEEDLE ROLLERS	SEALS, SNAP RINGS & ROLLERS	367
NUKR	STUD TYPE METRIC LABYRINTH SEALED CYLINDRICAL ROLLER CAM FOLLOWER	CAM FOLLOWERS	81
NUTR	YOKE TYPE METRIC LABYRINTH SEALED CYLINDRICAL ROLLER TRACK ROLLER	CAM FOLLOWERS	64

Index

BEARING SERIES	BEARING DESCRIPTION	SECTION NAME	PAGE
NX	METRIC COMBINATION BANDED THRUST BALL AND RADIAL NEEDLE	HIGH PRECISION	319
P / N IDENTIFICATION	NEEDLE BEARINGS	NEEDLE BEARINGS	3
P / N IDENTIFICATION	CAM FOLLOWERS	CAM FOLLOWERS	53
P / N IDENTIFICATION	TRACK ROLLERS	CAM FOLLOWERS	53
P / N IDENTIFICATION	THRUST BEARINGS	THRUST BEARINGS	88
P / N IDENTIFICATION	BALL BEARINGS	BALL BEARINGS	184
P / N IDENTIFICATION	MOUNTED UNITS	BALL BEARINGS	184
P / N IDENTIFICATION	HIGH PRECISION BALL AND ROLLER BEARINGS	HIGH PRECISION	291
P / N IDENTIFICATION	CYLINDRICAL ROLLER BEARINGS	CYLINDRICALS	325
P / N IDENTIFICATION	ROLLER CLUTCHES	CLUTCHES	347
P / N IDENTIFICATION	SEALS, SNAP RINGS & ROLLERS	SEALS, SNAP RINGS & ROLLERS	355
P / N IDENTIFICATION	PERMAGLIDE PLAIN BEARINGS	PLAIN BEARINGS & ROD ENDS	376
P / N IDENTIFICATION	ELGES SPHERICAL PLAIN BEARINGS	PLAIN BEARINGS & ROD ENDS	378
P / N IDENTIFICATION	ELGES ROD ENDS	PLAIN BEARINGS & ROD ENDS	378
P / N IDENTIFICATION	LINEAR BEARINGS	LINEAR	459
P / N IDENTIFICATION	THIN SECTION, SLEWING RING & OTHER	THIN SECTION, SLEWING RING & OTHER	669
PAB	PERMAGLIDE LINEAR PLAIN BEARINGS	LINEAR	598
PAF..P10	METRIC PERMAGLIDE FLANGED PLAIN BEARINGS	PLAIN BEARINGS & ROD ENDS	393
PAF..P11	METRIC PERMAGLIDE FLANGED PLAIN BEARINGS	PLAIN BEARINGS & ROD ENDS	394
PAGBA	PERMAGLIDE LINEAR PLAIN BEARINGS	LINEAR	600
PAH	END STOPS	LINEAR	539
PAK	LOW HEIGHT ECONOMY SEAL ECCENTRIC LOCK PILLOW BLOCK	BALL BEARINGS	218
PAKY	LOW HEIGHT ECONOMY SEAL SETSCREW LOCK PILLOW BLOCK	BALL BEARINGS	220
PAP	INTERCHANGE, METRIC PLAIN BEARINGS	PLAIN BEARINGS & ROD ENDS	382
PAP..P10	METRIC PERMAGLIDE PLAIN BEARINGS	PLAIN BEARINGS & ROD ENDS	390
PAP..P11	METRIC PERMAGLIDE PLAIN BEARINGS	PLAIN BEARINGS & ROD ENDS	392
PAP..P20	METRIC PERMAGLIDE PLAIN BEARINGS	PLAIN BEARINGS & ROD ENDS	399
PAPZ	INTERCHANGE, INCH PLAIN BEARINGS	PLAIN BEARINGS & ROD ENDS	383
PAPZ..P10	INCH PERMAGLIDE PLAIN BEARINGS	PLAIN BEARINGS & ROD ENDS	386
PAS..P10	PERMAGLIDE STRIPS	PLAIN BEARINGS & ROD ENDS	396
PAS..P11	PERMAGLIDE STRIPS	PLAIN BEARINGS & ROD ENDS	397
PAS..P20	PERMAGLIDE STRIPS	PLAIN BEARINGS & ROD ENDS	401
PAS..P21	PERMAGLIDE STRIPS	PLAIN BEARINGS & ROD ENDS	402
PAS..P22	PERMAGLIDE STRIPS	PLAIN BEARINGS & ROD ENDS	403
PASE	STANDARD HEIGHT ECONOMY SEAL ECCENTRIC LOCK PILLOW BLOCK	BALL BEARINGS	214
PASEY	STANDARD HEIGHT ECONOMY SEAL SETSCREW LOCK PILLOW BLOCK	BALL BEARINGS	216
PAW	INTERCHANGE, METRIC THRUST WASHERS	PLAIN BEARINGS & ROD ENDS	384
PAW..P10	PERMAGLIDE THRUST WASHERS	PLAIN BEARINGS & ROD ENDS	395

Index

BEARING SERIES	BEARING DESCRIPTION	SECTION NAME	PAGE
PAW..P20	PERMAGLIDE THRUST WASHERS	PLAIN BEARINGS & ROD ENDS	400
PCCJ	METRIC DOUBLE ROW ANGULAR CONTACT NON-SELF ALIGNING PILOTED FLANGE	BALL BEARINGS	251
PCJ	ECONOMY SEAL ECCENTRIC LOCK SQUARE FLANGE	BALL BEARINGS	240
PCJT	ECONOMY SEAL ECCENTRIC LOCK OVAL FLANGE	BALL BEARINGS	236
PCJTY	ECONOMY SEAL SETSCREW OVAL FLANGE	BALL BEARINGS	238
PCJTZ	METRIC ECONOMY SEAL ECCENTRIC LOCK PILOTED OVAL FLANGE	BALL BEARINGS	245
PCJTZY	METRIC ECONOMY SEAL SETSCREW LOCK PILOTED OVAL FLANGE	BALL BEARINGS	246
PCJY	ECONOMY SEAL SETSCREW SQUARE FLANGE	BALL BEARINGS	242
PI	INCH PRECISION GROUND NEEDLE BEARING INNER RINGS	NEEDLE BEARINGS	48
PME	METRIC ECONOMY SEAL ECCENTRIC LOCK PILOTED SQUARE FLANGE	BALL BEARINGS	252
PMEY	METRIC ECONOMY SEAL SETSCREW LOCK PILOTED SQUARE FLANGE	BALL BEARINGS	253
PNA	METRIC ALIGNING PRECISION GROUND NEEDLE	NEEDLE BEARINGS	41
PR	LINEAR ROLLER BEARING BLOCK, FULL COMPLEMENT	LINEAR	642
PSFT	METRIC SERIES ECONOMY SEAL ECCENTRIC LOCK PIVOTING TAKE UP	BALL BEARINGS	251
PSHE	METRIC ECONOMY SEAL ECCENTRIC LOCK TAPPED BASE PILLOW BLOCK	BALL BEARINGS	235
PSHEY	METRIC ECONOMY SEAL SETSCREW LOCK TAPPED BASE PILLOW BLOCK	BALL BEARINGS	236
PTUE	METRIC SERIES ECONOMY SEALS ECCENTRIC LOCK ISO SLOT WIDTH TAKE UP	BALL BEARINGS	249
PWKR..2RS	STUD TYPE METRIC SEALED CYLINDRICAL ROLLER CAM FOLLOWER	CAM FOLLOWERS	82
PWTR..2RS	YOKE TYPE METRIC SEALED CYLINDRICAL ROLLER TRACK ROLLER	CAM FOLLOWERS	65
RAE..NPPFA106	METRIC BORE ECONOMY SEAL ECCENTRIC LOCKING WITH CYLINDRICAL OD	BALL BEARINGS	199
RAE..NPPNR	METRIC BORE ECONOMY SEAL ECCENTRIC LOCKING WITH CYLINDRICAL OD & SNAP RING BALL	BALL BEARINGS	195
RAK	LOW HEIGHT STANDARD SEAL ECCENTRIC LOCK PILLOW BLOCK	BALL BEARINGS	226
RAKY	LOW HEIGHT STANDARD SEAL SETSCREW LOCK PILLOW BLOCK	BALL BEARINGS	228
RALE..NPPB	METRIC BORE ECONOMY SEAL LIGHT DUTY ECCENTRIC LOCKING COLLAR INSERT BALL	BALL BEARINGS	206
RASE	STANDARD HEIGHT STANDARD SEAL ECCENTRIC LOCK PILLOW BLOCK	BALL BEARINGS	222
RASEA	METRIC STANDARD HEIGHT STANDARD SEAL ADAPTER MOUNTED PILLOW BLOCK	BALL BEARINGS	232
RASEL	METRIC STANDARD HEIGHT STANDARD SEAL DRIVE SLOT LOCKED EXPANSION TYPE PILLOW BLOCK	BALL BEARINGS	233
RASEY	STANDARD HEIGHT STANDARD SEAL SETSCREW LOCK PILLOW BLOCK	BALL BEARINGS	224
RCJ	STANDARD SEAL ECCENTRIC LOCK SQUARE FLANGE	BALL BEARINGS	244
RCJL	METRIC STANDARD SEAL ECCENTRIC LOCK DRIVING SLOT EXPANSION TYPE SQUARE FLANGE	BALL BEARINGS	249
RCJO	METRIC STANDARD SEAL HEAVY SERIES ECCENTRIC LOCK SQUARE FLANGE	BALL BEARINGS	250
RCJT	STANDARD SEAL ECCENTRIC LOCK OVAL FLANGE	BALL BEARINGS	240
RCJTY	STANDARD SEAL SETSCREW LOCK OVAL FLANGE	BALL BEARINGS	242
RCJTZ	METRIC STANDARD SEAL ECCENTRIC LOCK PILOTED OVAL FLANGE	BALL BEARINGS	247
RCJTZY	METRIC STANDARD SEAL SETSCREW LOCK PILOTED OVAL FLANGE	BALL BEARINGS	248
RCJY	STANDARD SEAL SETSCREW LOCK SQUARE FLANGE	BALL BEARINGS	246

Index

BEARING SERIES	BEARING DESCRIPTION	SECTION NAME	PAGE
RCSM..	METRIC BORE ECONOMY SEAL ECCENTRIC LOCKING COLLAR CYLINDRICAL RUBBER OD BALL	BALL BEARINGS	274
RCT	INCH CRANE HOOK CYLINDRICAL ROLLER	THRUST BEARINGS	171
RF	YOKE TYPE INCH FULL COMPLEMENT NEEDLE TRACK ROLLER	CAM FOLLOWERS	69
RF..PP	YOKE TYPE INCH SEALED FULL COMPLEMENT NEEDLE TRACK ROLLER	CAM FOLLOWERS	69
RGT	PLANETARY ROLLER SCREW	LINEAR	648
RLB	TENSIONER-LEVELER BACK UP ROLLERS	THIN SECTION, SLEWING RING & OTHER	697
RME	METRIC STANDARD SEAL ECCENTRIC LOCK PILOTED SQUARE FLANGE	BALL BEARINGS	254
RMEO	METRIC HEAVY SERIES STANDARD SEAL ECCENTRIC LOCK PILOTED ROUND SQUARE FLANGE	BALL BEARINGS	257
RMEY	METRIC STANDARD SEAL SETSCREW LOCK PILOTED SQUARE FLANGE	BALL BEARINGS	255
RNA22..2RS	YOKE TYPE METRIC SEALED NEEDLE TRACK ROLLER WITHOUT INNER	CAM FOLLOWERS	67
RNA48	METRIC ISO SERIES 48 PRECISION GROUND NEEDLE BEARINGS WITHOUT INNER	NEEDLE BEARINGS	39
RNA49	METRIC ISO SERIES 49 PRECISION GROUND NEEDLE BEARINGS WITHOUT INNER	NEEDLE BEARINGS	35
RNA49..2RS	METRIC ISO SERIES 49 SEALED PRECISION GROUND NEEDLE WITHOUT INNER	NEEDLE BEARINGS	40
RNA69	METRIC ISO SERIES 69 PRECISION GROUND NEEDLE BEARINGS WITHOUT INNER	NEEDLE BEARINGS	35
RNAO	METRIC SEPARABLE PRECISION GROUND NEEDLE BEARINGS WITHOUT INNER	NEEDLE BEARINGS	33
RPNA	METRIC ALIGNING PRECISION GROUND NEEDLE BEARINGS WITHOUT INNER	NEEDLE BEARINGS	41
RSAO	METRIC STANDARD HEIGHT HEAVY SERIES ECCENTRIC LOCK PILLOW BLOCK	BALL BEARINGS	234
RSHE	METRIC STANDARD SEAL ECCENTRIC LOCK TAPPED BASE PILLOW BLOCK	BALL BEARINGS	237
RSHEY	METRIC STANDARD SEAL SETSCREW LOCK TAPPED BASE PILLOW BLOCK	BALL BEARINGS	238
RSR..	CABLE ROPE AND V-BELT IDLER PULLEY	BALL BEARINGS	256
RSTO	YOKE TYPE METRIC CAGED NEEDLE TRACK ROLLER WITHOUT INNER	CAM FOLLOWERS	61
RT600	INCH MEDIUM SERIES CYLINDRICAL ROLLER	THRUST BEARINGS	172
RT700	INCH HEAVY SERIES CYLINDRICAL ROLLER	THRUST BEARINGS	141
RTL	INCH LIGHT SERIES CYLINDRICAL ROLLER	THRUST BEARINGS	173
RTL	ROTOR BEARINGS	THIN SECTION, SLEWING RING & OTHER	645
RTL	ROTOR BEARINGS	THIN SECTION, SLEWING RING & OTHER	699
RTUE	METRIC SERIES STANDARD SEALS ECCENTRIC LOCK ISO SLOT WIDTH TAKE UP	BALL BEARINGS	250
RTW600	INCH MEDIUM SERIES SELF ALIGNING SEAT CYLINDRICAL ROLLER	THRUST BEARINGS	174
RUDS	DAMPING CARRIAGE	LINEAR	479
RUE	LINEAR RECIRCULATING ROLLER BEARING AND GUIDEWAY ASSEMBLIES	LINEAR	470
RUE..H	LINEAR RECIRCULATING ROLLER BEARING AND GUIDEWAY ASSEMBLIES	LINEAR	472
RUKS	LOCKING ELEMENT	LINEAR	474
RUS	LINEAR ROLLER BEARING BLOCK, WITH SEPARATOR	LINEAR	638
RUSV	LINEAR ROLLER BEARINGS WITH INTEGRAL ADJUSTING GIB	LINEAR	646
RUSZ	INCH LINEAR ROLLER BEARING BLOCK, WITH SEPARATOR	LINEAR	640

Index

BEARING SERIES	BEARING DESCRIPTION	SECTION NAME	PAGE
RWCT	INCH CRANE HOOK CYLINDRICAL ROLLER WITH GREASE FITTING	THRUST BEARINGS	171
S	OPEN END INCH MECHANICALLY RETAINED FULL COMPLEMENT SHELL	NEEDLE BEARINGS	16
SCE	OPEN END INCH CAGED SHELL	NEEDLE BEARINGS	7
SCH	OPEN END HEAVY INCH CAGED SHELL	NEEDLE BEARINGS	7
SCH..PP	OPEN END SEALED INCH CAGED SHELL	NEEDLE BEARINGS	12
SD	METRIC DOUBLE LIP POLYURETHANE SEALS	SEALS, SNAP RINGS & ROLLERS	334
SD	METRIC DOUBLE LIP POLYURETHANE SEALS	SEALS, SNAP RINGS & ROLLERS	358
SECTION CONTENTS	NEEDLE BEARINGS	NEEDLE BEARINGS	1
SECTION CONTENTS	CAM FOLLOWERS	CAM FOLLOWERS	51
SECTION CONTENTS	THRUST BEARINGS	THRUST BEARINGS	85
SECTION CONTENTS	BALL BEARINGS	BALL BEARINGS	179
SECTION CONTENTS	HIGH PRECISION	HIGH PRECISION	289
SECTION CONTENTS	CYLINDRICALS	CYLINDRICALS	323
SECTION CONTENTS	CLUTCHES	CLUTCHES	345
SECTION CONTENTS	SEALS, SNAP RINGS & ROLLERS	SEALS, SNAP RINGS & ROLLERS	353
SECTION CONTENTS	PLAIN BEARINGS & ROD ENDS	PLAIN BEARINGS & ROD ENDS	371
SECTION CONTENTS	LINEAR	LINEAR	445
SECTION CONTENTS	THIN SECTION, SLEWING RING & OTHER	THIN SECTION, SLEWING RING & OTHER	667
SERIES	DESCRIPTION	NAME	
SL 02	METRIC ISO SERIES 2 ROW NON-LOCATING FULL COMPLEMENT ROLLER	CYLINDRICALS	330
SL01	METRIC ISO SERIES 2 ROW LOCATING FULL COMPLEMENT ROLLER	CYLINDRICALS	331
SL04	SHEAVE BEARINGS - METRIC 2 ROW LOCATING FULL COMPLEMENT ROLLER	CYLINDRICALS	336
SL05	METRIC SPHERICAL OD 2 ROW LOCATING FULL COMPLEMENT ROLLER	CYLINDRICALS	338
SL06	METRIC SPHERICAL OD 2 ROW NON-LOCATING FULL COMPLEMENT ROLLER	CYLINDRICALS	339
SL11	METRIC 3 ROW LOCATING FULL COMPLEMENT ROLLER	CYLINDRICALS	332
SL12	METRIC 4 ROW LOCATING FULL COMPLEMENT ROLLER	CYLINDRICALS	334
SL14	METRIC 3 ROW NON-LOCATING FULL COMPLEMENT ROLLER	CYLINDRICALS	333
SL15	METRIC 4 ROW NON-LOCATING FULL COMPLEMENT ROLLER	CYLINDRICALS	335
SL18	METRIC ISO SERIES 2 FLANGED INNER 1 ROW FULL COMPLEMENT ROLLER	CYLINDRICALS	326
SL18 22	METRIC ISO SERIES 2 FLANGED INNER 1 ROW FULL COMPLEMENT ROLLER	CYLINDRICALS	326
SL18 29	METRIC ISO SERIES 2 FLANGED INNER 1 ROW FULL COMPLEMENT ROLLER	CYLINDRICALS	326
SL18 30	METRIC ISO SERIES 2 FLANGED INNER 1 ROW FULL COMPLEMENT ROLLER	CYLINDRICALS	326
SL18 48	METRIC ISO SERIES 2 ROW SEMI-LOCATING FULL COMPLEMENT ROLLER	CYLINDRICALS	329
SL18 49	METRIC ISO SERIES 2 ROW SEMI-LOCATING FULL COMPLEMENT ROLLER	CYLINDRICALS	329
SL18 50	METRIC ISO SERIES 2 ROW SEMI-LOCATING FULL COMPLEMENT ROLLER	CYLINDRICALS	329
SL19 23	METRIC ISO SERIES 2 FLANGED OUTER 1 ROW FULL COMPLEMENT ROLLER	CYLINDRICALS	326

Index

BEARING SERIES	BEARING DESCRIPTION	SECTION NAME	PAGE
SMDE	MINIMAL QUANTITY LUBRICANT METERING UNIT	LINEAR	478
SN	OPEN END INCH GREASE RETAINED FULL COMPLEMENT SHELL	NEEDLE BEARINGS	15
STO	YOKE TYPE METRIC CAGED NEEDLE TRACK ROLLER	CAM FOLLOWERS	61
STUD SELECTOR	COMBINED INCH AND METRIC STUD TYPE CAM FOLLOWERS SORTED BY OD	CAM FOLLOWERS	77
SX 01	METRIC ISO SERIES 18 CROSS ROLLER	HIGH PRECISION	312
T.AR	TANDEM CYLINDRICAL ROLLER THRUST BEARINGS	THIN SECTION, SLEWING RING & OTHER	698
TASE	METRIC STANDARD HEIGHT TRI-PLY SEAL ECCENTRIC LOCK PILLOW BLOCK	BALL BEARINGS	230
TC	INCH CAGE AND NEEDLE ASSEMBLY	THRUST BEARINGS	146
TCJ	METRIC TRI-PLY SEAL ECCENTRIC LOCK SQUARE FLANGE	BALL BEARINGS	248
TKVD	GUIDEWAYS	LINEAR	482
TKVD	GUIDEWAYS	LINEAR	508
TME	METRIC TRI-PLY SEAL ECCENTRIC LOCK PILOTED ROUND SQUARE FLANGE	BALL BEARINGS	256
TSHE	METRIC TRI-PLY SEAL ECCENTRIC LOCK TAPPED BASE PILLOW BLOCK	BALL BEARINGS	239
TSMW	SHAFT AND SUPPORT RAIL UNITS	LINEAR	535
TSN	SUPPORT RAILS	LINEAR	613
TSNW	SHAFT AND SUPPORT RAIL UNITS	LINEAR	531
TSNW	SHAFT AND SUPPORT RAIL UNITS	LINEAR	605
TSNW..G	SHAFT AND SUPPORT RAIL UNITS	LINEAR	532
TSNW..G	SHAFT AND SUPPORT RAIL UNITS	LINEAR	607
TSSW	SHAFT AND SUPPORT RAIL UNITS	LINEAR	534
TSSW	SHAFT AND SUPPORT RAIL UNITS	LINEAR	608
TSUW	SHAFT AND SUPPORT RAIL UNITS	LINEAR	533
TSUW	SHAFT AND SUPPORT RAIL UNITS	LINEAR	606
TSUZ	SHAFT SUPPORT RAILS	LINEAR	577
TSUZ	SHAFT SUPPORT RAILS	LINEAR	627
TSUZ..PD	SHAFT SUPPORT RAILS	LINEAR	628
TSWW	SHAFT AND SUPPORT RAIL UNITS	LINEAR	605
TSWWA	SHAFT AND SUPPORT RAIL UNITS	LINEAR	609
TSWZ	SHAFT SUPPORT RAILS	LINEAR	625
TSWZ..PD	SHAFT SUPPORT RAILS	LINEAR	626
TWA	INCH DUAL PURPOSE 1/32 ROLLER WASHER	THRUST BEARINGS	152
TWB	INCH DUAL PURPOSE 1/16 ROLLER WASHER	THRUST BEARINGS	152
TWC	INCH DUAL PURPOSE 3/32 ROLLER WASHER	THRUST BEARINGS	152
TWD	INCH DUAL PURPOSE 1/8 ROLLER WASHER	THRUST BEARINGS	152
VA 20	SLEWING RING EXTERNAL GEAR 4 POINT CONTACT BALL	THIN SECTION, SLEWING RING & OTHER	688
VD	LUBRICATION PLUGS FOR CAM FOLLOWERS	CAM FOLLOWERS	78
VI 20	SLEWING RING INTERNAL GEAR 4 POINT CONTACT BALL	THIN SECTION, SLEWING RING & OTHER	689

Index

BEARING SERIES	BEARING DESCRIPTION	SECTION NAME	PAGE
VLA 20	SLEWING RING EXTERNAL GEAR LIGHT SERIES 4 POINT CONTACT BALL	THIN SECTION, SLEWING RING & OTHER	679
VLI 20	SLEWING RING INTERNAL GEAR LIGHT SERIES 4 POINT CONTACT BALL	THIN SECTION, SLEWING RING & OTHER	680
VLU 20	SLEWING RING NO GEAR LIGHT SERIES 4 POINT CONTACT BALL	THIN SECTION, SLEWING RING & OTHER	681
VSA 20	SLEWING RING EXTERNAL GEAR STANDARD SERIES 4 POINT CONTACT BALL	THIN SECTION, SLEWING RING & OTHER	682
VSA 25	SLEWING RING EXTERNAL GEAR STANDARD SERIES 4 POINT CONTACT BALL	THIN SECTION, SLEWING RING & OTHER	685
VSI 20	SLEWING RING INTERNAL GEAR STANDARD SERIES 4 POINT CONTACT BALL	THIN SECTION, SLEWING RING & OTHER	683
VSI 25	SLEWING RING INTERNAL GEAR STANDARD SERIES 4 POINT CONTACT BALL	THIN SECTION, SLEWING RING & OTHER	686
VSU 20	SLEWING RING NO GEAR STANDARD SERIES 4 POINT CONTACT BALL	THIN SECTION, SLEWING RING & OTHER	684
VSU 25	SLEWING RING NO GEAR STANDARD SERIES 4 POINT CONTACT BALL	THIN SECTION, SLEWING RING & OTHER	687
VU 20	SLEWING RING NO GEAR 4 POINT CONTACT BALL	THIN SECTION, SLEWING RING & OTHER	690
VUS	ADJUSTING GIBS	LINEAR	644
W	INCH MEDIUM SERIES 3 PIECE BALL	THRUST BEARINGS	135
W	SHAFTS	LINEAR	602
WASHER SELECTOR	INCH AND METRIC THRUST WASHERS	THRUST BEARINGS	152
WGTR	ROLLING MILL BACK UP ROLLERS	THIN SECTION, SLEWING RING & OTHER	697
WH	SHAFTS	LINEAR	604
WR	METRIC SHAFT RETAINING RINGS	SEALS, SNAP RINGS & ROLLERS	360
WRE	METRIC HEAVY SERIES SHAFT RETAINING RINGS	SEALS, SNAP RINGS & ROLLERS	363
WS	METRIC ISO SHAFT PILOTED ROLLER WASHER	THRUST BEARINGS	152
WZ	PRECISION GROUND SHAFTS	LINEAR	623
WZ..PDT	PRECISION GROUND SHAFTS	LINEAR	624
XA	SLEWING RING EXTERNAL GEAR CROSS ROLLER	THIN SECTION, SLEWING RING & OTHER	694
XI	SLEWING RING INTERNAL GEAR CROSS ROLLER	THIN SECTION, SLEWING RING & OTHER	695
XSA 14	SLEWING RING EXTERNAL GEAR STANDARD SERIES CROSS ROLLER	THIN SECTION, SLEWING RING & OTHER	691

Index

BEARING SERIES	BEARING DESCRIPTION	SECTION NAME	PAGE
XSI 14	SLEWING RING INTERNAL GEAR STANDARD SERIES CROSS ROLLER	THIN SECTION, SLEWING RING & OTHER	692
XSU 14	SLEWING RING NO GEAR STANDARD SERIES CROSS ROLLER	THIN SECTION, SLEWING RING & OTHER	693
XU	SLEWING RING NO GEAR CROSS ROLLER	THIN SECTION, SLEWING RING & OTHER	696
XW	INCH LIGHT SERIES 3 PIECE BALL	THRUST BEARINGS	136
YOKE SELECTOR	COMBINED INCH AND METRIC YOKE TYPE TRACK ROLLERS SORTED BY SHAFT	CAM FOLLOWERS	56
YRT	ROTARY TABLE - METRIC FLANGED COMBINATION ROLLER	HIGH PRECISION	314
ZARF	BALL SCREW SUPPORT - METRIC FLANGED COMBINATION RADIAL & THRUST ROLLER	HIGH PRECISION	304
ZARF..LTN	BALL SCREW SUPPORT - METRIC FLANGED COMBINATION RADIAL & THRUST ROLLER	HIGH PRECISION	306
ZARN	BALL SCREW SUPPORT - METRIC COMBINATION RADIAL & THRUST ROLLER	HIGH PRECISION	300
ZARN..LTN	BALL SCREW SUPPORT - METRIC COMBINATION RADIAL & THRUST ROLLER	HIGH PRECISION	302
ZKLDF	ROTARY TABLE - METRIC FLANGED 60 DEGREE 2 ROW THRUST BALL	HIGH PRECISION	316
ZKLF	BALL SCREW SUPPORT - METRIC FLANGED 60 DEGREE 2 ROW THRUST BALL	HIGH PRECISION	297
ZKLF..PE	BALL SCREW SUPPORT - METRIC FLANGED 60 DEGREE 2 ROW THRUST BALL	HIGH PRECISION	296
ZKLN	BALL SCREW SUPPORT - METRIC 60 DEGREE 2 ROW THRUST BALL	HIGH PRECISION	295
ZKLN..PE	BALL SCREW SUPPORT- METRIC 60 DEGREE 2 ROW THRUST BALL	HIGH PRECISION	294
ZM	METRIC RADIALLY CLAMPING PRECISION LOCKNUT FOR THRUST BEARINGS	HIGH PRECISION	310
ZS	METRIC CENTER WASHER FOR DOUBLE DIRECTION ROLLER	THRUST BEARINGS	176
ZSL	METRIC ISO SERIES 2 FLANGED OUTER 1 ROW SPACER SEPARATED ROLLER	CYLINDRICALS	341

NOTES

INA SALES OFFICES
MANUFACTURING PLANTS

SALES OFFICES

TORONTO, CANADA

INA Canada Inc.
2871 Plymouth Drive
Oakville, Ontario L6H 5S5
Toll Free: 1-800-263-4397
Telephone: 905-829-2750
Fax: 905-829-2563

MONTREAL

INA Canada Inc.
489 Lepine St.
Dorval, QC H9P 2V6
Toll Free: 1-800-361-7015

VANCOUVER

INA Canada Inc.
1115 Cliveden Ave.
Delta, BC V3M 6G9
Toll Free: 1-800-663-9006

EDMONTON

INA Canada Inc.
3132 Parsons Road NW, Suite 215
Edmonton, AB T6N 1L6
Telephone: 780-989-3650
Fax: 780-989-3651
Toll Free: 1-800-663-9006

MEXICO CITY, MEXICO

INA Mexico, S.A. de C.V
Paseo de la Reforma 383, Int. 704
Col. Cuauhtemoc 06500
Mexico, D.F.
Telephone: 525-525-00-12 / 01-84
Fax: 525-525-01-94

OTHER COUNTRIES

Argentina
Australia
Austria
Belgium
Brazil
Denmark
Finland
France
Germany
Great Britain
Italy
Japan
Korea
Netherlands
Norway
Portugal
South Africa
Spain
Sweden
Turkey

MANUFACTURING PLANTS

PARENT COMPANY

INA-Schaeffler KG
Industriestrasse 1-3
D-91074 Herzogenaurach
Germany
Telephone: (49132) 82-0
Fax: (49132) 82 49 33

UNITED STATES

Plant I
INA USA Corporation
One INA Drive
P.O. Box 390
Cheraw, South Carolina 29520
Telephone: 843-537-9341/9346
Fax: 843-537-8751

Plant II
INA USA Corporation
Highway 9 West
P.O. Box 390
Cheraw, South Carolina 29520
Telephone: 843-537-9341
Fax 843-537-8752

Plant III
INA USA Corporation
308 Springhill Farm Road
Fort Mill, South Carolina 29715
Telephone: 803-547-7990
Fax: 803-548-8597

Plant IV
INA USA Corporation
New Cut Road, P.O. Box 570
Spartanburg, South Carolina 29304
Telephone: 864-583-4541
Fax: 864-591-8890

Plant V
INA USA Corporation
200 Evans Row
Cheraw, South Carolina 29520
Telephone: 843-537-9341
Fax: 843-537-8751

OTHER COUNTRIES

Australia
Brazil
Canada
China
France
Germany
Great Britain
Italy
Korea
Slovakia
Spain
Switzerland

Corporate Offices

INA USA CORPORATION
308 Springhill Farm Road
Fort Mill, South Carolina 29715
Telephone: 803-548-8500 Fax: 803-548-8599

USA SALES OFFICES

ATLANTA
207 N. Lewis Avenue, Suite G
LaGrange, GA 30240
Telephone: 706-883-7305
Fax: 706-883-7315

CHARLOTTE
377 Carowinds Boulevard, Suite 120
Fort Mill, South Carolina 29708
Telephone: 803-547-7970
Fax: 803-548-6361

CHICAGO
2525 Cabot Drive, Suite 202
Lisle, Illinois 60532
Telephone: 630-955-9360
Fax: 630-955-9365

CLEVELAND
12306 Woodward Boulevard
Garfield Heights, Ohio 44125
Telephone: 216-587-4393
Fax: 216-587-2655

DALLAS
3939 Belt Line Road, Suite 365
Addison, Texas 75001
Telephone: 972-488-2544
Fax: 972-488-2802

DAYTON
261 Regency Ridge Drive
Centerville, Ohio 45459
Telephone: 937-433-6404
Fax: 937-433-6814

DETROIT
335 East Big Beaver Road, Suite 101
Troy, Michigan 48083
Telephone: 248-619-2102
Fax: 248-528-5100

HOUSTON
10101 Southwest Freeway, Suite 400
Houston, Texas 77074
Telephone: 713-219-1430
Fax: 713-219-1431

KANSAS CITY
14425 College Blvd., Suite 110
Lenexa, Kansas 66215
Telephone: 913-451-0300
Fax: 913-451-0302

LOS ANGELES
9 Goddard
Irvine, California 92618
Telephone: 949-453-9799
Fax: 949-453-9299

LOUISVILLE
14419 Micawber Way
Louisville, Kentucky 40245
Telephone: 502-254-9590
Fax: 502-254-2760

MEMPHIS
1922 Exeter Road, Suite 20
Germantown, Tennessee 38138
Telephone: 901-756-0023
Fax: 901-756-0260

MILWAUKEE
N16 W23233 Stoneridge Drive, Suite 220
Waukesha, Wisconsin 53188
Telephone: 262-544-8270
Fax: 262-544-8271

MINNEAPOLIS
80 W. 78th Street, Suite 270C
Chanhassen, Minnesota 55317
Telephone: 952-934-8822
Fax: 952-934-8833

PHILADELPHIA
3000 Cabot Blvd. West, Suite 220
Langhorne, PA 19047
Telephone: 215-891-8500
Fax: 215-891-0554

PHOENIX
6619 N. Scottsdale Road, Suite 5
Scottsdale, Arizona 85250
Telephone: 480-296-2060
Fax: 480-596-5745

QUAD CITIES
300 NW Banktower, 2550 Middle Road
Bettendorf, Iowa 52722
Telephone: 319-355-0383
Fax: 319-355-1937

SEATTLE
40 Lake Bellevue, Suite 100
Bellevue, Washington 98005
Telephone: 425-646-9477
Fax: 425-646-9471

PRGV40203

INA USA CORPORATION

A Tradition Of Excellence Built Upon A Commitment To Quality

308 SPRINGHILL FARM ROAD FORT MILL, SC 29715 TELEPHONE (803)548-8500 FAX (803)548-8599 www.ina.com/us