www.bergab.ru Берг АБ skf@bergab.ru Тел. (495)-228-06-21, факс (495) 223-3071

Bearings for screw drives

Fitting and maintenance manual

SCHAEFFLER GROUP
INDUSTRIAL

www.bergab.ru Берг АБ skf@bergab.ru Тел. (495)-228-06-21, факс (495) 223-3071

added competence

The right product for every application

=

Optimum benefit for you

With their forward-looking bearing arrangement solutions for feed spindles, main spindles, rotary tables and linear guidance units, INA and FAG have been at the forefront of the world market for decades. The bearing components alone, however, are often no longer the decisive factor for these machine subsystems.

Our customers have of course benefitted directly from significant performance improvements and unique selling propositions thanks to our “ready-to-fit” products; these compact, ready-to-fit bearings are used in accordance with the simple principle: unpack, screw mount, use. In order to optimise the entire machine tool system, however, it is becoming ever more important not simply to support the subsystems but to integrate important functions such as measurement, sealing, lubrication, braking etc. in the components themselves. This intellectual approach is fulfilled comprehensively by the new concept **added competence** in the Production Machinery Sector since it attaches central importance to systems solution thinking for the bearing, bearing position and entire system. This means that you can now access a product range that gives optimum coverage to all your applications in the machine tool.

Since direct drives and mechatronic solutions are used ever more frequently in machine tools, we have incorporated a further strong partner in the form of IDAM – INA Drives & Mecatronics – in our spectrum of capabilities. In this way, we can now supply you from a single source with bearing elements and the appropriate drive system to give complete systems that are precisely matched to each other. This opens up completely new technical and economic design possibilities for your requirements as well as significant advantages in the time and process chain.

In terms of products, we offer you a comprehensive, precisely balanced range, precision technology and top product quality. In order to match the pulse of your developments as closely as possible, furthermore, we have a worldwide network of engineers, service and sales technicians working for you and ensuring that we maintain close contact with you in your own location.

In conclusion, we are convinced that we will always have the right product for your application. Just contact us to see what we can do for you.

added competence

www.bergab.ru Берг АБ skf@bergab.ru Тел. (495)-228-06-21, факс (495) 223-3071

Bearings for screw drives

		Page
Product overview	Bearings for screw drives	5
Preparations for fitting	Notes on the description of fitting procedures	6
	Preparations for fitting	6
	Delivered condition of the bearings	7
	Bearing storage and storage life	7
	Unpacking of bearings	8
	Compatibility and miscibility with anti-corrosion agents	8
	Cleaning of bearings	9
	Design of fitting area	10
	Bearing protection measures during fitting	11
	Fitting tools	12
	Preparation of the adjacent construction	13
	Initial greasing of axial angular contact ball bearings	13
	Lubrication of needle roller/ axial cylindrical roller bearings ZARN (L), ZARF (L)	14
	Fasteners	14
	General safety and operating guidelines	15
Fitting of double row axial angular contact ball bearings for screw mounting	Series ZKLF, ZKLF..-PE, ZKLF..-2AP	16
	Checking the dimensional and geometrical tolerances of the bearing seating and locating surfaces	17
	Fitting of bearings on the screw drive spindle	19
	Screw mounting of bearings directly on the face of the adjacent construction	21
	Screw mounting of bearings in the centring bore in the adjacent construction	23
	Radial centring of matched bearings screw mounted on a flat surface using a centring ring	25
Fitting of double row axial angular contact ball bearings not for screw mounting	Series ZKLN, ZKLN..-PE, ZKLN..-2AP, ZKLN..-DAC	26
	Checking the dimensional and geometrical tolerances of the bearing seating and locating surfaces	27
	Fitting of bearings on the screw drive spindle	29
	Screw mounting of bearings in the centring bore in the adjacent construction	31

www.bergab.ru Берг АБ skf@bergab.ru Тел. (495)-228-06-21, факс (495) 223-3071

Page

Fitting of single row axial angular contact ball bearings

Series BSB, BSB..-SU, 7602, 7603 32
Checking the dimensional and geometrical tolerances of the bearing seating and locating surfaces 33
Fitting of bearings on the screw drive spindle 35
Mounting of bearings in the centring bore in the adjacent construction 37

Fitting of angular contact ball bearing units

Series ZKLR, ZKLR..-2RS, ZKLR..-2Z 38
Checking the dimensional and geometrical tolerances of the bearing seating and locating surfaces 38
Fitting the unit on the screw drive spindle 39
Screw mounting the unit on the face of the adjacent construction 40

Fitting of double row and triple row axial angular contact ball bearings

Series ZKLFA, DKLFA 42
Checking the dimensional and geometrical tolerances of the bearing seating and locating surfaces 43
Fitting of bearings on the screw drive spindle 44
Screw mounting of bearings in the centring bore in the adjacent construction 46
Screw mounting of bearings directly on the face of the adjacent construction 48

Fitting of needle roller/ axial cylindrical roller bearings for screw mounting Fitting of seal carrier assemblies

Series ZARF (L) 50
Series DRS 50
Checking the dimensional and geometrical tolerances of the bearing seating and locating surfaces 51
Fitting of bearings on the screw drive spindle 52
Setting the axial preload 54
Screw mounting of bearings in the centring bore in the adjacent construction 56
Fitting of seal carrier assemblies 58

www.bergab.ru Берг АБ skf@bergab.ru Тел. (495)-228-06-21, факс (495) 223-3071

Bearings for screw drives

		Page
Fitting of needle roller/ axial cylindrical roller bearings not for screw mounting	Series ZARN (L)	60
	Checking the dimensional and geometrical tolerances of the bearing seating and locating surfaces	61
	Fitting of bearings on the screw drive spindle	62
	Setting the axial preload	64
	Screw mounting of bearings in the centring bore in the adjacent construction	66
Preloading of bearings using precision locknuts	Series ZM, ZMA	68
	Tools	68
	Preloading of bearings	69
	Securing of precision locknuts	70
	Removal of precision locknuts	70
Preloading of bearings using precision locknuts	Series AM	72
	Tools	72
	Preloading of bearings	73
	Securing of precision locknuts	74
	Removal of precision locknuts	74
Checking operation	Running accuracy	76
	Bearing temperature	77
	Lubricant supply	77
	Frictional torque behaviour	77
Lubrication	Lubricants	78
	Relubrication conditions	78
	Relubrication of bearings	79
	Relubrication interval	80

www.bergab.ru Берг АБ skf@bergab.ru Тел. (495) 228-06-21, факс (495) 223-3071

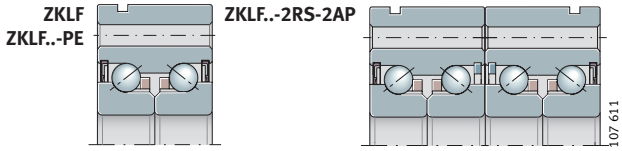

Fitting of double row axial angular contact ball bearings for screw mounting

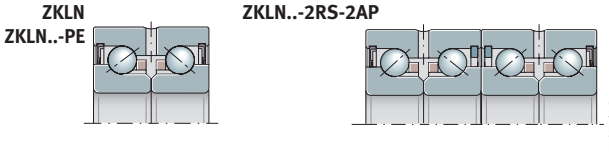

Fitting of double row axial angular contact ball bearings not for screw mounting

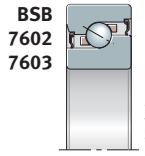

Fitting of single row axial angular contact ball bearings

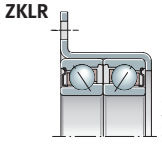

Fitting of angular contact ball bearing units

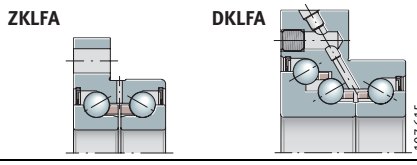

Fitting of double row and triple row axial angular contact ball bearings

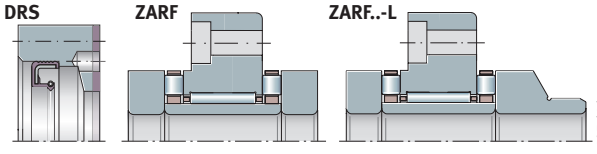

Fitting of needle roller/ axial cylindrical roller bearings for screw mounting

Fitting of seal carrier assemblies

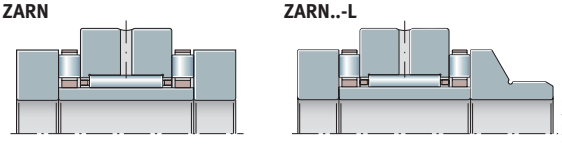

Fitting of needle roller/ axial cylindrical roller bearings not for screw mounting

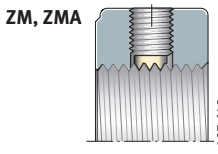

Preloading of bearings using precision locknuts

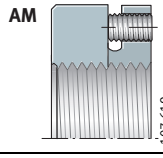

Preloading of bearings using precision locknuts

Checking operation

Lubrication

www.bergab.ru Берг АБ skf@bergab.ru Тел. (495)-228-06-21, факс (495) 223-3071

Bearings for screw drives

This manual describes the fitting and maintenance of:

- axial angular contact ball bearings
- needle roller/axial cylindrical roller bearings
- seal carrier assemblies for needle roller/ axial cylindrical roller bearings
- precision locknuts.

Caution! Before fitting the bearings, it is absolutely essential that you read the section Preparations for fitting.

The content of this fitting and maintenance manual must be communicated to the end user.

INA accepts no liability for loss or damage arising from:

- incorrect fitting
- incorrect or inadequate maintenance
- incorrect communication of the content to third parties or a failure to do so.

Notes on the description of fitting procedures

Caution! The sequence of operations depends on the design of the adjacent construction. It is therefore not possible to provide a single description that includes all the fitting variants.

Since in the majority of applications the bearing is fitted on the shaft first and the bearing outer ring is then fixed in place, the fitting of the bearings is described on the basis of this fitting process.

If the adjacent construction is different, fit the bearing appropriately or contact INA/FAG.

The instructions in the section Preparations for fitting must be followed.

The General safety and operating guidelines must be followed, page 15.

Preparations for fitting

Bearings for screw drive are high precision machine components. These high precision rolling bearings will only achieve their maximum operating life and functional capability if they are fitted correctly.

Caution! Before and during fitting, bearings must be handled with care and in accordance with this fitting and maintenance manual.

Bearings should only be fitted using the tools and fitting aids specified. If unsuitable or contaminated tools and fitting aids are used, this will seriously impair the function of the bearings and significantly reduce their operating life.

www.bergab.ru Берг АБ skf@bergab.ru Тел. (495)-228-06-21, факс (495) 223-3071

Delivered condition of the bearings

Bearings of series ZKLR, ZKLN, ZKLF, ZKLFA and DKLFA are greased and dry preserved using VCI paper, *Figure 1*.

Bearings of series ZARN (L), ZARF (L) are ungreased and are preserved using an anti-corrosion agent with a mineral oil base or VCI paper.

Depending on their design, bearings of series BSB, 7602 and 7603 are ungreased or greased and preserved by dry preservative.

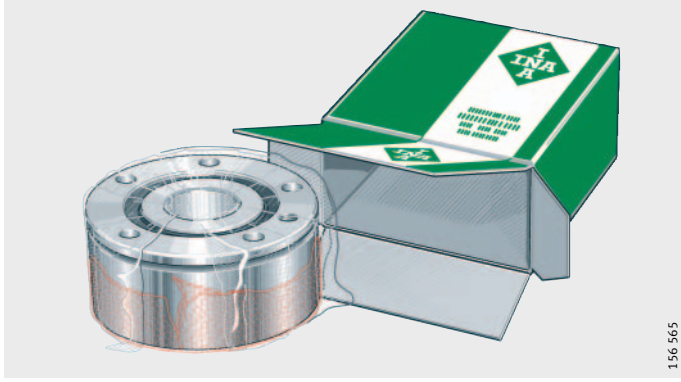

Figure 1
Delivered condition

Bearing storage and storage life

The storage life of the bearings is limited by the storage life of the grease.

Experience shows that the greases with a mineral oil base used can be stored for up to 3 years under the following conditions:

- closed room or store
- dry, clean rooms with temperature between 0 °C and +40 °C
- relative atmospheric humidity not more than 65%
- security against chemical agents – vapours, gases or fluids.

After long storage periods, the frictional torque may temporarily be higher than that of freshly greased bearings. The lubricity of the grease may also have deteriorated.

www.bergab.ru Берг АБ skf@bergab.ru Тел. (495)-228-06-21, факс (495) 223-3071

Unpacking of bearings

Perspiration from handling leads to corrosion. Hands must be kept clean and dry; protective gloves should be worn if necessary, *Figure 2*.

Bearings should only be removed from their original packaging immediately before assembly, *Figure 2*. If the original packaging is damaged, the bearings must be checked. Clean any contaminated bearings.

Bulk packaging

If bearings are removed from a batch packaged with dry preservative, close the package again immediately:

- the protective vapour phase can be maintained only in the closed package
- Ungreased bearings must be oiled or greased immediately after unpacking – for oils and greases, see page 13 and page 80.

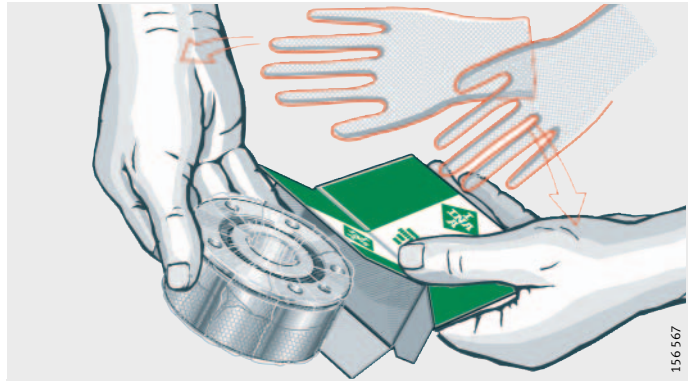

Figure 2
Unpacking of bearings

Compatibility and miscibility with anti-corrosion agents

The anti-corrosion agents in bearings with an oil-based preservative are compatible and miscible with lubricating oils having a mineral oil base. Compatibility must be checked if, for example, synthetic lubricants are to be used.

If there is an incompatibility, wash out the anti-corrosion oil before greasing if using:

- alkoxy fluoroether products
- products with a polyglycol oil base
- silicone oils

or if

- the lubricant is changed or
- the bearings are contaminated.

If in doubt, please contact the relevant lubricant manufacturer.

www.bergab.ru Берг АБ skf@bergab.ru Тел. (495)-228-06-21, факс (495) 223-3071

Cleaning of bearings

In general, it is not necessary to remove the anti-corrosion agents from bearings with an oil-based preservative.

Caution! Use lint-free cloths for removing agents.

The cloth must only be used to clean the external surfaces of the bearing, *Figure 3*.

Cleaning can be carried out using:

- organic cleaning agents, such as paraffin oil free from water and acid, petroleum ether (not petrol) or freon 12 substitutes
- thin, clean oil for hot cleaning
  oil with a flash point of at least +250 °C should be used and heated to approx. +120 °C. In addition to effective cleaning, this method also protects the bearings temporarily against corrosion.

Caution! Check the contaminant content of the cleaning baths – it should not exceed 0,1%.

Legal regulations (on environmental protection, health and safety at work, etc.) and the manufacturer's instructions (e.g. on handling) must be observed.

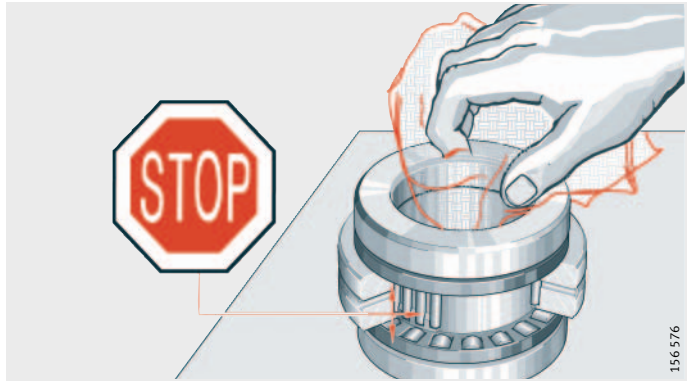

Figure 3
Cleaning of bearings

www.bergab.ru Берг АБ skf@bergab.ru Тел. (495)-228-06-21, факс (495) 223-3071

Design of fitting area

Caution!

The fitting area must be kept clean and free from dust, *Figure 4*. Contamination will impair the function and operating life of the bearings.

Hands must be kept clean and dry. The bearings must be protected against moisture and aggressive media.

Keep the following away from the fitting area:

- swarf-producing tools such as files, emery paper, etc.
- lint-producing cleaning cloths, cleaning wool, etc.
- metal swarf, sand, sawdust, corrosive substances, etc.

Ensure that work surfaces are bright, clean and free from fibres (e.g. plastic) and that lighting conditions are good.

Rolling bearings should be fitted in the workshop if possible.

If this is not possible, *Figure 4*:

- cover the machine
- protect the bearings against contamination from the surrounding area.

Bearings should only be unpacked immediately before fitting and must be protected against contamination.

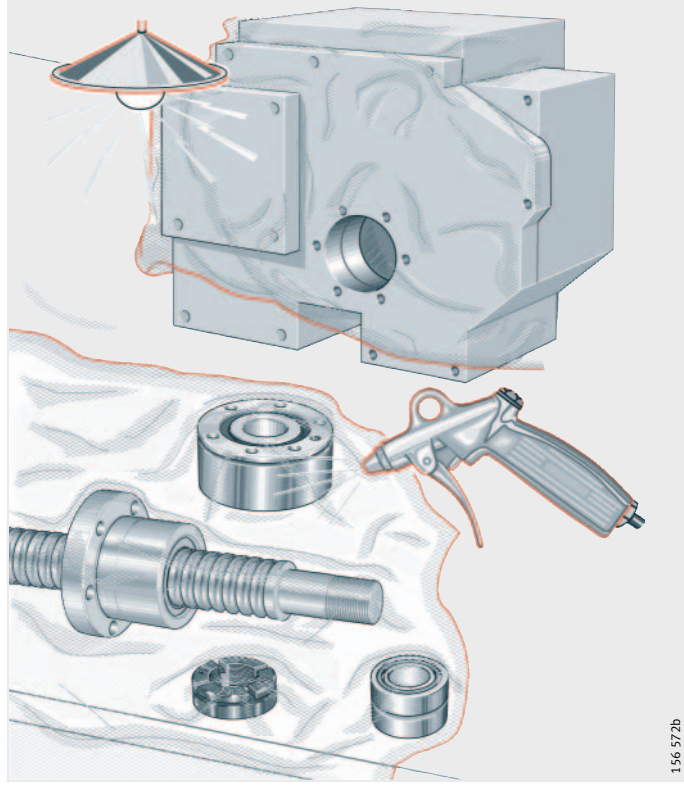

Figure 4
Design of fitting area

www.bergab.ru Берг АБ skf@bergab.ru Тел. (495)-228-06-21, факс (495) 223-3071

Bearing protection measures during fitting

Caution!

If fitting of bearings is very time-consuming – for example with complex fitting processes – or fitting is interrupted, take appropriate measures to protect bearings against contamination and damage.

Do not cover using cleaning wool or lint-forming cloths.

Wrapping

The machine area can be completely wrapped using VCI paper or plastic sheeting, *Figure 5*.

If this is not possible, cover the exposed bearing and shaft with a clean, lint-free cloth, *Figure 6*.

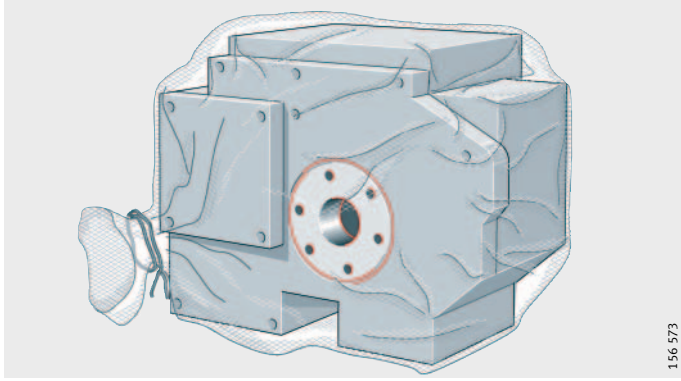

Figure 5
Wrapping of the machine area

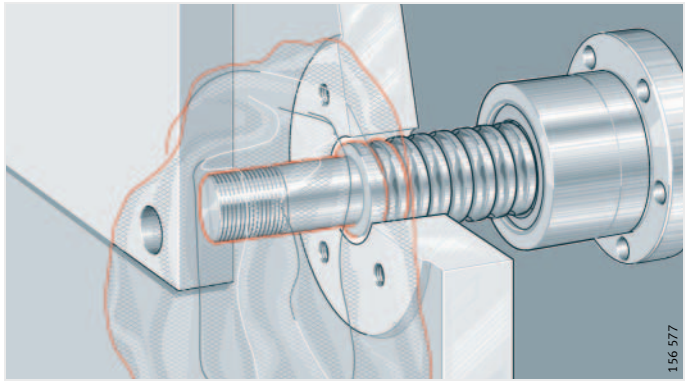

Figure 6
Local covering of the bearing arrangement

www.bergab.ru Берг АБ skf@bergab.ru Тел. (495)-228-06-21, факс (495) 223-3071

Fitting tools

Mechanical processes

The bearing seating on the screw drive spindle and in the housing bore generally has a transition fit. As a result, the bearings can normally be fitted by hand.

If a firmer fit is used, the bearings are preferably pressed onto the shaft seat using a precision locknut ①, *Figure 7*.

Caution! During fitting, forces should be applied only to the bearing ring to be fitted. Forces must never be directed through the rolling elements or sealing rings.

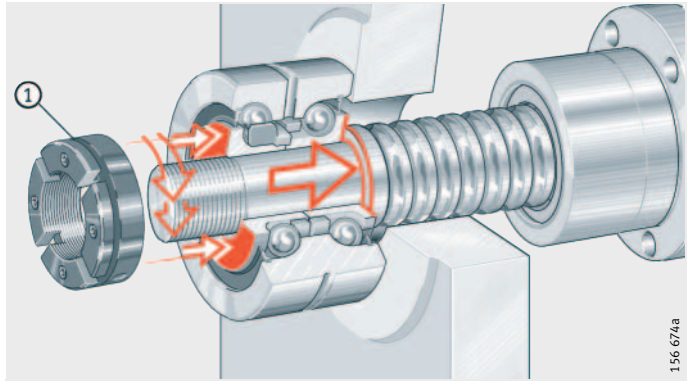

① Precision locknut

Figure 7
Mechanical process

Induction heater

The induction heater ① is suitable for the fitting of ring-shaped machine components made from ferrous materials, *Figure 8*.

Due to its compact dimensions, it can be used in any location with an appropriate mains power supply.

Disadvantages such as uneven heating, bearing contamination, long preheating times, etc. are eliminated. In greased bearings, the quality of the grease is unaffected. There is no heating of plastic or rubber seal lips.

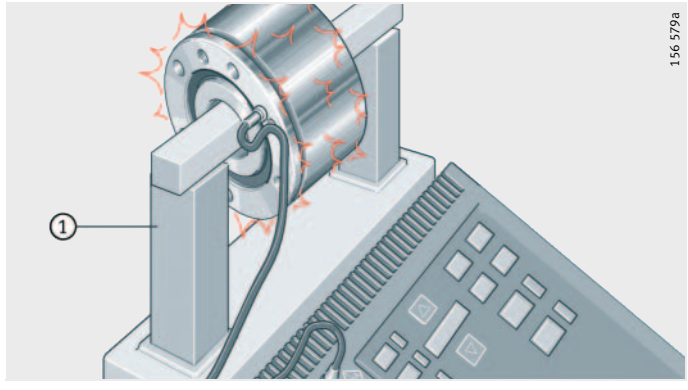

① Induction heater

Figure 8
Heating with an induction heater

Prepararation of the adjacent construction

The locating surfaces for the bearing rings must be clean and free from burrs.

Suitable cleaning agents include petroleum, diesel oil, commercially available grease solvents (e.g. acetone, isopropanol).

Caution! The appropriate legal regulations relating to the use of cleaning agents (manufacturer's instructions and regulations covering health and safety at work, environmental protection, etc.) must be observed.

Cleaning agents must be disposed of correctly after use.

Cleaning the adjacent construction

Cleaning:

- Smooth the locating surfaces and burrs using an oil stone
- Apply cleaning agents to the locating and bearing seating surfaces using a brush or suitable cloth
- Clean and dry the surfaces.

Caution! Ensure that the adjacent components and lubrication holes are free from cleaning agents, solvents and washing emulsions.

If the adjacent construction and lubrication holes are not completely clean, the raceway system may become contaminated or the fit surfaces may rust.

Initial greasing of axial angular contact ball bearings

ZKLF, ZKLN, ZKLFA, DKLFA, ZKLR, BSB, 7602, 7603

Bearings of series ZKLN, ZKLF, ZKLFA and DKLFA are greased using a lithium soap grease to GA28.

Bearings of series ZKLR are greased using a grease to DIN 51825–K2N–40.

Greased bearings of series BSB, 7602 and 7603 are lubricated for life using a lithium soap grease to GA28.

The greases are compatible with oils and greases having a mineral oil base – for special versions see the bearing delivery drawing.

In most cases, the greasing is sufficient for the whole operating life of the bearing.

If oil lubrication is to be used, the bearings should be lubricated using a compatible oil.

Miscibility of greases

Greases may be mixed if:

- they have the same base oil
- they have matching thickener types
- they have similar base oil viscosities – the difference must be no more than one ISO VG class
- they have the same consistency (NLGI class).

In case of doubt, the lubricant manufacturer should be consulted before relubrication conditions are established.

Caution! The bearing frictional torque M_{RL} is heavily dependent, apart from other factors, on greasing of the bearing.

The frictional torques M_{RL} stated in TPI 123 are guide values only. They are valid only for bearings with the original greasing or, in the case of unsealed bearings, for lightly oiled raceways.

Check the miscibility of greases.

www.bergab.ru Берг АБ skf@bergab.ru Тел. (495)-228-06-21, факс (495) 223-3071

Lubrication of needle roller/ axial cylindrical roller bearings ZARN (L), ZARF (L)

These bearings are supplied with a wet or dry preservative. They should preferably be lubricated using oil.

Good results have been obtained with oils CLP (DIN 51 517) and HLP (DIN 51 524) of viscosity classes ISO VG 32 to ISO VG 100.

If grease lubrication is to be used, lithium or lithium complex soap greases with a mineral oil base to DIN 51 825–KP2 are recommended, such as Arcanol MULTITOP.

Caution! Where a vertical axis of rotation is used in conjunction with automatic lubrication systems, the lubrication impulse should be selected such that the supply to the upper axial bearing is sufficient.

Fasteners

Fixing screws

Bearings must only be fixed using the screw types specified.

It is vital to follow the information:

- in TPI 123
- in the technical proposal letter
- that should be included in the assembly drawing.

Caution! The specifications relating to the fasteners must be observed. Any deviations will influence the effectiveness of the screw connection and the function – e.g. the rigidity – as well as the life of the bearings.

Use fixing screws of grade 10.9 to DIN 912 only – for other grades, please contact INA/FAG.

Ensure that the adjacent construction has adequate strength – VDI guideline 2 230.

INA precision locknuts

Caution! Axial angular contact ball bearings and needle roller/axial cylindrical roller bearings must be axially preloaded when fitted.

The technical characteristics of the bearings – e.g. load carrying capacity, frictional torque M_{RL}, axial rigidity C_{aL}, tilting rigidity C_{kL} – are only valid in conjunction with INA precision locknuts.

The setting values stated in the dimension tables in TPI 123 are only valid for INA precision locknuts.

The tightening torques M_A for precision locknuts in accordance with TPI 123 or the technical quotation letter must be observed in all cases. The tightening torques should also be stated in the assembly drawing. Precision locknuts must be secured using set screws after screw mounting.

Bearings for screw drives may only be preloaded using disc springs in special cases. In such cases, the bearing arrangement must be designed specially in order to achieve correct preloading.
Disc springs must never be pressed directly on the bearing rings without intermediate washers.

Angular contact ball bearing unit

Units ZKLR are fixed on the shaft using locknuts or by means of clearance-free clamping.

www.bergab.ru Берг АБ skf@bergab.ru Тел. (495)-228-06-21, факс (495) 223-3071

General safety and operating guidelines

Caution!

During fitting, forces must only be applied to the bearing ring to be fitted, never through the rolling elements or sealing rings; i.e.: when fitting the inner ring, direct forces only through the inner ring; when fitting the outer ring, direct forces only through the outer ring, *Figure 9*.

Avoid direct blows on the bearing rings.

Bearing rings must be fitted without the use of external loads.

Do not heat bearings using a naked flame. The material undergoes excessive localised heating, reducing its hardness. Furthermore, stresses will be induced in the bearing, *Figure 9*.

Do not cool the bearings excessively. Moisture due to condensation can lead to corrosion in the bearings and bearing seatings, *Figure 9*.

Bearings of series ZKLF, ZKLN, ZKLFA, ZKLR, DKLFA, BSB, 7602 and 7603 are self-retaining. Bearings of series ZARN (L) and ZARF (L) are not self-retaining. The components of the bearings are matched to each other and must not be interchanged. If bearing components are separated from the bearing unit, please contact INA/FAG.

Inspection and measurement must only be carried out using extremely precise, calibrated and preferably electronic measuring equipment.

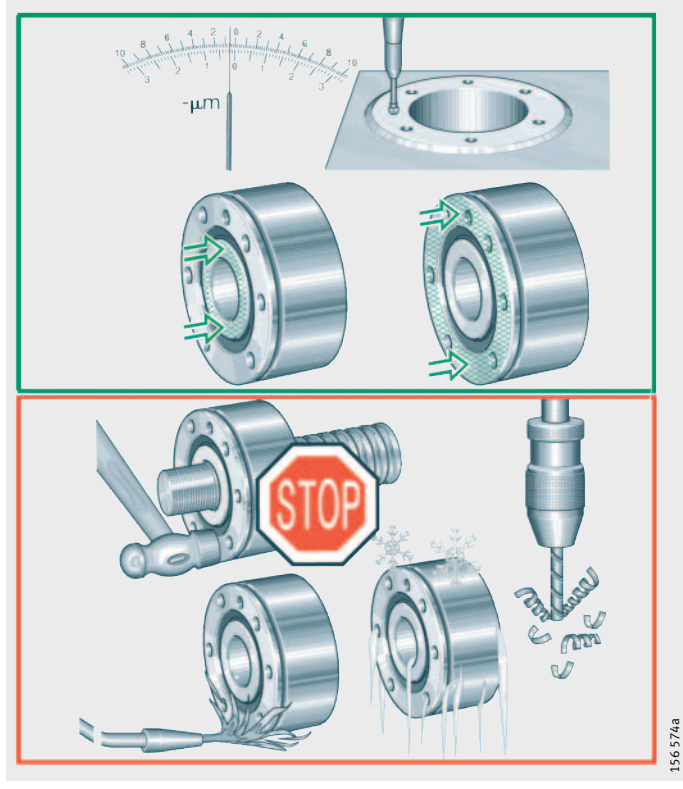

Figure 9
General safety and operating guidelines

www.bergab.ru Берг АБ skf@bergab.ru Тел. (495)-228-06-21, факс (495) 223-3071

Fitting of double row axial angular contact ball bearings for screw mounting Series ZKLF, ZKLF..-PE, ZKLF..-2AP

Bearings of these series are either:

- screw mounted directly on the face of the adjacent construction, *Figure 1* or
- screw mounted in the centring bore in the adjacent construction, *Figure 2*.

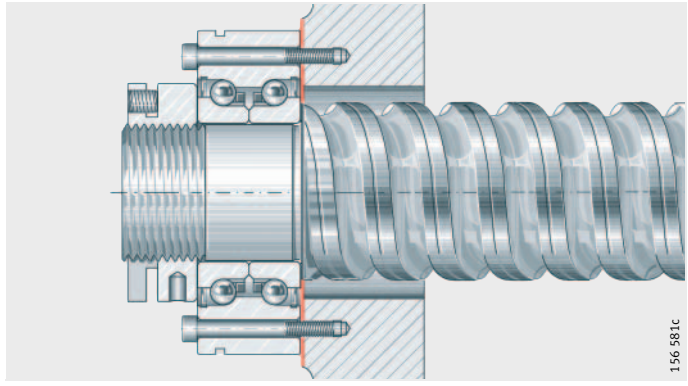

Figure 1
Outer ring screw mounted on flat adjacent construction

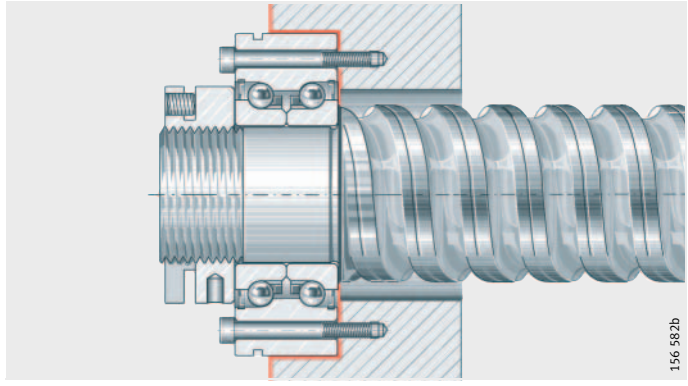

Figure 2
Outer ring screw mounted in bore

www.bergab.ru Берг АБ skf@bergab.ru Тел. (495)-228-06-21, факс (495) 223-3071

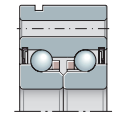

Checking the dimensional and geometrical tolerances of the bearing seating and locating surfaces

For design of the adjacent construction, see *Figure 3*, *Figure 4*:

- Remove any burrs from the holes and edges.
- Check the edge radius on the end of the spindle, the undercut on the shaft shoulder and the lead chamfer on the housing bore in accordance with the information given by the screw drive manufacturer and the assembly drawing.
- Check the surface quality of the bearing seating surfaces.
- Check the dimensional and geometrical accuracy of the seating and locating faces
  - check the shaft/housing seating at two points using a micrometer screw
  - the locating surfaces on the shaft shoulder or on the shoulder of the housing bore must be perpendicular to the cylindrical fit surfaces. An excessively large lateral runout of these locating surfaces will influence the function of the rolling bearings.

Caution! Observe the permissible geometrical tolerances of the screw mounting surfaces on the adjacent construction.

Ensure that the height of the shaft/housing shoulders is not below the minimum heights – minimum abutment diameter. If these values are not achieved, observe the bearing rib diameter D_1, d_1 in the dimension tables in TPI 123.

ZKLF
ZKLF..-2AP

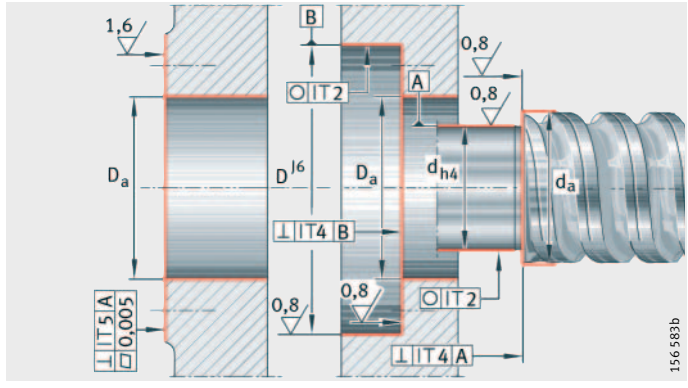

Figure 3
Design of adjacent construction

ZKLF..-PE

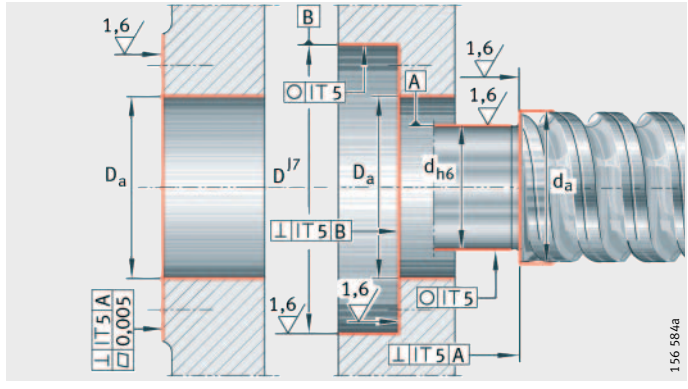

Figure 4
Design of adjacent construction

www.bergab.ru Берг АБ skf@bergab.ru Тел. (495)-228-06-21, факс (495) 223-3071

Matched bearings ZKLF..-2AP

Caution! Ensure that the tolerance of the bearing seating on the shaft is adhered to. If the tolerances are not met, this can lead to tilting of the bearings and impair the function of the bearings as a result.

If matched bearings are screw mounted in the centring bore in the adjacent construction, check the depth of the housing bore. The outer ring of the outermost bearing must be radially supported to at least $^1/_4$ of its width ①, *Figure 5*.

In matched bearings, the individual bearings in the assembly are matched to each other. Marking on the outer rings ② indicates the arrangement of the bearings, *Figure 6*. If the correct arrangement is present, the seals face outwards.

Caution! During fitting, the hole pattern of the two bearing outer rings ③ and not the marking ② must match, *Figure 6*.

Matched bearings screw mounted to a flat face must be radially centred by a centring ring, see page 25.

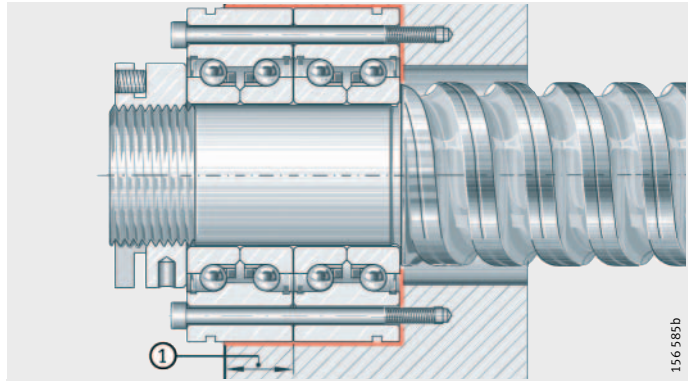

① Radial support

Figure 5
Outer ring screw mounted in bore

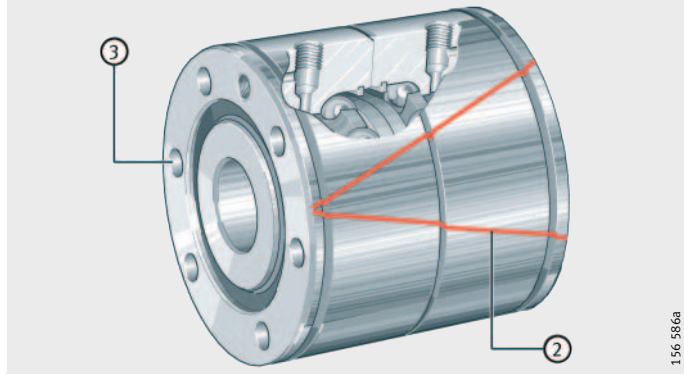

② Marking
③ Hole pattern

Figure 6
Hole pattern/marking on outer ring

www.bergab.ru Берг АБ skf@bergab.ru Тел. (495)-228-06-21, факс (495) 223-3071

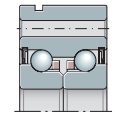

Fitting of bearings on the screw drive spindle

Caution!

Bearings of series ZKLF are self-retaining; the individual bearing components are matched to each other. The inner ring halves must not be separated, *Figure 7*.

If the inner ring halves have been separated due to inappropriate handling, please contact INA/FAG. Never use force to fit the bearing parts, *Figure 8*. This can lead to plastic deformation in the rolling element system that may render the bearing unusable.

Figure 7
Do not remove the inner ring halves

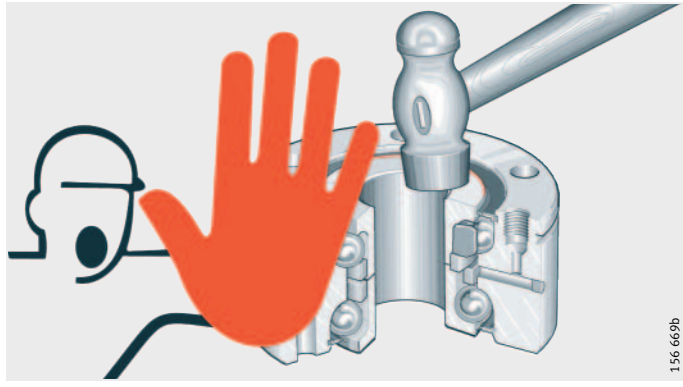

Figure 8
Never use force to fit the bearing parts

www.bergab.ru Берг АБ skf@bergab.ru Тел. (495)-228-06-21, факс (495) 223-3071

Mounting of bearings

Mount the bearings according to the following procedure (see also notes on the description of fitting procedures, page 6):

- Lightly oil or grease the seating surface for the bearing rings on the screw drive spindle and the bore of the bearing.
- If a nut ① is mounted on the spindle, push the bearing seating side of the spindle through the bore in the adjacent construction, *Figure 9*
  - care should be taken not to damage the spindle.
- Push the bearing assembly onto the bearing seating until the innermost inner ring rests against the shoulder of the screw drive spindle ② – ensure correcting positioning of the extraction slot ③, *Figure 10*
  - the bearing seating on the screw drive spindle generally has a transition fit. As a result, bearings can normally be fitted by hand
  - if the fit is tighter, the bearing is preferably pushed onto the shaft seating by means of a precision locknut ④, *Figure 10* – tools for fitting of locknuts: see page 68 and page 72.

Caution!

During fitting, forces should be applied only to the bearing ring to be fitted. Forces must never be directed through the rolling elements or sealing rings.

Preload the bearing against the shaft shoulder using a locknut and secure the locknut, page 68 and 72.

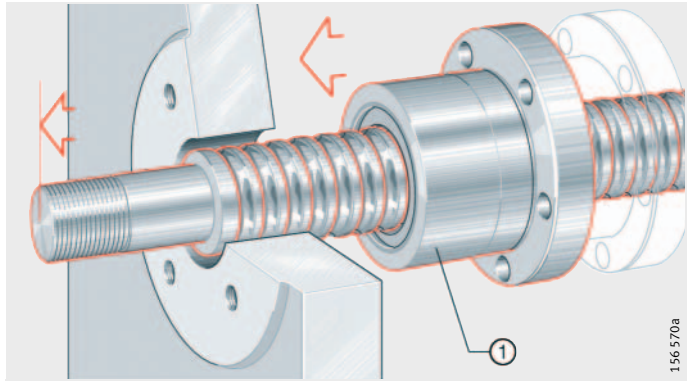

① Spindle nut

Figure 9
Positioning the spindle

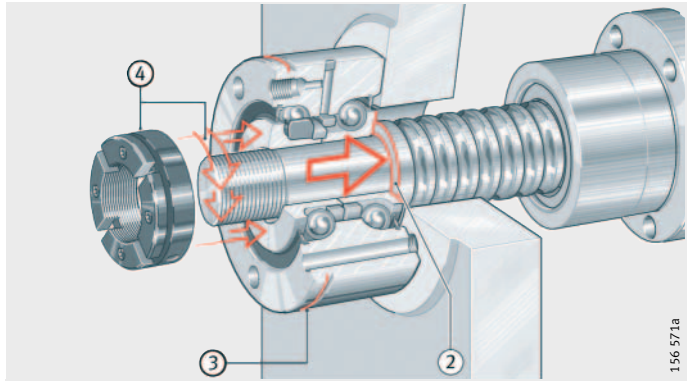

② Abutment of innermost inner ring
③ Extraction slot
④ Precision locknut

Figure 10
Mounting the bearing assembly on the spindle

www.bergab.ru Берг АБ skf@bergab.ru Тел. (495)-228-06-21, факс (495) 223-3071

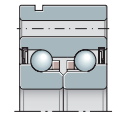

Screw mounting of bearings directly on the face of the adjacent construction

Mounting of bearings

- Lightly oil or grease the bearing seating surface on the adjacent construction.

Caution!

If the bearing outer ring is to be bonded by adhesive to the face of the adjacent construction, for example using Loctite 638, keep the bearing seating surface free from oil and grease. The instructions given by the adhesive manufacturer must be followed in all cases.

Adhesives must not be allowed to penetrate the raceway system or come into contact with the seals.

- Press the bearing assembly ① against the face of the adjacent construction, *Figure 11*
  – care should be taken not to damage the spindle.
- Insert the fixing screws ② for the bearing outer ring in the holes and tighten finger tight, *Figure 12*.
- Align the bearing assembly ① radially by moving the nut ③, *Figure 12*.

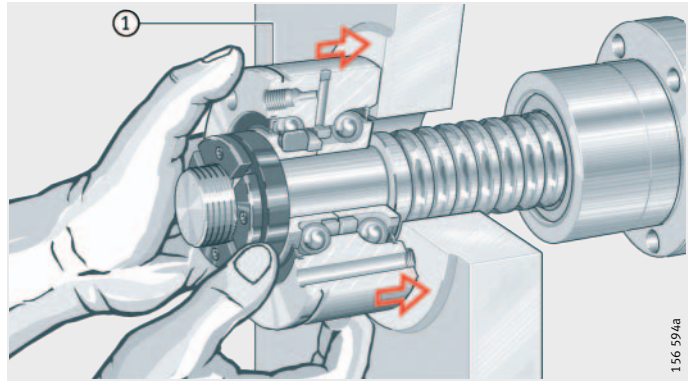

① Bearing assembly

Figure 11
Pressing the bearing assembly against the face

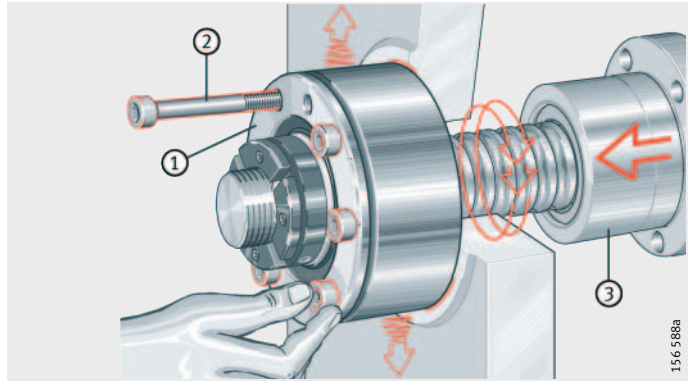

① Bearing assembly
② Fixing screws
③ Spindle nut

Figure 12
Screw mounting the bearing assembly finger tight/ aligning the bearing assembly using the nut

www.bergab.ru Берг АБ skf@bergab.ru Тел. (495)-228-06-21, факс (495) 223-3071

- Tighten the fixing screws ① using a torque wrench ② to the specified tightening torque M_A in accordance with the screw manufacturer's instructions or the assembly drawing, *Figure 13*
  - tighten the screws in a crosswise sequence in order to prevent unacceptable fluctuations in the screw tightening forces.

Caution! All the fixing screw holes must be used. If a smaller number are used, this will reduce the load carrying capacity of the screw connections as well as the running accuracy and load carrying capacity of the bearings.

The rigidity values in the dimension tables of TPI 123 are only valid if all the fixing holes are used.

Matched bearings screw mounted to a flat face must be radially centred by a centring ring, see page 25.

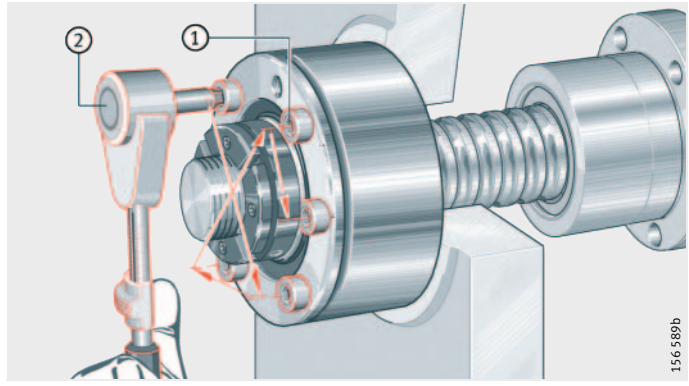

① Fixing screws
② Torque wrench

Figure 13
Screw mounting the bearing assembly

www.bergab.ru Берг АБ skf@bergab.ru Тел. (495)-228-06-21, факс (495) 223-3071

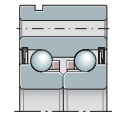

Screw mounting of bearings in the centring bore in the adjacent construction

Mounting of bearings

- Lightly oil or grease the bearing seating surfaces in the housing bore.
- Push the bearing assembly ① into the housing bore until it contacts the housing shoulder, *Figure 14*
  - if the fit is tighter, the bearing is preferably drawn into the housing bore uniformly using long screws ② or threaded rods with countertensioned hexagonal nuts, *Figure 15*
  - care should be taken not to damage the spindle.

Caution! During fitting, forces should be applied only to the bearing ring to be fitted. Forces must never be directed through the rolling elements or sealing rings.

Do not tilt the outer ring. If the outer ring is tilted, locate the bearing again and fit concentrically.

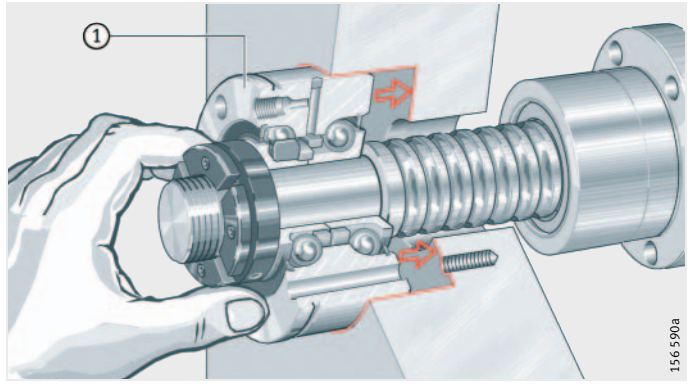

① Bearing assembly

Figure 14
Pushing the bearing assembly into the housing bore

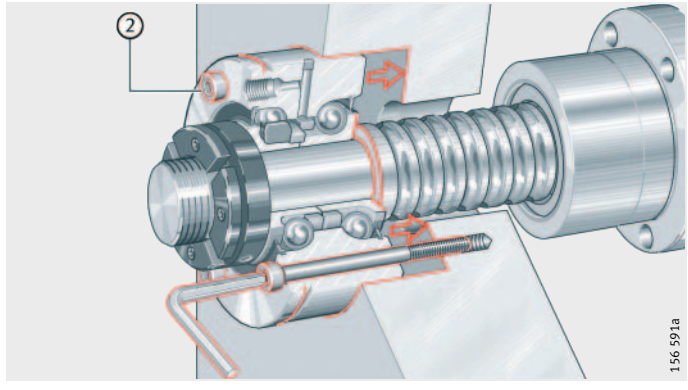

② Long fixing screws

Figure 15
Drawing the bearing assembly into the housing bore using long fixing screws

www.bergab.ru Берг АБ skf@bergab.ru Тел. (495)-228-06-21, факс (495) 223-3071

- Insert the fixing screws ① for the bearing outer ring in the holes and tighten finger tight, *Figure 16*.
- Tighten the fixing screws using a torque wrench ② to the specified tightening torque M_A in accordance with the screw manufacturer's instructions or the assembly drawing, *Figure 17*
  - tighten the screws in a crosswise sequence in order to prevent unacceptable fluctuations in the screw tightening forces.

Caution! All the fixing screw holes must be used. If a smaller number are used, this will reduce the load carrying capacity of the screw connections as well as the running accuracy and load carrying capacity of the bearings.

The rigidity values in the dimension tables of TPI 123 are only valid if all the fixing holes are used.

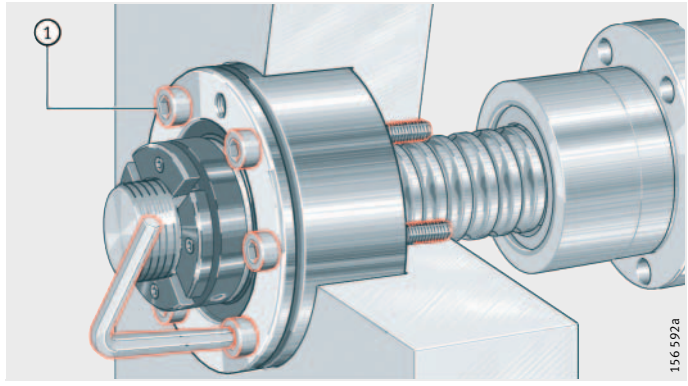

① Fixing screws

Figure 16
Screw mounting the bearing assembly finger tight

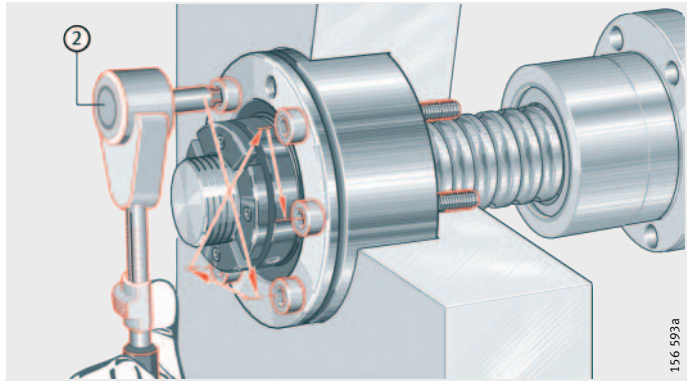

② Torque wrench

Figure 17
Screw mounting the bearing assembly

www.bergab.ru Берг АБ skf@bergab.ru Тел. (495)-228-06-21, факс (495) 223-3071

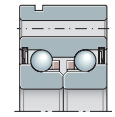

Radial centring of screw mounted, matched bearings using a centring ring

Caution!

Matched bearings ZKLF..-2AP screw mounted directly on the face of the adjacent construction must be radially centred.

Radial centring of bearings

- Prepare the centring ring ① and push it over the joint between the two bearings, *Figure 18*, *Figure 19*
  - the ring must be in contact with the screw mounting face of the adjacent construction.
- Secure the centring ring axially using a commercially available retaining ring ② in the extraction slot of the bearing.

Dimensions of the centring ring, *Figure 19*:

- The dimensions D, d are in relation to the outside diameter D of the bearing. For bearing dimensions, see TPI 123, dimension tables
- The width B of the centring ring is dimension l in TPI 123, dimension tables.

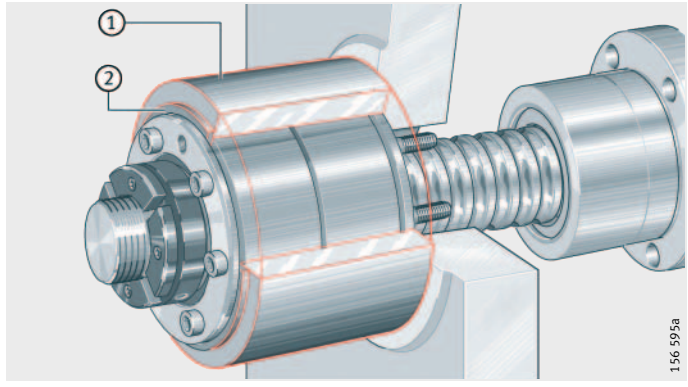

① Centring ring
② Retaining ring

Figure 18
Centring the bearings radially using a centring ring

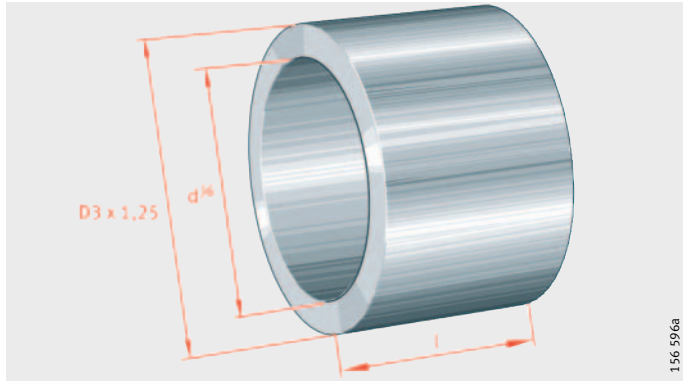

Figure 19
Dimensions of the centring ring

www.bergab.ru Берг АБ skf@bergab.ru Тел. (495)-228-06-21, факс (495) 223-3071

Fitting of double row axial angular contact ball bearings not for screw mounting

Series ZKLN, ZKLN..-PE, ZKLN..-2AP, ZKLN..-DAC

Bearings of these series are fitted in the centring bore in the adjacent construction and axially located using a housing cover ①, *Figure 1*.

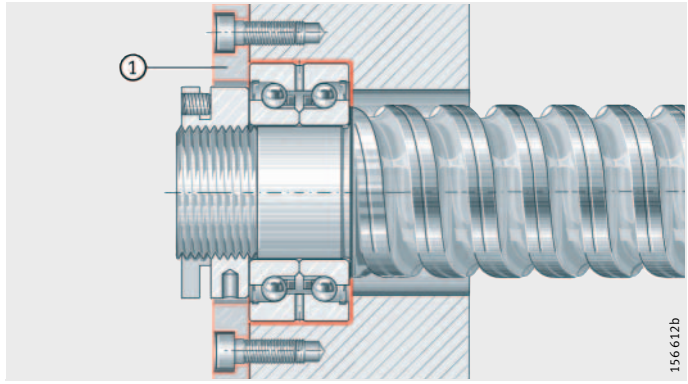

① Housing cover

Figure 1
Outer ring screw mounted in bore

www.bergab.ru Берг АБ skf@bergab.ru Тел. (495)-228-06-21, факс (495) 223-3071

Checking the dimensional and geometrical tolerances of the bearing seating and locating surfaces

For design of the adjacent construction, see *Figure 2*, *Figure 3*:

- Remove any burrs from the holes and edges.
- Check the edge radius on the end of the spindle, the undercut on the shaft shoulder and the lead chamfer on the housing bore in accordance with the information given by the screw drive manufacturer and the assembly drawing.
- Check the surface quality of the bearing seating surfaces.
- Check the dimensional and geometrical accuracy of the seating and locating faces
  - check the shaft/housing seating at two points using a micrometer screw
  - the locating surfaces on the shaft shoulder or on the shoulder of the housing bore must be perpendicular to the cylindrical fit surfaces. An excessively large lateral runout of these locating surfaces will influence the function of the rolling bearings.

Caution! Observe the permissible geometrical tolerances of the screw mounting surfaces on the adjacent construction.

Ensure that the height of the shaft/housing shoulders is not below the minimum heights – minimum abutment diameter. If these values are not achieved, observe the bearing rib diameter D_1, d_1 in the dimension tables in TPI 123.

ZKLN
ZKLN..-2AP
ZKLN..-DAC

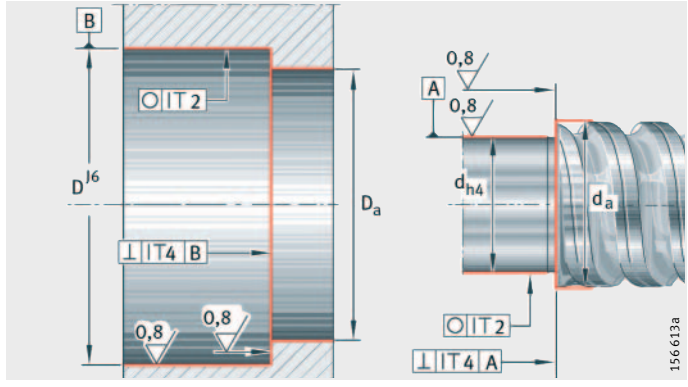

Figure 2
Design of adjacent construction

ZKLN..-PE

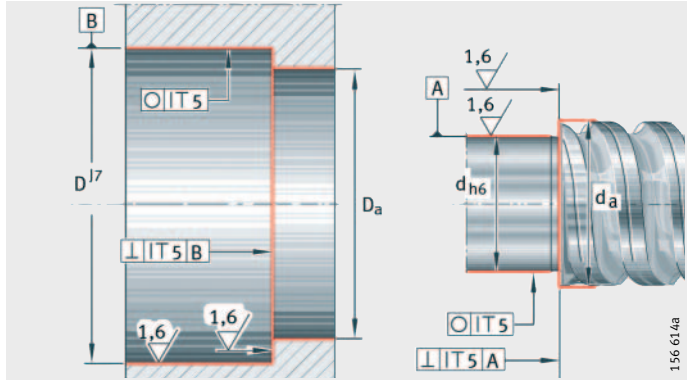

Figure 3
Design of adjacent construction

www.bergab.ru Берг АБ skf@bergab.ru Тел. (495)-228-06-21, факс (495) 223-3071

Matched bearings ZKLN..-2AP

Caution! Ensure that the tolerance of the bearing seating on the shaft is adhered to. If the tolerances are not met, this can lead to tilting of the bearings and impair the function of the bearings as a result.

In matched bearings, the individual bearings in the assembly are matched to each other. Marking on the outer rings indicates the arrangement of the bearings, *Figure 4*, ①.
If the correct arrangement is present, the seals face outwards.

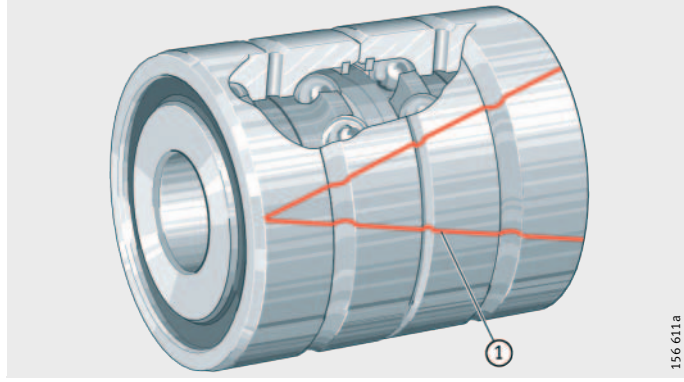

① Marking

Figure 4
Marking on outer ring

www.bergab.ru Берг АБ skf@bergab.ru Тел. (495)-228-06-21, факс (495) 223-3071

Fitting of bearings on the screw drive spindle

Caution!

Bearings of series ZKLN are self-retaining; the individual bearing components are matched to each other. The inner ring halves must not be separated, *Figure 5*.

If the inner ring halves have been separated due to inappropriate handling, please contact INA/FAG. Never use force to fit the bearing parts, *Figure 6*. This can lead to plastic deformation in the rolling element system that may render the bearing unusable.

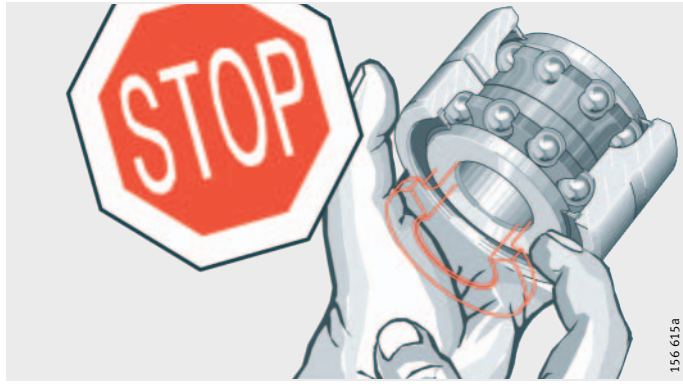

Figure 5
Do not remove the inner ring halves

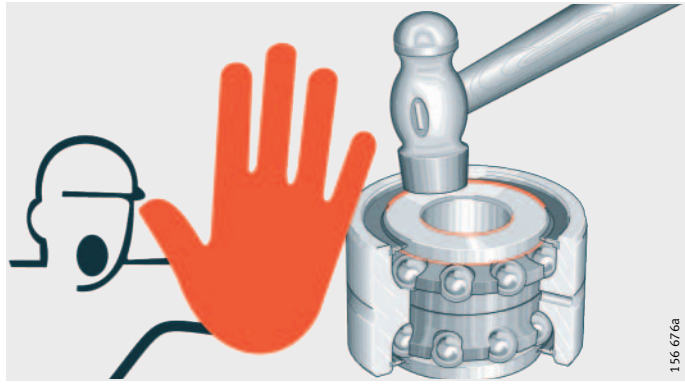

Figure 6
Never use force to fit the bearing parts

www.bergab.ru Берг АБ skf@bergab.ru Тел. (495)-228-06-21, факс (495) 223-3071

Mounting of bearings

Mount the bearings according to the following procedure (see also notes on the description of fitting procedures, page 6):

- Lightly oil or grease the seating surface for the bearing rings on the screw drive spindle and the bore of the bearing.
- If a nut ① is mounted on the spindle, push the bearing seating side of the spindle through the bore in the adjacent construction, *Figure 7*
  - care should be taken not to damage the spindle.
- Push the bearing assembly onto the bearing seating until the innermost inner ring rests against the shoulder of the screw drive spindle ②, *Figure 8*
  - the bearing seating on the screw drive spindle generally has a transition fit. As a result, bearings can normally be fitted by hand
  - if the fit is tighter, the bearing is preferably pushed onto the shaft seating by means of a precision locknut ③, *Figure 8* – tools for fitting of locknuts: see page 68 and page 72.

Caution!

During fitting, forces should be applied only to the bearing ring to be fitted. Forces must never be directed through the rolling elements or sealing rings.

Preload the bearing against the shaft shoulder using a locknut and secure the locknut, page 68 and 72.

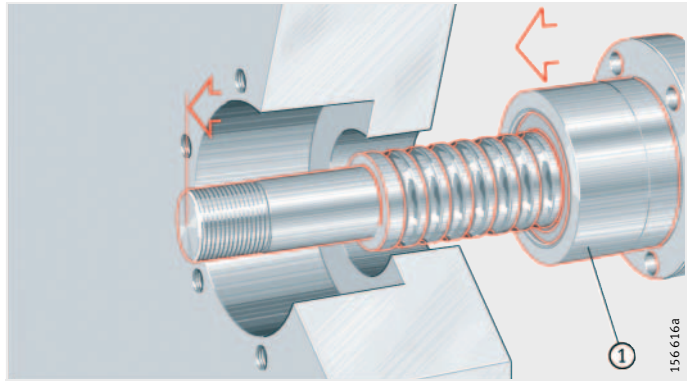

① Spindle nut

Figure 7
Positioning the spindle

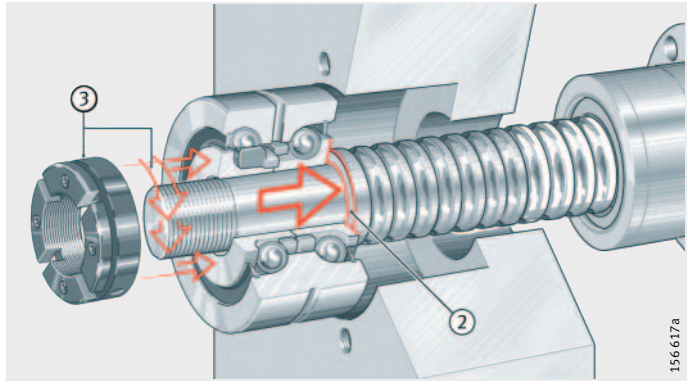

② Abutment of innermost inner ring
③ Precision locknut

Figure 8
Mounting the bearing assembly on the spindle

www.bergab.ru Берг АБ skf@bergab.ru Тел. (495)-228-06-21, факс (495) 223-3071

Screw mounting of bearings in the centring bore in the adjacent construction

Mounting of bearings

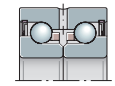

- Lightly oil or grease the bearing seating surfaces in the housing bore.
- Push the bearing assembly ① into the housing bore until it contacts the housing shoulder, *Figure 9*
  - if the fit is tighter, the bearing assembly should be carefully mounted by means of the bearing outer ring using an unhardened fitting sleeve, applying uniform pressure
  - care should be taken not to damage the spindle.

Caution! During fitting, forces should be applied only to the bearing ring to be fitted. Forces must never be directed through the rolling elements or sealing rings.

Do not tilt the outer rings. If the outer rings are tilted, locate the bearing again and fit concentrically.

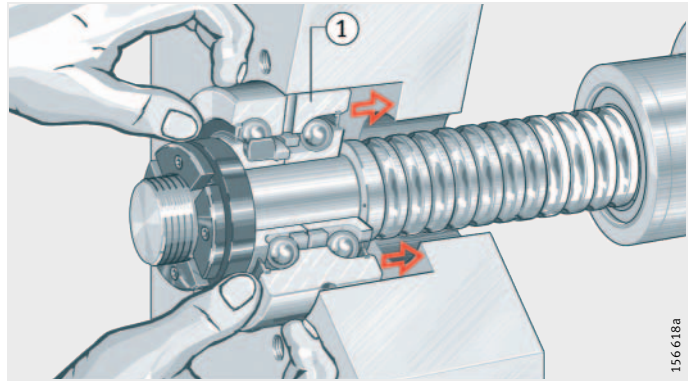

① Bearing assembly

Figure 9
Pushing the bearing assembly into the housing bore

Locating the bearing outer ring

Locate the outer ring using a housing cover ②, *Figure 10*:

- Tighten the fixing screws ③ using a torque wrench ④ in a crosswise sequence to the specified tightening torque M_A in accordance with the screw manufacturer's instructions or the assembly drawing in four stages (finger tight, 40%, 70%, 100% of M_A).

Caution! Only use adequately dimensioned fixing screws for the housing cover ②, *Figure 10*.

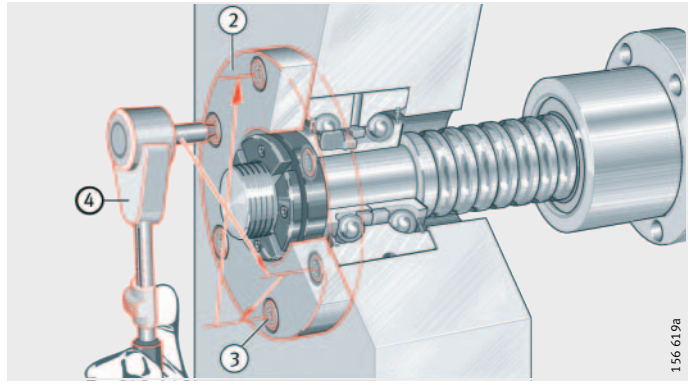

② Housing cover
③ Fixing screws
④ Torque wrench

Figure 10
Locating the outer ring using a housing cover

www.bergab.ru Берг АБ skf@bergab.ru Тел. (495)-228-06-21, факс (495) 223-3071

Fitting of single row axial angular contact ball bearings Series BSB, BSB..-SU, 7602, 7603

Bearings of these series are fitted in the centring bore in the adjacent construction and axially located using a ring nut ① or housing cover ②, *Figure 1*, *Figure 2*.

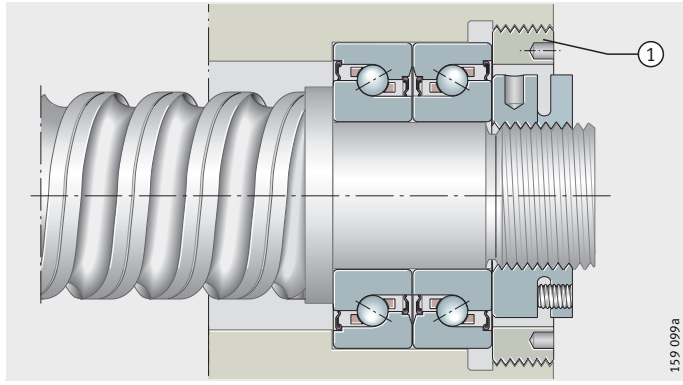

① Ring nut

Figure 1
Two-bearing set in O arrangement, bearing axially located using ring nut

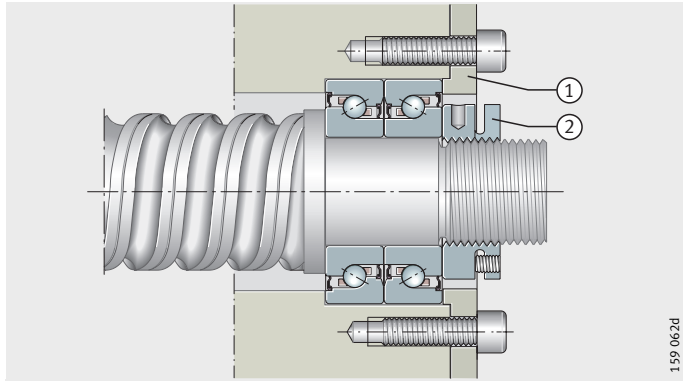

① Housing cover
② Precision locknut

Figure 2
Two-bearing set in O arrangement, bearing axially located using housing cover

www.bergab.ru Берг АБ skf@bergab.ru Тел. (495)-228-06-21, факс (495) 223-3071

Checking the dimensional and geometrical tolerances of the bearing seating and locating surfaces

For design of the adjacent construction, see *Figure 3*:

- Remove any burrs from the holes and edges.
- Check the edge radius on the end of the spindle, the undercut on the shaft shoulder and the lead chamfer on the housing bore in accordance with the information given by the screw drive manufacturer and the assembly drawing.
- Check the surface quality of the bearing seating surfaces.
- Check the dimensional and geometrical accuracy of the seating and locating faces
  - check the shaft/housing seating at two points using a micrometer screw
  - the locating surfaces on the shaft shoulder or on the shoulder of the housing bore must be perpendicular to the cylindrical fit surfaces. An excessively large lateral runout of these locating surfaces will influence the function of the rolling bearings
  - values r, r_1: see dimension table, TPI 107.

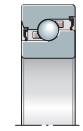

Caution! Observe the permissible geometrical tolerances of the screw mounting surfaces on the adjacent construction.

Ensure that the height of the shaft/housing shoulders is not below the minimum heights – minimum abutment diameter. If these values are not achieved, observe the bearing rib diameter D_1, D_2, d_1, d_2 in the dimension tables in TPI 123.

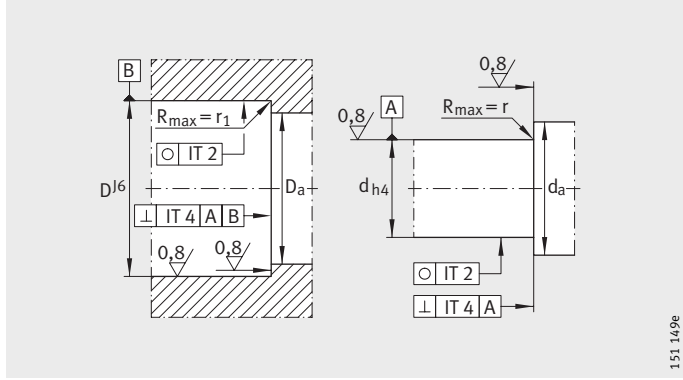

Figure 3
Design of adjacent construction

www.bergab.ru Берг АБ skf@bergab.ru Тел. (495)-228-06-21, факс (495) 223-3071

Matched bearings

The bearings are designed as universal bearings and can be combined in a wide range of sets, *Figure 4*.

Bearings of series BSB..-SU are marked with the nominal bore and outside diameter. This allows sorting of bearings into specific combinations to meet particular requirements.

Caution!

Ensure that the tolerance of the bearing seating on the shaft is adhered to. If the tolerances are not met, this can lead to tilting of the bearings and impair the function of the bearings as a result.

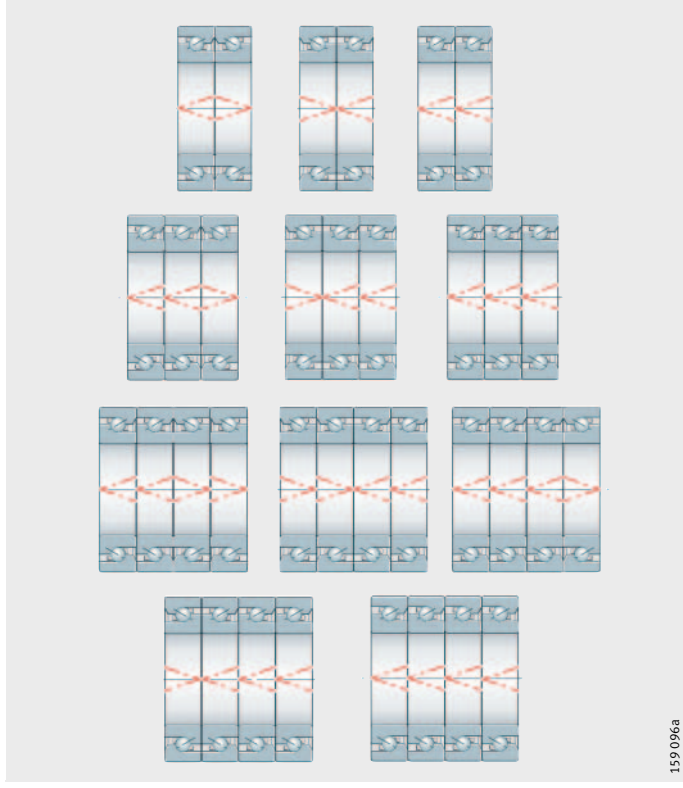

Figure 4
Set combinations

www.bergab.ru Берг АБ skf@bergab.ru Тел. (495)-228-06-21, факс (495) 223-3071

Fitting of bearings on the screw drive spindle

Caution!

The bearings are self-retaining. Never remove the inner ring from the bearing, *Figure 5*.

If the bearing rings are separated, please contact INA/FAG. Never use force to fit the bearing parts, *Figure 6*. This can lead to plastic deformation in the rolling element system that may render the bearing unusable.

Figure 5
Do not remove the inner ring

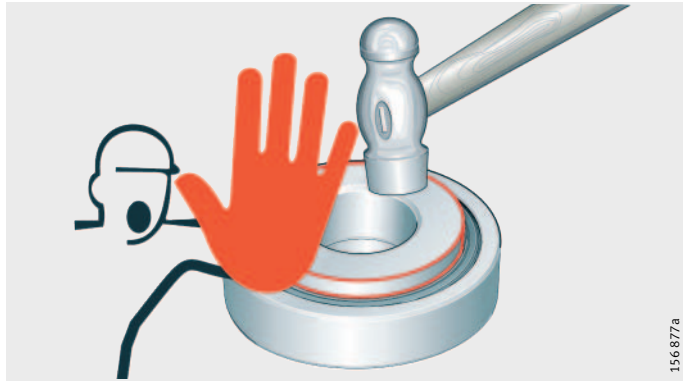

Figure 6
Never use force to fit the bearing parts

www.bergab.ru Берг АБ skf@bergab.ru Тел. (495)-228-06-21, факс (495) 223-3071

Mounting of bearings

Mount the bearings according to the following procedure (see also notes on the description of fitting procedures, page 6):

- Lightly oil or grease the seating surface for the bearing rings on the screw drive spindle and the bore of the bearing.
- If a nut ① is mounted on the spindle, push the bearing seating side of the spindle through the bore in the adjacent construction, *Figure 7*
  - care should be taken not to damage the spindle.
- Push the first bearing onto the bearing seating until the inner ring rests against the shoulder of the screw drive spindle ②, *Figure 8*
  - the bearing seating on the screw drive spindle generally has a transition fit. As a result, bearings can normally be fitted by hand
  - if the fit is tighter, the bearing is preferably pushed onto the shaft seating by means of a precision locknut ③, *Figure 8* – tools for fitting of locknuts: see page 68 and page 72.

Caution!

Observe the mounting direction of the bearing in accordance with the assembly drawing and the arrow marks on the bearing outside diameter.

In series BSB..-SU, the mounting position can also be seen from the seal colour.

During fitting, forces should be applied only to the bearing ring to be fitted. Forces must never be directed through the rolling elements or sealing rings.

Preload the bearing against the shaft shoulder using a locknut and secure the locknut, page 68 and 72.

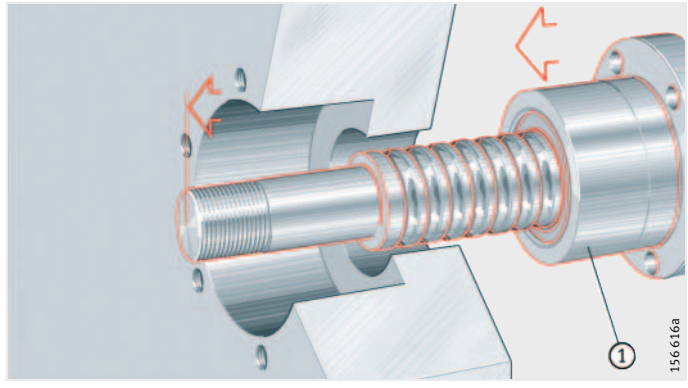

① Spindle nut

Figure 7
Positioning the spindle

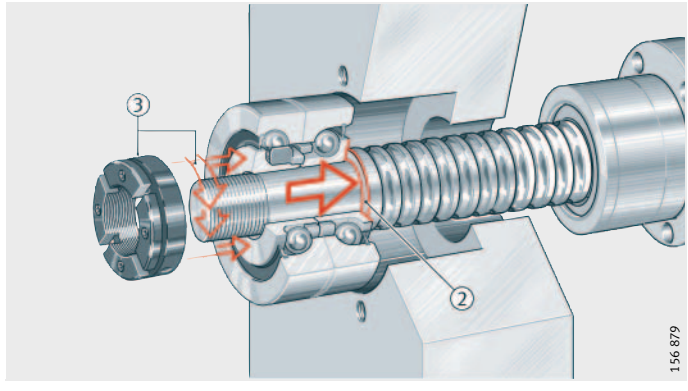

② Abutment of inner ring
③ Precision locknut

Figure 8
Mounting the bearing assembly on the spindle

www.bergab.ru Берг АБ skf@bergab.ru Тел. (495)-228-06-21, факс (495) 223-3071

Mounting of bearings in the centring bore in the adjacent construction

Mounting of bearings

- Lightly oil or grease the bearing seating surfaces in the housing bore.
- Push the bearing assembly ① into the housing bore until it contacts the housing shoulder, *Figure 9*
  - if the fit is tighter, the bearing assembly should be carefully mounted by means of the bearing outer ring using an unhardened fitting sleeve, applying uniform pressure
  - care should be taken not to damage the spindle.

Caution! During fitting, forces should be applied only to the bearing ring to be fitted. Forces must never be directed through the rolling elements or sealing rings.

Do not tilt the outer rings. If the outer rings are tilted, locate the bearing again and fit concentrically.

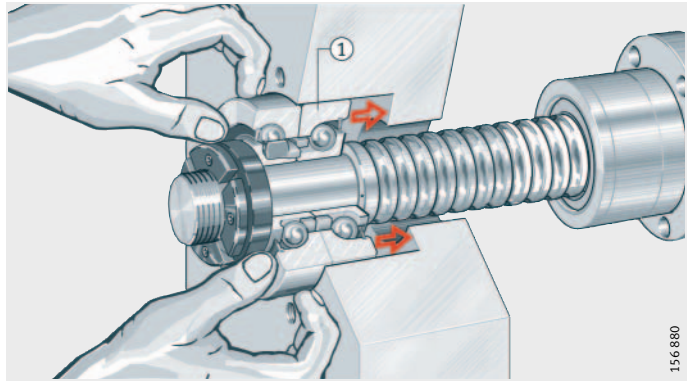

① Bearing assembly

Figure 9
Pushing the bearing assembly into the housing bore

Locating the bearing outer ring

Location of outer ring using a ring nut, *Figure 1*, page 32:

- Tighten the ring nut to the required tightening torque in accordance with the assembly drawing. The preload force given in the catalogue must be observed. Secure the ring nut against loosening (e.g. using Loctite 638).

Location of outer ring using a housing cover, *Figure 2*, page 32:

- Tighten the fixing screws ③ using a torque wrench ④ in a crosswise sequence to the specified tightening torque M_A in accordance with the screw manufacturer's instructions or the assembly drawing in four stages (finger tight, 40%, 70%, 100% of M_A).

Caution! Only use adequately dimensioned fixing screws for the housing cover.

www.bergab.ru Берг АБ skf@bergab.ru Тел. (495)-228-06-21, факс (495) 223-3071

Fitting of angular contact ball bearing units Series ZKLR..-2RS, ZKLR..-2Z

Bearings of these series are screw mounted directly on the face of the adjacent construction, *Figure 1*.

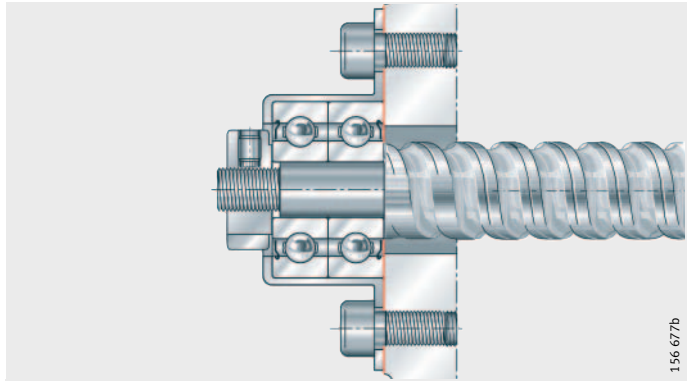

Figure 1
Unit screw mounted on flat adjacent construction

Checking the dimensional and geometrical tolerances of the bearing seating and locating surfaces

For design of the adjacent construction, see *Figure 2*:

- Remove any burrs from the holes and edges.
- Check the edge radius on the end of the spindle and the undercut on the shaft shoulder in accordance with the information given by the screw drive manufacturer and the assembly drawing.
- Check the surface quality of the bearing seating surface.
- Check the dimensional and geometrical accuracy of the seating and locating faces
  - check the shaft seating at two points using a micrometer screw
  - the locating surfaces on the shaft shoulder must be perpendicular to the cylindrical fit surfaces. An excessively large lateral runout of these locating surfaces will influence the function of the rolling bearings.

Caution! Observe the permissible geometrical tolerances of the screw mounting surfaces on the adjacent construction.

Ensure that the height of the shaft/housing shoulders is not below the minimum heights – minimum abutment diameter. If these values are not achieved, observe the bearing rib diameter d_1 in the dimension tables in TPI 123.

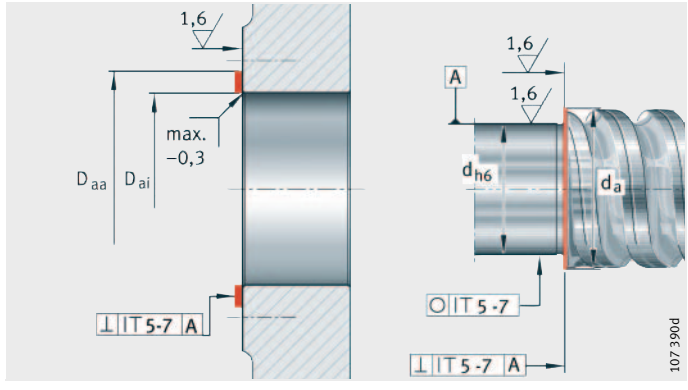

Figure 2
Design of adjacent construction

www.bergab.ru Берг АБ skf@bergab.ru Тел. (495)-228-06-21, факс (495) 223-3071

Fitting the unit on the screw drive spindle

Mount the bearings according to the following procedure (see also notes on the description of fitting procedures, page 6):

- Lightly oil or grease the seating surface for the bearing rings on the screw drive spindle and the bore of the bearing.
- If a nut ① is mounted on the spindle, push the bearing seating side of the spindle through the bore in the adjacent construction, *Figure 3*
  - care should be taken not to damage the spindle.
- Push the bearing assembly onto the bearing seating until the innermost inner ring rests against the shoulder of the screw drive spindle ②, *Figure 4*
  - the bearing seating on the screw drive spindle generally has a transition fit. As a result, bearings can normally be fitted by hand
  - if the fit is tighter, the bearing is preferably pushed onto the shaft seating by means of a precision locknut ③, *Figure 4* – tools for fitting of locknuts: see page 68 and page 72.

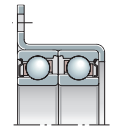

Caution! During fitting, forces should be applied only to the bearing ring to be fitted. Forces must never be directed through the rolling elements or sealing rings.

Locate the bearing using a locknut ③ or clearance-free clamping on the screw drive spindle, *Figure 4*.

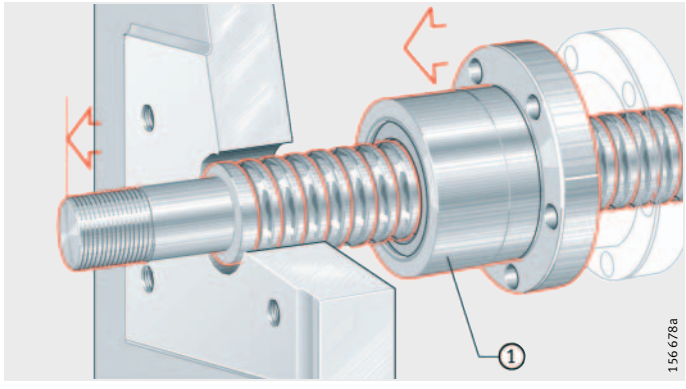

① Spindle nut

Figure 3
Positioning the spindle

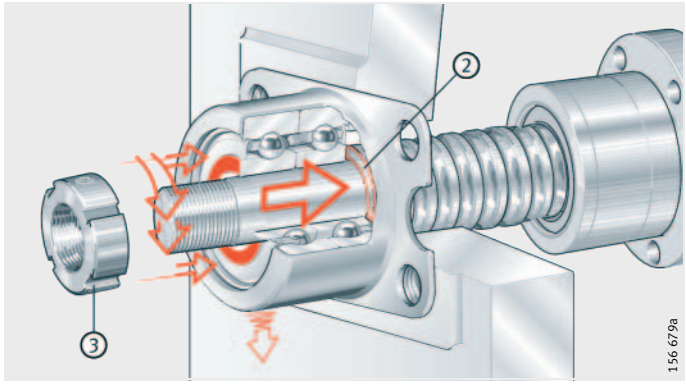

② Abutment of innermost inner ring
③ Precision locknut

Figure 4
Mounting the unit on the spindle

www.bergab.ru Берг АБ skf@bergab.ru Тел. (495)-228-06-21, факс (495) 223-3071

Screw mounting the unit on the face of the adjacent construction

- Lightly oil or grease the bearing seating surface on the adjacent construction.
- Press the unit ① against the face of the adjacent construction, *Figure 5*
  - care should be taken not to damage the spindle.
- Insert the fixing screws ② in the holes in the housing and tighten finger tight, *Figure 5*.
- Align the unit radially by moving the nut, *Figure 5*.
- Tighten the fixing screws using a torque wrench ③ to the specified tightening torque M_A in accordance with the screw manufacturer's instructions or the assembly drawing, *Figure 6*
  - tighten the screws in a crosswise sequence in order to prevent unacceptable fluctuations in the screw tightening forces.

Caution! All the fixing screw holes must be used. If a smaller number are used, this will reduce the load carrying capacity of the screw connections as well as the running accuracy and load carrying capacity of the bearings.

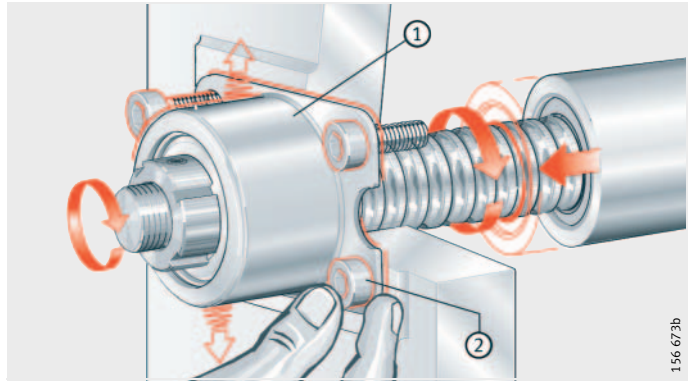

① Angular contact ball bearing unit
② Fixing screws

Figure 5
Pressing the unit against the face/ aligning the unit radially using the nut

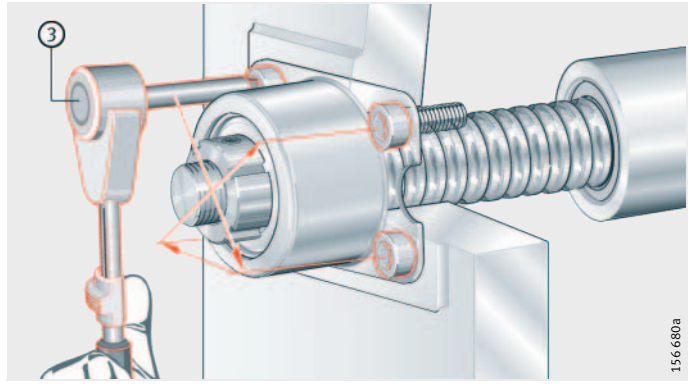

③ Torque wrench

Figure 6
Screw mounting the bearing assembly

www.bergab.ru Берг АБ skf@bergab.ru Тел. (495)-228-06-21, факс (495) 223-3071

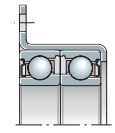

www.bergab.ru Берг АБ skf@bergab.ru Тел. (495)-228-06-21, факс (495) 223-3071

Fitting of double row and triple row axial angular contact ball bearings Series ZKLFA, DKLFA

Bearings of series ZKLFA are only screw mounted in the centring bore in the adjacent construction, *Figure 1*.

Bearings of series DKLFA are either:

- screw mounted directly on the face of the adjacent construction, *Figure 2* or
- screw mounted in the centring bore in the adjacent construction, *Figure 2*.

ZKLFA

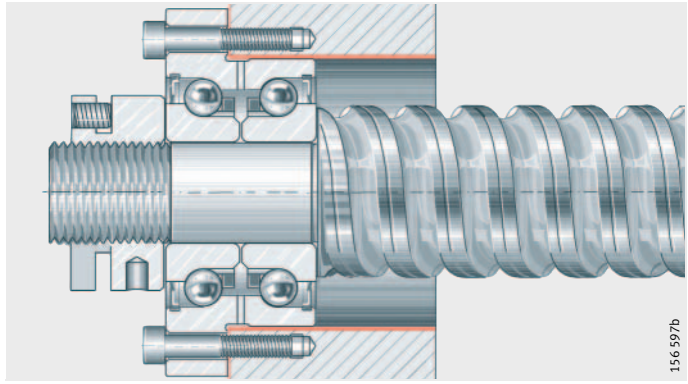

Figure 1
Bearing screw mounted in centring bore

DKLFA

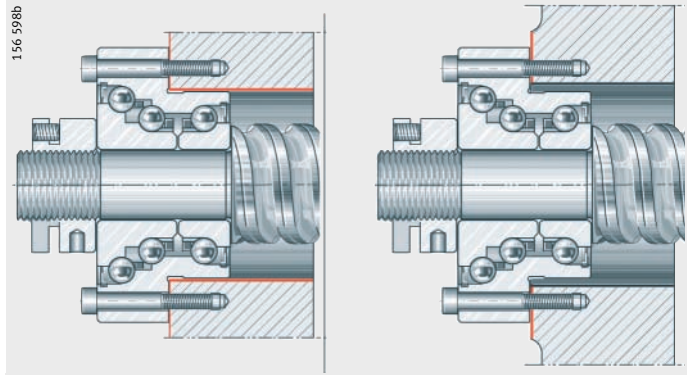

Figure 2
Bearing screw mounted on face of adjacent construction or in centring bore

www.bergab.ru Берг АБ skf@bergab.ru Тел. (495)-228-06-21, факс (495) 223-3071

Checking the dimensional and geometrical tolerances of the bearing seating and locating surfaces

For design of the adjacent construction, see *Figure 3*, *Figure 4*:

- Remove any burrs from the holes and edges.
- Check the edge radius on the end of the spindle, the undercut on the shaft shoulder and the lead chamfer on the housing bore in accordance with the information given by the screw drive manufacturer and the assembly drawing.
- Check the surface quality of the bearing seating surfaces.
- Check the dimensional and geometrical accuracy of the seating and locating faces
  - check the shaft/housing seating at two points using a micrometer screw
  - the locating surfaces on the shaft shoulder or on the shoulder of the housing bore must be perpendicular to the cylindrical fit surfaces. An excessively large lateral runout of these locating surfaces will influence the function of the rolling bearings.

Caution! Observe the permissible geometrical tolerances of the screw mounting surfaces on the adjacent construction.

Ensure that the height of the shaft/housing shoulders is not below the minimum heights – minimum abutment diameter. If these values are not achieved, observe the bearing rib diameter D_1, d_1 in the dimension tables in TPI 123.

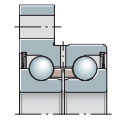

ZKLFA

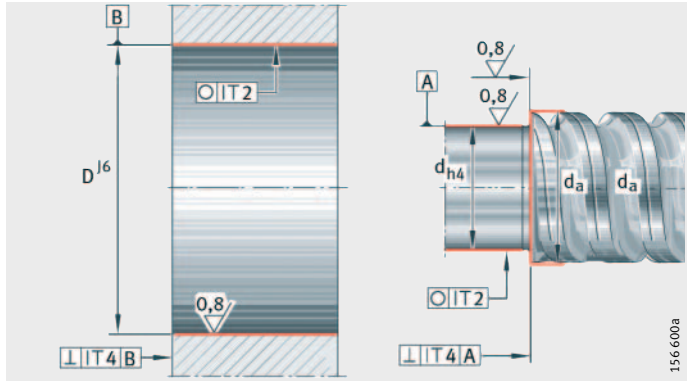

Figure 3
Design of adjacent construction

DKLFA

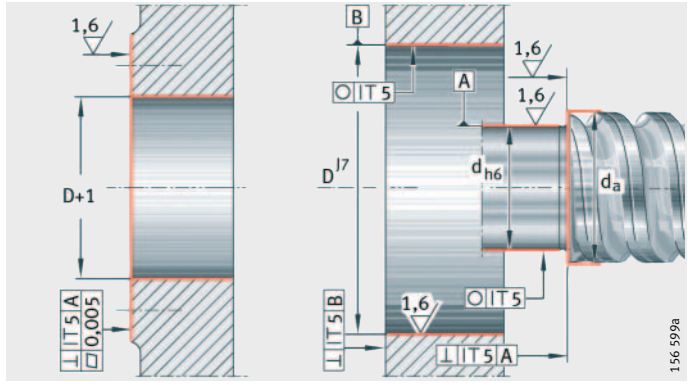

Figure 4
Design of adjacent construction

www.bergab.ru Берг АБ skf@bergab.ru Тел. (495)-228-06-21, факс (495) 223-3071

Fitting of bearings on the screw drive spindle

Caution!

Bearings of series DKLFA/ZKLFA are self-retaining; the individual bearing components are matched to each other. The inner ring halves must not be separated, *Figure 5*.

If the inner ring halves have been separated due to inappropriate handling, please contact INA/FAG. Never use force to fit the bearing parts, *Figure 6*. This can lead to plastic deformation in the rolling element system that may render the bearing unusable.

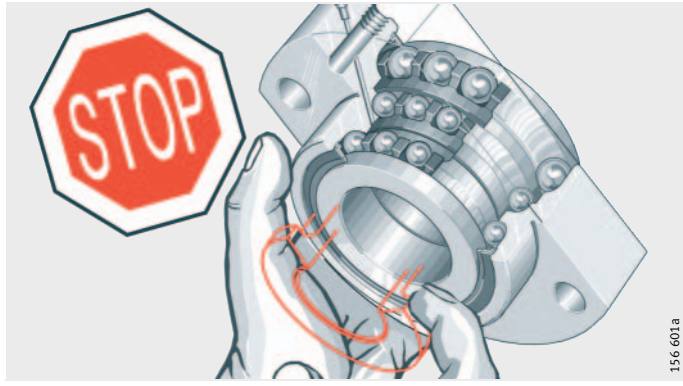

Figure 5
Do not remove the inner ring halves

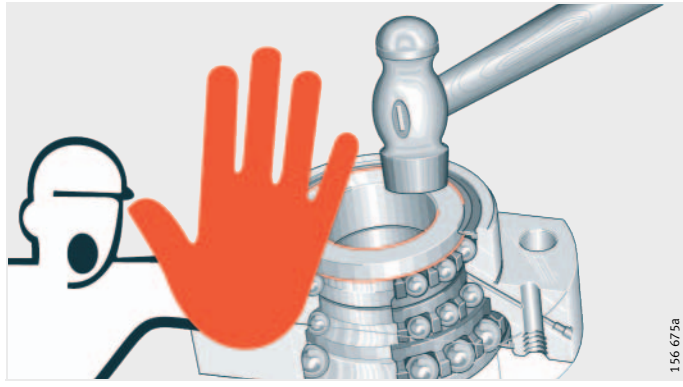

Figure 6
Never use force to fit the bearing parts

www.bergab.ru Берг АБ skf@bergab.ru Тел. (495)-228-06-21, факс (495) 223-3071

Mounting of bearings

Mount the bearings according to the following procedure (see also notes on the description of fitting procedures, page 6):

- Lightly oil or grease the seating surface for the bearing rings on the screw drive spindle and the bore of the bearing.
- If a nut ① is mounted on the spindle, push the bearing seating side of the spindle through the bore in the adjacent construction, *Figure 7*
  - care should be taken not to damage the spindle.
- Push the bearing assembly onto the bearing seating until the innermost inner ring rests against the shoulder of the screw drive spindle ②, *Figure 7*
  - the bearing seating on the screw drive spindle generally has a transition fit. As a result, bearings can normally be fitted by hand
  - if the fit is tighter, the bearing is preferably pushed onto the shaft seating by means of a precision locknut ③, *Figure 8* – tools for fitting of locknuts: see page 68 and page 72.

Caution!

During fitting, forces should be applied only to the bearing ring to be fitted. Forces must never be directed through the rolling elements or sealing rings.

Preload the bearing against the shaft shoulder using a locknut and secure the locknut, page 68 and 72.

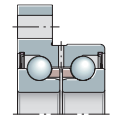

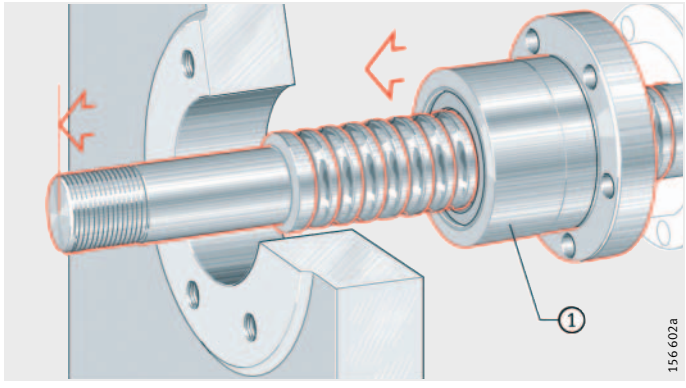

① Spindle nut

Figure 7
Positioning the spindle

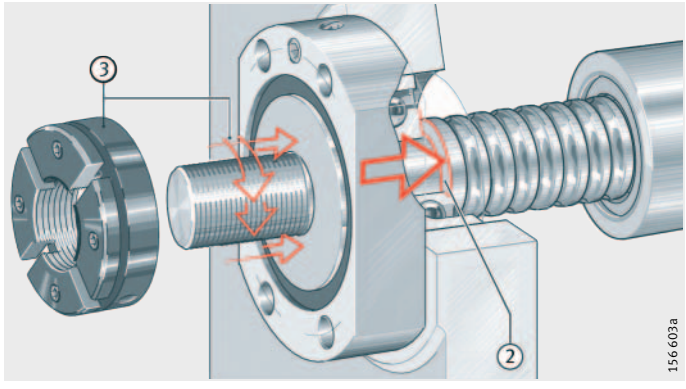

② Abutment of innermost inner ring
③ Precision locknut

Figure 8
Mounting the bearing assembly on the spindle

www.bergab.ru Берг АБ skf@bergab.ru Тел. (495)-228-06-21, факс (495) 223-3071

Screw mounting of bearings in the centring bore in the adjacent construction

Mounting of bearings

- Lightly oil or grease the bearing seating surfaces in the housing bore and on the adjacent construction.
- Push the bearing assembly ① into the housing bore until it contacts the face of the adjacent construction, *Figure 9*
  - if the fit is tighter, the bearing is preferably drawn into the housing bore uniformly using long screws ② or threaded rods with countertensioned hexagonal nuts, *Figure 10*
  - care should be taken not to damage the spindle.

Caution! During fitting, forces should be applied only to the bearing ring to be fitted. Forces must never be directed through the rolling elements or sealing rings.

Do not tilt the outer ring. If the outer ring is tilted, locate the bearing again and fit concentrically.

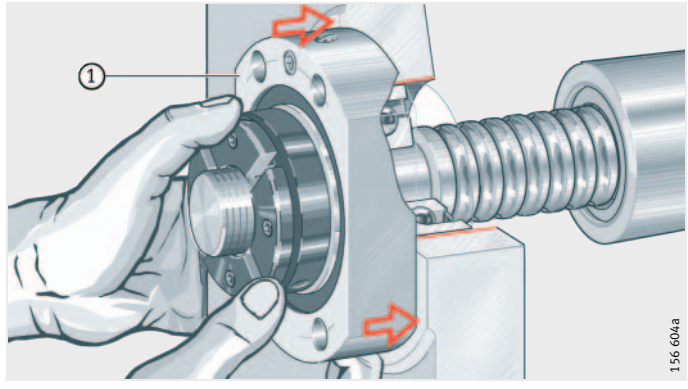

① Bearing assembly

Figure 9
Pushing the bearing assembly into the housing bore to the face

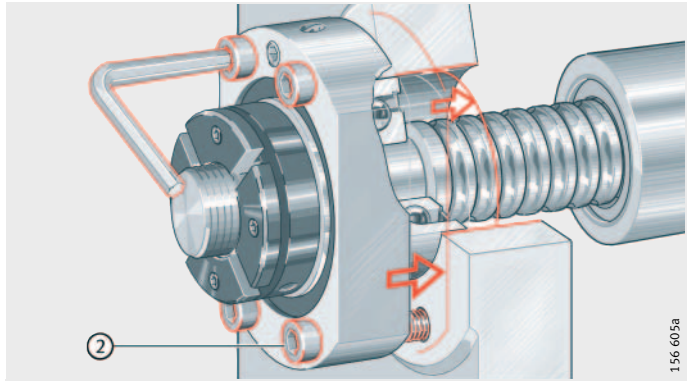

② Long fixing screws

Figure 10
Positioning the bearing assembly using long screws

www.bergab.ru Берг АБ skf@bergab.ru Тел. (495)-228-06-21, факс (495) 223-3071

- Insert the fixing screws ① for the bearing outer ring in the holes and tighten finger tight, *Figure 11*.
- Tighten the fixing screws ① using a torque wrench ② to the specified tightening torque M_A in accordance with the screw manufacturer's instructions or the assembly drawing, *Figure 12*
  - tighten the screws in a crosswise sequence in order to prevent unacceptable fluctuations in the screw tightening forces.

Caution! All the fixing screw holes must be used. If a smaller number are used, this will reduce the load carrying capacity of the screw connections as well as the running accuracy and load carrying capacity of the bearings.

The rigidity values in the dimension tables of TPI 123 are only valid if all the fixing holes are used.

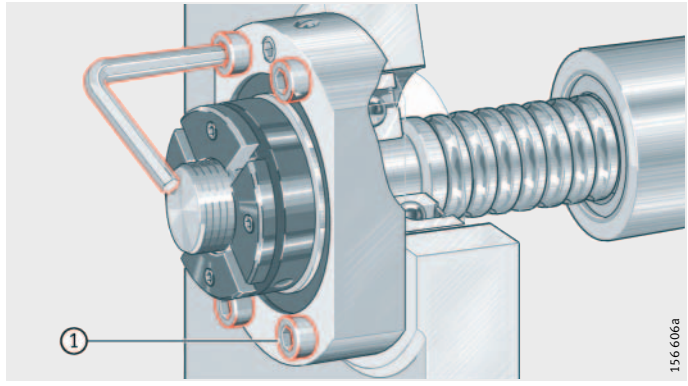

① Fixing screws

Figure 11
Screw mounting the bearing assembly finger tight

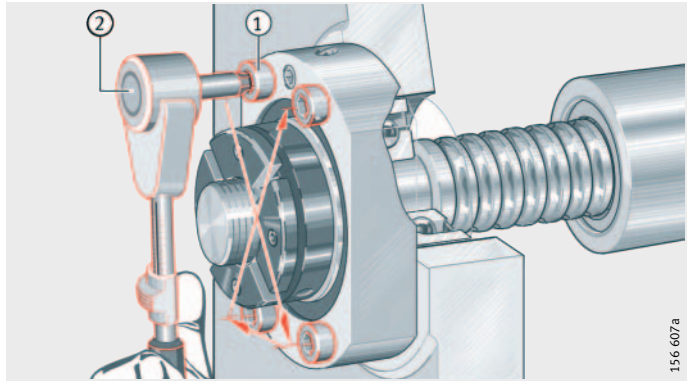

① Fixing screws
② Torque wrench

Figure 12
Screw mounting the bearing assembly

www.bergab.ru Берг АБ skf@bergab.ru Тел. (495)-228-06-21, факс (495) 223-3071

Screw mounting of bearings directly on the face of the adjacent construction

Mounting of bearings

- Lightly oil or grease the bearing seating surfaces in the housing bore and on the adjacent construction.

Caution!

If the bearing outer ring is to be bonded by adhesive to the face of the adjacent construction, for example using Loctite 638, keep the bearing seating surface free from oil and grease. The instructions given by the adhesive manufacturer must be followed in all cases.

Adhesives must not be allowed to penetrate the raceway system or come into contact with the seals.

- Push the bearing assembly ① into the housing bore until it contacts the face of the adjacent construction, *Figure 13*
  – care should be taken not to damage the spindle.
- Insert the fixing screws ② for the bearing outer ring in the holes and tighten finger tight, *Figure 13*.
- Align the bearing assembly ③ radially by moving the nut, *Figure 14*.

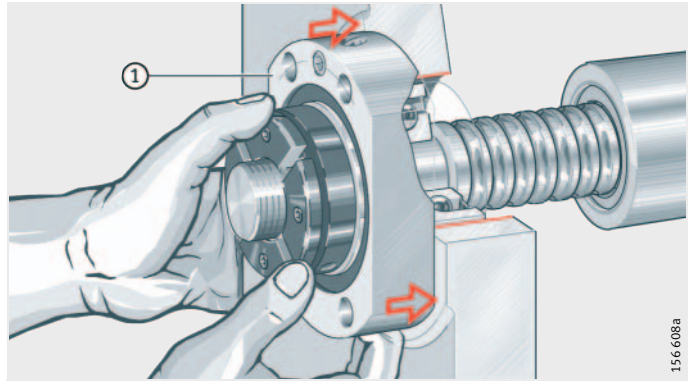

① Bearing assembly

Figure 13
Pushing the bearing assembly into the housing bore to the face

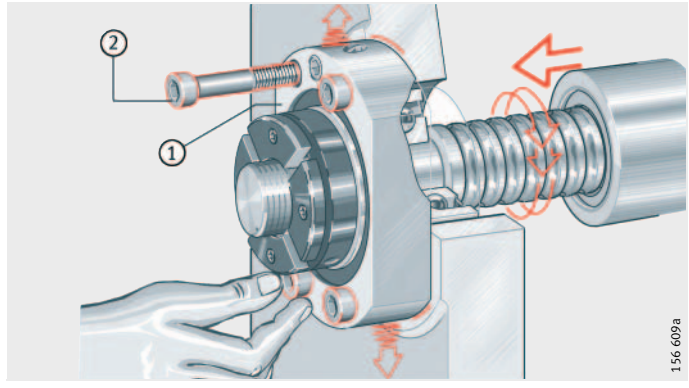

① Bearing assembly
② Fixing screws

Figure 14
Screw mounting the bearing assembly finger tight/ aligning the bearing assembly using the nut

www.bergab.ru Берг АБ skf@bergab.ru Тел. (495)-228-06-21, факс (495) 223-3071

- Tighten the fixing screws ① using a torque wrench ② to the specified tightening torque M_A in accordance with the screw manufacturer's instructions or the assembly drawing, *Figure 15*
  - tighten the screws in a crosswise sequence in order to prevent unacceptable fluctuations in the screw tightening forces.

Caution! All the fixing screw holes must be used. If a smaller number are used, this will reduce the load carrying capacity of the screw connections as well as the running accuracy and load carrying capacity of the bearings.

The rigidity values in the dimension tables of TPI 123 are only valid if all the fixing holes are used.

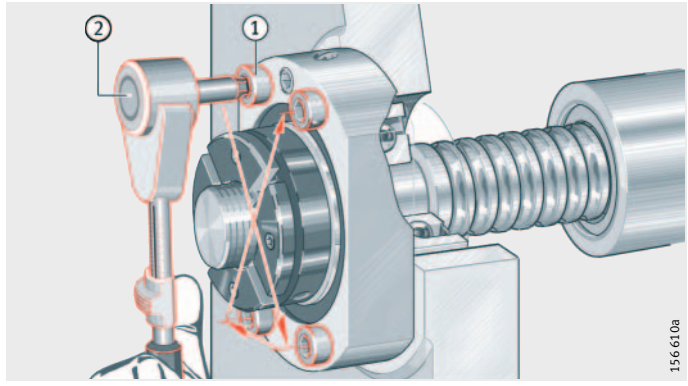

① Fixing screws
② Torque wrench

Figure 15
Screw mounting the bearing assembly

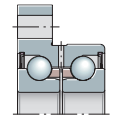

www.bergab.ru Берг АБ skf@bergab.ru Тел. (495)-228-06-21, факс (495) 223-3071

Fitting of needle roller/axial cylindrical roller bearings for screw mounting

Fitting of seal carrier assemblies

Series ZARF (L)

Bearings of series ZARF (L) are screw mounted in the centring bore in the adjacent construction, *Figure 1*.

Series DRS

The seal carrier assembly DRS is centred on the bearing outer ring and seals the bearing against outside influences, *Figure 1*, *Figure 2*. It is supplied as a complete seal assembly, see page 58.

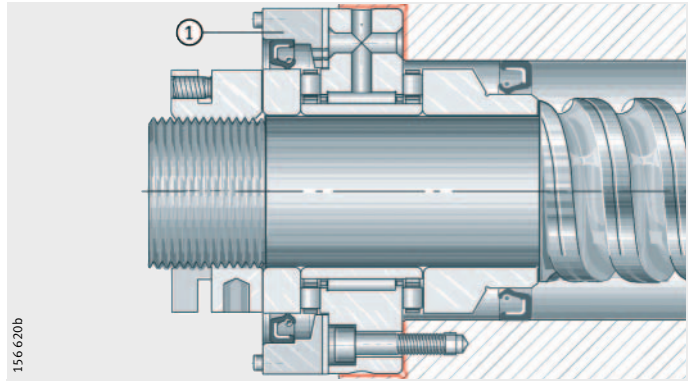

① Seal carrier assembly DRS

Figure 1
Outer ring screw mounted in bore

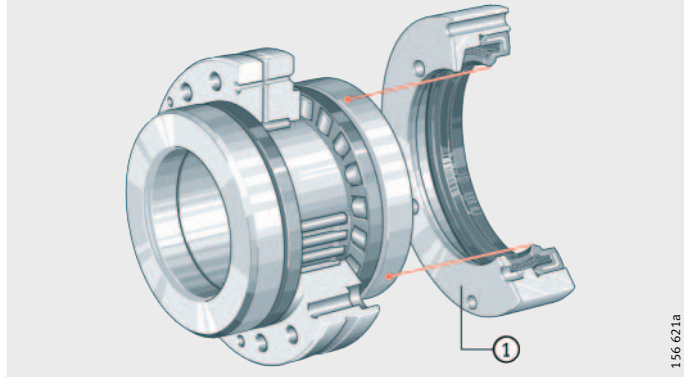

ZARF
DRS
① Seal carrier assembly DRS

Figure 2
Bearing with seal carrier assembly

www.bergab.ru Берг АБ skf@bergab.ru Тел. (495)-228-06-21, факс (495) 223-3071

Checking the dimensional and geometrical tolerances of the bearing seating and locating surfaces

For design of the adjacent construction, see *Figure 3*:

- Remove any burrs from the holes and edges.
- Check the edge radius on the end of the spindle, the undercut on the shaft shoulder and the lead chamfer on the housing bore in accordance with the information given by the screw drive manufacturer and the assembly drawing.
- Check the surface quality of the bearing seating surfaces.
- Check the dimensional and geometrical accuracy of the seating and locating faces
  - check the shaft/housing seating at two points using a micrometer screw
  - the locating surfaces on the shaft shoulder or on the shoulder of the housing bore must be perpendicular to the cylindrical fit surfaces. An excessively large lateral runout of these locating surfaces will influence the function of the rolling bearings.

Caution!

Observe the permissible geometrical tolerances of the screw mounting surfaces on the adjacent construction.

Observe the recommended minimum abutment diameter d_a for shaft shoulders according to the dimension tables in TPI 123.

If other values are used for d_a in the case of ZARF..-L, observe the permissible contact pressure of the adjacent construction.

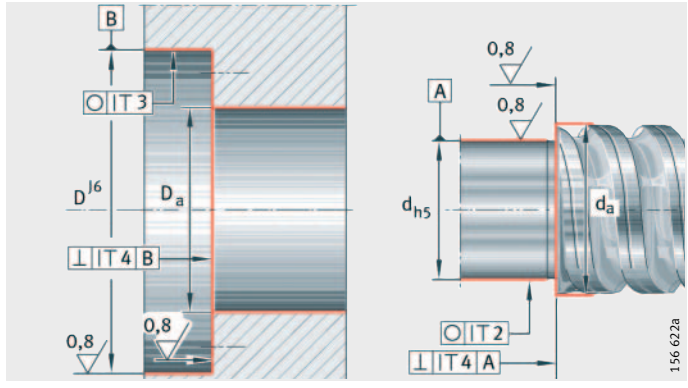

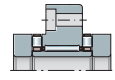

Figure 3
Design of adjacent construction

www.bergab.ru Берг АБ skf@bergab.ru Тел. (495)-228-06-21, факс (495) 223-3071

Fitting of bearings on the screw drive spindle

Caution! Bearings of series ZARF (L) are not self-retaining.
The individual bearing components are matched to each other.

During fitting, the individual parts of the bearings must not be interchanged or combined with other bearings.

Fitting of rotary shaft seals for ZARF (L) bearings

Before these bearings are fitted on the screw drive spindle, the rotary shaft seal ① must be pressed into the housing bore, *Figure 4*:

- If there is no abutment surface, determine and mark the approximate axial position of the seal seating in the housing bore, *Figure 4*.
- Oil or grease the seal lip and housing bore.
- Press the rotary shaft seal ① into the housing bore using a suitable tool, *Figure 4*
  - note the position of the seal lip
  - fit the sealing ring such that the pressing-in force is applied as close as possible to the outside diameter.

Caution! Follow the instructions of the sealing ring manufacturer.

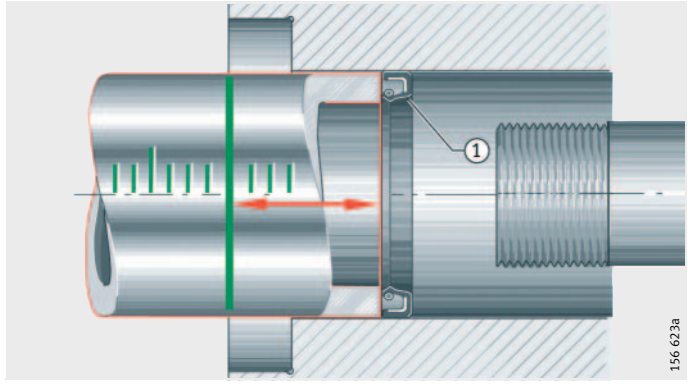

① Rotary shaft seal

Figure 4
Fitting the rotary shaft seal

www.bergab.ru Берг АБ skf@bergab.ru Тел. (495)-228-06-21, факс (495) 223-3071

Mounting of bearings

Mount the bearings according to the following procedure (see also notes on the description of fitting procedures, page 6):

- Lightly oil or grease the seating surface for the bearing rings on the screw drive spindle and the bore of the bearing.
- If a nut ① is mounted on the spindle, push the bearing seating side of the spindle through the bore in the adjacent construction, *Figure 5*
  - care should be taken not to damage the spindle.
- Push the bearing assembly onto the bearing seating until the shaft locating washer ② rests against the shoulder of the screw drive spindle ③, *Figure 6*
  - the bearing seating on the screw drive spindle generally has a transition fit. As a result, bearings can normally be fitted by hand
  - if the fit is tighter, the bearing is preferably pushed onto the shaft seating by means of a precision locknut ④, *Figure 6* – tools for fitting of locknuts: see page 68 and page 72.

Caution!

During fitting, forces should be applied only to the bearing ring to be fitted. Forces must never be directed through the rolling elements or sealing rings.

Preload the bearing against the shaft shoulder using a locknut and secure the locknut, page 68 and 72.

If the decisive factor is the frictional torque, set the axial preload by means of the bearing frictional torque M_{RL} in accordance with page 55.

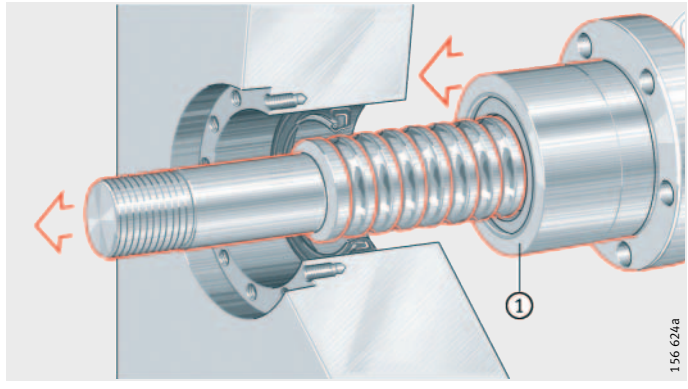

① Spindle nut

Figure 5
Positioning the spindle

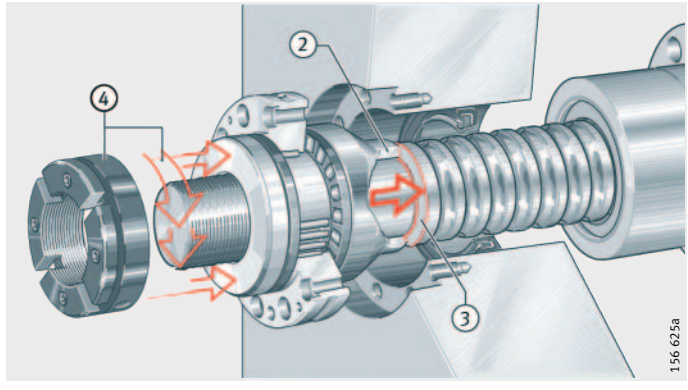

② Shaft locating washer
③ Shoulder of screw drive spindle
④ Precision locknut

Figure 6
Mounting the bearing assembly on the spindle

www.bergab.ru Берг АБ skf@bergab.ru Тел. (495)-228-06-21, факс (495) 223-3071

Setting the axial preload

Caution! The preload in the axial component of ZARF (L) bearings is decisive for the function. It must therefore be set with sufficient accuracy.

Since direct force measurement of these values in fitting is not cost-effective, the axial preload is set indirectly using the following methods:

- by means of the tightening torque M_A of the precision locknut, *Figure 7*. The frictional torque may deviate from the value given in the dimension tables of TPI 123
- by means of the bearing frictional torque M_{RL} (see page 55).

Setting the preload using the tightening torque M_A of the precision locknut

This method is easy to use and – in combination with INA precision locknuts – gives sufficiently precise setting values for most applications. The tightening torque M_A of the precision locknut in accordance with the dimension tables in TPI 123 should be taken as the reference value.

Caution! The preload should only be set in accordance with the section Preloading of bearings using precision locknuts, page 68 and page 72.

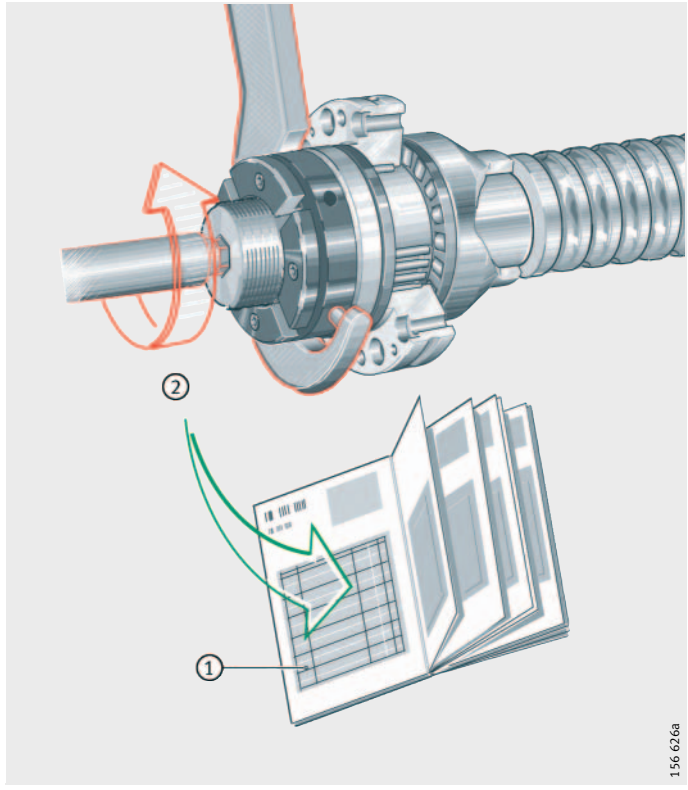

① TPI 123
② Tightening torque M_A

Figure 7
Setting the preload using the tightening torque of the precision locknut

www.bergab.ru Берг АБ skf@bergab.ru Тел. (495)-228-06-21, факс (495) 223-3071

Setting the preload using the bearing frictional torque M_{RL}

If the decisive factor is the frictional torque, (e.g. for high temperatures, frictional torque compensation between different bearing locations, etc.), the preload should be set using the bearing frictional torque M_{RL}, *Figure 8*.

This method is more accurate than setting using the tightening torque M_A of the locknut but is relatively time-consuming in practice.

The bearing frictional torque M_{RL} ① should be measured under the following conditions, *Figure 8*:

- on the bearing outer ring when the screw drive spindle is dismantled – in order to eliminate any external torques
- on lightly oiled bearings
- at a speed of $n \approx 5\ min^{-1}$.

For setting, tighten the locknut to the tightening torque M_A until the frictional torque M_{RL} is achieved. Values for the tightening torque M_A and frictional torque M_{RL} are given in TPI 123 or the assembly drawing. The tightening torque M_A may deviate from the value stated in the table.

Caution! The preload should only be set in accordance with the section Preloading of bearings using precision locknuts, page 68 and page 72.

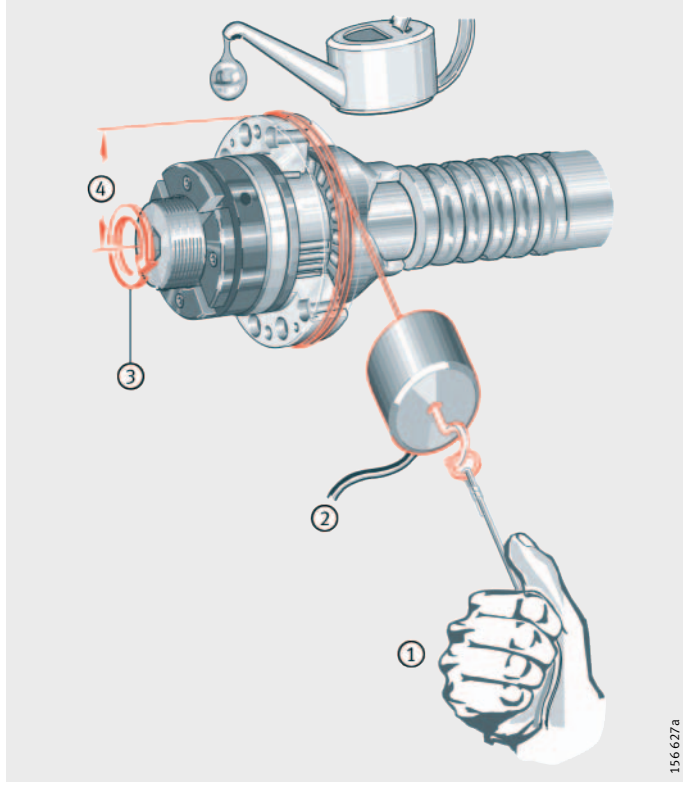

① $M_{RL} = F \cdot \frac{D}{2}$
② F [N]
③ $n \approx 5\ min^{-1}$
④ $\frac{D}{2}$

Figure 8
Setting the preload using the bearing frictional torque

www.bergab.ru Берг АБ skf@bergab.ru Тел. (495)-228-06-21, факс (495) 223-3071

Screw mounting of bearings in the centring bore in the adjacent construction

Mounting of bearings

- Press the closing plugs ① supplied into the unused lubrication holes of the bearing outer ring, *Figure 9*.
- Oil or grease the sealing surface of the shaft locating washer and seal lip.
- Lightly oil or grease the bearing seating surfaces in the housing bore.
- Push the bearing assembly ② into the housing bore until it contacts the housing shoulder, *Figure 9*
  - if the fit is tighter, the bearing assembly ② is preferably drawn into the housing bore uniformly using long screws ③ or threaded rods with countertensioned hexagonal nuts, *Figure 10*
  - care should be taken not to damage the spindle.

Caution! During fitting, forces should be applied only to the bearing ring to be fitted. Forces must never be directed through the rolling elements or sealing rings.

Do not tilt the outer ring. If the outer ring is tilted, locate the bearing again and fit concentrically.

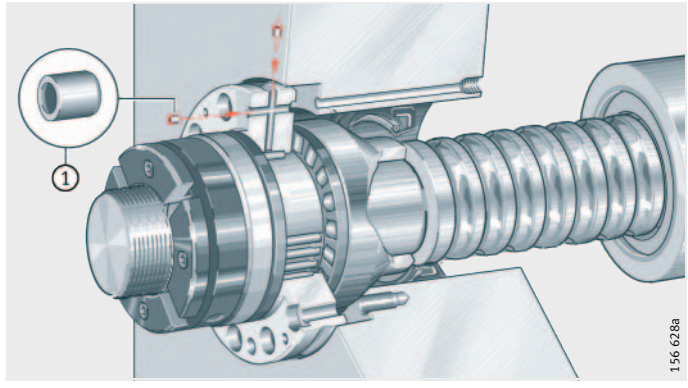

① Cover

Figure 9
Closing off the lubrication holes/ pushing the bearing assembly into the housing bore

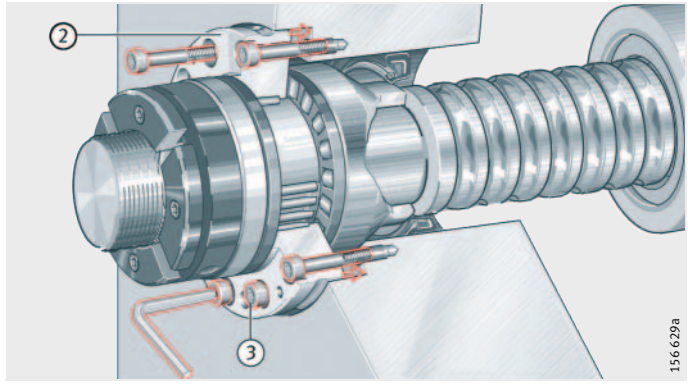

② Bearing assembly
③ Long fixing screws

Figure 10
Positioning the bearing assembly using long fixing screws

www.bergab.ru Берг АБ skf@bergab.ru Тел. (495)-228-06-21, факс (495) 223-3071

- Insert the fixing screws ① for the bearing outer ring in the holes and tighten finger tight, *Figure 11*.
- Tighten the fixing screws using a torque wrench ② to the specified tightening torque M_A in accordance with the screw manufacturer's instructions or the assembly drawing, *Figure 12*
  - tighten the screws in a crosswise sequence in order to prevent unacceptable fluctuations in the screw tightening forces.

Caution! All the fixing screw holes must be used. If a smaller number are used, this will reduce the load carrying capacity of the screw connections as well as the running accuracy and load carrying capacity of the bearings.

The rigidity values in the dimension tables of TPI 123 are only valid if all the fixing holes are used.

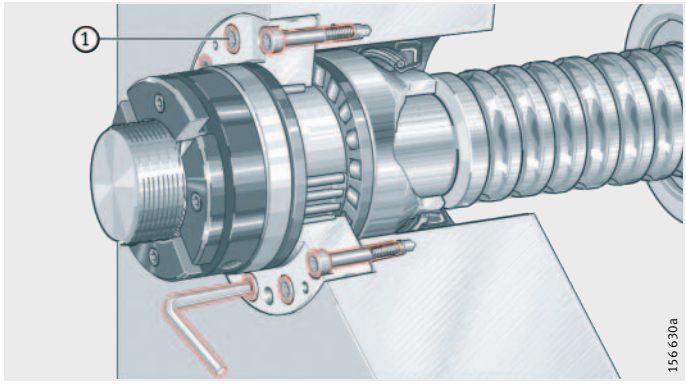

① Fixing screws

Figure 11
Screw mounting the bearing assembly finger tight

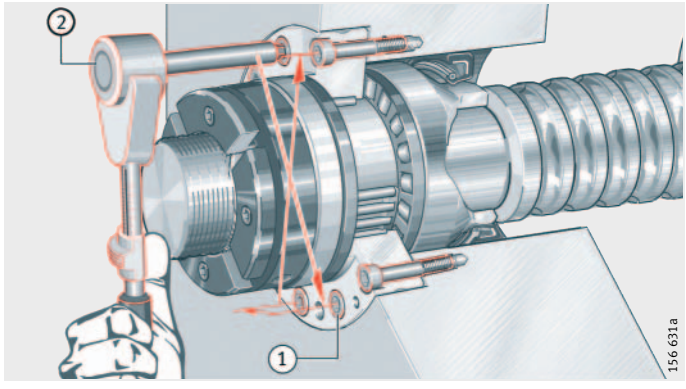

① Fixing screws
② Torque wrench

Figure 12
Screw mounting the bearing assembly

www.bergab.ru Берг АБ skf@bergab.ru Тел. (495)-228-06-21, факс (495) 223-3071

Fitting of seal carrier assemblies

Seal carrier assemblies DRS are complete sealing kits. They are precisely centred on the outer ring of the bearing and seal the bearing against external influences.

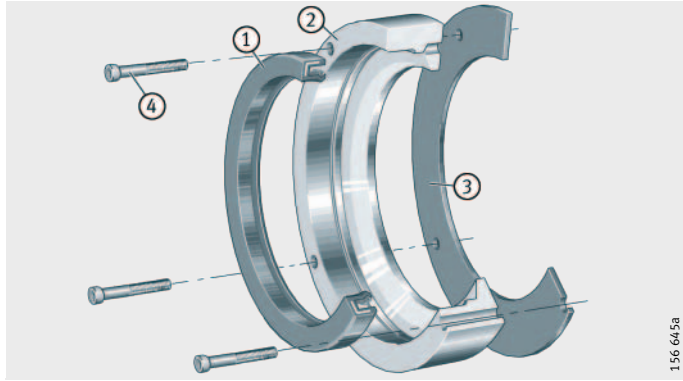

Sealing kit:
① Rotary shaft seal
② Seal carrier
③ Gasket
④ Fixing screws

Figure 13
Seal carrier assemblies

www.bergab.ru Берг АБ skf@bergab.ru Тел. (495)-228-06-21, факс (495) 223-3071

Fitting of seal carrier assemblies

- Press the rotary shaft seal ① into the correct position in the seal carrier ②, *Figure 14*
  – the seal lip must face inwards.
- Locate the gasket ③ on the seal carrier ②, *Figure 14*.
- Position the seal carrier ② in the correct position on the end face of the outer ring, *Figure 14*
  – ensure that the lubrication hole is positioned correctly.
- Insert the fixing screws ④ in the holes and tighten finger tight, *Figure 14*.
- Tighten the fixing screws ④ using a torque wrench ⑤ to the specified tightening torque M_A in accordance with the screw manufacturer's instructions or the assembly drawing, *Figure 15*.

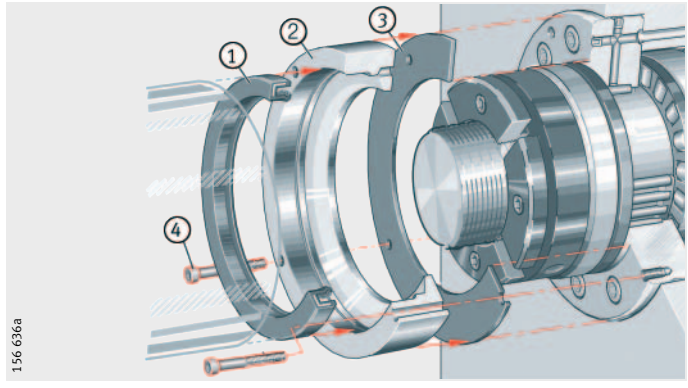

① Rotary shaft seal
② Seal carrier
③ Gasket
④ Fixing screws

Figure 14
Positioning the seal carrier assembly

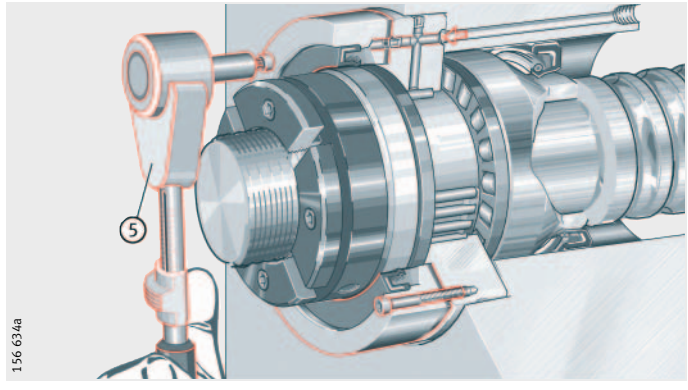

⑤ Torque wrench

Figure 15
Screw mounting the seal carrier assembly

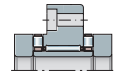

www.bergab.ru Берг АБ skf@bergab.ru Тел. (495)-228-06-21, факс (495) 223-3071

Fitting of needle roller/axial cylindrical roller bearings not for screw mounting Series ZARN (L)

Bearings of these series are fitted in the centring bore in the adjacent construction and axially located using a housing cover ①, *Figure 1*.

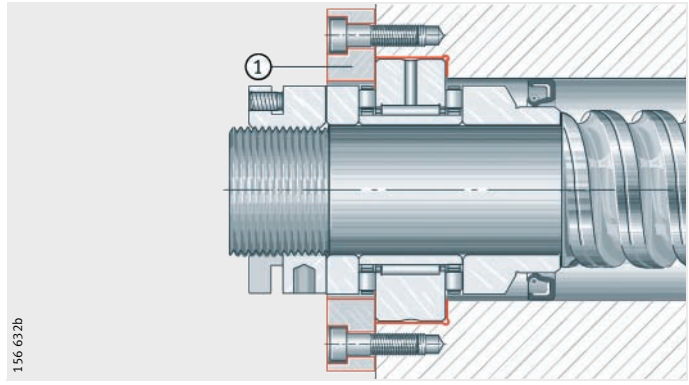

① Housing cover

Figure 1
Bearing fitted in centring bore

www.bergab.ru Берг АБ skf@bergab.ru Тел. (495)-228-06-21, факс (495) 223-3071

Checking the dimensional and geometrical tolerances of the bearing seating and locating surfaces

For design of the adjacent construction, see *Figure 2*:

- Remove any burrs from the holes and edges.
- Check the edge radius on the end of the spindle, the undercut on the shaft shoulder and the lead chamfer on the housing bore in accordance with the information given by the screw drive manufacturer and the assembly drawing.
- Check the surface quality of the bearing seating surfaces.
- Check the dimensional and geometrical accuracy of the seating and locating faces
  - check the shaft/housing seating at two points using a micrometer screw
  - the locating surfaces on the shaft shoulder or on the shoulder of the housing bore must be perpendicular to the cylindrical fit surfaces. An excessively large lateral runout of these locating surfaces will influence the function of the rolling bearings.

Caution! Observe the permissible geometrical tolerances of the screw mounting surfaces on the adjacent construction.

Observe the recommended minimum abutment diameter d_a for shaft shoulders according to the dimension tables in TPI 123.

If other values are used for d_a in the case of ZARN..-L, observe the permissible contact pressure of the adjacent construction.

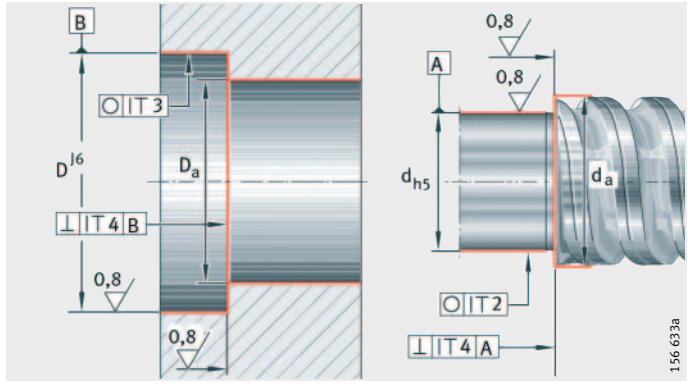

Figure 2
Design of adjacent construction

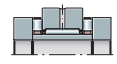

www.bergab.ru Берг АБ skf@bergab.ru Тел. (495)-228-06-21, факс (495) 223-3071

Fitting of bearings on the screw drive spindle

Caution! Bearings of series ZARN (L) are not self-retaining.
The individual bearing components are matched to each other.

During fitting, the individual parts of the bearings must not be interchanged or combined with other bearings.

Fitting of rotary shaft seals for ZARN and ZARN..L bearings

Before these bearings are fitted on the screw drive spindle, the rotary shaft seal ① must be pressed into the housing bore, *Figure 3*:

- If there is no abutment surface, determine and mark the approximate axial position of the seal seating in the housing bore, *Figure 3*.
- Oil or grease the seal lip and housing bore.
- Press the rotary shaft seal ① into the housing bore using a suitable tool, *Figure 3*
  - note the position of the seal lip
  - fit the sealing ring such that the pressing-in force is applied as close as possible to the outside diameter.

Caution! Follow the instructions of the sealing ring manufacturer.

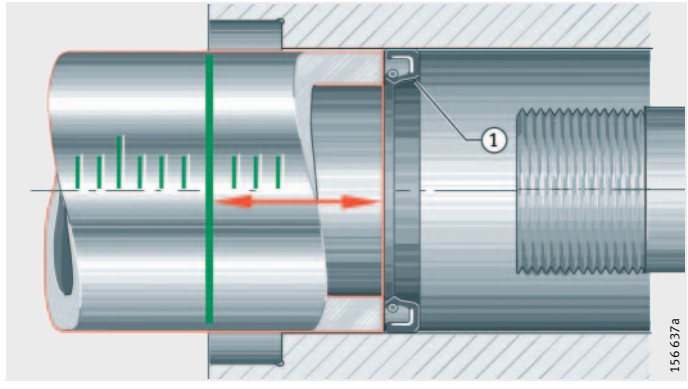

① Rotary shaft seal

Figure 3
Fitting the rotary shaft seal

www.bergab.ru Берг АБ skf@bergab.ru Тел. (495)-228-06-21, факс (495) 223-3071

Mounting of bearings

Mount the bearings according to the following procedure (see also notes on the description of fitting procedures, page 6):

- Lightly oil or grease the seating surface for the bearing rings on the screw drive spindle and the bore of the bearing.
- If a nut ① is mounted on the spindle, push the bearing seating side of the spindle through the bore in the adjacent construction, *Figure 4*
  - care should be taken not to damage the spindle.
- Push the bearing assembly onto the bearing seating until the shaft locating washer ② rests against the shoulder of the screw drive spindle ③, *Figure 5*
  - the bearing seating on the screw drive spindle generally has a transition fit. As a result, bearings can normally be fitted by hand
  - if the fit is tighter, the bearing is preferably pushed onto the shaft seating by means of a precision locknut ④, *Figure 5* – tools for fitting of locknuts: see page 68 and page 72.

Caution!

During fitting, forces should be applied only to the bearing ring to be fitted. Forces must never be directed through the rolling elements or sealing rings.

Preload the bearing against the shaft shoulder using a locknut and secure the locknut, page 68 and 72.

If the decisive factor is the frictional torque, set the axial preload by means of the bearing frictional torque M_{RL} in accordance with page 65.

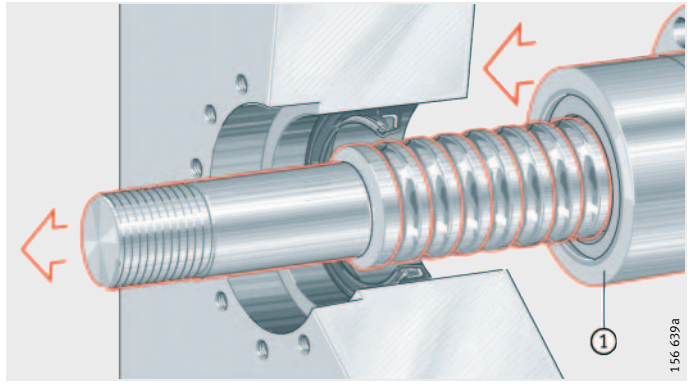

① Spindle nut

Figure 4
Positioning the spindle

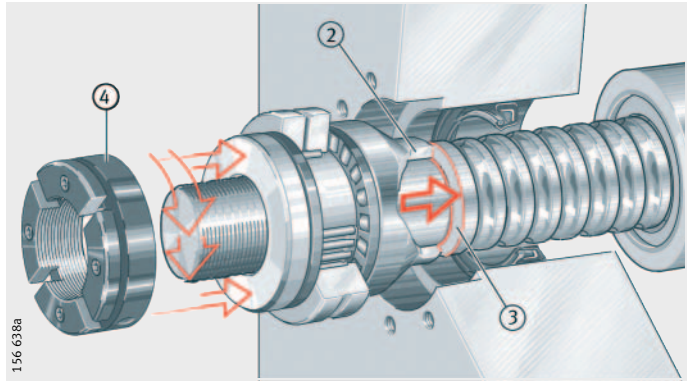

② Shaft locating washer
③ Shoulder of screw drive spindle
④ Precision locknut

Figure 5
Mounting the bearing assembly on the spindle

www.bergab.ru Берг АБ skf@bergab.ru Тел. (495)-228-06-21, факс (495) 223-3071

Setting the axial preload

Caution! The preload in the axial component of ZARN (L) bearings is decisive for the function. It must therefore be set with sufficient accuracy.

Since direct force measurement of these values in fitting is not cost-effective, the axial preload is set indirectly using the following methods:

- by means of the tightening torque M_A of the precision locknut, *Figure 6*. The frictional torque may deviate from the value given in the dimension tables of TPI 123
- by means of the bearing frictional torque M_{RL} (see page 65).

Setting the preload using the tightening torque M_A of the precision locknut

This method is easy to use and – in combination with INA precision locknuts – gives sufficiently precise setting values for most applications. The tightening torque M_A of the precision locknut in accordance with the dimension tables in TPI 123 should be taken as the reference value.

Caution! The preload should only be set in accordance with the section Preloading of bearings using precision locknuts, page 68 and page 72.

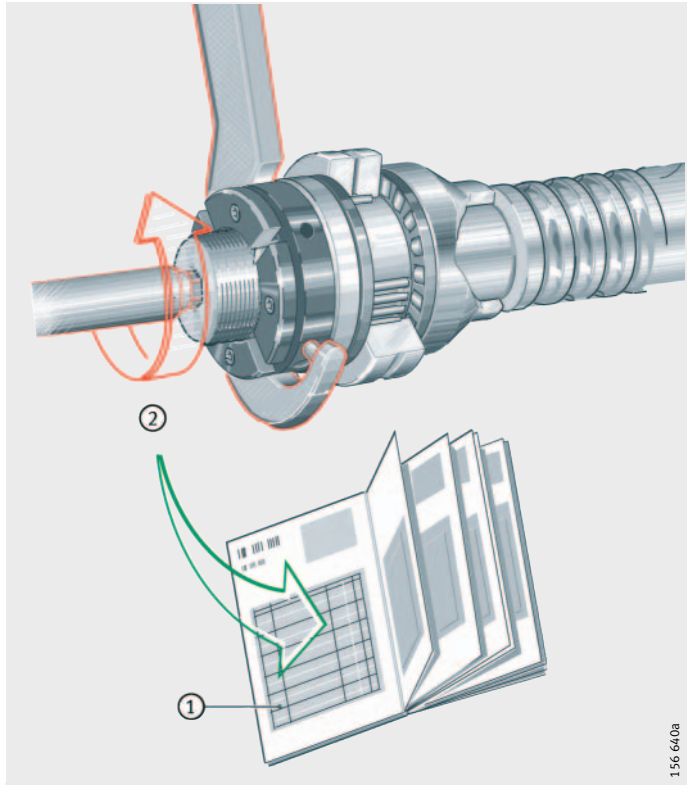

① TPI 123
② Tightening torque M_A

Figure 6
Setting the preload using the tightening torque of the precision locknut

www.bergab.ru Берг АБ skf@bergab.ru Тел. (495)-228-06-21, факс (495) 223-3071

Setting the preload using the bearing frictional torque M_{RL}

If the decisive factor is the frictional torque, (e.g. for high temperatures, frictional torque compensation between different bearing locations, etc.), the preload shoud be set using the bearing frictional torque M_{RL}, *Figure 7*.

This method is more accurate than setting using the tightening torque M_A of the locknut but is relatively time-consuming in practice.

The bearing frictional torque M_{RL} ① should be measured under the following conditions, *Figure 7*:

- on the bearing outer ring when the screw drive spindle is dismantled – in order to eliminate any external torques
- on lightly oiled bearings
- at a speed of $n \approx 5\ min^{-1}$.

For setting, tighten the locknut to the tightening torque M_A until the frictional torque M_{RL} is achieved. Values for the tightening torque M_A and frictional torque M_{RL} are given in TPI 123 or the assembly drawing. The tightening torque M_A may deviate from the value stated in the table.

Caution! The preload should only be set in accordance with the section Preloading of bearings using precision locknuts, page 68 and page 72.

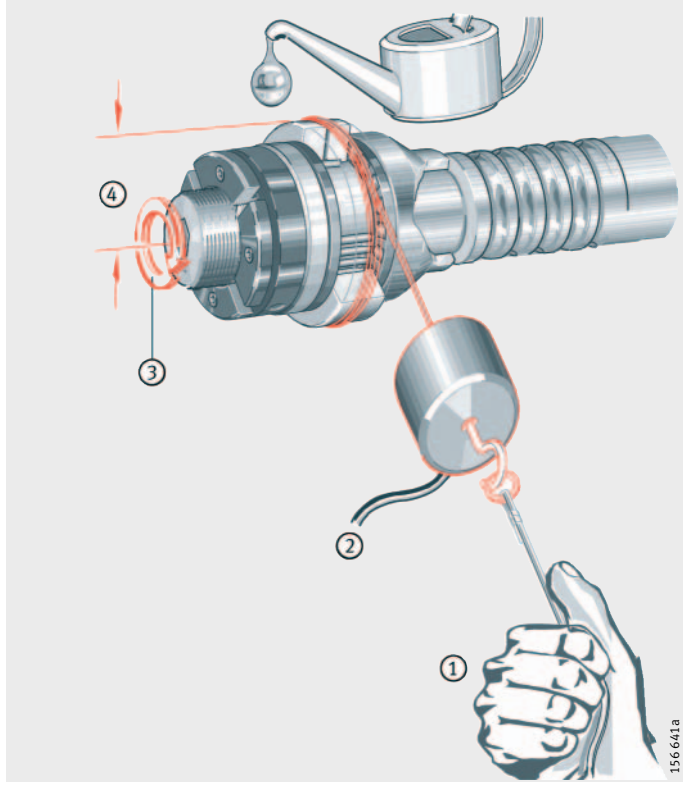

① $M_{RL} = F \cdot \frac{D}{2}$
② F [N]
③ $n \approx 5\ min^{-1}$
④ $\frac{D}{2}$

Figure 7
Setting the preload using the bearing frictional torque

www.bergab.ru Берг АБ skf@bergab.ru Тел. (495)-228-06-21, факс (495) 223-3071

Screw mounting of bearings in the centring bore in the adjacent construction

Mounting of bearings

- Oil or grease the sealing surface of the shaft locating washer and seal lip.
- Lightly oil or grease the bearing seating surfaces in the housing bore.
- Push the bearing assembly ① into the housing bore until it contacts the housing shoulder, *Figure 8*
  - if the fit is tighter, the bearing is preferably drawn into the housing bore uniformly using long screws ② or threaded rods with countertensioned hexagonal nuts, *Figure 9*
  - care should be taken not to damage the spindle.

Caution! During fitting, forces should be applied only to the bearing ring to be fitted. Forces must never be directed through the rolling elements or sealing rings.

Do not tilt the outer ring. If the outer ring is tilted, locate the bearing again and fit concentrically.

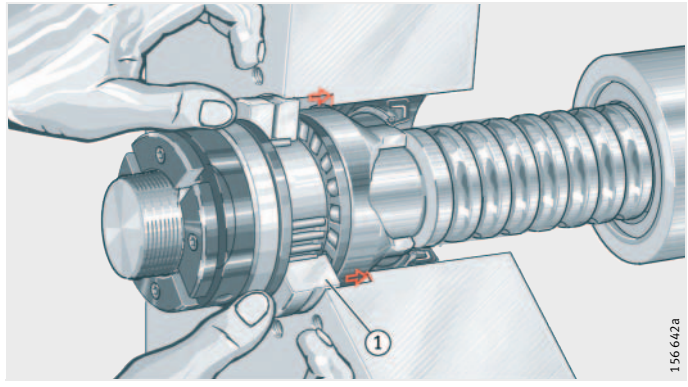

① Bearing assembly

Figure 8
Pushing the bearing assembly into the housing bore

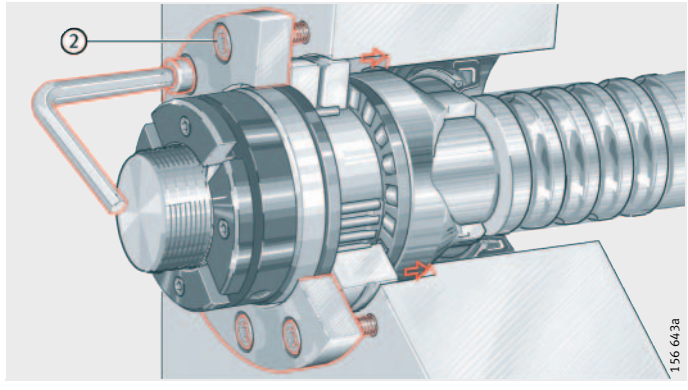

② Long fixing screws

Figure 9
Positioning the bearing assembly using long fixing screws

www.bergab.ru Берг АБ skf@bergab.ru Тел. (495)-228-06-21, факс (495) 223-3071

- Axially locate the outer ring of the bearing assembly using the housing cover ①, *Figure 10*
  - Tighten the fixing screws ② using a torque wrench ③ to the specified tightening torque M_A in accordance with the screw manufacturer's instructions or the assembly drawing,

Caution! Only use adequately dimensioned fixing screws.

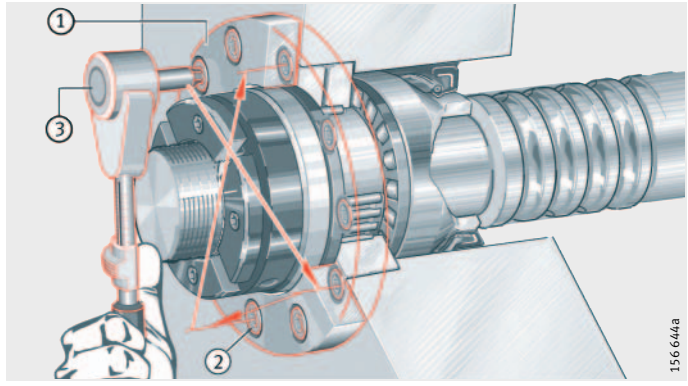

① Housing cover
② Fixing screws
③ Torque wrench

Figure 10
Screw mounting the bearing assembly

www.bergab.ru Берг АБ skf@bergab.ru Тел. (495)-228-06-21, факс (495) 223-3071

Preloading of bearings using precision locknuts Series ZM, ZMA

Caution! The technical features of the bearings are only valid when used in combination with INA precision locknuts and the stated tightening torques.

The design of the spindle ends for correct preloading of the bearings is the responsibility of the user.

Tools

Appropriate tools for tightening and locating the locknuts include:

- hook wrenches to DIN 1810 A, *Figure 1*
- GZ AG universal socket wrench with square socket ZMS/ZME, *Figure 2*. This wrench can be obtained from:
  Gewinde Ziegler AG
  Subingenstraße 149
  CH-4557 Horriwil (Switzerland)
  Tel. ++41 (0) 32 614 12 31
  e-mail gzgsa@bluewin.ch

Caution! If locknuts are fitted using tool combinations adapted in-house, it is absolutely essential that the installation guidelines given for fitting of locknuts and the specified tightening torques for the nuts are strictly adhered to.

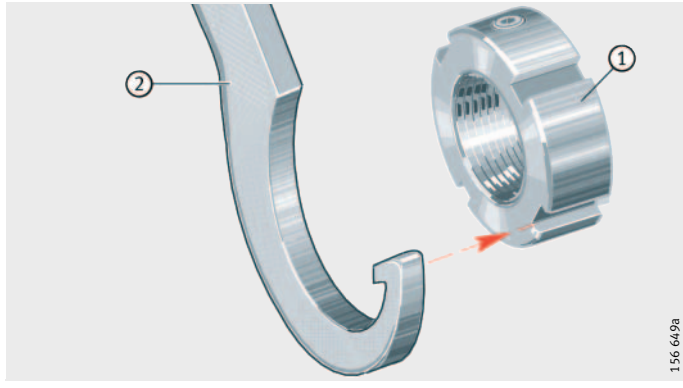

① Precision locknut
② Hook wrench to DIN 1810 A

Figure 1
Hook wrench

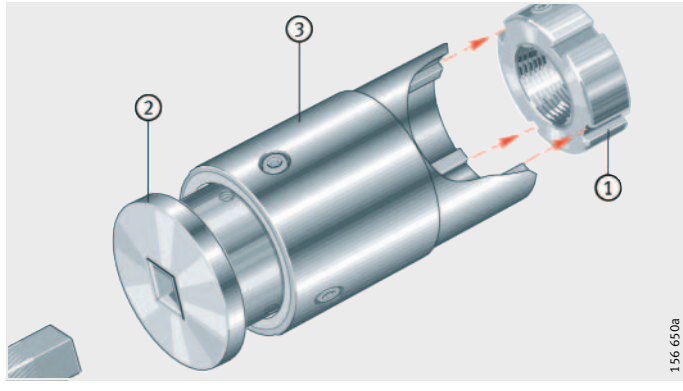

① Precision locknut ZM/ZMA
② ZME
③ ZMS

Figure 2
Universal socket wrench ZME/ZMS

www.bergab.ru Берг АБ skf@bergab.ru Тел. (495)-228-06-21, факс (495) 223-3071

Preloading of bearings

The tightening torque M_A can be applied by means of:

- the screw drive spindle, *Figure 3*. In this case the locknut must be located
- the locknut, *Figure 4*. In this case the spindle must be located.

Preloading of bearings

- Lightly oil the thread on the spindle.
- Screw the locknut ① onto the thread, tighten to twice the tightening torque value M_A and loosen again, *Figure 3*, *Figure 4*
  – this will prevent any settling effects.
- Tighten the locknut ① firmly to the tightening torque M_A, *Figure 3*, *Figure 4*
  – tightening torque M_A: see dimension tables in TPI 123 or the assembly drawing.

Caution! For preloading of series ZARF and ZARN, it is absolutely essential to observe the instructions in the section Setting the axial preload, page 54 and page 64.

If the decisive factor for series ZARF and ZARN is the frictional torque, (e.g. for high temperatures, frictional torque compensation between different bearing locations, etc.), set the preload using the bearing frictional torque M_{RL}.

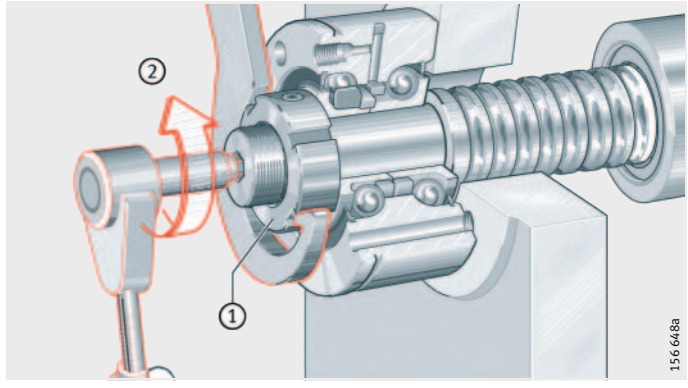

① Precision locknut
② Tightening torque M_A

Figure 3
Preloading of bearings

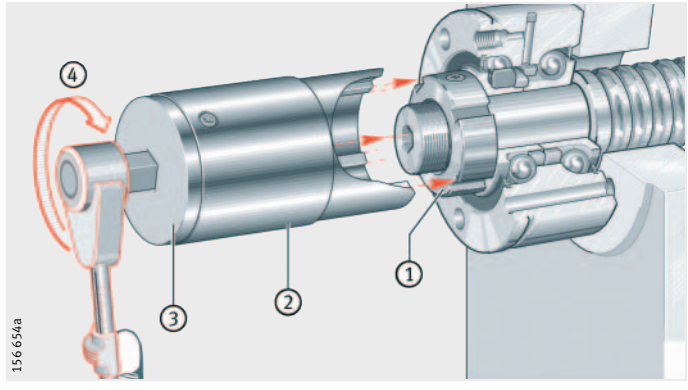

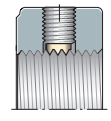

① Precision locknut
② ZMS
③ ZME
④ Tightening torque M_A

Figure 4
Preloading of bearings

www.bergab.ru Берг АБ skf@bergab.ru Тел. (495)-228-06-21, факс (495) 223-3071

Securing of precision locknuts

Tighten the set screws ① evenly and in a crosswise sequence in two steps to the specified tightening torque M_m, *Figure 5*:

- in the first step, tighten to half the value
- in the second step, tighten to the full recommended value. For the tightening torque M_m, see table Tightening torques.

Removal of precision locknuts

If handled correctly, the locknuts can be reused several times.

To remove the locknut, loosen the set screws. Loosen the locking pegs by means of light blows with a plastic hammer on the outer cylindrical surface of the locknut – in the vicinity of the threaded holes. This will prevent damage to the thread on the journal when unscrewing the nut.

Loosen the locknut using a wrench and unscrew by hand, locate the screw drive spindle while loosening.

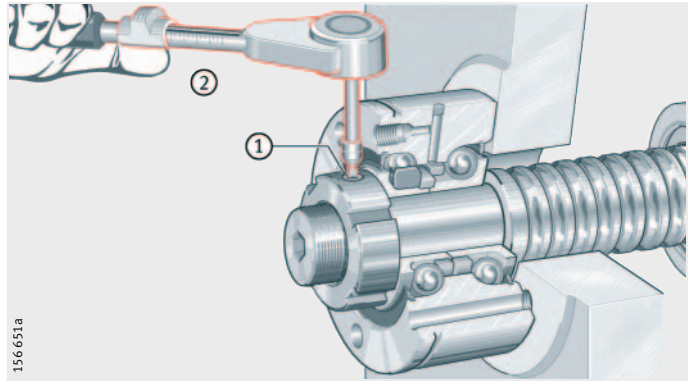

① Set screw
② Tightening torque M_m

Figure 5
Securing of precision locknuts

Tightening torques

Locknut[1)] Designation	Set screw Tightening torques M_m Nm
ZM06	1
ZM08	1
ZM10	1
ZM12	1
ZM15	1
ZMA15/33	3
ZM17	3
ZM20	3
ZMA20/38	3
ZMA20/52	3
ZM25	5
ZMA25/45	5
ZMA25/58	5

1) Tightening torques M_A for locknuts:
see dimension tables in TPI 123 or the assembly drawing.

www.bergab.ru Берг АБ skf@bergab.ru Тел. (495)-228-06-21, факс (495) 223-3071

Tightening torques
(continued)

Locknut[1)] Designation	Set screw Tightening torques M_m Nm
ZM30	5
ZMA30/52	5
ZMA30/65	5
ZM35	5
ZMA35/58	5
ZMA35/70	5
ZM40	5
ZMA40/62	15
ZMA40/75	15
ZM45	5
ZMA45/68	15
ZMA45/85	15
ZM50	5
ZMA50/75	15
ZMA50/92	15
ZM55	5
ZMA55/98	15
ZM60	5
ZMA60/98	15
ZM65	5
ZMA65/105	15
ZM70	15
ZMA70/110	15
ZM75	15
ZMA75/125	15
ZM80	15
ZMA80/120	15
ZM85	15
ZM90	15
ZMA90/130	15
ZMA90/155	15
ZM100	15
ZMA100/140	20
ZM105	20
ZM110	20
ZM115	20
ZM120	20
ZM125	20
ZM130	20
ZM140	38
ZM150	38

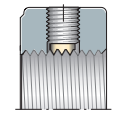

1) Tightening torques M_A for locknuts:
see dimension tables in TPI 123 or the assembly drawing.

www.bergab.ru Берг АБ skf@bergab.ru Тел. (495)-228-06-21, факс (495) 223-3071

Preloading of bearings using precision locknuts Series AM

Caution! The technical features of the bearings are only valid when used in combination with INA precision locknuts and the stated tightening torques.

The design of the spindle ends for correct preloading of the bearings is the responsibility of the user.

Tools

Appropriate tools for tightening and locating the locknuts include:

- INA adapter AMS ①, page 75, table Tightening torques, in combination with a hook wrench to DIN 1810 A ② or DIN 1810 B ③, *Figure 1*
- for direct tightening or location of locknuts – without the INA adapter AMS – hook wrench to DIN 1810 B ③, *Figure 1*
- GZ AG universal socket wrench with square socket ZMS/ZME ②, ③ in combination with INA adapter AMS ①, *Figure 2*.
  The universal socket wrench can be obtained from:
  Gewinde Ziegler AG
  Subingenstraße 149
  CH-4557 Horriwil (Switzerland)
  Tel. ++41 (0) 32 614 12 31
  e-mail gzgsa@bluewin.ch

Caution! If locknuts are fitted using tool combinations adapted in-house, it is absolutely essential that the installation guidelines given for fitting of locknuts and the specified tightening torques for the nuts are strictly adhered to.

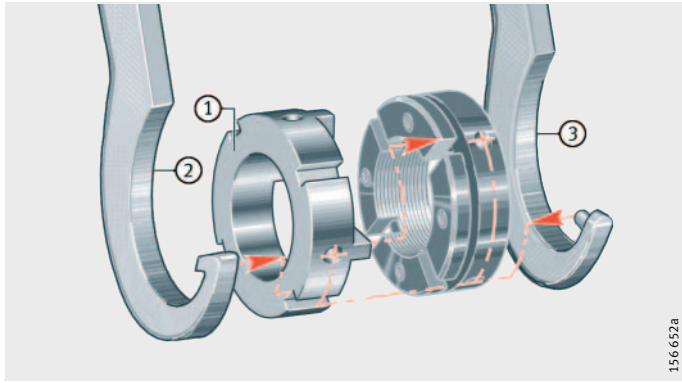

① INA AMS
② Hook wrench to DIN 1810 A
③ Hook wrench to DIN 1810 B

Figure 1
Hook wrenches in accordance with DIN

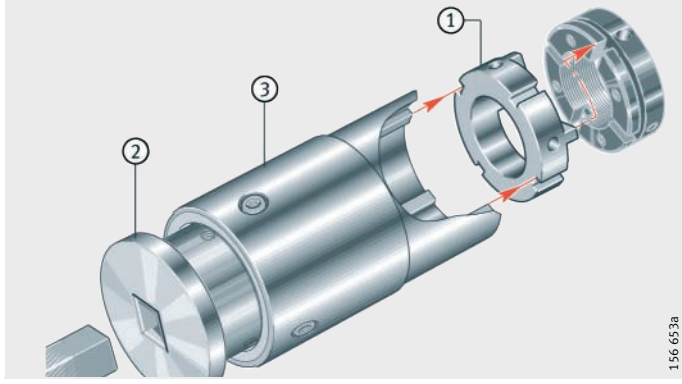

① INA AMS
② ZME
③ ZMS

Figure 2
GZ AG universal socket wrench ZME/ZMS

www.bergab.ru Берг АБ skf@bergab.ru Тел. (495)-228-06-21, факс (495) 223-3071

Preloading of bearings

Caution! Never tighten locknuts using only one segment.

The tightening torque M_A can be applied by means of:

- the screw drive spindle, *Figure 3*. In this case the locknut must be located.
- the locknut, *Figure 4*. In this case the spindle must be located.

Preloading of bearings

- Lightly oil the thread on the spindle.
- Screw the locknut ① onto the thread, tighten to twice the tightening torque value M_A and loosen again, *Figure 3*, *Figure 4*
  - this will prevent any settling effects.
- Tighten the locknut ① firmly to the tightening torque M_A, *Figure 3*, *Figure 4*
  - tightening torque M_A: see dimension tables in TPI 123 or the assembly drawing.

Caution! For preloading of series ZARF and ZARN, it is absolutely essential to observe the instructions in the section Setting the axial preload, page 54 and page 64.

If the decisive factor for series ZARF and ZARN is the frictional torque, (e.g. for high temperatures, frictional torque compensation between different bearing locations, etc.), set the preload using the bearing frictional torque M_{RL}.

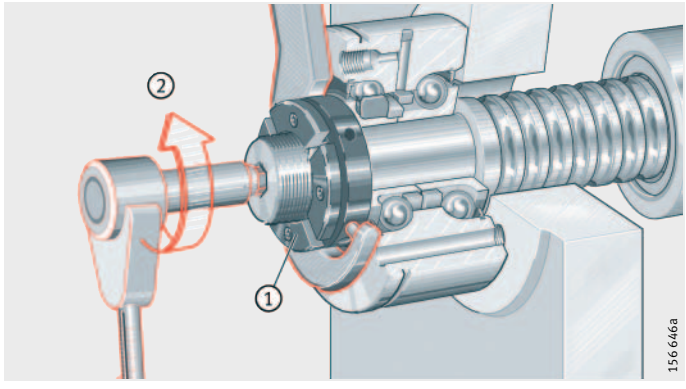

① Precision locknut
② Tightening torque M_A

Figure 3
Preloading of bearings

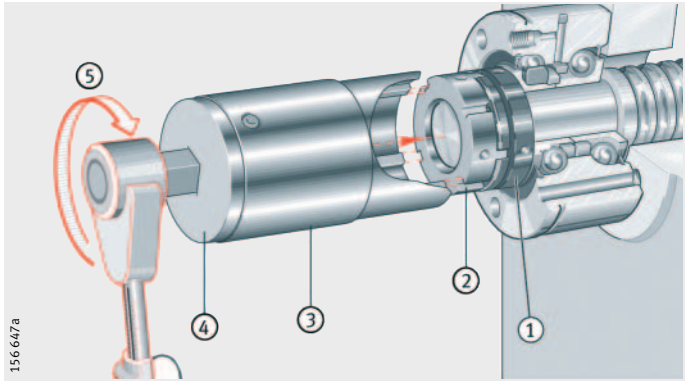

① Precision locknut
② INA AMS
③ ZMS
④ ZME
⑤ Tightening torque M_A

Figure 4
Preloading of bearings

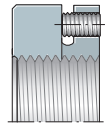

www.bergab.ru Берг АБ skf@bergab.ru Тел. (495)-228-06-21, факс (495) 223-3071

Securing of precision locknuts

Tighten the set screws ① evenly and in a crosswise sequence in two steps to the specified tightening torque M_m, *Figure 5*:

- in the first step, tighten to half the value
- in the second step, tighten to the full recommended value. For the tightening torque M_m, see table Tightening torques, page 75.

Caution! Screw the locknut completely onto the shaft thread and tighten the set screws evenly in a crosswise sequence, otherwise the correct functioning of the locknut cannot be guaranteed.

Removal of precision locknuts

If handled correctly, the locknuts can be reused several times.

For removal, loosen all the set screws in the segments evenly so that no segment is left tensioned.

Loosen the locknut using a wrench and unscrew by hand, locate the screw drive spindle while loosening.

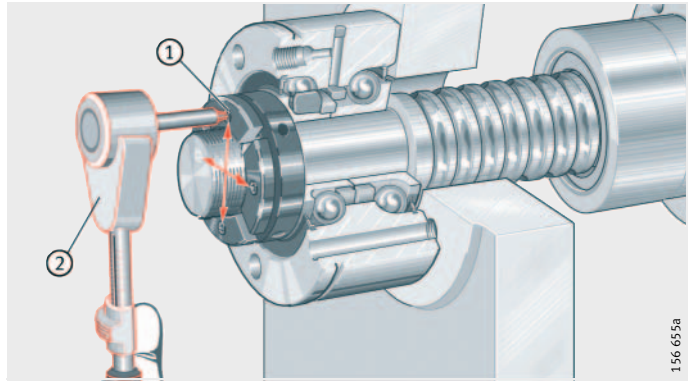

① Set screw
② Tightening torque M_m

Figure 5
Securing of precision locknuts

www.bergab.ru Берг АБ skf@bergab.ru Тел. (495)-228-06-21, факс (495) 223-3071

Tightening torques

Locknut[1)] Designation	Set screw Tightening torque M_m Nm	INA adapter for precision locknut Designation
AM15	3	**AMS20**
AM17	3	**AMS20**
AM20	5	**AMS20**
AM25	5	**AMS30**
AM30	5	**AMS30**
AM35/58	5	**AMS30**
AM35	5	**AMS40**
AM40	5	**AMS40**
AM45	5	**AMS50**
AM50	5	**AMS50**
AM55	15	**AMS60**
AM60	15	**AMS60**
AM65	15	**AMS70**
AM70	15	**AMS70**
AM75	20	**AMS80**
AM80	20	**AMS80**
AM85	20	**AMS80**
AM90	20	**AMS90**
AM100	20	**AMS110**
AM110	20	**AMS110**
AM120	20	**AMS130**
AM130	20	**AMS130**

1) Tightening torques M_A for locknuts:
see dimension tables in TPI 123 or the assembly drawing.

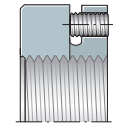

www.bergab.ru Берг АБ skf@bergab.ru Тел. (495)-228-06-21, факс (495) 223-3071

Checking operation

Once fitting is complete, the operation of the bearings must be checked. When the fixing screws and locknuts are tightened according to the specification, the spindle must rotate evenly:

- Provide ungreased bearings with their initial greasing or connect them to a lubricant supply.
- Rotate the fitted screw drive and check the operation of the bearing
  - the starting frictional torque of sealed and greased bearings may be higher than that of ungreased, unsealed bearings.
- Connect the screw drive spindle to the drive mechanism.
- Increase the speed in steps and check the operation of the bearing.

  Remove and examine the bearing if there is:
  - uneven, irregular running
  - an unusual increase in temperature.

Running accuracy

Inspection and measurement must only be carried out using extremely precise, calibrated and preferably electronic measuring equipment.

Check the running accuracy – axial runout – using a dial gauge; for values, see TPI 123 or assembly drawing.

Caution! Deviations from the values may be the result of:

- inaccuracies in the adjacent construction. In the case of matched pairs of bearings in particular, deviating tolerances in the bearing seating can lead to tilting of the bearing and thereby to oscillation of the spindle
- inaccurately centred bearings. Unevenly stressed bearings due to incorrectly tightened fixing screws, locknuts or housing cover.

www.bergab.ru Берг АБ skf@bergab.ru Тел. (495)-228-06-21, факс (495) 223-3071

Bearing temperature

After initial operation, the temperature can increase – in the case of grease lubrication, for example, until the grease is evenly distributed in the bearing arrangement. The temperature decreases again when it has reached its equilibrium value.

A further increase or unusually high temperatures may be caused by one of the following:

- the bearing is running without lubrication (especially in the case of ZARF/ZARN bearings)
- the bearing is lubricated using an unsuitable grease
- there is excessive lubricant in the bearing
- the load on the bearing is excessively high
- the bearings are unevenly stressed or damaged
- the adjacent construction does not correspond to the specifications.

Lubricant supply

After initial operation, check the integrity of the lubricant supply. For further information, see the section Lubrication.

Frictional torque behaviour

The frictional torques M_{RL} stated in TPI 123 are guide values only. The frictional torques are valid in the case of bearings of series ZKLR, ZKLN, ZKLF, ZKLFA, DKLFA, BSB, 7602, 7603 for grease lubrication and in the case of series ZARN, ZARF for lightly oiled bearings, measured at a speed of $n \approx 5\ min^{-1}$. In the case of unsealed bearings, the values are valid for lightly oiled raceways.

The frictional torque M_{RL} is influenced by:

- the bearing preload
- the bearing seals
- lubrication conditions in the bearing
- the temperature in the bearing
- the accuracy and condition of the adjacent construction.

In series ZARF (L) and ZARN (L), the precise frictional torque is determined by the method used to set the axial preload – either by means of the tightening torque M_A of the precision locknut or the bearing frictional torque M_{RL}. See Setting the axial preload, page 54 and page 64.

For most applications, setting by means of the locknut tightening torque M_A gives sufficiently precise setting values. The tightening torque M_A of the precision locknut in accordance with the dimension tables in TPI 123 should be taken as the reference value.

If the decisive factor is the frictional torque, the preload should be set by means of the bearing frictional torque M_{RL}.

www.bergab.ru Берг АБ skf@bergab.ru Тел. (495)-228-06-21, факс (495) 223-3071

Lubrication

Lubricants

Axial angular contact ball bearings ZKLF, ZKLN, ZKLFA, DKLFA, ZKLR, BSB, 7602, 7603

Bearings of series ZKLN, ZKLF, ZKLFA and DKLFA are greased using a lithium soap grease to GA28. In most cases, the initial greasing is sufficient for the whole operating life of the bearing.

Bearings of series ZKLR are greased using a grease to DIN 51825–K2N–40.

Depending on their design, bearings of series BSB, 7602 and 7603 are ungreased or greased to GA28 and preserved by dry preservative.

The grease is compatible with oils with a mineral oil base.
For special versions, see the delivery drawing for the bearing.

Needle roller/axial cylindrical roller bearings ZARN (L), ZARF (L)

If grease lubrication is to be used with these bearings, lithium or lithium complex soap greases with a mineral oil base to DIN 51825–KP2 are recommended, such as Arcanol MULTITOP.

Relubrication conditions

Caution!

Only use fresh, clean greases in accordance with the directions in the section Lubricants.

Use only clean grease guns – these must not contain any old grease, foreign matter or rust particles.

Before relubrication is carried out, it must be ensured that the feed ducts in the adjacent construction do not contain any cleaning agents, solvents, washing emulsions, etc.

Relubrication should be carried out with the bearing warm from operation and rotating slowly, *Figure 1*.

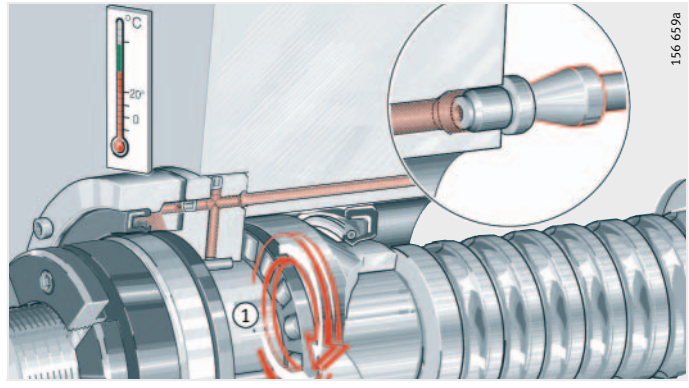

① Speed $n > 0\ min^{-1}$

Figure 1
Relubrication conditions

www.bergab.ru Берг АБ skf@bergab.ru Тел. (495)-228-06-21, факс (495) 223-3071

Relubrication of bearings

Clean the lubrication nipples ①, clean or replace the lubricant filters, *Figure 2*.

Press sufficient grease into all lubrication nipples until the relubrication quantity is achieved; while doing this, rotate the spindle ② and ensure that old grease can leave the bearing unhindered, *Figure 3*.

If bearings of series ZKLN, ZKLF, ZKLFA, DKLFA must be relubricated due to the application conditions, please consult INA regarding the relubrication quantities.

Initial greasing and relubrication quantities for series ZARF, ZARN: see table Initial greasing and relubrication quantities for ZARN/ZARF bearings, page 80.

Before initial operation is carried out, it must be ensured that all the lubricant connections to the bearing ③ are filled with lubricant, *Figure 3*.

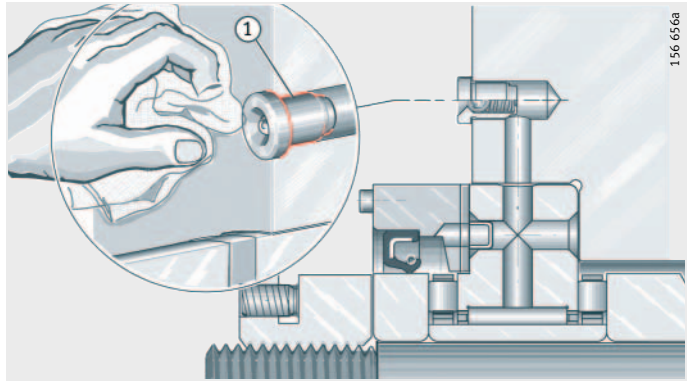

① Lubrication nipple

Figure 2
Preparation for relubrication

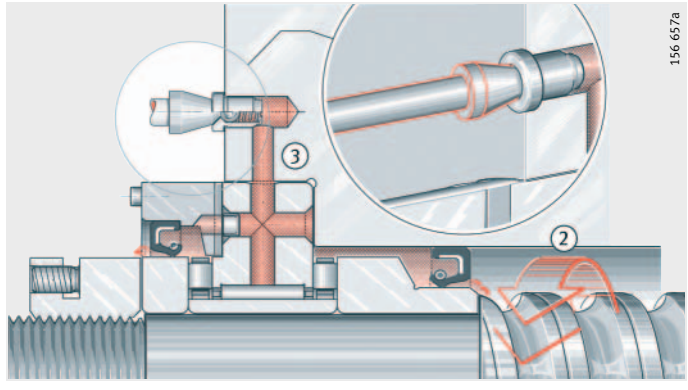

② Screw drive spindle
③ Filled lubricant connection

Figure 3
Relubrication of bearings

www.bergab.ru Берг АБ skf@bergab.ru Тел. (495)-228-06-21, факс (495) 223-3071

Relubrication interval

The relubrication intervals cannot be determined precisely in advance. They are dependent to a significant extent on the operating conditions and the environmental influences such as temperature, contamination, dust, water, etc.

Caution!

Bearings must always be relubricated:
- before and after long stoppage periods
- in conditions of high humidity
- within the defined lubrication intervals in accordance with the technical quotation, the assembly drawing or the maintenance plan.

In the following applications, please contact us:
when the bearings are stationary, are subject to vibrations or undergo very small oscillating movements.

Initial greasing and relubrication quantities for ZARN (L)/ZARF (L) bearings

Needle roller/ axial cylindrical roller bearing Series		Initial greasing quantity g	Relubrication quantity g
ZARN1545	**ZARF1560**	1,9 to 2,1	1,0 to 1,2
ZARN1747	**ZARF1762**	2,2 to 2,5	1,2 to 1,4
ZARN2052	**ZARF2068**	2,8 to 3,1	1,5 to 1,7
ZARN2062	**ZARF2080**	5,7 to 6,0	3,1 to 3,3
ZARN2557	**ZARF2575**	3,7 to 4,1	2,0 to 2,3
ZARN2572	**ZARF2590**	14,5 to 15,0	8,0 to 8,3
ZARN3062	**ZARF3080**	4,6 to 5,1	2,5 to 2,8
ZARN3080	**ZARF30105**	17,6 to 18,1	9,7 to 10,0
ZARN3570	**ZARF3590**	6,1 to 6,6	3,4 to 3,6
ZARN3585	**ZARF35110**	19,6 to 20,1	10,8 to 11,1
ZARN4075	**ZARF40100**	6,8 to 7,3	3,7 to 4,0
ZARN4090	**ZARF40115**	21,7 to 22,4	11,9 to 12,3
ZARN4580	**ZARF45105**	8,1 to 8,8	4,5 to 4,8
ZARN45105	**ZARF45130**	19,9 to 20,8	10,9 to 11,4
ZARN5090	**ZARF50115**	15,1 to 15,8	8,3 to 8,7
ZARN50110	**ZARF50140**	39,5 to 40,4	21,7 to 22,2
ZARN55115	**ZARF55145**	42,3 to 43,2	23,3 to 23,8
ZARN60120	**ZARF60155**	44,3 to 45,3	24,4 to 24,9
ZARN65125	**ZARF65155**	46,5 to 47,6	25,6 to 26,2
ZARN70130	**ZARF70160**	48,8 to 50,0	26,8 to 27,5
ZARN75155	**ZARF75185**	91,3 to 93,6	50,2 to 51,5
ZARN90180	**ZARF90120**	85,5 to 88,5	47,0 to 48,7

www.bergab.ru Берг АБ skf@bergab.ru Тел. (495)-228-06-21, факс (495) 223-3071

Sach-Nr. 005-393-485/TPI 100 GB-D · Printed in Germany

INA-Schaeffler KG

Industriestrasse 1–3
91074 Herzogenaurach (Germany)
Internet www.ina.com
E-Mail Info@de.ina.com

In Germany:
Phone 0180 5003872
Fax 0180 5003873

From Other Countries:
Phone +49 9132 82-0
Fax +49 9132 82-4950

FAG Kugelfischer AG & Co. oHG

Georg-Schäfer-Strasse 30
97421 Schweinfurt (Germany)
Internet www.fag.com
E-Mail FAGdirect@de.fag.com

In Germany:
Phone 0180 5003872
Fax 0180 5003873

From Other Countries:
Phone +49 9721 91-0
Fax +49 9721 91-3435

Every care has been taken to ensure the correctness of the information contained in this publication but no liability can be accepted for any errors or omissions.
We reserve the right to make changes in the interest of technical progress.

© by INA/FAG · 2005, September

This publication or parts thereof may not be reproduced without our permission.