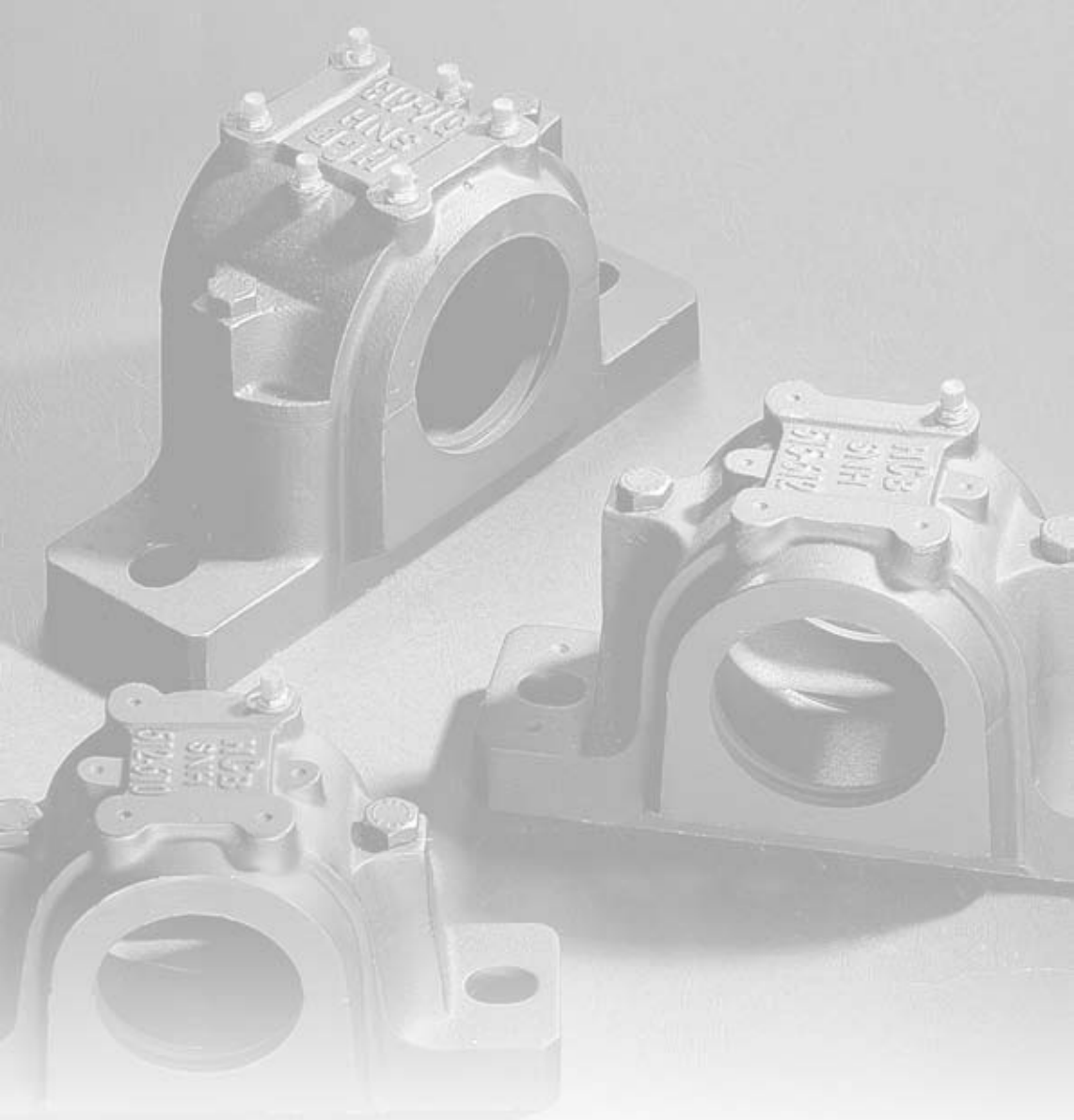

COPYRIGHT HCB 2008

The contents of this catalogue may not be reproduced whitout permission even extracts.The accuracy of the informations in this catalogue has been ensured. No liability can be accepted for any errors and omissions.We reserve the right to make changes in technical progress.

PRINTED IN TURKEY

I N D E X

SNH 200-300	02 - 10
SNH 500-600	11 - 20
SN 200	21 - 28
SN 300	29 - 36
SN 500	37 - 44
SN 600	45 - 52
SNH 3000 TS	53 - 56
SNH 3000 GTS	57 - 60
SNH 3100 TS	61 - 64
SNH 3100 GTS	65 - 68
SD3100 TS	69 - 72
SD3100 GTS	73 - 76
S 30 K	77 - 79
SD 500	80 - 82
SD 600	83 - 85
722500	87 - 91
TVN 200-300	92 - 97

F O R E W O R D

HCB® gives you the best results for long-life use of bearings in all units.

ISO 9001:2000 certified HCB® bearing housings are manufactured of grey cast iron in accordance with DIN 736/737 and ISO/R 113 norms.Cast steel and spheroidal cast iron are supplied upon request.

HCB® bearing housings are machined according to H7 tolerance.

This catalogue provides a general view to HCB® range for standart housings and allows you to make easy selections from our wide range.

HCB® bearing housings offer the advantage of ease in changing bearings.

For special purpose housings not listed in this catalogue, we will be happy to supply your needs should application be made.

Series

SNH 200 - 300

HCB®

BEARING HOUSINGS

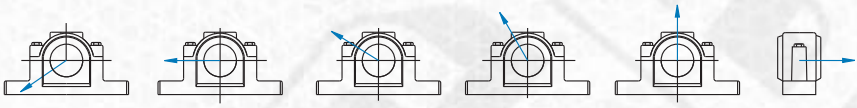

P55° P90° P120° P150° P180° Pa

Housing	Breaking loads						
Size	$P_{0°}$	$P_{55°}$	$P_{90°}$	$P_{120°}$	$P_{150°}$	$P_{180°}$	P_a
-	*kN*	*kN*	*kN*	*kN*	*kN*	*kN*	*kN*
SNH 205	100	155	95	70	60	80	52
SNH 206-305	130	170	100	80	65	85	55
SNH 207-306	140	190	115	85	80	95	60
SNH 208-307	150	215	130	95	85	110	70
SNH 209	160	230	140	100	90	115	75
SNH 210-308	170	265	155	120	110	130	85
SNH 211-309	210	275	170	125	115	140	90
SNH 212-310	210	300	180	130	120	150	100
SNH 213-311	270	340	205	150	130	170	110
SNH 215-312	290	410	250	185	160	205	135
SNH 216-313	350	430	260	190	175	215	140
SNH 217	370	480	290	205	190	240	155
SNH 218-315	430	550	340	250	215	275	180
SNH 219-316	450	580	350	260	230	290	190
SNH 220-317	470	620	370	280	250	310	200
SNH 222-319	600	680	410	310	275	340	220
SNH 224-320	800	790	470	350	320	400	260
SNH 226	900	900	540	410	360	450	295
SNH 228	1000	1050	630	470	430	530	345
SNH 230	1100	1200	730	540	480	600	390
SNH 232	1300	1450	860	640	570	720	470

series
SNH 200-300

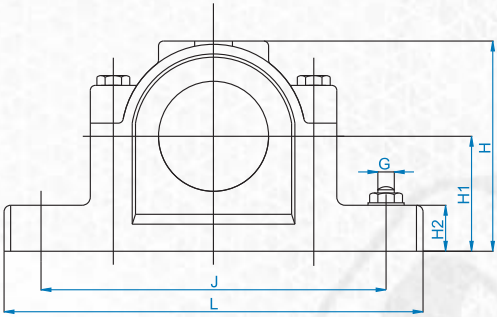

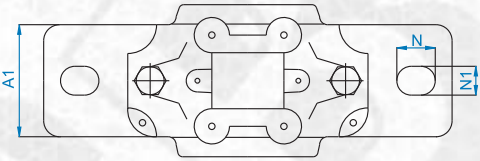

SHAFT DIAMETER		HOUSING NO	HOUSING WITHOUT SEALS	HOUSING WITH DOUBLE-LIP SEAL	HOUSING WITH FELT SEALS	HOUSING WITH V-RING SEALS	HOUSING WITH LABYRINTH SEALS	BEARING NO
Da	Db							
25	30	**SNH 205**	SNH 505	SNH 205 TG	SNH 205 TC	---	SNH 205 TS	1205 2205 22205
		SNH 305	SNH 506-605	SNH 305 TG	---	---	SNH 305 TS	1305 2305 21305
30	35	**SNH 206**	SNH 506-605	SNH 206 TG	SNH 206 TC	---	SNH 206 TS	1206 2206 22206
		SNH 306	SNH 507-606	SNH 306 TG	---	---	SNH 306 TS	1306 2306 21306
35	45	**SNH 207**	SNH 507-606	SNH 207 TG	SNH 207 TC	---	SNH 207 TS	1207 2207 22207
		SNH 307	SNH 508-607	SNH 307 TG	---	---	SNH 307 TS	1307 2307 21307
40	50	**SNH 208**	SNH 508-607	SNH 208 TG	SNH 208 TC	---	SNH 208 TS	1208 2208 22208
		SNH 308	SNH 510-608	SNH 308 TG	---	SNH 308 TA	SNH 308 TS	1308 2308 21308 22308
45	55	**SNH 209**	SNH 509	SNH 209 TG	SNH 209 TC	SNH 209 TA	SNH 209 TS	1209 2209 22209
		SNH 309	SNH 511-609	SNH 309 TG	---	SNH 309 TA	SNH 309 TS	1309 2309 21309 22309

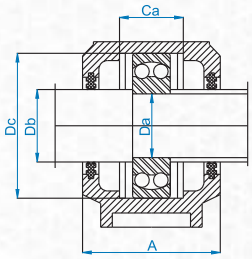

Housing with double-lip seals type TG

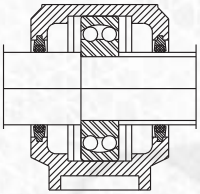

Housing with felt seals type TC

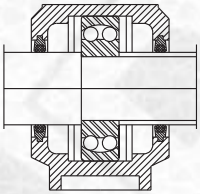

Housing with V-Ring seals type TA

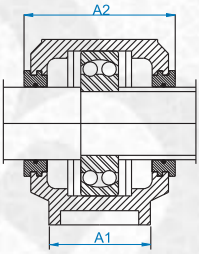

Housing with labyrint seals type TS

DIMENSIONS														LOCATING RING	END COVER
A	A1	A2	Ca	Dc	H	H1	H2	J	L	N	N1	G	Kg		
67	46	90	25	52	74	40	19	130	165	20	15	12	1,4	2 FRB 5/52 2 FRB 3,5/52 2 FRB 3,5/52	ASNH 205
77	52	89	32	62	89	50	22	150	185	20	15	12	1,9	2 FRB 7,5/62 2 FRB 4/62 2 FRB 7,5/62	ASNH 206
77	52	89	32	62	89	50	22	150	185	20	15	12	1,9	2 FRB 8/62 2 FRB 6/62 2 FRB 6/62	ASNH 206
82	52	94	34	72	93	50	22	150	185	20	15	12	2,2	2 FRB 7,5/72 2 FRB 3,5/72 2 FRB 7,5/72	ASNH 507-606
82	52	94	34	72	93	50	22	150	185	20	15	12	2,1	2 FRB 8,5/72 2 FRB 5,5/72 2 FRB 5,5/72	ASNH 207
85	60	97	39	80	107	60	25	170	205	20	15	12	2,9	2 FRB 9/80 2 FRB 4/80 2 FRB 9/80	ASNH 307
85	60	97	39	80	107	60	25	170	205	20	15	12	2,75	2 FRB 10,5/80 2 FRB 8/80 2 FRB 8/80	ASNH 208
90	60	102	41	90	113	60	25	170	205	20	15	12	3,2	2 FRB 9/90 2 FRB 4/90 2 FRB 9/90 2 FRB 4/90	ASNH 510-608
85	60	97	30	85	109	60	25	170	205	20	15	12	2,75	2 FRB 5,5/85 2 FRB 3,5/85 2 FRB 3,5/85	ASNH 209
95	70	107	44	100	127	70	28	210	255	24	18	16	4,4	2 FRB 9,5/100 2 FRB 4/100 2 FRB 9,5/100 2 FRB 4/100	ASNH 511-609

series
SNH 200-300

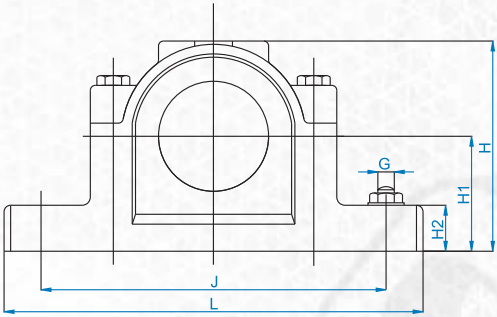

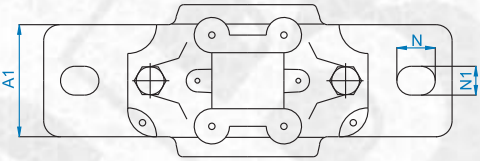

SHAFT DIAMETER		HOUSING NO	HOUSING WITHOUT SEALS	HOUSING WITH DOUBLE-LIP SEAL	HOUSING WITH FELT SEALS	HOUSING WITH V-RING SEALS	HOUSING WITH LABYRINTH SEALS	BEARING NO
Da	Db							
50	60	SNH 210	SNH 510-608	SNH 210 TG	SNH 210 TC	SNH 210 TA	SNH 210 TS	1210
								2210
								22210
		SNH 310	SNH 512-610	SNH 310 TG	---	SNH 310 TA	SNH 310 TS	1310
								2310
								21310
								22310
55	65	SNH 211	SNH 511-609	SNH 211 TG	SNH 211 TC	SNH 211 TA	SNH 211 TS	1211
								2211
								22211
		SNH 311	SNH 513-611	SNH 311 TG	---	SNH 311 TA	SNH 311 TS	1311
								2311
								21311
								22311
60	70	SNH 212	SNH 512-610	SNH 212 TG	SNH 212 TC	SNH 212 TA	SNH 212 TS	1212
								2212
								22212
		SNH 312	SNH 515-612	SNH 312 TG	---	SNH 312 TA	SNH 312 TS	1312
								2312
								21312
								22312
65	75	SNH 213	SNH 513-611	SNH 213 TG	SNH 213 TC	SNH 213 TA	SNH 213 TS	1213
								2213
								22213
		SNH 313	SNH 516-613	SNH 313 TG	---	SNH 313 TA	SNH 313 TS	1313
								2313
								21313
								22313

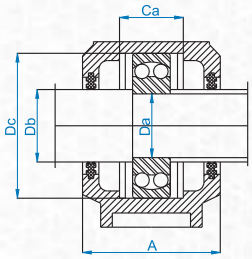

Housing with double-lip seals type TG

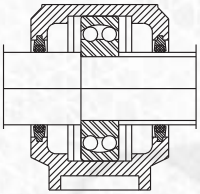

Housing with felt seals type TC

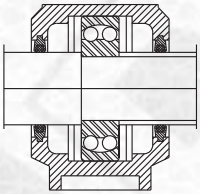

Housing with V-Ring seals type TA

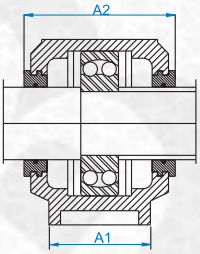

Housing with labyrint seals type TS

DIMENSIONS														LOCATING RING	END COVER
A	A1	A2	Ca	Dc	H	H1	H2	J	L	N	N1	G	Kg		
90	60	102	41	90	113	60	25	170	205	20	15	12	3	2 FRB 10,5/90 2 FRB 9/90 2 FRB 9/90	ASNH 210
105	70	117	48	110	133	70	30	210	255	24	18	16	5,1	2 FRB 10,5/110 2 FRB 4/110 2 FRB 10,5/110 2 FRB 4/110	ASNH 512-610
95	70	107	44	100	127	70	28	210	255	24	18	12	4,2	2 FRB 11,5/100 2 FRB 9,5/100 2 FRB 9,5/100	ASNH 211
110	80	122	51	120	148	80	30	230	275	24	18	12	6,5	2 FRB 11/120 2 FRB 4/120 2 FRB 11/120 2 FRB 4/120	ASNH 513-611
105	70	117	48	110	133	70	30	210	255	24	18	16	4,75	2 FRB 13/110 2 FRB 10/110 2 FRB 10/110	ASNH 212
115	80	127	56	130	154	80	30	230	280	24	18	16	7	2 FRB 12,5/130 2 FRB 5/130 2 FRB 12,5/130 2 FRB 5/130	ASNH 515-612
110	80	128	51	120	148	80	30	230	275	24	18	12	6,1	2 FRB 14/120 2 FRB 10/120 2 FRB 10/120	ASNH 213
120	90	138	58	140	175	95	32	260	315	28	22	20	9,5	2 FRB 12,5/140 2 FRB 5/140 2 FRB 12,5/140 2 FRB 5/140	ASNH 516-611

series
SNH 200-300

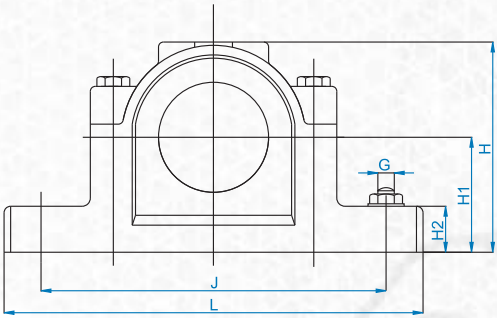

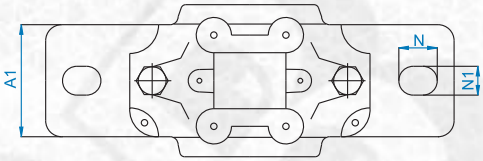

SHAFT DIAMETER		HOUSING NO	HOUSING WITHOUT SEALS	HOUSING WITH DOUBLE-LIP SEAL	HOUSING WITH FELT SEALS	HOUSING WITH V-RING SEALS	HOUSING WITH LABYRINTH SEALS	BEARING NO
Da	Db							
70	80	SNH 314	SNH 517	SNH 314 TG	-	SNH 314 TA	SNH 314 TS	1314
								2314
								21314
								22314
75	85	SNH 215	SNH 515-612	SNH 215 TG	SNH 215 TC	SNH 215 TA	SNH 215 TS	1215
								2215
								22215
		SNH 315	SNH 518-615	SNH 315 TG	-	SNH 315 TA	SNH 315 TS	1315
								2315
								21315
								22315
80	90	SNH 216	SNH 516-613	SNH 216 TG	SNH 216 TC	SNH 216 TA	SNH 216 TS	1216
								2216
								22216
		SNH 316	SNH 519-616	SNH 316 TG	-	SNH 316 TA	SNH 316 TS	1316
								2316
								21316
								22316
85	95	SNH 217	SNH 517	SNH 217 TG	SNH 217 TC	SNH 217 TA	SNH 217 TS	1217
								2217
								22217
		SNH 317	SNH 520-617	SNH 317 TG	-	SNH 317 TA	SNH 317 TS	1317
								2317
								21317
								22317
90	100	SNH 218	SNH 518-615	SNH 218 TG	SNH 218 TC	SNH 218 TA	SNH 218 TS	1218
								2218
								22218
								223218
		SNH 318	SNH 618	SNH 318 TG	-	SNH 318 TA	SNH 318 TS	1318
								2318
								21318
								22318

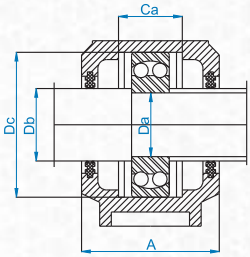

Housing with double-lip seals type TG

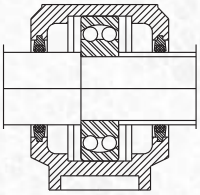

Housing with felt seals type TC

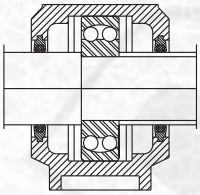

Housing with V-Ring seals type TA

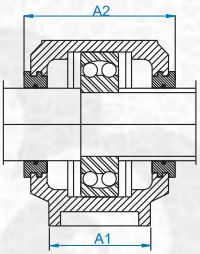

Housing with labyrint seals type TS

DIMENSIONS														LOCATING RING	END COVER
A	A1	A2	Ca	Dc	H	H1	H2	J	L	N	N1	G	Kg		
125	90	143	61	150	183	95	32	260	320	28	22	20	10	2 FRB 13/150 2 FRB 5/150 2 FRB 13/150 2 FRB 5/150	ASNH 517
115	80	133	56	130	154	80	30	230	280	24	18	16	7	2 FRB 15,5/130 2 FRB 12,5/130 2 FRB 12,5/130	ASNH 215
140	100	158	65	160	193	100	35	290	345	28	22	20	12,5	2 FRB 14/160 2 FRB 5/160 2 FRB 14/160 2 FRB 5/160	ASNH 518-615
120	90	138	58	140	175	95	32	260	315	28	22	20	9,5	2 FRB 16/140 2 FRB 12,5/140 2 FRB 12,5/140	ASNH 216
145	100	163	68	170	210	112	35	290	345	28	22	20	13,7	2 FRB 14,5/170 2 FRB 5/170 2 FRB 14,5/170 2 FRB 5/170	ASNH 519-616
125	90	143	61	150	183	95	32	260	320	28	22	20	10	2 FRB 16,5/150 2 FRB 12,5/150 2 FRB 12,5/150	ASNH 217
160	110	178	70	180	215	112	40	320	380	32	26	24	17,6	2 FRB 14,5/180 2 FRB 5/180 2 FRB 14,5/180 2 FRB 5/180	ASNH 520-617
140	100	158	65	160	193	100	35	290	345	28	22	20	12,5	2 FRB 17,5/160 2 FRB 12,5/160 2 FRB 12,5/160 2 FRB 6,25/160	ASNH 218
155	110	173	95	190	229	112	40	320	380	32	26	24	22	2 FRB 15/190 2 FRB 5/190 2 FRB 15/190	ASNH 618

SNH 200-300

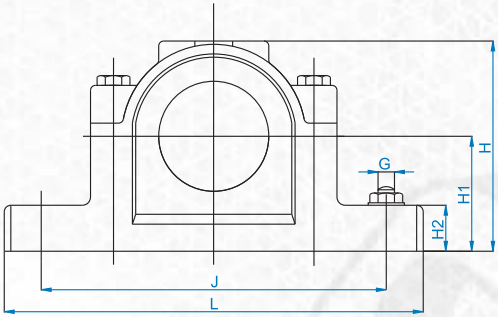

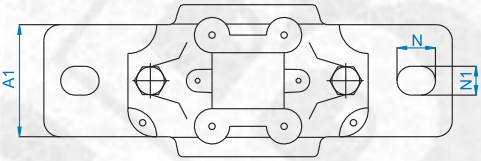

SHAFT DIAMETER		HOUSING NO	HOUSING WITHOUT SEALS	HOUSING WITH DOUBLE-LIP SEAL	HOUSING WITH FELT SEALS	HOUSING WITH V-RING SEALS	HOUSING WITH LABYRINTH SEALS	BEARING NO
Da	Db							
95	110	SNH 219	SNH 519-616	SNH 219 TG	-	SNH 219 TA	SNH 219 TS	1219
								2219
								22219
		SNH 319	SNH 522-619	SNH 319 TG	-	SNH 319 TA	SNH 319 TS	1319
								2319
								21319
								22319
100	115	SNH 220	SNH 520-617	SNH 220 TG	-	SNH 220 TA	SNH 220 TS	1220
								2220
								22220
								23220
		SNH 320	SNH 524-620	SNH 320 TG	-	SNH 320 TA	SNH 320 TS	1320
								2320
								21320
								22320
110	125	SNH 222	SNH 522-619	SNH 222 TG	-	SNH 222 TA	SNH 222 TS	1222
								2222
								22222
								23222
120	135	SNH 224	SNH 524-620	SNH 224 TG	-	SNH 224 TA	SNH 224 TS	1224
								22224
								23224
130	145	SNH 226	SNH 526	SNH 226 TG	-	SNH 226 TA	SNH 226 TS	1226
								22226
								23226
140	155	SNH 228	SNH 528	SNH 228 TG	-	SNH 228 TA	SNH 228 TS	22228
								23228
150	165	SNH 230	SNH 530	SNH 230 TG	-	SNH 230 TA	SNH 230 TS	22230
								23230
160	175	SNH 232	SNH 532	SNH 232 TG	-	SNH 232 TA	SNH 232 TS	22232
								23232

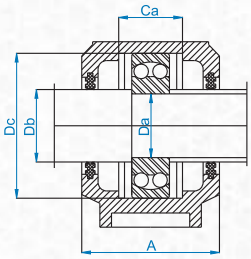

Housing with double-lip seals type TG

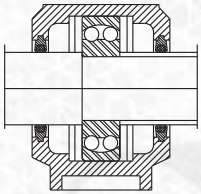

Housing with felt seals type TC

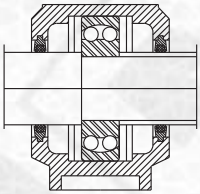

Housing with V-Ring seals type TA

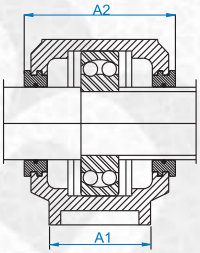

Housing with labyrint seals type TS

DIMENSIONS														LOCATING RING	END COVER
A	A1	A2	Ca	Dc	H	H1	H2	J	L	N	N1	G	Kg		
145	100	163	68	170	210	112	35	290	345	28	22	20	13,7	2 FRB 18/70	ASNH 519-616
														2 FRB 12,5/170	
														2 FRB 12,5/170	
175	120	191	80	200	239	125	45	350	410	32	26	24	22	2 FRB 17,5/200	ASNH 522-619
														2 FRB 6,5/200	
														2 FRB 17,5/200	
														2 FRB 6,5/200	
160	110	178	70	180	215	112	40	320	380	32	26	24	17,6	2 FRB 18/180	ASNH 520-617
														2 FRB 12/180	
														2 FRB 12/180	
														2 FRB 4,85/180	
185	120	199	86	215	271	140	45	350	410	32	26	24	26,2	2 FRB 19,5/215	ASNH 524-620
														2 FRB 6,5/215	
														2 FRB 19,5/215	
														2 FRB 6,5/215	
175	120	191	80	200	239	125	45	350	410	32	26	24	22	2 FRB 21/200	ASNH 522-619
														2 FRB 13,5/200	
														2 FRB 13,5/200	
														2 FRB 5,1/200	
185	120	199	86	215	271	140	45	350	410	32	26	24	26,2	2 FRB 22/215	ASNH 524-620
														2 FRB 14/215	
														2 FRB 5/215	
190	130	208	90	230	290	150	50	380	445	35	28	24	33	2 FRB 22/230	ASNH 526
														2 FRB 13/230	
														2 FRB 5/230	
205	150	233	98	250	302	150	50	420	500	42	35	30	40	2 FRB 15/250	ASNH 520
														2 FRB 5/250	
220	160	241	106	270	323	160	60	450	530	42	35	30	49	2 FRB 16,5/270	ASNH 530
														2 FRB 5/270	
235	160	254	114	290	344	170	60	470	550	42	35	30	55	2 FRB 17/290	ASNH 532
														2 FRB 5/290	

Series

SNH 500 - 600

HCB®

BEARING HOUSINGS

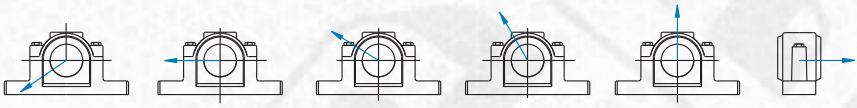

P55° P90° P120° P150° P180° Pa

Housing	Breaking loads						
Size	$P_{0°}$	$P_{55°}$	$P_{90°}$	$P_{120°}$	$P_{150°}$	$P_{180°}$	P_a
-	*kN*	*kN*	*kN*	*kN*	*kN*	*kN*	*kN*
SNH 505	100	155	95	70	60	80	52
SNH 506-605	130	170	100	80	65	85	55
SNH 507-606	140	190	115	85	80	95	60
SNH 508-607	150	215	130	95	85	110	70
SNH 509	160	230	140	100	90	115	75
SNH 510-608	170	265	155	120	110	130	85
SNH 511-609	190	275	170	125	115	140	90
SNH 512-610	210	300	180	130	120	150	100
SNH 513-611	270	340	205	150	130	170	110
SNH 515-612	290	410	250	185	160	205	135
SNH 516-613	350	430	260	190	175	215	140
SNH 517	370	480	290	205	190	240	155
SNH 518-615	430	550	340	250	215	275	180
SNH 519-616	450	580	350	260	230	290	190
SNH 520-617	470	620	370	280	250	310	200
SNH 522-619	600	680	410	310	275	340	220
SNH 524-620	800	790	470	350	320	400	260
SNH 526	900	900	540	410	360	450	295
SNH 528	1000	1 050	630	470	430	530	345
SNH 530	1100	1 200	730	540	480	600	390
SNH 532	1300	1 450	860	640	570	720	470

series
SNH 500-600

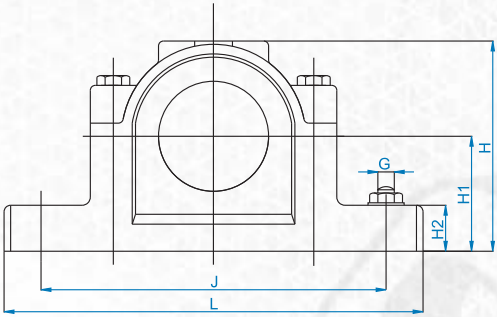

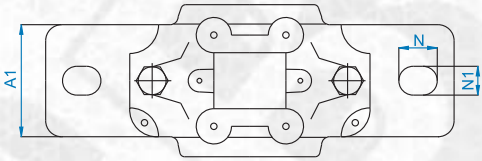

SHAFT DIAMETER Da	HOUSING NO	HOUSING WITHOUT SEALS	HOUSING WITH DOUBLE-LIP SEAL	HOUSING WITH FELT SEALS	HOUSING WITH V-RING SEALS	HOUSING WITH LABYRINTH SEALS	BEARING NO	ADAPTER NO
20	SNH 505	SNH 505	SNH 505 TG	SNH 505 TC	SNH 505 TA	SNH 505 TS	1205 K	H 205
							2205 K	H 305
							22205 K	H 305
	SNH 605	SNH 506-605	SNH 605 TG	SNH 605 TC	SNH 605 TA	SNH 605 TS	1305 K	H 305
							2305 K	H 2305
25	SNH 506	SNH 506-605	SNH 506 TG	SNH 506 TC	SNH 506 TA	SNH 506 TS	1206 K	H 206
							2206 K	H 306
							22206 K	H 306
	SNH 606	SNH 507-606	SNH 606 TG	SNH 606 TC	SNH 606 TA	SNH 606 TS	1306 K	H 306
							2306 K	H 2306
30	SNH 507	SNH 507-606	SNH 507 TG	SNH 507 TC	SNH 507 TA	SNH 507 TS	1207 K	H 207
							2207 K	H 307
							22207 K	H 307
	SNH 607	SNH 508-607	SNH 607 TG	SNH 607 TC	SNH 607 TA	SNH 607 TS	1307 K	H 307
							2307 K	H 2307
35	SNH 508	SNH 508-607	SNH 508 TG	SNH 508 TC	SNH 508 TA	SNH 508 TS	1208 K	H 208
							2208 K	H 308
							22208 K	H 308
	SNH 608	SNH 510-608	SNH 608 TG	SNH 608 TC	SNH 608 TA	SNH 608 TS	1308 K	H 308
							2308 K	H 2308
							21308 K	H 308
							22308 K	H 2308
40	SNH 509	SNH 509	SNH 509 TG	SNH 509 TC	SNH 509 TA	SNH 509 TS	1209 K	H 209
							2209 K	H 309
							22209 K	H 309
	SNH 609	SNH 511-609	SNH 609 TG	SNH 609 TC	SNH 609 TA	SNH 609 TS	1309 K	H 309
							2309 K	H 2309
							21309 K	H 309
							22309 K	H 2309

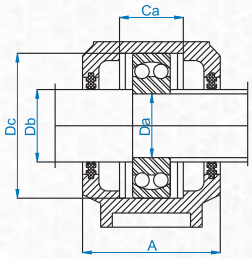

Housing with double-lip seals type TG

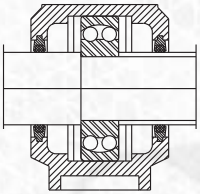

Housing with felt seals type TC

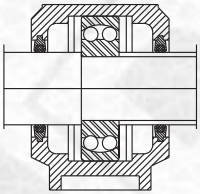

Housing with V-Ring seals type TA

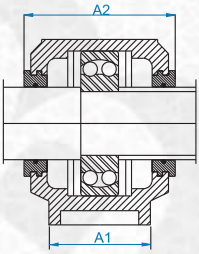

Housing with labyrint seals type TS

DIMENSIONS														LOCATING RING	END COVER
A	A1	A2	Ca	Dc	H	H1	H2	J	L	N	N1	G	Kg		
67	46	80	25	52	74	40	19	130	165	20	15	12	1,5	2 FRB 5/52 2 FRB 3,5/52 2 FRB 3,5/52	ASNH 505
77	52	89	32	62	89	50	22	150	185	20	15	12	2	2 FRB 7,5/62 2 FRB 4/62	ASNH 506-605
77	52	89	32	62	89	50	22	150	185	20	15	12	2	2 FRB 8/62 2 FRB 6/62 2 FRB 6/62	ASNH 506-605
82	52	94	34	72	93	50	22	150	185	20	15	12	2,2	2 FRB 7,5/72 2 FRB 3,5/72	ASNH 507-605
82	52	94	34	72	93	50	22	150	185	20	15	12	2,2	2 FRB 8,5/72 2 FRB 5,5/72 2 FRB 5,5/72	ASNH 507-606
85	60	97	39	80	107	60	25	170	205	20	15	12	2,9	2 FRB 9/80 2 FRB 4/80	ASNH 508-607
85	60	97	39	80	107	60	25	170	205	20	15	12	2,9	2 FRB 10,5/80 2 FRB 8/80 2 FRB 8/80	ASNH 508-607
90	60	102	41	90	113	60	25	170	205	20	15	12	3,2	2 FRB 9/90 2 FRB 4/90 2 FRB 9/90 2 FRB 4/90	ASNH 510-608
85	60	97	30	85	109	60	25	170	205	20	15	12	2,9	2 FRB 5,5/85 2 FRB 3,5/85 2 FRB 3,5/85	ASNH 509
95	70	107	44	100	127	70	28	210	255	24	18	16	4,4	2 FRB 9,5/100 2 FRB 4/100 2 FRB 9,5/100 2 FRB 4/100	ASNH 511-609

SNH 500-600

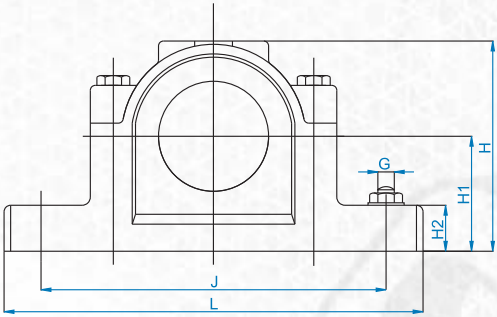

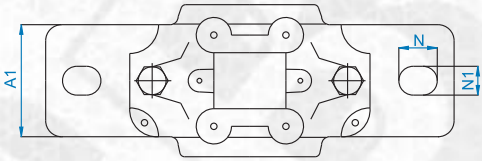

SHAFT DIAMETER Da	HOUSING NO	HOUSING WITHOUT SEALS	HOUSING WITH DOUBLE-LIP SEAL	HOUSING WITH FELT SEALS	HOUSING WITH V-RING SEALS	HOUSING WITH LABYRINTH SEALS	BEARING NO	ADAPTER NO
45	SNH 510	SNH 510	SNH 510 TG	SNH 510 TC	SNH 510 TA	SNH 510 TS	1210 K	H 210
							2210 K	H 310
							22210 K	H 310
	SNH 610	SNH 512-610	SNH 610 TG	SNH 610 TC	SNH 610 TA	SNH 610 TS	1310 K	H 310
							2310 K	H 2310
							21310 K	H 310
							22310 K	H 2310
50	SNH 511	SNH 511-609	SNH 511 TG	SNH 511 TC	SNH 511 TA	SNH 511 TS	1211 K	H 211
							2211 K	H 311
							22211 K	H 311
	SNH 611	SNH 513-611	SNH 611 TG	SNH 611 TC	SNH 611 TA	SNH 611 TS	1311 K	H 311
							2311 K	H 2311
							21311 K	H 311
							22311 K	H 2311
55	SNH 512	SNH 512-610	SNH 512 TG	SNH 512 TC	SNH 512 TA	SNH 512 TS	1212 K	H 212
							2212 K	H 312
							22212 K	H 312
	SNH 612	SNH 515-612	SNH 612 TG	SNH 612 TC	SNH 612 TA	SNH 612 TS	1312 K	H 312
							2312 K	H 2312
							21312 K	H 312
							22312 K	H 2312
60	SNH 513	SNH 513-611	SNH 513 TG	SNH 513 TC	SNH 513 TA	SNH 513 TS	1213 K	H 213
							2213 K	H 313
							22213 K	H 313
	SNH 613	SNH 516-613	SNH 613 TG	SNH 613 TC	SNH 613 TA	SNH 613 TS	1313 K	H 313
							2313 K	H 2313
							21313 K	H 313
							22313 K	H 2313

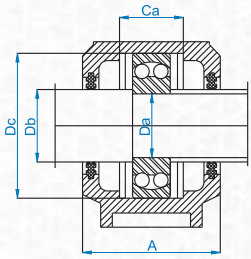

Housing with double-lip seals type TG

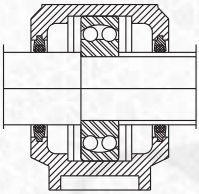

Housing with felt seals type TC

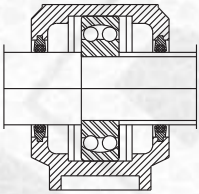

Housing with V-Ring seals type TA

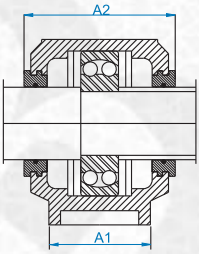

Housing with labyrint seals type TS

DIMENSIONS														LOCATING RING	END COVER
A	A1	A2	Ca	Dc	H	H1	H2	J	L	N	N1	G	Kg		
90	60	102	41	90	113	60	25	170	205	20	15	12	3,2	2 FRB 10,5/90	ASNH 510-608
														2 FRB 9/90	
														2 FRB 9/90	
105	70	117	48	110	133	70	30	210	255	24	18	16	5,1	2 FRB 10,5/110	ASNH 512-610
														2 FRB 4/110	
														2 FRB 10,5/110	
														2 FRB 4/110	
95	70	107	44	100	127	70	28	210	255	24	18	12	4,4	2 FRB 11.5/100	ASNH 511-609
														2 FRB 9,5/100	
														2 FRB 9,5/100	
110	80	122	51	120	148	80	30	230	275	24	18	12	6,5	2 FRB 11/120	ASNH 513-611
														2 FRB 4/120	
														2 FRB 11/120	
														2 FRB 4/120	
105	70	117	48	110	133	70	30	210	255	24	18	16	5,1	2 FRB 13/110	ASNH 512-610
														2 FRB 10/110	
														2 FRB 10/110	
115	80	127	56	130	154	80	30	230	280	24	18	16	7	2 FRB 12,5/130	ASNH 515-612
														2 FRB 5/130	
														2 FRB 12,5/130	
														2 FRB 5/130	
110	80	122	51	120	148	80	30	230	275	24	18	16	6,5	2 FRB 14/120	ASNH 513-611
														2 FRB 10/120	
														2 FRB 10/120	
120	90	138	58	140	175	95	32	260	315	28	22	20	9,5	2 FRB 12,5/140	ASNH 516-613
														2 FRB 5/140	
														2 FRB 12,5/140	
														2 FRB 5/140	

series
SNH 500-600

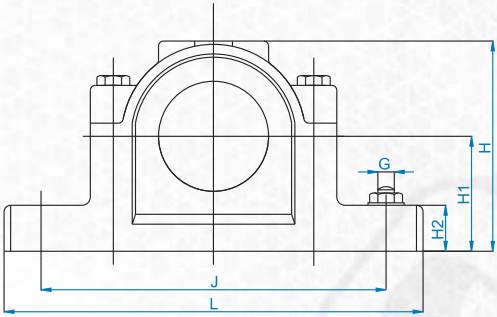

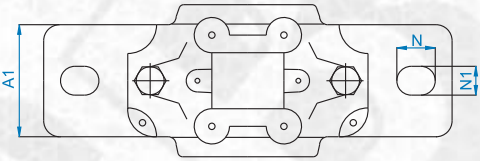

SHAFT DIAMETER Da	HOUSING NO	HOUSING WITHOUT SEALS	HOUSING WITH DOUBLE-LIP SEAL	HOUSING WITH FELT SEALS	HOUSING WITH V-RING SEALS	HOUSING WITH LABYRINTH SEALS	BEARING NO	ADAPTER NO
65	**SNH 515**	SNH 515-612	SNH 515 TG	SNH 515 TC	SNH 515 TA	SNH 515 TS	1215 K	H 215
							2215 K	H 315
							22215 K	H 315
	SNH 615	SNH 518-615	SNH 615 TG	SNH 615 TC	SNH 615 TA	SNH 615 TS	1315 K	H 315
							2315 K	H 2315
							21315 K	H 315
							22315 K	H 2315
70	**SNH 516**	SNH 516-612	SNH 516 TG	SNH 516 TC	SNH 516 TA	SNH 516 TS	1216 K	H 216
							2216 K	H 316
							22216 K	H 316
	SNH 616	SNH 519-616	SNH 616 TG	SNH 616 TC	SNH 616 TA	SNH 616 TS	1316 K	H 316
							2316 K	H 2316
							21316 K	H 316
							22316 K	H 2316
75	**SNH 517**	SNH 517	SNH 517 TG	SNH 517 TC	SNH 517 TA	SNH 517 TS	1217 K	H 217
							2217 K	H 317
							22217 K	H 317
	SNH 617	SNH 520-617	SNH 617 TG	SNH 617 TC	SNH 617 TA	SNH 617 TS	1317 K	H 317
							2317 K	H 2317
							21317 K	H 317
							22317 K	H 2317
80	**SNH 518**	SNH 518	SNH 518 TG	SNH 518 TC	SNH 518 TA	SNH 518 TS	1218 K	H 218
							2218 K	H 318
							22218 K	H 318
	SNH 618	SNH 618	SNH 618 TG	SNH 618 TC	SNH 618 TA	SNH 618 TS	1318 K	H 318
							2318 K	H 2318
							21318 K	H 318
							22318 K	H 2318

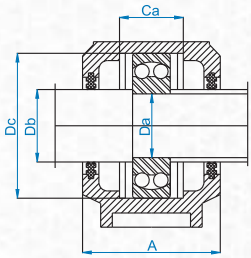

Housing with double-lip seals type TG

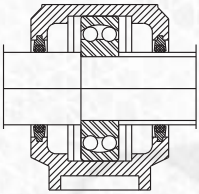

Housing with felt seals type TC

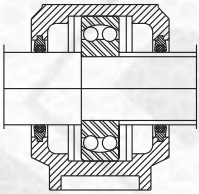

Housing with V-Ring seals type TA

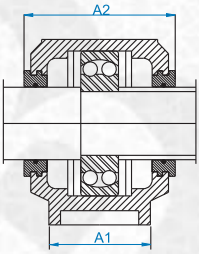

Housing with labyrint seals type TS

DIMENSIONS													LOCATING RING	END COVER
A	A1	A2	Ca	Dc	H	H1	H2	J	L	N	N1	G	Kg		
115	80	127	56	130	154	80	30	230	280	24	18	16	7	2 FRB 15,5/130 2 FRB 12,5/130 2 FRB 12,5/130	ASNH 515-612
140	100	158	65	160	193	100	35	290	345	28	22	20	12,5	2 FRB 14/160 2 FRB 5/160 2 FRB 14/160 2 FRB 5/160	ASNH 518-615
120	90	138	58	140	175	95	32	260	315	28	22	20	9,5	2 FRB 16/140 2 FRB 12,5/140 2 FRB 12,5/140	ASNH 516-613
145	100	163	68	170	210	112	35	290	345	28	22	20	13,7	2 FRB 14,5/170 2 FRB 5/170 2 FRB 14,5/170 2 FRB 5/170	ASNH 519-616
125	90	143	61	150	183	95	32	260	320	28	22	20	10	2 FRB 16,5/150 2 FRB 12,5/150 2 FRB 12,5/150	ASNH 517
160	110	178	70	180	215	112	40	320	380	32	26	24	17,6	2 FRB 14,5/180 2 FRB 5/180 2 FRB 14,5/180 2 FRB 5/180	ASNH 520-617
140	100	158	65	160	193	100	35	290	345	28	22	20	12,5	2 FRB 17,5/160 2 FRB 12,5/160 2 FRB 12,5/160	ASNH 518-615
155	110	128	74	190	229	112	40	320	380	32	26	24	22	2 FRB 15,5/190 2 FRB 5/190 2 FRB 14,5/190 2 FRB 5/190	ASNH 618

series
SNH 500-600

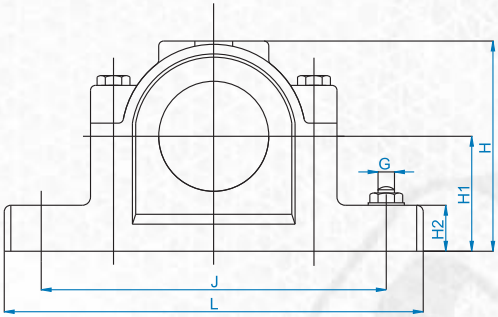

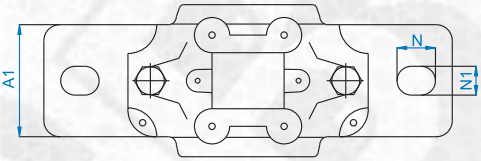

SHAFT DIAMETER Da	HOUSING NO	HOUSING WITHOUT SEALS	HOUSING WITH DOUBLE-LIP SEAL	HOUSING WITH FELT SEALS	HOUSING WITH V-RING SEALS	HOUSING WITH LABYRINTH SEALS	BEARING NO	ADAPTER NO
85	SNH 519	SNH 519-616	SNH 519 TG	SNH 519 TC	SNH 519 TA	SNH 519 TS	1219 K	H 219
							2219 K	H 319
							22219 K	H 319
	SNH 619	SNH 522-619	SNH 619 TG	SNH 619 TC	SNH 619 TA	SNH 619 TS	1319 K	H 319
							2319 K	H 2319
							21319 K	H 319
							22319 K	H 2319
90	SNH 520	SNH 520-617	SNH 520 TG	SNH 520 TC	SNH 520 TA	SNH 520 TS	1220 K	H 220
							2220 K	H 320
							22220 K	H 320
							23220 K	H 2320
	SNH 620	SNH 524-620	SNH 620 TG	SNH 620 TC	SNH 620 TA	SNH 620 TS	1320 K	H 320
							2320 K	H 2320
							21320 K	H 320
							22320 K	H 2320
100	SNH 522	SNH 522-619	SNH 522 TG	SNH 522 TC	SNH 522 TA	SNH 522 TS	1222 K	H 222
							2222 K	H 322
							22222 K	H 322
							23222 K	H 2322
110	SNH 524	SNH 524-620	SNH 524 TG	SNH 524 TC	SNH 524 TA	SNH 524 TS	1224 K	H 3124
							22224 K	H 3124
							23224 K	H 2324
115	SNH 526	SNH 526	SNH 526 TG	SNH 526 TC	SNH 526 TA	SNH 526 TS	22226 K	H 3126
							23226 K	H 2326
125	SNH 528	SNH 528	SNH 528 TG	SNH 528 TC	SNH 528 TA	SNH 528 TS	22228 K	H 3128
							23228 K	H 2328
135	SNH 530	SNH 530	SNH 530 TG	SNH 530 TC	SNH 530 TA	SNH 530 TS	22230 K	H 3130
							23230 K	H 2330
140	SNH 532	SNH 532	SNH 532 TG	SNH 532 TC	SNH 532 TA	SNH 532 TS	22232 K	H 3132
							23232 K	H 2332

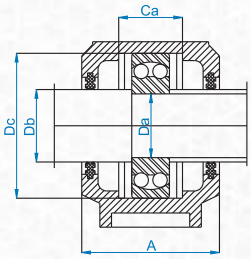

Housing with double-lip seals type TG

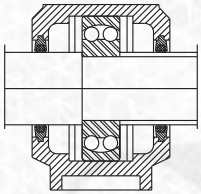

Housing with felt seals type TC

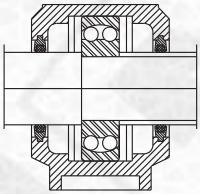

Housing with V-Ring seals type TA

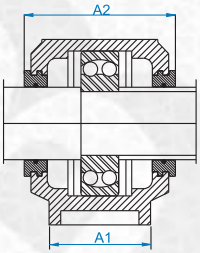

Housing with labyrint seals type TS

DIMENSIONS														LOCATING RING	END COVER
A	A1	A2	Ca	Dc	H	H1	H2	J	L	N	N1	G	Kg		
145	100	163	68	170	210	112	35	290	345	28	22	20	13,7	2 FRB 18/170	ASNH 519-616
														2 FRB 12,5/170	
														2 FRB 12,5/170	
175	120	191	80	200	239	125	45	350	410	32	26	24	22	2 FRB 17,5/200	ASNH 522-619
														2 FRB 6,5/200	
														2 FRB 17,5/200	
														2 FRB 6,5/200	
160	110	178	70	180	215	112	40	320	380	32	26	24	17,6	2 FRB 18/180	ASNH 520-617
														2 FRB 12/180	
														2 FRB 12/180	
														2 FRB 4,85/180	
185	120	199	86	215	271	140	45	350	410	32	26	24	26,2	2 FRB 19,5/215	ASNH 524-620
														2 FRB 6,5/215	
														2 FRB 19,5/215	
														2 FRB 6,5/215	
175	120	191	80	200	239	125	45	350	410	32	26	24	22	2 FRB 21/200	ASNH 522-619
														2 FRB 13,5/200	
														2 FRB 13,5/200	
														2 FRB 5,1/200	
185	120	199	86	215	271	140	45	350	410	32	26	24	26,2	2 FRB 22/215	ASNH 524-620
														2 FRB 14/215	
														2 FRB 5/215	
190	130	208	90	230	290	150	50	380	445	35	28	24	33	2 FRB 13/230	ASNH 526
														2 FRB 5/230	
205	150	233	98	250	302	150	50	420	500	42	35	30	40	2 FRB 15/250	ASNH 528
														2 FRB 5/250	
220	160	241	106	270	323	160	60	450	530	42	35	30	49	2 FRB 16,5/270	ASNH 530
														2 FRB 5/270	
235	160	254	114	290	344	170	60	470	550	42	35	30	55	2 FRB 17/290	ASNH 532
														2 FRB 5/290	

Series

SN 200

HCB®

BEARING HOUSINGS

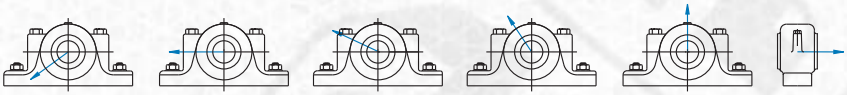

Housing	Breaking loads						
Size	$P_{0°}$	$P_{55°}$	$P_{90°}$	$P_{120°}$	$P_{150°}$	$P_{180°}$	P_a
-	*kN*	*kN*	*kN*	*kN*	*kN*	*kN*	*kN*
SN 205	-	70	40	30	30	35	25
SN 206	-	80	50	35	30	40	27
SN 207	-	90	55	40	35	45	30
SN 208	-	100	60	45	40	50	35
SN 209	-	110	65	50	45	55	40
SN 210	-	120	70	55	50	60	45
SN 211	-	140	85	65	55	70	50
SN 212	-	150	90	65	60	75	55
SN 213	-	170	100	75	70	85	65
SN 215	-	190	110	85	75	95	70
SN 216	-	220	130	100	90	110	85
SN 217	-	240	140	110	95	120	90
SN 218	-	260	160	120	100	130	95
SN 219	-	280	170	130	110	140	100
SN 220	-	340	200	150	140	170	125
SN 222	-	440	260	200	180	220	150
SN 224	-	520	310	230	210	260	175
SN 226	-	620	370	280	250	310	210
SN 228	-	720	430	320	290	360	250
SN 230	-	860	520	390	340	430	280
SN 232	-	1100	660	490	440	550	375

series
SN 200

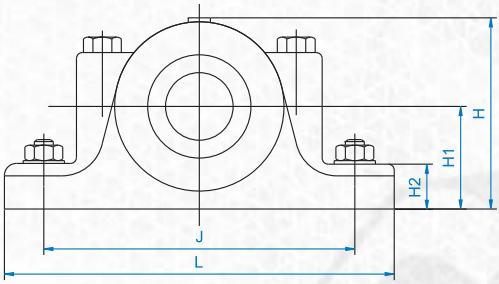

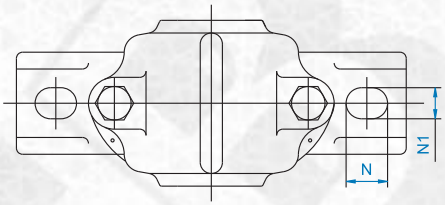

SHAFT DIAMETER		HOUSIGN NO	DIMENSIONS										
D	Da		A	A1	Ca	Dc	H	H1	H2	J	L	N	N1
25	30	SN 205	67	46	25	52	74	40	19	130	165	20	15
30	35	SN 206	77	52	32	62	89	50	22	150	185	20	15
35	45	SN 207	82	52	34	72	93	50	22	150	185	20	15
40	50	SN 208	85	60	39	80	107	60	25	170	205	20	15
45	55	SN 209	85	60	30	85	109	60	25	170	205	20	15
50	60	SN 210	90	60	41	90	113	60	25	170	205	20	15
55	65	SN 211	95	70	44	100	127	70	28	210	255	24	18
60	70	SN 212	105	70	48	110	133	70	30	210	255	24	18

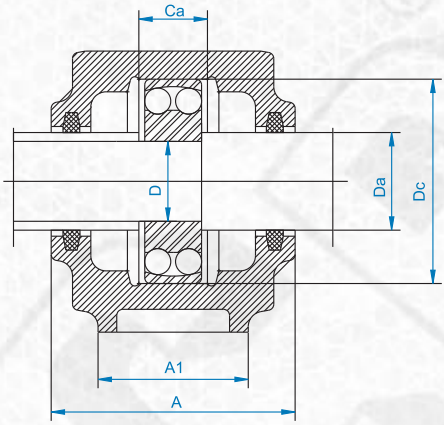

SHAFT DIAMETER		LOCATING RING	BEARING NO	FELT STRIP	Kg.
D	Da				
25	30	2 FRB 5/52	1205	2 FS 110	1,3
		2 FRB 3,5/52	2205		
		2 FRB 3,5/52	22205		
30	35	2 FRB 8/62	1206	2 FS 190	1,8
		2 FRB 6/62	2206		
		2 FRB 6/62	22206		
35	45	2 FRB 8,5/72	1207	2 FS 190	2
		2 FRB 5,5/72	2207		
		2 FRB 5,5/72	22207		
40	50	2 FRB 10,5/80	1208	2 FS 190	2,8
		2 FRB 8/80	2208		
		2 FRB 8/80	22208		
45	55	2 FRB 5,5/85	1209	2 FS 190	2,8
		2 FRB 3,5/85	2209		
		2 FRB 3,5/85	22209		
50	60	2 FRB 10,5/90	1210	2 FS 190	2,9
		2 FRB 9/90	2210		
		2 FRB 9/90	22210		
55	65	2 FRB 11.5/100	1211	2 FS 260	4,3
		2 FRB 9,5/100	2211		
		2 FRB 9,5/100	22211		
60	70	2 FRB 13/110	1212	2 FS 260	5
		2 FRB 10/110	2212		
		2 FRB 10/110	22212		

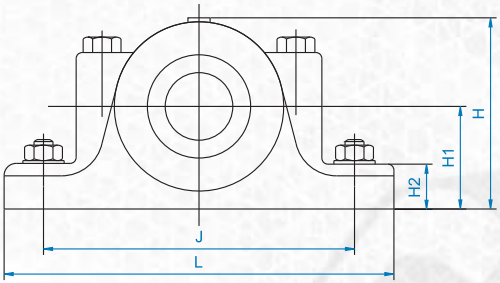

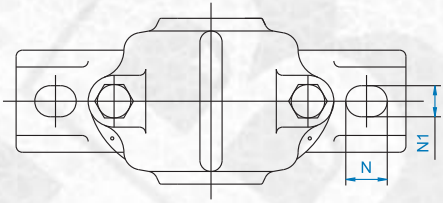

SHAFT DIAMETER		HOUSING NO	DIMENSIONS										
D	Da		A	A1	Ca	Dc	H	H1	H2	J	L	N	N1
65	75	SN 213	110	80	51	120	148	80	30	230	275	24	18
70	80	SN 214	115	80	44	125	154	80	30	230	275	24	18
75	85	SN 215	115	80	56	130	154	80	30	230	280	24	18
80	90	SN 216	120	90	58	140	175	95	32	260	315	28	22
85	95	SN 217	125	90	61	150	183	95	32	260	320	28	22
90	100	SN 218	140	100	65	160	193	100	35	290	345	28	22
95	110	SN 219	145	100	68	170	210	112	35	290	345	28	22
100	115	SN 220	160	110	70	180	215	112	40	320	380	32	26
110	125	SN 222	175	120	80	200	239	125	45	350	410	32	26

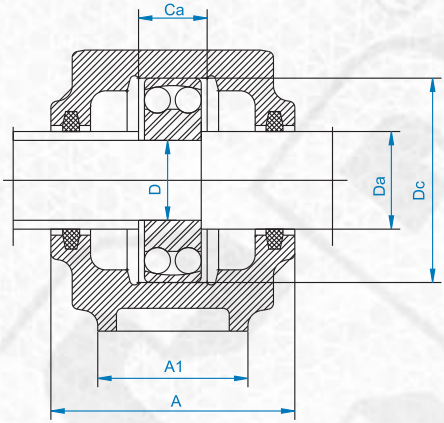

SHAFT DIAMETER		LOCATING RING	BEARING NO	FELT STRIP	Kg.
D	Da				
65	75	2 FRB 14/120	1213	2 FS 260	6,3
		2 FRB 10/120	2213		
		2 FRB 10/120	22213		
70	80	2 FRB 10/125	1214	2 FS 260	6.5
		2 FRB 13/125	2214		
		2FRB 13/125	22214		
75	85	2 FRB 15,5/130	1215	2 FS 260	6,5
		2 FRB 12,5/130	2215		
		2 FRB 12,5/130	22215		
80	90	2 FRB 16/140	1216	2 FS 330	9,3
		2 FRB 12,5/140	2216		
		2 FRB 12,5/140	22216		
85	95	2 FRB 16,5/150	1217	2 FS 300	9,7
		2 FRB 12,5/150	2217		
		2 FRB 12,5/150	22217		
90	100	2 FRB 17,5/160	1218	2 FS 330	12,8
		2 FRB 12,5/160	2218		
		2 FRB 12,5/160	22218		
95	110	2 FRB 18/170	1219	2 FS 370	14,5
		2 FRB 12,5/170	2219		
		2 FRB 12,5/170	22219		
100	115	2 FRB 18/180	1220	2 FS 370	17
		2 FRB 12/180	2220		
		2 FRB 12/180	22220		
		2 FRB 4,85/180	23220		
110	125	2 FRB 21/200	1222	2 FS 460	19
		2 FRB 13,5/200	2222		
		2 FRB 13,5/200	22222		
		2 FRB 5,1/200	23222		

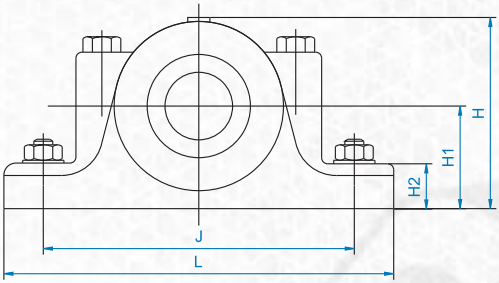

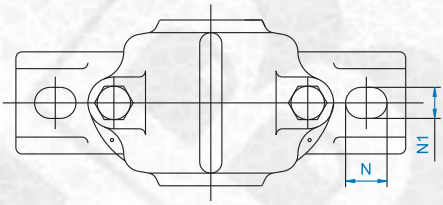

SHAFT DIAMETER		HOUSING NO	DIMENSIONS										
D	Da		A	A1	Ca	Dc	H	H1	H2	J	L	N	N1
120	135	SN 224	185	120	86	215	270	140	45	350	410	32	26
130	145	SN 226	190	130	90	230	290	150	50	380	445	35	28
140	155	SN 228	205	150	98	250	302	150	50	420	500	42	35
150	165	SN 230	220	160	106	270	323	160	60	450	530	42	35
160	175	SN 232	235	160	114	290	345	170	60	470	550	42	35

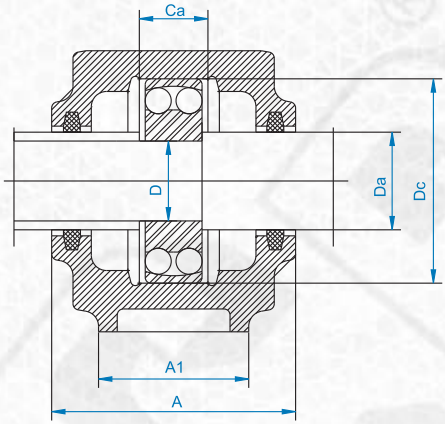

SHAFT DIAMETER		LOCATING RING	BEARING NO	FELT STRIP	Kg.
D	Da				
120	135	2 FRB 22/215	1224	2 FS 460	24,5
		2 FRB 14/215	22224		
		2 FRB 5/215	23224		
130	145	2 FRB 13/230	22226	2 FS 460	30
		2 FRB 5/230	23226		
140	155	2 FRB 15/250	22228	2 FS 510	38
		2 FRB 5/250	23228		
150	165	2 FRB 16,5/270	22230	2 FS 510	45,5
		2 FRB 5/270	23230		
160	175	2 FRB 17/290	22232	2 FS 680	54
		2 FRB 5/290	23232		

Series

SN 300

HCB®

BEARING HOUSINGS

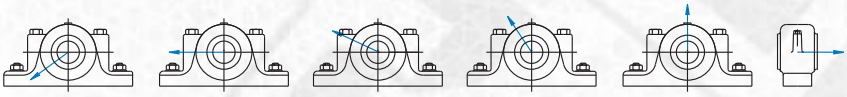

P55° P90° P120° P150° P180° Pa

Housing	Breaking loads						
Size	$P_{0°}$	$P_{55°}$	$P_{90°}$	$P_{120°}$	$P_{150°}$	$P_{180°}$	P_a
	kN	*kN*	*kN*	*kN*	*kN*	*kN*	*kN*
SN 307	-	100	60	45	40	50	35
SN 308	-	120	70	55	50	60	45
SN 309	-	140	85	65	55	70	50
SN 310	-	150	90	65	60	75	55
SN 311	-	170	100	75	70	85	65
SN 312	-	190	110	85	75	95	70
SN 313	-	220	130	100	90	110	85
SN 314	-	240	140	110	95	120	90
SN 315	-	260	160	120	100	130	95
SN 316	-	280	170	130	110	140	100
SN 317	-	340	200	150	140	170	125
SN 318	-	400	230	180	160	200	135
SN 319	-	440	260	200	180	220	150
SN 320	-	520	310	230	210	260	175
SN 322	-	670	400	300	270	335	230
SN 324	-	800	580	370	320	400	270
SN 326	-	1000	610	460	400	510	340
SN 328	-	1150	740	535	460	590	390
SN 330	-	1320	845	620	525	675	445
SN 332	-	1500	950	700	590	765	500

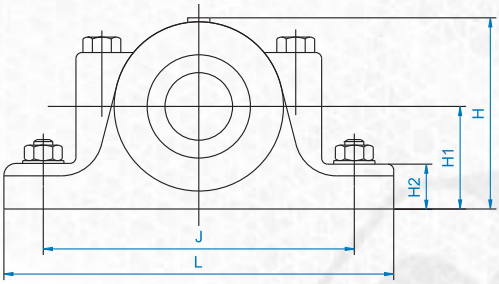

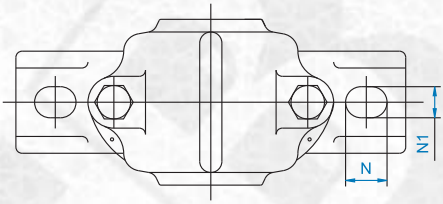

SHAFT DIAMETER		HOUSING NO	DIMENSIONS										
D	Da		A	A1	Ca	Dc	H	H1	H2	J	L	N	N1
35	45	SN 307	85	60	39	80	107	60	25	170	205	20	15
40	50	SN 308	90	60	41	90	113	60	25	170	205	20	15
45	55	SN 309	95	70	44	100	127	70	28	210	255	24	18
50	60	SN 310	105	70	48	110	133	70	30	210	255	24	18
55	65	SN 311	110	80	51	120	148	80	30	230	275	24	18
60	70	SN 312	115	80	56	130	154	80	30	230	280	24	18

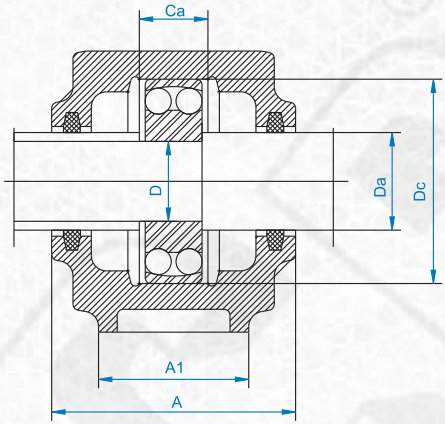

SHAFT DIAMETER		LOCATING RING	BEARING NO	FELT STRIP	Kg.
D	Da				
35	45	2 FRB 9/80	1307	2 FS 110	2,7
		2 FRB 9/80	21307		
40	50	2 FRB 9/90	1308	2 FS 190	3,3
		2 FRB 9/90	21308		
		2 FRB 4/90	22308		
45	55	2 FRB 9,5/100	1309	2 FS 190	4,6
		2 FRB 9,5/100	21309		
		2 FRB 4/100	22309		
50	60	2 FRB 10.5/110	1310	2 FS 190	4,7
		2 FRB 10.5/110	21310		
		2 FRB 4/110	22310		
55	65	2 FRB 11/120	1311	2 FS 260	6,4
		2 FRB 11/120	21311		
		2 FRB 4/120	22311		
60	70	2 FRB 12,5/130	1312	2 FS 260	7
		2 FRB 12,5/130	21312		
		2 FRB 5/130	22312		

series
SN 300

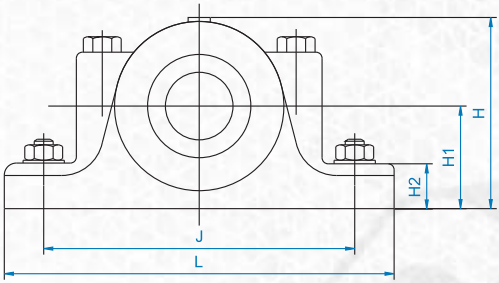

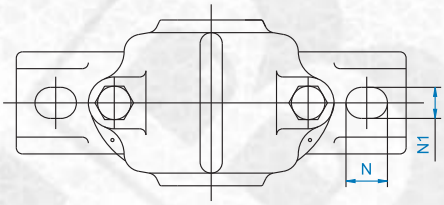

SHAFT DIAMETER		HOUSING NO	DIMENSIONS										
D	Da		A	A1	Ca	Dc	H	H1	H2	J	L	N	N1
65	75	SN 313	120	90	58	140	175	95	32	260	315	28	22
70	80	SN 314	125	90	61	150	183	95	32	260	320	28	22
75	85	SN 315	140	100	65	160	193	100	35	290	345	28	22
80	90	SN 316	145	100	68	170	210	112	35	290	345	28	22
85	95	SN 317	160	110	70	180	215	112	40	320	380	32	26
90	105	SN 318	160	110	74	190	220	112	40	320	380	32	26
95	110	SN 319	175	120	80	200	239	125	45	350	410	32	26

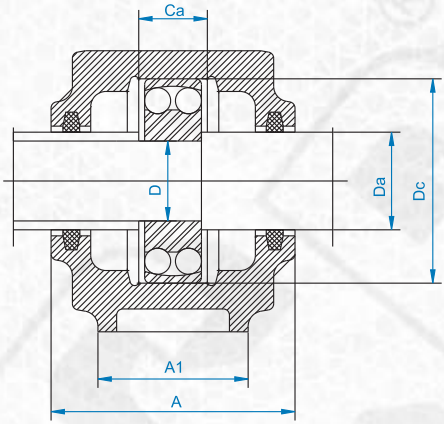

SHAFT DIAMETER		LOCATING RING	BEARING NO	FELT STRIP	Kg.
D	Da				
65	75	2 FRB 12,5/140	1313	2 FS 260	9,6
		2 FRB 12,5/140	21313		
		2 FRB 5/140	22313		
70	80	2 FRB 13/150	1314	2 FS 260	11
		2 FRB 13/150	21314		
		2 FRB 5/150	22314		
75	85	2 FRB 14/160	1315	2 FS 260	14
		2 FRB 14/160	21315		
		2 FRB 5/160	22315		
80	90	2 FRB 14,5/170	1316	2 FS 330	14
		2 FRB 14,5/170	21316		
		2 FRB 5/170	22316		
85	95	2 FRB 14,5/180	1317	2 FS 330	14,5
		2 FRB 14,5/180	21317		
		2 FRB 5/180	22317		
90	105	2 FRB 15,5/190	1318	2 FS 330	18,5
		2 FRB 15,5/190	21318		
		1 FRB 10/190	22318		
95	110	1 FRB 10/200	1319	2 FS 330	21,5
		2 FRB 16/200	21319		
		1 FRB 10/200	22319		

series
SN 300

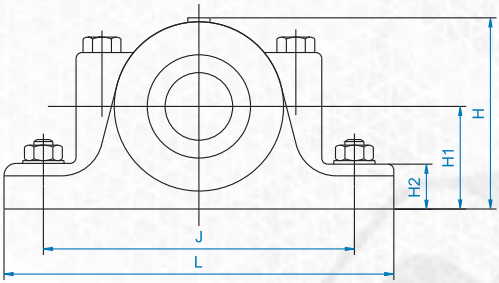

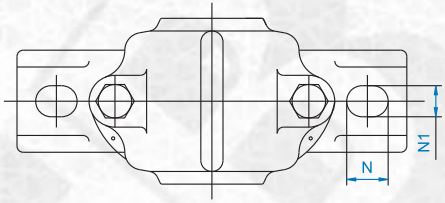

SHAFT DIAMETER		HOUSING NO	DIMENSIONS										
D	Da		A	A1	Ca	Dc	H	H1	H2	J	L	N	N1
100	115	SN 320	185	120	86	215	270	140	45	350	410	32	26
110	125	SN 322	190	130	90	240	295	150	50	390	450	35	28
120	135	SN 324	200	160	96	260	320	160	60	450	530	42	35
130	150	SN 326	210	160	103	280	340	170	60	470	550	42	35
140	160	SN 328	235	170	112	300	367	180	65	520	620	42	35
150	170	SN 330	245	180	118	320	385	190	65	560	650	42	35
160	180	SN 332	255	190	124	340	405	200	70	580	680	50	42

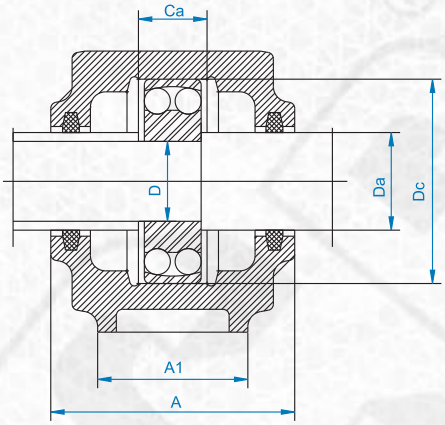

SHAFT DIAMETER		LOCATING RING	BEARING NO	FELT STRIP	Kg.
D	Da				
100	115	2 FRB 18/215	1320	2 FS 370	24,5
		2 FRB 18/215	21320		
		1 FRB 10/215	22320		
110	125	2 FRB 20/240	20322	2 FS 460	31,5
		2 FRB 18/240	21322		
		1 FRB 10/240	22322		
120	135	2 FRB 20,5/260	20324	2 FS 460	48
		1 FRB 10/260	22324		
130	150	2 FRB 22,5/280	20326	2 FS 460	56
		1 FRB 10/280	22326		
140	160	2 FRB 25/300	20328	2 FS 510	72
		1 FRB 10/300	22328		
150	170	2 FRB 26,5/320	20330	2 FS 510	98
		1 FRB 10/320	22330		
160	180	2 FRB 28/340	20332	2 FS 680	115
		1 FRB 10/340	22332		

Series

SN 500

HCB®

BEARING HOUSINGS

P55° P90° P120° P150° P180° Pa

Housing	Breaking Loads						
Size	$P_{0°}$	$P_{55°}$	$P_{90°}$	$P_{120°}$	$P_{150°}$	$P_{180°}$	P_a
	kN	*kN*	*kN*	*kN*	*kN*	*kN*	*kN*
SN 505	-	70	40	30	30	35	25
SN 506	-	80	50	35	30	40	27
SN 507	-	90	55	40	35	45	30
SN 508	-	100	60	45	40	50	35
SN 509	-	110	65	50	45	55	40
SN 510	-	120	70	55	50	60	45
SN 511	-	140	85	65	55	70	50
SN 512	-	150	90	65	60	75	55
SN 513	-	170	100	75	70	85	65
SN 515	-	190	110	85	75	95	70
SN 516	-	220	130	100	90	110	85
SN 517	-	240	140	110	95	120	90
SN 518	-	260	160	120	100	130	95
SN 519	-	280	170	130	110	140	100
SN 520	-	340	200	150	140	170	125
SN 522	-	440	260	200	180	220	150
SN 524	-	520	310	230	210	260	175
SN 526	-	620	370	280	250	310	210
SN 528	-	720	430	320	290	360	250
SN 530	-	860	520	390	340	430	280
SN 532	-	1100	660	490	440	550	375

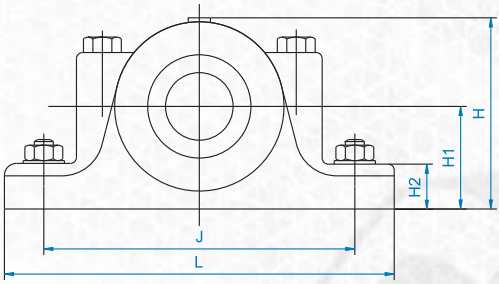

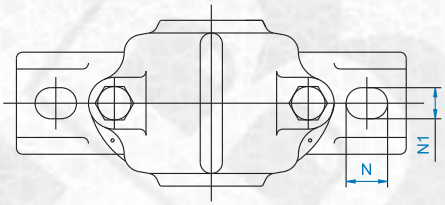

SHAFT DIAMETER	HOUSING NO	DIMENSIONS										
Da		A	A1	Ca	Dc	H	H1	H2	J	L	N	N1
20	SN 505	67	46	25	52	74	40	19	130	165	20	15
25	SN 506	77	52	32	62	89	50	22	150	185	20	15
30	SN 507	82	52	34	72	93	50	22	150	185	20	15
35	SN 508	85	60	39	80	107	60	25	170	205	20	15
40	SN 509	85	60	30	85	109	60	25	170	205	20	15
45	SN 510	90	60	41	90	113	60	25	170	205	20	15
50	SN 511	95	70	44	100	127	70	28	210	255	24	18
55	SN 512	105	70	48	110	133	70	30	210	255	24	18

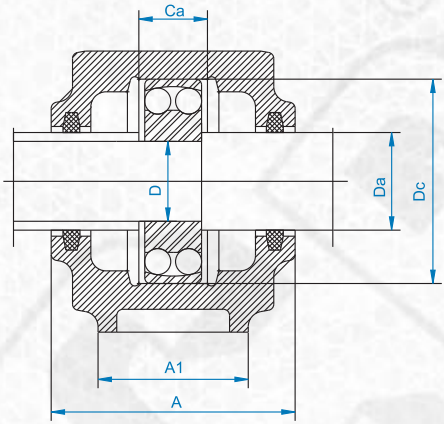

SHAFT DIAMETER Da	LOCATING RING	BEARING NO	ADAPTER NO	FELT STRIP	Kg.
20	2 FRB 5/52	1205 K	H 205	2 FS 110	1,4
	2 FRB 3,5/52	2205 K	H 305		
	2 FRB 3,5/52	22205 K	H 305		
25	2 FRB 8/62	1206 K	H 206	2 FS 190	1,9
	2 FRB 6/62	2206 K	H 306		
	2 FRB 6/62	22206 K	H 306		
30	2 FRB 8,5/72	1207 K	H 207	2 FS 190	2
	2 FRB 5,5/72	2207 K	H 307		
	2 FRB 5,5/72	22207 K	H 307		
35	2 FRB 10,5/80	1208 K	H 208	2 FS 190	2,8
	2 FRB 8/80	2208 K	H 308		
	2 FRB 8/80	22208 K	H 308		
40	2 FRB 5,5/85	1209 K	H 209	2 FS 190	2,9
	2 FRB 3,5/85	2209 K	H 309		
	2 FRB 3,5/85	22209 K	H 309		
45	2 FRB 10,5/90	1210 K	H 210	2 FS 190	3
	2 FRB 9/90	2210 K	H 310		
	2 FRB 9/90	22210 K	H 310		
50	2 FRB 11.5/100	1211 K	H 211	2 FS 260	4,2
	2 FRB 9,5/100	2211 K	H311		
	2 FRB 9,5/100	22211 K	H311		
55	2 FRB 13/110	1212 K	H 212	2 FS 260	4,9
	2 FRB 10/110	2212 K	H 312		
	2 FRB 10/110	22212 K	H 312		

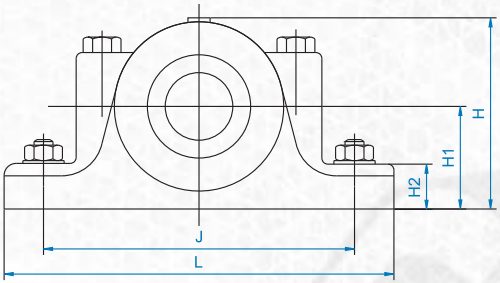

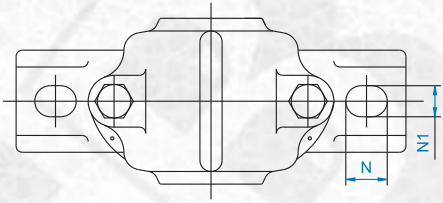

SHAFT DIAMETER	HOUSING NO	DIMENSIONS										
Da		A	A1	Ca	Dc	H	H1	H2	J	L	N	N1
60	SN 513	110	80	51	120	148	80	30	230	275	24	18
65	SN 515	115	80	56	130	154	80	30	230	280	24	18
70	SN 516	120	90	58	140	175	95	32	260	315	28	22
75	SN 517	125	90	61	150	183	95	32	260	320	28	22
80	SN 518	140	100	65	160	193	100	35	290	345	28	22
85	SN 519	145	100	68	170	210	112	35	290	345	28	22
90	SN 520	160	110	70	180	215	112	40	320	380	32	26
100	SN 522	175	120	80	200	239	125	45	350	410	32	26

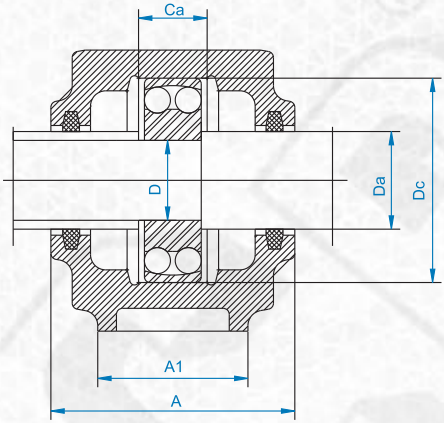

SHAFT DIAMETER Da	LOCATING RING	BEARING NO	ADAPTER NO	FELT STRIP	Kg.
60	2 FRB 14/120	1213 K	H 213	2 FS 260	6,2
	2 FRB 10/120	2213 K	H 313		
	2 FRB 10/120	22213 K	H 313		
65	2 FRB 15,5/130	1215 K	H 215	2 FS 260	6,8
	2 FRB 12,5/130	2215 K	H 315		
	2 FRB 12,5/130	22215 K	H 315		
70	2 FRB 16/140	1216 K	H 216	2 FS 330	9,3
	2 FRB 12,5/140	2216 K	H 316		
	2 FRB 12,5/140	22216 K	H 316		
75	2 FRB 16,5/150	1217 K	H 217	2 FS 300	9,7
	2 FRB 12,5/150	2217 K	H 317		
	2 FRB 12,5/150	22217 K	H 317		
80	2 FRB 17,5/160	1218 K	H 218	2 FS 330	12,8
	2 FRB 12,5/160	2218 K	H 318		
	2 FRB 12,5/160	22218 K	H 318		
85	2 FRB 18/170	1219 K	H 219	2 FS 370	14,5
	2 FRB 12,5/170	2219 K	H 319		
	2 FRB 12,5/170	22219 K	H 319		
90	2 FRB 18/180	1220 K	H 220	2 FS 370	17
	2 FRB 12/180	2220 K	H 320		
	2 FRB 12/180	22220 K	H 320		
	2 FRB 4,85/180	23220 K	H 2320		
100	2 FRB 21/200	1222 K	H 222	2 FS 460	19
	2 FRB 13,5/200	2222 K	H 322		
	2 FRB 13,5/200	22222 K	H 322		
	2 FRB 5,1/200	23222 K	H 2322		

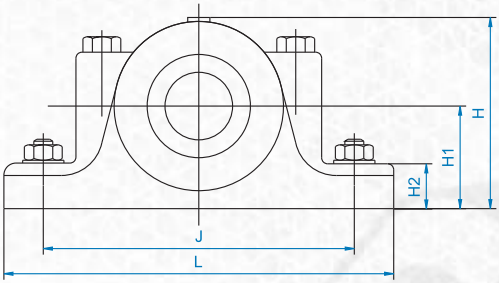

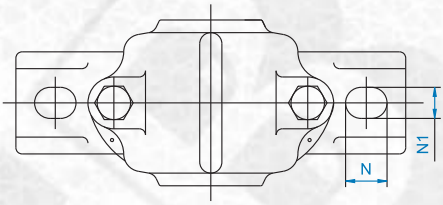

SHAFT DIAMETER	HOUSING NO	DIMENSIONS										
Da		A	A1	Ca	Dc	H	H1	H2	J	L	N	N1
110	SN 524	185	120	86	215	270	140	45	350	410	32	26
115	SN 526	190	130	90	230	290	150	50	380	445	35	28
125	SN 528	205	150	98	250	302	150	50	420	500	42	35
135	SN 530	220	160	106	270	323	160	60	450	530	42	35
140	SN 532	235	160	114	290	345	170	60	470	550	42	35

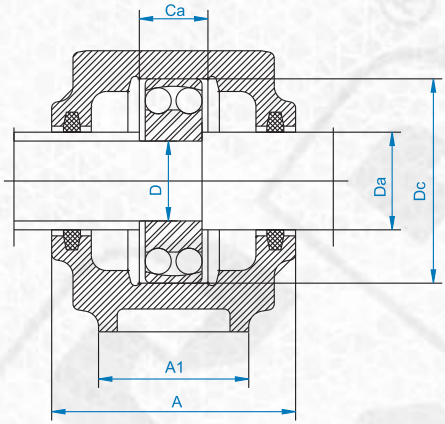

SHAFT DIAMETER Da	LOCATING RING	BEARING NO	ADAPTER NO	FELT STRIP	Kg.
110	2 FRB 22/215	1224 K	H 3124	2 FS 460	24,5
	2 FRB 14/215	22224 K	H 3124		
	2 FRB 5/215	23224 K	H 2324		
115	2 FRB 13/230	22226 K	H 3126	2 FS 460	30
	2 FRB 5/230	23226 K	H 2326		
125	2 FRB 15/250	22228 K	H 3128	2 FS 510	38
	2 FRB 5/250	23228 K	H 2328		
135	2 FRB 16,5/270	22230 K	H 3130	2 FS 510	45,5
	2 FRB 5/270	23230 K	H 2330		
140	2 FRB 17/290	22232 K	H 3132	2 FS 680	54
	2 FRB 5/290	23232 K	H 2332		

Series

SN 600

HCB®

BEARING HOUSINGS

P55° P90° P120° P150° P180° Pa

Housing	Breaking loads						
Size	$P_{0°}$	$P_{55°}$	$P_{90°}$	$P_{120°}$	$P_{150°}$	$P_{180°}$	P_a
	kN	*kN*	*kN*	*kN*	*kN*	*kN*	*kN*
SN 605	-	80	50	35	30	40	27
SN 606	-	90	55	40	35	45	30
SN 607	-	100	60	45	40	50	35
SN 608	-	120	70	55	50	60	45
SN 609	-	140	85	65	55	70	50
SN 610	-	150	90	65	60	75	55
SN 611	-	170	100	75	70	85	65
SN 612	-	190	110	85	75	95	70
SN 613	-	220	130	100	90	110	85
SN 615	-	260	160	120	100	130	95
SN 616	-	280	170	130	110	140	100
SN 617	-	340	200	150	140	170	125
SN 618	-	400	230	180	160	200	135
SN 619	-	440	260	200	180	220	150
SN 620	-	520	310	230	210	260	175
SN 622	-	670	400	300	270	335	230
SN 624	-	800	580	370	320	400	270
SN 626	-	1000	610	460	400	510	340
SN 628	-	1150	740	535	460	590	390
SN 630	-	1320	845	620	525	675	445
SN 632	-	1500	950	700	590	765	500

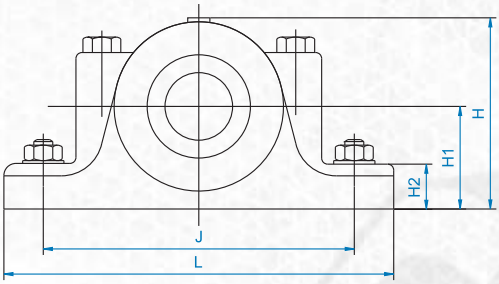

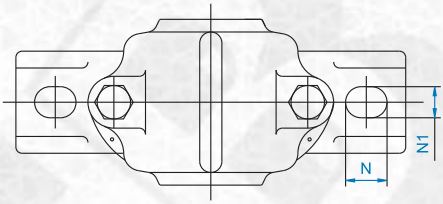

SHAFT DIAMETER Da	HOUSING NO	DIMENSIONS										
		A	A1	Ca	Dc	H	H1	H2	J	L	N	N1
30	SN 607	90	60	39	80	110	60	25	170	205	20	15
35	SN 608	95	60	41	90	115	60	25	170	205	20	15
40	SN 609	105	70	44	100	130	70	28	210	255	23	18
45	SN 610	115	70	48	110	135	70	30	210	255	23	18
50	SN 611	120	80	51	120	150	80	30	230	275	23	18
55	SN 612	125	80	56	130	154	80	30	230	280	25	18

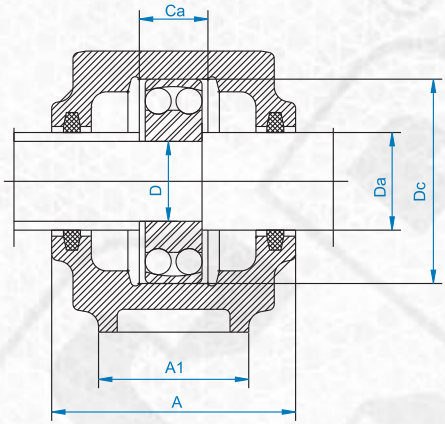

SHAFT DIAMETER Da	LOCATING RING	BEARING NO	ADAPTER NO	FELT STRIP	Kg.
30	2 FRB 9/80	1307 K	H 307	2 FS 110	3,3
	2 FRB 9/80	21307 K	H 307		
35	2 FRB 9/90	1308 K	H 308	2 FS 190	3,4
	2 FRB 9/90	21308 K	H 308		
	2 FRB 4/90	22308 K	H 2308		
40	2 FRB 9,5/100	1309 K	H 309	2 FS 190	4,7
	2 FRB 9,5/100	21309 K	H 309		
	2 FRB 4/100	22309 K	H 2309		
45	2 FRB 10.5/110	1310 K	H 310	2 FS 190	5
	2 FRB 10.5/110	21310 K	H 310		
	2 FRB 4/110	22310 K	H 2310		
50	2 FRB 11/120	1311 K	H 311	2 FS 260	6,6
	2 FRB 11/120	21311 K	H 311		
	2 FRB 4/120	22311 K	H 2311		
55	2 FRB 12,5/130	1312 K	H 312	2 FS 260	7,3
	2 FRB 12,5/130	21312 K	H 312		
	2 FRB 5/130	22312 K	H 2312		

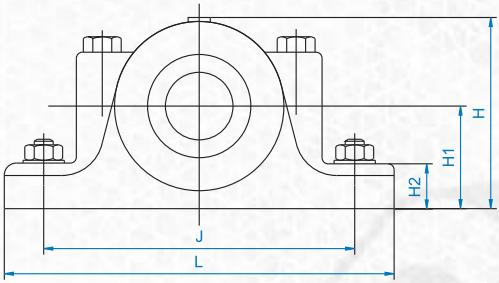

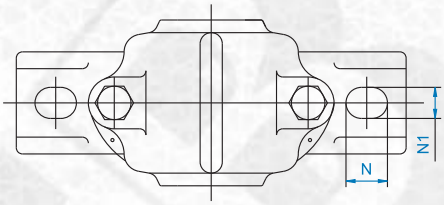

SHAFT DIAMETER Da	HOUSING NO	DIMENSIONS										
		A	A1	Ca	Dc	H	H1	H2	J	L	N	N1
60	SN 613	130	90	58	140	175	95	32	260	315	28	22
65	SN 615	140	100	65	160	192	100	35	290	345	27	22
70	SN 616	145	100	68	170	210	112	35	290	345	27	22
75	SN 617	155	110	70	180	215	112	40	320	380	32	26
80	SN 618	160	110	74	190	220	112	40	320	380	32	26
85	SN 619	170	120	80	200	240	125	45	350	410	32	26

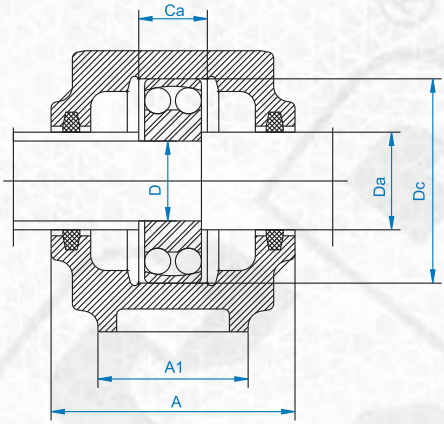

SHAFT DIAMETER Da	LOCATING RING	BEARING NO	ADAPTER NO	FELT STRIP	Kg.
60	2 FRB 12,5/140	1313 K	H 313	2 FS 260	9,9
	2 FRB 12,5/140	21313 K	H 313		
	2 FRB 5/140	22313 K	H 2313		
65	2 FRB 14/160	1315 K	H 315	2 FS 260	14,3
	2 FRB 14/160	21315 K	H 315		
	2 FRB 5/160	22315 K	H 2315		
70	2 FRB 14,5/170	1316 K	H 316	2 FS 330	13,9
	2 FRB 14,5/170	21316 K	H 316		
	2 FRB 5/170	22316 K	H 2316		
75	2 FRB 14,5/180	1317 K	H 317	2 FS 330	15
	2 FRB 14,5/180	21317 K	H 317		
	2 FRB 5/180	22317 K	H 2317		
80	2 FRB 15,5/190	1318 K	H 318	2 FS 330	19
	2 FRB 15,5/190	21318 K	H 318		
	1 FRB 10/190	22318 K	H 2318		
85	1 FRB 10/200	1319 K	H 319	2 FS 330	22
	2 FRB 16/200	21319 K	H 319		
	1 FRB 10/200	22319 K	H 2319		

series
SN 600

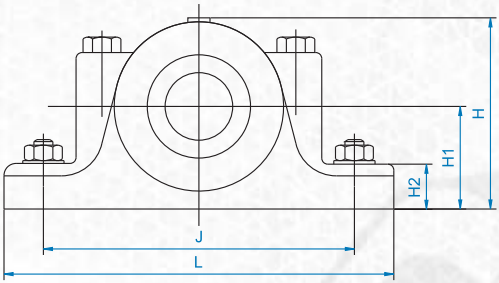

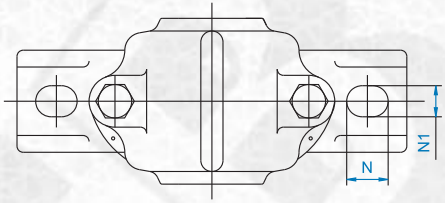

SHAFT DIAMETER Da	HOUSING NO	DIMENSIONS										
		A	A1	Ca	Dc	H	H1	H2	J	L	N	N1
90	SN 620	175	120	86	215	270	140	45	350	410	32	26
100	SN 622	190	130	90	240	295	150	50	390	450	35	28
110	SN 624	200	160	96	260	320	160	60	450	530	42	35
115	SN 626	210	160	103	280	340	170	60	470	550	42	35
125	SN 628	235	170	112	300	367	180	65	520	620	42	35
135	SN 630	245	180	118	320	385	190	65	560	650	42	35
140	SN 632	255	190	124	340	405	200	70	580	680	50	42

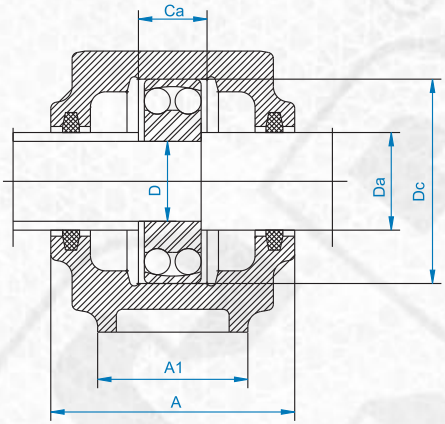

SHAFT DIAMETER Da	LOCATING RING	BEARING NO	ADAPTER NO	FELT STRIP	Kg.
90	2 FRB 18/215	1320 K	H 320	2 FS 370	25
	2 FRB 18/215	21320 K	H 320		
	1 FRB 10/215	22320 K	H 2320		
100	2 FRB 20/240	20322 K	H 322	2 FS 460	32
	2 FRB 18/240	21322 K	H 322		
	2 FRB 10/240	22322 K	H 2322		
110	2 FRB 20,5/260	20324 K	H 3124	2 FS 460	48
	1 FRB 10/260	22324 K	H 2324		
115	2 FRB 22,5/280	20326 K	H 3126	2 FS 460	56
	1 FRB 10/280	22326 K	H 2326		
125	2 FRB 25/300	20328 K	H 3128	2 FS 510	72
	1 FRB 10/300	22328 K	H 2328		
135	2 FRB 26,5/320	20330 K	H 3130	2 FS 510	98
	1 FRB 10/320	22330 K	H 2330		
140	2 FRB 28/340	20332 K	H 3132	2 FS 680	115
	1 FRB 10/340	22332 K	H 2332		

Series

SNH 3000 TS

HCB®

BEARING HOUSINGS

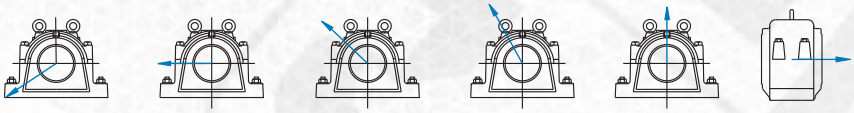

P55° P90° P120° P150° P180° Pa

Housing	Breaking loads						
Size	$P_{0°}$	$P_{55°}$	$P_{90°}$	$P_{120°}$	$P_{150°}$	$P_{180°}$	P_a
	kN	*kN*	*kN*	*kN*	*kN*	*kN*	*kN*
SNH 3036	1700	2100	1000	760	680	850	550
SNH 3038	1900	2400	1150	850	760	950	620
SNH 3040	2200	2700	1300	1000	880	1100	710
SNH 3044	2600	3200	1600	1100	1000	1300	840
SNH 3048	3100	4000	1900	1400	1300	1600	1000
SNH 3052	3400	4200	2000	1500	1400	1700	1100
SNH 3056	3800	4700	2300	1700	1500	1900	1200
SNH 3060	4000	5000	2400	1800	1600	2000	1300
SNH 3064	4800	6000	2900	2200	1900	2400	1500
SNH 3068	5400	7000	3400	2500	2200	2800	1800
SNH 3076	6000	7500	3600	2600	2300	1300	1900
SNH 3080	6000	7700	3600	2700	2400	3000	2000
SNH 3084	6100	8000	3900	2900	2500	3200	2100
SNH 3088	7000	8700	4200	3100	2700	3500	2200

series
SNH 3000 TS

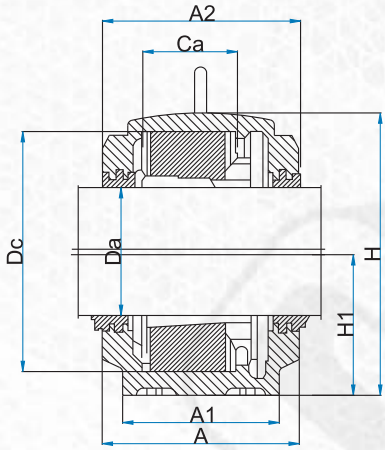

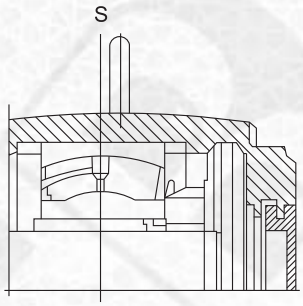

SHAFT DIAMETER	HOUSING NO	DIMENSIONS													
Da		A	A1	A2	Ca	Dc	H	H1	H2	J	J1	L	N	N1	S
160	SNH 3036	230	210	240	108	280	333	170	70	430	100	510	34	28	14
170	SNH 3038	240	190	250	115	290	353	180	75	450	110	530	34	28	15
180	SNH 3040	260	210	270	122	310	375	190	80	480	120	560	34	28	10
200	SNH 3044	280	230	290	130	340	411	210	85	510	130	610	42	35	10
220	SNH 3048	290	240	300	140	360	434	220	90	540	140	640	42	35	12
240	SNH 3052	310	260	315	148	400	474	240	95	600	150	700	42	35	12
260	SNH 3056	320	280	330	166	420	516	260	100	650	160	770	50	42	13
280	SNH 3060	320	280	330	168	460	551	280	105	670	160	790	50	42	16
300	SNH 3064	350	310	360	181	480	591	300	110	710	190	830	50	42	22
320	SNH 3068	370	330	380	197	520	631	320	115	750	200	880	50	42	23
340	SNH 3072	370	330	380	197	520	631	320	115	750	200	880	50	42	23
360	SNH 3076 L	400	360	410	214	560	675	340	120	810	220	950	50	42	24
360	SNH 3076 F	400	360	410	135	560	675	340	120	810	220	950	50	42	24
380	SNH 3080 L	400	360	410	192	600	695	350	120	840	220	1000	50	42	30
380	SNH 3080 F	400	360	410	148	600	695	350	120	840	220	1000	50	42	30
400	SNH 3084 L	400	360	410	194	620	675	360	120	870	220	1040	50	42	30
400	SNH 3084 F	400	360	410	150	620	675	360	120	870	220	1040	50	42	30
410	SNH 3088 L	430	390	440	200	650	775	380	125	950	240	1120	60	48	30
410	SNH 3088 F	430	390	440	157	650	775	380	125	950	240	1120	60	48	30

series
SNH 3000 TS

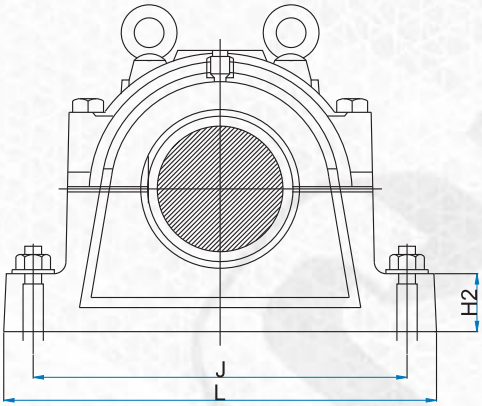

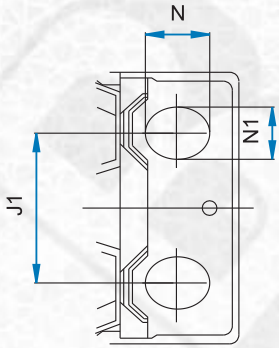

HOUSING FOR THROUGH SHAFT	HOUSING FOR SHAFT END	LABYRINTH RING WITH O-SECTION TUBE	END COVER WITH O-SECTION TUBE	LOCATING RING	ADAPTER NO	BEARING NO	Kg.
SNH 3036 TS	SNH 3036 ATS	TS 36	ETS 36	2 FRB 17/280	H 3036	23036 K	80
SNH 3038 TS	SNH 3038 ATS	TS 38	ETS 38	4 FRB 10/290	H 3038	23038 K	89
SNH 3040 TS	SNH 3040 ATS	TS 40	ETS 40	4 FRB 10/310	H 3040	23040 K	112
SNH 3044 TS	SNH 3044 ATS	TS 44	ETS 44	4 FRB 10/340	H 3044	23044 K	141
SNH 3048 TS	SNH 3048 ATS	TS 48	ETS 48	4 FRB 12/360	H 3048	23048 K	160
SNH 3052 TS	SNH 3052 ATS	TS 52	ETS 52	2 FRB 22/400	H 3052	23052 K	210
SNH 3056 TS	SNH 3056 ATS	TS 56	ETS 56	6 FRB 10/420	H 3056	23056 K	241
SNH 3060 TS	SNH 3060 ATS	TS 60	ETS 60	2 FRB 25/460	H 3060	23060 K	273
SNH 3064 TS	SNH 3064 ATS	TS 64	ETS 64	6 FRB 10/480	H 3064	23064 K	322
SNH 3068 TS	SNH 3068 ATS	TS 68	ETS 68	4 FRB 16/520	H 3068	23068 K	360
SNH 3072 TS	SNH 3072 ATS	TS 72	ETS 72	4 FRB 16/540	H 3072	23072 K	360
SNH 3076 TS	SNH 3076 ATS	TS 76	ETS 76	-	H 3076	23076 K	447
SNH 3076 TS	SNH 3076 ATS	TS 76	ETS 76	-	H 3076	23076 K	447
SNH 3080 TS	SNH 3080 ATS	TS 80	ETS 80	-	H 3080	23080 K	473
SNH 3080 TS	SNH 3080 ATS	TS 80	ETS 80	-	H 3080	23080 K	473
SNH 3084 TS	SNH 3084 ATS	TS 84	ETS 84	-	H 3084	23084 K	490
SNH 3084 TS	SNH 3084 ATS	TS 84	ETS 84	-	H 3084	23084 K	490
SNH 3088 TS	SNH 3088 ATS	TS 88	ETS 88	-	H 3088	23088 K	615
SNH 3088 TS	SNH 3088 ATS	TS 88	ETS 88	-	H 3088	23088 K	615

Series

SNH 3000 GTS

HCB®

BEARING HOUSINGS

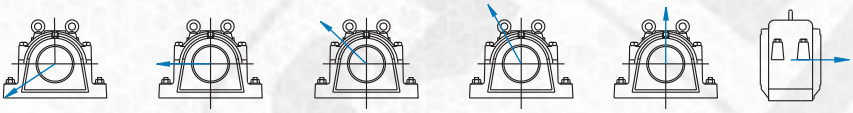

Housing	Breaking loads						
Size	$P_{0°}$	$P_{55°}$	$P_{90°}$	$P_{120°}$	$P_{150°}$	$P_{180°}$	P_a
	kN	*kN*	*kN*	*kN*	*kN*	*kN*	*kN*
SNH 3036	1700	2100	1000	760	680	850	550
SNH 3038	1900	2400	1150	850	760	950	620
SNH 3040	2200	2700	1300	1000	880	1100	710
SNH 3044	2600	3200	1600	1100	1000	1300	840
SNH 3048	3100	4000	1900	1400	1300	1600	1000
SNH 3052	3400	4200	2000	1500	1400	1700	1100
SNH 3056	3800	4700	2300	1700	1500	1900	1200
SNH 3060	4000	5000	2400	1800	1600	2000	1300
SNH 3064	4800	6000	2900	2200	1900	2400	1500
SNH 3068	5400	7000	3400	2500	2200	2800	1800
SNH 3076	6000	7500	3600	2600	2300	1300	1900
SNH 3080	6000	7700	3600	2700	2400	3000	2000
SNH 3084	6100	8000	3900	2900	2500	3200	2100
SNH 3088	7000	8700	4200	3100	2700	3500	2200

SNH 3000 GTS

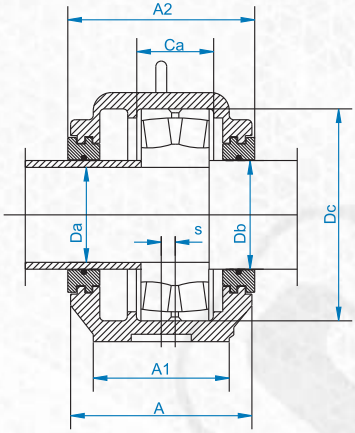

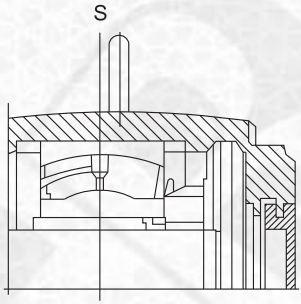

SHAFT DIAMETER		HOUSING NO	DIMENSIONS													
Da	Db		A	A1	A2	Ca	Dc	H	H1	H2	J	J1	L	N	N1	S
180	200	SNH 3036 G	230	210	240	108	280	333	170	70	430	100	510	34	28	14
190	200	SNH 3038 G	240	190	250	115	290	353	180	75	450	110	530	34	28	15
200	220	SNH 3040 G	260	210	270	122	310	375	190	80	480	120	560	34	28	10
220	240	SNH 3044 G	280	230	290	130	340	411	210	85	510	130	610	42	35	10
240	260	SNH 3048 G	290	240	300	140	360	434	220	90	540	140	640	42	35	12
260	280	SNH 3052 G	310	260	315	148	400	474	240	95	600	150	700	42	35	12
280	300	SNH 3056 G	320	280	330	166	420	516	260	100	650	160	770	50	42	13
300	320	SNH 3060 G	320	280	330	168	460	551	280	105	670	160	790	50	42	16
320	340	SNH 3064 G	350	310	360	181	480	591	300	110	710	190	830	50	42	22
340	360	SNH 3068 G	370	330	380	197	520	631	320	115	750	200	880	50	42	23
360	380	SNH 3072 G	370	330	380	197	520	631	320	115	750	200	880	50	42	23
380	400	SNH 3076 GL	400	360	410	180	560	675	340	120	810	220	950	50	42	24
380	400	SNH 3076 GF	400	360	410	135	560	675	340	120	810	220	950	50	42	24
400	430	SNH 3080 GL	400	360	410	192	600	695	350	120	840	220	1000	50	42	30
400	430	SNH 3080 GF	400	360	410	148	600	695	350	120	840	220	1000	50	42	30
420	450	SNH 3084 GL	400	360	410	194	620	675	360	120	870	220	1040	50	42	30
420	450	SNH 3084 GF	400	360	410	150	620	675	360	120	870	220	1040	50	42	30
440	470	SNH 3088 GL	430	390	440	200	650	775	380	125	950	240	1120	60	48	30
440	470	SNH 3088 GF	430	390	440	157	650	775	380	125	950	240	1120	60	48	30

series
SNH 3000 GTS

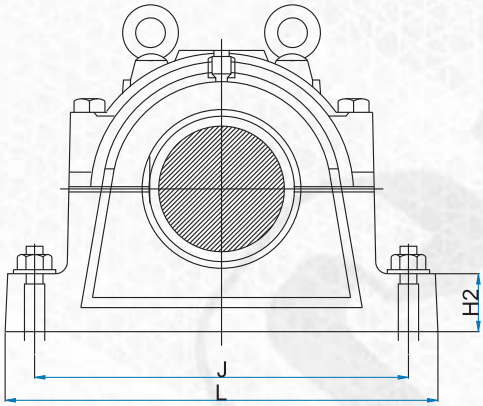

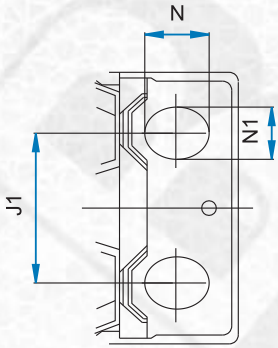

HOUSING FOR THROUGH SHAFT	HOUSING FOR SHAFT END	LABYRINTH RING WITH O-SECTION TUBE	END COVER WITH O-SECTION TUBE	LOCATING RING	ADAPTER NO	BEARING NO	Kg.
SNH 3036 GTS	SNH 3036 GATS	TS 44	ETS 44	2 FRB 4/280	H 3036	23036	80
SNH 3038 GTS	SNH 3038 GATS	TS 44	ETS 44	4 FRB 10/290	H 3038	23038	89
SNH 3040 GTS	SNH 3040 GATS	TS 48	ETS 48	4 FRB 10/310	H 3040	23040	112
SNH 3044 GTS	SNH 3044 GATS	TS 52	ETS 52	4 FRB 10/340	H 3044	23044	141
SNH 3048 GTS	SNH 3048 GATS	TS 56	ETS 56	4 FRB 12/360	H 3048	23048	160
SNH 3052 GTS	SNH 3052 GATS	TS 60	ETS 60	2 FRB 22/400	H 3052	23052	210
SNH 3056 GTS	SNH 3056 GATS	TS 64	ETS 64	6 FRB 10/420	H 3056	23056	241
SNH 3060 GTS	SNH 3060 GATS	TS 68	ETS 68	2 FRB 25/460	H 3060	23060	273
SNH 3064 GTS	SNH 3064 GATS	TS 72	ETS 72	2 FRB 10.5/480	H 3064	23064	322
SNH 3068 GTS	SNH 3068 GATS	TS 76	ETS 76	4 FRB 16/520	H 3068	23068	360
SNH 3072 GTS	SNH 3072 GATS	TS 80	ETS 80	4 FRB 16/540	H 3072	23072	360
SNH 3076 GTS	SNH 3076 GATS	TS 84	ETS 84	-	H 3076	23076	447
SNH 3076 GTS	SNH 3076 GATS	TS 84	ETS 84	-	H 3076	23076	447
SNH 3080 GTS	SNH 3080 GATS	TS 92	ETS 92	-	H 3080	23080	473
SNH 3080 GTS	SNH 3080 GATS	TS 92	ETS 92	-	H 3080	23080	473
SNH 3084 GTS	SNH 3084 GATS	TS 96	ETS 96	-	H 3084	23084	490
SNH 3084 GTS	SNH 3084 GATS	TS 96	ETS 96	-	H 3084	23084	490
SNH 3088 GTS	SNH 3088 GATS	TS 500	ETS 500	-	H 3088	23088	615
SNH 3088 GTS	SNH 3088 GATS	TS 500	ETS 500	-	H 3088	23088	615

Series

SNH 3100 TS

HCB®

BEARING HOUSINGS

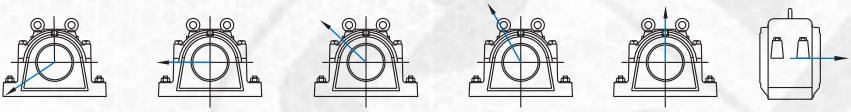

P55° P90° P120° P150° P180° Pa

Housing	Breaking loads						
Size	$P_{0°}$	$P_{55°}$	$P_{90°}$	$P_{120°}$	$P_{150°}$	$P_{180°}$	P_a
	kN	kN	kN	kN	kN	kN	kN
SNH 3134	1700	2100	1000	760	680	850	550
SNH 3136	1900	2400	1150	850	760	950	620
SNH 3138	2200	2700	1300	1000	880	1100	710
SNH 3140	2600	3200	1600	1100	1000	1300	840
SNH 3144	3100	4000	1900	1400	1300	1600	1000
SNH 3148	3400	4200	2000	1500	1400	1700	1100
SNH 3152	3800	4700	2300	1700	1500	1900	1200
SNH 3156	4000	5000	2400	1800	1600	2000	1300
SNH 3160	4800	6000	2900	2200	1900	2400	1500
SNH 3164	5400	7000	3400	2500	2200	2800	1800
SNH 3168	6000	7500	3600	2600	2300	1300	1900
SNH 3172	6000	7700	3600	2700	2400	3000	2000
SNH 3176	6100	8000	3900	2900	2500	3200	2100
SNH 3180	7000	8700	4200	3100	2700	3500	2200

series
SNH 3100 TS

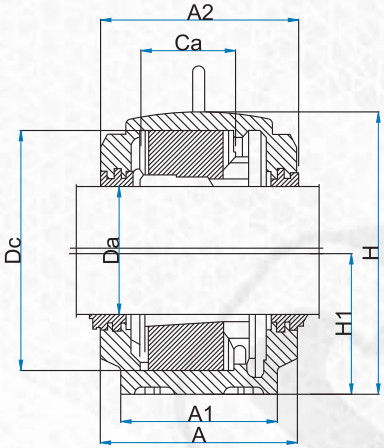

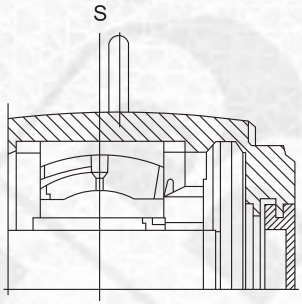

SHAFT DIAMETER	HOUSING NO	DIMENSIONS													
Da		A	A1	A2	Ca	Dc	H	H1	H2	J	J1	L	N	N1	S
150	SNH 3134	230	180	240	108	280	333	170	70	430	100	510	34	28	14
160	SNH 3136	240	190	260	116	300	353	180	75	450	110	530	34	28	15
170	SNH 3138	260	210	270	124	320	375	190	80	480	120	560	34	28	10
180	SNH 3140	280	230	290	132	340	411	210	85	510	130	610	42	35	10
200	SNH 3144	290	240	300	140	370	434	220	90	540	140	640	42	35	12
220	SNH 3148	310	260	315	148	400	474	240	95	600	150	700	42	35	12
240	SNH 3152	320	280	330	164	440	516	260	100	650	160	770	50	42	13
260	SNH 3156	320	280	330	166	460	551	280	105	670	160	790	50	42	16
280	SNH 3160	350	310	360	180	500	591	300	110	710	190	830	50	42	22
300	SNH 3164	370	330	380	196	540	631	320	115	750	200	880	50	42	23
320	SNH 3168 L	400	360	410	210	580	675	340	120	810	220	950	50	42	24
320	SNH 3168 F	400	360	410	190	580	675	340	120	810	220	950	50	42	24
340	SNH 3172 L	400	360	410	212	600	695	350	120	840	220	1000	50	42	30
340	SNH 3172 F	400	360	410	192	600	695	350	120	840	220	1000	50	42	30
360	SNH 3176 L	400	360	410	214	620	715	360	120	870	220	1040	50	42	30
360	SNH 3176 F	400	360	410	194	620	715	360	120	870	220	1040	50	42	30
380	SNH 3180 L	430	390	440	220	650	775	380	125	950	240	1120	60	48	30
380	SNH 3180 F	430	390	440	200	650	775	380	125	950	240	1120	60	48	30

series
SNH 3100 TS

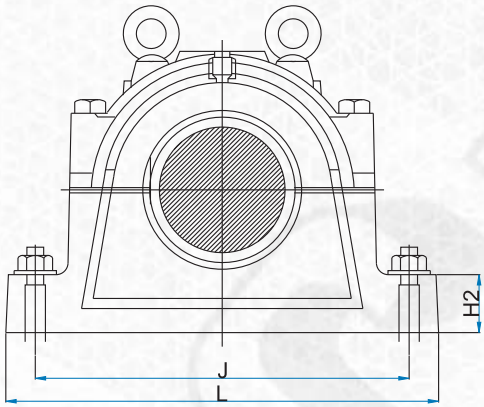

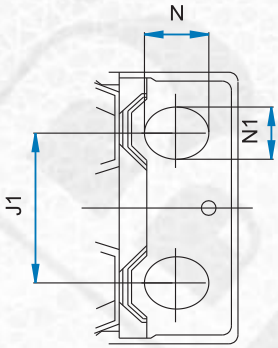

HOUSING FOR THROUGH SHAFT	HOUSING FOR SHAFT END	LABYRINTH RING WITH O-SECTION TUBE	END COVER WITH O-SECTION TUBE	LOCATING RING	ADAPTER NO	BEARING NO	Kg.
SNH 3134 TS	SNH 3134 ATS	TS 34	ETS 34	2 FRB 10/280	H 3134	23134 K	80
SNH 3136 TS	SNH 3136 ATS	TS 36	ETS 36	2 FRB 10/300	H 3136	23136 K	89
SNH 3138 TS	SNH 3138 ATS	TS 38	ETS 38	2 FRB 10/320	H 3138	23138 K	112
SNH 3140 TS	SNH 3140 ATS	TS 40	ETS 40	2 FRB 10/340	H 3140	23140 K	141
SNH 3144 TS	SNH 3144 ATS	TS 44	ETS 44	2 FRB 10/370	H 3144	23144 K	160
SNH 3148 TS	SNH 3148 ATS	TS 48	ETS 48	2 FRB 10/400	H 3148	23148 K	210
SNH 3152 TS	SNH 3152 ATS	TS 52	ETS 52	2 FRB 10/440	H 3152	23152 K	241
SNH 3156 TS	SNH 3156 ATS	TS 56	ETS 56	2 FRB 10 /460	H 3156	23156 K	273
SNH 3160 TS	SNH 3160 ATS	TS 60	ETS 60	2 FRB 10/500	H 3160	23160 K	322
SNH 3164 TS	SNH 3164 ATS	TS 64	ETS 64	2 FRB 10 /540	H3164	23164 K	360
SNH 3168 TS	SNH 3168 ATS	TS 68	ETS 68	-	H 3168	23168 K	447
SNH 3168 TS	SNH 3168 ATS	TS 68	ETS 68	-	H 3168	23168 K	447
SNH 3172 TS	SNH 3172 ATS	TS 72	ETS 72	-	H 3172	23172 K	473
SNH 3172 TS	SNH 3172 ATS	TS 72	ETS 72	-	H 3172	23172 K	473
SNH 3176 TS	SNH 3176 ATS	TS 84	ETS 76	-	H 3176	23176 K	490
SNH 3176 TS	SNH 3176 ATS	TS 84	ETS 76	-	H 3176	23176 K	490
SNH 3180 TS	SNH 3180 ATS	TS 80	ETS 80	-	H 3180	23180 K	615
SNH 3180 TS	SNH 3180 ATS	TS 80	ETS 80	-	H 3180	23180 K	615

Series

SNH 3100 GTS

HCB®

BEARING HOUSINGS

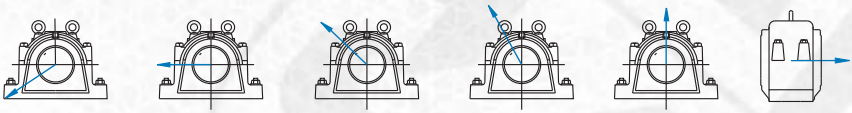

P55° P90° P120° P150° P180° Pa

Housing	Breaking loads						
Size	$P_{0°}$	$P_{55°}$	$P_{90°}$	$P_{120°}$	$P_{150°}$	$P_{180°}$	P_a
	kN	kN	kN	kN	kN	kN	kN
SNH 3134	1700	2100	1000	760	680	850	550
SNH 3136	1900	2400	1150	850	760	950	620
SNH 3138	2200	2700	1300	1000	880	1100	710
SNH 3140	2600	3200	1600	1100	1000	1300	840
SNH 3144	3100	4000	1900	1400	1300	1600	1000
SNH 3148	3400	4200	2000	1500	1400	1700	1100
SNH 3152	3800	4700	2300	1700	1500	1900	1200
SNH 3156	4000	5000	2400	1800	1600	2000	1300
SNH 3160	4800	6000	2900	2200	1900	2400	1500
SNH 3164	5400	7000	3400	2500	2200	2800	1800
SNH 3168	6000	7500	3600	2600	2300	1300	1900
SNH 3172	6000	7700	3600	2700	2400	3000	2000
SNH 3176	6100	8000	3900	2900	2500	3200	2100
SNH 3180	7000	8700	4200	3100	2700	3500	2200

SNH 3100 GTS

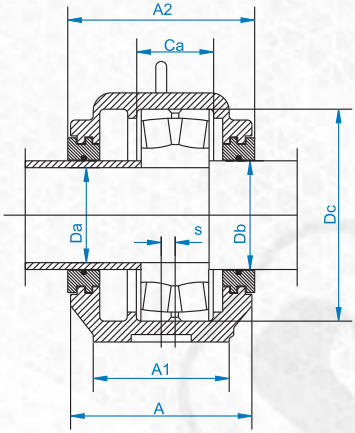

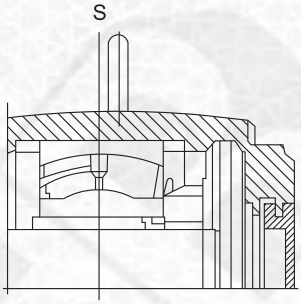

SHAFT DIAMETER		HOUSING NO	DIMENSIONS													
Da	Db		A	A1	A2	Ca	Dc	H	H1	H2	J	J1	L	N	N1	S
170	180	SNH 3134 G	230	150	240	108	280	333	170	70	430	100	510	34	28	14
180	200	SNH 3136 G	240	190	250	116	300	353	180	75	450	110	530	34	28	15
190	200	SNH 3138 G	260	210	270	124	320	375	190	80	480	120	560	34	28	10
190	210	SNH 3140 G	280	230	290	132	340	411	210	85	510	130	610	42	35	10
220	240	SNH 3144 G	290	240	300	140	370	434	220	90	540	140	640	42	35	12
240	260	SNH 3148 G	310	260	315	148	400	474	240	95	600	150	700	42	35	12
260	280	SNH 3152 G	320	280	330	164	440	516	260	100	650	160	770	50	42	13
280	300	SNH 3156 G	320	280	330	166	460	551	280	105	670	160	790	50	42	16
300	320	SNH 3160 G	350	310	360	180	500	591	300	110	710	190	830	50	42	22
320	340	SNH 3164 G	370	330	380	196	540	631	320	115	750	200	880	50	42	23
340	360	SNH 3168 GL	400	360	410	210	580	675	340	120	810	220	950	50	42	24
340	360	SNH 3168 GF	400	360	410	190	580	675	340	120	810	220	950	50	42	24
360	380	SNH 3172 GL	400	360	410	212	600	695	350	120	840	220	1000	50	42	30
360	380	SNH 3172 GF	400	360	410	192	600	695	350	120	840	220	1000	50	42	30
380	400	SNH 3176 GL	400	360	410	214	620	715	360	120	870	220	1040	50	42	30
380	400	SNH 3176 GF	400	360	410	194	620	715	360	120	870	220	1040	50	42	30
400	430	SNH 3180 GL	430	390	440	220	650	775	380	125	950	240	1120	60	48	30
400	430	SNH 3180 GF	430	390	440	200	650	775	380	125	950	240	1120	60	48	30

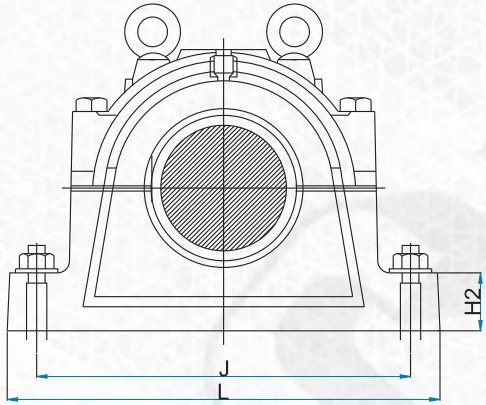

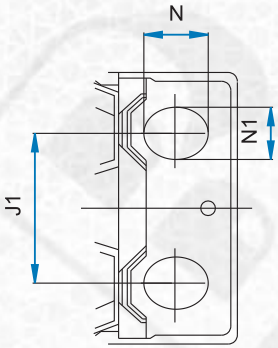

HOUSING FOR THROUGH SHAFT	HOUSING FOR SHAFT END	LABYRINTH RING WITH O-SECTION TUBE	END COVER WITH O-SECTION TUBE	LOCATING RING	ADAPTER NO	BEARING NO	Kg.
SNH 3134 GTS	SNH 3134 GATS	TS 40	ETS 40	2 FRB 10/280	H3134	23134 K	80
SNH 3136 GTS	SNH 3136 GATS	TS 44	ETS 44	2 FRB 10/300	H3136	23136 K	89
SNH 3138 GTS	SNH 3138 GATS	TS 44	ETS 44	2 FRB 10/320	H 3138	23138 K	112
SNH 3140 GTS	SNH 3140 GATS	TS 48	ETS 48	2 FRB 10/340	H3140	23140 K	141
SNH 3144 GTS	SNH 3144 GATS	TS 52	ETS 52	2 FRB 10/370	H 3144	23144 K	160
SNH 3148 GTS	SNH 3148 GATS	TS 56	ETS 56	2 FRB 10/400	H 3148	23148 K	210
SNH 3152 GTS	SNH 3152 GATS	TS 60	ETS 60	2 FRB 10/440	H 3152	23152 K	241
SNH 3156 GTS	SNH 3156 GATS	TS 64	ETS 64	2 FRB 10/460	H 3156	23156 K	273
SNH 3160 GTS	SNH 3160 GATS	TS 68	ETS 68	2 FRB 10/500	H 3160	23160 K	322
SNH 3164 GTS	SNH 3164 GATS	TS 72	ETS 72	2 FRB 10/540	H 3164	23164 K	360
SNH 3168 GTS	SNH 3168 GATS	TS 76	ETS 76	-	-	23168 K	447
SNH 3168 GTS	SNH 3168 GATS	TS 76	ETS 76	-	-	23168 K	447
SNH 3172 GTS	SNH 3172 GATS	TS 80	ETS 80	-	-	23172 K	473
SNH 3172 GTS	SNH 3172 GATS	TS 80	ETS 80	-	-	23172 K	473
SNH 3176 GTS	SNH 3176 GATS	TS 84	ETS 84	-	-	23176 K	490
SNH 3176 GTS	SNH 3176 GATS	TS 84	ETS 84	-	-	23176 K	490
SNH 3180 GTS	SNH 3180 GATS	TS 92	ETS 92	-		23180 K	615
SNH 3180 GTS	SNH 3180 GATS	TS 92	ETS 92	-		23180 K	615

Series

SD 3100 TS

HCB®

BEARING HOUSINGS

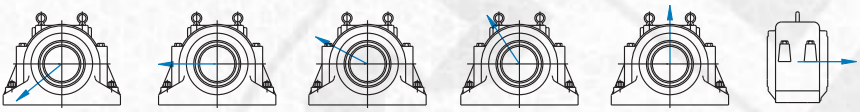

P55° P90° P120° P150° P180° Pa

Housing	Breaking loads					
Size	$P_{55°}$	$P_{90°}$	$P_{120°}$	$P_{150°}$	$P_{180°}$	P_a
	kN	*kN*	*kN*	*kN*	*kN*	*kN*
SD 3134	2100	1000	760	680	850	550
SD 3136	2400	1150	850	760	950	620
SD 3138	2700	1300	1000	880	1100	710
SD 3140	3200	1600	1100	1000	1300	840
SD 3144	4000	1900	1400	1300	1600	1000
SD 3148	4200	2000	1500	1400	1700	1100
SD 3152	4700	2300	1700	1500	1900	1200
SD 3156	5000	2400	1800	1600	2000	1300
SD 3160	6000	2900	2200	1900	2400	1500
SD 3164	7000	3400	2500	2200	2800	1800

series
SD 3100 TS

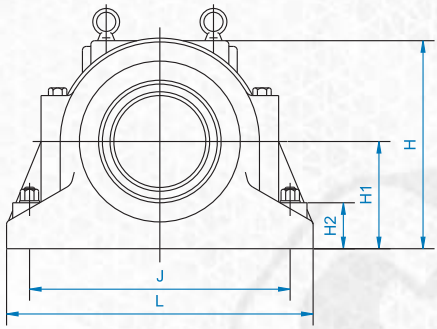

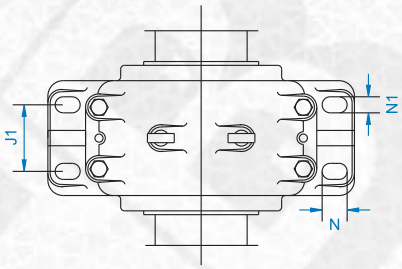

SHAFT DIAMETER	HOUSING NO	DIMENSIONS													
Da		A	A1	A2	Ca	Dc	H	H1	H2	J	J1	L	N	N1	S
150	SD 3134	230	180	240	108	280	335	170	70	430	100	510	34	28	14
160	SD 3136	240	190	250	116	300	335	180	75	450	110	530	34	28	15
170	SD 3138	260	210	270	124	320	375	190	80	480	120	560	34	28	10
180	SD 3140	280	230	290	132	340	410	210	85	510	130	610	42	35	10
200	SD 3144	290	240	300	140	370	435	220	90	540	140	640	42	35	12
220	SD 3148	310	260	320	148	400	475	240	95	600	150	700	42	35	12
240	SD 3152	320	280	330	164	440	515	260	100	650	160	770	50	42	13
260	SD 3156	320	280	330	166	460	550	280	105	670	160	790	50	42	16
280	SD 3160	350	310	360	180	500	590	300	110	710	190	830	50	42	22
300	SD 3164	370	330	380	196	540	630	320	115	750	200	880	50	42	23

series
SD 3100 TS

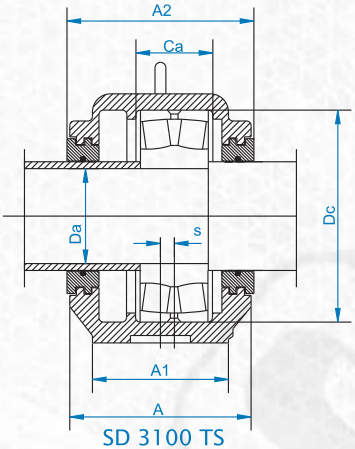

SD 3100 TS

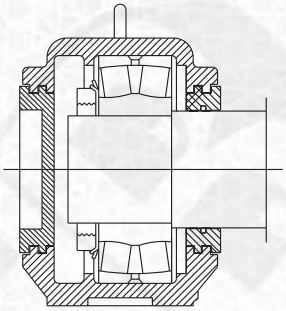

SD 3100 ATS

HOUSING FOR THROUGH SHAFT	HOUSING FOR SHAFT END	LABYRINTH RING WITH O-SECTION TUBE	END COVER WITH O-SECTION TUBE	LOCATING RING	ADAPTER NO	BEARING NO	Kg.
SD 3134 TS	SD 3134 ATS	TS 34	ETS 34	2 FRB 10/280	H3134	23134 K	65
SD 3136 TS	SD 3136 ATS	TS 36	ETS 36	2 FRB 10/300	H3136	23136 K	75
SD 3138 TS	SD 3138 ATS	TS 38	ETS 38	2 FRB 10/320	H3138	23138 K	95
SD 3140 TS	SD 3140 ATS	TS 40	ETS 40	2 FRB 10/340	H3140	23140 K	120
SD 3144 TS	SD 3144 ATS	TS 44	ETS 44	2 FRB 10/370	H3144	23144 K	135
SD 3148 TS	SD 3148 ATS	TS 48	ETS 48	2 FRB 10/400	H3148	23148 K	180
SD 3152 TS	SD 3152 ATS	TS 52	ETS 52	2 FRB 10/440	H3152	23152 K	215
SD 3156 TS	SD 3156 ATS	TS 56	ETS 56	2 FRB 10/460	H3156	23156 K	250
SD 3160 TS	SD 3160 ATS	TS 60	ETS 60	2 FRB 10/500	H3160	23160 K	300
SD 3164 TS	SD 3164 ATS	TS 64	ETS 64	2 FRB 10/540	H3164	23164 K	330

Series

SD 3100 GTS

HCB®

BEARING HOUSINGS

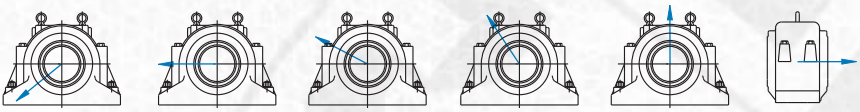

P55° P90° P120° P150° P180° Pa

Housing	Breaking loads					
Size	$P_{55°}$	$P_{90°}$	$P_{120°}$	$P_{150°}$	$P_{180°}$	P_a
	kN	*kN*	*kN*	*kN*	*kN*	*kN*
SD 3134	2100	1000	760	680	850	550
SD 3136	2400	1150	850	760	950	620
SD 3138	2700	1300	1000	880	1100	710
SD 3140	3200	1600	1100	1000	1300	840
SD 3144	4000	1900	1400	1300	1600	1000
SD 3148	4200	2000	1500	1400	1700	1100
SD 3152	4700	2300	1700	1500	1900	1200
SD 3156	5000	2400	1800	1600	2000	1300
SD 3160	6000	2900	2200	1900	2400	1500
SD 3164	7000	3400	2500	2200	2800	1800

series
SD 3100 GTS

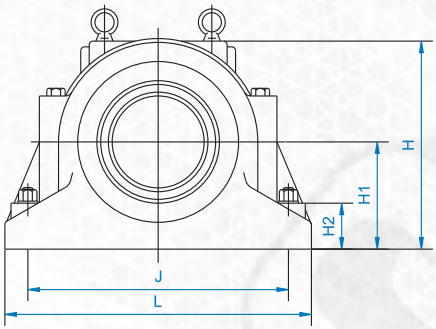

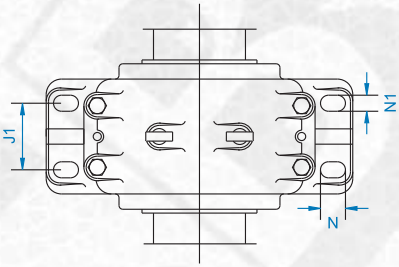

SHAFT DIAMETER		HOUSING NO	DIMENSIONS													
Da	Db		A	A1	A2	Ca	Dc	H	H1	H2	J	J1	L	N	N1	S
170	180	SD 3134 G	230	180	240	108	280	335	170	70	430	100	510	34	28	14
180	200	SD 3136 G	240	190	250	116	300	335	180	75	450	110	530	34	28	15
190	200	SD 3138 G	260	210	270	124	320	375	190	80	480	120	560	34	28	10
200	220	SD 3140 G	280	230	290	132	340	410	210	85	510	130	610	42	35	10
220	240	SD 3144 G	290	240	300	140	370	435	220	90	540	140	640	42	35	12
240	260	SD 3148 G	310	260	320	148	400	475	240	95	600	150	700	42	35	12
260	280	SD 3152 G	320	280	330	164	440	515	260	100	650	160	770	50	42	13
280	300	SD 3156 G	320	280	330	166	460	550	280	105	670	160	790	50	42	16
300	320	SD 3160 G	350	310	360	180	500	590	300	110	710	190	830	50	42	22
320	340	SD 3164 G	370	330	380	196	540	630	320	115	750	200	880	50	42	23

series
SD 3100 GTS

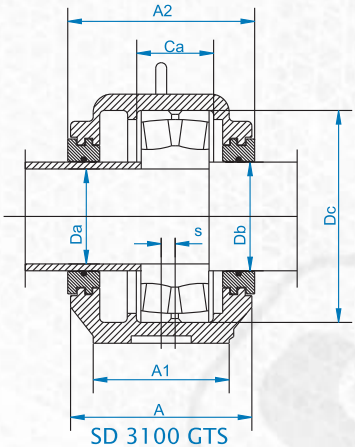

SD 3100 GTS

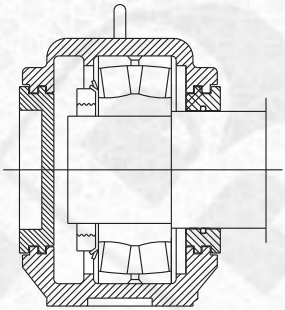
SD 3100 GATS

HOUSING FOR THROUGH SHAFT	HOUSING FOR SHAFT END	LABYRINTH RING WITH O-SECTION TUBE	END COVER WITH O-SECTION TUBE	LOCATING RING	ADAPTER NO	BEARING NO	Kg.
SD 3134 GTS	SD 3134 GATS	TS 40	ETS 40	2 FRB 10/280	H3134	23134 K	65
SD 3136 GTS	SD 3136 GATS	TS 44	ETS 44	2 FRB 10/300	H3136	23136 K	75
SD 3138 GTS	SD 3138 GATS	TS 44	ETS 44	2 FRB 10/320	H3138	23138 K	95
SD 3140 GTS	SD 3140 GATS	TS 48	ETS 48	2 FRB 10/340	H3140	23140 K	120
SD 3144 GTS	SD 3144 GATS	TS 52	ETS 52	2 FRB 10/370	H3144	23144 K	135
SD 3148 GTS	SD 3148 GATS	TS 56	ETS 56	2 FRB 10/400	H3148	23148 K	180
SD 3152 GTS	SD 3152 GATS	TS 60	ETS 60	2 FRB 10/440	H3152	23152 K	215
SD 3156 GTS	SD 3156 GATS	TS 64	ETS 64	2 FRB 10/460	H3156	23156 K	250
SD 3160 GTS	SD 3160 GATS	TS 68	ETS 68	2 FRB 10/500	H3160	23160 K	300
SD 3164 GTS	SD 3164 GATS	TS 72	ETS 72	2 FRB 10/540	H3164	23164 K	330

Series

S 30 K

HCB®

BEARING HOUSINGS

Housing	Breaking loads					
Size	P55°	P90°	P120°	P150°	P180°	Pa
	kN	*kN*	*kN*	*kN*	*kN*	*kN*
S 3024 K	700	420	310	280	350	220
S 3026 K	750	450	340	300	370	240
S 3028 K	900	540	400	370	460	300
S 3030 K	1050	630	470	430	530	345
S 3032K	1050	630	470	430	530	345
S 3034 K	1630	950	720	640	800	520
S 3036K	2100	1000	760	680	850	550
S 3038 K	2400	1150	850	760	950	620
S 3040 K	2700	1300	1000	880	1100	710
S 3044 K	3200	1600	1100	1000	1300	840
S 3048 K	4000	1900	1400	1300	1600	1000
S 3052 K	4200	2000	1500	1400	1700	1100
S 3056 K	4700	2300	1700	1500	1900	1200

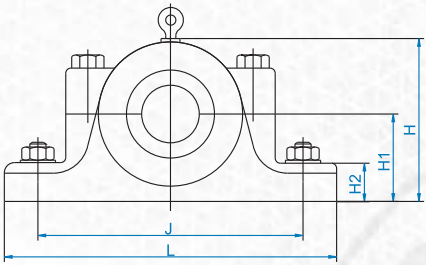

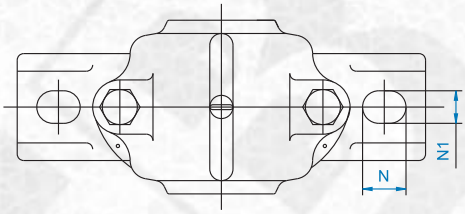

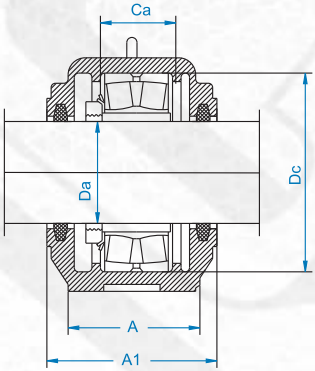

Da	HOUSING NO	DIMENSIONS											LOCATION RING	ADAPTER NO	BEARING NO	FELT STRIP	Kg
		A	A1	Ca	Dc	H	H1	H2	J	L	N	N1					
110	S 3024 K	110	150	56	180	215	112	40	320	380	36	28	1 FRB 10/180	H 3024	23024 K	FS 460	20
115	S 3026 K	120	160	62	200	239	125	45	350	410	36	28	1 FRB 10/200	H 3026	23026 K	FS 460	24
125	S 3028 K	120	170	63	210	260	140	45	350	410	36	28	1 FRB 10/210	H 3028	23028 K	FS 510	30
135	S 3030 K	130	180	66	225	286	150	50	380	445	36	28	1 FRB 10/225	H 3030	23030 K	FS 510	40
140	S 3032K	130	190	70	240	297	150	50	390	460	36	28	1 FRB 10/240	H 3032	23032 K	FS 680	41
150	S 3034 K	160	205	77	260	318	160	60	450	530	48	35	1 FRB 10/260	H 3034	23034 K	FS 680	55
160	S 3036 K	160	210	84	280	338	170	60	470	550	48	35	1 FRB 10/280	H 3036	23036 K	FS 680	62
170	S 3038 K	160	220	85	290	346	170	60	470	550	48	35	1 FRB 10/290	H 3038	23038 K	FS 680	70
180	S 3040 K	170	235	92	310	366	180	60	515	610	48	35	1 FRB 10/310	H 3040	23040 K	FS 680	80
200	S 3044 K	190	255	100	340	401	200	70	580	690	50	42	1 FRB 10/340	H 3044	23044 K	FS 950	105
220	S 3048 K	200	265	102	360	422	210	75	610	720	50	42	1 FRB 10/360	H 3048	23048 K	FS 950	125
240	S 3052 K	220	285	114	400	472	240	80	680	820	70	48	1 FRB 10/400	H 3052	23052 K	FS 1120	160
260	S 3056 K	230	295	116	420	495	250	80	720	860	70	48	1 FRB 10/420	H 3056	23056 K	FS 1120	180

Series

SD 500

HCB®

BEARING HOUSINGS

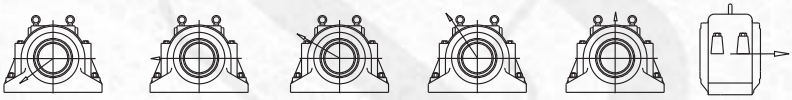

P55° P90° P120° P150° P180° Pa

Housing	Breaking loads					
Size	$P_{55°}$	$P_{90°}$	$P_{120°}$	$P_{150°}$	$P_{180°}$	P_a
	kN	*kN*	*kN*	*kN*	*kN*	*kN*
SD 530	2250	1100	830	740	920	600
SD 532	2600	1250	920	830	1030	670
SD 534	2850	1400	1070	940	1150	750
SD 536	3000	1530	1150	960	1250	900
SD 538	3700	1900	1400	1300	1600	1000
SD 540	4200	2000	1500	1400	1700	1050
SD 544	4900	2300	1700	1500	1900	1200
SD 548	6400	2350	1750	1550	1950	1270
SD 552	8000	3100	2350	2000	2500	1450
SD 556	8400	4000	2950	2400	2550	1700
SD 560	8700	4600	3300	2650	2900	1920
SD 564	9600	5000	3750	3300	3100	2100

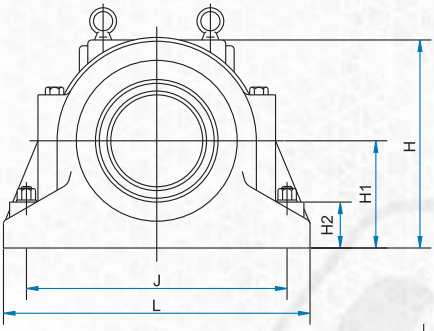

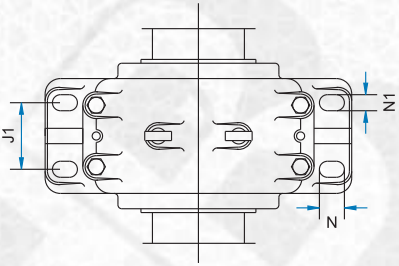

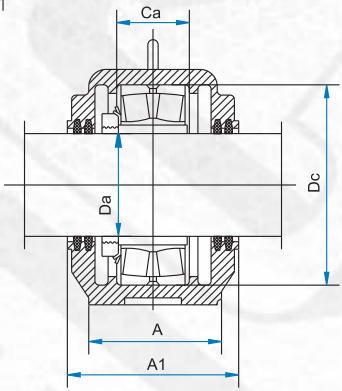

Da	HOUSING NO	DIMENSIONS												LOCATING RING	FELT STRIP	BEARING NO	ADAPTERNO	Kg
		A	A1	Ca	Dc	H	H1	H2	J	J1	L	N	N1					
135	SD 530	220	240	83	270	320	160	55	450	120	550	45	33	FRB 10/270	4 FS 510	22230 K	H 3130	76
140	SD 532	230	250	90	290	340	170	55	480	130	580	45	33	FRB 10/290	4 FS 680	22232 K	H 3132	87
150	SD 534	250	270	96	310	360	180	60	510	140	620	50	36	FRB 10/310	4 FS 680	22234 K	H 3134	105
160	SD 536	260	280	96	320	380	190	60	540	150	650	50	36	FRB 10/320	4 FS 680	22236 K	H 3136	118
170	SD 538	280	290	102	340	400	200	65	570	160	700	55	40	FRB 10/340	4 FS 680	22238 K	H 3138	136
180	SD 540	290	300	108	360	420	210	65	610	170	740	55	40	FRB 10/360	4 FS 680	22240 K	H 3140	170
200	SD 544	320	330	118	400	475	240	70	680	190	820	62	42	FRB 10/400	4 FS 950	22244 K	H 3144	216
220	SD 548	330	340	130	440	515	260	85	740	200	880	65	45	FRB 10/440	4 FS 950	22248 K	H 3148	258
240	SD 552	360	370	140	480	555	280	85	790	210	940	65	45	FRB 10/480	4 FS 1120	22252 K	H 3152	323
260	SD 556	380	390	140	500	590	300	100	830	230	990	77	52	FRB 10/500	4 FS 1120	22256 K	H 3156	404
280	SD 560	400	410	150	540	640	325	100	890	250	1060	77	52	FRB 10/540	4 FS 1220	22260 K	H 3160	480
300	SD 564	430	440	160	580	690	355	110	930	270	1110	85	56	FRB 10/580	4 FS 1220	22264 K	H 3164	605

Series

SD 600

HCB®

BEARING HOUSINGS

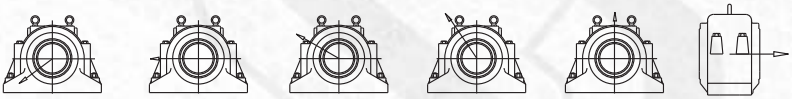

P55° P90° P120° P150° P180° Pa

Housing	Breaking loads					
Size	$P_{55°}$	$P_{90°}$	$P_{120°}$	$P_{150°}$	$P_{180°}$	P_a
	kN	*kN*	*kN*	*kN*	*kN*	*kN*
SD 630	3000	1530	1150	960	1250	900
SD 632	3700	1900	1400	1300	1600	1000
SD 634	4200	2000	1500	1400	1700	1050
SD 636	4000	2150	1600	1450	1800	1120
SD 638	4900	2300	1700	1500	1900	1200
SD 640	8000	3100	2350	2000	2500	1450
SD 644	8400	4000	2950	2400	2550	1700
SD 648	8700	4600	3300	2650	2900	1920
SD 652	9600	5000	3750	3300	3100	2100

series
SD 600

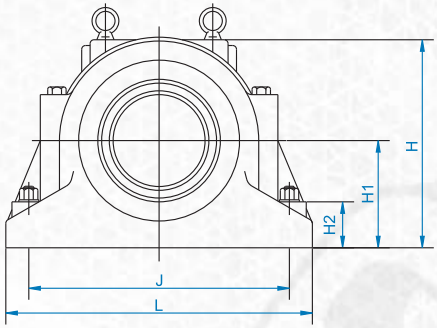

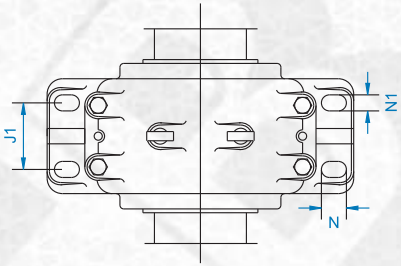

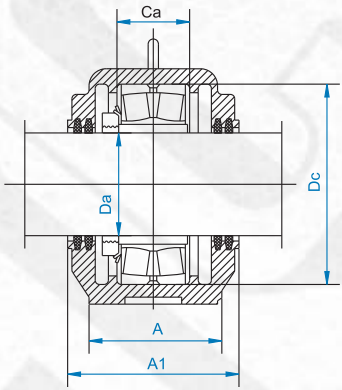

Da	HOUSING NO	DIMENSIONS												LOCATING RING	FELT STRIP	BEARING NO	ADAPTERNO	Kg
		A	A1	Ca	Dc	H	H1	H2	J	J1	L	N	N1					
135	SD 630	260	280	118	320	380	190	60	540	150	650	50	36	FRB 10/320	4 FS 510	22330 K	H 2330	118
140	SD 632	280	290	124	340	400	200	65	570	160	700	55	40	FRB 10/340	4 FS 680	22332 K	H 2332	136
150	SD 634	290	300	130	360	420	210	65	610	170	740	55	40	FRB 10/360	4 FS 680	22334 K	H 2334	170
160	SD 636	310	320	136	380	450	225	70	640	180	780	62	42	FRB 10/380	4 FS 680	22336 K	H 2336	194
170	SD 638	320	330	142	400	475	240	70	680	190	820	62	42	FRB 10/400	4 FS 680	22338 K	H 2338	216
180	SD 640	340	350	148	420	500	250	85	710	200	860	65	45	FRB 10/420	4 FS 680	22340 K	H 2340	258
200	SD 644	350	360	155	460	550	280	85	770	210	920	65	45	FRB 10/460	4 FS 950	22344 K	H 2344	323
220	SD 648	380	390	165	500	590	300	100	830	230	990	77	52	FRB 10/500	4 FS 950	22348 K	H 2348	404
240	SD 652	400	410	175	540	640	325	100	890	250	1060	77	52	FRB 10/540	4 FS 1120	22352 K	H 2352	480

HCB®

BEARING HOUSINGS

Series

722500

HCB®

BEARING HOUSINGS

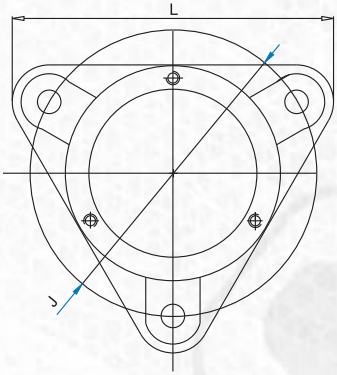

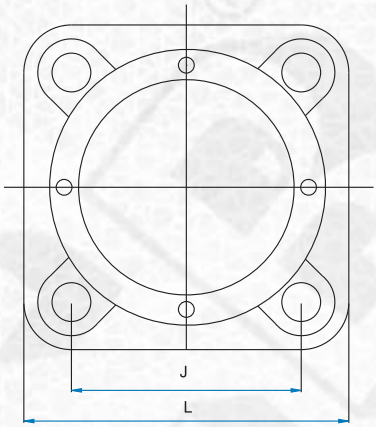

Housing	Breaking loads		
Size	P_0	P_{60}	P_{180}
	KN	*KN*	*KN*
722505	50	40	80
722506	60	45	85
722507	70	50	90
722508	80	55	95
722509	90	60	100
722510	100	65	105
722511	110	80	110
722512	120	95	115
722513	130	110	190
722515	140	125	265
722516	150	140	340
722517	160	155	415
722518	170	170	490
722520	180	185	565
722522	190	200	640

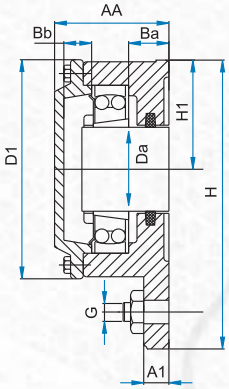

722500DA

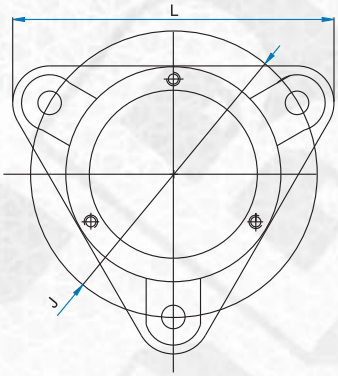

SHAFT DIAMETER	HOUSING NO	DIMENSIONS										
Da		AA	AB	A1	Ba	Bb	D1	H	H1	J	L	G
20	722505	51,5	56,5	10	15	12,5	75	100	38	96	110	10
25	722506	57	59,5	12	16	15	86	117	44	116	130	10
30	722507	59,5	63,5	12	16	14,5	97	130	48,5	130	145	12
35	722508	64	65,5	12	17	18	108	143	54	140	160	12
40	722509	64,5	69,5	12	19	16,5	113	160	60	160	180	12
45	722510	68,5	73	15	22	17,5	118	160	60	160	180	12
50	722511	75,5	81,5	15	24	19,5	128	172	65	170	192	12
55	722512	77	82	15	23	19	142	189	72	180	210	12
60	722513	80	86	15	22	20	152	203	78	190	225	12

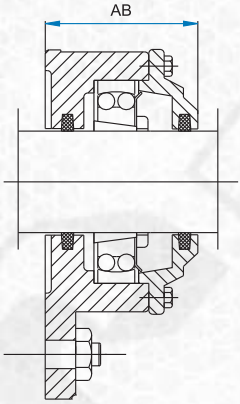

722500DB

SHAFT DIAMETER Da	HOUSING FOR SHAFT END	HOUSING FOR THROUGHT SHAFT	LOCATING RING	BEARING NO	ADAPTER NO	FELT STRIP	Kg
20	722505 A	722505 B	1 FRB 5/52	1205 K	H 205	FS 110	1,1
			1 ZW 42x52	2205 K	H 305		
25	722506 A	722506 B	1 FRB 8/62	1206 K	H 206	FS 190	1,5
			1 ZW 50x62	2206 K	H 306		
30	722507 A	722507 B	1 FRB 8/72	1207 K	H 207	FS 190	1,8
			1 ZW 65x72	2207 K	H 307		
			1 ZW 65x72	22207 K	H 307		
35	722508 A	722508 B	1 FRB 8/80	1208 K	H 208	FS 190	2,3
			1 ZW 70x80	2208 K	H 308		
			1 ZW 70x80	22208 K	H 308		
40	722509 A	722509 B	1 FRB 6/85	1209 K	H 209	FS 190	3
			1 ZW 75x85	2209 K	H 309		
			1 ZW 75x85	22209 K	H 309		
45	722510 A	722510 B	1 FRB 5/90	1210 K	H 210	FS 190	3
			1 ZW 80x90	2210 K	H 310		
			1 ZW 80x90	22210 K	H 310		
50	722511 A	722511 B	1 FRB 6/100	1211 K	H 211	FS 260	4,1
			1 ZW 85x100	2211 K	H311		
			1 ZW 85x100	22211 K	H311		
55	722512 A	722512 B	1 FRB 8/110	1212 K	H 212	FS 260	4,8
			1 ZW 90x110	2212 K	H 312		
			1 ZW 90x110	22212 K	H 312		
60	722513 A	722513 B	1 FRB 10/120	1213 K	H 213	FS 260	5,9
			1 FRB 2/120	2213 K	H 313		
			1 FRB 2/120	22213 K	H 313		

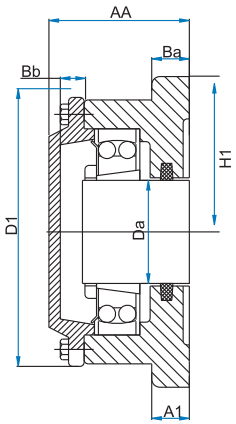

722500DA

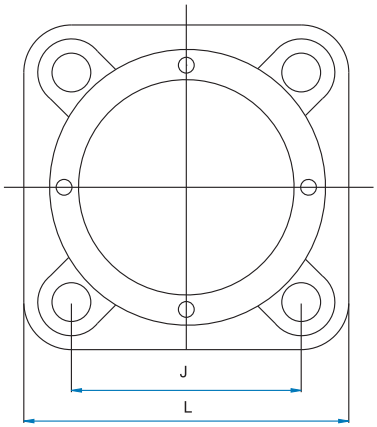

SHAFT DIAMETER	HOUSING NO	DIMENSIONS									
Da		AA	AB	A1	Ba	Bb	D1	H1	J	L	G
65	722515	104	104	25	30	27	168	95	152	190	16
70	722516	110	110	25	31	30	176	98	152	196	16
75	722517	114	114	25	31	30	188	105	170	210	16
80	722518	118	118	25	30	31	198	105	170	210	16
90	722520	127	127	30	30	33	224	125	198	250	20
100	722522	137	137	30	30	38	246	135	219	270	20

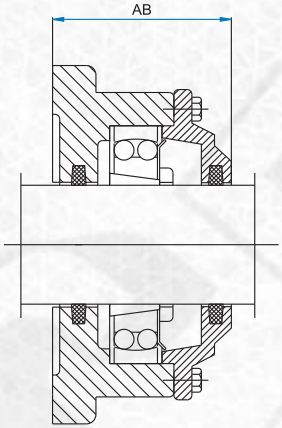

722500DB

SHAFT DIAMETER Da	HOUSING FOR SHAFT END	HOUSING FOR THROUGHT SHAFT	LOCATING RING	BEARING NO	ADAPTER NO	FELT STRIP	Kg
65	722515 A	722515 B	2 FRB 8/130	1215 K	H 215	FS 260	9,4
			1 FRB 10/130	2215 K	H 315		
			1 FRB 10/130	22215 K	H 315		
70	722516 A	722516 B	2 FRB 8,5/140	1216 K	H 216	FS 330	9,8
			1 FRB 10/140	2216 K	H 316		
			1 FRB 10/140	22216 K	H 316		
75	722517 A	722517 B	2 FRB 9/150	1217 K	H 217	FS 300	11,5
			1 FRB 10/150	2217 K	H 317		
			1 FRB 10/150	22217 K	H 317		
80	722518 A	722518 B	2 FRB 10/160	1218 K	H 218	FS 330	12,5
			1 FRB 10/160	2218 K	H 318		
			1 FRB 10/160	22218 K	H 318		
90	722520 A	722520 B	1 FRB 10/180	1220 K	H 220	FS 370	18
			1 FRB 12/180				
			1 FRB 10/180	22220 K	H 320		
			1 FRB 10/180	23220 K	H 2320		
100	722522 A	722522 B	2 FRB 12,5/200	1222 K	H 222	FS 460	21,5
			1 FRB 10/200	2222 K	H 322		
			1 FRB 10/200	22222 K	H 322		

Series

TVN 200 - 300

HCB®

BEARING HOUSINGS

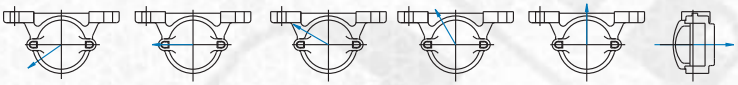

Housing	Breaking loads					
Size	$P_{55°}$	$P_{90°}$	$P_{120°}$	$P_{150°}$	$P_{180°}$	P_a
	kN	*kN*	*kN*	*kN*	*kN*	*kN*
TVN 204	130	55	29	25	30	10
TVN 205	140	55	29	25	30	10
TVN 206	210	68	48	42	50	16
TVN 207	210	98	56	48	58	16
TVN 208	280	130	79	69	82	30
TVN 209	280	150	90	80	95	30
TVN 210	280	150	90	80	95	30
TVN 211	360	250	135	115	140	30
TVN 212	360	280	135	115	140	30
TVN 213	420	280	160	140	170	48
TVN 214	420	280	160	140	170	48
TVN 215	580	290	180	160	190	48
TVN 216	580	290	180	160	190	48
TVN 217	580	290	180	160	190	48
TVN 218	630	390	240	210	250	75
TVN 305	210	68	48	42	50	16
TVN 306	210	98	56	48	58	16
TVN 307	280	130	79	69	82	30
TVN 308	280	150	90	80	95	30
TVN 309	360	250	135	115	140	30
TVN 310	360	250	135	115	140	30
TVN 311	420	280	160	140	170	48
TVN 312	420	280	160	140	170	48
TVN 313	580	290	180	160	190	48
TVN 314	580	290	180	160	190	48
TVN 315	630	390	240	210	250	75

series
TVN 200-300

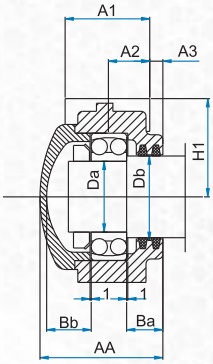

TVN – A

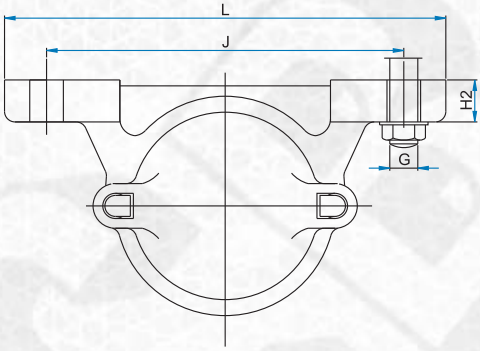

SHAFT DIAMETER		DIMENSIONS											
Da	Db	AA	AB	A1	A2	A3	Ba	Bb	H1	H2	J	L	G
20	25	62	68	45	25	6	23,5	20	35	14	110	150	12
25	30	63	71	45	25	7	24	20	40	16	130	170	12
		71	-	52	30	7	26,5	23	50	16	150	190	12
30	35	71	76	52	30	7	27	23	50	16	150	190	12
		77	78	52	30	8	27,5	25	50	18	150	190	12
35	45	77	78	52	30	8	28,5	26	50	18	150	190	12
		86	92	60	35	8	31,5	28	60	18	170	210	12
40	50	86	92	60	35	8	33	30	60	18	170	210	12
		90	94	60	35	8	32,5	29	60	20	170	210	12
45	55	87	92	60	35	8	32	31	60	20	170	210	12
		95	100	70	40	8	32,5	31	70	23	210	270	16
50	60	90	94	60	35	8	34	31	60	20	170	210	12
		102	105	70	40	10	36,5	32	70	23	210	270	16
55	65	95	100	70	40	8	34,5	33	70	23	210	270	16
		110	115	80	45	10	37,5	36	80	25	230	290	16
60	70	102	105	70	40	10	39	35	70	23	210	270	16
		115	117	80	45	10	38,5	38	80	25	230	290	16

series
TVN 200-300

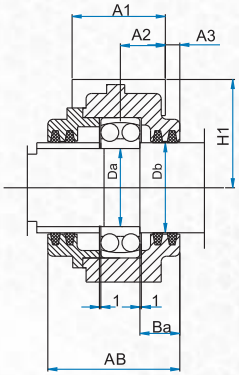

TVN – B

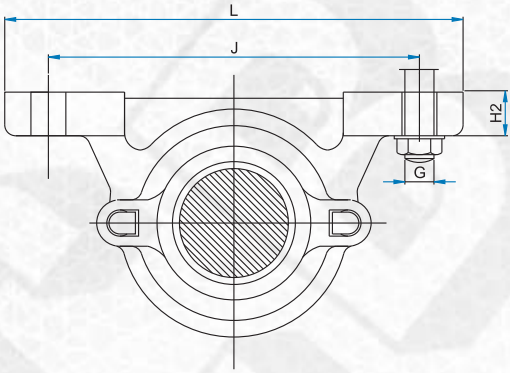

SHAFT DIAMETER		HOUSING FOR SHAFT END	HOUSING FOR THROUGHT SHAFT	BEARING NO	FELT STRIP	Kg.
Da	Db					
20	25	TVN 204 A	TVN 204 B	1204	FS 190	1,2
25	30	TVN 205 A	TVN 205 B	1205	FS 190	1,4
		TVN 305 A	-	1305 21305	FS 190	2,3
30	35	TVN 206 A	TVN 206 B	1206	FS 190	2,2
		TVN 306 A	TVN 306 B	1306 21306	FS 190	2,6
35	45	TVN 207 A	TVN 207 B	1207	FS 190	2,6
		TVN 307 A	TVN 307 B	1307 21307	FS 190	3,9
40	50	TVN 208 A	TVN 208 B	1208	FS 260	3,7
		TVN 308 A	TVN 308 B	1308 21308	FS 260	4,2
45	55	TVN 209 A	TVN 209 B	1209	FS 260	4
		TVN 309 A	TVN 309 B	1309 21309	FS 260	6,3
50	60	TVN 210 A	TVN 210 B	1210	FS 260	4,2
		TVN 310 A	TVN 310 B	1310 21310	FS 260	6,9
55	65	TVN 211 A	TVN 211 B	1211	FS 260	6,2
		TVN 311 A	TVN 311 B	1311 21311	FS 260	9,3
60	70	TVN 212 A	TVN 212 B	1212	FS 330	6,7
		TVN 312 A	TVN 312 B	1312 21312	FS 330	10

TVN 200-300

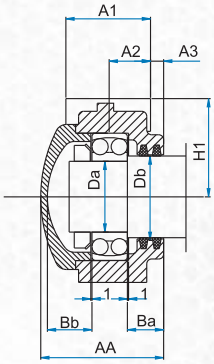

TVN – A

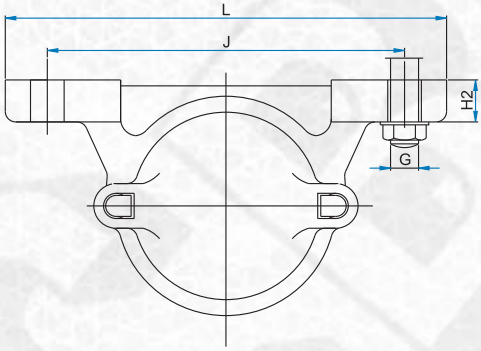

SHAFT DIAMETER		DIMENSIONS											
Da	Db	AA	AB	A1	A2	A3	Ba	Bb	H1	H2	J	L	G
65	75	110	115	80	45	10	40,5	39	80	25	230	290	16
		122	127	90	50	12	42,5	38	95	28	260	330	20
70	80	111	115	80	45	10	40,5	40	80	25	230	290	16
		126	129	90	50	12	43,5	39	95	28	260	330	20
75	85	115	117	80	45	10	41,5	41	80	25	230	290	16
		136	139	100	55	13	47,5	43	100	30	290	360	20
80	90	122	127	90	50	12	42,5	38	95	28	260	330	16
85	85	126	129	90	50	12	43,5	39	95	28	260	330	16
90	100	136	139	100	55	13	47,5	43	100	30	290	360	20

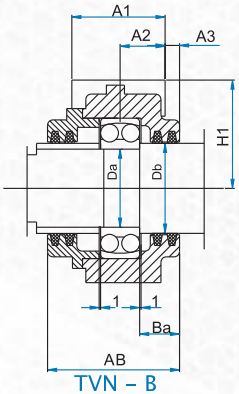

TVN – B

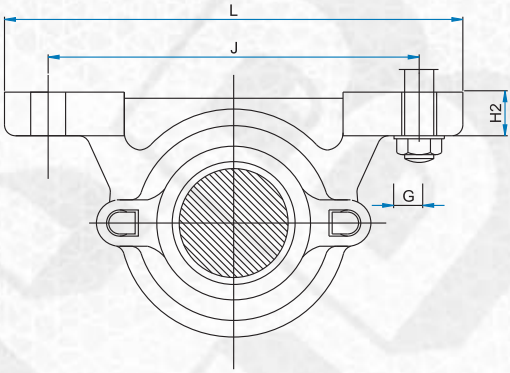

SHAFT DIAMETER		HOUSING FOR SHAFT END	HOUSING FOR THROUGHT SHAFT	BEARING NO	FELT SEALS	Kg.
D	Da					
65	75	TVN 213 A	TVN 213 B	1213	FS 330	9,1
		TVN 313 A	TVN 213 B	1313 21313	FS 330	13,5
70	80	TVN 214 A	TVN 214 B	1214	FS 330	9,4
		TVN 314 A	TVN 314 B	1314 21314	FS 330	14
75	85	TVN 215 A	TVN 215 B	1215	FS 330	9,9
		TVN 315 A	TVN 315 B	1315 21315	FS 330	18,5
80	90	TVN 216 A	TVN 216 B	1216	FS 330	13,5
85	85	TVN 217 A	TVN 217 B	1217	FS 330	14
90	100	TVN 218 A	TVN 218 B	1218	FS 330	18,5