Koyo®

Torrington® Needle Roller Bearings

Needle Roller Bearings

JTEKT

JTEKT CORPORATION

CAT. NO. B2016E-2

★The contents of this catalog are subject to change without prior notice. Every possible effort has been made to ensure that the data herein is correct; however, JTEKT cannot assume responsibility for any errors or omissions.

Reproduction of this catalog without written consent is strictly prohibited

INDEX

A

ENGINEERING

Introduction A-3
Bearing Types and Cages A-4
Bearing Reactions, Dynamic Equivalent Loads and Bearing Life A-4
System Life and Weighted Average Life A-11
Bearing Tolerances, Inch and Metric A-12
Mounting Designs A-25
Shaft Designs A-27
Housing Designs A-28
Lubrication and Seals A-29
Limiting Speed A-35
Torque A-36

B

NEEDLE ROLLER BEARINGS

Radial Needle Roller and Cage Assemblies B-3
Drawn Cup Needle Roller Bearings B-43
Drawn Cup Roller Clutches B-125
Heavy-Duty Needle Roller Bearings B-145
Track Rollers B-207
Thrust Bearings, Assemblies, Washers B-269
Combined Needle Roller Bearings B-329
Needle Rollers, Accessories B-345

C

NEEDLE BEARING APPLICATIONS

Automatic Transmissions C-4
Manual Transmissions C-6
Valvetrain Components C-8
Steering Columns C-9
Automotive Accessories C-10
Drivetrain Components C-12
Power Transmissions C-13
Sport Vehicles C-14
Marine Applications C-16
Power Tools C-18
Consumer Products C-19
Mechanical Pumps C-20
Industrial Machinery C-21

D

SUPPLEMENTARY TABLES

Conversion Table D-4
Designation Suffixes D-8
Symbols and Terms D-9
Index D-11

PRODUCT BREADTH

A complete line of needle roller bearing designs ranging from 3 to 160 mm bore (1/8 to 6 1/4 in.) is offered.

DRAWN CUP NEEDLE ROLLER BEARINGS, available in 3 mm to 140 mm bore (1/8 to 5 1/2 in.), are designed to support radial loads and reduce friction between rotating components. The low cross section of the drawn cup bearing provides maximum load-carrying capability with minimum space required.

DRAWN CUP ROLLER CLUTCHES AND BEARING ASSEMBLIES, available in 3 to 30 mm bore (1/8 to 1 1/4 in.), are designed to transmit torque between the shaft and housing in one direction and allow free overrun in the opposite direction. When transmitting torque, either the shaft or the housing can be the input member.

ROLLER AND CAGE ASSEMBLIES, available in 3 mm to 165 mm bore (1/8 to 6 1/2 in.), consist of a complement of needle rollers held in place by a cage. With no inner or outer ring, the low cross section provides maximum load-carrying capability within the smallest envelope. The mating shaft and housing are normally used as inner and outer raceways.

THRUST BEARING ASSEMBLIES AND WASHERS, available in 5 mm to 160 mm (3/16 to 6 1/4 in.) bore, consist of a complement of needle rollers held in place by a cage.

Needle roller and cage thrust assemblies are complements of small diameter needle rollers arranged in a spoke-like configuration. Needle rollers are equally spaced by means of a cage whose web section separates the rollers and provides guidance to keep them tracking in an orbital path. The purpose of these assemblies is to transmit a thrust load between two relatively rotating objects while greatly reducing friction.

Needle roller and cage thrust assemblies also can be unitized with lipped washers which service as raceway surfaces for the needle rollers. Washers can be supplied separately or can be mechanically unitized to the needle roller thrust assemblies for ease of handling.

HEAVY-DUTY NEEDLE ROLLER BEARINGS, available in 5 mm to 100 mm bore (3/16 to 4 in.), consist of a machined and ground channel-shaped outer ring with a complement of needle rollers retained and guided by a cage. The thick outer ring provides maximum load capacity and shock resistance with a relatively small radial cross section.

TRACK ROLLERS/CAM FOLLOWERS, available in 10 mm to 110 mm O.D. (3/8 to 4 1/4 in.), are characterized by their thick-walled outer rings that run directly on a track. The thick outer rings permit high load-carrying capability while minimizing distortion and bending stresses.

ENGINE BEARINGS include a full line of advanced bearing assemblies for automotive engine valve trains. These assemblies help reduce friction and optimize performance in both overhead valve and overhead cam engines. They include roller rocker arms for overhead valve (pushrod) engines, roller finger followers for overhead cam engines, valve lifter rollers for overhead valve and overhead cam engines.

PRECISION NEEDLE ROLLERS have multiple uses in a variety of industries including automotive, truck, farm and construction equipment, two-cycle engines, outboard engines and consumer durables. Needle rollers are mainly used as bearing rolling elements to transmit torque and reduce friction. They also can serve as precision shafts or as precision locating pins.

PLANETARY GEAR SHAFTS have multiple uses in a variety of industries including automotive, truck and farm and construction equipment. The shafts are used in planetary gear sets, differentials and engine valve trains.

PRECISION PINS AND SHAFTS are crafted from the highest quality steel within a TS16949/ISO9000/AS9100-certified manufacturing facility. Pins and shafts come in a larger variety of configurations and materials and flexible product volumes. These pins and shafts are found in applications such as gasoline fuel systems components, diesel systems components, aerospace rollers and precision rollers (DFAR-compliant), planet pins, racing applications, rollers for bearing assemblies, gear shafts and steering column pins.

NEEDLE ROLLER BEARINGS

To identify: NEEDLE ROLLER AND CAGE RADIAL ASSEMBLY

As a general rule, there are no identifiable markings on needle roller and cage radial assemblies to indicate the bearing part number. Parts are specified by bore diameter, outside diameter and width (e.g. K24x28x10H).

To identify: STUD-TYPE TRACK ROLLERS

The complete bearing part number is marked on the stud face or stamped on the face of the outer ring (e.g. KRE22.2RS). Yoke-type track rollers (without stud, not shown) have the part stamped on the face of the inner or outer ring.

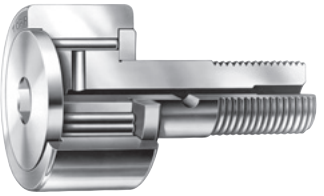

To identify: NEEDLE ROLLER THRUST BEARINGS

As a general rule, there are no identifiable markings on needle roller and cage radial assemblies to indicate the bearing part number. Parts are specified by bore diameter and outside diameter (e.g. AXK1024).

To identify: COMBINATION BEARINGS

As a general rule, there are no identifiable markings on combination bearings to indicate the bearing part number. Parts are specified by the product series and bore diameter (e.g. RAXZ510).

To identify: DRAWN CUP NEEDLE ROLLER BEARINGS AND DRAWN CUP ROLLER CLUTCHES

The complete bearing part number is stamped on the face of the outer ring (e.g. HK1412, FCL-10-K). Also, on clutch assemblies, the mounted clutch assembly engages when the housing is rotated relative to the shaft in the direction of the arrow and the word LOCK stamped on the outer ring.

To identify: NEEDLE/CYLINDRICAL ROLLERS

As a general rule, there are no identifiable markings on loose rollers to indicate the part number. They are packaged in bulk or in strips. Loose rollers are specified by the product series, end geometry, diameter and nominal length (e.g. NRO.B 1.5x11.8 G2).

ENGINEERING

A

A ENGINEERING

Introduction A-3

Bearing Types and Cages A-4

Bearing Reactions, Dynamic Equivalent Loads and Bearing Life A-4

System Life and Weighted Average Life A-11

Bearing Tolerances, Inch and Metric A-12

Mounting Designs A-25

Shaft Designs A-27

Housing Designs A-28

Lubrication and Seals A-29

Limiting Speeds A-35

Torque A-36

A

ENGINEERING

INTRODUCTION

Where more complex bearing applications are involved, your representative should be consulted. The following topics are covered within this section:

- Bearing types.
- Cages.
- Internal clearances.
- Tolerances.
- Shaft and housing fits and shoulders.
- Load ratings and life calculations.
- Lubrication.
- Materials.
- Speed ratings.

NEEDLE ROLLER BEARING SELECTION

Because of the possible combinations of roller complement orientation, bearing cross section thickness and raceway construction needle roller bearings should be given extra consideration for roller bearing applications selection. The table below should be used as a general guideline for the application of needle roller bearings.

Table A-1. Needle roller bearing capability comparison based on suitable oil lubrication

Bearing type/ design capability	Radial needle roller and cage assembly	Drawn cup needle roller bearing caged	Drawn cup roller bearing full complement	Needle roller bearing and inner ring	Track roller	Thrust needle roller and cage assembly	Needle rollers	Combination bearing radial/thrust
Radial load	High	Moderate	High	High	Moderate	None	Very high	High
Axial load	None	None	None	None	Low	Very high	None	High
Limiting speed	Very high	High	Moderate	Very high	Moderate	High	Moderate	Moderate
Slope tolerance	Moderate	Moderate	Very low	Moderate	Moderate(1)	Low	Very low	Low
Grease life	High	High	Low	High	Moderate	Low	Low	Low
Friction	Very low	Very low	High	Very low	Low(2)	Moderate	High	Moderate
Precision	Very high	Moderate	Moderate	High	High	High	Very high	High
Cross section	Very low	Low	Low	Moderate	High	Very low	Very low	High
Cost	Low	Low	Low	High	High	Moderate	Very low	Very high

(1) "Low" for full complement track rollers
(2) "Moderate" for full complement track rollers

Radial needle roller and cage assembly

Drawn cup needle roller

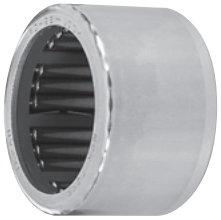

Heavy-duty needle roller

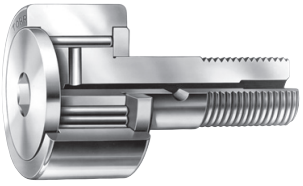

Track roller

Thrust needle roller and cage assembly

Combined radial/thrust

Drawn cup roller clutch

A

BEARING TYPES AND CAGES

NEEDLE ROLLER BEARINGS

Needle roller bearings are an economical alternative for applications requiring minimal space to carry a given load at a desired speed. Needle roller bearings can be an ideal choice because of their ability to handle a given level of speed and load capacity, yet have the smallest cross section of all roller bearing types.

We offer both inch and metric nominal bearings in popular designs such as: drawn cups, radial caged needle rollers, machined ring, track rollers, thrust bearings, combined bearings, and drawn cup roller clutches. Most of these bearing types can be operated directly on a machined shaft of suitable quality, or with a matching inner ring where this requirement cannot be conventionally satisfied.

Radial Needle Roller and Cage Assemblies

Radial needle roller and cage assemblies have a steel cage that provides both inward and outward retention for the needle rollers. The designs provide maximum cage strength consistent with the inherently high load ratings of needle roller bearings. Accurate guidance of the needle rollers by the cage bars allows for operation at high speeds. Also available are needle roller and cage assemblies using molded, one-piece glass-reinforced engineered polymer cages. Needle roller and cage assemblies are manufactured with either one or two rows of needle rollers.

Drawn Cup Bearings

The outer ring in the form of a cup is accurately drawn and no subsequent machining is performed to build the outer raceway. Drawn cup needle roller bearings are available in open ends or single, closed-end designs. They also are available with one or two integral seals. Other options include a single lubricating hole and matching inner ring.

Heavy-Duty (Machined) Needle Roller Bearings

These bearings are available in a wide range of inch and metric sizes plus an array of design features including: integral seals, side flanges (or separate end washers), inner rings, oil holes and single or double caged sets (or full complement) of rollers.

Track Rollers

Track rollers listed in this catalog are designed with outer rings of large radial cross section to withstand heavy rolling and shock loads on track-type or cam-controlled equipment. The outside diameters of the outer rings are either profiled or cylindrical. Profiled track rollers are designed to alleviate uneven bearing loading resulting from deflection, bending or misalignment in mounting. Stud-type track rollers are available with or without lip contact seals, or with shields. Yoke-type track rollers are designed for straddle mounting. Each yoke-type is available with either radial needle roller and cage assemblies, or with a single (or double) full complement row of cylindrical or needle rollers.

Thrust Bearings

Thrust needle roller and cage assemblies are available in a variety of inch or metric sizes. All types have very small cross sections. If the back up surfaces cannot be used as raceways, hardened washers are available. Thrust bearings are available with needle rollers or heavier cylindrical rollers for high load-carrying capacity.

Combined (Radial and Thrust) Bearings

Combined bearings consist of a radial bearing (needle roller bearing) and a thrust bearing (ball or roller bearing). Some combined bearings are constructed similar to drawn cups, but with an added thrust bearing component. Like other needle roller bearings, these combined bearings can be matched with an optional inner ring or thrust washer as the opposing raceway.

BEARING REACTIONS, DYNAMIC EQUIVALENT LOADS AND BEARING LIFE

DEFINITION OF LOAD RATINGS

Basic Dynamic Load Rating

The "basic dynamic load rating" (C) for a radial roller bearing is that calculated, constant, radial load, which a group of apparently identical bearings with stationary outer ring can theoretically endure for a rating life of one million revolutions of the inner ring. For a thrust roller bearing (C) is that calculated, constant, centric thrust load, which a group of apparently identical bearings can theoretically endure for a rating life of one million revolutions of one of the bearing washers. The basic dynamic load rating is a reference value only, the base value of one million revolutions has been chosen for ease of calculation. Since applied loading as great as the basic dynamic load tends to cause local plastic deformation of the rolling surfaces, it is not anticipated that such heavy loading would normally be applied.

Basic Static Load Rating

Basic static load rating for a radial roller bearing suitably manufactured from a good quality hardened alloy steel, the static radial load rating (C_o) is that uniformly distributed static radial bearing load, which produces a maximum contact stress of 4000 megapascals (580,000 psi) acting at the center of contact of the most heavily loaded rolling element. The static axial load rating (C_{oa}) is that uniformly distributed static centric axial load, which produces a maximum contact stress of 4000 megapascals (580,000 psi) acting at the center of contact of each rolling element.

Note: For a contact stress of 4000 megapascals (580,000 psi) a total permanent deformation of roller and raceway occurs, which is appoximately 0.0001 of the roller diameter.

EQUIVALENT DYNAMIC RADIAL BEARING LOADS (P_R)

To calculate the L_{10} life, it is necessary to calculate a dynamic equivalent radial load, designated by P_r. The dynamic equivalent radial load is defined as a single radial load that, if applied to the bearing, will result in the same life as the combined loading under which the bearing operates.

$$P_r = XF_r + YF_a$$

Where:

P_r = Dynamic equivalent radial load
F_r = Applied radial load
F_a = Applied axial load
X = Radial load factor
Y = Axial load factor

Radial needle roller bearings are designed to carry radial load with zero thrust load under normal conditions. With the thrust load equal to zero, equivalent radial load (P_r) is equal to the design radial load (F_r). Your representative should be consulted on any applications where thrust load is involved (as the resulting increase in internal friction may require cooling to prevent increased operating temperatures).

MINIMUM BEARING LOAD

Slippage can occur if loads are too light and, if accompanied by inadequate lubrication, can cause damage to the bearings. The minimum load for radial cylindrical, spherical and full complement needle roller bearings is: P/C = 0.04 (P is the dynamic load and C is the basic dynamic load rating).

Thrust needle roller bearings also have an added design requirement such that the minimum thrust load is satisfied to prevent the rollers from skidding on the raceway. The equation for the thrust loading force is different for needle rollers versus cylindrical rollers as noted:

(needle rollers) $F_{a\,min} = C_0/2200$ kN
(cylindrical rollers) $F_{a\,min} = 0.1C_0/2200$ kN

STATIC RADIAL AND/OR AXIAL EQUIVALENT LOADS

The static equivalent radial and/or axial loading is dependent on the bearing type selected. For bearings designed to accommodate only radial or thrust loading, the static equivalent load is equal to the applied load.

For all bearings, the maximum contact stress can be approximated using the static equivalent load and the static rating.

For roller bearings:

$$\sigma_0 = 4000 \times \left(\frac{P_0}{C_0}\right)^{1/2} \text{ MPa}$$

$$\sigma_0 = 580 \times \left(\frac{P_0}{C_0}\right)^{1/2} \text{ ksi}$$

Needle Roller Bearings

Because radial needle roller bearings are not designed to accept thrust loading, their equation to determine static radial equivalent load is:

$$P_{0r} = F_r$$

Thrust needle roller bearings are not designed to accept radial loading, so their equation to determine static thrust equivalent load is:

$$P_{0a} = F_a$$

The determination of the static load safety factor (f_0) serves to ascertain that a bearing with adequate static load rating has been selected.

$$f_0 = \frac{C_0}{P_0}$$

Where:

f_0 = Static load safety factor
C_0 = Basic static load rating (kN or lbf)
P_0 = Maximum applied static load (kN or lbf)

f_0 is a safety factor against permanent deformation of the contact areas of the rolling elements and raceways. Higher f_0 values are required for particulary smooth operation. The following values are generally suggested.

f_0 = 1.5 ... 2.5 for particularly smooth operation
f_0 = 1.0 ... 1.5 for smooth operation
f_0 = 0.7 ... 1.0 for less smooth operation

For drawn cup needle roller bearings, f_0 should be ≥3.

A

BEARING LIFE

Many different performance criteria exist that dictate how a bearing should be selected. These include bearing fatigue life, rotational precision, power requirements, temperature limits, speed capabilities, sound, etc. This publication deals primarily with bearing life as related to material-associated fatigue. Bearing life is defined here as the length of time, or number of revolutions, until a fatigue spall of 6 mm^2 (0.0100 $in.^2$) develops. Since metal fatigue is a statistical phenomenon, the life of an individual bearing is impossible to precisely predetermine. Bearings that may appear to be identical can exhibit considerable life scatter when tested under identical conditions. Thus, it is necessary to base life predictions on a statistical evaluation of a large number of bearings operating under similar conditions. The Weibull distribution function is commonly used to predict the life of a population of bearings at any given reliability level.

RATING LIFE

Rating life, L_{10}, is the life that 90 percent of a group of apparently identical bearings will complete or exceed before a fatigue spall develops. The L_{10} life also is associated with 90 percent reliability for a single bearing under a certain load.

BEARING LIFE EQUATIONS

Traditionally, the L_{10} life has been calculated as follows for bearings under radial or combined loading where the dynamic equivalent radial load, P_r, has been determined:

$$L_{10} = \left(\frac{C}{P_r}\right)^{10/3} (1x10^6) \text{ revolutions}$$

or,

$$L_{10} = \left(\frac{C}{P_r}\right)^{10/3} \left(\frac{1x10^6}{60n}\right) \text{ hours}$$

Where:

n = speed (min^{-1})

For thrust bearings, the above equations change to the following:

$$L_{10} = \left(\frac{C_a}{P_a}\right)^{10/3} (1x10^6) \text{ revolutions}$$

or,

$$L_{10} = \left(\frac{C_a}{P_a}\right)^{10/3} \left(\frac{1x10^6}{60n}\right) \text{ hours}$$

As the first set of equations for radial bearings with dynamic ratings based on one million revolutions is the most common form of the equations, this will be used through the rest of this section. The equivalent dynamic load equations and the life adjustment factors are applicable to all forms of the life equation.

With increased emphasis on the relationship between the reference conditions and the actual environment in which the bearing operates in the machine, the traditional life equations were expanded to include certain additional variables that affect bearing performance. The approach whereby these factors are considered in the bearing analysis and selection has been termed Bearing Systems Analysis (BSA).

The ISO/ABMA expanded bearing life equation is:

$$L_{na} = a_1 a_2 a_3 L_{10}$$

Where:

a_1 = Reliability life factor
a_2 = Material life factor
a_3 = Operating condition life factor
(to be specified by the manufacturer)

The expanded bearing life equation is:

$$L_{na} = a_1 a_2 a_{3h} a_{3k} a_{3l} a_{3m} a_{3p} \left(\frac{C}{P_r}\right)^{10/3} (1x10^6)$$

Where:

a_1 = Reliability life factor
a_2 = Material life factor
a_{3h} = Hardness life factor
a_{3k} = Load zone life factor
a_{3l} = Lubrication life factor
a_{3m} = Misalignment life factor
a_{3p} = Low load life factor
c = Dynamic radial load rating
P_r = Dynamic equivalent radial load

Reliability Life Factor (a_1)

The equation for the life adjustment factor for reliability is:

$$a_1 = 4.26 \times \left(\ln \frac{100}{R}\right)^{2/3} + 0.05$$

ln = natural logarithm (base e)

To adjust the calculated L_{10} life for reliability, multiply by the a_1 factor. If 90 (90 percent reliability) is substituted for R in the above equation, $a_1 = 1$. For R = 99 (99 percent reliability), $a_1 = 0.25$. The following table lists the reliability factor for commonly used reliability values.

Table A-2. Reliability factors

R (percent)	L_n	a_1
90	L_{10}	1.00
95	L_5	0.64
96	L_4	0.55
97	L_3	0.47
98	L_2	0.37
99	L_1	0.25
99.5	$L_{0.5}$	0.175
99.9	$L_{0.1}$	0.093

Note that the equation for reliability adjustment assumes there is a short minimum life below which the probability of bearing damage is minimal (e.g., zero probability of bearing damage producing a short life). Extensive bearing fatigue life testing has shown the minimum life, below which the probability of bearing damage is negligible, to be larger than shown. For a more accurate prediction of bearing lives at high levels of reliability, consult your representative.

Material Life Factor (a_2)

The life adjustment factor for bearing material (a_2) for standard bearings manufactured from bearing quality steel, is 1.0. Bearings also are manufactured from premium steels, containing fewer and smaller inclusion impurities than standard steels and providing the benefit of extending bearing fatigue life. Application of the material life factor requires that fatigue life is limited by nonmetallic inclusions, that contact stresses are approximately less than 2400 MPa (350 ksi), and adequate lubrication is provided. It is important to note that improvements in material cannot offset poor lubrication in an operating bearing system. Consult your representative for applicability of the material factor.

Hardness Life Factor (a_{3h})

Both the dynamic and static load ratings of bearings are based on a minimum raceway hardness equivalent to 58 on the Rockwell C scale (HRC) [ASTM E-18]. If the raceway hardness must be decreased, these load ratings also will be decreased. For bearings supplied as a full assembly, the hardness life factor will be unity. For bearing applications designed to use the shaft or housing surfaces as raceways, this factor can be used to estimate performance when the required 58 HRC minimum hardness cannot be achieved.

The effective raceway hardness affects the life of a bearing application as shown in the following table. If values for raceway hardness below 45 HRC are required, consult your representative.

Table A-3. Raceway hardness factor for life equation

Raceway hardness (HRC)	a_{3h}
58	1.00
57	0.81
56	0.66
55	0.53
54	0.43
53	0.35
52	0.28
51	0.22
50	0.18
49	0.14
48	0.11
47	0.09
46	0.07
45	0.06

Table A-4. Hardness factors to modify basic static load rating (C_o/HF_S)

Raceway hardness (HRC)	Hardness factor (HF_s)
58	1.00
57	1.06
56	1.13
55	1.21
54	1.29
53	1.37
52	1.46
51	1.55
50	1.65
49	1.76
48	1.88
47	2.00
46	2.13
45	2.27
44	2.41
43	2.57
42	2.74
41	2.92
40	3.10

A

Load Zone Life Factor (a_{3k})

The fatigue life of a bearing is a function of the stresses in rollers and raceways and the number of stress cycles that the loaded bearing surfaces experience in one bearing revolution. The stresses depend on applied load and on how many rollers support that load. The number of stress cycles depends on bearing geometry and, again, on how many rollers support the load. Therefore, life for a given external load is related to the loaded arc, or load zone, of the bearing.

The load zone in a bearing is dominated by the internal clearance, either radial or axial depending on the bearing type. Without considering preload, less clearance in a bearing results in a larger load zone and subsequently longer bearing life.

Fig. A-1. Bearing load zones and roller-raceway contact loading

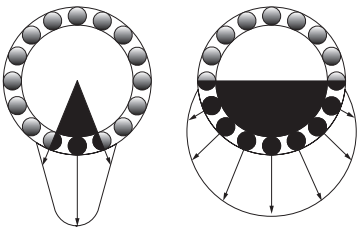

If a more accurate assessment of the load zone adjusted life is necessary (e.g., including the effects of internal clearance or fitting practice), consult your representative.

Lubrication Life Factor (a_{3l})

The influence of lubrication film due to elastohydrodynamic (EHL) lubrication on bearing performance is related to the reduction or prevention of asperity (metal-metal) contact between the bearing surfaces. It has been found that the roller and raceway surface finish, relative to lubricant film thickness, has the most notable effect on improving bearing performance. Factors such as bearing geometry, material, loads and load zones also play an important role in bearing performance.

The following equation provides a method to calculate the lubrication factor for a more accurate prediction of the influence of lubrication on bearing life (L_{10a}).

$$a_{3l} = C_g \times C_\ell \times C_j \times C_s \times C_v \times C_{gr}$$

Where:

C_g = Geometry factor
C_ℓ = Load factor
C_j = Load zone factor
C_s = Speed factor
C_v = Viscosity factor
C_{gr} = Grease lubrication factor

Where:

C_{gr} = 0.79 for grease
1.00 for oil

Please note that the a_{3l} maximum is 2.88 for all bearings. The a_{3l} minimum is 0.200 for case-hardened bearings and 0.126 for through hardened bearings.

A lubricant contamination factor is not included in the lubrication factor because endurance tests are typically run with a 0.040 mm (0.00157 in.) filter to provide a realistic level of lubricant cleanness for most applications.

Geometry Factor (C_g)

C_g is given for most part numbers in the bearing tables. The geometry factor also includes the material effects and load zone considerations for non-tapered roller bearings, as these also are inherent to the bearing design. However, it should be noted that the primary effect of the load zone is on roller load distributions and contact stresses within the bearing, which are not quantified within the lubrication factor. Refer to the previous section, Load Zone Life Factor, a_{3k}, for more information.

Load Factor (C_ℓ)

The C_ℓ factor is obtained from the following figure. Note that the factor is different based on the type of bearing utilized. P_r is the equivalent load applied to the bearing in Newtons and is determined in the Equivalent Bearing Loads (P_r) section.

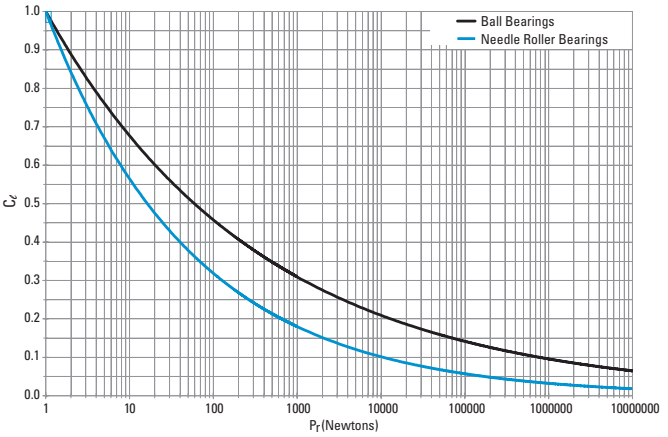

Fig. A-2. Load factor (C_ℓ) vs. equivalent bearing load (P_r)

Load Zone Factor (C_j)

For all non-tapered roller bearings, the load zone factor is unity.

Speed Factor (C_s)

C_s is determined from the following figure, where rev/min (min^{-1}) is the rotational speed of the inner ring relative to the outer ring.

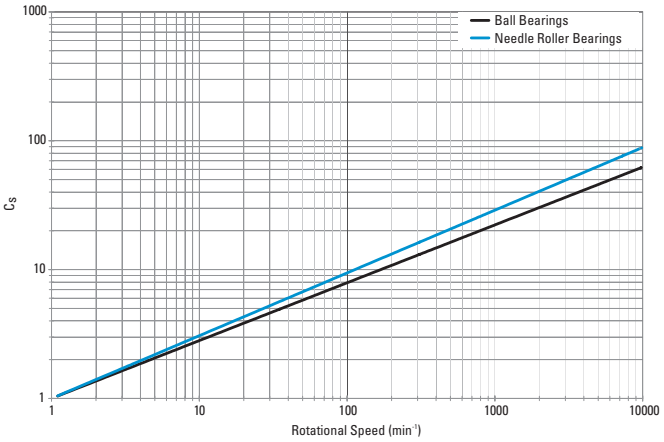

Fig. A-3. Speed factor (C_s) vs. rotational speed

Viscosity Factor (C_v)

The lubricant kinematic viscosity [centistokes (cSt)] is taken at the operating temperature of the bearing. The operating viscosity can be estimated by using the figure in the Lubricant and Seals section. The viscosity factor (C_v) can then be determined from the following figure.

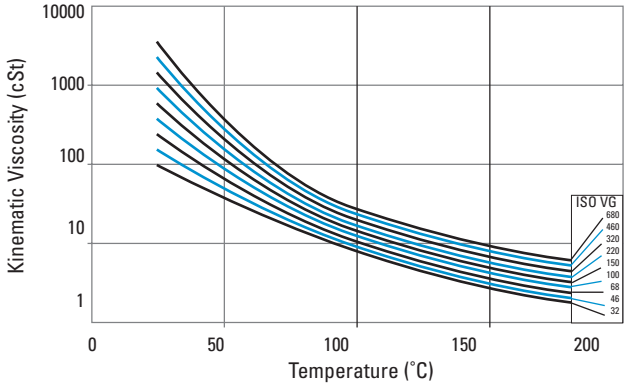

Fig. A-4. Kinematic viscosity vs. temperature

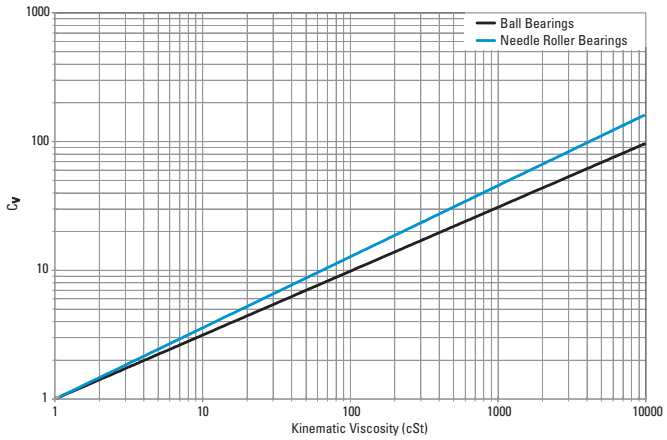

Fig. A-5. Viscosity factor (C_v) vs. kinematic viscosity

Misalignment Life Factor (a_{3m})

The effect of bearing life depends on the magnitude of the angle of misalignment, on the internal bearing geometry, and on the applied loads.

For needle roller bearings, the following table gives the misalignment limitations based on bearing width.

Table A-5. Misalignment limitations based on bearing width

Bearing width		Maximum slope	
mm	in.	Caged	Full complement
>50.8	>2	0.0005	0.0005
25.4 - 50.8	1 - 2	0.0010	0.0005
<25.4	<1	0.0015	0.0010

Performance of all bearings under various levels of misalignment, radial and axial load can be predicted using sophisticated computer programs. Using these programs, engineers can design special bearing contact profiles to accommodate the conditions of radial load, axial load and/or bearing misalignment in your application. Consult your representative for more information.

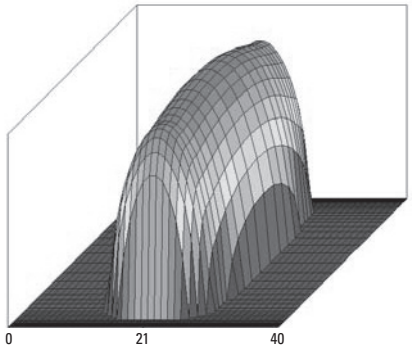

Fig. A-6. Roller-inner raceway contact stress without misalignment

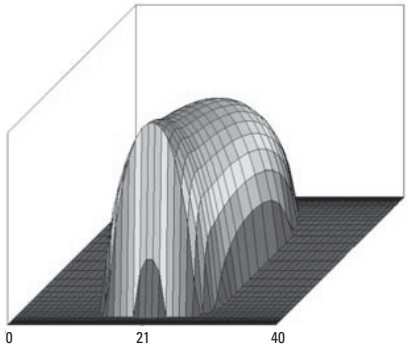

Fig. A-7. Roller-inner raceway contact stress with high misalignment and special profile

BEARING REACTIONS, DYNAMIC EQUIVALENT LOADS AND BEARING LIFE - *continued*

Needle Rollers With Relieved Ends

Needle roller bearing life is affected by the distribution of contact stress between roller and raceways. Even when non-profiled needle rollers are loaded under conditions of ideal alignment, the contact stress is not uniform along the length of the rollers, but rather is concentrated toward the ends. Misalignment causes even greater roller contact stress. This effect is illustrated below.

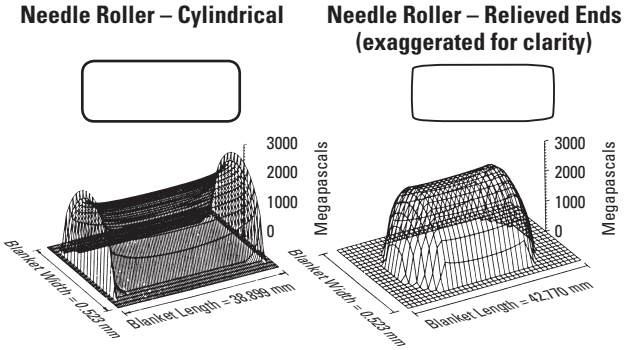

Fig. A-8. Comparative Stress Patterns

The use of needle rollers with relieved ends helps to reduce stress concentration at the ends of rollers, both under misalignment or ideal alignment, and results in more uniform stress distribution and optimum bearings performance.

Low Load Life Factor (a_{3p})

Bearing life tests have shown greatly extended bearing fatigue life performance is achievable when the bearing contact stresses are low and the lubricant film is sufficient to fully separate the micro-scale textures of the contacting surfaces. Mating the test data with sophisticated computer programs for predicting bearing performance, engineers developed a low load factor for use in the catalog to predict the life increase expected when operating under low bearing loads. The following figure shows the low load factor (a_{3p}) as a function of the lubricant life factor (a_{3l}) and the ratio of bearing dynamic rating to the bearing equivalent load.

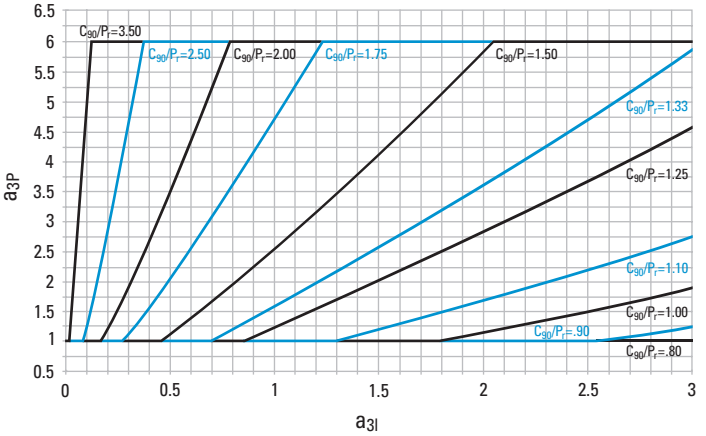

Fig. A-9. Low-load factor (a_{3p}) vs. lubricant life factor (a_{3l}) and C_{90}/P_r ratio

APPLIED DYNAMIC LOAD

Maximum Bearing Load

When the applied load is greater than one-third of the basic dynamic load rating, the above load-life relationship is no longer valid. Therefore, for most applications, it should be the maximum load applied on a bearing when calculating the basic rating life.

Equivalent Bearing Load Under Variable Loads and Speeds

When a bearing constant is subjected to varying loads and speeds, the equivalent (constant) load (P) on the bearing can be determined using the following formula:

$$P = \left(\frac{P_1^{10/3} \times n_1 \times t_1 + P_2^{10/3} \times n_2 \times t_2 + P_3^{10/3} \times n_3 \times t_3 + \ldots}{N} \right)^{3/10}$$

Where P_1, P_2, and P_3 represent loads acting at speeds n_1, n_2 and n_3 and t_1, t_2 and t_3 represent the decimal portion of the total time that P_1 is acting at n_1, P_2 is acting at n_2 and P_3 is acting at n_3. The weighted min^{-1} N is the numerical summation of $t_1\ n_1$ plus $t_2\ n_2$ plus ...$t_n\ n_n$.

Equivalent Bearing Load Under Variable Loads, but Constant Speed

$$P = \left(P_1^{10/3} \times t_1 + P_2^{10/3} \times t_2 + \ldots \right)^{3/10}$$

SYSTEM LIFE AND WEIGHTED AVERAGE LIFE

SYSTEM LIFE

System reliability is the probability that all of several bearings ina system will attain or exceed some required life. Systems reliability is the product of the individual bearing reliablities in the syste:

$$R_{(system)} = R_A \; R_B \; R_C \; \ldots R_n$$

In an application, the L_{10} system life for a number of bearings each having a different L_{10} life is:

$$L_{10(system)} = \left[\left(\frac{1}{L_{10A}}\right)^{3/2} + \left(\frac{1}{L_{10B}}\right)^{3/2} + \ldots + \left(\frac{1}{L_{10n}}\right)^{3/2} \right]^{-2/3}$$

WEIGHTED AVERAGE LIFE

To allow for varying lubrication conditions in a load cycle it is necessary to perform the weighted average life calculation:

Weighted average life:

$$L_{10wt} = \frac{1}{\frac{T_1}{(L_{10})_1} + \frac{T_2}{(L_{10})_2} + \ldots + \frac{T_n}{(L_{10})_n}}$$

Where, during a load cycle:

T = Proportion of total time

L_{10} = Calculated L_{10} bearing life for each condition

A

BEARING TOLERANCES, INCH AND METRIC

TOLERANCES OF NEEDLE ROLLER BEARINGS

The tolerances given in the following table apply to inner rings of metric series needle roller radial bearing types in which their rings are precision-finished.

TOLERANCE TERMS, SYMBOLS AND DEFINITIONS
Axes, planes etc.

Inner ring (or shaft washer) axis: Axis of the cylinder inscribed in a basically cylindrical bore. The inner ring (or shaft washer) axis also is the bearing axis.

Outer ring (or housing washer) axis: Axis of the cylinder circumscribed around a basically cylindrical outside surface.

Radial plane: Plane perpendicular to the bearing or ring axis. It is, however, acceptable to consider radial planes referred to in the definitions as being parallel with the plane tangential to the reference face of a ring or the back face of a thrust bearing washer.

Radial direction: Direction through the bearing or ring axis in a radial plane.

Axial plane: Plane containing the bearing or ring axis.

Axial direction: Direction parallel with the bearing or ring axis. It is, however, acceptable to consider axial directions referred to in the definitions as being perpendicular to the plane tangential to the reference face of a ring or back face of a thrust bearing washer.

Reference face: Face designated by the manufacturer of the bearings and which may be the datum for measurements.

The reference face for measurement is generally taken as the unmarked face. In case of symmetrical rings, when it is not possible to identify the reference face, the tolerances are deemed to comply relative to either face, but not both. The reference face of a shaft and housing washer as a thrust bearing is that face intended to support axial load and is generally opposite the raceway face.

Outer ring flange back face: That side of an outer ring flange which is intended to support axial load.

Middle of raceway: Point or line on a raceway surface, halfway between the two edges of the raceway.

Raceway contact diameter: Diameter of the theoretical circle through the nominal points of contact between the rolling elements and raceway.

NOTE: For roller bearings, the nominal point of contact is generally at the middle of the roller.

Diameter deviation near ring faces: In radial planes, nearer the face of a ring than 1.2 times the maximum (axial direction) ring chamfer, only the maximum material limits apply.

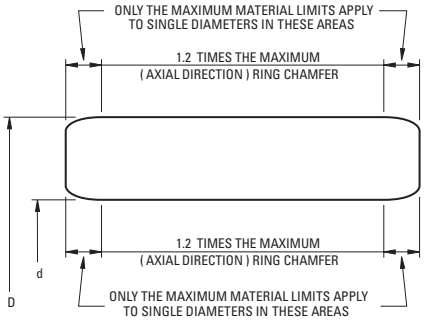

ABMA / ISO Symbols - Inner Ring

Δd_{mp} Single plane mean bore diameter deviation from basic bore diameter, e.g., bore tolerance for a basically tapered bore, Δd_{mp} refers only to the theoretical small bore end of the bore.

V_{dsp} Difference between the largest and the smallest of the single bore diameters in a single radial plane.

V_{dmp} Difference between the largest and smallest of the mean bore diameters in a single radial plane of an individual ring.

ABMA / ISO Symbols - Outer Ring

ΔD_{mp} Single plane mean outside diameter deviation from basic outside diameter, e.g., O.D. tolerance.

V_{Dsp} Difference between the largest and smallest of the single outside diameters in a single radial plane.

The following tables provide standard ISO tolerance information. They are provided for general use and are referenced throughout this catalog.

ISO Tolerances for Holes – Metric

Diameters **mm**		Deviations **mm**						Deviations **mm**					
		B10		B11		B12		C9		C10		C11	
>	≤	Max.	Min.	Max.	Min.	Max.	Min.	Max.	Min.	Max.	Min.	Max.	Min.
3	6	0.188	0.140	0.215	0.140	0.260	0.140	0.100	0.070	0.118	0.070	0.145	0.070
6	10	0.208	0.150	0.240	0.150	0.300	0.150	0.116	0.080	0.138	0.080	0.170	0.080
10	18	0.220	0.150	0.260	0.150	0.330	0.150	0.138	0.095	0.165	0.095	0.205	0.095
18	30	0.244	0.160	0.290	0.160	0.370	0.160	0.162	0.110	0.194	0.110	0.240	0.110
30	40	0.270	0.170	0.330	0.170	0.420	0.170	0.182	0.120	0.220	0.120	0.280	0.120
40	50	0.280	0.180	0.340	0.180	0.430	0.180	0.192	0.130	0.230	0.130	0.290	0.130
50	65	0.310	0.190	0.380	0.190	0.490	0.190	0.214	0.140	0.260	0.140	0.330	0.140
65	80	0.320	0.200	0.390	0.200	0.500	0.200	0.224	0.150	0.270	0.150	0.340	0.150
80	100	0.360	0.220	0.440	0.220	0.570	0.220	0.257	0.170	0.310	0.170	0.390	0.170
100	120	0.380	0.240	0.460	0.240	0.590	0.240	0.267	0.180	0.320	0.180	0.400	0.180
120	140	0.420	0.260	0.510	0.260	0.660	0.260	0.300	0.200	0.360	0.200	0.450	0.200
140	160	0.440	0.280	0.530	0.280	0.680	0.280	0.310	0.210	0.370	0.210	0.460	0.210
160	180	0.470	0.310	0.560	0.310	0.710	0.310	0.330	0.230	0.390	0.230	0.480	0.230
180	200	0.525	0.340	0.630	0.340	0.800	0.340	0.355	0.240	0.425	0.240	0.530	0.240
200	225	0.565	0.380	0.670	0.380	0.840	0.380	0.375	0.260	0.445	0.260	0.550	0.260
225	250	0.605	0.420	0.710	0.420	0.880	0.420	0.395	0.280	0.465	0.280	0.570	0.280
250	280	0.690	0.480	0.800	0.480	1.000	0.480	0.430	0.300	0.510	0.300	0.620	0.300
280	315	0.750	0.540	0.860	0.540	1.060	0.540	0.460	0.330	0.540	0.330	0.650	0.330
315	355	0.830	0.600	0.960	0.600	1.170	0.600	0.500	0.360	0.590	0.360	0.720	0.360
355	400	0.910	0.680	1.040	0.680	1.250	0.680	0.540	0.400	0.630	0.400	0.760	0.400
400	450	1.010	0.760	1.160	0.760	1.390	0.760	0.595	0.440	0.690	0.440	0.840	0.440
450	500	1.090	0.840	1.240	0.840	1.470	0.840	0.635	0.480	0.730	0.480	0.880	0.480

Diameters **mm**		Deviations **mm**									
		E9		E10		E11		E12		E13	
>	≤	Max.	Min.	Max.	Min.	Max.	Min.	Max.	Min.	Max.	Min.
3	6	0.050	0.020	0.068	0.020	0.095	0.020	0.140	0.020	0.200	0.020
6	10	0.061	0.025	0.083	0.025	0.115	0.025	0.175	0.025	0.245	0.025
10	18	0.075	0.032	0.102	0.032	0.142	0.032	0.212	0.032	0.302	0.032
18	30	0.092	0.040	0.124	0.040	0.170	0.040	0.250	0.040	0.370	0.040
30	50	0.112	0.050	0.150	0.050	0.210	0.050	0.300	0.050	0.440	0.050
50	80	0.134	0.060	0.180	0.060	0.250	0.060	0.360	0.060	0.520	0.060
80	120	0.159	0.072	0.212	0.072	0.292	0.072	0.422	0.072	0.612	0.072
120	180	0.185	0.085	0.245	0.085	0.335	0.085	0.485	0.085	0.715	0.085
180	250	0.215	0.100	0.285	0.100	0.390	0.100	0.560	0.100	0.820	0.100
250	315	0.240	0.110	0.320	0.110	0.430	0.110	0.630	0.110	0.920	0.110
315	400	0.265	0.125	0.355	0.125	0.485	0.125	0.695	0.125	1.015	0.125
400	500	0.290	0.135	0.385	0.135	0.535	0.135	0.765	0.135	1.105	0.135

Diameters **mm**		Deviations **mm**							
		F5		F6		F7		F8	
>	≤	Max.	Min.	Max.	Min.	Max.	Min.	Max.	Min.
3	6	0.015	0.010	0.018	0.010	0.022	0.010	0.028	0.010
6	10	0.019	0.013	0.022	0.013	0.028	0.013	0.035	0.013
10	18	0.024	0.016	0.027	0.016	0.034	0.016	0.043	0.016
18	30	0.029	0.020	0.033	0.020	0.041	0.020	0.053	0.020
30	50	0.036	0.025	0.041	0.025	0.050	0.025	0.064	0.025
50	80	0.043	0.030	0.049	0.030	0.060	0.030	0.076	0.030
80	120	0.051	0.036	0.058	0.036	0.071	0.036	0.090	0.036
120	180	0.061	0.043	0.068	0.043	0.083	0.043	0.106	0.043
180	250	0.070	0.050	0.079	0.050	0.096	0.050	0.122	0.050
250	315	0.079	0.056	0.088	0.056	0.108	0.056	0.137	0.056
315	400	0.087	0.062	0.098	0.062	0.119	0.062	0.151	0.062
400	500	0.095	0.068	0.108	0.068	0.131	0.068	0.165	0.068

ISO Tolerances for Holes – Metric							
Diameter **mm**		Deviations **mm**					
		G5		G6		G7	
>	≤	Max.	Min.	Max.	Min.	Max.	Min.
3	6	0.009	0.004	0.012	0.004	0.016	0.004
6	10	0.011	0.005	0.014	0.005	0.020	0.005
10	18	0.014	0.006	0.017	0.006	0.024	0.006
18	30	0.016	0.007	0.020	0.007	0.028	0.007
30	50	0.020	0.009	0.025	0.009	0.034	0.009
50	80	0.023	0.010	0.029	0.010	0.040	0.010
80	120	0.027	0.012	0.034	0.012	0.047	0.012
120	180	0.032	0.014	0.039	0.014	0.054	0.014
180	250	0.035	0.015	0.044	0.015	0.061	0.015
250	315	0.040	0.017	0.049	0.017	0.069	0.017
315	400	0.043	0.018	0.054	0.018	0.075	0.018
400	500	0.047	0.020	0.060	0.020	0.083	0.020

Diameters **mm**		Deviations **mm**									
		H4		H5		H6		H7		H8	
>	≤	Max.	Min.	Max.	Min.	Max.	Min.	Max.	Min.	Max.	Min.
3	6	0.004	0.000	0.005	0.000	0.008	0.000	0.012	0.000	0.018	0.000
6	10	0.004	0.000	0.006	0.000	0.009	0.000	0.015	0.000	0.022	0.000
10	18	0.005	0.000	0.008	0.000	0.011	0.000	0.018	0.000	0.027	0.000
18	30	0.006	0.000	0.009	0.000	0.013	0.000	0.021	0.000	0.033	0.000
30	50	0.007	0.000	0.011	0.000	0.016	0.000	0.025	0.000	0.039	0.000
50	80	0.008	0.000	0.013	0.000	0.019	0.000	0.030	0.000	0.046	0.000
80	120	0.010	0.000	0.015	0.000	0.022	0.000	0.035	0.000	0.054	0.000
120	180	0.012	0.000	0.018	0.000	0.025	0.000	0.040	0.000	0.063	0.000
180	250	0.014	0.000	0.020	0.000	0.029	0.000	0.046	0.000	0.072	0.000
250	315	0.016	0.000	0.023	0.000	0.032	0.000	0.052	0.000	0.081	0.000
315	400	0.018	0.000	0.025	0.000	0.036	0.000	0.057	0.000	0.089	0.000
400	500	0.020	0.000	0.027	0.000	0.040	0.000	0.063	0.000	0.097	0.000

Diameters **mm**		Deviations **mm**							
		H9		H10		H11		H12	
>	≤	Max.	Min.	Max.	Min.	Max.	Min.	Max.	Min.
3	6	0.030	0.000	0.048	0.000	0.075	0.000	0.120	0.000
6	10	0.036	0.000	0.058	0.000	0.090	0.000	0.150	0.000
10	18	0.043	0.000	0.070	0.000	0.110	0.000	0.180	0.000
18	30	0.052	0.000	0.084	0.000	0.130	0.000	0.210	0.000
30	50	0.062	0.000	0.100	0.000	0.160	0.000	0.250	0.000
50	80	0.074	0.000	0.120	0.000	0.190	0.000	0.300	0.000
80	120	0.087	0.000	0.140	0.000	0.220	0.000	0.350	0.000
120	180	0.100	0.000	0.160	0.000	0.250	0.000	0.400	0.000
180	250	0.115	0.000	0.185	0.000	0.290	0.000	0.460	0.000
250	315	0.130	0.000	0.210	0.000	0.320	0.000	0.520	0.000
315	400	0.140	0.000	0.230	0.000	0.360	0.000	0.570	0.000
400	500	0.155	0.000	0.250	0.000	0.400	0.000	0.630	0.000

ISO Tolerances for Holes – Metric

Diameters mm		Deviations mm						Deviations mm					
		J6		J7		J8		K6		K7		K8	
>	≤	Max.	Min.	Max.	Min.	Max.	Min.	Max.	Min.	Max.	Min.	Max.	Min.
3	6	0.005	-0.003	0.006	-0.006	0.010	-0.008	0.002	-0.006	0.003	-0.009	0.005	-0.013
6	10	0.005	-0.004	0.008	-0.007	0.012	-0.010	0.002	-0.007	0.005	-0.010	0.006	-0.016
10	18	0.006	-0.005	0.010	-0.008	0.015	-0.012	0.002	-0.009	0.006	-0.012	0.008	-0.019
18	30	0.008	-0.005	0.012	-0.009	0.020	-0.013	0.002	-0.011	0.006	-0.015	0.010	-0.023
30	50	0.010	-0.006	0.014	-0.011	0.024	-0.015	0.003	-0.013	0.007	-0.018	0.012	-0.027
50	80	0.013	-0.006	0.018	-0.012	0.028	-0.018	0.004	-0.015	0.009	-0.021	0.014	-0.032
80	120	0.016	-0.006	0.022	-0.013	0.034	-0.020	0.004	-0.018	0.010	-0.025	0.016	-0.038
120	180	0.018	-0.007	0.026	-0.014	0.041	-0.022	0.004	-0.021	0.012	-0.028	0.020	-0.043
180	250	0.022	-0.007	0.030	-0.016	0.047	-0.025	0.005	-0.024	0.013	-0.033	0.022	-0.050
250	315	0.025	-0.007	0.036	-0.016	0.055	-0.026	0.005	-0.027	0.016	-0.036	0.025	-0.056
315	400	0.029	-0.007	0.039	-0.018	0.060	-0.029	0.007	-0.029	0.017	-0.040	0.028	-0.061
400	500	0.033	-0.007	0.043	-0.020	0.066	-0.031	0.008	-0.032	0.018	-0.045	0.029	-0.068

Diameters mm		Deviations mm						Deviations mm					
		M5		M6		M7		N6		N7		N8	
>	≤	Max.	Min.	Max.	Min.	Max.	Min.	Max.	Min.	Max.	Min.	Max.	Min.
3	6	-0.003	-0.008	-0.001	-0.009	0.000	-0.012	-0.005	-0.013	-0.004	-0.016	-0.002	-0.020
6	10	-0.004	-0.010	-0.003	-0.012	0.000	-0.015	-0.007	-0.016	-0.004	-0.019	-0.003	-0.025
10	18	-0.004	-0.012	-0.004	-0.015	0.000	-0.018	-0.009	-0.020	-0.005	-0.023	-0.003	-0.030
18	30	-0.005	-0.014	-0.004	-0.017	0.000	-0.021	-0.011	-0.024	-0.007	-0.028	-0.003	-0.036
30	50	-0.005	-0.016	-0.004	-0.020	0.000	-0.025	-0.012	-0.028	-0.008	-0.033	-0.003	-0.042
50	80	-0.006	-0.019	-0.005	-0.024	0.000	-0.030	-0.014	-0.033	-0.009	-0.039	-0.004	-0.050
80	120	-0.008	-0.023	-0.006	-0.028	0.000	-0.035	-0.016	-0.038	-0.010	-0.045	-0.004	-0.058
120	180	-0.009	-0.027	-0.008	-0.033	0.000	-0.040	-0.020	-0.045	-0.012	-0.052	-0.004	-0.067
180	250	-0.011	-0.031	-0.008	-0.037	0.000	-0.046	-0.022	-0.051	-0.014	-0.060	-0.005	-0.077
250	315	-0.013	-0.036	-0.009	-0.041	0.000	-0.052	-0.025	-0.057	-0.014	-0.066	-0.005	-0.086
315	400	-0.014	-0.039	-0.010	-0.046	0.000	-0.057	-0.026	-0.062	-0.016	-0.073	-0.005	-0.094
400	500	-0.016	-0.043	-0.010	-0.050	0.000	-0.063	-0.027	-0.067	-0.017	-0.080	-0.006	-0.103

Diameters mm		Deviations mm				Deviations mm					
		P6		P7		R6		R7		R8	
>	≤	Max.	Min.	Max.	Min.	Max.	Min.	Max.	Min.	Max.	Min.
3	6	-0.009	-0.017	-0.008	-0.020	-0.012	-0.020	-0.011	-0.023	-0.015	-0.033
6	10	-0.012	-0.021	-0.009	-0.024	-0.016	-0.025	-0.013	-0.028	-0.019	-0.041
10	18	-0.015	-0.026	-0.011	-0.029	-0.020	-0.031	-0.016	-0.034	-0.023	-0.050
18	30	-0.018	-0.031	-0.014	-0.035	-0.024	-0.037	-0.020	-0.041	-0.028	-0.061
30	50	-0.021	-0.037	-0.017	-0.042	-0.029	-0.045	-0.025	-0.050	-0.034	-0.073
50	65	-0.026	-0.045	-0.021	-0.051	-0.035	-0.054	-0.030	-0.060	-0.041	-0.087
65	80	-0.026	-0.045	-0.021	-0.051	-0.037	-0.056	-0.032	-0.062	-0.043	-0.089
80	100	-0.030	-0.052	-0.024	-0.059	-0.044	-0.066	-0.038	-0.073	-0.051	-0.105
100	120	-0.030	-0.052	-0.024	-0.059	-0.047	-0.069	-0.041	-0.076	-0.054	-0.108
120	140	-0.037	-0.061	-0.028	-0.068	-0.056	-0.081	-0.048	-0.088	-0.063	-0.126
140	160	-0.036	-0.061	-0.028	-0.068	-0.058	-0.083	-0.050	-0.090	-0.065	-0.128
160	180	-0.036	-0.061	-0.028	-0.068	-0.061	-0.086	-0.053	-0.093	-0.068	-0.131
180	200	-0.041	-0.070	-0.033	-0.079	-0.068	-0.097	-0.060	-0.106	-0.077	-0.149
200	225	-0.041	-0.070	-0.033	-0.079	-0.071	-0.100	-0.063	-0.109	-0.080	-0.152
225	250	-0.041	-0.070	-0.033	-0.079	-0.075	-0.104	-0.067	-0.113	-0.084	-0.156
250	280	-0.047	-0.079	-0.036	-0.088	-0.085	-0.117	-0.074	-0.126	-0.094	-0.175
280	315	-0.047	-0.079	-0.036	-0.088	-0.089	-0.121	-0.078	-0.130	-0.098	-0.179
315	355	-0.051	-0.087	-0.041	-0.098	-0.097	-0.133	-0.087	-0.144	-0.108	-0.197
355	400	-0.051	-0.087	-0.041	-0.098	-0.103	-0.139	-0.093	-0.150	-0.114	-0.203
400	450	-0.055	-0.095	-0.045	-0.108	-0.113	-0.153	-0.103	-0.166	-0.126	-0.223
450	500	-0.055	-0.095	-0.045	-0.108	-0.119	-0.159	-0.109	-0.172	-0.132	-0.229

ISO Tolerances for Shafts – Metric									
Diameters **mm**		Deviations **mm**							
		a10		a11		a12		a13	
>	≤	Max.	Min.	Max.	Min.	Max.	Min.	Max.	Min.
—	3	-0.270	-0.310	-0.270	-0.330	-0.270	-0.370	-0.270	-0.410
3	6	-0.270	-0.318	-0.270	-0.345	-0.270	-0.390	-0.270	-0.450
6	10	-0.280	-0.338	-0.280	-0.370	-0.280	-0.430	-0.280	-0.500
10	18	-0.290	-0.360	-0.290	-0.400	-0.290	-0.470	-0.290	-0.560
18	30	-0.300	-0.384	-0.300	-0.430	-0.300	-0.510	-0.300	-0.630
30	40	-0.310	-0.410	-0.310	-0.470	-0.310	-0.560	-0.310	-0.700
40	50	-0.320	-0.420	-0.320	-0.480	-0.320	-0.570	-0.320	-0.710
50	65	-0.340	-0.460	-0.340	-0.530	-0.340	-0.640	-0.340	-0.800
65	80	-0.360	-0.480	-0.360	-0.550	-0.360	-0.660	-0.360	-0.820
80	100	-0.380	-0.520	-0.380	-0.600	-0.380	-0.730	-0.380	-0.920
100	120	-0.410	-0.550	-0.410	-0.630	-0.410	-0.760	-0.410	-0.950
120	140	-0.460	-0.620	-0.460	-0.710	-0.460	-0.860	-0.460	-1.090
140	160	-0.520	-0.680	-0.520	-0.770	-0.520	-0.920	-0.520	-1.150
160	180	-0.580	-0.740	-0.580	-0.830	-0.580	-0.980	-0.580	-1.210
180	200	-0.660	-0.845	-0.660	-0.950	-0.660	-1.120	-0.660	-1.380
200	225	-0.740	-0.925	-0.740	-1.030	-0.740	-1.200	-0.740	-1.460
225	250	-0.820	-1.005	-0.820	-1.110	-0.820	-1.280	-0.820	-1.540
250	280	-0.920	-1.130	-0.920	-1.240	-0.920	-1.440	-0.920	-1.730
280	315	-1.050	-1.260	-1.050	-1.370	-1.050	-1.570	-1.050	-1.860
315	355	-1.200	-1.430	-1.200	-1.560	-1.200	-1.770	-1.200	-2.090
355	400	-1.350	-1.580	-1.350	-1.710	-1.350	-1.920	-1.350	-2.240

Diameters **mm**		Deviations **mm**						Deviations **mm**					
		c11		c12		c13		e11		e12		e13	
>	≤	Max.	Min.	Max.	Min.	Max.	Min.	Max.	Min.	Max.	Min.	Max.	Min.
—	3	-0.060	-0.120	-0.060	-0.160	-0.060	-0.200	-0.014	-0.074	-0.014	-0.114	-0.014	-0.154
3	6	-0.070	-0.145	-0.070	-0.190	-0.070	-0.250	-0.020	-0.095	-0.020	-0.140	-0.020	-0.200
6	10	-0.080	-0.170	-0.080	-0.230	-0.080	-0.300	-0.025	-0.115	-0.025	-0.175	-0.025	-0.245
10	18	-0.095	-0.205	-0.095	-0.275	-0.095	-0.365	-0.032	-0.142	-0.032	-0.212	-0.032	-0.302
18	30	-0.110	-0.240	-0.110	-0.320	-0.110	-0.440	-0.040	-0.170	-0.040	-0.250	-0.040	-0.370
30	40	-0.120	-0.280	-0.120	-0.370	-0.120	-0.510	-0.050	-0.210	-0.050	-0.300	-0.050	-0.440
40	50	-0.130	-0.290	-0.130	-0.380	-0.130	-0.520	-0.050	-0.210	-0.050	-0.300	-0.050	-0.440
50	65	-0.140	-0.330	-0.140	-0.440	-0.140	-0.600	-0.060	-0.250	-0.060	-0.360	-0.060	-0.520
65	80	-0.150	-0.340	-0.150	-0.450	-0.150	-0.610	-0.060	-0.250	-0.060	-0.360	-0.060	-0.520
80	100	-0.170	-0.390	-0.170	-0.520	-0.170	-0.710	-0.072	-0.292	-0.072	-0.422	-0.072	-0.612
100	120	-0.180	-0.400	-0.180	-0.530	-0.180	-0.720	-0.072	-0.292	-0.072	-0.422	-0.072	-0.612
120	140	-0.200	-0.450	-0.200	-0.600	-0.200	-0.830	-0.085	-0.335	-0.085	-0.485	-0.085	-0.715
140	160	-0.210	-0.460	-0.210	-0.610	-0.210	-0.840	-0.085	-0.335	-0.085	-0.485	-0.085	-0.715
160	180	-0.230	-0.480	-0.230	-0.630	-0.230	-0.860	-0.085	-0.335	-0.085	-0.485	-0.085	-0.715
180	200	-0.240	-0.530	-0.240	-0.700	-0.240	-0.960	-0.100	-0.390	-0.100	-0.560	-0.100	-0.820
200	225	-0.260	-0.550	-0.260	-0.720	-0.260	-0.980	-0.100	-0.390	-0.100	-0.560	-0.100	-0.820
225	250	-0.280	-0.570	-0.280	-0.740	-0.280	-1.000	-0.100	-0.390	-0.100	-0.560	-0.100	-0.820
250	280	-0.300	-0.620	-0.300	-0.820	-0.300	-1.110	-0.110	-0.430	-0.110	-0.630	-0.110	-0.920
280	315	-0.330	-0.650	-0.330	-0.850	-0.330	-1.140	-0.110	-0.430	-0.110	-0.630	-0.110	-0.920
315	355	-0.360	-0.720	-0.360	-0.930	-0.360	-1.250	-0.125	-0.485	-0.125	-0.695	-0.125	-1.015
355	400	-0.400	-0.760	-0.400	-0.970	-0.400	-1.290	-0.125	-0.485	-0.125	-0.695	-0.125	-1.015

ISO Tolerances for Shafts – Metric

Diameters **mm**		Deviations **mm**						Deviations **mm**					
		f5		f6		f7		g5		g6		g7	
>	≤	Max.	Min.	Max.	Min.	Max.	Min.	Max.	Min.	Max.	Min.	Max.	Min.
—	3	-0.006	-0.010	-0.006	-0.012	-0.006	-0.016	-0.002	-0.006	-0.002	-0.008	-0.002	-0.012
3	6	-0.010	-0.015	-0.010	-0.018	-0.010	-0.022	-0.004	-0.009	-0.004	-0.012	-0.004	-0.016
6	10	-0.013	-0.019	-0.013	-0.022	-0.013	-0.028	-0.005	-0.011	-0.005	-0.014	-0.005	-0.020
10	18	-0.016	-0.024	-0.016	-0.027	-0.016	-0.034	-0.006	-0.014	-0.006	-0.017	-0.006	-0.024
18	30	-0.020	-0.029	-0.020	-0.033	-0.020	-0.041	-0.007	-0.016	-0.007	-0.020	-0.007	-0.028
30	50	-0.025	-0.036	-0.025	-0.041	-0.025	-0.050	-0.009	-0.020	-0.009	-0.025	-0.009	-0.034
50	80	-0.030	-0.043	-0.030	-0.049	-0.030	-0.060	-0.010	-0.023	-0.010	-0.029	-0.010	-0.040
80	120	-0.036	-0.051	-0.036	-0.058	-0.036	-0.071	-0.012	-0.027	-0.012	-0.034	-0.012	-0.047
120	180	-0.043	-0.061	-0.043	-0.068	-0.043	-0.083	-0.014	-0.032	-0.014	-0.039	-0.014	-0.054
180	250	-0.050	-0.070	-0.050	-0.079	-0.050	-0.096	-0.015	-0.035	-0.015	-0.044	-0.015	-0.061
250	315	-0.056	-0.079	-0.056	-0.088	-0.056	-0.108	-0.017	-0.040	-0.017	-0.049	-0.017	-0.069
315	400	-0.062	-0.087	-0.062	-0.098	-0.062	-0.119	-0.018	-0.043	-0.018	-0.054	-0.018	-0.075

Diameters **mm**		Deviations **mm**									
		h4		h5		h6		h7		h8	
>	≤	Max.	Min.	Max.	Min.	Max.	Min.	Max.	Min.	Max.	Min.
—	3	0.000	-0.003	0.000	-0.004	0.000	-0.006	0.000	-0.010	0.000	-0.014
3	6	0.000	-0.004	0.000	-0.005	0.000	-0.008	0.000	-0.012	0.000	-0.018
6	10	0.000	-0.004	0.000	-0.006	0.000	-0.009	0.000	-0.015	0.000	-0.022
10	18	0.000	-0.005	0.000	-0.008	0.000	-0.011	0.000	-0.018	0.000	-0.027
18	30	0.000	-0.006	0.000	-0.009	0.000	-0.013	0.000	-0.021	0.000	-0.033
30	50	0.000	-0.007	0.000	-0.011	0.000	-0.016	0.000	-0.025	0.000	-0.039
50	80	0.000	-0.008	0.000	-0.013	0.000	-0.019	0.000	-0.030	0.000	-0.046
80	120	0.000	-0.010	0.000	-0.015	0.000	-0.022	0.000	-0.035	0.000	-0.054
120	180	0.000	-0.012	0.000	-0.018	0.000	-0.025	0.000	-0.040	0.000	-0.063
180	250	0.000	-0.014	0.000	-0.020	0.000	-0.029	0.000	-0.046	0.000	-0.072
250	315	0.000	-0.016	0.000	-0.023	0.000	-0.032	0.000	-0.052	0.000	-0.081
315	400	0.000	-0.018	0.000	-0.025	0.000	-0.036	0.000	-0.057	0.000	-0.089

Diameters **mm**		Deviations **mm**									
		h9		h10		h11		h12		h13	
>	≤	Max.	Min.	Max.	Min.	Max.	Min.	Max.	Min.	Max.	Min.
—	3	0.000	-0.025	0.000	-0.040	0.000	-0.060	0.000	-0.100	0.000	-0.140
3	6	0.000	-0.030	0.000	-0.048	0.000	-0.075	0.000	-0.120	0.000	-0.180
6	10	0.000	-0.036	0.000	-0.058	0.000	-0.090	0.000	-0.150	0.000	-0.220
10	18	0.000	-0.043	0.000	-0.070	0.000	-0.110	0.000	-0.180	0.000	-0.270
18	30	0.000	-0.052	0.000	-0.084	0.000	-0.130	0.000	-0.210	0.000	-0.330
30	50	0.000	-0.062	0.000	-0.100	0.000	-0.160	0.000	-0.250	0.000	-0.390
50	80	0.000	-0.074	0.000	-0.120	0.000	-0.190	0.000	-0.300	0.000	-0.460
80	120	0.000	-0.087	0.000	-0.140	0.000	-0.220	0.000	-0.350	0.000	-0.540
120	180	0.000	-0.100	0.000	-0.160	0.000	-0.250	0.000	-0.400	0.000	-0.630
180	250	0.000	-0.115	0.000	-0.185	0.000	-0.290	0.000	-0.460	0.000	-0.720
250	315	0.000	-0.130	0.000	-0.210	0.000	-0.320	0.000	-0.520	0.000	-0.810
315	400	0.000	-0.140	0.000	-0.230	0.000	-0.360	0.000	-0.570	0.000	-0.890

ISO Tolerances for Shafts – Metric

Diameter **mm**		Deviations **mm**						Deviations **mm**					
		j5		j6		j7		k5		k6		k7	
>	≤	Max.	Min.	Max.	Min.	Max.	Min.	Max.	Min.	Max.	Min.	Max.	Min.
—	3	0.002	-0.002	0.004	-0.002	0.006	-0.004	0.004	0.000	0.006	0.000	0.010	0.000
3	6	0.003	-0.002	0.006	-0.002	0.008	-0.004	0.006	0.001	0.009	0.001	0.013	0.001
6	10	0.004	-0.002	0.007	-0.002	0.010	-0.005	0.007	0.001	0.010	0.001	0.016	0.001
10	18	0.005	-0.003	0.008	-0.003	0.012	-0.006	0.009	0.001	0.012	0.001	0.019	0.001
18	30	0.005	-0.004	0.009	-0.004	0.013	-0.008	0.011	0.002	0.015	0.002	0.023	0.002
30	50	0.006	-0.005	0.011	-0.005	0.015	-0.010	0.013	0.002	0.018	0.002	0.027	0.002
50	80	0.006	-0.007	0.012	-0.007	0.018	-0.012	0.015	0.002	0.021	0.002	0.032	0.002
80	120	0.006	-0.009	0.013	-0.009	0.020	-0.015	0.018	0.003	0.025	0.003	0.038	0.003
120	180	0.007	-0.011	0.014	-0.011	0.022	-0.018	0.021	0.003	0.028	0.003	0.043	0.003
180	250	0.007	-0.013	0.016	-0.013	0.025	-0.021	0.024	0.004	0.033	0.004	0.050	0.004
250	315	0.007	-0.016	0.016	-0.016	0.026	-0.026	0.027	0.004	0.036	0.004	0.056	0.004
315	400	0.007	-0.018	0.018	-0.018	0.029	-0.028	0.029	0.004	0.040	0.004	0.061	0.004

Diameter **mm**		Deviations **mm**						Deviations **mm**					
		m5		m6		m7		n5		n6		n7	
>	≤	Max.	Min.	Max.	Min.	Max.	Min.	Max.	Min.	Max.	Min.	Max.	Min.
—	3	0.006	0.002	0.008	0.002	0.012	0.002	0.008	0.004	0.010	0.004	0.014	0.004
3	6	0.009	0.004	0.012	0.004	0.016	0.004	0.013	0.008	0.016	0.008	0.020	0.008
6	10	0.012	0.006	0.015	0.006	0.021	0.006	0.016	0.010	0.019	0.010	0.025	0.010
10	18	0.015	0.007	0.018	0.007	0.025	0.007	0.020	0.012	0.023	0.012	0.030	0.012
18	30	0.017	0.008	0.021	0.008	0.029	0.008	0.024	0.015	0.028	0.015	0.036	0.015
30	50	0.020	0.009	0.025	0.009	0.034	0.009	0.028	0.017	0.033	0.017	0.042	0.017
50	80	0.024	0.011	0.030	0.011	0.041	0.011	0.033	0.020	0.039	0.020	0.050	0.020
80	120	0.028	0.013	0.035	0.013	0.048	0.013	0.038	0.023	0.045	0.023	0.058	0.023
120	180	0.033	0.015	0.040	0.015	0.055	0.015	0.045	0.027	0.052	0.027	0.067	0.027
180	250	0.037	0.017	0.046	0.017	0.063	0.017	0.051	0.031	0.060	0.031	0.077	0.031
250	315	0.043	0.020	0.052	0.020	0.072	0.020	0.057	0.034	0.066	0.034	0.086	0.034
315	400	0.046	0.021	0.057	0.021	0.078	0.021	0.062	0.037	0.073	0.037	0.094	0.037

Diameter **mm**		Deviations **mm**					
		p6		r6		r7	
>	≤	Max.	Min.	Max.	Min.	Max.	Min.
80	100	0.059	0.037	-	-	-	-
100	120	0.059	0.037	-	-	-	-
120	140	0.068	0.043	0.090	0.065	-	-
140	160	0.068	0.043	0.090	0.065	-	-
160	180	0.068	0.043	0.090	0.065	-	-
180	200	0.079	0.050	0.106	0.077	-	-
200	225	0.079	0.050	0.109	0.080	0.126	0.080
225	250	0.079	0.050	0.113	0.084	0.130	0.084
250	280	0.088	0.056	0.126	0.094	0.146	0.094
280	315	0.088	0.056	0.130	0.098	0.150	0.098
315	355	0.098	0.062	0.144	0.108	0.165	0.108
355	400	0.098	0.062	0.150	0.114	0.171	0.114
400	450	0.108	0.068	0.166	0.126	0.189	0.126
450	500	0.108	0.068	0.172	0.132	0.195	0.132

ISO Tolerances for Holes – In.

Diameter in.		Deviations in.						Deviations in.					
		B10		B11		B12		C9		C10		C11	
>	≤	Max.	Min.	Max.	Min.	Max.	Min.	Max.	Min.	Max.	Min.	Max.	Min.
0.1181	0.2362	+0.0074	+0.0055	+0.0085	+0.0055	+0.0102	+0.0055	+0.0039	+0.0028	+0.0046	+0.0028	+0.0057	+0.0028
0.2362	0.3937	+0.0082	+0.0059	+0.0094	+0.0059	+0.0118	+0.0059	+0.0046	+0.0031	+0.0054	+0.0031	+0.0067	+0.0031
0.3937	0.7087	+0.0087	+0.0059	+0.0102	+0.0059	+0.0130	+0.0059	+0.0054	+0.0037	+0.0065	+0.0037	+0.0081	+0.0037
0.7087	1.1811	+0.0096	+0.0063	+0.0114	+0.0063	+0.0146	+0.0063	+0.0064	+0.0043	+0.0076	+0.0043	+0.0094	+0.0043
1.1811	1.5748	+0.0106	+0.0067	+0.0130	+0.0067	+0.0165	+0.0067	+0.0072	+0.0047	+0.0087	+0.0047	+0.0110	+0.0047
1.5748	1.9685	+0.0110	+0.0071	+0.0134	+0.0071	+0.0169	+0.0071	+0.0076	+0.0051	+0.0091	+0.0051	+0.0114	+0.0051
1.9685	2.5591	+0.0122	+0.0075	+0.0150	+0.0075	+0.0193	+0.0075	+0.0084	+0.0055	+0.0102	+0.0055	+0.0120	+0.0055
2.5591	3.1496	+0.0126	+0.0079	+0.0154	+0.0079	+0.0197	+0.0079	+0.0088	+0.0059	+0.0106	+0.0059	+0.0134	+0.0059
3.1496	3.9370	+0.0142	+0.0087	+0.0173	+0.0087	+0.0224	+0.0087	+0.0101	+0.0067	+0.0122	+0.0067	+0.0154	+0.0067
3.9370	4.7244	+0.0150	+0.0094	+0.0181	+0.0094	+0.0232	+0.0094	+0.0105	+0.0071	+0.0126	+0.0071	+0.0157	+0.0071
4.7244	5.5118	+0.0165	+0.0102	+0.0201	+0.0102	+0.0260	+0.0102	+0.0118	+0.0079	+0.0142	+0.0079	+0.0177	+0.0079
5.5118	6.2992	+0.0173	+0.0110	+0.0209	+0.0110	+0.0268	+0.0110	+0.0122	+0.0083	+0.0146	+0.0083	+0.0181	+0.0083
6.2992	7.0866	+0.0185	+0.0122	+0.0220	+0.0122	+0.0280	+0.0122	+0.0130	+0.0091	+0.0154	+0.0091	+0.0189	+0.0091
7.0866	7.8740	+0.0207	+0.0134	+0.0248	+0.0134	+0.0315	+0.0134	+0.0140	+0.0094	+0.0167	+0.0094	+0.0209	+0.0094
7.8740	8.8583	+0.0222	+0.0150	+0.0264	+0.0150	+0.0331	+0.0150	+0.0148	+0.0102	+0.0175	+0.0102	+0.0217	+0.0102
8.8583	9.8425	+0.0238	+0.0165	+0.0280	+0.0165	+0.0346	+0.0165	+0.0156	+0.0110	+0.0183	+0.0110	+0.0224	+0.0110
9.8425	11.0236	+0.0272	+0.0189	+0.0315	+0.0189	+0.0394	+0.0189	+0.0169	+0.0118	+0.0201	+0.0118	+0.0244	+0.0118
11.0236	12.4016	+0.0295	+0.0213	+0.0339	+0.0213	+0.0417	+0.0213	+0.0181	+0.0130	+0.0213	+0.0130	+0.0256	+0.0130
12.4016	13.9764	+0.0327	+0.0236	+0.0378	+0.0236	+0.0461	+0.0236	+0.0197	+0.0142	+0.0232	+0.0142	+0.0283	+0.0142
13.9764	15.7480	+0.0358	+0.0268	+0.0409	+0.0268	+0.0492	+0.0268	+0.0213	+0.0157	+0.0248	+0.0157	+0.0299	+0.0157
15.7480	17.7165	+0.0398	+0.0299	+0.0457	+0.0299	+0.0547	+0.0299	+0.0234	+0.0173	+0.0272	+0.0173	+0.0331	+0.0173
17.71654	19.6850	+0.0429	+0.0331	+0.0488	+0.0331	+0.0579	+0.0331	+0.0250	+0.0189	+0.0287	+0.0189	+0.0346	+0.0189

Diameter in.		Deviations in.									
		E9		E10		E11		E12		E13	
>	≤	Max.	Min.	Max.	Min.	Max.	Min.	Max.	Min.	Max.	Min.
0.1181	0.2362	+0.0020	+0.0008	+0.0027	+0.0008	+0.0037	+0.0008	+0.0055	+0.0008	+0.0079	+0.0008
0.2362	0.3937	+0.0024	+0.0010	+0.0033	+0.0010	+0.0045	+0.0010	+0.0069	+0.0010	+0.0096	+0.0010
0.3937	0.7087	+0.0030	+0.0013	+0.0040	+0.0013	+0.0056	+0.0013	+0.0083	+0.0013	+0.0119	+0.0013
0.7087	1.1811	+0.0036	+0.0016	+0.0049	+0.0016	+0.0067	+0.0016	+0.0098	+0.0016	+0.0146	+0.0016
1.1811	1.9685	+0.0044	+0.0020	+0.0059	+0.0020	+0.0083	+0.0020	+0.0118	+0.0020	+0.0173	+0.0020
1.9685	3.1496	+0.0053	+0.0024	+0.0071	+0.0024	+0.0098	+0.0024	+0.0142	+0.0024	+0.0205	+0.0024
3.1496	4.7244	+0.0063	+0.0028	+0.0083	+0.0028	+0.0115	+0.0028	+0.0166	+0.0028	+0.0241	+0.0028
4.7244	7.0866	+0.0073	+0.0033	+0.0096	+0.0033	+0.0132	+0.0033	+0.0191	+0.0033	+0.0281	+0.0033
7.0866	9.8425	+0.0085	+0.0039	+0.0112	+0.0039	+0.0154	+0.0039	+0.0220	+0.0039	+0.0323	+0.0039
9.8425	12.4016	+0.0094	+0.0043	+0.0126	+0.0043	+0.0169	+0.0043	+0.0248	+0.0043	+0.0362	+0.0043
12.4016	15.7480	+0.0104	+0.0049	+0.0140	+0.0049	+0.0191	+0.0049	+0.0274	+0.0049	+0.0400	+0.0049
15.7480	19.6850	+0.0114	+0.0053	+0.0152	+0.0053	+0.0211	+0.0053	+0.0301	+0.0053	+0.0435	+0.0053

Diameter in.		Deviations in.							
		F5		F6		F7		F8	
>	≤	Max.	Min.	Max.	Min.	Max.	Min.	Max.	Min.
0.1181	0.2362	+0.0006	+0.0004	+0.0007	+0.0004	+0.0009	+0.0004	+0.0011	+0.0004
0.2362	0.3937	+0.0007	+0.0005	+0.0009	+0.0005	+0.0011	+0.0005	+0.0014	+0.0005
0.3937	0.7087	+0.0009	+0.0006	+0.0011	+0.0006	+0.0013	+0.0006	+0.0017	+0.0006
0.7087	1.1811	+0.0011	+0.0008	+0.0013	+0.0008	+0.0016	+0.0008	+0.0021	+0.0008
1.1811	1.9685	+0.0014	+0.0010	+0.0016	+0.0010	+0.0020	+0.0010	+0.0025	+0.0010
1.9685	3.1496	+0.0017	+0.0012	+0.0019	+0.0012	+0.0024	+0.0012	+0.0030	+0.0012
3.1496	4.7244	+0.0020	+0.0014	+0.0023	+0.0014	+0.0028	+0.0014	+0.0035	+0.0014
4.7244	7.0866	+0.0024	+0.0017	+0.0027	+0.0017	+0.0033	+0.0017	+0.0042	+0.0017
7.0866	9.8425	+0.0028	+0.0020	+0.0031	+0.0020	+0.0038	+0.0020	+0.0048	+0.0020
9.8425	12.4016	+0.0031	+0.0022	+0.0035	+0.0022	+0.0043	+0.0022	+0.0054	+0.0022
12.4016	15.7480	+0.0034	+0.0024	+0.0039	+0.0024	+0.0047	+0.0024	+0.0059	+0.0024
15.7480	19.6850	+0.0037	+0.0027	+0.0043	+0.0027	+0.0052	+0.0027	+0.0065	+0.0027

ISO Tolerances for Holes – In.							
Diameter in.		Deviations in.					
		G5		G6		G7	
>	≤	Max.	Min.	Max.	Min.	Max.	Min.
0.1181	0.2362	+0.0004	+0.0002	+0.0005	+0.0002	+0.0006	+0.0002
0.2362	0.3937	+0.0004	+0.0002	+0.0006	+0.0002	+0.0008	+0.0002
0.3937	0.7087	+0.0006	+0.0002	+0.0007	+0.0002	+0.0009	+0.0002
0.7087	1.1811	+0.0006	+0.0003	+0.0008	+0.0003	+0.0011	+0.0003
1.1811	1.9685	+0.0008	+0.0004	+0.0010	+0.0004	+0.0013	+0.0004
1.9685	3.1496	+0.0009	+0.0004	+0.0011	+0.0004	+0.0016	+0.0004
3.1496	4.7244	+0.0011	+0.0005	+0.0013	+0.0005	+0.0019	+0.0005
4.7244	7.0866	+0.0013	+0.0006	+0.0015	+0.0006	+0.0021	+0.0006
7.0866	9.8425	+0.0014	+0.0006	+0.0017	+0.0006	+0.0024	+0.0006
9.8425	12.4016	+0.0016	+0.0007	+0.0019	+0.0007	+0.0027	+0.0007
12.4016	15.7480	+0.0017	+0.0007	+0.0021	+0.0007	+0.0030	+0.0007
15.7480	19.6850	+0.0019	+0.0008	+0.0024	+0.0008	+0.0033	+0.0008

Diameter in.		Deviations in.									
		H4		H5		H6		H7		H8	
>	≤	Max.	Min.	Max.	Min.	Max.	Min.	Max.	Min.	Max.	Min.
0.1181	0.2362	+0.0002	0	+0.0002	0	+0.0003	0	+0.0005	0	+0.0007	0
0.2362	0.3937	+0.0002	0	+0.0002	0	+0.0004	0	+0.0006	0	+0.0009	0
0.3937	0.7087	+0.0002	0	+0.0003	0	+0.0004	0	+0.0007	0	+0.0011	0
0.7087	1.1811	+0.0002	0	+0.0004	0	+0.0005	0	+0.0008	0	+0.0013	0
1.1811	1.9685	+0.0003	0	+0.0004	0	+0.0006	0	+0.0010	0	+0.0015	0
1.9685	3.1496	+0.0003	0	+0.0005	0	+0.0007	0	+0.0012	0	+0.0018	0
3.1496	4.7244	+0.0004	0	+0.0006	0	+0.0009	0	+0.0014	0	+0.0021	0
4.7244	7.0866	+0.0005	0	+0.0007	0	+0.0010	0	+0.0016	0	+0.0025	0
7.0866	9.8425	+0.0006	0	+0.0008	0	+0.0011	0	+0.0018	0	+0.0028	0
9.8425	12.4016	+0.0006	0	+0.0009	0	+0.0013	0	+0.0020	0	+0.0032	0
12.4016	15.7480	+0.0007	0	+0.0010	0	+0.0014	0	+0.0022	0	+0.0035	0
15.7480	19.6850	+0.0008	0	+0.0011	0	+0.0016	0	+0.0025	0	+0.0038	0

Diameter in.		Deviations in.							
		H9		H10		H11		H12	
>	≤	Max.	Min.	Max.	Min.	Max.	Min.	Max.	Min.
0.1181	0.2362	+0.0012	0	+0.0019	0	+0.0030	0	+0.0047	0
0.2362	0.3937	+0.0014	0	+0.0023	0	+0.0035	0	+0.0059	0
0.3937	0.7087	+0.0017	0	+0.0028	0	+0.0043	0	+0.0071	0
0.7087	1.1811	+0.0020	0	+0.0033	0	+0.0051	0	+0.0083	0
1.1811	1.9685	+0.0024	0	+0.0039	0	+0.0063	0	+0.0098	0
1.9685	3.1496	+0.0029	0	+0.0047	0	+0.0075	0	+0.0118	0
3.1496	4.7244	+0.0034	0	+0.0055	0	+0.0087	0	+0.0138	0
4.7244	7.0866	+0.0039	0	+0.0063	0	+0.0098	0	+0.0157	0
7.0866	9.8425	+0.0045	0	+0.0073	0	+0.0114	0	+0.0181	0
9.8425	12.4016	+0.0051	0	+0.0083	0	+0.0126	0	+0.0205	0
12.4016	15.7480	+0.0055	0	+0.0091	0	+0.0142	0	+0.0224	0
15.7480	19.6850	+0.0061	0	+0.0098	0	+0.0157	0	+0.0248	0

ISO Tolerances for Holes – In.

Diameter in.		Deviations in.						Deviations in.					
		J6		J7		J8		K6		K7		K8	
>	≤	Max.	Min.	Max.	Min.	Max.	Min.	Max.	Min.	Max.	Min.	Max.	Min.
0.1181	0.2362	+0.00020	-0.00012	+0.00024	-0.00024	+0.00039	-0.00031	+0.00008	-0.00024	+0.00012	-0.00035	+0.00020	-0.00051
0.2362	0.3937	+0.00020	-0.00016	+0.00031	-0.00028	+0.00047	-0.00039	+0.00008	-0.00028	+0.00020	-0.00039	+0.00024	-0.00063
0.3937	0.7087	+0.00024	-0.00020	+0.00039	-0.00031	+0.00059	-0.00047	+0.00008	-0.00035	+0.00024	-0.00047	+0.00031	-0.00075
0.7087	1.1811	+0.00031	-0.00020	+0.00047	-0.00035	+0.00079	-0.00051	+0.00008	-0.00043	+0.00024	-0.00059	+0.00039	-0.00091
1.1811	1.9685	+0.00039	-0.00024	+0.00055	-0.00043	+0.00094	-0.00059	+0.00012	-0.00051	+0.00028	-0.00071	+0.00047	-0.00106
1.9685	3.1496	+0.00051	-0.00024	+0.00071	-0.00047	+0.00110	-0.00071	+0.00016	-0.00059	+0.00035	-0.00083	+0.00055	-0.00126
3.1496	4.7244	+0.00063	-0.00024	+0.00087	-0.00051	+0.00134	-0.00079	+0.00016	-0.00071	+0.00039	-0.00098	+0.00063	-0.00150
4.7244	7.0866	+0.00071	-0.00028	+0.00102	-0.00055	+0.00161	-0.00087	+0.00016	-0.00083	+0.00047	-0.00110	+0.00079	-0.00169
7.0866	9.8425	+0.00087	-0.00028	+0.00118	-0.00063	+0.00185	-0.00098	+0.00020	-0.00094	+0.00051	-0.00130	+0.00087	-0.00197
9.8425	12.4016	+0.00098	-0.00028	+0.00142	-0.00063	+0.00217	-0.00102	+0.00020	-0.00106	+0.00063	-0.00142	+0.00098	-0.00220
12.4016	15.7480	+0.00114	-0.00028	+0.00154	-0.00071	+0.00236	-0.00114	+0.00028	-0.00114	+0.00067	-0.00157	+0.00110	-0.00240
15.7480	19.6850	+0.00130	-0.00028	+0.00169	-0.00079	+0.00259	-0.00122	+0.00031	-0.00126	+0.00071	-0.00177	+0.00114	-0.00268

Diameter in.		Deviations in.						Deviations in.					
		M5		M6		M7		N6		N7		N8	
>	≤	Max.	Min.	Max.	Min.	Max.	Min.	Max.	Min.	Max.	Min.	Max.	Min.
0.1181	0.2362	-0.00012	-0.00031	-0.00004	-0.00035	0	-0.00047	-0.0002	-0.0005	-0.0002	-0.0006	-0.0001	-0.0008
0.2362	0.3937	-0.00016	-0.00039	-0.00012	-0.00047	0	-0.00059	-0.0003	-0.0006	-0.0002	-0.0007	-0.0001	-0.0010
0.3937	0.7087	-0.00016	-0.00047	-0.00016	-0.00059	0	-0.00071	-0.0004	-0.0008	-0.0002	-0.0009	-0.0001	-0.0012
0.7087	1.1811	-0.00020	-0.00055	-0.00016	-0.00067	0	-0.00083	-0.0004	-0.0009	-0.0003	-0.0011	-0.0001	-0.0014
1.1811	1.9685	-0.00020	-0.00063	-0.00016	-0.00079	0	-0.00098	-0.0005	-0.0011	-0.0003	-0.0013	-0.0001	-0.0017
1.9685	3.1496	-0.00024	-0.00075	-0.00020	-0.00094	0	-0.00118	-0.0006	-0.0013	-0.0004	-0.0015	-0.0002	-0.0020
3.1496	4.7244	-0.00031	-0.00091	-0.00024	-0.00110	0	-0.00138	-0.0006	-0.0015	-0.0004	-0.0018	-0.0002	-0.0023
4.7244	7.0866	-0.00035	-0.00106	-0.00031	-0.00130	0	-0.00157	-0.0008	-0.0018	-0.0005	-0.0020	-0.0002	-0.0026
7.0866	9.8425	-0.00043	-0.00122	-0.00031	-0.00146	0	-0.00181	-0.0009	-0.0020	-0.0006	-0.0024	-0.0002	-0.0030
9.8425	12.4016	-0.00051	-0.00142	-0.00035	-0.00161	0	-0.00205	-0.0000	-0.0022	-0.0006	-0.0026	-0.0002	-0.0034
12.4016	15.7480	-0.00055	-0.00154	-0.00039	-0.00181	0	-0.00224	-0.0010	-0.0024	-0.0006	-0.0029	-0.0002	-0.0037
15.7480	19.6850	-0.00063	-0.00169	-0.00039	-0.00197	0	-0.00248	-0.0011	-0.0026	-0.0007	-0.0031	-0.0002	-0.0041

Diameter in.		Deviations in.				Deviations in.					
		P6		P7		R6		R7		R8	
>	≤	Max.	Min.	Max.	Min.	Max.	Min.	Max.	Min.	Max.	Min.
0.1181	0.2362	-0.0004	-0.0007	-0.0003	-0.0008	-0.0005	-0.0008	-0.0004	-0.0009	-0.0006	-0.0013
0.2362	0.3937	-0.0005	-0.0008	-0.0004	-0.0009	-0.0006	-0.0010	-0.0005	-0.0011	-0.0007	-0.0016
0.3937	0.7087	-0.0006	-0.0010	-0.0004	-0.0011	-0.0008	-0.0012	-0.0006	-0.0013	-0.0009	-0.0020
0.7087	1.1811	-0.0007	-0.0012	-0.0006	-0.0014	-0.0009	-0.0015	-0.0008	-0.0016	-0.0011	-0.0024
1.1811	1.9685	-0.0008	-0.0015	-0.0007	-0.0017	-0.0011	-0.0018	-0.0010	-0.0020	-0.0013	-0.0029
1.9685	2.5591	-0.0010	-0.0018	-0.0008	-0.0020	-0.0014	-0.0021	-0.0012	-0.0024	-0.0016	-0.0034
2.5591	3.1496	-0.0010	-0.0018	-0.0008	-0.0020	-0.0015	-0.0022	-0.0013	-0.0024	-0.0017	-0.0035
3.1496	3.9370	-0.0012	-0.0020	-0.0009	-0.0023	-0.0017	-0.0026	-0.0015	-0.0029	-0.0020	-0.0041
3.9370	4.7244	-0.0012	-0.0020	-0.0009	-0.0023	-0.0019	-0.0027	-0.0016	-0.0030	-0.0021	-0.0043
4.7244	5.5118	-0.0014	-0.0024	-0.0011	-0.0027	-0.0022	-0.0032	-0.0019	-0.0035	-0.0025	-0.0050
5.5118	6.2992	-0.0014	-0.0024	-0.0011	-0.0027	-0.0023	-0.0033	-0.0020	-0.0035	-0.0026	-0.0050
6.2992	7.0866	-0.0014	-0.0024	-0.0011	-0.0027	0.0024	-0.0034	-0.0021	-0.0037	-0.0027	-0.0052
7.0866	7.8740	-0.0016	-0.0028	-0.0013	-0.0031	-0.0027	-0.0038	-0.0024	-0.0042	-0.0030	-0.0059
7.8740	8.8583	-0.0016	-0.0028	-0.0013	-0.0031	0.0028	-0.0039	-0.0025	-0.0043	-0.0031	-0.0060
8.8583	9.8425	-0.0016	-0.0028	-0.0013	-0.0031	-0.0030	-0.0041	-0.0026	-0.0044	-0.0033	-0.0061
9.8425	11.0236	-0.0019	-0.0031	-0.0014	-0.0035	-0.0033	-0.0046	-0.0029	-0.0050	-0.0037	-0.0069
11.0236	12.4016	-0.0019	-0.0031	-0.0014	-0.0035	-0.0035	-0.0048	-0.0031	-0.0051	-0.0039	-0.0070
12.4016	13.9764	-0.0020	-0.0034	-0.0016	-0.0039	-0.0038	-0.0052	-0.0034	-0.0057	-0.0043	-0.0078
13.9764	15.7480	-0.0020	-0.0034	-0.0016	-0.0039	-0.0041	-0.0055	-0.0037	-0.0059	-0.0045	-0.0080
15.7480	17.7165	-0.0022	-0.0037	-0.0018	-0.0043	-0.0044	-0.0060	-0.0041	-0.0065	-0.0050	-0.0088
17.7165	19.6850	-0.0022	-0.0037	-0.0018	-0.0043	-0.0047	-0.0063	-0.0043	-0.0068	-0.0052	-0.0090

ISO Tolerances for Holes – In.									
Diameter in.		Deviations in.							
		a10		a11		a12		a13	
>	≤	Max.	Min.	Max.	Min.	Max.	Min.	Max.	Min.
–	0.1181	-0.0106	-0.0122	-0.0106	-0.0130	-0.0106	-0.0146	-0.0106	-0.0161
0.1181	0.2362	-0.0106	-0.0125	-0.0106	-0.0136	-0.0106	-0.0154	-0.0106	-0.0177
0.2362	0.3937	-0.0110	-0.0133	-0.0110	-0.0146	-0.0110	-0.0169	-0.0110	-0.0197
0.3937	0.7087	-0.0114	-0.0142	-0.0114	-0.0157	-0.0114	-0.0185	-0.0114	-0.0220
0.7087	1.1811	-0.0118	-0.0151	-0.0118	-0.0169	-0.0118	-0.0201	-0.0118	-0.0248
1.1811	1.5748	-0.0122	-0.0161	-0.0122	-0.0185	-0.0122	-0.0220	-0.0122	-0.0276
1.5748	1.9685	-0.0126	-0.0165	-0.0126	-0.0189	-0.0126	-0.0224	-0.0126	-0.0280
1.9685	2.5591	-0.0134	-0.0181	-0.0134	-0.0209	-0.0134	-0.0252	-0.0134	-0.0315
2.5591	3.1496	-0.0142	-0.0189	-0.0142	-0.0217	-0.0142	-0.0260	-0.0142	-0.0323
3.1496	3.9370	-0.0150	-0.0205	-0.0150	-0.0236	-0.0150	-0.0287	-0.0150	-0.0362
3.9370	4.7244	-0.0161	-0.0217	-0.0161	-0.0248	-0.0161	-0.0299	-0.0161	-0.0374
4.7244	5.5118	-0.0181	-0.0244	-0.0181	-0.0280	-0.0181	-0.0339	-0.0181	-0.0429
5.5118	6.2992	-0.0205	-0.0268	-0.0205	-0.0303	-0.0205	-0.0362	-0.0205	-0.0453
6.2992	7.0866	-0.0228	-0.0291	-0.0228	-0.0327	-0.0228	-0.0386	-0.0228	-0.0476
7.0866	7.8740	-0.0260	-0.0333	-0.0260	-0.0374	-0.0260	-0.0441	-0.0260	-0.0543
7.8740	8.8583	-0.0291	-0.0364	-0.0291	-0.0406	-0.0291	-0.0472	-0.0291	-0.0575
8.8583	9.8425	-0.0323	-0.0396	-0.0323	-0.0437	-0.0323	-0.0504	-0.0323	-0.0606
9.8425	11.0236	-0.0362	-0.0445	-0.0362	-0.0488	-0.0362	-0.0567	-0.0362	-0.0681
11.0236	12.4016	-0.0413	-0.0496	-0.0413	-0.0539	-0.0413	-0.0618	-0.0413	-0.0732
12.4016	13.9764	-0.0472	-0.0563	-0.0472	-0.0614	-0.0472	-0.0697	-0.0472	-0.0823
13.9764	15.7480	-0.0531	-0.0622	-0.0531	-0.0673	-0.0531	-0.0756	-0.0531	-0.0882

Diameter in.		Deviations in.						Deviations in.					
		c11		c12		c13		e11		e12		e13	
>	≤	Max.	Min.	Max.	Min.	Max.	Min.	Max.	Min.	Max.	Min.	Max.	Min.
—	0.1181	-0.0024	-0.0047	-0.0024	-0.0063	-0.0024	-0.0079	-0.0006	-0.0029	-0.0006	-0.0045	-0.0006	-0.0061
0.1181	0.2362	-0.0028	-0.0057	-0.0028	-0.0075	-0.0028	-0.0098	-0.0008	-0.0037	-0.0008	-0.0055	-0.0008	-0.0079
0.2362	0.3937	-0.0031	-0.0067	-0.0031	-0.0091	-0.0031	-0.0118	-0.0010	-0.0045	-0.0010	-0.0069	-0.0010	-0.0096
0.3937	0.7087	-0.0037	-0.0081	-0.0037	-0.0108	-0.0037	-0.0144	-0.0013	-0.0056	-0.0013	-0.0083	-0.0013	-0.0119
0.7087	1.1811	-0.0043	-0.0094	-0.0043	-0.0126	-0.0043	-0.0173	-0.0016	-0.0067	-0.0016	-0.0098	-0.0016	-0.0146
1.1811	1.5748	-0.0047	-0.0110	-0.0047	-0.0146	-0.0047	-0.0201	-0.0020	-0.0083	-0.0020	-0.0118	-0.0020	-0.0173
1.5748	1.9685	-0.0051	-0.0114	-0.0051	-0.0150	-0.0051	-0.0205	-0.0020	-0.0083	-0.0020	-0.0118	-0.0020	-0.0173
1.9685	2.5591	-0.0055	-0.0130	-0.0055	-0.0173	-0.0055	-0.0236	-0.0024	-0.0098	-0.0024	-0.0142	-0.0024	-0.0205
2.5591	3.1496	-0.0059	-0.0134	-0.0059	-0.0177	-0.0059	-0.0240	-0.0024	-0.0098	-0.0024	-0.0142	-0.0024	-0.0205
3.1496	3.9370	-0.0067	-0.0154	-0.0067	-0.0205	-0.0067	-0.0280	-0.0028	-0.0115	-0.0028	-0.0166	-0.0028	-0.0241
3.9370	4.7244	-0.0071	-0.0157	-0.0071	-0.0209	-0.0071	-0.0283	-0.0028	-0.0115	-0.0028	-0.0166	-0.0028	-0.0241
4.7244	5.5118	-0.0079	-0.0177	-0.0079	-0.0236	-0.0079	-0.0327	-0.0033	-0.0132	-0.0033	-0.0191	-0.0033	-0.0281
5.5118	6.2992	-0.0083	-0.0181	-0.0083	-0.0240	-0.0083	-0.0331	-0.0033	-0.0132	-0.0033	-0.0191	-0.0033	-0.0281
6.2992	7.0866	-0.0091	-0.0189	-0.0091	-0.0248	-0.0091	-0.0339	-0.0033	-0.0132	-0.0033	-0.0191	-0.0033	-0.0281
7.0866	7.8740	-0.0094	-0.0209	-0.0094	-0.0276	-0.0094	-0.0378	-0.0039	-0.0154	-0.0039	-0.0220	-0.0039	-0.0323
7.8740	8.8583	-0.0102	-0.0217	-0.0102	-0.0283	-0.0102	-0.0386	-0.0039	-0.0154	-0.0039	-0.0220	-0.0039	-0.0323
8.8583	9.8425	-0.0110	-0.0224	-0.0110	-0.0291	-0.0110	-0.0394	-0.0039	-0.0154	-0.0039	-0.0220	-0.0039	-0.0323
9.8425	11.0236	-0.0118	-0.0244	-0.0118	-0.0323	-0.0118	-0.0437	-0.0043	-0.0169	-0.0043	-0.0248	-0.0043	-0.0362
11.0236	12.4016	-0.0130	-0.0256	-0.0130	-0.0335	-0.0130	-0.0449	-0.0043	-0.0169	-0.0043	-0.0248	-0.0043	-0.0362
12.4016	13.9764	-0.0142	-0.0283	-0.0142	-0.0366	-0.0142	-0.0492	-0.0049	-0.0191	-0.0049	-0.0274	-0.0049	-0.0400
13.9764	15.7480	-0.0157	-0.0299	-0.0157	-0.0382	-0.0157	-0.0508	-0.0049	-0.0191	-0.0049	-0.0274	-0.0049	-0.0400

ISO Tolerances for Shafts – In.

Diameter in.		Deviations in.						Deviations in.					
		f5		f6		f7		g5		g6		g7	
>	≤	Max.	Min.	Max.	Min.	Max.	Min.	Max.	Min.	Max.	Min.	Max.	Min.
—	0.1181	-0.0002	-0.0004	-0.0002	-0.0005	-0.0002	-0.0006	-0.0001	-0.0002	-0.0001	-0.0003	-0.0001	-0.0005
0.1181	0.2362	-0.0004	-0.0006	-0.0004	-0.0007	-0.0004	-0.0009	-0.0002	-0.0004	-0.0002	-0.0005	-0.0002	-0.0006
0.2362	0.3937	-0.0005	-0.0007	-0.0005	-0.0009	-0.0005	-0.0011	-0.0002	-0.0004	-0.0002	-0.0006	-0.0002	-0.0008
0.3937	0.7087	-0.0006	-0.0009	-0.0006	-0.0011	-0.0006	-0.0013	-0.0002	-0.0006	-0.0002	-0.0007	-0.0002	-0.0009
0.7087	1.1811	-0.0008	-0.0011	-0.0008	-0.0013	-0.0008	-0.0016	-0.0003	-0.0006	-0.0003	-0.0008	-0.0003	-0.0011
1.1811	1.9685	-0.0010	-0.0014	-0.0010	-0.0016	-0.0010	-0.0020	-0.0004	-0.0008	-0.0004	-0.0010	-0.0004	-0.0013
1.9685	3.1496	-0.0012	-0.0017	-0.0012	-0.0019	-0.0012	-0.0024	-0.0004	-0.0009	-0.0004	-0.0011	-0.0004	-0.0016
3.1496	4.7244	-0.0014	-0.0020	-0.0014	-0.0023	-0.0014	-0.0028	-0.0005	-0.0011	-0.0005	-0.0013	-0.0005	-0.0019
4.7244	7.0866	-0.0017	-0.0024	-0.0017	-0.0027	-0.0017	-0.0033	-0.0006	-0.0013	-0.0006	-0.0015	-0.0006	-0.0021
7.0866	9.8425	-0.0020	-0.0028	-0.0020	-0.0031	-0.0020	-0.0038	-0.0006	-0.0014	-0.0006	-0.0017	-0.0006	-0.0024
9.8425	12.4016	-0.0022	-0.0031	-0.0022	-0.0035	-0.0022	-0.0043	-0.0007	-0.0016	-0.0007	-0.0019	-0.0007	-0.0027
12.4016	15.7480	-0.0024	-0.0034	-0.0024	-0.0039	-0.0024	-0.0047	-0.0007	-0.0017	-0.0007	-0.0021	-0.0007	-0.0030

Diameter in.		Deviations in.									
		h4		h5		h6		h7		h8	
>	≤	Max.	Min.	Max.	Min.	Max.	Min.	Max.	Min.	Max.	Min.
—	0.1181	0	-0.00012	0	-0.00016	0	-0.00024	0	-0.0004	0	-0.0006
0.1181	0.2362	0	-0.00016	0	-0.00020	0	-0.00031	0	-0.0005	0	-0.0007
0.2362	0.3937	0	-0.0002	0	-0.00024	0	-0.0004	0	-0.0006	0	-0.0009
0.3937	0.7087	0	-0.0002	0	-0.00031	0	-0.0004	0	-0.0007	0	-0.0011
0.7087	1.1811	0	-0.0002	0	-0.0004	0	-0.0005	0	-0.0008	0	-0.0013
1.1811	1.9685	0	-0.0003	0	-0.0004	0	-0.0006	0	-0.0010	0	-0.0015
1.9685	3.1496	0	-0.0003	0	-0.0005	0	-0.0007	0	-0.0012	0	-0.0018
3.1496	4.7244	0	-0.0004	0	-0.0006	0	-0.0009	0	-0.0014	0	-0.0021
4.7244	7.0866	0	-0.0005	0	-0.0007	0	-0.0010	0	-0.0016	0	-0.0025
7.0866	9.8425	0	-0.0006	0	-0.0008	0	-0.0011	0	-0.0018	0	-0.0028
9.8425	12.4016	0	-0.0006	0	-0.0009	0	-0.0013	0	-0.0020	0	-0.0032
12.4016	15.7480	0	-0.0007	0	-0.0010	0	-0.0014	0	-0.0022	0	-0.0035

Diameter in.		Deviations in.									
		h9		h10		h11		h12		h13	
>	≤	Max.	Min.	Max.	Min.	Max.	Min.	Max.	Min.	Max.	Min.
—	0.1181	0	-0.0010	0	-0.0016	0	-0.0024	0	-0.0039	0	-0.0055
0.1181	0.2362	0	-0.0012	0	-0.0019	0	-0.0030	0	-0.0047	0	-0.0071
0.2362	0.3937	0	-0.0014	0	-0.0023	0	-0.0035	0	-0.0059	0	-0.0087
0.3937	0.7087	0	-0.0017	0	-0.0028	0	-0.0043	0	-0.0071	0	-0.0106
0.7087	1.1811	0	-0.0020	0	-0.0033	0	-0.0051	0	-0.0083	0	-0.0130
1.1811	1.9685	0	-0.0024	0	-0.0039	0	-0.0063	0	-0.0098	0	-0.0154
1.9685	3.1496	0	-0.0029	0	-0.0047	0	-0.0075	0	-0.0118	0	-0.0181
3.1496	4.7244	0	-0.0034	0	-0.0055	0	-0.0087	0	-0.0138	0	-0.0213
4.7244	7.0866	0	-0.0039	0	-0.0063	0	-0.0098	0	-0.0157	0	-0.0248
7.0866	9.8425	0	-0.0045	0	-0.0073	0	-0.0114	0	-0.0181	0	-0.0283
9.8425	12.4016	0	-0.0051	0	-0.0083	0	-0.0126	0	-0.0205	0	-0.0319
12.4016	15.7480	0	-0.0055	0	-0.0091	0	-0.0142	0	-0.0224	0	-0.0350

ISO Tolerances for Shafts – In.

Diameter in.		Deviations in.						Deviations in.					
		j5		j6		j7		k5		k6		k7	
>	≤	Max.	Min.	Max.	Min.	Max.	Min.	Max.	Min.	Max.	Min.	Max.	Min.
—	0.1181	+0.00008	-0.00008	+0.00016	-0.00008	+0.00024	-0.00016	+0.00016	0	+0.00024	0	+0.00039	0
0.1181	0.2362	+0.00012	-0.00008	+0.00024	-0.00008	+0.00031	-0.00016	+0.00024	+0.00004	+0.00035	+0.00004	+0.00051	+0.00004
0.2362	0.3937	+0.00016	-0.00008	+0.00028	-0.00008	+0.00039	-0.00020	+0.00028	+0.00004	+0.00039	+0.00004	+0.00063	+0.00004
0.3937	0.7087	+0.00020	-0.00012	+0.00031	-0.00012	+0.00047	-0.00024	+0.00035	+0.00004	+0.00047	+0.00004	+0.00075	+0.00004
0.7087	1.1811	+0.00020	-0.00016	+0.00035	-0.00016	+0.00051	-0.00031	+0.00043	+0.00008	+0.00059	+0.00008	+0.00091	+0.00008
1.1811	1.9685	+0.00024	-0.00020	+0.00043	-0.00020	+0.00059	-0.00039	+0.00051	+0.00008	+0.00071	+0.00008	+0.00106	+0.00008
1.9685	3.1496	+0.00024	-0.00028	+0.00047	-0.00028	+0.00071	-0.00047	+0.00059	+0.00008	+0.00083	+0.00008	+0.00126	+0.00008
3.1496	4.7244	+0.00024	-0.00035	+0.00051	-0.00035	+0.00079	-0.00059	+0.00071	+0.00012	+0.00098	+0.00012	+0.00150	+0.00012
4.7244	7.0866	+0.00028	-0.00043	+0.00055	-0.00043	+0.00087	-0.00071	+0.00083	+0.00012	+0.00110	+0.00012	+0.00169	+0.00012
7.0866	9.8425	+0.00028	-0.00051	+0.00063	-0.00051	+0.00098	-0.00083	+0.00094	+0.00016	+0.00130	+0.00016	+0.00197	+0.00016
9.8425	12.4016	+0.00028	-0.00063	+0.00063	-0.00063	+0.00102	-0.00102	+0.00106	+0.00016	+0.00142	+0.00016	+0.00220	+0.00016
12.4016	15.7480	+0.00028	-0.00071	+0.00071	-0.00071	+0.00114	-0.00110	+0.00114	+0.00016	+0.00157	+0.00016	+0.00240	+0.00016

Diameter in.		Deviations in.						Deviations in.					
		m5		m6		m7		n5		n6		n7	
>	≤	Max.	Min.	Max.	Min.	Max.	Min.	Max.	Min.	Max.	Min.	Max.	Min.
—	0.1181	+0.00024	+0.00008	+0.00031	+0.00008	+0.00047	+0.00008	+0.0003	+0.0002	+0.0004	+0.0002	+0.0006	+0.0002
0.1181	0.2362	+0.00035	+0.00016	+0.00047	+0.00016	+0.00063	+0.00016	+0.0005	+0.0003	+0.0006	+0.0003	+0.0008	+0.0003
0.2362	0.3937	+0.00047	+0.00024	+0.00059	+0.00024	+0.00083	+0.00024	+0.0006	+0.0004	+0.0007	+0.0004	+0.0010	+0.0004
0.3937	0.7087	+0.00059	+0.00028	+0.00071	+0.00028	+0.00098	+0.00028	+0.0008	+0.0005	+0.0009	+0.0005	+0.0012	+0.0005
0.7087	1.1811	+0.00067	+0.00031	+0.00083	+0.00031	+0.00114	+0.00031	+0.0009	+0.0006	+0.0011	+0.0006	+0.0014	+0.0006
1.1811	1.9685	+0.00079	+0.00035	+0.00098	+0.00035	+0.00134	+0.00035	+0.0011	+0.0007	+0.0013	+0.0007	+0.0017	+0.0007
1.9685	3.1496	+0.00094	+0.00043	+0.00118	+0.00043	+0.00161	+0.00043	+0.0013	+0.0008	+0.0015	+0.0008	+0.0020	+0.0008
3.1496	4.7244	+0.00110	+0.00051	+0.00138	+0.00051	+0.00189	+0.00051	+0.0015	+0.0009	+0.0018	+0.0009	+0.0023	+0.0009
4.7244	7.0866	+0.00130	+0.00059	+0.00157	+0.00059	+0.00217	+0.00059	+0.0018	+0.0011	+0.0020	+0.0011	+0.0026	+0.0011
7.0866	9.8425	+0.00146	+0.00067	+0.00181	+0.00067	+0.00248	+0.00067	+0.0020	+0.0012	+0.0024	+0.0012	+0.0030	+0.0012
9.8425	12.4016	+0.00169	+0.00079	+0.00205	+0.00079	+0.00283	+0.00079	+0.0022	+0.0013	+0.0026	+0.0013	+0.0034	+0.0013
12.4016	15.7480	+0.00181	+0.00083	+0.00224	+0.00083	+0.00307	+0.00083	+0.0024	+0.0015	+0.0029	+0.0015	+0.0037	+0.0015

Diameter in.		Deviations in.					
		p6		r6		r7	
>	≤	Max.	Min.	Max.	Min.	Max.	Min.
3.1496	3.9370	+0.0023	+0.0015	-	-	-	-
3.9370	4.7244	+0.0023	+0.0015	-	-	-	-
4.7244	5.5118	+0.0027	+0.0017	+0.0035	+0.0026	-	-
5.5118	6.2992	+0.0027	+0.0017	+0.0035	+0.0026	-	-
6.2992	7.0866	+0.0027	+0.0017	+0.0035	+0.0026	-	-
7.0866	7.8740	+0.0031	+0.0020	+0.0042	+0.0030	-	-
7.8740	8.8583	+0.0031	+0.0020	+0.0043	+0.0031	+0.0050	+0.0031
8.8583	9.8425	+0.0031	+0.0020	+0.0044	+0.0033	+0.0051	+0.0033
9.8425	11.0236	+0.0035	+0.0022	+0.0050	+0.0037	+0.0057	+0.0037
11.0236	12.4016	+0.0035	+0.0022	+0.0051	+0.0039	+0.0059	+0.0039
12.4016	13.9764	+0.0039	+0.0024	+0.0057	+0.0043	+0.0065	+0.0043
13.9764	15.7480	+0.0039	+0.0024	+0.0059	+0.0045	+0.0067	+0.0045
15.7480	17.7165	+0.0043	+0.0027	+0.0065	+0.0050	+0.0074	+0.0050
17.7165	19.6850	+0.0043	+0.0027	+0.0068	+0.0052	+0.0077	+0.0052

MOUNTING DESIGNS

METRIC SERIES NEEDLE ROLLER BEARINGS (EXCEPT DRAWN CUP BEARINGS)

Metric series needle roller bearings are available with Radial Internal Clearance (RIC) designations per either of the following tables: per "ISO/ABMA 'C' Clearance." Non-standard values also are available by special request. Standard radial internal clearance values are listed in the following tables based on bore size. The clearance required for a given application depends on the desired operating precision, rotational speed of the bearing and the fitting practice used. Most applications use a normal or C0 clearance. Typically, larger clearance reduces the operating zone of the bearing, increases the maximum roller load and reduces the bearing's expected life.

Table A-6. Metric series needle roller bearing radial internal clearance limits

Bore		C2		C0		C3		C4	
		RIC							
over	incl.	Max.	Min.	Max.	Min.	Max.	Min.	Max.	Min
mm in.	mm in.	mm in.	mm in.	mm in.	mm in.	mm in.	mm in.	mm in.	mm in.
-	**30.000**	**0.025**	**0.000**	**0.045**	**0.020**	**0.060**	**0.035**	**0.075**	**0.050**
-	1.1811	0.0010	0.0000	0.0018	0.0008	0.0024	0.0014	0.0030	0.0020
30.000	**40.000**	**0.030**	**0.005**	**0.050**	**0.025**	**0.070**	**0.045**	**0.085**	**0.060**
1.1811	1.5748	0.0012	0.0002	0.0020	0.0010	0.0028	0.0018	0.0033	0.0024
40.000	**50.000**	**0.035**	**0.005**	**0.060**	**0.030**	**0.080**	**0.050**	**0.100**	**0.070**
1.5748	1.9685	0.0014	0.0002	0.0024	0.0012	0.0031	0.0020	0.0039	0.0028
50.000	**65.000**	**0.040**	**0.010**	**0.070**	**0.040**	**0.090**	**0.060**	**0.110**	**0.080**
1.9685	2.5591	0.0016	0.0004	0.0028	0.0016	0.0035	0.0024	0.0043	0.0031
65.000	**80.000**	**0.045**	**0.010**	**0.075**	**0.040**	**0.100**	**0.065**	**0.125**	**0.090**
2.5591	3.1496	0.0018	0.0004	0.0030	0.0016	0.0039	0.0026	0.0049	0.0035
80.000	**100.000**	**0.050**	**0.015**	**0.085**	**0.050**	**0.110**	**0.075**	**0.140**	**0.105**
3.1496	3.9370	0.0020	0.0006	0.0033	0.0020	0.0043	0.0030	0.0055	0.0041
100.000	**120.000**	**0.055**	**0.015**	**0.090**	**0.050**	**0.125**	**0.085**	**0.165**	**0.125**
3.9370	4.7244	0.0022	0.0006	0.0035	0.0020	0.0049	0.0033	0.0065	0.0049
120.000	**140.000**	**0.060**	**0.015**	**0.105**	**0.060**	**0.145**	**0.100**	**0.190**	**0.145**
4.7244	5.5118	0.0024	0.0006	0.0041	0.0024	0.0057	0.0039	0.0075	0.0057
140.000	**160.000**	**0.070**	**0.020**	**0.120**	**0.070**	**0.165**	**0.115**	**0.215**	**0.165**
5.5118	6.2992	0.0028	0.0008	0.0047	0.0028	0.0065	0.0045	0.0085	0.0065
160.000	**180.000**	**0.075**	**0.025**	**0.125**	**0.075**	**0.170**	**0.120**	**0.220**	**0.170**
6.2992	7.0866	0.0030	0.0010	0.0049	0.0030	0.0067	0.0047	0.0087	0.0067
180.000	**200.000**	**0.090**	**0.035**	**0.145**	**0.090**	**0.195**	**0.140**	**0.250**	**0.195**
7.0866	7.8740	0.0035	0.0014	0.0057	0.0035	0.0077	0.0055	0.0098	0.0077
200.000	**225.000**	**0.105**	**0.045**	**0.165**	**0.105**	**0.220**	**0.160**	**0.280**	**0.220**
7.8740	8.8583	0.0041	0.0018	0.0065	0.0041	0.0087	0.0063	0.0110	0.0087
225.000	**250.000**	**0.110**	**0.045**	**0.175**	**0.110**	**0.235**	**0.170**	**0.300**	**0.235**
8.8583	9.8425	0.0043	0.0018	0.0069	0.0043	0.0093	0.0067	0.0118	0.0093
250.000	**280.000**	**0.125**	**0.055**	**0.195**	**0.125**	**0.260**	**0.190**	**0.330**	**0.260**
9.8425	11.0236	0.0049	0.0022	0.0077	0.0049	0.0102	0.0075	0.0130	0.0102
280.000	**315.000**	**0.130**	**0.055**	**0.205**	**0.130**	**0.275**	**0.200**	**0.350**	**0.275**
11.0236	12.4016	0.0051	0.0022	0.0081	0.0051	0.0108	0.0079	0.0138	0.0108
315.000	**355.000**	**0.145**	**0.065**	**0.225**	**0.145**	**0.305**	**0.225**	**0.385**	**0.305**
12.4016	13.9764	0.0057	0.0026	0.0089	0.0057	0.0120	0.0089	0.0152	0.0120
355.000	**400.000**	**0.190**	**0.100**	**0.280**	**0.190**	**0.370**	**0.280**	**0.460**	**0.370**
13.9764	15.7480	0.0075	0.0039	0.0110	0.0075	0.0146	0.0110	0.0181	0.0146
400.000	**450.000**	**0.210**	**0.110**	**0.310**	**0.210**	**0.410**	**0.310**	**0.510**	**0.410**
15.7480	17.7165	0.0083	0.0043	0.0122	0.0083	0.0161	0.0122	0.0201	0.0161
450.000	**500.000**	**0.220**	**0.110**	**0.330**	**0.220**	**0.440**	**0.330**	**0.550**	**0.440**
17.7165	19.6850	0.0087	0.0043	0.0130	0.0087	0.0173	0.0130	0.0217	0.0173

METRIC SERIES BEARING CHAMFER DIMENSIONS

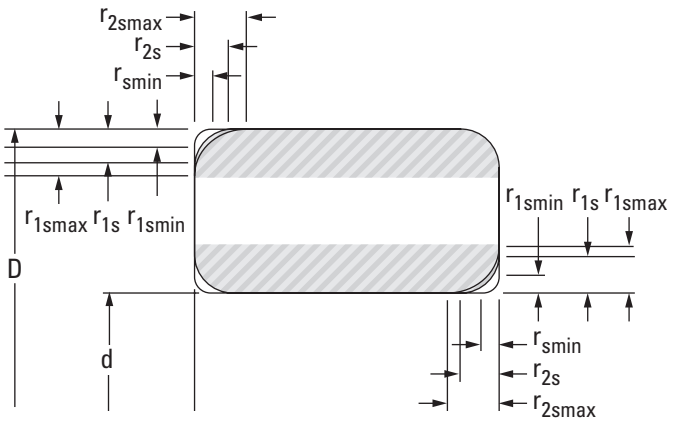

Radial Bearings

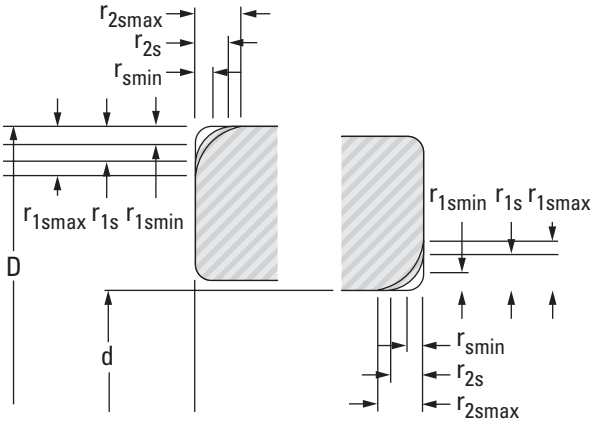

Thrust Bearings

Table A-7. Chamfer dimensions of radial bearings metric series

$r_{s\,min}$	d Nominal bore dia.	$r_{1s\,max}$	r_{2smax}
mm in.	**mm** in.	**mm** in.	**mm** in.
0.150 0.0059	all all	**0.300** 0.0118	**0.600** 0.0236
0.200 0.0079	all all	**0.500** 0.0197	**0.800** 0.0315
0.300 0.0118	**≤40.000** **>40.000** ≤1.5748 >1.5748	**0.600** **0.800** 0.0236 0.0315	**1.000** **1.000** 0.0394 0.0394
0.600 0.0236	**≤40.000** **>40.000** ≤1.5748 >1.5748	**1.000** **1.300** 0.0394 0.0512	**2.000** **2.000** 0.0787 0.0787
1.000 0.0394	**≤50.000** **>50.000** ≤1.9685 >1.9685	**1.500** **1.900** 0.0591 0.0748	**3.000** **3.000** 0.1181 0.1181
1.100 0.0433	**≤120.000** **>120.000** 4.7244 4.7244	**2.000** **2.500** 0.0787 0.0984	**3.500** **4.000** 0.1378 0.1575
1.500 0.0591	**≤120.000** **>120.000** 4.7244 4.7244	**2.300** **3.000** 0.09055 0.1181	**4.000** **5.000** 0.1575 0.19685
2.000 0.0787	**≤80.000** **>80.000 ≤220.000** **>220.000** ≤3.1496 >3.1496 ≤8.6614 >8.6614	**3.000** **3.500** **3.800** 0.1181 0.1378 0.1496	**4.500** **5.000** **6.000** 0.1772 0.19685 0.2362
2.100 0.0827	**≤280.000** **>280.000** 11.0236 11.0236	**4.000** **4.500** 0.1575 0.1772	**6.500** **7.000** 0.2559 0.2756

Table A-8. Chamfer dimensions of thrust bearings metric series

$r_{s\,min}$	$r_{1s\,max}$	r_{2smax}
mm in.	**mm** in.	**mm** in.
0.300 0.0118	**0.800** 0.0315	**0.800** 0.0315
0.600 0.0236	**1.500** 0.0591	**1.500** 0.0591
1.000 0.0394	**2.200** 0.0866	**2.200** 0.0866
1.100 0.0433	**2.700** 0.1063	**2.700** 0.1063
1.500 0.0591	**3.500** 0.1378	**3.500** 0.1378
2.000 0.0787	**4.000** 0.1575	**4.000** 0.1575

ABMA / ISO Symbols

d	Bearing bore diameter, nominal and shaft-piloted washer bore diameter, nominal.
D	Bearing outside diameter, nominal and housing-piloted washer outside diameter, nominal.
$r_{s\,min}$	Smallest permissible single chamfer dimension (minimum limit).
$r_{1s\,max}$	Largest permissible single chamfer dimension in a radial direction.
$r_{2s\,max}$	Largest permissible single chamfer dimension in an axial direction.

SHAFT DESIGNS

BEARINGS WITHOUT INNER RINGS

When the shaft is used as the inner raceway for needle roller bearings it must have a hardness between 58 and 64 HRC and a wave-free finish in order to realize the full load-carrying capability of the bearing.

1. **Metallurgy** – either case-hardening or through-hardening grades of good bearing-quality steel are satisfactory for raceways. Steels that are modified for free machining, such as those high in sulfur content and particularly those containing lead, are seldom satisfactory for raceways.

   To realize full bearing capacity, the raceway area must be at least surface hard with a reasonable core strength. It is preferred that the case depth be not less than 0.38 mm (0.0150 in.). The preferred surface hardness is equivalent to 58 HRC. If the raceway is of lesser hardness, see the modification factors shown in Tables A-3 and A-4 on page A-7.

   The minimum effective case depth of hardened and ground raceways, for use with all types of needle roller bearings, depends on the applied load, the diameter of the rolling elements and the core strength of the steel used. To calculate the approximate case depth the following formula may be used:

   Min case depth = (0.07 to 0.12) x D_w

   D_w is the diameter of the rolling element.

   The high value should apply to a low core-strength material and/or heavy loads.

   The effective case is defined as the distance from the surface, after final grind, to the 50 HRC hardness level.

2. **Strength** – the shaft must be of sufficient strength to keep the operating deflections within the limits outlined.
3. **Tolerance** – the suggested shaft diameter tolerances for each type of needle roller bearing are indicated in the appropriate section of this catalog.
4. **Variation of mean shaft diameter** – within the length of the bearing raceway should not exceed 0.008 mm (0.0003 in.), or one-half the diameter tolerance (whichever is smaller).
5. **Deviation from circular form** – the radial deviation from true circular form of the raceway should not exceed 0.0025 mm (0.0001 in.) for diameters up to and including 25.000 mm (1.0000 in.). For raceways greater than 25.000 mm (1.0000 in.), the allowable radial deviation should not exceed 0.0025 mm (0.0001 in.) multiplied by a factor of the raceway diameter divided by 25.000 for mm (1.0000 for in.).
6. **High frequency lobing** – the lobing which occurs 10 or more times around the circumference of a shaft and exceeds 0.0004 mm (0.000015 in.) peak-to-valley is defined as chatter. Chatter usually causes undesirable noise and reduces fatigue life.
7. **Surface finish** – In addition to a wave-free finish, the raceway surface roughness of $R_a \leq 0.2$ µm (8.0 µin.) must be maintained for the bearing to utilize its full load rating. The raceway area also must be free of nicks, burrs, scratches and dents. Oil holes are permissible in the raceway area, but care must be taken to blend the edges gently into the raceway, and if possible, the hole should be located in the unloaded zone of the raceway.

   Care also must be taken to prevent grind reliefs, fillets, etc., from extending into the raceway area. If the rollers overhang a grind relief or step on the shaft, there will be high stress concentration with resultant early damage.
8. **End chamfer** – for the most effective assembly of the shaft into a bearing, the end of the shaft should have a large chamfer or rounding. This should help in preventing damage to the roller complement, scratching of the raceway surface, and nicking of the shaft end.
9. **Sealing surface** – in some instances, bearings have integral or immediately adjacent seals that operate on the surface ground for the bearing raceway. Here, particular attention should be paid to the pattern of the shaft finish. In no instance should there be a "lead," or spiral effect, as often occurs with through-feed centerless grinding. Such a "lead" may pump lubricant past the seal.

BEARINGS WITH INNER RINGS

When it is undesirable or impractical to prepare the shaft to be used as a raceway, inner rings are available as listed in the tabular pages. If the shaft is not used directly as a raceway, the following design specifications must be met:

1. **Strength** – the shaft must be of sufficient strength to keep the operating deflections within the limits outlined.
2. **Tolerance** – the suggested shaft diameter tolerances for each type of needle roller bearing are indicated in the appropriate section of the catalog.
3. **Variation of mean shaft raceway diameter and deviation from circular form of the raceway** – should not exceed one-half the shaft diameter tolerance.
4. **Surface finish** – the surface finish should not exceed R_a 1.6 µm (63 µin.).
5. **Locating shoulders or steps** – locating shoulders or steps in the shaft must be held to close concentricity with the bearing seat to prevent imbalance and resultant vibrations.

A

HOUSING DESIGNS

BEARINGS WITH OUTER RINGS

For bearings with outer rings, the function of the housing is to locate and support the outer ring. The following specifications must be met:

1. **Strength** – housings should be designed so that the radial loads placed on the bearings will cause a minimum of deflection or distortion of the housing.
2. **Variation of mean housing diameter** – within the length of the outer ring should not exceed 0.013 mm (0.0005 in.).
3. **Deviation from circular form** – the housing bore should be round within one-half the housing bore tolerance.
4. **Parallelism** – when possible, line bore housings that are common to one shaft to obtain parallelism of the housing bores and the shaft axis.
5. **Surface finish** – The surface finish should not exceed R_a 1.6 µm (63 µin.).
6. **End chamfer** – to permit easy introduction of the bearing into the housing, the end of the housing should have a generous chamfer.

Only heavy-duty needle roller bearings can be installed into housings with a transition fit or a clearance fit. The outer ring should be a transition fit in the housing when it rotates relative to the load. The outer ring may be a clearance fit in the housing when it is stationary relative to the load. In either case, locate the bearings by shoulders, or other locating devices, to prevent axial movement.

Since only the heavy-duty needle roller bearing does not require an interference fit in the housing to round and size it properly, a split housing may be used if desired. Dowels should be used to maintain proper register of the housing sections.

Drawn cup bearings have a thin case-hardened outer ring that is out-of-round from the hardening operation. For proper mounting it must **always** be pressed into the housing. Split housings will not round and size a drawn cup bearing. When split housings must be used, the bearing should first be mounted in a cylindrical sleeve.

The housing should be of sufficient tensile strength and section to round and size the bearing. It must be designed for minimum distortion under load. Steel or cast iron housings are preferred. Housing bores in low tensile strength materials such as aluminum, magnesium, phenolics, etc., should be reduced to provide more interference fit. Thin section cast iron and steel housings may also require reduced bores. Consult your representative for suggestions when working with these lower strength housings.

The housing should be through-bored if possible. When shouldered housing bores are unavoidable, the bearing should be located far enough from the shoulder to avoid the danger of crushing the end of the drawn cup during installation.

When the drawn cup bearing is mounted close to the housing face, care should be taken to mount the bearing at least 0.250 mm (0.0100 in.) within the housing face to protect the bearing lip.

BEARINGS WITHOUT OUTER RINGS

In many cases, such as with gear bores, it is desirable to have the housing bore serve as the outer raceway for radial needle roller and cage assemblies or loose needle roller complements. In those instances, as for shafts used as a raceway, the housing bore must have a hardness between 58 and 64 HRC and a roughness Ra ≤ 0.2 µm (8.0 µin.), so that the full load-carrying capacity of the bearing is realized.

1. **Strength** – the housing must be of sufficient cross section to maintain proper roundness and running clearance under maximum load.
2. **Metallurgical** – material selection, hardness and case depth should be consistent with the requirements for inner raceways given in the shaft design.
3. **Variation of mean housing raceway diameter and deviation from circular form of the raceway** – the raceway out-of-roundness and taper should not exceed 0.008 mm (0.0003 in.) or one-half the bore tolerance, whichever is smaller. In addition, the bore diameter must never be smaller at both ends than in the center [sway-back].
4. **Surface finish** – In addition to a wave-free finish, the raceway surface roughness of Ra ≤ 0.2 µm (8.0 µin.) must be maintained for the bearing to utilize its full load rating. The raceway area also must be free of nicks, burrs, scratches and dents.
5. **Grind reliefs** – care must be exercised to ensure that grind reliefs, fillets, etc., do not extend to the raceway. Oil holes in the raceway area are permissible, but the edges must be blended smoothly with the raceway and, if possible, the hole should be located in the unloaded zone of the raceway.

LUBRICATION AND SEALS

To help maintain a rolling bearing's anti-friction characteristics, lubrication is needed to:

- Minimize rolling resistance due to deformation of the rolling elements and raceway under load by separating the mating surfaces.
- Minimize sliding friction occurring between rolling elements, raceways and cage.
- Transfer heat (with oil lubrication).
- Protect from corrosion and, with grease lubrication, from contaminant ingress.

Modern lubricants do this very effectively. Although in many applications, the means by which they accomplish this are extremely complex and not completely understood. Because the principles involved with lubricating rolling element bearings are complex; and do not have to be known to employ lubricants successfully, this discussion will stress the practical rather than the theoretical aspects of lubrication.

LUBRICATION SELECTION

The wide range of bearing types and operating conditions precludes any simple, all-inclusive statement or guideline allowing the selection of the proper lubricant. At the design level, the first consideration is whether oil or grease is best for the particular operation. The advantages of oil and grease are outlined in the table below. When heat must be carried away from the bearing, oil must be used. It is nearly always preferred for very high-speed applications. For limiting speeds of grease and oil-lubricated bearings, refer to the section entitled Torque.

Table A-9. Advantages of oil and grease

Oil	Grease
Carries heat away from the bearings	Simplifies seal design and acts as a sealant
Carries away moisture and particulate matter	Permits prelubrication of sealed or shielded bearings
Easily controlled lubrication	Generally requires less frequent lubrication

LUBRICANT ADDITIVES

Additives are materials, usually chemicals, that improve specific properties when added to lubricants. Additives, when properly formulated into a lubricant, can increase lubricant life, provide greater resistance to corrosion, increase load-carrying capacity and enhance other properties. Additives are very complex and should not be added indiscriminately to lubricants as a cure-all for all lubrication problems.

The more common lubricant additives include:

- Oxidation inhibitors for increasing lubricant service life.
- Rust or corrosion inhibitors to protect surfaces.
- Demulsifiers to promote oil and water separation.
- Viscosity-index improvers to decrease viscosity sensitivity to temperature change.
- Pour-point depressants to lower the pouring point at low temperatures.
- Lubricity agents to modify friction.
- Anti-wear agents to retard wear.
- Extreme pressure (EP) additives to prevent scoring under boundary-lubrication conditions.
- Detergents and dispersants to maintain cleanliness.
- Anti-foam agents to reduce foam.
- Tackiness agents to improve adhesive properties.

Inorganic additives such as molybdenum disulphide, graphite and zinc oxide are sometimes included in lubricants. In most roller bearing applications, inorganic additives are of no significant benefit. Conversely, as long as the concentration is low and the particle size small, they are not harmful.

Recently, the effects of lubricant chemistry on bearing life (as opposed to the purely physical characteristics) have received much emphasis. Rust, oxidation, extreme pressure and anti-wear additive packages are widely used in engine and gear oils. Fatigue testing has shown these additives may – depending on their chemical formulation, concentration and operating temperature – have a positive or negative impact on bearing life.

GUIDANCE FOR OIL/GREASE SELECTION

Oil Lubrication

Oils used for bearing lubrication should be high-quality, non-oxidizing mineral oils or synthetic oils with similar properties. Selection of the proper type of oils depends on bearing speed, load, operating temperature and method of lubrication. Some features and advantages of oil lubrication, in addition to the above, are as follows:

- Oil is a better lubricant for high speeds or high temperatures. It can be cooled to help reduce bearing temperature.
- With oil, it is easier to handle and control the amount of lubricant reaching the bearing. It is harder to retain in the bearing. Lubricant losses may be higher than with grease.
- As a liquid, oil can be introduced to the bearing in many ways, such as drip-feed, wick-feed, pressurized circulating systems, oil bath or air-oil mist. Each is suited for certain types of applications.
- Oil is easier to keep clean for recirculating systems.

Oil may be introduced to the bearing housing in many ways. The most common systems are:

- Oil bath. The housing is designed to provide a sump through which the rolling elements of the bearing will pass. Generally, the oil level should be no higher than the center point of the lowest rolling element. If speed is high, lower oil levels should be used to reduce churning. Gages or controlled elevation drains are used to achieve and maintain the proper oil level.
- Circulating system. This system has the advantages of:
  - An adequate supply of oil for both cooling and lubrication.
  - Metered control of the quantity of oil delivered to each bearing.
  - Removal of contaminants and moisture from the bearing by flushing action.
  - Suitability for multiple bearing installations.
  - Large reservoir, which reduces deterioration. Increased lubricant life provides economical efficiency.
  - Incorporation of oil-filtering devices.
  - Positive control to deliver the lubricant where needed.

  A typical circulating oil system consists of an oil reservoir, pump, piping and filter. A cooler may be required.
- Oil-mist lubrication. Oil-mist lubrication systems are used in high-speed, continuous operation applications. This system permits close control of the amount of lubricant reaching the bearings. The oil may be metered, atomized by compressed air and mixed with air, or it may be picked up from a reservoir using a venturi effect. In either case, the air is filtered and supplied under sufficient pressure to assure adequate lubrication of the bearings. Control of this type of lubrication system is accomplished by monitoring the operating temperatures of the bearings being lubricated. The continuous passage of the pressurized air and oil, through the labyrinth seals used in the system, prevents the entrance of contaminants from the atmosphere to the system. The successful operation of this type of system is based upon the following factors: proper location of the lubricant entry ports in relation to the bearings being lubricated, avoidance of excessive pressure drops across void spaces within the system, proper air pressure and oil quantity ratio to suit the particular application, and adequate exhaust of the air-oil mist after lubrication has been accomplished. To ensure "wetting" of the bearings, and to prevent possible damage to the rolling elements and races, it is imperative that the oil-mist system be turned on for several minutes before the equipment is started. The importance of "wetting" the bearing before starting cannot be overstated, and it also has particular significance for equipment that has been idled for extended periods of time.

OIL LUBRICATION GUIDELINES

Oil Lubrication

Lubricating oils are commercially available in many forms for automotive, industrial, aircraft and other uses. Oils are classified as either petroleum types (refined from crude oil) or synthetic types (produced by chemical synthesis).

Petroleum Oils

Petroleum oils are used for nearly all oil-lubricated applications of bearings. These oils have physical and chemical properties that can help in the selection of the correct oil for any bearing application.

Synthetic Oils

Synthetic oils cover a broad range of categories and include polyalphaolefins, silicones, polyglycols and various esters. In general, synthetic oils are less prone to oxidation and can operate at extreme hot or cold temperatures. Physical properties, such as pressure-viscosity coefficients, tend to vary between oil types and caution should be used when making oil selections.

The polyalphaolefins (PAO) have a hydrocarbon chemistry, which parallel petroleum oil both in their chemical structures and pressure-viscosity coefficients. Therefore, PAO oil is mostly used in the oil-lubricated applications of bearings when severe temperature environments (hot and cold) are encountered or when extended lubricant life is required. The silicone, ester and polyglycol oils have an oxygen-based chemistry that is structurally quite different from petroleum oils and PAO oils. This difference has a profound effect on its physical properties where pressure- viscosity coefficients can be lower compared to mineral and PAO oils. This means that these types of synthetic oils may actually generate a smaller EHD film thickness than a mineral or PAO oil of equal viscosity at operating temperature. Reductions in bearing fatigue life and increases in bearing wear could result from this reduction of lubricant film thickness.

Table A-10. Approximate temperature limits for oils

Oil type	˚C	˚F
Petroleum	**149˚**	300˚
Super refined petroleum	**177°**	350˚
Synthetic hydrocarbon	**204°**	400˚
Synthetic esters	**204°**	400˚
Silicones	**260°**	500˚
Polyphenylether	**288°**	550˚
Perfluorinated	**316°**	600˚

CLASSIFICATION

There are several classifications of oils based on viscosity grades. The most familiar are the Society of Automotive Engineers (SAE) classifications for automotive engine and gear oils. The American Society for Testing and Materials (ASTM) and the International Organization for Standardization (ISO) have adopted standard viscosity grades for industrial fluids. Fig. A-10 shows the viscosity comparisons of ISO/ASTM with SAE classification systems at 40° C (104° F).

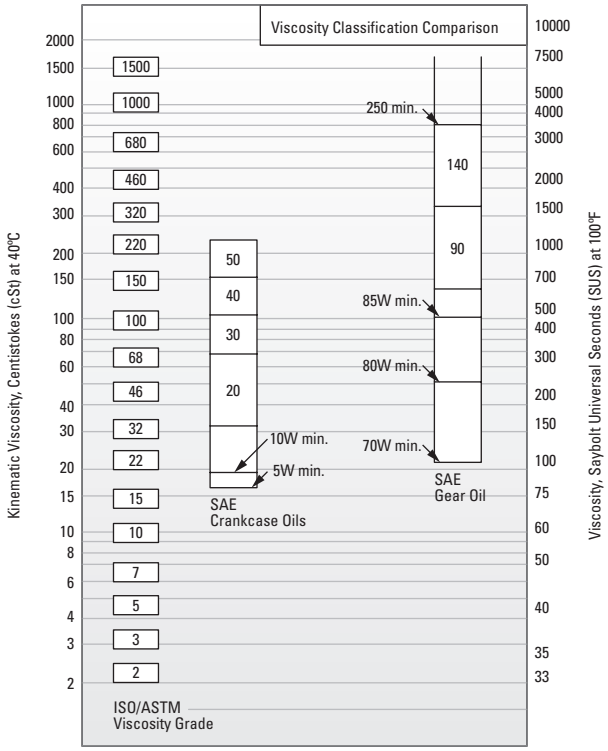

Fig. A-10. Viscosity classification comparison between ISO/ASTM grades (ISO 3448/ASTM D2442) and SAE grades (SAE J 300-80 for crankcase oils, SAE J 306-81 for axle and manual transmission oils)

The figure below can be used to predict the oil's kinematic viscosity versus temperature (use base oil for grease).

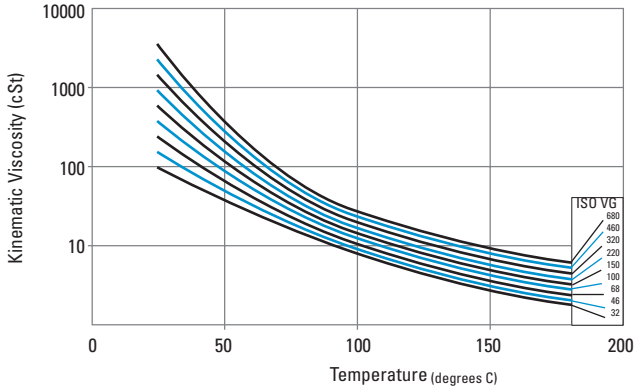

Fig. A-11. Temperature vs. kinematic viscosity

TYPICAL OIL LUBRICATION GUIDELINES

In this section, the properties and characteristics of lubricants for typical needle roller bearing applications are listed. These general characteristics have resulted from long, successful performance in these applications.

General Purpose Rust and Oxidation Lubricating Oil

General purpose rust and oxidation (R&O) inhibited oils are the most common type of industrial lubricant.

Table A-11. Suggested general purpose R&O lubricating oil properties

Properties	
Base stock:	Solvent refined, high viscosity-index petroleum oil
Additives:	Corrosion and oxidation inhibitors
Viscosity index:	80 min.
Pour point:	-10° C max. (14° F)
Viscosity grades:	ISO/ ASTM 32 through 220

Some low-speed and/or high-ambient temperature applications require the higher viscosity grades. And high-speed and/or low-temperature applications require the lower viscosity grades.

Industrial Extreme Pressure (EP) Gear Oil

Extreme pressure gear oils are used to lubricate bearings in all types of heavily loaded industrial equipment. They should be capable of withstanding heavy loads including abnormal shock loads common in heavy-duty equipment.

Table A-12. Suggested industrial EP gear oil properties

Properties	
Base stock:	Solvent refined, high viscosity-index petroleum oil
Additives:	Corrosion and oxidation inhibitors Extreme pressure (EP) additive[1] - 15.8 kg (35 lb) min.
Viscosity index:	80 min.
Pour point:	-10° C max. (14° F)
Viscosity grades:	ISO/ ASTM 100, 150, 220, 320, 460

[1] ASTM D 2782

Industrial EP gear oils should be composed of a highly refined petroleum oil-based stock plus appropriate inhibitors and additives. They should not contain materials that are corrosive or abrasive to bearings. The inhibitors should provide long-term protection from oxidation and protect the bearing from corrosion in the presence of moisture. The oils should resist foaming in service and have good water separation properties. An EP additive protects against scoring under boundary-lubrication conditions. The viscosity grades suggested represent a wide range. High-temperature and/ or slow-speed applications generally require the higher viscosity grades. Low temperatures and/or high speeds require the use of lower viscosity grades.

A

LUBRICATING GREASES

Definition

According to the ASTM definition, lubricating grease is a "solid to semi-fluid product of the dispersion of a thickening agent in a liquid lubricant; other ingredients imparting special properties may be included." If this definition were applied in the manner a chemist would use to illustrate a chemical reaction, the composition of a grease could be described by the formula below.

Table A-13. Composition of grease

Fluids	+Thickening agents	+Special ingredients	= Lubricating grease
Mineral oils Esters Organic esters Glycols Silicones	Soaps Lithium, codium Barium, calcium Strontium Non-soap (inorganic) Microgel (clay) Carbon black Silica-gel Non-soap (organic) Urea compounds Terepthlamate Organic dyes	Oxidation inhibitors Rust inhibitors VI improver Tackiness Perfumes Dyes Metal deactivator	

At this time, there is no known universal anti-friction bearing grease. Each individual grease has certain limiting properties and characteristics.

Synthetic lubricating fluids, such as esters, organic esters and silicones are used with conventional thickeners or chemical additives to provide greases capable of performing over an extremely wide range of temperatures, from as low as -73° C (-100° F) to a high of 288° C (550° F).

The successful use of lubricating grease in roller bearings depends on the physical and chemical properties of the lubricant pertaining to the bearing, its application, installation and general environmental factors. Because the choice of a lubricating grease for a particular bearing under certain service conditions is often difficult to make, your representative should be consulted for proper suggestions.

Grease Lubrication

The simplest lubrication system for any bearing application is grease. Conventionally, greases used in bearing applications are petroleum oils of some specific viscosity that are thickened to the desired consistency by some form of metallic soap. Greases are available in many soap types such as sodium, calcium, lithium, calcium-complex and aluminium-complex. Organic and inorganic type non-soap thickeners also are used in some products.

Soap Type

Calcium greases have good water resistance. Sodium greases generally have good stability and will operate at higher temperatures, but they absorb water and cannot be used where moisture is present. Lithium, calcium-complex and aluminium-complex greases generally combine the higher temperature properties and stability of sodium grease with the water resistance of calcium grease. These greases are often referred to as multi-purpose greases since they combine the two most important lubricant advantages into one product.

CHARACTERISTICS AND OPERATING ENVIRONMENTS

Listed below are the general characteristics of prominent rolling bearing greases.

Table A-14. General characteristics of prominent rolling bearing greases

Thickener	Typical Dropping PT		Usable[1] Temperature		Typical Water Resistance
	°C	°F	°C	°F	
Sodium Soap	**260+**	500+	**121**	250	Poor
Lithium Soap	**193**	380	**104**	220	Good
Polyurea	**238**	460	**149**	300	Excellent
Lithium Complex Soap	**260+**	500+	**163**	325	Good

(1) Continuous operation with no relubrication. Depending upon the formulation the service limits may vary. The usable limit can be extended significantly with relubrication.

Polyurea as a thickener for lubricating fluids is one of the most significant lubrication developments in more than 30 years. Polyurea grease performance in a wide range of bearing applications is outstanding and in a relatively short time it has gained acceptance as a factory-packed lubricant for ball bearings.

Consistency

Greases may vary in consistency from semi-fluids, hardly thicker than a viscous oil, to solid grades almost as hard as a soft wood.

Consistency is measured by a penetrometer in which a standard weighted cone is dropped into the grease. The distance the cone penetrates (measured in tenths of a millimeter in a specific time) is the penetration number.

The National Lubricating Grease Institute (N.L.G.I.) classification of grease consistency is shown below:

Table A-15. NLGI Classifications

NLGI grease grades	Penetration number
0	355-385
1	310-340
2	265-295
3	220-250
4	175-205
5	130-160
6	85-115

Low Temperatures

Starting torque in a grease-lubricated bearing at low temperatures can be critical. Some greases may function adequately as long as the bearing is operating, but resistance to initial movement is such that the starting torque is excessive. In certain smaller machines starting is impossibile when very cold. Under such operating circumstances, the greases containing low-temperature characteristic oils are generally required.

If the operating temperature range is wide, synthetic fluid greases offer definite advantages. Greases are available to provide very low starting and running torque at temperatures as low as -73° C (-100° F). In certain instances, these greases perform better in this respect than oil.

An important point concerning lubricating greases is that the starting torque is not necessarily a function of the consistency or the channel properties of the grease. It appears to be more a function of the individual properties of the particular grease and is difficult to measure. Experience alone will indicate whether one grease is superior to another.

High Temperatures

The high temperature limit for modern grease is generally a function of the thermal and oxidation stability of the fluid and the effectiveness of the oxidation inhibitors. The graph to the right was prepared using military-specification greases to illustrate the thermal limitations of mineral oil, ester, silicone, and fluorinated ether greases. The limits as shown, apply only to prelubricated bearings or to applications where relubrication is not possible. Where provisions have been made for relubrication, the temperature limits may be extended, provided the interval between cycles is reduced accordingly.

A rule of thumb, developed from years of testing grease-lubricated bearings, indicates that grease life is halved for every 10° C (18° F) increase in temperature. For example, if a particular grease is providing 2000 hours of life at 90° C (194° F), by raising the temperature to 100° C (212° F), reduction in life to approximately 1000 hours would result. On the other hand, 4000 hours could be expected by lowering the temperature to 80° C (176° F).

It becomes obvious that the reactions started by the normal reaction of lubricant with oxygen increases rapidly at higher temperatures. The lubricants undergo a series of chemical reactions that ultimately result in the development of viscous or hard residues that interfere with the operation of the bearing.

Thermal stability, oxidation resistance and temperature limitations must be considered when selecting greases for high-temperature applications. In non-relubricatable applications, highly refined mineral oils or chemically stable synthetic fluids are required as the oil component of greases for operation at temperatures above 121° C (250° F).

Table A-16. Approximate temperature limits for grease thickeners

Grease thickener	° C	° F
Soaps	**121°**	250°
Complexes	**177°**	350°
Polyureas	**177°**	350°
Non-soap	**>260°**	>500°

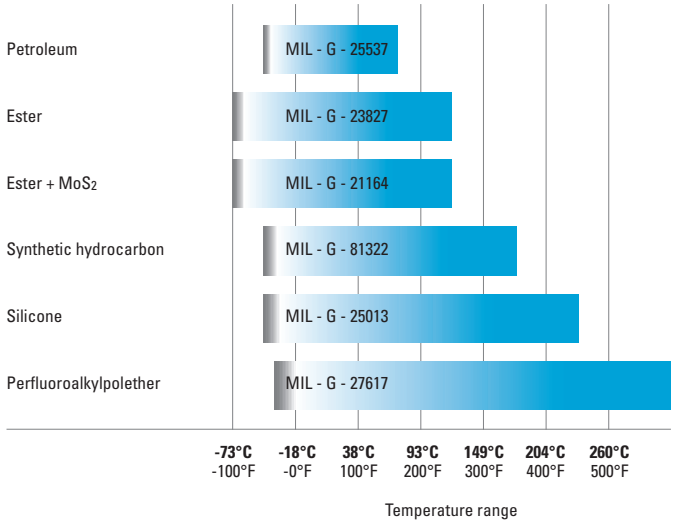

Fig. A-12. Lubrication grease temperature ranges

⚠ WARNING

Failure to observe the following warnings could create a risk of serious bodily harm.

Proper maintenance and handling practices are critical. Failure to follow installation instructions and to maintain proper lubrication can result in equipment failure.

Never spin a bearing with compressed air. The rolling elements may be forcefully expelled.

⚠ WARNING

Mixing grease types can cause the lubricant to become ineffective, which can result in equipment failure, creating a risk of serious bodily harm.

Table A-17. Grease compatibility chart

■ = Best Choice
■ = Compatible
■ = Borderline
■ = Incompatible

	Al Complex	Ba Complex	Ca Stearate	Ca 12 Hydroxy	Ca Complex	Ca Sulfonate	Clay Non-Soap	Li Stearate	Li 12 Hydroxy	Li Complex	Polyurea	Polyurea S S
Aluminum Complex												
Barium Complex												
Calcium Stearate												
Calcium 12 Hydroxy												
Calcium Complex												
Calcium Sulfonate												
Clay Non-Soap												
Lithium Stearate												
Lithium 12 Hydroxy												
Lithium Complex												
Polyurea Conventional												
Polyurea Shear Stable												

WET CONDITIONS

Water and moisture can be particularly conducive to bearing damage. Lubricating greases may provide a measure of protection from this contamination. Certain greases, the calcium, lithium and non-soap type, for example, are highly water-resistant. However, these greases exhibit poor rust-preventative characteristics unless properly inhibited.

Sodium-soap greases emulsify with small amounts of moisture that may be present and prevent the moisture from coming in contact with the bearing surfaces. In certain applications, this characteristic may be advantageous; however, emulsions are generally considered undesirable.

Many bearing applications require lubricants with special properties or lubricants formulated specifically for certain environments, such as:

- Friction oxidation (fretting corrosion).
- Chemical and solvent resistance.
- Food handling.
- Quiet running.
- Space and/or vacuum.
- Electrical conductivity.

For assistance with these or other areas requiring special lubricants, consult your representative.

CONTAMINATION

Abrasive Particles

When needle roller bearings operate in a clean environment, the primary cause of damage is the eventual fatigue of the surfaces where rolling contact occurs. However, when particle contamination enters the bearing system, it is likely to cause damage such as bruising, which can shorten bearing life.

When dirt from the environment or metallic wear debris from some component in the application is allowed to contaminate the lubricant, wear can become the predominant cause of bearing damage. If, due to particle contamination of the lubricant, bearing wear becomes significant, changes will occur to critical bearing dimensions that could adversely affect machine operation.

Bearings operating in a contaminated lubricant exhibit a higher initial rate of wear than those running in an uncontaminated lubricant. With no further contaminant ingress, this wear rate quickly diminishes. The contamination particles are reduced in size as they pass through the bearing contact area during normal operation.

Water

Either dissolved or suspended water in lubricating oils can exert a detrimental influence on bearing fatigue life. Water can cause bearing etching that also can reduce bearing fatigue life. The exact mechanism by which water lowers fatigue life is not fully understood. It has been suggested that water enters micro-cracks in the bearing races that are caused by repeated stress cycles. This leads to corrosion and hydrogen embrittlement in the micro-cracks, reducing the time required for these cracks to propagate to an unacceptable-sized spall.

Water-base fluids such as water, glycol and invert emulsions also have shown a reduction in bearing fatigue life. Although water from these sources is not the same as contamination, the results support the previous discussion concerning water-contaminated lubricants.

GREASES - APPLICATIONS AND LUBRICATING METHODS

Grease lubrication is generally applicable to the following conditions, and features low-to-moderate speed applications within operating temperature limits of the grease:

- Easily confined in the housing. This is important in the food, textile and chemical industries.
- Bearing enclosure and seal design simplified.
- Improves the efficiency of external mechanical seals to give better protection to the bearing.
- Successfully used for integrally-sealed, prelubricated ball bearings.

Advantages of Prelubricated Bearings

Prelubricated shielded and sealed bearings are extensively used with much success in applications where:

- Grease might be injurious to other parts of the mechanism.
- Cost and space limitations preclude the use of a grease filled housing.
- Housings cannot be kept free of dirt and grit, water or other contaminants.
- Relubrication is impossible or would be a hazard to satisfactory use.

Prelubricated bearings are pre-packed with greases that have chemical and mechanical stability, and have demonstrated long-life characteristics in rotating bearings. Greases are filtered several times to remove all harmful material, and accurately metered so that each bearing receives the proper amount of grease.

LIMITING SPEEDS

In addition to the bearing load ratings, the tabular pages also list the limiting speed values which are the maximum speeds at which the bearings may operate. These speeds have been calculated for unsealed and sealed bearings of conventional design, tolerances and internal clearances, properly mounted with low applied loads using normal splash, drip feed or other methods of lubrication which will provide adequate cooling of the bearings. A bearing may operate at a speed higher than the listed limiting speed with the use of a clean, good quality oil and after prior consultation with Torrington's Engineering Department. With high speeds and high acceleration rates, the ratio of P/C should not fall below 0.02 to prevent skidding of the rolling elements.

Also the bearing should not be subjected to uneven stress distribution due to the effects of misalignment between the bearing housings, deformation of the shaft or housing.

Speeds Inadequate for Elastohydrodynamic Lubricating Film

International Standard **ISO 281** which covers calculation of dynamic load ratings and rating life states that at exceptionally low rotational speeds (i.e. the product of speed and pitch diameter (D_{pw}) in mm is less than 10000) the generated lubricant film is unlikely to be adequate to separate the rolling element/raceway contacts. At such operating conditions it may be inappropriate to calculate the bearing life although practical improvement in life, may be achieved with the use of lubricants of higher kinematic viscosity or containing EP additives.

A

TORQUE

NEEDLE ROLLER BEARINGS

Empirical torque equations for radial and thrust needle roller bearings were developed:

$M = d_m (4.5 \times 10^{-7} v^{0.3} n^{0.6} + 0.12 F_r^{0.4})$
v = Lubricant kinematic viscosity cSt
n = Rotational speed, min^{-1}
F_r = Radial load
d_m = Mean diameter

Testing also showed that full complement radial needle roller bearings operate at 1.5 to 2 times the torque determined for caged radial needle roller bearings. Similarly, the running torque of thrust needle roller bearings is given:

$M = 4.5 \times 10^{-7} v^{0.3} n^{0.6} d_m + 0.016 F_a l$
F_a = Axial load
l = Roller length

In both equations, the mean diameter d_m is the average of the bore and O.D. of the bearings, while the length (l) in the thrust bearing torque equation can be approximated using the bearing's radial section (e.g., $l = {}^1/_2 [E_a - E_b]$).

E_a is raceway contact dimensions, outer.
E_b is raceway contact dimensions, inner.

The viscosity is in units of centistokes. A typical conversion factor for mineral oil is 1cSt = 0.875 cP.

Both of the aforementioned equations were determined for circulating oil lubrication systems. For grease lubrication, the viscosity of the base oil should be used to estimate the running torque.

NEEDLE ROLLER BEARINGS

B

B NEEDLE ROLLER BEARINGS

Radial Needle Roller and Cage Assemblies B-3
Drawn Cup Needle Roller Bearings B-43
Drawn Cup Roller Clutches B-125
Heavy-Duty Needle Roller Bearings B-145
Track Rollers B-207
Thrust Bearings, Assemblies, Washers B-269
Combined Needle Roller Bearings B-329
Needle Rollers, Accessories B-345

B

NEEDLE ROLLER BEARINGS

RADIAL NEEDLE ROLLER AND CAGE ASSEMBLIES

Overview: Needle roller and cage assemblies feature a complement of needles held in place by a cage with no inner or outer ring. The minimal cross section provides maximum load-carrying capability within the smallest envelope.

- **Sizes:** 3 mm – 165 mm (0.1181 in. – 6.4961 in.) bore.
- **Markets:** Automotive and truck transmissions, agricultural and construction equipment, two-cycle engines, pumps and compressors.
- **Features and Benefits:**
  - Unitized design simplifies handling and installation while allowing for increased lube flow.
  - Split and segmented designs allow mounting at difficult positions on crankshafts and gear shafts.
  - Controlled contour rollers optimize contact stress distribution.
  - Special manufacturing processes help increase roller fatigue resistance and minimize axial drift effects in critical applications.
  - Optimized cage piloting geometry minimizes pressure velocity effects.
  - Steel or polymer cages are available to suit your application requirements.
  - Coatings are available to help avoid corrosion and improve wear resistance.

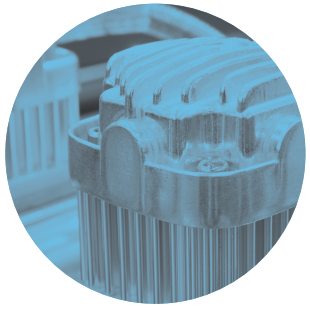

Radial Needle Roller and Cage Assemblies – Metric Nominal Dimensions

Prefix
K needle roller and cage assembly

Outer diameter
28 = 28 mm
65 = 65 mm

K 24 x 28 x 10 H

Bore diameter
24 = 24 mm
49 = 49 mm

Width
10 = 10 mm
38 = 38 mm

Suffix
- **BE** hardened steel cage (for crank pin position)
- **H** hardened steel cage
- **SE** hardened steel cage (for wrist pin position)
- **TN** molded cage of reinforced engineered polymer
- **ZW** double-row
- **F** machined cage
- **FH** machined cage, case hardened
- **FV** machined cage, hardened and tempered

Radial Needle Roller and Cage Assemblies – Inch Nominal Dimensions

Prefixes
- **WJ** needle roller and sigma type cage assembly
- **WJC** needle roller and non-sigma type cage assembly

Width
16 = $^{16}/_{16}$ = 1 in.

WJ - 20 26 16

Bore
20 = $^{20}/_{16}$ = 1 $^{1}/_{4}$ in.

Outer Diameter
26 = $^{26}/_{16}$ = 1 $^{5}/_{8}$ in.

B

Radial Needle Roller and Cage Assemblies

Page

Introduction B-6

Single-Row, Double-Row Assemblies – Metric Series B-8

Radial Needle Roller and Cage Assemblies
for Connecting Rod Applications – Metric Series. B-28

Assemblies for Crank Pin End Applications – Metric Series . . . B-33

Assemblies for Wrist Pin End Applications – Metric Series . . . B-35

Radial Needle Roller and Cage Assemblies – Inch Series . . . B-37

Single-Row Assemblies – Inch Series B-39

B

RADIAL NEEDLE ROLLER AND CAGE ASSEMBLIES

METRIC SERIES

Metric series radial needle roller and cage assemblies are available in a variety of sizes and designs. This catalog includes the most popular, standardized designs.

REFERENCE STANDARDS ARE:

- **ISO 3030** – needle roller bearings – radial needle roller and cage assemblies – boundary dimensions and tolerances.
- **DIN 5405 Part 1** – rolling bearings – needle roller bearings – radial needle roller and cage assemblies.
- **ANSI/ABMA 18.1** – needle roller bearings – radial, metric design.

Before selecting specific metric series radial needle roller and cage assemblies, the engineering section should be reviewed.

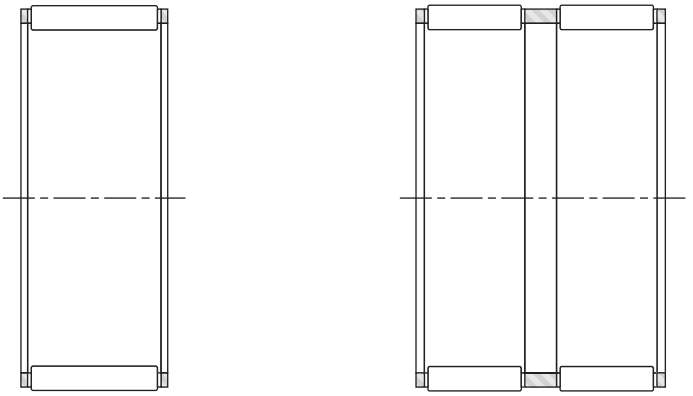

K K ... ZW

Fig. B-1. Types of Metric Series Radial Needle Roller and Cage Assemblies

Suffixes	
TN	molded cage of reinforced engineered polymer
ZW	double-row
TNZW	molded cage of reinforced engineered polymer – double-row
H	hardened steel cage
F	machined cage
FH	machined cage, case hardened
FV	machined cage, hardened and tempered

CONSTRUCTION

Radial needle roller and cage assemblies have a steel cage that provides both inward and outward retention for the needle rollers. The designs provide maximum cage strength consistent with the inherent high load-ratings of needle roller bearings. Accurate guidance of the needle rollers by the cage bars allows for operation at high speeds. Needle roller and cage assemblies have either one or two rows of needle rollers.

Also listed are metric series needle roller and cage assemblies using molded, one-piece glass-reinforced engineered polymer cages (suffix TN). These operate well at temperatures up to 120° C (250° F) over extended periods. However, care should be exercised when these assemblies are lubricated with oils containing additives as service life may be reduced if the operating temperature exceeds 100° C (212° F). At such high temperatures oil can deteriorate with time and it is suggested that oil change intervals are observed.

Needle rollers with relieved ends used in these assemblies are made of high-carbon chrome steel, through-hardened, ground and lapped to close tolerances for diameter and roundness. See the engineering section for further discussion of relieved end rollers.

DIMENSIONAL ACCURACY

NEEDLE ROLLER GROUPS (GAGES)

Metric series radial needle roller and cage assemblies are supplied with needle roller complements subdivided into groups (gages) shown in Table B-1. This is in accordance with Grade G2 specified in ISO 3096 standard (see needle rollers, page B-355). The group limits of the needle rollers are indicated on the package. Labels of identifying colors show the group limits of the needle rollers. The needle roller and cage assemblies of one shipment usually contain needle rollers with group limits of between 0.000 to -0.002 mm (0.0000 to -0.00008 in.) and -0.005 to -0.007 mm (-0.0002 to -0.0003 in.) [colors red, blue and white]. For additional information on needle roller and cage assemblies with needle rollers of different group limits contact your representative.

Table B-1. Needle roller group limits (Grade G2)

Group tolerance		Marking gage	Identifying color on label or on package
mm in.	**mm** in.		
0.000 0.0000	**-0.002** -0.00008	P0M2	Red
-0.001 -0.00004	**-0.003** -0.00012	M1M3	Red
-0.002 -0.00008	**-0.004** -0.0002	M2M4	Blue
-0.003 -0.00012	**-0.005** -0.0002	M3M5	Blue
-0.004 -0.0002	**-0.006** -0.0002	M4M6	White (gray)
-0.005 -0.0002	**-0.007** -0.0003	M5M7	White (gray)
-0.006 -0.0002	**-0.008** -0.0003	M6M8	Green
-0.007 -0.0003	-0.009 -0.0004	M7M9	Green
-0.008 -0.0003	**-0.010** -0.0004	M8M10	Yellow
-0.009 -0.0004	**-0.011** -0.0004	M9M11	Yellow

In the marking of the gages, P identifies zero (0) or plus (+), M identifies minus (-).

MOUNTING DIMENSIONS

DESIGN OF RACEWAYS

Radial needle roller and cage assemblies use the housing bore as the outer raceway and the shaft as the inner raceway. To realize full bearing load rating and life, the housing bore and the shaft raceways must have the correct geometric and metallurgical characteristics. The housing should be of sufficient cross section to maintain adequate roundness and running clearance under load. Additional design details for housings and shafts used as outer and inner raceways can be found in the engineering section. The only limit to precision of the radial clearance of a mounted assembly is the capability of the user to hold close tolerances on the inner and outer raceways. The suggested shaft tolerances listed in Table B-2 are based on housing bore tolerance G6 and apply to metric series radial needle roller and cage assemblies with needle rollers of group limits between P0M2 and M5M7.

Table B-2. Suggested shaft tolerances for housing bores machined to G6

Nominal shaft diameter in mm	≤ 80	> 80
Radial clearance	Shaft tolerance	
Smaller than normal	j5	h5
Normal	h5	g5
Larger than normal	g6	f6

AXIAL GUIDANCE REQUIREMENTS

Radial needle roller and cage assembly must be axially guided by shoulders or other suitable means. The end guiding surfaces should be hardened to minimize wear and must provide sufficient axial clearance to prevent end-locking of the assembly. Length tolerance H11 is suggested.

If end guidance is provided by a housing shoulder at one end and by a shaft shoulder at the other end, the shaft must be axially positioned to prevent end-locking of needle roller and cage assembly. The housing and shaft shoulder heights should be 70 percent to 90 percent of the needle roller diameter to provide proper axial guidance.

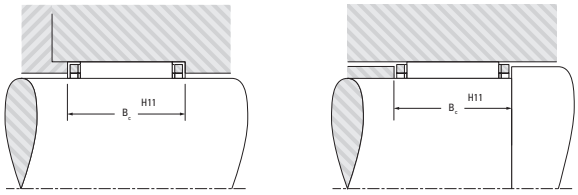

Guidance in the housing **Guidance in the shaft**

Fig. B-2. Axial guidance requirements

MOUNTING IN SETS

Radial needle roller and cage assemblies that are mounted side by side must have needle rollers of the same group limits to ensure uniform load distribution.

LUBRICATION

Oil is the preferred lubricant for most applications. In critical applications involving high speeds, ample oil flow must be provided. Where assemblies are subjected to high centrifugal forces – such as in epicyclic gearing, or inertia forces, as in the small end of a connecting rod – the contact pressure between the cage and the raceway guiding surface becomes critical. The allowable contact pressure depends on a combination of the induced force and the relative velocity between the cage and raceway and the rate of lubricant flow. Consult your representative when cages will be subjected to high induced forces.

SPECIAL DESIGNS

Radial needle roller and cage assemblies made to special dimensions or configurations – such as those which are split to assemble around a one-piece crankshaft – can be made available on special order. Special coated or plated cages to enhance life, under conditions of marginal lubrication and high induced forces, also can be made available.

SINGLE-ROW, DOUBLE-ROW ASSEMBLIES

METRIC SERIES

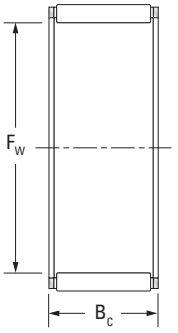

K

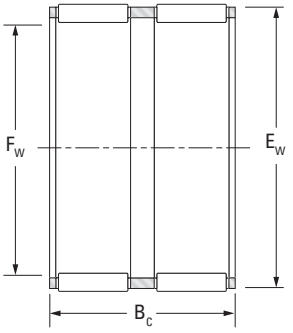

KZW

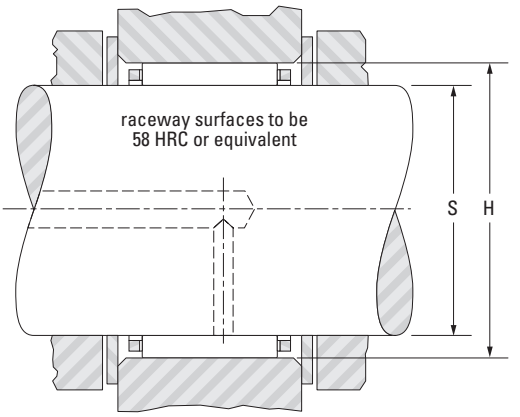

Shaft Dia.	F_w	E_w	B_c -0.20 -0.008 -0.55 -0.022	Assembly Designation	C	C_0	Speed Rating Grease	Speed Rating Oil	C_g	S Max.	S Min.	H Max.	H Min.	Wt.
					Load Ratings					Mounting Dimension				
mm in.	mm in.	mm in.	mm in.		kN lbf.		min^{-1}			mm in.	mm in.	mm in.	mm in.	kg lbs.
3 0.1181	3 0.1181	5 0.1969	7 0.2756	K3X5x7TN	1.56 351	1.29 290	48000	74000	—	3.000 0.1181	2.996 0.1180	5.004 0.1970	5.012 0.1973	0.0002 0.0004
	3 0.1181	5 0.1969	9 0.3543	K3X5x9TN	1.74 391	1.48 333	48000	74000	—	3.000 0.1181	2.996 0.1180	5.004 0.1970	5.012 0.1973	0.0003 0.0007
4 0.1575	4 0.1575	7 0.2756	7 0.276	K4X7X7TN	1.83 411	1.32 297	34000	52000	—	4.000 0.1575	3.995 0.1573	7.014 0.2761	7.005 0.2758	0.0005 0.001
5 0.1969	5 0.1969	8 0.3150	8 0.315	K5X8X8TN	2.18 490	1.71 384	31000	47000	—	5.000 0.1969	4.995 0.1967	8.014 0.3155	8.005 0.3152	0.0007 0.002
	5 0.1969	8 0.3150	10 0.394	K5X8X10TN	3.04 683	2.63 591	31000	47000	—	5.000 0.1969	4.995 0.1967	8.014 0.3155	8.005 0.3152	0.0008 0.002
	5 0.1969	9 0.3543	13 0.512	K5X9X13TN	4.29 964	3.55 798	26000	40000	—	5.000 0.1969	4.995 0.1967	9.014 0.3549	9.005 0.3545	0.002 0.004
6 0.2362	6 0.2362	9 0.3543	8 0.315	K6X9X8	3.19 717	2.90 652	29000	44000	0.0116	6.000 0.2362	5.995 0.2360	9.014 0.3549	9.005 0.3545	0.0008 0.002
	6 0.2362	9 0.3543	8 0.315	K6X9X8TN	2.47 555	2.07 465	29000	44000	—	6.000 0.2362	5.995 0.2360	9.014 0.3549	9.005 0.3545	0.001 0.002
	6 0.2362	9 0.3543	10 0.394	K6X9X10TN	3.07 690	2.74 616	29000	44000	—	6.000 0.2362	5.995 0.2360	9.014 0.3549	9.005 0.3545	0.001 0.002
7 0.2756	7 0.2756	10 0.3937	8 0.315	K7X10X8TN	2.74 616	2.44 549	28000	42000	—	7.000 0.2756	6.994 0.2754	10.014 0.3943	10.005 0.3939	0.001 0.002
	7 0.2756	10 0.3937	10 0.394	K7X10X10TN	3.40 764	3.22 724	28000	42000	—	7.000 0.2756	6.994 0.2754	10.014 0.3943	10.005 0.3939	0.001 0.002
	7 0.2756	11 0.4331	15 0.591	K7X11X15TN	6.44 1450	6.24 1400	23000	35000	—	7.000 0.2756	6.994 0.2754	11.017 0.4337	11.006 0.4333	0.003 0.007
8 0.3150	8 0.3150	11 0.4331	8 0.315	K8X11X8FV	3.23 726	3.11 699	26000	41000	0.0132	8.000 0.3150	7.994 0.3147	11.017 0.4337	11.006 0.4333	0.002 0.004
	8 0.3150	11 0.4331	8 0.315	K8X11X8TN	2.34 526	2.05 461	26000	41000	—	8.000 0.3150	7.994 0.3147	11.017 0.4337	11.006 0.4333	0.001 0.002
	8 0.3150	11 0.4331	10 0.394	K8X11X10	4.57 1030	4.89 1100	26000	41000	0.0148	8.000 0.3150	7.994 0.3147	11.017 0.4337	11.006 0.4333	0.002 0.004
	8 0.3150	11 0.4331	10 0.394	K8X11X10FV	4.01 901	4.11 924	26000	41000	0.0142	8.000 0.3150	7.994 0.3147	11.017 0.4337	11.006 0.4333	0.002 0.004
	8 0.3150	11 0.4331	10 0.394	K8x11x10TN	3.84 864	3.91 880	26000	41000	—	8.000 0.3150	7.994 0.3147	11.006 0.4333	11.017 0.4337	0.001 0.002

Shaft Dia.	F_w	E_w	B_c	Assembly Designation	C	C_0	Speed Rating		C_g	S		H		Wt.
			-0.20 -0.008 -0.55 -0.022		Load Ratings		Grease	Oil		Mounting Dimension				
										Max.	Min.	Max.	Min.	
mm in.	mm in.	mm in.	mm in.		kN lbf.		min^{-1}			mm in.	mm in.	mm in.	mm in.	kg lbs.
8 0.3150	**8** 0.3150	**11** 0.4331	**13** 0.512	K8x11x13TN	**5.18** 1170	**5.75** 1290	26000	41000	—	**8.000** 0.3150	**7.994** 0.3147	**11.006** 0.4333	**11.017** 0.4337	**0.002** 0.004
	8 0.3150	**11** 0.4331	**13** 0.512	K8X11X13H	**5.22** 1170	**5.78** 1300	26000	41000	0.0154	**8.000** 0.3150	**7.994** 0.3147	**11.017** 0.4337	**11.006** 0.4333	**0.003** 0.007
	8 0.3150	**12** 0.4724	**10** 0.394	K8X12X10F	**5.05** 1140	**4.69** 1050	22000	33000	0.0143	**8.000** 0.3150	**7.994** 0.3147	**12.017** 0.4731	**12.006** 0.4727	**0.002** 0.004
9 0.3543	**9** 0.3543	**12** 0.4724	**10** 0.394	K9X12X10FH	**4.27** 960	**4.60** 1030	26000	40000	0.0153	**9.000** 0.3543	**8.994** 0.3541	**12.017** 0.4731	**12.006** 0.4727	**0.003** 0.007
	9 0.3543	**12** 0.4724	**10** 0.394	K9X12X10FV	**4.27** 960	**4.60** 1030	26000	40000	0.0153	**9.000** 0.3543	**8.994** 0.3541	**12.017** 0.4731	**12.006** 0.4727	**0.002** 0.004
	9 0.3543	**12** 0.4724	**13** 0.512	K9X12X13F	**5.57** 1250	**6.47** 1450	26000	40000	0.0167	**9.000** 0.3543	**8.994** 0.3541	**12.017** 0.4731	**12.006** 0.4727	**0.003** 0.007
	9 0.3543	**12** 0.4724	**13** 0.512	K9X12X13FH	**5.57** 1250	**6.47** 1450	26000	40000	0.0167	**9.000** 0.3543	**8.994** 0.3541	**12.017** 0.4731	**12.006** 0.4727	**0.003** 0.007
	9 0.3543	**12** 0.4724	**13** 0.512	K9X12X13FV	**5.57** 1250	**6.47** 1450	26000	40000	0.0167	**9.000** 0.3543	**8.994** 0.3541	**12.017** 0.4731	**12.006** 0.4727	**0.003** 0.007
	9 0.3543	**13** 0.5118	**8** 0.315	K9X13X8H	**3.96** 890	**3.50** 787	21000	32000	0.0139	**9.000** 0.3543	**8.994** 0.3541	**13.017** 0.5125	**13.006** 0.5120	**0.003** 0.007
10 0.3937	**10** 0.3937	**13** 0.5118	**10** 0.394	K10X13X10	**5.40** 1210	**6.43** 1450	25000	39000	0.0174	**10.000** 0.3937	**9.994** 0.3935	**13.017** 0.5125	**13.006** 0.5120	**0.002** 0.004
	10 0.3937	**13** 0.5118	**10** 0.394	K10X13X10H	**5.40** 1210	**6.43** 1450	25000	39000	0.0174	**10.000** 0.3937	**9.994** 0.3935	**13.017** 0.5125	**13.006** 0.5120	**0.002** 0.004
	10 0.3937	**13** 0.5118	**10** 0.394	K10X13X10TN	**4.29** 964	**4.77** 1070	25000	39000	—	**10.000** 0.3937	**9.994** 0.3935	**13.017** 0.5125	**13.006** 0.5120	**0.002** 0.004
	10 0.3937	**13** 0.5118	**13** 0.512	K10X13X13	**5.90** 1330	**7.16** 1610	25000	39000	0.0178	**10.000** 0.3937	**9.994** 0.3935	**13.017** 0.5125	**13.006** 0.5120	**0.003** 0.007
	10 0.3937	**13** 0.5118	**16** 0.630	K10X13X16	**7.43** 1670	**9.64** 2170	25000	39000	0.0192	**10.000** 0.3937	**9.994** 0.3935	**13.017** 0.5125	**13.006** 0.5120	**0.004** 0.009
	10 0.3937	**14** 0.5512	**10** 0.394	K10X14X10H	**6.12** 1380	**6.29** 1410	20000	31000	0.0167	**10.000** 0.3937	**9.994** 0.3935	**14.017** 0.5519	**14.006** 0.5514	**0.003** 0.007
	10 0.3937	**14** 0.5512	**13** 0.512	K10X14X13H	**7.88** 1770	**8.71** 1960	20000	31000	0.0181	**10.000** 0.3937	**9.994** 0.3935	**14.017** 0.5519	**14.006** 0.5514	**0.004** 0.009
	10 0.3937	**16** 0.6299	**12** 0.472	K10X16X12F	**8.39** 1890	**7.47** 1680	15000	24000	0.0168	**10.000** 0.3937	**9.994** 0.3935	**16.017** 0.6306	**16.006** 0.6302	**0.006** 0.013
	10 0.3937	**16** 0.6299	**12** 0.472	K10X16X12TN	**7.50** 1690	**6.40** 1440	15000	24000	—	**10.000** 0.3937	**9.994** 0.3935	**16.017** 0.6306	**16.006** 0.6302	**0.005** 0.011
12 0.4724	**12** 0.4724	**15** 0.5906	**10** 0.394	K12X15X10H	**5.85** 1320	**7.51** 1690	24000	37000	0.0195	**12.000** 0.4724	**11.992** 0.4721	**15.017** 0.5912	**15.006** 0.5908	**0.003** 0.007
	12 0.4724	**15** 0.5906	**13** 0.512	K12X15X13H	**6.78** 1520	**9.03** 2030	24000	37000	0.0204	**12.000** 0.4724	**11.992** 0.4721	**15.017** 0.5912	**15.006** 0.5908	**0.004** 0.009
	12 0.4724	**16** 0.6299	**13** 0.512	K12X16X13	**7.49** 1680	**8.51** 1910	19000	30000	0.0194	**12.000** 0.4724	**11.992** 0.4721	**16.017** 0.6306	**16.006** 0.6302	**0.006** 0.013
	12 0.4724	**17** 0.6693	**13** 0.512	K12X17X13	**8.93** 2010	**9.29** 2090	16000	25000	0.0194	**12.000** 0.4724	**11.992** 0.4721	**17.017** 0.6700	**17.006** 0.6695	**0.008** 0.018
	12 0.4724	**18** 0.7087	**12** 0.472	K12X18X12H	**9.76** 2190	**9.40** 2110	14000	22000	0.0191	**12.000** 0.4724	**11.992** 0.4721	**18.017** 0.7093	**18.006** 0.7089	**0.009** 0.020
13 0.5118	**13** 0.5118	**17** 0.6693	**10** 0.394	K13X17X10	**7.22** 1620	**8.33** 1870	19000	29000	0.0199	**13.000** 0.5118	**12.992** 0.5115	**17.017** 0.6700	**17.006** 0.6695	**0.004** 0.009

Continued on next page.

SINGLE-ROW, DOUBLE-ROW ASSEMBLIES – *continued*

METRIC SERIES

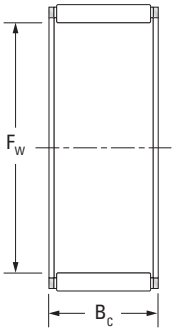

K

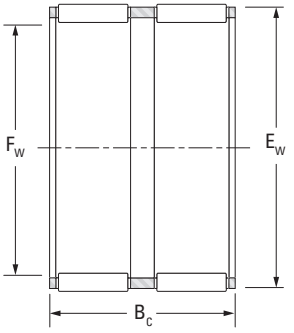

KZW

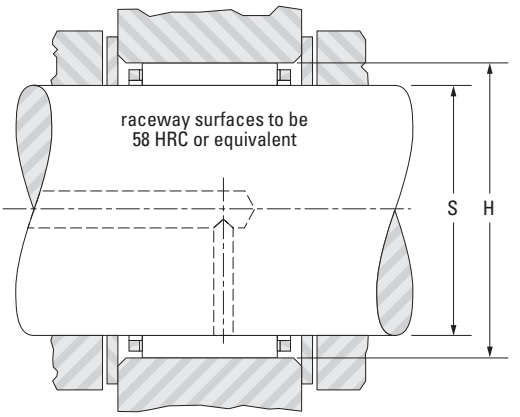

Shaft Dia.	F_w	E_w	B_c -0.20 -0.008 -0.55 -0.022	Assembly Designation	C	C_0	Speed Rating Grease	Speed Rating Oil	C_g	S Max.	S Min.	H Max.	H Min.	Wt.
					Load Ratings					Mounting Dimension				
mm in.	mm in.	mm in.	mm in.		kN lbf.		min^{-1}			mm in.	mm in.	mm in.	mm in.	kg lbs.
13 0.5118	**13** 0.5118	**18** 0.7087	**15** 0.591	K13X18X15F	**10.8** 2430	**12.1** 2720	16000	25000	0.0213	**13.000** 0.5118	**12.992** 0.5115	**18.017** 0.7093	**18.006** 0.7089	**0.008** 0.01
14 0.5512	**14** 0.5512	**18** 0.7087	**8** 0.315	K14X18X8	**5.39** 1210	**5.82** 1310	19000	29000	0.0188	**14.000** 0.5512	**13.992** 0.5509	**18.017** 0.7093	**18.006** 0.7089	**0.004** 0.009
	14 0.5512	**18** 0.7087	**10** 0.394	K14X18X10	**7.17** 1 610	**8.41** 1890	19000	29000	0.0206	**14.000** 0.5512	**13.992** 0.5509	**18.017** 0.7093	**18.006** 0.7089	**0.005** 0.011
	14 0.5512	**18** 0.7087	**13** 0.512	K14X18X13	**9.73** 2190	**12.5** 2810	19000	29000	0.0227	**14.000** 0.5512	**13.992** 0.5509	**18.017** 0.7093	**18.006** 0.7089	**0.006** 0.013
	14 0.5512	**18** 0.7087	**15** 0.591	K14X18X15	**10.5** 2360	**13.8** 3100	19000	29000	0.0233	**14.000** 0.5512	**13.992** 0.5509	**18.017** 0.7093	**18.006** 0.7089	**0.007** 0.015
	14 0.5512	**18** 0.7087	**17** 0.669	K14X18X17H	**12.4** 2790	**17.1** 3840	19000	29000	0.0246	**14.000** 0.5512	**13.992** 0.5509	**18.017** 0.7093	**18.006** 0.7089	**0.008** 0.018
	14 0.5512	**19** 0.7480	**13** 0.512	K14X19X13H	**10.2** 2290	**11.4** 2560	16000	24000	0.0217	**14.000** 0.5512	**13.992** 0.5509	**19.020** 0.7488	**19.007** 0.7483	**0.008** 0.018
	14 0.5512	**19** 0.7480	**18** 0.709	K14X19X18F	**13.2** 2970	**16.0** 3600	16000	24000	0.0236	**14.000** 0.5512	**13.992** 0.5509	**19.020** 0.7488	**19.007** 0.7483	**0.011** 0.024
	14 0.5512	**20** 0.7874	**12** 0.472	K14X20X12	**10.5** 2360	**10.6** 2380	14000	21000	0.0209	**14.000** 0.5512	**13.992** 0.5509	**20.020** 0.7882	**20.007** 0.7877	**0.009** 0.020
15 0.5906	**15** 0.5906	**18** 0.7087	**14** 0.551	K15X18X14TN	**7.92** 1780	**11.9** 2680	13000	23000	—	**15.000** 0.5906	**14.992** 0.5902	**18.017** 0.7093	**18.006** 0.7089	**0.003** 0.007
	15 0.5906	**18** 0.7087	**16** 0.630	K15X18X16F	**8.36** 1880	**12.6** 2830	13000	23000	0.0244	**15.000** 0.5906	**14.992** 0.5902	**18.017** 0.7093	**18.006** 0.7089	**0.005** 0.011
	15 0.5906	**18** 0.7087	**17** 0.669	K15X18X17	**8.08** 1820	**12.1** 2720	23000	36000	0.0241	**15.000** 0.5906	**14.992** 0.5902	**18.017** 0.7093	**18.006** 0.7089	**0.005** 0.011
	15 0.5906	**19** 0.7480	**10** 0.394	K15X19X10	**7.87** 1770	**9.69** 2180	18000	28000	0.0220	**15.000** 0.5906	**14.992** 0.5902	**19.020** 0.7488	**19.007** 0.7483	**0.005** 0.011
	15 0.5906	**19** 0.7480	**13** 0.512	K15X19X13	**9.66** 2170	**12.6** 2830	18000	28000	0.0235	**15.000** 0.5906	**14.992** 0.5902	**19.020** 0.7488	**19.007** 0.7483	**0.007** 0.015
	15 0.5906	**19** 0.7480	**17** 0.669	K15X19X17	**12.3** 2770	**17.2** 3870	18000	28000	0.0254	**15.000** 0.5906	**14.992** 0.5902	**19.020** 0.7488	**19.007** 0.7483	**0.009** 0.020
	15 0.5906	**19** 0.7480	**17** 0.669	K15X19X17H	**12.3** 2770	**17.2** 3870	18000	28000	0.0254	**15.000** 0.5906	**14.992** 0.5902	**19.020** 0.7488	**19.007** 0.7483	**0.009** 0.020
	15 0.5906	**19** 0.7480	**22** 0.866	K15X19X22ZW	**12.2** 2740	**17.0** 3820	18000	28000	0.0253	**15.000** 0.5906	**14.992** 0.5902	**19.020** 0.7488	**19.007** 0.7483	**0.010** 0.022

Shaft Dia.	F_w	E_w	B_c -0.20 -0.008 -0.55 -0.022	Assembly Designation	C	C_0	Speed Rating Grease	Speed Rating Oil	C_g	S Max.	S Min.	H Max.	H Min.	Wt.
					Load Ratings					Mounting Dimension				
mm in.	mm in.	mm in.	mm in.		kN lbf.		min-1			mm in.	mm in.	mm in.	mm in.	kg lbs.
15 0.5906	**15** 0.5906	**20** 0.7874	**13** 0.512	K15X20X13H	**9.93** 2230	**11.3** 2540	16000	24000	0.0222	**15.000** 0.5906	**14.992** 0.5902	**20.020** 0.7882	**20.007** 0.7877	**0.008** 0.018
	15 0.5906	**21** 0.8268	**15** 0.591	K15X21X15	**13.4** 3010	**14.8** 3330	14000	21000	0.0233	**15.000** 0.5906	**14.992** 0.5902	**21.020** 0.8276	**21.007** 0.8270	**0.013** 0.029
	15 0.5906	**21** 0.8268	**21** 0.827	K15X21X21H	**18.0** 4050	**21.7** 4880	14000	21000	0.0256	**15.000** 0.5906	**14.992** 0.5902	**21.020** 0.8276	**21.007** 0.8270	**0.018** 0.040
16 0.6299	**16** 0.6299	**20** 0.7874	**8** 0.315	K16X20X8F	**6.37** 1430	**7.51** 1690	18000	28000	0.0212	**16.000** 0.6299	**15.992** 0.6296	**20.020** 0.7882	**20.007** 0.7877	**0.005** 0.011
	16 0.6299	**20** 0.7874	**10** 0.394	K16X20X10	**7.82** 1760	**9.76** 2190	18000	28000	0.0226	**16.000** 0.6299	**15.992** 0.6296	**20.020** 0.7882	**20.007** 0.7877	**0.006** 0.013
	16 0.6299	**20** 0.7874	**10** 0.394	K16X20X10H	**7.82** 1760	**9.76** 2190	18000	28000	0.0226	**16.000** 0.6299	**15.992** 0.6296	**20.020** 0.7882	**20.007** 0.7877	**0.006** 0.013
	16 0.6299	**20** 0.7874	**10.6** 0.417	K16X20X10,6TN1	**6.06** 1360	**7.01** 1580	18000	28000	—	**16.000** 0.6299	**15.992** 0.6296	**20.020** 0.7882	**20.007** 0.7877	**0.003** 0.007
	16 0.6299	**20** 0.7874	**13** 0.512	K16X20X13	**10.1** 2270	**13.5** 3030	18000	28000	0.0245	**16.000** 0.6299	**15.992** 0.6296	**20.020** 0.7882	**20.007** 0.7877	**0.007** 0.015
	16 0.6299	**20** 0.7874	**14** 0.551	K16X20X14	**10.8** 2430	**14.8** 3330	18000	28000	0.0251	**16.000** 0.6299	**15.992** 0.6296	**20.020** 0.7882	**20.007** 0.7877	**0.007** 0.015
	16 0.6299	**20** 0.7874	**17** 0.669	K16X20X17F	**11.9** 2680	**16.8** 3780	18000	28000	0.0259	**16.000** 0.6299	**15.992** 0.6296	**20.020** 0.7882	**20.007** 0.7877	**0.009** 0.020
	16 0.6299	**20** 0.7874	**17** 0.669	K16X20X17H	**12.9** 2900	**18.5** 4160	18000	28000	0.0265	**16.000** 0.6299	**15.992** 0.6296	**20.020** 0.7882	**20.007** 0.7877	**0.008** 0.018
	16 0.6299	**20** 0.7874	**20** 0.787	K16X20X20	**13.4** 3010	**19.5** 4380	18000	28000	0.0269	**16.000** 0.6299	**15.992** 0.6296	**20.020** 0.7882	**20.007** 0.7877	**0.011** 0.024
	16 0.6299	**22** 0.8661	**12** 0.472	K16X22X12	**11.2** 2520	**11.9** 2680	19000	29000	0.0227	**16.000** 0.6299	**15.992** 0.6296	**22.020** 0.8669	**22.007** 0.8664	**0.010** 0.022
	16 0.6299	**22** 0.8661	**16** 0.630	K16X22X16	**14.9** 3350	**17.2** 3870	19000	29000	0.0248	**16.000** 0.6299	**15.992** 0.6296	**22.020** 0.8669	**22.007** 0.8664	**0.014** 0.031
	16 0.6299	**22** 0.8661	**16** 0.630	K16X22X16H	**14.9** 3350	**17.2** 3870	19000	29000	0.0248	**16.000** 0.6299	**15.992** 0.6296	**22.020** 0.8669	**22.007** 0.8664	**0.014** 0.031
	16 0.6299	**22** 0.8661	**20** 0.787	K16X22X20	**18.6** 4180	**22.9** 5150	19000	29000	0.0267	**16.000** 0.6299	**15.992** 0.6296	**22.020** 0.8669	**22.007** 0.8664	**0.017** 0.037
	16 0.6299	**24** 0.9449	**20** 0.787	K16X24X20	**20.2** 4540	**21.4** 4810	20000	30000	0.0255	**16.000** 0.6299	**15.992** 0.6296	**24.020** 0.9457	**24.007** 0.9452	**0.025** 0.055
17 0.6693	**17** 0.6693	**20** 0.7874	**10** 0.394	K17X20X10	**5.96** 1340	**8.53** 1920	16000	25000	0.0234	**17.000** 0.6693	**16.992** 0.6690	**20.020** 0.7882	**20.007** 0.7877	**0.004** 0.009
	17 0.6693	**21** 0.8268	**10** 0.394	K17X21X10	**8.12** 1830	**10.4** 2340	17000	26000	0.0236	**17.000** 0.6693	**16.992** 0.6690	**21.020** 0.8276	**21.007** 0.8270	**0.006** 0.013
	17 0.6693	**21** 0.8268	**12.8** 0.504	K17X21X13H	**10.5** 2360	**14.5** 3260	17000	26000	0.0256	**17.000** 0.6693	**16.992** 0.6690	**21.020** 0.8276	**21.007** 0.8270	**0.008** 0.018
	17 0.6693	**21** 0.8268	**13** 0.512	K17X21X13	**10.5** 2360	**14.5** 3260	17000	26000	0.0256	**17.000** 0.6693	**16.992** 0.6690	**21.020** 0.8276	**21.007** 0.8270	**0.008** 0.018
	17 0.6693	**21** 0.8268	**15** 0.591	K17X21X15	**11.4** 2560	**16.1** 3620	17000	26000	0.0263	**17.000** 0.6693	**16.992** 0.6690	**21.020** 0.8276	**21.007** 0.8270	**0.008** 0.018
	17 0.6693	**21** 0.8268	**17** 0.669	K17X21X17H	**13.4** 3010	**19.8** 4450	17000	26000	0.0277	**17.000** 0.6693	**16.992** 0.6690	**21.020** 0.8276	**21.007** 0.8270	**0.011** 0.024
	17 0.6693	**22** 0.8661	**20** 0.787	K17X22X20FH	**17.0** 3820	**23.3** 5240	17000	27000	0.0280	**17.000** 0.6693	**16.992** 0.6690	**22.020** 0.8669	**22.007** 0.8664	**0.015** 0.033

Continued on next page.

SINGLE-ROW, DOUBLE-ROW ASSEMBLIES – *continued*

METRIC SERIES

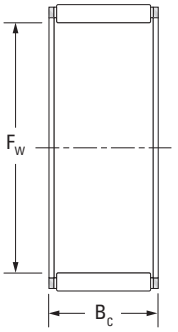

K

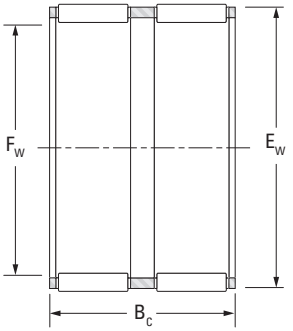

KZW

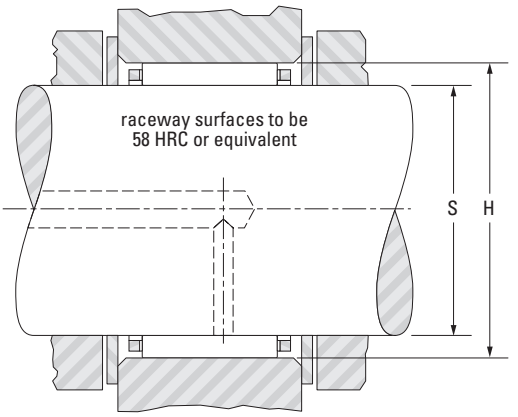

Shaft Dia.	F_w	E_w	B_c -0.20 -0.008 -0.55 -0.022	Assembly Designation	C	C_0	Speed Rating Grease	Speed Rating Oil	C_g	S Max.	S Min.	H Max.	H Min.	Wt.
					Load Ratings					Mounting Dimension				
mm in.	mm in.	mm in.	mm in.		kN lbf.		min^{-1}			mm in.	mm in.	mm in.	mm in.	kg lbs.
17 0.6693	**17** 0.6693	**23** 0.9055	**15** 0.591	K17X23X15F	**14.1** 3170	**16.3** 3660	18000	27000	0.0251	**17.000** 0.6693	**16.992** 0.6690	**23.020** 0.9063	**23.007** 0.9058	**0.010** 0.022
18 0.7087	**18** 0.7087	**22** 0.8661	**8** 0.315	K18X22X8F	**6.32** 1420	**7.70** 1730	16000	24000	0.0224	**18.000** 0.7087	**17.992** 0.7083	**22.020** 0.8669	**22.007** 0.8664	**0.005** 0.011
	18 0.7087	**22** 0.8661	**10** 0.394	K18X22X10	**8.41** 1890	**11.1** 2500	16000	24000	0.0246	**18.000** 0.7087	**17.992** 0.7083	**22.020** 0.8669	**22.007** 0.8664	**0.006** 0.013
	18 0.7087	**22** 0.8661	**10** 0.394	K18X22X10H	**8.41** 1890	**11.1** 2500	16000	24000	0.0246	**18.000** 0.7087	**17.992** 0.7083	**22.020** 0.8669	**22.007** 0.8664	**0.006** 0.013
	18 0.7087	**22** 0.8661	**13** 0.512	K18X22X13H	**10.8** 2430	**15.4** 3460	16000	24000	0.0266	**18.000** 0.7087	**17.992** 0.7083	**22.020** 0.8669	**22.007** 0.8664	**0.008** 0.018
	18 0.7087	**22** 0.8661	**14** 0.551	K18X22X14	**11.6** 2610	**16.8** 3780	16000	24000	0.0272	**18.000** 0.7087	**17.992** 0.7083	**22.020** 0.8669	**22.007** 0.8664	**0.009** 0.020
	18 0.7087	**22** 0.8661	**14** 0.551	K18X22X14FV	**11.3** 2540	**16.3** 3660	16000	24000	0.0270	**18.000** 0.7087	**17.992** 0.7083	**22.020** 0.8669	**22.007** 0.8664	**0.009** 0.020
	18 0.7087	**22** 0.8661	**17** 0.669	K18X22X17H	**13.3** 2990	**19.9** 4470	16000	24000	0.0284	**18.000** 0.7087	**17.992** 0.7083	**22.020** 0.8669	**22.007** 0.8664	**0.009** 0.020
	18 0.7087	**22** 0.8661	**20** 0.787	K18X22X20F	**15.0** 3370	**23.4** 5260	16000	24000	0.0296	**18.000** 0.7087	**17.992** 0.7083	**22.020** 0.8669	**22.007** 0.8664	**0.011** 0.024
	18 0.7087	**24** 0.9449	**12** 0.472	K18X24X12	**11.8** 2650	**13.1** 2940	17000	25000	0.0243	**18.000** 0.7087	**17.992** 0.7083	**24.020** 0.9457	**24.007** 0.9452	**0.011** 0.024
	18 0.7087	**24** 0.9449	**20** 0.787	K18X24X20H	**19.4** 4360	**24.9** 5600	16000	25000	0.0285	**18.000** 0.7087	**17.992** 0.7083	**24.020** 0.9457	**24.007** 0.9452	**0.019** 0.042
	18 0.7087	**25** 0.9843	**22** 0.866	K18X25X22H	**23.3** 5240	**28.6** 6430	17000	26000	0.0291	**18.000** 0.7087	**17.992** 0.7083	**25.020** 0.9850	**25.007** 0.9845	**0.025** 0.055
	18 0.7087	**26** 1.0236	**12** 0.472	K18X26X12FV	**13.8** 3100	**13.5** 3030	11000	17000	0.0238	**18.000** 0.7087	**17.992** 0.7083	**26.020** 1.0244	**26.007** 1.0239	**0.020** 0.044
	18 0.7087	**26** 1.0236	**20** 0.787	K18X26X20F	**21.7** 4880	**24.1** 5420	17000	26000	0.0275	**18.000** 0.7087	**17.992** 0.7083	**26.020** 1.0244	**26.007** 1.0239	**0.027** 0.060
19 0.7480	**19** 0.7480	**23** 0.9055	**13** 0.512	K19X23X13	**10.8** 2430	**15.5** 3480	15000	23000	0.0273	**19.000** 0.7480	**18.991** 0.7477	**23.020** 0.9063	**23.007** 0.9058	**0.008** 0.018
	19 0.7480	**23** 0.9055	**17** 0.669	K19X23X17	**13.4** 3010	**20.6** 4630	15000	23000	0.0293	**19.000** 0.7480	**18.991** 0.7477	**23.020** 0.9063	**23.007** 0.9058	**0.011** 0.024
20 0.7874	**20** 0.7874	**24** 0.9449	**8** 0.315	K20X24X8F	**7.31** 1640	**9.60** 2160	14000	22000	0.0248	**20.000** 0.7874	**19.991** 0.7870	**24.020** 0.9457	**24.007** 0.9452	**0.005** 0.011

Shaft Dia.	F_w	E_w	B_c	Assembly Designation	C	C_0	Speed Rating		C_g	S		H		Wt.
			-0.20 -0.008 **-0.55** -0.022		Load Ratings		Grease	Oil		Mounting Dimension				
										Max.	Min.	Max.	Min.	
mm in.	**mm** in.	**mm** in.	**mm** in.		**kN** lbf.		min^{-1}			**mm** in.	**mm** in.	**mm** in.	**mm** in.	**kg** lbs.
20 0.7874	**20** 0.7874	**24** 0.9449	**10** 0.394	K20X24X10	**8.97** 2020	**12.5** 2810	14000	22000	0.0265	**20.000** 0.7874	**19.991** 0.7870	**24.020** 0.9457	**24.007** 0.9452	**0.006** 0.013
	20 0.7874	**24** 0.9449	**10** 0.394	K20X24X10H	**8.97** 2020	**12.5** 2810	14000	22000	0.0265	**20.000** 0.7874	**19.991** 0.7870	**24.020** 0.9457	**24.007** 0.9452	**0.006** 0.013
	20 0.7874	**24** 0.9449	**12** 0.472	K20X24X12	**10.7** 2410	**15.7** 3530	14000	22000	0.0280	**20.000** 0.7874	**19.991** 0.7870	**24.020** 0.9457	**24.007** 0.9452	**0.008** 0.018
	20 0.7874	**24** 0.9449	**13** 0.512	K20X24X13	**11.5** 2590	**17.3** 3890	14000	22000	0.0287	**20.000** 0.7874	**19.991** 0.7870	**24.020** 0.9457	**24.007** 0.9452	**0.008** 0.018
	20 0.7874	**24** 0.9449	**13** 0.512	K20X24X13H	**11.5** 2590	**17.3** 3890	14000	22000	0.0287	**20.000** 0.7874	**19.991** 0.7870	**24.020** 0.9457	**24.007** 0.9452	**0.009** 0.020
	20 0.7874	**24** 0.9449	**14** 0.551	K20X24X14	**12.4** 2790	**18.9** 4250	14000	22000	0.0293	**20.000** 0.7874	**19.991** 0.7870	**24.020** 0.9457	**24.007** 0.9452	**0.009** 0.020
	20 0.7874	**24** 0.9449	**17** 0.669	K20X24X17H	**14.8** 3330	**23.7** 5330	14000	22000	0.0310	**20.000** 0.7874	**19.991** 0.7870	**24.020** 0.9457	**24.007** 0.9452	**0.011** 0.024
	20 0.7874	**26** 1.0236	**12** 0.472	K20X26X12	**13.0** 2920	**15.3** 3440	15000	23000	0.0264	**20.000** 0.7874	**19.991** 0.7870	**26.020** 1.0244	**26.007** 1.0239	**0.012** 0.026
	20 0.7874	**26** 1.0236	**13** 0.512	K20X26X13H	**13.4** 3010	**15.9** 3570	15000	23000	0.0267	**20.000** 0.7874	**19.991** 0.7870	**26.020** 1.0244	**26.007** 1.0239	**0.014** 0.031
	20 0.7874	**26** 1.0236	**17** 0.669	K20X26X17H	**19.3** 4340	**25.5** 5730	15000	23000	0.0300	**20.000** 0.7874	**19.991** 0.7870	**26.020** 1.0244	**26.007** 1.0239	**0.017** 0.037
	20 0.7874	**26** 1.0236	**20** 0.787	K20X26X20	**20.3** 4560	**27.2** 6110	15000	23000	0.0305	**20.000** 0.7874	**19.991** 0.7870	**26.020** 1.0244	**26.007** 1.0239	**0.020** 0.044
	20 0.7874	**28** 1.1024	**20** 0.787	K20X28X20H	**24.6** 5530	**29.0** 6520	15000	23000	0.0300	**20.000** 0.7874	**19.991** 0.7870	**28.020** 1.1031	**28.007** 1.1026	**0.028** 0.062
	20 0.7874	**28** 1.1024	**25** 0.984	K20X28X25H	**29.7** 6680	**37.0** 8320	15000	23000	0.0319	**20.000** 0.7874	**19.991** 0.7870	**28.020** 1.1031	**28.007** 1.1026	**0.036** 0.079
	20 0.7874	**30** 1.1811	**30** 1.181	K20X30X30H	**38.9** 8750	**45.8** 10300	16000	24000	0.0329	**20.000** 0.7874	**19.991** 0.7870	**30.020** 1.1819	**30.007** 1.1814	**0.055** 0.121
	20 0.7874	**32** 1.2598	**36** 1.417	K20X32X36H	**49.9** 11220	**57.0** 12810	16000	25000	0.0344	**20.000** 0.7874	**19.991** 0.7870	**32.025** 1.2608	**32.009** 1.2602	**0.082** 0.181
21 0.8268	**21** 0.8268	**25** 0.9843	**17** 0.669	K21X25X17F	**14.3** 3210	**23.1** 5190	14000	21000	0.0315	**21.000** 0.8268	**20.991** 0.8264	**25.020** 0.9850	**25.007** 0.9845	**0.012** 0.026
	21 0.8268	**25** 0.9843	**17** 0.669	K21X25X17H	**14.3** 3210	**23.1** 5190	14000	21000	0.0315	**21.000** 0.8268	**20.991** 0.8264	**25.020** 0.9850	**25.007** 0.9845	**0.013** 0.029
22 0.8661	**22** 0.8661	**26** 1.0236	**10** 0.394	K22X26X10H	**9.81** 2210	**14.5** 3 260	13000	20000	0.0291	**22.000** 0.8661	**21.991** 0.8658	**26.020** 1.0244	**26.007** 1.0239	**0.007** 0.015
	22 0.8661	**26** 1.0236	**13** 0.512	K22X26X13H	**11.8** 2650	**18.3** 4110	13000	20000	0.0303	**22.000** 0.8661	**21.991** 0.8658	**26.020** 1.0244	**26.007** 1.0239	**0.012** 0.026
	22 0.8661	**26** 1.0236	**17** 0.669	K22X26X17	**15.6** 3510	**26.3** 5910	13000	20000	0.0332	**22.000** 0.8661	**21.991** 0.8658	**26.020** 1.0244	**26.007** 1.0239	**0.015** 0.033
	22 0.8661	**26** 1.0236	**17** 0.669	K22X26X17H	**15.6** 3510	**26.3** 5910	13000	20000	0.0332	**22.000** 0.8661	**21.991** 0.8658	**26.020** 1.0244	**26.007** 1.0239	**0.012** 0.026
	22 0.8661	**26** 1.0236	**18** 0.709	K22X26X18H	**15.3** 3440	**25.5** 5730	13000	20000	0.0329	**22.000** 0.8661	**21.991** 0.8658	**26.020** 1.0244	**26.007** 1.0239	**0.017** 0.037
	22 0.8661	**28** 1.1024	**13** 0.512	K22X28X13	**13.9** 3120	**17.1** 3840	13000	20000	0.0283	**22.000** 0.8661	**21.991** 0.8658	**28.020** 1.1031	**28.007** 1.1026	**0.015** 0.033
	22 0.8661	**28** 1.1024	**17** 0.669	K22X28X17H	**18.2** 4090	**24.2** 5440	13000	20000	0.0308	**22.000** 0.8661	**21.991** 0.8658	**28.020** 1.1031	**28.007** 1.1026	**0.020** 0.044

Continued on next page.

SINGLE-ROW, DOUBLE-ROW ASSEMBLIES –

continued

METRIC SERIES

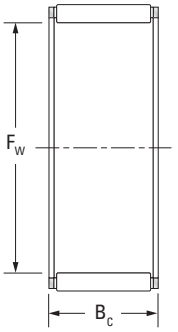

K

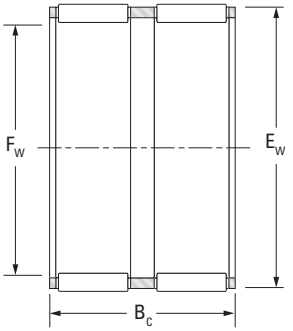

KZW

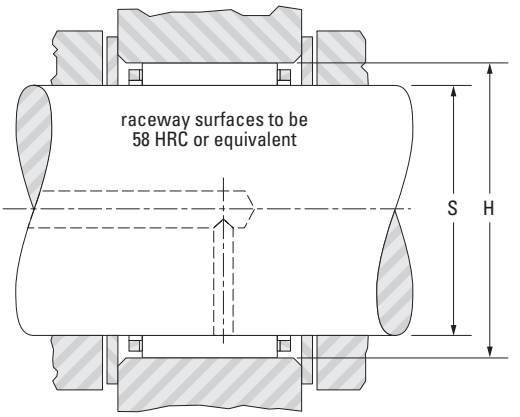

Shaft Dia.	F_w	E_w	B_c -0.20 -0.008 -0.55 -0.022	Assembly Designation	C	C_0	Speed Rating Grease	Speed Rating Oil	C_g	S Max.	S Min.	H Max.	H Min.	Wt.
					Load Ratings					Mounting Dimension				
mm in.	mm in.	mm in.	mm in.		kN lbf.		min^{-1}			mm in.	mm in.	mm in.	mm in.	kg lbs.
22 0.8661	22 0.8661	30 1.1811	15 0.591	K22X30X15H	19.7 4430	22.3 5010	14000	21000	0.0292	22.000 0.8661	21.991 0.8658	30.020 1.1819	30.007 1.1814	0.023 0.051
	22 0.8661	30 1.1811	20 0.787	K22X30X20FV	24.4 5490	29.4 6610	14000	21000	0.0313	22.000 0.8661	21.991 0.8658	30.020 1.1819	30.007 1.1814	0.031 0.068
	22 0.8661	32 1.2598	24 0.945	K22X32X24F	33.1 7440	37.9 8520	14000	22000	0.0326	22.000 0.8661	21.991 0.8658	32.025 1.2608	32.009 1.2602	0.046 0.101
	22 0.8661	32 1.2598	30 1.181	K22X32X30H	41.8 9400	51.3 11530	14000	22000	0.0351	22.000 0.8661	21.991 0.8658	32.025 1.2608	32.009 1.2602	0.057 0.126
23 0.9055	23 0.9055	28 1.1024	24 0.945	K23X28X24F	22.4 5040	36.2 8140	12000	19000	0.0355	23.000 0.9055	22.991 0.9052	28.020 1.1031	28.007 1.1026	0.023 0.051
	23 0.9055	35 1.3780	16 0.630	K23X35X16H	25.9 5820	25.1 5640	14000	21000	0.0294	23.000 0.9055	22.991 0.9052	35.025 1.3789	35.009 1.3783	0.040 0.088
	23 0.9055	35 1.3780	16.2 0.638	K23X35X16,2H	29.1 6540	29.3 6590	14000	21000	0.0306	23.000 0.9055	22.991 0.9052	35.025 1.3789	35.009 1.3783	0.040 0.088
24 0.9449	24 0.9449	28 1.1024	10 0.394	K24X28X10H	9.67 2170	14.6 3280	12000	18000	0.0298	24.000 0.9449	23.991 0.9445	28.020 1.1031	28.007 1.1026	0.027 0.060
	24 0.9449	28 1.1024	13 0.512	K24X28X13H	12.5 2810	20.2 4540	12000	18000	0.0323	24.000 0.9449	23.991 0.9445	28.020 1.1031	28.007 1.1026	0.010 0.022
	24 0.9449	28 1.1024	16 0.630	K24X28X16F						24.000 0.9449	23.991 0.9445	28.020 1.1031	28.007 1.1026	
	24 0.9449	28 1.1024	17 0.669	K24X28X17H	15.4 3460	26.4 5930	12000	18000	0.0345	24.000 0.9449	23.991 0.9445	28.020 1.1031	28.007 1.1026	0.013 0.029
	24 0.9449	30 1.1811	10 0.394	K24X30X10TN	11.3 2540	13.5 3030	12000	19000	—	24.000 0.9449	23.991 0.9445	30.020 1.1819	30.007 1.1814	0.008 0.018
	24 0.9449	30 1.1811	17 0.669	K24X30X17H	19.8 4450	27.7 6230	12000	19000	0.0331	24.000 0.9449	23.991 0.9445	30.020 1.1819	30.007 1.1814	0.020 0.044
	24 0.9449	30 1.1811	22 0.866	K24X30X22	25.0 5620	37.3 8390	12000	19000	0.0356	24.000 0.9449	23.991 0.9445	30.020 1.1819	30.007 1.1814	0.024 0.053
	24 0.9449	36 1.4173	23 0.906	K24X36X23H	37.1 8340	40.1 9010	13000	20000	0.0336	24.000 0.9449	23.991 0.9445	36.025 1.4183	36.009 1.4177	0.070 0.154
25 0.9843	25 0.9843	29 1.1417	10 0.394	K25X29X10H	9.61 2160	14.6 3280	11000	17000	0.0303	25.000 0.9843	24.991 0.9839	29.020 1.1425	29.007 1.1420	0.008 0.018
	25 0.9843	29 1.1417	13 0.512	K25X29X13H	12.8 2880	21.1 4740	11000	17000	0.0332	25.000 0.9843	24.991 0.9839	29.020 1.1425	29.007 1.1420	0.010 0.022

Shaft Dia.	F_w	E_w	B_c	Assembly Designation	C	C_0	Speed Rating		C_g	S		H		Wt.
			-0.20 -0.008 **-0.55** -0.022		Load Ratings		Grease	Oil		Mounting Dimension				
										Max.	Min.	Max.	Min.	
mm in.	**mm** in.	**mm** in.	**mm** in.		**kN** lbf.		min^{-1}			**mm** in.	**mm** in.	**mm** in.	**mm** in.	**kg** lbs.
25 0.9843	**25** 0.9843	**29** 1.1417	**17** 0.669	K25X29X17H	**15.1** 3390	**26.2** 5890	11000	17000	0.0351	**25.000** 0.9843	**24.991** 0.9839	**29.020** 1.1425	**29.007** 1.1420	**0.016** 0.035
	25 0.9843	**30** 1.1811	**13** 0.512	K25X30X13	**14.6** 3280	**21.4** 4810	11000	17000	0.0323	**25.000** 0.9843	**24.991** 0.9839	**30.020** 1.1819	**30.007** 1.1814	**0.012** 0.026
	25 0.9843	**30** 1.1811	**17** 0.669	K25X30X17H	**18.8** 4230	**29.8** 6700	11000	17000	0.0351	**25.000** 0.9843	**24.991** 0.9839	**30.020** 1.1819	**30.007** 1.1814	**0.016** 0.035
	25 0.9843	**30** 1.1811	**18** 0.709	K25X30X18	**20.6** 4630	**33.4** 7510	11000	17000	0.0361	**25.000** 0.9843	**24.991** 0.9839	**30.020** 1.1819	**30.007** 1.1814	**0.017** 0.037
	25 0.9843	**30** 1.1811	**20** 0.787	K25X30X20H	**21.9** 4920	**36.1** 8120	11000	17000	0.0368	**25.000** 0.9843	**24.991** 0.9839	**30.020** 1.1819	**30.007** 1.1814	**0.019** 0.042
	25 0.9843	**30** 1.1811	**24** 0.945	K25X30X24H	**24.8** 5580	**42.4** 9530	11000	17000	0.0383	**25.000** 0.9843	**24.991** 0.9839	**30.020** 1.1819	**30.007** 1.1814	**0.024** 0.053
	25 0.9843	**30** 1.1811	**26** 1.024	K25X30X26ZW	**23.0** 5170	**38.6** 8680	11000	17000	0.0374	**25.000** 0.9843	**24.991** 0.9839	**30.020** 1.1819	**30.007** 1.1814	**0.027** 0.060
	25 0.9843	**31** 1.2205	**14** 0.551	K25X31X14H	**16.8** 3780	**22.7** 5100	12000	18000	0.0320	**25.000** 0.9843	**24.991** 0.9839	**31.025** 1.2215	**31.009** 1.2208	**0.017** 0.037
	25 0.9843	**31** 1.2205	**17** 0.669	K25X31X17H	**19.7** 4430	**27.8** 6250	12000	18000	0.0337	**25.000** 0.9843	**24.991** 0.9839	**31.025** 1.2215	**31.009** 1.2208	**0.020** 0.044
	25 0.9843	**31** 1.2205	**21** 0.827	K25X31X21	**25.1** 5640	**38.0** 8540	12000	18000	0.0364	**25.000** 0.9843	**24.991** 0.9839	**31.025** 1.2215	**31.009** 1.2208	**0.026** 0.057
	25 0.9843	**31** 1.2205	**21** 0.827	K25X31X21F	**25.1** 5640	**38.0** 8540	12000	18000	0.0364	**25.000** 0.9843	**24.991** 0.9839	**31.025** 1.2215	**31.009** 1.2208	**0.026** 0.057
	25 0.9843	**31** 1.2205	**21** 0.827	K25X31X21H	**25.1** 5640	**38.0** 8540	12000	18000	0.0364	**25.000** 0.9843	**24.991** 0.9839	**31.025** 1.2215	**31.009** 1.2208	**0.026** 0.057
	25 0.9843	**31** 1.2205	**24** 0.945	K25X31X24F	**25.3** 5690	**38.5** 8660	12000	18000	0.0365	**25.000** 0.9843	**24.991** 0.9839	**31.025** 1.2215	**31.009** 1.2208	**0.031** 0.068
	25 0.9843	**31** 1.2205	**24** 0.945	K25X31X24FH	**25.3** 5690	**38.5** 8660	12000	18000	0.0365	**25.000** 0.9843	**24.991** 0.9839	**31.025** 1.2215	**31.009** 1.2208	**0.031** 0.068
	25 0.9843	**32** 1.2598	**16** 0.630	K25X32X16	**19.8** 4450	**25.3** 5690	12000	18000	0.0323	**25.000** 0.9843	**24.991** 0.9839	**32.025** 1.2608	**32.009** 1.2602	**0.027** 0.060
	25 0.9843	**33** 1.2992	**20** 0.787	K25X33X20FH	**25.6** 5760	**32.3** 7260	12000	18000	0.0337	**25.000** 0.9843	**24.991** 0.9839	**33.025** 1.3002	**33.009** 1.2996	**0.035** 0.077
	25 0.9843	**33** 1.2992	**20** 0.787	K25X33X20H	**28.8** 6470	**37.6** 8450	12000	18000	0.0350	**25.000** 0.9843	**24.991** 0.9839	**33.025** 1.3002	**33.009** 1.2996	**0.035** 0.077
	25 0.9843	**33** 1.2992	**24** 0.945	K25X33X24H	**32.3** 7260	**43.5** 9780	12000	18000	0.0363	**25.000** 0.9843	**24.991** 0.9839	**33.025** 1.3002	**33.009** 1.2996	**0.038** 0.084
	25 0.9843	**33** 1.2992	**25** 0.984	K25X33X25H	**33.0** 7420	**44.6** 10030	12000	18000	0.0365	**25.000** 0.9843	**24.991** 0.9839	**33.025** 1.3002	**33.009** 1.2996	**0.041** 0.090
	25 0.9843	**35** 1.3780	**23.7** 0.933	K25X35X23,7H	**35.9** 8070	**42.3** 9510	12000	19000	0.0354	**25.000** 0.9843	**24.991** 0.9839	**35.025** 1.3789	**35.009** 1.3783	**0.050** 0.110
	25 0.9843	**35** 1.3780	**25** 0.984	K25X35X25H	**37.8** 8500	**46.2** 10390	12000	19000	0.0360	**25.000** 0.9843	**24.991** 0.9839	**35.025** 1.3789	**35.009** 1.3783	**0.054** 0.119
	25 0.9843	**35** 1.3780	**30** 1.181	K25X35X30H	**44.6** 10030	**57.2** 12860	12000	19000	0.0379	**25.000** 0.9843	**24.991** 0.9839	**35.025** 1.3789	**35.009** 1.3783	**0.060** 0.132
	25 0.9843	**35** 1.3780	**36** 1.417	K25X35X36H	**52.4** 11780	**70.4** 15830	12000	19000	0.0399	**25.000** 0.9843	**24.991** 0.9839	**35.025** 1.3789	**35.009** 1.3783	**0.074** 0.163
	25 0.9843	**37** 1.4567	**20** 0.787	K25X37X20H	**32.5** 7310	**34.1** 7670	12000	19000	0.0328	**25.000** 0.9843	**24.991** 0.9839	**37.025** 1.4577	**37.009** 1.4570	**0.055** 0.121

Continued on next page.

SINGLE-ROW, DOUBLE-ROW ASSEMBLIES –

continued

METRIC SERIES

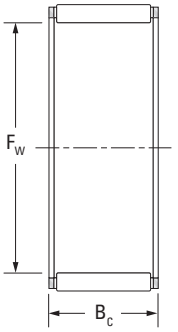

K

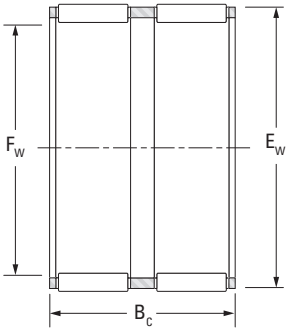

KZW

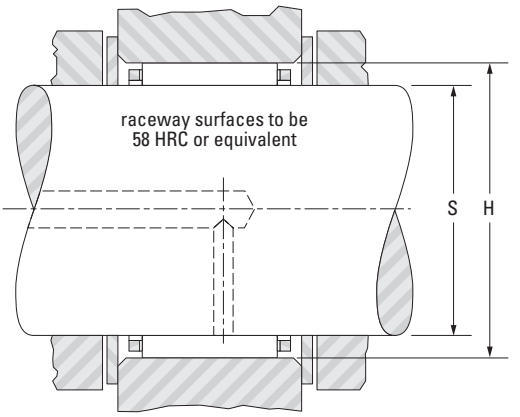

Shaft Dia.	F_w	E_w	B_c -0.20 -0.008 -0.55 -0.022	Assembly Designation	C	C_0	Speed Rating Grease	Speed Rating Oil	C_g	S Max.	S Min.	H Max.	H Min.	Wt.
					Load Ratings					Mounting Dimension				
mm in.	mm in.	mm in.	mm in.		kN lbf.		min^{-1}			mm in.	mm in.	mm in.	mm in.	kg lbs.
26 1.0236	26 1.0236	30 1.1811	10 0.394	K26X30X10F	9.46 2130	14.5 3260	11000	16000	0.0308	26.000 1.0236	25.991 1.0233	30.020 1.1819	30.007 1.1814	0.007 0.015
	26 1.0236	30 1.1811	13 0.512	K26X30X13	12.3 2770	20.4 4590	10000	16000	0.0335	26.000 1.0236	25.991 1.0233	30.020 1.1819	30.007 1.1814	0.011 0.024
	26 1.0236	30 1.1811	17 0.669	K26X30X17	15.0 3370	26.3 5910	10000	16000	0.0357	26.000 1.0236	25.991 1.0233	30.020 1.1819	30.007 1.1814	0.014 0.031
	26 1.0236	30 1.1811	22 0.866	K26X30X22ZW	16.7 3750	30.2 6790	10000	16000	0.0370	26.000 1.0236	25.991 1.0233	30.020 1.1819	30.007 1.1814	0.018 0.040
28 1.1024	28 1.1024	32 1.2598	21 0.827	K28X32X21F	18.7 4200	35.7 8030	9900	15000	0.0398	28.000 1.1024	27.991 1.1020	32.025 1.2608	32.009 1.2602	0.018 0.040
	28 1.1024	33 1.2992	13 0.512	K28X33X13F	14.1 3170	21.4 4810	10000	15000	0.0339	28.000 1.1024	27.991 1.1020	33.025 1.3002	33.009 1.2996	0.015 0.033
	28 1.1024	33 1.2992	13 0.512	K28X33X13FV	14.1 3170	21.4 4810	10000	15000	0.0339	28.000 1.1024	27.991 1.1020	33.025 1.3002	33.009 1.2996	0.015 0.033
	28 1.1024	33 1.2992	17 0.669	K28X33X17H	19.8 4450	33.0 7420	10000	15000	0.0378	28.000 1.1024	27.991 1.1020	33.025 1.3002	33.009 1.2996	0.018 0.040
	28 1.1024	33 1.2992	27 1.063	K28X33X27	29.0 6520	53.8 12090	10000	15000	0.0427	28.000 1.1024	27.991 1.1020	33.025 1.3002	33.009 1.2996	0.027 0.060
	28 1.1024	34 1.3386	17 0.669	K28X34X17	21.1 4740	31.5 7080	10000	16000	0.0364	28.000 1.1024	27.991 1.1020	34.025 1.3396	34.009 1.3389	0.022 0.049
	28 1.1024	34 1.3386	20 0.787	K28X34X20H	24.4 5490	37.8 8500	10000	16000	0.0381	28.000 1.1024	27.991 1.1020	34.025 1.3396	34.009 1.3389	0.025 0.055
	28 1.1024	35 1.3780	15 0.591	K28X35X15H	19.5 4380	25.6 5760	10000	16000	0.0339	28.000 1.1024	27.991 1.1020	35.025 1.3789	35.009 1.3783	0.025 0.055
	28 1.1024	35 1.3780	16 0.630	K28X35X16FH	21.5 4830	29.1 6540	10000	16000	0.0350	28.000 1.1024	27.991 1.1020	35.025 1.3789	35.009 1.3783	0.026 0.057
	28 1.1024	35 1.3780	16 0.630	K28X35X16H	21.5 4830	29.1 6540	10000	16000	0.0350	28.000 1.1024	27.991 1.1020	35.025 1.3789	35.009 1.3783	0.026 0.057
	28 1.1024	35 1.3780	27 1.063	K28X35X27H	35.2 7910	54.7 12300	10000	16000	0.0409	28.000 1.1024	27.991 1.1020	35.025 1.3789	35.009 1.3783	0.042 0.093
	28 1.1024	36 1.4173	20 0.787	K28X36X20FV	27.8 6250	37.0 8320	10000	16000	0.0365	28.000 1.1024	27.991 1.1020	36.025 1.4183	36.009 1.4177	0.039 0.086
	28 1.1024	38 1.4961	25 1.004	K28X38X25,5	40.9 9190	52.7 11850	11000	16000	0.0389	28.000 1.1024	27.991 1.1020	38.025 1.4970	38.009 1.4964	0.059 0.130

Shaft Dia.	F_w	E_w	B_c -0.20 -0.008 -0.55 -0.022	Assembly Designation	C	C_0	Speed Rating Grease	Speed Rating Oil	C_g	S Max.	S Min.	H Max.	H Min.	Wt.
					Load Ratings					Mounting Dimension				
mm in.	mm in.	mm in.	mm in.		kN lbf.		min-1			mm in.	mm in.	mm in.	mm in.	kg lbs.
28 1.1024	28 1.1024	40 1.5748	18 0.709	K28X40X18H	33.6 7550	36.5 8210	11000	17000	0.0349	28.000 1.1024	27.991 1.1020	40.025 1.5758	40.009 1.5752	0.060 0.132
	28 1.1024	40 1.5748	25 0.984	K28X40X25H	45.5 10230	54.0 12140	11000	17000	0.0384	28.000 1.1024	27.991 1.1020	40.025 1.5758	40.009 1.5752	0.072 0.159
	28 1.1024	40 1.5748	30 1.181	K28X40X30H	54.3 12210	67.8 15240	11000	17000	0.0406	28.000 1.1024	27.991 1.1020	40.025 1.5758	40.009 1.5752	0.100 0.220
	28 1.1024	41 1.6142	25 0.984	K28X41X25H	49.2 11060	57.1 12840	11000	17000	0.0386	28.000 1.1024	27.991 1.1020	41.025 1.6152	41.009 1.6145	0.082 0.181
29 1.1417	29 1.1417	34 1.3386	27 1.063	K29X34X27F	28.9 6500	54.0 12140	9700	15000	0.0434	29.000 1.1417	28.991 1.1414	34.025 1.3396	34.009 1.3389	0.033 0.073
30 1.1811	30 1.1811	34 1.3386	13 0.512	K30X34X13	13.5 3030	24.1 5420	9200	14000	0.0372	30.000 1.1811	29.991 1.1807	34.025 1.3396	34.009 1.3389	0.011 0.024
	30 1.1811	35 1.3780	13 0.512	K30X35X13H	15.6 3510	24.9 5600	9300	14000	0.0363	30.000 1.1811	29.991 1.1807	35.025 1.3789	35.009 1.3783	0.017 0.037
	30 1.1811	35 1.3780	17 0.669	K30X35X17H	20.2 4540	34.6 7780	9300	14000	0.0394	30.000 1.1811	29.991 1.1807	35.025 1.3789	35.009 1.3783	0.022 0.049
	30 1.1811	35 1.3780	20 0.787	K30X35X20H	23.5 5280	41.9 9420	9300	14000	0.0413	30.000 1.1811	29.991 1.1807	35.025 1.3789	35.009 1.3783	0.023 0.051
	30 1.1811	35 1.3780	22.8 0.898	K30X35X23F	25.6 5760	46.8 10520	9300	14000	0.0425	30.000 1.1811	29.991 1.1807	35.025 1.3789	35.009 1.3783	0.028 0.062
	30 1.1811	35 1.3780	27 1.063	K30X35X27H	30.6 6880	59.0 13260	9300	14000	0.0450	30.000 1.1811	29.991 1.1807	35.025 1.3789	35.009 1.3783	0.032 0.071
	30 1.1811	35 1.3780	27 1.063	K30X35X27HZW	19.9 4470	33.6 7550	9300	14000	0.0391	30.000 1.1811	29.991 1.1807	35.025 1.3789	35.009 1.3783	0.033 0.073
	30 1.1811	36 1.4173	14 0.551	K30X36X14	18.0 4050	26.2 5890	9500	15000	0.0358	30.000 1.1811	29.991 1.1807	36.025 1.4183	36.009 1.4177	0.020 0.044
	30 1.1811	37 1.4567	17.8 0.701	K30X37X18	24.3 5460	34.8 7820	9600	15000	0.0377	30.000 1.1811	29.991 1.1807	37.025 1.4577	37.009 1.4570	0.033 0.073
	30 1.1811	37 1.4567	18 0.709	K30X37X18FV	24.3 5460	34.8 7820	9600	15000	0.0377	30.000 1.1811	29.991 1.1807	37.025 1.4577	37.009 1.4570	0.033 0.073
	30 1.1811	40 1.5748	30 1.181	K30X40X30H	49.2 11060	67.8 15240	9900	15000	0.0426	30.000 1.1811	29.991 1.1807	40.025 1.5758	40.009 1.5752	0.077 0.170
	30 1.1811	42 1.6535	30 1.181	K30X42X30H	54.2 12180	68.6 15420	10000	16000	0.0419	30.000 1.1811	29.991 1.1807	42.025 1.6545	42.009 1.6539	0.096 0.212
	30 1.1811	44 1.7323	26 1.024	K30X44X26H	52.4 11780	59.9 13470	10000	16000	0.0399	30.000 1.1811	29.991 1.1807	44.025 1.7333	44.009 1.7326	0.095 0.209
31 1.2047	31 1.2047	37 1.4409	24 0.945	K30,6X36,6X24FV	27.8 6250	46.2 10390	9300	14000	0.0416	30.600 1.2047	30.591 1.2044	36.625 1.4419	36.609 1.4413	0.038 0.084
32 1.2598	32 1.2598	36 1.4173	15 0.591	K32X36X15F	11.6 2610	20.2 4540	8600	13000	0.0367	32.000 1.2598	31.989 1.2594	36.025 1.4183	36.009 1.4177	0.015 0.033
	32 1.2598	37 1.4567	13 0.512	K32X37X13	15.2 3420	24.4 5490	8700	13000	0.0372	32.000 1.2598	31.989 1.2594	37.025 1.4577	37.009 1.4570	0.018 0.040
	32 1.2598	37 1.4567	17 0.669	K32X37X17H	20.0 4500	34.8 7820	8700	13000	0.0406	32.000 1.2598	31.989 1.2594	37.025 1.4577	37.009 1.4570	0.020 0.044
	32 1.2598	37 1.4567	27 1.063	K32X37X27	29.3 6590	56.8 12770	8700	13000	0.0459	32.000 1.2598	31.989 1.2594	37.025 1.4577	37.009 1.4570	0.035 0.077
	32 1.2598	38 1.4961	20 0.787	K32X38X20H	27.3 6140	45.7 10270	8800	14000	0.0423	32.000 1.2598	31.989 1.2594	38.025 1.4970	38.009 1.4964	0.030 0.066

Continued on next page.

SINGLE-ROW, DOUBLE-ROW ASSEMBLIES –

continued

METRIC SERIES

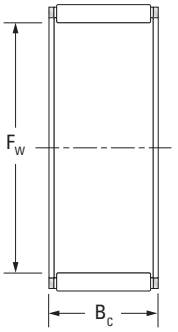

K

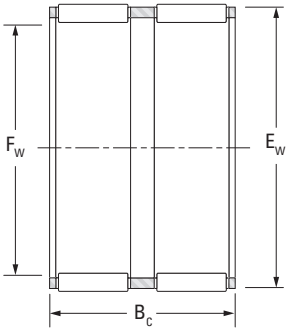

KZW

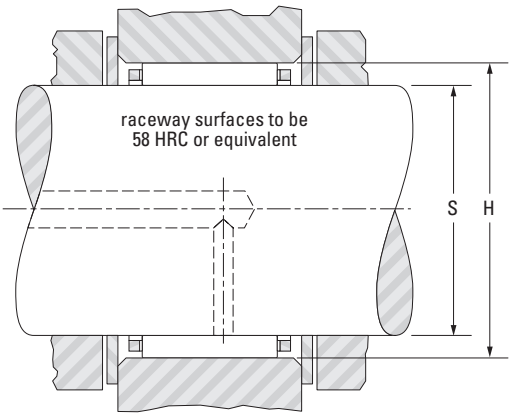

Shaft Dia.	F_w	E_w	B_c -0.20 -0.008 -0.55 -0.022	Assembly Designation	C	C_0	Speed Rating Grease	Speed Rating Oil	C_g	S Max.	S Min.	H Max.	H Min.	Wt.
					Load Ratings					Mounting Dimension				
mm in.	mm in.	mm in.	mm in.		kN lbf.		min^{-1}			mm in.	mm in.	mm in.	mm in.	kg lbs.
32 1.2598	32 1.2598	38 1.4961	26 1.024	K32X38X26H	33.2 7460	58.8 13220	8800	14000	0.0451	32.000 1.2598	31.989 1.2594	38.025 1.4970	38.009 1.4964	0.037 0.082
	32 1.2598	39 1.5354	16 0.630	K32X39X16H	23.0 5170	33.0 7420	8900	14000	0.0382	32.000 1.2598	31.989 1.2594	39.025 1.5364	39.009 1.5358	0.030 0.066
	32 1.2598	39 1.5354	18 0.709	K32X39X18H	25.8 5800	38.2 8590	8900	14000	0.0397	32.000 1.2598	31.989 1.2594	39.025 1.5364	39.009 1.5358	0.033 0.073
	32 1.2598	40 1.5748	25 0.984	K32X40X25H	37.9 8520	57.2 12860	9000	14000	0.0431	32.000 1.2598	31.989 1.2594	40.025 1.5758	40.009 1.5752	0.052 0.115
	32 1.2598	40 1.5748	36 1.417	K32X40X36H	52.3 11760	86.4 19420	9000	14000	0.0477	32.000 1.2598	31.989 1.2594	40.025 1.5758	40.009 1.5752	0.080 0.176
	32 1.2598	42 1.6535	42 1.654	K32X42X42H	69.2 15560	108 24280	9200	14000	0.0491	32.000 1.2598	31.989 1.2594	42.025 1.6545	42.009 1.6539	0.110 0.243
	32 1.2598	46 1.8110	18 0.709	K32X46X18H	39.2 8810	41.9 9420	9600	15000	0.0374	32.000 1.2598	31.989 1.2594	46.025 1.8120	46.009 1.8114	0.075 0.165
	32 1.2598	46 1.8110	32 1.260	K32X46X32H	67.0 15060	83.4 18750	9600	15000	0.0444	32.000 1.2598	31.989 1.2594	46.025 1.8120	46.009 1.8114	0.140 0.309
	32 1.2598	46 1.8110	40 1.575	K32X46X40H	81.7 18370	108 24280	9600	15000	0.0473	32.000 1.2598	31.989 1.2594	46.025 1.8120	46.009 1.8114	0.158 0.348
33 1.2992	33 1.2992	51 2.0079	23 0.906	K33X51X23H	55.9 12570	57.6 12950	9600	15000	0.0401	33.000 1.2992	32.989 1.2988	51.029 2.0090	51.010 2.0083	0.140 0.309
34 1.3386	34 1.3386	38 1.4961	11 0.433	K34X38X11	12.2 2740	21.9 4920	8100	12000	0.0385	34.000 1.3386	33.989 1.3381	38.025 1.4970	38.009 1.4964	0.011 0.024
	34 1.3386	44 1.7323	26 1.024	K34X44X26FH	42.9 9640	58.9 13240	8600	13000	0.0433	34.000 1.3386	33.989 1.3381	44.025 1.7333	44.009 1.7326	0.080 0.176
	34 1.3386	44 1.7323	26 1.024	K34X44X26FV	42.9 9640	58.9 13240	8600	13000	0.0433	34.000 1.3386	33.989 1.3381	44.025 1.7333	44.009 1.7326	0.075 0.165
35 1.3780	35 1.3780	40 1.5748	13 0.512	K35X40X13H	16.2 3640	27.2 6110	7900	12000	0.0398	35.000 1.3780	34.989 1.3775	40.025 1.5758	40.009 1.5752	0.018 0.040
	35 1.3780	40 1.5748	17 0.669	K35X40X17H	22.1 4970	40.8 9170	7900	12000	0.0440	35.000 1.3780	34.989 1.3775	40.025 1.5758	40.009 1.5752	0.025 0.055
	35 1.3780	40 1.5748	19 0.748	K35X40X19F	23.2 5220	43.2 9710	7900	12000	0.0446	35.000 1.3780	34.989 1.3775	40.025 1.5758	40.009 1.5752	0.025 0.055
	35 1.3780	40 1.5748	19 0.748	K35X40X19H	23.2 5220	43.2 9710	7900	12000	0.0446	35.000 1.3780	34.989 1.3775	40.025 1.5758	40.009 1.5752	0.025 0.055

Shaft Dia.	F_w	E_w	B_c -0.20 -0.008 -0.55 -0.022	Assembly Designation	C	C_0	Speed Rating Grease	Speed Rating Oil	C_g	S Max.	S Min.	H Max.	H Min.	Wt.
					Load Ratings					Mounting Dimension				
mm in.	mm in.	mm in.	mm in.		kN lbf.		min-1			mm in.	mm in.	mm in.	mm in.	kg lbs.
35 1.3780	35 1.3780	40 1.5748	25 0.984	K35X40X25H	28.4 6380	56.2 12630	7900	12000	0.0476	35.000 1.3780	34.989 1.3775	40.025 1.5758	40.009 1.5752	0.035 0.077
	35 1.3780	40 1.5748	27 1.063	K35X40X27H	29.8 6700	59.6 13400	7900	12000	0.0483	35.000 1.3780	34.989 1.3775	40.025 1.5758	40.009 1.5752	0.037 0.082
	35 1.3780	42 1.6535	16 0.630	K35X42X16	24.5 5510	36.8 8270	8100	12000	0.0408	35.000 1.3780	34.989 1.3775	42.025 1.6545	42.009 1.6539	0.032 0.071
	35 1.3780	42 1.6535	16 0.630	K35X42X16AH	24.5 5510	36.8 8270	8100	12000	0.0408	35.000 1.3780	34.989 1.3775	42.025 1.6545	42.009 1.6539	0.031 0.068
	35 1.3780	42 1.6535	18 0.709	K35X42X18	27.5 6180	42.6 9580	8100	12000	0.0423	35.000 1.3780	34.989 1.3775	42.025 1.6545	42.009 1.6539	0.035 0.077
	35 1.3780	42 1.6535	20 0.787	K35X42X20H	30.4 6830	48.5 10900	8100	12000	0.0437	35.000 1.3780	34.989 1.3775	42.025 1.6545	42.009 1.6539	0.037 0.082
	35 1.3780	42 1.6535	30 1.181	K35X42X30FH	40.5 9100	70.0 15740	8100	12000	0.0479	35.000 1.3780	34.989 1.3775	42.025 1.6545	42.009 1.6539	0.061 0.134
	35 1.3780	45 1.7717	20 0.787	K35X45X20FH	36.5 8210	49.9 11220	8400	13000	0.0421	35.000 1.3780	34.989 1.3775	45.025 1.7726	45.009 1.7720	0.059 0.130
	35 1.3780	45 1.7717	30 1.181	K35X45X30F	51.2 11510	74.5 16750	8400	13000	0.0465	35.000 1.3780	34.989 1.3775	45.025 1.7726	45.009 1.7720	0.100 0.220
	35 1.3780	45 1.7717	35 1.378	K35X45X35H	62.1 13960	95.5 21470	8400	13000	0.0494	35.000 1.3780	34.989 1.3775	45.025 1.7726	45.009 1.7720	0.085 0.187
	35 1.3780	45 1.7717	41 1.614	K35X45X41	70.8 15920	113 25400	8400	13000	0.0515	35.000 1.3780	34.989 1.3775	45.025 1.7726	45.009 1.7720	0.120 0.265
	35 1.3780	45 1.7717	49 1.929	K35X45X49H	82.5 18550	138 31020	8400	13000	0.0541	35.000 1.3780	34.989 1.3775	45.025 1.7726	45.009 1.7720	0.143 0.315
	35 1.3780	45 1.7717	49 1.929	K35X45X49HZW	71.8 16140	115 25850	8400	13000	0.0518	35.000 1.3780	34.989 1.3775	45.025 1.7726	45.009 1.7720	0.143 0.315
	35 1.3780	48 1.8898	22.8 0.898	K35X48X22,8H	47.6 10700	57.4 12900	8600	13000	0.0423	35.000 1.3780	34.989 1.3775	48.025 1.8907	48.009 1.8901	0.100 0.220
	35 1.3780	50 1.9685	40 1.575	K35X50X40F	79.7 17920	102 22930	8700	13000	0.0480	35.000 1.3780	34.989 1.3775	50.025 1.9695	50.009 1.9689	0.200 0.441
36 1.4173	36 1.4173	40 1.5748	29 1.142	K36X40X29TN	21.2 4770	45.2 10160	7600	12000	—	36.000 1.4173	35.989 1.4169	40.025 1.5758	40.009 1.5752	0.029 0.064
	36 1.4173	42 1.6535	16 0.630	K36X42X16	22.8 5130	37.7 8480	7800	12000	0.0425	36.000 1.4173	35.989 1.4169	42.025 1.6545	42.009 1.6539	0.027 0.060
	36 1.4173	44 1.7323	27.5 1.083	K36X44X27,5H	42.8 9620	69.2 15560	7900	12000	0.0475	36.000 1.4173	35.989 1.4169	44.025 1.7333	44.009 1.7326	0.064 0.140
37 1.4567	37 1.4567	42 1.6535	13 0.512	K37X42X13H	16.9 3800	29.4 6610	7500	11000	0.0416	37.000 1.4567	36.989 1.4563	42.025 1.6545	42.009 1.6539	0.017 0.037
	37 1.4567	42 1.6535	17 0.669	K37X42X17H	21.9 4920	41.0 9220	7500	11000	0.0451	37.000 1.4567	36.989 1.4563	42.025 1.6545	42.009 1.6539	0.025 0.055
	37 1.4567	42 1.6535	27 1.063	K37X42X27F	32.1 7220	66.9 15040	7500	11000	0.0510	37.000 1.4567	36.989 1.4563	42.025 1.6545	42.009 1.6539	0.039 0.086
	37 1.4567	44 1.7323	19 0.748	K37X44X19H	29.7 6680	48.0 10790	7600	12000	0.0447	37.000 1.4567	36.989 1.4563	44.025 1.7333	44.009 1.7326	0.039 0.086
38 1.4961	38 1.4961	41 1.6142	9 0.354	K38X41X9TN	5.93 1330	11.0 2470	7100	11000	—	38.000 1.4961	37.989 1.4956	41.025 1.6152	41.009 1.6145	0.004 0.009
	38 1.4961	43 1.6929	17 0.669	K38X43X17F	21.8 4900	41.0 9220	7300	11000	0.0457	38.000 1.4961	37.989 1.4956	43.025 1.6939	43.009 1.6933	0.032 0.071

Continued on next page.

SINGLE-ROW, DOUBLE-ROW ASSEMBLIES – *continued*

METRIC SERIES

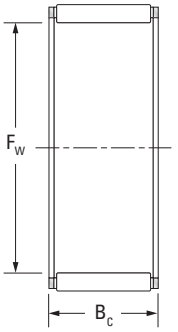

K

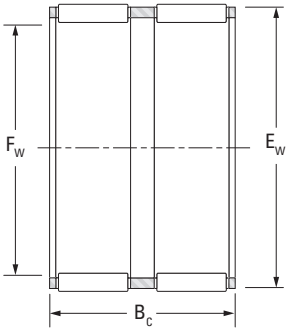

KZW

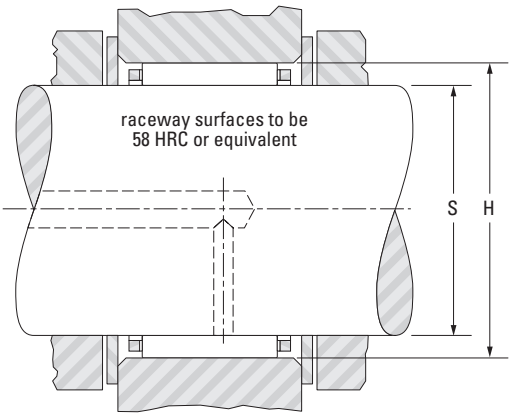

Shaft Dia.	F_w	E_w	B_c -0.20 -0.008 -0.55 -0.022	Assembly Designation	C	C_0	Speed Rating Grease	Speed Rating Oil	C_g	S Max.	S Min.	H Max.	H Min.	Wt.
					Load Ratings					Mounting Dimension				
mm in.	mm in.	mm in.	mm in.		kN lbf.		min^{-1}			mm in.	mm in.	mm in.	mm in.	kg lbs.
38 1.4961	38 1.4961	43 1.6929	17 0.669	K38X43X17H	21.8 4900	41.0 9220	7300	11000	0.0457	38.000 1.4961	37.989 1.4956	43.025 1.6939	43.009 1.6933	0.032 0.071
	38 1.4961	43 1.6929	27 1.063	K38X43X27	31.9 7170	67.0 15060	7300	11000	0.0516	38.000 1.4961	37.989 1.4956	43.025 1.6939	43.009 1.6933	0.041 0.090
	38 1.4961	46 1.8110	19.8 0.780	K38X46X20	33.3 7490	51.0 11470	7500	12000	0.0450	38.000 1.4961	37.989 1.4956	46.025 1.8120	46.009 1.8114	0.055 0.121
	38 1.4961	46 1.8110	19.8 0.780	K38X46X20H	33.3 7490	51.0 11470	7500	12000	0.0450	38.000 1.4961	37.989 1.4956	46.025 1.8120	46.009 1.8114	0.055 0.121
	38 1.4961	46 1.8110	32 1.260	K38X46X32FV1	53.7 12070	94.6 21270	7500	12000	0.0525	38.000 1.4961	37.989 1.4956	46.025 1.8120	46.009 1.8114	0.080 0.176
	38 1.4961	46 1.8110	32 1.260	K38X46X32H	55.2 12410	98.1 22050	7500	12000	0.0530	38.000 1.4961	37.989 1.4956	46.025 1.8120	46.009 1.8114	0.090 0.198
	38 1.4961	50 1.9685	25 0.984	K38X50X25	53.0 11910	70.8 15920	7800	12000	0.0464	38.000 1.4961	37.989 1.4956	50.025 1.9695	50.009 1.9689	0.100 0.220
	38 1.4961	50 1.9685	33 1.299	K38X50X33H	68.3 15350	98.2 22080	7800	12000	0.0504	38.000 1.4961	37.989 1.4956	50.025 1.9695	50.009 1.9689	0.126 0.278
	38 1.4961	50 1.9685	40 1.575	K38X50X40FH	76.2 17130	113 25400	7800	12000	0.0521	38.000 1.4961	37.989 1.4956	50.025 1.9695	50.009 1.9689	0.170 0.375
40 1.5748	40 1.5748	45 1.7717	13 0.512	K40X45X13H	17.6 3960	31.7 7130	6900	11000	0.0438	40.000 1.5748	39.989 1.5744	45.025 1.7726	45.009 1.7720	0.022 0.049
	40 1.5748	45 1.7717	18 0.709	K40X45X18H	25.1 5640	50.4 11330	6900	11000	0.0492	40.000 1.5748	39.989 1.5744	45.025 1.7726	45.009 1.7720	0.031 0.068
	40 1.5748	45 1.7717	21 0.827	K40X45X21H	23.3 5240	45.2 10160	6900	11000	0.0479	40.000 1.5748	39.989 1.5744	45.025 1.7726	45.009 1.7720	0.033 0.073
	40 1.5748	45 1.7717	27 1.063	K40X45X27H	32.7 7350	70.2 15780	6900	11000	0.0534	40.000 1.5748	39.989 1.5744	45.025 1.7726	45.009 1.7720	0.040 0.088
	40 1.5748	45 1.7717	27 1.063	K40X45X27TN	33.3 7490	72.1 16210	6900	11000	0.0538	40.000 1.5748	39.989 1.5744	45.025 1.7726	45.009 1.7720	0.030 0.066
	40 1.5748	45 1.7717	29 1.142	K40X45X29H	34.7 7800	75.9 17060	6900	11000	0.0545	40.000 1.5748	39.989 1.5744	45.025 1.7726	45.009 1.7720	0.050 0.110
	40 1.5748	46 1.8110	17 0.669	K40X46X17	25.2 5670	44.0 9890	7000	11000	0.0464	40.000 1.5748	39.989 1.5744	46.025 1.8120	46.009 1.8114	0.033 0.073
	40 1.5748	47 1.8504	18 0.709	K40X47X18	28.0 6290	45.6 10250	7000	11000	0.0456	40.000 1.5748	39.989 1.5744	47.025 1.8514	47.009 1.8507	0.041 0.090

Shaft Dia.	F_w	E_w	B_c -0.20 -0.008 -0.55 -0.022	Assembly Designation	C	C_0	Speed Rating Grease	Speed Rating Oil	C_g	S Max.	S Min.	H Max.	H Min.	Wt.
					Load Ratings					Mounting Dimension				
mm in.	mm in.	mm in.	mm in.		kN lbf.		min-1			mm in.	mm in.	mm in.	mm in.	kg lbs.
40 1.5748	40 1.5748	47 1.8504	20 0.787	K40X47X20	31.1 6990	52.1 11710	7000	11000	0.0472	40.000 1.5748	39.989 1.5744	47.025 1.8514	47.009 1.8507	0.042 0.093
	40 1.5748	48 1.8898	20 0.787	K40X48X20FV1	35.5 7980	56.3 12660	7100	11000	0.0472	40.000 1.5748	39.989 1.5744	48.025 1.8907	48.009 1.8901	0.052 0.115
	40 1.5748	48 1.8898	20 0.787	K40X48X20H	35.5 7980	56.3 12660	7100	11000	0.0472	40.000 1.5748	39.989 1.5744	48.025 1.8907	48.009 1.8901	0.050 0.110
	40 1.5748	48 1.8898	35 1.378	K40X48X35H	57.3 12880	104 23380	7100	11000	0.0550	40.000 1.5748	39.989 1.5744	48.025 1.8907	48.009 1.8901	0.098 0.216
	40 1.5748	50 1.9685	27 1.063	K40X50X27H	53.0 11910	81.0 18210	7200	11000	0.0502	40.000 1.5748	39.989 1.5744	50.025 1.9695	50.009 1.9689	0.084 0.185
	40 1.5748	55 2.1654	45 1.772	K40X55X45H	103 23160	146 32820	7500	12000	0.0554	40.000 1.5748	39.989 1.5744	55.029 2.1665	55.010 2.1657	0.221 0.487
	40 1.5748	56 2.2047	26 1.024	K40X56X26H	63.7 14320	75.7 17020	7600	12000	0.0467	40.000 1.5748	39.989 1.5744	56.029 2.2059	56.010 2.2051	0.138 0.304
41 1.6142	41 1.6142	48 1.8898	31 1.220	K41X48X31HZW	38.0 8540	68.1 15310	6800	11000	0.0510	41.000 1.6142	40.989 1.6137	48.025 1.8907	48.009 1.8901	0.067 0.148
42 1.6535	42 1.6535	47 1.8504	13 0.512	K42X47X13H	18.7 4200	34.9 7850	6500	10000	0.0459	42.000 1.6535	41.989 1.6531	47.025 1.8514	47.009 1.8507	0.027 0.060
	42 1.6535	47 1.8504	17 0.669	K42X47X17H	22.8 5130	45.2 10160	6500	10000	0.0490	42.000 1.6535	41.989 1.6531	47.025 1.8514	47.009 1.8507	0.028 0.062
	42 1.6535	47 1.8504	27 1.063	K42X47X27FH	33.8 7600	74.7 16790	6500	10000	0.0555	42.000 1.6535	41.989 1.6531	47.025 1.8514	47.009 1.8507	0.041 0.090
	42 1.6535	47 1.8504	27 1.063	K42X47X27H	33.8 7600	74.7 16790	6500	10000	0.0555	42.000 1.6535	41.989 1.6531	47.025 1.8514	47.009 1.8507	0.041 0.090
	42 1.6535	48 1.8898	24 0.945	K42X48X24F	33.1 7440	63.9 14370	6600	10000	0.0519	42.000 1.6535	41.989 1.6531	48.025 1.8907	48.009 1.8901	0.046 0.101
	42 1.6535	50 1.9685	13 0.512	K42X50X13H	20.9 4700	28.9 6500	6700	10000	0.0409	42.000 1.6535	41.989 1.6531	50.025 1.9695	50.009 1.9689	0.035 0.077
	42 1.6535	50 1.9685	20 0.787	K42X50X20H	35.2 7910	56.6 12720	6700	10000	0.0483	42.000 1.6535	41.989 1.6531	50.025 1.9695	50.009 1.9689	0.054 0.119
	42 1.6535	50 1.9685	30 1.181	K42X50X30H	51.3 11530	91.9 20660	6700	10000	0.0545	42.000 1.6535	41.989 1.6531	50.025 1.9695	50.009 1.9689	0.080 0.176
	42 1.6535	54 2.1260	30.7 1.209	K42X54X30,7H	62.7 14100	90.1 20260	7000	11000	0.0514	42.000 1.6535	41.989 1.6531	54.029 2.1271	54.010 2.1264	0.140 0.309
43 1.6929	43 1.6929	48 1.8898	17 0.669	K43X48X17FH	23.0 5170	45.8 10300	6400	9800	0.0496	43.000 1.6929	42.989 1.6925	48.025 1.8907	48.009 1.8901	0.036 0.079
	43 1.6929	48 1.8898	27 1.063	K43X48X27H	34.8 7820	78.0 17540	6400	9800	0.0567	43.000 1.6929	42.989 1.6925	48.025 1.8907	48.009 1.8901	0.050 0.110
44 1.7323	44 1.7323	50 1.9685	22 0.866	K44X50X22	31.6 7100	60.6 13620	6400	9900	0.0523	44.000 1.7323	43.989 1.7319	50.025 1.9695	50.009 1.9689	0.046 0.101
	44 1.7323	50 1.9685	22 0.866	K44X50X22H	31.6 7100	60.6 13620	6400	9900	0.0523	44.000 1.7323	43.989 1.7319	50.025 1.9695	50.009 1.9689	0.046 0.101
	44 1.7323	50 1.9685	30 1.201	K44X50X30,5HZW	35.5 7980	70.5 15850	6400	9900	0.0543	44.000 1.7323	43.989 1.7319	50.025 1.9695	50.009 1.9689	0.068 0.150
45 1.7717	45 1.7717	50 1.9685	13 0.512	K45X50X13H	18.4 4140	35.1 7890	6100	9400	0.0474	45.000 1.7717	44.989 1.7712	50.025 1.9695	50.009 1.9689	0.022 0.049
	45 1.7717	50 1.9685	15 0.591	K45X50X15H	19.4 4360	37.3 8390	6100	9400	0.0482	45.000 1.7717	44.989 1.7712	50.025 1.9695	50.009 1.9689	0.028 0.062

Continued on next page.

SINGLE-ROW, DOUBLE-ROW ASSEMBLIES – *continued*

METRIC SERIES

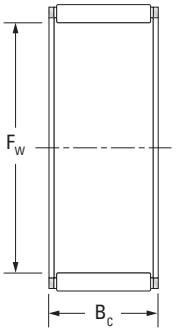

K

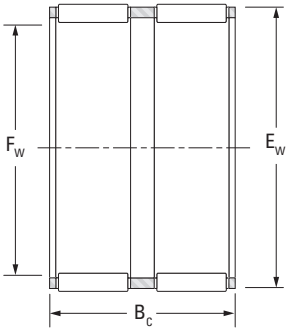

KZW

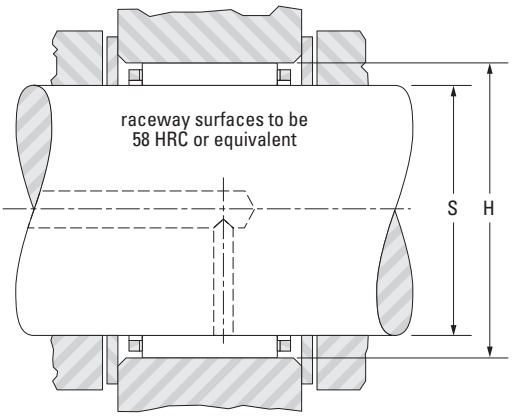

Shaft Dia.	F_w	E_w	B_c -0.20 -0.008 -0.55 -0.022	Assembly Designation	C	C_0	Speed Rating Grease	Speed Rating Oil	C_g	S Max.	S Min.	H Max.	H Min.	Wt.
					Load Ratings					Mounting Dimension				
mm in.	mm in.	mm in.	mm in.		kN lbf.		min^{-1}			mm in.	mm in.	mm in.	mm in.	kg lbs.
45 1.7717	**45** 1.7717	**50** 1.9685	**17** 0.669	K45X50X17H	**24.9** 5600	**51.8** 11650	6100	9400	0.0523	**45.000** 1.7717	**44.989** 1.7712	**50.025** 1.9695	**50.009** 1.9689	**0.030** 0.066
	45 1.7717	**50** 1.9685	**20** 0.787	K45X50X20F	**27.0** 6070	**57.4** 12900	6100	9400	0.0536	**45.000** 1.7717	**44.989** 1.7712	**50.025** 1.9695	**50.009** 1.9689	**0.040** 0.088
	45 1.7717	**50** 1.9685	**21** 0.827	K45X50X21CH	**24.6** 5530	**50.4** 11330	6100	9400	0.0519	**45.000** 1.7717	**44.989** 1.7712	**50.025** 1.9695	**50.009** 1.9689	**0.036** 0.079
	45 1.7717	**50** 1.9685	**27** 1.063	K45X50X27FH	**34.2** 7690	**77.4** 17400	6100	9400	0.0577	**45.000** 1.7717	**44.989** 1.7712	**50.025** 1.9695	**50.009** 1.9689	**0.043** 0.095
	45 1.7717	**50** 1.9685	**27** 1.063	K45X50X27TN	**31.8** 7150	**70.7** 15890	6100	9400	—	**45.000** 1.7717	**44.989** 1.7712	**50.025** 1.9695	**50.009** 1.9689	**0.048** 0.106
	45 1.7717	**52** 2.0472	**18** 0.709	K45X52X18H	**30.1** 6770	**52.0** 11690	6200	9500	0.0497	**45.000** 1.7717	**44.989** 1.7712	**52.029** 2.0484	**52.010** 2.0476	**0.045** 0.099
	45 1.7717	**52** 2.0472	**21** 0.827	K45X52X21F	**35.0** 7870	**63.2** 14210	6200	9500	0.0521	**45.000** 1.7717	**44.989** 1.7712	**52.029** 2.0484	**52.010** 2.0476	**0.055** 0.121
	45 1.7717	**53** 2.0866	**20** 0.787	K45X53X20H	**36.0** 8090	**59.5** 13380	6200	9600	0.0504	**45.000** 1.7717	**44.989** 1.7712	**53.029** 2.0878	**53.010** 2.0870	**0.054** 0.119
	45 1.7717	**53** 2.0866	**24.8** 0.976	K45X53X25H	**45.9** 10320	**81.5** 18320	6200	9600	0.0545	**45.000** 1.7717	**44.989** 1.7712	**53.029** 2.0878	**53.010** 2.0870	**0.072** 0.159
	45 1.7717	**53** 2.0866	**25** 0.984	K45X53X25F	**42.5** 9550	**73.7** 16570	6200	9600	0.0531	**45.000** 1.7717	**44.989** 1.7712	**53.029** 2.0878	**53.010** 2.0870	**0.075** 0.165
	45 1.7717	**53** 2.0866	**28** 1.102	K45X53X28H	**49.3** 11080	**89.2** 20050	6200	9600	0.0557	**45.000** 1.7717	**44.989** 1.7712	**53.029** 2.0878	**53.010** 2.0870	**0.078** 0.172
	45 1.7717	**55** 2.1654	**20** 0.787	K45X55X20H	**42.0** 9440	**62.2** 13980	6400	9800	0.0494	**45.000** 1.7717	**44.989** 1.7712	**55.029** 2.1665	**55.010** 2.1657	**0.074** 0.163
	45 1.7717	**59** 2.3228	**18** 0.709	K45X59X18H	**47.8** 10750	**58.9** 13240	6600	10000	0.0467	**45.000** 1.7717	**44.989** 1.7712	**59.029** 2.3240	**59.010** 2.3232	**0.107** 0.236
	45 1.7717	**59** 2.3228	**18** 0.709	K45X59X18TN	**45.7** 10270	**55.4** 12450	6600	10000	—	**45.000** 1.7717	**44.989** 1.7712	**59.029** 2.3240	**59.010** 2.3232	**0.097** 0.214
	45 1.7717	**59** 2.3228	**36** 1.417	K45X59X36H	**82.4** 18520	**118** 26530	6600	10000	0.0555	**45.000** 1.7717	**44.989** 1.7712	**59.029** 2.3240	**59.010** 2.3232	**0.181** 0.399
	45 1.7717	**60** 2.3622	**30** 1.181	K45X60X30H	**75.5** 16970	**101** 22710	6600	10000	0.0530	**45.000** 1.7717	**44.989** 1.7712	**60.029** 2.3633	**60.010** 2.3626	**0.171** 0.377
	45 1.7717	**60** 2.3622	**45** 1.772	K45X60X45H	**108** 24280	**160** 35970	6600	10000	0.0594	**45.000** 1.7717	**44.989** 1.7712	**60.029** 2.3633	**60.010** 2.3626	**0.280** 0.617

Shaft Dia.	F_w	E_w	B_c -0.20 -0.008 -0.55 -0.022	Assembly Designation	C	C_0	Speed Rating Grease	Speed Rating Oil	C_g	S Max.	S Min.	H Max.	H Min.	Wt.
					Load Ratings					Mounting Dimension				
mm in.	mm in.	mm in.	mm in.		kN lbf.		min-1			mm in.	mm in.	mm in.	mm in.	kg lbs.
46 1.8110	46 1.8110	53 2.0866	36 1.417	K46X53X36HZW	48.6 10930	96.7 21740	6100	9300	0.0585	46.000 1.8110	45.989 1.8106	53.029 2.0878	53.010 2.0870	0.100 0.220
47 1.8504	47 1.8504	52 2.0472	15 0.591	K47X52X15FH	20.1 4520	39.8 8950	5800	8900	0.0499	47.000 1.8504	46.989 1.8500	52.029 2.0484	52.010 2.0476	0.030 0.066
	47 1.8504	52 2.0472	17 0.669	K47X52X17H	24.2 5440	50.4 11330	5800	8900	0.0529	47.000 1.8504	46.989 1.8500	52.029 2.0484	52.010 2.0476	0.032 0.071
	47 1.8504	52 2.0472	26.8 1.055	K47X52X27FH	35.4 7960	82.4 18520	5800	8900	0.0598	47.000 1.8504	46.989 1.8500	52.029 2.0484	52.010 2.0476	0.045 0.099
	47 1.8504	52 2.0472	27 1.063	K47X52X27H	36.6 8230	85.9 19310	5800	8900	0.0604	47.000 1.8504	46.989 1.8500	52.029 2.0484	52.010 2.0476	0.045 0.099
	47 1.8504	55 2.1654	28 1.102	K47X55X28FV1	48.9 10990	89.5 20120	6000	9200	0.0568	47.000 1.8504	46.989 1.8500	55.029 2.1665	55.010 2.1657	0.092 0.203
48 1.8898	48 1.8898	53 2.0866	17 0.669	K48X53X17H	25.7 5780	54.9 12340	5700	8700	0.0546	48.000 1.8898	47.989 1.8893	53.029 2.0878	53.010 2.0870	0.032 0.071
	48 1.8898	54 2.1260	19 0.748	K48X54X19H	30.9 6950	61.2 13760	5700	8800	0.0545	48.000 1.8898	47.989 1.8893	54.029 2.1271	54.010 2.1264	0.042 0.093
49 1.9291	49 1.9291	55 2.1654	32 1.260	K49X55X32HZW	40.2 9040	86.4 19420	5600	8600	0.0599	49.000 1.9291	48.989 1.9287	55.029 2.1665	55.010 2.1657	0.080 0.176
	49 1.9291	65 2.5591	38 1.496	K49X65X38H	100 22480	142 31920	6100	9300	0.0593	49.000 1.9291	48.989 1.9287	65.029 2.5602	65.010 2.5594	0.244 0.538
50 1.9685	50 1.9685	55 2.1654	17 0.669	K50X55X17H	25.5 5730	55.0 12360	5400	8400	0.0557	50.000 1.9685	49.989 1.9681	55.029 2.1665	55.010 2.1657	0.032 0.071
	50 1.9685	55 2.1654	20 0.787	K50X55X20H	30.2 6790	68.5 15400	5400	8400	0.0588	50.000 1.9685	49.989 1.9681	55.029 2.1665	55.010 2.1657	0.038 0.084
	50 1.9685	55 2.1654	30 1.181	K50X55X30	38.2 8590	92.4 20770	5400	8400	0.0633	50.000 1.9685	49.989 1.9681	55.029 2.1665	55.010 2.1657	0.057 0.120
	50 1.9685	55 2.1654	30 1.181	K50X55X30FV1	38.2 8590	92.4 20770	5400	8400	0.0633	50.000 1.9685	49.989 1.9681	55.029 2.1665	55.010 2.1657	0.057 0.126
	50 1.9685	56 2.2047	23 0.906	K50X56X23	35.5 7980	74.1 16660	5500	8500	0.0582	50.000 1.9685	49.989 1.9681	56.029 2.2059	56.010 2.2051	0.051 0.112
	50 1.9685	57 2.2441	18 0.709	K50X57X18FH	31.3 7040	56.4 12680	5500	8500	0.0531	50.000 1.9685	49.989 1.9681	57.029 2.2452	57.010 2.2445	0.050 0.110
	50 1.9685	58 2.2835	20 0.787	K50X58X20H	38.8 8720	67.8 15240	5600	8600	0.0545	50.000 1.9685	49.989 1.9681	58.029 2.2846	58.010 2.2839	0.065 0.143
	50 1.9685	58 2.2835	25 0.984	K50X58X25H	46.5 10450	85.6 19240	5600	8600	0.0577	50.000 1.9685	49.989 1.9681	58.029 2.2846	58.010 2.2839	0.081 0.179
	50 1.9685	58 2.2835	35 1.378	K50X58X35H	64.9 14590	131 29450	5600	8600	0.0642	50.000 1.9685	49.989 1.9681	58.029 2.2846	58.010 2.2839	0.105 0.231
	50 1.9685	62 2.4409	30 1.181	K50X62X30H	64.6 14520	98.1 22050	5800	8900	0.0565	50.000 1.9685	49.989 1.9681	62.029 2.4421	62.010 2.4413	0.136 0.300
	50 1.9685	66 2.5984	30 1.181	K50X66X30H	80.9 18190	109 24500	5900	9100	0.0559	50.000 1.9685	49.989 1.9681	66.029 2.5996	66.010 2.5988	0.192 0.423
	50 1.9685	70 2.7559	32 1.260	K50X70X32H	103 23160	129 29000	6100	9300	0.0569	50.000 1.9685	49.989 1.9681	70.029 2.7570	70.010 2.7563	0.224 0.494
52 2.0472	52 2.0472	57 2.2441	12 0.472	K52X57X12	18.4 4140	36.7 8250	5200	8000	0.0512	52.000 2.0472	51.987 2.0467	57.029 2.2452	57.010 2.2445	0.022 0.049
	52 2.0472	57 2.2441	17 0.669	K52X57X17FCH	21.4 4810	44.3 9960	5200	8000	0.0537	52.000 2.0472	51.987 2.0467	57.029 2.2452	57.010 2.2445	0.035 0.077

Continued on next page.

SINGLE-ROW, DOUBLE-ROW ASSEMBLIES – *continued*

B

METRIC SERIES

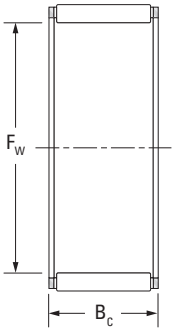

K

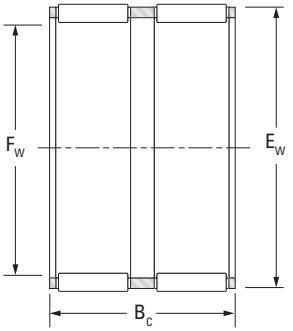

KZW

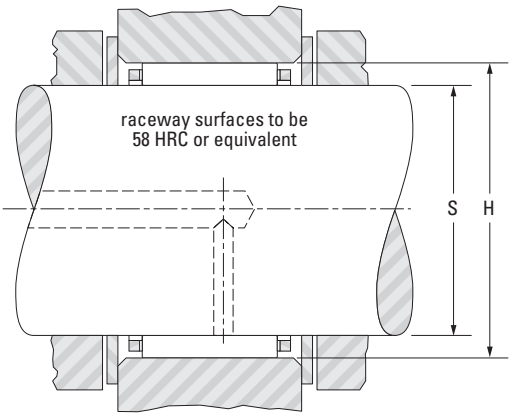

Shaft Dia.	F_w	E_w	B_c -0.20 -0.008 -0.55 -0.022	Assembly Designation	C	C_0	Speed Rating Grease	Speed Rating Oil	C_g	S Max.	S Min.	H Max.	H Min.	Wt.
					Load Ratings					Mounting Dimension				
mm in.	mm in.	mm in.	mm in.		kN lbf.		min^{-1}			mm in.	mm in.	mm in.	mm in.	kg lbs.
52 2.0472	52 2.0472	57 2.2441	17 0.669	K52X57X17H	21.4 4810	44.3 9960	5200	8000	0.0537	52.000 2.0472	51.987 2.0467	57.029 2.2452	57.010 2.2445	0.035 0.077
	52 2.0472	60 2.3622	24 0.945	K52X60X24	47.1 10600	88.3 19900	5400	8200	0.0592	52.000 2.0472	51.987 2.0467	60.029 2.3633	60.010 2.3626	0.078 0.172
55 2.1654	55 2.1654	60 2.3622	17 0.669	K55X60X17	26.0 5850	58.3 13100	4900	7600	0.0590	55.000 2.1654	54.987 2.1648	60.029 2.3633	60.010 2.3626	0.037 0.082
	55 2.1654	60 2.3622	20 0.787	K55X60X20H	30.7 6900	72.4 16300	4900	7600	0.0622	55.000 2.1654	54.987 2.1648	60.029 2.3633	60.010 2.3626	0.042 0.093
	55 2.1654	60 2.3622	27 1.063	K55X60X27H	40.1 9010	102 22900	4900	7600	0.0677	55.000 2.1654	54.987 2.1648	60.029 2.3633	60.010 2.3626	0.055 0.121
	55 2.1654	60 2.3622	30 1.181	K55X60X30	40.6 9130	103 23200	4900	7600	0.0680	55.000 2.1654	54.987 2.1648	60.029 2.3633	60.010 2.3626	0.066 0.146
	55 2.1654	60 2.3622	30 1.181	K55X60X30FH	40.6 9130	103 23200	4900	7600	0.0680	55.000 2.1654	54.987 2.1648	60.029 2.3633	60.010 2.3626	0.068 0.150
	55 2.1654	61 2.4016	26 1.024	K55X61X26H	44.3 9960	102 22900	5000	7600	0.0657	55.000 2.1654	54.987 2.1648	61.029 2.4027	61.010 2.4020	0.063 0.139
	55 2.1654	62 2.4409	18 0.709	K55X62X18H	33.2 7460	62.8 14100	5000	7700	0.0569	55.000 2.1654	54.987 2.1648	62.029 2.4421	62.010 2.4413	0.055 0.121
	55 2.1654	63 2.4803	15 0.591	K55X63X15F	30.5 6860	51.5 11600	5000	7800	0.0531	55.000 2.1654	54.987 2.1648	63.029 2.4815	63.010 2.4807	0.054 0.119
	55 2.1654	63 2.4803	20 0.787	K55X63X20	40.3 9060	73.5 16500	5000	7800	0.0580	55.000 2.1654	54.987 2.1648	63.029 2.4815	63.010 2.4807	0.072 0.159
	55 2.1654	63 2.4803	25 0.984	K55X63X25	49.8 11200	96.5 21700	5000	7800	0.0621	55.000 2.1654	54.987 2.1648	63.029 2.4815	63.010 2.4807	0.080 0.176
	55 2.1654	63 2.4803	32 1.260	K55X63X32	62.3 14000	129 29000	5000	7800	0.0667	55.000 2.1654	54.987 2.1648	63.029 2.4815	63.010 2.4807	0.108 0.238
58 2.2835	58 2.2835	63 2.4803	17 0.669	K58X63X17F	27.0 6070	62.6 14100	4700	7200	0.0615	58.000 2.2835	57.987 2.2830	63.029 2.4815	63.010 2.4807	0.037 0.082
	58 2.2835	64 2.5197	19 0.748	K58X64X19H	32.9 7400	70.6 15900	4700	7200	0.0615	58.000 2.2835	57.987 2.2830	64.029 2.5208	64.010 2.5201	0.037 0.082
	58 2.2835	65 2.5591	18 0.709	K58X65X18H	34.3 7710	67.1 15100	4700	7300	0.0593	58.000 2.2835	57.987 2.2830	65.029 2.5602	65.010 2.5594	0.058 0.128
60 2.3622	60 2.3622	65 2.5591	20 0.787	K60X65X20H	31.9 7170	78.1 17600	4500	6900	0.0660	60.000 2.3622	59.987 2.3617	65.029 2.5602	65.010 2.5594	0.046 0.101

Shaft Dia.	F_w	E_w	B_c -0.20 -0.008 -0.55 -0.022	Assembly Designation	C	C_0	Speed Rating Grease	Speed Rating Oil	C_g	S Max.	S Min.	H Max.	H Min.	Wt.
					Load Ratings					Mounting Dimension				
mm in.	mm in.	mm in.	mm in.		kN lbf.		min-1			mm in.	mm in.	mm in.	mm in.	kg lbs.
60 2.3622	60 2.3622	65 2.5591	26.8 1.055	K60X65X27FH	39.5 8880	103 23200	4500	6900	0.0707	60.000 2.3622	59.987 2.3617	65.029 2.5602	65.010 2.5594	0.059 0.130
	60 2.3622	65 2.5591	29.8 1.173	K60X65X30FH	42.9 9640	114 25600	4500	6900	0.0726	60.000 2.3622	59.987 2.3617	65.029 2.5602	65.010 2.5594	0.085 0.187
	60 2.3622	65 2.5591	30 1.181	K60X65X30	42.9 9640	114 25600	4500	6900	0.0726	60.000 2.3622	59.987 2.3617	65.029 2.5602	65.010 2.5594	0.070 0.154
	60 2.3622	68 2.6772	17 0.669	K60X68X17F	34.2 7690	61.4 13800	4600	7100	0.0577	60.000 2.3622	59.987 2.3617	68.029 2.6783	68.010 2.6776	0.066 0.146
	60 2.3622	68 2.6772	20 0.787	K60X68X20H	41.8 9400	79.2 17800	4600	7100	0.0614	60.000 2.3622	59.987 2.3617	68.029 2.6783	68.010 2.6776	0.066 0.146
	60 2.3622	68 2.6772	23 0.906	K60X68X23F	49.0 11000	97.2 21900	4600	7100	0.0646	60.000 2.3622	59.987 2.3617	68.029 2.6783	68.010 2.6776	0.089 0.196
	60 2.3622	68 2.6772	23 0.906	K60X68X23FH	49.0 11000	97.2 21900	4600	7100	0.0646	60.000 2.3622	59.987 2.3617	68.029 2.6783	68.010 2.6776	0.089 0.196
	60 2.3622	68 2.6772	23 0.906	K60X68X23H	49.0 11000	97.2 21900	4600	7100	0.0646	60.000 2.3622	59.987 2.3617	68.029 2.6783	68.010 2.6776	0.089 0.196
	60 2.3622	68 2.6772	25 0.984	K60X68X25	51.6 11600	104 23400	4600	7100	0.0657	60.000 2.3622	59.987 2.3617	68.029 2.6783	68.010 2.6776	0.091 0.201
	60 2.3622	68 2.6772	30 1.181	K60X68X30ZW	46.4 10400	90.1 20300	4600	7100	0.0634	60.000 2.3622	59.987 2.3617	68.029 2.6783	68.010 2.6776	0.119 0.262
63 2.4803	63 2.4803	71 2.7953	20 0.787	K63X71X20	41.4 9310	79.4 17800	4400	6700	0.0628	63.000 2.4803	62.987 2.4798	71.029 2.7964	71.010 2.7957	0.070 0.154
64 2.5197	64 2.5197	70 2.7559	16 0.630	K64X70X16	26.4 5930	55.1 12400	4200	6500	0.0605	64.000 2.5197	63.987 2.5192	70.029 2.7570	70.010 2.7563	0.049 0.108
65 2.5591	65 2.5591	70 2.7559	20 0.787	K65X70X20CH	28.6 6430	69.2 15600	4100	6400	0.0665	65.000 2.5591	64.987 2.5585	70.029 2.7570	70.010 2.7563	0.050 0.110
	65 2.5591	70 2.7559	20 0.787	K65X70X20H	31.5 7080	78.9 17700	4100	6400	0.0687	65.000 2.5591	64.987 2.5585	70.029 2.7570	70.010 2.7563	0.050 0.110
	65 2.5591	70 2.7559	30 1.181	K65X70X30	44.4 9980	123 27700	4100	6400	0.0766	65.000 2.5591	64.987 2.5585	70.029 2.7570	70.010 2.7563	0.075 0.165
	65 2.5591	73 2.8740	23 0.906	K65X73X23H	48.2 10800	97.7 22000	4200	6500	0.0671	65.000 2.5591	64.987 2.5585	73.029 2.8752	73.010 2.8744	0.091 0.201
	65 2.5591	73 2.8740	30 1.181	K65X73X30H	60.1 13500	129 29100	4200	6500	0.0719	65.000 2.5591	64.987 2.5585	73.029 2.8752	73.010 2.8744	0.116 0.256
68 2.6772	68 2.6772	74 2.9134	20 0.787	K68X74X20FH	37.5 8430	88.1 19800	4000	6100	0.0699	68.000 2.6772	67.987 2.6767	74.029 2.9145	74.010 2.9138	0.062 0.137
	68 2.6772	74 2.9134	28 1.102	K68X74X28CH	44.8 10100	110 24700	4000	6100	0.0739	68.000 2.6772	67.987 2.6767	74.029 2.9145	74.010 2.9138	0.082 0.181
	68 2.6772	74 2.9134	30 1.181	K68X74X30H	47.6 10700	119 26800	4000	6100	0.0754	68.000 2.6772	67.987 2.6767	74.029 2.9145	74.010 2.9138	0.098 0.216
	68 2.6772	74 2.9134	35 1.378	K68X74X35HZW	45.1 10100	111 25000	4000	6100	0.0740	68.000 2.6772	67.987 2.6767	74.029 2.9145	74.010 2.9138	0.120 0.265
	68 2.6772	76 2.9921	20 0.787	K68X76X20	43.8 9850	87.8 19700	4000	6200	0.0667	68.000 2.6772	67.987 2.6767	76.029 2.9933	76.010 2.9925	0.086 0.190
	68 2.6772	82 3.2283	38.5 1.516	K68X82X38,5H	117 26300	209 47000	4200	6400	0.0761	68.000 2.6772	67.987 2.6767	82.034 3.2297	82.012 3.2288	0.320 0.705
70 2.7559	70 2.7559	76 2.9921	20 0.787	K70X76X20	36.1 8120	84.7 19000	3900	5900	0.0702	70.000 2.7559	69.987 2.7554	76.029 2.9933	76.010 2.9925	0.065 0.143

Continued on next page.

SINGLE-ROW, DOUBLE-ROW ASSEMBLIES – *continued*

METRIC SERIES

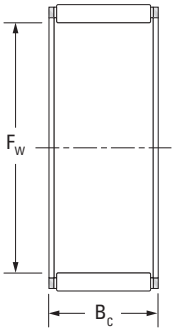

K

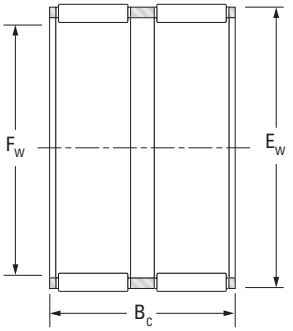

KZW

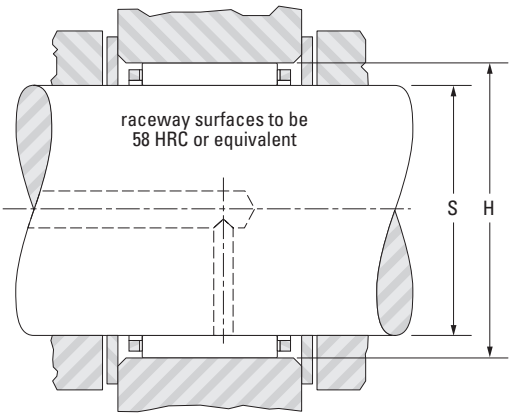

Shaft Dia.	F_w	E_w	B_c	Assembly Designation	C	C_0	Speed Rating		C_g	S		H		Wt.
			-0.20 -0.008 **-0.55** -0.022		Load Ratings		Grease	Oil		Mounting Dimension				
										Max.	Min.	Max.	Min.	
mm in.	**mm** in.	**mm** in.	**mm** in.		**kN** lbf.		min^{-1}			**mm** in.	**mm** in.	**mm** in.	**mm** in.	**kg** lbs.
70 2.7559	**70** 2.7559	**76** 2.9921	**30** 1.181	K70X76X30	**51.6** 11600	**134.0** 30100	3900	5900	0.0786	**70.000** 2.7559	**69.987** 2.7554	**76.029** 2.9933	**76.010** 2.9925	**0.097** 0.214
	70 2.7559	**78** 3.0709	**20** 0.787	K70X78X20H	**43.6** 9800	**87.9** 19800	3900	6000	0.0676	**70.000** 2.7559	**69.987** 2.7554	**78.029** 3.0720	**78.010** 3.0713	**0.090** 0.198
	70 2.7559	**78** 3.0709	**23** 0.906	K70X78X23F	**49.8** 11200	**104.0** 23400	3900	6000	0.0705	**70.000** 2.7559	**69.987** 2.7554	**78.029** 3.0720	**78.010** 3.0713	**0.115** 0.254
	70 2.7559	**78** 3.0709	**24.8** 0.976	K70X78X25F	**49.8** 11200	**104.0** 23400	3900	6000	0.0705	**70.000** 2.7559	**69.987** 2.7554	**78.029** 3.0720	**78.010** 3.0713	**0.115** 0.254
	70 2.7559	**78** 3.0709	**30** 1.181	K70X78X30H	**62.2** 14000	**139.0** 31200	3900	6000	0.0757	**70.000** 2.7559	**69.987** 2.7554	**78.029** 3.0720	**78.010** 3.0713	**0.140** 0.309
	70 2.7559	**78** 3.0709	**46** 1.811	K70X78X46ZW	**78.4** 17600	**187.0** 42000	3900	6000	0.0815	**70.000** 2.7559	**69.987** 2.7554	**78.029** 3.0720	**78.010** 3.0713	**0.188** 0.414
	70 2.7559	**85** 3.3465	**40** 1.575	K70X85X40F	**118** 26500	**203** 45600	4100	6300	0.0758	**70.000** 2.7559	**69.987** 2.7554	**85.034** 3.3478	**85.012** 3.3469	**0.338** 0.745
	70 2.7559	**88** 3.4646	**30** 1.181	K70X88X30H	**115** 25900	**175** 39300	4100	6400	0.0714	**70.000** 2.7559	**69.987** 2.7554	**88.034** 3.4659	**88.012** 3.4650	**0.205** 0.452
72 2.8346	**72** 2.8346	**80** 3.1496	**20** 0.787	K72X80X20	**44.4** 9980	**90.7** 20400	3800	5800	0.0690	**72.000** 2.8346	**71.987** 2.8341	**80.029** 3.1507	**80.010** 3.1500	**0.084** 0.185
73 2.8740	**73** 2.8740	**79** 3.1102	**20** 0.787	K73X79X20	**37.0** 8320	**88.7** 19900	3700	5700	0.0723	**73.000** 2.8740	**72.987** 2.8735	**79.029** 3.1114	**79.010** 3.1106	**0.068** 0.150
75 2.9528	**75** 2.9528	**81** 3.1890	**20** 0.787	K75X81X20F	**37.4** 8410	**90.7** 20400	3600	5500	0.0737	**75.000** 2.9528	**74.987** 2.9522	**81.034** 3.1903	**81.012** 3.1894	**0.075** 0.165
	75 2.9528	**83** 3.2677	**23** 0.906	K75X83X23	**52.5** 11800	**114.0** 25600	3600	5600	0.0744	**75.000** 2.9528	**74.987** 2.9522	**83.034** 3.2691	**83.012** 3.2682	**0.104** 0.229
	75 2.9528	**83** 3.2677	**30** 1.181	K75X83X30	**60.9** 13700	**138** 31000	3600	5600	0.0780	**75.000** 2.9528	**74.987** 2.9522	**83.034** 3.2691	**83.012** 3.2682	**0.141** 0.311
	75 2.9528	**83** 3.2677	**30** 1.181	K75X83X30FH	**60.9** 13700	**138** 31000	3600	5600	0.0780	**75.000** 2.9528	**74.987** 2.9522	**83.034** 3.2691	**83.012** 3.2682	**0.141** 0.311
80 3.1496	**80** 3.1496	**86** 3.3858	**20** 0.787	K80X86X20H	**38.6** 8680	**96.7** 21700	3400	5200	0.0771	**80.000** 3.1496	**79.987** 3.1491	**86.034** 3.3872	**86.012** 3.3863	**0.072** 0.159
	80 3.1496	**88** 3.4646	**25** 0.984	K80X88X25FV1	**54.0** 12100	**121** 27200	3400	5200	0.0778	**80.000** 3.1496	**79.987** 3.1491	**88.034** 3.4659	**88.012** 3.4650	**0.134** 0.295
	80 3.1496	**88** 3.4646	**30** 1.181	K80X88X30	**67.5** 15200	**161** 36200	3400	5200	0.0835	**80.000** 3.1496	**79.987** 3.1491	**88.034** 3.4659	**88.012** 3.4650	**0.153** 0.337

Shaft Dia.	F_w	E_w	B_c	Assembly Designation	C	C_0	Speed Rating		C_g	S		H		Wt.
			-0.20 -0.008 **-0.55** -0.022		Load Ratings		Grease	Oil		Mounting Dimension				
										Max.	Min.	Max.	Min.	
mm in.	**mm** in.	**mm** in.	**mm** in.		**kN** lbf.		min^{-1}			**mm** in.	**mm** in.	**mm** in.	**mm** in.	**kg** lbs.
85 3.3465	**85** 3.3465	**92** 3.6220	**20** 0.787	K85X92X20H	**39.9** 8970	**91.7** 20600	3200	4900	0.0763	**84.988** 3.3460	**84.973** 3.3454	**92.034** 3.6234	**92.012** 3.6225	**0.085** 0.187
	85 3.3465	**93** 3.6614	**25** 0.984	K85X93X25F	**58.8** 13219	**138** 31024	3200	4900	—	**84.988** 3.3460	**84.973** 3.3454	**93.034** 3.6628	**93.012** 3.6619	**0.000** 0.000
	85 3.3465	**93** 3.6614	**30** 1.181	K85X93X30H	**31024"** 15600	**3200** 38200	4900	4900	0.0870	**84.988** 3.3460	**84.973** 3.3454	**93.034** 3.6628	**93.012** 3.6619	**0.166** 0.366
90 3.5433	**90** 3.5433	**97** 3.8189	**20** 0.787	K90X97X20	**46.3** 10400	**114** 25600	3000	4600	0.0827	**89.988** 3.5428	**89.973** 3.5422	**97.034** 3.8202	**97.012** 3.8194	**0.095** 0.209
	90 3.5433	**98** 3.8583	**25** 0.984	K90X98X25F	**54.8** 12300	**128** 28800	3000	4600	0.0832	**89.988** 3.5428	**89.973** 3.5422	**98.034** 3.8596	**98.012** 3.8587	**0.134** 0.295
	90 3.5433	**98** 3.8583	**30** 1.181	K90X98X30	**63.6** 14300	**155** 34800	3000	4600	0.0873	**89.988** 3.5428	**89.973** 3.5422	**98.034** 3.8596	**98.012** 3.8587	**0.168** 0.370
95 3.7402	**95** 3.7402	**103** 4.0551	**20** 0.787	K95X103X20	**49.3** 11100	**114** 25600	2800	4400	0.0829	**94.988** 3.7397	**94.973** 3.7391	**103.034** 4.0565	**103.012** 4.0556	**0.130** 0.287
	95 3.7402	**103** 4.0551	**30** 1.181	K95X103X30F	**71.0** 16000	**183** 41100	2800	4400	0.0932	**94.988** 3.7397	**94.973** 3.7391	**103.034** 4.0565	**103.012** 4.0556	**0.180** 0.39
100 3.9370	**100** 3.9370	**108** 4.2520	**30** 1.181	K100X108X30	**72.4** 16300	**191** 42900	2700	4200	0.0965	**99.988** 3.9365	**99.973** 3.9359	**108.034** 4.2533	**108.012** 4.2524	**0.210** 0.463
110 4.3307	**110** 4.3307	**118** 4.6457	**24** 0.945	K110X118X24	**64.0** 14400	**168** 37800	2400	3800	0.0977	**109.988** 4.3302	**109.973** 4.3296	**118.034** 4.6470	**118.012** 4.6461	**0.165** 0.364
	110 4.3307	**118** 4.6457	**30** 1.181	K110X118X30H	**75.3** 16900	**207** 46500	2400	3800	0.1029	**109.988** 4.3302	**109.973** 4.3296	**118.034** 4.6470	**118.012** 4.6461	**0.200** 0.441
120 4.7244	**120** 4.7244	**128** 5.0393	**25** 0.984	K120X128X25	**66.4** 14927	**181.0** 40690	2200	3400	—	**119.988** 4.7239	**119.973** 4.7233	**128.039** 5.0409	**128.014** 5.0399	**0.237** 0.523
130 5.1181	**130** 5.1181	**137** 5.3937	**24** 0.945	K130X137X24	**64.3** 14455	**197.0** 44287	2100	3200	—	**129.986** 5.1176	**129.968** 5.1168	**137.039** 5.3952	**137.014** 5.3942	**0.211** 0.465
	130 5.1181	**140** 5.5118	**45** 1.7717	K130X140X45	**135.0** 30349	**397.0** 89249	2100	3200	—	**129.986** 5.1176	**129.968** 5.1168	**140.039** 5.5133	**140.014** 5.5124	**0.586** 1.292
135 5.3150	**135** 5.3150	**145** 5.7090	**38** 1.4961	K135X145X38	**123.0** 27651	**355.0** 79807	2000	3100	—	**134.986** 5.3144	**134.968** 5.3137	**145.039** 5.7102	**145.014** 5.7092	**0.511** 1.127
140 5.5118	**140** 5.5118	**150** 5.9055	**43** 1.6929	K140X150X43	**141.0** 31698	**428.0** 96218	1900	3000	—	**139.986** 5.5113	**139.968** 5.5106	**150.039** 5.9070	**150.014** 5.9061	**0.596** 1.314
150 5.9055	**150** 5.9055	**160** 6.2992	**43** 1.6929	K150X160X43	**144.0** 32372	**452.0** 101613	1800	2800	—	**149.986** 5.9050	**149.968** 5.9042	**160.039** 6.3007	**160.014** 6.3000	**0.636** 1.402
160 6.2992	**160** 6.2992	**168** 6.6142	**22** 0.8661	K160X168X22	**65.4** 14702	**196.0** 44062	1700	2600	—	**159.986** 6.2987	**159.968** 6.2980	**168.039** 6.6157	**168.014** 6.6147	**0.281** 0.620
165 6.4961	**165** 6.4961	**173** 6.8110	**26** 1.0236	K165X173X26	**78.8** 17715	**251.0** 56427	1600	2500	—	**164.986** 6.4955	**164.968** 6.4948	**173.039** 6.8126	**173.014** 6.8116	**0.338** 0.745

RADIAL NEEDLE ROLLER AND CAGE ASSEMBLIES FOR CONNECTING ROD APPLICATIONS

METRIC SERIES

B

Connecting rods have two bearing positions: the crank pin or big end, and the wrist pin or small end.

In the crank pin position there may be severe operating conditions due to centrifugal forces, internal forces, accelerations and high rotational speeds, requiring the use of special radial needle roller and cage assemblies.

Similarly, in the wrist pin position the reciprocating inertia loads and high oscillating speeds dictate the use of special cage designs.

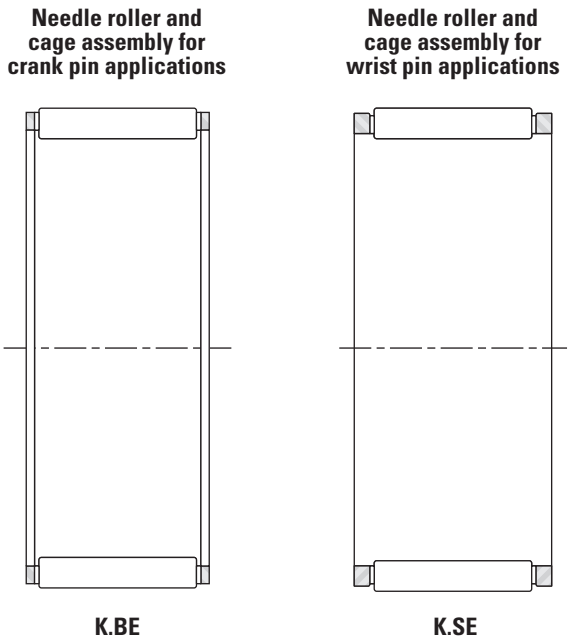

Fig. B-3. Types of metric series radial needle roller and cage assemblies

Suffixes

BE	steel cage, heat treated, for crank pin position
SE	steel cage, heat treated, for wrist pin position

CONSTRUCTION

METRIC SERIES RADIAL NEEDLE ROLLER AND CAGE ASSEMBLIES FOR CRANK PIN POSITIONS

Needle roller and cage assemblies for use in crank pin positions have cages with a large outside cylindrical surface to ensure optimum radial guidance in the connecting rod bore. Due to the inherent low weight and strength of the heat-treated cages, the needle roller and cage assemblies are well-suited for high-speed engine applications. When necessary, silver plating and copper plating can be applied for optimum performance during operation at high speeds.

METRIC SERIES RADIAL NEEDLE ROLLER AND CAGE ASSEMBLIES FOR WRIST PIN POSITIONS

Reciprocating inertia loads and oscillating speeds require the cages used in the wrist pin positions to be heat-treated and to guide on the wrist pin.

These cages are available in a variety of widths to allow the selection of a needle roller and cage assembly with the length of needle rollers to match the connecting rod width.

SIZE SELECTION

In most instances, selection of a suitable size of a needle roller and cage assembly for typical connecting rod positions may be based on the cylinder displacement of the engine which in turn, dictates the crank pin and wrist pin diameters.

Suggestions, based on engine displacements, are listed in the following table.

Table B-3. Crank pin and wrist pin diameters, determined by the cylinder displacement of the engine

Cylinder displacement in cm^3								
Cylinder	>		40	60	100	150	200	300
Displacement	≤	40	60	100	150	200	300	

Diameter								
		mm in.	**mm** in.	**mm** in.	**mm** in.	**mm** in.	**mm** in.	**mm** in.
Crank pin		**12/14** 0.4724/0.5512	**15/16/18** 0.5906/0.6299/0.7087	**18/20** 0.7087/0.7874	**18/20/22** 0.7087/0.7874/0.8661	**24/25/28** 0.9449/0.9843/1.1024	**28/30** 1.1024/1.1811	**35/40** 1.3780/1.5748
Wrist pin		**10/11** 0.3937/0.4331	**12/13** 0.4724/0.5118	**14/15** 0.5512/0.5906	**15/16** 0.5906/0.6299	**18** 0.7087	**20** 0.7874	**20** 0.7874

B

CONNECTING ROD GUIDANCE ARRANGEMENTS

End guidance of a connecting rod can be provided either at the crank pin or at the wrist pin end. Connecting-rod guidance is achieved at the crank pin end using a small clearance between the crank counterweights. Guidance at the wrist pin end is controlled by a small clearance between the piston bosses.

CRANK PIN END GUIDANCE

With crank pin end guidance, care must be taken that an adequate amount of lubricant is supplied to the crank pin bearing and the surfaces that guide the connecting rod. For this purpose, grooves in the connecting rod end faces, or slots in the connecting rod bore aligned with the incoming lubrication path, should be provided. Occasionally, bronze or hardened steel washers may be used for end guidance of the connecting rod.

At the wrist pin end, the needle roller and cage assembly is located axially between the piston bosses. It may be both economical and effective to machine the connecting rod at the wrist pin end and at the crank pin end to the same width. It is suggested that, at the wrist pin end, the needle roller length does not overhang the connecting rod width. Otherwise, the load rating of the needle roller and cage assembly will be reduced.

WRIST PIN END GUIDANCE

Wrist pin end will get the most effective axial guidance between the piston bosses. Grooves in the bottom of the piston bosses and a chamfer of small angle – on each side of the upper portion of the connecting rod small end – can improve the oil flow to the needle roller and cage assembly and its guiding surfaces.

The length of the needle roller and cage assembly and the connecting rod width at the crank pin end should be identical to ensure best possible radial piloting of cage in the bore of the connecting rod. The crank counterweights are recessed to allow proper axial alignment of the connecting rod. As a rule, it is not necessary to have an additional supply of lubricant. Only in engines with sparse lubrication should consideration be given to provide lubricating slots in the connecting rod bores as with crank pin end guidance.

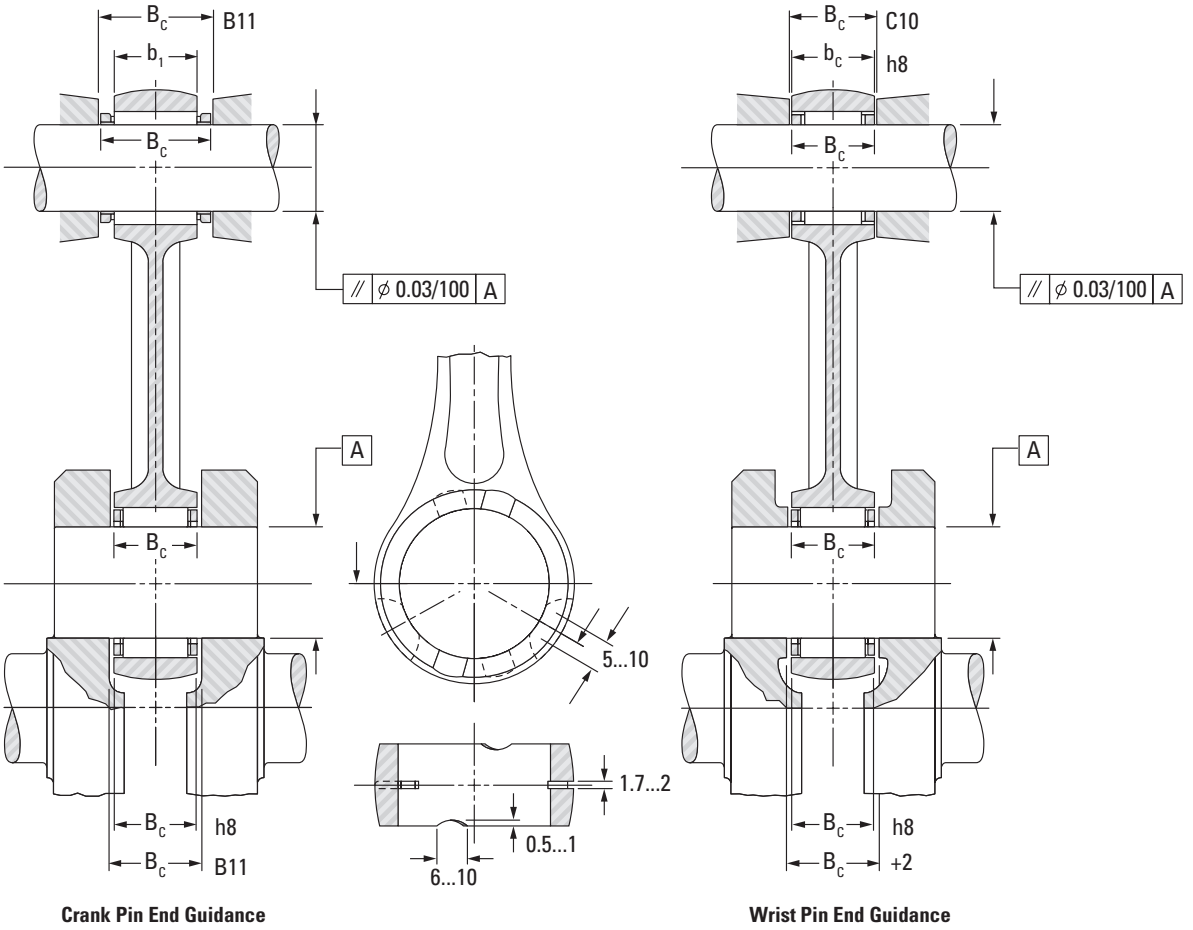

Fig. B-4. Crank pin and wrist pin end guidance

SUITABLE MATERIALS AND HEAT TREATMENT

Connecting rod crank pin end and wrist pin end bores serve as raceways:

a case-hardening steel such as 15 CrNi 6, 17 MnCr 5 or AISI 8620.

Crank pins:

e.g., case-hardening steel 15 Cr 3, AISI 8620, AISI 1018 or through-hardening steel 100 Cr 6, AISI 52100.

Wrist pins:

e.g., case-hardening steel Ck 15, 15 Cr 3 or through-hardening steel 100 Cr 6, AISI 52100.

The effective case depth (50 HRC) of the raceways should be 0.5 mm (0.0197 in.) minimum, and the surface hardness should be 60 HRC or 700 HV minimum.

After hardening, the connecting rods must be stress-relieved.

The connecting rod raceway bores, as well as the crank pins and the wrist pins, must be precision-ground or preferably honed to a surface finish Ra not exceeding 0.16 µm.

FORM TOLERANCES

The form tolerances for crank pins, wrist pins and connecting rod bores are listed in Table B-4.

Table B-4. Form tolerances

		Dimension in **mm**				
Nominal pin diameter	>	**10**	**14**	**18**	**25**	**30**
	≤	**14**	**18**	**25**	**30**	**40**
		Tolerances in µm				
Parallelism[1]	wrist pin & crank pin	**1**	**1**	**2**	**2**	**3**
	rod bore	**2**	**3**	**3**	**4**	**4**
Circularity (DIN ISO 1101)	wrist pin & crank pin	**1**	**1**	**1.5**	**1.5**	**2**
	rod bore	**1.5**	**2**	**2**	**2.5**	**2.5**

[1] The parallelism values are valid for the needle roller length L_w.

It is suggested that the parallelism of the wrist pin axis and the crank pin axis be within a tolerance zone of 0.03 mm (0.0012 in.) diameter over a distance of 100 mm (3.9370 in.).

RADIAL CLEARANCE

METRIC SERIES CRANK PIN BEARINGS

The high speeds of modern production engines dictate the need for crank pin bearings with a relatively large radial clearance. As an approximation, the minimum clearance can be taken as the crank pin diameter/1000. The maximum radial clearance would be a result of the sorting plan shown in Table B-5(1) on page B-32.

As shown in the example of the matching scheme, the suggested mounting diameters for the crank pin position are G6 for the connecting rod bore diameters and h5 for the crank pin diameters. Axial location of the cage is shown on the crank pin end guidance arrangement.

Racing and sport engines operate at even higher speeds than production engines, requiring 50 percent larger radial clearances in the crank pin bearings. The larger radial clearances also should be used in bores of split connecting rods to avoid the danger of distortion – resulting from the unavoidable connecting rod deformation occurring in operation. Consult your representative for advice on such applications.

METRIC SERIES WRIST PIN BEARINGS

The radial clearance in wrist pin bearings should be held as small as possible. The minimum clearance should be aimed at 2 µm with the maximum clearance resulting from the proposed sorting plan in Table B-5(2) on page B-32. The maximum clearance should be held as close as possible to 12 µm for all wrist pin bearings based on sorting wrist pins made to a tolerance h5, small end bore diameter tolerance of K6 and needle roller grades as shown in Table B-5(2) on page B-32.

METRIC SERIES RADIAL NEEDLE ROLLER AND CAGE ASSEMBLIES FOR CONNECTING ROD APPLICATIONS

B

MATCHING SCHEME FOR A CRANK PIN BEARING ARRANGEMENT
(three diameter ranges are specified for the connecting rod and crank pin)

Example:	Crank pin diameter	20 mm, tolerance h5
	Connecting rod bore diameter	26 mm, tolerance G6
	Needle roller and cage assembly	K20x26x12BE
	Radial clearance	20 . . . 29 µm

Table B-5(1). Radial clearance

		Connecting Rod Crank Pin End Bore Diameter 26^{+20}_{+7} Tolerances and Radial Clearances In µm					
		+12 +7 Needle Roller Tolerance	Radial Clearance	+16 +12 Needle Roller Tolerance	Radial Clearance	+20 +16 Needle Roller Tolerance	Radial Clearance
Crank Pin Diameter 20^{0}_{-9}	0 -3	-7 -9	21...29	-4 -5 -6 -7	20...29	-2 -3 -4 -5	20...29
	-3 -6	-5 -7	20...28	-3 -5	21...28	-1 -3	21...28
	-6 -9	-4 -6	21...29	-1 -2 -3 -4	20...29	0 -2	22...29

MATCHING SCHEME FOR A WRIST PIN BEARING ARRANGEMENT
(three diameter ranges are specified for the connecting rod and wrist pin)

Example:	Wrist pin diameter	16 mm, tolerance h5
	Connecting rod bore diameter	20 mm, tolerance K6
	Needle roller and cage assembly	K16x20x20SE
	Radial clearance	2 . . . 12 µm

Table B-5(2). Radial clearance

		Wrist Pin End Bore Diameter 20^{+2}_{-11} Tolerances and Radial Clearances In µm					
		-6 -11 Needle roller Tolerance	Radial Clearance	-2 -6 Needle Roller Tolerance	Radial Clearance	+2 -2 Needle Roller Tolerance	Radial Clearance
Wrist Pin Diameter 16^{0}_{-8}	0 -3			-4 -5 -6 -7	2...11	-2 -3 -4 -5	2...11
	-3 -6	-5 -7	2...10	-3 -4 -5 -6	3...12	-1 -2 -3 -4	3...12
	-6 -8	-4 -5 -6 -7	3...12	-1 -2 -3 -4	2...10	0 -2	4...10

ASSEMBLIES FOR CRANK PIN END APPLICATIONS

METRIC SERIES

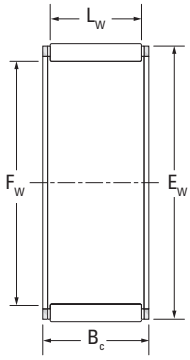

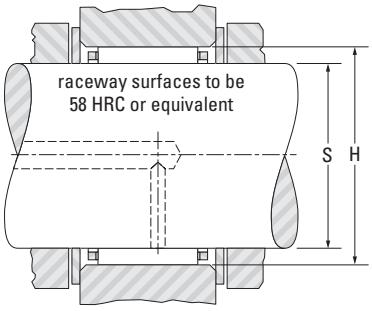

K.BE

Shaft Dia.	F_w	E_w	B_c	L_w	Assembly Designation	C	C_0	C_g	S		H		Wt.
			-0.2 -0.008 **-0.55** -0.022			Load Ratings			Mounting Dimensions (non-high performance engines)				
									Max.	Min.	Max.	Min.	
mm in.	**mm** in.	**mm** in.	**mm** in.	**mm** in.		**kN** lbf.			**mm** in.	**mm** in.	**mm** in.	**mm** in.	**kg** lbs.
12 0.4724	**12** 0.4724	**16** 0.6299	**10** 0.394	**7.8** 0.307	K12X16X10BE	**6.21** 1400	**6.70** 1510	—	**12.000** 0.4724	**11.992** 0.4721	**16.017** 0.6306	**16.006** 0.6302	**0.004** 0.009
	12 0.4724	**17** 0.6693	**10** 0.394	**7.8** 0.307	K12X17X10BE	**7.32** 1650	**7.21** 1620	—	**12.000** 0.4724	**11.992** 0.4721	**17.017** 0.6700	**17.006** 0.6695	**0.005** 0.011
14 0.5512	**14** 0.5512	**18** 0.7087	**10** 0.394	**7.8** 0.307	K14X18X10BE	**6.89** 1550	**7.98** 1790	—	**14.000** 0.5512	**13.992** 0.5509	**18.017** 0.7093	**18.006** 0.7089	**0.005** 0.011
	14 0.5512	**18** 0.7087	**10** 0.394	**7.8** 0.307	WK14X18X10BE	**6.89** 1550	**7.98** 1790	**0.0204**	**14.000** 0.5512	**13.992** 0.5509	**18.017** 0.7093	**18.006** 0.7089	**0.005** 0.011
	14 0.5512	**20** 0.7874	**10** 0.394	**7.8** 0.307	K14X20X10BE	**8.90** 2000	**8.61** 1940	**0.0198**	**14.000** 0.5512	**13.992** 0.5509	**20.020** 0.7882	**20.007** 0.7877	**0.007** 0.015
	14 0.5512	**20** 0.7874	**12** 0.472	**9.5** 0.374	K14X20X12BE	**10.50** 2360	**10.60** 2380	**0.0209**	**14.000** 0.5512	**13.992** 0.5509	**20.020** 0.7882	**20.007** 0.7877	**0.009** 0.020
	14 0.5512	**20** 0.7874	**12** 0.472	**9.5** 0.374	WK14X20X12BE	**10.50** 2360	**10.60** 2380	**0.0209**	**14.000** 0.5512	**13.992** 0.5509	**20.020** 0.7882	**20.007** 0.7877	**0.009** 0.020
15 0.5984	**15** 0.5984	**22** 0.8740	**12** 0.472	**9.0** 0.354	K15,2X22,2X12BE	**10.80** 2430	**10.30** 2320	**0.0211**	**15.200** 0.5984	**15.192** 0.5981	**22.220** 0.8748	**22.207** 0.8743	**0.012** 0.026
16 0.6299	**16** 0.6299	**21** 0.8268	**10** 0.394	**7.8** 0.307	K16X21X10BE	**8.17** 1840	**8.90** 2000	**0.0215**	**16.000** 0.6299	**15.992** 0.6296	**21.020** 0.8276	**21.007** 0.8270	**0.007** 0.015
	16 0.6299	**21** 0.8268	**10** 0.394	**7.8** 0.307	WK16X21X10BE	**8.17** 1840	**8.90** 2000	**0.0215**	**16.000** 0.6299	**15.992** 0.6296	**21.020** 0.8276	**21.007** 0.8270	**0.007** 0.015
	16 0.6299	**22** 0.8661	**12** 0.472	**9.5** 0.374	K16X22X12BE	**11.20** 2520	**11.90** 2680	**0.0227**	**16.000** 0.6299	**15.992** 0.6296	**22.020** 0.8669	**22.007** 0.8664	**0.011** 0.024
18 0.7087	**18** 0.7087	**24** 0.9449	**12** 0.472	**9.5** 0.374	K18X24X12BE	**11.80** 2650	**13.10** 2940	**0.0243**	**18.000** 0.7087	**17.992** 0.7083	**24.020** 0.9457	**24.007** 0.9452	**0.011** 0.024
	18 0.7087	**24** 0.9449	**13** 0.512	**9.8** 0.386	K18X24X13BE	**12.10** 2720	**13.50** 3030	**0.0245**	**18.000** 0.7087	**17.992** 0.7083	**24.020** 0.9457	**24.007** 0.9452	**0.013** 0.029
	18 0.7087	**24** 0.9449	**13** 0.512	**10.5** 0.413	WK18X24X13BE	**12.80** 2880	**14.60** 3280	**0.0250**	**18.000** 0.7087	**17.992** 0.7083	**24.020** 0.9457	**24.007** 0.9452	**0.011** 0.024
	18 0.7087	**24** 0.9449	**15** 0.591	**11.8** 0.465	K18X24X15BE	**13.30** 2990	**15.20** 3420	**0.0253**	**18.000** 0.7087	**17.992** 0.7083	**24.020** 0.9457	**24.007** 0.9452	**0.014** 0.031
19 0.7480	**19** 0.7480	**25** 0.9843	**15** 0.591	**12.5** 0.492	K19X25X15BE	**14.70** 3300	**17.60** 3960	**0.0268**	**19.000** 0.7480	**18.991** 0.7477	**25.020** 0.9850	**25.007** 0.9845	**0.014** 0.031
20 0.7874	**20** 0.7874	**26** 1.0236	**12** 0.472	**9.8** 0.386	K20X26X12BE	**13.30** 2990	**15.80** 3550	**0.0267**	**20.000** 0.7874	**19.991** 0.7870	**26.020** 1.0244	**26.007** 1.0239	**0.013** 0.029

Continued on next page.

ASSEMBLIES FOR CRANK PIN END APPLICATIONS –

continued

METRIC SERIES

B

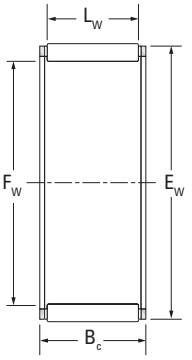

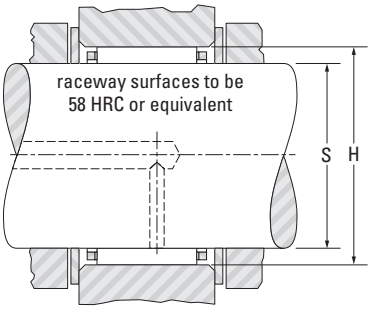

K.BE

Shaft Dia.	F_w	E_w	B_c	L_w	Assembly Designation	C	C_0	C_g	S		H		Wt.
						Load Ratings			Mounting Dimensions (non-high performance engines)				
			-0.2 -0.008 **-0.55** -0.022						Max.	Min.	Max.	Min.	
mm in.	**mm** in.	**mm** in.	**mm** in.	**mm** in.		**kN** lbf.			**mm** in.	**mm** in.	**mm** in.	**mm** in.	**kg** lbs.
20 0.7874	**20** 0.7874	**26** 1.0236	**17** 0.669	**13.8** 0.543	K20X26X17BE	**14.90** 3350	**18.20** 4090	**0.0276**	**20.000** 0.7874	**19.991** 0.7870	**26.020** 1.0244	**26.007** 1.0239	**0.017** 0.037
21 0.8307	**21** 0.8307	**27** 1.0669	**13** 0.512	**10.5** 0.413	K21,1X27,1X13BE	**14.10** 3170	**17.20** 3870	**0.0278**	**21.100** 0.8307	**21.091** 0.8304	**27.120** 1.0677	**27.107** 1.0672	**0.016** 0.035
22 0.8661	**22** 0.8661	**28** 1.1024	**13** 0.512	**9.8** 0.386	K22X28X13BE	**13.90** 3120	**17.10** 3840	**0.0283**	**22.000** 0.8661	**21.991** 0.8658	**28.020** 1.1031	**28.007** 1.1026	**0.015** 0.033
	22 0.8661	**29** 1.1417	**15.6** 0.614	**12.8** 0.504	WK22X29X15,6BE	**18.50** 4160	**22.30** 5010	**0.0296**	**22.000** 0.8661	**21.991** 0.8658	**29.020** 1.1425	**29.007** 1.1420	**0.021** 0.046
	22 0.8661	**29** 1.1417	**16** 0.630	**12.8** 0.504	K22X29X16BE	**18.50** 4160	**22.30** 5010	**0.0296**	**22.000** 0.8661	**21.991** 0.8658	**29.020** 1.1425	**29.007** 1.1420	**0.021** 0.046
24 0.9449	**24** 0.9449	**30** 1.1811	**13** 0.512	**9.8** 0.386	K24X30X13BE	**14.40** 3240	**18.40** 4140	**0.0298**	**24.000** 0.9449	**23.991** 0.9445	**30.020** 1.1819	**30.007** 1.1814	**0.016** 0.035
	24 0.9449	**30** 1.1811	**15** 0.591	**11.8** 0.465	K24X30X15BE	**15.30** 3440	**19.70** 4430	**0.0304**	**24.000** 0.9449	**23.991** 0.9445	**30.020** 1.1819	**30.007** 1.1814	**0.018** 0.040
	24 0.9449	**30** 1.1811	**17** 0.669	**13.8** 0.543	K24X30X17BE	**19.00** 4270	**26.30** 5910	**0.0326**	**24.000** 0.9449	**23.991** 0.9445	**30.020** 1.1819	**30.007** 1.1814	**0.021** 0.040
25 0.9843	**25** 0.9843	**31** 1.2205	**19.8** 0.780	**17.8** 0.701	WK25X31X20BE	**23.30** 5240	**34.50** 7760	**0.0355**	**25.000** 0.9843	**24.991** 0.9839	**31.025** 1.2215	**31.009** 1.2208	**0.024** 0.053
	25 0.9843	**32** 1.2598	**16** 0.630	**12.8** 0.504	K25X32X16BE	**19.20** 4320	**24.30** 5460	**0.0319**	**25.000** 0.9843	**24.991** 0.9839	**32.025** 1.2608	**32.009** 1.2602	**0.022** 0.049
	25 0.9843	**32** 1.2598	**24** 0.945	**19.8** 0.780	K25X32X24BE	**27.50** 6180	**38.50** 8660	**0.0358**	**25.000** 0.9843	**24.991** 0.9839	**32.025** 1.2608	**32.009** 1.2602	**0.035** 0.077
30 1.1811	**30** 1.1811	**37** 1.4567	**16** 0.630	**12.8** 0.504	K30X37X16BE	**21.60** 4860	**29.80** 6700	**0.0363**	**30.000** 1.1811	**29.991** 1.1807	**37.025** 1.4577	**37.009** 1.4570	**0.029** 0.064
35 1.3780	**35** 1.3780	**42** 1.6535	**20** 0.787	**16.8** 0.661	K35X42X20BE	**29.70** 6680	**47.00** 10600	**0.0434**	**35.000** 1.3780	**34.989** 1.3775	**42.025** 1.6545	**42.009** 1.6539	**0.039** 0.086

ASSEMBLIES FOR WRIST PIN END APPLICATIONS

METRIC SERIES

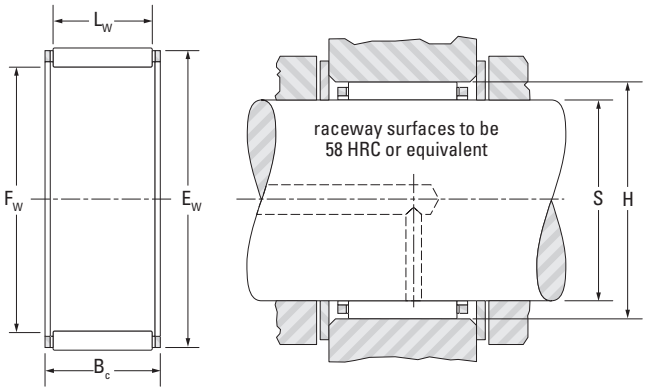

K.SE

Shaft Dia.	F_w	E_w	B_c -0.20 -.008 -0.55 -.022	L_w	Assembly Designation	C	C_0	Cg	S Mounting Dimensions (non-high performance engines) Max.	S Min.	H Max.	H Min.	Wt.
						Load Ratings							
mm in.	mm in.	mm in.	mm in.	mm in.		kN lbf.			mm in.	mm in.	mm in.	mm in.	kg lbs.
9 0.3543	9 0.3543	12 0.4724	11.5 0.453	8.4 0.331	K9X12X11,5SE	4.23 951	4.53 1020	0.0296	9.000 0.3543	8.994 0.3541	12.017 0.4731	12.006 0.4727	0.003 0.007
	9 0.3543	13 0.5118	12.5 0.492	9.8 0.386	K9X13X12,5SE	5.58 1250	5.41 1220	0.0306	9.000 0.3543	8.994 0.3541	13.017 0.5125	13.006 0.5120	0.005 0.011
10 0.3937	10 0.3937	13 0.5118	14.5 0.571	11.8 0.465	K10X13X14,5SE	5.93 1330	7.20 1620	0.0152	10.000 0.3937	9.994 0.3935	13.017 0.5125	13.006 0.5120	0.004 0.009
	10 0.3937	14 0.5512	10.0 0.394	7.0 0.276	K10X14X10SE	4.62 1040	4.36 980	0.0155	10.000 0.3937	9.994 0.3935	14.017 0.5519	14.006 0.5514	0.004 0.009
12 0.4724	12 0.4724	15 0.5906	13.0 0.512	9.8 0.386	K12X15X13SE	6.00 1350	7.72 1740	0.0179	12.000 0.4724	11.992 0.4721	15.017 0.5912	15.006 0.5908	0.004 0.009
	12 0.4724	15 0.5906	15.0 0.591	11.8 0.465	K12X15X15SE	6.97 1570	9.36 2100	0.0153	12.000 0.4724	11.992 0.4721	15.017 0.5912	15.006 0.5908	0.005 0.011
	12 0.4724	15 0.5906	17.5 0.689	12.8 0.504	K12X15X17,5SE	7.45 1670	10.2 2290	0.0196	12.000 0.4724	11.992 0.4721	15.017 0.5912	15.006 0.5908	0.006 0.013
	12 0.4724	16 0.6299	13.0 0.512	9.8 0.386	K12X16X13SE	6.03 1360	6.38 1430	0.0206	12.000 0.4724	11.992 0.4721	16.017 0.6306	16.006 0.6302	0.006 0.013
	12 0.4724	17 0.6693	13.0 0.512	9.8 0.386	K12X17X13SE	7.61 1710	7.54 1700	0.0210	12.000 0.4724	11.992 0.4721	17.017 0.6700	17.006 0.6695	0.007 0.015
	12 0.4724	17 0.6693	15.0 0.591	12.5 0.492	K12X17X15SE	9.30 2090	9.75 2190	0.0181	12.000 0.4724	11.992 0.4721	17.017 0.6700	17.006 0.6695	0.007 0.015
13 0.5118	13 0.5118	16 0.6299	14.0 0.551	9.8 0.386	K13X16X14SE	5.62 1260	7.23 1630	0.0184	13.000 0.5118	12.992 0.5115	16.017 0.6306	16.006 0.6302	0.005 0.011
	13 0.5118	17 0.6693	17.7 0.697	13.8 0.543	K13X17X17,7SE	9.80 2200	12.3 2770	0.0196	13.000 0.5118	12.992 0.5115	17.017 0.6700	17.006 0.6695	0.008 0.018
	13 0.5118	18 0.7087	15.0 0.591	12.5 0.492	K13X18X15SE	9.28 2090	9.88 2220	0.0200	13.000 0.5118	12.992 0.5115	18.017 0.7093	18.006 0.7089	0.008 0.018
14 0.5512	14 0.5512	18 0.7087	13.0 0.512	9.8 0.386	K14X18X13SE	7.39 1660	8.69 1950	0.0220	14.000 0.5512	13.992 0.5509	18.017 0.7093	18.006 0.7089	0.007 0.015
	14 0.5512	18 0.7087	17.0 0.669	11.8 0.465	K14X18X17SE	8.59 1930	10.5 2360	0.0203	14.000 0.5512	13.992 0.5509	18.017 0.7093	18.006 0.7089	0.009 0.020
	14 0.5512	18 0.7087	21.0 0.827	14.8 0.583	K14X18X21SE	10.3 2320	13.3 2990	0.0208	14.000 0.5512	13.992 0.5509	18.017 0.7093	18.006 0.7089	0.011 0.024
15 0.5906	15 0.5906	19 0.7480	17.0 0.669	11.8 0.465	K15X19X17SE	9.05 2030	11.5 2590	0.0218	15.000 0.5906	14.992 0.5902	19.020 0.7488	19.007 0.7483	0.009 0.020

Continued on next page.

ASSEMBLIES FOR WRIST PIN END APPLICATIONS – *continued*

METRIC SERIES

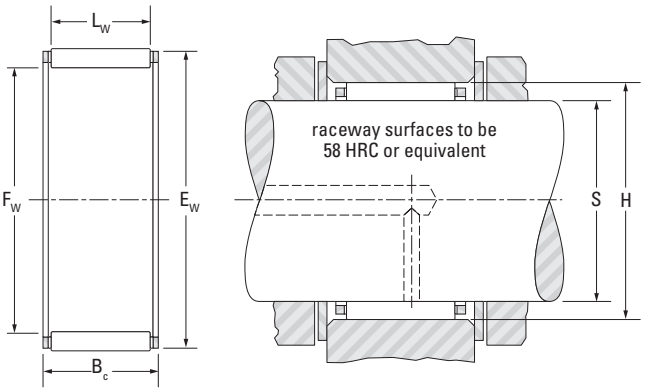

K.BE

Shaft Dia.	F_w	E_w	B_c	L_w	Assembly Designation	C	C_0	Cg	S		H		Wt.
						Load Ratings			Mounting Dimensions (non-high performance engines)				
			-0.20 -.008 **-0.55** -.022						Max.	Min.	Max.	Min.	
mm in.	**mm** in.	**mm** in.	**mm** in.	**mm** in.		**kN** lbf.			**mm** in.	**mm** in.	**mm** in.	**mm** in.	**kg** lbs.
15 0.5906	**15** 0.5906	**19** 0.7480	**19.5** 0.768	**15.8** 0.622	K15X19X19,5SE	**10.8** 2430	**14.3** 3210	**0.0231**	**15.000** 0.5906	**14.992** 0.5902	**19.020** 0.7488	**19.007** 0.7483	**0.010** 0.022
	15 0.5906	**19** 0.7480	**20.0** 0.787	**15.8** 0.622	K15X19X20SE	**10.8** 2430	**14.3** 3210	**0.0229**	**15.000** 0.5906	**14.992** 0.5902	**19.020** 0.7488	**19.007** 0.7483	**0.010** 0.022
16 0.6299	**16** 0.6299	**20** 0.7874	**20.0** 0.787	**15.8** 0.622	K16X20X20SE	**12.0** 2700	**16.9** 3800	**0.0242**	**16.000** 0.6299	**15.992** 0.6296	**20.020** 0.7882	**20.007** 0.7877	**0.011** 0.024
	16 0.6299	**20** 0.7874	**22.0** 0.866	**15.8** 0.622	K16X20X22SE	**12.0** 2700	**16.9** 3800	**0.0242**	**16.000** 0.6299	**15.992** 0.6296	**20.020** 0.7882	**20.007** 0.7877	**0.013** 0.029
	16 0.6299	**20** 0.7874	**23.0** 0.906	**15.8** 0.622	K16X20X23SE	**10.7** 2410	**14.5** 3260	**0.0259**	**16.000** 0.6299	**15.992** 0.6296	**20.020** 0.7882	**20.007** 0.7877	**0.013** 0.029
18 0.7087	**18** 0.7087	**22** 0.8661	**22.0** 0.866	**17.8** 0.701	K18X22X22SE	**14.4** 3240	**22.0** 4950	**0.0259**	**18.000** 0.7087	**17.992** 0.7083	**22.020** 0.8669	**22.007** 0.8664	**0.016** 0.035
	18 0.7087	**23** 0.9055	**20.0** 0.787	**15.8** 0.622	K18X23X20SE	**13.6** 3060	**17.6** 3960	**0.0249**	**18.000** 0.7087	**17.992** 0.7083	**23.020** 0.9063	**23.007** 0.9058	**0.015** 0.033
	18 0.7087	**23** 0.9055	**23.0** 0.906	**17.8** 0.701	K18X23X23SE	**15.9** 3570	**21.6** 4860	**0.0291**	**18.000** 0.7087	**17.992** 0.7083	**23.020** 0.9063	**23.007** 0.9058	**0.018** 0.040
19 0.7480	**19** 0.7480	**24** 0.9449	**25.5** 1.004	**17.8** 0.701	K19X24X25,5SE	**16.7** 3750	**23.4** 5260	**0.0268**	**19.000** 0.7480	**18.991** 0.7477	**24.020** 0.9457	**24.007** 0.9452	**0.022** 0.049
20 0.7874	**20** 0.7874	**24** 0.9449	**23.0** 0.906	**17.8** 0.701	K20X24X23SE	**14.8** 3330	**23.7** 5330	**0.0282**	**20.000** 0.7874	**19.991** 0.7870	**24.020** 0.9457	**24.007** 0.9452	**0.017** 0.037
	20 0.7874	**25** 0.9843	**22.0** 0.866	**16.8** 0.661	K20X25X22SE	**15.9** 3570	**22.2** 4990	**0.0294**	**20.000** 0.7874	**19.991** 0.7870	**25.020** 0.9850	**25.007** 0.9845	**0.020** 0.044
	20 0.7874	**25** 0.9843	**23.0** 0.906	**17.8** 0.701	K20X25X23SE	**17.5** 3930	**25.2** 5670	**0.0310**	**20.000** 0.7874	**19.991** 0.7870	**25.020** 0.9850	**25.007** 0.9845	**0.025** 0.055

RADIAL NEEDLE ROLLER AND CAGE ASSEMBLIES

INCH SERIES

Inch series radial needle roller and cage assemblies are available in a variety of sizes and designs. This catalog includes the most popular, standardized designs.

REFERENCE STANDARDS:

- **ANSI/ABMA 18.2** – needle roller bearings – radial, inch design.

Before selecting specific inch series radial needle roller and cage assemblies, the engineering section should be reviewed.

WJ

WJC

Fig. B-5 . Types of inch series radial needle roller and cage assemblies

There are two primary constructions of inch series needle roller and cage assemblies. WJ assemblies are heavy-duty compared to WJC assemblies due to the nature of the roller diameter.

CONSTRUCTION

Radial needle roller and cage assemblies have a steel cage that provides both inward and outward retention for the needle rollers. The designs provide maximum cage strength consistent with the inherent high load-ratings of needle roller bearings.

Accurate guidance of the needle rollers by the cage bars allows for operation at high speeds. Needle roller and cage assemblies have either one or two rows of needle rollers.

Also available (by request) are needle roller and cage assemblies using molded, one-piece glass-reinforced engineered polymer cages. These operate well at temperatures up to 250° F (120° C) over extended periods. However, care should be exercised when bearings are lubricated with oils containing additives, as service life may be reduced if the operating temperature exceeds 212° F (100˚ C). At such high temperatures, oil can deteriorate with time and it is suggested that oil change intervals are observed.

Needle rollers with relieved ends – used in these assemblies are made of high carbon chrome steel through-hardened, ground and lapped to close tolerances for diameter and roundness. See the engineering section for further discussion of relieved end rollers.

DIMENSIONAL ACCURACY

The nominal inch assemblies, WJ and WJC, contain needle rollers manufactured to only one diameter grade. Within any one assembly, the needle rollers have a total diameter tolerance of 0.0001 in. (0.003 mm).

The limit to precision of the radial clearance of mounted needle roller and cage assemblies is the capability of the user to hold close tolerances on the inner and outer raceways.

The tolerance of the overall width of these assemblies is given in the bearing tables of this section.

MOUNTING DIMENSIONS

The needle roller and cage assembly normally uses the shaft and housing as the inner and outer raceways. To realize full bearing load rating and life, the shaft and housing must have the correct geometric and metallurgical characteristics.

The tables of dimensions for these assemblies list the suggested diameters for the shaft when used as the inner raceway. These are consistent with ISO h5 shaft raceway tolerances. Additional design details for shafts used as inner raceways can be found in the engineering section.

Since the housing normally serves as the outer raceway, it should be of sufficient cross section to maintain adequate roundness and running clearance under load. The tables of dimensions

also list the suggested diameters for the housings when used as outer raceways. These are consistent with ISO G6 housing bore tolerances. Additional design details for housings used as outer raceways can be found in the engineering section.

The suggested mounting diameter tolerances for these needle roller and cage assemblies will provide correct running clearance for most applications.

The needle roller and cage assembly must be axially located by shoulders or other suitable means. End locating surfaces should be hardened to minimize wear. For satisfactory operation, minimum axial clearance should be 0.008 in. (0.203 mm). When using type WJ assembly, fillets adjacent to the assembly must not exceed 0.03 in. (0.762 mm) radius. When it is necessary to use fillets adjacent to WJC assembly, please consult your representative for suggestions.

LUBRICATION

Oil is the preferred lubricant for most applications. In critical applications involving high speeds, ample oil flow must be provided. Where assemblies are subjected to high centrifugal forces, such as in epicyclic gearing, or inertia forces, as in the small end of a connecting rod, the contact pressure between the cage and the raceway guiding surface becomes critical. The allowable contact pressure depends on a combination of the induced force and the relative velocity between the cage and the raceway and the rate of lubricant flow. Consult your representative when cages will be subjected to high induced forces.

SPECIAL DESIGNS

Needle roller and cage assemblies made to special dimensions or configurations, such as those that are split to assemble around a one-piece crankshaft, can be made available on special order where quantities permit. Special plated cages to enhance life under conditions of high induced forces can also be made available.

SINGLE-ROW ASSEMBLIES

INCH SERIES

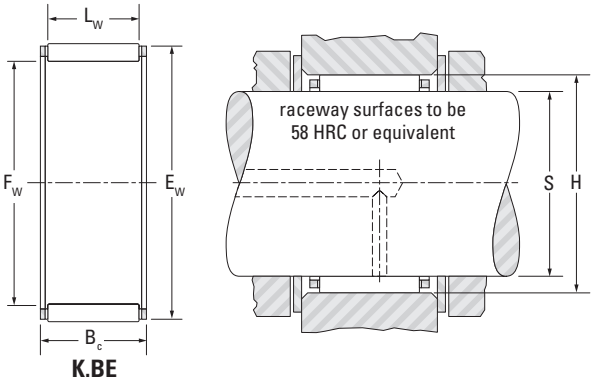

K.BE

Shaft Dia.	F_w	E_w	B_c +0 -0.38	Assembly Designation	C	C_0	Grease	Oil	C_g	S (ISO h5) Max.	S (ISO h5) Min.	H (ISO G6) Max.	H (ISO G6) Min.	Wt.
					Load Ratings		Speed Rating			Mounting Dimensions				
in.	mm in.	mm in.	mm in.		kN lbf.		min^{-1}			mm in.	mm in.	mm in.	mm in.	kg lbs.
3/8	**9.525** 0.3750	**12.700** 0.5000	**9.53** 0.375	WJC-060806	**3.87** 870	**4.00** 900	24000	37000	0.0170	**9.525** 0.3750	**9.520** 0.3748	**12.715** 0.5006	**12.705** 0.5002	**0.003** 0.006
1/2	**12.700** 0.5000	**15.875** 0.6250	**12.70** 0.500	WJC-081008	**6.23** 1400	**8.01** 1800	23000	35000	0.0227	**12.700** 0.5000	**12.692** 0.4997	**15.890** 0.6256	**15.880** 0.6252	**0.005** 0.010
9/16	**14.288** 0.5625	**17.463** 0.6875	**12.70** 0.500	WJC-091108	**6.81** 1530	**9.25** 2080	22000	34000	0.0247	**14.288** 0.5625	**14.280** 0.5622	**17.478** 0.6881	**17.468** 0.6877	**0.006** 0.013
5/8	**15.875** 0.6250	**19.050** 0.7500	**12.70** 0.500	WJC-101208	**7.03** 1580	**9.96** 2240	18000	27000	0.0264	**15.875** 0.6250	**15.867** 0.6247	**19.070** 0.7508	**19.058** 0.7503	**0.006** 0.013
	15.875 0.6250	**22.225** 0.8750	**15.88** 0.625	WJ-101410	**15.6** 3510	**17.8** 3990	19000	29000	0.0280	**15.875** 0.6250	**15.867** 0.6247	**22.245** 0.8758	**22.233** 0.8753	**0.012** 0.027
	15.875 0.6250	**22.225** 0.8750	**22.23** 0.875	WJ-101414	**21.3** 4780	**26.4** 5940	19000	29000	0.0309	**15.875** 0.6250	**15.867** 0.6247	**22.245** 0.8758	**22.233** 0.8753	**0.017** 0.038
3/4	**19.050** 0.7500	**25.400** 1.0000	**25.40** 1.000	WJ-121616	**26.8** 6020	**37.2** 8370	16000	24000	0.0362	**19.050** 0.7500	**19.040** 0.7496	**25.420** 1.0008	**25.408** 1.0003	**0.023** 0.051
13/16	**20.638** 0.8125	**26.988** 1.0625	**22.23** 0.875	WJ-131714	**25.1** 5650	**35.0** 7880	14000	22000	0.0368	**20.638** 0.8125	**20.627** 0.8121	**27.008** 1.0633	**26.995** 1.0628	**0.021** 0.046
7/8	**22.225** 0.8750	**28.575** 1.1250	**25.40** 1.000	WJ-141816	**29.2** 6570	**43.5** 9770	13000	20000	0.0401	**22.225** 0.8750	**22.215** 0.8746	**28.595** 1.1258	**28.583** 1.1253	**0.026** 0.058
1	**25.400** 1.0000	**33.338** 1.3125	**19.05** 0.750	WJ-162112	**28.1** 6320	**37.1** 8340	12000	18000	0.0397	**25.400** 1.0000	**25.390** 0.9996	**33.363** 1.3135	**33.348** 1.3129	**0.029** 0.063
	25.400 1.0000	**33.338** 1.3125	**25.40** 1.000	WJ-162116	**36.8** 8270	**52.5** 11800	12000	18000	0.0432	**25.400** 1.0000	**25.390** 0.9996	**33.363** 1.3135	**33.348** 1.3129	**0.038** 0.084
	25.400 1.0000	**33.338** 1.3125	**31.75** 1.250	WJ-162120	**44.5** 10000	**67.2** 15100	12000	18000	0.0460	**25.400** 1.0000	**25.390** 0.9996	**33.363** 1.3135	**33.348** 1.3129	**0.048** 0.105
1 1/8	**28.575** 1.1250	**38.100** 1.5000	**25.40** 1.000	WJ-182416	**42.4** 9520	**57.8** 13000	10000	16000	0.0455	**28.575** 1.1250	**28.565** 1.1246	**38.125** 1.5010	**38.110** 1.5004	**0.041** 0.090
	28.575 1.1250	**38.100** 1.5000	**31.75** 1.250	WJ-182420	**52** 11700	**74.7** 16800	10000	16000	0.0485	**28.575** 1.1250	**28.565** 1.1246	**38.125** 1.5010	**38.110** 1.5004	**0.065** 0.143
1 1/4	**31.750** 1.2500	**41.275** 1.6250	**19.05** 0.750	WJ-202612	**33.4** 7520	**43.7** 9830	9300	14000	0.0443	**31.750** 1.2500	**31.740** 1.2496	**41.300** 1.6260	**41.285** 1.6254	**0.043** 0.094
	31.750 1.2500	**41.275** 1.6250	**25.40** 1.000	WJ-202616	**44.1** 9910	**62.3** 14000	9300	14000	0.0484	**31.750** 1.2500	**31.740** 1.2496	**41.300** 1.6260	**41.285** 1.6254	**0.061** 0.134
	31.750 1.2500	**41.275** 1.6250	**31.75** 1.250	WJ-202620	**53.8** 12100	**81.0** 18200	9300	14000	0.0517	**31.750** 1.2500	**31.740** 1.2496	**41.300** 1.6260	**41.285** 1.6254	**0.071** 0.156

Continued on next page.

Load ratings are based on a minimum raceway hardness of 58 HRC or equivalent.

Minimum axial clearance should be 0.02 mm (0.008 in.).

Shaft Dia.	F_w	E_w	B_c	Assembly Designation	C	C_0	Grease	Oil	C_g	S (ISO h5)		H (ISO G6)		Wt.
					Load Ratings		Speed Rating			Mounting Dimensions				
										Max.	Min.	Max.	Min.	
in.	mm in.	mm in.	mm in.		kN lbf.		min^{-1}			mm in.	mm in.	mm in.	mm in.	kg lbs.
			+0 +0 -0.38 -0.015											
1¼	**31.750** 1.2500	**41.275** 1.6250	**38.10** 1.500	WJ-202624	**63.6** 14300	**99.6** 22400	9300	14000	0.0544	**31.750** 1.2500	**31.740** 1.2496	**41.300** 1.6260	**41.285** 1.6254	**0.085** 0.188
1⅜	**34.925** 1.3750	**44.450** 1.7500	**25.40** 1.000	WJ-222816	**45.8** 10300	**67.2** 15100	8300	13000	0.0513	**34.925** 1.3750	**34.915** 1.3746	**44.475** 1.7510	**44.460** 1.7504	**0.067** 0.147
	34.925 1.3750	**44.450** 1.7500	**31.75** 1.250	WJ-222820	**56.0** 12600	**87.2** 19600	8300	13000	0.0547	**34.925** 1.3750	**34.915** 1.3746	**44.475** 1.7510	**44.460** 1.7504	**0.077** 0.170
1½	**38.100** 1.5000	**47.625** 1.8750	**25.40** 1.000	WJ-243016	**47.2** 10600	**71.6** 16100	7600	12000	0.0541	**38.100** 1.5000	**38.090** 1.4996	**47.650** 1.8760	**47.635** 1.8754	**0.078** 0.172
	38.100 1.5000	**47.625** 1.8750	**31.75** 1.250	WJ-243020	**57.8** 13000	**93.0** 20900	7600	12000	0.0577	**38.100** 1.5000	**38.090** 1.4996	**47.650** 1.8760	**47.635** 1.8754	**0.083** 0.184
	38.100 1.5000	**47.625** 1.8750	**38.10** 1.500	WJ-243024	**68.1** 15300	**114.8** 25800	7600	12000	0.0608	**38.100** 1.5000	**38.090** 1.4996	**47.650** 1.8760	**47.635** 1.8754	**0.100** 0.220
	38.100 1.5000	**47.625** 1.8750	**44.45** 1.750	WJ-243028	**77.4** 17400	**135.7** 30500	7600	12000	0.0634	**38.100** 1.5000	**38.090** 1.4996	**47.650** 1.8760	**47.635** 1.8754	**0.134** 0.295
1¾	**44.450** 1.7500	**53.975** 2.1250	**19.05** 0.750	WJ-283412	**39.5** 8870	**59.6** 13400	6400	9900	0.0552	**44.450** 1.7500	**44.440** 1.7496	**54.003** 2.1261	**53.985** 2.1254	**0.058** 0.127
	44.450 1.7500	**53.975** 2.1250	**25.40** 1.000	WJ-283416	**52.0** 11700	**85.0** 19100	6400	9900	0.0603	**44.450** 1.7500	**44.440** 1.7496	**54.003** 2.1261	**53.985** 2.1254	**0.084** 0.185
	44.450 1.7500	**53.975** 2.1250	**38.10** 1.500	WJ-283424	**74.7** 16800	**136** 30600	6400	9900	0.0677	**44.450** 1.7500	**44.440** 1.7496	**54.003** 2.1261	**53.985** 2.1254	**0.115** 0.253
2	**50.800** 2.0000	**60.325** 2.3750	**19.05** 0.750	WJ-323812	**42.8** 9610	**69** 15500	5600	8600	0.0606	**50.800** 2.0000	**50.787** 1.9995	**60.353** 2.3761	**60.335** 2.3754	**0.065** 0.143
	50.800 2.0000	**60.325** 2.3750	**25.40** 1.000	WJ-323816	**56.5** 12700	**98** 22100	5600	8600	0.0662	**50.800** 2.0000	**50.787** 1.9995	**60.353** 2.3761	**60.335** 2.3754	**0.105** 0.231
	50.800 2.0000	**60.325** 2.3750	**31.75** 1.250	WJ-323820	**69.0** 15500	**127** 28700	5600	8600	0.0707	**50.800** 2.0000	**50.787** 1.9995	**60.353** 2.3761	**60.335** 2.3754	**0.108** 0.238
	50.800 2.0000	**60.325** 2.3750	**38.10** 1.500	WJ-323824	**81.0** 18200	**157** 35300	5600	8600	0.0744	**50.800** 2.0000	**50.787** 1.9995	**60.353** 2.3761	**60.335** 2.3754	**0.130** 0.286
2 1/16	**52.388** 2.0625	**61.913** 2.4375	**25.40** 1.000	WJ-333916	**57.8** 13000	**102** 23100	5400	8300	0.0678	**52.388** 2.0625	**52.375** 2.0620	**61.940** 2.4386	**61.923** 2.4379	**0.099** 0.218
2⅛	**53.975** 2.1250	**63.500** 2.5000	**25.40** 1.000	WJ-344016	**52.5** 11800	**92.08** 20700	5200	8000	0.0668	**53.975** 2.1250	**53.962** 2.1245	**63.528** 2.5011	**63.510** 2.5004	**0.089** 0.196
	53.975 2.1250	**63.500** 2.5000	**38.10** 1.500	WJ-344024	**78.3** 17600	**153** 34500	5200	8000	0.0759	**53.975** 2.1250	**53.962** 2.1245	**63.528** 2.5011	**63.510** 2.5004	**0.137** 0.302
2 3/16	**55.563** 2.1875	**65.088** 2.5625	**19.05** .750	WJ-354112	**44.5** 10000	**75.17** 16900	5000	7800	0.0644	**55.563** 2.1875	**55.550** 2.1870	**65.115** 2.5636	**65.098** 2.5629	**0.070** 0.155
	55.563 2.1875	**65.088** 2.5625	**25.40** 1.000	WJ-354116	**57.8** 13000	**107** 24100	5000	7800	0.0704	**55.563** 2.1875	**55.550** 2.1870	**65.115** 2.5636	**65.098** 2.5629	**0.094** 0.207
2¼	**57.150** 2.2500	**66.675** 2.6250	**25.40** 1.000	WJ-364216	**53.8** 12100	**96.08** 21600	4900	7500	0.0693	**57.150** 2.2500	**57.137** 2.2495	**66.703** 2.6261	**66.685** 2.6254	**0.096** 0.212
	57.150 2.2500	**66.675** 2.6250	**31.75** 1.250	WJ-364220	**67.6** 15200	**128** 28900	4900	7500	0.0745	**57.150** 2.2500	**57.137** 2.2495	**66.703** 2.6261	**66.685** 2.6254	**0.120** 0.265
2⅜	**60.325** 2.3750	**69.850** 2.7500	**38.10** 1.500	WJ-384424	**81.4** 18300	**167** 37600	4600	7100	0.0815	**60.325** 2.3750	**60.312** 2.3745	**69.878** 2.7511	**69.860** 2.7504	**0.151** 0.334
2½	**63.500** 2.5000	**73.025** 2.8750	**25.40** 1.000	WJ-404616	**55.6** 12500	**104** 23400	4400	6700	0.0741	**63.500** 2.5000	**63.487** 2.4995	**73.053** 2.8761	**73.035** 2.8754	**0.106** 0.234

Load ratings are based on a minimum raceway hardness of 58 HRC or equivalent.

Minimum axial clearance should be 0.02 mm (0.008 in.).

Shaft Dia.	F_w	E_w	B_c	Assembly Designation	C	C_0	Grease	Oil	C_g	S (ISO h5)		H (ISO G6)		Wt.
			+0 +0 -0.38 -0.015		Load Ratings		Speed Rating			Mounting Dimensions				
										Max.	Min.	Max.	Min.	
in.	mm in.	mm in.	mm in.		kN lbf.		min^{-1}			mm in.	mm in.	mm in.	mm in.	kg lbs.
2½	**63.500** 2.5000	**73.025** 2.8750	**31.75** 1.250	WJ-404620	**69.8** 15700	**139** 31400	4400	6700	0.0797	**63.500** 2.5000	**63.487** 2.4995	**73.053** 2.8761	**73.035** 2.8754	**0.132** 0.292
	63.500 2.5000	**73.025** 2.8750	**38.10** 1.500	WJ-404624	**83.2** 18700	**173** 39100	4400	6700	0.0842	**63.500** 2.5000	**63.487** 2.4995	**73.053** 2.8761	**73.035** 2.8754	**0.179** 0.395
2¾	**69.850** 2.7500	**79.375** 3.1250	**25.40** 1.000	WJ-445016	**57.8** 13000	**112.54** 25300	4000	6100	0.0788	**69.850** 2.7500	**69.837** 2.7495	**79.403** 3.1261	**79.385** 3.1254	**0.116** 0.256
3	**76.200** 3.0000	**85.725** 3.3750	**25.40** 1.000	WJ-485416	**59.6** 13400	**120.55** 27100	3600	5600	0.0833	**76.200** 3.0000	**76.187** 2.9995	**85.761** 3.3764	**85.738** 3.3755	**0.126** 0.278
	76.200 3.0000	**85.725** 3.3750	**38.10** 1.500	WJ-485424	**85.4** 19200	**191.72** 43100	3600	5600	0.0935	**76.200** 3.0000	**76.187** 2.9995	**85.761** 3.3764	**85.738** 3.3755	**0.189** 0.416
3¼	**82.550** 3.2500	**92.075** 3.6250	**25.40** 1.000	WJ-525816	**61.4** 13800	**128.55** 28900	3300	5100	0.0878	**82.550** 3.2500	**82.535** 3.2494	**92.111** 3.6264	**92.088** 3.6255	**0.136** 0.299
	82.550 3.2500	**92.075** 3.6250	**38.10** 1.500	WJ-525824	**88.1** 19800	**204.62** 46000	3300	5100	0.0985	**82.550** 3.2500	**82.535** 3.2494	**92.111** 3.6264	**92.088** 3.6255	**0.220** 0.486
3½	**88.900** 3.5000	**98.425** 3.8750	**25.40** 1.000	WJ-566216	**63.2** 14200	**136.56** 30700	3100	4700	0.0922	**88.900** 3.5000	**88.885** 3.4994	**98.461** 3.8764	**98.438** 3.8755	**0.146** 0.321
	88.900 3.5000	**101.600** 4.0000	**25.40** 1.000	WJ-566416	**79.6** 17900	**150.35** 33800	3100	4800	0.0903	**88.900** 3.5000	**88.885** 3.4994	**101.636** 4.0014	**101.613** 4.0005	**0.197** 0.435
	88.900 3.5000	**101.600** 4.0000	**38.10** 1.500	WJ-566424	**113** 25600	**237.53** 53400	3100	4800	0.1011	**88.900** 3.5000	**88.885** 3.4994	**101.636** 4.0014	**101.613** 4.0005	**0.296** 0.653
4	**101.600** 4.0000	**114.300** 4.5000	**25.40** 1.000	WJ-647216	**83.6** 18800	**166.59** 37450	2700	4200	0.0983	**101.600** 4.0000	**101.585** 3.9994	**114.336** 4.5014	**114.313** 4.5005	**0.224** 0.493
	101.600 4.0000	**114.300** 4.5000	**38.10** 1.500	WJ-647224	**119** 26800	**263.33** 59200	2700	4200	0.1102	**101.600** 4.0000	**101.585** 3.9994	**114.336** 4.5014	**114.313** 4.5005	**0.335** 0.739
5	**127.000** 5.0000	**152.400** 6.0000	**38.10** 1.500	WJ-809624	**211** 47600	**365.20** 82100	2200	3400	0.1196	**127.000** 5.0000	**126.982** 4.9993	**152.438** 6.0015	**152.415** 6.0006	**1.018** 2.244

NOTES

DRAWN CUP NEEDLE ROLLER BEARINGS

Overview: Drawn cup needle roller bearings support radial loads and reduce friction between rotating components, with a drawn outer shell serving as a raceway for the rollers. The small cross section of the drawn cup bearing provides high load-carrying capability with minimum required space. Drawn cup bearings are easily installed with a press fit in the housing.

- **Sizes:** 3 mm – 139.7 mm (0.1181 in. – 5.5000 in.) bore.
- **Markets:** Transmissions, transfer cases, engines, valve trains, steering and braking systems, axle supports, outboard engines, power tools, copiers, fax machines, paper-moving equipment and appliances.
- **Features:** Available in two basic designs: full complement and caged.
- **Benefits:** Full complement bearings handle high radial load-carrying capability. Caged bearings provide high speed and maximum lubricant-retention capability.

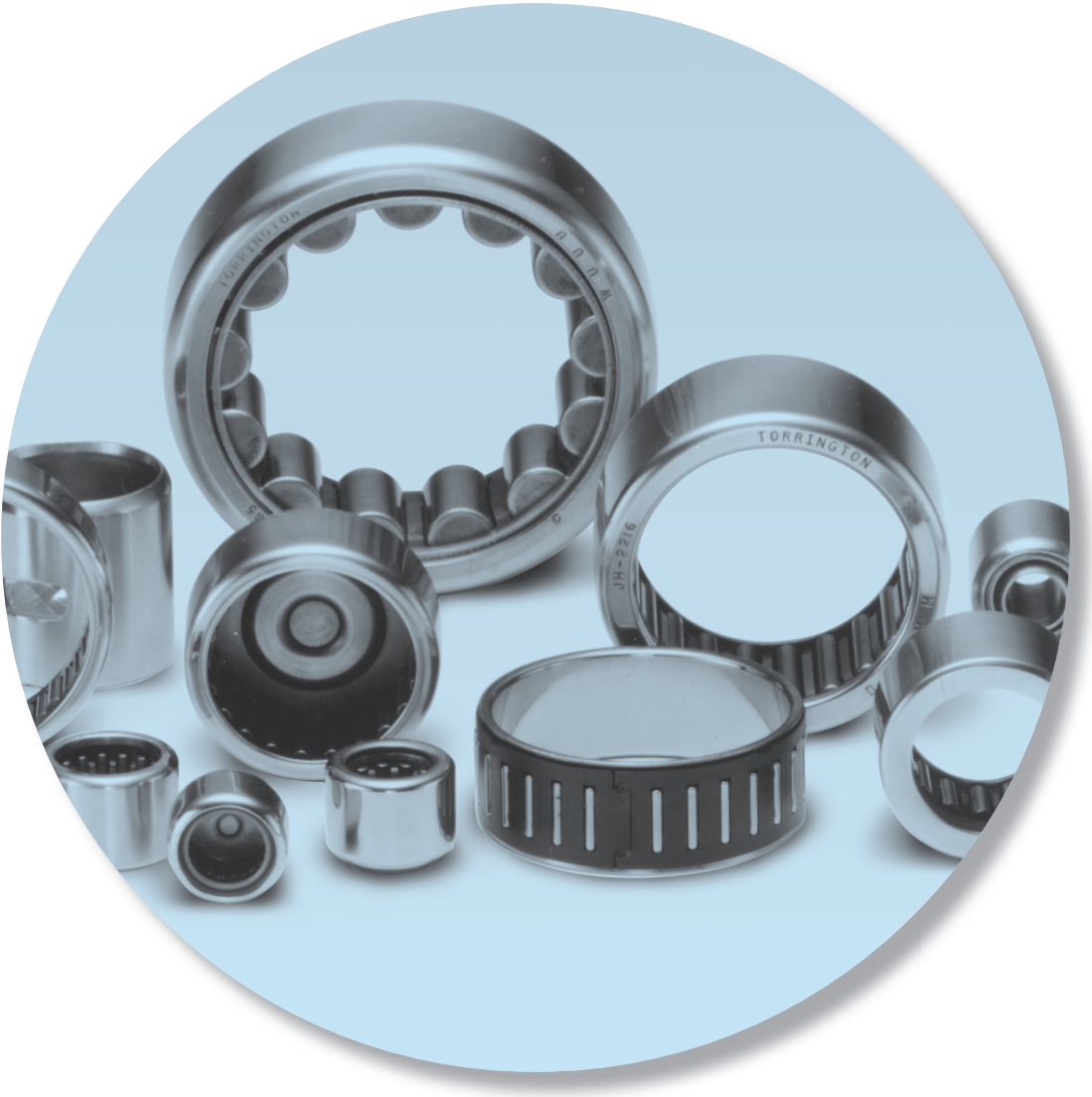

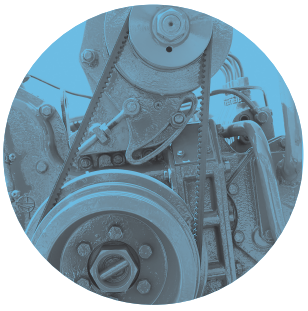

Drawn Cup Needle Roller Bearings – Metric Nominal Dimensions

Prefix
- **HK** drawn cup bearing, caged, open ends
- **BK** drawn cup bearing, caged, closed end
- **DL** drawn cup bearing, full complement, open ends
- **DLF** drawn cup bearing, full complement, closed end
- **DLH** drawn cup bearing, full complement, oil hole option

Width
- **12** = 12 mm
- **20** = 20 mm

HK 10 12 AS1

Bore diameter
- **10** = 10 mm
- **25** = 25 mm

Suffix[1]
- **RS** lip contact seal on one side of the bearing
- **.2RS** lip contact seal on each side of the bearing
- **AS1** lubricating hole

[1] These suffixes only apply to the HK and BK Series bearings.

Inner Rings – Metric Nominal Dimensions

Prefix
- **JR** inner ring
- **JRZ** inner ring without mounting chamfers
- **IM** inner ring for full complement bearings
- **IMC** inner ring with oil hole for full complement bearings

Outer diameter
- **14** = 14 mm
- **25** = 25 mm

Suffix
- **JS1** lubricating hole
- **R6** crowned raceway (IM types)

JR 10 x 14 x 12 JS1

Bore diameter
- **10** = 10 mm
- **20** = 20 mm

Width
- **12** = 12 mm
- **30** = 30 mm

Drawn Cup Needle Roller Bearings – Inch Nominal Dimensions

Prefixes
- **B** full complement of mechanically retained needle rollers
- **G** extra-precision
- **H** heavy series
- **J** caged complement of needle rollers
- **M** closed end
- **T** one seal
- **TT** two seals

with M prefix
signifies closed end inch nominal dimensions

Suffixes: limited availability
- **F** plastic cage
- **GF** grease fitting, closed end
- **OH** oil hole
- **OHE** oil hole in closed end

MJH - 18 16 1 - OH

Bore
- **16** = 16/16 = 1 in.
- **18** = 18/16 = 1 1/8 in.

Width
- **12** = 12/16 = 3/4 in.
- **16** = 16/16 = 1 in.

Inner Rings (with four-digit number) Inch Nominal Dimensions

Prefixes
- **IR** regular width (for use with drawn cup bearings only)
- **IRA** extended width (for use with drawn cup bearings only)

Suffixes: limited availability
- **L** 0.0050 in. width tolerance
- **OH** oil hole and lube groove

IR - 14 16 - OH

Bore
- **5** = 5/16 in.
- **14** = 14/16 = 7/8 in.

Width (IR series only)
- **12** = 12/16 = 3/4 in.
- **16** = 16/16 = 1 in.

B

Drawn Cup Needle Roller Bearings

Page

Introduction B-46
Open Ends, Closed One End – Metric Series B-52
Sealed Bearings – Metric Series..... B-62
Inner Rings – Metric Series..... B-66
Full Complement Open Ends, Closed One End –
Metric Series B-78
Inner Rings for Full Complement Drawn cup
Needle Roller Bearings – Metric Series B-84
Drawn Cup Needle Roller Bearings – Inch Series..... B-87
Full Complement Bearings, Open Ends,
Closed One End – Inch Series..... B-94
Extra-Precision Bearings – Inch Series B-108
Caged Bearings – Open Ends, Closed One End –
Inch Series..... B-112
Sealed Drawn Cup Bearings – Inch Series B-120
Inner Rings for Inch Series Drawn Cup Bearings B-122

B

DRAWN CUP NEEDLE ROLLER BEARINGS

METRIC SERIES

When a rolling bearing is needed for a compact and economic design and where it is not practical to harden and grind the housing bore, or where the housing materials are of low rigidity such as cast iron, aluminum or even plastics – drawn cup needle roller bearings should be considered.

REFERENCE STANDARDS ARE:

- **ISO 3245** – rolling bearings – needle roller bearings, drawn cup, without inner ring, boundary dimensions and tolerances.
- **ANSI/ABMA 18.1** – needle roller bearings – radial, metric design.
- **DIN 618** – needle roller bearings with cage – drawn cups with open end, drawn cup with closed end.

Before selecting specific drawn cup needle roller bearings, please review the engineering section of this catalog.

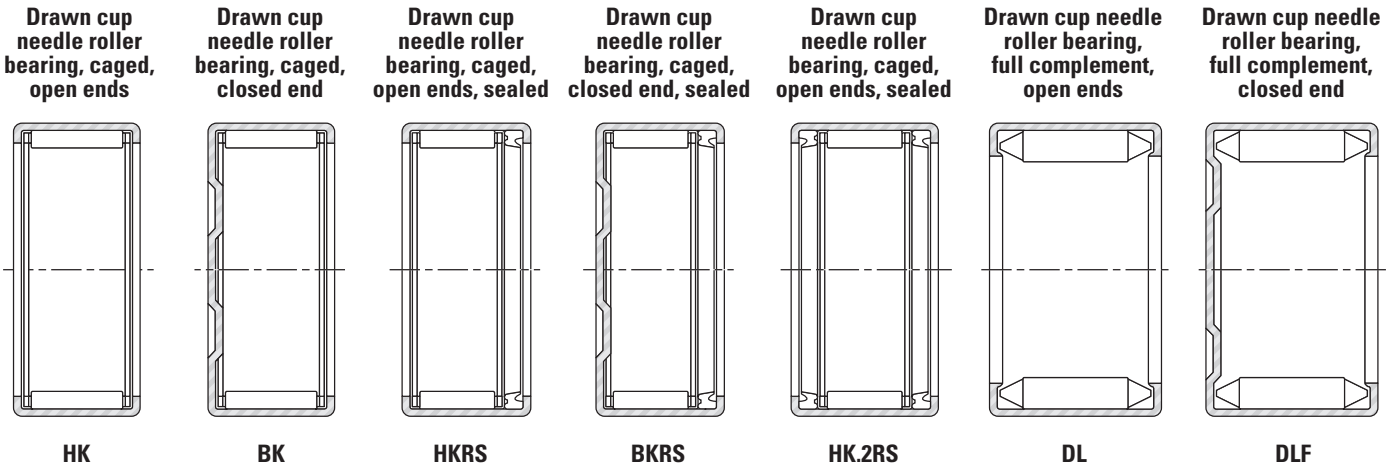

Fig. B-6. Types of metric series drawn cup needle roller bearings

Suffixes	
AS1	lubricating hole
RS	lip contact seal on one side of the bearing
.2RS	lip contact seal on each side of the bearing

CONSTRUCTION

The prefix letters in metric series drawn cup bearing designations denote whether the bearings are made with a full complement of needle rollers or caged needle rollers. The use of a full complement of needle rollers is indicated by the prefix code letters **DL** or **DLF**, and for use of caged needle rollers by the prefix code letters **HK** or **BK**.

The outer ring, in the form of a cup, is accurately drawn and no subsequent machining is performed. Drawn cup needle roller bearings of series **HK** and **DL** have open ends. The **HK** series also are available with one seal, **HKRS**, and with two seals, **HK.2RS**. The stamped lip of a drawn cup needle roller bearing of series **HKRS** is at the seal end.

Drawn cup needle roller bearings of series **BK** and **DLF** are closed at one end. They are used for shaft-end mounting. The open end is typically not sealed.

The one-piece steel cage used in **HK** and **BK** series drawn cup bearings is designed to provide rigidity and minimize wear. This cage design separates the needle roller guiding and retention functions.

Drawn cup needle roller bearings also are available with two needle roller and cage assemblies. They have a lubricating hole in the outer ring. Metric series drawn cup bearings with one needle roller and cage assembly may be made available on request with a lubricating hole, indicated by suffix **AS1**.

SEALED BEARINGS

The HK series drawn cup bearings are offered with integral seals. The tables of dimensions on pages B-62 to B-65, indicate those sizes available with lip contact seals. The seal lip design achieves a light and constant contact with the inner raceway throughout the range of mounted bearing clearances, thereby ensuring positive sealing and low frictional drag.

Sealed drawn cup bearings are intended to retain grease or non-pressurized oil within a bearing while also preventing contaminants from entering the raceway area.

Details of shaft design for sealed bearings are given in the engineering section of this catalog.

The standard lip contact seals are compatible with common lubricating oils and petroleum based fuels; but, they are adversely affected by certain fire-resistant hydraulic fluids and most common solvents. Sealed drawn cup bearings are normally filled with a high-quality lithium soap-based general purpose grease. The seal material and grease properties limit the bearing operating temperature between -30˚ C and +100˚ C (-22˚ F and + 212˚ F).

If the operating temperature must be outside of the range for the seals mentioned here, or if the seals are exposed to unusual fluids, please consult your representative.

BEARING MOUNTING FITS AND INTERNAL CLEARANCE

Drawn cup bearings are manufactured to a degree of precision that will satisfy the radial clearance requirements of most applications. The total radial clearance for an installed drawn cup bearing results from the buildup of manufacturing tolerances of the housing bore, the inner raceway diameter and the bearing, as well as the minimum radial clearance required for the application (reference Table B-6 on page B-48).

For metric series **caged** drawn cup bearings requiring close control of radial internal clearance, the suggested housing bore tolerance is N6 and h5 tolerance for the inner raceway diameter. When such exacting close control of radial internal clearance is not required, the user may select N7 housing bore and h6 inner raceway diameter tolerances.

For metric series **full complement** drawn cup bearings requiring close control of radial internal clearance, the suggested housing bore tolerance is H6 and h5 tolerance for the inner raceway diameter. When such exacting close control of radial internal clearance is not required, the user may select H7 housing bore and h6 inner raceway diameter tolerances.

TOLERANCES FOR HOUSING MATERIALS OF LOW RIGIDITY

The suggested housing bore tolerance for metric series **caged** drawn cup bearings used in housings made from materials of low rigidity or steel housings of small section is R6. To maintain normal radial internal clearance, the inner raceway diameter tolerance should be h5. When such exacting close control of radial internal clearance is not required, the user may select R7 housing bore and h6 inner raceway diameter tolerances.

The suggested housing bore tolerance for metric series **full complement** drawn cup bearings used in housings made from materials of low rigidity or steel housings of small section is M6. To maintain normal radial internal clearance, the inner raceway diameter tolerance should be h5. When such exacting close control of radial internal clearance is not required, the user may select M7 housing bore and h6 inner raceway diameter tolerances.

OUTER RING ROTATION

For metric series **caged** drawn cup bearing applications where the outer ring rotates with respect to the load, it is suggested that both the housing bore and the inner raceway diameter be reduced using R6 and f5 tolerance practice respectively. The user may select R7 housing bore and f6 inner raceway diameter tolerance when such exacting close control of radial internal clearance is not required.

For metric series **full complement** drawn cup bearings applications where the outer ring rotates with respect to the load, it is suggested that both the housing bore and the inner raceway diameter tolerance be reduced using is M6 and f5 tolerance practice respectively. The user may select M7 housing bore and f6 inner raceway diameter tolerances when such exacting close control of radial internal clearance is not required.

OSCILLATING MOTION

Metric series drawn cup bearing applications involving oscillating motion may require reduced radial internal clearances. This reduction may be accomplished by increasing the inner raceway diameter using j5 tolerance. When such exacting close control of radial clearance is not required, the user may select j6 inner raceway diameter tolerances.

Table B-6. Metric mounting fits

Bearing type	Operating condition	Shaft fit (recommended internal radial clearances)	Housing fit (recommended internal radial clearances)
HK, BK, HKRS, HK.2RS	One piece heavy section steel or cast iron housing	h5 (h6)	N6 (N7)
DL, DLF	One piece heavy section steel or cast iron housing	h5 (h6)	H6 (H7)
HK, BK, HKRS, HK.2RS	Housing material of low rigidity	h5 (h6)	R6 (R7)
DL, DLF	Housing material of low rigidity	h5 (h6)	M6 (M7)
HK, BK, HKRS, HK.2RS	Outer ring rotation (one piece heavy section steel or cast iron housing)	f5 (f6)	R6 (R7)
DL, DLF	Outer ring rotation (one piece heavy section steel or cast iron housing)	f5 (f6)	M6 (M7)
HK, BK, HKRS, HK.2RS	Oscillating motion	j5 (j6)	(1)
DL, DLF	Oscillating Motion	j5 (j6)	(1)

(1) Tolerance dependent on housing design.

INNER RINGS

When it becomes impractical to meet the shaft raceway design requirements (hardness, case depth, surface finish, etc.) outlined in the engineering section of this catalog, standard inner rings may be used with metric series drawn cup bearings. It is suggested that when metric series inner rings are used with metric series drawn cup bearings, they should be mounted with a loose transition fit on the shaft using g5 shaft diameter tolerance. The inner ring should be end-clamped against a shoulder. If a tight transition fit must be used (shaft diameter tolerance h5) to keep the inner ring from rotating relative to the shaft, the inner ring outer diameter, as mounted, must not exceed the raceway diameter required by the drawn cup bearing for the particular application. In case the outer diameter of the inner ring, when mounted on the shaft, exceeds the required raceway diameter for the matching drawn cup bearing, it should be ground to proper diameter while mounted on the shaft. When such exacting close control of radial internal clearance is not required the user may select g6 or h5 shaft diameter tolerances.

LOAD RATING FACTORS

DYNAMIC LOADS

Drawn cup needle roller bearings can accommodate only radial loads.

$P = F_r$

P = The maximum dynamic radial load that may be applied to a drawn cup bearing based on the dynamic load rating, C given in the bearing tables. This load should be $\leq$ C/3.

STATIC LOADS

$$f_0 = \frac{C_0}{P_0}$$

f_0 = static load safety factor

C_0 = basic static load rating (kN)

P_0 = maximum applied static load (kN)

To ensure satisfactory operation of drawn cup needle roller bearings, under all types of conditions, the static load safety factor f_0 should be $\geq$ 3.

ADJUSTED RATING LIFE

When application data includes details of operating temperature, oil viscosity, operating speed and the applied load meets the $\leq$ C/3 condition adjusted rating life may be evaluated using the information given in the engineering section.

INSPECTION OF DRAWN CUP NEEDLE ROLLER BEARINGS

Although the bearing cup is accurately drawn from strip steel, because of its fairly thin section, it may go out-of-round during heat treatment. When the bearing is pressed into a true round housing, or ring gage of correct size and wall thickness, it becomes round and is sized properly. *For this reason, it is incorrect to inspect an unmounted drawn cup bearing by measuring the outer diameter.* The correct method for inspecting the bearing size is to:

1. Press the bearing into a ring gage of proper size.
2. Plug the bearing bore with the appropriate "go" and "no go" gages, or measure it with a tapered arbor (lathe mandrel).

The "go" gage size is the minimum needle roller complement bore diameter. The "no go" gage size is larger than the maximum needle roller complement bore diameter by 0.002 mm (0.0001 in.).

NOTE

SPECIAL BEARINGS. There are bearings available with other cage designs, and materials such as reinforced engineered polymer for use where operating conditions permit.

Table B-7. Caged bearing gage sizes

Nominal bore diameter	Ring gage[1]	Needle roller complement bore diameter	
		Max.	Min.
mm in.	mm in.	mm in.	mm in.
3.000 0.1181	**6.484** 0.2553	**3.024** 0.1191	**3.006** 0.1183
4.000 0.1575	**7.984** 0.3143	**4.028** 0.1586	**4.010** 0.1579
5.000 0.1969	**8.984** 0.3537	**5.028** 0.1980	**5.010** 0.1972
6.000 0.2362	**9.984** 0.3931	**6.028** 0.2373	**6.010** 0.2366
7.000 0.2756	**10.980** 0.4323	**7.031** 0.2768	**7.013** 0.2761
8.000 0.3150	**11.980** 0.4717	**8.031** 0.3162	**8.013** 0.3155
9.000 0.3543	**12.980** 0.5110	**9.031** 0.3555	**9.013** 0.3548
10.000 0.3937	**13.980** 0.5504	**10.031** 0.3949	**10.013** 0.3942
12.000 0.4724	**15.980** 0.6291	**12.034** 0.4738	**12.016** 0.4731
12.000 0.4724	**17.980** 0.7079	**12.034** 0.4738	**12.016** 0.4731
13.000 0.5118	**18.976** 0.7471	**13.034** 0.5131	**13.016** 0.5124
14.000 0.5512	**19.976** 0.7865	**14.034** 0.5525	**14.016** 0.5518
15.000 0.5906	**20.976** 0.8258	**15.034** 0.5919	**15.016** 0.5912
16.000 0.6299	**21.976** 0.8652	**16.034** 0.6313	**16.016** 0.6306
17.000 0.6693	**22.976** 0.9046	**17.034** 0.6706	**17.016** 0.6699
18.000 0.7087	**23.976** 0.9439	**18.034** 0.7100	**18.016** 0.7093
20.000 0.7874	**25.976** 1.0227	**20.041** 0.7890	**20.020** 0.7882
22.000 0.8661	**27.976** 1.1014	**22.041** 0.8678	**22.020** 0.8669
25.000 0.9843	**31.972** 1.2587	**25.041** 0.9859	**25.020** 0.9850
28.000 1.1024	**34.972** 1.3769	**28.041** 1.1040	**28.020** 1.1031
30.000 1.1811	**36.972** 1.4556	**30.041** 1.1827	**30.020** 1.1819
35.000 1.3780	**41.972** 1.6524	**35.050** 1.3799	**35.025** 1.3789
40.000 1.5750	**46.972** 1.8493	**40.050** 1.5768	**40.025** 1.5758
45.000 1.7717	**51.967** 2.0459	**45.050** 1.7736	**45.025** 1.7726
50.000 1.9685	**57.967** 2.2822	**50.050** 1.9705	**50.025** 1.9695
60.000 2.3622	**67.967** 2.6759	**60.060** 2.3646	**60.030** 2.3634

[1] The ring gage sizes are in accordance with ISO N6 lower limit.

Table B-8. Full complement bearing gage sizes

Nominal bore diameter	Ring gage	Needle roller complement bore diameter	
		Max.	Min.
mm in.	mm in.	mm in.	mm in.
6.000 0.2362	**12.000** 0.4724	**6.034** 0.2376	**6.009** 0.2366
8.000 0.3150	**14.000** 0.5512	**8.034** 0.3163	**8.009** 0.3153
9.000 0.3543	**14.000** 0.5512	**9.034** 0.3557	**9.009** 0.3547
10.000 0.3937	**16.000** 0.6299	**10.034** 0.3950	**10.009** 0.3941
12.000 0.4724	**18.000** 0.7087	**10.033** 0.3950	**10.009** 0.3941
13.000 0.5118	**19.000** 0.7480	**13.033** 0.5131	**13.009** 0.5122
14.000 0.5512	**20.000** 0.7874	**14.033** 0.5525	**14.009** 0.5515
15.000 0.5906	**21.000** 0.8268	**15.033** 0.5919	**15.009** 0.5909
16.000 0.6299	**22.000** 0.8661	**16.033** 0.6312	**16.009** 0.6303
17.000 0.6693	**23.000** 0.9055	**17.033** 0.6706	**17.009** 0.6696
18.000 0.7087	**24.000** 0.9449	**18.033** 0.7100	**18.009** 0.7090
20.000 0.7874	**26.000** 1.0236	**20.033** 0.7887	**20.009** 0.7878
22.000 0.8661	**28.000** 1.1024	**22.033** 0.8674	**22.009** 0.8665
25.000 0.9843	**33.000** 1.2992	**25.039** 0.9858	**25.015** 0.9848
28.000 1.1024	**36.000** 1.4173	**28.039** 1.1039	**28.015** 1.1030
30.000 1.1811	**38.000** 1.4961	**30.039** 1.1826	**30.015** 1.1817
35.000 1.3780	**43.000** 1.6929	**35.039** 1.3795	**35.015** 1.3785
40.000 1.5748	**48.000** 1.8898	**40.039** 1.5763	**40.015** 1.5754
44.000 1.7323	**52.000** 2.0472	**44.039** 1.7338	**44.015** 1.7329
47.000 1.8504	**55.000** 2.1654	**47.039** 1.8519	**47.015** 1.8510
50.000 1.9685	**58.000** 2.2835	**50.039** 1.9700	**50.015** 1.9691
55.000 2.1654	**63.000** 2.4803	**55.039** 2.1669	**55.015** 2.1659

B

INSTALLATION PROCEDURES

GENERAL INSTALLATION REQUIREMENTS

- A drawn cup bearing must be pressed into its housing.
- An installation tool, similar to the ones illustrated must be used in conjunction with a standard press.
- The bearing must not be hammered into its housing, even in conjunction with the proper assembly mandrel.
- The bearing must not be pressed tightly against a shoulder in the housing.
- If it is necessary to use a shouldered housing, the depth of the housing bore must be sufficient to ensure that the housing shoulder fillet, as well as the shoulder face, clears the bearing.
- The installation tool must be coaxial with the housing bore.

INSTALLATION OF OPEN ENDS CAGED BEARINGS

It is advisable to utilize a positive stop on the press tool to locate the bearing properly in the housing. The assembly tool should have a leader or a pilot, as shown, to aid in starting the bearing true in the housing. The "O" ring shown on the drawing may be used to assist in holding the bearing on the installation tool. The bearing should be installed with the stamped end (the end with the identification markings) against the angled shoulder of the pressing tool.

A – 0.40 mm (0.016 in.) less than housing bore
B – 0.08 mm (0.003 in.) less than shaft diameter
C – distance bearing will be inset into housing, minimum of 0.20 mm (0.008 in.)
D – pilot length should be length of bearing less 0.80 mm (0.030 in.)
E – approximately ½ D

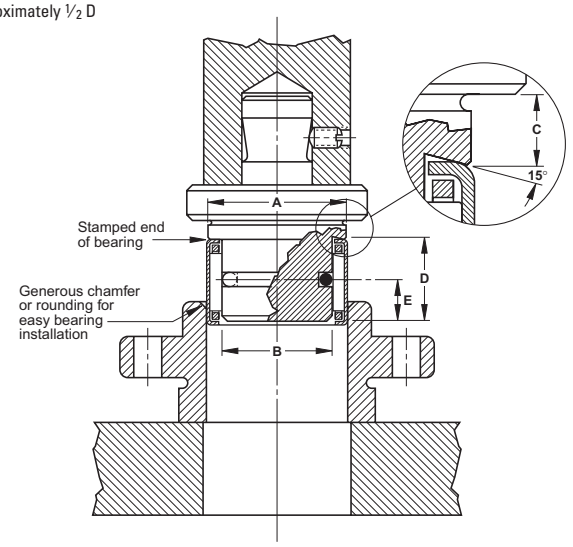

INSTALLATION OF CLOSED END CAGED BEARINGS

Bearing can be piloted from below for installation.

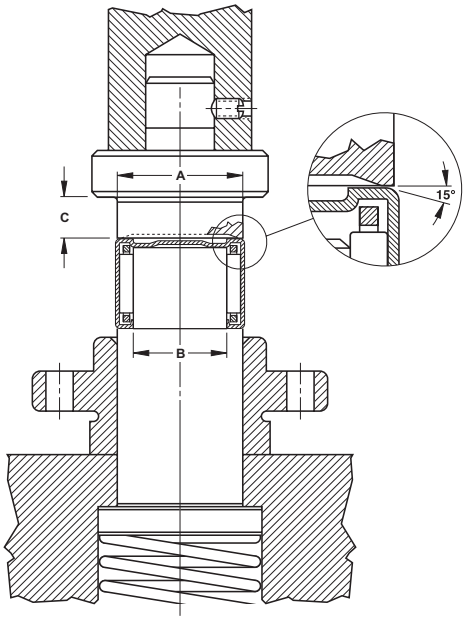

EXTRACTION FROM A STRAIGHT HOUSING (CAGED AND FULL COMPLEMENT BEARINGS)

Bearing can be extracted by pushing it through the housing. After extraction, the drawn cup bearing should not be reused.

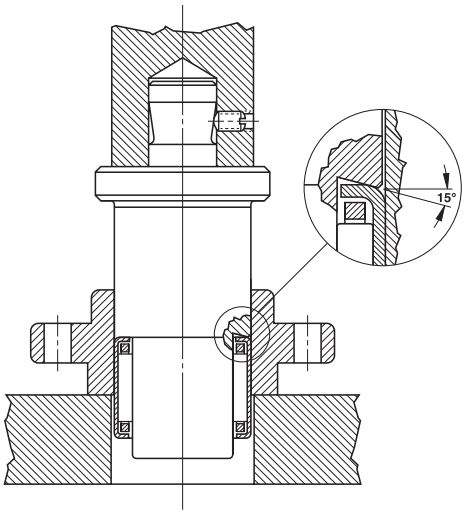

INSTALLATION OF OPEN ENDS FULL COMPLEMENT BEARINGS

It is advisable to utilize a positive stop on the press tool to locate the bearing properly in the housing. The assembly tool should have a leader or a pilot, as shown, to aid in starting the bearing true in the housing. The ball detent shown on the drawing is used to assist in aligning the rollers of a full complement bearing during installation and to hold the bearing on the installation tool. The bearing should be installed with the marked end (the end with identification markings) against the angled shoulder of the pressing tool.

A – 0.40 mm (0.016 in.) less than housing bore
B – 0.08 mm (0.003 in.) less than shaft diameter
C – distance bearing will be inset into housing, minimum of 0.20 mm (0.008 in.)
D – pilot length should be length of bearing less 0.80 mm (0.030 in.)
E – approximately 1/2 D

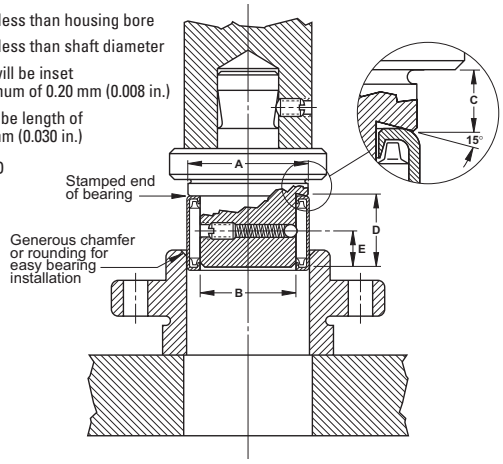

INSTALLATION OF CLOSED END FULL COMPLEMENT BEARINGS

The installation tool combines all the features of the tool used to install open end bearings, but the pilot is spring loaded and is part of the press bed.

The angled shoulder of the pressing tool should bear against the closed end with the bearing held on the pilot to aid in starting the bearing true in the housing.

A – 0.40 mm (0.016 in.) less than housing bore
B – 0.08 mm (0.003 in.) less than shaft diameter
C – distance bearing will be inset into housing, minimum of 0.20 mm (0.008 in.)

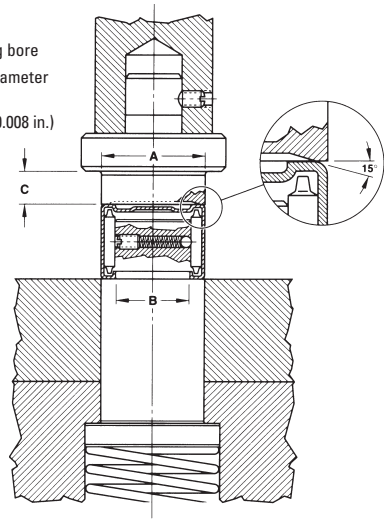

EXTRACTION FROM A SHOULDERED OR DEAD END HOUSING (CAGED AND FULL COMPLEMENT BEARINGS) (with space between the bearing and the housing shoulder)

Bearings may be extracted from shouldered or dead end housings with a common bearing puller tool as shown. This type of tool is slotted in two places at right angles to form four prongs. The four puller prongs are pressed together and inserted into the space between the end of the bearing and the shoulder. The prongs are forced outward by inserting the expansion rod, and then the bearing is extracted. Do not reuse the bearing after extraction.

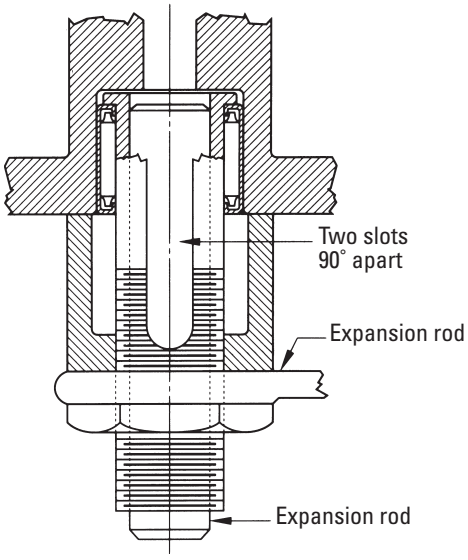

EXTRACTION FROM A SHOULDERED HOUSING (CAGED AND FULL COMPLEMENT BEARINGS) (with bearing pressed up close to the shoulder)

The tool to be used, as shown, is of a similar type described for a shouldered or dead end housing, but the rollers must first be removed from the bearing.

The four segment puller jaws are collapsed and slipped into the empty cup. The jaws are then forced outward into the cup bore by means of the tapered expansion rod. The jaws should bear on the lip as near as possible to the cup bore. The cup is then pressed out from the top.

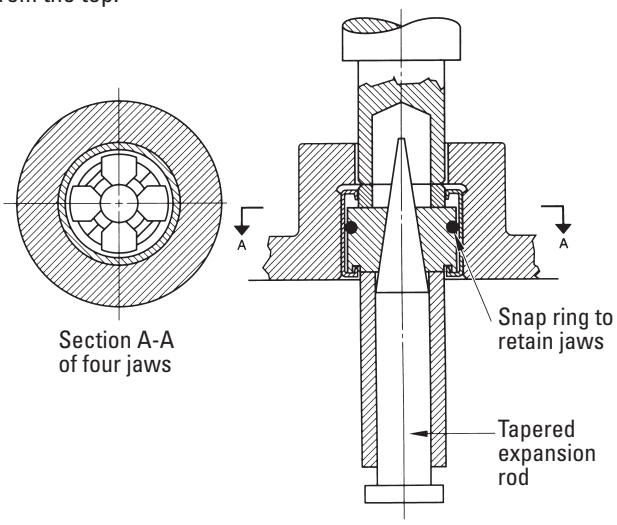

OPEN ENDS, CLOSED ONE END

METRIC SERIES

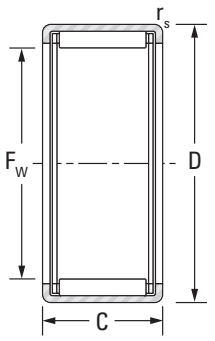

HK

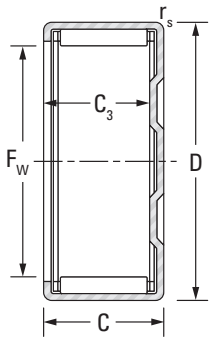

BK

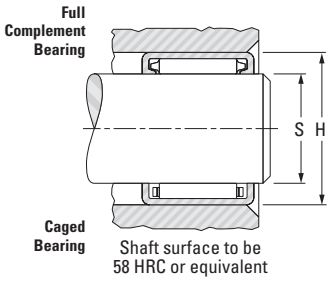

Shaft Dia.	F_W	D	C	$C_{3\,min}$	$r_{s\,min}$	Bearing Designation	Load Ratings Dynamic C	Load Ratings Static C_0	Speed Rating Grease	Speed Rating Oil	C_g
			-0.3, -0.012								
mm in.	mm in.	mm in.	mm in.	mm in.	mm in.		kN lbf.		min^{-1}		
3 0.1181	3 0.1181	6.5 0.2559	6 0.236	5.20 0.205	0.30 0.012	BK0306	1.20 270	0.78 175	30000	46000	0.0065
	3 0.1181	6.5 0.2559	6 0.236	—	0.30 0.012	HK0306	1.60 360	1.14 256	30000	46000	0.0065
4 0.1575	4 0.1575	8 0.3150	8 0.315	6.40 0.252	0.40 0.016	BK0408	1.83 411	1.32 297	25000	39000	0.0083
	4 0.1575	8 0.3150	8 0.315	—	0.40 0.016	HK0408	1.88 423	1.38 310	25000	39000	0.0083
5 0.1969	5 0.1969	9 0.3543	9 0.354	7.40 0.291	0.40 0.016	BK0509	2.52 567	2.07 465	23000	36000	0.0100
	5 0.1969	9 0.3543	9 0.354	—	0.40 0.016	HK0509	2.52 567	2.07 465	23000	36000	0.0100
6 0.2362	6 0.2362	10 0.3937	8 0.315	—	0.40 0.016	HK0608	2.34 526	1.95 438	22000	33000	0.0105
	6 0.2362	10 0.3937	9 0.354	7.40 0.291	0.40 0.016	BK0609	3.14 706	2.85 641	22000	33000	0.0116
	6 0.2362	10 0.3937	9 0.354	—	0.40 0.016	HK0609	3.14 706	2.85 641	22000	33000	0.0116
7 0.2756	7 0.2756	11 0.4331	9 0.354	7.40 0.291	0.40 0.016	BK0709	3.24 728	3.10 697	21000	32000	0.0125
	7 0.2756	11 0.4331	9 0.354	—	0.40 0.016	HK0709	3.23 726	3.05 686	21000	32000	0.0125
8 0.3150	8 0.3150	12 0.4724	8 0.315	6.40 0.252	0.40 0.016	BK0808	2.90 652	2.73 614	20000	31000	0.0128
	8 0.3150	12 0.4724	8 0.315	—	0.40 0.016	HK0808	2.90 652	2.73 614	20000	31000	0.0128
	8 0.3150	12 0.4724	10 0.394	8.40 0.331	0.40 0.016	BK0810	3.93 883	4.14 931	20000	31000	0.0184
	8 0.3150	12 0.4724	10 0.394	—	0.40 0.016	HK0810	3.95 888	4.07 915	20000	31000	0.0186
9 0.3543	9 0.3543	13 0.5118	10 0.394	8.40 0.331	0.40 0.016	BK0910	4.57 1030	5.07 1140	19000	30000	0.0206
	9 0.3543	13 0.5118	10 0.394	—	0.40 0.016	HK0910	4.57 1030	5.07 1140	19000	30000	0.0206
	9 0.3543	13 0.5118	12 0.472	10.40 0.409	0.40 0.016	BK0912	5.65 1270	6.65 1490	19000	30000	0.0220
	9 0.3543	13 0.5118	12 0.472	—	0.40 0.016	HK0912	5.65 1270	6.65 1490	19000	30000	0.0220
10 0.3937	10 0.3937	14 0.5512	10 0.394	8.40 0.331	0.40 0.016	BK1010	4.78 1070	5.51 1240	19000	29000	0.0219
	10 0.3937	14 0.5512	10 0.394	—	0.40 0.016	HK1010	4.78 1070	5.51 1240	19000	29000	0.0219
	10 0.3937	14 0.5512	12 0.472	10.40 0.409	0.40 0.016	BK1012	5.90 1330	7.23 1630	19000	29000	0.0239
	10 0.3937	14 0.5512	12 0.472	—	0.40 0.016	HK1012	5.90 1330	7.23 1630	19000	29000	0.0235
	10 0.3937	14 0.5512	15 0.591	13.40 0.528	0.40 0.016	BK1015	7.49 1680	9.81 2210	19000	29000	0.0253

See Engineering section for discussion of shaft and housing design.

Wt.	S (h5)		H (N6)		Inspection			C_g	Mounting Inner Ring (pg B-67 to B-76)	Shaft Dia.
	Recommended Mounting Dimension				Ring Gage	Plug Gage				
	Max.	Min.	Max.	Min.		Go	No Go			
kg lbs.	**mm** in.	**mm** in.	**mm** in.	**mm** in.						**mm** in.
0.001 0.002	**3** 0.1181	**2.996** 0.118	**6.493** 0.2556	**6.484** 0.2553	**6.484** 0.2553	**3.006** 0.1183	**3.026** 0.1191			**3** 0.1181
0.001 0.002	**3** 0.1181	**2.996** 0.118	**6.493** 0.2556	**6.484** 0.2553	**6.484** 0.2553	**3.006** 0.1183	**3.026** 0.1191			**3** 0.1181
0.002 0.004	**4** 0.1575	**3.995** 0.1573	**7.993** 0.3147	**7.984** 0.3143	**7.984** 0.3143	**4.010** 0.1579	**4.030** 0.1587			**4** 0.1575
0.002 0.004	**4** 0.1575	**3.995** 0.1573	**7.993** 0.3147	**7.984** 0.3143	**7.984** 0.3143	**4.010** 0.1579	**4.030** 0.1587			**4** 0.1575
0.002 0.004	**5** 0.1969	**4.995** 0.1967	**8.993** 0.3541	**8.984** 0.3537	**8.984** 0.3537	**5.010** 0.1972	**5.030** 0.1980			**5** 0.1969
0.002 0.004	**5** 0.1969	**4.995** 0.1967	**8.993** 0.3541	**8.984** 0.3537	**8.984** 0.3537	**5.010** 0.1972	**5.030** 0.1980			
0.002 0.004	**6** 0.2362	**5.995** 0.236	**9.993** 0.3934	**9.984** 0.3931	**9.984** 0.3931	**6.010** 0.2366	**6.030** 0.2374			**6** 0.2362
0.003 0.007	**6** 0.2362	**5.995** 0.236	**9.993** 0.3934	**9.984** 0.3931	**9.984** 0.3931	**6.010** 0.2366	**6.030** 0.2374			
0.002 0.004	**6** 0.2362	**5.995** 0.236	**9.993** 0.3934	**9.984** 0.3931	**9.984** 0.3931	**6.010** 0.2366	**6.030** 0.2374			
0.003 0.007	**7** 0.2756	**6.994** 0.2754	**10.991** 0.4327	**10.980** 0.4323	**10.980** 0.4323	**7.013** 0.2761	**7.033** 0.2769			**7** 0.2756
0.003 0.007	**7** 0.2756	**6.994** 0.2754	**10.991** 0.4327	**10.980** 0.4323	**10.980** 0.4323	**7.013** 0.2761	**7.033** 0.2769			
0.003 0.007	**8** 0.315	**7.994** 0.3147	**11.991** 0.4721	**11.980** 0.4717	**11.980** 0.4717	**8.013** 0.3155	**8.033** 0.3163			**8** 0.315
0.003 0.007	**8** 0.315	**7.994** 0.3147	**11.991** 0.4721	**11.980** 0.4717	**11.980** 0.4717	**8.013** 0.3155	**8.033** 0.3163			
0.004 0.009	**8** 0.315	**7.994** 0.3147	**11.991** 0.4721	**11.980** 0.4717	**11.980** 0.4717	**8.013** 0.3155	**8.033** 0.3163	**0.0241**	JR5x8x12	
0.004 0.009	**8** 0.315	**7.994** 0.3147	**11.991** 0.4721	**11.980** 0.4717	**11.980** 0.4717	**8.013** 0.3155	**8.033** 0.3163	**0.0244**	JR5x8x12	
0.004 0.009	**9** 0.3543	**8.994** 0.3541	**12.991** 0.5115	**12.980** 0.5110	**12.980** 0.5110	**9.013** 0.3548	**9.033** 0.3556	**0.0270**	JR6x9x12	**9** 0.3543
0.004 0.009	**9** 0.3543	**8.994** 0.3541	**12.991** 0.5115	**12.980** 0.5110	**12.980** 0.5110	**9.013** 0.3548	**9.033** 0.3556	**0.0270**	JR6x9x12	
0.005 0.011	**9** 0.3543	**8.994** 0.3541	**12.991** 0.5115	**12.980** 0.5110	**12.980** 0.5110	**9.013** 0.3548	**9.033** 0.3556	**0.0289**	JR6x9x12	
0.005 0.011	**9** 0.3543	**8.994** 0.3541	**12.991** 0.5115	**12.980** 0.5110	**12.980** 0.5110	**9.013** 0.3548	**9.033** 0.3556	**0.0289**	JR6x9x12	
0.004 0.009	**10** 0.3937	**9.994** 0.3935	**13.991** 0.5508	**13.980** 0.5504	**13.980** 0.5504	**10.013** 0.3942	**10.033** 0.3950	**0.0287**	JR7x10x10.5	**10** 0.3937
0.004 0.009	**10** 0.3937	**9.994** 0.3935	**13.991** 0.5508	**13.980** 0.5504	**13.980** 0.5504	**10.013** 0.3942	**10.033** 0.3950	**0.0287**	JR7x10x10.5	
0.006 0.013	**10** 0.3937	**9.994** 0.3935	**13.991** 0.5508	**13.980** 0.5504	**13.980** 0.5504	**10.013** 0.3942	**10.033** 0.3950	**0.0314**	JR7x10x12	
0.005 0.011	**10** 0.3937	**9.994** 0.3935	**13.991** 0.5508	**13.980** 0.5504	**13.980** 0.5504	**10.013** 0.3942	**10.033** 0.3950	**0.0308**	JR7x10x12	
0.006 0.013	**10** 0.3937	**9.994** 0.3935	**13.991** 0.5508	**13.980** 0.5504	**13.980** 0.5504	**10.013** 0.3942	**10.033** 0.3950	**0.0332**	JR7x10x16	

Continued on next page.

OPEN ENDS, CLOSED ONE END

— continued

METRIC SERIES

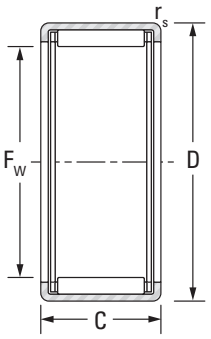

HK

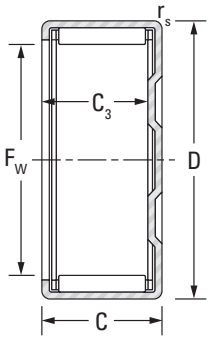

BK

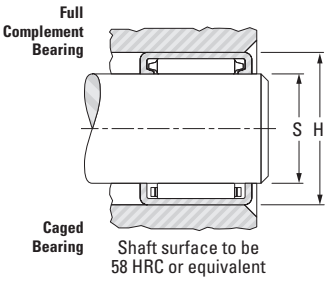

Shaft Dia.	F_w	D	C	$C_{3\,min}$	$r_{s\,min}$	Bearing Designation	Load Ratings Dynamic C	Load Ratings Static C_0	Speed Rating Grease	Speed Rating Oil	C_g
			-0.3, -0.012								
mm in.	mm in.	mm in.	mm in.	mm in.	mm in.		kN lbf.		min^{-1}		
	10 0.3937	**14** 0.5512	**15** 0.591	—	**0.40** 0.016	HK1015	**7.49** 1680	**9.81** 2210	19000	29000	**0.0253**
12 0.4724	**12** 0.4724	**16** 0.6299	**10** 0.394	**8.40** 0.331	**0.4** 0.016	BK1210	**4.96** 1120	**6.08** 1370	18000	28000	**0.0243**
	12 0.4724	**16** 0.6299	**10** 0.394	—	**0.4** 0.016	HK1210	**4.96** 1120	**6.08** 1370	18000	28000	**0.0243**
	12 0.4724	**18** 0.7087	**12** 0.472	**9.30** 0.366	**1** 0.039	BK1212	**6.61** 1490	**7.29** 1640	14000	22000	**0.0245**
	12 0.4724	**18** 0.7087	**12** 0.472	—	**1** 0.039	HK1212	**6.61** 1490	**7.29** 1640	14000	22000	**0.0245**
13 0.5118	**13** 0.5118	**19** 0.7480	**12** 0.472	**9.30** 0.366	**1** 0.039	BK1312	**6.92** 1560	**7.89** 1770	14000	22000	**0.0258**
	13 0.5118	**19** 0.7480	**12** 0.472	—	**1** 0.039	HK1312	**6.92** 1560	**7.89** 1770	14000	22000	**0.0258**
14 0.5512	**14** 0.5512	**20** 0.7874	**12** 0.472	**9.30** 0.366	**1** 0.039	BK1412	**7.21** 1620	**8.50** 1910	14000	21000	**0.0271**
	14 0.5512	**20** 0.7874	**12** 0.472	—	**1** 0.039	HK1412	**7.21** 1620	**8.50** 1910	14000	21000	**0.0271**
15 0.5906	**15** 0.5906	**21** 0.8268	**12** 0.472	**9.30** 0.366	**1** 0.039	BK1512	**7.16** 1610	**8.57** 1930	14000	21000	**0.0284**
	15 0.5906	**21** 0.8268	**12** 0.472	—	**1** 0.039	HK1512	**7.49** 1680	**9.11** 2050	14000	21000	**0.0284**
	15 0.5906	**21** 0.8268	**16** 0.630	**13.30** 0.524	**1** 0.039	BK1516	**10.70** 2410	**14.4** 3240	14000	21000	**0.0318**
	15 0.5906	**21** 0.8268	**16** 0.630	—	**1** 0.039	HK1516	**10.70** 2410	**14.4** 3240	14000	21000	**0.0318**
	15 0.5906	**21** 0.8268	**22** 0.866	**19.30** 0.760	**1** 0.039	BK1522	**13.50** 3030	**19.4** 4360	14000	21000	**0.0288**
	15 0.5906	**21** 0.8268	**22** 0.866	—	**1** 0.039	HK1522	**13.50** 3030	**19.4** 4360	14000	21000	**0.0288**
16 0.6299	**16** 0.6299	**22** 0.8661	**12** 0.472	**9.30** 0.366	**1** 0.039	BK1612	**7.76** 1740	**9.72** 2190	14000	21000	**0.0297**
	16 0.6299	**22** 0.8661	**12** 0.472	—	**1** 0.039	HK1612	**7.76** 1740	**9.72** 2190	14000	21000	**0.0297**
	16 0.6299	**22** 0.8661	**16** 0.630	**13.30** 0.524	**1** 0.039	BK1616	**11.1** 2500	**15.3** 3440	14000	21000	**0.0332**
	16 0.6299	**22** 0.8661	**16** 0.630	—	**1** 0.039	HK1616	**11.1** 2500	**15.3** 3440	14000	21000	**0.0332**
	16 0.6299	**22** 0.8661	**22** 0.866	**19.30** 0.760	**1** 0.039	BK1622	**13.4** 3010	**19.5** 4380	14000	21000	**0.0297**
	16 0.6299	**22** 0.8661	**22** 0.866	—	**1** 0.039	HK1622	**13.40** 3010	**19.5** 4380	14000	21000	**0.0297**
17 0.6693	**17** 0.6693	**23** 0.9055	**12** 0.472	**9.30** 0.366	**1** 0.039	BK1712	**8.12** 1830	**10.4** 2340	13000	20000	**0.0236**
	17 0.6693	**23** 0.9055	**12** 0.472	—	**1** 0.039	HK1712	**8.12** 1830	**10.4** 2340	13000	20000	**0.0236**
18 0.7087	**18** 0.7087	**24** 0.9449	**12** 0.472	**9.30** 0.366	**1** 0.039	BK1812	**8.41** 1890	**11.11** 2500	12000	18000	**0.0246**

See Engineering section for discussion of shaft and housing design.

Wt.	S (h5)		H (N6)		Inspection			C_g	Mounting Inner Ring (pg B-67 to B-76)	Shaft Dia.
	Recommended Mounting Dimension				Ring Gage	Plug Gage				
	Max.	Min.	Max.	Min.		Go	No Go			
kg lbs.	**mm** in.	**mm** in.	**mm** in.	**mm** in.						**mm** in.
0.006 0.013	**10** 0.3937	**9.994** 0.3935	**13.991** 0.5508	**13.980** 0.5504	**13.980** 0.5504	**10.013** 0.3942	**10.033** 0.3950	**0.0332**	JR7x10x16	
0.006 0.013	**12** 0.4724	**11.992** 0.4721	**15.991** 0.6296	**15.980** 0.6291	**15.980** 0.6291	**12.016** 0.4731	**12.036** 0.4739	**0.0319**	JR8x12x10.5	**12** 0.4724
0.006 0.013	**12** 0.4724	**11.992** 0.4721	**15.991** 0.6296	**15.980** 0.6291	**15.980** 0.6291	**12.016** 0.4731	**12.036** 0.4739	**0.0319**	JR8x12x10.5	
0.012 0.026	**12** 0.4724	**11.992** 0.4721	**17.991** 0.7083	**17.980** 0.7079	**17.980** 0.7079	**12.016** 0.4731	**12.036** 0.4739	**0.0321**	JR8x12x12.5	
0.01 0.022	**12** 0.4724	**11.992** 0.4721	**17.991** 0.7083	**17.980** 0.7079	**17.980** 0.7079	**12.016** 0.4731	**12.036** 0.4739	**0.0321**	JR8x12x12.5	**12** 0.4724
0.012 0.026	**13** 0.5118	**12.992** 0.5115	**18.989** 0.7476	**18.976** 0.7471	**18.976** 0.7471	**13.016** 0.5124	**13.036** 0.5132	**0.0338**	JR10x13x12.5	**13** 0.5118
0.01 0.022	**13** 0.5118	**12.992** 0.5115	**18.989** 0.7476	**18.976** 0.7471	**18.976** 0.7471	**13.016** 0.5124	**13.036** 0.5132	**0.0338**	JR10x13x12.5	
0.014 0.031	**14** 0.5512	**13.992** 0.5509	**19.989** 0.7870	**19.976** 0.7865	**19.976** 0.7865	**14.016** 0.5518	**14.036** 0.5526	**0.0356**	JR10x14x12	**14** 0.5512
0.011 0.024	**14** 0.5512	**13.992** 0.5509	**19.989** 0.7870	**19.976** 0.7865	**19.976** 0.7865	**14.016** 0.5518	**14.036** 0.5526	**0.0356**	JR10x14x12	
0.015 0.033	**15** 0.5906	**14.992** 0.5902	**20.989** 0.8263	**20.976** 0.8258	**20.976** 0.8258	**15.016** 0.5912	**15.036** 0.5920	**0.0373**	JR12x15x12.5	**15** 0.5906
0.012 0.026	**15** 0.5906	**14.992** 0.5902	**20.989** 0.8263	**20.976** 0.8258	**20.976** 0.8258	**15.016** 0.5912	**15.036** 0.5920	**0.0373**	JR12x15x12.5	
0.019 0.042	**15** 0.5906	**14.992** 0.5902	**20.989** 0.8263	**20.976** 0.8258	**20.976** 0.8258	**15.016** 0.5912	**15.036** 0.5920	**0.0417**	JR12x15x16.5	
0.018 0.040	**15** 0.5906	**14.992** 0.5902	**20.989** 0.8263	**20.976** 0.8258	**20.976** 0.8258	**15.016** 0.5912	**15.036** 0.5920	**0.0417**	JR12x15x16.5	
0.022 0.049	**15** 0.5906	**14.992** 0.5902	**20.989** 0.8263	**20.976** 0.8258	**20.976** 0.8258	**15.016** 0.5912	**15.036** 0.5920	**0.0378**	JR12x15x22.5	
0.024 0.053	**15** 0.5906	**14.992** 0.5902	**20.989** 0.8263	**20.976** 0.8258	**20.976** 0.8258	**15.016** 0.5912	**15.036** 0.5920	**0.0378**	JR12x15x22.5	
0.016 0.035	**16** 0.6299	**15.992** 0.6296	**21.989** 0.8657	**21.976** 0.8652	**21.976** 0.8652	**16.016** 0.6306	**16.036** 0.6313	**0.0390**	JR12x16x12	**16** 0.6299
0.012 0.026	**16** 0.6299	**15.992** 0.6296	**21.989** 0.8657	**21.976** 0.8652	**21.976** 0.8652	**16.016** 0.6306	**16.036** 0.6313	**0.0390**	JR12x16x12	
0.02 0.044	**16** 0.6299	**15.992** 0.6296	**21.989** 0.8657	**21.976** 0.8652	**21.976** 0.8652	**16.016** 0.6306	**16.036** 0.6313	**0.0436**	JR12x16x16	
0.016 0.035	**16** 0.6299	**15.992** 0.6296	**21.989** 0.8657	**21.976** 0.8652	**21.976** 0.8652	**16.016** 0.6306	**16.036** 0.6313	**0.0436**	JR12x16x16	
0.028 0.062	**16** 0.6299	**15.992** 0.6296	**21.989** 0.8657	**21.976** 0.8652	**21.976** 0.8652	**16.016** 0.6306	**16.036** 0.6313	**0.0390**	JR12x16x22	
0.022 0.049	**16** 0.6299	**15.992** 0.6296	**21.989** 0.8657	**21.976** 0.8652	**21.976** 0.8652	**16.016** 0.6306	**16.036** 0.6313	**0.0390**	JR12x16x22	
0.018 0.040	**17** 0.6693	**16.992** 0.6690	**22.989** 0.9051	**22.976** 0.9046	**22.976** 0.9046	**17.016** 0.6699	**17.036** 0.6707			**17** 0.6693
0.013 0.029	**17** 0.6693	**16.992** 0.6690	**22.989** 0.9051	**22.976** 0.9046	**22.976** 0.9046	**17.016** 0.6699	**17.036** 0.6707			
0.017 0.037	**18** 0.7087	**17.992** 0.7083	**23.989** 0.9444	**23.976** 0.9439	**23.976** 0.9439	**18.016** 0.7093	**18.036** 0.7101			**18** 0.7087

Continued on next page.

OPEN ENDS, CLOSED ONE END

— continued

METRIC SERIES

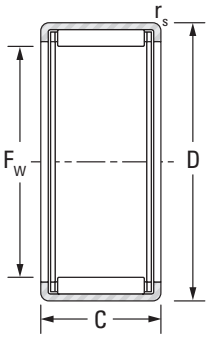

HK

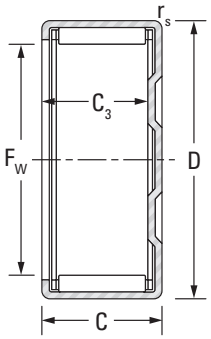

BK

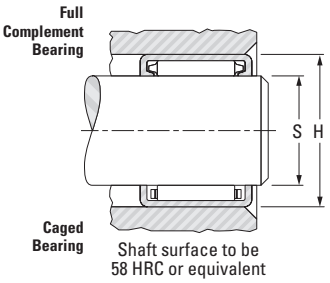

Shaft Dia.	F_w	D	C	$C_{3\,min}$	$r_{s\,min}$	Bearing Designation	Load Ratings Dynamic C	Load Ratings Static C_0	Speed Rating Grease	Speed Rating Oil	C_g
			-0.3, -0.012								
mm in.	mm in.	mm in.	mm in.	mm in.	mm in.		kN lbf.		min^{-1}		
18 0.7087	**18** 0.7087	**24** 0.9449	**12** 0.472	—	**1** 0.039	HK1812	**8.41** 1890	**11.11** 2500	12000	18000	**0.0246**
	18 0.7087	**24** 0.9449	**16** 0.630	**13.30** 0.524	**1** 0.039	BK1816	**11.6** 2610	**16.8** 3780	12000	18000	**0.0357**
	18 0.7087	**24** 0.9449	**16** 0.630	—	**1** 0.039	HK1816	**11.6** 2610	**16.8** 3780	12000	18000	**0.0357**
20 0.7874	**20** 0.7874	**26** 1.0236	**12** 0.472	**9.3** 0.366	**1** 0.039	BK2012	**8.97** 2020	**12.5** 2810	11000	16000	**0.0347**
	20 0.7874	**26** 1.0236	**12** 0.472	—	**1** 0.039	HK2012	**8.97** 2020	**12.5** 2810	11000	16000	**0.0347**
	20 0.7874	**26** 1.0236	**16** 0.630	**13.3** 0.524	**1** 0.039	BK2016	**12.40** 2790	**18.90** 4250	11000	16000	**0.0385**
20 0.7874	**20** 0.7874	**26** 1.0236	**16** 0.630	—	**1** 0.039	HK2016	**12.40** 2790	**18.90** 4250	11000	16000	**0.0385**
	20 0.7874	**26** 1.0236	**20** 0.787	**17.3** 0.681	**1** 0.039	BK2020	**15.50** 3480	**25.30** 5690	11000	16000	**0.0414**
	20 0.7874	**26** 1.0236	**20** 0.787	—	**1** 0.039	HK2020	**15.90** 3570	**26.20** 5890	11000	16000	**0.0414**
	20 0.7874	**26** 1.0236	**30** 1.181	**27.3** 1.075	**1** 0.039	BK2030	**21.20** 4770	**37.80** 8500	11000	16000	**0.0385**
	20 0.7874	**26** 1.0236	**30** 1.181	—	**1** 0.039	HK2030	**21.20** 4770	**37.80** 8500	11000	16000	**0.0385**
22 0.8661	**22** 0.8661	**28** 1.1024	**12** 0.472	**9.3** 0.366	**1** 0.039	BK2212	**9.81** 2210	**14.50** 3260	9600	15000	**0.0375**
	22 0.8661	**28** 1.1024	**12** 0.472	—	**1** 0.039	HK2212	**9.81** 2210	**14.50** 3260	9600	15000	**0.0382**
	22 0.8661	**28** 1.1024	**16** 0.630	**13.3** 0.524	**1** 0.039	BK2216	**13.10** 2940	**20.90** 4700	9600	15000	**0.0412**
	22 0.8661	**28** 1.1024	**16** 0.630	—	**1** 0.039	HK2216	**13.10** 2940	**20.90** 4700	9600	15000	**0.0412**
	22 0.8661	**28** 1.1024	**20** 0.787	**17.3** 0.681	**1** 0.039	BK2220	**15.30** 3440	**25.50** 5730	9600	15000	**0.0432**
	22 0.8661	**28** 1.1024	**20** 0.787	—	**1** 0.039	HK2220	**15.30** 3440	**25.50** 5730	9600	15000	**0.0432**
25 0.9843	**25** 0.9843	**32** 1.2598	**12** 0.472	**9.30** 0.366	**1** 0.039	BK2512	**10.90** 2450	**14.70** 3300	8500	13000	**0.0295**
	25 0.9843	**32** 1.2598	**12** 0.472	—	**1** 0.039	HK2512	**10.90** 2450	**14.70** 3300	8500	13000	**0.0295**
	25 0.9843	**32** 1.2598	**16** 0.630	**13.3** 0.524	**1** 0.039	BK2516	**15.60** 3510	**23.50** 5280	8500	13000	**0.0434**
	25 0.9843	**32** 1.2598	**16** 0.630	—	**1** 0.039	HK2516	**15.60** 3510	**23.50** 5280	8500	13000	**0.0434**
	25 0.9843	**32** 1.2598	**20** 0.787	**17.3** 0.681	**1** 0.039	BK2520	**20.60** 4630	**33.40** 7510	8500	13000	**0.0474**
	25 0.9843	**32** 1.2598	**20** 0.787	—	**1** 0.039	HK2520	**20.60** 4630	**33.40** 7510	8500	13000	**0.0474**
	25 0.9843	**32** 1.2598	**26** 1.024	**23.3** 0.917	**1** 0.039	BK2526	**25.70** 5780	**44.40** 9980	8500	13000	**0.0508**

See Engineering section for discussion of shaft and housing design.

Wt.	S (h5)		H (N6)		Inspection			C_g	Mounting Inner Ring (pg B-67 to B-76)	Shaft Dia.
	Recommended Mounting Dimension				Ring Gage	Plug Gage				
	Max.	Min.	Max.	Min.		Go	No Go			
kg lbs.	**mm** in.	**mm** in.	**mm** in.	**mm** in.						**mm** in.
0.015 0.033	**18** 0.7087	**17.992** 0.7083	**23.989** 0.9444	**23.976** 0.9439	**23.976** 0.9439	**18.016** 0.7093	**18.036** 0.7101			**18** 0.7087
0.022 0.049	**18** 0.7087	**17.992** 0.7083	**23.989** 0.9444	**23.976** 0.9439	**23.976** 0.9439	**18.016** 0.7093	**18.036** 0.7101	**0.0468**	JR15x18x16.5	
0.018 0.040	**18** 0.7087	**17.992** 0.7083	**23.989** 0.9444	**23.976** 0.9439	**23.976** 0.9439	**18.016** 0.7093	**18.036** 0.7101	**0.0468**	JR15x18x16.5	
0.017 0.037	**20** 0.7874	**19.991** 0.7870	**25.989** 1.0232	**25.976** 1.0227	**25.976** 1.0227	**20.020** 0.7882	**20.043** 0.7891	**0.0455**	JR15x20x12	**20** 0.7874
0.015 0.033	**20** 0.7874	**19.991** 0.7870	**25.989** 1.0232	**25.976** 1.0227	**25.976** 1.0227	**20.020** 0.7882	**20.043** 0.7891	**0.0455**	JR15x20x12	
0.024 0.053	**20** 0.7874	**19.991** 0.7870	**25.989** 1.0232	**25.976** 1.0227	**25.976** 1.0227	**20.020** 0.7882	**20.043** 0.7891	**0.0505**	JR17x20x16.5	
0.022 0.049	**20** 0.7874	**19.991** 0.7870	**25.989** 1.0232	**25.976** 1.0227	**25.976** 1.0227	**20.020** 0.7882	**20.043** 0.7891	**0.0505**	JR17x20x16.5	**20** 0.7874
0.027 0.060	**20** 0.7874	**19.991** 0.7870	**25.989** 1.0232	**25.976** 1.0227	**25.976** 1.0227	**20.020** 0.7882	**20.043** 0.7891	**0.0543**	JR17x20x20.5	
0.025 0.055	**20** 0.7874	**19.991** 0.7870	**25.989** 1.0232	**25.976** 1.0227	**25.976** 1.0227	**20.020** 0.7882	**20.043** 0.7891	**0.0543**	JR17x20x20.5	
0.043 0.095	**20** 0.7874	**19.991** 0.7870	**25.989** 1.0232	**25.976** 1.0227	**25.976** 1.0227	**20.020** 0.7882	**20.043** 0.7891	**0.0505**	JR17x20x30.5	
0.041 0.090	**20** 0.7874	**19.991** 0.7870	**25.989** 1.0232	**25.976** 1.0227	**25.976** 1.0227	**20.020** 0.7882	**20.043** 0.7891	**0.0505**	JR17x20x30.5	
0.02 0.044	**22** 0.8661	**21.991** 0.8658	**27.989** 1.1019	**27.976** 1.1014	**27.976** 1.1014	**22.020** 0.8669	**22.043** 0.8678	**0.0492**	JR17x22x13	**22** 0.8661
0.015 0.033	**22** 0.8661	**21.991** 0.8658	**27.989** 1.1019	**27.976** 1.1014	**27.976** 1.1014	**22.020** 0.8669	**22.043** 0.8678	**0.0501**	JR17x22x13	
0.027 0.060	**22** 0.8661	**21.991** 0.8658	**27.989** 1.1019	**27.976** 1.1014	**27.976** 1.1014	**22.020** 0.8669	**22.043** 0.8678	**0.0541**	JR17x22x16	
0.022 0.049	**22** 0.8661	**21.991** 0.8658	**27.989** 1.1019	**27.976** 1.1014	**27.976** 1.1014	**22.020** 0.8669	**22.043** 0.8678	**0.0541**	JR17x22x16	
0.028 0.062	**22** 0.8661	**21.991** 0.8658	**27.989** 1.1019	**27.976** 1.1014	**27.976** 1.1014	**22.020** 0.8669	**22.043** 0.8678	**0.0567**	JR17x22x23	
0.026 0.057	**22** 0.8661	**21.991** 0.8658	**27.989** 1.1019	**27.976** 1.1014	**27.976** 1.1014	**22.020** 0.8669	**22.043** 0.8678	**0.0567**	JR17x22x23	
0.025 0.055	**25** 0.9843	**24.991** 0.9839	**31.988** 1.2594	**31.972** 1.2587	**31.972** 1.2587	**25.020** 0.9850	**25.043** 0.9859			**25** 0.9843
0.021 0.046	**25** 0.9843	**24.991** 0.9839	**31.988** 1.2594	**31.972** 1.2587	**31.972** 1.2587	**25.020** 0.985	**25.043** 0.9859			
0.031 0.068	**25** 0.9843	**24.991** 0.9839	**31.988** 1.2594	**31.972** 1.2587	**31.972** 1.2587	**25.020** 0.9850	**25.043** 0.9859	**0.0569**	JR20x25x17	
0.028 0.062	**25** 0.9843	**24.991** 0.9839	**31.988** 1.2594	**31.972** 1.2587	**31.972** 1.2587	**25.020** 0.9850	**25.043** 0.9859	**0.0569**	JR20x25x17	
0.043 0.095	**25** 0.9843	**24.991** 0.9839	**31.988** 1.2594	**31.972** 1.2587	**31.972** 1.2587	**25.020** 0.9850	**25.043** 0.9859	**0.0622**	JR20x25x20.5	
0.040 0.088	**25** 0.9843	**24.991** 0.9839	**31.988** 1.2594	**31.972** 1.2587	**31.972** 1.2587	**25.020** 0.9850	**25.043** 0.9859	**0.0622**	JR20x25x20.5	
0.051 0.112	**25** 0.9843	**24.991** 0.9839	**31.988** 1.2594	**31.972** 1.2587	**31.972** 1.2587	**25.020** 0.9850	**25.043** 0.9859	**0.0666**	JR20x25x26.5	

Continued on next page.

OPEN ENDS, CLOSED ONE END

— continued

METRIC SERIES

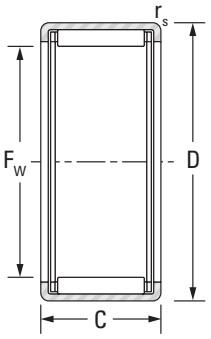

HK

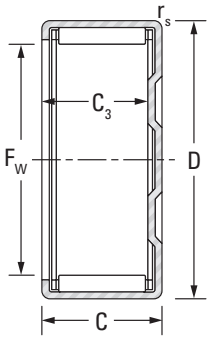

BK

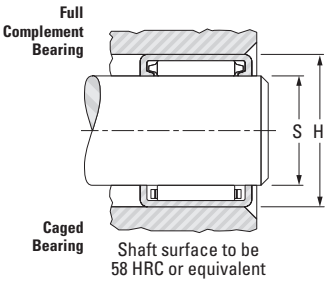

Shaft Dia.	F_W	D	C	$C_{3\,min}$	$r_{s\,min}$	Bearing Designation	Load Ratings Dynamic C	Load Ratings Static C_0	Speed Rating Grease	Speed Rating Oil	C_g
			-0.3, -0.012								
mm in.	mm in.	mm in.	mm in.	mm in.	mm in.		kN lbf.		min^{-1}		
	25 0.9843	32 1.2598	26 1.024	—	1 0.039	HK2526	25.70 5780	44.40 9980	8500	13000	0.0508
	25 0.9843	32 1.2598	38 1.496	35.3 1.390	1 0.039	BK2538	35.30 7940	66.90 15000	8500	13000	0.0474
	25 0.9843	32 1.2598	38 1.496	—	1 0.039	HK2538	35.30 7940	66.90 15000	8500	13000	0.0474
28 1.1024	28 1.1024	35 1.3780	16 0.630	13.30 0.524	1 0.039	BK2816	15.9 3570	24.9 5600	7500	12000	0.0462
	28 1.1024	35 1.3780	16 0.630	—	1 0.039	HK2816	15.9 3570	24.9 5600	7500	12000	0.0462
	28 1.1024	35 1.3780	20 0.787	17.3 0.681	1 0.039	BK2820	20.9 4700	35.3 7940	7500	12000	0.0504
	28 1.1024	35 1.3780	20 0.787	—	1 0.039	HK2820	20.9 4700	35.3 7940	7500	12000	0.0504
30 1.1811	30 1.1811	37 1.4567	12 0.472	9.3 0.366	1 0.039	BK3012	11.6 2610	16.8 3780	7000	11000	0.0330
	30 1.1811	37 1.4567	12 0.472	—	1 0.039	HK3012	12.0 2700	17.7 3980	7000	11000	0.0330
	30 1.1811	37 1.4567	16 0.630	13.30 0.524	1 0.039	BK3016	16.8 3780	27.3 6140	7000	11000	0.0488
	30 1.1811	37 1.4567	16 0.630	—	1 0.039	HK3016	16.8 3780	27.3 6140	7000	11000	0.0488
	30 1.1811	37 1.4567	20 0.787	17.3 0.681	1 0.039	BK3020	22.4 5040	39.6 8900	7000	11000	0.0537
	30 1.1811	37 1.4567	20 0.787	—	1 0.039	HK3020	22.4 5040	39.6 8900	7000	11000	0.0537
	30 1.1811	37 1.4567	26 1.024	23.3 0.917	1 0.039	BK3026	27.4 6160	51.2 11500	7000	11000	0.0570
	30 1.1811	37 1.4567	26 1.024	—	1 0.039	HK3026	27.4 6160	51.2 11500	7000	11000	0.0571
	30 1.1811	37 1.4567	38 1.496	35.3 1.390	1 0.039	BK3038	38.4 8630	79.2 17800	7000	11000	0.0535
	30 1.1811	37 1.4567	38 1.496	—	1 0.039	HK3038	38.4 8630	79.2 17800	7000	11000	0.0535
35 1.3780	35 1.3780	42 1.6535	12 0.472	—	1 0.039	HK3512	13.0 2920	20.6 4630	5900	9100	0.0365
	35 1.3780	42 1.6535	16 0.630	—	1 0.039	HK3516	17.4 3910	29.9 6720	5900	9100	0.0534
	35 1.3780	42 1.6535	20 0.787	17.3 0.681	1 0.039	BK3520	24.5 5510	46.8 10520	5900	9100	0.0597
	35 1.3780	42 1.6535	20 0.787	—	1 0.039	HK3520	24.5 5510	46.8 10500	5900	9100	0.0597
40 1.5748	40 1.5748	47 1.8504	12 0.472	—	1 0.039	HK4012	14.7 3300	25.3 5690	5200	7900	0.0402
	40 1.5748	47 1.8504	16 0.630	—	1 0.039	HK4016	18.9 4250	34.8 7820	5200	7900	0.0589
	40 1.5748	47 1.8504	20 0.787	17.3 0.681	1 0.039	BK4020	25.1 5640	50.4 11300	5200	7900	0.0646

See Engineering section for discussion of shaft and housing design.

Wt.	S (h5)		H (N6)		Inspection			C_g	Mounting Inner Ring (pg B-67 to B-76)	Shaft Dia.
	Recommended Mounting Dimension				Ring Gage	Plug Gage				
	Max.	Min.	Max.	Min.		Go	No Go			
kg lbs.	**mm** in.	**mm** in.	**mm** in.	**mm** in.						**mm** in.
0.046 0.101	**25** 0.9843	**24.991** 0.9839	**31.988** 1.2594	**31.972** 1.2587	**31.972** 1.2587	**25.020** 0.985	**25.043** 0.9859	**0.0666**	JR20x25x26.5	
0.077 0.170	**25** 0.9843	**24.991** 0.9839	**31.988** 1.2594	**31.972** 1.2587	**31.972** 1.2587	**25.020** 0.985	**25.043** 0.9859	**0.0622**	JR20x25x38.5	
0.068 0.150	**25** 0.9843	**24.991** 0.9839	**31.988** 1.2594	**31.972** 1.2587	**31.972** 1.2587	**25.020** 0.985	**25.043** 0.9859	**0.0622**	JR20x25x38.5	
0.038 0.084	**28** 1.1024	**27.991** 1.1020	**34.988** 1.3775	**34.972** 1.3769	**34.972** 1.3769	**28.020** 1.1031	**28.043** 1.1041	**0.0606**	JR22x28x17	**28** 1.1024
0.032 0.071	**28** 1.1024	**27.991** 1.1020	**34.988** 1.3775	**34.972** 1.3769	**34.972** 1.3769	**28.020** 1.1031	**28.043** 1.1041	**0.0606**	JR22x28x17	
0.047 0.104	**28** 1.1024	**27.991** 1.1020	**34.988** 1.3775	**34.972** 1.3769	**34.972** 1.3769	**28.020** 1.1031	**28.043** 1.1041	**0.0661**	JR22x28x20.5	
0.040 0.088	**28** 1.1024	**27.991** 1.1020	**34.988** 1.3775	**34.972** 1.3769	**34.972** 1.3769	**28.020** 1.1031	**28.043** 1.1041	**0.0661**	JR22x28x20.5	
0.031 0.068	**30** 1.1811	**29.991** 1.1807	**36.988** 1.4562	**36.972** 1.4556	**36.972** 1.4556	**30.020** 1.1819	**30.043** 1.1828			**30** 1.1811
0.024 0.053	**30** 1.1811	**29.991** 1.1807	**36.988** 1.4562	**36.972** 1.4556	**36.972** 1.4556	**30.020** 1.1819	**30.043** 1.1828			
0.041 0.090	**30** 1.1811	**29.991** 1.1807	**36.988** 1.4562	**36.972** 1.4556	**36.972** 1.4556	**30.020** 1.1819	**30.043** 1.1828	**0.0640**	JR25x30x17	
0.032 0.071	**30** 1.1811	**29.991** 1.1807	**36.988** 1.4562	**36.972** 1.4556	**36.972** 1.4556	**30.020** 1.1819	**30.043** 1.1828	**0.0640**	JR25x30x17	
0.053 0.117	**30** 1.1811	**29.991** 1.1807	**36.988** 1.4562	**36.972** 1.4556	**36.972** 1.4556	**30.020** 1.1819	**30.043** 1.1828	**0.0705**	JR25x30x20.5	
0.042 0.093	**30** 1.1811	**29.991** 1.1807	**36.988** 1.4562	**36.972** 1.4556	**36.972** 1.4556	**30.020** 1.1819	**30.043** 1.1828	**0.0705**	JR25x30x20.5	
0.067 0.148	**30** 1.1811	**29.991** 1.1807	**36.988** 1.4562	**36.972** 1.4556	**36.972** 1.4556	**30.020** 1.1819	**30.043** 1.1828	**0.0748**	JR25x30x26.5	
0.054 0.119	**30** 1.1811	**29.991** 1.1807	**36.988** 1.4562	**36.972** 1.4556	**36.972** 1.4556	**30.020** 1.1819	**30.043** 1.1828	**0.0749**	JR25x30x26.5	
0.093 0.205	**30** 1.1811	**29.991** 1.1807	**36.988** 1.4562	**36.972** 1.4556	**36.972** 1.4556	**30.020** 1.1819	**30.043** 1.1828	**0.0702**	JR25x30x38.5	
0.075 0.165	**30** 1.1811	**29.991** 1.1807	**36.988** 1.4562	**36.972** 1.4556	**36.972** 1.4556	**30.020** 1.1819	**30.043** 1.1828	**0.0702**	JR25x30x38.5	
0.028 0.062	**35** 1.3780	**34.989** 1.3775	**41.988** 1.6531	**41.972** 1.6524	**41.972** 1.6524	**35.025** 1.3789	**35.052** 1.3800			**35** 1.3780
0.037 0.082	**35** 1.3780	**34.989** 1.3775	**41.988** 1.6531	**41.972** 1.6524	**41.972** 1.6524	**35.025** 1.3789	**35.052** 1.3800	**0.0701**	JR30x35x17	
0.065 0.143	**35** 1.3780	**34.989** 1.3775	**41.988** 1.6531	**41.972** 1.6524	**41.972** 1.6524	**35.025** 1.3789	**35.052** 1.3800	**0.0783**	JR30x35x20.5	
0.049 0.108	**35** 1.3780	**34.989** 1.3775	**41.988** 1.6531	**41.972** 1.6524	**41.972** 1.6524	**35.025** 1.3789	**35.052** 1.3800	**0.0783**	JR30x35x20.5	
0.033 0.073	**40** 1.5748	**39.989** 1.5744	**46.988** 1.8499	**46.972** 1.8493	**46.972** 1.8493	**40.025** 1.5758	**40.052** 1.5769			**40** 1.5748
0.042 0.093	**40** 1.5748	**39.989** 1.5744	**46.988** 1.8499	**46.972** 1.8493	**46.972** 1.8493	**40.025** 1.5758	**40.052** 1.5769	**0.0773**	JR35x40x17	
0.070 0.154	**40** 1.5748	**39.989** 1.5744	**46.988** 1.8499	**46.972** 1.8493	**46.972** 1.8493	**40.025** 1.5758	**40.052** 1.5769	**0.0848**	JR35x40x20.5	

Continued on next page.

OPEN ENDS, CLOSED ONE END

— continued

METRIC SERIES

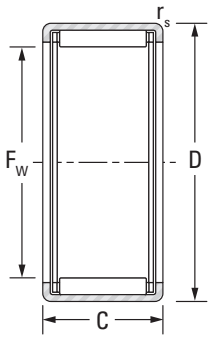

HK

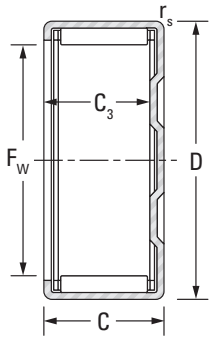

BK

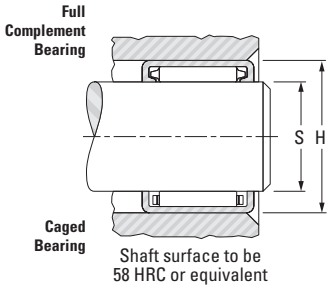

Shaft Dia.	F_W	D	C	$C_{3\,min}$	$r_{s\,min}$	Bearing Designation	Load Ratings Dynamic C	Load Ratings Static C_0	Speed Rating Grease	Speed Rating Oil	C_g
			-0.3, -0.012								
mm in.	**mm** in.	**mm** in.	**mm** in.	**mm** in.	**mm** in.		**kN** lbf.		min^{-1}		
	40 1.5748	**47** 1.8504	**20** 0.787	—	**1** 0.039	HK4020	**25.1** 5640	**50.4** 11300	5200	7900	**0.0646**
45 1.7717	**45** 1.7717	**52** 2.0472	**12** 0.472	—	**1** 0.039	HK4512	**14.1** 3170	**24.8** 5580	4600	7000	**0.0435**
	45 1.7717	**52** 2.0472	**16** 0.630	—	**1** 0.039	HK4516	**19.8** 4450	**38.5** 8660	4600	7000	**0.0637**
	45 1.7717	**52** 2.0472	**20** 0.787	**17.3** 0.681	**1** 0.039	BK4520	**26.3** 5910	**55.4** 12500	4600	7000	**0.0697**
	45 1.7717	**52** 2.0472	**20** 0.787	—	**1** 0.039	HK4520	**27.2** 6110	**58.2** 13100	4600	7000	**0.0697**
50 1.9685	**50** 1.9685	**58** 2.2835	**20** 0.787	—	**1** 0.039	HK5020	**30.9** 6950	**62.2** 14000	4100	6300	**0.0714**
	50 1.9685	**58** 2.2835	**25** 0.984	—	**1** 0.039	HK5025	**35.5** 7980	**74.1** 16700	4100	6300	**0.0764**
60 2.3622	**60** 2.3622	**68** 2.6772	**12** 0.472	—	**1** 0.039	HK6012	**17.2** 3870	**31.2** 7010	3400	5200	**0.0523**

See Engineering section for discussion of shaft and housing design.

Wt.	S (h5)		H (N6)		Inspection			C_g	Mounting Inner Ring (pg B-67 to B-76)	Shaft Dia.
	Recommended Mounting Dimension				Ring Gage	Plug Gage				
	Max.	Min.	Max.	Min.		Go	No Go			
kg lbs.	**mm** in.	**mm** in.	**mm** in.	**mm** in.						**mm** in.
0.060 0.132	**40** 1.5748	**39.989** 1.5744	**46.988** 1.8499	**46.972** 1.8493	**46.972** 1.8493	**40.025** 1.5758	**40.052** 1.5769	**0.0848**	JR35x40x20.5	
0.036 0.079	**45** 1.7717	**44.989** 1.7712	**51.986** 2.0467	**51.967** 2.0459	**51.967** 2.0459	**45.025** 1.7726	**45.052** 1.7737			**45** 1.7717
0.048 0.106	**45** 1.7717	**44.989** 1.7712	**51.986** 2.0467	**51.967** 2.0459	**51.967** 2.0459	**45.025** 1.7726	**45.052** 1.7737	**0.0836**	JR40x45x17	
0.079 0.174	**45** 1.7717	**44.989** 1.7712	**51.986** 2.0467	**51.967** 2.0459	**51.967** 2.0459	**45.025** 1.7726	**45.052** 1.7737	**0.0914**	JR40x45x20.5	
0.059 0.130	**45** 1.7717	**44.989** 1.7712	**51.986** 2.0467	**51.967** 2.0459	**51.967** 2.0459	**45.025** 1.7726	**45.052** 1.7737	**0.0914**	JR40x45x20.5	
0.072 0.159	**50** 1.9685	**49.989** 1.9681	**57.986** 2.2829	**57.967** 2.2822	**57.967** 2.2822	**50.025** 1.9695	**50.052** 1.9706	**0.0937**	JR45x50x20	**50** 1.9685
0.092 0.203	**50** 1.9685	**49.989** 1.9681	**57.986** 2.2829	**57.967** 2.2822	**57.967** 2.2822	**50.025** 1.9695	**50.052** 1.9706	**0.1002**	JR45x50x25.5	
0.060 0.132	**60** 2.3622	**59.987** 2.3617	**67.986** 2.6766	**67.967** 2.6759	**67.967** 2.6759	**60.030** 2.3634	**60.062** 2.3646			**60** 2.3622

B

SEALED BEARINGS

METRIC SERIES

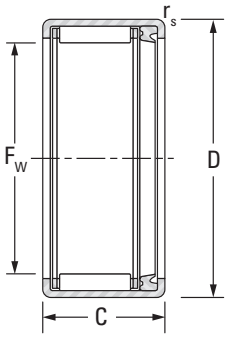

HK RS

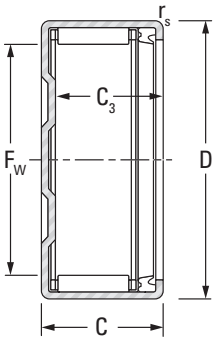

BK RS

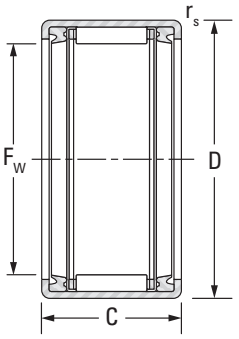

HK.2RS

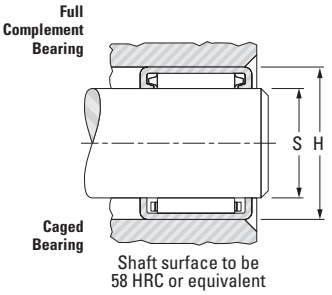

See Engineering section for discussion of shaft and housing design.

Shaft Dia.	F_w	D	C	$C_{3\,min}$	$r_{s\,min}$	Bearing Designation	Load Ratings Dynamic C	Load Ratings Static C_0	Speed Rating Approx. Grease	C_g
			-0.3, -0.012							
mm in.	mm in.	mm in.	mm in.	mm in.	mm in.		kN lbf.		min^{-1}	
8 0.3150	**8** 0.3150	**12** 0.4724	**10** 0.394	—	**0.4** 0.016	HK0810RS	**2.90** 650	**2.73** 610	20000	0.0128
10 0.3937	**10** 0.3937	**14** 0.5512	**12** 0.472	—	**0.4** 0.016	HK1012RS	**4.78** 1070	**5.51** 1240	19000	0.0167
12 0.4724	**12** 0.4724	**18** 0.7087	**14** 0.551	—	**1** 0.039	HK1214RS	**6.61** 1490	**7.29** 1640	14000	0.0189
	12 0.4724	**18** 0.7087	**16** 0.630	—	**1** 0.039	HK1216.2RS	**6.87** 1540	**7.65** 1720	14000	0.0189
14 0.5512	**14** 0.5512	**20** 0.7874	**14** 0.551	**11.6** 0.457	**1** 0.039	BK1414RS	**7.17** 1610	**8.41** 1890	14000	0.0206
	14 0.5512	**20** 0.7874	**14** 0.551	—	**1** 0.039	HK1414RS	**7.17** 1610	**8.41** 1890	14000	0.0271
	14 0.5512	**20** 0.7874	**16** 0.630	—	**1** 0.039	HK1416.2RS	**7.17** 1610	**8.41** 1890	14000	0.0271
15 0.5906	**15** 0.5906	**21** 0.8268	**14** 0.551	**11.3** 0.445	**1** 0.039	BK1514RS	**7.87** 1770	**9.69** 2180	13000	0.0288
	15 0.5906	**21** 0.8268	**14** 0.551	—	**1** 0.039	HK1514RS	**7.87** 1770	**9.69** 2180	13000	0.0288
	15 0.5906	**21** 0.8268	**16** 0.630	—	**1** 0.039	HK1516.2RS	**7.87** 1770	**9.69** 2180	13000	0.0288
16 0.6299	**16** 0.6299	**22** 0.8661	**14** 0.551	—	**1** 0.039	HK1614RS	**7.82** 1760	**9.76** 2190	12000	0.0297
	16 0.6299	**22** 0.8661	**16** 0.630	—	**1** 0.039	HK1616.2RS	**7.82** 1760	**9.76** 2190	12000	0.0297
18 0.7087	**18** 0.7087	**24** 0.9449	**14** 0.551	—	**1** 0.039	HK1814RS	**8.41** 1890	**11.10** 2500	11000	0.0246
	18 0.7087	**24** 0.9449	**16** 0.630	—	**1** 0.039	HK1816.2RS	**8.41** 1890	**11.10** 2500	11000	0.0322
20 0.7874	**20** 0.7874	**26** 1.0236	**16** 0.630	—	**1** 0.039	HK2016.2RS	**8.97** 2020	**12.50** 2810	9700	0.0347
	20 0.7874	**26** 1.0236	**18** 0.709	—	**1** 0.039	HK2018RS	**12.40** 2790	**18.90** 4250	9700	0.0385
	20 0.7874	**26** 1.0236	**20** 0.787	—	**1** 0.039	HK2020.2RS	**12.40** 2790	**18.90** 4250	9700	0.0385
22 0.7874	**22** 0.7874	**28** 1.1024	**16** 0.630	—	**1** 0.039	HK2216.2RS	**9.81** 2210	**14.50** 3260	8800	0.0286
	22 0.8661	**28** 1.1024	**18** 0.709	—	**1** 0.039	HK2218RS	**13.10** 2950	**20.90** 4700	8800	0.0412
	22 0.8661	**28** 1.1024	**20** 0.787	—	**1** 0.039	HK2220.2RS	**13.10** 2950	**20.90** 4700	8800	0.0412
25 0.9843	**25** 0.9843	**32** 1.2598	**14** 0.551	—	**1** 0.039	HK2514RS	**10.90** 2450	**14.70** 3310	7800	N/A
	25 0.9843	**32** 1.2598	**16** 0.630	—	**1** 0.039	HK2516.2RS	**11.10** 2500	**15.10** 3390	7800	0.0389
	25 0.9843	**32** 1.2598	**18** 0.709	—	**1** 0.039	HK2518RS	**16.20** 3640	**24.60** 5530	7800	0.0439
	25 0.9843	**32** 1.2598	**20** 0.787	—	**1** 0.039	HK2520.2RS	**16.20** 3640	**24.60** 5530	7800	0.0439

Wt.	S (h5)		H (N6)		Inspection			C_g	Mounting Inner Ring (pg B-67 to B-76)	Shaft Dia.
	Recommended Mounting Dimension				Ring Gage	Plug Gage				
	Max.	Min.	Max.	Min.		Go	No Go			
kg lbs.	**mm** in.	**mm** in.	**mm** in.	**mm** in.						**mm** in.
0.004 0.009	**8** 0.3150	**7.994** 0.3147	**11.991** 0.4721	**11.980** 0.4717	**11.980** 0.4717	**8.013** 0.3155	**8.033** 0.3163			**8** 0.315
0.006 0.013	**10** 0.3937	**9.994** 0.3935	**13.991** 0.5508	**13.980** 0.5504	**13.980** 0.5504	**10.013** 0.3942	**10.033** 0.3950			**10** 0.3937
0.013 0.029	**12** 0.4724	**11.992** 0.4721	**17.991** 0.7083	**17.980** 0.7079	**17.980** 0.7079	**12.016** 0.4731	**12.036** 0.4739			**12** 0.4724
0.016 0.035	**12** 0.4724	**11.992** 0.4721	**17.991** 0.7083	**17.980** 0.7079	**17.980** 0.7079	**12.016** 0.4731	**12.036** 0.4739			
0.014 0.031	**14** 0.5512	**13.992** 0.5509	**19.989** 0.7870	**19.976** 0.7865	**19.976** 0.7865	**14.016** 0.5518	**14.036** 0.5526			**14** 0.5512
0.015 0.033	**14** 0.5512	**13.992** 0.5509	**19.989** 0.7870	**19.976** 0.7865	**19.976** 0.7865	**14.016** 0.5518	**14.036** 0.5526	**0.0356**	JR10x14x16	
0.014 0.031	**14** 0.5512	**13.992** 0.5509	**19.989** 0.7870	**19.976** 0.7865	**19.976** 0.7865	**14.016** 0.5518	**14.036** 0.5526	**0.0356**	JR10x14x20	
0.017 0.037	**15** 0.5906	**14.992** 0.5902	**20.989** 0.8263	**20.976** 0.8258	**20.976** 0.8258	**15.016** 0.5912	**15.036** 0.5920	**0.0378**	JR12x15x16.5	**15** 0.5906
0.016 0.035	**15** 0.5906	**14.992** 0.5902	**20.989** 0.8263	**20.976** 0.8258	**20.976** 0.8258	**15.016** 0.5912	**15.036** 0.5920	**0.0378**	JR12x15x16.5	
0.019 0.042	**15** 0.5906	**14.992** 0.5902	**20.989** 0.8263	**20.976** 0.8258	**20.976** 0.8258	**15.016** 0.5912	**15.036** 0.5920	**0.0378**	JR12x15x16.5	
0.014 0.031	**16** 0.6299	**15.992** 0.6296	**21.989** 0.8657	**21.976** 0.8652	**21.976** 0.8652	**16.016** 0.6306	**16.036** 0.6313	**0.0390**	JR12x16x16	**16** 0.6299
0.015 0.033	**16** 0.6299	**15.992** 0.6296	**21.989** 0.8657	**21.976** 0.8652	**21.976** 0.8652	**16.016** 0.6306	**16.036** 0.6313	**0.0390**	JR12x16x20	
0.018 0.040	**18** 0.7087	**17.992** 0.7083	**23.989** 0.9444	**23.976** 0.9439	**23.976** 0.9439	**18.016** 0.7093	**18.036** 0.7101	**0.0321**	JR15x18x16.5	**18** 0.7087
0.017 0.037	**18** 0.7087	**17.992** 0.7083	**23.989** 0.9444	**23.976** 0.9439	**23.976** 0.9439	**18.016** 0.7093	**18.036** 0.7101	**0.0422**	JR15x18x16.5	
0.023 0.051	**20** 0.7874	**19.991** 0.7870	**25.989** 1.0232	**25.976** 1.0227	**25.976** 1.0227	**20.020** 0.7882	**20.043** 0.7891	**0.0455**	JR17x20x16.5	**20** 0.7874
0.025 0.055	**20** 0.7874	**19.991** 0.7870	**25.989** 1.0232	**25.976** 1.0227	**25.976** 1.0227	**20.020** 0.7882	**20.043** 0.7891	**0.0505**	JR17x20x20.5	
0.028 0.062	**20** 0.7874	**19.991** 0.7870	**25.989** 1.0232	**25.976** 1.0227	**25.976** 1.0227	**20.020** 0.7882	**20.043** 0.7891	**0.0505**	JR17x20x20.5	
0.025 0.055	**22** 0.8661	**21.991** 0.8658	**27.989** 1.1019	**27.976** 1.1014	**27.976** 1.1014	**22.020** 0.8669	**22.043** 0.8678			**22** 0.7874
0.027 0.060	**22** 0.8661	**21.991** 0.8658	**27.989** 1.1019	**27.976** 1.1014	**27.976** 1.1014	**22.020** 0.8669	**22.043** 0.8678	**0.0541**	JR17x22x23	
0.026 0.057	**22** 0.8661	**21.991** 0.8658	**27.989** 1.1019	**27.976** 1.1014	**27.976** 1.1014	**22.020** 0.8669	**22.043** 0.8678	**0.0541**	JR17x22x23	
0.027 0.060	**25** 0.9843	**24.991** 0.9839	**31.988** 1.2594	**31.972** 1.2587	**31.972** 1.2587	**25.020** 0.9850	**25.043** 0.9859	**0.0394**	JR20x25x17	**25** 0.9843
0.030 0.066	**25** 0.9843	**24.991** 0.9839	**31.988** 1.2594	**31.972** 1.2587	**31.972** 1.2587	**25.020** 0.9850	**25.043** 0.9859	**0.0510**	JR20x25x17	
0.034 0.075	**25** 0.9843	**24.991** 0.9839	**31.988** 1.2594	**31.972** 1.2587	**31.972** 1.2587	**25.020** 0.9850	**25.043** 0.9859	**0.0576**	JR20x25x20.5	
0.033 0.073	**25** 0.9843	**24.991** 0.9839	**31.988** 1.2594	**31.972** 1.2587	**31.972** 1.2587	**25.020** 0.9850	**25.043** 0.9859	**0.0576**	JR20x25x20.5	

Continued on next page.

SEALED BEARINGS
— continued

METRIC SERIES

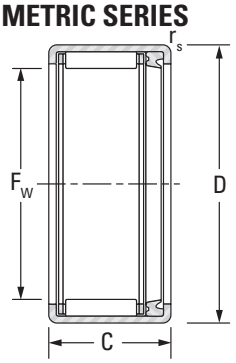

HK RS

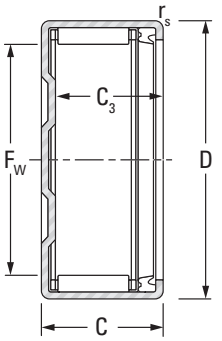

BK RS

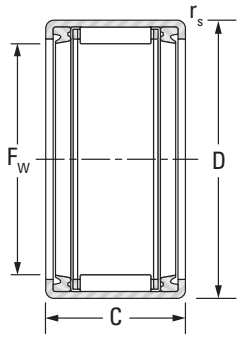

HK.2RS

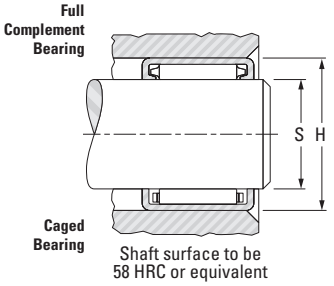

See Engineering section for discussion of shaft and housing design.

Shaft Dia.	F_w	D	C	$C_{3\,min}$	$r_{s\,min}$	Bearing Designation	Load Ratings Dynamic C	Load Ratings Static C_0	Speed Rating Approx. Grease	C_g
			-0.3, -0.012							
mm in.	mm in.	mm in.	mm in.	mm in.	mm in.		kN lbf.		min^{-1}	
25 0.9843	25 0.9843	32 1.2598	22 0.866	—	1 0.039	HK2522RS	20.60 4630	33.40 7510	7800	0.0474
	25 0.9843	32 1.2598	24 0.945	—	1 0.039	HK2524.2RS	20.6 4630	33.4 7510	7800	0.0474
28 1.1024	28 1.1024	35 1.3780	20 0.787	—	1 0.039	HK2820.2RS	15.9 3570	24.9 5600	6900	0.0462
30 1.1811	30 1.1811	37 1.4567	16 0.63	—	1 0.039	HK3016.2RS	11.6 2610	16.8 3780	6500	0.0432
	30 1.1811	37 1.4567	18 0.709	—	1 0.039	HK3018RS	16.8 3780	27.3 6140	6500	0.0488
	30 1.1811	37 1.4567	20 0.787	—	1 0.039	HK3020.2RS	16.8 3780	27.3 6140	6500	0.0488
	30 1.1811	37 1.4567	22 0.866	—	1 0.039	HK3022RS	22.4 5040	39.6 8900	6500	0.0535
	30 1.1811	37 1.4567	24 0.945	—	1 0.039	HK3024.2RS	22.4 5040	39.6 8900	6500	0.0535
35 1.3780	35 1.3780	42 1.6535	16 0.630	—	1 0.039	HK3516.2RS	14.2 3190	23.2 5220	5500	0.0492
	35 1.3780	42 1.6535	18 0.709	—	1 0.039	HK3518RS	17.4 3910	29.9 6720	5500	0.0534
	35 1.3780	42 1.6535	20 0.787	—	1 0.039	HK3520.2RS	17.4 3910	29.9 6720	5500	0.0534
40 1.5748	40 1.5748	47 1.8504	16 0.630	—	1 0.039	HK4016.2RS	13.4 3010	22.4 5040	4900	0.0528
	40 1.5748	47 1.8504	18 0.709	—	1 0.039	HK4018RS	18.9 4250	34.8 7820	4900	0.0589
	40 1.5748	47 1.8504	20 0.787	—	1 0.039	HK4020.2RS	18.9 4250	34.8 7820	4900	0.0589
45 1.7717	45 1.7717	52 2.0472	18 0.709	—	1 0.039	HK4518RS	19.8 4450	38.5 8660	4300	0.0637
	45 1.7717	52 2.0472	20 0.787	—	1 0.039	HK4520.2RS	19.8 4450	38.5 8660	4300	0.0637
50 1.9685	50 1.9685	58 2.2835	22 0.866	—	1 0.039	HK5022RS	28.8 6470	56.6 12700	3900	0.0714
	50 1.9685	58 2.2835	24 0.945	—	1 0.039	HK5024.2RS	28.8 6470	56.6 12700	3900	0.0714

Wt.	S (h5)		H (N6)		Inspection			C_g	Mounting Inner Ring (pg B-67 to B-76)	Shaft Dia.
	Recommended Mounting Dimension				Ring Gage	Plug Gage				
	Max.	Min.	Max.	Min.		Go	No Go			
kg lbs.	**mm** in.	**mm** in.	**mm** in.	**mm** in.						**mm** in.
0.042 0.093	**25** 0.9843	**24.991** 0.9839	**31.988** 1.2594	**31.972** 1.2587	**31.972** 1.2587	**25.020** 0.9850	**25.043** 0.9859	**0.0622**	JR20x25x26	
0.047 0.104	**25** 0.9843	**24.991** 0.9839	**31.988** 1.2594	**31.972** 1.2587	**31.972** 1.2587	**25.020** 0.9850	**25.043** 0.9859	**0.0622**	JR20x25x26	**25** 0.9843
0.042 0.093	**28** 1.1024	**27.991** 1.1020	**34.988** 1.3775	**34.972** 1.3769	**34.972** 1.3769	**28.020** 1.1031	**28.043** 1.1041	**0.0606**	JR22x28x20.5	**28** 1.1024
0.030 0.066	**30** 1.1811	**29.991** 1.1807	**36.988** 1.4562	**36.972** 1.4556	**36.972** 1.4556	**30.020** 1.1819	**30.043** 1.1828	**0.0567**	JR25x30x17	**30** 1.1811
0.042 0.093	**30** 1.1811	**29.991** 1.1807	**36.988** 1.4562	**36.972** 1.4556	**36.972** 1.4556	**30.020** 1.1819	**30.043** 1.1828	**0.0640**	JR25x30x20.5	
0.040 0.088	**30** 1.1811	**29.991** 1.1807	**36.988** 1.4562	**36.972** 1.4556	**36.972** 1.4556	**30.020** 1.1819	**30.043** 1.1828	**0.0640**	JR25x30x20.5	
0.051 0.112	**30** 1.1811	**29.991** 1.1807	**36.988** 1.4562	**36.972** 1.4556	**36.972** 1.4556	**30.020** 1.1819	**30.043** 1.1828	**0.0702**	JR25x30x26	
0.057 0.126	**30** 1.1811	**29.991** 1.1807	**36.988** 1.4562	**36.972** 1.4556	**36.972** 1.4556	**30.020** 1.1819	**30.043** 1.1828	**0.0702**	JR25x30x26	
0.047 0.104	**35** 1.3780	**34.989** 1.3775	**41.988** 1.6531	**41.972** 1.6524	**41.972** 1.6524	**35.025** 1.3789	**35.052** 1.3800	**0.0646**	JR30x35x17	**35** 1.3780
0.054 1.119	**35** 1.3780	**34.989** 1.3775	**41.988** 1.6531	**41.972** 1.6524	**41.972** 1.6524	**35.025** 1.3789	**35.052** 1.3800	**0.0701**	JR30x35x20.5	
0.044 0.097	**35** 1.3780	**34.989** 1.3775	**41.988** 1.6531	**41.972** 1.6524	**41.972** 1.6524	**35.025** 1.3789	**35.052** 1.3800	**0.0701**	JR30x35x20.5	
0.037 0.082	**40** 1.5748	**39.989** 1.5744	**46.988** 1.8499	**46.972** 1.8493	**46.972** 1.8493	**40.025** 1.5758	**40.052** 1.5769	**0.0693**	JR35x40x20	**40** 1.5748
0.057 0.126	**40** 1.5748	**39.989** 1.5744	**46.988** 1.8499	**46.972** 1.8493	**46.972** 1.8493	**40.025** 1.5758	**40.052** 1.5769	**0.0773**	JR35x40x20.5	
0.053 0.117	**40** 1.5748	**39.989** 1.5744	**46.988** 1.8499	**46.972** 1.8493	**46.972** 1.8493	**40.025** 1.5758	**40.052** 1.5769	**0.0773**	JR35x40x20.5	
0.064 0.141	**45** 1.7717	**44.989** 1.7712	**51.986** 2.0467	**51.967** 2.0459	**51.967** 2.0459	**45.025** 1.7726	**45.052** 1.7737	**0.0836**	JR40x45x20.5	**45** 1.7717
0.055 0.121	**45** 1.7717	**44.989** 1.7712	**51.986** 2.0467	**51.967** 2.0459	**51.967** 2.0459	**45.025** 1.7726	**45.052** 1.7737	**0.0836**	JR40x45x20.5	
0.097 0.214	**50** 1.9685	**49.989** 1.9681	**57.986** 2.2829	**57.967** 2.2822	**57.967** 2.2822	**50.025** 1.9695	**50.052** 1.9706	**0.0937**	JR45x50x25.5	**50** 1.9685
0.083 0.183	**50** 1.9685	**49.989** 1.9681	**57.986** 2.2829	**57.967** 2.2822	**57.967** 2.2822	**50.025** 1.9695	**50.052** 1.9706	**0.0937**	JR45x50x25.5	

INNER RINGS

METRIC SERIES

When it is impractical to meet the shaft raceway design requirements (hardness, surface finish, case depth, etc.) outlined in the engineering section of this catalog, standard inner rings may be used.

Inner rings are made of rolling bearing steel and after hardening, their bores, raceways and end surfaces are ground. Metric series inner rings may be used to provide inner raceway surfaces for metric series radial needle roller and cage assemblies, metric series needle roller bearings and metric series drawn cup needle roller bearings. The extended inner rings are suitable for use with bearings containing lip contact seals and for applications in which axial movement may be present.

CONSTRUCTION

Metric series inner rings are available in four basic designs and differ only by the chamfers at the ends of the raceway surfaces, the lubricant access holes and the raceway profile. Inner rings of series JR have chamfers to assist in bearing installation but are without lubricating holes. Inner rings of series JR and IM have bearing installation chamfers and lubricating holes (bore diameters 5 to 180 mm [0.1969 in. to 7.0866 in.]). Innengs of series JRZ.JS1 are without installation chamfers, allowing for maximum possible raceway contact.

DIMENSIONAL ACCURACY

The tolerances of size, form, and runout for metric series inner rings meet the requirements of ISO normal tolerance class for radial bearings (see the engineering section). Most metric series inner rings are produced with outside diameter raceway tolerance in accordance with h5 which, in most cases, is suitable for combining the metric series needle roller bearings to give the normal clearance class, and for use with drawn cup bearings. Other raceway tolerances may also be found on inner rings for combining with needle roller bearings to give one of the clearance requirement.

MOUNTING OF INNER RINGS

Inner rings may be mounted on the shaft with either a loose transition fit or an interference fit. These fits used in conjunction with the proper fit of the bearing outer ring, will provide the correct operating clearances for most applications.

Regardless of the fit of the inner ring on the shaft, the inner ring should be axially located by shaft shoulders or other positive means. The shaft shoulder diameter adjacent to the inner ring must not exceed the inner ring outside diameter (per suggestions on pages B-153 and B-154 of the metric series needle roller bearing section).

When metric series inner rings are to be used with the metric series needle roller bearings, appropriate shaft tolerances should be selected from Table B-19 on page B-153 in the metric series needle roll bearing section. When Metric series inner rings are to be used with drawn cup bearings the suggested shaft tolerances are given in the “Inner ring” discussion on page B-48 of the “metric series drawn cup needle roller bearings” section of this catalog.

INCH SERIES INNER RINGS

Inch series inner rings for use with inch series drawn cup bearings are tabulated on page B-122 of this catalog.

INNER RINGS

METRIC SERIES

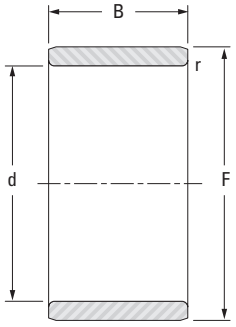

JR, IM..P

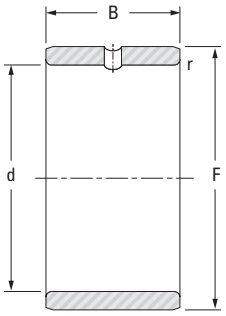

JR.JS1

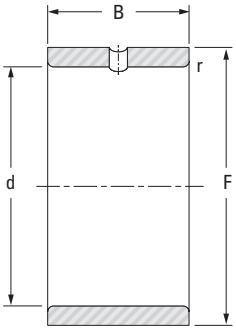

JRZ.JS1

Shaft Dia.	d	F [1]	B	$r_{s\,min}$	Inner Ring Designation	Wt.
mm in.	**mm** in.	**mm** in.	**mm** in.	**mm** in.		**kg** lbs.
5 0.1969	**5** 0.1969	**8** 0.3150	**8** 0.3150	**0.3** 0.01	JR5x8x8JS1	**0.002** 0.004
	5 0.1969	**8** 0.3150	**12** 0.4724	**0.3** 0.01	JR5x8x12	**0.003** 0.007
	5 0.1969	**8** 0.3150	**16** 0.630	**0.3** 0.01	JR5x8x16	**0.004** 0.009
6 0.2362	**6** 0.2362	**9** 0.3543	**8** 0.315	**0.3** 0.01	JR6x9x8JS1	**0.002** 0.004
	6 0.2362	**9** 0.3543	**12** 0.4724	**0.3** 0.01	JR6x9x12	**0.003** 0.007
	6 0.2362	**9** 0.3543	**16** 0.630	**0.3** 0.01	JR6x9x16	**0.004** 0.009
	6 0.2362	**10** 0.3937	**10** 0.394	**0.3** 0.01	JR6x10x10	**0.004** 0.009
	6 0.2362	**10** 0.3937	**10** 0.394	**0.3** 0.01	JR6x10x10JS1	**0.004** 0.009
	6 0.2362	**10** 0.3937	**12** 0.4724	**0.3** 0.01	JRZ6x10x12JS1	**0.005** 0.011
7 0.2756	**7** 0.2756	**10** 0.3937	**10.5** 0.413	**0.3** 0.01	JR7x10x10.5	**0.003** 0.007
	7 0.2756	**10** 0.3937	**12** 0.4724	**0.3** 0.01	JR7x10x12	**0.004** 0.009
	7 0.2756	**10** 0.3937	**16** 0.630	**0.3** 0.01	JR7x10x16	**0.005** 0.011
8 0.3150	**8** 0.3150	**12** 0.4724	**10** 0.394	**0.3** 0.01	JR8x12x10	**0.005** 0.011
	8 0.3150	**12** 0.4724	**10** 0.394	**0.3** 0.01	JR8x12x10JS1	**0.005** 0.011
	8 0.3150	**12** 0.4724	**10.5** 0.413	**0.3** 0.01	JR8x12x10.5	**0.005** 0.011
	8 0.3150	**12** 0.4724	**12** 0.472	**0.3** 0.01	JRZ8xl2x12JS1	**0.006** 0.013
	8 0.3150	**12** 0.4724	**12.5** 0.492	**0.3** 0.01	JR8x12x12.5	**0.006** 0.013
	8 0.3150	**12** 0.4724	**16** 0.630	**0.3** 0.01	IM 8 12 16 P	**0.007** 0.016
9 0.3543	**9** 0.3543	**12** 0.4724	**12** 0.4724	**0.3** 0.01	JR9x12x12	**0.005** 0.011
	9 0.3543	**12** 0.4724	**16** 0.630	**0.3** 0.01	JR9x12x16	**0.006** 0.013
10 0.3937	**10** 0.3937	**13** 0.5118	**12.5** 0.492	**0.3** 0.01	JR10x13x12.5	**0.005** 0.011
	10 0.3937	**14** 0.5512	**11** 0.433	**0.3** 0.01	JR10x14x11JS1	**0.007** 0.015
	10 0.3937	**14** 0.5512	**12** 0.4724	**0.3** 0.01	JR10x14x12	**0.007** 0.015
	10 0.3937	**14** 0.5512	**12** 0.4724	**0.3** 0.01	JR10x14x12JS1	**0.007** 0.015

[1] Inner rings for metric full complement needle roller bearings are produced with outside diameter tolerance g5.

Continued on next page.

INNER RINGS – *continued*

METRIC SERIES

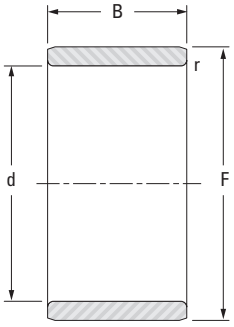

JR, IM..P

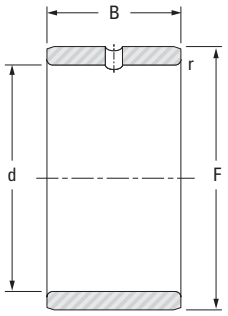

JR.JS1

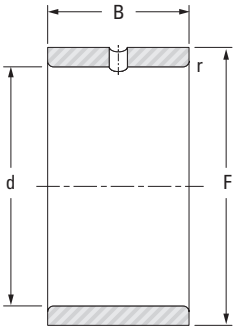

JRZ.JS1

Shaft Dia.	d	F [1]	B	$r_{s\,min}$	Inner Ring Designation	Wt.
mm in.	**mm** in.	**mm** in.	**mm** in.	**mm** in.		**kg** lbs.
10 0.3937	**10** 0.3937	**14** 0.5512	**13** 0.512	**0.3** 0.01	JR10x14x13	**0.007** 0.015
	10 0.3937	**14** 0.5512	**14** 0.551	**0.3** 0.01	JRZ10x14x14JS1	**0.008** 0.018
	10 0.3937	**14** 0.5512	**16** 0.630	**0.3** 0.01	JR10x14x16	**0.009** 0.020
	10 0.3937	**14** 0.5512	**20** 0.787	**0.3** 0.01	JR10x14x20	**0.012** 0.026
12 0.4724	**12** 0.4724	**15** 0.5906	**12.5** 0.492	**0.3** 0.01	JR12x15x12.5	**0.006** 0.013
	12 0.4724	**15** 0.5906	**16** 0.630	**0.3** 0.01	JR12x15x16	**0.008** 0.018
	12 0.4724	**15** 0.5906	**16.5** 0.650	**0.3** 0.01	JR12x15x16.5	**0.008** 0.018
	12 0.4724	**15** 0.5906	**18.5** 0.728	**0.3** 0.01	JR12x15x18.5	**0.009** 0.020
	12 0.4724	**15** 0.5906	**22.4** 0.882	**0.2** 0.01	IM 12 15 22,4 P	**0.011** 0.024
	12 0.4724	**15** 0.5906	**22.5** 0.886	**0.3** 0.01	JR12x15x22.5	**0.011** 0.024
	12 0.4724	**16** 0.6299	**12** 0.472	**0.3** 0.01	JR12x16x12	**0.008** 0.018
	12 0.4724	**16** 0.6299	**12** 0.472	**0.3** 0.01	JR12x16x12JS1	**0.008** 0.018
	12 0.4724	**16** 0.6299	**13** 0.512	**0.3** 0.01	JR12x16x13	**0.008** 0.018
	12 0.4724	**16** 0.6299	**14** 0.551	**0.3** 0.01	JRZ12x16x14JS1	**0.010** 0.022
	12 0.4724	**16** 0.6299	**16** 0.630	**0.3** 0.01	JR12x16x16	**0.011** 0.024
	12 0.4724	**16** 0.6299	**20** 0.787	**0.3** 0.01	JR12x16x20	**0.014** 0.031
	12 0.4724	**16** 0.6299	**22** 0.866	**0.3** 0.01	JR12x16x22	**0.015** 0.033
13 0.5118	**13** 0.5118	**18** 0.7087	**16** 0.630	**0.35** 0.014	IM 13 18 16 P	**0.015** 0.033
14 0.5512	**14** 0.5512	**17** 0.6693	**17** 0.669	**0.3** 0.01	JR14x17x17	**0.009** 0.020
15 0.5906	**15** 0.5906	**18** 0.7087	**16.5** 0.650	**0.3** 0.01	JR15x18x16.5	**0.010** 0.022
	15 0.5906	**19** 0.7480	**16** 0.630	**0.3** 0.01	JR15x19x16	**0.013** 0.029
	15 0.5906	**19** 0.7480	**20** 0.787	**0.3** 0.01	JR15x19x20	**0.017** 0.037
	15 0.5906	**20** 0.7874	**12** 0.472	**0.3** 0.01	JR15x20x12	**0.012** 0.026
	15 0.5906	**20** 0.7874	**12** 0.472	**0.3** 0.01	JR15x20x12JS1	**0.012** 0.026

[1] Inner rings for metric full complement needle roller bearings are produced with outside diameter tolerance g5.

Continued on next page.

INNER RINGS – *continued*

METRIC SERIES

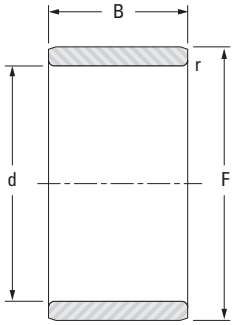

JR, IM..P

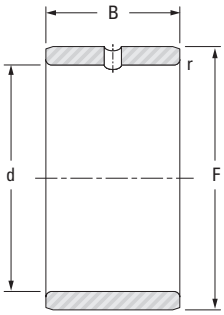

JR.JS1

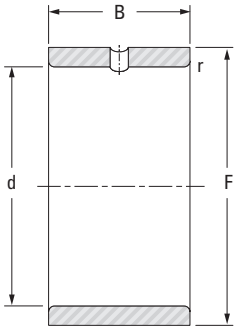

JRZ.JS1

Shaft Dia.	d	F [1]	B	$r_{s\,min}$	Inner Ring Designation	Wt.
mm in.	**mm** in.	**mm** in.	**mm** in.	**mm** in.		**kg** lbs.
15 0.5906	**15** 0.5906	**20** 0.7874	**13** 0.512	**0.3** 0.01	JR15x20x13	**0.014** 0.031
	15 0.5906	**20** 0.7874	**14** 0.551	**0.3** 0.01	JRZ15x20x14JS1	**0.015** 0.033
	15 0.5906	**20** 0.7874	**16** 0.630	**0.3** 0.01	JR15x20x16	**0.017** 0.037
	15 0.5906	**20** 0.7874	**20** 0.787	**0.35** 0.014	IM 15 20 20 P	**0.021** 0.045
	15 0.5906	**20** 0.7874	**23** 0.906	**0.3** 0.01	JR15x20x23	**0.025** 0.055
	15 0.5906	**20** 0.7874	**26** 1.024	**0.3** 0.01	JR15x20x26	**0.028** 0.062
17 0.6693	**17** 0.6693	**20** 0.7874	**16.5** 0.650	**0.3** 0.01	JR17x20x16.5	**0.011** 0.024
	17 0.6693	**20** 0.7874	**20** 0.787	**0.3** 0.01	JR17x20x20	**0.014** 0.031
	17 0.6693	**20** 0.7874	**20.5** 0.807	**0.3** 0.01	JR17x20x20.5	**0.014** 0.031
	17 0.6693	**20** 0.7874	**30.5** 1.201	**0.3** 0.01	JR17x20x30.5	**0.021** 0.046
	17 0.6693	**21** 0.8268	**16** 0.630	**0.3** 0.01	JR17x21x16	**0.015** 0.033
	17 0.6693	**21** 0.8268	**20** 0.787	**0.3** 0.01	JR17x21x20	**0.019** 0.042
	17 0.6693	**22** 0.8661	**13** 0.512	**0.3** 0.01	JR17x22x13	**0.015** 0.033
	17 0.6693	**22** 0.8661	**13** 0.512	**0.35** 0.014	IM 4903	**0.015** 0.033
	17 0.6693	**22** 0.8661	**16** 0.630	**0.3** 0.01	JR17x22x16	**0.019** 0.042
	17 0.6693	**22** 0.8661	**16** 0.630	**0.3** 0.01	JR17x22x16JS1	**0.019** 0.042
	17 0.6693	**22** 0.8661	**16** 0.630	**0.3** 0.01	JRZ17x22x16JS1	**0.019** 0.042
	17 0.6693	**22** 0.8661	**20** 0.787	**0.35** 0.014	IM 17 22 20 P	**0.023** 0.051
	17 0.6693	**22** 0.8661	**23** 0.906	**0.3** 0.01	JR17x22x23	**0.028** 0.062
	17 0.6693	**22** 0.8661	**26** 1.024	**0.3** 0.01	JR17x22x26	**0.031** 0.068
	17 0.6693	**22** 0.8661	**32** 1.260	**0.3** 0.01	JR17x22x32	**0.038** 0.084
20 0.7874	**20** 0.7874	**24** 0.9449	**16** 0.630	**0.3** 0.01	JR20x24x16	**0.018** 0.040
	20 0.7874	**24** 0.9449	**20** 0.787	**0.3** 0.01	JR20x24x20	**0.022** 0.049
	20 0.7874	**25** 0.9843	**16** 0.630	**0.3** 0.01	JR20x25x16	**0.022** 0.049

[1] Inner rings for metric full complement needle roller bearings are produced with outside diameter tolerance g5.

Continued on next page.

INNER RINGS — *continued*

METRIC SERIES

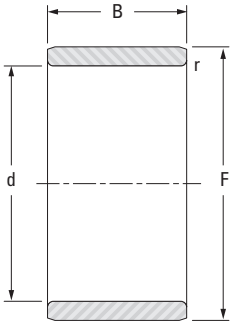

JR, IM..P

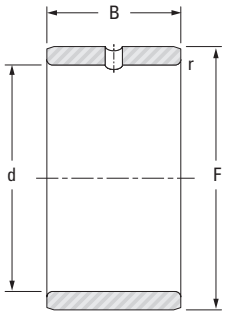

JR.JS1

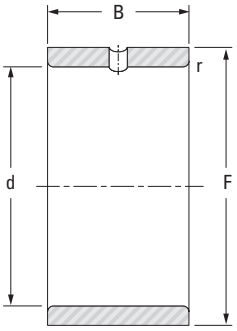

JRZ.JS1

Shaft Dia.	d	F [1]	B	$r_{s\,min}$	Inner Ring Designation	Wt.
mm in.	**mm** in.	**mm** in.	**mm** in.	**mm** in.		**kg** lbs.
20 0.7874	**20** 0.7874	**25** 0.9843	**16** 0.630	**0.3** 0.01	JR20x25x16JS1	**0.022** 0.049
	20 0.7874	**25** 0.9843	**17** 0.669	**0.3** 0.01	JR20x25x17	**0.023** 0.051
	20 0.7874	**25** 0.9843	**18** 0.709	**0.3** 0.01	JRZ20x25x18JS1	**0.025** 0.055
	20 0.7874	**25** 0.9843	**20** 0.787	**0.3** 0.01	JR20x25x20	**0.028** 0.062
	20 0.7874	**25** 0.9843	**20.5** 0.807	**0.3** 0.01	JR20x25x20.5	**0.029** 0.064
	20 0.7874	**25** 0.9843	**26** 1.024	**0.3** 0.01	JR20x25x26	**0.036** 0.079
	20 0.7874	**25** 0.9843	**26.5** 1.043	**0.3** 0.01	JR20x25x26.5	**0.037** 0.082
	20 0.7874	**25** 0.9843	**30** 1.181	**0.3** 0.01	JR20x25x30	**0.042** 0.093
	20 0.7874	**25** 0.9843	**32** 1.260	**0.3** 0.01	JR20x25x32	**0.044** 0.097
	20 0.7874	**25** 0.9843	**38.5** 1.516	**0.3** 0.01	JR20x25x38.5	**0.054** 0.119
22 0.8661	**22** 0.8661	**26** 1.0236	**16** 0.630	**0.3** 0.01	JR22x26x16	**0.019** 0.042
	22 0.8661	**26** 1.0236	**20** 0.787	**0.3** 0.01	JR22x26x20	**0.023** 0.051
	22 0.8661	**28** 1.1024	**17** 0.669	**0.3** 0.01	JR22x28x17	**0.030** 0.066
	22 0.8661	**28** 1.1024	**20.5** 0.807	**0.3** 0.01	JR22x28x20.5	**0.038** 0.084
	22 0.8661	**28** 1.1024	**30** 1.181	**0.3** 0.01	JR22x28x30	**0.056** 0.123
23 0.9055	**23** 0.9055	**28** 1.1024	**20** 0.787	**0.35** 0.014	IM 23 28 20 P	**0.030** 0.066
25 0.9843	**25** 0.9843	**29** 1.1417	**20** 0.787	**0.3** 0.01	JR25x29x20	**0.027** 0.060
	25 0.9843	**29** 1.1417	**30** 1.181	**0.3** 0.01	JR25x29x30	**0.040** 0.088
	25 0.9843	**30** 1.1811	**16** 0.630	**0.3** 0.01	JR25x30x16	**0.027** 0.060
	25 0.9843	**30** 1.1811	**16** 0.630	**0.3** 0.01	JR25x30x16JS1	**0.027** 0.060
	25 0.9843	**30** 1.1811	**17** 0.669	**0.3** 0.01	JR25x30x17	**0.028** 0.062
	25 0.9843	**30** 1.1811	**18** 0.709	**0.3** 0.01	JRZ25x30x18JS1	**0.031** 0.068
	25 0.9843	**30** 1.1811	**20** 0.787	**0.3** 0.01	JR25x30x20	**0.034** 0.075
	25 0.9843	**30** 1.1811	**20.5** 0.807	**0.3** 0.01	JR25x30x20.5	**0.035** 0.077

[1] Inner rings for metric full complement needle roller bearings are produced with outside diameter tolerance g5.

Continued on next page.

INNER RINGS – *continued*

METRIC SERIES

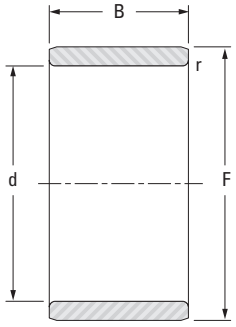

JR, IM..P

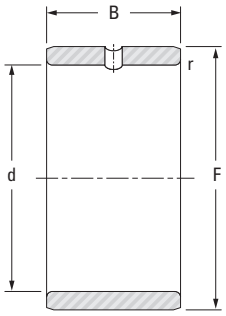

JR.JS1

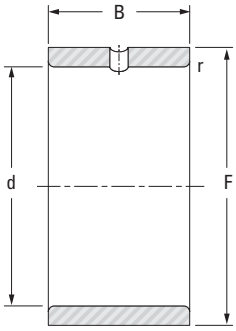

JRZ.JS1

Shaft Dia.	d	F [1]	B	$r_{s\,min}$	Inner Ring Designation	Wt.
mm in.	**mm** in.	**mm** in.	**mm** in.	**mm** in.		**kg** lbs.
25 0.9843	**25** 0.9843	**30** 1.1811	**26** 1.024	**0.3** 0.01	JR25x30x26	**0.044** 0.097
	25 0.9843	**30** 1.1811	**26.5** 1.043	**0.3** 0.01	JR25x30x26.5	**0.045** 0.099
	25 0.9843	**30** 1.1811	**30** 1.181	**0.3** 0.01	JR25x30x30	**0.051** 0.112
	25 0.9843	**30** 1.1811	**32** 1.260	**0.3** 0.01	JR25x30x32	**0.054** 0.119
	25 0.9843	**30** 1.1811	**38.5** 1.516	**0.3** 0.01	JR25x30x38.5	**0.066** 0.146
28 1.1024	**28** 1.1024	**32** 1.2598	**17** 0.669	**0.3** 0.01	JR28x32x17	**0.028** 0.062
	28 1.1024	**32** 1.2598	**20** 0.787	**0.3** 0.01	JR28x32x20	**0.030** 0.066
	28 1.1024	**32** 1.2598	**30** 1.181	**0.3** 0.01	JR28x32x30	**0.044** 0.097
30 1.1811	**30** 1.1811	**35** 1.3780	**16** 0.630	**0.3** 0.01	JR30x35x16	**0.031** 0.068
	30 1.1811	**35** 1.3780	**17** 0.669	**0.3** 0.01	JR30x35x17	**0.033** 0.073
	30 1.1811	**35** 1.3780	**17** 0.669	**0.35** 0.014	IM 4906	**0.033** 0.073
	30 1.1811	**35** 1.3780	**18** 0.709	**0.3** 0.01	JRZ30x35x18JS1	**0.036** 0.079
	30 1.1811	**35** 1.3780	**20** 0.787	**0.3** 0.01	JR30x35x20	**0.039** 0.086
	30 1.1811	**35** 1.3780	**20** 0.787	**0.3** 0.01	JRZ30x35x20JS1	**0.039** 0.086
	30 1.1811	**35** 1.3780	**20.5** 0.807	**0.3** 0.01	JR30x35x20.5	**0.040** 0.088
	30 1.1811	**35** 1.3780	**26** 1.024	**0.3** 0.01	JR30x35x26	**0.054** 0.119
	30 1.1811	**35** 1.3780	**30** 1.181	**0.3** 0.01	JR30x35x30	**0.057** 0.126
	30 1.1811	**35** 1.3780	**32** 1.260	**0.3** 0.01	JR30x35x32	**0.062** 0.137
	30 1.1811	**38** 1.4961	**20** 0.787	**0.6** 0.02	JR30x38x20JS1	**0.067** 0.148
32 1.2598	**32** 1.2598	**37** 1.4567	**20** 0.787	**0.3** 0.01	JR32x37x20	**0.043** 0.095
	32 1.2598	**37** 1.4567	**30** 1.181	**0.3** 0.01	JR32x37x30	**0.064** 0.141
	32 1.2598	**40** 1.5748	**20** 0.787	**0.6** 0.02	JR32x40x20	**0.069** 0.152
	32 1.2598	**40** 1.5748	**36** 1.417	**0.6** 0.02	JR32x40x36	**0.128** 0.282
35 1.3780	**35** 1.3780	**40** 1.5748	**17** 0.669	**0.3** 0.01	JR35x40x17	**0.040** 0.088

[1] Inner rings for metric full complement needle roller bearings are produced with outside diameter tolerance g5.

Continued on next page.

INNER RINGS — *continued*

METRIC SERIES

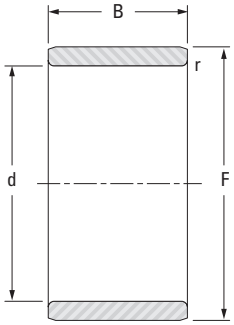

JR, IM..P

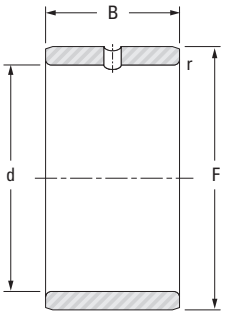

JR.JS1

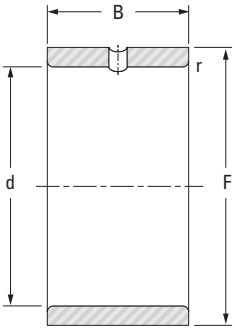

JRZ.JS1

Shaft Dia.	d	F [1]	B	$r_{s\,min}$	Inner Ring Designation	Wt.
mm in.	**mm** in.	**mm** in.	**mm** in.	**mm** in.		**kg** lbs.
35 1.3780	**35** 1.3780	**40** 1.5748	**20** 0.787	**0.3** 0.01	JR35x40x20	**0.046** 0.101
	35 1.3780	**40** 1.5748	**20.5** 0.807	**0.3** 0.01	JR35x40x20.5	**0.049** 0.108
	35 1.3780	**40** 1.5748	**22** 0.866	**0.3** 0.01	JR35x40x22	**0.052** 0.115
	35 1.3780	**40** 1.5748	**30** 1.181	**0.3** 0.01	JR35x40x30	**0.071** 0.157
	35 1.3780	**40** 1.5748	**34** 1.339	**0.3** 0.01	JR35x40x34	**0.080** 0.176
	35 1.3780	**40** 1.5748	**40** 1.575	**0.3** 0.01	JR35x40x40	**0.094** 0.207
	35 1.3780	**42** 1.6535	**20** 0.787	**0.6** 0.02	JR35x42x20	**0.065** 0.143
	35 1.3780	**42** 1.6535	**20** 0.787	**0.6** 0.02	JR35x42x20JS1	**0.065** 0.143
	35 1.3780	**42** 1.6535	**23** 0.906	**0.6** 0.02	JRZ35x42x23JS1	**0.074** 0.163
	35 1.3780	**42** 1.6535	**36** 1.417	**0.6** 0.02	JR35x42x36	**0.122** 0.269
	35 1.3780	**44** 1.7323	**22** 0.866	**0.6** 0.02	JR35x44x22	**0.097** 0.214
37 1.4567	**37** 1.4567	**42** 1.6535	**20** 0.787	**0.35** 0.014	IM 37 42 20 P	**0.046** 0.101
38 1.4961	**38** 1.4961	**43** 1.6929	**20** 0.787	**0.3** 0.01	JR38x43x20	**0.050** 0.110
	38 1.4961	**43** 1.6929	**30** 1.181	**0.3** 0.01	JR38x43x30	**0.075** 0.165
40 1.5748	**40** 1.5748	**45** 1.7717	**17** 0.669	**0.3** 0.01	JR40x45x17	**0.044** 0.097
	40 1.5748	**45** 1.7717	**20** 0.787	**0.3** 0.01	JR40x45x20	**0.052** 0.115
	40 1.5748	**45** 1.7717	**20.5** 0.807	**0.3** 0.01	JR40x45x20.5	**0.054** 0.119
	40 1.5748	**45** 1.7717	**25** 0.984	**0.35** 0.014	IM 40 45 25 P	**0.062** 0.137
	40 1.5748	**45** 1.7717	**30** 1.181	**0.3** 0.01	JR40x45x30	**0.078** 0.172
	40 1.5748	**45** 1.7717	**34** 1.339	**0.3** 0.01	JR40x45x34	**0.089** 0.196
	40 1.5748	**45** 1.7717	**40** 1.575	**0.3** 0.01	JR40x45x40	**0.115** 0.254
	40 1.5748	**48** 1.8898	**22** 0.866	**0.6** 0.02	JR40x48x22	**0.094** 0.207
	40 1.5748	**48** 1.8898	**23** 0.906	**0.6** 0.02	JRZ40x48x23JS1	**0.100** 0.220
	40 1.5748	**48** 1.8898	**40** 1.575	**0.6** 0.02	JR40x48x40	**0.173** 0.381

[1] Inner rings for metric full complement needle roller bearings are produced with outside diameter tolerance g5.

Continued on next page.

INNER RINGS – *continued*

METRIC SERIES

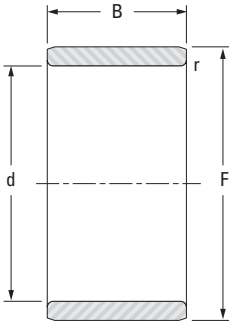

JR, IM..P

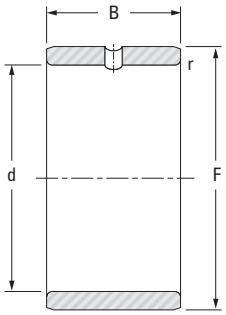

JR.JS1

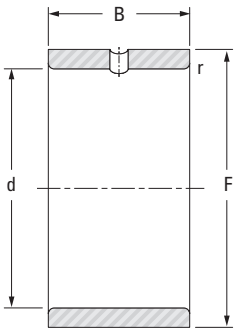

JRZ.JS1

Shaft Dia.	d	F [1]	B	$r_{s\,min}$	Inner Ring Designation	Wt.
mm in.	**mm** in.	**mm** in.	**mm** in.	**mm** in.		**kg** lbs.
40 1.5748	**40** 1.5748	**50** 1.9685	**20** 0.787	**1** 0.04	JR40x50x20	**0.110** 0.243
42 1.6535	**42** 1.6535	**47** 1.8504	**20** 0.787	**0.3** 0.01	JR42x47x20	**0.055** 0.121
	42 1.6535	**47** 1.8504	**30** 1.181	**0.3** 0.01	JR42x47x30	**0.083** 0.183
45 1.7717	**45** 1.7717	**50** 1.9685	**20** 0.787	**0.3** 0.01	JR45x50x20	**0.058** 0.128
	45 1.7717	**50** 1.9685	**25** 0.984	**0.6** 0.02	JR45x50x25	**0.073** 0.161
	45 1.7717	**50** 1.9685	**25.5** 1.004	**0.3** 0.01	JR45x50x25.5	**0.075** 0.165
	45 1.7717	**50** 1.9685	**35** 1.378	**0.6** 0.02	JR45x50x35	**0.103** 0.227
	45 1.7717	**50** 1.9685	**40** 1.575	**0.3** 0.01	JR45x50x40	**0.117** 0.258
	45 1.7717	**52** 2.0472	**22** 0.866	**0.6** 0.02	JR45x52x22	**0.090** 0.198
	45 1.7717	**52** 2.0472	**22** 0.866	**0.85** 0.033	IM 4909	**0.087** 0.192
	45 1.7717	**52** 2.0472	**23** 0.906	**0.6** 0.02	JR45x52x23	**0.096** 0.212
	45 1.7717	**52** 2.0472	**23** 0.906	**0.6** 0.02	JRZ45x52x23JS1	**0.096** 0.212
	45 1.7717	**52** 2.0472	**40** 1.575	**0.6** 0.02	JR45x52x40	**0.167** 0.368
	45 1.7717	**55** 2.1654	**20** 0.787	**1** 0.04	JR45x55x20	**0.133** 0.293
	45 1.7717	**55** 2.1654	**20** 0.787	**1** 0.04	JR45x55x20JS1	**0.133** 0.293
	45 1.7717	**55** 2.1654	**22** 0.866	**1** 0.04	JR45x55x22	**0.135** 0.298
	45 1.7717	**55** 2.1654	**40** 1.575	**1** 0.04	JR45x55x40	**0.247** 0.545
50 1.9685	**50** 1.9685	**55** 2.1654	**20** 0.787	**0.3** 0.01	JR50x55x20	**0.065** 0.143
	50 1.9685	**55** 2.1654	**25** 0.984	**0.6** 0.02	JR50x55x25	**0.081** 0.179
	50 1.9685	**55** 2.1654	**35** 1.378	**0.65** 0.026	IM 50 55 35 P	**0.107** 0.236
	50 1.9685	**55** 2.1654	**35** 1.378	**0.6** 0.02	JR50x55x35	**0.113** 0.249
	50 1.9685	**55** 2.1654	**40** 1.575	**0.3** 0.01	JR50x55x40	**0.130** 0.287
	50 1.9685	**58** 2.2835	**22** 0.866	**0.6** 0.02	JR50x58x22	**0.117** 0.258
	50 1.9685	**58** 2.2835	**23** 0.906	**0.6** 0.02	JRZ50x58x23JS1	**0.122** 0.269

[1] Inner rings for metric full complement needle roller bearings are produced with outside diameter tolerance g5.

Continued on next page.

INNER RINGS — *continued*

METRIC SERIES

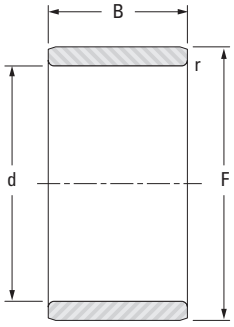

JR, IM..P

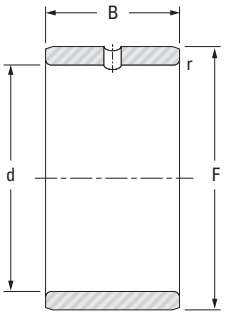

JR.JS1

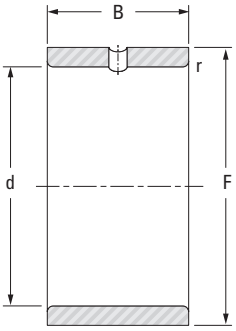

JRZ.JS1

Shaft Dia.	d	F [1]	B	$r_{s\,min}$	Inner Ring Designation	Wt.
mm in.	**mm** in.	**mm** in.	**mm** in.	**mm** in.		**kg** lbs.
50 1.9685	**50** 1.9685	**58** 2.2835	**40** 1.575	**0.6** 0.02	JR50x58x40	**0.213** 0.470
	50 1.9685	**60** 2.3622	**20** 0.787	**1** 0.04	JR50x60x20	**0.155** 0.342
	50 1.9685	**60** 2.3622	**20** 0.787	**1** 0.04	JR50x60x20JS1	**0.155** 0.342
	50 1.9685	**60** 2.3622	**25** 0.984	**1** 0.04	JR50x60x25	**0.170** 0.375
	50 1.9685	**60** 2.3622	**40** 1.575	**1** 0.04	JR50x60x40	**0.310** 0.683
55 2.1654	**55** 2.1654	**60** 2.3622	**25** 0.984	**0.6** 0.02	JR55x60x25	**0.088** 0.194
	55 2.1654	**60** 2.3622	**35** 1.378	**0.65** 0.026	IM 55 60 35 P	**0.118** 0.260
	55 2.1654	**60** 2.3622	**35** 1.378	**0.6** 0.02	JR55x60x35	**0.124** 0.273
	55 2.1654	**63** 2.4803	**25** 0.984	**1** 0.04	JR55x63x25	**0.141** 0.311
	55 2.1654	**63** 2.4803	**45** 1.772	**1** 0.04	JR55x63x45	**0.286** 0.631
	55 2.1654	**65** 2.5591	**30** 1.181	**1** 0.04	JR55x65x30	**0.222** 0.489
	55 2.1654	**65** 2.5591	**60** 2.362	**1** 0.04	JR55x65x60	**0.444** 0.979
58 2.2835	**58** 2.2835	**65** 2.5591	**25** 0.984	**0.85** 0.033	IM 58 65 25 P	**0.125** 0.276
60 2.3622	**60** 2.3622	**68** 2.6772	**25** 0.984	**0.6** 0.02	JR60x68x25	**0.153** 0.337
	60 2.3622	**68** 2.6772	**35** 1.378	**0.6** 0.02	JR60x68x35	**0.220** 0.485
	60 2.3622	**68** 2.6772	**45** 1.772	**1** 0.04	JR60x68x45	**0.284** 0.626
	60 2.3622	**70** 2.7559	**25** 0.984	**1** 0.04	JR60x70x25	**0.200** 0.441
	60 2.3622	**70** 2.7559	**30** 1.181	**1** 0.04	JR60x70x30	**0.240** 0.529
	60 2.3622	**70** 2.7559	**35** 1.378	**0.85** 0.033	IM 60 70 35 P	**0.280** 0.616
	60 2.3622	**70** 2.7559	**60** 2.362	**1** 0.04	JR60x70x60	**0.480** 1.058
65 2.5591	**65** 2.5591	**72** 2.8346	**25** 0.984	**1** 0.04	JR65x72x25	**0.143** 0.315
	65 2.5591	**72** 2.8346	**45** 1.772	**1** 0.04	JR65x72x45	**0.266** 0.586
65 2.5591	**65** 2.5591	**73** 2.8740	**25** 0.984	**0.6** 0.02	JR65x73x25	**0.170** 0.375
	65 2.5591	**73** 2.8740	**35** 1.378	**0.6** 0.02	JR65x73x35	**0.240** 0.529

[1] Inner rings for metric full complement needle roller bearings are produced with outside diameter tolerance g5.

Continued on next page.

INNER RINGS – *continued*

METRIC SERIES

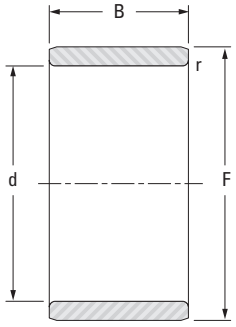

JR, IM..P

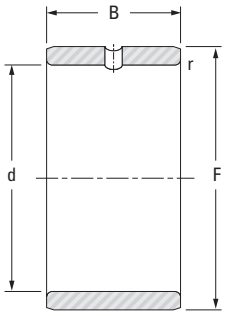

JR.JS1

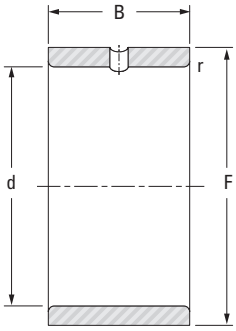

JRZ.JS1

Shaft Dia.	d	F [1]	B	$r_{s\,min}$	Inner Ring Designation	Wt.
mm in.	**mm** in.	**mm** in.	**mm** in.	**mm** in.		**kg** lbs.
65 2.5591	**65** 2.5591	**75** 2.9528	**28** 1.102	**1** 0.04	JR65x75x28	**0.240** 0.529
	65 2.5591	**75** 2.9528	**30** 1.181	**1** 0.04	JR65x75x30	**0.260** 0.573
	65 2.5591	**75** 2.9528	**60** 2.362	**1** 0.04	JR65x75x60	**0.520** 1.146
70 2.7559	**70** 2.7559	**80** 3.1496	**25** 0.984	**1** 0.04	JR70x80x25	**0.230** 0.507
	70 2.7559	**80** 3.1496	**30** 1.181	**1** 0.04	JR70x80x30	**0.270** 0.595
	70 2.7559	**80** 3.1496	**35** 1.378	**1** 0.04	JR70x80x35	**0.320** 0.705
	70 2.7559	**80** 3.1496	**54** 2.126	**1** 0.04	JR70x80x54	**0.500** 1.102
	70 2.7559	**80** 3.1496	**60** 2.362	**1** 0.04	JR70x80x60	**0.556** 1.226
75 2.9528	**75** 2.9528	**85** 3.3465	**25** 0.984	**1** 0.04	JR75x85x25	**0.240** 0.529
	75 2.9528	**85** 3.3465	**30** 1.181	**1** 0.04	JR75x85x30	**0.289** 0.637
	75 2.9528	**85** 3.3465	**35** 1.378	**1** 0.04	JR75x85x35	**0.338** 0.745
	75 2.9528	**85** 3.3465	**54** 2.126	**1** 0.04	JR75x85x54	**0.530** 1.168
80 3.1496	**80** 3.1496	**90** 3.5433	**25** 0.984	**1** 0.04	JR80x90x25	**0.260** 0.573
	80 3.1496	**90** 3.5433	**30** 1.181	**1** 0.04	JR80x90x30	**0.306** 0.675
	80 3.1496	**90** 3.5433	**35** 1.378	**1** 0.04	JR80x90x35	**0.355** 0.783
	80 3.1496	**90** 3.5433	**54** 2.126	**1** 0.04	JR80x90x54	**0.565** 1.246
85 3.3465	**85** 3.3465	**95** 3.7402	**26** 1.024	**1** 0.04	JR85x95x26	**0.290** 0.639
	85 3.3465	**95** 3.7402	**30** 1.181	**1** 0.04	JR85x95x30	**0.334** 0.736
	85 3.3465	**95** 3.7402	**36** 1.417	**1** 0.04	JR85x95x36	**0.397** 0.875
	85 3.3465	**100** 3.9370	**35** 1.378	**1.1** 0.04	JR85x100x35	**0.595** 1.312
	85 3.3465	**100** 3.9370	**63** 2.480	**1.1** 0.04	JR85x100x63	**1.080** 2.381
90 3.5433	**90** 3.5433	**100** 3.9370	**26** 1.024	**1** 0.04	JR90x100x26	**0.300** 0.661
	90 3.5433	**100** 3.9370	**30** 1.181	**1** 0.04	JR90x100x30	**0.350** 0.772
	90 3.5433	**100** 3.9370	**36** 1.417	**1** 0.04	JR90x100x36	**0.422** 0.930

[1] Inner rings for metric full complement needle roller bearings are produced with outside diameter tolerance g5.

Continued on next page.

INNER RINGS — *continued*

METRIC SERIES

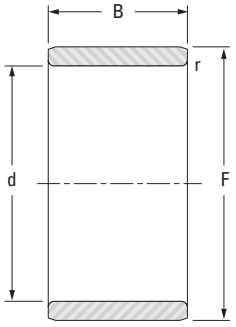

JR, IM..P

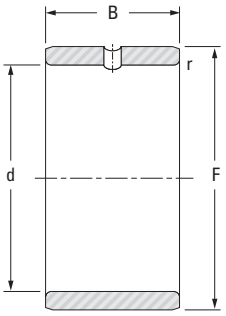

JR.JS1

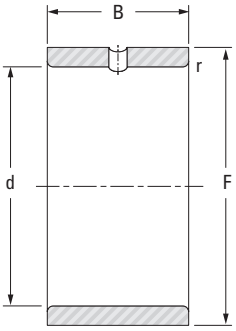

JRZ.JS1

Shaft Dia.	d	F [1]	B	$r_{s\,min}$	Inner Ring Designation	Wt.
mm in.	**mm** in.	**mm** in.	**mm** in.	**mm** in.		**kg** lbs.
90 3.5433	**90** 3.5433	**105** 4.1339	**32** 1.260	**1.1** 0.04	JR90x105x32	**0.580** 1.279
90 3.5433	**90** 3.5433	**105** 4.1339	**35** 1.378	**1.1** 0.04	JR90x105x35	**0.624** 1.376
	90 3.5433	**105** 4.1339	**63** 2.480	**1.1** 0.04	JR90x105x63	**1.140** 2.513
95 3.7402	**95** 3.7402	**105** 4.1339	**26** 1.024	**1** 0.04	JR95x105x26	**0.310** 0.683
	95 3.7402	**105** 4.1339	**36** 1.417	**1** 0.04	JR95x105x36	**0.430** 0.948
	95 3.7402	**110** 4.3307	**35** 1.378	**1.1** 0.04	JR95x110x35	**0.653** 1.440
	95 3.7402	**110** 4.3307	**63** 2.480	**1.1** 0.04	JR95x110x63	**1.200** 2.646
100 3.9370	**100** 3.9370	**110** 4.3307	**30** 1.181	**1.1** 0.04	JR100x110x30	**0.384** 0.847
	100 3.9370	**110** 4.3307	**40** 1.575	**1.1** 0.04	JR100x110x40	**0.510** 1.124
	100 3.9370	**115** 4.5276	**40** 1.575	**1.1** 0.04	JR100x115x40	**0.790** 1.742
110 4.3307	**110** 4.3307	**120** 4.7244	**30** 1.181	**1** 0.04	JR110x120x30	**0.425** 0.937
	110 4.3307	**125** 4.9213	**40** 1.575	**1.1** 0.04	JR110x125x40	**0.870** 1.918
120 4.7244	**120** 4.7244	**130** 5.1181	**30** 1.181	**1** 0.04	JR120x130x30	**0.460** 1.014
	120 4.7244	**135** 5.3150	**45** 1.772	**1.1** 0.04	JR120x135x45	**1.060** 2.337
130 5.1181	**130** 5.1181	**145** 5.7087	**35** 1.378	**1.1** 0.04	JR130x145x35	**0.890** 1.962
	130 5.1181	**150** 5.9055	**50** 1.969	**1.5** 0.06	JR130x150x50	**1.730** 3.814
140 5.5118	**140** 5.5118	**155** 6.1024	**35** 1.378	**1.1** 0.04	JR140x155x35	**0.955** 2.105
	140 5.5118	**160** 6.2992	**50** 1.969	**1.5** 0.06	JR140x160x50	**1.860** 4.101
150 5.9055	**150** 5.9055	**165** 6.4961	**40** 1.575	**1.1** 0.04	JR150x165x40	**1.170** 2.579
160 6.2992	**160** 6.2992	**175** 6.8898	**40** 1.575	**1.1** 0.04	JR160x175x40	**1.240** 2.734
170 6.6929	**170** 6.6929	**185** 7.2835	**45** 1.772	**1.1** 0.04	JR170x185x45	**1.480** 3.263
180 7.0866	**180** 7.0866	**195** 7.6772	**45** 1.772	**1.1** 0.04	JR180x195x45	**1.560** 3.439

[1] Inner rings for metric full complement needle roller bearings are produced with outside diameter tolerance g5.

NOTES

FULL COMPLEMENT OPEN ENDS, CLOSED ONE END

METRIC SERIES

B

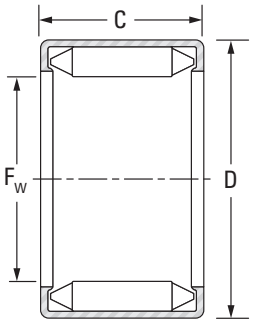

DL

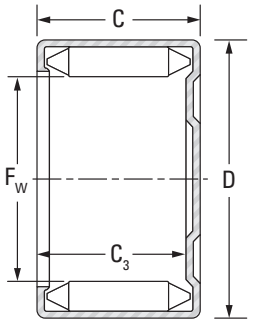

DLF

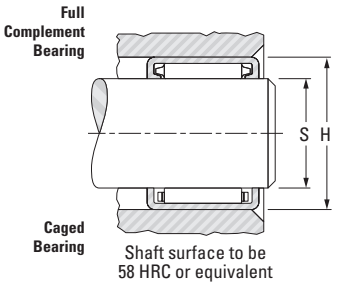

Shaft Dia.	F_w	D	C	$C_{3\,min}$	Bearing Designation	Load Ratings Dynamic C	Load Ratings Static C_0	Speed Rating Grease	Speed Rating Oil	C_g
			-0.3, -0.012							
mm in.	mm in.	mm in.	mm in.	mm in.		kN lbf.		min^{-1}		
6 0.2362	**6** 0.2362	**12** 0.4724	**10** 0.394	–	DL 6 10	**2.90** 650	**3.80** 850	33000	50000	**0.0120**
	6 0.2362	**12** 0.4724	**10** 0.394	**7.7** 0.303	DLF 6 10	**2.90** 650	**3.80** 850	33000	50000	**0.0120**
8 0.3150	**8** 0.3150	**14** 0.5512	**10** 0.394	–	DL 8 10	**4.50** 1010	**6.50** 1460	24000	37500	**0.0145**
	8 0.3150	**14** 0.5512	**10** 0.394	**7.7** 0.303	DLF 8 10	**4.50** 1010	**6.50** 1460	24000	37500	**0.0145**
9 0.3543	**9** 0.3543	**14** 0.5512	**12** 0.472	–	DL 9 14 12	**6.10** 1370	**9.20** 1270	21000	33000	**0.0176**
	9 0.3547	**14** 0.5512	**12** 0.472	**9.70** 0.382	DLF 9 14 12	**6.10** 1370	**9.20** 1270	21000	33000	**0.0176**
10 0.3937	**10** 0.3937	**16** 0.6299	**12** 0.472	–	DL 10 12	**7.00** 1570	**10.9** 2450	20000	30000	**0.0180**
	10 0.3937	**16** 0.6299	**12** 0.472	**9.7** 0.382	DLF 10 12	**7.00** 1570	**10.9** 2450	20000	30000	**0.0180**
12 0.4724	**12** 0.4724	**18** 0.7087	**10** 0.394	–	DL 12 10	**6.00** 1350	**9.70** 2180	16000	25000	**0.0195**
	12 0.4724	**18** 0.7087	**10** 0.394	**7.70** 0.303	DLF 12 10	**6.00** 1350	**9.7** 2180	16000	25000	**0.0195**
	12 0.4724	**18** 0.7087	**12** 0.472	–	DL 12 12	**7.00** 1570	**11.5** 2590	16000	25000	**0.0206**
	12 0.4724	**18** 0.7087	**12** 0.472	**9.7** 0.382	DLF 12 12	**7.00** 1570	**11.5** 2590	16000	25000	**0.0206**
13 0.5118	**13** 0.5118	**19** 0.7480	**12** 0.472	–	DL 13 12	**8.50** 1910	**14.2** 3190	15000	23000	**0.0217**
	13 0.5118	**19** 0.7480	**12** 0.472	**9.7** 0.382	DLF 13 12	**8.50** 1910	**14.2** 3190	15000	23000	**0.0217**
14 0.5512	**14** 0.5512	**20** 0.7874	**12** 0.472	–	DL 14 12	**7.90** 1780	**13.5** 3030	14000	21500	**0.0229**
	14 0.5512	**20** 0.7874	**12** 0.472	**9.7** 0.382	DLF 14 12	**7.90** 1780	**13.5** 3030	14000	21500	**0.0229**
15 0.5906	**15** 0.5906	**21** 0.8268	**12** 0.472	–	DL 15 12	**9.40** 2110	**16.4** 3690	13000	20000	**0.0238**
	15 0.5906	**21** 0.8268	**12** 0.472	**9.7** 0.382	DLF 15 12	**9.40** 2110	**16.4** 3690	13000	20000	**0.0238**
16 0.6299	**16** 0.6299	**22** 0.8661	**12** 0.472	–	DL 16 12	**8.70** 1960	**15.5** 3480	12000	18500	**0.0251**
	16 0.6299	**22** 0.8661	**12** 0.472	**9.7** 0.382	DLF 16 12	**8.70** 1960	**15.5** 3480	12000	18500	**0.0251**
17 0.6693	**17** 0.6693	**23** 0.9055	**12** 0.472	–	DL 17 12	**9.00** 2020	**16.2** 3640	11000	17500	**0.0260**
	17 0.6693	**23** 0.9055	**12** 0.472	**9.7** 0.382	DLF 17 12	**9.00** 2020	**16.2** 3640	11000	17500	**0.0260**
18 0.7087	**18** 0.7087	**24** 0.9449	**12** 0.472	–	DL 18 12	**10.7** 2410	**19.5** 4380	11000	16500	**0.0272**
	18 0.7087	**24** 0.9449	**12** 0.472	**9.7** 0.382	DLF 18 12	**10.7** 2410	**19.5** 4380	11000	16500	**0.0272**
	18 0.7087	**24** 0.9449	**16** 0.630	–	DL 18 16	**16.0** 3600	**29.5** 6630	11000	16500	**0.0304**
	18 0.7087	**24** 0.9449	**16** 0.630	**13.7** 0.539	DLF 18 16	**16.0** 3600	**29.5** 6630	11000	16500	**0.0304**

See Engineering section for discussion of shaft and housing design.

Wt.	S (h5)		H (H6)		Inspection			C_g	Mounting Inner Ring (pg B-84 to B-86)	Shaft Dia.
	Recommended Mounting Dimension				Ring Gage	Plug Gage				
	Max.	Min.	Max.	Min.		Go	No Go			
kg lbs.	**mm** in.	**mm** in.	**mm** in.	**mm** in.						**mm** in.
0.004 0.009	**6.000** 0.2362	**5.995** 0.2360	**12.011** 0.4729	**12.000** 0.4724	**12.000** 0.4724	**6.009** 0.2366	**6.036** 0.2376			**6** 0.2362
0.004 0.010	**6.000** 0.2362	**5.995** 0.2360	**12.011** 0.4729	**12.000** 0.4724	**12.000** 0.4724	**6.009** 0.2366	**6.036** 0.2376			
0.005 0.012	**8.000** 0.3150	**7.994** 0.3147	**14.011** 0.5516	**14.000** 0.5512	**14.000** 0.5512	**8.009** 0.3153	**8.036** 0.3164			**8** 0.3150
0.006 0.013	**8.000** 0.3150	**7.994** 0.3147	**14.011** 0.5516	**14.000** 0.5512	**14.000** 0.5512	**8.009** 0.3153	**8.036** 0.3164			
0.006 0.013	**9.000** 0.3543	**8.994** 0.3541	**14.011** 0.5516	**14.000** 0.5512	**14.000** 0.5512	**9.009** 0.3547	**9.036** 0.3557			**9** 0.3543
0.007 0.015	**9.000** 0.3543	**8.994** 0.3541	**14.011** 0.5516	**14.000** 0.5512	**14.000** 0.5512	**9.009** 0.3547	**9.036** 0.3557			
0.008 0.018	**10.000** 0.3937	**9.994** 0.3935	**16.011** 0.6304	**16.000** 0.6299	**16.000** 0.6299	**10.009** 0.3941	**10.036** 0.3951			**10** 0.3937
0.009 0.020	**10.000** 0.3937	**9.994** 0.3935	**16.011** 0.6304	**16.000** 0.6299	**16.000** 0.6299	**10.009** 0.3941	**10.036** 0.3951			
0.008 0.017	**12.000** 0.4724	**11.992** 0.4721	**18.011** 0.7091	**18.000** 0.7087	**18.000** 0.7087	**12.009** 0.4728	**12.035** 0.4738			**12** 0.4724
0.008 0.018	**12.000** 0.4724	**11.992** 0.4721	**18.011** 0.7091	**18.000** 0.7087	**18.000** 0.7087	**12.009** 0.4728	**12.035** 0.4738			
0.009 0.021	**12.000** 0.4724	**11.992** 0.4721	**18.011** 0.7091	**18.000** 0.7087	**18.000** 0.7087	**12.009** 0.4728	**12.035** 0.4738	**0.0270**	IM 8 12 12.4	
0.010 0.022	**12.000** 0.4724	**11.992** 0.4721	**18.011** 0.7091	**18.000** 0.7087	**18.000** 0.7087	**12.009** 0.4728	**12.035** 0.4738	**0.0270**	IM 8 12 12.4	
0.010 0.022	**13.000** 0.5118	**12.992** 0.5115	**19.013** 0.7485	**19.000** 0.7480	**19.000** 0.7480	**13.009** 0.5122	**13.035** 0.5132	**0.0285**	IM 9 13 12.4	**13** 0.5118
0.011 0.024	**13.000** 0.5118	**12.992** 0.5115	**19.013** 0.7485	**19.000** 0.7480	**19.000** 0.7480	**13.009** 0.5122	**13.035** 0.5132	**0.0285**	IM 9 13 12.4	
0.011 0.023	**14.000** 0.5512	**13.992** 0.5509	**20.013** 0.7879	**20.000** 0.7874	**20.000** 0.7874	**14.009** 0.5515	**14.035** 0.5526	**0.0300**	IM 10 14 12.4	**14** 0.5512
0.012 0.026	**14.000** 0.5512	**13.992** 0.5509	**20.013** 0.7879	**20.000** 0.7874	**20.000** 0.7874	**14.009** 0.5515	**14.035** 0.5526	**0.0300**	IM 10 14 12.4	
0.011 0.024	**15.000** 0.5906	**14.992** 0.5902	**21.013** 0.8273	**21.000** 0.8268	**21.000** 0.8268	**15.009** 0.5909	**15.035** 0.5919	**0.0312**	IM 12 15 12.4	**15** 0.5906
0.012 0.026	**15.000** 0.5906	**14.992** 0.5902	**21.013** 0.8273	**21.000** 0.8268	**21.000** 0.8268	**15.009** 0.5909	**15.035** 0.5919	**0.0312**	IM 12 15 12.4	
0.012 0.026	**16.000** 0.6299	**15.992** 0.6296	**22.013** 0.8667	**22.000** 0.8661	**22.000** 0.8661	**16.009** 0.6303	**16.035** 0.6313	**0.0329**	IM 12 16 12.4	**16** 0.6299
0.013 0.029	**16.000** 0.6299	**15.992** 0.6296	**22.013** 0.8667	**22.000** 0.8661	**22.000** 0.8661	**16.009** 0.6303	**16.035** 0.6313	**0.0329**	IM 12 16 12.4	
0.013 0.029	**17.000** 0.6693	**16.992** 0.6690	**23.013** 0.9060	**23.000** 0.9055	**23.000** 0.9055	**17.009** 0.6696	**17.035** 0.6707	**0.0341**	IM 13 17 12.4	**17** 0.6693
0.014 0.031	**17.000** 0.6693	**16.992** 0.6690	**23.013** 0.9060	**23.000** 0.9055	**23.000** 0.9055	**17.009** 0.6696	**17.035** 0.6707	**0.0341**	IM 13 17 12.4	
0.014 0.031	**18.000** 0.7087	**17.992** 0.7083	**24.013** 0.9454	**24.000** 0.9449	**24.000** 0.9449	**18.009** 0.7090	**18.035** 0.7100	**0.0357**	IM 13 18 12.4	**18** 0.7087
0.016 0.035	**18.000** 0.7087	**17.992** 0.7083	**24.013** 0.9454	**24.000** 0.9449	**24.000** 0.9449	**18.009** 0.7090	**18.035** 0.7100	**0.0357**	IM 13 18 12.4	
0.019 0.042	**18.000** 0.7087	**17.992** 0.7083	**24.013** 0.9454	**24.000** 0.9449	**24.000** 0.9449	**18.009** 0.7090	**18.035** 0.7100	**0.0399**	IM 13 18 16.4	
0.021 0.046	**18.000** 0.7087	**17.992** 0.7083	**24.013** 0.9454	**24.000** 0.9449	**24.000** 0.9449	**18.009** 0.7090	**18.035** 0.7100	**0.0399**	IM 13 18 16.4	

Continued on next page.

FULL COMPLEMENT OPEN ENDS, CLOSED ONE END

— continued

B

METRIC SERIES

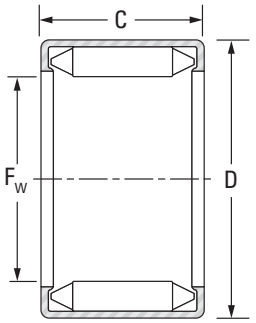

DL

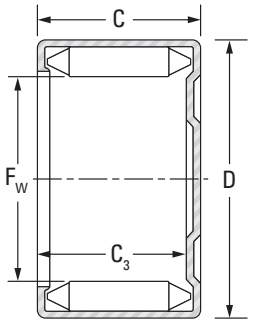

DLF

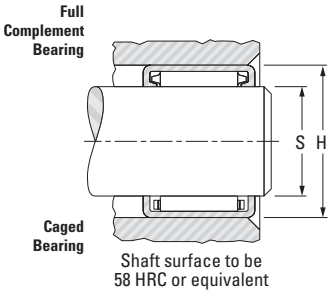

Shaft Dia.	F_w	D	C	$C_{3\,min}$	Bearing Designation	Load Ratings Dynamic C	Load Ratings Static C_0	Speed Rating Grease	Speed Rating Oil	C_g
			-0.3, -0.012							
mm in.	mm in.	mm in.	mm in.	mm in.		kN lbf.		min^{-1}		
20 0.7874	**20** 0.7874	**26** 1.0236	**12** 0.472	–	DL 20 12	**10.2** 2290	**19.5** 4380	10000	15000	**0.0292**
	20 0.7874	**26** 1.0236	**12** 0.472	**9.7** 0.382	DLF 20 12	**10.2** 2290	**19.5** 4380	10000	15000	**0.0292**
	20 0.7874	**26** 1.0236	**16** 0.630	–	DL 20 16	**16.0** 3600	**30.5** 6860	10000	15000	**0.0327**
	20 0.7874	**26** 1.0236	**16** 0.630	**13.7** 0.539	DLF 20 16	**16.0** 3600	**30.5** 6860	10000	15000	**0.0327**
22 0.8661	**22** 0.8661	**28** 1.1024	**16** 0.630	–	DL 22 16	**17.0** 3820	**33.0** 7420	8800	13500	**0.0349**
	22 0.8661	**28** 1.1024	**16** 0.630	**13.7** 0.539	DLF 22 16	**17.0** 3820	**33.0** 7420	8800	13500	**0.0349**
25 0.9843	**25** 0.9843	**33** 1.2992	**16** 0.630	–	DL 25 16	**16.0** 3600	**32.5** 7310	7800	12000	**0.0348**
	25 0.9843	**33** 1.2992	**16** 0.630	**13.7** 0.539	DLF 25 16	**16.0** 3600	**32.5** 7310	7800	12000	**0.0348**
	25 0.9843	**33** 1.2992	**20** 0.787	–	DL 25 20	**22.8** 5130	**46.0** 10300	7800	12000	**0.0379**
	25 0.9843	**33** 1.2992	**20** 0.787	**17.7** 0.697	DLF 25 20	**22.8** 5130	**46.0** 10300	7800	12000	**0.0379**
28 1.1024	**28** 1.1024	**36** 1.4173	**20** 0.787	–	DL 28 20	**24.5** 5510	**52.0** 11700	7200	11000	**0.0417**
	28 1.1024	**36** 1.4173	**20** 0.787	**17.70** 0.697	DLF 28 20	**24.5** 5510	**52.0** 11700	7200	11000	**0.0417**
30 1.1811	**30** 1.1811	**38** 1.4961	**16** 0.630	–	DL 30 16	**21.7** 4880	**46.5** 10500	6500	10000	**0.0403**
	30 1.1811	**38** 1.4961	**16** 0.630	**13.70** 0.539	DLF 30 16	**21.7** 4880	**46.5** 10500	6500	10000	**0.0403**
	30 1.1811	**38** 1.4961	**20** 0.787	–	DL 30 20	**26.0** 5850	**56.0** 12600	6500	10000	**0.0437**
	30 1.1811	**38** 1.4961	**20** 0.787	**17.70** 0.697	DLF 30 20	**26.0** 5850	**56.0** 12600	6500	10000	**0.0437**
	30 1.1811	**38** 1.4961	**25** 0.984	–	DL 30 25	**35.5** 7980	**76.0** 17100	6500	10000	**0.0470**
	30 1.1811	**38** 1.4961	**25** 0.984	**22.70** 0.894	DLF 30 25	**35.5** 7980	**76.0** 17100	6500	10000	**0.0470**
35 1.3780	**35** 1.3780	**43** 1.6929	**16** 0.630	–	DL 35 16	**24.0** 5400	**54.0** 12100	5500	8500	**0.0437**
	35 1.3780	**43** 1.6929	**16** 0.630	**13.70** 0.539	DLF 35 16	**24.0** 5400	**54.0** 12100	5500	8500	**0.0437**
	35 1.3780	**43** 1.6929	**20** 0.787	–	DL 35 20	**29.0** 6520	**65.0** 14600	5500	8500	**0.0477**
	35 1.3780	**43** 1.6929	**20** 0.787	**17.70** 0.697	DLF 35 20	**29.0** 6520	**65.0** 14600	5500	8500	**0.0477**
40 1.5748	**40** 1.5748	**48** 1.8898	**16** 0.630	–	DL 40 16	**26.5** 5960	**62.0** 13900	4900	7500	**0.0479**
	40 1.5748	**48** 1.8898	**16** 0.063	**13.70** 0.539	DLF 40 16	**26.50** 5960	**62.0** 13900	4900	7500	**0.0479**
	40 1.5748	**48** 1.8898	**20** 0.787	–	DL 40 20	**36.0** 8090	**84.0** 18900	4900	7500	**0.0523**
	40 1.5748	**48** 1.8898	**20** 0.787	**17.7** 0.697	DLF 40 20	**36.0** 8090	**84.0** 18900	4900	7500	**0.0523**

See Engineering section for discussion of shaft and housing design.

Wt.	S (h5)		H (H6)		Inspection			C_g	Mounting Inner Ring (pg B-84 to B-86)	Shaft Dia.
	Recommended Mounting Dimension				Ring Gage	Plug Gage				
	Max.	Min.	Max.	Min.		Go	No Go			
kg lbs.	**mm** in.	**mm** in.	**mm** in.	**mm** in.						**mm** in.
0.015 0.033	**20.000** 0.7874	**19.991** 0.7870	**26.013** 1.0241	**26.000** 1.0236	**26.000** 1.0236	**20.009** 0.7878	**20.035** 0.7888	**0.0383**	IM 15 20 12.4	**20** 0.7874
0.017 0.037	**20.000** 0.7874	**19.991** 0.7870	**26.013** 1.0241	**26.000** 1.0236	**26.000** 1.0236	**20.009** 0.7878	**20.035** 0.7888	**0.0383**	IM 15 20 12.4	
0.020 0.044	**20.000** 0.7874	**19.991** 0.7870	**26.013** 1.0241	**26.000** 1.0236	**26.000** 1.0236	**20.009** 0.7878	**20.035** 0.7888	**0.0429**	IM 15 20 16.4	
0.022 0.049	**20.000** 0.7874	**19.991** 0.7870	**26.013** 1.0241	**26.000** 1.0236	**26.000** 1.0236	**20.009** 0.7878	**20.035** 0.7888	**0.0429**	IM 15 20 16.4	
0.022 0.049	**22.000** 0.8661	**21.991** 0.8658	**28.013** 1.1029	**28.000** 1.1024	**28.000** 1.1024	**20.009** 0.7878	**20.035** 0.7888	**0.0458**	IM 17 22 16.4	**22** 0.8661
0.025 0.055	**22.000** 0.8661	**21.991** 0.8658	**28.013** 1.1029	**28.000** 1.1024	**28.000** 1.1024	**20.009** 0.7878	**20.035** 0.7888	**0.0458**	IM 17 22 16.4	
0.035 0.077	**25.000** 0.9843	**24.991** 0.9839	**33.016** 1.2998	**33.000** 1.2992	**33.000** 1.2992	**22.009** 0.8665	**22.035** 0.8675	**0.0457**	IM 20 25 16.4	**25** 0.9843
0.039 0.086	**25.000** 0.9843	**24.991** 0.9839	**33.016** 1.2998	**33.000** 1.2992	**33.000** 1.2992	**22.009** 0.8665	**22.035** 0.8675	**0.0457**	IM 20 25 16.4	
0.043 0.095	**25.000** 0.9843	**24.991** 0.9839	**33.016** 1.2998	**33.000** 1.2992	**33.000** 1.2992	**25.015** 0.9848	**25.041** 0.9859	**0.0497**	IM 20 25 20.4	
0.047 0.104	**25.000** 0.9843	**24.991** 0.9839	**33.016** 1.2998	**33.000** 1.2992	**33.000** 1.2992	**25.015** 0.9848	**25.041** 0.9859	**0.0497**	IM 20 25 20.4	
0.047 0.104	**28.000** 1.1024	**27.991** 1.1020	**36.016** 1.4180	**36.000** 1.4173	**36.000** 1.4173	**28.015** 1.1030	**28.041** 1.1040	**0.0547**	IM 23 28 20.4	**28** 1.1024
0.051 0.112	**28.000** 1.1024	**27.991** 1.1020	**36.016** 1.4180	**36.000** 1.4173	**36.000** 1.4173	**28.015** 1.1030	**28.041** 1.1040	**0.0547**	IM 23 28 20.4	
0.040 0.088	**30.000** 1.1811	**29.991** 1.1807	**38.016** 1.4967	**38.000** 1.4961	**38.000** 1.4961	**30.015** 1.1817	**30.041** 1.1827	**0.0529**	IM 25 30 16.4	**30** 1.1811
0.045 0.099	**30.000** 1.1811	**29.991** 1.1807	**38.016** 1.4967	**38.000** 1.4961	**38.000** 1.4961	**30.015** 1.1817	**30.041** 1.1827	**0.0529**	IM 25 30 16.4	
0.050 0.110	**30.000** 1.1811	**29.991** 1.1807	**38.016** 1.4967	**38.000** 1.4961	**38.000** 1.4961	**30.015** 1.1817	**30.041** 1.1827	**0.0573**	IM 25 30 20.4	
0.055 0.121	**30.000** 1.1811	**29.991** 1.1807	**38.016** 1.4967	**38.000** 1.4961	**38.000** 1.4961	**30.015** 1.1817	**30.041** 1.1827	**0.0573**	IM 25 30 20.4	
0.063 0.139	**30.000** 1.1811	**29.991** 1.1807	**38.016** 1.4967	**38.000** 1.4961	**38.000** 1.4961	**30.015** 1.1817	**30.041** 1.1827	**0.0617**	IM 25 30 25	
0.068 0.150	**30.000** 1.1811	**29.991** 1.1807	**38.016** 1.4967	**38.000** 1.4961	**38.000** 1.4961	**30.015** 1.1817	**30.041** 1.1827	**0.0617**	IM 25 30 25	
0.046 0.101	**35.000** 1.3780	**34.989** 1.3775	**43.016** 1.6935	**43.000** 1.6929	**43.000** 1.6929	**35.015** 1.3785	**35.041** 1.3796	**0.0573**	IM 30 35 16.4	**35** 1.3780
0.053 0.117	**35.000** 1.3780	**34.989** 1.3775	**43.016** 1.6935	**43.000** 1.6929	**43.000** 1.6929	**35.015** 1.3785	**35.041** 1.3796	**0.0573**	IM 30 35 16.4	
0.057 0.126	**35.000** 1.3780	**34.989** 1.3775	**43.016** 1.6935	**43.000** 1.6929	**43.000** 1.6929	**35.015** 1.3785	**35.041** 1.3796	**0.0626**	IM 30 35 20.4	
0.064 0.141	**35.000** 1.3780	**34.989** 1.3775	**43.016** 1.6935	**43.000** 1.6929	**43.000** 1.6929	**35.015** 1.3785	**35.041** 1.3796	**0.0626**	IM 30 35 20.4	
0.051 0.112	**40.000** 1.5748	**39.989** 1.5744	**48.016** 1.8904	**48.000** 1.8898	**48.000** 1.8898	**40.015** 1.5754	**40.041** 1.5764	**0.0628**	IM 35 40 16.4	**40** 1.5748
0.061 0.134	**40.000** 1.5748	**39.989** 1.5744	**48.016** 1.8904	**48.000** 1.8898	**48.000** 1.8898	**40.015** 1.5754	**40.041** 1.5764	**0.0628**	IM 35 40 16.4	
0.064 0.141	**40.000** 1.5748	**39.989** 1.5744	**48.016** 1.8904	**48.000** 1.8898	**48.000** 1.8898	**40.015** 1.5754	**40.041** 1.5764	**0.0686**	IM 35 40 20.4	
0.074 0.163	**40.000** 1.5748	**39.989** 1.5744	**48.016** 1.8904	**48.000** 1.8898	**48.000** 1.8898	**40.015** 1.5754	**40.041** 1.5764	**0.0686**	IM 35 40 20.4	

Continued on next page.

FULL COMPLEMENT OPEN ENDS, CLOSED ONE END

— continued

B

METRIC SERIES

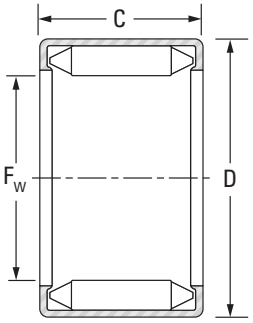

DL

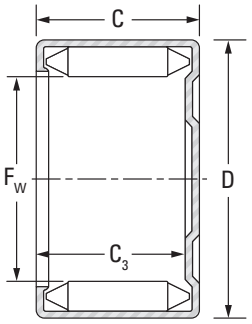

DLF

Shaft Dia.	F_w	D	C	$C_{3\,min}$	Bearing Designation	Load Ratings Dynamic C	Load Ratings Static C_0	Speed Rating Grease	Speed Rating Oil	C_g
			-0.3, -0.012							
mm in.	**mm** in.	**mm** in.	**mm** in.	**mm** in.		**kN** lbf.		min^{-1}		
44 1.7323	**44** 1.7323	**52** 2.0472	**16** 0.630	–	DL 44 16	**23.80** 5350	**57.00** 12800	4400	6800	**0.0512**
	44 1.7323	**52** 2.0472	**16** 0.630	**13.70** 0.539	DLF 44 16	**23.80** 5350	**57.00** 12800	4400	6800	**0.0512**
47 1.8504	**47** 1.8504	**55** 2.1654	**16** 0.630	–	DL 47 16	**25.00** 5620	**61.00** 13700	4200	6400	**0.0536**
	47 1.8504	**55** 2.1654	**16** 0.630	**13.70** 0.539	DLF 47 16	**25.00** 5620	**61.00** 13700	4200	6400	**0.0536**
50 1.9685	**50** 1.9685	**58** 2.2835	**12** 0.472	–	DL 50 12	**20.00** 4500	**50.00** 11200	3900	6000	**0.0508**
	50 1.9685	**58** 2.2835	**12** 0.472	**9.70** 0.382	DLF 50 12	**20.00** 4500	**50.00** 11200	3900	6000	**0.0508**
	50 1.9685	**58** 2.2835	**18** 0.709	–	DL 50 18	**36.50** 8210	**92.00** 20700	3900	6000	**0.0587**
	50 1.9685	**58** 2.2835	**18** 0.709	**15.70** 0.618	DLF 50 18	**36.50** 8210	**92.00** 20700	3900	6000	**0.0587**
	50 1.9685	**58** 2.2835	**20** 0.787	–	DL 50 20	**37.00** 8320	**93.00** 20900	3900	6000	**0.0611**
	50 1.9685	**58** 2.2835	**20** 0.787	**17.70** 0.697	DLF 50 20	**37.00** 8320	**93.00** 20900	3900	6000	**0.0611**
55 2.1654	**55** 2.1654	**63** 2.4803	**20** 0.787	–	DL 55 20	**39.5** 8880	**102.0** 22900	3600	5500	**0.0653**
	55 2.1654	**63** 2.4803	**20** 0.787	**17.70** 0.697	DLF 55 20	**39.5** 8880	**102.0** 22900	3600	5500	**0.0653**

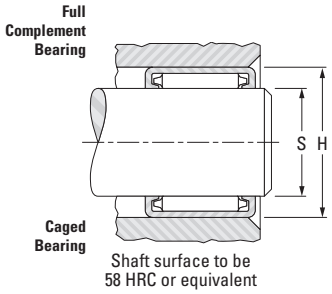

See Engineering section for discussion of shaft and housing design.

Wt.	S (h5)		H (H6)		Inspection			C_g	Mounting Inner Ring (pg B-84 to B-86)	Shaft Dia.
	Recommended Mounting Dimension				Ring Gage	Plug Gage				
	Max.	Min.	Max.	Min.		Go	No Go			
kg lbs.	**mm** in.	**mm** in.	**mm** in.	**mm** in.						**mm** in.
0.056 0.123	**44.000** 1.7323	**43.989** 1.7319	**52.019** 2.0480	**52.000** 2.0472	**52.000** 2.0472	**44.015** 1.7329	**44.041** 1.7339	**0.0672**	IM 40 44 16.4	**44** 1.7323
0.066 0.146	**44.000** 1.7323	**43.989** 1.7319	**52.019** 2.0480	**52.000** 2.0472	**52.000** 2.0472	**44.015** 1.7329	**44.041** 1.7339	**0.0672**	IM 40 44 16.4	
0.060 0.132	**47.000** 1.8504	**46.989** 1.8500	**55.019** 2.1661	**55.000** 2.1654	**55.000** 2.1654	**47.015** 1.8510	**47.041** 1.8520			**47** 1.8504
0.071 0.157	**47.000** 1.8504	**46.989** 1.8500	**55.019** 2.1661	**55.000** 2.1654	**55.000** 2.1654	**47.015** 1.8510	**47.041** 1.8520			
0.047 0.104	**50.000** 1.9685	**49.989** 1.9681	**58.019** 2.2842	**58.000** 2.2835	**58.000** 2.2835	**50.015** 1.9691	**50.041** 1.9701			**50** 1.9685
0.061 0.134	**50.000** 1.9685	**49.989** 1.9681	**58.019** 2.2842	**58.000** 2.2835	**58.000** 2.2835	**50.015** 1.9691	**50.041** 1.9701			
0.071 0.157	**50.000** 1.9685	**49.989** 1.9681	**58.019** 2.2842	**58.000** 2.2835	**58.000** 2.2835	**50.015** 1.9691	**50.041** 1.9701			
0.085 0.187	**50.000** 1.9685	**49.989** 1.9681	**58.019** 2.2842	**58.000** 2.2835	**58.000** 2.2835	**50.015** 1.9691	**50.041** 1.9701			
0.077 0.170	**50.000** 1.9685	**49.989** 1.9681	**58.019** 2.2842	**58.000** 2.2835	**58.000** 2.2835	**50.015** 1.9691	**50.041** 1.9701	**0.0802**	IM 45 50 20.4	
0.091 0.201	**50.000** 1.9685	**49.989** 1.9681	**58.019** 2.2842	**58.000** 2.2835	**58.000** 2.2835	**50.015** 1.9691	**50.041** 1.9701	**0.0802**	IM 45 50 20.4	
0.086 0.190	**55.000** 2.1654	**54.987** 2.1648	**63.019** 2.4811	**63.000** 2.4803	**63.000** 2.4803	**55.015** 2.1659	**55.041** 2.1670	**0.0857**	IM 50 55 20.4	**55** 2.1654
0.102 0.225	**55.000** 2.1654	**54.987** 2.1648	**63.019** 2.4811	**63.000** 2.4803	**63.000** 2.4803	**55.015** 2.1659	**55.041** 2.1670	**0.0857**	IM 50 55 20.4	

INNER RINGS FOR FULL COMPLEMENT DRAWN CUP NEEDLE ROLLER BEARINGS

METRIC SERIES

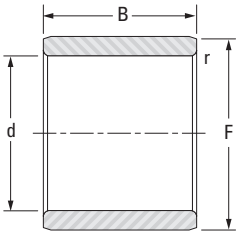

IM

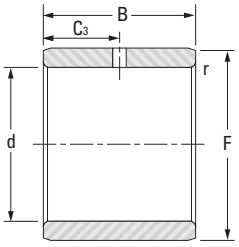

IMC

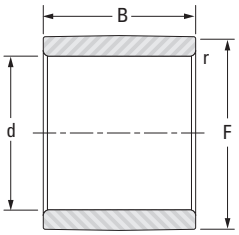

IM…R6

Shaft Dia.	d	F [1]	B	Hole Location[2] C_3	$r_{s\,min}$	Inner Ring Designation	Wt.
mm in.	**mm** in.	**mm** in.	**mm** in.	**mm** in.	**mm** in.		**kg** lbs.
8 0.3150	**8** 0.3150	**12** 0.4724	**12.4** 0.488		**0.3** 0.01	IM 8 12 12.4	**0.006** 0.013
9 0.3543	**9** 0.3543	**13** 0.5118	**12.4** 0.488		**0.3** 0.01	IM 9 13 12.4	**0.006** 0.013
	9 0.3543	**13** 0.5118	**12.4** 0.488		**0.3** 0.01	IM 9 13 12.4 R6	**0.006** 0.013
10 0.3937	**10** 0.3937	**14** 0.5512	**12.4** 0.488		**0.3** 0.01	IM 10 14 12.4	**0.007** 0.015
	10 0.3937	**14** 0.5512	**16.4** 0.646		**0.3** 0.01	IM 10 14 16.4	**0.009** 0.020
11 0.4331	**11** 0.4331	**15** 0.5906	**12.4** 0.488		**0.3** 0.01	IM 11 15 12.4	**0.008** 0.018
12 0.4724	**12** 0.4724	**15** 0.5906	**12.4** 0.488		**0.2** 0.01	IM 12 15 12.4	**0.006** 0.013
	12 0.4724	**16** 0.6299	**12.4** 0.488		**0.2** 0.01	IM 12 16 12.4	**0.008** 0.018
	12 0.4724	**16** 0.6299	**12.4** 0.488		**0.3** 0.01	IM 12 16 12.4 R6	**0.008** 0.018
	12 0.4724	**16** 0.6299	**12.4** 0.488	**6.2** 0.24	**0.3** 0.01	IMC 12 16 12.4	**0.008** 0.018
13 0.5118	**13** 0.5118	**17** 0.6693	**12.4** 0.488		**0.3** 0.01	IM 13 17 12.4	**0.009** 0.020
	13 0.5118	**18** 0.7087	**12.4** 0.488		**0.35** 0.014	IM 13 18 12.4	**0.011** 0.025
	13 0.5118	**18** 0.7087	**12.4** 0.488		**0.35** 0.014	IM 13 18 12.4 R6	**0.011** 0.025
	13 0.5118	**18** 0.7087	**16.4** 0.646		**0.35** 0.014	IM 13 18 16.4	**0.015** 0.033
15 0.5906	**15** 0.5906	**20** 0.7874	**12.4** 0.488		**0.35** 0.014	IM 15 20 12.4	**0.013** 0.028
	15 0.5906	**20** 0.7874	**16.4** 0.646		**0.35** 0.014	IM 15 20 16.4	**0.017** 0.037
	17 0.6693	**22** 0.8661	**16.4** 0.646		**0.35** 0.014	IM 17 22 16.4	**0.019** 0.041
	17 0.6693	**22** 0.8661	**16.4** 0.646		**0.35** 0.014	IM 17 22 16.4 R6	**0.019** 0.041
17 0.6693	**17** 0.6693	**22** 0.8661	**16.4** 0.646	**8.2** 0.32	**0.35** 0.014	IMC 17 22 16.4	**0.019** 0.041
20 0.7874	**20** 0.7874	**25** 0.9843	**16.4** 0.646		**0.35** 0.014	IM 20 25 16.4	**0.022** 0.047
	20 0.7874	**25** 0.9843	**16.4** 0.646		**0.35** 0.014	IM 20 25 16.4 R6	**0.022** 0.047
	20 0.7874	**25** 0.9843	**16.4** 0.646	**8.2** 0.32	**0.35** 0.014	IMC 20 25 16.4	**0.022** 0.047
	20 0.7874	**25** 0.9843	**20.4** 0.803		**0.35** 0.014	IM 20 25 20.4	**0.027** 0.060

[1] Call for O.D. tolerance
[2] Single 2.000 mm (0.0787 in.) dia. through hole

Continued on next page.

INNER RINGS FOR FULL COMPLEMENT DRAWN CUP NEEDLE ROLLER BEARINGS – *continued*

METRIC SERIES

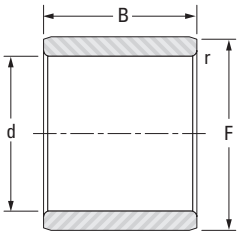

IM

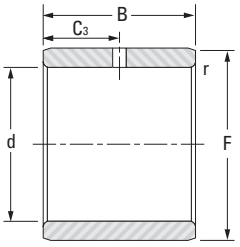

IMC

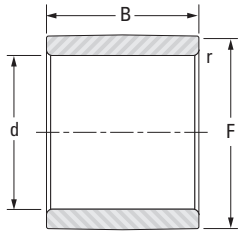

IM…R6

Shaft Dia.	d	F [1]	B	Hole Location[2] C_3	$r_{s\,min}$	Inner Ring Designation	Wt.
mm in.	**mm** in.	**mm** in.	**mm** in.	**mm** in.	**mm** in.		**kg** lbs.
20 0.7874	**20** 0.7874	**25** 0.9843	**20.4** 0.803	**10.2** 0.40	**0.35** 0.014	IMC 20 25 20.4	**0.027** 0.060
	20 0.7874	**25** 0.9843	**25.0** 0.984		**0.35** 0.014	IM 20 25 25	**0.033** 0.073
23 0.9055	**23** 0.9055	**28** 1.1024	**20.4** 0.803		**0.35** 0.014	IM 23 28 20.4	**0.031** 0.067
25 0.9843	**25** 0.9843	**30** 1.1811	**16.4** 0.646		**0.35** 0.014	IM 25 30 16.4	**0.027** 0.060
	25 0.9843	**30** 1.1811	**16.4** 0.646		**0.35** 0.014	IM 25 30 16.4 R6	**0.027** 0.060
	25 0.9843	**30** 1.1811	**16.4** 0.646	**8.2** 0.32	**0.35** 0.014	IMC 25 30 16.4	**0.027** 0.058
	25 0.9843	**30** 1.1811	**20.4** 0.803		**0.35** 0.014	IM 25 30 20.4	**0.033** 0.073
	25 0.9843	**30** 1.1811	**20.4** 0.803	**10.2** 0.40	**0.35** 0.014	IMC 25 30 20.4	**0.033** 0.073
	25 0.9843	**30** 1.1811	**25** 0.984		**0.35** 0.014	IM 25 30 25	**0.040** 0.088
30 1.1811	**30** 1.1811	**35** 1.3780	**16.4** 0.646		**0.35** 0.014	IM 30 35 16.4	**0.031** 0.068
	30 1.1811	**35** 1.3780	**16.4** 0.646		**0.35** 0.014	IM 30 35 16.4 R6	**0.031** 0.068
	30 1.1811	**35** 1.3780	**16.4** 0.646	**8.2** 0.32	**0.35** 0.014	IMC 30 35 16.4	**0.031** 0.068
	30 1.1811	**35** 1.3780	**20.4** 0.803		**0.35** 0.014	IM 30 35 20.4	**0.039** 0.086
	30 1.1811	**35** 1.3780	**20.4** 0.803		**0.35** 0.014	IM 30 35 20.4 R6	**0.039** 0.086
	30 1.1811	**35** 1.3780	**20.4** 0.803	**10.2** 0.40	**0.35** 0.014	IMC 30 35 20.4	**0.039** 0.086
	30 1.1811	**35** 1.3780	**25.0** 0.984		**0.35** 0.014	IM 30 35 25	**0.048** 0.106
35 1.3780	**35** 1.3780	**40** 1.5748	**16.4** 0.646		**0.35** 0.014	IM 35 40 16.4	**0.036** 0.079
	35 1.3780	**40** 1.5748	**16.4** 0.646		**0.35** 0.014	IM 35 40 16.4 R6	**0.036** 0.079
	35 1.3780	**40** 1.5748	**20.4** 0.803		**0.35** 0.014	IM 35 40 20.4	**0.045** 0.099
	35 1.3780	**40** 1.5748	**20.4** 0.803		**0.35** 0.014	IM 35 40 20.4 R6	**0.045** 0.099
	35 1.3780	**40** 1.5748	**20.4** 0.803	**10.2** 0.40	**0.35** 0.014	IMC 35 40 20.4	**0.045** 0.099
	35 1.3780	**40** 1.5748	**25** 0.984		**0.35** 0.014	IM 35 40 25	**0.055** 0.121
40 1.5748	**40** 1.5748	**44** 1.7323	**16.4** 0.646		**0.3** 0.01	IM 40 44 16.4	**0.032** 0.071

[1] Call for O.D. tolerance
[2] Single 2.000 mm (0.0787 in.) dia. through hole

Continued on next page.

INNER RINGS FOR FULL COMPLEMENT DRAWN CUP NEEDLE ROLLER BEARINGS – *continued*

METRIC SERIES

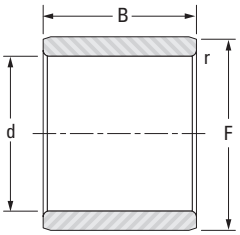

IM

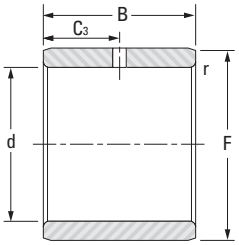

IMC

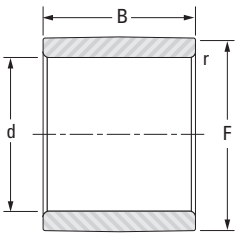

IM…R6

Shaft Dia.	d	F [1]	B	Hole Location[2] C_3	$r_{s\,min}$	Inner Ring Designation	Wt.
mm in.	**mm** in.	**mm** in.	**mm** in.	**mm** in.	**mm** in.		**kg** lbs.
40 1.5748	**40** 1.5748	**44** 1.7323	**16.4** 0.646		**0.3** 0.01	IM 40 44 16.4 R6	**0.032** 0.071
	40 1.5748	**44** 1.7323	**16.4** 0.646	**8.2** 0.32	**0.3** 0.01	IMC 40 44 16.4	**0.032** 0.071
	40 1.5748	**45** 1.7717	**20.4** 0.803		**0.35** 0.014	IM 40 45 20.4	**0.051** 0.112
	40 1.5748	**44** 1.7323	**20.4** 0.803	**10.2** 0.40	**0.35** 0.014	IMC 40 45 20.4	**0.051** 0.112
45 1.7717	**45** 1.7717	**50** 1.9685	**20.4** 0.803		**0.65** 0.026	IM 45 50 20.4	**0.056** 0.123
	45 1.7717	**50** 1.9685	**20.4** 0.803		**0.65** 0.026	IM 45 50 20.4 R6	**0.056** 0.123
	45 1.7717	**50** 1.9685	**25** 0.984		**0.65** 0.026	IM 45 50 25	**0.069** 0.152
	45 1.7717	**60** 2.3622	**25** 0.984		**0.65** 0.026	IM 45 50 25 R6	**0.069** 0.152
50 1.9685	**50** 1.9685	**55** 2.1654	**20.4** 0.803		**0.65** 0.026	IM 50 55 20.4 R6	**0.062** 0.137
	50 1.9685	**55** 2.1654	**20.4** 0.803		**0.65** 0.026	IM 50 55 20.4	**0.062** 0.137

[1] Call for O.D. tolerance
[2] Single 2.000 mm (0.0787 in.) dia. through hole

DRAWN CUP NEEDLE ROLLER BEARINGS

INCH SERIES

When a rolling bearing is needed for a compact and economical design, where it is not practical to harden and grind the housing bore, or where the housing materials are of low rigidity such as cast iron, aluminum or even plastics – drawn cup needle roller bearings should be considered.

REFERENCE STANDARDS

- **ANSI/ABMA 18.2** – needle roller bearings - radial, inch design.
- **ASTM F2162** – standard specification for bearing, roller, needle: drawn outer ring, full complement, without inner ring, open and closed end, standard type.

B **M** **J** **JTT**

Full complement bearings **Caged bearings**

Fig. B-7. Types of inch series drawn cup needle roller bearings

IDENTIFICATION

The prefix letter, or letters in inch series drawn cup bearing designation, denote whether the bearings are made with a full complement of needle rollers or caged needle rollers. The use of a full complement of needle rollers is indicated by the prefix code letter **B**, and for use of caged needle rollers by the prefix code letter **J**.

Inch bearings are available in either of two radial cross sections. The larger cross section is indicated by the prefix code letter **H**. Absence of the letter **H** indicates the smaller radial cross section.

These major features of dimension and construction are summarized in Table B-9.

In addition, there can be other identifying letters which cover special modification. Please consult your representative when special modifications are required.

Because the entire identification code in the bearing designation may not appear on the bearing itself, the manufacturer's parts list (or another reliable source) should always be consulted when ordering bearings for service or field replacement.

Table B-9. Prefix letter in bearing designations

	Prefix letters in bearing designation	
	Smaller roller	Larger roller
Full complement (mechanically retained)	B	BH
Caged	J	JH

CONSTRUCTION

FULL COMPLEMENT BEARINGS

The original drawn cup needle roller bearing employs a full complement of needle rollers. The full complement drawn cup bearing combines maximum load-carrying capability with the advantages of the drawn outer ring.

The inward turned lips of the cup are used to mechanically retain the full complement of needle rollers, providing their positive radial retention – even though it may be necessary to remove the shaft repeatedly during servicing of the mechanism employing the bearing.

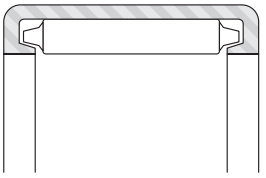

Fig. B-8. Full complement bearing

CAGED BEARINGS

The one-piece steel cage, used in most caged drawn cup bearings, is designed to provide rigidity and minimize wear. This cage design separates the roller guiding and roller retainment functions. The portions of the cage that retain the rollers cannot contact the rollers while the bearing is operating. Thus, there is no wear which might affect roller retention.

The cage contacts the rollers only near their ends at the roller pitch line, so accurate guidance is achieved with least effort. Pitch line guidance at the ends of the rollers prevents skewing and assures roller stability, with little stress on the cage itself. The design minimizes the contact area and force required for roller guidance, and thus minimizes drag between cage and rollers.

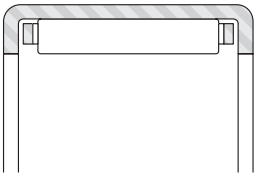

Fig. B-9. Caged bearing

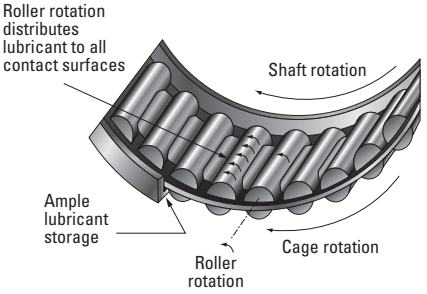

Fig. B-10. Cage design

The same design feature that assures no contact between roller retention bars and rollers while the bearing is operating, also provides ample clearance along the length of the roller to enhance the circulation of lubricant.

There are bearings with other cage designs. Bearings with engineered polymer cages are for use where operating conditions permit. Before applying bearings with engineered polymer cages, please consult your representative.

SEALED BEARINGS

Drawn cup caged needle roller bearings are offered with integral seals. The tables of dimensions on pages B-120 and B-121 indicate those sizes available with lip contact seals which limit the bearing operating temperature between -30° C and 110° C (-25° F and 225° F). The seal lip design achieves a light and constant contact with the shaft throughout the range of mounting bearing clearances thereby ensuring positive sealing and low frictional drag.

Sealed drawn cup bearings are intended to retain grease or non-pressurized oil within a bearing while also preventing contaminants from entering the raceway area.

Details of shaft design for sealed bearings are given in the engineering section.

The standard lip contact seals are compatible with common lubricating oils and petroleum based fuels. But they are adversely affected by certain fire-resistant hydraulic fluids and most common solvents.

If the operating temperature must be outside of the specified range, or if the seals are exposed to unusual fluids, please consult your representative.

DIMENSIONAL ACCURACY AND MOUNTING DIMENSIONS

MANUFACTURING TOLERANCES AND RESULTING CLEARANCES

Reference: J-1616 bearing

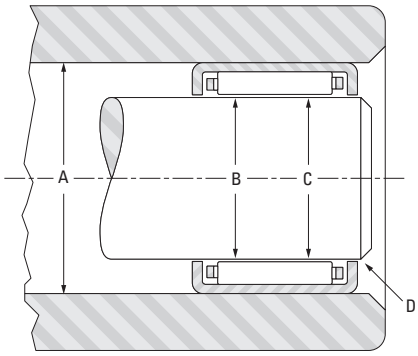

A. Housing bore tolerance 0.025 mm (0.0010in.)
B. Manufacturing tolerance for bearing 0.023 mm (0.0009 in.)
C. Shaft diameter tolerance 0.013 mm (0.0005 in.)
D. Min. Initial radial clearance 0.013 mm (0.0005 in.)

Fig. 11. Manufacturing tolerances and resulting clearances

BEARING MOUNTING FITS AND RADIAL INTERNAL CLEARANCE

Drawn cup bearings are manufactured to a degree of precision that will satisfy the radial clearance requirements of most applications. The total radial clearance of an installed drawn cup bearing results from the buildup of manufacturing tolerances of the housing bore, inner raceway O.D., and the bearing – as well as the minimum radial clearance required for the application.

For bearings of nominal inch dimensions, the suggested mounting dimensions will provide correct running clearance for most applications. Closer control of radial clearance would be governed by the user's capability of holding housing and shaft raceway dimensional tolerances tighter than the limits shown in the bearing tables.

The drawing illustrates the manufacturing tolerances and resulting clearances applying to medium size drawn cup bearings, in rotating applications, when using the suggested tabulated mounting dimensions.

Radial clearance in a mounted bearing may be more closely controlled by reducing the manufacturing tolerances of the housing bore and inner raceway diameter. Where extremely close control of radial clearance is required for bearings of nominal inch dimensions, extra-precision full complement bearings are available (see page B-108).

TOLERANCES FOR HOUSING MATERIALS OF LOW RIGIDITY

For housing materials of low rigidity, or steel housings of small section, it is suggested that for initial trial the housing bore diameters given in the bearing tables be reduced by the amounts shown in Table B-10. To maintain normal radial internal clearance, the inner raceway diameter tolerance given in the bearing tables should be used.

Table B-10. Low Rigidity Housing Bore

Nom. housing bore				Subtract	
Over	Incl.	Over	Incl.		
mm		in.		mm	in.
0.0	**9.5**	0.00	0.38	**0.010**	0.0004
9.5	**25.4**	0.38	1.00	**0.015**	0.0006
25.4	**50.8**	1.00	2.00	**0.025**	0.0010
50.8	**76.2**	2.00	3.00	**0.030**	0.0012
76.2	**152.4**	3.00	6.00	**0.036**	0.0014

OUTER RING ROTATION

For applications where the outer ring rotates with respect to the load, it is suggested that both the housing bore and inner raceway diameter be reduced. Bearings of nominal inch dimensions should have the housing bore and inner raceway diameters reduced by 0.013 mm (0.0005 in.)

OSCILLATING MOTION

Applications involving oscillating motion often require reduced radial clearances. This reduction is accomplished by increasing the shaft raceway diameters as shown in Table B-11.

Table B-11. Nominal inch bearing oscillating shaft size

Shaft size		Add	
mm	in.	mm	in.
2.38 to 4.76	0.094 to 0.188	**0.008**	0.0003
6.35 to 47.62	0.250 to 1.875	**0.013**	0.0005
50.8 to 139.70	2.000 to 5.500	**0.015**	0.0006

INNER RINGS

Where it becomes impractical to meet the shaft raceway design requirements (hardness, case depth, surface finish, etc.) outlined in the engineering section, standard inner rings for drawn cup bearings are available. These are tabulated on pages B-122 to B-124 of the drawn cup section.

Inner rings for drawn cup bearings are designed to be a loose transition fit on the shaft and should be clamped against a shoulder. If a tight transition fit must be used to keep the inner ring from rotating relative to the shaft, the inner ring O.D., as mounted, must not exceed the raceway diameters required by the drawn cup bearing for the particular application.

LUBRICATION

Inch series drawn cup bearings can be furnished with an oil hole (centered in the drawn cup) to facilitate re-lubrication. If desired, specify on order by adding an **-OH** suffix to the bearing designation.

LOAD RATING FACTORS

Dynamic Loads

Drawn cup needle roller bearings can accommodate only radial loads.

$P = F_r$

P = The maximum dynamic radial load that may be applied to a drawn cup bearing based on the dynamic load rating, C given in the bearing tables. This load should be $\leq$ C/3.

Static Loads

$$f_0 = \frac{C_0}{P_0}$$

f_0 = static load safety factor

C_0 = basic static load rating

P_0 = maximum applied static load

To ensure satisfactory operation of drawn cup needle roller bearings under all types of conditions the static load safety factor f_0 should be $\geq$ 3.

ADJUSTED RATING LIFE

When application data includes details of operating temperature, oil viscosity, operating speed and the applied load meets the $\leq$ C/3 condition, adjusted rating life may be evaluated using the information given in the engineering section of this catalog.

INSPECTION PROCEDURES

Although the bearing cup (outer ring) is accurately drawn from strip steel it may go out of round during heat treatment. When the bearing is pressed into a true, round housing or ring gage of correct size and wall thickness, it becomes round and is sized properly. For this reason, it is incorrect to inspect an unmounted drawn cup bearing by measuring the O.D. The correct method for inspecting the bearing size is to:

1. Press the bearing into a ring gage of proper size.
2. Plug the bearing bore with the appropriate "go" and "no go" gages.

Table B-12 on page B-91 provides the correct ring and plug gage diameters for inspecting Torrington drawn cup needle roller bearings. When the letter **H** appears in the columns headed "Bearing Bore Designation" and "Nominal Shaft Diameter," the gage sizes listed are for the larger cross section bearings which include **H** in their bearing designation prefix.

Example

Find the ring gage and plug gage dimensions for a BH-68 bearing.

The nominal bore diameter (F_w) for this bearing, as shown in the table of dimensions on page B-91, is 9.525 mm (0.3750 in.). Since the letter H appears in the bearing designation, the following information will be found opposite H6 9.525 mm (0.3750 in.) in Table B-12 on page B-91.

	in.
ring gage	0.6255
diameter under needle rollers, min.	0.3765
diameter under needle rollers, max.	0.3774

The "go" plug gage is the same size as the minimum needle roller complement bore diameter and the "no go" plug gage size is 0.002 mm (0.0001 in.) larger than the maximum bore diameter. Therefore the correct ring and plug gage dimensions are:

	in.
ring gage	0.6255
plug gage, "go"	0.3765
plug gage, "no go"	0.3775

These same gage dimensions also apply to JH-68.

Table B-12. Ring and plug gage dimensions

Bearing bore designation	Nominal shaft diameter	Nominal. bore diameter	Ring gage	Needle roller complement bore diameter	
				Max.	Min
	mm in.	mm in.	mm in.	mm in.	mm in.
2	**3.175** 1/8	**3.175** 0.1250	**6.363** 0.2505	**3.218** 0.1267	**3.195** 0.1258
2 1/2	**3.970** 5/32	**3.967** 0.1562	**7.155** 0.2817	**4.013** 0.1580	**3.99** 0.1571
3	**4.763** 3/16	**4.763** 0.1875	**8.730** 0.3437	**4.806** 0.1892	**4.783** 0.1883
4	**6.350** 1/4	**6.350** 0.2500	**11.125** 0.4380	**6.411** 0.2524	**6.388** 0.2515
5	**7.938** 5/16	**7.938** 0.3125	**12.713** 0.5005	**7.998** 0.3149	**7.976** 0.3140
H 5	**H 7.938** H 5/16	**7.938** 0.3125	**14.300** 0.5630	**7.998** 0.3149	**7.976** 0.3140
6	**9.525** 3/8	**9.525** 0.3750	**14.300** 0.5630	**9.586** 0.3774	**9.563** 0.3765
H 6	**H 9.525** H 3/8	**9.525** 0.3750	**15.888** 0.6255	**9.586** 0.3774	**9.563** 0.3765
7	**11.113** 7/16	**11.113** 0.4375	**15.888** 0.6255	**11.174** 0.4399	**11.151** 0.4390
H 7	**H 11.113** H 7/16	**11.113** 0.4375	**17.475** 0.6880	**11.174** 0.4399	**11.151** 0.4390
8	**12.700** 1/2	**12.700** 0.5000	**17.475** 0.6880	**12.761** 0.5024	**12.738** 0.5015
H 8	**H12.700** H 1/2	**12.700** 0.5000	**19.063** 0.7505	**12.761** 0.5024	**12.738** 0.5015
9	**14.288** 9/16	**14.288** 0.5625	**19.063** 0.7505	**14.349** 0.5649	**14.326** 0.5640
H 9	**H 14.288** H 9/16	**14.288** 0.5625	**20.650** 0.8130	**14.349** 0.5649	**14.326** 0.5640
10	**15.875** 5/8	**15.875** 0.6250	**20.650** 0.8130	**14.349** 0.6274	**15.913** 0.6265
H 10	**H 15.875** H 5/8	**15.875** 0.6250	**22.238** 0.8755	**14.349** 0.6274	**15.913** 0.6265
11	**17.463** 11/16	**17.463** 0.6875	**22.238** 0.8755	**17.524** 0.6899	**17.501** 0.6890
H 11	**H 17.463** H 11/16	**17.463** 0.6875	**23.825** 0.9380	**17.524** 0.6899	**17.501** 0.6890
12	**19.050** 3/4	**19.050** 0.7500	**25.387** 0.9995	**19.086** 0.7514	**19.063** 0.7505
H 12	**H 19.050** H 3/4	**19.050** 0.7500	**26.975** 1.0620	**19.086** 0.7514	**19.063** 0.7505
13	**20.638** 13/16	**20.638** 0.8125	**26.975** 1.0620	**20.673** 0.8139	**20.650** 0.8130
H 13	**H 20.638** H 13/16	**20.638** 0.8125	**28.562** 1.1245	**20.673** 0.8139	**20.650** 0.8130
14	**22.225** 7/8	**22.225** 0.8750	**28.562** 1.1245	**22.261** 0.8764	**22.238** 0.8755
H 14	**H 22.225** H 7/8	**22.225** 0.8750	**30.150** 1.1870	**22.261** 0.8764	**22.238** 0.8755
15	**23.813** 15/16	**23.813** 0.9375	**30.150** 1.1870	**23.848** 0.9389	**23.825** 0.9380
16	**25.400** 1	**25.400** 1.0000	**31.737** 1.2495	**25.436** 1.0014	**25.413** 1.0005
H 16	**H 25.400** H 1	**25.400** 1.0000	**33.325** 1.3120	**25.436** 1.0014	**25.413** 1.0005
17	**26.988** 1 1/16	**26.988** 1.0625	**33.325** 1.3120	**27.023** 1.0639	**27.000** 1.0630
18	**28.575** 1 1/8	**28.575** 1.1250	**34.912** 1.3745	**28.611** 1.1264	**28.588** 1.1255
H 18	**H 28.575** H 1 1/8	**28.575** 1.1250	**38.087** 1.4995	**28.611** 1.1264	**28.588** 1.1255
19	**30.163** 1 3/16	**30.163** 1.1875	**38.087** 1.4995	**30.198** 1.1889	**30.175** 1.1880
20	**31.750** 1 1/4	**31.750** 1.2500	**38.087** 1.4995	**31.786** 1.2514	**31.763** 1.2505
H 20	**H 31.750** H 1 1/4	**31.750** 1.2500	**41.262** 1.6245	**31.786** 1.2514	**31.763** 1.2505
21	**33.338** 1 5/16	**33.338** 1.3125	**41.262** 1.6245	**33.376** 1.3140	**33.350** 1.3130
22	**34.925** 1 3/8	**34.925** 1.3750	**41.262** 1.6245	**34.963** 1.3765	**34.938** 1.3755
H 22	**H 34.925** H1 3/8	**34.925** 1.3750	**44.437** 1.7495	**34.963** 1.3765	**34.938** 1.3755
24	**38.100** 1 1/2	**38.100** 1.5000	**47.612** 1.8745	**38.141** 1.5016	**38.113** 1.5005
26	**41.275** 1 5/8	**41.275** 1.6250	**50.787** 1.9995	**41.316** 1.6266	**41.288** 1.6255
28	**44.450** 1 3/4	**44.450** 1.7500	**53.962** 2.1245	**44.493** 1.7517	**44.463** 1.7505
30	**47.625** 1 7/8	**47.625** 1.8750	**57.137** 2.2495	**47.668** 1.8767	**47.638** 1.8755
32	**50.800** 2	**50.800** 2.0000	**60.312** 2.3745	**50.846** 2.0018	**50.815** 2.0006
H 33	**H 52.388** H 2 1/16	**52.388** 2.0625	**64.280** 2.5307	**52.436** 2.0644	**52.400** 2.0630
34	**53.975** 2 1/8	**53.975** 2.1250	**63.487** 2.4995	**54.026** 2.1270	**53.990** 2.1256
36	**57.150** 2 1/4	**57.150** 2.2500	**66.662** 2.6245	**57.201** 2.2520	**57.165** 2.2506
42	**66.675** 2 5/8	**66.675** 2.6250	**76.187** 2.9995	**66.736** 2.6274	**66.700** 2.6260
44	**69.850** 2 3/4	**69.850** 2.7500	**79.362** 3.1245	**69.911** 2.7524	**69.875** 2.7510
56	**88.900** 3 1/2	**88.900** 3.5000	**101.587** 3.9995	**88.961** 3.5024	**88.925** 3.5010
88	**139.700** 5 1/2	**139.700** 5.5000	**152.375** 5.9990	**139.774** 5.5029	**139.725** 5.5010

Bearing bore should be checked with "go" and "no go" plug gages. The "go" gage size is the minimum needle roller complement bore diameter. The "no go" gage size is larger than the maximum needle roller complement bore diameter by 0.0001 in.

B

INSTALLATION OF DRAWN CUP BEARINGS

GENERAL INSTALLATION REQUIREMENTS

- A drawn cup bearing must be pressed into its housing.
- An installation tool, similar to the ones shown, must be used in conjunction with a standard press.
- The bearing must not be hammered into its housing – even in conjunction with the proper assembly mandrel.
- The bearing must not be pressed tightly against a shoulder in the housing.
- If it is necessary to use a shouldered housing, the depth of the housing bore must be sufficient to ensure the housing shoulder fillet, and the shoulder face, clear the bearing.
- The installation tool must be coaxial with the housing bore.

INSTALLATION OF OPEN END BEARINGS

It is advisable to utilize a positive stop on the press tool to locate the bearing properly in the housing. The assembly tool should have a leader or a pilot, as shown, to aid in starting the bearing true in the housing. The ball detent shown on the drawing is used to assist in aligning the rollers of a full complement bearing during installation and to hold the bearing on the installation tool. A caged-type drawn cup bearing does not require a ball detent to align its rollers. The ball detent may still be used to hold the bearing on the installation tool or an "O" ring may be used as shown in the drawing on this page. The bearing should be installed with the marked end (the end with identification markings) against the angled shoulder of the pressing tool.

A – 0.40 mm (0.016 in.) less than housing bore
B – 0.08 mm (0.003 in.) less than shaft diameter
C – distance bearing will be inset into housing, minimum of 0.20 mm (0.008 in.)
D – pilot length should be length of bearing less 0.80 mm (0.030 in.)
E – approximately 1/2 D

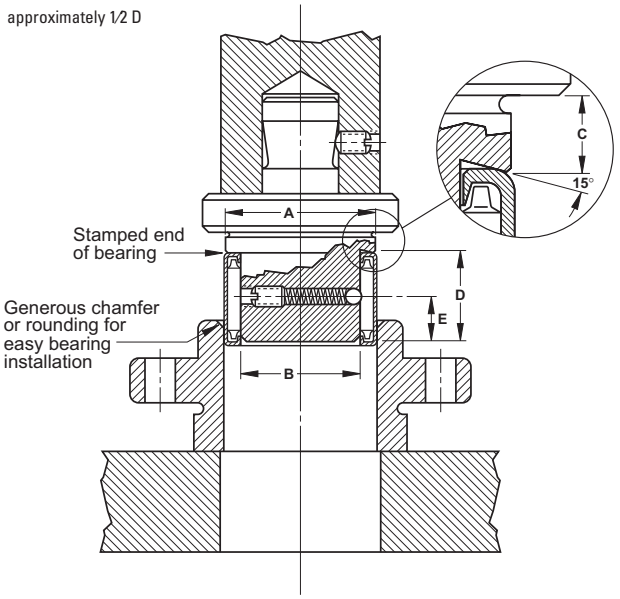

Fig. B-12. Installation of open ends caged bearings

A – 0.40 mm (0.016 in.) less than housing bore
B – 0.08 mm (0.003 in.) less than shaft diameter
C – distance bearing will be inset into housing, minimum of 0.20 mm (0.008 in.)
D – pilot length should be length of bearing less 0.80 mm (0.030 in.)
E – approximately 1/2 D

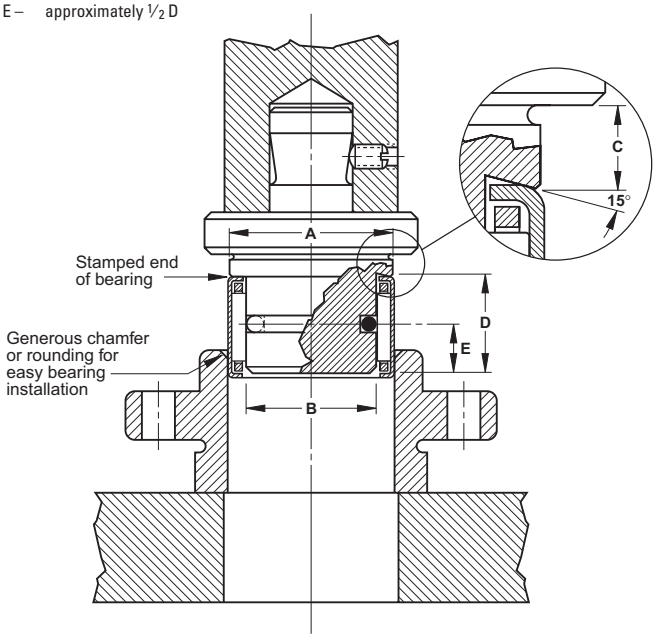

Fig. B-13. Installation of open ends full complement bearings

INSTALLATION OF CLOSED END BEARINGS

The installation tool combines all the features of the tool used to install open end bearings. But the pilot is spring loaded and is part of the press bed.

The angled shoulder of the pressing tool should bear against the closed end, with the bearing held on the pilot, to aid in starting the bearing true in the housing.

A – 0.40 mm (0.016 in.) less than housing bore
B – 0.08 mm (0.003 in.) less than shaft diameter
C – distance bearing will be inset into housing, minimum of 0.20 mm (0.008 in.)

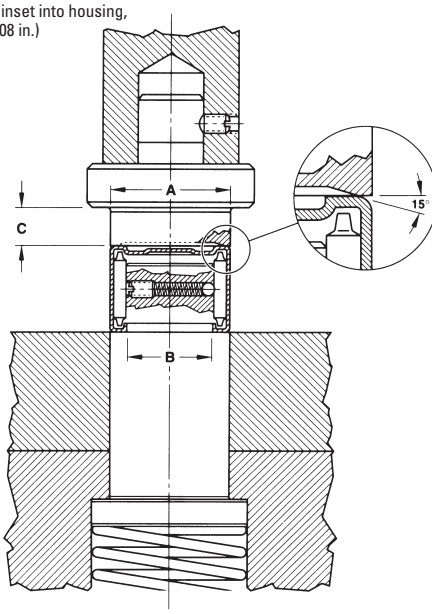

Fig. B-14. Installation of closed end bearings

EXTRACTION OF DRAWN CUP BEARINGS

The need to extract a drawn cup bearing does not arise often. Standard extractor tools may be purchased from a reputable manufacturer. Customers may produce the special extraction tools at their own facilities. After extraction, the drawn cup bearing should not be reused.

EXTRACTION FROM A STRAIGHT HOUSING

When it is necessary to extract a drawn cup bearing from a straight housing, a similar tool to the installation tool – but without the stop – may be used. To avoid damage to the bearing, pressure should be applied against the marked end of the bearing, just as it is done at installation.

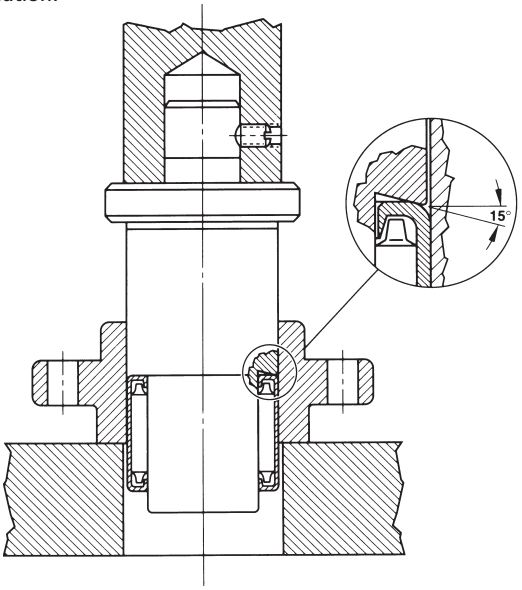

Fig. B-15. Extraction from a straight housing

EXTRACTION FROM A SHOULDERED HOUSING

(with bearing pressed up close to the shoulder)

The tool to be used, as shown, is of a similar type described for a shouldered or dead end housing. But the rollers must first be removed from the bearing.

The four segment puller jaws are collapsed and slipped into the empty cup. The jaws are then forced outward into the cup bore, by means of the tapered expansion rod. The jaws should bear on the lip as near as possible to the cup bore. The cup is then pressed out from the top.

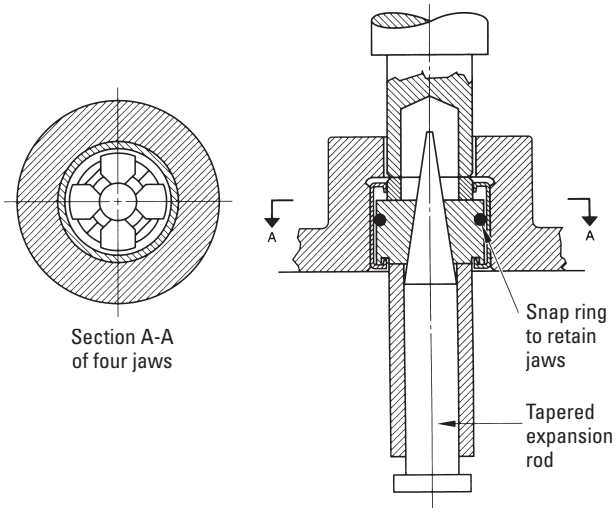

Fig. B-16. Extraction from a shouldered housing

EXTRACTION FROM A SHOULDERED OR DEAD END HOUSING

(with space between the bearing and the housing shoulder)

Bearings may be extracted from shouldered or dead end housings with a common bearing puller tool as shown. This type of tool is slotted in two places, at right angles, to form four prongs. The four puller prongs are pressed together and inserted into the space between the end of the bearing and the shoulder. The prongs are forced outward by inserting the expansion rod, and then the bearing is extracted. Do not reuse the bearing after extraction.

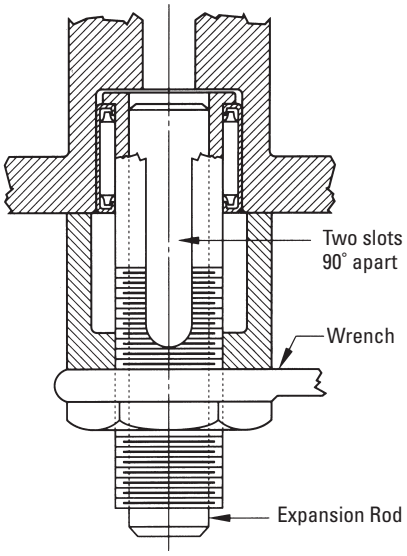

Fig. B-17. Extraction from a shouldered or dead end housing

FULL COMPLEMENT BEARINGS, OPEN ENDS, CLOSED ONE END

INCH SERIES

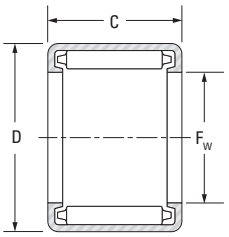

B, BH

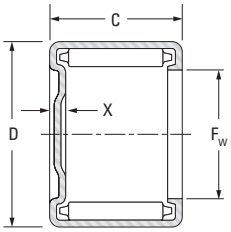

M-1, MH-1

Full Complement Bearing

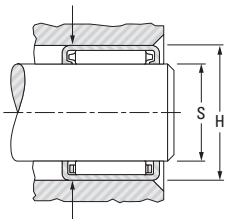

Caged Bearing

Shaft surface to be 58 HRC or equivalent

Drawn cup bearings of nominal inch dimensions, with one closed end, that are not tabulated, may be made available upon request.

Mounting dimensions are based on the inner ring rotating and the outer ring being stationary, relative to the load. The housing should be of high strength material.

See Engineering section for discussion of shaft and housing design.

Shaft Dia.	F_w	D	C	X (max.)	Bearing Designation		Load Ratings Dynamic C	Load Ratings Static C_0	Speed Rating Grease	Speed Rating Oil	C_g
			+0 +0.000 **-0.3** -0.010								
in.	**mm** in.	**mm** in.	**mm** in.	**mm** in.			**kN** lbf.		min^{-1}		
1/8	**3.175** 0.1250	**6.350** 0.2500	**6.35** 0.250	—	B-24	—	**1.73** 390	**1.65** 370	8100	13000	**0.0081**
5/32	**3.970** 0.1563	**7.142** 0.2812	**6.35** 0.250	—	B-2 1/2 4	—	**2.00** 450	**2.00** 450	7000	11000	**0.0093**
	3.970 0.1563	**7.142** 0.2812	**7.92** 0.312	—	B-2 1/2 5	—	**2.58** 580	**2.80** 630	7000	11000	**0.0101**
3/16	**4.763** 0.1875	**8.733** 0.3438	**6.35** 0.250	**1.78** 0.070	B-34	M-341	**2.22** 500	**2.14** 480	7000	11000	**0.0099**
	4.763 0.1875	**8.733** 0.3438	**9.53** 0.375	**1.78** 0.070	B-36	M-361	**3.78** 850	**4.23** 950	7000	11000	**0.0118**
1/4	**6.350** 0.2500	**11.113** 0.4375	**6.35** 0.250	**2.03** 0.080	B-44	M-441	**2.76** 620	**2.62** 590	6500	10000	**0.0115**
	6.350 0.2500	**11.113** 0.4375	**7.92** 0.312	**2.03** 0.080	B-45	M-451	**3.56** 800	**3.69** 830	6500	10000	**0.0125**
	6.350 0.2500	**11.113** 0.4375	**9.53** 0.375	—	B-46	—	**4.54** 1020	**5.03** 1130	6500	10000	**0.0135**
	6.350 0.2500	**11.113** 0.4375	**11.13** 0.438	**2.03** 0.080	B-47	M-471	**5.52** 1240	**6.45** 1450	6500	10000	**0.0143**
5/16	**7.938** 0.3125	**12.700** 0.5000	**7.92** 0.312	**2.03** 0.080	B-55	M-551	**4.09** 920	**4.58** 1030	5400	8300	**0.0144**
	7.938 0.3125	**12.700** 0.5000	**9.53** 0.375	—	B-56	—	**5.25** 1180	**6.32** 1420	5400	8300	**0.0156**
	7.938 0.3125	**12.700** 0.5000	**11.13** 0.438	**2.03** 0.080	B-57	M-571	**6.32** 1420	**8.10** 1820	5400	8300	**0.0165**
	7.938 0.3125	**12.700** 0.5000	**14.27** 0.562	—	B-59	—	**8.36** 1880	**11.6** 2600	5400	8300	**0.0181**
	7.938 0.3125	**14.288** 0.5625	**11.13** 0.438	**2.29** 0.090	BH-57	MH-571	**7.03** 1580	**7.34** 1650	7500	12000	**0.0156**
	7.938 0.3125	**14.288** 0.5625	**14.27** 0.562	—	BH-59	—	**9.47** 2130	**10.8** 2420	7500	12000	**0.0171**
3/8	**9.525** 0.3750	**14.288** 0.5625	**7.92** 0.312	**2.03** 0.080	B-65	M-651	**4.54** 1020	**5.52** 1240	4600	7100	**0.0162**
	9.525 0.3750	**14.288** 0.5625	**9.53** 0.375	**2.03** 0.080	B-66	M-661	**5.83** 1310	**7.61** 1710	4600	7100	**0.0175**
	9.525 0.3750	**14.288** 0.5625	**11.13** 0.438	—	B-67	—	**7.07** 1590	**9.70** 2180	4600	7100	**0.0186**
	9.525 0.3750	**14.288** 0.5625	**12.70** 0.500	**2.03** 0.080	B-68	M-681	**8.18** 1840	**11.8** 2650	4600	7100	**0.0195**
	9.525 0.3750	**14.288** 0.5625	**14.27** 0.562	—	B-69	—	**9.34** 2100	**13.9** 3130	4600	7100	**0.0203**
	9.525 0.3750	**14.288** 0.5625	**15.88** 0.625	**2.03** 0.080	B-610	M-6101	**10.4** 2340	**16.0** 3590	4600	7100	**0.0211**
	9.525 0.3750	**15.875** 0.6250	**12.70** 0.500	—	BH-68	—	**9.34** 2100	**10.9** 2460	6500	10000	**0.0184**
7/16	**11.113** 0.4375	**15.875** 0.6250	**9.53** 0.375	—	B-76	—	**6.36** 1430	**8.90** 2000	4100	6300	**0.0194**
	11.113 0.4375	**15.875** 0.6250	**11.13** 0.438	—	B-77	—	**7.70** 1730	**11.3** 2550	4100	6300	**0.0206**
	11.113 0.4375	**15.875** 0.6250	**12.70** 0.500	**2.03** 0.080	B-78	M-781	**8.99** 2020	**13.8** 3100	4100	6300	**0.0216**

Approx. Wt.		S		H		Inspection			Mounting Inner Ring (pg B-122 to B-124)	Shaft Dia.
		Recommended Mounting Dimension				Ring Gage	Plug Gage			
Open Ends	Closed End	Max.	Min.	Max.	Min.		Go	No Go		
kg lbs.	**kg** lbs.	**mm** in.	**mm** in.	**mm** in.	**mm** in.					in.
0.001 0.002	—	**3.175** 0.1250	**3.167** 0.1247	**6.363** 0.2505	**6.350** 0.2500	**6.363** 0.2505	**3.195** 0.1258	**3.221** 0.1268		1/8
0.001 0.002	—	**3.970** 0.1563	**3.962** 0.1560	**7.155** 0.2817	**7.142** 0.2812	**7.155** 0.2817	**3.990** 0.1571	**4.016** 0.1581		5/32
0.001 0.003	—	**3.970** 0.1563	**3.962** 0.1560	**7.155** 0.2817	**7.142** 0.2812	**7.155** 0.2817	**3.990** 0.1571	**4.016** 0.1581		
0.001 0.003	**0.002** 0.004	**4.763** 0.1875	**4.755** 0.1872	**8.730** 0.3437	**8.717** 0.3432	**8.730** 0.3437	**4.783** 0.1883	**4.808** 0.1893		3/16
0.002 0.005	**0.003** 0.006	**4.763** 0.1875	**4.755** 0.1872	**8.730** 0.3437	**8.717** 0.3432	**8.730** 0.3437	**4.783** 0.1883	**4.808** 0.1893		
0.002 0.005	**0.003** 0.006	**6.350** 0.2500	**6.337** 0.2495	**11.125** 0.4380	**11.100** 0.4370	**11.125** 0.4380	**6.388** 0.2515	**6.414** 0.2525		1/4
0.003 0.007	**0.004** 0.008	**6.350** 0.2500	**6.337** 0.2495	**11.125** 0.4380	**11.100** 0.4370	**11.125** 0.4380	**6.388** 0.2515	**6.414** 0.2525		
0.004 0.008	—	**6.350** 0.2500	**6.337** 0.2495	**11.125** 0.4380	**11.100** 0.4370	**11.125** 0.4380	**6.388** 0.2515	**6.414** 0.2525		
0.004 0.009	**0.005** 0.011	**6.350** 0.2500	**6.337** 0.2495	**11.125** 0.4380	**11.100** 0.4370	**11.125** 0.4380	**6.388** 0.2515	**6.414** 0.2525		
0.004 0.008	**0.004** 0.009	**7.938** 0.3125	**7.925** 0.3120	**12.713** 0.5005	**12.687** 0.4995	**12.713** 0.5005	**7.976** 0.3140	**8.001** 0.3150		5/16
0.005 0.010	—	**7.938** 0.3125	**7.925** 0.3120	**12.713** 0.5005	**12.687** 0.4995	**12.713** 0.5005	**7.976** 0.3140	**8.001** 0.3150		
0.005 0.011	**0.006** 0.013	**7.938** 0.3125	**7.925** 0.3120	**12.713** 0.5005	**12.687** 0.4995	**12.713** 0.5005	**7.976** 0.3140	**8.001** 0.3150		
0.006 0.014	—	**7.938** 0.3125	**7.925** 0.3120	**12.713** 0.5005	**12.687** 0.4995	**12.713** 0.5005	**7.976** 0.3140	**8.001** 0.3150		
0.007 0.016	**0.008** 0.018	**7.938** 0.3125	**7.925** 0.3120	**14.300** 0.5630	**14.275** 0.5620	**14.300** 0.5630	**7.976** 0.3140	**8.001** 0.3150		
0.009 0.020	—	**7.938** 0.3125	**7.925** 0.3120	**14.300** 0.5630	**14.275** 0.5620	**14.300** 0.5630	**7.976** 0.3140	**8.001** 0.3150		
0.004 0.009	**0.005** 0.010	**9.525** 0.3750	**9.512** 0.3745	**14.300** 0.5630	**14.275** 0.5620	**14.300** 0.5630	**9.563** 0.3765	**9.589** 0.3775	IRA-3	3/8
0.005 0.011	**0.005** 0.012	**9.525** 0.3750	**9.512** 0.3745	**14.300** 0.5630	**14.275** 0.5620	**14.300** 0.5630	**9.563** 0.3765	**9.589** 0.3775	IRA-3	
0.006 0.013	—	**9.525** 0.3750	**9.512** 0.3745	**14.300** 0.5630	**14.275** 0.5620	**14.300** 0.5630	**9.563** 0.3765	**9.589** 0.3775	IRA-3	
0.007 0.015	**0.008** 0.017	**9.525** 0.3750	**9.512** 0.3745	**14.300** 0.5630	**14.275** 0.5620	**14.300** 0.5630	**9.563** 0.3765	**9.589** 0.3775	IRA-3	
0.007 0.016	—	**9.525** 0.3750	**9.512** 0.3745	**14.300** 0.5630	**14.275** 0.5620	**14.300** 0.5630	**9.563** 0.3765	**9.589** 0.3775		
0.008 0.018	**0.010** 0.021	**9.525** 0.3750	**9.512** 0.3745	**14.300** 0.5630	**14.275** 0.5620	**14.300** 0.5630	**9.563** 0.3765	**9.589** 0.3775		
0.010 0.021	—	**9.525** 0.3750	**9.512** 0.3745	**15.888** 0.6255	**15.862** 0.6245	**15.888** 0.6255	**9.563** 0.3765	**9.589** 0.3775	IRA-3	
0.005 0.012	—	**11.113** 0.4375	**11.100** 0.4370	**15.888** 0.6255	**15.862** 0.6245	**15.888** 0.6255	**11.151** 0.4390	**11.176** 0.4400	IRA-4	7/16
0.007 0.015	—	**11.113** 0.4375	**11.100** 0.4370	**15.888** 0.6255	**15.862** 0.6245	**15.888** 0.6255	**11.151** 0.4390	**11.176** 0.4400	IRA-4	
0.008 0.017	**0.009** 0.019	**11.113** 0.4375	**11.100** 0.4370	**15.888** 0.6255	**15.862** 0.6245	**15.888** 0.6255	**11.151** 0.4390	**11.176** 0.4400	IRA-4	

Continued on next page.

FULL COMPLEMENT BEARINGS, OPEN ENDS, CLOSED ONE END – *continued*

INCH SERIES

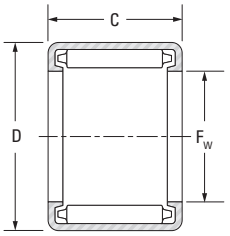

B, BH

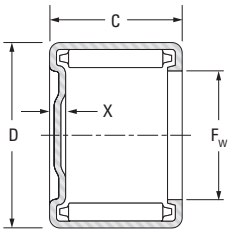

M-1, MH-1

Full Complement Bearing

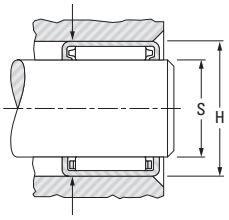

Caged Bearing

Shaft surface to be 58 HRC or equivalent

Drawn cup bearings of nominal inch dimensions, with one closed end, that are not tabulated, may be made available upon request.

Mounting dimensions are based on the inner ring rotating and the outer ring being stationary, relative to the load. The housing should be of high strength material.

See Engineering section for discussion of shaft and housing design.

Shaft Dia.	F_w	D	C +0 +0.000 -0.3 -0.010	X (max.)	Bearing Designation		Load Ratings Dynamic C	Load Ratings Static C_0	Speed Rating Grease	Speed Rating Oil	C_g
in.	mm in.	mm in.	mm in.	mm in.			kN lbf.		min^{-1}		
	11.113 0.4375	**15.875** 0.6250	**15.88** 0.625	—	B-710	—	**11.3** 2550	**18.7** 4200	4100	6300	**0.0233**
	11.113 0.4375	**17.463** 0.6875	**12.70** 0.500	—	BH-78	—	**10.3** 2320	**12.8** 2870	5700	8800	**0.0203**
1/2	**12.700** 0.5000	**17.463** 0.6875	**7.92** 0.312	**2.03** 0.080	B-85	M-851	**5.34** 1200	**7.38** 1660	3600	5600	**0.0196**
	12.700 0.5000	**17.463** 0.6875	**9.53** 0.375	**2.03** 0.080	B-86	M-861	**6.85** 1540	**10.1** 2280	3600	5600	**0.0212**
	12.700 0.5000	**17.463** 0.6875	**11.13** 0.438	**2.03** 0.080	B-87	M-871	**8.32** 1870	**13.0** 2920	3600	5600	**0.0225**
	12.700 0.5000	**17.463** 0.6875	**12.70** 0.500	**2.03** 0.080	B-88	M-881	**9.61** 2160	**15.7** 3530	3600	5600	**0.0236**
	12.700 0.5000	**17.463** 0.6875	**15.88** 0.625	**2.03** 0.080	B-810	M-8101	**12.2** 2750	**21.3** 4800	3600	5600	**0.0255**
	12.700 0.5000	**17.463** 0.6875	**19.05** 0.750	**2.03** 0.080	B-812	M-8121	**14.7** 3300	**27.0** 6060	3600	5600	**0.0270**
	12.700 0.5000	**19.050** 0.7500	**11.13** 0.438	—	BH-87	—	**9.47** 2130	**11.8** 2650	5100	7900	**0.0210**
	12.700 0.5000	**19.050** 0.7500	**12.70** 0.500	—	BH-88	—	**11.2** 2510	**14.6** 3280	5100	7900	**0.0221**
	12.700 0.5000	**19.050** 0.7500	**15.88** 0.625	—	BH-810	—	**14.4** 3230	**20.2** 4540	5100	7900	**0.0240**
	12.700 0.5000	**19.050** 0.7500	**19.05** 0.750	**2.29** 0.090	BH-812	MH-8121	**17.4** 3910	**25.8** 5790	5100	7900	**0.0255**
9/16	**14.288** 0.5625	**19.050** 0.7500	**7.92** 0.312	**2.03** 0.080	B-95	M-951	**5.74** 1290	**8.32** 1870	3300	5000	**0.0212**
	14.288 0.5625	**19.050** 0.7500	**9.53** 0.375	**2.03** 0.080	B-96	M-961	**7.34** 1650	**11.4** 2570	3300	5000	**0.0229**
	14.288 0.5625	**19.050** 0.7500	**11.13** 0.438	**2.03** 0.080	B-97	M-971	**8.85** 1990	**14.6** 3280	3300	5000	**0.0244**
	14.288 0.5625	**19.050** 0.7500	**12.70** 0.500	**2.03** 0.080	B-98	M-981	**10.3** 2320	**17.7** 3990	3300	5000	**0.0256**
	14.288 0.5625	**19.050** 0.7500	**15.88** 0.625	**2.03** 0.080	B-910	M-9101	**13.1** 2940	**24.0** 5400	3300	5000	**0.0276**
	14.288 0.5625	**19.050** 0.7500	**19.05** 0.750	**2.03** 0.080	B-912	M-9121	**15.7** 3520	**30.3** 6820	3300	5000	**0.0292**
	14.288 0.5625	**20.638** 0.8125	**12.70** 0.500	—	BH-98	—	**12.0** 2690	**16.5** 3700	4600	7100	**0.0239**
	14.288 0.5625	**20.638** 0.8125	**15.88** 0.625	—	BH-910	—	**15.4** 3460	**22.7** 5110	4600	7100	**0.0259**
	14.288 0.5625	**20.638** 0.8125	**19.05** 0.750	—	BH-912	—	**18.6** 4190	**29.0** 6520	4600	7100	**0.0275**
5/8	**15.875** 0.6250	**20.638** 0.8125	**7.92** 0.312	**2.03** 0.080	B-105	M-1051	**6.10** 1360	**9.25** 2080	3000	4500	**0.0227**
	15.875 0.6250	**20.638** 0.8125	**11.13** 0.438	**2.03** 0.080	B-107	M-1071	**9.39** 2110	**16.2** 3650	3000	4500	**0.0262**
	15.875 0.6250	**20.638** 0.8125	**12.70** 0.500	**2.03** 0.080	B-108	M-1081	**10.9** 2450	**19.7** 4430	3000	4500	**0.0275**
	15.875 0.6250	**20.638** 0.8125	**15.88** 0.625	**2.03** 0.080	B-1010	M-10101	**13.80** 3110	**26.7** 6000	3000	4500	**0.0296**

Approx. Wt.		S		H		Inspection			Mounting Inner Ring (pg B-122 to B-124)	Shaft Dia.
		Recommended Mounting Dimension				Ring Gage	Plug Gage			
Open Ends	Closed End	Max.	Min.	Max.	Min.		Go	No Go		
kg lbs.	**kg** lbs.	**mm** in.	**mm** in.	**mm** in.	**mm** in.					in.
0.010 0.021	—	**11.113** 0.4375	**11.100** 0.4370	**15.888** 0.6255	**15.862** 0.6245	**15.888** 0.6255	**11.151** 0.4390	**11.176** 0.4400		
0.010 0.023	—	**11.113** 0.4375	**11.100** 0.4370	**17.475** 0.6880	**17.450** 0.6870	**17.475** 0.6880	**11.151** 0.4390	**11.176** 0.4400	IRA-4	
0.005 0.012	**0.006** 0.014	**12.700** 0.5000	**12.687** 0.4995	**17.475** 0.6880	**17.450** 0.6870	**17.475** 0.6880	**12.738** 0.5015	**12.764** 0.5025	IRA-5	1/2
0.006 0.014	**0.007** 0.016	**12.700** 0.5000	**12.687** 0.4995	**17.475** 0.6880	**17.450** 0.6870	**17.475** 0.6880	**12.738** 0.5015	**12.764** 0.5025	IRA-5	
0.007 0.016	**0.008** 0.018	**12.700** 0.5000	**12.687** 0.4995	**17.475** 0.6880	**17.450** 0.6870	**17.475** 0.6880	**12.738** 0.5015	**12.764** 0.5025	IRA-5	
0.009 0.019	**0.010** 0.021	**12.700** 0.5000	**12.687** 0.4995	**17.475** 0.6880	**17.450** 0.6870	**17.475** 0.6880	**12.738** 0.5015	**12.764** 0.5025	IRA-5	
0.010 0.023	**0.012** 0.026	**12.700** 0.5000	**12.687** 0.4995	**17.475** 0.6880	**17.450** 0.6870	**17.475** 0.6880	**12.738** 0.5015	**12.764** 0.5025		
0.013 0.028	**0.014** 0.031	**12.700** 0.5000	**12.687** 0.4995	**17.475** 0.6880	**17.450** 0.6870	**17.475** 0.6880	**12.738** 0.5015	**12.764** 0.5025		
0.010 0.023	—	**12.700** 0.5000	**12.687** 0.4995	**19.063** 0.7505	**19.037** 0.7495	**19.063** 0.7505	**12.738** 0.5015	**12.764** 0.5025	IRA-5	
0.012 0.026	—	**12.700** 0.5000	**12.687** 0.4995	**19.063** 0.7505	**19.037** 0.7495	**19.063** 0.7505	**12.738** 0.5015	**12.764** 0.5025	IRA-5	
0.015 0.033	—	**12.700** 0.5000	**12.687** 0.4995	**19.063** 0.7505	**19.037** 0.7495	**19.063** 0.7505	**12.738** 0.5015	**12.764** 0.5025		
0.018 0.039	**0.020** 0.044	**12.700** 0.5000	**12.687** 0.4995	**19.063** 0.7505	**19.037** 0.7495	**19.063** 0.7505	**12.738** 0.5015	**12.764** 0.5025		
0.006 0.013	**0.006** 0.014	**14.288** 0.5625	**14.275** 0.5620	**19.063** 0.7505	**19.037** 0.7495	**19.063** 0.7505	**14.326** 0.5640	**14.351** 0.5650	IR-68	9/16
0.007 0.015	**0.008** 0.018	**14.288** 0.5625	**14.275** 0.5620	**19.063** 0.7505	**19.037** 0.7495	**19.063** 0.7505	**14.326** 0.5640	**14.351** 0.5650	IR-68	
0.008 0.018	**0.010** 0.021	**14.288** 0.5625	**14.275** 0.5620	**19.063** 0.7505	**19.037** 0.7495	**19.063** 0.7505	**14.326** 0.5640	**14.351** 0.5650	IR-68	
0.009 0.020	**0.010** 0.023	**14.288** 0.5625	**14.275** 0.5620	**19.063** 0.7505	**19.037** 0.7495	**19.063** 0.7505	**14.326** 0.5640	**14.351** 0.5650	IR-68	
0.012 0.026	**0.013** 0.029	**14.288** 0.5625	**14.275** 0.5620	**19.063** 0.7505	**19.037** 0.7495	**19.063** 0.7505	**14.326** 0.5640	**14.351** 0.5650	IR-612[1]	
0.014 0.031	**0.015** 0.034	**14.288** 0.5625	**14.275** 0.5620	**19.063** 0.7505	**19.037** 0.7495	**19.063** 0.7505	**14.326** 0.5640	**14.351** 0.5650	IR-612[1]	
0.013 0.029	—	**14.288** 0.5625	**14.275** 0.5620	**20.650** 0.8130	**20.625** 0.8120	**20.650** 0.8130	**14.326** 0.5640	**14.351** 0.5650	IR-68	
0.016 0.036	—	**14.288** 0.5625	**14.275** 0.5620	**20.650** 0.8130	**20.625** 0.8120	**20.650** 0.8130	**14.326** 0.5640	**14.351** 0.5650	IR-612[1]	
0.020 0.043	—	**14.288** 0.5625	**14.275** 0.5620	**20.650** 0.8130	**20.625** 0.8120	**20.650** 0.8130	**14.326** 0.5640	**14.351** 0.5650	IR-612[1]	
0.006 0.014	**0.007** 0.016	**15.875** 0.6250	**15.862** 0.6245	**20.650** 0.8130	**20.625** 0.8120	**20.650** 0.8130	**15.913** 0.6265	**15.939** 0.6275	IR-68-1	5/8
0.009 0.020	**0.010** 0.022	**15.875** 0.6250	**15.862** 0.6245	**20.650** 0.8130	**20.625** 0.8120	**20.650** 0.8130	**15.913** 0.6265	**15.939** 0.6275	IR-68-1	
0.010 0.022	**0.012** 0.026	**15.875** 0.6250	**15.862** 0.6245	**20.650** 0.8130	**20.625** 0.8120	**20.650** 0.8130	**15.913** 0.6265	**15.939** 0.6275	IR-68-1	
0.013 0.028	**0.015** 0.032	**15.875** 0.6250	**15.862** 0.6245	**20.650** 0.8130	**20.625** 0.8120	**20.650** 0.8130	**15.913** 0.6265	**15.939** 0.6275	IR-612-1	

[1] IRA inner ring provides additional length if required.

Continued on next page.

FULL COMPLEMENT BEARINGS, OPEN ENDS, CLOSED ONE END – *continued*

INCH SERIES

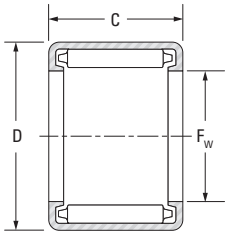

B, BH

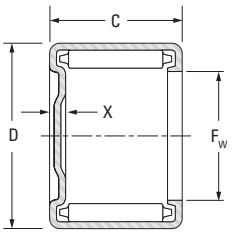

M-1, MH-1

Full Complement Bearing

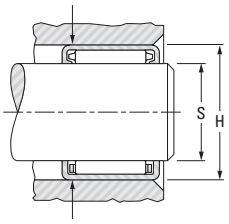

Caged Bearing

Shaft surface to be 58 HRC or equivalent

Drawn cup bearings of nominal inch dimensions, with one closed end, that are not tabulated, may be made available upon request.

Mounting dimensions are based on the inner ring rotating and the outer ring being stationary, relative to the load. The housing should be of high strength material.

See Engineering section for discussion of shaft and housing design.

Shaft Dia.	F_w	D	C +0 +0.000 -0.3 -0.010	X (max.)	Bearing Designation		Load Ratings Dynamic C	Load Ratings Static C_0	Speed Rating Grease	Speed Rating Oil	C_g
in.	mm in.	mm in.	mm in.	mm in.			kN lbf.		min^{-1}		
5/8	**15.875** 0.6250	**20.638** 0.8125	**19.05** 0.750	**2.03** 0.080	B-1012	M-10121	**16.6** 3720	**33.7** 7580	3000	4500	**0.0314**
	15.875 0.6250	**22.212** 0.8745	**12.70** 0.500	**2.29** 0.090	BH-108	MH-1081	**12.7** 2860	**18.3** 4110	4200	6500	**0.0256**
	15.875 0.6250	**22.212** 0.8745	**15.88** 0.625	—	BH-1010	—	**16.4** 3680	**25.3** 5680	4200	6500	**0.0278**
	15.875 0.6250	**22.212** 0.8745	**19.05** 0.750	—	BH-1012	—	**19.8** 4450	**32.3** 7250	4200	6500	**0.0295**
	15.875 0.6250	**22.212** 0.8745	**25.40** 1.000	—	BH-1016	—	**26.2** 5890	**46.3** 10400	4200	6500	**0.0322**
11/16	**17.463** 0.6875	**22.212** 0.8745	**9.53** 0.375	**2.03** 0.080	B-116	M-1161	**8.18** 1840	**14.0** 3140	2700	4200	**0.0263**
	17.463 0.6875	**22.212** 0.8745	**12.70** 0.500	**2.03** 0.080	B-118	M-1181	**11.5** 2580	**21.7** 4880	2700	4200	**0.0293**
	17.463 0.6875	**22.212** 0.8745	**15.88** 0.625	**2.03** 0.080	B-1110	M-11101	**14.6** 3270	**29.4** 6610	2700	4200	**0.0316**
	17.463 0.6875	**22.212** 0.8745	**19.05** 0.750	**2.03** 0.080	B-1112	M-11121	**17.4** 3920	**37.1** 8340	2700	4200	**0.0335**
	17.463 0.6875	**23.813** 0.9375	**11.13** 0.438	—	BH-117	—	**11.4** 2560	**16.2** 3650	3900	6000	**0.0259**
	17.463 0.6875	**23.813** 0.9375	**15.88** 0.625	**2.29** 0.090	BH-1110	MH-11101	**17.3** 3890	**27.8** 6250	3900	6000	**0.0296**
	17.463 0.6875	**23.813** 0.9375	**19.05** 0.750	—	BH-1112	—	**20.9** 4700	**35.5** 7980	3900	6000	**0.0314**
3/4	**19.050** 0.7500	**25.400** 1.0000	**9.53** 0.375	**2.29** 0.090	B-126	M-1261	**9.7** 2180	**13.6** 3050	3600	5600	**0.0256**
	19.050 0.7500	**25.400** 1.0000	**12.70** 0.500	**2.29** 0.090	B-128	M-1281	**14.1** 3170	**22.0** 4940	3600	5600	**0.0289**
	19.050 0.7500	**25.400** 1.0000	**15.88** 0.625	**2.29** 0.090	B-1210	M-12101	**18.2** 4080	**30.3** 6820	3600	5600	**0.0313**
	19.050 0.7500	**25.400** 1.0000	**19.05** 0.750	**2.29** 0.090	B-1212	M-12121	**21.9** 4930	**38.7** 8710	3600	5600	**0.0333**
13/16	**20.638** 0.8125	**26.988** 1.0625	**9.53** 0.375	—	B-136	—	**10.1** 2280	**14.7** 3300	3400	5200	**0.0271**
	20.638 0.8125	**26.988** 1.0625	**12.70** 0.500	**2.29** 0.090	B-138	M-1381	**14.8** 3320	**23.8** 5350	3400	5200	**0.0305**
	20.638 0.8125	**26.988** 1.0625	**22.23** 0.875	**2.29** 0.090	B-1314	M-13141	**26.7** 6010	**51.2** 11500	3400	5200	**0.0369**
	20.638 0.8125	**26.988** 1.0625	**25.40** 1.000	**2.29** 0.090	B-1316	M-13161	**30.3** 6820	**60.1** 13500	3400	5200	**0.0384**
	20.638 0.8125	**26.988** 1.0625	**31.75** 1.250	—	B-1320	—	**37.3** 8380	**78.3** 17600	3500	5200	**0.0410**
	20.643 0.8125	**28.575** 1.1250	**12.70** 0.500	**2.79** 0.110	BH-138	MH-1381	**14.9** 3340	**20.8** 4680	4100	6300	**0.0287**
	20.638 0.8125	**28.575** 1.1250	**15.88** 0.625	**2.79** 0.110	BH-1310	MH-13101	**19.7** 4430	**29.9** 6720	4100	6300	**0.0314**
	20.638 0.8125	**28.575** 1.1250	**19.05** 0.750	**2.79** 0.110	BH-1312	MH-13121	**24.2** 5440	**39.0** 8760	4100	6300	**0.0336**
7/8	**22.225** 0.8750	**28.575** 1.1250	**9.53** 0.375	**2.29** 0.090	B-146	M-1461	**10.5** 2370	**15.8** 3560	3100	4800	**0.0285**

Approx. Wt.		S		H		Inspection			Mounting Inner Ring (pg B-122 to B-124)	Shaft Dia.
		Recommended Mounting Dimension				Ring Gage	Plug Gage			
Open Ends	Closed End	Max.	Min.	Max.	Min.		Go	No Go		
kg lbs.	**kg** lbs.	**mm** in.	**mm** in.	**mm** in.	**mm** in.					in.
0.015 0.034	**0.017** 0.038	**15.875** 0.6250	**15.862** 0.6245	**20.650** 0.8130	**20.625** 0.8120	**20.650** 0.8130	**15.913** 0.6265	**15.939** 0.6275	IR-612-1	5/8
0.014 0.031	**0.016** 0.035	**15.875** 0.6250	**15.862** 0.6245	**22.238** 0.8755	**22.212** 0.8745	**22.238** 0.8755	**15.913** 0.6265	**15.939** 0.6275	IR-68-1	
0.018 0.039	—	**15.875** 0.6250	**15.862** 0.6245	**22.238** 0.8755	**22.212** 0.8745	**22.238** 0.8755	**15.913** 0.6265	**15.939** 0.6275	IR-612-1	
0.021 0.047	—	**15.875** 0.6250	**15.862** 0.6245	**22.238** 0.8755	**22.212** 0.8745	**22.238** 0.8755	**15.913** 0.6265	**15.939** 0.6275	IR-612-1	
0.028 0.062	—	**15.875** 0.6250	**15.862** 0.6245	**22.238** 0.8755	**22.212** 0.8745	**22.238** 0.8755	**15.913** 0.6265	**15.939** 0.6275		
0.008 0.018	**0.009** 0.020	**17.463** 0.6875	**17.450** 0.6870	**22.238** 0.8755	**22.212** 0.8745	**22.238** 0.8755	**17.501** 0.6890	**17.526** 0.6900		11/16
0.011 0.024	**0.012** 0.027	**17.463** 0.6875	**17.450** 0.6870	**22.238** 0.8755	**22.212** 0.8745	**22.238** 0.8755	**17.501** 0.6890	**17.526** 0.6900		
0.014 0.030	**0.015** 0.034	**17.463** 0.6875	**17.450** 0.6870	**22.238** 0.8755	**22.212** 0.8745	**22.238** 0.8755	**17.501** 0.6890	**17.526** 0.6900		
0.016 0.036	**0.019** 0.041	**17.463** 0.6875	**17.450** 0.6870	**22.238** 0.8755	**22.212** 0.8745	**22.238** 0.8755	**17.501** 0.6890	**17.526** 0.6900		
0.014 0.030	—	**17.463** 0.6875	**17.450** 0.6870	**23.825** 0.9380	**23.800** 0.9370	**23.825** 0.9380	**17.501** 0.6890	**17.526** 0.6900		
0.019 0.042	**0.021** 0.047	**17.463** 0.6875	**17.450** 0.6870	**23.825** 0.9380	**23.800** 0.9370	**23.825** 0.9380	**17.501** 0.6890	**17.526** 0.6900		
0.023 0.051	—	**17.463** 0.6875	**17.450** 0.6870	**23.825** 0.9380	**23.800** 0.9370	**23.825** 0.9380	**17.501** 0.6890	**17.526** 0.6900		
0.012 0.027	**0.014** 0.031	**19.050** 0.7500	**19.037** 0.7495	**25.413** 1.0005	**25.387** 0.9995	**25.387** 0.9995	**19.063** 0.7505	**19.088** 0.7515	IR-88	3/4
0.016 0.036	**0.019** 0.041	**19.050** 0.7500	**19.037** 0.7495	**25.413** 1.0005	**25.387** 0.9995	**25.387** 0.9995	**19.063** 0.7505	**19.088** 0.7515	IR-88	
0.020 0.045	**0.024** 0.052	**19.050** 0.7500	**19.037** 0.7495	**25.413** 1.0005	**25.387** 0.9995	**25.387** 0.9995	**19.063** 0.7505	**19.088** 0.7515	IR-812(1)	
0.024 0.054	**0.028** 0.062	**19.050** 0.7500	**19.037** 0.7495	**25.413** 1.0005	**25.387** 0.9995	**25.387** 0.9995	**19.063** 0.7505	**19.088** 0.7515	IR-812(1)	
0.013 0.029	—	**20.638** 0.8125	**20.625** 0.8120	**27.000** 1.0630	**26.975** 1.0620	**26.975** 1.0620	**20.650** 0.8130	**20.676** 0.8140		13/16
0.018 0.039	**0.020** 0.044	**20.638** 0.8125	**20.625** 0.8120	**27.000** 1.0630	**26.975** 1.0620	**26.975** 1.0620	**20.650** 0.8130	**20.676** 0.8140		
0.031 0.068	**0.035** 0.077	**20.638** 0.8125	**20.625** 0.8120	**27.000** 1.0630	**26.975** 1.0620	**26.975** 1.0620	**20.650** 0.8130	**20.676** 0.8140		
0.035 0.078	**0.040** 0.088	**20.638** 0.8125	**20.625** 0.8120	**27.000** 1.0630	**26.975** 1.0620	**26.975** 1.0620	**20.650** 0.8130	**20.676** 0.8140		
0.044 0.098	—	**20.638** 0.8125	**29 625** 0.8120	**27.000** 1.0630	**26.975** 1.0620	**26.975** 1.0620	**20.650** 0.8130	**20.676** 0.8140		
0.023 0.050	**0.026** 0.057	**20.638** 0.8125	**20.625** 0.8120	**28.588** 1.1255	**28.562** 1.1245	**28.562** 1.1245	**20.650** 0.8130	**20.676** 0.8140		
0.029 0.063	**0.032** 0.071	**20.638** 0.8125	**20.625** 0.8120	**28.588** 1.1255	**28.562** 1.1245	**28.562** 1.1245	**20.650** 0.8130	**20.676** 0.8140		
0.034 0.076	**0.039** 0.086	**20.638** 0.8125	**20.625** 0.8120	**28.588** 1.1255	**28.562** 1.1245	**28.562** 1.1245	**20.650** 0.8130	**20.676** 0.8140		
0.014 0.031	**0.016** 0.035	**22.225** 0.8750	**22.212** 0.8745	**28.588** 1.1255	**28.562** 1.1245	**28.562** 1.1245	**22.238** 0.8755	**22.263** 0.8765		7/8

(1) IRA inner ring provides additional length if required.

Continued on next page.

FULL COMPLEMENT BEARINGS, OPEN ENDS, CLOSED ONE END – *continued*

INCH SERIES

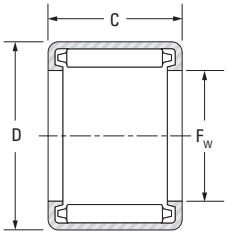

B, BH

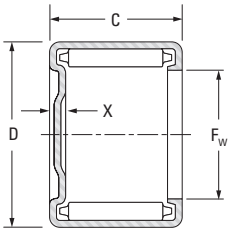

M-1, MH-1

Full Complement Bearing

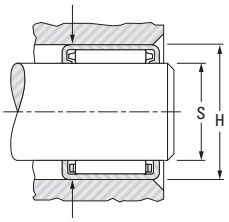

Caged Bearing

Shaft surface to be 58 HRC or equivalent

Drawn cup bearings of nominal inch dimensions, with one closed end, that are not tabulated, may be made available upon request.

Mounting dimensions are based on the inner ring rotating and the outer ring being stationary, relative to the load. The housing should be of high strength material.

See Engineering section for discussion of shaft and housing design.

Shaft Dia.	F_w	D	C +0 +0.000 -0.3 -0.010	X (max.)	Bearing Designation		Load Ratings Dynamic C	Load Ratings Static C_0	Speed Rating Grease	Speed Rating Oil	C_g
in.	mm in.	mm in.	mm in.	mm in.			kN lbf.		min^{-1}		
	22.225 0.8750	**28.575** 1.1250	**12.70** 0.500	**2.29** 0.090	B-148	M-1481	**15.4** 3450	**25.6** 5760	3100	4800	**0.0321**
	22.225 0.8750	**28.575** 1.1250	**19.05** 0.750	**2.29** 0.090	B-1412	M-14121	**23.9** 5370	**45.4** 10200	3100	4800	**0.0369**
	22.225 0.8750	**28.575** 1.1250	**25.40** 1.000	**2.29** 0.090	B-1416	M-14161	**31.6** 7100	**64.9** 14600	3100	4800	**0.0404**
	22.225 0.8750	**28.575** 1.1250	**28.58** 1.125	—	B-1418	—	**35.2** 7920	**74.7** 16800	3100	4800	**0.0418**
	22.225 0.8750	**30.163** 1.1875	**15.88** 0.625	**2.79** 0.110	BH-1410	MH-14101	**20.3** 4570	**32.2** 7240	3800	5880	**0.0331**
	22.225 0.8750	**30.163** 1.1875	**19.05** 0.750	**2.79** 0.110	BH-1412	MH-14121	**25.0** 5620	**42.0** 9440	3800	5880	**0.0354**
	22.225 0.8750	**30.163** 1.1875	**25.40** 1.000	—	BH-1416	—	**33.7** 7570	**61.4** 13800	3800	5880	**0.0389**
15/16	**23.813** 0.9375	**30.163** 1.1875	**12.70** 0.500	—	B-158	—	**15.9** 3580	**27.5** 6180	3000	4500	**0.0336**
	23.813 0.9375	**30.163** 1.1875	**25.40** 1.000	**2.29** 0.090	B-1516	M-15161	**32.8** 7370	**69.4** 15600	3000	4500	**0.0423**
1	**25.400** 1.0000	**31.750** 1.2500	**9.53** 0.375	—	B-166	—	**11.3** 2550	**18.1** 4070	2800	4300	**0.0312**
	25.400 1.0000	**31.750** 1.2500	**11.13** 0.438	**2.29** 0.090	B-167	M-1671	**14.0** 3140	**23.7** 5320	2800	4300	**0.0333**
	25.400 1.0000	**31.750** 1.2500	**12.70** 0.5000	**2.29** 0.090	B-168	M-1681	**16.5** 3710	**29.3** 6590	2800	4300	**0.0351**
	25.400 1.0000	**31.750** 1.2500	**15.88** 0.625	**2.29** 0.090	B-1610	M-16101	**21.2** 4770	**40.5** 9110	2800	4300	**0.0381**
	25.400 1.0000	**31.750** 1.2500	**19.05** 0.750	**2.29** 0.090	B-1612	M-16121	**25.7** 5770	**51.6** 11600	2800	4300	**0.0404**
	25.400 1.0000	**31.750** 1.2500	**25.40** 1.000	**2.29** 0.090	B-1616	M-16161	**33.9** 7630	**74.3** 16700	2800	4300	**0.0442**
	25.400 1.0000	**33.338** 1.3125	**12.70** 0.500	**2.79** 0.110	BH-168	MH-1681	**16.6** 3740	**25.6** 5760	3400	5200	**0.0330**
	25.400 1.0000	**33.338** 1.3125	**15.88** 0.625	—	BH-1610	—	**22.0** 4950	**36.8** 8280	3400	5200	**0.0361**
	25.400 1.0000	**33.338** 1.3125	**19.05** 0.750	**2.79** 0.110	BH-1612	MH-16121	**27.1** 6090	**48.0** 10800	3400	5200	**0.0386**
	25.400 1.0000	**33.338** 1.3125	**22.23** 0.875	—	BH-1614	—	**31.9** 7170	**59.2** 13300	3400	5200	**0.0407**
	25.400 1.0000	**33.338** 1.3125	**25.40** 1.000	**2.79** 0.110	BH-1616	MH-16161	**36.5** 8200	**70.3** 15800	3400	5200	**0.0425**
	25.400 1.0000	**33.338** 1.3125	**31.75** 1.250	—	BH-1620	—	**45.4** 10200	**93.0** 20900	3400	5200	**0.0455**
	25.400 1.0000	**33.338** 1.3125	**38.10** 1.500	**2.79** 0.110	BH-1624	MH-16241	**53.4** 12000	**115.2** 25900	3400	5200	**0.0480**
1 1/16	**26.988** 1.0625	**33.338** 1.3125	**15.88** 0.625	**2.29** 0.090	B-1710	M-17101	**21.9** 4930	**43.1** 9680	2600	4000	**0.0397**
	26.988 1.0625	**34.925** 1.3750	**19.05** 0.750	—	BH-1712	—	**29.5** 6630	**52.5** 11800	3400	5200	**0.0402**
1 1/8	**28.575** 1.1250	**34.925** 1.3750	**9.53** 0.375	**2.29** 0.090	B-186	M-1861	**12.1** 2720	**20.4** 4580	2500	3800	**0.0338**

Approx. Wt.		S		H		Inspection			Mounting Inner Ring (pg B-122 to B-124)	Shaft Dia.
		Recommended Mounting Dimension				Ring Gage	Plug Gage			
Open Ends	Closed End	Max.	Min.	Max.	Min.		Go	No Go		
kg lbs.	**kg** lbs.	**mm** in.	**mm** in.	**mm** in.	**mm** in.					in.
0.019 0.042	**0.022** 0.048	**22.225** 0.8750	**22.212** 0.8745	**28.588** 1.1255	**28.562** 1.1245	**28.562** 1.1245	**22.238** 0.8755	**22.263** 0.8765	IR-1012(1)	
0.028 0.062	**0.032** 0.070	**22.225** 0.8750	**22.212** 0.8745	**28.588** 1.1255	**28.562** 1.1245	**28.562** 1.1245	**22.238** 0.8755	**22.263** 0.8765	IR-1012(1)	
0.038 0.083	**0.043** 0.094	**22.225** 0.8750	**22.212** 0.8745	**28.588** 1.1255	**28.562** 1.1245	**28.562** 1.1245	**22.238** 0.8755	**22.263** 0.8765	IR-1016	
0.043 0.094	—	**22.225** 0.8750	**22.212** 0.8745	**28.588** 1.1255	**28.562** 1.1245	**28.562** 1.1245	**22.238** 0.8755	**22.263** 0.8765		
0.030 0.067	**0.035** 0.076	**22.225** 0.8750	**22.212** 0.8745	**30.175** 1.1880	**30.150** 1.1870	**30.150** 1.1870	**22.238** 0.8755	**22.263** 0.8765	IR-1012(1)	
0.036 0.080	**0.041** 0.091	**22.225** 0.8750	**22.212** 0.8745	**30.175** 1.1880	**30.150** 1.1870	**30.150** 1.1870	**22.238** 0.8755	**22.263** 0.8765	IR-1012(1)	
0.049 0.107	—	**22.225** 0.8750	**22.212** 0.8745	**30.175** 1.1880	**30.150** 1.1870	**30.150** 1.1870	**22.238** 0.8755	**22.263** 0.8765	IR-1016	
0.020 0.044	—	**23.813** 0.9375	**23.800** 0.9370	**30.175** 1.1880	**30.150** 1.1870	**30.150** 1.1870	**23.825** 0.9380	**23.851** 0.9390		15/16
0.040 0.088	**0.045** 0.100	**23.813** 0.9375	**23.800** 0.9370	**30.175** 1.1880	**30.150** 1.1870	**30.150** 1.1870	**23.825** 0.9380	**23.851** 0.9390		
0.016 0.035	—	**25.400** 1.0000	**25.387** 0.9995	**31.763** 1.2505	**31.737** 1.2495	**31.737** 1.2495	**25.413** 1.0005	**25.438** 1.0015	IR-128	1
0.019 0.041	**0.021** 0.046	**25.400** 1.0000	**25.387** 0.9995	**31.763** 1.2505	**31.737** 1.2495	**31.737** 1.2495	**25.413** 1.0005	**25.438** 1.0015	IR-128	
0.021 0.047	**0.024** 0.053	**25.400** 1.0000	**25.387** 0.9995	**31.763** 1.2505	**31.737** 1.2495	**31.737** 1.2495	**25.413** 1.0005	**25.438** 1.0015	IR-128	
0.026 0.058	**0.030** 0.066	**25.400** 1.0000	**25.387** 0.9995	**31.763** 1.2505	**31.737** 1.2495	**31.737** 1.2495	**25.413** 1.0005	**25.438** 1.0015	IR-1212	
0.032 0.070	**0.036** 0.080	**25.400** 1.0000	**25.387** 0.9995	**31.763** 1.2505	**31.737** 1.2495	**31.737** 1.2495	**25.413** 1.0005	**25.438** 1.0015	IR-1212	
0.043 0.094	**0.048** 0.106	**25.400** 1.0000	**25.387** 0.9995	**31.763** 1.2505	**31.737** 1.2495	**31.737** 1.2495	**25.413** 1.0005	**25.438** 1.0015	IR-1216(1)	
0.027 0.060	**0.031** 0.068	**25.400** 1.0000	**25.387** 0.9995	**33.350** 1.3130	**33.325** 1.3120	**33.325** 1.3120	**25.413** 1.0005	**25.438** 1.0015	IR-128	
0.034 0.075	—	**25.400** 1.0000	**25.387** 0.9995	**33.350** 1.3130	**33.325** 1.3120	**33.325** 1.3120	**25.413** 1.0005	**25.438** 1.0015	IR-1212	
0.041 0.090	**0.046** 0.102	**25.400** 1.0000	**25.387** 0.9995	**33.350** 1.3130	**33.325** 1.3120	**33.325** 1.3120	**25.413** 1.0005	**25.438** 1.0015	IR-1212	
0.048 0.105	—	**25.400** 1.0000	**25.387** 0.9995	**33.350** 1.3130	**33.325** 1.3120	**33.325** 1.3120	**25.413** 1.0005	**25.438** 1.0015	IR-1216(1)	
0.054 0.120	**0.062** 0.136	**25.400** 1.0000	**25.387** 0.9995	**33.350** 1.3130	**33.325** 1.3120	**33.325** 1.3120	**25.413** 1.0005	**25.438** 1.0015	IR-1216(1)	
0.068 0.150	—	**25.400** 1.0000	**25.387** 0.9995	**33.350** 1.3130	**33.325** 1.3120	**33.325** 1.3120	**25.413** 1.0005	**25.438** 1.0015	IR-1220	
0.082 0.180	**0.093** 0.204	**25.400** 1.0000	**25.387** 0.9995	**33.350** 1.3130	**33.325** 1.3120	**33.325** 1.3120	**25.413** 1.0005	**25.438** 1.0015	IR-1224	
0.028 0.062	**0.032** 0.070	**26.988** 1.0625	**26.975** 1.0620	**33.350** 1.3130	**33.325** 1.3120	**33.325** 1.3120	**27.000** 1.0630	**27.026** 1.0640		1 1/16
0.035 0.078	—	**26.988** 1.0625	**26.975** 1.0620	**34.938** 1.3755	**34.912** 1.3745	**34.912** 1.3745	**27.000** 1.0630	**27.026** 1.0640		
0.018 0.039	**0.020** 0.044	**28.575** 1.1250	**28.562** 1.1245	**34.938** 1.3755	**34.912** 1.3745	**34.912** 1.3745	**28.588** 1.1255	**28.613** 1.1265	IR-1416(1)	1 1/8

(1) IRA inner ring provides additional length if required.

Continued on next page.

FULL COMPLEMENT BEARINGS, OPEN ENDS, CLOSED ONE END – *continued*

INCH SERIES

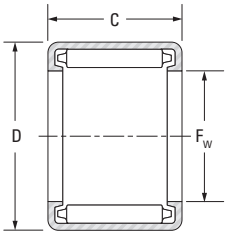

B, BH

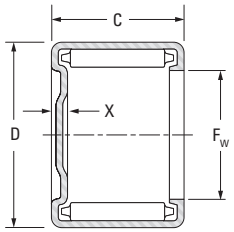

M-1, MH-1

Full Complement Bearing

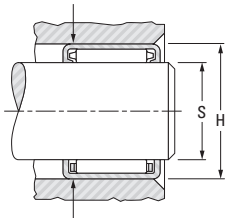

Caged Bearing

Shaft surface to be 58 HRC or equivalent

Drawn cup bearings of nominal inch dimensions, with one closed end, that are not tabulated, may be made available upon request.

Mounting dimensions are based on the inner ring rotating and the outer ring being stationary, relative to the load. The housing should be of high strength material.

See Engineering section for discussion of shaft and housing design.

Shaft Dia.	F_w	D	C +0 +0.000 -0.3 -0.010	X (max.)	Bearing Designation		Load Ratings Dynamic C	Load Ratings Static C_0	Speed Rating Grease	Speed Rating Oil	C_g
in.	mm in.	mm in.	mm in.	mm in.			kN lbf.		min^{-1}		
	28.575 1.1250	**34.925** 1.3750	**12.70** 0.500	**2.29** 0.090	B-188	M-1881	**17.6** 3950	**33.0** 7420	2500	3800	**0.0381**
	28.575 1.1250	**34.925** 1.3750	**15.88** 0.625	—	B-1810	—	**22.6** 5080	**45.8** 10300	2500	3800	**0.0413**
	28.575 1.1250	**34.925** 1.3750	**19.05** 0.750	**2.29** 0.090	B-1812	M-18121	**27.3** 6140	**58.3** 13100	2500	3800	**0.0438**
	28.575 1.1250	**34.925** 1.3750	**25.40** 1.000	**2.29** 0.090	B-1816	M-18161	**36.2** 8130	**83.6** 18800	2500	3800	**0.0479**
	28.575 1.1250	**38.100** 1.5000	**19.05** 0.750	**3.05** 0.120	BH-1812	MH-18121	**31.5** 7090	**52.9** 11900	3600	5600	**0.0405**
	28.575 1.1250	**38.100** 1.5000	**25.40** 1.000	**3.05** 0.120	BH-1816	MH-18161	**42.5** 9560	**77.8** 17500	3600	5600	**0.0446**
	28.575 1.1250	**38.100** 1.5000	**31.75** 1.250	**3.05** 0.120	BH-1820	MH-18201	**52.9** 11900	**103.2** 23200	3600	5600	**0.0479**
1 3/16	**30.163** 1.1875	**38.100** 1.5000	**15.88** 0.625	**2.79** 0.110	B-1910	M-19101	**24.1** 5420	**43.8** 9840	2900	4400	**0.0406**
	30.163 1.1875	**38.100** 1.5000	**25.40** 1.000	—	B-1916	—	**40.0** 8980	**83.6** 18800	2900	4400	**0.0477**
1 1/4	**31.750** 1.2500	**38.100** 1.5000	**12.70** 0.500	**2.29** 0.090	B-208	M-2081	**18.6** 4170	**36.6** 8240	2300	3500	**0.0409**
	31.750 1.2500	**38.100** 1.5000	**15.88** 0.625	**2.29** 0.090	B-2010	M-20101	**23.9** 5370	**50.7** 11400	2300	3500	**0.0444**
	31.750 1.2500	**38.100** 1.5000	**19.05** 0.750	**2.29** 0.090	B-2012	M-20121	**28.9** 6490	**64.5** 14500	2300	3500	**0.0471**
	31.750 1.2500	**38.100** 1.5000	**25.40** 1.000	**2.29** 0.090	B-2016	M-20161	**38.2** 8590	**92.5** 20800	2300	3500	**0.0515**
	31.750 1.2500	**38.100** 1.5000	**31.75** 1.250	**2.29** 0.090	B-2020	M-20201	**47.2** 10600	**121.0** 27200	2300	3500	**0.0550**
	31.750 1.2500	**41.275** 1.6250	**12.70** 0.500	**3.05** 0.120	BH-208	MH-2081	**19.7** 4420	**30.0** 6750	3300	5000	**0.0369**
	31.750 1.2500	**41.275** 1.6250	**19.05** 0.750	**3.05** 0.120	BH-2012	MH-20121	**33.1** 7440	**58.7** 13200	3300	5000	**0.0435**
	31.750 1.2500	**41.275** 1.6250	**25.40** 1.000	**3.05** 0.120	BH-2016	MH-20161	**44.9** 10100	**86.7** 19500	3300	5000	**0.0480**
	31.750 1.2500	**41.275** 1.6250	**31.75** 1.250	**3.05** 0.120	BH-2020	MH-20201	**56.0** 12600	**115.0** 25800	3300	5000	**0.0515**
1 5/16	**33.338** 1.3125	**41.275** 1.6250	**12.70** 0.500	**2.79** 0.110	B-218	M-2181	**19.3** 4330	**33.7** 7570	2600	4100	**0.0397**
	33.338 1.3125	**41.275** 1.6250	**15.88** 0.625	**2.79** 0.110	B-2110	M-21101	**25.5** 5740	**48.5** 10900	2600	4100	**0.0435**
	33.338 1.3125	**41.275** 1.6250	**31.75** 1.250	—	B-2120	—	**52.5** 11800	**122.0** 27500	2600	4100	**0.0547**
1 3/8	**34.925** 1.3750	**41.275** 1.6250	**12.70** 0.500	**2.29** 0.090	B-228	M-2281	**19.5** 4390	**40.4** 9070	2100	3200	**0.0437**
	34.925 1.3750	**41.275** 1.6250	**19.05** 0.750	**2.29** 0.090	B-2212	M-22121	**30.4** 6830	**71.2** 16000	2100	3200	**0.0504**
	34.925 1.3750	**41.275** 1.6250	**25.40** 1.000	**2.29** 0.090	B-2216	M-22161	**40.2** 9030	**102.0** 22900	2100	3200	**0.0551**
	34.925 1.3750	**41.275** 1.6250	**31.75** 1.250	**2.29** 0.090	B-2220	M-22201	**49.4** 11100	**133.0** 29900	2100	3200	**0.0588**

Approx. Wt.		S		H		Inspection			Mounting Inner Ring (pg B-122 to B-124)	Shaft Dia.
		Recommended Mounting Dimension				Ring Gage	Plug Gage			
Open Ends	Closed End	Max.	Min.	Max.	Min.		Go	No Go		
kg lbs.	**kg** lbs.	**mm** in.	**mm** in.	**mm** in.	**mm** in.					in.
0.024 0.052	**0.027** 0.059	**28.575** 1.1250	**28.562** 1.1245	**34.938** 1.3755	**34.912** 1.3745	**34.912** 1.3745	**28.588** 1.1255	**28.613** 1.1265	IR-1416(1)	
0.029 0.065	—	**28.575** 1.1250	**28.562** 1.1245	**34.938** 1.3755	**34.912** 1.3745	**34.912** 1.3745	**28.588** 1.1255	**28.613** 1.1265	IR-1416(1)	
0.035 0.078	**0.040** 0.088	**28.575** 1.1250	**28.562** 1.1245	**34.938** 1.3755	**34.912** 1.3745	**34.912** 1.3745	**28.588** 1.1255	**28.613** 1.1265	IR-1416(1)	
0.047 0.104	**0.054** 0.118	**28.575** 1.1250	**28.562** 1.1245	**34.938** 1.3755	**34.912** 1.3745	**34.912** 1.3745	**28.588** 1.1255	**28.613** 1.1265	IR-1416(1)	
0.056 0.123	**0.063** 0.138	**28.575** 1.1250	**28.562** 1.1245	**38.113** 1.5005	**38.087** 1.4995	**38.087** 1.4995	**28.588** 1.1255	**28.613** 1.1265	IR-1416(1)	
0.074 0.164	**0.084** 0.186	**28.575** 1.1250	**28.562** 1.1245	**38.113** 1.5005	**38.087** 1.4995	**38.087** 1.4995	**28.588** 1.1255	**28.613** 1.1265	IR-1416(1)	
0.093 0.205	**0.105** 0.232	**28.575** 1.1250	**28.562** 1.1245	**38.113** 1.5005	**38.087** 1.4995	**38.087** 1.4995	**28.588** 1.1255	**28.613** 1.1265		
0.040 0.088	**0.045** 0.099	**30.163** 1.1875	**30.150** 1.1870	**38.113** 1.5005	**38.087** 1.4995	**38.087** 1.4995	**30.175** 1.1880	**30.201** 1.1890		1 3/16
0.064 0.140	—	**30.163** 1.1875	**30.150** 1.1870	**38.113** 1.5005	**38.087** 1.4995	**38.087** 1.4995	**30.175** 1.1880	**30.201** 1.1890		
0.026 0.057	**0.029** 0.065	**31.750** 1.2500	**31.737** 1.2495	**38.113** 1.5005	**38.087** 1.4995	**38.087** 1.4995	**31.763** 1.2505	**31.788** 1.2515	IR-1612	1 1/4
0.032 0.071	**0.044** 0.097	**31.750** 1.2500	**31.737** 1.2495	**38.113** 1.5005	**38.087** 1.4995	**38.087** 1.4995	**31.763** 1.2505	**31.788** 1.2515	IR-1612	
0.039 0.086	**0.045** 0.099	**31.750** 1.2500	**31.737** 1.2495	**38.113** 1.5005	**38.087** 1.4995	**38.087** 1.4995	**31.763** 1.2505	**31.788** 1.2515	IR-1612	
0.052 0.114	**0.059** 0.130	**31.750** 1.2500	**31.737** 1.2495	**38.113** 1.5005	**38.087** 1.4995	**38.087** 1.4995	**31.763** 1.2505	**31.788** 1.2515	IR-1616(1)	
0.065 0.143	**0.073** 0.162	**31.750** 1.2500	**31.737** 1.2495	**38.113** 1.5005	**38.087** 1.4995	**38.087** 1.4995	**31.763** 1.2505	**31.788** 1.2515		
0.041 0.090	**0.046** 0.102	**31.750** 1.2500	**31.737** 1.2495	**41.288** 1.6255	**41.262** 1.6245	**41.262** 1.6245	**31.763** 1.2505	**31.788** 1.2515	IR-1612	
0.061 0.135	**0.069** 0.153	**31.750** 1.2500	**31.737** 1.2495	**41.288** 1.6255	**41.262** 1.6245	**41.262** 1.6245	**31.763** 1.2505	**31.788** 1.2515	IR-1612	
0.081 0.179	**0.092** 0.203	**31.750** 1.2500	**31.737** 1.2495	**41.288** 1.6255	**41.262** 1.6245	**41.262** 1.6245	**31.763** 1.2505	**31.788** 1.2515	IR-1616(1)	
0.102 0.224	**0.115** 0.254	**31.750** 1.2500	**31.737** 1.2495	**41.288** 1.6255	**41.262** 1.6245	**41.262** 1.6245	**31.763** 1.2505	**31.788** 1.2515		
0.034 0.076	**0.039** 0.086	**33.338** 1.3125	**33.325** 1.3120	**41.288** 1.6255	**41.262** 1.6245	**41.262** 1.6245	**33.350** 1.3130	**33.378** 1.3141		1 5/16
0.043 0.095	**0.049** 0.108	**33.338** 1.3125	**33.325** 1.3120	**41.288** 1.6255	**41.262** 1.6245	**41.262** 1.6245	**33.350** 1.3130	**33.378** 1.3141		
0.087 0.191	—	**33.338** 1.3125	**33.325** 1.3120	**41.288** 1.6255	**41.262** 1.6245	**41.262** 1.6245	**33.350** 1.3130	**33.378** 1.3141		
0.028 0.062	**0.032** 0.070	**34.925** 1.3750	**34.912** 1.3745	**41.288** 1.6255	**41.262** 1.6245	**41.262** 1.6245	**34.938** 1.3755	**34.966** 1.3766	IR-1812	1 3/8
0.043 0.094	**0.049** 0.107	**34.925** 1.3750	**34.912** 1.3745	**41.288** 1.6255	**41.262** 1.6245	**41.262** 1.6245	**34.938** 1.3755	**34.966** 1.3766	IR-1812	
0.057 0.125	**0.064** 0.142	**34.925** 1.3750	**34.912** 1.3745	**41.288** 1.6255	**41.262** 1.6245	**41.262** 1.6245	**34.938** 1.3755	**34.966** 1.3766	IR-1816	
0.071 0.156	**0.080** 0.177	**34.925** 1.3750	**34.912** 1.3745	**41.288** 1.6255	**41.262** 1.6245	**41.262** 1.6245	**34.938** 1.3755	**34.966** 1.3766	IR-1820	

(1) IRA inner ring provides additional length if required.

Continued on next page.

FULL COMPLEMENT BEARINGS, OPEN ENDS, CLOSED ONE END – *continued*

INCH SERIES

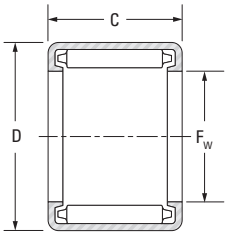

B, BH

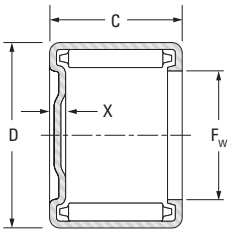

M-1, MH-1

Full Complement Bearing

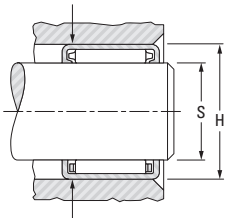

Caged Bearing

Shaft surface to be 58 HRC or equivalent

Drawn cup bearings of nominal inch dimensions, with one closed end, that are not tabulated, may be made available upon request.

Mounting dimensions are based on the inner ring rotating and the outer ring being stationary, relative to the load. The housing should be of high strength material.

See Engineering section for discussion of shaft and housing design.

Shaft Dia.	F_w	D	C +0 +0.000 -0.3 -0.010	X (max.)	Bearing Designation		Load Ratings Dynamic C	Load Ratings Static C_0	Speed Rating Grease	Speed Rating Oil	C_g
in.	mm in.	mm in.	mm in.	mm in.			kN lbf.		min^{-1}		
	34.925 1.3750	**44.450** 1.7500	**12.70** 0.500	—	BH-228	—	**21.2** 4770	**33.5** 7540	3000	4700	**0.0394**
	34.925 1.3750	**44.450** 1.7500	**15.88** 0.625	—	BH-2210	—	**28.5** 6410	**48.9** 11000	3000	4700	**0.0432**
	34.925 1.3750	**44.450** 1.7500	**19.05** 0.750	**3.05** 0.120	BH-2212	MH-22121	**35.3** 7930	**64.5** 14500	3000	4700	**0.0463**
	34.925 1.3750	**44.450** 1.7500	**25.40** 1.000	**3.05** 0.120	BH-2216	MH-22161	**47.6** 10700	**94.8** 21300	3000	4700	**0.0509**
	34.925 1.3750	**44.450** 1.7500	**31.75** 1.250	—	BH-2220	—	**59.6** 13400	**126.0** 28300	3000	4700	**0.0547**
1 1/2	**38.100** 1.5000	**47.625** 1.8750	**12.70** 0.500	**3.05** 0.120	B-248	M-2481	**22.3** 5020	**37.1** 8340	2800	4300	**0.0420**
	38.100 1.5000	**47.625** 1.8750	**15.88** 0.625	**3.05** 0.120	B-2410	M-24101	**29.8** 6710	**53.8** 12100	2800	4300	**0.0460**
	38.100 1.5000	**47.625** 1.8750	**19.05** 0.750	**3.05** 0.120	B-2412	M-24121	**36.9** 8290	**70.7** 15900	2800	4300	**0.0493**
	38.100 1.5000	**47.625** 1.8750	**22.23** 0.875	**3.05** 0.120	B-2414	M-24141	**43.5** 9780	**87.6** 19700	2800	4300	**0.0519**
	38.100 1.5000	**47.625** 1.8750	**25.40** 1.000	**3.05** 0.120	B-2416	M-24161	**49.8** 11200	**103.0** 23300	2800	4300	**0.0542**
	38.100 1.5000	**47.625** 1.8750	**31.75** 1.250	**3.05** 0.120	B-2420	M-24201	**61.8** 13900	**138.0** 31000	2800	4300	**0.0581**
1 5/8	**41.275** 1.6250	**50.800** 2.0000	**12.70** 0.500	—	B-268	—	**22.8** 5120	**39.2** 8820	2600	3900	**0.0441**
	41.275 1.6250	**50.800** 2.0000	**15.88** 0.625	**3.05** 0.120	B-2610	M-26101	**30.6** 6890	**57.4** 12900	2600	3900	**0.0485**
	41.275 1.6250	**50.800** 2.0000	**25.40** 1.000	—	B-2616	—	**51.6** 11600	**112.0** 25200	2600	3900	**0.0573**
	41.275 1.6250	**50.800** 2.0000	**31.75** 1.250	**3.05** 0.120	B-2620	M-26201	**64.0** 14400	**149.0** 33400	2600	3900	**0.0614**
1 3/4	**44.450** 1.7500	**53.975** 2.1250	**19.05** 0.750	**3.05** 0.120	B-2812	M-28121	**39.3** 8830	**81.4** 18300	2400	3700	**0.0547**
	44.450 1.7500	**53.975** 2.1250	**25.40** 1.000	**3.05** 0.120	B-2816	M-28161	**53.4** 12000	**121.0** 27100	2400	3700	**0.0603**
	44.450 1.7500	**53.975** 2.1250	**31.75** 1.250	—	B-2820	—	**66.3** 14900	**160.0** 36000	2400	3700	**0.0647**
	44.450 1.7500	**53.975** 2.1250	**38.10** 1.500	**3.05** 0.120	B-2824	M-26241	**78.7** 17700	**199.0** 44800	2400	3700	**0.0683**
1 7/8	**47.625** 1.8750	**57.150** 2.2500	**12.70** 0.500	**3.05** 0.120	B-308	M-3081	**25.1** 5650	**46.3** 10400	2300	3500	**0.0489**
	47.625 1.8750	**57.150** 2.2500	**15.888** 0.625	—	B-3010	—	**33.6** 7550	**67.6** 15200	2300	3500	**0.0537**
	47.625 1.8750	**57.150** 2.2500	**19.05** 0.750	—	B-3012	—	**41.5** 9330	**88.5** 19900	2300	3500	**0.0574**
	47.625 1.8750	**57.150** 2.2500	**25.40** 1.000	**3.05** 0.120	B-3016	M-30161	**56.0** 12600	**130.0** 29200	2300	3500	**0.0632**
2	**50.800** 2.0000	**60.325** 2.3750	**12.70** 0.500	**3.05** 0.120	B-328	M-3281	**25.4** 5710	**48.0** 10800	2100	3300	**0.0509**
	50.800 2.0000	**60.325** 2.3750	**15.88** 0.625	—	B-3210	—	**34.2** 7680	**70.7** 15900	2100	3300	**0.0560**

Approx. Wt.		S		H		Inspection			Mounting Inner Ring (pg B-122 to B-124)	Shaft Dia.
		Recommended Mounting Dimension				Ring Gage	Plug Gage			
Open Ends	Closed End	Max.	Min.	Max.	Min.		Go	No Go		
kg lbs.	kg lbs.	mm in.	mm in.	mm in.	mm in.					in.
0.044 0.098	—	**34.925** 1.3750	**34.912** 1.3745	**44.463** 1.7505	**44.437** 1.7495	**44.437** 1.7495	**34.938** 1.3755	**34.966** 1.3766	IR-1812	
0.055 0.122	—	**34.925** 1.3750	**34.912** 1.3745	**44.463** 1.7505	**44.437** 1.7495	**44.437** 1.7495	**34.938** 1.3755	**34.966** 1.3766	IR-1812	
0.066 0.146	**0.075** 0.165	**34.925** 1.3750	**34.912** 1.3745	**44.463** 1.7505	**44.437** 1.7495	**44.437** 1.7495	**34.938** 1.3755	**34.966** 1.3766	IR-1812	
0.088 0.195	**0.100** 0.221	**34.925** 1.3750	**34.912** 1.3745	**44.463** 1.7505	**44.437** 1.7495	**44.437** 1.7495	**34.938** 1.3755	**34.966** 1.3766	IR-1816	
0.111 0.244	**0.125** 0.276	**34.925** 1.3750	**34.912** 1.3745	**44.463** 1.7505	**44.437** 1.7495	**44.437** 1.7495	**34.938** 1.3755	**34.966** 1.3766	IR-1820	
0.048 0.105	**0.054** 0.119	**38.100** 1.5000	**38.087** 1.4995	**47.638** 1.8755	**47.612** 1.8745	**47.612** 1.8745	**38.113** 1.5005	**38.143** 1.5017	IR-1916	1 1/2
0.060 0.132	**0.068** 0.150	**38.100** 1.5000	**38.087** 1.4995	**47.638** 1.8755	**47.612** 1.8745	**47.612** 1.8745	**38.113** 1.5005	**38.143** 1.5017	IR-1916	
0.072 0.158	**0.081** 0.179	**38.100** 1.5000	**38.087** 1.4995	**47.638** 1.8755	**47.612** 1.8745	**47.612** 1.8745	**38.113** 1.5005	**38.143** 1.5017	IR-1916	
0.083 0.184	**0.095** 0.209	**38.100** 1.5000	**38.087** 1.4995	**47.638** 1.8755	**47.612** 1.8745	**47.612** 1.8745	**38.113** 1.5005	**38.143** 1.5017	IR-1916	
0.096 0.211	**0.108** 0.239	**38.100** 1.5000	**38.087** 1.4995	**47.638** 1.8755	**47.612** 1.8745	**47.612** 1.8745	**38.113** 1.5005	**38.143** 1.5017	IR-1916	
0.119 0.263	**0.135** 0.298	**38.100** 1.5000	**38.087** 1.4995	**47.638** 1.8755	**47.612** 1.8745	**47.612** 1.8745	**38.113** 1.5005	**38.143** 1.5017	IR-1920	
0.051 0.113	—	**41.275** 1.6250	**41.262** 1.6245	**50.813** 2.0005	**50.787** 1.9995	**50.787** 1.9995	**41.288** 1.6255	**41.318** 1.6267	IR-2020[1]	1 5/8
0.064 0.141	**0.073** 0.160	**41.275** 1.6250	**41.262** 1.6245	**50.813** 2.0005	**50.787** 1.9995	**50.787** 1.9995	**41.288** 1.6255	**41.318** 1.6267	IR-2020[1]	
0.103 0.226	—	**41.275** 1.6250	**41.262** 1.6245	**50.813** 2.0005	**50.787** 1.9995	**50.787** 1.9995	**41.288** 1.6255	**41.318** 1.6267	IR-2020[1]	
0.128 0.282	**0.145** 0.320	**41.275** 1.6250	**41.262** 1.6245	**50.813** 2.0005	**50.787** 1.9995	**50.787** 1.9995	**41.288** 1.6255	**41.318** 1.6267	IR-2220[1]	
0.082 0.181	**0.093** 0.205	**44.450** 1.7500	**44.437** 1.7495	**53.988** 2.1255	**53.962** 2.1245	**53.962** 2.1245	**44.463** 1.7505	**44.496** 1.7518	IR-2316	1 3/4
0.110 0.242	**0.124** 0.274	**44.450** 1.7500	**44.437** 1.7495	**53.988** 2.1255	**53.962** 2.1245	**53.962** 2.1245	**44.463** 1.7505	**44.496** 1.7518	IR-2316	
0.137 0.302	—	**44.450** 1.7500	**44.437** 1.7495	**53.988** 2.1255	**53.962** 2.1245	**53.962** 2.1245	**44.463** 1.7505	**44.496** 1.7518	IR-2324	
0.165 0.363	**0.186** 0.411	**44.450** 1.7500	**44.437** 1.7495	**53.988** 2.1255	**53.962** 2.1245	**53.962** 2.1245	**44.463** 1.7505	**44.496** 1.7518	IR-2324	
0.059 0.129	**0.066** 0.146	**47.625** 1.8750	**47.612** 1.8745	**57.163** 2.2505	**57.137** 2.2495	**57.137** 2.2495	**47.638** 1.8755	**47.671** 1.8768		1 7/8
0.073 0.161	—	**47.625** 1.8750	**47.612** 1.8745	**57.163** 2.2505	**57.137** 2.2495	**57.137** 2.2495	**47.638** 1.8755	**47.671** 1.8768		
0.088 0.193	—	**47.625** 1.8750	**47.612** 1.8745	**57.163** 2.2505	**57.137** 2.2495	**57.137** 2.2495	**47.638** 1.8755	**47.671** 1.8768		
0.117 0.258	**0.132** 0.292	**47.625** 1.8750	**47.612** 1.8745	**57.163** 2.2505	**57.137** 2.2495	**57.137** 2.2495	**47.638** 1.8755	**47.671** 1.8768		
0.062 0.136	**0.070** 0.154	**50.800** 2.0000	**50.785** 1.9994	**60.338** 2.3755	**60.312** 2.3745	**60.312** 2.3745	**50.815** 2.0006	**50.848** 2.0019		2
0.078 0.171	—	**50.800** 2.0000	**50.785** 1.9994	**60.335** 2.3755	**60.312** 2.3745	**60.312** 2.3745	**50.815** 2.0006	**50.848** 2.0019		

[1] IRA inner ring provides additional length if required.

Continued on next page.

FULL COMPLEMENT BEARINGS, OPEN ENDS, CLOSED ONE END – *continued*

INCH SERIES

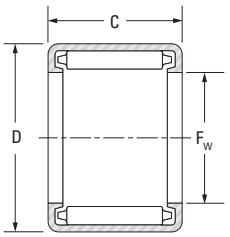

B, BH

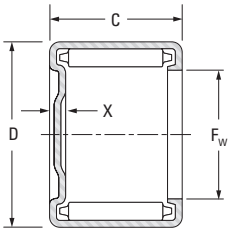

M-1, MH-1

Full Complement Bearing

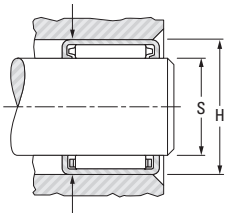

Caged Bearing

Shaft surface to be 58 HRC or equivalent

Drawn cup bearings of nominal inch dimensions, with one closed end, that are not tabulated, may be made available upon request.

Mounting dimensions are based on the inner ring rotating and the outer ring being stationary, relative to the load. The housing should be of high strength material.

See Engineering section for discussion of shaft and housing design.

Shaft Dia.	F_w	D	C	X (max.)	Bearing Designation		Load Ratings Dynamic	Load Ratings Static	Speed Rating Grease	Speed Rating Oil	C_g
			+0 +0.000 **-0.3** -0.010				C	C_0			
in.	**mm** in.	**mm** in.	**mm** in.	**mm** in.			**kN** lbf.		min^{-1}		
	50.800 2.0000	**60.325** 2.3750	**22.23** 0.875	—	B-3214	—	**54.3** 11300	**115.0** 26000	2100	3300	**0.0632**
	50.800 2.0000	**60.325** 2.3750	**25.40** 1.000	**3.05** 0.120	B-3216	M-32161	**57.4** 12900	**138.0** 31000	2100	3300	**0.0661**
	50.800 2.0000	**60.325** 2.3750	**31.75** 1.250	**3.05** 0.120	B-3220	M-32201	**71.6** 16100	**183.0** 41100	2100	3300	**0.0708**
	50.800 2.0000	**60.325** 2.3750	**38.10** 1.500	**3.05** 0.120	B-3224	M-32241	**85.0** 19100	**228.0** 51200	2100	3300	**0.0748**
	50.800 2.0000	**60.325** 2.3750	**44.45** 1.750	**3.05** 0.120	B-3228	M-32281	**97.4** 21900	**273.0** 61300	2100	3300	**0.0782**
2 1/16	**52.388** 2.0625	**64.292** 2.5312	**19.05** 0.750	—	BH-3312	—	**46.3** 10400	**86.7** 19500	2600	4100	**0.0574**
	52.388 2.0625	**64.292** 2.5312	**25.40** 1.000	**3.56** 0.140	BH-3316	MH-33161	**64.0** 14400	**133.0** 29900	2600	4100	**0.0639**
	52.388 2.0625	**64.292** 2.5312	**38.10** 1.500	**3.56** 0.140	BH-3324	MH-33241	**97.0** 21800	**226.0** 50700	2600	4100	**0.0728**
2 1/8	**53.975** 2.1250	**63.500** 2.5000	**12.70** 0.500	—	B-348	—	**26.1** 5870	**51.2** 11500	2000	3100	**0.0531**
	53.975 2.1250	**63.500** 2.5000	**19.05** 0.750	—	B-3412	—	**43.6** 9790	**99.2** 22300	2000	3100	**0.0626**
	53.975 2.1250	**63.500** 2.5000	**25.40** 1.000	**3.05** 0.120	B-3416	M-34161	**59.2** 13300	**147.0** 33000	2000	3100	**0.0690**
	53.975 2.1250	**63.500** 2.5000	**31.75** 1.250	—	B-3420	—	**73.4** 16500	**194.0** 43700	2000	3100	**0.0740**
	53.975 2.1250	**63.500** 2.5000	**38.10** 1.500	**3.05** 0.120	B-3424	M-34241	**87.2** 19600	**242.0** 54400	2000	3100	**0.0781**
2 1/4	**57.150** 2.2500	**66.675** 2.6250	**19.05** 0.750	**3.30** 0.130	B-3612	M-36121	**45.8** 10300	**105.0** 23700	2000	3000	**0.0648**
	57.150 2.2500	**66.675** 2.6250	**25.40** 1.000	—	B-3616	—	**62.2** 14000	**155.6** 35000	2000	3000	**0.0715**
	57.150 2.2500	**66.675** 2.6250	**31.75** 1.250	—	B-3620	—	**77.4** 17400	**206.0** 46400	2000	3000	**0.0766**
	57.150 2.2500	**66.675** 2.6250	**38.10** 1.500	**3.30** 0.130	B-3624	M-36241	**92.1** 20700	**257.0** 57700	2000	3000	**0.0809**
2 5/8	**66.675** 2.6250	**76.200** 3.0000	**25.40** 1.000	**3.30** 0.130	B-4216	M-42161	**66.7** 15000	**182.0** 40900	1700	2500	**0.0799**
2 3/4	**69.850** 2.7500	**79.375** 3.1250	**15.88** 0.625	—	B-4410	—	**41.0** 9210	**98.0** 22000	1600	2500	**0.0698**
	69.850 2.7500	**79.375** 3.1250	**19.050** 0.7500	—	B-4412	—	**50.7** 11400	**129.0** 29000	1600	2500	**0.0747**
	69.850 2.7500	**79.375** 3.1250	**25.40** 1.000	—	B-4416	—	**69.0** 15500	**190.0** 42800	1600	2500	**0.0824**
	69.850 2.7500	**79.375** 3.1250	**31.75** 1.250	**3.30** 0.130	B-4420	M-44201	**85.4** 19200	**252.0** 56700	1600	2500	**0.0883**
3 1/2	**88.900** 3.5000	**101.600** 4.0000	**19.05** 0.750	—	B-5612	—	**64.9** 14600	**150.0** 33700	1800	2700	**0.0819**
5 1/2	**139.700** 5.5000	**152.400** 6.0000	**19.05** 0.750	—	B-8812	—	**77.0** 17300	**231.0** 52000	1000	1600	**0.1140**

Approx. Wt.		S		H		Inspection			Mounting Inner Ring (pg B-122 to B-124)	Shaft Dia.
		Recommended Mounting Dimension				Ring Gage	Plug Gage			
Open Ends	Closed End	Max.	Min.	Max.	Min.		Go	No Go		
kg lbs.	**kg** lbs.	**mm** in.	**mm** in.	**mm** in.	**mm** in.					in.
0.108 0.239	—	**50.800** 2.0000	**50.785** 1.9994	**60.338** 2.3755	**60.312** 2.3745	**60.312** 2.3745	**50.815** 2.0006	**50.848** 2.0019		
0.124 0.273	**0.140** 0.309	**50.800** 2.0000	**50.785** 1.9994	**60.338** 2.3755	**60.312** 2.3745	**60.312** 2.3745	**50.815** 2.0006	**50.848** 2.0019		
0.155 0.341	**0.175** 0.386	**50.800** 2.0000	**50.785** 1.9994	**60.338** 2.3755	**60.312** 2.3745	**60.312** 2.3745	**50.815** 2.0006	**50.848** 2.0019		
0.186 0.410	**0.211** 0.465	**50.800** 2.0000	**50.785** 1.9994	**60.338** 2.3755	**60.312** 2.3745	**60.312** 2.3745	**50.815** 2.0006	**50.848** 2.0019		
0.217 0.478	**0.245** 0.541	**50.800** 2.0000	**50.785** 1.9994	**60.338** 2.3755	**60.312** 2.3745	**60.312** 2.3745	**50.815** 2.0006	**50.848** 2.0019		
0.122 0.269	—	**52.388** 2.0625	**52.372** 2.0619	**64.305** 2.5317	**64.280** 2.5307	**64.280** 2.5307	**52.413** 2.0635	**52.451** 2.0650	IR-2916	2 1/16
0.162 0.358	**0.184** 0.406	**52.388** 2.0625	**52.372** 2.0619	**64.305** 2.5317	**64.280** 2.5307	**64.280** 2.5307	**52.413** 2.0635	**52.451** 2.0650	IR-2916	
0.244 0.537	**0.276** 0.609	**52.388** 2.0625	**52.372** 2.0619	**64.305** 2.5317	**64.280** 2.5307	**64.280** 2.5307	**52.413** 2.0635	**52.451** 2.0650	IR-2924	
0.065 0.144	—	**53.975** 2.1250	**53.960** 2.1244	**63.513** 2.5005	**63.487** 2.4995	**63.487** 2.4995	**53.990** 2.1256	**54.028** 2.1271	IR-3024	2 1/8
0.098 0.216	—	**53.975** 2.1250	**53.960** 2.1244	**63.513** 2.5005	**63.487** 2.4995	**63.487** 2.4995	**53.990** 2.1256	**54.028** 2.1271	IR-3024	
0.131 0.289	**0.148** 0.327	**53.975** 2.1250	**53.960** 2.1244	**63.513** 2.5005	**63.487** 2.4995	**63.487** 2.4995	**53.990** 2.1256	**54.028** 2.1271	IR-3024	
0.164 0.361	—	**53.975** 2.1250	**53.960** 2.1244	**63.513** 2.5005	**63.487** 2.4995	**63.487** 2.4995	**53.990** 2.1256	**54.028** 2.1271	IR-3024	
0.196 0.433	**0.223** 0.491	**53.975** 2.1250	**53.960** 2.1244	**63.513** 2.5005	**63.487** 2.4995	**63.487** 2.4995	**53.990** 2.1256	**54.028** 2.1271	IR-3024	
0.103 0.228	**0.117** 0.258	**57.150** 2.2500	**57.135** 2.2494	**66.688** 2.6255	**66.662** 2.6245	**66.662** 2.6245	**57.165** 2.2506	**57.203** 2.2521		2 1/4
0.138 0.304	—	**57.150** 2.2500	**57.135** 2.2494	**66.688** 2.6255	**66.662** 2.6245	**66.662** 2.6245	**57.165** 2.2506	**57.203** 2.2521		
0.172 0.380	—	**57.150** 2.2500	**57.135** 2.2494	**66.688** 2.6255	**66.662** 2.6245	**66.662** 2.6245	**57.165** 2.2506	**57.203** 2.2521		
0.207 0.456	**0.235** 0.517	**57.150** 2.2500	**57.135** 2.2494	**66.688** 2.6255	**66.662** 2.6245	**66.662** 2.6245	**57.165** 2.2506	**57.203** 2.2521		
0.159 0.351	**0.181** 0.398	**66.675** 2.6250	**66.660** 2.6244	**76.213** 3.0005	**76.187** 2.9995	**76.187** 2.9995	**66.700** 2.6260	**66.739** 2.6275		2 5/8
0.104 0.229	—	**69.850** 2.7500	**69.835** 2.7494	**79.388** 3.1255	**79.362** 3.1245	**79.362** 3.1245	**69.875** 2.7510	**69.914** 2.7525	IR-4016	2 3/4
0.124 0.274	—	**69.850** 2.7500	**69.835** 2.7494	**79.388** 3.1255	**79.362** 3.1245	**79.362** 3.1245	**69.875** 2.7510	**69.914** 2.7525	IR-4016	
0.166 0.366	—	**69.850** 2.7500	**69.835** 2.7494	**79.388** 3.1255	**79.362** 3.1245	**79.362** 3.1245	**69.875** 2.7510	**69.914** 2.7525	IR-4016	
0.208 0.458	**0.235** 0.519	**69.850** 2.7500	**69.835** 2.7494	**79.388** 3.1255	**79.362** 3.1245	**79.362** 3.1245	**69.875** 2.7510	**69.914** 2.7525		
0.212 0.468	—	**88.900** 3.5000	**88.885** 3.4994	**101.613** 4.0005	**101.587** 3.9995	**101.587** 3.9995	**88.925** 3.5010	**88.964** 3.5025		3 1/2
0.325 0.717	—	**139.700** 5.5000	**139.682** 5.4993	**152.425** 6.0010	**152.375** 5.9990	**152.375** 5.9990	**139.725** 5.5010	**139.776** 5.5030		5 1/2

B

EXTRA-PRECISION BEARINGS

INCH SERIES

Open-end full-complement mechanically retained drawn cup needle roller bearings, manufactured to inch standards, are offered with extra-precision specifications. The manufacturing tolerance of these bearings is one-third that of the standard precision bearings. In production operations, using closer tolerances on shaft and housing, they will assemble with consistently lower radial internal clearances than can be expected with the standard precision series bearings.

Extra-precision bearings are suitable for those applications requiring close control of radial play and eccentricity. They are also preferred when two bearings are mounted adjacent to each other because greater accuracy in manufacture will provide better load distribution between the bearings.

Nominal dimensions, load ratings, speed ratings and other general specifications for extra-precision bearings are the same as for the corresponding "B" or "BH" sizes of drawn cup needle roller bearings. Consequently, the data on pages B-94 to B-107 can be used in bearing size selection.

When ordering an extra-precision bearing, add the prefix letter "G" to the bearing designation. For example, after following the size selection procedure outlined in the engineering section, bearing B-1212 is selected – but extra-precision tolerances are required. These are designated by ordering a GB-1212 bearing.

To realize the advantages of the expected closer radial internal clearance of the extra-precision bearing, the user must have the capability of producing housing bore and shaft raceway diameters to the close tolerances indicated by the bearing tables on page B-110.

The resulting total radial internal clearance, within the installed GB-1212 extra-precision drawn cup needle roller bearing, will lie in the range from 0.005 mm to 0.030 mm (0.0002 in. to 0.0012 in.)

Inspection dimensions for the extra-precision bearings are given in Table B-13 on page B-109. Note that these bearings must be inspected while mounted in the specified ring gage. Bearing bores are checked with "go" and "no go" plug gages. The "go" gage size is the minimum diameter inside the needle rollers. The "no go" gage size is 0.002 mm (0.0001 in.) larger than the maximum diameter inside the needle rollers.

Procedures for selecting ring and plug gage dimensions are the same as for those involving standard precision needle roller bearings – except that the ring gage diameters and diameters inside the needle rollers must be drawn from the table on page B-109.

Table B-13. Inspection for extra-precision drawn cup needle roller bearings – inch series

Nominal shaft diameter	Gaging		
	Ring gage	Diameter inside needle rollers	
		Max.	Min.
mm in.	**mm** in.	**mm** in.	**mm** in.
3.175 1/8	**6.281** 0.2473	**3.200** 0.1260	**3.190** 0.1256
3.970 5/32	**7.074** 0.2785	**3.995** 0.1573	**3.985** 0.1569
4.763 3/16	**8.611** 0.3390	**4.788** 0.1885	**4.777** 0.1881
6.350 1/4	**10.993** 0.4328	**6.375** 0.2510	**6.365** 0.2506
7.938 5/16	**12.581** 0.4953	**7.963** 0.3135	**7.953** 0.3131
H 7.938 H 5/16	**14.168** 0.5578	**7.963** 0.3135	**7.953** 0.3131
9.525 3/8	**14.168** 0.5578	**9.550** 0.3760	**9.540** 0.3756
H 9.525 H 3/8	**15.756** 0.6203	**9.550** 0.3760	**9.540** 0.3756
11.113 7/16	**15.756** 0.6203	**11.138** 0.4385	**11.127** 0.4381
H 11.113 H 7/16	**17.343** 0.6828	**11.138** 0.4385	**11.127** 0.4381
12.700 1/2	**17.343** 0.6828	**12.725** 0.5010	**12.715** 0.5006
H 12.700 H 1/2	**18.931** 0.7453	**12.725** 0.5010	**12.715** 0.5006
14.288 9/16	**18.931** 0.7453	**14.313** 0.5635	**14.303** 0.5631
H 14.288 H 9/16	**20.518** 0.8078	**14.313** 0.5635	**14.303** 0.5631
15.875 5/8	**20.518** 0.8078	**15.900** 0.6260	**15.890** 0.6256
H 15.875 H 5/8	**22.106** 0.8703	**15.900** 0.6260	**15.890** 0.6256
17.463 11/16	**22.106** 0.8703	**17.488** 0.6885	**17.478** 0.6881
H 17.463 H 11/16	**23.693** 0.9328	**17.488** 0.6885	**17.478** 0.6881
19.050 3/4	**25.273** 0.9950	**19.068** 0.7507	**19.058** 0.7503
H 19.050 H 3/4	**26.861** 1.0575	**19.068** 0.7507	**19.058** 0.7503
20.638 13/16	**26.861** 1.0575	**20.655** 0.8132	**20.645** 0.8128
H 20.638 H 13/16	**28.448** 1.1200	**20.655** 0.8132	**20.645** 0.8128
22.225 7/8	**28.448** 1.1200	**22.243** 0.8757	**22.233** 0.8753
H 22.225 H 7/8	**30.036** 1.1825	**22.243** 0.8757	**22.233** 0.8753

Nominal shaft diameter	Gaging		
	Ring gage	Diameter inside needle rollers	
		Max.	Min.
mm in.	**mm** in.	**mm** in.	**mm** in.
23.813 15/16	**30.036** 1.1825	**23.830** 0.9382	**23.820** 0.9378
25.400 1	**31.623** 1.2450	**25.418** 1.0007	**25.408** 1.0003
H 25.400 H 1	**33.211** 1.3075	**25.418** 1.0007	**25.408** 1.0003
26.988 1 1/16	**33.211** 1.3075	**27.005** 1.0632	**26.995** 1.0628
28.575 1 1/8	**34.798** 1.3700	**28.593** 1.1257	**28.583** 1.1253
H 28.575 H 1 1/8	**37.973** 1.4950	**28.593** 1.1257	**28.583** 1.1253
30.163 1 3/16	**37.973** 1.4950	**30.180** 1.1882	**30.170** 1.1878
31.750 1 1/4	**37.973** 1.4950	**31.768** 1.2507	**31.758** 1.2503
H 31.750 H 1 1/4	**41.148** 1.6200	**31.768** 1.2507	**31.758** 1.2503
33.338 1 5/16	**41.148** 1.6200	**33.355** 1.3132	**33.345** 1.3128
34.925 1 3/8	**41.148** 1.6200	**34.943** 1.3757	**34.933** 1.3753
H 34.925 H 1 3/8	**44.323** 1.7450	**34.943** 1.3757	**34.933** 1.3753
38.100 1 1/2	**47.498** 1.8700	**38.120** 1.5008	**38.108** 1.5003
41.275 1 5/8	**50.673** 1.9950	**41.295** 1.6258	**41.283** 1.6253
44.450 1 3/4	**53.848** 2.1200	**44.470** 1.7508	**44.458** 1.7503
47.625 1 7/8	**57.023** 2.2450	**47.645** 1.8758	**47.633** 1.8753
50.800 2	**60.198** 2.3700	**50.820** 2.0008	**50.808** 2.0003
H 52.388 H 2 1/16	**64.166** 2.5262	**52.408** 2.0633	**52.395** 2.0628
53.975 2 1/8	**63.373** 2.4950	**53.995** 2.1258	**53.983** 2.1253
57.150 2 1/4	**66.548** 2.6200	**57.170** 2.2508	**57.158** 2.2503
66.675 2 5/8	**76.073** 2.9950	**66.700** 2.6260	**66.685** 2.6254
69.850 2 3/4	**79.248** 3.1200	**69.875** 2.7510	**69.860** 2.7504
88.900 3 1/2	**101.473** 3.9950	**88.925** 3.5010	**88.710** 3.5004

B

Table B-14. Mounting dimensions for extra-precision drawn cup needle roller bearings – inch series

Bearing bore designation	Mounting					
	Nominal bore	Nominal O.D.	Shaft raceway diameter		Housing bore	
			Max.	Min.	Max.	Min.
	mm in.	mm in.	mm in.	mm in.	mm in.	mm in.
GB-2	**3.175** 0.1250	**6.350** 0.2500	**3.178** 0.1251	**3.170** 0.1248	**6.281** 0.2473	**6.274** 0.2470
GB-2 1/2	**3.967** 0.1562	**7.142** 0.2812	**3.973** 0.1564	**3.965** 0.1561	**7.074** 0.2785	**7.066** 0.2782
GB-3	**4.763** 0.1875	**8.733** 0.3438	**4.765** 0.1876	**4.757** 0.1873	**8.611** 0.3390	**8.603** 0.3387
GB-4	**6.350** 0.2500	**11.113** 0.4375	**6.353** 0.2501	**6.345** 0.2498	**10.993** 0.4328	**10.986** 0.4325
GB-5	**7.938** 0.3125	**12.700** 0.5000	**7.940** 0.3126	**7.932** 0.3123	**12.581** 0.4953	**12.573** 0.4950
GBH-5	**7.938** 0.3125	**14.288** 0.5625	**7.940** 0.3126	**7.932** 0.3123	**14.168** 0.5578	**14.161** 0.5575
GB-6	**9.525** 0.3750	**14.288** 0.5625	**9.528** 0.3751	**9.520** 0.3748	**14.168** 0.5578	**14.161** 0.5575
GBH-6	**9.525** 0.3750	**15.875** 0.6250	**9.528** 0.3751	**9.520** 0.3748	**15.756** 0.6203	**15.748** 0.6200
GB-7	**11.113** 0.4375	**15.875** 0.6250	**11.115** 0.4376	**11.107** 0.4373	**15.756** 0.6203	**15.748** 0.6200
GBH-7	**11.113** 0.4375	**17.463** 0.6875	**11.115** 0.4376	**11.107** 0.4373	**17.343** 0.6828	**17.336** 0.6825
GB-8	**12.700** 0.5000	**17.463** 0.6875	**12.703** 0.5001	**12.695** 0.4998	**17.343** 0.6828	**17.336** 0.6825
GBH-8	**12.700** 0.5000	**19.050** 0.7500	**12.703** 0.5001	**12.695** 0.4998	**18.931** 0.7453	**18.923** 0.7450
GB-9	**14.288** 0.5625	**19.050** 0.7500	**14.290** 0.5626	**14.282** 0.5623	**18.931** 0.7453	**18.923** 0.7450
GBH-9	**14.288** 0.5625	**20.638** 0.8125	**14.290** 0.5626	**14.282** 0.5623	**20.518** 0.8078	**20.511** 0.8075
GB-10	**15.875** 0.6250	**20.638** 0.8125	**14.878** 0.6251	**15.870** 0.6248	**20.518** 0.8078	**20.511** 0.8075
GBH-10	**15.875** 0.6250	**22.225** 0.8750	**14.878** 0.6251	**15.870** 0.6248	**22.106** 0.8703	**22.098** 0.8700
GB-11	**17.463** 0.6875	**22.225** 0.8750	**17.465** 0.6876	**17.457** 0.6873	**22.106** 0.8703	**22.098** 0.8700
GBH-11	**17.463** 0.6875	**23.813** 0.9375	**17.465** 0.6876	**17.457** 0.6873	**23.693** 0.9328	**23.686** 0.9325
GB-12	**19.050** 0.7500	**25.400** 1.0000	**19.053** 0.7501	**19.045** 0.7498	**25.281** 0.9953	**25.273** 0.9950
GBH-12	**19.050** 0.7500	**26.988** 1.0625	**19.053** 0.7501	**19.045** 0.7498	**26.868** 1.0578	**26.861** 1.0575
GB-13	**20.638** 0.8125	**26.988** 1.0625	**20.640** 0.8126	**20.632** 0.8123	**26.868** 1.0578	**26.861** 1.0575
GBH-13	**20.638** 0.8125	**28.575** 1.1250	**20.640** 0.8126	**20.632** 0.8123	**28.456** 1.1203	**28.448** 1.1200
GB-14	**22.225** 0.8750	**28.575** 1.1250	**22.228** 0.8751	**22.220** 0.8748	**28.456** 1.1203	**28.448** 1.1200
GBH-14	**22.225** 0.8750	**30.163** 1.1875	**22.228** 0.8751	**22.220** 0.8748	**30.046** 1.1829	**30.036** 1.1825

Bearing bore designation	Mounting					
	Nominal bore	Nominal O.D.	Shaft raceway diameter		Housing bore	
			Max.	Min.	Max.	Min.
	mm in.	mm in.	mm in.	mm in.	mm in.	mm in.
GB-15	**23.813** 0.9375	**30.163** 1.1875	**23.815** 0.9376	**23.807** 0.9373	**30.046** 1.1829	**30.036** 1.1825
GB-16	**25.400** 1.0000	**31.750** 1.2500	**25.403** 1.0001	**25.395** 0.9998	**31.633** 1.2454	**31.623** 1.2450
GBH-16	**25.400** 1.0000	**33.338** 1.3125	**25.403** 1.0001	**25.395** 0.9998	**33.221** 1.3079	**33.211** 1.3075
GB-17	**26.988** 1.0625	**33.338** 1.3125	**26.990** 1.0626	**26.982** 1.0623	**33.221** 1.3079	**33.211** 1.3075
GB-18	**28.575** 1.1250	**34.925** 1.3750	**28.578** 1.1251	**28.570** 1.1248	**34.808** 1.3704	**34.798** 1.3700
GBH-18	**28.575** 1.1250	**38.100** 1.5000	**28.578** 1.1251	**28.570** 1.1248	**37.986** 1.4955	**37.973** 1.4950
GB-19	**30.163** 1.1875	**38.100** 1.5000	**30.165** 1.1876	**30.157** 1.1873	**37.986** 1.4955	**37.973** 1.4950
GB-20	**31.750** 1.2500	**38.100** 1.5000	**31.753** 1.2501	**31.745** 1.2498	**37.986** 1.4955	**37.973** 1.4950
GBH-20	**31.750** 1.2500	**41.275** 1.6250	**31.753** 1.2501	**31.745** 1.2498	**41.161** 1.6205	**41.148** 1.6200
GB-21	**33.338** 1.3125	**41.275** 1.6250	**33.340** 1.3126	**33.332** 1.3123	**41.161** 1.6205	**41.148** 1.6200
GB-22	**34.925** 1.3750	**41.275** 1.6250	**34.925** 1.3750	**34.917** 1.3747	**41.161** 1.6205	**41.148** 1.6200
GBH-22	**34.925** 1.3750	**44.450** 1.7500	**34.925** 1.3750	**34.917** 1.3747	**44.336** 1.7455	**44.323** 1.7450
GB-24	**38.100** 1.5000	**47.625** 1.8750	**38.100** 1.5000	**38.092** 1.4997	**47.511** 1.8705	**47.498** 1.8700
GB-26	**41.275** 1.6250	**50.800** 2.0000	**41.275** 1.6250	**41.267** 1.6247	**50.686** 1.9955	**50.673** 1.9950
GB-28	**44.450** 1.7500	**53.975** 2.1250	**44.450** 1.7500	**44.442** 1.7497	**53.861** 2.1205	**53.848** 2.1200
GB-30	**47.625** 1.8750	**57.150** 2.2500	**47.625** 1.8750	**47.617** 1.8747	**57.036** 2.2455	**57.023** 2.2450
GB-32	**50.800** 2.0000	**60.325** 2.3750	**50.800** 2.0000	**50.792** 1.9997	**60.211** 2.3705	**60.198** 2.3700
GBH-33	**52.388** 2.0625	**64.293** 2.5312	**52.385** 2.0624	**52.377** 2.0621	**64.178** 2.5267	**64.166** 2.5262
GB-34	**53.975** 2.1250	**63.500** 2.5000	**53.973** 2.1249	**53.965** 2.1246	**63.386** 2.4955	**63.373** 2.4950
GB-36	**57.150** 2.2500	**66.675** 2.6250	**57.148** 2.2499	**57.140** 2.2496	**66.561** 2.6205	**66.548** 2.6200
GB-42	**66.675** 2.6250	**76.200** 3.0000	**66.670** 2.6248	**66.662** 2.6245	**76.088** 2.9956	**76.073** 2.9950
GB-44	**69.850** 2.7500	**79.375** 3.1250	**69.845** 2.7498	**69.837** 2.7495	**79.263** 3.1206	**79.248** 3.1200
GB-56	**88.900** 3.5000	**101.600** 4.0000	**88.895** 3.4998	**88.887** 3.4995	**101.488** 3.9956	**101.473** 3.9950

NOTE

Check for availability as not every size may be in production.

NOTES

CAGED BEARINGS – OPEN ENDS, CLOSED ONE END

INCH SERIES

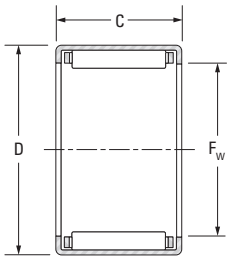

J, JH

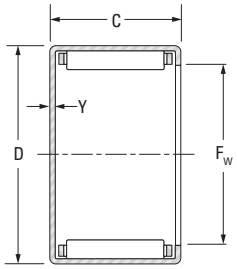

MJ-1, MJH-1

Full Complement Bearing

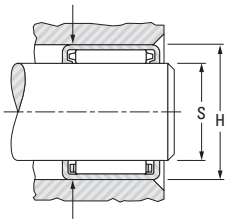

Caged Bearing

Shaft surface to be 58 HRC or equivalent

Drawn cup bearings of nominal inch dimensions, with one closed end, that are not tabulated, may be made available upon request.

Mounting dimensions are based on the inner ring rotating and the outer ring being stationary, relative to the load. The housing should be of high strength material.

See Engineering section for discussion of shaft and housing design.

Shaft Dia.	F_w	D	C	Y (max.)	Bearing Designation		Load Ratings Dynamic C	Load Ratings Static C_0	Speed Rating Grease	Speed Rating Oil	C_g
			+0 +0.000 **-0.3** -0.010								
in.	**mm** in.	**mm** in.	**mm** in.	**mm** in.			**kN** lbf.		min^{-1}		
1/8	**3.175** 0.1250	**6.350** 0.2500	**4.78** 0.188	—	JP-23-F	—	**0.89** 200	**0.62** 140	33000	51000	**0.0064**
	3.175 0.1250	**6.350** 0.2500	**6.35** 0.250	—	JP-24-F	—	**1.33** 300	**1.02** 230	33000	51000	**0.0072**
5/32	**3.970** 0.1563	**7.142** 0.2812	**4.78** 0.188	—	JP-2 1/2 3F	—	**0.93** 210	**0.62** 140	31000	47000	**0.0070**
3/16	**4.763** 0.1875	**8.733** 0.3438	**4.77** 0.188	—	JP-33-F	—	**1.07** 240	**0.71** 160	25000	38000	**0.0076**
	4.763 0.1875	**8.733** 0.3438	**6.35** 0.250	—	JP-34-F	—	**1.60** 360	**1.25** 280	25000	38000	**0.0087**
	4.763 0.1875	**8.733** 0.3438	**9.53** 0.375	**1.02** 0.040	J-36	MJ-361	**2.27** 510	**1.91** 430	25000	38000	**0.0097**
1/4	**6.350** 0.2500	**11.113** 0.4375	**7.92** 0.312	**1.02** 0.040	J-45	MJ-451	**2.22** 500	**1.73** 390	20000	30000	**0.0103**
	6.350 0.2500	**11.113** 0.4375	**11.13** 0.438	**1.02** 0.040	J-47	MJ-471	**3.38** 760	**3.02** 680	20000	30000	**0.0119**
5/16	**7.938** 0.3125	**12.700** 0.5000	**7.92** 0.312	—	J-55	—	**2.40** 540	**2.00** 450	18000	28000	**0.0117**
	7.938 0.3125	**12.700** 0.5000	**11.13** 0.438	**1.02** 0.040	J-57	MJ-571	**4.05** 910	**3.91** 880	18000	28000	**0.0130**
	7.938 0.3125	**14.288** 0.5625	**11.13** 0.438	**1.02** 0.040	JH-57	MJH-571	**4.63** 1040	**3.78** 850	14000	22000	**0.0132**
3/8	**9.525** 0.3750	**14.288** 0.5625	**7.92** 0.312	**1.02** 0.040	J-65	MJ-651	**2.76** 620	**2.49** 560	18000	27000	**0.0133**
	9.525 0.3750	**14.288** 0.5625	**9.53** 0.375	**1.02** 0.040	J-66	MJ-661	**3.51** 790	**3.47** 780	18000	27000	**0.0144**
	9.525 0.3750	**14.288** 0.5625	**12.70** 0.500	**1.02** 0.040	J-68	MJ-681	**5.20** 1170	**5.74** 1290	18000	27000	**0.0163**
	9.525 0.3750	**15.875** 0.6250	**12.70** 0.500	—	JH-68	—	**6.58** 1480	**6.09** 1370	13000	20000	**0.0159**
7/16	**11.113** 0.4375	**15.875** 0.6250	**12.70** 0.500	**1.02** 0.040	J-78	MJ-781	**6.36** 1430	**7.70** 1730	17000	26000	**0.0187**
	11.113 0.4375	**17.463** 0.6875	**12.70** 0.500	—	JH-78	—	**7.12** 1600	**6.89** 1550	13000	19000	**0.0174**
1/2	**12.700** 0.5000	**17.463** 0.6875	**7.92** 0.312	**1.02** 0.040	J-85	MJ-851	**3.47** 780	**3.65** 820	16000	25000	**0.0164**
	12.700 0.5000	**17.463** 0.6875	**9.53** 0.375	**1.02** 0.040	J-86	MJ-861	**4.67** 1050	**5.38** 1210	16000	25000	**0.0181**
	12.700 0.5000	**17.463** 0.6875	**12.70** 0.500	**1.02** 0.040	J-88	MJ-881	**6.32** 1420	**7.92** 1780	16000	25000	**0.0199**
	12.700 0.5000	**17.463** 0.6875	**19.05** 0.750	—	J-812	—	**10.23** 2300	**14.72** 3310	16000	25000	**0.0232**
	12.700 0.5000	**19.050** 0.7500	**11.13** 0.438	**1.02** 0.040	JH-87	MJH-871	**6.41** 1440	**6.18** 1390	12000	19000	**0.0179**
	12.700 0.5000	**19.050** 0.7500	**12.70** 0.500	**1.02** 0.040	JH-88	MJH-881	**7.56** 1700	**7.70** 1730	12000	19000	**0.0189**

Approx. Wt.		S		H		Inspection			Mounting Inner Ring (pg B-122 to B-124)	Shaft Dia.
		Recommended Mounting Dimension				Ring Gage	Plug Gage			
Open Ends	Closed End	Max.	Min.	Max.	Min.		go	no go		
kg lbs.	**kg** lbs.	**mm** in.	**mm** in.	**mm** in.	**mm** in.					in.
0.001 0.001	—	**3.175** 0.1250	**3.167** 0.1247	**6.363** 0.2505	**6.350** 0.2500	**6.363** 0.2505	**3.195** 0.1258	**3.221** 0.1268		1/8
0.001 0.001	—	**3.175** 0.1250	**3.167** 0.1247	**6.363** 0.2505	**6.350** 0.2500	**6.363** 0.2505	**3.195** 0.1258	**3.221** 0.1268		
0.001 0.001	—	**3.970** 0.1563	**3.962** 0.1560	**7.155** 0.2817	**7.142** 0.2812	**7.155** 0.2817	**3.990** 0.1571	**4.016** 0.1581		5/32
0.001 0.002	—	**4.763** 0.1875	**4.755** 0.1872	**8.730** 0.3437	**8.717** 0.3432	**8.730** 0.3437	**4.783** 0.1883	**4.808** 0.1893		3/16
0.001 0.002	—	**4.763** 0.1875	**4.755** 0.1872	**8.730** 0.3437	**8.717** 0.3432	**8.730** 0.3437	**4.783** 0.1883	**4.808** 0.1893		3/16
0.002 0.004	**0.002** 0.005	**4.763** 0.1875	**4.755** 0.1872	**8.730** 0.3437	**8.717** 0.3432	**8.730** 0.3437	**4.783** 0.1883	**4.808** 0.1893		
0.003 0.006	**0.003** 0.007	**6.350** 0.2500	**6.337** 0.2495	**11.125** 0.4380	**11.100** 0.4370	**11.125** 0.4380	**6.388** 0.2515	**6.414** 0.2525		1/4
0.004 0.008	**0.004** 0.009	**6.350** 0.2500	**6.337** 0.2495	**11.125** 0.4380	**11.100** 0.4370	**11.125** 0.4380	**6.388** 0.2515	**6.414** 0.2525		
0.003 0.007	—	**7.938** 0.3125	**7.925** 0.3120	**12.713** 0.5005	**12.687** 0.4995	**12.713** 0.5005	**7.976** 0.3140	**8.001** 0.3150		5/16
0.004 0.009	**0.005** 0.011	**7.938** 0.3125	**7.925** 0.3120	**12.713** 0.5005	**12.687** 0.4995	**12.713** 0.5005	**7.976** 0.3140	**8.001** 0.3150		
0.006 0.013	**0.007** 0.016	**7.938** 0.3125	**7.925** 0.3120	**14.300** 0.5630	**14.275** 0.5620	**14.300** 0.5630	**7.976** 0.3140	**8.001** 0.3150		
0.004 0.008	**0.004** 0.009	**9.525** 0.3750	**9.512** 0.3745	**14.300** 0.5630	**14.275** 0.5620	**14.300** 0.5630	**9.563** 0.3765	**9.589** 0.3775	IRA-3	3/8
0.004 0.009	**0.005** 0.010	**9.525** 0.3750	**9.512** 0.3745	**14.300** 0.5630	**14.275** 0.5620	**14.300** 0.5630	**9.563** 0.3765	**9.589** 0.3775	IRA-3	
0.005 0.012	**0.006** 0.013	**9.525** 0.3750	**9.512** 0.3745	**14.300** 0.5630	**14.275** 0.5620	**14.300** 0.5630	**9.563** 0.3765	**9.589** 0.3775	IRA-3	
0.008 0.017	—	**9.525** 0.3750	**9.512** 0.3745	**15.888** 0.6255	**15.862** 0.6245	**15.888** 0.6255	**9.563** 0.3765	**9.589** 0.3775	IRA-3	
0.006 0.014	**0.007** 0.016	**11.113** 0.4375	**11.100** 0.4370	**15.888** 0.6255	**15.862** 0.6245	**15.888** 0.6255	**11.151** 0.4390	**11.176** 0.4400		7/16
0.009 0.019	—	**11.113** 0.4375	**11.100** 0.4370	**17.475** 0.6880	**17.450** 0.6870	**17.475** 0.6880	**11.151** 0.4390	**11.176** 0.4400		
0.005 0.010	**0.005** 0.012	**12.700** 0.5000	**12.687** 0.4995	**17.475** 0.6880	**17.450** 0.6870	**17.475** 0.6880	**12.738** 0.5015	**12.764** 0.5025	IRA-5	1/2
0.005 0.011	**0.006** 0.013	**12.700** 0.5000	**12.687** 0.4995	**17.475** 0.6880	**17.450** 0.6870	**17.475** 0.6880	**12.738** 0.5015	**12.764** 0.5025	IRA-5	
0.007 0.015	**0.008** 0.018	**12.700** 0.5000	**12.687** 0.4995	**17.475** 0.6880	**17.450** 0.6870	**17.475** 0.6880	**12.738** 0.5015	**12.764** 0.5025	IRA-5	
0.010 0.023	—	**12.700** 0.5000	**12.687** 0.4995	**17.475** 0.6880	**17.450** 0.6870	**17.475** 0.6880	**12.738** 0.5015	**12.764** 0.5025		
0.009 0.019	**0.010** 0.023	**12.700** 0.5000	**12.687** 0.4995	**19.063** 0.7505	**19.037** 0.7495	**19.063** 0.7505	**12.738** 0.5015	**12.764** 0.5025	IRA-5	
0.010 0.022	**0.012** 0.026	**12.700** 0.5000	**12.687** 0.4995	**19.063** 0.7505	**19.037** 0.7495	**19.063** 0.7505	**12.738** 0.5015	**12.764** 0.5025	IRA-5	

Continued on next page.

CAGED BEARINGS – OPEN ENDS, CLOSED ONE END – *continued*

INCH SERIES

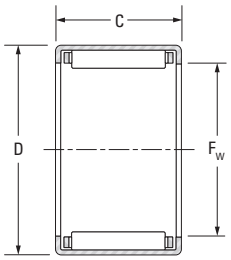

J, JH

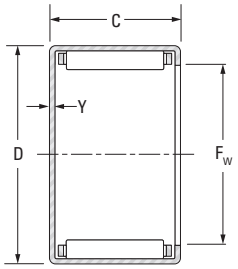

MJ-1, MJH-1

Full Complement Bearing

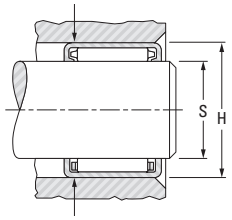

Caged Bearing

Shaft surface to be 58 HRC or equivalent

Drawn cup bearings of nominal inch dimensions, with one closed end, that are not tabulated, may be made available upon request.

Mounting dimensions are based on the inner ring rotating and the outer ring being stationary, relative to the load. The housing should be of high strength material.

See Engineering section for discussion of shaft and housing design.

Shaft Dia.	F_w	D	C	Y (max.)	Bearing Designation		Load Ratings Dynamic C	Load Ratings Static C_0	Speed Rating Grease	Speed Rating Oil	C_g
			+0 +0.000 **-0.3** -0.010								
in.	**mm** in.	**mm** in.	**mm** in.	**mm** in.			**kN** lbf.		min^{-1}		
	12.700 0.5000	**19.050** 0.7500	**19.05** 0.750	—	JH-812	—	**12.32** 2770	**14.41** 3240	12000	19000	**0.0221**
9/16	**14.288** 0.5625	**19.050** 0.750	**11.13** 0.438	**1.02** 0.040	J-97	MJ-971	**5.47** 1230	**6.81** 1530	16000	25000	**0.0201**
	14.288 0.5625	**19.050** 0.7500	**12.70** 0.500	**1.02** 0.040	J-98	MJ-981	**6.23** 1400	**8.01** 1800	16000	25000	**0.0210**
	14.288 0.5625	**19.050** 0.7500	**15.88** 0.625	—	J-910	—	**5.83** 1310	**7.21** 1620	16000	25000	**0.0205**
	14.288 0.5625	**20.638** 0.8125	**12.70** 0.500	**1.02** 0.040	JH-98	MJH-981	**8.01** 1800	**8.50** 1910	12000	18000	**0.0203**
5/8	**15.875** 0.6250	**20.638** 0.8125	**12.70** 0.500	**1.02** 0.040	J-108	MJ-1081	**6.72** 1510	**9.12** 2050	13000	21000	**0.0227**
	15.875 0.6250	**20.638** 0.8125	**15.88** 0.625	**1.02** 0.040	J-1010	MJ-10101	**8.81** 1980	**12.94** 2910	13000	21000	**0.0247**
	15.875 0.6250	**20.638** 0.8125	**19.05** 0.750	**1.02** 0.040	J-1012	MJ-10121	**11.74** 2640	**18.86** 4240	13000	21000	**0.0272**
	15.875 0.6250	**22.212** 0.8745	**15.88** 0.625	**1.02** 0.040	JH-1010	MJH-10101	**11.57** 2600	**14.10** 3170	14000	21000	**0.0240**
	15.875 0.6250	**22.212** 0.8745	**25.40** 1.000	**1.02** 0.040	JH-1016	MJH-10161	**19.79** 4450	**28.11** 6320	14000	21000	**0.0285**
11/16	**17.463** 0.6875	**22.212** 0.8745	**19.05** 0.750	**1.02** 0.040	J-1112	MJ-11121	**12.46** 2800	**20.91** 4700	12000	19000	**0.0290**
	17.463 0.6875	**23.813** 0.9375	**15.88** 0.625	**1.02** 0.040	JH-1110	MJH-11101	**12.05** 2710	**15.21** 3420	13000	19000	**0.0255**
	17.463 0.6875	**23.813** 0.9375	**19.05** 0.750	—	JH-1112	—	**16.15** 3630	**22.20** 4990	13000	19000	**0.0280**
3/4	**19.050** 0.7500	**25.400** 1.0000	**9.53** 0.375	—	J-126	—	**6.49** 1460	**7.03** 1580	11000	18000	**0.0218**
	19.050 0.7500	**25.400** 1.0000	**12.70** 0.500	—	J-128	—	**9.92** 2230	**12.19** 2740	11000	18000	**0.0250**
	19.050 0.7500	**25.400** 1.0000	**15.88** 0.625	**1.02** 0.040	J-1210	MJ-12101	**12.50** 2810	**16.32** 3670	11000	18000	**0.0269**
	19.050 0.7500	**25.400** 1.0000	**19.05** 0.750	**1.02** 0.040	J-1212	MJ-12121	**15.52** 3490	**21.62** 4860	11000	18000	**0.0288**
	19.050 0.7500	**26.988** 1.0625	**19.05** 0.750	**1.02** 0.040	JH-1212	MJH-12121	**19.08** 4290	**23.58** 5300	12000	18000	**0.0285**
13/16	**20.638** 0.8125	**26.988** 1.0625	**22.23** 0.875	—	J-1314	—	**19.31** 4340	**29.31** 6590	10000	16000	**0.0321**
	20.638 0.8125	**28.575** 1.1250	**19.05** 0.750	**1.27** 0.050	JH-1312	MJH-13121	**18.77** 4220	**24.55** 5520	11000	16000	**0.0299**
7/8	**22.225** 0.8750	**28.575** 1.1250	**9.53** 0.375	—	J-146	—	**7.21** 1620	**8.41** 1890	9700	15000	**0.0243**
	22.225 0.8750	**28.575** 1.1250	**12.70** 0.500	—	J-148	—	**10.94** 2460	**14.50** 3260	9700	15000	**0.0270**
	22.225 0.8750	**28.575** 1.1250	**19.05** 0.750	**1.02** 0.040	J-1412	MJ-14121	**17.88** 4020	**27.18** 6110	9700	15000	**0.0325**

Approx. Wt.		S		H		Inspection			Mounting Inner Ring (pg B-122 to B-124)	Shaft Dia.
		Recommended Mounting Dimension				Ring Gage	Plug Gage			
Open Ends	Closed End	Max.	Min.	Max.	Min.		go	no go		
kg lbs.	**kg** lbs.	**mm** in.	**mm** in.	**mm** in.	**mm** in.					in.
0.015 0.032	—	**12.700** 0.5000	**12.687** 0.4995	**19.063** 0.7505	**19.037** 0.7495	**19.063** 0.7505	**12.738** 0.5015	**12.764** 0.5025		
0.007 0.016	**0.009** 0.019	**14.288** 0.5625	**14.275** 0.5620	**19.063** 0.7505	**19.037** 0.7495	**19.063** 0.7505	**14.326** 0.5640	**14.351** 0.5650	IR-68	9/16
0.008 0.017	**0.009** 0.020	**14.288** 0.5625	**14.275** 0.5620	**19.063** 0.7505	**19.037** 0.7495	**19.063** 0.7505	**14.326** 0.5640	**14.351** 0.5650	IR-68	
0.010 0.021	—	**14.288** 0.5625	**14.275** 0.5620	**19.063** 0.7505	**19.037** 0.7495	**19.063** 0.7505	**14.326** 0.5640	**14.351** 0.5650	IR-612(1)	
0.011 0.025	**0.014** 0.030	**14.288** 0.5625	**14.275** 0.5620	**20.650** 0.8130	**20.625** 0.8120	**20.650** 0.8130	**14.326** 0.5640	**14.351** 0.5650	IR-68	
0.009 0.019	**0.010** 0.023	**15.875** 0.6250	**15.862** 0.6245	**20.650** 0.8130	**20.625** 0.8120	**20.650** 0.8130	**15.913** 0.6265	**15.939** 0.6275	IR-68-1	5/8
0.010 0.023	**0.013** 0.028	**15.875** 0.6250	**15.862** 0.6245	**20.650** 0.8130	**20.625** 0.8120	**20.650** 0.8130	**15.913** 0.6265	**15.939** 0.6275	IR-612-1	
0.013 0.028	**0.015** 0.033	**15.875** 0.6250	**15.862** 0.6245	**20.650** 0.8130	**20.625** 0.8120	**20.650** 0.8130	**15.913** 0.6265	**15.939** 0.6275	IR-612-1	
0.015 0.032	**0.017** 0.037	**15.875** 0.6250	**15.862** 0.6245	**22.238** 0.8755	**22.212** 0.8745	**22.238** 0.8755	**15.913** 0.6265	**15.939** 0.6275	IR-612-1	
0.024 0.052	**0.028** 0.062	**15.875** 0.6250	**15.862** 0.6245	**22.238** 0.8755	**22.212** 0.8745	**22.238** 0.8755	**15.913** 0.6265	**15.939** 0.6275		
0.014 0.030	**0.016** 0.036	**17.463** 0.6875	**17.450** 0.6870	**22.238** 0.8755	**22.212** 0.8745	**22.238** 0.8755	**17.501** 0.6890	**17.526** 0.6900		11/16
0.016 0.035	**0.019** 0.042	**17.463** 0.6875	**17.450** 0.6870	**23.825** 0.9380	**23.800** 0.9370	**23.825** 0.9380	**17.501** 0.6890	**17.526** 0.6900		
0.019 0.042	—	**17.463** 0.6875	**17.450** 0.6870	**23.825** 0.9380	**23.800** 0.9370	**23.825** 0.9380	**17.501** 0.6890	**17.526** 0.6900		
0.010 0.022	—	**19.050** 0.7500	**19.037** 0.7495	**25.413** 1.0005	**25.387** 0.9995	**25.387** 0.9995	**19.063** 0.7505	**19.088** 0.7515	IR-88	3/4
0.014 0.030	—	**19.050** 0.7500	**19.037** 0.7495	**25.413** 1.0005	**25.387** 0.9995	**25.387** 0.9995	**19.063** 0.7505	**19.088** 0.7515	IR-88	
0.017 0.038	**0.020** 0.045	**19.050** 0.7500	**19.037** 0.7495	**25.413** 1.0005	**25.387** 0.9995	**25.387** 0.9995	**19.063** 0.7505	**19.088** 0.7515	IR-812(1)	
0.020 0.045	**0.025** 0.054	**19.050** 0.7500	**19.037** 0.7495	**25.413** 1.0005	**25.387** 0.9995	**25.387** 0.9995	**19.063** 0.7505	**19.088** 0.7515	IR-812(1)	
0.026 0.058	**0.031** 0.069	**19.050** 0.7500	**19.037** 0.7495	**27.000** 1.0630	**26.975** 1.0620	**26.975** 1.0620	**19.063** 0.7505	**19.088** 0.7515	IR-812(1)	
0.025 0.056	—	**20.638** 0.8125	**20.625** 0.8120	**27.000** 1.0630	**26.975** 1.0620	**26.975** 1.0620	**20.650** 0.8130	**20.676** 0.8140		13/16
0.028 0.062	**0.034** 0.074	**20.638** 0.8125	**20.625** 0.8120	**28.588** 1.1255	**28.562** 1.1245	**28.562** 1.1245	**20.650** 0.8130	**20.676** 0.8140		
0.012 0.026	—	**22.225** 0.8750	**22.212** 0.8745	**28.588** 1.1255	**28.562** 1.1245	**28.562** 1.1245	**22.238** 0.8755	**22.263** 0.8765	IR-1012(1)	7/8
0.015 0.034	—	**22.225** 0.8750	**22.212** 0.8745	**28.588** 1.1255	**28.562** 1.1245	**28.562** 1.1245	**22.238** 0.8755	**22.263** 0.8765	IR-1012(1)	
0.024 0.052	**0.028** 0.062	**22.225** 0.8750	**22.212** 0.8745	**28.588** 1.1255	**28.562** 1.1245	**28.562** 1.1245	**22.238** 0.8755	**22.263** 0.8765	IR-1012(1)	

(1) IRA inner ring provides additional length if required.

Continued on next page.

CAGED BEARINGS – OPEN ENDS, CLOSED ONE END – *continued*

INCH SERIES

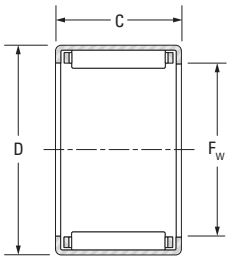

J, JH

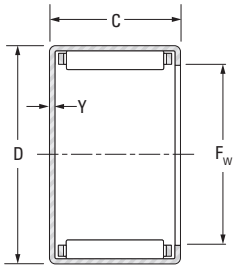

MJ-1, MJH-1

Full Complement Bearing

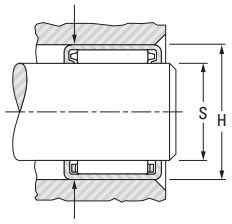

Caged Bearing

Shaft surface to be 58 HRC or equivalent

Drawn cup bearings of nominal inch dimensions, with one closed end, that are not tabulated, may be made available upon request.

Mounting dimensions are based on the inner ring rotating and the outer ring being stationary, relative to the load. The housing should be of high strength material.

See Engineering section for discussion of shaft and housing design.

Shaft Dia.	F_w	D	C	Y (max.)	Bearing Designation		Load Ratings Dynamic C	Load Ratings Static C_0	Speed Rating Grease	Speed Rating Oil	C_g
			+0 +0.000 **-0.3** -0.010								
in.	**mm** in.	**mm** in.	**mm** in.	**mm** in.			**kN** lbf.		min^{-1}		
	22.225 0.8750	**28.575** 1.1250	**25.40** 1.000	**1.02** 0.040	J-1416	MJ-14161	**23.66** 5320	**38.97** 8760	9700	15000	**0.0356**
	22.225 0.8750	**30.163** 1.1875	**19.05** 0.750	**1.27** 0.050	JH-1412	MJH-14121	**18.33** 4120	**24.55** 5520	9800	15000	**0.0309**
	22.225 0.8750	**30.163** 1.1875	**25.40** 1.000	**1.27** 0.050	JH-1416	MJH-14161	**25.40** 5710	**37.37** 8400	9800	15000	**0.0343**
1	**25.400** 1.0000	**31.750** 1.2500	**19.05** 0.750	—	J-1612	—	**18.15** 4080	**28.82** 6480	8400	13000	**0.0350**
	25.400 1.0000	**31.750** 1.2500	**25.40** 1.000	**1.02** 0.040	J-1616	MJ-16161	**24.95** 5610	**43.41** 9760	8400	13000	**0.0387**
	25.400 1.0000	**33.338** 1.3125	**19.05** 0.750	**1.27** 0.050	JH-1612	MJH-16121	**20.68** 4650	**29.58** 6650	8500	13000	**0.0342**
	25.400 1.0000	**33.338** 1.3125	**25.40** 1.000	**1.27** 0.050	JH-1616	MJH-16161	**27.58** 6200	**42.88** 9640	8500	13000	**0.0375**
1 1/8	**28.575** 1.1250	**34.925** 1.3750	**12.70** 0.500	**1.02** 0.040	J-188	MJ-1881	**11.65** 2620	**16.95** 3810	7400	11000	**0.0323**
	28.575 1.1250	**34.925** 1.3750	**19.05** 0.750	**1.02** 0.040	J-1812	MJ-18121	**19.04** 4280	**31.76** 7140	7400	11000	**0.0377**
	28.575 1.1250	**34.925** 1.3750	**25.40** 1.000	**1.02** 0.040	J-1816	MJ-18161	**26.16** 5880	**48.04** 10800	7400	11000	**0.0418**
	28.575 1.1250	**38.100** 1.5000	**19.05** 0.750	**1.27** 0.050	JH-1812	MJH-18121	**23.35** 5250	**31.32** 7040	7600	12000	**0.0356**
	28.575 1.1250	**38.100** 1.5000	**25.40** 1.000	**1.27** 0.050	JH-1816	MJH-18161	**33.14** 7450	**49.38** 11100	7600	12000	**0.0398**
	28.575 1.1250	**38.100** 1.5000	**28.58** 1.125	**1.27** 0.050	JH-1818	MJH-18181	**36.30** 8160	**55.16** 12400	7600	12000	**0.0410**
1 1/4	**31.750** 1.2500	**38.100** 1.5000	**19.05** 0.750	**1.02** 0.040	J-2012	MJ-20121	**19.84** 4460	**34.70** 7800	6600	10000	**0.0404**
	31.750 1.2500	**38.100** 1.5000	**25.40** 1.000	**1.02** 0.040	J-2016	MJ-20161	**28.82** 6480	**56.49** 12700	6600	10000	**0.0455**
	31.750 1.2500	**41.275** 1.6250	**19.05** 0.750	—	JH-2012	—	**24.11** 5420	**33.94** 7630	6800	10000	**0.0380**
	31.750 1.2500	**41.275** 1.6250	**25.40** 1.000	—	JH-2016	—	**33.94** 7630	**52.93** 11900	6800	10000	**0.0424**
	31.750 1.2500	**41.275** 1.6250	**31.75** 1.250	—	JH-2020	—	**43.37** 9750	**72.51** 16300	6800	10000	**0.0459**
1 3/8	**34.925** 1.3750	**41.275** 1.6250	**12.70** 0.500	**1.02** 0.040	J-228	MJ-2281	**13.97** 3140	**22.91** 5150	6000	9200	**0.0380**
	34.925 1.3750	**41.275** 1.6250	**19.05** 0.750	—	J-2212	—	**22.82** 5130	**42.97** 9660	6000	9200	**0.0444**
	34.925 1.3750	**44.450** 1.7500	**19.05** 0.750	**1.27** 0.050	JH-2212	MJH-22121	**26.24** 5900	**38.43** 8640	6100	9400	**0.0407**
	34.925 1.3750	**44.450** 1.7500	**25.40** 1.000	**1.27** 0.050	JH-2216	MJH-22161	**36.52** 8210	**58.72** 13200	6100	9400	**0.0452**
1 1/2	**38.100** 1.5000	**47.625** 1.8750	**19.05** 0.750	**1.27** 0.050	J-2412	MJ-24121	**29.89** 6720	**47.15** 10600	5600	8600	**0.0445**

Approx. Wt.		S		H		Inspection			Mounting Inner Ring (pg B-122 to B-124)	Shaft Dia.
		Recommended Mounting Dimension				Ring Gage	Plug Gage			
Open Ends	Closed End	Max.	Min.	Max.	Min.		go	no go		
kg lbs.	**kg** lbs.	**mm** in.	**mm** in.	**mm** in.	**mm** in.					in.
0.031 0.069	**0.059** 0.129	**22.225** 0.8750	**22.212** 0.8745	**28.588** 1.1255	**28.562** 1.1245	**28.562** 1.1245	**22.238** 0.8755	**22.263** 0.8765	IR-1016	
0.030 0.066	**0.036** 0.079	**22.225** 0.8750	**22.212** 0.8745	**30.175** 1.1880	**30.150** 1.1870	**30.150** 1.1870	**22.238** 0.8755	**22.263** 0.8765	IR-1012(1)	
0.040 0.089	**0.048** 0.106	**22.225** 0.8750	**22.212** 0.8745	**30.175** 1.1880	**30.150** 1.1870	**30.150** 1.1870	**22.238** 0.8755	**22.263** 0.8765	IR-1016	
0.026 0.058	—	**25.400** 1.0000	**25.387** 0.9995	**31.763** 1.2505	**31.737** 1.2495	**31.737** 1.2495	**25.413** 1.0005	**25.438** 1.0015	IR-1212	1
0.035 0.077	**0.042** 0.092	**25.400** 1.0000	**25.387** 0.9995	**31.763** 1.2505	**31.737** 1.2495	**31.737** 1.2495	**25.413** 1.0005	**25.438** 1.0015	IR-1216(1)	
0.034 0.074	**0.040** 0.088	**25.400** 1.0000	**25.387** 0.9995	**33.350** 1.3130	**33.325** 1.3120	**33.325** 1.3120	**25.413** 1.0005	**25.438** 1.0015	IR-1212	
0.045 0.099	**0.054** 0.119	**25.400** 1.0000	**25.387** 0.9995	**33.350** 1.3130	**33.325** 1.3120	**33.325** 1.3120	**25.413** 1.0005	**25.438** 1.0015	IR-1216(1)	
0.020 0.043	**0.023** 0.050	**28.575** 1.1250	**28.562** 1.1245	**34.938** 1.3755	**34.912** 1.3745	**34.912** 1.3745	**28.588** 1.1255	**28.613** 1.1265	IR-1416(1)	1 1/8
0.029 0.064	**0.035** 0.076	**28.575** 1.1250	**28.562** 1.1245	**34.938** 1.3755	**34.912** 1.3745	**34.912** 1.3745	**28.588** 1.1255	**28.613** 1.1265	IR-1416(1)	
0.039 0.086	**0.047** 0.103	**28.575** 1.1250	**28.562** 1.1245	**34.938** 1.3755	**34.912** 1.3745	**34.912** 1.3745	**28.588** 1.1255	**28.613** 1.1265	IR-1416(1)	
0.046 0.101	**0.055** 0.121	**28.575** 1.1250	**28.562** 1.1245	**38.113** 1.5005	**38.087** 1.4995	**38.087** 1.4995	**28.588** 1.1255	**28.613** 1.1265	IR-1416(1)	
0.061 0.135	**0.074** 0.162	**28.575** 1.1250	**28.562** 1.1245	**38.113** 1.5005	**38.087** 1.4995	**38.087** 1.4995	**28.588** 1.1255	**28.613** 1.1265	IR-1416(1)	
0.069 0.152	**0.082** 0.181	**28.575** 1.1250	**28.562** 1.1245	**38.113** 1.5005	**38.087** 1.4995	**38.087** 1.4995	**28.588** 1.1255	**28.613** 1.1265		
0.036 0.080	**0.043** 0.095	**31.750** 1.2500	**31.737** 1.2495	**38.113** 1.5005	**38.087** 1.4995	**38.087** 1.4995	**31.763** 1.2505	**31.788** 1.2515	IR-1612	1 1/4
0.043 0.094	**0.051** 0.113	**31.750** 1.2500	**31.737** 1.2495	**38.113** 1.5005	**38.087** 1.4995	**38.087** 1.4995	**31.763** 1.2505	**31.788** 1.2515	IR-1616(1)	
0.050 0.111	—	**31.750** 1.2500	**31.737** 1.2495	**41.288** 1.6255	**41.262** 1.6245	**41.262** 1.6245	**31.763** 1.2505	**31.788** 1.2515	IR-1612	
0.067 0.148	—	**31.750** 1.2500	**31.737** 1.2495	**41.288** 1.6255	**41.262** 1.6245	**41.262** 1.6245	**31.763** 1.2505	**31.788** 1.2515	IR-1616(1)	
0.084 0.185	—	**31.750** 1.2500	**31.737** 1.2495	**41.288** 1.6255	**41.262** 1.6245	**41.262** 1.6245	**31.763** 1.2505	**31.788** 1.2515		
0.024 0.052	**0.028** 0.062	**34.925** 1.3750	**34.912** 1.3745	**41.288** 1.6255	**41.262** 1.6245	**41.262** 1.6245	**34.938** 1.3755	**34.966** 1.3766	IR-1812	1 3/8
0.035 0.077	—	**34.925** 1.3750	**34.912** 1.3745	**41.288** 1.6255	**41.262** 1.6245	**41.262** 1.6245	**34.938** 1.3755	**34.966** 1.3766	IR-1812	
0.055 0.121	**0.065** 0.144	**34.925** 1.3750	**34.912** 1.3745	**44.463** 1.7505	**44.437** 1.7495	**44.437** 1.7495	**34.938** 1.3755	**34.966** 1.3766	IR-1812	
0.073 0.161	**0.087** 0.192	**34.925** 1.3750	**34.912** 1.3745	**44.463** 1.7505	**44.437** 1.7495	**44.437** 1.7495	**34.938** 1.3755	**34.966** 1.3766	IR-1816	
0.059 0.131	**0.094** 0.208	**38.100** 1.5000	**38.087** 1.4995	**47.638** 1.8755	**47.612** 1.8745	**47.612** 1.8745	**38.113** 1.5005	**38.143** 1.5017	IR-1916	1 1/2

(1) IRA inner ring provides additional length if required.

Continued on next page.

CAGED BEARINGS – OPEN ENDS, CLOSED ONE END – *continued*

INCH SERIES

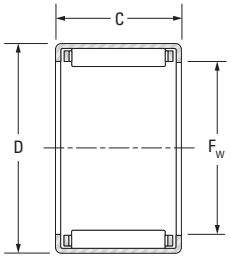

J, JH

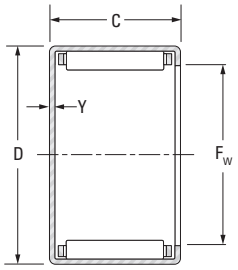

MJ-1, MJH-1

Full Complement Bearing

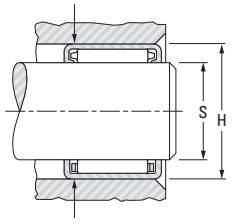

Caged Bearing

Shaft surface to be 58 HRC or equivalent

Drawn cup bearings of nominal inch dimensions, with one closed end, that are not tabulated, may be made available upon request.

Mounting dimensions are based on the inner ring rotating and the outer ring being stationary, relative to the load. The housing should be of high strength material.

See Engineering section for discussion of shaft and housing design.

Shaft Dia.	F_w	D	C	Y (max.)	Bearing Designation		Load Ratings Dynamic C	Load Ratings Static C_0	Speed Rating Grease	Speed Rating Oil	C_g
			+0 +0.000 **-0.3** -0.010								
in.	**mm** in.	**mm** in.	**mm** in.	**mm** in.			**kN** lbf.		min^{-1}		
	38.100 1.5000	**47.625** 1.8750	**25.40** 1.000	**1.27** 0.050	J-2416	MJ-24161	**39.32** 8840	**66.72** 15000	5600	8600	**0.0486**
	38.100 1.5000	**47.625** 1.8750	**31.75** 1.250	—	J-2420	—	**49.38** 11100	**89.85** 20200	5600	8600	**0.0523**
1 5/8	**41.275** 1.6250	**50.800** 2.0000	**15.88** 0.625	—	J-2610	—	**26.11** 5870	**40.97** 9210	5100	7900	**0.0446**
	41.275 1.6250	**50.800** 2.0000	**25.40** 1.000	**1.27** 0.050	J-2616	M-26161	**39.28** 8830	**68.95** 15500	5100	7900	**0.0508**
1 3/4	**44.450** 1.7500	**53.975** 2.1250	**19.05** 0.750	**1.27** 0.050	J-2812	MJ-28121	**29.58** 6650	**49.38** 11100	4700	7300	**0.0483**
	44.450 1.7500	**53.975** 2.1250	**25.40** 1.000	**1.27** 0.050	J-2816	MJ-28161	**40.08** 9010	**72.95** 16400	4700	7300	**0.0532**
	44.450 1.7500	**53.975** 2.1250	**38.10** 1.500	**1.27** 0.050	J-2824	MJ-28241	**59.61** 13400	**121.88** 27400	4700	7300	**0.0605**
1 7/8	**47.625** 1.8750	**57.150** 2.2500	**25.40** 1.000	**1.27** 0.050	J-3016	MJ-30161	**41.10** 9240	**76.06** 17100	4400	6800	**0.0553**
2	**50.800** 2.0000	**60.325** 2.3750	**25.40** 1.000	**1.27** 0.050	J-3216	MJ-32161	**42.39** 9530	**81.40** 18300	4100	6300	**0.0579**
2 1/4	**57.150** 2.2500	**66.675** 2.6250	**19.05** 0.750	—	J-3612	—	**35.41** 7960	**65.83** 14800	3600	5600	**0.0577**
	57.150 2.2500	**66.675** 2.6250	**25.40** 1.000	—	J-3616	—	**46.26** 10400	**92.52** 20800	3600	5600	**0.0628**
2 3/4	**69.850** 2.7500	**79.375** 3.1250	**19.05** 0.750	—	J-4412	—	**36.25** 8150	**72.95** 16400	2900	4500	**0.0649**

Approx. Wt.		S		H		Inspection			Mounting Inner Ring (pg B-122 to B-124)	Shaft Dia.
		Recommended Mounting Dimension				Ring Gage	Plug Gage			
Open Ends	Closed End	Max.	Min.	Max.	Min.		go	no go		
kg lbs.	**kg** lbs.	**mm** in.	**mm** in.	**mm** in.	**mm** in.					in.
0.079 0.174	**0.094** 0.208	**38.100** 1.5000	**38.087** 1.4995	**47.638** 1.8755	**47.612** 1.8745	**47.612** 1.8745	**38.113** 1.5005	**38.143** 1.5017	IR-1916	
0.099 0.218	—	**38.100** 1.5000	**38.087** 1.4995	**47.638** 1.8755	**47.612** 1.8745	**47.612** 1.8745	**38.113** 1.5005	**38.143** 1.5017	IR-1920	
0.053 0.117	—	**41.275** 1.6250	**41.262** 1.6245	**50.813** 2.0005	**50.787** 1.9995	**50.787** 1.9995	**41.288** 1.6255	**41.318** 1.6267	IR-2020[1]	1 5/8
0.085 0.187	**0.101** 0.223	**41.275** 1.6250	**41.262** 1.6245	**50.813** 2.0005	**50.787** 1.9995	**50.787** 1.9995	**41.288** 1.6255	**41.318** 1.6267	IR-2020[1]	
0.068 0.150	**0.081** 0.179	**44.450** 1.7500	**44.437** 1.7495	**53.988** 2.1255	**53.962** 2.1245	**53.962** 2.1245	**44.463** 1.7505	**44.496** 1.7518	IR-2316	1 3/4
0.091 0.200	**0.108** 0.239	**44.450** 1.7500	**44.437** 1.7495	**53.988** 2.1255	**53.962** 2.1245	**53.962** 2.1245	**44.463** 1.7505	**44.496** 1.7518	IR-2316	
0.136 0.300	**0.162** 0.358	**44.450** 1.7500	**44.437** 1.7495	**53.988** 2.1255	**53.962** 2.1245	**53.962** 2.1245	**44.463** 1.7505	**44.496** 1.7518	IR-2324	
0.097 0.213	**0.115** 0.254	**47.625** 1.8750	**47.612** 1.8745	**57.163** 2.2505	**57.137** 2.2495	**57.137** 2.2495	**47.638** 1.8755	**47.671** 1.8768		1 7/8
0.103 0.226	**0.137** 0.301	**50.800** 2.0000	**50.785** 1.9994	**60.338** 2.3755	**60.312** 2.3745	**60.312** 2.3745	**50.815** 2.0006	**50.848** 2.0019		2
0.086 0.189	—	**57.150** 2.2500	**57.135** 2.2494	**66.688** 2.6255	**66.662** 2.6245	**66.662** 2.6245	**57.165** 2.2506	**57.203** 2.2521		2 1/4
0.114 0.252	—	**57.150** 2.2500	**57.135** 2.2494	**66.688** 2.6255	**66.662** 2.6245	**66.662** 2.6245	**57.165** 2.2506	**57.203** 2.2521		
0.103 0.227	—	**69.850** 2.7500	**69.835** 2.7494	**79.388** 3.1255	**79.362** 3.1245	**79.362** 3.1245	**69.875** 2.7510	**69.914** 2.7525	IR-4016	2 3/4

[1] IRA inner ring provides additional length if required.

B

SEALED DRAWN CUP BEARINGS

INCH SERIES

- Check for availability. Not all bearings are in production.
- Pre-packed with general purpose ball and roller bearing grease unless otherwise specified.
- Bearing operating temperature limited between -30° C and +110° C (-25° F and +225° F).
- Consult your representative for operating temperatures outside the above range or if seals have been exposed to unusual fluids.
- Speed rating based on shaft contact speed of 610 m/min. (2000 fpm).
- Reduce the listed speed rating by one-half for outer ring rotation.

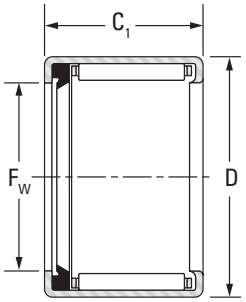

JT – One Seal

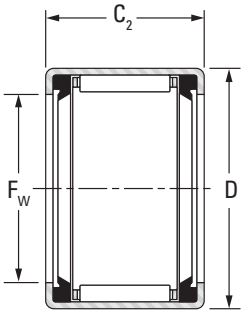

JTT – Two Seals

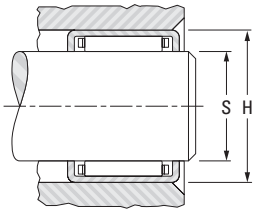

Shaft surface to be 58 HRC or equivalent

Drawn cup bearings of nominal inch dimensions, with one closed end, that are not tabulated, may be made available upon request.

Mounting dimensions are based on the inner ring rotating and the outer ring being stationary, relative to the load. The housing should be of high strength material.

Shaft Dia.	F_w	D	Bearings With One Seal			Bearings With Two Seals		
			C_1 **+0** +0.000 **-0.3** -0.010	Bearing Designation	Approx. Wt.	C_2 **+0** +0.000 **-0.3** -0.010	Bearing Designation	Approx. Wt.
in.	**mm** in.	**mm** in.	**mm** in.		**kg** lbs.			**kg** lbs.
5/16	**7.938** 0.3125	**12.700** 0.5000	**9.53** 0.375	JT-56	**0.004** 0.008	**11.13** 0.438	JTT-57	**0.004** 0.009
	7.938 0.3125	**12.700** 0.5000	—	—	—	**14.27** 0.562	JTT-59	**0.005** 0.012
3/8	**9.525** 0.3750	**14.288** 0.5625	**9.53** 0.375	JT-66	**0.004** 0.009	**11.13** 0.438	JTT-67	**0.005** 0.011
	9.525 0.3750	**14.288** 0.5625	**14.27** 0.562	JT-69	**0.006** 0.014	—	—	—
1/2	**12.700** 0.5000	**17.463** 0.6875	**9.53** 0.375	JT-86	**0.005** 0.012	**11.13** 0.438	JTT-87	**0.006** 0.013
	12.700 0.5000	**17.463** 0.6875	**14.27** 0.562	JT-89	**0.008** 0.017	**15.88** 0.625	JTT-810	**0.009** 0.019
	12.700 0.5000	**17.463** 0.6875	—	—	—	**22.23** 0.875	JTT-814	**0.012** 0.027
9/16	**14.288** 0.5625	**19.050** 0.7500	**14.27** 0.562	JT-99	**0.009** 0.019	**15.88** 0.625	JTT-910	**0.010** 0.021
	14.288 0.5625	**19.050** 0.7500	—	—	—	**19.05** 0.750	JTT-912	**0.011** 0.025
5/8	**15.875** 0.6250	**20.638** 0.8125	**14.27** 0.562	JT-109	**0.010** 0.021	**15.88** 0.625	JTT-1010	**0.010** 0.023
	15.875 0.6250	**20.638** 0.8125	—	—	—	**19.05** 0.750	JTT-1012	**0.013** 0.028
	15.875 0.6250	**20.638** 0.8125	—	—	—	**22.23** 0.875	JTT-1014	**0.015** 0.032
11/16	**17.463** 0.6875	**22.225** 0.8750	—	—	—	**22.23** 0.875	JTT-1114	**0.016** 0.035
3/4	**19.050** 0.7500	**25.400** 1.0000	**14.27** 0.562	JT-129	**0.015** 0.034	**15.88** 0.625	JTT-1210	**0.017** 0.038
	19.050 0.7500	**25.400** 1.0000	**17.48** 0.688	JT-1211	**0.019** 0.041	—	—	—
	19.050 0.7500	**25.400** 1.0000	**20.62** 0.812	JT-1213	**0.022** 0.049	**22.23** 0.875	JTT-1214	**0.024** 0.053
7/8	**22.225** 0.8750	**28.575** 1.1250	**14.27** 0.562	JT-149	**0.018** 0.039	**15.88** 0.625	JTT-1410	**0.020** 0.043
	22.225 0.8750	**28.575** 1.1250	**26.97** 1.062	JT-1417	**0.033** 0.073	—	—	—
1	**25.400** 1.0000	**31.750** 1.2500	**20.62** 0.812	JT-1613	**0.029** 0.063	**22.23** 0.875	JTT-1614	**0.031** 0.068
1 1/8	**28.575** 1.1250	**34.925** 1.3750	**20.62** 0.812	JT-1813	**0.032** 0.070	**22.23** 0.875	JTT-1814	**0.034** 0.075
1 1/4	**31.750** 1.2500	**38.100** 1.5000	**20.62** 0.812	JT-2013	**0.035** 0.077	—	—	—
	31.750 1.2500	**38.100** 1.5000	—	—	—	**28.58** 1.125	JTT-2018	**0.048** 0.106
1 1/2	**38.100** 1.5000	**47.625** 1.8750	**33.32** 1.312	JT-2421	**0.104** 0.229	—	—	—

Load Ratings		Approx. Speed Rating (Grease)	C_g	S		H		Inspection			Shaft Dia.
Dynamic	Static			Mounting Dimension				Ring Gage	Plug Gage		
C	C_0			Max.	Min.	Max.	Min.		go	no go	
kN lbf.		min^{-1}		**mm** in.	**mm** in.	**mm** in.	**mm** in.				in.
2.40 540	**2.00** 450	18000	**0.0117**	**7.938** 0.3125	**7.925** 0.3120	**12.713** 0.5005	**12.687** 0.4995	**12.713** 0.5005	**7.976** 0.3140	**8.001** 0.3150	5/16
4.05 910	**3.91** 880	18000	**0.0138**	**7.938** 0.3125	**7.925** 0.3120	**12.713** 0.5005	**12.687** 0.4995	**12.713** 0.5005	**7.976** 0.3140	**8.001** 0.3150	
2.74 615	**2.49** 560	18000	**0.0133**	**9.525** 0.3750	**9.512** 0.3745	**14.300** 0.5630	**14.275** 0.5620	**14.300** 0.5630	**9.563** 0.3765	**9.589** 0.3775	3/8
5.20 1 170	**5.74** 1 290	18000	**0.0163**	**9.525** 0.3750	**9.512** 0.3745	**14.300** 0.5630	**14.275** 0.5620	**14.300** 0.5630	**9.563** 0.3765	**9.589** 0.3775	
3.47 780	**3.65** 820	15000	**0.0164**	**12.700** 0.5000	**12.687** 0.4995	**17.475** 0.6880	**17.450** 0.6870	**17.475** 0.6880	**12.738** 0.5015	**12.764** 0.5025	1/2
6.32 1 420	**7.92** 1 780	15000	**0.0199**	**12.700** 0.5000	**12.687** 0.4995	**17.475** 0.6880	**17.450** 0.6870	**17.475** 0.6880	**12.738** 0.5015	**12.764** 0.5025	
10.2 2 300	**14.7** 3 310	15000	**0.0232**	**12.700** 0.5000	**12.687** 0.4995	**17.475** 0.6880	**17.450** 0.6870	**17.475** 0.6880	**12.738** 0.5015	**12.764** 0.5025	
6.23 1 400	**8.01** 1 800	14000	**0.0210**	**14.288** 0.5625	**14.275** 0.5620	**19.063** 0.7505	**19.037** 0.7495	**19.063** 0.7505	**14.326** 0.5640	**14.351** 0.5650	9/16
8.18 1 840	**11.4** 2 560	14000	**0.0229**	**14.288** 0.5625	**14.275** 0.5620	**19.063** 0.7505	**19.037** 0.7495	**19.063** 0.7505	**14.326** 0.5640	**14.351** 0.5650	
6.72 1 510	**9.12** 2 050	12000	**0.0227**	**15.875** 0.6250	**15.862** 0.6245	**20.650** 0.8130	**20.625** 0.8120	**20.650** 0.8130	**15.913** 0.6265	**15.939** 0.6275	5/8
8.81 1 980	**12.9** 2 910	12000	**0.0247**	**15.875** 0.6250	**15.862** 0.6245	**20.650** 0.8130	**20.625** 0.8120	**20.650** 0.8130	**15.913** 0.6265	**15.939** 0.6275	
11.7 2 640	**18.9** 4 240	12000	**0.0272**	**15.875** 0.6250	**15.862** 0.6245	**20.650** 0.8130	**20.625** 0.8120	**20.650** 0.8130	**15.913** 0.6265	**15.939** 0.6275	
12.5 2 800	**20.9** 4 700	11000	**0.0290**	**17.463** 0.6875	**17.450** 0.6870	**22.238** 0.8755	**22.212** 0.8745	**22.238** 0.8755	**17.501** 0.6890	**17.526** 0.6900	11/16
9.92 2 230	**12.2** 2 740	10000	**0.0250**	**19.050** 0.7500	**19.037** 0.7495	**25.413** 1.0005	**25.387** 0.9995	**25.387** 0.9995	**19.063** 0.7505	**19.088** 0.7515	3/4
12.5 2 810	**16.3** 3 670	10000	**0.0269**	**19.050** 0.7500	**19.037** 0.7495	**25.413** 1.0005	**25.387** 0.9995	**25.387** 0.9995	**19.063** 0.7505	**19.088** 0.7515	
15.5 3 490	**21.6** 4 860	10000	**0.0288**	**19.050** 0.7500	**19.037** 0.7495	**25.413** 1.0005	**25.387** 0.9995	**25.387** 0.9995	**19.063** 0.7505	**19.088** 0.7515	
10.9 2 460	**14.5** 3 260	8700	**0.0278**	**22.225** 0.8750	**22.212** 0.8745	**28.588** 1.1255	**28.562** 1.1245	**28.562** 1.1245	**22.238** 0.8755	**22.263** 0.8765	7/8
23.7 5 320	**39.0** 8 760	8700	**0.0356**	**22.225** 0.8750	**22.212** 0.8745	**28.588** 1.1255	**28.562** 1.1245	**28.562** 1.1245	**22.238** 0.8755	**22.263** 0.8765	
18.1 4 080	**28.8** 6 480	7600	**0.035**	**25.400** 1.0000	**25.387** 0.9995	**31.763** 1.2505	**31.737** 1.2495	**31.737** 1.2495	**25.413** 1.0005	**25.438** 1.0015	1
19.0 4 280	**31.8** 7 140	6800	**0.0377**	**28.575** 1.1250	**28.562** 1.1245	**34.938** 1.3755	**34.912** 1.3745	**34.912** 1.3745	**28.588** 1.1255	**28.613** 1.1265	1 1/8
19.8 4 460	**34.7** 7 800	6100	**0.0404**	**31.750** 1.2500	**31.737** 1.2495	**38.113** 1.5005	**38.087** 1.4995	**38.087** 1.4995	**31.763** 1.2505	**31.788** 1.2515	1 1/4
28.8 6 480	**56.5** 12 700	6100	**0.0455**	**31.750** 1.2500	**31.737** 1.2495	**38.113** 1.5005	**38.087** 1.4995	**38.087** 1.4995	**31.763** 1.2505	**31.788** 1.2515	
49.4 11 100	**89.9** 20 200	5100	**0.0523**	**38.100** 1.5000	**38.087** 1.4995	**47.638** 1.8755	**47.612** 1.8745	**47.612** 1.8745	**38.113** 1.5005	**38.143** 1.5017	1 1/2

B

INNER RINGS FOR INCH SERIES DRAWN CUP BEARINGS

- Check for availability.
- Ideal choice when shaft is not practical to use as inner raceway.
- Provided in inch (IR, IRA) nominal dimensions for use with inch series drawn cup bearings.
- Designed to meet established inch tolerances.
- Designed to be wider than matching drawn cup bearing.
- Maximum shaft fillet radius ($r_{a\ max}$) cannot exceed inner ring bore chamfer ($r_{s\ min}$) as shown.
- Optional centralized lubrication groove (bore) and thru-hole available – specify when ordering.
- Designed to provide a loose transition fit on the shaft and should be axially clamped against a shoulder.
- If a tight transition fit must be used to keep the inner ring from rotating relative to the shaft, the inner ring O.D. must not exceed the raceway diameter for the matching drawn cup bearing after being mounted on the shaft.
- See tables for bearing raceway diameter dimensions.
- After mounting, if O.D. of inner ring exceeds required raceway diameter for matching bearing, ring should be ground to proper diameter while mounted on shaft.

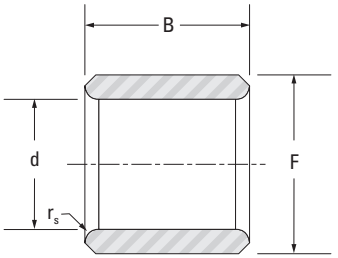

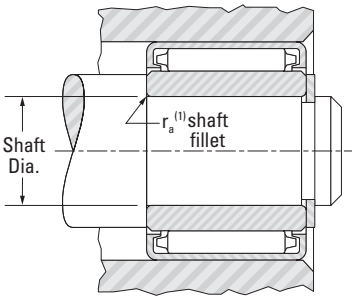

Shaft Dia.	d		F		B		$r_{s\ min.}$	Inner Ring Designation	Mounting Dimensions Transition Fit				Approx. Wt.
									Loose		Tight		
	Max.	Min.	Max.	Min.	Max.	Min.	Min.		Max.	Min.	Max.	Min.	
in.	**mm** in.	**mm** in.	**mm** in.	**mm** in.	**mm** in.	**mm** in.	**mm** in.		**mm** in.	**mm** in.	**mm** in.	**mm** in.	kg lbs.
3/16	**4.826** 0.1900	**4.813** 0.1895	**9.525** 0.3750	**9.512** 0.3745	**13.61** 0.536	**13.36** 0.526	**0.64** 0.025	IRA-3	**4.818** 0.1897	**4.806** 0.1892	**4.829** 0.1901	**4.816** 0.1896	**0.005** 0.012
1/4	**6.350** 0.2500	**6.337** 0.2495	**11.113** 0.4375	**11.100** 0.4370	**13.61** 0.536	**13.36** 0.526	**0.64** 0.025	IRA-4	**6.342** 0.2497	**6.330** 0.2492	**6.353** 0.2501	**6.340** 0.2496	**0.006** 0.014
5/16	**7.938** 0.3125	**7.925** 0.3120	**12.700** 0.5000	**12.687** 0.4995	**13.61** 0.536	**13.36** 0.526	**0.64** 0.025	IRA-5	**7.930** 0.3122	**7.917** 0.3117	**7.940** 0.3126	**7.927** 0.3121	**0.008** 0.017
3/8	**9.525** 0.3750	**9.512** 0.3745	**14.288** 0.5625	**14.275** 0.5620	**13.08** 0.515	**12.83** 0.505	**0.64** 0.025	IR-68	**9.517** 0.3747	**9.505** 0.3742	**9.528** 0.3751	**9.515** 0.3746	**0.009** 0.019
	9.525 0.3750	**9.512** 0.3745	**14.288** 0.5625	**14.275** 0.5620	**19.43** 0.765	**19.18** 0.755	**0.64** 0.025	IR-612	**9.517** 0.3747	**9.505** 0.3742	**9.528** 0.3751	**9.515** 0.3746	**0.013** 0.028
	9.525 0.3750	**9.512** 0.3745	**14.288** 0.5625	**14.275** 0.5620	**19.96** 0.786	**19.71** 0.776	**0.64** 0.025	IRA-6	**9.517** 0.3747	**9.505** 0.3742	**9.528** 0.3751	**9.515** 0.3746	**0.013** 0.029
	9.525 0.3750	**9.512** 0.3745	**15.875** 0.6250	**15.862** 0.6245	**13.08** 0.515	**12.83** 0.505	**0.64** 0.025	IR-68-1	**9.517** 0.3747	**9.505** 0.3742	**9.528** 0.3751	**9.515** 0.3746	**0.012** 0.027
	9.525 0.3750	**9.512** 0.3745	**15.875** 0.6250	**15.862** 0.6245	**19.43** 0.765	**19.18** 0.755	**0.64** 0.025	IR-612-1	**9.517** 0.3747	**9.505** 0.3742	**9.528** 0.3751	**9.515** 0.3746	**0.018** 0.040
7/16	**11.113** 0.4375	**11.100** 0.4370	**15.875** 0.6250	**15.862** 0.6245	**19.96** 0.786	**19.71** 0.776	**0.64** 0.025	IRA-7	**11.105** 0.4372	**11.092** 0.4367	**11.115** 0.4376	**11.102** 0.4371	**0.015** 0.033
1/2	**12.700** 0.5000	**12.687** 0.4995	**19.050** 0.7500	**19.037** 0.7495	**13.08** 0.515	**12.83** 0.505	**1.02** 0.040	IR-88	**12.692** 0.4997	**12.680** 0.4992	**12.703** 0.5001	**12.690** 0.4996	**0.015** 0.033
	12.700 0.5000	**12.687** 0.4995	**19.050** 0.7500	**19.037** 0.7495	**19.43** 0.765	**19.18** 0.755	**1.02** 0.040	IR-812	**12.692** 0.4997	**12.680** 0.4992	**12.703** 0.5001	**12.690** 0.4996	**0.023** 0.050

Bore and O.D. tolerance limits correspond to the single mean diameter (the arithmetical mean of the largest and smallest diameters in a single radial plane).

(1) r_a max is equal to minimum inner ring bore chamfer (r_s min).

Shaft Dia.	d		F		B		$r_{s\,min.}$	Inner Ring Designation	Mounting Dimensions Transition Fit				Approx. Wt.
									Loose		Tight		
	Max.	Min.	Max.	Min.	Max.	Min.	Min.		Max.	Min.	Max.	Min.	
in.	mm in.	mm in.	mm in.	mm in.	mm in.	mm in.	mm in.		mm in.	mm in.	mm in.	mm in.	kg lbs.
1/2	**12.700** 0.5000	**12.687** 0.4995	**19.050** 0.7500	**19.037** 0.7495	**19.96** 0.786	**19.71** 0.776	**1.02** 0.040	IRA-8	**12.692** 0.4997	**12.680** 0.4992	**12.703** 0.5001	**12.690** 0.4996	**0.023** 0.051
5/8	**15.875** 0.6250	**15.862** 0.6245	**22.225** 0.8750	**22.212** 0.8745	**19.43** 0.765	**19.18** 0.755	**1.02** 0.040	IR-1012	**15.867** 0.6247	**15.855** 0.6242	**15.878** 0.6251	**15.865** 0.6246	**0.027** 0.060
	15.875 0.6250	**15.862** 0.6245	**22.225** 0.8750	**22.212** 0.8745	**19.96** 0.786	**19.71** 0.776	**1.02** 0.040	IRA-10	**15.867** 0.6247	**15.855** 0.6242	**15.878** 0.6251	**15.865** 0.6246	**0.028** 0.062
	15.875 0.6250	**15.862** 0.6245	**22.225** 0.8750	**22.212** 0.8745	**25.78** 1.015	**25.53** 1.005	**1.02** 0.040	IR-1016	**15.867** 0.6247	**15.855** 0.6242	**15.878** 0.6251	**15.865** 0.6246	**0.036** 0.080
3/4	**19.050** 0.7500	**19.037** 0.7495	**25.400** 1.0000	**25.387** 0.9995	**13.08** 0.515	**12.83** 0.505	**1.02** 0.040	IR-128	**19.042** 0.7497	**19.030** 0.7492	**19.053** 0.7501	**19.040** 0.7496	**0.021** 0.047
	19.050 0.7500	**19.037** 0.7495	**25.400** 1.0000	**25.387** 0.9995	**19.43** 0.765	**19.18** 0.755	**1.02** 0.040	IR-1212	**19.042** 0.7497	**19.030** 0.7492	**19.053** 0.7501	**19.040** 0.7496	**0.032** 0.070
	19.050 0.7500	**19.037** 0.7495	**25.400** 1.0000	**25.387** 0.9995	**25.78** 1.015	**25.53** 1.005	**1.02** 0.040	IR-1216	**19.042** 0.7497	**19.030** 0.7492	**19.053** 0.7501	**19.040** 0.7496	**0.042** 0.093
	19.050 0.7500	**19.037** 0.7495	**25.400** 1.0000	**25.387** 0.9995	**26.31** 1.036	**26.06** 1.026	**1.02** 0.040	IRA-12	**19.042** 0.7497	**19.030** 0.7492	**19.053** 0.7501	**19.040** 0.7496	**0.043** 0.095
	19.050 0.7500	**19.037** 0.7495	**25.400** 1.0000	**25.387** 0.9995	**32.13** 1.265	**31.88** 1.255	**1.02** 0.040	IR-1220	**19.042** 0.7497	**19.030** 0.7492	**19.053** 0.7501	**19.040** 0.7496	**0.053** 0.116
	19.050 0.7500	**19.037** 0.7495	**25.400** 1.0000	**25.387** 0.9995	**38.48** 1.515	**38.23** 1.505	**1.02** 0.040	IR-1224	**19.042** 0.7497	**19.030** 0.7492	**19.053** 0.7501	**19.040** 0.7496	**0.063** 0.139
13/16	**20.638** 0.8125	**20.625** 0.8120	**25.400** 1.0000	**25.387** 0.9995	**19.43** 0.765	**19.18** 0.755	**1.02** 0.040	IR-1312	**20.630** 0.8122	**20.617** 0.8117	**20.640** 0.8126	**20.627** 0.8121	**0.024** 0.054
	20.638 0.8125	**20.625** 0.8120	**25.400** 1.0000	**25.387** 0.9995	**25.78** 1.015	**25.53** 1.005	**1.02** 0.040	IR-1316	**20.630** 0.8122	**20.617** 0.8117	**20.640** 0.8126	**20.627** 0.8121	**0.033** 0.072
7/8	**22.225** 0.8750	**22.212** 0.8745	**28.575** 1.1250	**28.562** 1.1245	**25.78** 1.015	**25.53** 1.005	**1.02** 0.040	IR-1416	**22.217** 0.8747	**22.205** 0.8742	**22.228** 0.8751	**22.215** 0.8746	**0.050** 0.111
	22.225 0.8750	**22.212** 0.8745	**28.575** 1.1250	**28.562** 1.1245	**26.31** 1.036	**26.06** 1.026	**1.02** 0.040	IRA-14	**22.217** 0.8747	**22.205** 0.8742	**22.228** 0.8751	**22.215** 0.8746	**0.050** 0.111
15/16	**23.813** 0.9375	**23.800** 0.9370	**28.575** 1.1250	**28.562** 1.1245	**25.78** 1.015	**25.53** 1.005	**1.02** 0.040	IR-1516	**23.805** 0.9372	**23.792** 0.9367	**23.815** 0.9376	**23.802** 0.9371	**0.037** 0.082
1	**25.400** 1.0000	**25.387** 0.9995	**31.750** 1.2500	**31.737** 1.2495	**19.43** 0.765	**19.18** 0.755	**1.02** 0.040	IR-1612	**25.392** 0.9997	**25.380** 0.9992	**25.403** 1.0001	**25.390** 0.9996	**0.041** 0.090
	25.400 1.0000	**25.387** 0.9995	**31.750** 1.2500	**31.737** 1.2495	**25.78** 1.015	**25.53** 1.005	**1.02** 0.040	IR-1616	**25.392** 0.9997	**25.380** 0.9992	**25.403** 1.0001	**25.390** 0.9996	**0.057** 0.125
	25.400 1.0000	**25.387** 0.9995	**31.750** 1.2500	**31.737** 1.2495	**26.31** 1.036	**26.06** 1.026	**1.02** 0.040	IRA-16	**25.392** 0.9997	**25.380** 0.9992	**25.403** 1.0001	**25.390** 0.9996	**0.056** 0.124
1 1/8	**28.575** 1.1250	**28.562** 1.1245	**34.925** 1.3750	**34.912** 1.3745	**19.43** 0.765	**19.18** 0.755	**1.02** 0.040	IR-1812	**28.567** 1.1247	**28.555** 1.1242	**28.578** 1.1251	**28.565** 1.1246	**0.045** 0.100
	28.575 1.1250	**28.562** 1.1245	**34.925** 1.3750	**34.912** 1.3745	**25.78** 1.015	**25.53** 1.005	**1.02** 0.040	IR-1816	**28.567** 1.1247	**28.555** 1.1242	**28.578** 1.1251	**28.565** 1.1246	**0.060** 0.133
	28.575 1.1250	**28.562** 1.1245	**34.925** 1.3750	**34.912** 1.3745	**32.13** 1.265	**31.88** 1.255	**1.02** 0.040	IR-1820	**28.567** 1.1247	**28.555** 1.1242	**28.578** 1.1251	**28.565** 1.1246	**0.075** 0.166
1 3/16	**30.163** 1.1875	**30.150** 1.1870	**38.100** 1.5000	**38.087** 1.4995	**25.78** 1.015	**25.53** 1.005	**1.02** 0.040	IR-1916	**30.155** 1.1872	**30.142** 1.1867	**30.165** 1.1876	**30.152** 1.1871	**0.084** 0.186
	30.163 1.1875	**30.150** 1.1870	**38.100** 1.5000	**38.087** 1.4995	**32.13** 1.265	**31.88** 1.255	**1.02** 0.040	IR-1920	**30.155** 1.1872	**30.142** 1.1867	**30.165** 1.1876	**30.152** 1.1871	**0.101** 0.223
1 1/4	**31.750** 1.2500	**31.737** 1.2495	**38.100** 1.5000	**38.087** 1.4995	**25.78** 1.015	**25.53** 1.005	**1.52** 0.060	IR-2016	**31.742** 1.2497	**31.730** 1.2492	**31.753** 1.2501	**31.740** 1.2496	**0.069** 0.152
	31.750 1.2500	**31.737** 1.2495	**38.100** 1.5000	**38.087** 1.4995	**32.13** 1.265	**31.88** 1.255	**1.52** 0.060	IR-2020	**31.742** 1.2497	**31.730** 1.2492	**31.753** 1.2501	**31.740** 1.2496	**0.086** 0.190

Bore and O.D. tolerance limits correspond to the single mean diameter (the arithmetical mean of the largest and smallest diameters in a single radial plane).

Continued on next page.

B

INNER RINGS FOR INCH SERIES DRAWN CUP BEARINGS– *continued*

- Check for availability.
- Ideal choice when shaft is not practical to use as inner raceway.
- Provided in inch (IR, IRA) nominal dimensions for use with inch series drawn cup bearings.
- Designed to meet established inch tolerances.
- Designed to be wider than matching drawn cup bearing.
- Maximum shaft fillet radius ($r_{a\ max}$) cannot exceed inner ring bore chamfer ($r_{s\ min}$) as shown.
- Optional centralized lubrication groove (bore) and thru-hole available – specify when ordering.
- Designed to provide a loose transition fit on the shaft and should be axially clamped against a shoulder.
- If a tight transition fit must be used to keep the inner ring from rotating relative to the shaft, the innr ring O.D. must not exceed the raceway diameter for the matching drawn cup bearing after being mounted on the shaft.
- See tables for bearing raceway diameter dimensions.
- After mounting, if O.D. of inner ring exceeds required raceway diameter for matching bearing, ring should be ground to proper diameter while mounted on shaft.

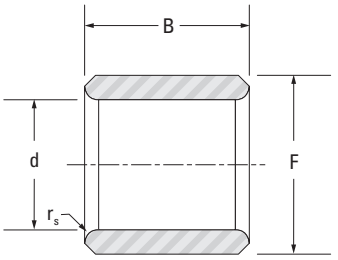

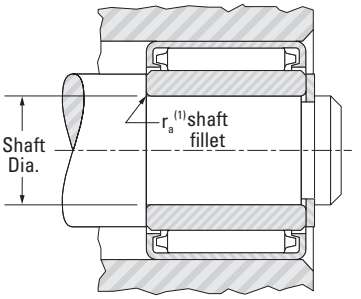

Shaft Dia.	d		F		B		$r_{s\ min.}$	Inner Ring Designation	Mounting Dimensions Transition Fit				Approx. Wt.
									Loose		Tight		
	Max.	Min.	Max.	Min.	Max.	Min.	Min.		Max.	Min.	Max.	Min.	
in.	mm in.	mm in.	mm in.	mm in.	mm in.	mm in.	mm in.		mm in.	mm in.	mm in.	mm in.	kg lbs.
1 1/4	**31.750** 1.2500	**31.737** 1.2495	**38.100** 1.5000	**38.087** 1.4995	**32.66** 1.286	**32.41** 1.276	**1.52** 0.060	IRA-20	**31.742** 1.2497	**31.730** 1.2492	**31.753** 1.2501	**31.740** 1.2496	**0.086** 0.190
1 3/8	**34.925** 1.3750	**34.912** 1.3745	**41.275** 1.6250	**41.262** 1.6245	**32.13** 1.265	**31.88** 1.255	**1.52** 0.060	IR-2220	**34.917** 1.3747	**34.905** 1.3742	**34.928** 1.3751	**34.915** 1.3746	**0.094** 0.208
1 7/16	**36.513** 1.4375	**36.500** 1.4370	**44.450** 1.7500	**44.437** 1.7495	**25.78** 1.015	**25.53** 1.005	**1.52** 0.060	IR-2316	**36.505** 1.4372	**36.492** 1.4367	**36.515** 1.4376	**36.502** 1.4371	**0.100** 0.220
	36.513 1.4375	**36.500** 1.4370	**44.450** 1.7500	**44.437** 1.7495	**38.48** 1.515	**38.23** 1.505	**1.52** 0.060	IR-2324	**36.505** 1.4372	**36.492** 1.4367	**36.515** 1.4376	**36.502** 1.4371	**0.150** 0.331
1 1/2	**38.100** 1.5000	**38.087** 1.4995	**44.450** 1.7500	**44.437** 1.7495	**25.78** 1.015	**25.53** 1.005	**1.52** 0.060	IR-2416	**38.092** 1.4997	**38.080** 1.4992	**38.103** 1.5001	**38.090** 1.4996	**0.078** 0.173
	38.100 1.5000	**38.087** 1.4995	**44.450** 1.7500	**44.437** 1.7495	**38.48** 1.515	**38.23** 1.505	**1.52** 0.060	IR-2424	**38.092** 1.4997	**38.080** 1.4992	**38.103** 1.5001	**38.090** 1.4996	**0.122** 0.270
1 11/16	**42.863** 1.6875	**42.850** 1.6870	**52.388** 2.0625	**52.375** 2.0620	**38.48** 1.515	**38.23** 1.505	**1.52** 0.060	IR-2724	**42.855** 1.6872	**42.842** 1.6867	**42.865** 1.6876	**42.852** 1.6871	**0.212** 0.468
1 3/4	**44.450** 1.7500	**44.437** 1.7495	**52.388** 2.0625	**52.375** 2.0620	**38.48** 1.515	**38.23** 1.505	**1.52** 0.060	IR-2824	**44.442** 1.7497	**44.430** 1.7492	**44.453** 1.7501	**44.440** 1.7496	**0.180** 0.396
1 13/16	**46.038** 1.8125	**46.025** 1.8120	**52.388** 2.0625	**52.375** 2.0620	**25.78** 1.015	**25.53** 1.005	**1.52** 0.060	IR-2916	**46.030** 1.8122	**46.017** 1.8117	**46.040** 1.8126	**46.027** 1.8121	**0.097** 0.214
	46.038 1.8125	**46.025** 1.8120	**52.388** 2.0625	**52.375** 2.0620	**38.48** 1.515	**38.23** 1.505	**1.52** 0.060	IR-2924	**46.030** 1.8122	**46.017** 1.8117	**46.040** 1.8126	**46.027** 1.8121	**0.146** 0.322
1 7/8	**47.625** 1.8750	**47.612** 1.8745	**53.975** 2.1250	**53.962** 2.1245	**38.48** 1.515	**38.23** 1.505	**1.52** 0.060	IR-3024	**47.617** 1.8747	**47.605** 1.8742	**47.628** 1.8751	**47.615** 1.8746	**0.145** 0.319
2 1/2	**63.500** 2.5000	**63.487** 2.4995	**69.850** 2.7500	**69.837** 2.7495	**25.78** 1.015	**25.53** 1.005	**1.52** 0.060	IR-4016	**63.495** 2.4998	**63.477** 2.4991	**63.505** 2.5002	**63.487** 2.4995	**0.132** 0.290

Bore and O.D. tolerance limits correspond to the single mean diameter (the arithmetical mean of the largest and smallest diameters in a single radial plane).

(1) r_a max is equal to minimum inner ring bore chamfer (r_s min).

DRAWN CUP ROLLER CLUTCHES

Overview: Drawn cup needle roller clutches are similar to drawn cup needle roller bearings in design; however, they allow free rotation in only one direction while transmitting torque in the opposite direction. These designs use the same small radial section as drawn cup needle roller bearings and are offered as clutch-only units or as clutch and bearing assemblies.

- **Sizes:** 3.2 mm – 35 mm (0.1250 in. – 1.3780 in.) bore.
- **Markets:** Office equipment, paper-towel dispensers, exercise equipment, appliances and two-speed gearboxes.
- **Features:** Compact, lightweight and operate directly on a hardened shaft.
- **Benefits:** Installation is easily accomplished with a simple press fit.

Drawn Cup Roller Clutches

Metric Series

FCS, FC-K	regular clutch, single roller per stainless steel spring
FC	regular clutch, multi-roller per stainless steel spring
FCL-K	light series clutch, single roller per stainless steel spring
FCB	regular clutch and bearing assembly, multi-roller per stainless steel spring
FCBL-K, FCBN-K	light series clutch and bearing assembly, single roller per stainless steel spring

FCL - 10 - K

Bore, in millimeters

Inch Series

RC	regular clutch, single roller per integral spring
RC-FS	regular clutch, single roller per stainless steel spring
RCB	regular clutch and bearing assembly, single roller per integral spring
RCB-FS	regular clutch and bearing assembly, single roller per stainless steel spring

RC - 10 14 10 - FS

Bore
10 = 10/16 = 5/8 in.

Outer Diameter
14 = 14/16 = 7/8 in.

Width
10 = 10/16 = 5/8 in.

B

Drawn Cup Roller Clutches

Page

Introduction B-128

Drawn Cup Roller Clutches – Metric Series B-134

Drawn Cup Roller Clutches and Bearing Assemblies – Metric Series B-136

Drawn Cup Roller Clutches – Inch Series B-138

Drawn Cup Roller Clutch and Bearing Assemblies – Inch Series B-140

Drawn Cup Roller Clutches for Use in Plastic Housings B-142

B

DRAWN CUP ROLLER CLUTCHES

METRIC AND INCH SERIES

Drawn cup roller clutch transmits torque between shaft and housing in one direction and allows free overrun in the opposite direction. When transmitting torque, either the shaft or the housing can be the input member. Applications are generally described as indexing, backstopping or overrunning.

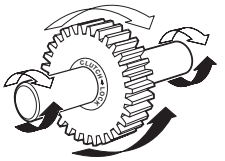

Fig. B-18.
Lock function: shaft drives gear clockwise (white arrows) or gear can drive shaft counterclockwise (black arrows)

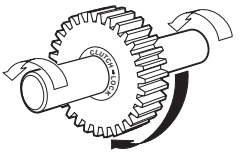

Fig. B-19.
Overrun function: shaft overruns in gear counter-clockwise (white arrows) or gear overruns on shaft clockwise (black arrow)

IDENTIFICATION

The prefix letters in the designation of the drawn cup roller clutches and drawn cup roller clutch and bearing assemblies denote whether these are manufactured to metric or inch nominal dimensions. Designation codes for clutches and clutch and bearing assemblies with metric nominal dimensions begin with the letter "F." Designation codes for clutches and clutch and bearing assemblies with inch nominal dimensions begin with the letter "R."

The basic types of clutches and clutch and bearing assemblies are listed below:

METRIC SERIES TYPES

FCS, FC-K	Regular clutch, single roller per stainless steel spring.
FC	Regular clutch, multi-roller per stainless steel spring.
FCB	Regular clutch and bearing assembly, multi-roller per stainless steel spring.
FCL-K	Light series clutch, single roller per stainless steel spring.
FCBL-K, FCBN-K	Light series clutch and bearing assembly. Single roller per stainless steel spring.

INCH SERIES TYPES

RC	Regular clutch, single roller per integral spring.
RC-FS	Regular clutch, single roller per stainless steel spring.
RCB	Regular clutch and bearing assembly, single roller per integral spring.
RCB-FS	Regular clutch and bearing assembly, single roller per stainless steel spring.

Drawn cup roller clutch type FC with stainless steel springs

Drawn cup clutch and bearing assembly type FCB with stainless steel springs

Drawn cup roller clutch, types FCS, FC-K, FCL-K, and RC-FS with stainless steel springs

Drawn cup clutch and bearing assembly types FCBL-K, FCBN-K and RCB-FS with stainless steel springs

Drawn cup roller clutch, type RC with integral springs

Drawn cup clutch and bearing assembly type RCB with integral springs

Fig. B-20. Types of clutches and clutch and bearing assemblies

CONSTRUCTION

In many respects, construction is similar to that of drawn cup bearings. Design and manufacture of drawn cup clutches – just as with drawn cup bearings – was pioneered and developed by The Torrington Company. The well-established design utilizes the same low-profile radial section as drawn cup bearings. The precisely formed interior ramps provide surfaces against which the needle rollers wedge. These positively lock the clutch with the shaft when rotated in the proper direction. These ramps, formed during the operation of drawing the cup, are case hardened for wear resistance. The incorporation of ramp forming into the cup drawing operation is a manufacturing innovation that contributes to the low cost of the unit.

Two designs of precision molded clutch cages are employed. Clutch and clutch and bearing assembly types – FC, FC-K, FCS, FCL-K, RC-FS, FCB, FCBN-K, FCBL-K and RCB-FS – use a glass fiber, reinforced nylon cage, equipped with inserted stainless steel leaf springs. The stainless steel springs permit higher rates of clutch engagement and achieve greater spring life. The nylon cage permits operation at higher temperatures. Clutch types RC and RCB utilize a one-piece cage of acetyl resin polymer with integral leaf style springs. They are used for lower temperatures than permitted for the units with nylon cages.

Types FCB, FCBL-K, FCBN-K, RCB and RCB-FS clutch and bearing assemblies have cages, for retention and guidance of the needle rollers in the bearings, located on both sides of the clutch unit.

Fig. B-21. Clutch and bearing assembly

Types FC, FC-K, FCS, FCL-K, RC and RC-FS are of clutch-only configurations for use with external radial support (usually two drawn cup needle roller bearings). Separate bearings position the shaft and housing concentrically and carry the radial load during overrun.

Fig. B-22. Clutch only

OPERATION

Operation is in two modes: the overrun mode and the lock mode. Operational mode is controlled by the direction of the clutch or shaft rotation with respect to the locking ramps.

In the overrun mode, shown in the drawings below, the relative rotation between the housed clutch and the shaft causes the rollers to move away from their locking position against the locking ramps in the drawn cup. The housing and the clutch are then free to overrun in one direction, or the shaft is free to overrun in the other direction.

In the lock mode, shown in the drawings below, the relative rotation between the housed clutch and the shaft is opposite to that in the overrun mode. The rollers, assisted by the leaf-type springs, become wedged between the locking ramps and the shaft to transmit torque between the two members. Either the member housing the clutch drives the shaft in one direction, or the shaft can drive the clutch and its housing member in the other direction.

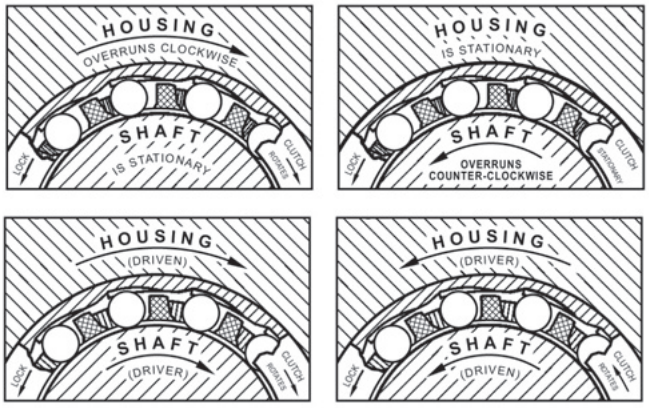

Clearance between the rollers and cup ramps is exaggerated in these drawings.

Fig. B-23. Overrun mode and lock mode

B

APPLICATION

Clutches and clutch and bearing assemblies are successfully applied in a wide range of commercial products where indexing, backstopping and overrunning operations must be performed reliably. The sketches on these pages illustrate some of the many possible uses.

When applying the clutch-only unit, separate bearings on each side of the clutch are required to position the shaft concentrically with the housing, and to carry the radial loads during overrun. Drawn cup needle roller bearings, with the same radial section as the clutch, should be used in the through-bored housings for simplicity and economy. Two clutches can be used side by side for greater torque capacity.

Where the radial loads are light, the clutch and bearing assembly can be used without additional support bearings. This reduces the overall assembly width, the number of stocked and ordered parts and assembly costs, as well.

Fig. B-24. Clutch and bearing arrangement for heavy loads

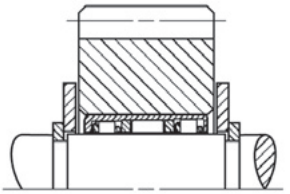

Fig. B-25. Clutch and bearing assembly for light loads

Drawn cup roller clutches are manufactured to commercial hardware standards and are used extensively in appliances, business machines, industrial and recreation equipment and a wide range of other applications.

In any application where our clutch may be considered, it will be part of a system in which the operating conditions and the clutch mounting will affect its function. Before any clutch selection is made, it is important that the following catalog section be carefully studied to understand the effects of these factors. Consideration should be given to operating conditions such as:

- Magnitude of externally applied torque, as well as inertial torque.
- Magnitude of applied radial loads during overrunning.
- Potential for vibration or axial shaft movement within the clutch during engagement.
- Engagement rate, as it pertains to the selection of stainless steel or plastic leaf springs.
- Oil lubricant supply during high overrunning speeds.
- External and internal environmental temperatures that can affect clutch performance.
- Lubricant selection effect on clutch engagement.
- Indexing inaccuracies resulting from backlash (lost motion).

Consideration should be given to the shaft and housing design requirements such as:

- Shaft hardness and strength particularly when approaching torque rating limits.
- Shaft roundness, taper and surface finish necessary to ensure sufficient fatigue life and torque-carrying ability.
- Housing strength (hardness and cross section) to support the applied torque loads.
- Housing roundness, taper and surface finish necessary to ensure uniform torque and load distribution.

A test program under all expected operating conditions should be carried out before putting a new application into production. Customer engineers are constantly working with and testing new applications, and their experience can be of great help to the designer considering the use of a drawn cup roller clutch.

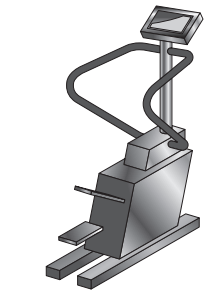

Stair steppers and other athletic equipment

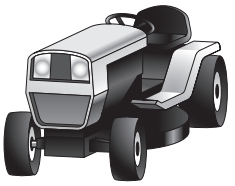

Lawnmower differential

Towel dispensers and similar web roll feed mechanisms

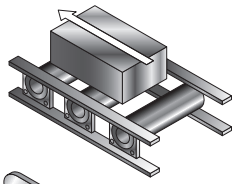

Conveyor rollers

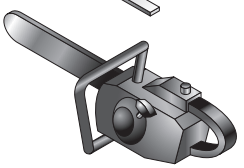

Chainsaw starters

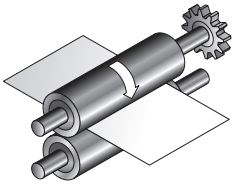

Paper feed rolls in business machines

Fig. B-26(1). Drawn cup clutches and clutch and bearing assembly applications

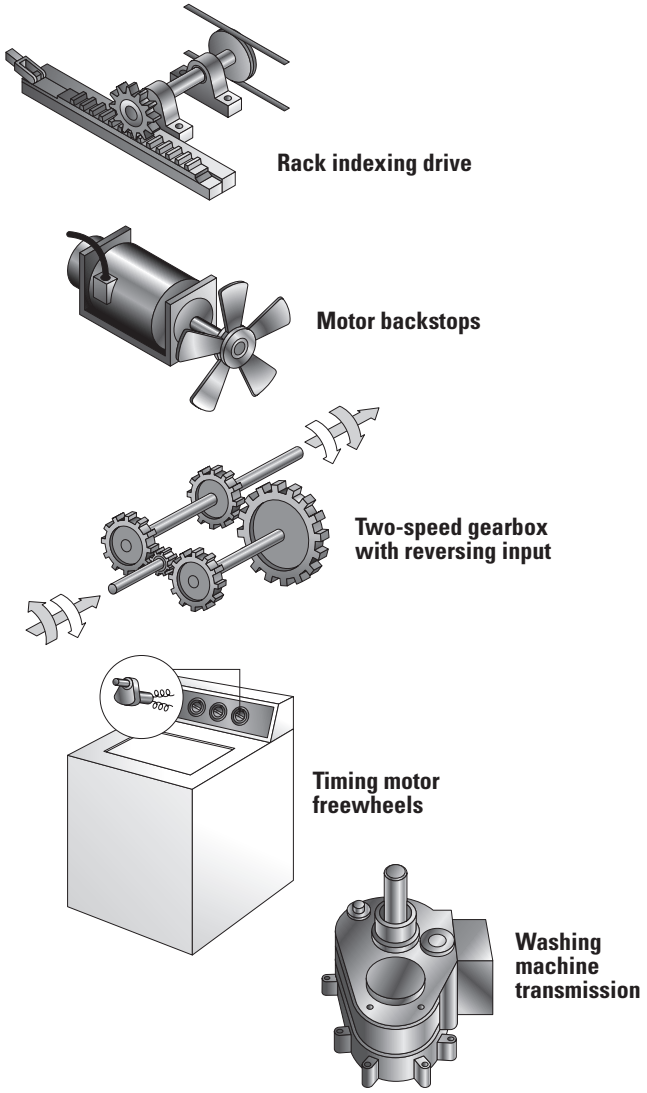

Fig. B-26(2). Drawn cup clutches and clutch and bearing assembly applications

HOUSING DESIGN

Drawn cup clutches and clutch and bearing assemblies are mounted with a simple press fit in their housings. Through-bored and chamfered housings are preferred. A 30 degree angle is suggested and care should be taken to round the edge where the chamfer meets the housing bore. A sharp edge at this location can greatly increase installation forces. Provisions for axial location, such as shoulders or snap rings, are not required. The case hardened cups must be properly supported. Steel housings are preferred and must be used for applications involving high-torque loads to prevent radial expansion of the clutch cups. The suggested minimum housing outer diameters in the tables of dimensions are for steel.

The housing bore should be round within one-half of the diameter tolerance.

The taper within the length of the outer ring should not exceed 0.013 mm (0.0005 in.).

The surface finish of the housing bore should not exceed 1.6 µm R_a (63 µin. R_a).

The torque ratings, given in the clutch tables, are based on a steel housing of a large section. When other housing material must be used (such as aluminum, powdered metal and plastics), the torque rating of the clutch will be reduced. Such housings may be satisfactory for lightly torqued applications. But, your representative should be consulted for appropriate housing and shaft suggestions. Otherwise, an insufficient press fit and use of a lower strength housing material can result in more internal clearance and reduced performance of the clutch.

When using non-steel housings, thorough testing of the design is suggested.

Adhesive compounds can be used to prevent creeping rotation of the clutch in plastic housings with low friction properties. Adhesives will not provide proper support in oversized metal housings. When using adhesives, care must be taken to keep the adhesive out of the clutches and bearings.

SHAFT DESIGN

The clutch or clutch and bearing assembly operates directly on the shaft whose specifications of dimension, hardness and surface finish are well within standard manufacturing limits.

Either case-hardening or through-hardening grades of good bearing-quality steel are satisfactory for raceways. Steels modified for free machining, such as those high in sulfur content and particularly those containing lead, are seldom satisfactory for raceways.

For long fatigue life, the shaft raceway must have a hardness equivalent to 58 HRC minimum and must be ground to the suggested diameter shown in the tables of dimensions. It may be through-hardened, or it may be case hardened with an effective case depth of 0.40 mm (0.015 in.). Effective case depth is defined as the distance from the surface inward to the equivalent of 50 HRC hardness level after grinding.

Taper within the length of the raceway should not exceed 0.008 mm (0.0003 in.), or one-half the diameter tolerance – whichever is smaller. The radial deviation from true circular form of the raceway should not exceed 0.0025 mm (0.0001 in.) for diameters up to and including 25 mm (1.0 in.). For raceways greater than 25 mm (1.0 in.), the allowable radial deviation should not exceed 0.0025 mm (0.0001 in.) multiplied by a factor of the raceway diameter divided by 25 (1.0 in.). Surface finish on the raceway should not exceed 0.4 µm (16 µin.) R_a. Deviations will reduce the load capacity and fatigue life of the shaft.

B

INSTALLATION

Simplicity of installation promotes additional cost savings. The drawn cup roller clutch or the clutch and bearing assembly must be pressed into its housing. Procedures are virtually identical with those for installing drawn cup bearings, as detailed on pages B-50 and B-92. The unit is pressed into the bore of a gear or pulley hub or housing of the proper size. No shoulders, splines, keys, screws or snap rings are required.

Installation procedures are summarized in the following sketches:

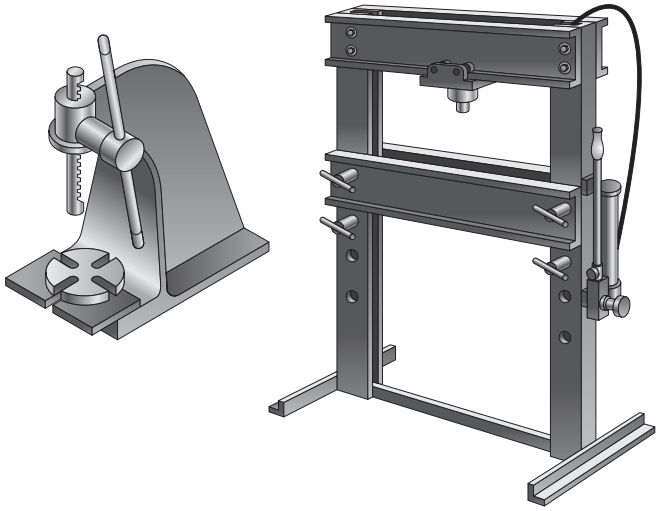

Fig. B-27. Arbor press and hydraulic ram press

Use an arbor press or hydraulic ram press to exert steady pressure. Never use a hammer, or other tool requiring pounding to drive the clutch into its housing.

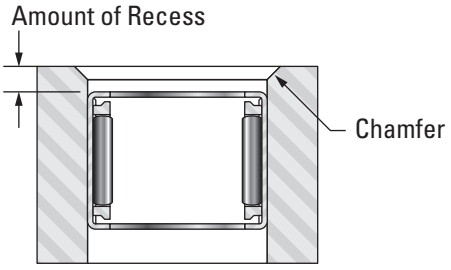

Fig. B-28. Chamfered housing bore

Make sure that the housing bore is chamfered to permit easy introduction of the clutch and bearing or the clutch unit. Press unit slightly beyond the chamfer in the housing bore to assure full seating. Through-bored housings are always preferred. If the housing has a shoulder, never seat the clutch against the shoulder. For further details, see pages B-50 and B-92.

Fig. B-29. Lock marking

IMPORTANT: The mounted clutch or clutch and bearing assembly engages when the housing is rotated relative to the shaft in the direction of the arrow and lock marking (◄– LOCK) stamped on the cup. Make sure that the unit is oriented properly before pressing it into its housing.

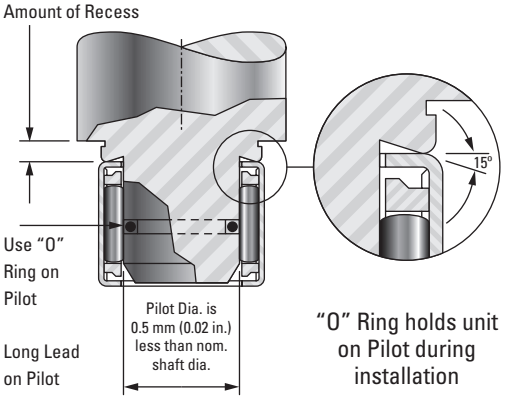

Fig. B-30. Installation tool

Use an installation tool as shown in Fig. B-30. If the clutch is straddled by needle roller bearings, press units into position – in proper sequence – and preferably leave a small clearance between units.

When assembling the shaft, it should be rotated in the overrun direction during insertion. The end of the shaft should have a large chamfer or rounding.

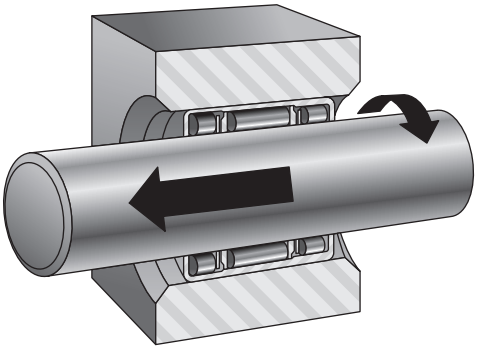

Fig. B-31. Rotate shaft in the overrun direction during insertion

APPLIED LOADS

The clutch-only unit is designed to transmit purely torque loads. Applied torque should not exceed the catalog ratings, which are based on the compressive strength of well-aligned clutch components. Bearings on either side of the clutch are to assure concentricity between the shaft and the housing to support radial loads during clutch overrun. Integral clutch and bearing assemblies are available for this purpose, especially where the radial loads are light. The total maximum dynamic radial load that may be shared by the two needle roller and cage radial bearing assemblies should not be greater than C/3.

In determining the total torque load on a clutch, it is essential to consider the torque, due to inertial forces developed in the mechanism, in addition to the externally applied torque. The larger the clutch, and the greater the mass of the mechanism controlled by it, the more important this consideration becomes.

Clutch lockup depends on friction. For this reason, applications involving severe vibrations or axial motion of the shaft within the clutch are to be avoided. Applications where overhanging or overturning loads occur should incorporate bearings that will maintain alignment between the shaft and the clutch housing. Consult your representative for suggestions.

LUBRICATION

Oil is the preferred lubricant; it minimizes wear and heat generation. For those applications where oil is not practical, clutches are packed with a soft grease containing mineral oil. Thick grease will retard roller engagement and can cause individual rollers to slip, possibly overloading any engaged rollers.

TEMPERATURE

Temperature extremes can cause clutch malfunctions and failure. The molded plastic cage with integral springs holds its necessary resiliency and strength when the operating temperature within the clutch is kept below 90° C (200° F). The clutch with reinforced nylon cage and separate steel springs operates well at temperatures up to 120° C (250° F) continuously and to 150° C (300° F) intermittently. Excessive thickening of the lubricant at low temperatures may prevent some, or all, of the rollers from engaging. New applications should be tested under expected operating conditions to determine whether or not temperature problems exist.

BACKLASH

Backlash, or lost motion, prior to engagement is minimal. The variation in backlash from one cycle to another is extremely low. Grease lubrication, or improper fit (housing bore and shaft diameter), may increase backlash. Angular displacement between the shaft and housing increases as an applied torque load is increased.

RATE OF ENGAGEMENT

Clutch lockup depends upon static friction. Axial motion between shaft and clutch rollers prevents lockup.

Clutches with integral springs engage satisfactorily at cyclic rates up to 200 engagements per minute. Intermittent operation at higher rates has been successful. The steel spring type clutches have proven dependability at rates up to 6000 or 7000 engagements per minute. Even higher cyclic rates may be practical. Because grease may impair engagement at high cyclic rates, a light oil should be used.

OVERRUN LIMIT SPEED RATING

Exact limiting speed ratings are not easily predictable. The value for each clutch given in the bearing tables is not absolute but serves as a guide for the designer. Oil lubrication is absolutely necessary for high speed operations. Consult your representative when overrunning speeds are high.

INSPECTION

Although the outer cup of the clutch is accurately drawn from strip steel, it can go slightly out of round during heat treat. When the assembly is pressed into a ring gage, or properly prepared housing of correct size and wall thickness, it becomes round and properly sized. Direct measurement of the outer diameter of a drawn cup assembly is an incorrect procedure. The proper inspection procedure is as follows:

1. Press the assembly into a ring gage of the proper size, as given in the tables.
2. Gage the bore with the specified plug gages of the proper size, as given in the tables of dimensions.
   a. The locking plug is rotated to ensure lockup when the clutch is operated on a low-limit shaft and is mounted in a high-limit housing, strong enough to properly size the clutch.
   b. The overrun plug is rotated to ensure free overrunning when the clutch is operated on a high-limit shaft and is mounted in a low-limit housing.
   c. The “go” plug and “no go” plug ensure proper size of the bearings in the clutch and bearing assemblies.

Gage sizes are listed in the tables of dimensions. Plug gage sizes reflect adjustment for the loose and tight conditions resulting from high or low housings or shafts.

DRAWN CUP ROLLER CLUTCHES

METRIC SERIES

B

- For proper application, separate bearings are suggested (adjacent to clutch) to carry radial loads and assure concentricity between shaft and housing.
- The clutch engages when housing is rotated relative to the shaft in direction of arrow marking (← LOCK), as labeled on cup.
- Proper inspection requires use of ring gage and bore plug gage(s). See the inspection section on page B-133.
- Full details on installation are given on page B-132.
- Shaft raceway and housing bore diameters that are necessary for proper mounting and operation are listed on the opposite page.
- Types FC, FCS, FC-K and FCL-K clutches have stainless steel springs inserted in molded cage to position rollers for lockup.

The mounted clutch engages when the housing is rotated relative to the shaft in the direction of the arrow marking (← LOCK) stamped on the cup.

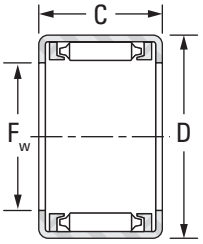

FC

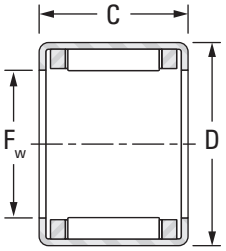

FCS, FCL-K and FC-K

Shaft Diameter	F_w	D	C	Clutch Designation	Torque Rating	Z Minimum O.D. of Steel Housing for Rated Torque	Overrun Limiting Speed Rating for Rotating Shaft	Suitable Drawn Cup Bearing[1]
			-0.30 mm -0.012 in.					
mm in.	mm in.	mm in.	mm in.		N-m lbf-in.	mm in.	min^{-1}	
4 0.1575	4 0.1575	8 0.3150	6 0.236	FC-4-K	0.349 3.09	11 0.433	26000	HK0408
6 0.2362	6 0.2362	10 0.3937	12 0.472	FCS-6	2.15 19.0	14 0.551	22000	HK0608
	6 0.2362	10 0.3937	12 0.472	FC-6	2.63 23.3	14 0.551	22000	HK0608
8 0.3150	8 0.3150	12 0.4724	12 0.472	FCL-8-K	3.39 30.0	17 0.669	21000	HK0808
	8 0.3150	14 0.5512	12 0.472	FC-8	4.42 39.1	20 0.787	21000	—
10 0.3937	10 0.3937	14 0.5512	12 0.472	FCL-10-K	4.60 40.7	20 0.787	19000	HK1010
	10 0.3937	16 0.6299	12 0.472	FC-10	5.82 51.5	25 0.984	19000	—
12 0.4724	12 0.4724	18 0.7087	16 0.630	FC-12	14.0 124	27 1.063	19000	HK1212
14 0.5512	14 0.5512	20 0.7874	16 0.630	FC-14-K	14.8 131	29 1.142	16000	HK1412
16 0.6299	16 0.6299	22 0.8661	16 0.630	FC-16	21.7 192	31 1.22	14000	HK1612
20 0.7874	20 0.7874	26 1.0236	16 0.630	FC-20	32.6 289	38 1.496	11000	HK2012
	20 0.7874	26 1.0236	16 0.630	FC-20-K	30.0 266	38 1.496	11000	HK2012
25 0.9843	25 0.9843	32 1.2598	20 0.787	FC-25-K	66.4 588	46 1.811	8700	HK2512
	25 0.9843	32 1.2598	20 0.787	FC-25	71.0 628	46 1.811	8700	HK2512
30 1.1811	30 1.1811	37 1.4567	20 0.787	FC-30	99.1 877	51 2.008	7300	HK3012
35 1.3780	35 1.3780	42 1.6535	20 0.787	FCS-35	107.0 947	56 2.205	6100	HK3512

[1] See pages B-52 to B-61 for suitable bearing types and sizes.

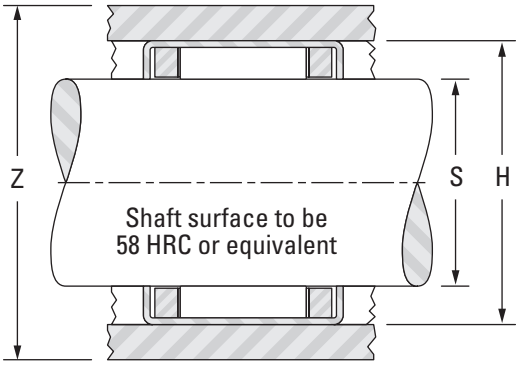

Gaging			S		H		Approx. Wt.
			Shaft Raceway Diameter		Housing Bore		
			Mounting				
Ring Gage	Clutch Locking Plug	Clutch Overrun Plug	Max.	Min.	Max.	Min.	
mm in.	**mm** in.	**mm** in.	**mm** in.	**mm** in.	**mm** in.	**mm** in.	**kg** lbs.
7.984 0.3143	**3.980** 0.1567	**4.004** 0.1576	**4.000** 0.1575	**3.995** 0.1573	**7.993** 0.3147	**7.984** 0.3143	**0.001** 0.002
9.984 0.3931	**5.980** 0.2354	**6.004** 0.2364	**6.000** 0.2362	**5.995** 0.2360	**9.993** 0.3934	**9.984** 0.3931	**0.003** 0.007
9.984 0.3931	**5.980** 0.2354	**6.004** 0.2364	**6.000** 0.2362	**5.995** 0.2360	**9.993** 0.3934	**9.984** 0.3931	**0.004** 0.009
11.980 0.4717	**7.976** 0.3140	**8.005** 0.3152	**8.000** 0.3150	**7.994** 0.3147	**11.991** 0.4721	**11.980** 0.4717	**0.003** 0.007
13.980 0.5504	**7.976** 0.3140	**8.005** 0.3152	**8.000** 0.3150	**7.994** 0.3147	**13.991** 0.5508	**13.980** 0.5504	**0.007** 0.015
13.980 0.5504	**9.976** 0.3928	**10.005** 0.3939	**10.000** 0.3937	**9.994** 0.3935	**13.991** 0.5508	**13.980** 0.5504	**0.004** 0.009
15.980 0.6291	**9.976** 0.3928	**10.005** 0.3939	**10.000** 0.3937	**9.994** 0.3935	**15.991** 0.6296	**15.980** 0.6291	**0.009** 0.020
17.980 0.7079	**11.974** 0.4714	**12.006** 0.4727	**12.000** 0.4724	**11.992** 0.4721	**17.991** 0.7083	**17.980** 0.7079	**0.012** 0.026
19.976 0.7865	**13.972** 0.5501	**14.006** 0.5514	**14.000** 0.5512	**13.992** 0.5509	**19.989** 0.7870	**19.976** 0.7865	**0.016** 0.035
21.976 0.8652	**15.972** 0.6288	**16.006** 0.6302	**16.000** 0.6299	**15.992** 0.6296	**21.989** 0.8657	**21.976** 0.8652	**0.018** 0.040
25.976 1.0227	**19.970** 0.7862	**20.007** 0.7877	**20.000** 0.7874	**19.991** 0.7870	**25.989** 1.0232	**25.976** 1.0227	**0.021** 0.046
25.976 1.0227	**19.970** 0.7862	**20.007** 0.7877	**20.000** 0.7874	**19.991** 0.7870	**25.989** 1.0232	**25.976** 1.0227	**0.016** 0.035
31.972 1.2587	**24.967** 0.9830	**25.007** 0.9845	**25.000** 0.9843	**24.991** 0.9839	**31.988** 1.2594	**31.972** 1.2587	**0.026** 0.057
31.972 1.2587	**24.967** 0.9830	**25.007** 0.9845	**25.000** 0.9843	**24.991** 0.9839	**31.988** 1.2594	**31.972** 1.2587	**0.034** 0.075
36.972 1.4556	**29.967** 1.1798	**30.007** 1.1814	**30.000** 1.1811	**29.991** 1.1807	**36.988** 1.4562	**36.972** 1.4556	**0.042** 0.093
41.972 1.6524	**34.964** 1.3765	**34.009** 1.3389	**35.000** 1.3780	**34.989** 1.3775	**41.988** 1.6531	**41.972** 1.6524	**0.048** 0.106

DRAWN CUP ROLLER CLUTCHES AND BEARING ASSEMBLIES

METRIC SERIES

B

- The clutch and bearing assembly engages when the housing is rotated relative to shaft in direction of arrow marking (← LOCK), as labeled on cup.
- Shaft raceway and housing bore diameters that are necessary for proper mounting and operation are listed on the opposite page.
- Proper inspection requires use of ring gage and bore plug gage(s). See the inspection section on page B-133.
- Full details on installation are given on page B-132.
- Types FCB, FCBL-L and FCBN-K clutch and bearing assemblies have stainless steel springs inserted in molded cage to position rollers for lockup.

The mounted clutch and bearing assembly engages when the housing is rotated relative to the shaft in the direction of the arrow marking (← LOCK) stamped on the cup.

Clutch and bearing assemblies

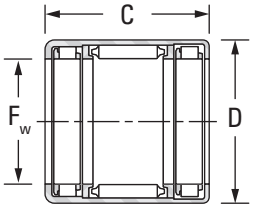

FCB

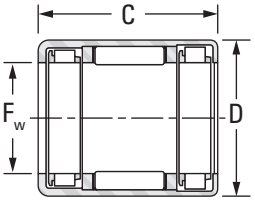

FCBL-K and FCBN-K

Shaft Diameter	F_w	D	C	Clutch and Bearing Assembly Designation	Torque Rating	Z Minimum O.D. of Steel Housing for Rated Torque	Load Ratings[1] C Dynamic	Load Ratings[1] C_0 Static	Overrun Limiting Speed Rating for Rotating Shaft
			-0.30 mm -0.012 in.						
mm in.	**mm** in.	**mm** in.	**mm** in.		**N-m** lbf-in.		**kN** lbf.	**kN** lbf.	min^{-1}
4 0.1575	**4** 0.1575	**10** 0.3937	**9** 0.354	FCBN-4-K	**0.19** 1.68	**16** 0.630	**1.86** 418	**0.99** 223	26000
6 0.2362	**6** 0.2362	**12** 0.4724	**10** 0.394	FCBN-6-K	**0.56** 4.96	**18** 0.709	**2.48** 558	**1.48** 333	22000
8 0.3150	**8** 0.3150	**12** 0.4724	**22** 0.866	FCBL-8-K	**3.39** 30.0	**17** 0.669	**3.62** 814	**3.28** 737	21000
	8 0.3150	**14** 0.5512	**20** 0.787	FCB-8	**4.42** 39.1	**20** 0.787	**4.22** 949	**3.04** 683	21000
10 0.3937	**10** 0.3937	**16** 0.6299	**20** 0.787	FCB-10	**5.82** 51.5	**25** 0.984	**4.84** 1090	**3.80** 854	19000
12 0.4724	**12** 0.4724	**18** 0.7087	**26** 1.024	FCB-12	**14.0** 124	**27** 1.063	**6.30** 1420	**5.84** 1310	19000
16 0.6299	**16** 0.6299	**22** 0.8661	**26** 1.024	FCB-16	**21.7** 192	**31** 1.220	**6.64** 1490	**7.12** 1600	14000
20 0.7874	**20** 0.7874	**26** 1.0236	**26** 1.024	FCB-20	**32.6** 289	**38** 1.496	**8.16** 1830	**9.46** 2130	11000
25 0.9843	**25** 0.9843	**32** 1.2598	**30** 1.181	FCB-25	**71.0** 628	**46** 1.811	**11.3** 2540	**13.1** 2940	8700
30 1.1811	**30** 1.1811	**37** 1.4567	**30** 1.181	FCB-30	**99.1** 877	**51** 2.008	**11.5** 2590	**14.9** 3350	7300

[1] Load ratings are based on a minimum raceway hardness of 58 HRC or equivalent.

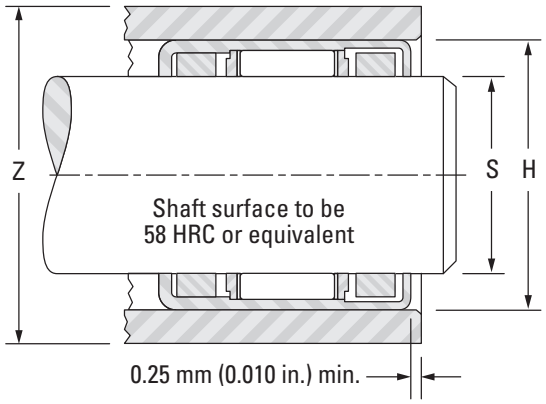

Gaging				S		H		Approx. Wt.
				Mounting				
Ring Gage	Clutch Locking Plug	Clutch Overrun and Bearing Go Plug	Bearing No Go Plug	Max.	Min.	Max.	Min.	
mm in.	**mm** in.	**mm** in.	**mm** in.	**mm** in.	**mm** in.	**mm** in.	**mm** in.	**kg** lbs.
9.984 0.3931	**3.980** 0.1567	**4.004** 0.1576	**4.030** 0.1587	**4.000** 0.1575	**3.995** 0.1573	**9.993** 0.3934	**9.984** 0.3931	**0.003** 0.007
11.980 0.4717	**5.977** 0.2353	**6.004** 0.2364	**6.030** 0.2374	**6.000** 0.2362	**5.995** 0.2360	**11.991** 0.4721	**11.980** 0.4717	**0.004** 0.009
11.980 0.4717	**7.976** 0.3140	**8.005** 0.3152	**8.033** 0.3163	**8.000** 0.3150	**7.994** 0.3147	**11.991** 0.4721	**11.980** 0.4717	**0.005** 0.011
13.980 0.5504	**7.976** 0.3140	**8.005** 0.3152	**8.033** 0.3163	**8.000** 0.3150	**7.994** 0.3147	**13.991** 0.5508	**13.980** 0.5504	**0.011** 0.024
15.980 0.6291	**9.976** 0.3928	**10.005** 0.3939	**10.033** 0.3950	**10.000** 0.3937	**9.994** 0.3935	**15.991** 0.6296	**15.980** 0.6291	**0.013** 0.029
17.980 0.7079	**11.974** 0.4714	**12.006** 0.4727	**12.036** 0.4739	**12.000** 0.4724	**11.992** 0.4721	**17.991** 0.7083	**17.980** 0.7079	**0.018** 0.040
21.976 0.8652	**15.972** 0.6288	**16.006** 0.6302	**16.036** 0.6313	**16.000** 0.6299	**15.992** 0.6296	**21.989** 0.8657	**21.976** 0.8652	**0.024** 0.053
25.976 1.0227	**19.970** 0.7862	**20.007** 0.7877	**20.043** 0.7891	**20.000** 0.7874	**19.991** 0.7870	**25.989** 1.0232	**25.976** 1.0227	**0.028** 0.062
31.972 1.2587	**24.967** 0.9830	**25.007** 0.9845	**25.043** 0.9859	**25.000** 0.9843	**24.991** 0.9839	**31.988** 1.2594	**31.972** 1.2587	**0.048** 0.106
36.972 1.4556	**29.967** 1.1798	**30.007** 1.1814	**30.043** 1.1828	**30.000** 1.1811	**29.991** 1.1807	**36.988** 1.4562	**36.972** 1.4556	**0.054** 0.119

B

DRAWN CUP ROLLER CLUTCHES

INCH SERIES

- For proper application, separate bearings are suggested (adjacent to clutch) to carry radial loads and assure concentricity between shaft and housing.
- The clutch engages when housing is rotated relative to the shaft in direction of arrow marking (← LOCK), as labeled on cup.
- Proper inspection requires use of ring gage and bore plug gage(s). See the inspection section on page B-133.
- Full details on installation are given on page B-132.
- Shaft raceway and housing bore diameters that are necessary for proper mounting and operation are listed on the opposite page.
- Clutch have spring integrally molded (type RC) stainless steel springs inserted (type RC-FS) in molded cage to position rollers for lockup.

The mounted clutch engages when the housing is rotated relative to the shaft in the direction of the arrow marking (← LOCK) stamped on the cup.

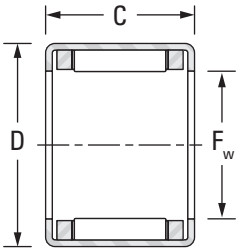

RC and RC-FS

Shaft Diameter	F_w	D	C	Clutch and Bearing Designations		Torque Rating	Z	Overrun Limiting Speed Rating for Rotating Shaft
			-0.25 mm -0.010 in.	With Stainless Steel Springs	With Integral Springs		Minimum O.D. of Steel Housing for Rated Torque	
mm in.	**mm** in.	**mm** in.	**mm** in.			**N-m** lbs-in.		min^{-1}
3.175 0.1250	**3.18** 0.125	**7.14** 0.281	**6.35** 0.250	—	RC-02	**0.323** 2.86	**11.2** 0.44	34000
6.350 0.2500	**6.35** 0.250	**11.13** 0.438	**12.70** 0.500	RC-040708-FS(1)	RC-040708	**1.94** 17.2	**15.7** 0.62	20000
9.525 0.3750	**9.53** 0.375	**15.88** 0.625	**12.70** 0.500	RC-061008-FS(1)	RC-061008	**5.45** 48.2	**22.4** 0.88	18000
12.700 0.5000	**12.70** 0.500	**19.05** 0.750	**12.70** 0.500	RC-081208-FS(1)	RC-081208	**8.85** 78.3	**27.9** 1.10	17000
15.875 0.6250	**15.88** 0.625	**22.23** 0.875	**15.88** 0.625	RC-101410-FS(1)	RC-101410	**16.8** 149	**30.5** 1.20	14000
19.050 0.7500	**19.05** 0.750	**25.40** 1.000	**15.88** 0.625	RC-121610-FS(1)	RC-121610	**23.3** 206	**35.6** 1.40	12000
25.400 1.0000	**25.40** 1.000	**33.35** 1.313	**15.88** 0.625	RC-162110-FS(1)	RC-162110	**49.6** 439	**48.3** 1.90	8700

(1) Suffix "-FS" is not always stamped on the clutch cup. Type RC-FS with stainless steel springs is always readily identified by RED clutch cage.
(2) See pages B-112 to B-119 for other suitable bearing types and sizes.

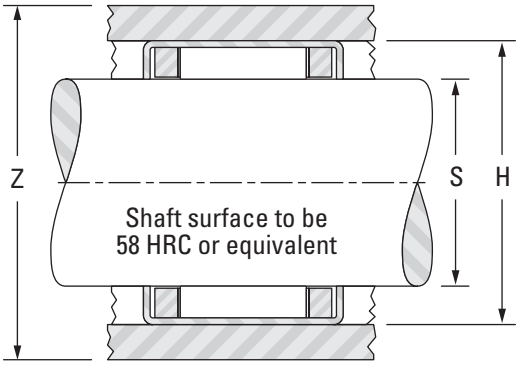

Suitable Drawn Cup Bearing(2)	Gaging			S		H		Approx. Wt.
				Shaft Raceway Diameter		Housing Bore		
				Mounting				
	Ring Gage	Clutch Locking Plug	Clutch Overrun Plug	Max.	Min.	Max.	Min.	
	mm in.	**mm** in.	**mm** in.	**mm** in.	**mm** in.	**mm** in.	**mm** in.	**kg** lbs.
—	**7.155** 0.2817	**3.160** 0.1244	**3.195** 0.1258	**3.175** 0.1250	**3.167** 0.1247	**7.155** 0.2817	**7.142** 0.2812	**0.001** 0.002
J-45	**11.125** 0.4380	**6.337** 0.2495	**6.383** 0.2513	**6.350** 0.2500	**6.337** 0.2495	**11.125** 0.4380	**11.100** 0.4370	**0.004** 0.008
JH-68	**15.888** 0.6255	**9.512** 0.3745	**9.558** 0.3763	**9.525** 0.3750	**9.512** 0.3745	**15.888** 0.6255	**15.862** 0.6245	**0.008** 0.017
JH-87	**19.063** 0.7505	**12.687** 0.4995	**12.733** 0.5013	**12.700** 0.5000	**12.687** 0.4995	**19.063** 0.7505	**19.037** 0.7495	**0.009** 0.020
JH-1010	**22.238** 0.8755	**15.862** 0.6245	**15.908** 0.6263	**15.875** 0.6250	**15.862** 0.6245	**22.238** 0.8755	**22.212** 0.8745	**0.014** 0.030
J-126	**25.387** 0.9995	**19.012** 0.7485	**19.058** 0.7503	**19.050** 0.7500	**19.037** 0.7495	**25.413** 1.0005	**25.387** 0.9995	**0.015** 0.034
JH-1612	**33.325** 1.3120	**25.362** 0.9985	**25.408** 1.0003	**25.400** 1.0000	**25.387** 0.9995	**33.350** 1.3130	**33.325** 1.3120	**0.026** 0.058

DRAWN CUP ROLLER CLUTCH AND BEARING ASSEMBLIES

INCH SERIES

B

- Clutch and bearing assembly engages when the housing is rotated relative to shaft in direction of arrow marking (← LOCK), as labeled on cup.
- Shaft raceway and housing bore diameters that are necessary for proper mounting and operation are listed on the opposite page.
- Proper inspection requires use of ring gage and bore plug gage(s). See the inspection section on page B-133.
- Full details on installation are given on page B-132.
- Clutch and bearing assemblies have spring integrally molded (type RCB) stainless steel springs inserted (type RCB-FS) in molded cage to position rollers for lockup.

The mounted clutch and bearing assemblies engages when the housing is rotated relative to the shaft in the direction of the arrow marking (← LOCK) stamped on the cup.

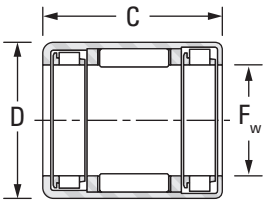

RCB and RCB-FS

Shaft Diameter	F_w	D	C	Clutch and Bearing Designations		Torque Rating	Z	Load Ratings(1)		Overrun Limiting Speed Rating for Rotating Shaft
			-0.25 mm -0.010 in.	With Stainless Steel Springs	With Integral Springs		Minimum O.D. of Steel Housing for Rated Torque	C Dynamic	C_0 Static	
mm in.	mm in.	mm in.	mm in.			N-m lbf-in.		kN lbf.	kN lbf.	min^{-1}
9.525 0.3750	**9.53** 0.375	**15.88** 0.625	**22.23** 0.875	RCB-061014-FS(1)	RCB-061014	**5.45** 48.2	**22.4** 0.88	**6.01** 1350	**4.89** 1100	18000
12.700 0.5000	**12.70** 0.500	**19.05** 0.750	**22.23** 0.875	RCB-081214-FS(1)	RCB-081214	**8.85** 78.3	**27.9** 1.1	**7.12** 1600	**6.49** 1460	17000
15.875 0.6250	**15.88** 0.625	**22.23** 0.875	**25.40** 1.000	RCB-101416-FS(1)	RCB-101416	**16.8** 149	**30.5** 1.2	**8.05** 1810	**8.14** 1830	14000
19.050 0.7500	**19.05** 0.750	**25.40** 1.000	**25.40** 1.000	RCB-121616-FS(1)	RCB-121616	**23.3** 206	**35.6** 1.4	**8.90** 2000	**9.79** 2200	12000
25.400 1.0000	**25.40** 1.000	**33.35** 1.313	**27.00** 1.063	RCB-162117-FS(1)	RCB-162117	**49.6** 439	**48.3** 1.9	**15.4** 3460	**17.6** 3960	8700

(1) Suffix "-FS" is not always stamped on the clutch cup. Type RC-FS with stainless steel springs is always readily identified by RED clutch cage.

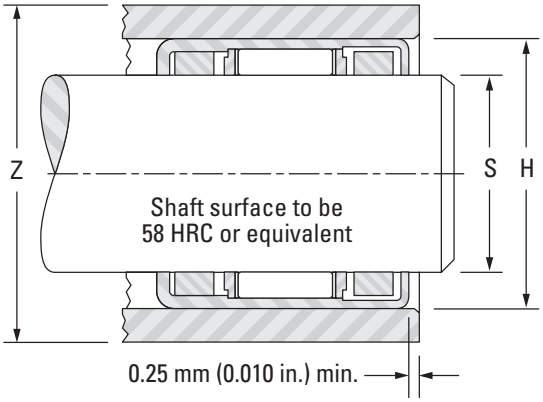

Gaging				S		H		Approx. Wt.
				Shaft Raceway Diameter		Housing Bore		
				Mounting				
Ring Gage	Clutch Locking Plug	Clutch Overrun and Bearing Go Plug	Bearing No Go Plug	Max.	Min.	Max.	Min.	
mm in.	**mm** in.	**mm** in.	**mm** in.	**mm** in.	**mm** in.	**mm** in.	**mm** in.	**kg** lbs.
15.888 0.6255	**9.512** 0.3745	**9.553** 0.3761	**9.589** 0.3775	**9.525** 0.3750	**9.512** 0.3745	**15.888** 0.6255	**15.862** 0.6245	**0.014** 0.030
19.063 0.7505	**12.687** 0.4995	**12.728** 0.5011	**12.764** 0.5025	**12.700** 0.5000	**12.687** 0.4995	**19.063** 0.7505	**19.037** 0.7495	**0.016** 0.036
22.238 0.8755	**15.862** 0.6245	**15.903** 0.6261	**15.939** 0.6275	**15.875** 0.6250	**15.862** 0.6245	**22.238** 0.8755	**22.212** 0.8745	**0.023** 0.050
25.387 0.9995	**19.012** 0.7485	**19.053** 0.7501	**19.088** 0.7515	**19.050** 0.7500	**19.037** 0.7495	**25.413** 1.0005	**25.387** 0.9995	**0.026** 0.057
33.325 1.3120	**25.362** 0.9985	**25.403** 1.0001	**25.438** 1.0015	**25.400** 1.0000	**25.387** 0.9995	**33.350** 1.3130	**33.325** 1.3120	**0.045** 0.100

B

INTRODUCTION

OTHER AVAILABLE CLUTCHES

In addition to the metric and inch sizes of drawn cup clutches and clutch and bearing assemblies already discussed, JTEKT offers other types of drawn cup clutches to address special customer needs:

DRAWN CUP ROLLER CLUTCHES FOR USE IN PLASTIC HOUSINGS

FCP AND DF TYPES

Types **FCP** and **DF** clutches feature axial grooves in the outside surface of the clutch cup. It is important that these grooves align with similar protrusions in the housing bore to prevent the clutch from slipping relative to the housing.

Types **FCP** and **DF** clutches are available with bore diameters of 4, 6, 8 and 10 mm.

These clutches may be made available already mounted in a plastic housing such as a gear or a pulley to meet the customer's design specifications.

Please contact your representative for details and availability.

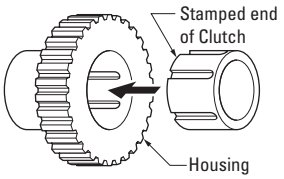

Fig. B-32. Clutch installation into housing

CHARACTERISTICS

- Easily unitized – they can be unitized with plastic parts such as gears, pulleys, rollers, etc. as needed.
- Creep preventing structure – creep is prevented by mating a thin cross section roller clutch, which has special grooves on O.D. formed by a precision press, with a plastic part that has an equal number of bosses on the bore of the housing.
- High precision and good durability – high precision and good durability is obtained because cam surfaces are formed by precision deep drawing.
- Small and compact – this series satisfies the need for a lighter compact product.

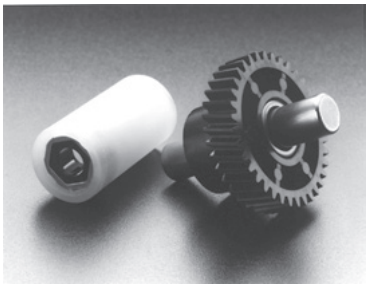

Fig. B-33. Sample DF and FCP clutches

STRUCTURE

Drawn cup roller clutches for plastic housings are composed of a drawn cup with internal cam surfaces and creep preventing grooves on O.D., rollers, and a retainer with either integral plastic or stainless steel springs.

The plastic housings can be a plastic gear, a pulley, a roller, etc., so it is possible to design the housing to meet any customers' needs.

ROLLER CLUTCH UNITS WITH PLASTIC HOUSINGS

FCU TYPES

Type **FCU** clutches were developed for office equipment and similar applications.

The **FCU** clutches are available with bore diameters of 6 and 8 mm.

They can be supplied with housings of various shapes to meet customer needs.

Please contact your representative for details and availability.

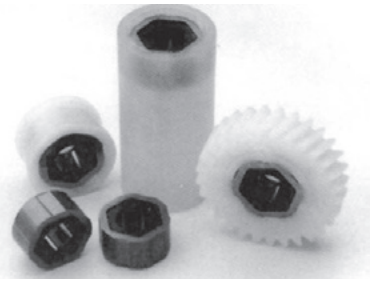

Fig. B-34. Sample of FCU clutch

RECOMMENDED FIT FOR SHAFT AND HOUSING

Drawn cup roller clutches for plastic housings are at their designed dimensions and tolerances only when they are installed in plastic housings.

- Shaft Material:
  - Carbon steel for machine structural use
  - Rolled steel for general use
  - Stainless steel
- Shaft Tolerance: h9 class
- Shaft surface finish: 0.4 micrometers
- Housing: Please consult your representative for housing bore sizes if purchasing roller clutches without housings. These roller clutches can be used with cylindrical steel or aluminum housings. In this case, please consult your representative for proper fit.

Specially designed clutches for use with plastic housings. Available in bores from 4 to 10 mm and ¼" and 3/8" bores. Grooves drawn into cup O.D. mate with protrusions molded into plastic housing bore to prevent clutch from moving relative to plastic housing. JTEKT can supply molded plastic housing and clutch assemblies.

JTEKT also has low cost FCU clutches available in 6 and 8 mm and 0.2362 in. to 0.3150 in. bores.

Can be designed and supplied with housings of various shapes to meet customer needs.

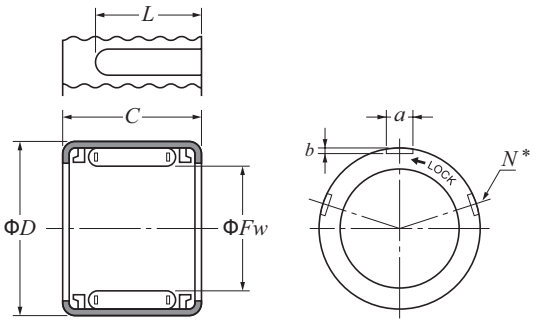

* Number of equally spaced grooves

Fig. B-35. Nominal clutch dimensions

Table B-15. Drawn cup roller clutches for plastic housings

Fw	D	C	a	b	L	N	Clutch Designation	Locking[1] Direction	Torque Rating (N-m)	Overrunning Drag (mN-m)	Type of Spring
mm in.	**mm** in.	**mm** in.	**mm** in.	**mm** in.	**mm** in.				**N-m**	**mN-m**	
4 0.1575	**8** 0.3150	**6** 0.2362	**1.0** 0.0394	**0.25** 0.0098	**4** 0.1575	5	DF-500401	CCW	**0.13**	**1.96**	Stainless Steel
	8 0.3150	**6** 0.2362	**1.0** 0.0394	**0.25** 0.0098	**4** 0.1575	5	DF-500408	CW	**0.13**	**1.96**	Stainless Steel
6 0.2362	**10** 0.3937	**8** 0.3150	**1.2** 0.0472	**0.25** 0.0098	**5.5** 0.2165	3	DF-500609	CCW	**0.44**	**2.94**	Integral Plastic
	10 0.3937	**8** 0.3150	**1.2** 0.0472	**0.25** 0.0098	**5.5** 0.2165	3	DF-500610	CW	**0.44**	**2.94**	Integral Plastic
	12 0.4724	**11** 0.4331	**1.5** 0.0591	**0.25** 0.0098	**8.5** 0.3346	5	FCP-6	CCW	**0.10**	**2.94**	Integral Plastic
	12 0.4724	**11** 0.4331	**1.5** 0.0591	**0.25** 0.0098	**8.5** 0.3346	5	FCPC-6	CW	**0.10**	**2.94**	Integral Plastic
	12 0.4724	**11** 0.4331	**1.5** 0.0591	**0.25** 0.0098	**8.5** 0.3346	5	FCP-6H	CCW	**0.90**	**2.94**	Integral Plastic
	12 0.4724	**11** 0.4331	**1.5** 0.0591	**0.25** 0.0098	**8.5** 0.3346	5	FCPC-6H	CW	**0.90**	**2.94**	Integral Plastic
8 0.3150	**12** 0.4724	**8** 0.3150	**1.2** 0.0472	**0.25** 0.0098	**5.5** 0.2165	9	DF-500808	CCW	**0.50**	**2.94**	Integral Plastic
	12 0.4724	**8** 0.3150	**1.2** 0.0472	**0.25** 0.0098	**5.5** 0.2165	9	DF-500809	CW	**0.50**	**2.94**	Integral Plastic
	12 0.4724	**12** 0.4724	**1.2** 0.0472	**0.25** 0.0098	**9.5** 0.3740	9	FCP-8	CCW	**0.21**	**2.94**	Integral Plastic
	12 0.4724	**12** 0.4724	**1.2** 0.0472	**0.25** 0.0098	**9.5** 0.3740	9	FCPC-8	CW	**0.21**	**2.94**	Integral Plastic
	12 0.4724	**12** 0.4724	**1.2** 0.0472	**0.25** 0.0098	**9.5** 0.3740	9	FCP-8H	CCW	**1.67**	**2.94**	Integral Plastic
	12 0.4724	**12** 0.4724	**1.2** 0.0472	**0.25** 0.0098	**9.5** 0.3740	9	FCPC-8H	CW	**1.67**	**2.94**	Integral Plastic
	12 0.4724	**12** 0.4724	**1.2** 0.0472	**0.25** 0.0098	**9.5** 0.3740	9	DF-500804	CCW	**1.67**	**2.94**	Integral Plastic
10 0.3937	**14** 0.5512	**12** 0.4724	**1.2** 0.0472	**0.25** 0.0098	**9.5** 0.3740	5	FCP-10	CCW	**0.28**	**3.92**	Integral Plastic
	14 0.5512	**12** 0.4724	**1.2** 0.0472	**0.25** 0.0098	**9.5** 0.3740	5	FCPC-10	CW	**0.28**	**3.92**	Integral Plastic
	14 0.5512	**12** 0.4724	**1.2** 0.0472	**0.25** 0.0098	**9.5** 0.3740	5	FCP-10H	CCW	**2.26**	**3.92**	Integral Plastic
	14 0.5512	**12** 0.4724	**1.2** 0.0472	**0.25** 0.0098	**9.5** 0.3740	5	FCPC-10H	CW	**2.26**	**3.92**	Integral Plastic

[1] Locking direction = Direction clutch must be rotated relative to shaft for clutch to lock as seen from staped end.

NOTES

HEAVY-DUTY NEEDLE ROLLER BEARINGS

Overview: Heavy-duty needle roller bearings consist of a machined and ground channel-shaped outer ring with a complement of needle rollers, and a cage. The high-strength cage retains and guides the rollers. An optional lubrication groove and hole in the outer ring facilitates re-lubrication. These bearings can be used with or without a machined and ground inner ring, depending on the suitability of the shaft as a raceway surface.

- **Sizes:** 5 mm – 335 mm (0.1969 in. – 13.1890 in.) bore.
- **Markets:** Gear pumps, sheaves, automotive transmissions and two-cycle engines.
- **Features:** Thick outer ring provides maximum load capacity and shock resistance with a relatively small radial cross section.
- **Benefits:** Optimum speed and lubrication-retention capability.

Needle Roller Bearings with Inner Rings – Metric Nominal Dimensions

Series
48 = dimension series 48
49 = dimension series 49
69 = dimension series 69
10 = Series 1000
20 = Series 2000
220 = Series 22000
30 = Series 3000

Inner Ring Bore Diameter
(for NA49, NA69: < 17 mm bore)
00 = 10 mm
01 = 12 mm
02 = 15 mm
03 = 17 mm

(for NA48, NA49, NA69: ≥ 20 mm bore)
bore code x 5 = bore diameter

NA 49 04 .2RS

NA 69 / 22

Suffix
RS lip contact seal on one side
.2RS lip contact seal on both sides
TN molded cage of reinforced polymer
A modified internal design

Prefix
NA needle roller bearing with inner ring, lube hole in outer ring
NKJ needle roller bearing with inner ring
NKJS needle roller bearing with inner ring, lube hole in outer ring
NAO needle roller bearing with inner ring, without flanges

NKJ 7 / 16 TN

Inner Ring Bore Diameter
(for NA49, NA69, NKJ, NKJS, NAO)
7 = 7 mm
22 = 22 mm
30 = 3 mm

Bearing Width
(for NKJ, NAO)
16 = 16 mm
17 = 17 mm

NAO 30 x 45 x 17

Outer Ring Diameter
45 = 45 mm

Needle Roller Bearings without Inner Rings – Metric Nominal Dimensions

Series
48 = dimension series 48
49 = dimension series 49
69 = dimension series 69
10 = Series 1000
20 = Series 2000
220 = Series 22000
30 = Series 3000

Needle Roller Complement Bore Code
See tables for dimensions

RNA **49** **04** **.2RS**

Suffix
RS lip contact seal on one side
.2RS lip contact seal on both sides
TN molded cage of reinforced polymer
A modified internal design

Prefix
RNA needle roller bearing without inner ring, lube hole in outer ring
NK needle roller bearing without inner ring
NKS needle roller bearing without inner ring, lube hole in outer ring
RNAO needle roller bearing without inner ring, without flanges

RNA **69** / **22**

NK **10** / **16** **TN**

Needle Roller Complement Bore Diameter
(NK, NKS, RNAO):
10 = 10 mm
35 = 35 mm
(for RNA49, RNA69):
22 = 28 mm
28 = 32 mm
32 = 40 mm

Outer Ring Width
(for NK, RNAO)
16 = 16 mm
17 = 17 mm

RNAO **35** x **45** x **17**

Outer Ring Diameter
45 = 45 mm

Inner Rings for Needle Roller Bearings – Metric Nominal Dimensions

Prefix
JR inner ring for use with metric needle roller bearing
JRZ inner ring for use with metric needle roller bearing, without mounting chamfers

Bore Diameter
25 = 25 mm

Width
18 = 18 mm

JRZ **25** x **30** x **18** **JS1**

Outer Diameter
30 = 30 mm

Suffix
JS1 lubrication hole

B

Needle Roller Bearings – Inch Nominal Dimensions

Prefix
- **HJ** inch nominal dimensions
- **HJM** matched pair of HJ

Outer Diameter
20 = $^{20}/_{16}$ = 1 $^{1}/_{4}$ in.

Suffix
- **RS** one seal
- **2RS** two seals

HJ - 16 24 12 • .2RS

Bore Diameter
16 = $^{16}/_{16}$ = 1 in.
80 = $^{80}/_{16}$ = 5 in.

Width
12 = $^{12}/_{16}$ = $^{3}/_{4}$ in.
36 = $^{36}/_{16}$ = 2 $^{1}/_{4}$ in.

Inner Rings (six-digit number) – Inch Nominal Dimensions

Prefix
- **IR** for use with machined ring needle roller bearings only

Outer Diameter
14 = $^{14}/_{16}$ = $^{7}/_{8}$ in.
80 = $^{80}/_{16}$ = 5 in.

IR - 10 14 16

Bore Diameter
10 = $^{10}/_{16}$ = $^{5}/_{8}$ in.
64 = $^{64}/_{16}$ = 4 in.

Width
16 = $^{16}/_{16}$ = 1 in.
36 = $^{36}/_{16}$ = 2 $^{1}/_{4}$ in.

Cylindrical Roller Radial Bearings - Metric Nominal Dimensions

Prefix
- **NJ** = cylindrical roller radial bearing (two ribs on outer ring, one rib on inner ring)
- **NU** = cylindrical roller radial bearing (two ribs on outer ring, cylindrical inner ring)
- **NUP** = cylindrical roller radial bearing (two ribs on outer ring, one fixed rib and one loose rib/flat washer on inner ring)

Inner Ring Bore Diameter
02 = 15 mm
03 = 17 mm
(for inner ring bore > 20 mm):
bore code x 5 = bore diameter
04 = 4 x 5 = 20 mm

NJ 2 04 E.TVP

Series
- **10** = width series 1; diameter series 0 (dimension series 10)
- **2** = width series 0; diameter series 2 (dimension series 02)
- **22** = width series 2; diameter series 2 (dimension series 22)
- **3** = width series 0; diameter series 3 (dimension series 03)
- **23** = width series 2; diameter series 3 (dimension series 23)

Suffix
- **E.TVP** = "E" design bearing, molded reinforced polymer window-type cage
- **M** = machined brass cage

B

Heavy-Duty Needle Roller Bearings

Page

NEEDLE ROLLER BEARINGS, METRIC SERIES

Introduction B-150

Needle Roller Bearings with Inner Rings B-157

Needle Roller Bearings without Inner Rings B-163

Sealed Needle Roller Bearings with Inner Rings B-170

Sealed Needle Roller Bearings without Inner Rings B-171

Needle Roller Bearings without Flanges with Inner Rings B-172

Needle Roller Bearings without Flanges without Inner Rings B-175

Needle Roller Bearings Full Complement without Inner Rings B-178

Needle Roller Bearings Full Complement with Inner Rings B-182

SINGLE ROW RADIAL BEARINGS, METRIC SERIES

Introduction B-185

Dimensional Accuracy B-186

Mounting Dimensions B-186

Load Ratings B-188

Cylindrical Roller Radial Bearings B-190

NEEDLE ROLLER BEARINGS, INCH SERIES

Introduction B-193

Dimensional Accuracy, Bearings – HJ Series B-194

Dimensional Accuracy, Inner Rings – IR Series B-195

HJ Type B-196

Sealed Heavy-Duty Needle Roller Bearings B-200

Inner Rings B-202

B

NEEDLE ROLLER BEARINGS

METRIC SERIES

When applications involve very heavy dynamic, static or even shock load conditions, the needle roller bearing may be found to give best results.

REFERENCE STANDARDS ARE:

- **ISO 1206** – needle roller bearings – light and medium series – dimensions and tolerances.
- **DIN 617** – rolling bearings – needle roller bearings with cage – dimension Series 48 and 49.

TYPES OF METRIC SERIES NEEDLE ROLLER BEARINGS

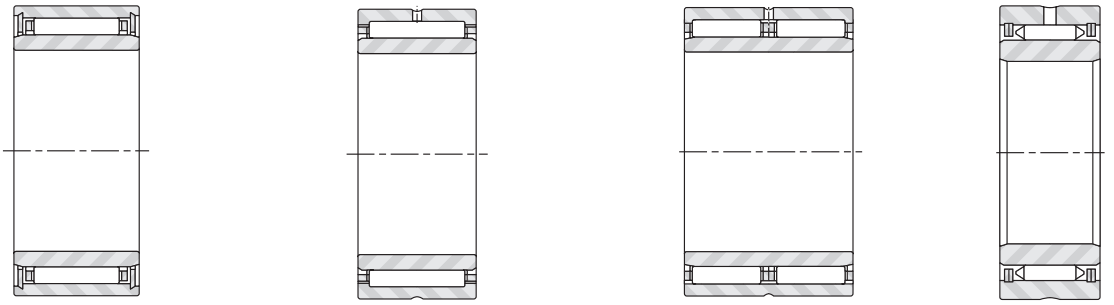

NKJ
(d ≤ 7 mm [0.2756 in.])

NKJ, NKJS
(d ≥ 9 mm [0.3543 in.])
NA48, NA49
NA69 (d ≤ 30 mm [1.1811 in.] mm)

NA69
(d ≥ 32 mm [1.2598 in.])

NA Series 1000, 2000, 22000, 3000

Fig. B-36. Needle roller bearings with inner rings

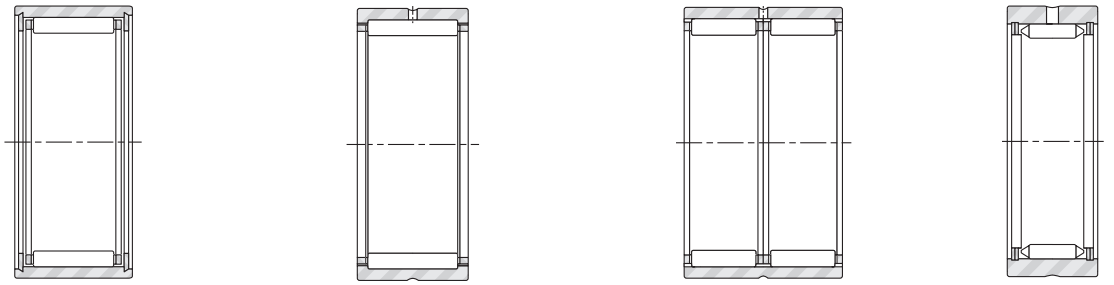

NK
(F_w ≤ 10 mm [0.03937 in.])

NK (F_w ≥ 12 mm [0.4724 in.])
NKS, RNA48, RNA49
RNA69 (F_w ≤ 35 mm [1.3780 in.])

RNA69
(F_w ≥ 40 mm [1.5748 in.])

RNA Series 1000, 2000, 22000, 3000

Fig. B-37. Needle roller bearings without inner rings

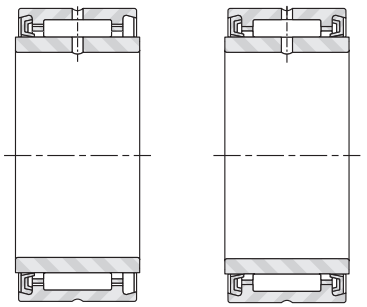

NA49RS **NA49.2RS**

Fig. B-38. Sealed needle roller bearings with inner rings

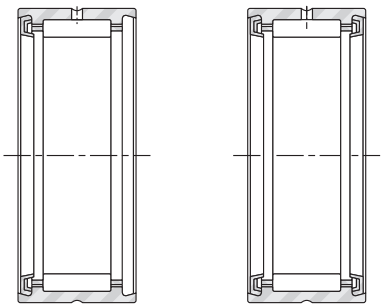

RNA49RS **RNA49.2RS**

Fig. B-39. Sealed needle roller bearings without inner rings

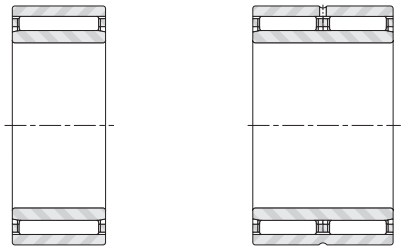

NAO NAO

Fig. B-40. Needle roller bearings without flanges, with inner rings

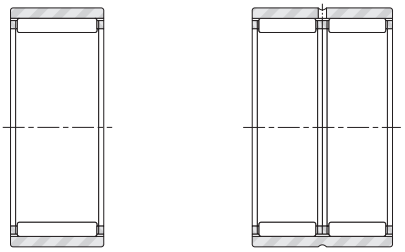

RNAO RNAO

Fig. B-41. Needle roller bearings without flanges, without inner rings

Suffixes	
RS	one seal
.2RS	two seals
TN	molded cage of engineered, reinforced polymer

CONSTRUCTION

The basic constructions of metric series needle roller bearings are:

- With integral end flanges on the one-piece, channel-shaped outer rings ($F_w \geq$ 12.000 mm[0.4724 in.]).
- With inserted-end washers to provide axial retention of the needle roller and cage assemblies ($F_w \leq$ 10.000 mm 0.3937 in.).
- Without flanges where separate end washers or housing shoulders are required to provide axial retention of the needle roller and cage assemblies.
- Full, outer ring piloted complement of needle rollers (with or without inner ring).

METRIC SERIES NEEDLE ROLLER BEARINGS WITH INNER RINGS

When it is impractical to finish the shaft to meet the desired raceway design requirements, an inner ring may be used. Standard needle roller bearings are available with inner rings (such as the NA Series) to form complete bearings. Bearings furnished with inner rings meet the quality requirements in accordance with ISO standards.

- For inner- and outer-ring tolerances, the metric series bearings follow the normal tolerance class in ISO Standard 492 covering radial bearings. Bearings to more precise tolerance classes, P6 and P5, may be obtained upon request.
- The metric series bearings may be obtained with radial internal clearance in accordance with ISO Standard 5753, also specified for cylindrical roller bearings. Mostly, they follow the normal (C0) radial clearance group, although bearings to clearance groups C2, C3 and C4 may be made available on request.
- Inner ring and outer ring chamfer dimensions meet the requirements of ISO Standard 582.

METRIC SERIES NEEDLE ROLLER BEARINGS WITHOUT INNER RINGS

Whenever the shaft can be used as the inner raceway, needle roller bearings without inner rings provide advantages of economy and close control of radial internal clearance in operation. Tolerance class F6 is the normal specification for the metric series needle roller complement bore diameter of an unmounted bearing, as shown in Table B-16 and Table B-17 on page B-152. In the case of needle roller bearings of series RNAO, without flanges and without inner rings, the outer rings and needle roller and cage assemblies are not interchangeable.

Table B-16. Metric series caged needle roller complement bore diameter for bearings without inner rings

F_w		ΔF_w min	
>	≤	Max.	Min.
mm in.	**mm** in.	**mm** in.	**mm** in.
3.000 0.1181	**6.000** 0.2362	**+0.018** +0.0007	**+0.010** +0.0004
6.000 0.2362	**10.000** 0.3937	**+0.022** +0.0009	**+0.013** +0.0005
10.000 0.3937	**18.000** 0.7087	**+0.027** +0.0011	**+0.016** +0.0006
18.000 0.7087	**30.000** 1.1811	**+0.033** +0.0013	**+0.020** +0.0008
30.000 1.1811	**50.000** 1.9685	**+0.041** +0.0016	**+0.025** +0.0010
50.000 1.9685	**80.000** 3.1496	**+0.049** +0.0019	**+0.030** +0.0012
80.000 3.1496	**120.000** 4.7244	**+0.058** +0.0023	**+0.036** +0.0014
120.000 4.7244	**180.000** 7.0866	**+0.068** +0.0027	**+0.043** +0.0017
180.000 7.0866	**250.000** 9.8425	**+0.079** +0.0031	**+0.050** +0.0020
250.000 9.8425	**315.000** 12.4016	**+0.088** +0.0035	**+0.056** +0.0022
315.000 12.4016	**400.000** 15.7480	**+0.098** +0.0039	**+0.062** +0.0024

Table B-17. Full complement metric needle roller complement bore diameter for bearings without inner rings

F_w		ΔF_w min	
>	≤	Max.	Min.
mm in.	**mm** in.	**mm** in.	**mm** in.
5.000 0.1969	**15.000** 0.5906	**+0.040** +0.0016	**+0.020** +0.0008
15.000 0.5906	**25.000** 0.9843	**+0.043** +0.0017	**+0.020** +0.0008
25.000 0.9843	**30.000** 1.1811	**+0.048** +0.0019	**+0.025** +0.0010
30.000 1.1811	**35.000** 1.3780	**+0.053** +0.0021	**+0.030** +0.0012
35.000 1.3780	**60.000** 2.3622	**+0.058** +0.0023	**+0.035** +0.0014
60.000 2.3622	**80.000** 3.1496	**+0.073** +0.0029	**+0.045** +0.0018
80.000 3.1496	**115.000** 4.5276	**+0.078** +0.0031	**+0.050** +0.0020
115.000 4.5276	**180.000** 7.0866	**+0.088** +0.0035	**+0.060** +0.0024
180.000 7.0866	**220.000** 8.6614	**+0.103** +0.0041	**+0.070** +0.0028
220.000 8.6614	**270.000** 10.6299	**+0.113** +0.0044	**+0.080** +0.0031
270.000 10.6299	**350.000** 13.7795	**+0.128** +0.0050	**+0.090** +0.0035

METRIC SERIES NEEDLE ROLLER BEARINGS WITH INTEGRAL FLANGES

The needle roller bearing has a one-piece, channel-shaped outer ring of bearing-quality steel heat treated to yield maximum load rating. The integral end flanges provide axial location for the needle rollers. The bores of the end flanges serve as piloting surfaces for the cage.

A steel cage provides inward retention for the needle rollers, and the design assures roller stability and minimizes friction between the cage and the needle rollers. The cage has maximum strength consistent with the inherent high-load ratings of needle roller bearings.

Needle roller bearings of series NKJ, NKJS, NA48 and NA49 contain one needle roller and cage assembly. Bearings of series NA69, with bearing bores of 32.000 mm (1.2598 in.) and above, have two needle roller and cage assemblies.

The outer ring has a lubricating groove and a lubricating hole for more convenient lubrication of the bearing. However, the smaller bearings of series **NKJ** and **NK** do not have a lubricating groove or a lubricating hole (Fw < 10 mm [0.3937 in.]).

METRIC SERIES NEEDLE ROLLER BEARINGS WITH INSERTED END WASHERS

Some metric series needle roller bearings have inserted end washers to provide axial retention of the needle roller and cage assembly. The radial needle roller and cage assemblies, consistent with other designs, provide inward and outward retention for the needle rollers.

METRIC SERIES NEEDLE ROLLER BEARINGS WITHOUT FLANGES

The radial needle roller and cage assembly, used in the metric series needle roller bearings without flanges, is slightly narrower than the inner and outer rings to ensure unobstructed operation. Separate end washers are required to provide axial retention of the radial needle roller and cage assembly. Wide needle roller bearings, using two needle roller and cage assemblies, have a lubricating groove and one lubricating hole in the outer ring to facilitate re-lubrication of the bearing. Narrow needle roller bearings do not have a lubricating groove or a lubricating hole in the outer ring.

SEALED METRIC SERIES NEEDLE ROLLER BEARINGS OF DIMENSION SERIES 49

Needle roller bearings of Series 49 are available with one or two integral lip-contact seals, as listed on page B-170. One seal is designated by suffix letters RS. Two seals are designated by .2RS. When combining sealed metric series needle roller bearings with inner rings, it is suggested to use inner rings, shown on pages B-67 and B-366, with designation JRZ because they are wider than the outer rings to ensure positive seal contact.

These seals limit the bearing operating temperature between -30° C and 110° C (-25° F and 225° F). If the operating temperature must be outside the above range or if the seals are exposed to unusual fluids, external seals using suitable seal materials or other solutions should be investigated. Sealed bearings are normally packed with a high quality lithium soap-based grease suitable up to 120° C (248° F) for short periods of operation.

The speed rating specified for sealed bearings listed in the bearing tables is based on operating conditions determined by testing. Optimum performance may be expected providing the bearing is properly installed with appropriate internal clearances and subjected to a load of low magnitude. Care should be taken that overheating will not occur, thus preventing breakdown of the grease and eventual bearing failure.

METRIC SERIES FULL COMPLEMENT NEEDLE ROLLER BEARINGS

Series NA and RNA 1000, 2000, 22000 and 3000 are available with possible options of extra wide and/or crowned inner ring raceways. Consult your representative for application details.

BEARING MOUNTING

MOUNTING DIMENSIONS

It is suggested that needle roller bearings are mounted in their housings with a clearance fit, if the load is stationary relative to the housing, or with a tight transition fit, if the load rotates relative to the housing. Table B-18 lists the suggested tolerances for the housing bore and the shaft raceway for metric series bearings without inner rings. Table B-19 lists the suggested shaft tolerances for the above two mounting conditions when the metric series bearings are used with inner rings. The suggested housing bore tolerances for metric series bearings with inner rings is the same as the housing bore tolerance listed in Table B-18 for metric series bearings without inner rings. Other quality requirements for shafts and housings are given in the engineering section.

Other mounting dimensions may be required for special operating conditions such as:

1. Extremely heavy radial loads.
2. Shock loads.
3. Temperature gradient across bearing.
4. Housing material with heat expansion coefficient different than that of the bearing.
5. Oscillating motion applications.

Table B-18. Mounting tolerances for metric series bearings without inner ring

Rotation conditions	Nominal housing bore diameter D	ISO tolerance zone for housing		Nominal shaft diameter F shaft	ISO tolerance zone for shaft	
	mm	caged	full	mm	caged	full
Load stationary relative to housing	all diameters	H7 (J7)	J6	all diameters	**h6**	**h5**
General work with larger clearance	all diameters	K7	—	all diameters	**g6**	—
Load housing relative tohousing	all diameters	N7	M6	all diameters	**f6**	**g5**

Care should be taken that the selected bearing internal clearance is appropriate for the operating conditions.

Table B-19. Shaft tolerances for metric series bearings with inner rings (use housing tolerance shown in table above)

Rotation conditions	Nominal shaft diameter, d		ISO tolerance zone for shaft	
	mm in.	**mm** in.	caged	full
Load rotates relative to housing	all diameters		g6	H5 (h6)
Load stationary relative to housing	>	≤		
		40.000 1.5748	k6	k5
	40.000 1.5748	**100.000** 3.9370	m6	m5
	100.000 3.9370	**140.000** 5.5118	m6	m5
	140.000 5.5118		n6	n6

Care should be taken that the selected bearing internal clearance is appropriate for the operating conditions.

Regardless of the fit of the bearing outer ring in the housing, the outer ring should be axially located by housing shoulders or other positive means. The bearing rings should closely fit against the shaft and housing shoulders and must not contact the fillet radius. The maximum shaft or housing fillet $r_{a\ max}$ should be no greater than the minimum bearing chamfer $r_{s\ min}$, as shown in Table B-20 on page B-154.

In order to permit mounting and dismounting of the shaft, the maximum diameter D_1 in Table B-21 on page B-154 must not be exceeded. F_w is shown in the bearing tables.

Needle roller bearings without flanges of series RNAO and NAO must have the radial needle roller and cage assembly properly end-guided by shoulders, as shown in Table B-22(1) on page B-155 and Table B-22(2) on page B-156, or other suitable means, such as spring steel washers (SNSH) shown on page B-383. These end-guiding surfaces should be hardened and precision turned, or ground to minimize wear, and should properly fit against the outer rings and the inner rings to provide the desired end clearance for the needle roller and cage assembly.

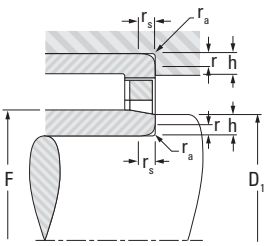

Fillet

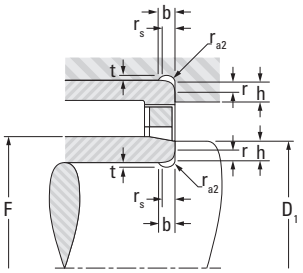

Undercut

Table B-20. Fillets, undercuts, and shoulder heights for metric series bearings

r_s(1)	r_a	t	r_{a2}	b	h
Min.	Max.		Min.		Min.
mm in.	**mm** in.	**mm** in.	**mm** in.	**mm** in.	**mm** in.
0.15 0.0059	**0.15** 0.0059				**0.6** 0.0236
0.3 0.0118	**0.3** 0.0118				**1** 0.0394
0.6 0.0236	**0.6** 0.0236				**2** 0.0787
1 0.0394	**1** 0.0394	**0.2** 0.0079	**1.3** 0.0512	**2** 0.0787	**2.5** 0.0984
1.1 0.0433	**1** 0.0394	**0.3** 0.0118	**2** 0.0787	**3** 0.1181	**3.25** 0.1280
1.5 0.0591	**1.5** 0.0591	**0.4** 0.0158	**2** 0.0787	**3.2** 0.1260	**4** 0.1575
2 0.0787	**2** 0.0787	**0.5** 0.0197	**2.5** 0.0984	**4** 0.1575	**5** 0.1969
2.1 0.0827	**2.1** 0.0827	**0.5** 0.0197	**3** 0.1181	**4.7** 0.1850	**5.5** 0.2165
3 0.1181	**2.5** 0.0984	**0.5** 0.0197	**3.5** 0.1378	**5.3** 0.2087	**6** 0.2362

(1) r_s : Bearing component corner rounding.

Table B-21. Shoulder diameter D_{1max} for metric series bearings

		mm in.	**mm** in.	**mm** in.	**mm** in.	**mm** in.
Needle roller complement bore diameter F_w	>		**20.000** 0.7874	**55.000** 2.1653	**100.000** 3.9370	**250.000** 9.8425
	≤	**20.000** 0.7874	**55.000** 2.1653	**100.000** 3.9370	**250.000** 9.8425	
Diameter	D_{1max}	F_w -0.3	F_w -0.5	F_w -0.7	F_w -1.0	F_w -1.5

LOAD RATING FACTORS

DYNAMIC LOADS

Needle roller bearings can accommodate only radial loads.

$$P = F_r \quad \text{(kN)}$$

P = The maximum dynamic radial load that may be applied to a needle roller bearing based on the dynamic load rating, C, given in the bearing tables. This load should be ≤ C/3.

STATIC LOADS

Needle roller bearings can accommodate only radial loads.

$$P_0 = F_r \quad \text{(kN)}$$

MOUNTING IN SETS

Radial needle roller and cage assemblies that are mounted side by side must have needle rollers of the same group limits to ensure uniform load distribution.

RNAO Series

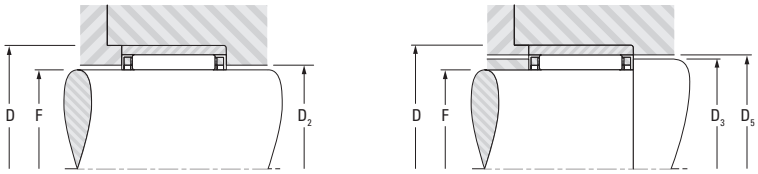

Fig. B-42. Guidance in the housing (left) and on the shaft (right)

Table B-22(1). Mounting dimensions for metric series needle roller bearings without flanges

FxD	D_3	D_2	D_5
Dimensions	Bearing series RNAO		
	Max.	Min.	Min.
mm in.	**mm** in.	**mm** in.	**mm** in.
10x17 0.3937x0.6693	**12.7** 0.5000	**10.3** 0.4055	**13.3** 0.5236
12x19 0.4724x0.7480	**14.7** 0.5787	**12.3** 0.4843	**15.3** 0.6024
14x22 0.5512x0.8661	**17.6** 0.6929	**14.4** 0.5669	**18.3** 0.7205
15x23 0.5906x0.9055	**18.6** 0.7323	**15.4** 0.6063	**19.3** 0.7598
16x24 0.6299x0.9499	**19.6** 0.7717	**16.4** 0.6457	**20.3** 0.7992
17x25 0.6693x0.9843	**20.6** 0.8110	**17.4** 0.6850	**21.3** 0.8386
18x26 0.7087x1.0236	**21.6** 0.8504	**18.4** 0.7244	**22.3** 0.8780
18x30 0.7087x1.1811	**23.6** 0.9291	**18.6** 0.7323	**24.5** 0.9646
20x28 0.7874x1.1024	**23.6** 0.9291	**20.4** 0.8032	**24.3** 0.9567
20x32 0.7874x1.2598	**25.6** 1.0079	**20.6** 0.8110	**26.5** 1.0433
22x30 0.8661x1.1811	**25.6** 1.0079	**22.4** 0.8819	**26.3** 0.9291
22x35 0.8661x1.3780	**28.4** 1.1181	**22.8** 0.8976	**29.5** 1.1614
25x35 0.9843x1.3780	**29.4** 1.1575	**25.6** 1.0079	**30.5** 1.2008
25x37 0.9843x1.4567	**31.4** 1.2362	**25.8** 1.0158	**32.5** 1.2795
28x40 1.1024x1.5748	**34.4** 1.3543	**28.8** 1.1339	**35.5** 1.3976
30x40 1.1811x1.5748	**34.4** 1.3543	**30.6** 1.2047	**35.5** 1.3976
30x42 1.1811x1.6535	**36.4** 1.4331	**30.8** 1.2126	**37.5** 1.4764
35x45 1.3780x1.7717	**39.4** 1.5512	**35.6** 1.4016	**40.5** 1.5945

FxD	D_3	D_2	D_5
Dimensions	Bearing series RNAO		
	Max.	Min.	Min.
mm in.	**mm** in.	**mm** in.	**mm** in.
35x47 1.3780x1.8504	**41.4** 1.6299	**35.8** 1.4096	**42.5** 1.6732
40x50 1.5748x1.9685	**44.4** 1.7480	**40.6** 1.5984	**45.5** 1.7913
40x55 1.5748x2.1654	**47.2** 1.8582	**41** 1.6142	**48.5** 1.9095
45x55 1.7717x2.1654	**49.4** 1.9449	**45.6** 1.7953	**50.5** 1.9882
45x62 1.7717x2.4409	**52.2** 2.0551	**46** 1.8110	**53.5** 2.1063
50x62 1.9685x2.4409	**54.4** 2.1417	**50.6** 1.9921	**55.8** 2.1969
50x65 1.9685x2.5591	**57.2** 2.2520	**51** 2.0079	**58.8** 2.3032
55x68 2.1654x2.6772	**59.4** 2.3386	**55.6** 2.1890	**60.8** 2.3937
55x72 2.1654x2.8347	**62.2** 2.4488	**56** 2.2047	**63.8** 2.5118
60x78 2.3622x3.0709	**67.2** 2.6457	**61** 2.4016	**68.8** 2.7087
65x85 2.5591x3.3465	**72.2** 2.8425	**66** 2.5984	**73.8** 2.9055
70x90 2.7559x3.5433	**77.2** 3.0394	**71** 2.7953	**78.8** 3.1024
75x95 2.9528x3.7402	**82.2** 3.2362	**76** 2.9921	**84** 3.3071
80x100 3.1496x3.9370	**87.2** 3.4331	**81** 3.1890	**89** 3.5039
85x105 3.3465x4.1339	**92.2** 3.6299	**86** 3.3858	**94** 3.7008
90x110 3.5433x4.3307	**97.2** 3.8268	**91** 3.5827	**99** 3.8976
95x115 3.7402x4.5276	**102.2** 4.0236	**96** 3.7795	**104** 4.0945
100x120 3.9370x4.7244	**107.2** 4.2205	**101** 3.9764	**109** 4.2913

B

NAO Series

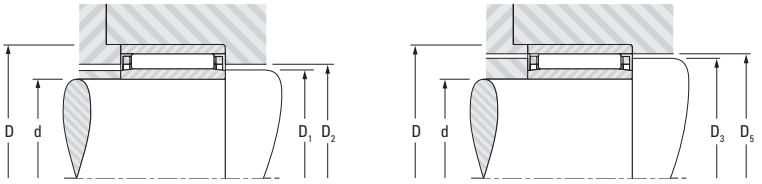

Fig. B-43. Guidance in the housing (left) and on the shaft (right)

Table B-22(2). Mounting dimensions for metric series needle roller bearings without flanges

dxD	D_1	D_2	D_3	D_5
Dimensions	Bearing series NAO			
	Max.	Min.	Max.	Min.
mm in.	mm in.	mm in.	mm in.	mm in.
6x17 0.2362x'0.6693	**9.7** 0.3819	**10.3** 0.4055	**12.7** 0.5000	**13.3** 0.5236
8x19 0.3150x'0.7480	**11.7** 0.4606	**12.3** 0.4843	**14.7** 0.5787	**15.3** 0.6024
10x22 0.3937x'0.8661	**13.7** 0.5394	**14.4** 0.5669	**17.6** 0.6929	**18.3** 0.7205
10x26 0.3937x1.0236	**13.7** 0.5394	**14.6** 0.5748	**19.6** 0.7717	**20.3** 0.7992
12x24 0.4724x'0.9449	**15.7** 0.6181	**16.4** 0.6457	**19.6** 0.7717	**20.3** 0.7992
12x28 0.4724x1.1024	**15.7** 0.6181	**16.6** 0.6535	**21.6** 0.8504	**22.3** 0.878
15x28 0.5906x1.1024	**19.5** 0.7677	**20.4** 0.8032	**23.6** 0.9291	**24.3** 0.9567
15x32 0.5906x1.2598	**19.5** 0.7677	**20.6** 0.811	**25.6** 1.0079	**26.5** 1.0433
17x30 0.6693x1.1811	**21.5** 0.8465	**22.4** 0.8819	**25.6** 1.0079	**26.3** 1.0354
17x35 0.6693x1.3780	**21.5** 0.8465	**22.8** 0.8976	**28.4** 1.1181	**29.5** 1.1614
20x35 0.7874x1.3780	**24.5** 0.9646	**25.6** 1.0079	**29.4** 1.1575	**30.5** 1.2008
20x37 0.7874x1.4567	**24.5** 0.9646	**25.8** 1.0158	**31.4** 1.2362	**32.5** 1.2795
25x40 0.9843x1.5748	**29.5** 1.1614	**30.6** 1.2047	**34.4** 1.3543	**35.5** 1.3976
25x42 0.9843x1.6535	**29.5** 1.1614	**30.8** 1.2126	**36.4** 1.4331	**37.5** 1.4764
30x45 1.1811x1.7717	**34.5** 1.3583	**35.6** 1.4016	**39.4** 1.5512	**40.5** 1.5945
30x47 1.1811x1.8504	**34.5** 1.3583	**35.8** 1.4095	**41.4** 1.6299	**42.5** 1.6732

dxD	D_1	D_2	D_3	D_5
Dimensions	Bearing series NAO			
	Max.	Min.	Max.	Min.
mm in.	mm in.	mm in.	mm in.	mm in.
35x50 1.3780x1.9685	**39.5** 1.5551	**40.6** 1.5984	**44.4** 1.748	**45.5** 1.7913
35x55 1.3780x2.1654	**39.5** 1.5551	**41** 1.6142	**47.2** 1.8583	**48.5** 1.9095
40x55 1.5748x2.1654	**44.5** 1.7520	**45.6** 1.7952	**49.4** 1.9449	**50.5** 1.9882
40x62 1.5748x2.4409	**44.5** 1.7520	**46** 1.8110	**52.2** 2.0551	**53.5** 2.1063
45x62 1.7717x2.4409	**49.5** 1.9488	**50.6** 1.9921	**54.4** 2.1417	**55.8** 2.1969
45x72 1.7717x2.8347	**54.5** 2.1457	**56** 2.2047	**62.2** 2.4488	**63.8** 2.5118
50x68 1.9685x2.6772	**54.5** 2.1457	**55.6** 2.1890	**59.4** 2.3386	**60.8** 2.3937
50x78 1.9685x3.0709	**59.3** 2.3347	**61** 2.4016	**67.2** 2.6457	**68.8** 2.7087
55x85 2.1654x3.3465	**64.3** 2.5315	**66** 2.5984	**72.2** 2.8425	**73.8** 2.9055
60x90 2.3622x3.5433	**69.3** 2.7284	**71** 2.7953	**77.2** 3.0394	**78.8** 3.1024
65x95 2.5591x3.7402	**74.3** 2.9252	**76** 2.9921	**82.2** 3.2362	**84** 3.3071
70x100 2.7559x3.9370	**79.3** 3.1221	**81** 3.1890	**87.2** 3.4331	**89** 3.5039
75x105 2.9528x4.1339	**84.3** 3.3189	**86** 3.3858	**92.2** 3.6299	**94** 3.7008
80x110 3.1496x4.3307	**89.3** 3.5158	**91** 3.5827	**97.2** 3.8268	**99** 3.8976
85x115 3.3465x4.5276	**94.3** 3.7126	**96** 3.7795	**102.2** 4.0236	**104** 4.0945
90x120 3.5433x4.7244	**99.3** 3.9095	**101** 3.9764	**107.2** 4.2205	**109** 4.2913

NEEDLE ROLLER BEARINGS WITH INNER RINGS

METRIC SERIES

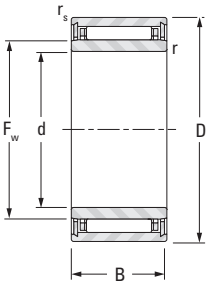

NKJ
(d ≤ 7)

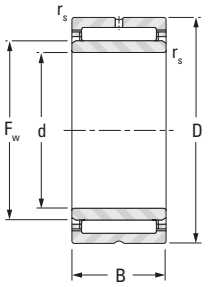

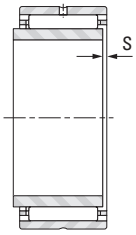

NKJ, NKJS
NA49, NA69

Shaft Dia.	d	D	B	F_w	$r_{s\,min}$	s[1]	Bearing Designation	Load Ratings Dynamic C	Load Ratings Static C_0	Speed Rating Oil	Speed Rating Grease	C_g	Approx. Wt.
mm in.	mm in.	mm in.	mm in.	mm in.	mm in.	mm in.		kN lbf.		min^{-1}			kg lbs.
5 0.1969	**5** 0.1969	**15** 0.5906	**12** 0.472	**8** 0.3150	**0.3** 0.012	**1.5** 0.059	NKJ5/12	**4.57** 1030	**4.89** 1100	41000	26000	0.0148	**0.014** 0.031
	5 0.1969	**15** 0.5906	**16** 0.630	**8** 0.3150	**0.3** 0.012	**1.5** 0.059	NKJ5/16	**5.22** 1170	**5.78** 1300	41000	26000	0.0154	**0.017** 0.037
6 0.2362	**6** 0.2362	**16** 0.6299	**12** 0.472	**9** 0.3543	**0.3** 0.012	**1.5** 0.059	NKJ6/12	**4.27** 960	**4.60** 1030	40000	26000	0.0153	**0.015** 0.033
	6 0.2362	**16** 0.6299	**16** 0.630	**9** 0.3543	**0.3** 0.012	**1.5** 0.059	NKJ6/16	**5.57** 1250	**6.47** 1450	40000	26000	0.0167	**0.019** 0.042
7 0.2756	**7** 0.2756	**17** 0.6693	**12** 0.472	**11.5** 0.4528	**0.3** 0.012	**1.5** 0.059	NKJ7/12	**5.40** 1210	**6.43** 1450	39000	25000	0.0174	**0.017** 0.037
	7 0.2756	**17** 0.6693	**16** 0.630	**11.5** 0.4528	**0.3** 0.012	**1.5** 0.059	NKJ7/16TN	**5.30** 1190	**6.27** 1410	39000	25000	0.0173	**0.021** 0.046
9 0.3543	**9** 0.3543	**19** 0.7480	**12** 0.472	**12** 0.4724	**0.3** 0.012	**1.5** 0.059	NKJ9/12	**6.86** 1540	**7.60** 1710	30000	19000	0.0189	**0.018** 0.040
	9 0.3543	**19** 0.7480	**16** 0.630	**12** 0.4724	**0.3** 0.012	**1.5** 0.059	NKJ9/16	**6.78** 1520	**9.03** 2030	30000	19000	0.0204	**0.024** 0.053
10 0.3937	**10** 0.3937	**22** 0.8661	**13** 0.512	**14** 0.5512	**0.3** 0.012	**1.0** 0.039	NA4900	**9.39** 2110	**10.3** 2320	24000	16000	0.0211	**0.025** 0.055
	10 0.3937	**22** 0.8661	**16** 0.630	**14** 0.5512	**0.6** 0.024	**1.5** 0.059	NKJ10/16	**12.4** 2790	**14.8** 3330	24000	16000	0.0231	**0.032** 0.071
	10 0.3937	**22** 0.8661	**20** 0.787	**14** 0.5512	**0.3** 0.012	**1.5** 0.059	NKJ10/20	**14.7** 3300	**18.4** 4140	24000	16000	0.0244	**0.040** 0.088
12 0.4724	**12** 0.4724	**24** 0.9449	**13** 0.512	**16** 0.6299	**0.3** 0.012	**1.0** 0.039	NA4901	**10.5** 2360	**12.0** 2700	28000	18000	0.0233	**0.028** 0.062
	12 0.4724	**24** 0.9449	**16** 0.630	**16** 0.6299	**0.3** 0.012	**1.5** 0.059	NKJ12/16	**13.0** 2920	**16.2** 3640	28000	18000	0.0250	**0.036** 0.079
	12 0.4724	**24** 0.9449	**20** 0.787	**16** 0.6299	**0.3** 0.012	**1.5** 0.059	NKJ12/20	**15.4** 3460	**20.2** 4540	28000	18000	0.0264	**0.046** 0.101
	12 0.4724	**24** 0.9449	**22** 0.866	**16** 0.6299	**0.3** 0.012	**1.0** 0.039	NA6901	**16.1** 3620	**21.3** 4790	28000	18000	0.0267	**0.051** 0.110
15 0.5906	**15** 0.5906	**27** 1.0630	**16** 0.630	**19** 0.7480	**0.3** 0.012	**1.5** 0.059	NKJ15/16	**14.1** 3170	**19.0** 4270	24000	15000	0.0279	**0.042** 0.093
	15 0.5906	**27** 1.0630	**20** 0.787	**19** 0.7480	**0.3** 0.012	**1.5** 0.059	NKJ15/20	**16.8** 3780	**23.6** 5310	24000	15000	0.0295	**0.054** 0.119
	15 0.5906	**28** 1.1024	**13** 0.512	**20** 0.7874	**0.3** 0.012	**1.0** 0.039	NA4902	**11.8** 2650	**15.3** 3440	22000	14000	0.0270	**0.037** 0.082
	15 0.5906	**28** 1.1024	**23** 0.906	**20** 0.7874	**0.3** 0.012	**1.5** 0.059	NA6902	**18.4** 4140	**26.9** 6050	22000	14000	0.0311	**0.067** 0.148
17 0.6693	**17** 0.6693	**29** 1.1417	**16** 0.630	**21** 0.8268	**0.3** 0.012	**2.0** 0.079	NKJ17/16	**15.3** 3440	**21.6** 4860	21000	14000	0.0301	**0.047** 0.104

[1] Max. axial displacement.

Continued on next page.

NEEDLE ROLLER BEARINGS WITH INNER RINGS – *continued*

METRIC SERIES

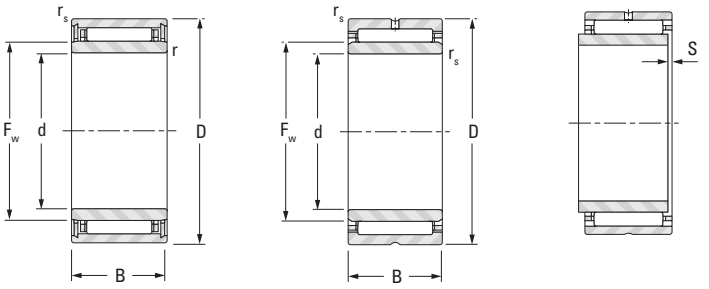

NKJ (d ≤ 7) **NKJ, NKJS NA49, NA69**

Shaft Dia.	d	D	B	F_w	$r_{s\,min}$	s[1]	Bearing Designation	Load Ratings Dynamic C	Load Ratings Static C_0	Speed Rating Oil	Speed Rating Grease	C_g	Approx. Wt.
mm in.	**mm** in.	**mm** in.	**mm** in.	**mm** in.	**mm** in.	**mm** in.		**kN** lbf.		min^{-1}			**kg** lbs.
17 0.6693	**17** 0.6693	**29** 1.1417	**20** 0.787	**21** 0.8268	**0.3** 0.012	**1.5** 0.059	NKJ17/20	**18.1** 4070	**23.9** 5370	21000	14000	0.0317	**0.059** 0.130
	17 0.6693	**30** 1.1811	**13** 0.512	**22** 0.8661	**0.3** 0.012	**1.0** 0.039	NA4903	**12.2** 2740	**16.4** 3690	20000	13000	0.0286	**0.040** 0.088
	17 0.6693	**30** 1.1811	**23** 0.906	**22** 0.8661	**0.6** 0.024	**1.0** 0.039	NA6903	**19.8** 4450	**30.6** 6880	20000	13000	0.0334	**0.084** 0.185
	17 0.6693	**37** 1.4567	**20** 0.787	**24** 0.9449	**0.6** 0.024	**1.0** 0.039	NKJS17	**29.1** 6540	**32.8** 7370	20000	13000	0.0325	**0.108** 0.238
20 0.7874	**20** 0.7874	**32** 1.2598	**16** 0.630	**24** 0.9449	**0.3** 0.012	**1.5** 0.059	NKJ20/16	**16.2** 3640	**24.3** 5460	18000	12000	0.0328	**0.053** 0.117
	20 0.7874	**32** 1.2598	**20** 0.787	**24** 0.9449	**0.3** 0.012	**1.5** 0.059	NKJ20/20	**19.3** 4340	**30.3** 6810	18000	12000	0.0346	**0.067** 0.148
	20 0.7874	**37** 1.4567	**17** 0.669	**25** 0.9843	**0.3** 0.012	**1.5** 0.059	NA4904	**21.3** 4790	**25.5** 5730	18000	12000	0.0318	**0.084** 0.185
	20 0.7874	**37** 1.4567	**30** 1.181	**25** 0.9843	**0.3** 0.012	**1.5** 0.059	NA6904	**36.6** 8230	**51.0** 11500	18000	12000	0.0378	**0.133** 0.293
	20 0.7874	**42** 1.6535	**20** 0.787	**28** 1.1024	**0.6** 0.024	**1.0** 0.039	NKJS20	**30.3** 6810	**38.4** 8630	16000	11000	0.0364	**0.130** 0.287
22 0.8661	**22** 0.8661	**34** 1.3386	**16** 0.630	**26** 1.0236	**0.3** 0.012	**1.5** 0.059	NKJ22/16	**16.6** 3730	**25.7** 5780	17000	11000	0.0344	**0.058** 0.128
	22 0.8661	**34** 1.3386	**20** 0.787	**26** 1.0236	**0.3** 0.012	**2.0** 0.079	NKJ22/20	**19.7** 4430	**32.0** 7190	17000	11000	0.0363	**0.071** 0.157
	22 0.8661	**39** 1.5354	**17** 0.669	**28** 1.1024	**0.3** 0.012	**1.5** 0.059	NA49/22	**23.3** 5240	**29.6** 6650	16000	10000	0.0346	**0.089** 0.196
	22 0.8661	**39** 1.5354	**30** 1.181	**28** 1.1024	**0.3** 0.012	**1.0** 0.039	NA69/22	**30.6** 6880	**50.7** 11400	16000	10000	0.0487	**0.163** 0.359
25 0.9843	**25** 0.9843	**38** 1.4961	**20** 0.787	**29** 1.1417	**0.3** 0.012	**2.0** 0.079	NKJ25/20	**23.4** 5260	**36.4** 8180	15000	9800	0.0383	**0.086** 0.190
	25 0.9843	**38** 1.4961	**30** 1.181	**29** 1.1417	**0.3** 0.012	**2.0** 0.079	NKJ25/30	**29.8** 6700	**56.4** 12700	15000	9800	0.0438	**0.130** 0.287
	25 0.9843	**42** 1.6535	**17** 0.669	**30** 1.1811	**0.3** 0.012	**1.5** 0.059	NA4905	**24.3** 5460	**31.7** 7130	15000	9700	0.0362	**0.099** 0.218
	25 0.9843	**42** 1.6535	**30** 1.181	**30** 1.1811	**0.3** 0.012	**1.5** 0.059	NA6905	**39.7** 8920	**59.6** 13400	15000	9700	0.0424	**0.178** 0.392
	25 0.9843	**47** 1.8504	**22** 0.866	**32** 1.2598	**0.6** 0.024	**1.5** 0.059	NKJS25	**36.0** 8090	**36.2** 8140	14000	9200	0.0398	**0.174** 0.384
28 1.1024	**28** 1.1024	**42** 1.6535	**20** 0.787	**32** 1.2598	**0.3** 0.012	**2.0** 0.079	NKJ28/20	**24.8** 5580	**40.4** 9080	14000	8800	0.0411	**0.104** 0.229
	28 1.1024	**42** 1.6535	**30** 1.181	**32** 1.2598	**0.3** 0.012	**2.0** 0.079	NKJ28/30	**35.6** 8000	**64.3** 14500	14000	8800	0.0461	**0.156** 0.344

[1] Max. axial displacement.

Continued on next page.

Shaft Dia.	d	D	B	F_w	$r_{s\,min}$	s[1]	Bearing Designation	Load Ratings Dynamic C	Load Ratings Static C_0	Speed Rating Oil	Speed Rating Grease	C_g	Approx. Wt.
mm in.	**mm** in.	**mm** in.	**mm** in.	**mm** in.	**mm** in.	**mm** in.		**kN** lbf.		min^{-1}			**kg** lbs.
28 1.1024	**28** 1.1024	**45** 1.7717	**17** 0.669	**32** 1.2598	**0.3** 0.012	**1.5** 0.059	NA49/28	**25.1** 5640	**33.8** 7600	14000	9000	0.0378	**0.108** 0.238
	28 1.1024	**45** 1.7717	**30** 1.181	**32** 1.2598	**0.3** 0.012	**1.5** 0.059	NA69/28	**37.1** 8340	**55.4** 12500	14000	9000	0.0434	**0.190** 0.419
30 1.1811	**30** 1.1811	**45** 1.7717	**20** 0.787	**35** 1.3780	**0.3** 0.012	**1.5** 0.059	NKJ30/20	**26.1** 5870	**44.4** 9980	12000	8000	0.0437	**0.120** 0.265
	30 1.1811	**45** 1.7717	**30** 1.181	**35** 1.3780	**0.3** 0.012	**1.5** 0.059	NKJ30/30	**37.4** 8410	**70.6** 15900	12000	8000	0.0491	**0.179** 0.395
	30 1.1811	**47** 1.8504	**17** 0.669	**35** 1.3780	**0.3** 0.012	**1.5** 0.059	NA4906	**25.9** 5820	**36.0** 8090	13000	8200	0.0399	**0.114** 0.251
	30 1.1811	**47** 1.8504	**30** 1.181	**35** 1.3780	**0.3** 0.012	**1.0** 0.039	NA6906	**42.6** 9580	**68.2** 15300	13000	8200	0.0467	**0.205** 0.452
	30 1.1811	**52** 2.0472	**22** 0.866	**37** 1.4567	**0.6** 0.024	**1.5** 0.059	NKJS30	**39.0** 8770	**53.4** 12000	12000	7900	0.0438	**0.198** 0.437
32 1.2598	**32** 1.2598	**47** 1.8504	**20** 0.787	**37** 1.4567	**0.3** 0.012	**2.0** 0.079	NKJ32/20	**26.6** 5980	**46.4** 10400	12000	7600	0.0453	**0.127** 0.280
	32 1.2598	**47** 1.8504	**30** 1.181	**37** 1.4567	**0.3** 0.012	**1.5** 0.059	NKJ32/30	**38.2** 8590	**73.9** 16600	12000	7600	0.0508	**0.192** 0.423
	32 1.2598	**52** 2.0472	**20** 0.787	**40** 1.5748	**0.6** 0.024	**1.5** 0.059	NA49/32	**32.0** 7190	**49.3** 11100	11000	7100	0.0457	**0.169** 0.373
	32 1.2598	**52** 2.0472	**36** 1.417	**40** 1.5748	**0.6** 0.024	**1.0** 0.039	NA69/32	**48.6** 10900	**84.5** 19000	11000	7100	0.0620	**0.313** 0.690
35 1.3780	**35** 1.3780	**50** 1.9685	**20** 0.787	**40** 1.5748	**0.3** 0.012	**2.0** 0.079	NKJ35/20	**27.8** 6250	**50.4** 11300	11000	7000	0.0479	**0.135** 0.298
	35 1.3780	**50** 1.9685	**30** 1.181	**40** 1.5748	**0.3** 0.012	**1.5** 0.059	NKJ35/30	**40.0** 8990	**80.2** 18000	11000	7000	0.0537	**0.208** 0.459
	35 1.3780	**55** 2.1654	**20** 0.787	**42** 1.6535	**0.6** 0.024	**1.5** 0.059	NA4907	**32.8** 7370	**51.7** 11600	10000	6700	0.0472	**0.179** 0.395
	35 1.3780	**55** 2.1654	**36** 1.417	**42** 1.6535	**0.6** 0.024	**1.0** 0.039	NA6907	**49.9** 11200	**88.7** 19900	10000	6700	0.0540	**0.340** 0.750
	35 1.3780	**58** 2.2835	**22** 0.866	**43** 1.6929	**0.6** 0.024	**1.0** 0.039	NKJS35	**41.6** 9350	**60.7** 13600	10000	6700	0.0481	**0.235** 0.518
38 1.4961	**38** 1.4961	**53** 2.0866	**20** 0.787	**43** 1.6929	**0.3** 0.012	**2.0** 0.079	NKJ38/20	**29.0** 6520	**54.4** 12200	9900	6400	0.0504	**0.146** 0.322
	38 1.4961	**53** 2.0866	**30** 1.181	**43** 1.6929	**0.3** 0.012	**1.5** 0.059	NKJ38/30	**41.6** 9350	**86.6** 19500	9900	6400	0.0565	**0.196** 0.432
40 1.5748	**40** 1.5748	**55** 2.1654	**20** 0.787	**45** 1.7717	**0.3** 0.012	**2.0** 0.079	NKJ40/20	**29.5** 6630	**56.4** 12700	9400	6100	0.0519	**0.152** 0.335
	40 1.5748	**55** 2.1654	**30** 1.181	**45** 1.7717	**0.3** 0.012	**1.5** 0.059	NKJ40/30	**42.3** 9510	**89.8** 20200	9400	6100	0.0582	**0.229** 0.505
	40 1.5748	**62** 2.4409	**22** 0.866	**48** 1.8898	**0.6** 0.024	**1.5** 0.059	NA4908	**44.2** 9940	**67.8** 15200	9100	5900	0.0519	**0.248** 0.547
	40 1.5748	**62** 2.4409	**40** 1.575	**48** 1.8898	**0.6** 0.024	**1.5** 0.059	NA6908	**70.8** 15900	**124** 27900	9100	5900	0.0717	**0.473** 1.043
	40 1.5748	**65** 2.5591	**22** 0.866	**50** 1.9685	**1.0** 0.039	**1.0** 0.039	NKJS40	**45.5** 10200	**71.3** 16000	8700	5700	0.0535	**0.292** 0.644
42 1.6535	**42** 1.6535	**57** 2.2441	**20** 0.787	**47** 1.8504	**0.3** 0.012	**2.0** 0.079	NKJ42/20	**30.0** 6740	**58.5** 13200	9000	5900	0.0534	**0.159** 0.351
	42 1.6535	**57** 2.2441	**30** 1.181	**47** 1.8504	**0.3** 0.012	**1.5** 0.059	NKJ42/30	**39.9** 8970	**84.1** 18900	9000	5900	0.0584	**0.241** 0.531
45 1.7717	**45** 1.7717	**62** 2.4409	**25** 0.984	**50** 1.9685	**0.6** 0.024	**3.0** 0.118	NKJ45/25	**40.7** 9150	**79.3** 17800	8500	5500	0.0580	**0.223** 0.492

[1] Max. axial displacement.

Continued on next page.

NEEDLE ROLLER BEARINGS WITH INNER RINGS – *continued*

METRIC SERIES

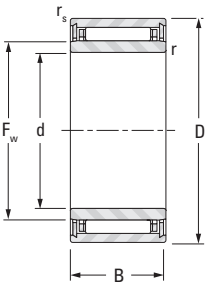

NKJ
(d ≤ 7)

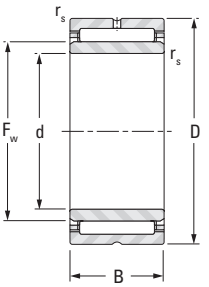

NKJ, NKJS
NA49, NA69

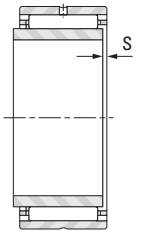

Shaft Dia.	d	D	B	F_w	$r_{s\,min}$	s[1]	Bearing Designation	Load Ratings Dynamic C	Load Ratings Static C_0	Speed Rating Oil	Speed Rating Grease	C_g	Approx. Wt.
mm in.	mm in.	mm in.	mm in.	mm in.	mm in.	mm in.		kN lbf.		min^{-1}			kg lbs.
45 1.7717	**45** 1.7717	**62** 2.4409	**35** 1.378	**50** 1.9685	**0.6** 0.024	**3.0** 0.118	NKJ45/35	**55.0** 12400	**117** 26300	8500	5500	0.0636	**0.345** 0.761
	45 1.7717	**68** 2.6772	**22** 0.866	**52** 2.0472	**0.6** 0.024	**2.0** 0.079	NA4909	**46.8** 10500	**74.8** 16800	8400	5400	0.0550	**0.291** 0.642
	45 1.7717	**68** 2.6772	**40** 1.575	**52** 2.0472	**0.6** 0.024	**1.5** 0.059	NA6909	**74.7** 16800	**137** 30800	8400	5400	0.0759	**0.55** 1.232
	45 1.7717	**72** 2.8346	**22** 0.866	**55** 2.1654	**1.0** 0.039	**1.0** 0.039	NKJS45	**47.9** 10800	**78.4** 17600	7900	5100	0.0571	**0.360** 0.794
50 1.9685	**50** 1.9685	**68** 2.6772	**25** 0.984	**55** 2.1654	**0.6** 0.024	**3.0** 0.118	NKJ50/25	**46.1** 10400	**87.3** 19600	7800	5000	0.0605	**0.288** 0.635
	50 1.9685	**68** 2.6772	**35** 1.378	**55** 2.1654	**0.6** 0.024	**3.0** 0.118	NKJ50/35	**62.3** 14000	**129** 29000	7800	5000	0.0667	**0.406** 0.895
	50 1.9685	**72** 2.8346	**22** 0.866	**58** 2.2835	**0.6** 0.024	**2.0** 0.079	NA4910	**48.9** 11000	**82.0** 18400	7400	4800	0.0591	**0.296** 0.653
	50 1.9685	**72** 2.8346	**40** 1.575	**58** 2.2835	**0.6** 0.024	**1.5** 0.059	NA6910	**75.7** 17000	**144** 32400	7400	4800	0.0806	**0.577** 1.272
	50 1.9685	**80** 3.1496	**28** 1.102	**60** 2.3622	**1.1** 0.043	**1.5** 0.059	NKJS50	**66.9** 15000	**103** 23200	7300	4800	0.0612	**0.523** 1.153
55 2.1654	**55** 2.1654	**72** 2.8346	**25** 0.984	**60** 2.3622	**0.6** 0.024	**3.0** 0.118	NKJ55/25	**44.3** 9960	**94.0** 21100	7000	4600	0.0654	**0.290** 0.639
	55 2.1654	**72** 2.8346	**35** 1.378	**60** 2.3622	**0.6** 0.024	**3.0** 0.118	NKJ55/35	**59.9** 13500	**139** 31200	7000	4600	0.0721	**0.410** 0.904
	55 2.1654	**80** 3.1496	**25** 0.984	**63** 2.4803	**1.0** 0.039	**2.5** 0.098	NA4911	**62.0** 13900	**107** 24100	6900	4500	0.0645	**0.426** 0.939
	55 2.1654	**80** 3.1496	**45** 1.772	**63** 2.4803	**1.0** 0.039	**2.5** 0.098	NA6911	**94.2** 21200	**172** 38700	6900	4500	0.0852	**0.800** 1.764
	55 2.1654	**85** 3.3465	**28** 1.102	**65** 2.5591	**1.1** 0.043	**1.5** 0.059	NKJS55	**71.0** 16000	**114** 25600	6700	4400	0.0650	**0.569** 1.254
60 2.3622	**60** 2.3622	**82** 3.2283	**25** 0.984	**68** 2.6772	**0.6** 0.024	**2.0** 0.079	NKJ60/25	**49.0** 11000	**101** 22700	6200	4000	0.0691	**0.440** 0.970
	60 2.3622	**82** 3.2283	**35** 1.378	**68** 2.6772	**0.6** 0.024	**2.5** 0.098	NKJ60/35	**66.2** 14900	**149** 33500	6200	4000	0.0760	**0.520** 1.146
	60 2.3622	**85** 3.3465	**25** 0.984	**68** 2.6772	**1.0** 0.039	**1.5** 0.059	NA4912	**64.8** 14600	**116** 26100	6300	4100	0.0681	**0.457** 1.008
	60 2.3622	**85** 3.3465	**45** 1.772	**68** 2.6772	**1.0** 0.039	**2.0** 0.079	NA6912	**99.3** 22300	**189** 42500	6400	4100	0.0901	**0.829** 1.828
	60 2.3622	**90** 3.5433	**28** 1.102	**70** 2.7559	**1.1** 0.043	**1.5** 0.059	NKJS60	**72.6** 16300	**120** 27000	6200	4000	0.0679	**0.607** 1.338
65 2.5591	**65** 2.5591	**90** 3.5433	**25** 0.984	**72** 2.8346	**1.0** 0.039	**1.5** 0.059	NA4913	**66.0** 14800	**121** 27200	5900	3900	0.0705	**0.489** 1.078

[1] Max. axial displacement.

Continued on next page.

Shaft Dia.	d	D	B	F_w	$r_{s\,min}$	s[1]	Bearing Designation	Load Ratings Dynamic C	Load Ratings Static C_0	Speed Rating Oil	Speed Rating Grease	C_g	Approx. Wt.
mm in.	**mm** in.	**mm** in.	**mm** in.	**mm** in.	**mm** in.	**mm** in.		**kN** lbf.		min^{-1}			**kg** lbs.
65 2.5591	**65** 2.5591	**90** 3.5433	**25** 0.984	**73** 2.8740	**0.6** 0.024	**2.0** 0.079	NKJ65/25	**61.5** 13800	**119** 26800	5800	3800	0.0717	**0.500** 1.102
	65 2.5591	**90** 3.5433	**35** 1.378	**73** 2.8740	**0.6** 0.024	**2.0** 0.079	NKJ65/35	**82.5** 18500	**173** 38900	5800	3800	0.0787	**0.690** 1.521
	65 2.5591	**90** 3.5433	**45** 1.772	**72** 2.8346	**1.0** 0.039	**2.0** 0.079	NA6913	**107** 24100	**213** 47900	6000	3900	0.0952	**0.945** 2.083
	65 2.5591	**95** 3.7402	**28** 1.102	**75** 2.9528	**1.1** 0.043	**1.5** 0.059	NKJS65	**76.5** 17200	**132** 29700	5800	3700	0.0716	**0.655** 1.444
70 2.7559	**70** 2.7559	**95** 3.7402	**25** 0.984	**80** 3.1496	**1.0** 0.039	**2.0** 0.079	NKJ70/25	**65.0** 14600	**131** 29400	5300	3400	0.0766	**0.561** 1.237
	70 2.7559	**95** 3.7402	**35** 1.378	**80** 3.1496	**1.0** 0.039	**3.5** 0.138	NKJ70/35	**79.7** 17900	**184** 41400	5300	3400	0.0846	**0.779** 1.717
	70 2.7559	**100** 3.9370	**28** 1.102	**80** 3.1496	**1.1** 0.043	**1.5** 0.059	NKJS70	**80.1** 18000	**143** 32100	5400	3500	0.0752	**0.772** 1.702
	70 2.7559	**100** 3.9370	**30** 1.181	**80** 3.1496	**1.0** 0.039	**2.5** 0.098	NA4914	**86.3** 19400	**157** 35300	5400	3500	0.0770	**0.772** 1.702
	70 2.7559	**100** 3.9370	**54** 2.126	**80** 3.1496	**1.0** 0.039	**2.0** 0.079	NA6914	**137** 30800	**286** 64300	5400	3500	0.1061	**1.450** 3.197
75 2.9528	**75** 2.9528	**105** 4.1339	**25** 0.984	**85** 3.3465	**1.0** 0.039	**2.0** 0.079	NKJ75/25	**76.4** 17200	**137** 30800	5000	3300	0.0764	**0.640** 1.411
	75 2.9528	**105** 4.1339	**30** 1.181	**85** 3.3465	**1.0** 0.039	**2.5** 0.098	NA4915	**92.4** 20800	**175** 39300	5000	3300	0.0812	**0.817** 1.801
	75 2.9528	**105** 4.1339	**32** 1.260	**90** 3.5433	**1.1** 0.043	**1.5** 0.059	NKJS75	**91.5** 20600	**176** 39600	4700	3100	0.0834	**1.060** 2.337
	75 2.9528	**105** 4.1339	**35** 1.378	**85** 3.3465	**1.0** 0.039	**2.0** 0.079	NKJ75/35	**108** 24300	**214** 48100	5000	3300	0.0854	**1.050** 2.315
	75 2.9528	**105** 4.1339	**54** 2.126	**85** 3.3465	**1.0** 0.039	**2.0** 0.079	NA6915	**143** 32100	**308** 69200	5000	3300	0.1110	**1.554** 3.426
80 3.1496	**80** 3.1496	**110** 4.3307	**25** 0.984	**90** 3.5433	**1.0** 0.039	**2.0** 0.079	NKJ80/25	**79.5** 17900	**147** 33000	4700	3100	0.0798	**0.790** 1.742
	80 3.1496	**110** 4.3307	**30** 1.181	**90** 3.5433	**1.0** 0.039	**2.5** 0.098	NA4916	**91.5** 20600	**176** 39600	4700	3100	0.0834	**0.862** 1.900
	80 3.1496	**110** 4.3307	**32** 1.260	**95** 3.7402	**1.1** 0.043	**2.0** 0.079	NKJS80	**95.1** 21400	**188** 42300	4500	2900	0.0869	**1.140** 2.513
	80 3.1496	**110** 4.3307	**35** 1.378	**90** 3.5433	**1.0** 0.039	**2.0** 0.079	NKJ80/35	**113** 25400	**230** 51700	4700	3100	0.0891	**0.980** 2.161
	80 3.1496	**110** 4.3307	**54** 2.126	**90** 3.5433	**1.0** 0.039	**2.0** 0.079	NA6916	**126** 28300	**320** 71900	4700	3000	0.1197	**1.615** 3.560
85 3.3465	**85** 3.3465	**115** 4.5276	**26** 1.024	**95** 3.7402	**1.0** 0.039	**3.0** 0.118	NKJ85/26	**49.3** 11100	**114** 25600	4400	2800	0.0839	**0.862** 1.900
	85 3.3465	**115** 4.5276	**36** 1.417	**95** 3.7402	**1.0** 0.039	**2.0** 0.079	NKJ85/36	**114** 25600	**238** 53500	4400	2800	0.0921	**1.040** 2.293
	85 3.3465	**120** 4.7244	**30** 1.181	**100** 3.9370	**1.1** 0.043	**2.5** 0.098	NA4917	**110** 24700	**230** 51700	4200	2800	0.0935	**1.310** 2.888
	85 3.3465	**120** 4.7244	**63** 2.480	**100** 3.9370	**1.1** 0.043	**2.0** 0.079	NA6917	**150** 33700	**416** 93500	4200	2700	0.1340	**2.427** 5.351
90 3.5433	**90** 3.5433	**120** 4.7244	**26** 1.024	**100** 3.9370	**1.0** 0.039	**3.0** 0.118	NKJ90/26	**83.6** 18800	**163** 36600	4200	2800	0.0857	**0.780** 1.720
	90 3.5433	**120** 4.7244	**36** 1.417	**100** 3.9370	**1.0** 0.039	**2.5** 0.098	NKJ90/36	**118** 26500	**254** 57100	4200	2800	0.0958	**1.080** 2.381
	90 3.5433	**125** 4.9213	**35** 1.378	**105** 4.1339	**1.1** 0.043	**2.5** 0.098	NA4918	**114** 25600	**245** 55100	4000	2600	0.0970	**1.370** 3.020

[1] Max. axial displacement.

Continued on next page.

NEEDLE ROLLER BEARINGS WITH INNER RINGS – *continued*

METRIC SERIES

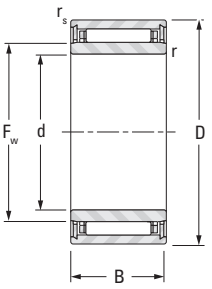

NKJ
(d ≤ 7)

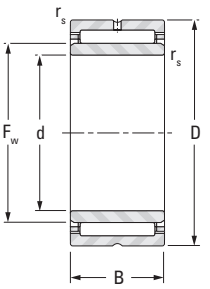

NKJ, NKJS
NA49, NA69

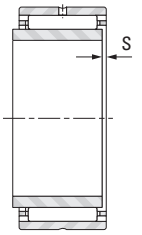

Shaft Dia.	d	D	B	F_w	$r_{s\,min}$	s[1]	Bearing Designation	Load Ratings Dynamic C	Load Ratings Static C_0	Speed Rating Oil	Speed Rating Grease	C_g	Approx. Wt.
mm in.	mm in.	mm in.	mm in.	mm in.	mm in.	mm in.		kN lbf.		min^{-1}			kg lbs.
90 3.5433	**90** 3.5433	**125** 4.9213	**63** 2.480	**105** 4.1339	**1.1** 0.043	**2.0** 0.079	NA6918	**175** 39300	**427** 96000	4000	2600	0.1323	**2.640** 5.820
95 3.7402	**95** 3.7402	**125** 4.9213	**26** 1.024	**105** 4.1339	**1.0** 0.039	**2.5** 0.098	NKJ95/26	**52.2** 11700	**127** 28600	3900	2600	0.0892	**0.935** 2.061
	95 3.7402	**125** 4.9213	**36** 1.417	**105** 4.1339	**1.0** 0.039	**3.5** 0.138	NKJ95/36	**72.8** 16400	**195** 43800	3900	2600	0.0992	**1.300** 2.866
	95 3.7402	**130** 5.1181	**35** 1.378	**110** 4.3307	**1.1** 0.043	**2.5** 0.098	NA4919	**115** 25900	**253** 56900	3800	2500	0.0999	**1.430** 3.153
	95 3.7402	**130** 5.1181	**63** 2.480	**110** 4.3307	**1.1** 0.043	**2.0** 0.079	NA6919	**158** 35500	**458** 103000	3800	2500	0.1434	**2.670** 5.88
100 3.9370	**100** 3.9370	**130** 5.1181	**30** 1.181	**110** 4.3307	**1.1** 0.043	**2.0** 0.079	NKJ100/30	**103** 23200	**220** 49500	3800	2500	0.0965	**0.984** 2.169
	100 3.9370	**130** 5.1181	**40** 1.575	**110** 4.3307	**1.1** 0.043	**2.0** 0.079	NKJ100/40	**132** 29700	**301** 67700	3800	2500	0.1043	**1.410** 3.109
	100 3.9370	**135** 5.3150	**32** 1.260	**115** 4.5276	**1.1** 0.043	**2.0** 0.079	NKJS100	**104** 23400	**226** 50800	3700	2400	0.0991	**2.010** 4.431
	100 3.9370	**140** 5.5118	**40** 1.575	**115** 4.5276	**1.1** 0.043	**3.5** 0.138	NA4920	**139** 31200	**296** 66500	3700	2400	0.1037	**2.010** 4.431
110 4.3307	**110** 4.3307	**140** 5.5118	**30** 1.181	**120** 4.7244	**1.0** 0.039	**0.5** 0.020	NA4822	**90.3** 20300	**230** 51700	3500	2300	0.1059	**1.210** 2.668
	110 4.3307	**150** 5.9055	**40** 1.575	**125** 4.9213	**1.1** 0.043	**3.5** 0.138	NA4922	**147** 33000	**325** 73100	3400	2200	0.1101	**2.190** 4.828
120 4.7244	**120** 4.7244	**150** 5.9055	**30** 1.181	**130** 5.1181	**1.0** 0.039	**0.5** 0.020	NA4824	**94.2** 21200	**249** 56000	3200	2100	0.1121	**1.310** 2.888
	120 4.7244	**165** 6.4961	**45** 1.772	**135** 5.3150	**1.1** 0.043	**3.5** 0.138	NA4924	**177** 39800	**407** 91500	3100	2000	0.1193	**3.040** 6.702
130 5.1181	**130** 5.1181	**165** 6.4961	**35** 1.378	**145** 5.7087	**1.1** 0.043	**1.0** 0.039	NA4826	**112** 25200	**323** 72600	2900	1900	0.1258	**1.990** 4.387
	130 5.1181	**180** 7.0866	**45** 1.772	**150** 5.9055	**1.5** 0.059	**3.0** 0.118	NA4926	**201** 45200	**495** 111000	2800	1800	0.1314	**4.140** 9.127
140 5.5118	**140** 5.5118	**175** 6.8898	**35** 1.378	**155** 6.1024	**1.1** 0.043	**1.0** 0.039	NA4828	**116** 26100	**346** 77800	2700	1700	0.1320	**2.120** 4.674
	140 5.5118	**190** 7.4803	**50** 1.969	**160** 6.2992	**1.5** 0.059	**3.0** 0.118	NA4928	**214** 48100	**549** 123000	2600	1700	0.1389	**4.410** 9.72
150 5.9055	**150** 5.9055	**190** 7.4803	**40** 1.575	**165** 6.4961	**1.1** 0.043	**2.0** 0.079	NA4830	**142** 31900	**402** 90400	2500	1600	0.1367	**2.700** 5.952
160 6.2992	**160** 6.2992	**200** 7.8740	**40** 1.575	**175** 6.8898	**1.1** 0.043	**2.0** 0.079	NA4832	**146** 32800	**425** 95500	2400	1500	0.1425	**3.150** 6.944

[1] Max. axial displacement.

NEEDLE ROLLER BEARINGS WITHOUT INNER RINGS

METRIC SERIES

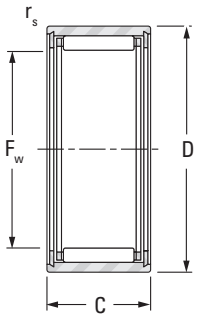

NK
($F_w \leq 10$)

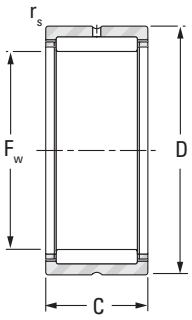

NK, NKS
RNA49, RNA69

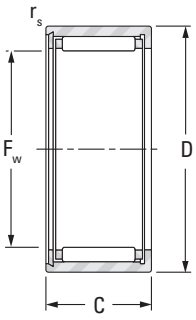

NKTN

Shaft Dia.	F_w	D	C	$r_{s\,min}$	Bearing Designation	Load Ratings Dynamic C	Load Ratings Static C_0	Speed Rating Oil	Speed Rating Grease	C_g	Approx. Wt.
mm in.	mm in.	mm in.	mm in.	mm in.		kN lbf.		min^{-1}			kg lbs.
5 0.1969	**5** 0.1969	**10** 0.3937	**10** 0.394	**0.2** 0.006	NK5/10TN	**2.18** 490	**1.71** 384	47000	31000	0.0095	**0.004** 0.009
	5 0.1969	**10** 0.3937	**12** 0.472	**0.2** 0.006	NK5/12TN	**3.04** 683	**2.63** 591	47000	31000	0.0106	**0.004** 0.009
6 0.2362	**6** 0.2362	**12** 0.4724	**10** 0.394	**0.2** 0.006	NK6/10	**3.19** 717	**2.90** 652	44000	29000	0.0116	**0.005** 0.011
	6 0.2362	**12** 0.4724	**12** 0.472	**0.2** 0.006	NK6/12TN	**3.07** 690	**2.74** 616	44000	29000	0.0115	**0.006** 0.013
7 0.2756	**7** 0.2756	**14** 0.5512	**10** 0.394	**0.3** 0.012	NK7/10TN	**2.74** 616	**2.44** 549	42000	28000	0.0118	**0.007** 0.015
	7 0.2756	**14** 0.5512	**12** 0.472	**0.3** 0.012	NK7/12TN	**3.40** 764	**3.22** 724	42000	28000	0.0127	**0.009** 0.020
8 0.3150	**8** 0.3150	**15** 0.5906	**12** 0.472	**0.3** 0.012	NK8/12	**4.57** 1030	**4.89** 1 100	41000	26000	0.0148	**0.011** 0.024
	8 0.3150	**15** 0.5906	**12** 0.472	**0.3** 0.012	NK8/12ASR1	**4.57** 1030	**4.89** 1100	41000	26000	0.0148	**0.011** 0.024
	8 0.3150	**15** 0.5906	**16** 0.630	**0.3** 0.012	NK8/16	**5.22** 1170	**5.78** 1300	41000	26000	0.0154	**0.013** 0.029
9 0.3543	**9** 0.3543	**16** 0.6299	**12** 0.472	**0.3** 0.012	NK9/12	**4.27** 960	**4.60** 1030	40000	26000	0.0153	**0.012** 0.026
	9 0.3543	**16** 0.6299	**16** 0.630	**0.3** 0.012	NK9/16	**5.57** 1250	**6.47** 1450	40000	26000	0.0170	**0.015** 0.033
10 0.3937	**10** 0.3937	**17** 0.6693	**12** 0.472	**0.3** 0.012	NK10/12	**5.40** 1210	**6.43** 1450	39000	25000	0.0174	**0.013** 0.029
	10 0.3937	**17** 0.6693	**16** 0.630	**0.3** 0.012	NK10/16TN	**5.30** 1190	**6.27** 1410	39000	25000	0.0173	**0.015** 0.033
12 0.4724	**12** 0.4724	**19** 0.7480	**12** 0.472	**0.3** 0.012	NK12/12	**6.86** 1540	**7.60** 1710	30000	19000	0.0195	**0.013** 0.029
	12 0.4724	**19** 0.7480	**12** 0.472	**0.3** 0.012	NK12/16	**6.78** 1520	**9.03** 2030	37000	24000	0.0204	**0.018** 0.040
14 0.5512	**14** 0.5512	**22** 0.8661	**13** 0.512	**0.3** 0.012	RNA4900	**9.39** 2110	**10.3** 2320	24000	16000	0.0211	**0.018** 0.040
	14 0.5512	**22** 0.8661	**16** 0.630	**0.3** 0.012	NK14/16	**12.4** 2790	**14.8** 3330	24000	16000	0.0231	**0.023** 0.051
	14 0.5512	**22** 0.8661	**20** 0.787	**0.3** 0.012	NK14/20	**14.7** 3300	**18.4** 4140	24000	16000	0.0244	**0.028** 0.06
15 0.5906	**15** 0.5906	**23** 0.9055	**16** 0.630	**0.3** 0.012	NK15/16	**12.4** 2790	**15.0** 3370	24000	15000	0.0238	**0.024** 0.053
	15 0.5906	**23** 0.9055	**20** 0.787	**0.3** 0.012	NK15/20	**14.7** 3300	**18.6** 4180	24000	15000	0.0252	**0.031** 0.068
16 0.6299	**16** 0.6299	**24** 0.9449	**13** 0.512	**0.3** 0.012	RNA4901	**10.5** 2360	**12.3** 2770	28000	18000	0.0233	**0.020** 0.044
	16 0.6299	**24** 0.9449	**16** 0.630	**0.3** 0.012	NK16/16	**15.4** 3460	**20.2** 4540	28000	18000	0.0250	**0.025** 0.055

Continued on next page.

NEEDLE ROLLER BEARINGS WITHOUT INNER RINGS — *continued*

METRIC SERIES

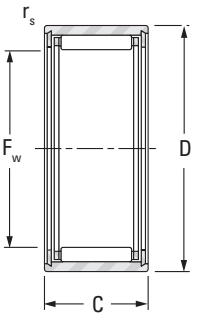

NK
($F_w \leq 10$)

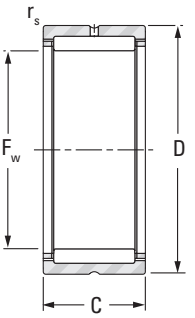

NK, NKS
RNA49, RNA69

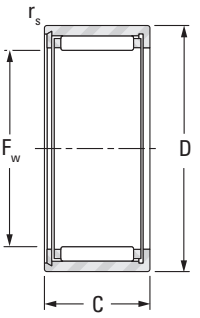

NKTN

Shaft Dia.	F_w	D	C	$r_{s\,min}$	Bearing Designation	Load Ratings Dynamic C	Load Ratings Static C_0	Speed Rating Oil	Speed Rating Grease	C_g	Approx. Wt.
mm in.	**mm** in.	**mm** in.	**mm** in.	**mm** in.		**kN** lbf.		min^{-1}			**kg** lbs.
16 0.6299	**16** 0.6299	**24** 0.9449	**20** 0.787	**0.3** 0.012	NK16/20	**16.1** 3620	**21.3** 4790	28000	18000	0.0264	**0.036** 0.079
	16 0.6299	**24** 0.9449	**22** 0.866	**0.3** 0.012	RNA6901	**16.1** 3620	**21.3** 4790	28000	18000	0.0267	**0.036** 0.079
17 0.6693	**17** 0.6693	**25** 0.9843	**16** 0.630	**0.3** 0.012	NK17/16	**13.6** 3060	**17.5** 3930	27000	17000	0.0261	**0.027** 0.060
	17 0.6693	**25** 0.9843	**20** 0.787	**0.3** 0.012	NK17/20	**15.4** 3460	**20.4** 4590	27000	17000	0.0271	**0.034** 0.075
18 0.7087	**18** 0.7087	**26** 1.0236	**16** 0.630	**0.3** 0.012	NK18/16	**13.6** 3060	**17.7** 3980	25000	16000	0.0268	**0.028** 0.062
	18 0.7087	**26** 1.0236	**20** 0.787	**0.3** 0.012	NK18/20	**16.1** 3620	**22.0** 4950	25000	16000	0.0283	**0.035** 0.077
19 0.7480	**19** 0.7480	**27** 1.0630	**16** 0.630	**0.3** 0.012	NK19/16	**14.1** 3170	**19.0** 4270	24000	15000	0.0279	**0.029** 0.064
	19 0.7480	**27** 1.0630	**20** 0.787	**0.3** 0.012	NK19/20	**18.8** 4230	**23.6** 5310	24000	15000	0.0295	**0.037** 0.082
	19 0.7480	**30** 1.1811	**16** 0.630	**0.3** 0.012	NKS18	**15.9** 3570	**16.2** 3640	26000	17000	0.0255	**0.045** 0.099
20 0.7874	**20** 0.7874	**28** 1.1024	**13** 0.512	**0.3** 0.012	RNA4902	**11.8** 2650	**15.3** 3440	22000	14000	0.0270	**0.023** 0.051
	20 0.7874	**28** 1.1024	**16** 0.630	**0.3** 0.012	NK20/16	**14.1** 3170	**19.1** 4290	22000	14000	0.0285	**0.030** 0.066
	20 0.7874	**28** 1.1024	**20** 0.787	**0.3** 0.012	NK20/20	**17.5** 3930	**25.3** 5690	22000	14000	0.0306	**0.038** 0.084
	20 0.7874	**28** 1.1024	**23** 0.906	**0.3** 0.012	RNA6902	**18.4** 4140	**26.9** 6050	22000	14000	0.0311	**0.042** 0.093
	20 0.7874	**32** 1.2598	**20** 0.787	**0.6** 0.024	NKS20	**24.4** 5490	**26.7** 6000	24000	15000	0.0290	**0.058** 0.128
21 0.8268	**21** 0.8268	**29** 1.1417	**16** 0.630	**0.3** 0.012	NK21/16	**15.3** 3440	**21.6** 4860	21000	14000	0.0301	**0.032** 0.071
	21 0.8268	**29** 1.1417	**20** 0.787	**0.3** 0.012	NK21/20	**18.1** 4070	**26.9** 6050	21000	14000	0.0317	**0.040** 0.088
22 0.8661	**22** 0.8661	**30** 1.1811	**13** 0.512	**0.3** 0.012	RNA4903	**12.2** 2740	**16.4** 3690	20000	13000	0.0286	**0.025** 0.055
	22 0.8661	**30** 1.1811	**16** 0.630	**0.3** 0.012	NK22/16	**15.2** 3420	**21.7** 4880	20000	13000	0.0307	**0.033** 0.073
	22 0.8661	**30** 1.1811	**20** 0.787	**0.3** 0.012	NK22/20	**18.0** 4050	**27.0** 6070	20000	13000	0.0324	**0.041** 0.090
	22 0.8661	**30** 1.1811	**23** 0.906	**0.3** 0.012	RNA6903	**19.8** 4450	**30.6** 6880	20000	13000	0.0334	**0.056** 0.123
	22 0.8661	**35** 1.3780	**20** 0.787	**0.6** 0.024	NKS22	**22.9** 5150	**27.1** 6090	21000	14000	0.0310	**0.069** 0.152
24 0.9449	**24** 0.9449	**32** 1.2598	**16** 0.630	**0.3** 0.012	NK24/16	**16.2** 3640	**24.3** 5460	18000	12000	0.0328	**0.035** 0.077

Continued on next page.

Shaft Dia.	F_w	D	C	$r_{s\,min}$	Bearing Designation	Load Ratings Dynamic C	Load Ratings Static C_0	Speed Rating Oil	Speed Rating Grease	C_g	Approx. Wt.
mm in.	**mm** in.	**mm** in.	**mm** in.	**mm** in.		**kN** lbf.		min^{-1}			**kg** lbs.
24 0.9449	**24** 0.9449	**32** 1.2598	**20** 0.787	**0.3** 0.012	NK24/20	**19.3** 4340	**30.3** 6810	18000	12000	0.0346	**0.045** 0.099
	24 0.9449	**37** 1.4567	**20** 0.787	**0.6** 0.024	NKS24	**29.1** 6540	**32.8** 7370	20000	13000	0.0325	**0.073** 0.161
25 0.9843	**25** 0.9843	**33** 1.2992	**16** 0.630	**0.3** 0.012	NK25/16	**16.1** 3620	**24.4** 5490	17000	11000	0.0334	**0.037** 0.082
	25 0.9843	**33** 1.2992	**20** 0.787	**0.3** 0.012	NK25/20	**19.1** 4290	**30.4** 6830	17000	11000	0.0353	**0.047** 0.104
	25 0.9843	**37** 1.4567	**17** 0.669	**0.3** 0.012	RNA4904	**21.3** 4790	**25.5** 5730	18000	12000	0.0318	**0.061** 0.134
	25 0.9843	**37** 1.4567	**30** 1.181	**0.3** 0.012	RNA6904	**36.6** 8230	**51.0** 11500	18000	12000	0.0378	**0.091** 0.201
	25 0.9843	**38** 1.4961	**20** 0.787	**0.6** 0.024	NKS25	**29.1** 6540	**33.0** 7420	19000	12000	0.0331	**0.076** 0.168
26 1.0236	**26** 1.0236	**34** 1.3386	**16** 0.630	**0.3** 0.012	NK26/16	**16.6** 3730	**25.7** 5780	17000	11000	0.0344	**0.039** 0.086
	26 1.0236	**34** 1.3386	**20** 0.787	**0.3** 0.012	NK26/20	**19.7** 4430	**32.0** 7190	17000	11000	0.0363	**0.048** 0.106
28 1.1024	**28** 1.1024	**37** 1.4567	**20** 0.787	**0.3** 0.012	NK28/20	**22.6** 5080	**34.4** 7730	16000	10000	0.0373	**0.057** 0.126
	28 1.1024	**37** 1.4567	**30** 1.181	**0.3** 0.012	NK28/30	**29.0** 6520	**53.8** 12100	16000	10000	0.0427	**0.088** 0.194
	28 1.1024	**39** 1.5354	**17** 0.669	**0.3** 0.012	RNA49/22	**23.3** 5240	**29.6** 6650	16000	10000	0.0346	**0.059** 0.130
	28 1.1024	**39** 1.5354	**30** 1.181	**0.3** 0.012	RNA69/22	**30.6** 6880	**50.7** 11400	16000	10000	0.0487	**0.107** 0.236
	28 1.1024	**42** 1.6535	**20** 0.787	**0.6** 0.024	NKS28	**30.3** 6810	**38.4** 8630	16000	11000	0.0364	**0.094** 0.207
29 1.1417	**29** 1.1417	**38** 1.4961	**20** 0.787	**0.3** 0.012	NK29/20	**23.4** 5260	**36.4** 8180	15000	9800	0.0383	**0.059** 0.130
	29 1.1417	**38** 1.4961	**30** 1.181	**0.3** 0.012	NK29/30	**29.8** 6700	**56.4** 12700	15000	9700	0.0438	**0.090** 0.198
30 1.1811	**30** 1.1811	**40** 1.5748	**20** 0.787	**0.3** 0.012	NK30/20	**24.2** 5440	**38.3** 8610	15000	9500	0.0394	**0.071** 0.157
	30 1.1811	**40** 1.5748	**30** 1.181	**0.3** 0.012	NK30/30	**34.7** 7800	**61.0** 13700	15000	9500	0.0442	**0.107** 0.236
	30 1.1811	**42** 1.6535	**17** 0.669	**0.3** 0.012	RNA4905	**24.3** 5460	**31.7** 7130	15000	9700	0.0362	**0.071** 0.157
	30 1.1811	**42** 1.6535	**30** 1.181	**0.3** 0.012	RNA6905	**39.7** 8920	**59.6** 13400	15000	9700	0.0424	**0.127** 0.280
	30 1.1811	**45** 1.7717	**20** 0.787	**0.6** 0.024	NKS30	**34.3** 7710	**42.8** 9620	15000	9900	0.0380	**0.114** 0.251
32 1.2598	**32** 1.2598	**42** 1.6535	**20** 0.787	**0.3** 0.012	NK32/20	**24.8** 5580	**40.4** 9080	14000	8800	0.0411	**0.074** 0.163
	32 1.2598	**42** 1.6535	**30** 1.181	**0.3** 0.012	NK32/30	**35.6** 8000	**64.3** 14500	14000	8800	0.0461	**0.112** 0.247
	32 1.2598	**45** 1.7717	**17** 0.669	**0.3** 0.012	RNA49/28	**25.1** 5640	**33.8** 7600	14000	9000	0.0378	**0.080** 0.176
	32 1.2598	**45** 1.7717	**30** 1.181	**0.3** 0.012	RNA69/28	**43.2** 9710	**62.5** 14100	14000	9100	0.0612	**0.140** 0.309
	32 1.2598	**47** 1.8504	**22** 0.866	**0.6** 0.024	NKS32	**36.0** 8090	**46.2** 10400	14000	9200	0.0398	**0.120** 0.265
35 1.3780	**35** 1.3780	**45** 1.7717	**20** 0.787	**0.3** 0.012	NK35/20	**26.1** 5870	**44.4** 9980	12000	8000	0.0437	**0.081** 0.179
	35 1.3780	**45** 1.7717	**30** 1.181	**0.3** 0.012	NK35/30	**37.4** 8410	**70.6** 15900	12000	8000	0.0491	**0.122** 0.269

Continued on next page.

NEEDLE ROLLER BEARINGS WITHOUT INNER RINGS — *continued*

METRIC SERIES

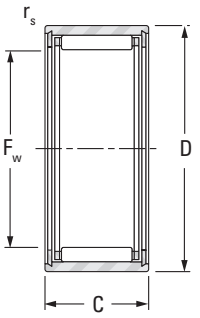

NK
($F_w \leq 10$)

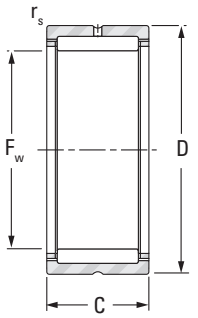

NK, NKS
RNA49, RNA69

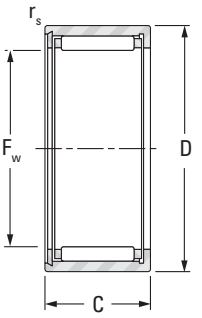

NKTN

Shaft Dia.	F_w	D	C	$r_{s\,min}$	Bearing Designation	Load Ratings Dynamic C	Load Ratings Static C_0	Speed Rating Oil	Speed Rating Grease	C_g	Approx. Wt.
mm in.	**mm** in.	**mm** in.	**mm** in.	**mm** in.		**kN** lbf.		min^{-1}			**kg** lbs.
35 1.3780	**35** 1.3780	**47** 1.8504	**18** 0.709	**0.3** 0.012	RNA4906	**25.9** 5820	**36.0** 8090	13000	8200	0.0399	**0.081** 0.179
	35 1.3780	**47** 1.8504	**30** 1.181	**0.3** 0.012	RNA6906	**42.6** 9580	**68.2** 15300	13000	8200	0.0467	**0.148** 0.326
	35 1.3780	**50** 1.9685	**22** 0.866	**0.6** 0.024	NKS35	**37.5** 8430	**49.9** 11200	13000	8400	0.0421	**0.130** 0.287
37 1.4567	**37** 1.4567	**47** 1.8504	**20** 0.787	**0.3** 0.012	NK37/20	**26.6** 5980	**46.4** 10400	12000	7600	0.0453	**0.084** 0.185
	37 1.4567	**47** 1.8504	**30** 1.181	**0.3** 0.012	NK37/30	**38.2** 8590	**73.9** 16600	12000	7600	0.0508	**0.128** 0.282
	37 1.4567	**52** 2.0472	**22** 0.866	**0.6** 0.024	NKS37	**39.0** 8770	**53.4** 12000	12000	7900	0.0438	**0.134** 0.295
38 1.4961	**38** 1.4961	**48** 1.8898	**20** 0.787	**0.3** 0.012	NK38/20	**21.7** 4880	**40.9** 9190	11000	7300	0.0456	**0.087** 0.192
	38 1.4961	**48** 1.8898	**30** 1.181	**0.3** 0.012	NK38/30	**31.9** 7170	**67.0** 15100	11000	7300	0.0516	**0.131** 0.289
40 1.5748	**40** 1.5748	**50** 1.9685	**20** 0.787	**0.3** 0.012	NK40/20	**27.8** 6250	**50.4** 11300	11000	7000	0.0479	**0.089** 0.196
	40 1.5748	**50** 1.9685	**30** 1.181	**0.3** 0.012	NK40/30	**40.0** 8990	**80.2** 18000	11000	7000	0.0537	**0.137** 0.302
	40 1.5748	**52** 2.0472	**20** 0.787	**0.6** 0.024	RNA49/32	**32.0** 7190	**49.3** 11100	11000	7100	0.0457	**0.100** 0.220
	40 1.5748	**52** 2.0472	**36** 1.417	**0.6** 0.024	RNA69/32	**48.6** 10900	**84.5** 19000	11000	7100	0.0620	**0.185** 0.408
	40 1.5748	**55** 2.1654	**22** 0.866	**0.6** 0.024	NKS40	**40.3** 9060	**57.0** 12800	11000	7200	0.0460	**0.140** 0.309
42 1.6535	**42** 1.6535	**52** 2.0472	**20** 0.787	**0.3** 0.012	NK42/20	**28.3** 6360	**52.4** 11800	10000	6600	0.0494	**0.085** 0.187
	42 1.6535	**52** 2.0472	**30** 1.181	**0.3** 0.012	NK42/30	**40.7** 9150	**83.5** 18800	10000	6600	0.0554	**0.141** 0.311
	42 1.6535	**55** 2.1654	**20** 0.787	**0.6** 0.024	RNA4907	**32.8** 7370	**51.7** 11600	10000	6700	0.0454	**0.114** 0.251
	42 1.6535	**55** 2.1654	**36** 1.417	**0.6** 0.024	RNA6907	**49.9** 11200	**88.7** 19900	10000	6700	0.0641	**0.218** 0.481
43 1.6929	**43** 1.6929	**53** 2.0866	**20** 0.787	**0.3** 0.012	NK43/20	**29.0** 6520	**54.4** 12200	9900	6400	0.0504	**0.096** 0.212
	43 1.6929	**53** 2.0866	**30** 1.181	**0.3** 0.012	NK43/30	**41.6** 9350	**86.6** 19500	9900	6400	0.0565	**0.134** 0.295
	43 1.6929	**58** 2.2835	**22** 0.866	**0.6** 0.024	NKS43	**41.6** 9350	**60.7** 13600	10000	6700	0.0481	**0.150** 0.331
45 1.7717	**45** 1.7717	**55** 2.1654	**20** 0.787	**0.3** 0.012	NK45/20	**29.5** 6630	**56.4** 12700	9400	6100	0.0519	**0.100** 0.220
	45 1.7717	**55** 2.1654	**30** 1.181	**0.3** 0.012	NK45/30	**42.3** 9510	**89.8** 20200	9400	6100	0.0582	**0.151** 0.333

Continued on next page.

Shaft Dia.	F_w	D	C	$r_{s\,min}$	Bearing Designation	Load Ratings Dynamic C	Load Ratings Static C_0	Speed Rating Oil	Speed Rating Grease	C_g	Approx. Wt.
mm in.	**mm** in.	**mm** in.	**mm** in.	**mm** in.		**kN** lbf.		min^{-1}			**kg** lbs.
45 1.7717	**45** 1.7717	**60** 2.3622	**22** 0.866	**0.6** 0.024	NKS45	**43.0** 9670	**64.2** 14400	9800	6400	0.0498	**0.156** 0.344
47 1.8504	**47** 1.8504	**57** 2.2441	**20** 0.787	**0.3** 0.012	NK47/20	**30.0** 6740	**58.5** 13200	9000	5900	0.0534	**0.104** 0.229
	47 1.8504	**57** 2.2441	**30** 1.181	**0.3** 0.012	NK47/30	**43.0** 9670	**93.1** 20900	9000	5900	0.0599	**0.158** 0.348
48 1.8898	**48** 1.8898	**62** 2.4409	**22** 0.866	**0.6** 0.024	RNA4908	**44.2** 9940	**67.8** 15200	9100	5900	0.0519	**0.154** 0.340
	48 1.8898	**62** 2.4409	**40** 1.575	**0.6** 0.024	RNA6908	**70.8** 15900	**124** 27900	9100	5900	0.0717	**0.300** 0.661
50 1.9685	**50** 1.9685	**62** 2.4409	**25** 0.984	**0.3** 0.012	NK50/25	**40.7** 9150	**79.3** 17800	8500	5500	0.0578	**0.171** 0.377
	50 1.9685	**62** 2.4409	**35** 1.378	**0.6** 0.024	NK50/35	**55.0** 12400	**117** 26300	8500	5500	0.0636	**0.242** 0.534
	50 1.9685	**65** 2.5591	**22** 0.866	**1.0** 0.039	NKS50	**45.5** 10200	**71.3** 16000	8700	5700	0.0535	**0.170** 0.375
52 2.0472	**52** 2.0472	**68** 2.6772	**22** 0.866	**0.6** 0.024	RNA4909	**46.8** 10500	**74.8** 16800	8400	5400	0.0550	**0.201** 0.443
	52 2.0472	**68** 2.6772	**40** 1.575	**0.6** 0.024	RNA6909	**74.7** 16800	**137** 30800	8400	5400	0.0759	**0.392** 0.864
55 2.1654	**55** 2.1654	**68** 2.6772	**25** 0.984	**0.6** 0.024	NK55/25	**46.1** 10400	**87.3** 19600	7800	5000	0.0605	**0.207** 0.456
	55 2.1654	**68** 2.6772	**35** 1.378	**0.6** 0.024	NK55/35	**62.3** 14000	**129** 29000	7800	5000	0.0667	**0.293** 0.646
	55 2.1654	**72** 2.8346	**22** 0.866	**1.0** 0.039	NKS55	**47.9** 10800	**78.4** 17600	7900	5100	0.0571	**0.225** 0.496
58 2.2835	**58** 2.2835	**72** 2.8346	**22** 0.866	**0.6** 0.024	RNA4910	**48.9** 11000	**82.0** 18400	7400	4800	0.0591	**0.179** 0.395
	58 2.2835	**72** 2.8346	**40** 1.575	**0.6** 0.024	RNA6910	**75.7** 17000	**144** 32400	7400	4800	0.0806	**0.364** 0.802
60 2.3622	**60** 2.3622	**72** 2.8346	**25** 0.984	**0.6** 0.024	NK60/25	**44.3** 9960	**94.0** 21100	7000	4400	0.0654	**0.202** 0.445
	60 2.3622	**72** 2.8346	**35** 1.378	**0.6** 0.024	NK60/35	**59.9** 13500	**139** 31200	7000	4400	0.0721	**0.286** 0.631
	60 2.3622	**80** 3.1496	**28** 1.102	**1.1** 0.043	NKS60	**66.9** 15000	**103** 23200	7300	4800	0.0612	**0.337** 0.743
63 2.4803	**63** 2.4803	**80** 3.1496	**25** 0.984	**1.0** 0.039	RNA4911	**62.0** 13900	**107** 24100	6900	4500	0.0645	**0.285** 0.628
	63 2.4803	**80** 3.1496	**45** 1.772	**1.0** 0.039	RNA6911	**94.2** 21200	**172** 38700	6900	4500	0.0852	**0.540** 1.190
65 2.5591	**65** 2.5591	**78** 3.0709	**25** 0.984	**0.6** 0.024	NK65/25	**48.2** 10800	**97.7** 22000	6500	4200	0.0671	**0.257** 0.567
	65 2.5591	**78** 3.0709	**35** 1.378	**0.6** 0.024	NK65/35	**65.2** 14700	**144** 32400	6500	4200	0.0739	**0.298** 0.657
	65 2.5591	**85** 3.3465	**28** 1.102	**1.1** 0.043	NKS65	**71.0** 16000	**114** 25600	6700	4200	0.0650	**0.362** 0.798
68 2.6772	**68** 2.6772	**82** 3.2283	**25** 0.984	**0.6** 0.024	NK68/25	**49.0** 11000	**101** 22700	6200	4000	0.0691	**0.287** 0.633
	68 2.6772	**82** 3.2283	**35** 1.378	**0.6** 0.024	NK68/35	**66.2** 14900	**149** 33500	6200	4000	0.0760	**0.350** 0.772
	68 2.6772	**85** 3.3465	**25** 0.984	**1.0** 0.039	RNA4912	**64.8** 14600	**116** 26100	6300	4100	0.0681	**0.304** 0.670
	68 2.6772	**85** 3.3465	**45** 1.772	**1.0** 0.039	RNA6912	**99.3** 22300	**189** 42500	6300	4100	0.0901	**0.546** 1.204
70 2.7559	**70** 2.7559	**85** 3.3465	**25** 0.984	**0.6** 0.024	NK70/25	**43.6** 9800	**87.9** 19800	6000	3900	0.0705	**0.298** 0.657

Continued on next page.

NEEDLE ROLLER BEARINGS WITHOUT INNER RINGS – *continued*

METRIC SERIES

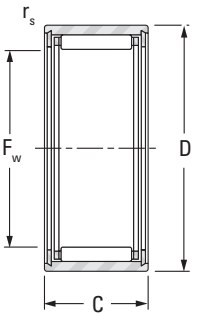

NK
($F_w \leq 10$)

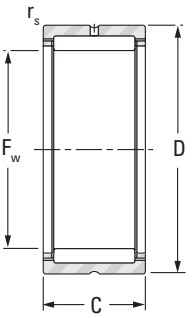

NK, NKS
RNA49, RNA69

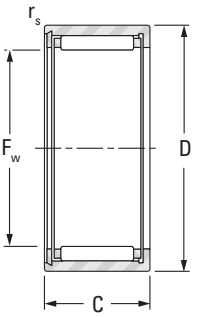

NKTN

Shaft Dia.	F_w	D	C	$r_{s\,min}$	Bearing Designation	Load Ratings Dynamic C	Load Ratings Static C_0	Speed Rating Oil	Speed Rating Grease	C_g	Approx. Wt.
mm in.	mm in.	mm in.	mm in.	mm in.		kN lbf.		min^{-1}			kg lbs.
70 2.7559	**70** 2.7559	**85** 3.3465	**35** 1.378	**0.6** 0.024	NK70/35	**62.2** 14000	**139** 31200	6000	3900	0.0757	**0.411** 0.906
	70 2.7559	**90** 3.5433	**28** 1.102	**1.1** 0.043	NKS70	**72.6** 16300	**120** 27000	6200	4000	0.0679	**0.383** 0.844
72 2.8346	**72** 2.8346	**90** 3.5433	**25** 0.984	**1.0** 0.039	RNA4913	**66.0** 14800	**121** 27200	5900	3900	0.0705	**0.346** 0.763
	72 2.8346	**90** 3.5433	**45** 1.772	**1.0** 0.039	RNA6913	**107** 24100	**213** 47900	5900	3900	0.0952	**0.679** 1.497
73 2.8740	**73** 2.8740	**90** 3.5433	**25** 0.984	**0.6** 0.024	NK73/25	**61.5** 13800	**119** 26800	5800	3800	0.0717	**0.320** 0.705
	73 2.8740	**90** 3.5433	**35** 1.378	**0.6** 0.024	NK73/35	**82.5** 18500	**173** 38900	5800	3800	0.0787	**0.450** 0.992
75 2.9528	**75** 2.9528	**92** 3.6220	**25** 0.984	**0.6** 0.024	NK75/25	**43.7** 9820	**90.2** 20300	5600	3600	0.0702	**0.364** 0.802
	75 2.9528	**92** 3.6220	**35** 1.378	**0.6** 0.024	NK75/35	**60.9** 13700	**138** 31000	5600	3600	0.0780	**0.518** 1.142
	75 2.9528	**95** 3.7402	**28** 1.102	**1.1** 0.043	NKS75	**76.5** 17200	**132** 29700	5800	3700	0.0716	**0.413** 0.911
80 3.1496	**80** 3.1496	**95** 3.7402	**25** 0.984	**1.0** 0.039	NK80/25	**65.0** 14600	**131** 29400	5300	3400	0.0766	**0.331** 0.730
	80 3.1496	**95** 3.7402	**35** 1.378	**1.0** 0.039	NK80/35	**79.7** 17900	**184** 41400	5300	3400	0.0846	**0.380** 0.838
	80 3.1496	**100** 3.9370	**30** 1.181	**1.0** 0.039	RNA4914	**86.3** 19400	**157** 35300	5400	3500	0.0770	**0.502** 1.107
	80 3.1496	**100** 3.9370	**54** 2.126	**1.0** 0.039	RNA6914	**137** 30800	**286** 64300	5400	6500	0.1061	**0.946** 2.086
85 3.3465	**85** 3.3465	**105** 4.1339	**25** 0.984	**1.0** 0.039	NK85/25	**76.4** 17200	**137** 30800	5000	3300	0.0764	**0.506** 1.116
	85 3.3465	**105** 4.1339	**30** 1.181	**1.0** 0.039	RNA4915	**92.4** 20800	**175** 39300	5000	3300	0.0812	**0.528** 1.164
	85 3.3465	**105** 4.1339	**35** 1.378	**1.0** 0.039	NK85/35	**108** 24300	**214** 48100	5000	3300	0.0854	**0.610** 1.345
	85 3.3465	**105** 4.1339	**54** 2.126	**1.0** 0.039	RNA6915	**143** 32100	**308** 69200	5000	3300	0.1110	**1.020** 2.249
90 3.5433	**90** 3.5433	**110** 4.3307	**25** 0.984	**1.0** 0.039	NK90/25	**79.5** 17900	**147** 33000	4700	3100	0.0798	**0.450** 0.992
	90 3.5433	**110** 4.3307	**30** 1.181	**1.0** 0.039	RNA4916	**91.5** 20600	**176** 39600	4700	3100	0.0834	**0.556** 1.226
	90 3.5433	**110** 4.3307	**35** 1.378	**1.0** 0.039	NK90/35	**113** 25400	**230** 51700	4700	3100	0.0891	**0.745** 1.642
	90 3.5433	**110** 4.3307	**54** 2.126	**1.0** 0.039	RNA6916	**126** 28300	**320** 71900	4700	3100	0.1197	**1.050** 2.315
95 3.7402	**95** 3.7402	**115** 4.5276	**26** 1.024	**1.0** 0.039	NK95/26	**49.3** 11100	**114** 25600	4400	2800	0.0829	**0.572** 1.261

Continued on next page.

Shaft Dia.	F_w	D	C	$r_{s\,min}$	Bearing Designation	Load Ratings		Speed Rating		C_g	Approx. Wt.
						Dynamic	Static				
						C	C_0	Oil	Grease		
mm in.	**mm** in.	**mm** in.	**mm** in.	**mm** in.		**kN** lbf.		min^{-1}			**kg** lbs.
95 3.7402	**95** 3.7402	**115** 4.5276	**36** 1.417	**1.0** 0.039	NK95/36	**114** 25600	**238** 53500	4500	2900	0.0921	**0.803** 1.770
100 3.9370	**100** 3.9370	**120** 4.7244	**26** 1.024	**1.0** 0.039	NK100/26	**83.6** 18800	**163** 36600	4200	2800	0.0857	**0.530** 1.168
	100 3.9370	**120** 4.7244	**35** 1.378	**1.1** 0.043	RNA4917	**110** 24700	**230** 51700	4200	2800	0.0935	**0.715** 1.576
	100 3.9370	**120** 4.7244	**36** 1.417	**1.0** 0.039	NK100/36	**118** 26500	**254** 57100	4200	2800	0.0958	**0.658** 1.451
	100 3.9370	**120** 4.7244	**63** 2.480	**1.1** 0.043	RNA6917	**150** 33700	**416** 93500	4200	2800	0.1340	**1.350** 2.976
105 4.1339	**105** 4.1339	**125** 4.9213	**26** 1.024	**1.0** 0.039	NK105/26	**52.2** 11700	**127** 28600	3900	2600	0.0892	**0.595** 1.312
	105 4.1339	**125** 4.9213	**35** 1.378	**1.1** 0.043	RNA4918	**114** 25600	**245** 55100	4000	2600	0.0970	**0.746** 1.645
	105 4.1339	**125** 4.9213	**63** 2.480	**1.1** 0.043	RNA6918	**154** 34600	**437** 98200	4000	2600	0.1323	**1.500** 3.30
110 4.3307	**110** 4.3307	**130** 5.1181	**30** 1.181	**1.1** 0.043	NK110/30	**103** 23200	**220** 49500	3800	2500	0.0965	**0.660** 1.455
	110 4.3307	**130** 5.1181	**35** 1.378	**1.1** 0.043	RNA4919	**115** 25900	**253** 56900	3800	2500	0.0999	**0.777** 1.713
	110 4.3307	**130** 5.1181	**40** 1.575	**1.1** 0.043	NK110/40	**132** 29700	**132** 29700	3800	2500	0.1043	**0.900** 1.984
	110 4.3307	**130** 5.1181	**63** 2.480	**1.1** 0.043	RNA6919	**158** 35500	**458** 103000	3800	2500	0.1434	**1.470** 3.241
115 4.5276	**115** 4.5276	**140** 5.5118	**40** 1.575	**1.1** 0.043	RNA4920	**139** 31200	**296** 66500	3700	2400	0.1037	**1.220** 2.690
120 4.7244	**120** 4.7244	**140** 5.5118	**30** 1.181	**1.0** 0.039	RNA4822	**90.3** 20300	**230** 51700	3500	2300	0.1059	**0.785** 1.731
125 4.9213	**125** 4.9213	**150** 5.9055	**40** 1.575	**1.1** 0.043	RNA4922	**147** 33000	**325** 73100	3400	2200	0.1101	**1.320** 2.910
130 5.1181	**130** 5.1181	**150** 5.9055	**30** 1.181	**1.0** 0.039	RNA4824	**94.1** 21200	**249** 56000	3200	2100	0.1121	**0.850** 1.874
135 5.3150	**135** 5.3150	**165** 6.4961	**45** 1.772	**1.1** 0.043	RNA4924	**177** 39800	**407** 91500	3100	2000	0.1193	**1.980** 4.365
145 5.7087	**145** 5.7087	**165** 6.4961	**35** 1.378	**1.0** 0.039	RNA4826	**112** 25200	**323** 72600	2900	1900	0.1258	**1.100** 2.425
150 5.9055	**150** 5.9055	**180** 7.0866	**50** 1.969	**1.5** 0.059	RNA4926	**201** 45200	**495** 111000	2800	1800	0.1314	**2.420** 5.335
155 6.1024	**155** 6.1024	**175** 6.8898	**35** 1.378	**1.1** 0.043	RNA4828	**116** 26100	**346** 77800	2700	1700	0.1320	**1.170** 2.579
160 6.2992	**160** 6.2992	**190** 7.4803	**50** 1.969	**1.5** 0.059	RNA4928	**214** 48100	**549** 123000	2600	1700	0.1389	**2.560** 5.644
165 6.4961	**165** 6.4961	**190** 7.4803	**40** 1.575	**1.1** 0.043	RNA4830	**142** 31900	**402** 90400	2500	1600	0.1367	**1.540** 3.395
175 6.8898	**175** 6.8898	**200** 7.8740	**40** 1.575	**1.1** 0.043	RNA4832	**146** 32800	**425** 95500	2400	1500	0.1425	**1.910** 4.211

SEALED NEEDLE ROLLER BEARINGS WITH INNER RINGS

METRIC SERIES

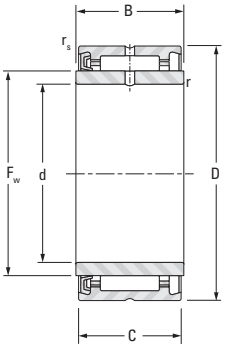

NA49RS

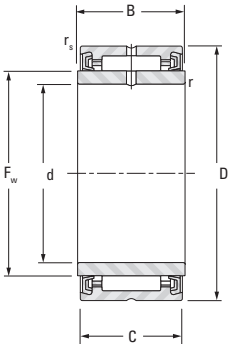

NA49.2RS

Shaft Dia.	d	D	B	C	F_w	$r_{s\,min}$	Bearing Designation	Load Ratings Dynamic C	Load Ratings Static C_0	Speed Rating Grease	C_g	Approx. Wt.
mm in.	mm in.	mm in.	mm in.	mm in.	mm in.	mm in.		kN lbf.		min^{-1}		kg lbs.
10 0.3937	**10** 0.3937	**22** 0.8661	**14** 0.551	**13** 0.512	**14** 0.5512	**0.3** 0.012	NA4900RS	**7.76** 1740	**8.06** 1810	14000	0.0199	**0.027** 0.060
	10 0.3937	**22** 0.8661	**14** 0.551	**13** 0.512	**14** 0.5512	**0.3** 0.012	NA4900.2RS	**7.76** 1740	**8.06** 1810	14000	0.0199	**0.027** 0.060
12 0.4724	**12** 0.4724	**24** 0.9449	**14** 0.551	**13** 0.512	**16** 0.6299	**0.3** 0.012	NA4901RS	**8.64** 1940	**9.59** 2160	12000	0.0219	**0.031** 0.068
	12 0.4724	**24** 0.9449	**14** 0.551	**13** 0.512	**16** 0.6299	**0.3** 0.012	NA4901.2RS	**8.64** 1940	**9.59** 2160	12000	0.0219	**0.031** 0.068
15 0.5906	**15** 0.5906	**28** 1.1024	**14** 0.551	**13** 0.512	**20** 0.7874	**0.3** 0.012	NA4902RS	**9.77** 2200	**12.0** 2700	9700	0.0254	**0.041** 0.090
	15 0.5906	**28** 1.1024	**14** 0.551	**13** 0.512	**20** 0.7874	**0.3** 0.012	NA4902.2RS	**9.77** 2200	**12.0** 2700	9700	0.0254	**0.041** 0.090
17 0.6693	**17** 0.6693	**30** 1.1811	**14** 0.551	**13** 0.512	**22** 0.8661	**0.3** 0.012	NA4903RS	**10.1** 2270	**12.8** 2880	8800	0.0269	**0.044** 0.097
	17 0.6693	**30** 1.1811	**14** 0.551	**13** 0.512	**22** 0.8661	**0.3** 0.012	NA4903.2RS	**10.1** 2270	**12.8** 2880	8800	0.0269	**0.044** 0.097
20 0.7874	**20** 0.7874	**37** 1.4567	**18** 0.709	**17** 0.669	**25** 0.9843	**0.3** 0.012	NA4904RS	**18.5** 4160	**21.2** 4770	7800	0.0309	**0.087** 0.192
	20 0.7874	**37** 1.4567	**18** 0.709	**17** 0.669	**25** 0.9843	**0.3** 0.012	NA4904.2RS	**18.5** 4160	**21.2** 4770	7800	0.0304	**0.087** 0.192
25 0.9843	**25** 0.9843	**42** 1.6535	**18** 0.709	**17** 0.669	**30** 1.1811	**0.3** 0.012	NA4905RS	**21.0** 4720	**26.4** 5930	6500	0.0346	**0.106** 0.234
	25 0.9843	**42** 1.6535	**18** 0.709	**17** 0.669	**30** 1.1811	**0.3** 0.012	NA4905.2RS	**21.0** 4720	**26.4** 5930	6500	0.0346	**0.106** 0.234
30 1.1811	**30** 1.1811	**47** 1.8504	**18** 0.709	**17** 0.669	**35** 1.3780	**0.3** 0.012	NA4906RS	**22.5** 5060	**30.0** 6740	5500	0.0381	**0.119** 0.262
	30 1.1811	**47** 1.8504	**18** 0.709	**17** 0.669	**35** 1.3780	**0.3** 0.012	NA4906.2RS	**22.5** 5060	**30.0** 6740	5500	0.0381	**0.119** 0.262
35 1.3780	**35** 1.3780	**55** 2.1654	**21** 0.827	**20** 0.787	**42** 1.6535	**0.6** 0.024	NA4907RS	**29.1** 6540	**44.4** 9980	4600	0.0454	**0.198** 0.437
	35 1.3780	**55** 2.1654	**21** 0.827	**20** 0.787	**42** 1.6535	**0.6** 0.024	NA4907.2RS	**29.1** 6540	**44.4** 9980	4600	0.0454	**0.198** 0.437
40 1.5748	**40** 1.5748	**62** 2.4409	**23** 0.906	**22** 0.866	**48** 1.8898	**0.6** 0.024	NA4908RS	**38.6** 8680	**57.0** 12800	4000	0.0497	**0.263** 0.580
	40 1.5748	**62** 2.4409	**23** 0.906	**22** 0.866	**48** 1.8898	**0.6** 0.024	NA4908.2RS	**38.6** 8680	**57.0** 12800	4000	0.0497	**0.263** 0.580
45 1.7717	**45** 1.7717	**68** 2.6772	**23** 0.906	**22** 0.866	**52** 2.0472	**0.6** 0.024	NA4909RS	**39.4** 8860	**60.0** 13500	3700	0.0521	**0.303** 0.668
	45 1.7717	**68** 2.6772	**23** 0.906	**22** 0.866	**52** 2.0472	**0.6** 0.024	NA4909.2RS	**39.4** 8860	**60.0** 13500	3700	0.0521	**0.303** 0.668
50 1.9685	**50** 1.9685	**72** 2.8346	**23** 0.906	**22** 0.866	**58** 2.2835	**0.6** 0.024	NA4910RS	**41.2** 9260	**65.8** 14800	3300	0.0559	**0.309** 0.681
	50 1.9685	**72** 2.8346	**23** 0.906	**22** 0.866	**58** 2.2835	**0.6** 0.024	NA4910.2RS	**41.2** 9260	**65.8** 14800	3300	0.0559	**0.309** 0.681

SEALED NEEDLE ROLLER BEARINGS WITHOUT INNER RINGS

METRIC SERIES

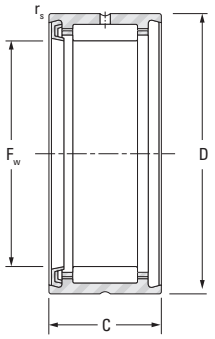

RNA49RS

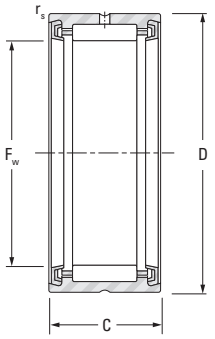

RNA49.2RS

Shaft Dia.	F_w	D	C	$r_{s\,min}$	Bearing Designation	Load Ratings Dynamic C	Load Ratings Static C_0	Speed Rating Grease	C_g	Approx. Wt.
mm in.	**mm** in.	**mm** in.	**mm** in.	**mm** in.		**kN** lbf.		min^{-1}		**kg** lbs.
14 0.5512	**14** 0.5512	**22** 0.8661	**13** 0.512	**0.3** 0.012	RNA4900RS	**7.76** 1740	**8.06** 1810	14000	0.0199	**0.019** 0.042
	14 0.5512	**22** 0.8661	**13** 0.512	**0.3** 0.012	RNA4900.2RS	**7.76** 1740	**8.06** 1810	14000	0.0199	**0.019** 0.042
16 0.6299	**16** 0.6299	**24** 0.9449	**13** 0.512	**0.3** 0.012	RNA4901RS	**8.64** 1940	**9.59** 2160	12000	0.0219	**0.021** 0.046
	16 0.6299	**24** 0.0449	**13** 0.512	**0.3** 0.012	RNA4901.2RS	**8.64** 1940	**9.59** 2160	12000	0.0219	**0.021** 0.046
20 0.7874	**20** 0.7874	**28** 1.1024	**13** 0.512	**0.3** 0.012	RNA4902RS	**9.70** 2180	**12.0** 2700	9700	0.0254	**0.026** 0.057
	20 0.7874	**28** 1.1024	**13** 0.512	**0.3** 0.012	RNA4902.2RS	**9.70** 2180	**12.0** 2700	9700	0.0254	**0.026** 0.057
22 0.8661	**22** 0.8661	**30** 1.1811	**13** 0.512	**0.3** 0.012	RNA4903RS	**10.1** 2270	**12.8** 2880	8800	0.0269	**0.027** 0.060
	22 0.8661	**30** 1.1811	**13** 0.512	**0.3** 0.012	RNA4903.2RS	**10.1** 2270	**12.8** 2880	8800	0.0269	**0.027** 0.060
25 0.9843	**25** 0.9843	**37** 1.4567	**17** 0.669	**0.3** 0.012	RNA4904RS	**18.5** 4160	**21.2** 4770	7800	0.0318	**0.062** 0.137
	25 0.9843	**37** 1.4567	**17** 0.669	**0.3** 0.012	RNA4904.2RS	**18.5** 4160	**21.2** 4770	7800	0.0318	**0.062** 0.137
30 1.1811	**30** 1.1811	**42** 1.6535	**17** 0.669	**0.3** 0.012	RNA4905RS	**21.0** 4720	**26.4** 5930	6500	0.0362	**0.075** 0.165
	30 1.1811	**42** 1.6535	**17** 0.669	**0.3** 0.012	RNA4905.2RS	**21.0** 4720	**26.4** 5930	6500	0.0362	**0.075** 0.165
35 1.3780	**35** 1.3780	**47** 1.864	**18** 0.709	**0.3** 0.012	RNA4906RS	**22.5** 5060	**30.0** 6740	5500	0.0399	**0.083** 0.183
	35 1.3780	**47** 1.8504	**18** 0.709	**0.3** 0.012	RNA4906.2RS	**22.5** 5060	**30.0** 6740	5500	0.0399	**0.083** 0.183
42 1.6535	**42** 1.6535	**55** 2.1654	**20** 0.787	**0.6** 0.024	RNA4907RS	**29.1** 6540	**44.4** 9980	4600	0.0454	**0.130** 0.287
	42 1.6535	**55** 2.1654	**20** 0.787	**0.6** 0.024	RNA4907.2RS	**29.1** 6540	**44.4** 9980	4600	0.0454	**0.130** 0.287
48 1.8898	**48** 1.8898	**62** 2.4409	**22** 0.866	**0.6** 0.024	RNA4908RS	**38.6** 8680	**57.0** 12800	4000	0.0519	**0.163** 0.359
	48 1.8898	**62** 2.4409	**22** 0.866	**0.6** 0.024	RNA4908.2RS	**38.6** 8680	**57.0** 12800	4000	0.0519	**0.163** 0.359
52 2.0472	**52** 2.0472	**68** 2.6772	**22** 0.866	**0.6** 0.024	RNA4909RS	**39.4** 8860	**60.0** 13500	3700	0.0550	**0.207** 0.456
	52 2.0472	**68** 2.6772	**22** 0.866	**0.6** 0.024	RNA4909.2RS	**39.4** 8860	**60.0** 13500	3700	0.0550	**0.207** 0.456
58 2.2835	**58** 2.2835	**72** 2.8346	**22** 0.866	**0.6** 0.024	RNA4910RS	**41.2** 9260	**65.8** 14800	3300	0.0591	**0.187** 0.412
	58 2.2835	**72** 2.8346	**22** 0.866	**0.6** 0.024	RNA4910.2RS	**41.2** 9260	**65.8** 14800	3300	0.0591	**0.187** 0.412

NEEDLE ROLLER BEARINGS WITHOUT FLANGES WITH INNER RINGS

METRIC SERIES

B

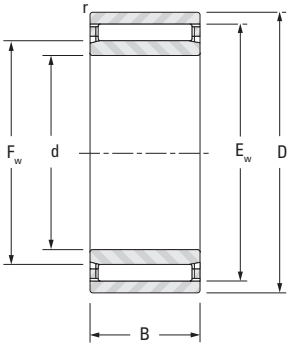

NAO

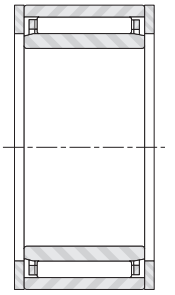

SNSH

Shaft Dia.	d	D	B	F_w	E_w	$r_{s\,min}$	s[1]	Bearing Designation	End Washer Designation	Load Ratings Dynamic C	Load Ratings Static C_0	Speed Rating Oil	Speed Rating Grease	C_g	Approx. Wt.
mm in.	mm in.	mm in.	mm in.	mm in.	mm in.	mm in.	mm in.			kN lbf.		min^{-1}			kg lbs.
6 0.2362	**6** 0.2362	**17** 0.6693	**10** 0.394	**10** 0.3937	**13** 0.5118	**0.3** 0.012	**0.5** 0.020	NAO6X17X10	SNSH10,5X17X0,5	**5.40** 1210	**6.43** 1450	39000	25000	0.0174	**0.014** 0.031
	8 0.3150	**19** 0.7480	**10** 0.394	**12** 0.4724	**15** 0.5906	**0.3** 0.012	**0.5** 0.020	NAO8X19X10	SNSH12,5X19X0,5	**5.85** 1320	**7.51** 1690	37000	24000	0.0195	**0.017** 0.037
10 0.3937	**10** 0.3937	**22** 0.8661	**13** 0.512	**14** 0.5512	**18** 0.7087	**0.3** 0.012	**1.0** 0.039	NAO10X22X13	SNSH14,5X22X0,5	**9.73** 2190	**12.5** 2810	29000	19000	0.0227	**0.026** 0.057
	10 0.3937	**22** 0.8661	**20** 0.787	**14** 0.5512	**18** 0.7087	**0.3** 0.012	**0.5** 0.020	NAO10X22X20	SNSH14,5X22X0,5	**12.3** 2770	**16.8** 3780	29000	19000	0.0291	**0.041** 0.090
	10 0.3937	**26** 1.0236	**12** 0.472	**14** 0.5512	**20** 0.7874	**0.3** 0.012	**0.7** 0.028	NAO10X26X12	SNSH14,5X26X0,5	**10.5** 2360	**10.6** 2380	21000	14000	0.0209	**0.036** 0.079
12 0.4724	**12** 0.4724	**24** 0.9449	**13** 0.512	**16** 0.6299	**20** 0.7874	**0.3** 0.012	**1.0** 0.039	NAO12X24X13	SNSH16,5X24X0,5	**1 0.1** 2270	**13.5** 3030	28000	18000	0.0245	**0.030** 0.066
	12 0.4724	**24** 0.9449	**20** 0.787	**16** 0.6299	**20** 0.7874	**0.3** 0.012	**0.5** 0.020	NAO12X24X20	SNSH16,5X24X0,5	**13.4** 3010	**19.5** 4380	28000	18000	0.0319	**0.046** 0.101
	12 0.4724	**28** 1.1024	**12** 0.472	**16** 0.6299	**22** 0.8661	**0.3** 0.012	**0.7** 0.028	NAO12X28X12	SNSH16,5X28X0,5	**11.2** 2520	**11.9** 2680	29000	19000	0.0227	**0.041** 0.090
15 0.5906	**15** 0.5906	**28** 1.1024	**13** 0.512	**20** 0.7874	**24** 0.9449	**0.3** 0.012	**1.0** 0.039	NAO15X28X13	SNSH20,5X28X0,5	**11.5** 2590	**17.3** 3890	22000	14000	0.0287	**0.039** 0.086
	15 0.5906	**28** 1.1024	**26** 1.024	**20** 0.7874	**24** 0.9449	**0.3** 0.012	**1.0** 0.039	NAO15X28X26	SNSH20,5X28X0,5	**19.8** 4450	**34.6** 7780	22000	14000	0.0405	**0.078** 0.172
	15 0.5906	**32** 1.2598	**12** 0.472	**20** 0.7874	**26** 1.0236	**0.3** 0.012	**0.7** 0.028	NAO15X32X12	SNSH20,5X32X0,5	**13.0** 2920	**15.0** 3370	23000	15000	0.0264	**0.050** 0.110
17 0.6693	**17** 0.6693	**30** 1.1811	**13** 0.512	**22** 0.8661	**26** 1.0236	**0.3** 0.012	**1.0** 0.039	NAO17X30X13	SNSH22,5X30X0,5	**11.8** 2650	**18.3** 4110	20000	13000	0.0303	**0.043** 0.095
	17 0.6693	**30** 1.1811	**26** 1.024	**22** 0.8661	**26** 1.0236	**0.3** 0.012	**1.0** 0.039	NAO17X30X26	SNSH22,5X30X0,5	**20.2** 4540	**36.6** 8230	20000	13000	0.0428	**0.084** 0.185
	17 0.6693	**35** 1.3780	**16** 0.630	**22** 0.8661	**29** 1.1417	**0.3** 0.012	**1.5** 0.059	NAO17X35X16	SNSH22,5X35X0,5	**19.0** 4270	**23.3** 5240	20000	13000	0.0299	**0.078** 0.172
	17 0.6693	**35** 1.3780	**32** 1.260	**22** 0.8661	**29** 1.1417	**0.3** 0.012	**1.5** 0.059	NAO17X35X32	SNSH22,5X35X0,5	**32.7** 7350	**46.5** 10500	20000	13000	0.0423	**0.154** 0.340
20 0.7874	**20** 0.7874	**35** 1.3780	**17** 0.669	**25** 0.9843	**30** 1.1811	**0.3** 0.012	**1.2** 0.047	NAO20X35X17	SNSH25,5X35X0,5	**18.8** 4230	**29.8** 6700	17000	11000	0.0351	**0.073** 0.161
	20 0.7874	**35** 1.3780	**26** 1.024	**25** 0.9843	**30** 1.1811	**0.3** 0.012	**1.2** 0.047	NAO20X35X26	SNSH25,5X35X0,5	**25.0** 5620	**42.8** 9620	17000	11000	0.0456	**0.112** 0.247
	20 0.7874	**37** 1.4567	**16** 0.630	**25** 0.9843	**32** 1.2598	**0.3** 0.012	**1.5** 0.059	NAO20X37X16	SNSH25,5X37X0,5	**19.8** 4450	**25.3** 5690	17000	11000	0.0323	**0.080** 0.176

[1] Max. axial displacement.

Continued on next page.

Shaft Dia.	d	D	B	F_w	E_w	$r_{s\,min}$	s[1]	Bearing Designation	End Washer Designation	Load Ratings Dynamic C	Load Ratings Static C_0	Speed Rating Oil	Speed Rating Grease	C_g	Approx. Wt.
mm in.	mm in.	mm in.	mm in.	mm in.	mm in.	mm in.	mm in.			kN lbf.		min^{-1}			kg lbs.
20 0.7874	**20** 0.7874	**37** 1.4567	**32** 1.260	**25** 0.9843	**32** 1.2598	**0.3** 0.012	**1.5** 0.059	NAO20X37X32	SNSH25,5X37X0,5	**34.0** 7640	**50.7** 11400	17000	11000	0.0455	**0.162** 0.357
25 0.9843	**25** 0.9843	**40** 1.5748	**17** 0.669	**30** 1.1811	**35** 1.3780	**0.3** 0.012	**1.2** 0.047	NAO25X40X17	SNSH30,5X40X0,5	**20.2** 4540	**34.9** 7850	14000	9300	0.0394	**0.088** 0.194
	25 0.9843	**40** 1.5748	**26** 1.024	**30** 1.1811	**35** 1.3780	**0.3** 0.012	**1.2** 0.047	NAO25X40X26	SNSH30,5X40X0,5	**26.8** 6020	**49.7** 11200	14000	9300	0.0512	**0.132** 0.291
	25 0.9843	**42** 1.6535	**16** 0.630	**30** 1.1811	**37** 1.4567	**0.3** 0.012	**1.5** 0.059	NAO25X42X16		**22.4** 5040	**31.0** 6970	15000	9600	0.0366	**0.096** 0.212
	25 0.9843	**42** 1.6535	**32** 1.260	**30** 1.1811	**37** 1.4567	**0.3** 0.012	**1.5** 0.059	NAO25X42X32		**38.2** 8590	**62.1** 14000	15000	9600	0.0517	**0.185** 0.408
30 1.1811	**30** 1.1811	**45** 1.7717	**17** 0.669	**35** 1.3780	**40** 1.5748	**0.3** 0.012	**1.2** 0.047	NAO30X45X17		**22.1** 4970	**40.8** 9170	12000	7900	0.0440	**0.102** 0.225
	30 1.1811	**45** 1.7717	**26** 1.024	**35** 1.3780	**40** 1.5748	**0.3** 0.012	**1.2** 0.047	NAO30X45X26		**27.7** 6230	**54.5** 12300	12000	7900	0.0561	**0.155** 0.342
	30 1.1811	**47** 1.8504	**16** 0.630	**35** 1.3780	**42** 1.6535	**0.3** 0.012	**1.5** 0.059	NAO30X47X16	SNSH35,5X47X0,5	**24.5** 5510	**36.8** 8270	12000	8100	0.0408	**0.106** 0.234
	30 1.1811	**47** 1.8504	**32** 1.260	**35** 1.3780	**42** 1.6535	**0.3** 0.012	**1.5** 0.059	NAO30X47X32	SNSH35,5X47X0,5	**42.0** 9440	**73.5** 16500	12000	8100	0.0576	**0.218** 0.481
35 1.3780	**35** 1.3780	**50** 1.9685	**17** 0.669	**35** 1.3780	**40** 1.5748	**0.3** 0.012	**1.2** 0.047	NAO35X50X17		**23.8** 5350	**47.0** 10600	11000	6900	0.0484	**0.126** 0.278
	35 1.3780	**50** 1.9685	**34** 1.339	**35** 1.3780	**40** 1.5748	**0.3** 0.012	**0.7** 0.028	NAO35X50X34	SNSH40,5X50X0,5	**40.9** 9190	**94.1** 21200	11000	6900	0.0682	**0.232** 0.511
	35 1.3780	**55** 2.1654	**20** 0.787	**35** 1.3780	**43** 1.6929	**0.3** 0.012	**1.5** 0.059	NAO35X55X20	SNSH41X55X1	**35.5** 7980	**56.3** 12700	11000	7100	0.0472	**0.185** 0.408
	35 1.3780	**55** 2.1654	**40** 1.575	**35** 1.3780	**43** 1.6929	**0.3** 0.012	**1.7** 0.067	NAO35X55X40		**60.8** 13700	**113** 25400	11000	7100	0.0666	**0.370** 0.816
40 1.5748	**40** 1.5748	**55** 2.1654	**17** 0.669	**45** 1.7717	**50** 1.9685	**0.3** 0.012	**0.7** 0.028	NAO40X55X17	SNSH45,5X55X0,5	**24.9** 5600	**51.8** 11600	9400	6100	0.0523	**0.133** 0.293
	40 1.5748	**55** 2.1654	**34** 1.339	**45** 1.7717	**50** 1.9685	**0.3** 0.012	**0.7** 0.028	NAO40X55X34	SNSH45,5X55X0,5	**42.7** 9600	**104** 23400	9400	6100	0.0737	**0.257** 0.567
	40 1.5748	**62** 2.4409	**20** 0.787	**45** 1.7717	**53** 2.0866	**0.3** 0.012	**1.5** 0.059	NAO40X62X20	SNSH46X62X1	**36.0** 8090	**59.5** 13400	9600	6200	0.0504	**0.215** 0.474
	40 1.5748	**62** 2.4409	**40** 1.575	**45** 1.7717	**53** 2.0866	**0.3** 0.012	**1.7** 0.067	NAO40X62X40	SNSH46X62X1	**61.7** 13900	**119** 26800	9600	6200	0.0711	**0.440** 0.970
45 1.7717	**45** 1.7717	**62** 2.4409	**20** 0.787	**50** 1.9685	**55** 2.1654	**0.3** 0.012	**0.7** 0.028	NAO45X62X20		**30.2** 6790	**68.5** 15400	8400	5400	0.0588	**0.200** 0.441
	45 1.7717	**62** 2.4409	**40** 1.575	**50** 1.9685	**55** 2.1654	**0.3** 0.012	**0.5** 0.020	NAO45X62X40		**50.7** 11400	**137** 30800	8400	5400	0.0829	**0.386** 0.851
	45 1.7717	**72** 2.8346	**20** 0.787	**55** 2.1654	**63** 2.4803	**1.0** 0.039	**1.5** 0.059	NAO45X72X20	SNSH56X72X1	**40.3** 9060	**73.5** 16500	7800	5000	0.0580	**0.345** 0.761
	45 1.7717	**72** 2.8346	**40** 1.575	**55** 2.1654	**63** 2.4803	**1.0** 0.039	**1.7** 0.067	NAO45X72X40	SNSH56X72X1	**69.1** 15500	**147** 33000	7800	5000	0.0818	**0.680** 1.499
50 1.9685	**50** 1.9685	**68** 2.6772	**20** 0.787	**55** 2.1654	**60** 2.3622	**0.3** 0.012	**0.7** 0.028	NAO50X68X20		**30.7** 6900	**72.4** 16300	7600	4900	0.0622	**0.230** 0.507
	50 1.9685	**68** 2.6772	**40** 1.575	**55** 2.1654	**60** 2.3622	**0.3** 0.012	**0.5** 0.020	NAO50X68X40		**52.7** 11800	**145** 32600	7600	4900	0.0878	**0.450** 0.992
	50 1.9685	**78** 3.0709	**20** 0.787	**60** 2.3622	**68** 2.6772	**1.0** 0.039	**1.5** 0.059	NAO50X78X20	SNSH61X78X1	**41.8** 9400	**79.2** 17800	7100	4600	0.0614	**0.385** 0.849

[1] Max. axial displacement.

Continued on next page.

NEEDLE ROLLER BEARINGS WITHOUT FLANGES WITH INNER RINGS – *continued*

METRIC SERIES

B

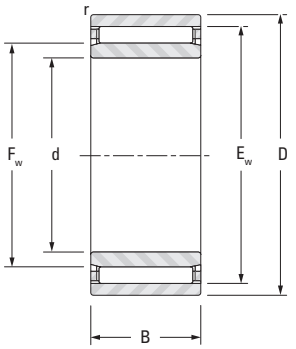

NAO

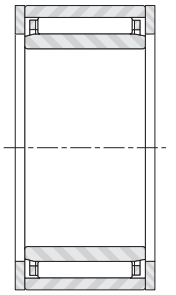

SNSH

Shaft Dia.	d	D	B	F_w	E_w	$r_{s\,min}$	s(1)	Bearing Designation	End Washer Designation	Load Ratings Dynamic C	Load Ratings Static C_0	Speed Rating Oil	Speed Rating Grease	C_g	Approx. Wt.
mm in.	mm in.	mm in.	mm in.	mm in.	mm in.	mm in.	mm in.			kN lbf.		min^{-1}			kg lbs.
50 1.9685	**50** 1.9685	**78** 3.0709	**40** 1.575	**60** 2.3622	**68** 2.6772	**1.0** 0.039	**1.7** 0.067	NAO50X78X40	SNSH61X78X1	**71.7** 16100	**158** 35500	7100	4600	0.0867	**0.746** 1.645
55 2.1654	**55** 2.1654	**85** 3.3465	**30** 1.181	**65** 2.5591	**73** 2.8740	**1.0** 0.039	**2.0** 0.079	NAO55X85X30	SNSH66X85X1	**60.1** 13500	**129** 29000	6500	4200	0.0719	**0.690** 1.521
	55 2.1654	**85** 3.3465	**60** 2.362	**65** 2.5591	**73** 2.8740	**1.0** 0.039	**1.5** 0.059	NAO55X85X60	SNSH66X85X1	**103** 23200	**259** 58200	6500	4200	0.1015	**1.320** 2.910
60 2.3622	**60** 2.3622	**90** 3.5433	**30** 1.181	**70** 2.7559	**78** 3.0709	**1.0** 0.039	**2.0** 0.079	NAO60X90X30		**62.2** 14000	**139** 31200	6000	3900	0.0757	**0.745** 1.642
	60 2.3622	**90** 3.5433	**60** 2.362	**70** 2.7559	**78** 3.0709	**1.0** 0.039	**1.7** 0.067	NAO60X90X60		**107** 24100	**277** 62300	6000	3900	0.1068	**1.405** 3.097
65 2.5591	**65** 2.5591	**95** 3.7402	**30** 1.181	**75** 2.9528	**83** 3.2677	**1.0** 0.039	**2.0** 0.079	NAO65X95X30		**60.9** 13700	**138** 31000	5600	3600	0.0780	**0.770** 1.698
	65 2.5591	**95** 3.7402	**60** 2.362	**75** 2.9528	**83** 3.2677	**1.0** 0.039	**1.7** 0.067	NAO65X95X60		**116** 26100	**277** 62300	5600	3600	0.1101	**1.500** 3.307
70 2.7559	**70** 2.7559	**100** 3.9370	**30** 1.181	**80** 3.1496	**88** 3.4646	**1.0** 0.039	**2.0** 0.079	NAO70X100X30		**67.5** 15200	**161** 36200	5200	3400	0.0835	**0.850** 1.874
	70 2.7559	**100** 3.9370	**60** 2.362	**80** 3.1496	**88** 3.4646	**1.0** 0.039	**1.7** 0.067	NAO70X100X60		**116** 26100	**322** 72400	5200	3400	0.1178	**1.600** 3.527
80 3.1496	**80** 3.1496	**110** 4.3307	**30** 1.181	**90** 3.5433	**98** 3.8583	**1.0** 0.039	**2.0** 0.079	NAO80X110X30		**63.6** 14300	**155** 34800	4600	3000	0.0873	**0.920** 2.028
85 3.3465	**85** 3.3465	**115** 4.5276	**30** 1.181	**95** 3.7402	**103** 4.0551	**1.0** 0.039	**2.0** 0.079	NAO85X115X30		**71.0** 16000	**183** 41100	4400	2800	0.0932	**0.985** 2.172
90 3.5433	**90** 3.5433	**120** 4.7244	**30** 1.181	**100** 3.9370	**108** 4.2520	**1.0** 0.039	**2.0** 0.079	NAO90X120X30		**72.4** 16300	**191** 42900	4200	2700	0.0965	**1.010** 2.22

(1) Max. axial displacement.

NEEDLE ROLLER BEARINGS WITHOUT FLANGES WITHOUT INNER RINGS

METRIC SERIES

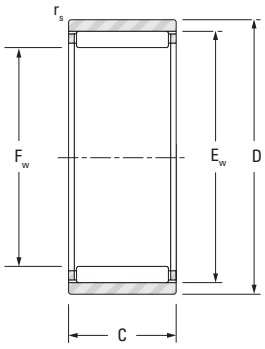

RNAO

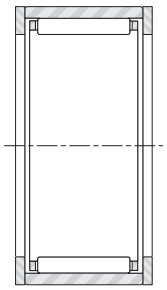

SNSH

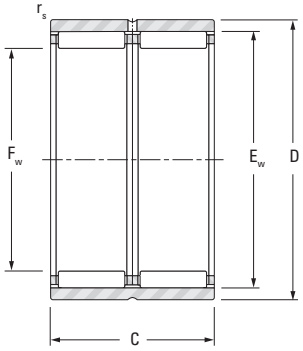

RNAO

Shaft Dia.	F_w	D	C	E_w	$r_{s\,min}$	Bearing Designation	End Washer Designation	Load Ratings Dynamic C	Load Ratings Static C_0	Speed Rating Oil	Speed Rating Grease	C_g	Approx. Wt.
mm in.	**mm** in.	**mm** in.	**mm** in.	**mm** in.	**mm** in.			**kN** lbf.		min^{-1}			**kg** lbs.
6 0.2362	**6** 0.2362	**13** 0.5118	**8** 0.315	**9** 0.3543	**0.3** 0.012	RNAO6X13X8TN		**2.47** 560	**2.07** 470	44000	29000	0.0107	**0.005** 0.011
7 0.2756	**7** 0.2756	**14** 0.5512	**8** 0.315	**10** 0.3937	**0.3** 0.012	RNAO7X14X8TN		**2.74** 620	**2.44** 550	42000	28000	0.0118	**0.007** 0.015
8 0.3150	**8** 0.3150	**15** 0.5906	**10** 0.394	**11** 0.4331	**0.3** 0.012	RNAO8X15X10	SNSH8,5X15X0,5	**4.57** 1030	**4.89** 1100	41000	26000	0.0148	**0.008** 0.018
9 0.3543	**9** 0.3543	**16** 0.6299	**10** 0.394	**12** 0.4724	**0.3** 0.012	RNAO9X16X10		**4.27** 960	**4.60** 1030	40000	26000	0.0153	**0.009** 0.020
10 0.3937	**10** 0.3937	**17** 0.6693	**10** 0.394	**13** 0.5118	**0.3** 0.012	RNAO10X17X10	SNSH10,5X17X0,5	**5.40** 1210	**6.43** 1450	39000	25000	0.0174	**0.010** 0.022
	10 0.3937	**17** 0.6693	**20** 0.787	**13** 0.5118	**0.3** 0.012	RNAO10X17X20	SNSH10,5X17X0,5	**9.25** 2080	**12.9** 2900	39000	25000	0.0245	**0.019** 0.042
12 0.4724	**12** 0.4724	**19** 0.7480	**10** 0.394	**15** 0.5906	**0.3** 0.012	RNAO12X19X10	SNSH12,5X19X0,5	**5.85** 1320	**7.51** 1690	37000	24000	0.0195	**0.012** 0.026
14 0.5512	**14** 0.5512	**22** 0.8661	**13** 0.512	**18** 0.7087	**0.3** 0.012	RNAO14X22X13	SNSH14,5X22X0,5	**9.73** 2190	**12.5** 2810	29000	19000	0.0227	**0.018** 0.040
	14 0.5512	**22** 0.8661	**20** 0.787	**18** 0.7087	**0.3** 0.012	RNAO14X22X20	SNSH14,5X22X0,5	**12.3** 2770	**16.8** 3780	29000	19000	0.0291	**0.029** 0.064
	14 0.5512	**26** 1.0236	**12** 0.472	**20** 0.7874	**0.3** 0.012	RNAO14X26X12	SNSH14,5X26X0,5	**10.5** 2360	**10.6** 2380	21000	14000	0.0209	**0.029** 0.064
15 0.5906	**15** 0.5906	**23** 0.9055	**13** 0.512	**19** 0.7480	**0.3** 0.012	RNAO15X23X13	SNSH15,5X23X0,5	**9.66** 2170	**12.6** 2830	28000	18000	0.0235	**0.019** 0.042
	15 0.5906	**23** 0.9055	**20** 0.787	**19** 0.7480	**0.3** 0.012	RNAO15X23X20	SNSH15,5X23X0,5	**13.5** 3030	**19.4** 4360	28000	18000	0.0310	**0.029** 0.064
16 0.6299	**16** 0.6299	**24** 0.9449	**13** 0.512	**20** 0.7874	**0.3** 0.012	RNAO16X24X13	SNSH16,5X24X0,5	**10.1** 2270	**13.5** 3030	28000	18000	0.0245	**0.022** 0.049
	16 0.6299	**24** 0.9449	**20** 0.787	**20** 0.7874	**0.3** 0.012	RNAO16X24X20	SNSH16,5X24X0,5	**13.4** 3010	**19.5** 4380	28000	18000	0.0319	**0.032** 0.071
	16 0.6299	**28** 1.1024	**12** 0.472	**22** 0.8661	**0.3** 0.012	RNAO16X28X12	SNSH16,5X28X0,5	**11.2** 2520	**11.9** 2680	29000	19000	0.0227	**0.033** 0.073
17 0.6693	**17** 0.6693	**25** 0.9843	**13** 0.512	**21** 0.8268	**0.3** 0.012	RNAO17X25X13	SNSH17,5X25X0,5	**10.5** 2360	**14.5** 3260	26000	17000	0.0256	**0.022** 0.049
	17 0.6693	**25** 0.9843	**20** 0.787	**21** 0.8268	**0.3** 0.012	RNAO17X25X20	SNSH17,5X25X0,5	**14.7** 3300	**22.5** 5060	26000	17000	0.0333	**0.032** 0.071
18 0.7087	**18** 0.7087	**26** 1.0236	**13** 0.512	**22** 0.8661	**0.3** 0.012	RNAO18X26X13	SNSH18,5X26X0,5	**10.8** 2430	**15.4** 3460	24000	16000	0.0266	**0.024** 0.053
	18 0.7087	**26** 1.0236	**13** 0.512	**22** 0.8661	**0.3** 0.012	RNAO18X26X13ASR1	SNSH18,5X26X0,5	**10.8** 2430	**15.4** 3460	24000	16000	0.0266	**0.024** 0.053
	18 0.7087	**26** 1.0236	**20** 0.787	**22** 0.8661	**0.3** 0.012	RNAO18X26X20	SNSH18,5X26X0,5	**14.4** 3240	**22.2** 4990	24000	16000	0.0347	**0.034** 0.075
	18 0.7087	**30** 1.1811	**24** 0.945	**24** 0.9449	**0.3** 0.012	RNAO18X30X24		**20.2** 4540	**26.2** 5890	25000	17000	0.0343	**0.070** 0.154
20 0.7874	**20** 0.7874	**28** 1.1024	**13** 0.512	**24** 0.9449	**0.3** 0.012	RNAO20X28X13	SNSH20,5X28X0,5	**11.5** 2590	**17.3** 3890	22000	14000	0.0287	**0.025** 0.055

Continued on next page.

NEEDLE ROLLER BEARINGS WITHOUT FLANGES WITHOUT INNER RINGS

— continued

B

METRIC SERIES

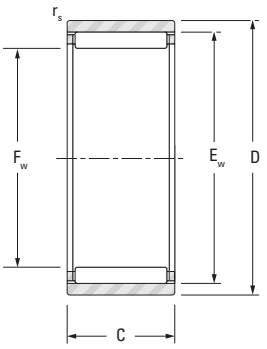

RNAO

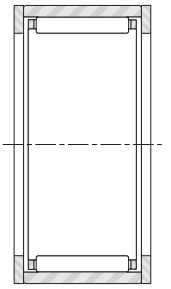

SNSH

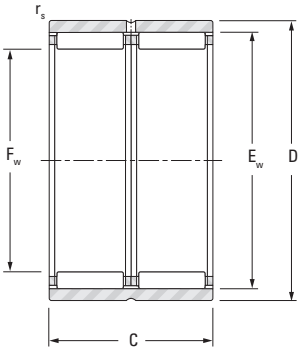

RNAO

Shaft Dia.	F_w	D	C	E_w	$r_{s\,min}$	Bearing Designation	End Washer Designation	Load Ratings Dynamic C	Load Ratings Static C_0	Speed Rating Oil	Speed Rating Grease	C_g	Approx. Wt.
mm in.	**mm** in.	**mm** in.	**mm** in.	**mm** in.	**mm** in.			**kN** lbf.		min^{-1}			**kg** lbs.
20 0.7874	**20** 0.7874	**28** 1.1024	**26** 1.024	**24** 0.9449	**0.3** 0.012	RNAO20X28X26	SNSH20,5X28X0,5	**19.8** 4450	**34.6** 7780	22000	14000	0.0405	**0.050** 0.110
	20 0.7874	**32** 1.2598	**12** 0.472	**26** 1.0236	**0.3** 0.012	RNAO20X32X12	SNSH20,5X32X0,5	**13.0** 2920	**15.3** 3440	23000	15000	0.0264	**0.038** 0.084
	20 0.7874	**32** 1.2598	**24** 0.945	**26** 1.0236	**0.3** 0.012	RNAO20X32X24	SNSH20,5X32X0,5	**22.3** 5010	**30.6** 6880	23000	15000	0.0373	**0.080** 0.176
22 0.8661	**22** 0.8661	**30** 1.1811	**13** 0.512	**26** 1.0236	**0.3** 0.012	RNAO22X30X13	SNSH22,5X30X0,5	**11.8** 2650	**18.3** 4110	20000	13000	0.0303	**0.028** 0.062
	22 0.8661	**30** 1.1811	**26** 1.024	**26** 1.0236	**0.3** 0.012	RNAO22X30X26	SNSH22,5X30X0,5	**20.2** 4540	**36.6** 8230	20000	13000	0.0428	**0.053** 0.117
	22 .8661	**35** 1.3780	**16** 0.630	**29** 1.1417	**0.3** 0.012	RNAO22X35X16	SNSH22,5X35X0,5	**19.1** 4290	**23.3** 5240	21000	13000	0.0299	**0.059** 0.130
	22 0.8661	**35** 1.3780	**32** 1.260	**29** 1.1417	**0.3** 0.012	RNAO22X35X32	SNSH22,5X35X0,5	**32.7** 7350	**46.5** 10500	21000	13000	0.0423	**0.116** 0.256
25 0.9843	**25** 0.9843	**35** 1.3780	**17** 0.669	**30** 1.1811	**0.3** 0.012	RNAO25X35X17	SNSH25,5X35X0,5	**18.8** 4230	**29.8** 6700	17000	11000	0.0351	**0.050** 0.110
	25 0.9843	**35** 1.3780	**26** 1.024	**30** 1.1811	**0.3** 0.012	RNAO25X35X26	SNSH25,5X35X0,5	**25.0** 5620	**42.8** 9620	17000	11000	0.0456	**0.076** 0.168
	25 0.9843	**37** 1.4567	**16** 0.630	**32** 1.2598	**0.3** 0.012	RNAO25X37X16	SNSH25,5X37X0,5	**19.8** 4450	**25.3** 5690	18000	12000	0.0323	**0.058** 0.128
	25 0.9843	**37** 1.4567	**32** 1.260	**32** 1.2598	**0.3** 0.012	RNAO25X37X32	SNSH25,5X37X0,5	**19.2** 4320	**23.6** 5310	18000	12000	0.0455	**0.118** 0.260
28 1.1024	**28** 1.1024	**40** 1.5748	**16** 0.630	**35** 1.3780	**0.3** 0.012	RNAO28X40X16	SNSH28,5X40X0,5	**20.9** 4700	**27.9** 6270	16000	10000	0.0347	**0.063** 0.139
	28 1.1024	**40** 1.5748	**32** 1.260	**35** 1.3780	**0.3** 0.012	RNAO28X40X32	SNSH28,5X40X0,5	**35.8** 8050	**55.9** 12600	16000	10000	0.0489	**0.128** 0.282
30 1.1811	**30** 1.1811	**40** 1.5748	**17** 0.669	**35** 1.3780	**0.3** 0.012	RNAO30X40X17	SNSH30,5X40X0,5	**20.2** 4540	**34.6** 7780	14000	9300	0.0394	**0.060** 0.132
	30 1.1811	**40** 1.5748	**26** 1.024	**35** 1.3780	**0.3** 0.012	RNAO30X40X26	SNSH30,5X40X0,5	**26.8** 6020	**49.7** 11200	14000	9300	0.0512	**0.088** 0.194
	30 1.1811	**42** 1.6535	**16** 0.630	**37** 1.4567	**0.3** 0.012	RNAO30X42X16		**22.3** 5010	**31.0** 6970	15000	9600	0.0366	**0.069** 0.152
	30 1.1811	**42** 1.6535	**32** 1.260	**37** 1.4567	**0.3** 0.012	RNAO30X42X32		**38.2** 8590	**62.1** 14000	15000	9600	0.0517	**0.131** 0.289
35 1.3780	**35** 1.3780	**45** 1.7717	**17** 0.669	**40** 1.5748	**0.3** 0.012	RNAO35X45X17		**22.1** 4970	**40.8** 9170	12000	7900	0.0440	**0.069** 0.152
	35 1.3780	**45** 1.7717	**26** 1.024	**40** 1.5748	**0.3** 0.012	RNAO35X45X26		**27.7** 6230	**54.5** 12300	12000	7900	0.0561	**0.091** 0.201
	35 1.3780	**47** 1.8504	**16** 0.630	**41** 1.6142	**0.3** 0.012	RNAO35X47X16	SNSH35,5X47X0,5	**24.5** 5510	**36.8** 8270	12000	8100	0.0404	**0.075** 0.165
	35 1.3780	**47** 1.8504	**32** 1.260	**42** 1.6535	**0.3** 0.012	RNAO35X47X32	SNSH35,5X47X0,5	**42.0** 9440	**73.5** 16500	12000	8100	0.0576	**0.156** 0.344
40 1.5748	**40** 1.5748	**50** 1.9685	**17** 0.669	**45** 1.7717	**0.3** 0.012	RNAO40X50X17	SNSH40,5X50X0,5	**23.8** 5350	**47.0** 10600	11000	6900	0.0484	**0.086** 0.190

Continued on next page.

Shaft Dia.	F_w	D	C	E_w	$r_{s\,min}$	Bearing Designation	End Washer Designation	Load Ratings Dynamic C	Load Ratings Static C_0	Speed Rating Oil	Speed Rating Grease	C_g	Approx. Wt.
mm in.	**mm** in.	**mm** in.	**mm** in.	**mm** in.	**mm** in.			**kN** lbf.		min^{-1}			**kg** lbs.
40 1.5748	**40** 1.5748	**50** 1.9685	**34** 1.339	**45** 1.7717	**0.3** 0.012	RNAO40X50X34	SNSH40,5X50X0,5	**40.9** 9190	**94.1** 21200	11000	6900	0.0575	**0.152** 0.335
	40 1.5748	**55** 2.1654	**20** 0.787	**48** 1.8898	**0.3** 0.012	RNAO40X55X20	SNSH41X55X1	**35.5** 7980	**56.3** 12700	11000	7100	0.0472	**0.139** 0.306
	40 1.5748	**55** 2.1654	**40** 1.575	**48** 1.8898	**0.3** 0.012	RNAO40X55X40	SNSH41X55X1	**60.8** 13700	**113** 25400	11000	7100	0.0666	**0.276** 0.608
45 1.7717	**45** 1.7717	**55** 2.1654	**17** 0.669	**50** 1.9685	**0.3** 0.012	RNAO45X55X17	SNSH45,5X55X0,5	**24.9** 5600	**51.8** 11600	9400	6100	0.0523	**0.089** 0.196
	45 1.7717	**55** 2.1654	**34** 1.339	**50** 1.9685	**0.3** 0.012	RNAO45X55X34	SNSH45,5X55X0,5	**42.7** 9600	**104** 23400	9400	6100	0.0737	**0.168** 0.370
	45 1.7717	**62** 2.4409	**20** 0.787	**53** 2.0866	**0.3** 0.012	RNAO45X62X20	SNSH46X62X1	**30.8** 6920	**68.1** 15300	9400	6100	0.0504	**0.163** 0.359
	45 1.7717	**62** 2.4409	**40** 1.575	**53** 2.0866	**0.3** 0.012	RNAO45X62X40	SNSH46X62X1	**61.7** 13900	**119** 26800	9600	6200	0.0711	**0.325** 0.717
50 1.9685	**50** 1.9685	**62** 2.4409	**20** 0.787	**55** 2.1654	**0.3** 0.012	RNAO50X62X20		**30.2** 6790	**68.5** 15400	8400	5400	0.0588	**0.142** 0.313
	50 1.9685	**62** 2.4409	**40** 1.575	**55** 2.1654	**0.3** 0.012	RNAO50X62X40		**51.7** 11600	**137** 30800	8400	5400	0.0829	**0.269** 0.593
	50 1.9685	**65** 2.5591	**20** 0.787	**58** 2.2835	**0.3** 0.012	RNAO50X65X20	SNSH51X65X1	**38.8** 8720	**67.8** 15200	8600	5600	0.0545	**0.167** 0.368
	50 1.9685	**65** 2.5591	**40** 1.575	**58** 2.2835	**0.3** 0.012	RNAO50X65X40		**66.5** 14900	**136** 30600	8600	5600	0.0769	**0.342** 0.754
55 2.1654	**55** 2.1654	**68** 2.6772	**20** 0.787	**60** 2.3622	**0.3** 0.012	RNAO55X68X20		**30.7** 6900	**72.4** 16300	7600	4900	0.0622	**0.165** 0.364
	55 2.1654	**68** 2.6772	**40** 1.575	**60** 2.3622	**0.3** 0.012	RNAO55X68X40		**52.7** 11800	**145** 32600	7600	4900	0.0878	**0.320** 0.705
	55 2.1654	**72** 2.8346	**20** 0.787	**63** 2.4803	**1.0** 0.039	RNAO55X72X20	SNSH56X72X1	**40.3** 9060	**73.5** 16500	7800	5000	0.0580	**0.212** 0.467
	55 2.1654	**72** 2.8346	**40** 1.575	**63** 2.4803	**1.0** 0.039	RNAO55X72X40	SNSH56X72X1	**69.1** 15500	**127** 28600	7800	5000	0.0818	**0.433** 0.955
60 2.3622	**60** 2.3622	**78** 3.0709	**20** 0.787	**68** 2.6772	**1.0** 0.039	RNAO60X78X20	SNSH61X78X1	**41.8** 9400	**79.2** 17800	7100	4600	0.0614	**0.230** 0.507
	60 2.3622	**78** 3.0709	**40** 1.575	**68** 2.6772	**1.0** 0.039	RNAO60X78X40	SNSH61X78X1	**71.7** 16100	**158** 35500	7100	4600	0.0867	**0.436** 0.961
65 2.5591	**65** 2.5591	**85** 3.3465	**30** 1.181	**73** 2.8740	**1.0** 0.039	RNAO65X85X30	SNSH66X85X1	**60.1** 13500	**129** 29000	6500	4200	0.0719	**0.468** 1.032
	65 2.5591	**85** 3.3465	**60** 2.362	**73** 2.8740	**1.0** 0.039	RNAO65X85X60	SNSH66X85X1	**103** 23200	**259** 58200	6500	4200	0.1015	**0.876** 1.931
70 2.7559	**70** 2.7559	**90** 3.5433	**30** 1.181	**78** 3.0709	**1.0** 0.039	RNAO70X90X30		**62.2** 14000	**139** 31200	6000	3900	0.0757	**0.505** 1.113
	70 2.7559	**90** 3.5433	**60** 2.362	**78** 3.0709	**1.0** 0.039	RNAO70X90X60		**107** 24100	**277** 62300	6000	3900	0.1068	**0.925** 2.039
75 2.9528	**75** 2.9528	**95** 3.7402	**30** 1.181	**83** 3.2677	**1.0** 0.039	RNAO75X95X30		**60.9** 13700	**138** 31000	5600	3600	0.0780	**0.510** 1.124
	75 2.9528	**95** 3.7402	**60** 2.362	**83** 3.2677	**1.0** 0.039	RNAO75X95X60		**104** 23400	**277** 62300	5600	3600	0.1101	**0.980** 2.161
80 3.1496	**80** 3.1496	**100** 3.9370	**30** 1.181	**88** 3.4646	**1.0** 0.039	RNAO80X100X30		**67.5** 15200	**161** 36200	5200	3400	0.0835	**0.580** 1.279
	80 3.1496	**100** 3.9370	**60** 2.362	**88** 3.4646	**1.0** 0.039	RNAO80X100X60		**116** 26100	**322** 72400	5200	3400	0.1178	**1.044** 2.30
85 3.3465	**85** 3.3465	**105** 4.1339	**30** 1.181	**93** 3.6614	**1.0** 0.039	RNAO85X105X30		**69.4** 15600	**170** 38200	4600	3000	0.0870	**0.586** 1.292
100 3.9370	**100** 3.9370	**120** 4.7244	**30** 1.181	**108** 4.2520	**1.0** 0.039	RNAO100X120X30		**72.4** 16300	**191** 42900	4200	2700	0.0965	**0.660** 1.455

NEEDLE ROLLER BEARINGS FULL COMPLEMENT WITHOUT INNER RINGS

METRIC SERIES

B

- Check for availability.

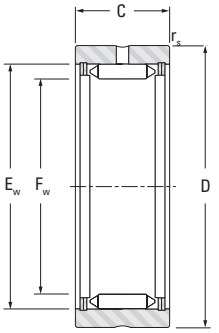

RNA

Shaft Dia.	F_w	D	C	E_w	$r_{s\,min}$	Bearing Designation	Load Ratings Dynamic C	Load Ratings Static C_0	Speed Rating Oil	Speed Rating Grease	C_g	Approx. Wt.
mm in.	mm in.	mm in.	mm in.	mm in.	mm in.		kN lbf.		min^{-1}			kg lbs.
7.3 0.2874	**7.3** 0.2874	**16** 0.6299	**12** 0.472	**12.3** 0.4843	**0.35** 0.014	RNA 1005	**3.95** 888	**4.45** 1000	34000	52000	0.0134	**0.010** 0.022
9.7 0.3819	**9.7** 0.3819	**19** 0.7480	**12** 0.472	**14.7** 0.5787	**0.35** 0.014	RNA 1007	**4.80** 1080	**5.90** 1330	25000	39000	0.0160	**0.013** 0.029
12.1 0.4764	**12.1** 0.4764	**22** 0.8661	**12** 0.472	**17.1** 0.6732	**0.35** 0.014	RNA 1009	**5.60** 1260	**7.40** 1660	20000	31000	0.0184	**0.018** 0.040
14.4 0.5669	**14.4** 0.5669	**24** 0.9449	**12** 0.472	**19.4** 0.7638	**0.35** 0.014	RNA 1010	**6.35** 1430	**8.90** 2000	17000	26000	0.0206	**0.020** 0.044
17.6 0.6929	**17.6** 0.6929	**28** 1.1024	**15** 0.591	**22.6** 0.8898	**0.35** 0.014	RNA 1012	**11.0** 2470	**16.5** 3710	14000	22000	0.0261	**0.034** 0.075
20.8 0.8189	**20.8** 0.8189	**32** 1.2598	**15** 0.591	**25.8** 1.0157	**0.65** 0.026	RNA 1015	**12.4** 2790	**19.5** 4380	12000	18000	0.0292	**0.044** 0.097
22.1 0.8701	**22.1** 0.8701	**35** 1.3780	**22** 0.866	**28.1** 1.1063	**0.65** 0.026	RNA 2015	**23.5** 5280	**37.5** 8430	11000	17000	0.0345	**0.082** 0.181
23.9 0.9409	**23.9** 0.9409	**35** 1.3780	**15** 0.591	**28.9** 1.1378	**0.65** 0.026	RNA 1017	**13.7** 3080	**22.5** 5060	10000	16000	0.0321	**0.047** 0.104
28.7 1.1299	**28.7** 1.1299	**42** 1.6535	**18** 0.709	**34.7** 1.3661	**0.65** 0.026	RNA 1020	**19.3** 4340	**33.5** 7530	8600	13000	0.0374	**0.084** 0.185
	28.7 1.1299	**42** 1.6535	**22** 0.866	**34.7** 1.3661	**0.65** 0.026	RNA 2020	**28.5** 6410	**49.0** 11000	8600	13000	0.0411	**0.104** 0.229
33.5 1.3189	**33.5** 1.3189	**47** 1.8504	**18** 0.709	**39.5** 1.5551	**0.65** 0.026	RNA 1025	**21.5** 4830	**39.0** 8770	7200	11000	0.0415	**0.097** 0.214
	33.5 1.3189	**47** 1.8504	**22** 0.866	**39.5** 1.5551	**0.65** 0.026	RNA 2025	**33.0** 7420	**60.0** 13500	7200	11000	0.0457	**0.122** 0.269
	33.5 1.3189	**47** 1.8504	**30** 1.181	**39.5** 1.5551	**0.65** 0.026	RNA 22025	**52.0** 11700	**94.0** 21100	7200	11000	0.0537	**0.170** 0.375
38.2 1.5039	**38.2** 1.5039	**52** 2.0472	**18** 0.709	**44.2** 1.7402	**0.65** 0.026	RNA 1030	**23.5** 5280	**44.5** 10000	6500	10000	0.0455	**0.107** 0.236
	38.2 1.5039	**52** 2.0472	**22** 0.866	**44.2** 1.7402	**0.65** 0.026	RNA 2030	**34.5** 7760	**66.0** 14800	6500	10000	0.0501	**0.139** 0.306
	38.2 1.5039	**52** 2.0472	**30** 1.181	**44.2** 1.7402	**0.65** 0.026	RNA 22030	**57.0** 12800	**108** 24300	6500	10000	0.0588	**0.193** 0.425
44 1.7323	**44** 1.7323	**58** 2.2835	**18** 0.709	**50.0** 1.9685	**0.65** 0.026	RNA 1035	**26.0** 5850	**51.0** 11500	5600	8600	0.0552	**0.127** 0.280
	44 1.7323	**58** 2.2835	**22** 0.866	**50.0** 1.9685	**0.65** 0.026	RNA 2035	**38.0** 8540	**75.0** 16900	5600	8600	0.0552	**0.160** 0.353
	44 1.7323	**58** 2.2835	**30** 1.181	**50.0** 1.9685	**0.65** 0.026	RNA 22035	**63.0** 14200	**124** 27900	5600	8600	0.0686	**0.225** 0.496

Continued on next page.

Shaft Dia.	F_w	D	C	E_w	$r_{s\,min}$	Bearing Designation	Load Ratings Dynamic C	Load Ratings Static C_0	Speed Rating Oil	Speed Rating Grease	C_g	Approx. Wt.
mm in.	**mm** in.	**mm** in.	**mm** in.	**mm** in.	**mm** in.		**kN** lbf.		min^{-1}			**kg** lbs.
44 1.7323	**44** 1.7323	**62** 2.4409	**30** 1.181	**51.0** 2.0094	**0.65** 0.026	RNA 3030	**64.0** 14400	**125** 28100	5600	8600	0.0607	**0.309** 0.681
49.7 1.9567	**49.7** 1.9567	**65** 2.5591	**18** 0.709	**55.7** 2.1929	**0.85** 0.033	RNA 1040	**28.5** 6410	**58.0** 13000	4900	7600	0.0546	**0.160** 0.353
	49.7 1.9567	**65** 2.5591	**22** 0.866	**55.7** 2.1929	**0.65** 0.026	RNA 2040	**41.5** 9330	**85.0** 19100	4900	7600	0.0601	**0.200** 0.441
	49.7 1.9567	**65** 2.5591	**30** 1.181	**55.7** 2.1929	**0.65** 0.026	RNA 22040	**68.0** 15300	**140** 31500	4900	7600	0.0707	**0.278** 0.613
	49.7 1.9567	**72** 2.8346	**36** 1.417	**56.8** 2.2346	**0.65** 0.026	RNA 3035	**90.0** 20200	**183** 41100	4900	7600	0.0704	**0.545** 1.202
55.4 2.1811	**55.4** 2.1811	**72** 2.8346	**18** 0.709	**61.4** 2.4173	**0.85** 0.033	RNA 1045	**30.5** 6860	**65.0** 14600	4500	6900	0.0590	**0.193** 0.425
	55.4 2.1811	**72** 2.8346	**22** 0.866	**61.4** 2.4173	**0.85** 0.033	RNA 2045	**45.0** 10100	**95.0** 21400	4500	6900	0.0649	**0.242** 0.534
	55.4 2.1811	**80** 3.1496	**36** 1.417	**62.5** 2.4591	**0.85** 0.033	RNA 3040	**97.0** 21800	**204** 45900	4500	6900	0.0759	**0.672** 1.482
62.1 2.4449	**62.1** 2.4449	**80** 3.1496	**20** 0.787	**68.1** 2.6811	**0.85** 0.033	RNA 1050	**33.0** 7420	**73.0** 16400	4000	6100	0.0639	**0.255** 0.562
	62.1 2.4449	**80** 3.1496	**28** 1.102	**68.1** 2.6811	**0.85** 0.033	RNA 2050	**64.0** 14400	**142** 31900	4000	6100	0.0754	**0.375** 0.827
	62.1 2.4449	**85** 3.3465	**38** 1.496	**69.2** 2.7228	**0.85** 0.033	RNA 3045	**105** 23600	**230** 51700	4000	6100	0.0823	**0.710** 1.565
68.8 2.7087	**68.8** 2.7087	**85** 3.3465	**20** 0.787	**74.8** 2.9449	**0.85** 0.033	RNA 1055	**35.5** 7980	**80.0** 18000	3600	5500	0.0687	**0.258** 0.569
	68.8 2.7087	**85** 3.3465	**28** 1.102	**74.8** 2.9449	**0.85** 0.033	RNA 2055	**69.0** 15500	**157** 35300	3600	5500	0.0810	**0.361** 0.796
	68.8 2.7087	**90** 3.5433	**38** 1.496	**75.9** 2.9866	**0.85** 0.033	RNA 3050	**113** 25400	**255** 57300	3600	5500	0.0885	**0.705** 1.55
72.6 2.8583	**72.6** 2.8583	**90** 3.5433	**20** 0.787	**78.6** 3.0945	**0.85** 0.033	RNA 1060	**37.0** 8320	**85.0** 19100	3400	5200	0.0714	**0.283** 0.624
	72.6 2.8583	**90** 3.5433	**28** 1.102	**78.6** 3.0945	**0.85** 0.033	RNA 2060	**72.0** 16200	**165** 37100	3400	5200	0.0842	**0.413** 0.911
	72.6 2.8583	**95** 3.7402	**38** 1.496	**79.6** 3.1339	**0.85** 0.033	RNA 3055	**117** 26300	**268** 60200	3400	5200	0.0811	**0.782** 1.724
78.3 3.0827	**78.3** 3.0827	**95** 3.7402	**20** 0.787	**84.3** 3.3189	**0.85** 0.033	RNA 1065	**41.5** 9330	**97.0** 21800	3200	4900	0.0751	**0.306** 0.675
	78.3 3.0827	**95** 3.7402	**28** 1.102	**84.3** 3.3189	**0.85** 0.033	RNA 2065	**78.0** 17500	**184** 41400	3200	4900	0.0887	**0.433** 0.955
	78.3 3.0827	**100** 3.9370	**38** 1.496	**85.3** 3.3583	**0.85** 0.033	RNA 3060	**123.0** 27700	**290** 65200	3200	4900	0.0966	**0.810** 1.786
83.1 3.2717	**83.1** 3.2717	**100** 3.9370	**20** 0.787	**89.1** 3.5079	**0.85** 0.033	RNA 1070	**43.0** 9670	**103** 23200	2900	4500	0.0784	**0.322** 0.710
	83.1 3.2717	**100** 3.9370	**28** 1.102	**89.1** 3.5079	**0.85** 0.033	RNA 2070	**81.0** 18200	**195** 43800	2900	4500	0.0926	**0.470** 1.036
	83.1 3.2717	**105** 4.1339	**38** 1.496	**90.2** 3.5496	**0.85** 0.033	RNA 3065	**129** 29000	**308** 69200	2900	4500	0.1012	**0.865** 1.907
88 3.4646	**88** 3.4646	**110** 4.3307	**24** 0.945	**95.0** 3.7402	**0.85** 0.033	RNA 1075	**64.0** 14400	**155** 34800	2800	4300	0.0864	**0.577** 1.272

Continued on next page.

NEEDLE ROLLER BEARINGS FULL COMPLEMENT WITHOUT INNER RINGS – *continued*

METRIC SERIES

B

- Check for availability.

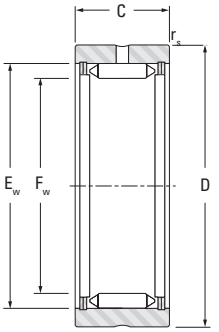

RNA

Shaft Dia.	F_w	D	C	E_w	$r_{s\,min}$	Bearing Designation	Load Ratings Dynamic C	Load Ratings Static C_0	Speed Rating Oil	Speed Rating Grease	C_g	Approx. Wt.
mm in.	**mm** in.	**mm** in.	**mm** in.	**mm** in.	**mm** in.		**kN** lbf.		min^{-1}			**kg** lbs.
88 3.4646	**88** 3.4646	**110** 4.3307	**32** 1.260	**95.0** 3.7402	**0.85** 0.033	RNA 2075	**104** 23400	**253** 56900	2800	4300	0.0983	**0.767** 1.691
	88 3.4646	**110** 4.3307	**38** 1.496	**95.0** 3.7402	**0.85** 0.033	RNA 3070	**134** 30100	**325** 73100	2800	4300	0.1050	**0.906** 1.997
96 3.7795	**96** 3.7795	**115** 4.5276	**24** 0.945	**103.0** 4.0551	**0.85** 0.033	RNA 1080	**68.0** 15300	**170** 38200	2600	4000	0.0918	**0.510** 1.124
	96 3.7795	**115** 4.5276	**32** 1.254	**103.0** 4.0551	**0.85** 0.033	RNA 2080	**110** 24700	**275** 61800	2600	4000	0.1045	**0.694** 1.530
	96 3.7795	**120** 4.7244	**38** 1.496	**103.0** 4.0551	**0.85** 0.033	RNA 3075	**142** 31900	**355** 79800	2600	4000	0.1117	**1.098** 2.421
99.5 3.9173	**99.5** 3.9173	**120** 4.7244	**32** 1.260	**106.5** 4.1929	**1.35** 0.053	RNA 2085	**113** 25400	**285** 64100	2500	3800	0.1072	**0.787** 1.735
	99.5 3.9173	**125** 4.9213	**38** 1.496	**106.5** 4.1929	**0.85** 0.033	RNA 3080	**145** 32600	**365** 82100	2500	3800	0.1145	**1.220** 2.690
104.7 4.1220	**104.7** 4.1220	**125** 4.9213	**32** 1.260	**111.7** 4.3976	**1.35** 0.053	RNA 2090	**117** 26300	**300** 67400	2300	3600	0.1113	**0.837** 1.845
	104.7 4.1220	**130** 5.1181	**38** 1.496	**111.7** 4.3976	**1.35** 0.053	RNA 3085	**150** 33700	**390** 87700	2300	3600	0.1189	**1.252** 2.760
109.1 4.2953	**109.1** 4.2953	**130** 5.1181	**32** 1.260	**116.1** 4.5709	**1.35** 0.053	RNA 2095	**120** 27000	**315** 70800	2300	3500	0.1225	**0.882** 1.944
	109.1 4.2953	**135** 5.3150	**43** 1.693	**116.1** 4.5709	**1.35** 0.053	RNA 3090	**185** 41600	**480** 108000	2300	3500	0.1280	**1.522** 3.355
114.7 4.5157	**114.7** 4.5157	**135** 5.3150	**32** 1.260	**121.7** 4.7913	**1.35** 0.053	RNA 2100	**125** 28100	**330** 74200	2100	3300	0.1188	**0.677** 1.493
	114.7 4.5157	**140** 5.5118	**43** 1.693	**121.7** 4.7913	**1.35** 0.053	RNA 3095	**190** 42700	**505** 114000	2100	3300	0.1327	**1.551** 3.419
119.2 4.6929	**119.2** 4.6929	**140** 5.5118	**32** 1.260	**126.2** 4.9685	**1.35** 0.053	RNA 2105	**129** 29000	**340** 76400	2100	3200	0.1221	**0.941** 2.075
	119.2 4.6929	**145** 5.7087	**43** 1.693	**126.2** 4.9685	**1.35** 0.053	RNA 3100	**195** 43800	**520** 117000	2100	3200	0.1364	**1.645** 3.627
124.5 4.9016	**124.5** 4.9016	**145** 5.7087	**34** 1.339	**131.5** 5.1772	**1.35** 0.053	RNA 2110	**133** 29900	**360** 80900	2000	3000	0.1260	**1.015** 2.238
	124.5 4.9016	**150** 5.9055	**45** 1.772	**131.5** 5.1772	**1.35** 0.053	RNA 3105	**203** 45600	**550** 124000	2000	3000	0.1408	**1.762** 3.885
132.5 5.2165	**132.5** 5.2165	**155** 6.1024	**34** 1.339	**139.5** 5.4921	**1.35** 0.053	RNA 2115	**139** 31200	**380** 85400	1900	2900	0.1318	**1.205** 2.657
	132.5 5.2165	**160** 6.2992	**45** 1.772	**139.5** 5.4921	**1.35** 0.053	RNA 3110	**210** 47200	**580** 130000	1900	2900	0.1471	**2.037** 4.49

Continued on next page.

Shaft Dia.	F_w	D	C	E_w	$r_{s\,min}$	Bearing Designation	Load Ratings Dynamic C	Load Ratings Static C_0	Speed Rating Oil	Speed Rating Grease	C_g	Approx. Wt.
mm in.	**mm** in.	**mm** in.	**mm** in.	**mm** in.	**mm** in.		**kN** lbf.		min^{-1}			**kg** lbs.
137 5.3937	**137** 5.3937	**160** 6.2992	**34** 1.339	**144.0** 5.6693	**1.35** 0.053	RNA 2120	**142** 31900	**395** 88800	1800	2800	0.1350	**1.265** 2.789
	137 5.3937	**165** 6.4961	**45** 1.772	**144.0** 5.6693	**1.35** 0.053	RNA 3115	**215** 48300	**600** 135000	1800	2800	0.1507	**2.140** 4.718
143.5 5.6496	**143.5** 5.6496	**165** 6.4961	**34** 1.339	**150.5** 5.9268	**1.35** 0.053	RNA 2125	**145** 32600	**410** 92200	1800	2700	0.1403	**1.218** 2.685
	143.5 5.6496	**170** 6.6929	**45** 1.772	**150.5** 5.9268	**1.35** 0.053	RNA 3120	**224** 50400	**630** 142000	1800	2700	0.1563	**2.107** 4.645
148 5.8268	**148** 5.8268	**170** 6.6929	**34** 1.339	**155.0** 6.1039	**1.35** 0.053	RNA 2130	**150** 33700	**425** 95500	1700	2600	0.1435	**1.292** 2.848
158 6.2205	**158** 6.2205	**180** 7.0866	**36** 1.417	**165.0** 6.4976	**1.35** 0.053	RNA 2140	**157** 35300	**455** 102000	1600	2400	0.1504	**1.478** 3.258
	158 6.2205	**190** 7.4803	**52** 2.047	**166.0** 6.5354	**1.35** 0.053	RNA 3130	**275** 61800	**790** 178000	1600	2400	0.1691	**3.285** 7.242
170.5 6.7126	**170.5** 6.7126	**195** 7.6772	**36** 1.417	**177.5** 6.9882	**1.35** 0.053	RNA 2150	**165** 37100	**490** 110000	1400	2200	0.1591	**1.790** 3.946
	170.5 6.7126	**205** 8.0709	**52** 2.047	**178.5** 7.0276	**1.35** 0.053	RNA 3140	**290** 65200	**860** 193000	1400	2200	0.1787	**3.840** 8.466
179.3 7.0591	**179.3** 7.0591	**205** 8.0709	**36** 1.417	**186.3** 7.3346	**1.35** 0.053	RNA 2160	**170** 38200	**515** 116000	1400	2100	0.1650	**1.970** 4.343
	179.3 7.0591	**215** 8.4646	**52** 2.047	**187.3** 7.3756	**1.35** 0.053	RNA 3150	**300** 67400	**900** 202000	1400	2100	0.1904	**4.185** 9.226
193.8 7.6299	**193.8** 7.6299	**220** 8.6614	**42** 1.654	**200.8** 7.9055	**1.85** 0.073	RNA 2170	**233** 52400	**720** 162000	1300	2000	0.1852	**2.570** 5.666
	193.8 7.6299	**230** 9.0551	**57** 2.244	**201.9** 7.9496	**1.35** 0.053	RNA 3160	**360** 80900	**1110** 250000	1300	2000	0.2071	**4.955** 10.924
202.6 7.9764	**202.6** 7.9764	**230** 9.0551	**42** 1.654	**209.6** 8.2520	**1.85** 0.073	RNA 2180	**240** 54000	**750** 169000	1200	1900	0.2145	**2.835** 6.250
216 8.5039	**216** 8.5039	**245** 9.6457	**42** 1.654	**223.0** 8.7795	**1.85** 0.073	RNA 2190	**250** 56200	**800** 180000	1200	1800	0.2004	**3.210** 7.077
	216 8.5039	**255** 10.0394	**57** 2.244	**224.1** 8.8236	**1.85** 0.073	RNA 3180	**385** 86600	**1240** 279000	1200	1800	0.2239	**6.040** 13.316
224.1 8.8228	**224.1** 8.8228	**255** 10.0394	**42** 1.654	**231.1** 9.0984	**1.85** 0.073	RNA 2200	**257** 57800	**830** 187000	1100	1700	0.2057	**3.560** 7.848
236 9.2913	**236** 9.2913	**265** 10.4331	**42** 1.654	**243.1** 9.5693	**1.85** 0.073	RNA 2210	**279** 62700	**910** 205000	1000	1600	0.2129	**3.470** 7.650
258.4 10.1732	**258.4** 10.1732	**300** 11.8110	**64** 2.520	**268.4** 10.5677	**1.85** 0.073	RNA 3220	**490** 110000	**1650** 371000	980	1500	0.2519	**8.570** 18.894
269.6 10.6142	**269.6** 10.6142	**300** 11.8110	**49** 1.929	**276.6** 10.8898	**1.85** 0.073	RNA 2240	**345** 77600	**1190** 268000	910	1400	0.2460	**4.985** 10.990
281.9 11.0984	**281.9** 11.0984	**325** 12.7953	**64** 2.520	**291.9** 11.4921	**1.85** 0.073	RNA 3240	**520** 117000	**1800** 405000	850	1300	0.2684	**9.480** 20.900
335 13.1890	**335** 13.1890	**375** 14.7638	**54** 2.126	**343.0** 13.5039	**1.85** 0.073	RNA 2300	**460** 103000	**1690** 380000	720	1100	0.2915	**8.600** 18.960

NEEDLE ROLLER BEARINGS FULL COMPLEMENT WITH INNER RINGS

METRIC SERIES

B

- Check for availability.

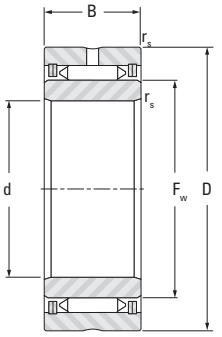

NA

Shaft Dia.	F_w	D	B	E_w	$r_{s\,min}$	Bearing Designation	Load Ratings Dynamic C	Load Ratings Static C_0	Speed Rating Oil	Speed Rating Grease	C_g	Approx. Wt.
mm in.	**mm** in.	**mm** in.	**mm** in.	**mm** in.	**mm** in.		**kN** lbf.		min^{-1}			**kg** lbs.
12 0.4724	**12** 0.4724	**28** 1.1024	**15** 0.591	**17.6** 0.6929	**0.35** 0.014	NA 1012(1)	**11.0** 2470	**16.5** 3710	14000	22000	0.0261	**0.050** 0.110
15 0.5906	**15** 0.5906	**32** 1.2598	**15** 0.591	**20.8** 0.8189	**0.65** 0.026	NA 1015(1)	**12.4** 2790	**19.5** 4380	12000	18000	0.0292	**0.044** 0.097
	15 0.5906	**35** 1.3780	**22** 0.866	**22.1** 0.8701	**0.65** 0.026	NA 2015	**23.5** 5280	**37.5** 8430	11000	17000	0.0345	**0.082** 0.181
17 0.6693	**17** 0.6693	**35** 1.3780	**15** 0.591	**23.9** 0.9409	**0.65** 0.026	NA 1017(1)	**13.7** 3080	**22.5** 5060	10000	16000	0.0321	**0.047** 0.104
20 0.7874	**20** 0.7874	**42** 1.6535	**18** 0.709	**28.7** 1.1299	**0.65** 0.026	NA 1020	**19.3** 4340	**33.5** 7530	8600	13000	0.0374	**0.084** 0.185
	20 0.7874	**42** 1.6535	**22** 0.866	**28.7** 1.1299	**0.65** 0.026	NA 2020	**28.5** 6410	**49.0** 11000	8600	13000	0.0411	**0.104** 0.229
25 0.9843	**25** 0.9843	**47** 1.8504	**18** 0.709	**33.5** 1.3189	**0.65** 0.026	NA 1025	**21.5** 4830	**39.0** 8770	7200	11000	0.0415	**0.097** 0.214
	25 0.9843	**47** 1.8504	**22** 0.866	**33.5** 1.3189	**0.65** 0.026	NA 2025	**33.0** 7420	**60.0** 13500	7200	11000	0.0457	**0.122** 0.269
	25 0.9843	**47** 1.8504	**30** 1.181	**33.5** 1.3189	**0.65** 0.026	NA 22025	**52.0** 11700	**94.0** 21100	7200	11000	0.0537	**0.170** 0.375
30 1.1811	**30** 1.1811	**52** 2.0472	**18** 0.709	**38.2** 1.5039	**0.65** 0.026	NA 1030	**23.5** 5280	**44.5** 10000	6500	10000	0.0455	**0.107** 0.236
	30 1.1811	**52** 2.0472	**22** 0.866	**38.2** 1.5039	**0.65** 0.026	NA 2030	**34.5** 7760	**66.0** 14800	6500	10000	0.0501	**0.139** 0.306
	30 1.1811	**52** 2.0472	**30** 1.181	**38.2** 1.5039	**0.65** 0.026	NA 22030	**57.0** 12800	**108** 24300	6500	10000	0.0588	**0.193** 0.425
	30 1.1811	**62** 2.4409	**30** 1.181	**44.0** 1.7323	**0.65** 0.026	NA 3030	**64.0** 14400	**125** 28100	5600	8600	0.0607	**0.309** 0.681
35 1.3780	**35** 1.3780	**58** 2.2835	**18** 0.709	**44.0** 1.7323	**0.65** 0.026	NA 1035	**26.0** 5850	**51.0** 11500	5600	8600	0.0552	**0.127** 0.280
	35 1.3780	**58** 2.2835	**22** 0.866	**44.0** 1.7323	**0.65** 0.026	NA 2035	**38.0** 8540	**75.0** 16900	5600	8600	0.0552	**0.160** 0.353
	35 1.3780	**58** 2.2835	**30** 1.181	**44.0** 1.7323	**0.65** 0.026	NA 22035	**63.0** 14200	**124** 27900	5600	8600	0.0686	**0.225** 0.496
	35 1.3780	**72** 2.8346	**36** 1.417	**50.0** 1.9685	**0.65** 0.026	NA 3035	**90.0** 20200	**183** 41100	4900	7600	0.0706	**0.545** 1.202
40 1.5748	**40** 1.5748	**65** 2.5591	**18** 0.709	**49.7** 1.9567	**0.85** 0.033	NA 1040	**28.5** 6410	**58.0** 13000	4900	7600	0.0546	**0.160** 0.353
	40 1.5748	**65** 2.5591	**22** 0.866	**49.7** 1.9567	**0.85** 0.033	NA 2040	**41.5** 9330	**85.0** 19100	4900	7600	0.0601	**0.200** 0.441
	40 1.5748	**65** 2.5591	**30** 1.181	**49.7** 1.9567	**0.85** 0.033	NA 22040	**68.0** 15300	**140** 31500	4900	7600	0.0707	**0.278** 0.613
	40 1.5748	**80** 3.1496	**36** 1.417	**55.4** 2.1811	**0.85** 0.033	NA 3040	**97.0** 21800	**204** 45900	4500	6900	0.0759	**0.672** 1.482
45 1.7717	**45** 1.7717	**72** 2.8346	**18** 0.709	**55.4** 2.1811	**0.85** 0.033	NA 1045	**30.5** 6860	**65.0** 14600	4500	6900	0.0590	**0.193** 0.425

(1) No lubrication holes.

Continued on next page.

Shaft Dia.	F_w	D	B	E_w	$r_{s\,min}$	Bearing Designation	Load Ratings Dynamic C	Load Ratings Static C_0	Speed Rating Oil	Speed Rating Grease	C_g	Approx. Wt.
mm in.	**mm** in.	**mm** in.	**mm** in.	**mm** in.	**mm** in.		**kN** lbf.		min^{-1}			**kg** lbs.
45 1.7717	**45** 1.7717	**72** 2.8346	**22** 0.866	**55.4** 2.1811	**0.85** 0.033	NA 2045	**45.0** 10100	**95.0** 21400	4500	6900	0.0649	**0.242** 0.534
	45 1.7717	**85** 3.3465	**38** 1.496	**62.1** 2.4449	**0.85** 0.033	NA 3045	**105.0** 23600	**230** 51700	4000	6100	0.0823	**0.710** 1.565
50 1.9685	**50** 1.9685	**80** 3.1496	**20** 0.787	**62.1** 2.4449	**0.85** 0.033	NA 1050	**33.0** 7420	**73.0** 16400	4000	6100	0.0639	**0.255** 0.562
	50 1.9685	**80** 3.1496	**28** 1.102	**62.1** 2.4449	**0.85** 0.033	NA 2050	**64.0** 14400	**142** 31900	4000	6100	0.0754	**0.375** 0.827
	50 1.9685	**90** 3.5433	**38** 1.496	**68.8** 2.7087	**0.85** 0.033	NA 3050	**113.0** 25400	**255** 57300	3600	5500	0.0885	**0.705** 1.554
55 2.1654	**55** 2.1654	**85** 3.3465	**20** 0.787	**68.8** 2.7087	**0.85** 0.033	NA 1055	**35.5** 7980	**80.0** 18000	3600	5500	0.0687	**0.258** 0.569
	55 2.1654	**85** 3.3465	**28** 1.102	**68.8** 2.7087	**0.85** 0.033	NA 2055	**69.0** 15500	**157** 35300	3600	5500	0.0810	**0.361** 0.796
	55 2.1654	**95** 3.7402	**38** 1.496	**72.6** 2.8583	**0.85** 0.033	NA 3055	**117.0** 26300	**268** 60200	3400	5200	0.0811	**0.782** 1.724
60 2.3622	**60** 2.3622	**90** 3.5433	**20** 0.787	**72.6** 2.8583	**0.85** 0.033	NA 1060	**37.0** 8320	**85.0** 19100	3400	5200	0.0714	**0.283** 0.624
	60 2.3622	**90** 3.5433	**28** 1.102	**72.6** 2.8583	**0.85** 0.033	NA 2060	**72.0** 16200	**165** 37100	3400	5200	0.0842	**0.413** 0.911
	60 2.3622	**100** 3.9370	**38** 1.496	**78.3** 3.0827	**0.85** 0.033	NA 3060	**123.0** 27700	**290** 65200	3200	4900	0.0966	**0.810** 1.786
65 2.5591	**65** 2.5591	**95** 3.7402	**28** 1.102	**78.3** 3.0827	**0.85** 0.033	NA 2065	**78.0** 17500	**184** 41400	3200	4900	0.0887	**0.433** 0.955
	65 2.5591	**105** 4.1339	**38** 1.496	**83.1** 3.2717	**0.85** 0.033	NA 3065	**129.0** 29000	**308** 69200	2900	4500	0.1012	**0.865** 1.907
70 2.7559	**70** 2.7559	**100** 3.9370	**20** 0.787	**83.1** 3.2717	**0.85** 0.033	NA 1070	**43.0** 9670	**103** 23200	2900	4500	0.0784	**0.322** 0.710
	70 2.7559	**100** 3.9370	**28** 1.102	**83.1** 3.2717	**0.85** 0.033	NA 2070	**81.0** 18200	**195** 43800	2900	4500	0.0926	**0.470** 1.036
	70 2.7559	**110** 4.3307	**38** 1.496	**88.0** 3.4646	**0.85** 0.033	NA 3070	**134.0** 30100	**325** 73100	2800	4300	0.1050	**0.906** 1.997
75 2.9528	**75** 2.9528	**110** 4.3307	**32** 1.260	**88.0** 3.4646	**0.85** 0.033	NA 2075	**104.0** 23400	**253** 56900	2800	4300	0.0983	**0.767** 1.691
	75 2.9528	**120** 4.7244	**38** 1.496	**96.0** 3.7795	**0.85** 0.033	NA 3075	**142.0** 31900	**355** 79800	2600	4000	0.1117	**1.098** 2.421
80 3.1496	**80** 3.1496	**115** 4.5276	**24** 0.945	**96.0** 3.7795	**0.85** 0.033	NA 1080	**68.0** 15300	**170** 38200	2600	4000	0.0918	**0.510** 1.124
	80 3.1496	**115** 4.5276	**32** 1.254	**96.0** 3.7795	**0.85** 0.033	NA 2080	**110.0** 24700	**275** 61800	2600	4000	0.1045	**0.694** 1.530
	80 3.1496	**125** 4.9213	**38** 1.496	**99.5** 3.9173	**0.85** 0.033	NA 3080	**145.0** 32600	**365** 82100	2500	3800	0.1145	**1.220** 2.690
85 3.3465	**85** 3.3465	**120** 4.7244	**32** 1.260	**99.5** 3.9173	**1.35** 0.053	NA 2085	**113.0** 25400	**285** 64100	2500	3800	0.1072	**0.787** 1.735
	85 3.3465	**130** 5.1181	**38** 1.496	**104.7** 4.1220	**1.35** 0.053	NA 3085	**150.0** 33700	**390** 87700	2300	3600	0.1189	**1.252** 2.760
90 3.5433	**90** 3.5433	**125** 4.9213	**32** 1.260	**104.7** 4.1220	**1.35** 0.053	NA 2090	**117.0** 26300	**300** 67400	2300	3600	0.1113	**0.837** 1.845
	90 3.5433	**135** 5.3150	**43** 1.693	**109.7** 4.3189	**1.35** 0.053	NA 3090	**185.0** 41600	**480** 108000	2300	3500	0.1283	**1.522** 3.355
95 3.7402	**95** 3.7402	**130** 5.1181	**32** 1.260	**109.1** 4.2953	**1.35** 0.053	NA 2095	**120.0** 27000	**315** 70800	2300	3500	0.1225	**0.882** 1.944
	95 3.7402	**140** 5.5118	**43** 1.693	**114.7** 4.5157	**1.35** 0.053	NA 3095	**190.0** 42700	**505** 114000	2100	3300	0.1327	**1.551** 3.419
100 3.9370	**100** 3.9370	**135** 5.3150	**32** 1.260	**114.7** 4.5157	**1.35** 0.053	NA 2100	**125.0** 28100	**330** 74200	2100	3300	0.1188	**0.677** 1.493

Continued on next page.

NEEDLE ROLLER BEARINGS FULL COMPLEMENT WITH INNER RINGS – *continued*

METRIC SERIES

B

- Check for availability.

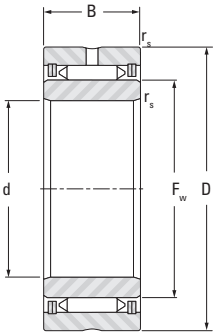

NA

Shaft Dia.	F_w	D	B	E_w	$r_{s\,min}$	Bearing Designation	Load Ratings Dynamic C	Load Ratings Static C_0	Speed Rating Oil	Speed Rating Grease	C_g	Approx. Wt.
mm in.	**mm** in.	**mm** in.	**mm** in.	**mm** in.	**mm** in.		**kN** lbf.		min^{-1}			**kg** lbs.
100 3.9370	**100** 3.9370	**145** 5.7087	**43** 1.693	**119.2** 4.6929	**1.35** 0.053	NA 3100	**195.0** 43800	**520** 117000	2100	3200	0.1364	**1.645** 3.627
105 4.1339	**105** 4.1339	**140** 5.5118	**32** 1.260	**119.2** 4.6929	**1.35** 0.053	NA 2105	**129.0** 29000	**340** 76400	2100	3200	0.1221	**0.941** 2.075
	105 4.1339	**150** 5.9055	**45** 1.772	**124.7** 4.9094	**1.35** 0.053	NA 3105	**203.0** 45600	**550** 124000	2000	3000	0.1409	**1.762** 3.885
110 4.3307	**110** 4.3307	**145** 5.7087	**34** 1.339	**124.7** 4.9094	**1.35** 0.053	NA 2110	**133.0** 29900	**360** 80900	2000	3000	0.1261	**1.015** 2.238
	110 4.3307	**160** 6.2992	**45** 1.772	**132.5** 5.2165	**1.35** 0.053	NA 3110	**210.0** 47200	**580** 130000	1900	2900	0.1471	**2.037** 4.491
115 4.5276	**115** 4.5276	**155** 6.1024	**34** 1.339	**132.5** 5.2165	**1.35** 0.053	NA 2115	**139.0** 31200	**380** 85400	1900	2900	0.1318	**1.205** 2.657
	115 4.5276	**165** 6.4961	**45** 1.772	**137.0** 5.3937	**1.35** 0.053	NA 3115	**215.0** 48300	**600** 135000	1800	2800	0.1507	**2.140** 4.718
120 4.7244	**120** 4.7244	**160** 6.2992	**34** 1.339	**137.0** 5.3937	**1.35** 0.053	NA 2120	**142.0** 31900	**395** 88800	1800	2800	0.1350	**1.265** 2.789
	120 4.7244	**170** 6.6929	**45** 1.772	**143.5** 5.6496	**1.35** 0.053	NA 3120	**224.0** 50400	**630** 142000	1800	2700	0.1563	**2.107** 4.645
125 4.9213	**125** 4.9213	**165** 6.4961	**34** 1.339	**143.5** 5.6496	**1.35** 0.053	NA 2125	**145.0** 32600	**410** 92200	1800	2700	0.1403	**1.218** 2.685
130 5.1181	**130** 5.1181	**170** 6.6929	**34** 1.339	**148.0** 5.8268	**1.35** 0.053	NA 2130	**150.0** 33700	**425** 95500	1700	2600	0.1435	**1.292** 2.848
140 5.5118	**140** 5.5118	**180** 7.0866	**36** 1.417	**158.0** 6.2205	**1.35** 0.053	NA 2140	**157.0** 35300	**455** 102000	1600	2400	0.1504	**1.478** 3.258
	140 5.5118	**205** 8.0709	**52** 2.047	**170.5** 6.7126	**1.35** 0.053	NA 3140	**290.0** 65200	**860** 193000	1400	2200	0.1787	**3.840** 8.466
150 5.9055	**150** 5.9055	**195** 7.6772	**36** 1.417	**170.5** 6.7126	**1.35** 0.053	NA 2150	**165.0** 37100	**490** 110000	1400	2200	0.1591	**1.790** 3.946
160 6.2992	**160** 6.2992	**205** 8.0709	**36** 1.417	**179.3** 7.0591	**1.35** 0.053	NA 2160	**170.0** 38200	**515** 116000	1400	2100	0.1650	**1.970** 4.343
170 6.6929	**170** 6.6929	**220** 8.6614	**42** 1.654	**193.8** 7.6299	**1.35** 0.053	NA 2170	**233.0** 52400	**720** 162000	1300	2000	0.1852	**2.570** 5.666
180 7.0866	**180** 7.0866	**230** 9.0551	**42** 1.654	**202.6** 7.9764	**1.35** 0.053	NA 2180	**240.0** 54000	**750** 169000	1200	1900	0.2145	**2.835** 6.250
190 7.4803	**190** 7.4803	**245** 9.6457	**42** 1.654	**216.0** 8.5039	**1.35** 0.053	NA 2190	**250.0** 56200	**800** 180000	1200	1800	0.2004	**3.210** 7.077
200 7.8740	**200** 7.8740	**255** 10.0394	**42** 1.654	**224.1** 8.8228	**1.35** 0.053	NA 2200	**257.0** 57800	**830** 187000	1100	1700	0.2057	**3.560** 7.848

SINGLE-ROW RADIAL BEARINGS – METRIC SERIES

The radial cylindrical roller bearing has integral end ribs on the outer ring for end guiding the cylindrical rollers. The inner ring is separable for simplified mounting and removal.

All NU design bearings are available on request without inner rings. For this requirement add letter R in the prefix.

The modified line contact between the cylindrical rollers and raceways reduces edge stressing.

REFERENCE STANDARDS ARE:

- DIN 5412 single-row cylindrical roller bearings.
- ISO 246 & DIN 5412 angle rings (thrust collar).

TYPES OF METRIC SERIES CYLINDRICAL ROLLER RADIAL BEARINGS

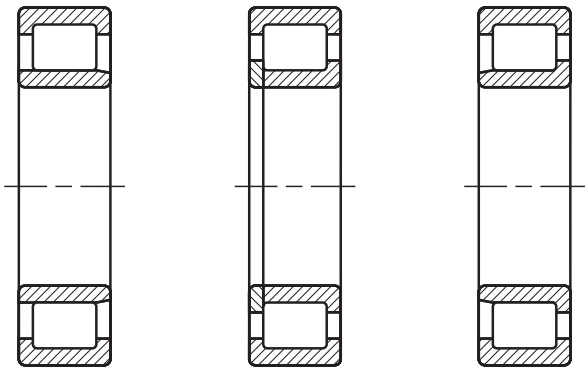

NU NUP NJ

SUFFIXES

E.TVP	E-design bearing, molded window type cage of engineered polymer.
M	Machined brass cages.

CONSTRUCTION

Cylindrical roller radial bearings can be recognized by the arrangement of their end ribs. Bearings of NU design have two ribs on the outer ring, the inner ring being cylindrical, making them well-suited for use as floating bearings. They are separable, which simplifies mounting and removal. Radial cylindrical roller bearings of NJ design have two ribs on the outer ring and one rib on the inner ring. They can accept axial loading in one direction.

Bearings of NUP design have two ribs on the outer ring, and one fixed and one loose rib (a flat washer) on the inner ring. These radial cylindrical roller bearings are used for locating purposes and can accept reversing axial loading. A radial cylindrical roller bearing of NJ design with an HJ Type thrust collar forms a locating bearing similar to the NUP design.

Cylindrical roller bearings of RNU Type, available on request, are supplied without an inner ring so that the cylindrical rollers run directly on a hardened and ground shaft. For most general applications, the shaft may be machined to g6 and the housing bore to K6 tolerances.

CAGE DESIGNS

The majority of cylindrical roller bearings of series 2..E, 22..E, 3..E and 23..E use cages of glass-fiber reinforced nylon. This cage construction allows bearings to be designed with maximum load carrying capability. These cages can also be used at operating temperatures of up to 120° C over extended periods. When bearings are lubricated with an oil, presence of additives may reduce operating life if the temperature exceeds 100° C over extended periods. Furthermore, stagnant oil may affect the performance of the cage at these temperatures, requiring oil change intervals to be strictly observed.

Suffix M indicates that the bearings use machined brass cages.

DIMENSIONAL ACCURACY

TOLERANCES AND BEARING CLEARANCE

Metric series radial cylindrical roller bearings are available in various tolerance classes and clearance groups. Single-row cylindrical roller bearings are made to normal clearance group C0, although bearings with radial clearance groups C2, C3 and C4 may be obtained on request.

For tolerances of radial cylindrical roller bearings see the engineering section. For radial internal clearances of radial cylindrical roller bearings see the engineering section.

ALIGNMENT

The modified line contact between the cylindrical rollers and raceways of cylindrical roller bearings reduces stress concentration at ends of the rollers and provides some aligning capability. The angular alignment of single-row cylindrical roller bearings must not exceed a maximum of four angular minutes at a load of $P/C \leq 0.2$ (P = equivalent dynamic load, kN). At higher applied loads, or with presence of greater misalignment, consultation with engineering is strongly encouraged.

MOUNTING DIMENSIONS

The bearing inner and outer rings should be mounted against the stepped portion on the shaft and the shoulder of the housing. Under no circumstances should they interfere with the shaft or housing fillets. For this reason, the maximum fillet radius $r_{as\ max}$ of the mating component must be no greater than the minimum chamfer dimension of the corresponding cylindrical roller bearing ring corner $r_{s\ min}$.

The shoulder of the mating components must be such that, even with the maximum permissible single chamfer dimension of the corresponding bearing ring, there is an adequate contact surface area. Table B-23 lists the maximum fillet radius $r_{as\ max}$ and the minimum shoulder height. At high axial loads the ribs must be supported over half their height.

$$\left(\frac{H+E}{2} \text{ and } \frac{F+J}{2}\right)$$

where from bearing tables:

- **F** raceway diameter of the inner ring
- **E** raceway diameter of the outer ring
- **J** rib diameter of the inner ring
- **H** rib diameter of the outer ring

The shaft can be mounted and removed if the mounting dimensions shown in Table B-24 on page B-187 are observed.

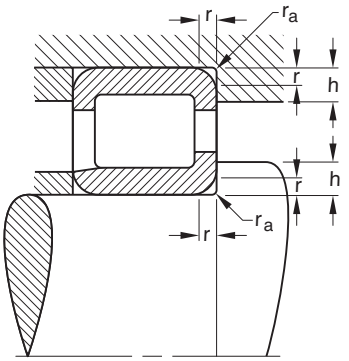

Table B-23. Abutment dimensions as specified in DIN 5418 for metric series bearings

r_s min	r_{as} max	h_{min} Bearing series	
		10	2..E 3..E 22..E 23..E
mm in.	**mm** in.	**mm** in.	**mm** in.
0.3 0.0118	**0.3** 0.0118	**1** 0.0394	**1.2** 0.0472
0.6 0.0236	**0.6** 0.0236	**1.6** 0.630	**2.1** 0.0827
1 0.0394	**1** 0.0394	**2.3** 0.0905	**2.8** 0.1102
1.1 0.0433	**1** 0.0394	**3** 0.1181	**3.5** 0.1378
1.5 0.0591	**1.5** 0.0591	**3.5** 0.1378	**4.5** 0.1772
2 0.0787	**2** 0.0787	**4.4** 0.1732	**5.5** 0.2165
2.1 0.0827	**2.1** 0.0827	**5.1** 0.2008	**6** 0.2362
3 0.1181	**2.5** 0.0984	**6.2** 0.2441	**7** 0.2756
4 0.1575	**3** 0.1181	**7.3** 0.2874	**8.5** 0.3346
5 0.1969	**4** 0.1575	**9** 0.3543	**10** 0.3937
6 0.2362	**5** 0.1969	**11.5** 0.4528	**13** 0.5118

Shaft tolerances for cylindrical roller bearings with inner rings are given in Table B-19 on page B-153.

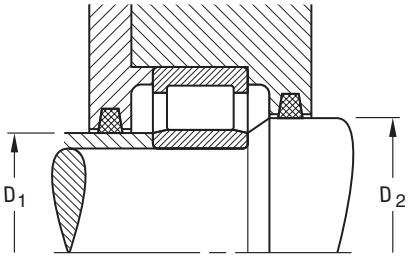

NU

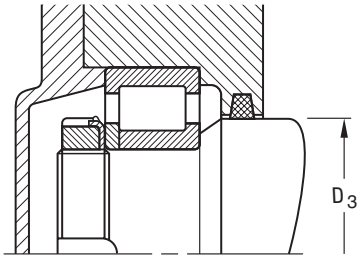

NUP

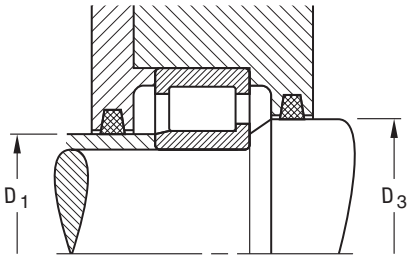

NJ

B

Table B-24. Mounting dimensions for metric series single-row cylindrical roller bearings

Bearing Reference Number	Shaft Dia.	Bearing Series							
		10	22..E	2..E	23..E		3..E		
		D_1	D_2	D_1	D_2	D_3	D_1	D_2	D_3
		max.	min.	max.	min.	min.	max.	min.	min.
	mm in.	**mm** in.	**mm** in.	**mm** in.	**mm** in.	**mm** in.	**mm** in.	**mm** in.	**mm** in.
02	**15** 0.5905			**20** 0.7874	**23** 0.9055	**26** 1.0236			
03	**17** 0.6693			**21** 0.8268	**25** 0.9843	**27** 1.0630	**24** 0.9449	**27** 1.0630	**30** 1.1811
04	**20** 0.7874	**25** 0.9843	**27** 1.0630	**26** 1.0236	**29** 1.1417	**32** 1.2598	**27** 1.0630	**30** 1.1811	**33** 1.2992
05	**25** 0.9843	**30** 1.1811	**32** 1.2598	**31** 1.2205	**34** 1.3386	**37** 1.4567	**33** 1.2992	**37** 1.4567	**40** 1.5748
06	**30** 1.1811	**35** 1.3779	**38** 1.4961	**37** 1.4567	**40** 1.5748	**44** 1.7323	**40** 1.5748	**44** 1.7323	**48** 1.8898
07	**35** 1.3779	**41** 1.6142	**44** 1.7323	**43** 1.6929	**46** 1.8110	**50** 1.9685	**45** 1.7716	**48** 1.8898	**53** 2.0866
08	**40** 1.5748	**46** 1.8110	**49** 1.9291	**49** 1.9291	**52** 2.0472	**56** 2.2047	**51** 2.0079	**55** 2.1653	**60** 2.3622
09	**45** 1.7716	**52** 2.0472	**54** 2.1260	**54** 2.1260	**57** 2.2441	**61** 2.4016	**57** 2.2441	**60** 2.3622	**66** 2.5984
10	**50** 1.9685	**57** 2.2441	**59** 2.3228	**58** 2.2835	**62** 2.4409	**67** 2.6378	**63** 2.4803	**67** 2.6378	**73** 2.8740
11	**55** 2.1653	**63** 2.4803	**66** 2.5984	**65** 2.5591	**68** 2.6772	**73** 2.8740	**69** 2.7165	**72** 2.8346	**80** 3.1496
12	**60** 2.3622	**68** 2.6772	**71** 2.7953	**71** 2.7953	**75** 2.9528	**80** 3.1496	**75** 2.9528	**79** 3.1102	**86** 3.3858
13	**65** 2.5591	**73** 2.8740	**76** 2.9921	**77** 3.0315	**81** 3.1890	**87** 3.4252	**81** 3.1890	**85** 3.3464	**93** 3.6614
14	**70** 2.7559	**78** 3.0709	**82** 3.2283	**82** 3.2284	**86** 3.3858	**92** 3.6220	**87** 3.4252	**92** 3.6220	**100** 3.9370
15	**75** 2.9528	**83** 3.2677	**87** 3.4252	**87** 3.4252	**90** 3.5433	**96** 3.7795	**93** 3.6614	**97** 3.8189	**106** 4.1732
16	**80** 3.1496	**90** 3.5433	**94** 3.7008	**94** 3.7008	**97** 3.8189	**104** 4.0945	**99** 3.8976	**105** 4.1339	**114** 4.4882

B

LOAD RATINGS

CYLINDRICAL ROLLER BEARING MAXIMUM ALLOWABLE AXIAL LOAD

Metric series cylindrical roller bearings of NUP, NJ, as well as NU or NJ designs with a thrust collar can transmit axial loads if they are radially loaded at the same time. The allowable axial load ratio F_a/C of 0.1 maximum depends to a great extent on the magnitude of radial load, the operating speed, type of lubricant used, the operating temperature, and heat transfer conditions at the bearing location. The heat balance achieved at the bearing location is used as a basis for determination of the allowable axial load.

The nomogram on page B-189 should be used to determine the allowable axial load F_{az} based on the following operating conditions:

- The axial load is of constant direction and magnitude.
- Radial load ratio Fr/C < 0.2.
- Ratio of axial load to radial load Fa/Fr<0.4.
- The temperature of the bearing is 80° C at an ambient temperature of 20° C.
- Lubricating oil is ISO VG 100 using oil bath lubrication or circulating oil.
- As an alternative, the bearing may be lubricated with a grease using the above specified base oil and viscosity. Use of EP additives will be necessary, although considerably shorter relubrication intervals may be expected than with purely radially loaded radial cylindrical roller bearings.

EXAMPLE OF USING THE NOMOGRAM

From the lower part of the nomogram, determine the intersection point of the inner ring bore diameter and the dimension series of the bearing. From the upper part, the allowable axial load ratio F_{az}/C can be found as a function of the operating speed, n.

For a cylindrical roller radial bearing **NU2207E.TVP**

$C = 63$ kN; $d = 35$ mm

$n = 2000\ \text{min}^{-1}$

$F_r = 10$ kN

From the nomogram:

$F_{az}/C = 0.06$

Then $F_{az} = 0.06 \bullet 63$

The calculated allowable axial load F_{az} is 3.78 kN

It should be noted that an axial load as high as that determined by means of the nomogram should not be applied if an oil of rated kinematic viscosity lower than ISO VG 100 is used. Suitable EP additives, which are known for fatigue life improving qualities, may allow for an increase in applied axial load subject to thorough testing.

HIGHER APPLIED AXIAL LOADS

Axial loads greater than those determined by means of the nomogram may be considered, providing they are to be applied intermittently. Also, the bearing should be cooled using circulating oil lubrication. If the operating temperature, due to the internal friction and the higher axial load, exceeds 80° C, a more viscous oil must be used.

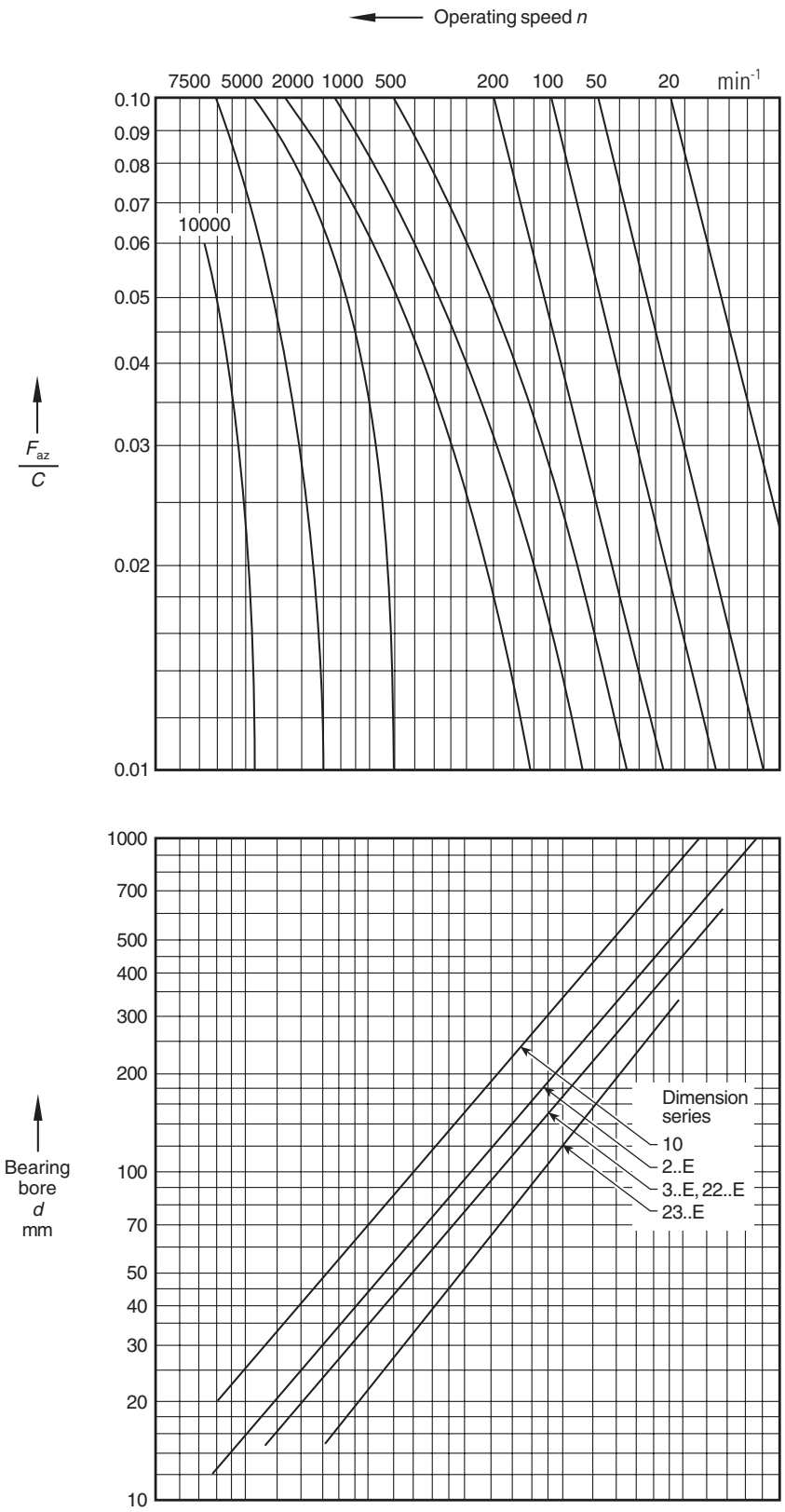

Fig. B-44. Nomogram for determining the allowable axial load F_{az}

CYLINDRICAL ROLLER RADIAL BEARINGS SINGLE-ROW

METRIC SERIES

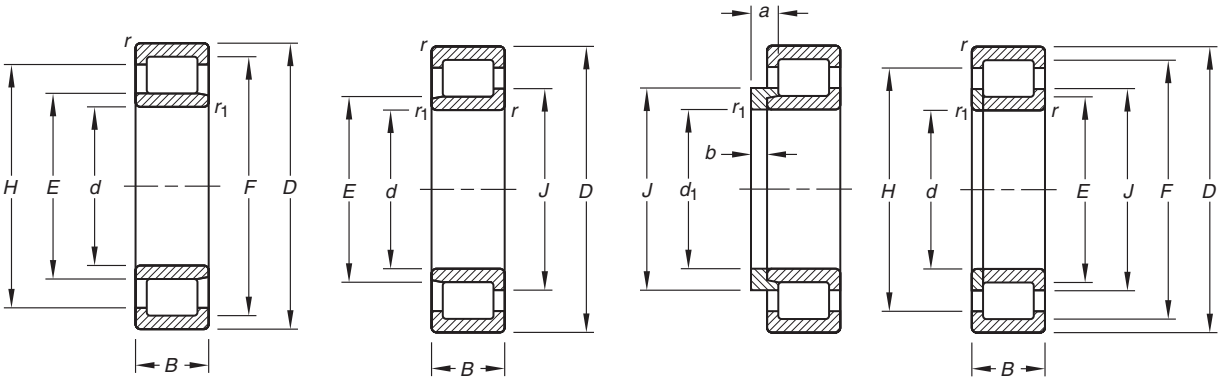

NU NJ NJ with HJ NUP

Bearing Number	Bore	O.D.	Width	chamfer		Backing Dia.		Rib Dia.		a	b	c	Load Ratings		Lubrication Factor	Reference Speed	Thermal Ratings	Wt.	
				min.	min.	Shaft	Housing	Inner	Outer				Dynamic	Static				Brg.	Thrust Collar
	d or d_1	D	B	r_1	r	E	F	J	H				C	C_0	Cg	Grease	Oil		
	mm in.	**mm** in.	**mm** in.	**mm** in.	**mm** in.	**mm** in.	**mm** in.	**mm** in.	**mm** in.	**mm** in.	**mm** in.	**mm** in.	**kN** lbf.			min^{-1}		**kg** lbs.	
NJ202E.TVP	**15** 0.5906	**35** 1.3780	**11** 0.4331	**0.3** 0.01	**0.6** 0.02	**19.3** 0.76	**30.3** 1.19	**21.8** 0.86	**27.8** 1.09	**5.0** 0.20	**2.5** 0.10		**11.6** 2610	**13.9** 3120	0.0327	14000	17000	**0.047** 0.104	**0.015** 0.007
NU202E.TVP	**15** 0.5906	**35** 1.3780	**11** 0.4331	**0.3** 0.01	**0.6** 0.02	**19.3** 0.76	**30.3** 1.19		**27.8** 1.09			**1.0** 0.04	**11.6** 2610	**13.9** 3120	0.0327	14000	17000	**0.047** 0.104	
NJ203E.TVP	**17** 0.6693	**40** 1.5748	**12** 0.4724	**0.3** 0.01	**0.6** 0.02	**22.1** 0.87	**35.1** 1.38	**24.7** 0.97	**32.0** 1.26	**5.5** 0.22	**3.0** 0.12		**16.0** 3600	**18.9** 4250	0.0366	12000	15000	**0.068** 0.150	**0.020** 0.009
NU203E.TVP	**17** 0.6693	**40** 1.5748	**12** 0.4724	**0.3** 0.01	**0.6** 0.02	**22.1** 0.87	**35.1** 1.38		**32.0** 1.26			**1.2** 0.05	**16.0** 3600	**18.9** 4250	0.0366	12000	15000	**0.068** 0.150	
NUP203E.TVP	**17** 0.6693	**40** 1.5748	**12** 0.4724	**0.3** 0.01	**0.6** 0.02	**22.1** 0.87	**35.1** 1.38	**24.7** 0.97	**32.0** 1.26				**16.0** 3600	**18.9** 4250	0.0366	12000	15000	**0.068** 0.150	
NJ2203E.TVP	**17** 0.6693	**40** 1.5748	**16** 0.6299	**0.3** 0.01	**0.6** 0.02	**22.1** 0.87	**35.1** 1.38	**24.7** 0.97	**32.0** 1.26	**6.0** 0.24	**3.0** 0.12		**23.3** 5240	**25.3** 5690	0.0402	11000	13000	**0.091** 0.201	**0.022** 0.010
NU2203E.TVP	**17** 0.6693	**40** 1.5748	**16** 0.6299	**0.3** 0.01	**0.6** 0.02	**22.1** 0.87	**35.1** 1.38		**32.0** 1.26			**1.0** 0.04	**23.3** 5240	**25.3** 5690	0.0402	11000	13000	**0.091** 0.201	
NUP2203E.TVP	**17** 0.6693	**40** 1.5748	**16** 0.6299	**0.3** 0.01	**0.6** 0.02	**22.1** 0.87	**35.1** 1.38	**24.7** 0.97	**32.0** 1.26				**23.3** 5240	**25.3** 5690	0.0402	11000	13000	**0.091** 0.201	
NJ303E.TVP	**17** 0.6693	**47** 1.8504	**14** 0.5512	**0.6** 0.02	**1.1** 0.04	**24.2** 0.95	**40.2** 1.58	**27.6** 1.09	**36.8** 1.45	**6.5** 0.26	**4.0** 0.16		**22.8** 5130	**26.7** 6000	0.0392	11000	13000	**0.121** 0.267	**0.012** 0.026
NU303E.TVP	**17** 0.6693	**47** 1.8504	**14** 0.5512	**0.6** 0.02	**1.1** 0.04	**24.2** 0.95	**40.2** 1.58		**36.8** 1.45			**1.2** 0.05	**22.8** 5130	**26.7** 6000	0.0392	11000	13000	**0.121** 0.267	
NJ204E.TVP	**20** 0.7874	**47** 1.8504	**14** 0.5512	**0.6** 0.02	**1.0** 0.04	**26.5** 1.04	**41.5** 1.63	**29.9** 1.18	**38.4** 1.51	**5.5** 0.22	**3.0** 0.12		**26.5** 5960	**29.0** 6520	0.0436	11000	13000	**0.133** 0.293	**0.024** 0.011
NU204E.TVP	**20** 0.7874	**47** 1.8504	**14** 0.5512	**0.6** 0.02	**1.0** 0.04	**26.5** 1.04	**41.5** 1.63		**38.4** 1.51			**1.0** 0.04	**26.5** 5960	**29.0** 6520	0.0436	11000	13000	**0.133** 0.293	
NUP204E.TVP	**20** 0.7874	**47** 1.8504	**14** 0.5512	**0.6** 0.02	**1.0** 0.04	**26.5** 1.04	**41.5** 1.63	**29.9** 1.18	**38.4** 1.51				**26.5** 5960	**29.0** 6520	0.0433	11000	13000	**0.133** 0.293	
NJ2204E.TVP	**20** 0.7874	**47** 1.8504	**18** 0.7087	**0.6** 0.02	**1.0** 0.04	**26.5** 1.04	**41.5** 1.63	**29.9** 1.18	**38.4** 1.51	**6.5** 0.26	**3.0** 0.12		**32.7** 7350	**34.1** 7670	0.0459	9400	11000	**0.142** 0.313	**0.012** 0.026
NU2204E.TVP	**20** 0.7874	**47** 1.8504	**18** 0.7087	**0.6** 0.02	**1.0** 0.04	**26.5** 1.04	**41.5** 1.63		**38.4** 1.51			**1.8** 0.07	**32.7** 7350	**34.1** 7670	0.0459	9400	11000	**0.142** 0.313	
NUP2204E.TVP	**20** 0.7874	**47** 1.8504	**18** 0.7087	**0.6** 0.02	**1.0** 0.04	**26.5** 1.04	**41.5** 1.63	**29.9** 1.18	**38.4** 1.51				**32.7** 7350	**34.1** 7670	0.0459	9400	11000	**0.142** 0.313	
NJ304E.TVP	**20** 0.7874	**52** 2.0472	**15** 0.5906	**0.6** 0.02	**1.1** 0.04	**27.5** 1.08	**45.5** 1.79	**31.4** 1.24	**41.8** 1.65	**6.5** 0.26	**4.0** 0.16		**28.0** 6290	**32.6** 7330	0.0435	10000	12000	**0.152** 0.335	**0.017** 0.037
NU304E.TVP	**20** 0.7874	**52** 2.0472	**15** 0.5906	**0.6** 0.02	**1.1** 0.04	**27.5** 1.08	**45.5** 1.79		**41.8** 1.65			**1.1** 0.04	**28.0** 6290	**32.6** 7330	0.0435	10000	12000	**0.152** 0.335	

Continued on next page.

Bearing Number	Bore	O.D.	Width	chamfer		Backing Dia.		Rib Dia.		a	b	c	Load Ratings		Lubrication Factor	Reference Speed	Thermal Ratings	Wt.	
				min.	min.	Shaft	Housing	Inner	Outer				Dynamic	Static				Brg.	Thrust Collar
	d or d_1	D	B	r_1	r	E	F	J	H				C	C_0	Cg	Grease	Oil		
	mm in.	mm in.	mm in.	mm in.	mm in.	mm in.	mm in.	mm in.	mm in.	mm in.	mm in.	mm in.	kN lbf.			min^{-1}		kg lbs.	
NUP304E.TVP	**20** 0.7874	**52** 2.0472	**15** 0.5906	**0.6** 0.02	**1.1** 0.04	**27.5** 1.08	**45.5** 1.79	**31.4** 1.24	**41.8** 1.65				**28.0** 6290	**32.6** 7330	0.0435	10000	12000	**0.152** 0.335	
NJ2304E.TVP	**20** 0.7874	**52** 2.0472	**21** 0.8268	**0.6** 0.02	**1.1** 0.04	**27.5** 1.08	**45.5** 1.79	**31.4** 1.24	**41.8** 1.65	**7.5** 0.30	**4.0** 0.16		**40.0** 8990	**42.9** 9640	0.0475	8200	9800	**0.207** 0.456	**0.020** 0.044
NJ205E.TVP	**25** 0.9843	**52** 2.0472	**15** 0.5906	**0.6** 0.02	**1.0** 0.04	**31.5** 1.24	**46.5** 1.83	**34.9** 1.37	**43.3** 1.70	**6.0** 0.24	**3.0** 0.12		**29.8** 6700	**31.0** 6970	0.0489	9600	12000	**0.140** 0.309	**0.031** 0.014
NU205E.TVP	**25** 0.9843	**52** 2.0472	**15** 0.5906	**0.6** 0.02	**1.0** 0.04	**31.5** 1.24	**46.5** 1.83		**43.3** 1.70			**1.3** 0.05	**29.8** 6700	**31.0** 6970	0.0489	9600	12000	**0.140** 0.309	
NUP205E.TVP	**25** 0.9843	**52** 2.0472	**15** 0.5906	**0.6** 0.02	**1.0** 0.04	**31.5** 1.24	**46.5** 1.83	**34.9** 1.37	**43.3** 1.70				**29.8** 6700	**31.0** 6970	0.0486	9600	12000	**0.140** 0.309	
NJ2205E.TVP	**25** 0.9843	**52** 2.0472	**18** 0.7087	**0.6** 0.02	**1.0** 0.04	**31.5** 1.24	**46.5** 1.83	**34.9** 1.37	**43.3** 1.70	**6.5** 0.26	**3.0** 0.12		**36.7** 8250	**36.5** 8210	0.0515	8100	9700	**0.160** 0.353	**0.014** 0.031
NU2205E.TVP	**25** 0.9843	**52** 2.0472	**18** 0.7087	**0.6** 0.02	**1.0** 0.04	**31.5** 1.24	**46.5** 1.83		**43.3** 1.70			**1.7** 0.07	**36.7** 8250	**36.5** 8210	0.0515	8100	9700	**0.160** 0.353	
NUP2205E.TVP	**25** 0.9843	**52** 2.0472	**18** 0.7087	**0.6** 0.02	**1.0** 0.04	**31.5** 1.24	**46.5** 1.83	**34.9** 1.37	**43.3** 1.70				**36.7** 8250	**36.5** 8210	0.0515	8100	9700	**0.160** 0.353	
NJ305E.TVP	**25** 0.9843	**62** 2.4409	**17** 0.6693	**1.1** 0.04	**1.1** 0.04	**34.0** 1.34	**54.0** 2.13	**38.3** 1.51	**50.1** 1.97	**7.0** 0.28	**4.0** 0.16		**38.9** 8750	**42.8** 9620	0.0508	8500	10000	**0.243** 0.536	**0.025** 0.055
NU305E.TVP	**25** 0.9843	**62** 2.4409	**17** 0.6693	**1.1** 0.04	**1.1** 0.04	**34.0** 1.34	**54.0** 2.13		**50.1** 1.97			**1.5** 0.06	**38.9** 8750	**42.8** 9620	0.0508	8500	10000	**0.243** 0.536	
NUP305E.TVP	**25** 0.9843	**62** 2.4409	**17** 0.6693	**1.1** 0.04	**1.1** 0.04	**34.0** 1.34	**54.0** 2.13	**38.3** 1.51	**50.1** 1.97				**38.9** 8750	**42.8** 9620	0.0508	8500	10000	**0.243** 0.536	
NJ2305E.TVP	**25** 0.9843	**62** 2.4409	**24** 0.9449	**1.1** 0.04	**1.1** 0.04	**34.0** 1.34	**54.0** 2.13	**38.3** 1.51	**50.1** 1.97	**8.0** 0.31	**4.0** 0.16		**57.6** 12900	**58.1** 13100	0.0561	6900	8300	**0.348** 0.767	**0.026** 0.057
NU2305E.TVP	**25** 0.9843	**62** 2.4409	**24** 0.9449	**1.1** 0.04	**1.1** 0.04	**34.0** 1.34	**54.0** 2.13		**50.1** 1.97			**1.9** 0.07	**57.6** 12900	**58.1** 13100	0.0561	6900	8300	**0.348** 0.767	
NJ206E.TVP	**30** 1.1811	**62** 2.4409	**16** 0.6299	**0.6** 0.02	**1.0** 0.04	**37.5** 1.48	**55.5** 2.19	**41.4** 1.63	**52.0** 2.05	**7.0** 0.28	**4.0** 0.16		**39.0** 8770	**40.4** 9080	0.0552	8000	9700	**0.206** 0.454	**0.055** 0.025
NU206E.TVP	**30** 1.1811	**62** 2.4409	**16** 0.6299	**0.6** 0.02	**1.0** 0.04	**37.5** 1.48	**55.5** 2.19		**52.0** 2.05			**1.4** 0.06	**39.0** 8770	**40.4** 9080	0.0280	8000	9700	**0.206** 0.454	
NUP206E.TVP	**30** 1.1811	**62** 2.4409	**16** 0.6299	**0.6** 0.02	**1.0** 0.04	**37.5** 1.48	**55.5** 2.19	**41.4** 1.63	**52.0** 2.05				**39.0** 8770	**40.4** 9080	0.0552	8000	9700	**0.206** 0.454	
NJ2206E.TVP	**30** 1.1811	**62** 2.4409	**20** 0.7874	**0.6** 0.02	**1.0** 0.04	**37.5** 1.48	**55.5** 2.19	**41.4** 1.63	**52.0** 2.05	**7.5** 0.30	**4.0** 0.16		**51.5** 11600	**50.1** 11300	0.0591	6800	8100	**0.255** 0.562	**0.025** 0.055
NU2206E.TVP	**30** 1.1811	**62** 2.4409	**20** 0.7874	**0.6** 0.02	**1.0** 0.04	**37.5** 1.48	**55.5** 2.19		**52.0** 2.05			**1.6** 0.06	**51.5** 11600	**50.1** 11300	0.0591	6800	8100	**0.255** 0.562	
NUP2206E.TVP	**30** 1.1811	**62** 2.4409	**20** 0.7874	**0.6** 0.02	**1.0** 0.04	**37.5** 1.48	**55.5** 2.19	**41.4** 1.63	**52.0** 2.05				**51.5** 11600	**50.1** 11300	0.0591	6800	8100	**0.255** 0.562	
NJ306E.TVP	**30** 1.1811	**72** 2.8346	**19** 0.7480	**1.1** 0.04	**1.1** 0.04	**40.5** 1.59	**62.5** 2.46	**45.1** 1.78	**58.3** 2.30	**8.5** 0.33	**5.0** 0.20		**52.1** 11700	**54.6** 12300	0.0581	7400	8800	**0.370** 0.816	**0.042** 0.093
NU306E.TVP	**30** 1.1811	**72** 2.8346	**19** 0.7480	**1.1** 0.04	**1.1** 0.04	**40.5** 1.59	**62.5** 2.46		**58.3** 2.30			**1.9** 0.07	**52.1** 11700	**54.6** 12300	0.0581	7400	8800	**0.370** 0.816	
NUP306E.TVP	**30** 1.1811	**72** 2.8346	**19** 0.7480	**1.1** 0.04	**1.1** 0.04	**40.5** 1.59	**62.5** 2.46	**45.1** 1.78	**58.3** 2.30				**52.1** 11700	**54.6** 12300	0.0581	7400	8800	**0.370** 0.816	
NJ2306E.TVP	**30** 1.1811	**72** 2.8346	**27** 1.0630	**1.1** 0.04	**1.1** 0.04	**40.5** 1.59	**62.5** 2.46	**45.1** 1.78	**58.3** 2.30	**9.5** 0.37	**5.0** 0.20		**79.5** 17900	**75.9** 17100	0.0645	6000	7200	**0.530** 1.169	**0.095** 0.043
NUP2306E.TVP	**30** 1.1811	**72** 2.8346	**27** 1.0630	**1.1** 0.04	**1.1** 0.04	**40.5** 1.59	**62.5** 2.46	**45.1** 1.78	**58.3** 2.30				**79.5** 17900	**75.9** 17100	0.0642	6000	7200	**0.530** 1.169	
NJ207E.TVP	**35** 1.3780	**72** 2.8346	**17** 0.6693	**0.6** 0.02	**1.1** 0.04	**44.0** 1.73	**64.0** 2.52	**48.0** 1.89	**60.1** 2.37	**7.0** 0.28	**4.0** 0.16		**52.2** 11700	**51.8** 11600	0.0624	6800	8200	**0.303** 0.668	**0.073** 0.033
NU2207E.TVP	**35** 1.3780	**72** 2.8346	**23** 0.9055	**0.6** 0.02	**1.1** 0.04	**44.0** 1.73	**64.0** 2.52		**60.1** 2.37			**2.9** 0.11	**67.3** 15100	**63.0** 14200	0.0664	6100	7300	**0.395** 0.871	
NUP2207E.TVP	**35** 1.3780	**72** 2.8346	**23** 0.9055	**0.6** 0.02	**1.1** 0.04	**44.0** 1.73	**64.0** 2.52	**48.0** 1.89	**60.1** 2.37				**67.3** 15100	**63.0** 14200	0.0664	6100	7300	**0.395** 0.871	
NJ307E.TVP	**35** 1.3780	**80** 3.1496	**21** 0.8268	**1.1** 0.04	**1.5** 0.06	**46.2** 1.82	**70.2** 2.76	**51.2** 2.02	**65.7** 2.59	**9.5** 0.37	**6.0** 0.24		**66.4** 14900	**67.3** 15100	0.0653	6700	7900	**0.485** 1.069	**0.132** 0.060

Continued on next page.

CYLINDRICAL ROLLER RADIAL BEARINGS SINGLE-ROW - continued

METRIC SERIES

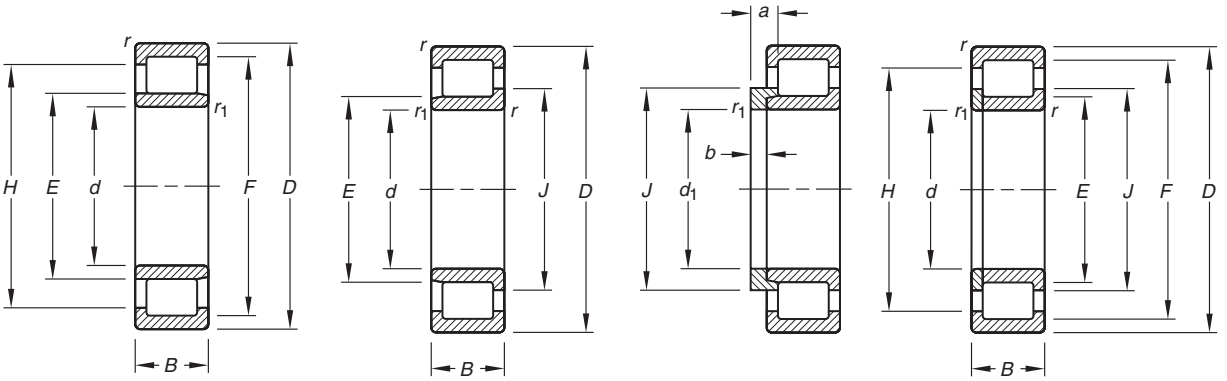

NU NJ NJ with HJ NUP

Bearing Number	Bore	O.D.	Width	chamfer		Backing Dia.		Rib Dia.		a	b	c	Load Ratings		Lubrication Factor	Reference Speed	Thermal Ratings	Wt.	
				min.	min.	Shaft	Housing	Inner	Outer				Dynamic	Static				Brg.	Thrust Collar
	d or d_1	D	B	r_1	r	E	F	J	H				C	C_0	Cg	Grease	Oil		
	mm in.	**mm** in.	**mm** in.	**mm** in.	**mm** in.	**mm** in.	**mm** in.	**mm** in.	**mm** in.	**mm** in.	**mm** in.	**mm** in.	**kN** lbf.			min^{-1}		**kg** lbs.	
NUP307E.TVP	**35** 1.3780	**80** 3.1496	**21** 0.8268	**1.1** 0.04	**1.5** 0.06	**46.2** 1.82	**70.2** 2.76	**51.2** 2.02	**65.7** 2.59				**66.4** 14900	**67.3** 15100	0.0653	6700	7900	**0.485** 1.069	
NU2307E.TVP	**35** 1.3780	**80** 3.1496	**31** 1.2205	**1.1** 0.04	**1.5** 0.06	**46.2** 1.82	**70.2** 2.76		**65.7** 2.59			**3.0** 0.12	**102.0** 22900	**93.7** 21100	0.0724	5600	6600	**0.720** 1.588	
NUP208E.TVP	**40** 1.5748	**80** 3.1496	**18** 0.7087	**1.1** 0.04	**1.1** 0.04	**49.5** 1.95	**71.5** 2.81	**54.1** 2.13	**67.3** 2.65				**57.7** 13000	**57.3** 12900	0.0668	6200	7500	**0.380** 0.838	
NU2208E.TVP	**40** 1.5748	**80** 3.1496	**23** 0.9055	**1.1** 0.04	**1.1** 0.04	**49.5** 1.95	**71.5** 2.81		**67.3** 2.65			**2.3** 0.09	**79.8** 17900	**73.8** 16600	0.0724	5300	6300	**0.490** 1.080	
NUP308E.TVP	**40** 1.5748	**90** 3.5433	**23** 0.9055	**1.5** 0.06	**1.5** 0.06	**52.0** 2.05	**80.0** 3.15	**57.7** 2.27	**74.9** 2.95				**82.7** 18600	**84.0** 18900	0.0714	6000	7100	**0.660** 1.455	
NJ2308E.TVP	**40** 1.5748	**90** 3.5433	**33** 1.2992	**1.5** 0.06	**1.5** 0.06	**52.0** 2.05	**80.0** 3.15	**57.7** 2.27	**74.9** 2.95	**12.5** 0.49	**7.0** 0.28		**123.0** 27700	**115.0** 25900	0.0788	5000	5900	**0.950** 2.095	**0.091** 0.201
NU2209E.TVP	**45** 1.7717	**85** 3.3465	**23** 0.9055	**1.1** 0.04	**1.1** 0.04	**54.5** 2.15	**76.5** 3.01		**72.4** 2.85			**2.3** 0.09	**87.0** 19600	**77.7** 17500	0.0775	4800	5700	**0.530** 1.169	
NUP2209E.TVP	**45** 1.7717	**85** 3.3465	**23** 0.9055	**1.1** 0.04	**1.1** 0.04	**54.5** 2.15	**76.5** 3.01	**59.1** 2.33	**72.4** 2.85				**87.0** 19600	**77.7** 17500	0.0775	4800	5700	**0.530** 1.169	
NJ309E.TVP	**45** 1.7717	**100** 3.9370	**25** 0.9843	**1.5** 0.06	**1.5** 0.06	**58.5** 2.30	**88.5** 3.48	**64.6** 2.54	**83.1** 3.27	**11.5** 0.45	**7.0** 0.28		**104.0** 23400	**101.0** 22700	0.0785	5500	6400	**0.895** 1.973	**0.110** 0.243
NUP210E.TVP	**50** 1.9685	**90** 3.5433	**20** 0.7874	**1.1** 0.04	**1.1** 0.04	**59.5** 2.34	**81.5** 3.21	**64.1** 2.52	**77.4** 3.05				**74.5** 16700	**67.7** 15200	0.0778	5500	6600	**0.490** 1.080	
NU2210E.TVP	**50** 1.9685	**90** 3.5433	**23** 0.9055	**1.1** 0.04	**1.1** 0.04	**59.5** 2.34	**81.5** 3.21		**77.4** 3.05			**2.2** 0.09	**94.1** 21200	**81.2** 18300	0.0824	4400	5200	**0.575** 1.268	
NUP211E.TVP	**55** 2.1654	**100** 3.9370	**21** 0.8268	**1.1** 0.04	**1.5** 0.06	**66.0** 2.60	**90.0** 3.54	**71.0** 2.80	**85.6** 3.37				**100.0** 22500	**87.2** 19600	0.0862	4800	5700	**0.665** 1.466	
NU311E.TVP	**55** 2.1654	**120** 4.7244	**29** 1.1417	**2.0** 0.08	**2.0** 0.08	**70.5** 2.78	**106.5** 4.19		**100.3** 3.95			**3.0** 0.12	**149.0** 33500	**142.0** 31900	0.0628	4700	5500	**1.470** 3.241	
NUP212E.TVP	**60** 2.3622	**110** 4.3307	**22** 0.8661	**1.5** 0.06	**1.5** 0.06	**72.0** 2.83	**100.0** 3.94	**77.7** 3.06	**95.1** 3.74				**109.0** 24500	**98.6** 22200	0.0896	4500	5300	**0.825** 1.819	
NUP2212E.TVP	**60** 2.3622	**110** 4.3307	**28** 1.1024	**1.5** 0.06	**1.5** 0.06	**72.0** 2.83	**100.0** 3.94	**77.7** 3.06	**95.1** 3.74				**158.0** 35500	**132.0** 29700	0.0984	3700	4300	**1.080** 2.381	
NUP2213E.TVP	**65** 2.5591	**120** 4.7244	**31** 1.2205	**1.5** 0.06	**1.5** 0.06	**78.5** 3.09	**108.5** 4.27	**84.6** 3.33	**103.2** 4.06				**188.0** 42300	**153.0** 34400	0.0723	3500	4100	**1.420** 3.131	

NEEDLE ROLLER BEARINGS

INCH SERIES

When there is a requirement for a rolling bearing to support very high dynamic, static or even shock loads with a restricted mounting space – the needle roller bearing may give best results.

REFERENCE STANDARDS ARE:

- **ANSI/ABMA Standard 18.2** – needle roller bearings – radial, inch design.
- **ASTM Standard F 2246** – standard specification for bearing, roller, needle: thick outer ring with rollers and cage.
- **Military Standard MS 51961** – bearing, roller, needle: thick outer ring with rollers and cage.
- **ASTM Standard F2431** – standard specification for ring, bearing, inner: needle roller bearing with thick outer ring.

IDENTIFICATION

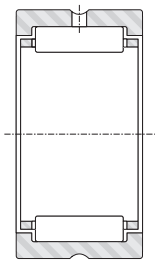

HJ

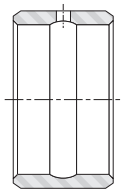

IR

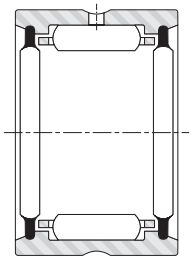

HJ – .2RS

The prefix letters HJ in the needle roller bearing designation denote that the bearing is manufactured to inch nominal dimensions.

Bearings are available with one or two lip-contact seals, as listed on pages B-200 and B-201. One seal is designated by suffix letters RS. Two seals are designated by .2RS.

Inner rings can be used with HJ Series needle roller bearings for applications where it is impractical to use the shaft as the inner raceway. These inch series inner rings are identified by the prefix letters IR.

Because the entire identification code may not appear on the bearing itself, the manufacturer's parts list or another reliable source should always be consulted when ordering bearings for service or field replacement to make certain that the correct bearing with the correct lubricant is used.

CONSTRUCTION

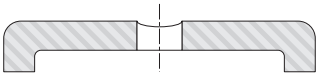

Fig. B-45. One-piece, channel-shaped outer ring

Fig. B-46. Steel cage

The HJ Series needle roller bearing has a one-piece channel-shaped outer ring of bearing-quality steel heat treated to provide maximum load rating. The integral end flanges provide axial location for the needle rollers. The bores of the end flanges serve as piloting surfaces for the cage, locating it to prevent removal of the lubricant film on the raceway.

These bearings have a steel cage, which provides inward retention for the needle rollers. The design assures roller stability and minimizes friction between the cage and the needle rollers. The cage has a maximum strength consistent with the inherent high load ratings of needle roller bearings.

The needle rollers are made from high-carbon chrome steel, through-hardened, ground and lapped to close tolerance with controlled contour for optimum load distribution.

SEALS

Shaft contact seals, which fit into the same housing bore as the heavy-duty needle roller bearings, may be obtained from recognized seal manufacturers. Bearings can also be made available with one or two integral seals. For information and listing of sealed bearings, see pages B-200 and B-201.

B

LUBRICATION

The outer rings of the HJ bearings are supplied with a lubrication groove on the O.D. and a lubrication hole in this groove to facilitate re-lubrication through the outer ring. The IR inner rings have lubrication grooves in the bore and a re-lubrication hole to facilitate re-lubrication through the inner ring.

HJ Series bearings (with or without seals) are typically shipped protected with a corrosion-preventive compound that is not a lubricant. When specified by the customer, HJ Series bearings may be ordered prelubricated with suitable greases and oils.

MOUNTING DIMENSIONS

HJ needle roller bearings are normally mounted in their housings with a clearance fit if the load is stationary relative to the housing, and with a tight transition fit if the load rotates relative to the housing. Because the tight transition fit of the bearing in its housing may result in a reduction of the needle roller complement bore diameter, the shaft raceway diameter should be reduced to a like amount.

The mounting dimensions in the bearing tables (pages B-196 to B-201) list the suggested ISO H7 tolerances for the housing bore and the suggested ISO h6 tolerances for the shaft raceway when the outer ring is to be mounted with a clearance fit. The tables also list the suggested ISO N7 tolerances for the housing bore and the suggested ISO f6 tolerances for the shaft raceway when the outer ring is to be mounted with a tight transition fit.

Other mounting dimensions may be required for special conditions such as:

1. Extremely heavy radial loads.
2. Shock loads.
3. Load rotating relative to both inner and outer rings.
4. Temperature gradient across bearing.
5. Housing with heat expansion coefficient differing from that of the bearing.

If these conditions are expected, please consult your representative.

DIMENSIONAL ACCURACY, BEARINGS

HJ SERIES

Tolerances for the HJ bearings are given in Tables B-25 and B-26. Pages B-196 to B-201 list the nominal outer diameter, width and needle roller complement bore diameter for the HJ bearings.

Table B-25. Outer diameter and width tolerances, HJ bearings

D				Deviaiton from nominal							
Nominal outer diameter				of single mean outer diameter, D_{mp}[1]				of width, C			
>	≤	>	≤	Max.	Min.	Max.	Min.	Max.	Min.	Max.	Min.
mm	mm	in.	in.	mm	mm	in.	in.	mm	mm	in.	in.
19.050	50.800	0.7500	2.0000	+0	-0.013	+0	-0.0005	+0	-0.013	+0	-0.005
50.800	82.550	2.0000	3.2500	+0	-0.015	+0	-0.0006	+0	-0.013	+0	-0.005
82.550	120.650	3.2500	4.7500	+0	-0.020	+0	-0.0008	+0	-0.013	+0	-0.005

[1] "Single mean diameter" is defined as the mean diameter in a single radial plane.

Table B-26. Roller complement bore tolerance, HJ bearings

F_w				Deviaiton from nominal of the smallest single diameter[1] of the roller complement bore, F_m[1]			
Nominal roller complement bore diameter							
>	≤	>	≤	Max.	Min.	Max.	Min.
mm	mm	in.	in.	mm	mm	in.	in.
12.700	15.875	0.5000	0.6250	+0.043	+0.020	+0.0017	+0.0008
15.875	28.575	0.6250	1.1250	+0.046	+0.023	+0.0018	+0.0009
28.575	41.275	1.1250	1.6250	+0.048	+0.025	+0.0019	+0.0010
41.275	47.625	1.6250	1.8750	+0.050	+0.025	+0.0020	+0.0010
47.625	69.850	1.8750	2.7500	+0.053	+0.028	+0.0021	+0.0011
69.850	76.200	2.7500	3.0000	+0.058	+0.028	+0.0023	+0.0011
76.200	101.600	3.0000	4.0000	+0.060	+0.030	+0.0024	+0.0012

[1] "The smallest single diameter of the roller complement bore" is defined as the diameter of the cylinder which, when used as a bearing inner ring, results in zero radial internal clearance in the bearing on at least one diameter.

B

DIMENSIONAL ACCURACY, INNER RINGS

IR SERIES

Tolerances for the IR inner rings are given in Tables B-27 and B-28. Pages B-202 to B-205 list the nominal outer diameter, width and bore diameter for the IR series inner rings.

Table B-27. Bore and width tolerances, IR inner rings

d				Deviaiton from nominal							
Nominal bore diameter				of single mean bore diameter, d_{mp}(1)				of width, B			
>	≤	>	≤	Max.	Min.	Max.	Min.	Max.	Min.	Max.	Min.
mm	mm	in.	in.	mm	mm	in.	in.	mm	mm	in.	in.
7.938	19.050	0.3125	0.7500	+0	-0.010	+0	-0.0004	+0.25	+0.12	+0.010	+0.005
19.050	50.800	0.7500	2.0000	+0	-0.013	+0	-0.0005	+0.25	+0.12	+0.010	+0.005
50.800	82.550	2.0000	3.2500	+0	-0.015	+0	-0.0006	+0.25	+0.12	+0.010	+0.005

(1) "Single mean diameter" is defined as the mean diameter in a single radial plane.

Table B-28. Outer diameter tolerance, IR inner rings

F				Deviaiton from nominal of single mean outer diameter, F_{mp}(1)			
Nominal outer diameter							
>	≤	>	≤	Max.	Min.	Max.	Min.
mm	mm	in.	in.	mm	mm	in.	in.
12.700	15.875	0.5000	0.6250	-0.013	-0.023	-0.0005	-0.0009
15.875	25.400	0.6250	1.0000	-0.018	-0.031	-0.0007	-0.0012
25.400	28.575	1.0000	1.1250	-0.023	-0.036	-0.0009	-0.0014
28.575	34.925	1.1250	1.3750	-0.023	-0.036	-0.0009	-0.0015
34.925	47.625	1.3750	1.8750	-0.025	-0.038	-0.0010	-0.0016
47.625	76.200	1.8750	3.0000	-0.028	-0.040	-0.0011	-0.0018
76.200	95.250	3.0000	3.7500	-0.033	-0.046	-0.0013	-0.0022

(1) "Single mean diameter" is defined as the mean diameter in a single radial plane.

LOAD RATING FACTORS

DYNAMIC LOADS

Needle roller bearings can accommodate only radial loads.

$$P = F_r$$

P = The maximum dynamic radial load that may be applied to a needle roller bearing based on the dynamic load rating, C, given in the bearing tables. This load should be ≤ C/3.

SPECIAL BEARINGS

For needle roller bearings with special dimensions or special features, such as split outer ring, consult your representative.

STATIC LOADS

Needle roller bearings can accommodate only radial loads.

$$P_0 = F_r$$

HJ TYPE

INCH SERIES

- Check for availability.
- Nominal bearing diameters and widths shown.
- Tolerance tables found on page B-194.
- Clearance fit suggested for outer ring when housing is stationary relative to load.
- Tight transition fit suggested if housing rotates relative to load.
- Consult your representative for oscillating applications (e.g., low radial clearance concerns).
- Unmarked end of outer ring should be assembled against housing shoulder to clear maximum allowed housing fillet.
- Meets Military Standard MS 51961 and ASTM F2246.

B

Shaft Dia.	F_w	D	C/B	$r_{s\,min}$	Bearing Designation	Used With Inner Ring Designation[1]	Load Ratings		Speed Rating		Approx. Wt.
							Dynamic	Static			
							C	C_0	Grease	Oil	
in.	**mm** in.	**mm** in.	**mm** in.	**mm** in.			**kN** lbf.		min^{-1}		**kg** lbs.
5/8	**15.875** 0.6250	**28.575** 1.1250	**19.050** 0.750	**0.64** 0.03	HJ-101812	IR-061012	**19.3** 4350	**20.7** 4650	20000	30000	**0.050** 0.11
3/4	**19.050** 0.7500	**31.750** 1.2500	**19.050** 0.750	**1.02** 0.04	HJ-122012	IR-081212	**20.7** 4650	**23.3** 5240	16000	25000	**0.059** 0.13
	19.050 0.7500	**31.750** 1.2500	**25.400** 1.000	**1.02** 0.04	HJ-122016	IR-081216	**27.5** 6190	**33.7** 7580	16000	25000	**0.077** 0.17
7/8	**22.225** 0.8750	**34.925** 1.3750	**19.050** 0.750	**1.02** 0.04	HJ-142212	IR-101412	**23** 5180	**27.9** 6270	13000	21000	**0.064** 0.14
	22.225 0.8750	**34.925** 1.3750	**25.400** 1.000	**1.02** 0.04	HJ-142216	IR-101416	**30.7** 6910	**40.3** 9070	13000	21000	**0.086** 0.19
1	**25.400** 1.0000	**38.100** 1.5000	**19.050** 0.750	**1.02** 0.04	HJ-162412	IR-121612	**25.3** 5680	**32.5** 7300	12000	18000	**0.073** 0.16
	25.400 1.0000	**38.100** 1.5000	**25.400** 1.000	**1.02** 0.04	HJ-162416	IR-121616 IR-131616	**33.6** 7560	**47.2** 10600	12000	18000	**0.095** 0.21
1 1/8	**28.575** 1.1250	**41.275** 1.6250	**25.400** 1.000	**1.02** 0.04	HJ-182616	IR-141816 IR-151816	**36.3** 8170	**53.8** 12100	10000	16000	**0.104** 0.23
	28.575 1.1250	**41.275** 1.6250	**31.750** 1.250	**1.02** 0.04	HJ-182620	IR-141820 IR-151820	**44.9** 10100	**70.3** 15800	10000	16000	**0.132** 0.29
1 1/4	**31.750** 1.2500	**44.450** 1.7500	**25.400** 1.000	**1.02** 0.04	HJ-202816	IR-162016	**37.4** 8410	**57.4** 12900	9100	14000	**0.113** 0.25
	31.750 1.2500	**44.450** 1.7500	**31.750** 1.250	**1.02** 0.04	HJ-202820	IR-162020	**46.3** 10400	**75.2** 16900	9100	14000	**0.145** 0.32
1 3/8	**34.925** 1.3750	**47.625** 1.8750	**25.400** 1.000	**1.02** 0.04	HJ-223016	IR-182216	**39.8** 8950	**64.1** 14400	8200	13000	**0.127** 0.28
	34.925 1.3750	**47.625** 1.8750	**31.750** 1.250	**1.02** 0.04	HJ-223020	IR-182220	**49.4** 11100	**84.1** 18900	8200	13000	**0.159** 0.35
1 1/2	**38.100** 1.5000	**52.388** 2.0625	**25.400** 1.000	**1.52** 0.06	HJ-243316	IR-202416	**47.6** 10700	**72.5** 16300	7600	12000	**0.154** 0.34
	38.100 1.5000	**52.388** 2.0625	**31.750** 1.250	**1.52** 0.06	HJ-243320	IR-192420 IR-202420	**58.7** 13200	**95.2** 21400	7600	12000	**0.195** 0.43
1 5/8	**41.275** 1.6250	**55.563** 2.1875	**25.400** 1.000	**1.52** 0.06	HJ-263516	IR-212616	**48.5** 10900	**76.5** 17200	7000	11000	**0.163** 0.36
	41.275 1.6250	**55.563** 2.1875	**31.750** 1.250	**1.52** 0.06	HJ-263520	IR-212620 IR-222620	**60.1** 13500	**100.5** 22600	7000	11000	**0.209** 0.46
1 3/4	**44.450** 1.7500	**58.738** 2.3125	**25.400** 1.000	**1.52** 0.06	HJ-283716	IR-232816 IR-242816	**49.8** 11200	**81.0** 18200	6400	9900	**0.177** 0.39

[1] See pages B-202 to B-205 for inch series inner rings. Order inner rings separately.
[2] Cg factor for bearing without inner ring.
[3] $r_{a\,max}$ is equal to the minimum bearing chamfer (r_s min) at unmarked end.

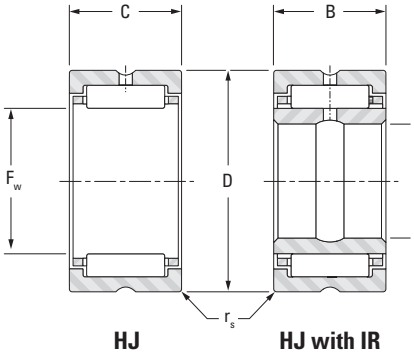

HJ HJ with IR

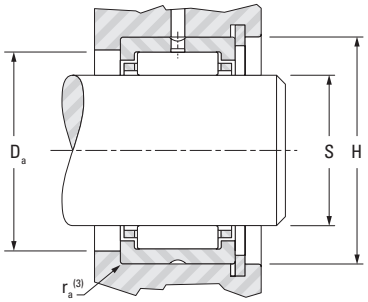

Shaft surface to be 58 HRC or equivalent

C_g (2)	S (ISO h6) Mounting Dimension Clearance Fit Max.	S (ISO h6) Min.	H (ISO H7) Max.	H (ISO H7) Min.	Bearing Designation	S (ISO f6) Tight Transition Fit Max.	S (ISO f6) Min.	H (ISO N7) Max.	H (ISO N7) Min.	D_a Shoulder Dia. ±.38 ±.015	Shaft Dia.
	mm in.	mm in.	mm in.	mm in.		mm in.	mm in.	mm in.	mm in.	mm in.	in.
0.0252	**15.875** 0.6250	**15.865** 0.6246	**28.595** 1.1258	**28.575** 1.1250	HJ-101812	**15.860** 0.6244	**15.850** 0.6240	**28.567** 1.1247	**28.547** 1.1239	**23.83** 0.938	5/8
0.0279	**19.050** 0.7500	**19.037** 0.7495	**31.775** 1.2510	**31.750** 1.2500	HJ-122012	**19.030** 0.7492	**19.017** 0.7487	**31.742** 1.2497	**31.717** 1.2487	**26.97** 1.062	3/4
0.0305	**19.050** 0.7500	**19.037** 0.7495	**31.775** 1.2510	**31.750** 1.2500	HJ-122016	**19.030** 0.7492	**19.017** 0.7487	**31.742** 1.2497	**31.717** 1.2487	**26.97** 1.062	
0.0310	**22.225** 0.8750	**22.212** 0.8745	**34.950** 1.3760	**34.925** 1.3750	HJ-142212	**22.205** 0.8742	**22.192** 0.8737	**34.917** 1.3747	**34.892** 1.3737	**30.18** 1.188	7/8
0.0340	**22.225** 0.8750	**22.212** 0.8745	**34.950** 1.3760	**34.925** 1.3750	HJ-142216	**22.205** 0.8742	**22.192** 0.8737	**34.917** 1.3747	**34.892** 1.3737	**30.18** 1.188	
0.0340	**25.400** 1.0000	**25.387** 0.9995	**38.125** 1.5010	**38.100** 1.5000	HJ-162412	**25.380** 0.9992	**25.367** 0.9987	**38.092** 1.4997	**38.067** 1.4987	**33.32** 1.312	1
0.0373	**25.400** 1.0000	**25.387** 0.9995	**38.125** 1.5010	**38.100** 1.5000	HJ-162416	**25.380** 0.9992	**25.367** 0.9987	**38.092** 1.4997	**38.067** 1.4987	**33.32** 1.312	
0.0404	**28.575** 1.1250	**28.562** 1.1245	**41.300** 1.6260	**41.275** 1.6250	HJ-182616	**28.555** 1.1242	**28.542** 1.1237	**41.267** 1.6247	**41.242** 1.6237	**36.53** 1.438	1 1/8
0.0433	**28.575** 1.1250	**28.562** 1.1245	**41.300** 1.6260	**41.275** 1.6250	HJ-182620	**28.555** 1.1242	**28.542** 1.1237	**41.267** 1.6247	**41.242** 1.6237	**36.53** 1.438	
0.0430	**31.750** 1.2500	**31.735** 1.2494	**44.475** 1.7510	**44.450** 1.7500	HJ-202816	**31.725** 1.2490	**31.709** 1.2484	**44.442** 1.7497	**44.417** 1.7487	**39.67** 1.562	1 1/4
0.0460	**31.750** 1.2500	**31.735** 1.2494	**44.475** 1.7510	**44.450** 1.7500	HJ-202820	**31.725** 1.2490	**31.709** 1.2484	**44.442** 1.7497	**44.417** 1.7487	**39.67** 1.562	
0.0460	**34.925** 1.3750	**34.910** 1.3744	**47.650** 1.8760	**47.625** 1.8750	HJ-223016	**34.900** 1.374	**34.884** 1.3734	**47.617** 1.8747	**47.592** 1.8737	**42.88** 1.688	1 3/8
0.0492	**34.925** 1.3750	**34.910** 1.3744	**47.650** 1.8760	**47.625** 1.8750	HJ-223020	**34.900** 1.3740	**34.884** 1.3734	**47.617** 1.8747	**47.592** 1.8737	**42.88** 1.688	
0.0480	**38.100** 1.5000	**38.085** 1.4994	**52.418** 2.0637	**52.388** 2.0625	HJ-243316	**38.075** 1.4990	**38.059** 1.4984	**52.380** 2.0622	**52.349** 2.0610	**47.63** 1.875	1 1/2
0.0514	**38.100** 1.5000	**38.085** 1.4994	**52.418** 2.0637	**52.388** 2.0625	HJ-243320	**38.075** 1.4990	**38.059** 1.4984	**52.380** 2.0622	**52.349** 2.0610	**47.63** 1.875	
0.0503	**41.275** 1.6250	**41.260** 1.6244	**55.593** 2.1887	**55.563** 2.1875	HJ-263516	**41.250** 1.6240	**41.234** 1.6234	**55.555** 2.1872	**55.524** 2.1860	**50.80** 2.000	1 5/8
0.0539	**41.275** 1.6250	**41.260** 1.6244	**55.593** 2.1887	**55.563** 2.1875	HJ-263520	**41.250** 1.6240	**41.234** 1.6234	**55.555** 2.1872	**55.524** 2.1860	**50.80** 2.000	
0.0527	**44.450** 1.7500	**44.435** 1.7494	**58.768** 2.3137	**58.738** 2.3125	HJ-283716	**44.425** 1.7490	**44.409** 1.7484	**58.730** 2.3122	**58.699** 2.3110	**53.98** 2.125	1 3/4

Continued on next page.

HJ TYPE — *continued*

INCH SERIES

- Check for availability.
- Nominal bearing diameters and widths shown.
- Tolerance tables found on page B-194.
- Clearance fit suggested for outer ring when housing is stationary relative to load.
- Tight transition fit suggested if housing rotates relative to load.
- Consult your representative for oscillating applications (e.g., low radial clearance concerns).
- Unmarked end of outer ring should be assembled against housing shoulder to clear maximum allowed housing fillet ($r_{a\ max}$[3]).
- Meets Military Standard MS 51961 and ASTM F2246.

Shaft Dia.	F_w	D	C/B	$r_{s\ min}$	Bearing Designation	Used With Inner Ring Designation[1]	Load Ratings Dynamic C	Load Ratings Static C_0	Speed Rating Grease	Speed Rating Oil	Approx. Wt.
in.	**mm** in.	**mm** in.	**mm** in.	**mm** in.			**kN** lbf.		min^{-1}		**kg** lbs.
1 3/4	**44.450** 1.7500	**58.738** 2.3125	**31.750** 1.250	**1.52** 0.06	HJ-283720	IR-222820 IR-232820 IR-253820	**61.8** 13900	**106** 23900	6400	9900	**0.222** 0.49
1 7/8	**47.625** 1.8750	**61.913** 2.4375	**31.750** 1.250	**1.52** 0.06	HJ-303920	IR-253020	**65.4** 14700	**117** 26300	6000	9200	**0.236** 0.52
2	**50.800** 2.0000	**65.088** 2.5625	**25.400** 1.000	**1.52** 0.06	HJ-324116	IR-273216	**53.8** 12100	**93.0** 20900	5600	8600	**0.200** 0.44
	50.800 2.0000	**65.088** 2.5625	**31.750** 1.250	**1.52** 0.06	HJ-324120	IR-243220 IR-253220 IR-263220 IR-273220	**66.7** 15000	**122** 27500	5600	8600	**0.249** 0.55
2 1/4	**57.150** 2.2500	**76.200** 3.0000	**38.100** 1.500	**1.52** 0.06	HJ-364824	IR-283624	**89.9** 20200	**164** 36900	5000	7600	**0.458** 1.01
	57.150 2.2500	**76.200** 3.0000	**44.450** 1.750	**1.52** 0.06	HJ-364828	IR-283628	**104** 23400	**198** 44500	5000	7600	**0.531** 1.17
2 1/2	**63.500** 2.5000	**82.550** 3.2500	**38.100** 1.500	**2.03** 0.08	HJ-405224	IR-314024 IR-324024	**97.0** 21800	**187** 42100	4400	6800	**0.499** 1.10
	63.500 2.5000	**82.550** 3.2500	**44.450** 1.750	**2.03** 0.08	HJ-405228	IR-314028 IR-324028	**97.0** 25200	**187** 50800	4400	6800	**0.499** 1.29
2 3/4	**69.850** 2.7500	**88.900** 3.5000	**25.400** 1.000	**2.03** 0.08	HJ-445616	—	**67.2** 15100	**120** 27000	4000	6200	**0.363** 0.80
	69.850 2.7500	**88.900** 3.5000	**38.100** 1.500	**2.03** 0.08	HJ-445624	IR-364424	**101** 22700	**203** 45700	4000	6200	**0.544** 1.20
	69.850 2.7500	**88.900** 3.5000	**44.450** 1.750	**2.03** 0.08	HJ-445628	IR-354428 IR-364428	**117** 26300	**245** 55100	4000	6200	**0.635** 1.40
3	**76.200** 3.0000	**95.250** 3.7500	**38.100** 1.500	**2.03** 0.08	HJ-486024	IR-404824	**107** 24100	**226** 50900	3700	5600	**0.585** 1.29
	76.200 3.0000	**95.250** 3.7500	**44.450** 1.750	**2.03** 0.08	HJ-486028	IR-384828 IR-404828	**124** 27900	**273** 61400	3700	5600	**0.685** 1.51
3 1/4	**82.550** 3.2500	**107.950** 4.2500	**44.450** 1.750	**2.03** 0.08	HJ-526828	IR-445228	**162** 36400	**305** 68600	3400	5300	**1.016** 2.24
	82.550 3.2500	**107.950** 4.2500	**50.800** 2.000	**2.03** 0.08	HJ-526832	IR-445232	**184** 41300	**358** 80500	3400	5300	**1.161** 2.56
3 1/2	**88.900** 3.5000	**114.300** 4.5000	**50.800** 2.000	**2.03** 0.08	HJ-567232	IR-475632 IR-485632	**187** 42000	**375** 84300	3200	4900	**1.238** 2.73

(1) See pages B-202 to B-205 for inch series inner rings. Order inner rings separately.
(2) Cg factor for bearing without inner ring.
(3) $r_{a\ max}$ is equal to the minimum bearing chamfer (r_s min) at unmarked end.

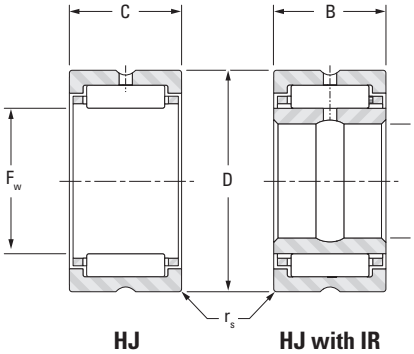

HJ HJ with IR

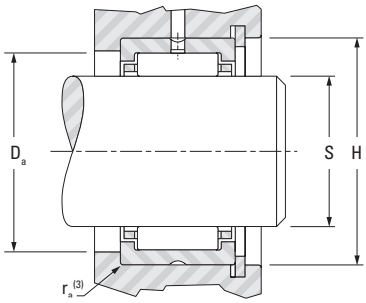

Shaft surface to be 58 HRC or equivalent

C_g (2)	S (ISO h6) Mounting Dimension Clearance Fit Max.	S (ISO h6) Min.	H (ISO H7) Max.	H (ISO H7) Min.	Bearing Designation	S (ISO f6) Mounting Dimension Tight Transition Fit Max.	S (ISO f6) Min.	H (ISO N7) Max.	H (ISO N7) Min.	D_a Shoulder Dia. ±.38 ±.015	Shaft Dia.
	mm in.	mm in.	mm in.	mm in.		mm in.	mm in.	mm in.	mm in.	mm in.	in.
0.0564	**44.450** 1.7500	**44.435** 1.7494	**58.768** 2.3137	**58.738** 2.3125	HJ-283720	**44.425** 1.7490	**44.409** 1.7484	**58.730** 2.3122	**58.699** 2.3110	**53.98** 2.125	
0.0595	**47.625** 1.8750	**47.610** 1.8744	**61.943** 2.4387	**61.913** 2.4375	HJ-303920	**47.600** 1.8740	**47.584** 1.8734	**61.905** 2.4372	**61.874** 2.4360	**57.15** 2.250	1 7/8
0.0578	**50.800** 2.0000	**50.782** 1.9993	**65.118** 2.5637	**65.088** 2.5625	HJ-324116	**50.770** 1.9988	**50.752** 1.9981	**65.080** 2.5622	**65.049** 2.5610	**60.33** 2.375	
0.0618	**50.800** 2.0000	**50.782** 1.9993	**65.118** 2.5637	**65.088** 2.5625	HJ-324120	**50.770** 1.9988	**50.752** 1.9981	**65.080** 2.5622	**65.049** 2.5610	**60.33** 2.375	2
0.0683	**57.150** 2.2500	**57.132** 2.2493	**76.230** 3.0012	**76.200** 3.0000	HJ-364824	**57.120** 2.2488	**57.102** 2.2481	**76.192** 2.9997	**76.162** 2.9985	**68.28** 2.688	2 1/4
0.0715	**57.150** 2.2500	**57.132** 2.2493	**76.230** 3.0012	**76.200** 3.0000	HJ-364828	**57.120** 2.2488	**57.102** 2.2481	**76.192** 2.9997	**76.162** 2.9985	**68.28** 2.688	
0.0739	**63.500** 2.5000	**63.482** 2.4993	**82.586** 3.2514	**82.550** 3.2500	HJ-405224	**63.470** 2.4988	**63.452** 2.4981	**82.537** 3.2495	**82.502** 3.2481	**74.63** 2.938	2 1/2
0.0774	**63.500** 2.5000	**63.482** 2.4993	**82.586** 3.2514	**82.550** 3.2500	HJ-405228	**63.470** 2.4988	**63.452** 2.4981	**82.537** 3.2495	**82.502** 3.2481	**74.63** 2.938	
0.0690	**69.850** 2.7500	**69.832** 2.7493	**88.936** 3.5014	**88.900** 3.5000	HJ-445616	**69.820** 2.7488	**69.802** 2.7481	**88.887** 3.4995	**88.852** 3.4981	**80.98** 3.188	
0.0786	**69.850** 2.7500	**69.832** 2.7493	**88.936** 3.5014	**88.900** 3.5000	HJ-445624	**69.820** 2.7488	**69.802** 2.7481	**88.887** 3.4995	**88.852** 3.4981	**80.98** 3.188	2 3/4
0.0823	**69.850** 2.7500	**69.832** 2.7493	**88.936** 3.5014	**88.900** 3.5000	HJ-445628	**69.820** 2.7488	**69.802** 2.7481	**88.887** 3.4995	**88.852** 3.4981	**80.98** 3.188	
0.0839	**76.200** 3.0000	**76.182** 2.9993	**95.286** 3.7514	**95.250** 3.7500	HJ-486024	**76.170** 2.9988	**76.152** 2.9981	**95.237** 3.7495	**95.202** 3.7481	**87.33** 3.438	3
0.0879	**76.200** 3.0000	**76.182** 2.9993	**95.286** 3.7514	**95.250** 3.7500	HJ-486028	**76.170** 2.9988	**76.152** 2.9981	**95.237** 3.7495	**95.202** 3.7481	**87.33** 3.438	
0.0888	**82.550** 3.2500	**82.527** 3.2491	**107.986** 4.2514	**107.950** 4.2500	HJ-526828	**82.514** 3.2486	**82.492** 3.2477	**107.937** 4.2495	**107.902** 4.2481	**98.43** 3.875	3 1/4
0.0924	**82.550** 3.2500	**82.527** 3.2491	**107.986** 4.2514	**107.950** 4.2500	HJ-526832	**82.514** 3.2486	**82.492** 3.2477	**107.937** 4.2495	**107.902** 4.2481	**98.43** 3.875	
0.0965	**88.900** 3.5000	**88.877** 3.4991	**114.336** 4.5014	**114.300** 4.5000	HJ-567232	**88.864** 3.4986	**88.842** 3.4977	**114.287** 4.4995	**114.252** 4.4981	**104.78** 4.125	3 1/2

SEALED HEAVY-DUTY NEEDLE ROLLER BEARINGS

INCH SERIES

- Bearing diameters and widths listed are nominal.
- For inspection purposes, see tolerance tables on page B-194.
- Available with one or two lip-contact seals designed to retain lubricant and exclude foreign material.
- Single seals are normally installed in the stamped end of bearing.
- Seals limit the bearing operating temperature between -30° C and +110° C (-25° F and +225° F).
- For operating temperature outside of the above range or if seals are exposed to unusual fluids, please consult your representative.

Shaft Dia.	F_w	D	C/B	$r_{s\,min}$	Bearing Designation		Used With Inner Ring[1]	Load Ratings		Speed Rating[2]	C_g
					One Seal	Two Seals		Dynamic C	Static C_0		
in.	mm in.	mm in.	mm in.	mm in.				kN lbf.		min^{-1}	
5/8	**15.875** 0.6250	**28.575** 1.1250	**25.40** 1.000	**0.64** 0.03	HJ-101816RS	HJ-101816.2RS	—	**19.3** 4350	**20.7** 4650	12000	0.025
3/4	**19.050** 0.7500	**31.750** 1.2500	**25.40** 1.000	**1.02** 0.04	HJ-122016RS	HJ-122016.2RS	IR-081216	**20.7** 4650	**23.3** 5240	10000	0.028
7/8	**22.225** 0.8750	**34.925** 1.3750	**25.40** 1.000	**1.02** 0.04	HJ-142216RS	HJ-142216.2RS	IR-101416	**23.0** 5180	**27.9** 6270	8700	0.031
1	**25.400** 1.0000	**38.100** 1.5000	**25.40** 1.000	**1.02** 0.04	HJ-162416RS	HJ-162416.2RS	IR-121616 IR-131616	**25.3** 5680	**32.5** 7300	7600	0.034
1 1/8	**28.575** 1.1250	**41.275** 1.6250	**31.75** 1.250	**1.02** 0.04	HJ-182620RS	HJ-182620.2RS	IR-141820	**36.3** 8170	**53.8** 12100	6800	0.040
1 1/4	**31.750** 1.2500	**44.450** 1.7500	**31.75** 1.250	**1.02** 0.04	HJ-202820RS	HJ-202820.2RS	IR-162020	**37.4** 8410	**57.4** 12900	6100	0.043
1 3/8	**34.925** 1.3750	**47.625** 1.8750	**31.75** 1.250	**1.02** 0.04	HJ-223020RS	HJ-223020.2RS	IR-182220	**39.8** 8950	**64.1** 14400	5600	0.046
1 1/2	**38.100** 1.5000	**52.388** 2.0625	**31.75** 1.250	**1.52** 0.06	HJ-243320RS	HJ-243320.2RS	IR-192420	**47.6** 10700	**72.5** 16300	5100	0.0480
1 5/8	**41.275** 1.6250	**55.563** 2.1875	**31.75** 1.250	**1.52** 0.06	HJ-263520RS	HJ-263520.2RS	IR-212620	**48.5** 10900	**76.5** 17200	2400	0.050
1 3/4	**44.450** 1.7500	**58.738** 2.3125	**31.75** 1.250	**1.52** 0.06	HJ-283720RS	HJ-283720.2RS	IR-222820 IR-232820 IR-242820	**49.8** 11200 —	**81.0** 18200 —	4400	0.053
2	**50.800** 2.0000	**65.088** 2.5625	**31.75** 1.250	**1.52** 0.06	HJ-324120RS	HJ-324120.2RS	IR-243220 IR-253220 IR-263220 IR-273220	**53.8** 12100 — —	**93.0** 20900 — —	3800	0.058
2 1/4	**57.150** 2.2500	**76.200** 3.0000	**44.45** 1.750	**1.52** 0.06	HJ-364828RS	HJ-364828.2RS	IR-283628	**89.9** 20200	**164.1** 36900	1700	0.068
2 1/2	**63.500** 2.5000	**82.550** 3.2500	**44.45** 1.750	**2.03** 0.08	HJ-405228RS	HJ-405228.2RS	IR-314028 IR-324028	**97.0** 21800 —	**187.3** 42100 —	3100	0.074
2 3/4	**69.850** 2.7500	**88.900** 3.5000	**44.45** 1.750	**2.03** 0.08	HJ-445628RS	HJ-445628.2RS	IR-354428 IR-364428	**101.0** 22700	**203.3** 45700	1400	0.079
3	**76.200** 3.0000	**95.250** 3.7500	**44.45** 1.750	**2.03** 0.08	HJ-486028RS	HJ-486028.2RS	IR-384828 IR-404828	**107.2** 24100	**226.4** 50900	2500	0.084

(1) See pages B-202 to B-205 for inch series inner rings. Order inner rings separately.
(2) Based on standard seal shaft contact speed of 5 m/sec., 1000 ft./min.
(3) $r_{a\,max}$ is equal to the minimum bearing chamfer ($r_{s\,min}$) at unmarked end.

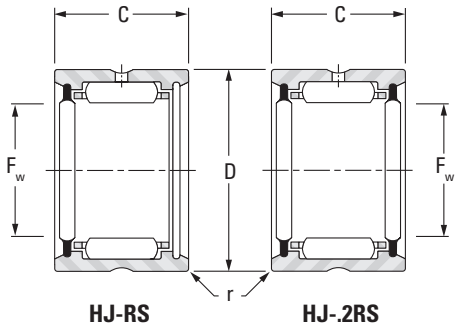

HJ-RS HJ-.2RS

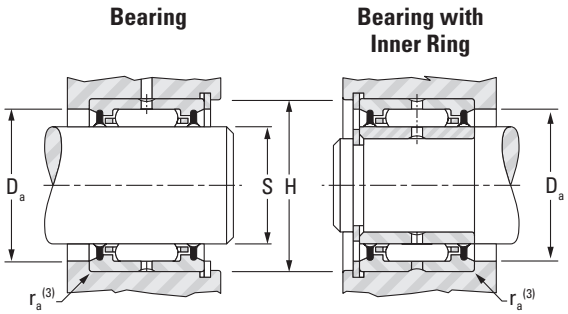

Shaft surface to be 58 HRC or equivalent

Approx. Wt.	S (ISO h6) Mounting Dimension Clearance Fit Max.	S (ISO h6) Mounting Dimension Clearance Fit Min.	H (ISO H7) Mounting Dimension Clearance Fit Max.	H (ISO H7) Mounting Dimension Clearance Fit Min.	Bearing Designation	S (ISO f6) Mounting Dimension Tight Transition Fit Max.	S (ISO f6) Mounting Dimension Tight Transition Fit Min.	H (ISO N7) Mounting Dimension Tight Transition Fit Max.	H (ISO N7) Mounting Dimension Tight Transition Fit Min.	D_a Shoulder Dia. ±.38 ±.015	Shaft Dia.
kg lbs.	**mm** in.	**mm** in.	**mm** in.	**mm** in.		**mm** in.	**mm** in.	**mm** in.	**mm** in.	**mm** in.	in.
0.07 0.15	**15.875** 0.6250	**15.865** 0.6246	**28.595** 1.1258	**28.575** 1.1250	HJ-101816-	**15.860** 0.6244	**15.850** 0.6240	**28.567** 1.1247	**28.547** 1.1239	**23.83** 0.938	5/8
0.08 0.17	**19.050** 0.7500	**19.037** 0.7495	**31.775** 1.2510	**31.750** 1.2500	HJ-122016-	**19.030** 0.7492	**19.017** 0.7487	**31.742** 1.2497	**31.717** 1.2487	**26.97** 1.062	3/4
0.09 0.19	**22.225** 0.8750	**22.212** 0.8745	**34.950** 1.3760	**34.925** 1.3750	HJ-142216-	**22.205** 0.8742	**22.192** 0.8737	**34.917** 1.3747	**34.892** 1.3737	**30.18** 1.188	7/8
0.10 0.21	**25.400** 1.0000	**25.387** 0.9995	**38.125** 1.5010	**38.100** 1.5000	HJ-162416-	**25.380** 0.9992	**25.367** 0.9987	**38.092** 1.4997	**38.067** 1.4987	**33.32** 1.312	1
0.13 0.29	**28.575** 1.1250	**28.562** 1.1245	**41.300** 1.6260	**41.275** 1.6250	HJ-182620-	**28.555** 1.1242	**28.542** 1.1237	**41.267** 1.6247	**41.242** 1.6237	**36.53** 1.438	1 1/8
0.15 0.32	**31.750** 1.2500	**31.735** 1.2494	**44.475** 1.7510	**44.450** 1.7500	HJ-202820-	**31.725** 1.2490	**31.709** 1.2484	**44.442** 1.7497	**44.417** 1.7487	**39.67** 1.562	1 1/4
0.16 0.35	**34.925** 1.3750	**34.910** 1.3744	**47.650** 1.8760	**47.625** 1.8750	HJ-223020-	**34.900** 1.3740	**34.884** 1.3734	**47.617** 1.8747	**47.592** 1.8737	**42.88** 1.688	1 3/8
0.20 0.43	**38.100** 1.5000	**38.085** 1.4994	**52.418** 2.0637	**52.388** 2.0625	HJ-243320-	**38.075** 1.4990	**38.059** 1.4984	**52.380** 2.0622	**52.349** 2.0610	**47.63** 1.875	1 1/2
0.21 0.46	**41.275** 1.6250	**41.260** 1.6244	**55.593** 2.1887	**55.563** 2.1875	HJ-263520-	**41.250** 1.6240	**41.234** 1.6234	**55.555** 2.1872	**55.524** 2.1860	**50.80** 2.000	1 5/8
0.22 0.49	**44.450** 1.7500	**44.435** 1.7494	**58.768** 2.3137	**58.738** 2.3125	HJ-283720-	**44.425** 1.7490	**44.409** 1.7484	**58.730** 2.3122	**58.699** 2.3110	**53.98** 2.125	1 3/4
0.25 0.55	**50.800** 2.0000	**50.782** 1.9993	**65.118** 2.5637	**65.088** 2.5625	HJ-324120-	**50.770** 1.9988	**50.752** 1.9981	**65.080** 2.5622	**65.049** 2.5610	**60.33** 2.375	2
0.53 1.17	**57.150** 2.2500	**57.132** 2.2493	**76.230** 3.0012	**76.200** 3.0000	HJ-364828-	**57.120** 2.2488	**57.102** 2.2481	**76.192** 2.9997	**76.162** 2.9985	**68.28** 2.688	2 1/4
0.59 1.29	**63.500** 2.5000	**63.482** 2.4993	**82.586** 3.2514	**82.550** 3.2500	HJ-405228-	**63.470** 2.4988	**63.452** 2.4981	**82.537** 3.2495	**82.502** 3.2481	**74.63** 2.938	2 1/2
0.64 1.40	**69.850** 2.7500	**69.832** 2.7493	**88.936** 3.5014	**88.900** 3.5000	HJ-445628-	**69.820** 2.7488	**69.802** 2.7481	**88.887** 3.4995	**88.852** 3.4981	**80.98** 3.188	2 3/4
0.68 1.51	**76.200** 3.0000	**76.182** 2.9993	**95.286** 3.7514	**95.250** 3.7500	HJ-486028-	**76.170** 2.9988	**76.152** 2.9981	**95.237** 3.7495	**95.202** 3.7481	**87.33** 3.438	3

B

INNER RINGS

INCH SERIES

- Check for availability.
- Ideal choice when shaft is not practical to use as inner raceway.
- Provided in inch nominal dimensions for use with inch series heavy-duty needle roller bearings.
- Designed to meet established inch tolerances.
- Selected size should be wider than matching needle roller bearing.
- Maximum shaft fillet radius ($r_{as\ max}$) cannot exceed inner ring bore chamfer ($r_{s\ min}$) as shown.
- Optional centralized lubrication groove (bore) or through-hole available. Specify when ordering.
- Designed to be axially clamped against shoulder for loose transition fit on shaft.
- After mounting, for tight transition fit (keeping inner ring from rotating relative to shaft), inner ring O.D. must not exceed raceway diameter on matching bearing. (See mounting

Shaft Dia.	d	F	B	$r_{s\ min}$	Bearing Designation	Approx. Wt.	S Loose Transition Fit Max.	S Loose Transition Fit Min.	S Interference Fit Max.	S Interference Fit Min.	Used With Bearing Designation
in.	mm in.	mm in.	mm in.	mm in.		kg lbs.	mm in.	mm in.	mm in.	mm in.	
3/8	**9.525** 0.3750	**15.875** 0.6250	**19.05** 0.750	**0.64** 0.025	IR-061012	**0.018** 0.040	**9.520** 0.3748	**9.510** 0.3744	**9.538** 0.3755	**9.530** 0.3752	HJ-101812
1/2	**12.700** 0.5000	**19.050** 0.7500	**19.05** 0.750	**1.02** 0.04	IR-081212	**0.023** 0.050	**12.692** 0.4997	**12.682** 0.4993	**12.715** 0.5006	**12.708** 0.5003	HJ-122012
	12.700 0.5000	**19.050** 0.7500	**25.40** 1.000	**1.02** 0.04	IR-081216	**0.032** 0.070	**12.692** 0.4997	**12.682** 0.4993	**12.715** 0.5006	**12.708** 0.5003	HJ-122016
5/8	**15.875** 0.6250	**22.225** 0.8750	**19.05** 0.750	**1.02** 0.04	IR-101412	**0.027** 0.060	**15.867** 0.6247	**15.857** 0.6243	**15.890** 0.6256	**15.883** 0.6253	HJ-142212
	15.875 0.6250	**22.225** 0.8750	**25.40** 1.000	**1.02** 0.04	IR-101416	**0.036** 0.080	**15.867** 0.6247	**15.857** 0.6243	**15.890** 0.6256	**15.883** 0.6253	HJ-142216
11/16	**17.463** 0.6875	**22.225** 0.8750	**19.05** 0.750	**1.02** 0.04	IR-111412	**0.023** 0.050	**17.455** 0.6872	**17.445** 0.6868	**17.478** 0.6881	**17.470** 0.6878	HJ-142212
3/4	**19.050** 0.7500	**25.400** 1.0000	**19.05** 0.750	**1.02** 0.04	IR-121612	**0.032** 0.070	**19.042** 0.7497	**19.030** 0.7492	**19.068** 0.7507	**19.058** 0.7503	HJ-162412
	19.050 0.7500	**25.400** 1.0000	**25.40** 1.000	**1.02** 0.04	IR-121616	**0.041** 0.090	**19.042** 0.7497	**19.030** 0.7492	**19.068** 0.7507	**19.058** 0.7503	HJ-162416
13/16	**20.638** 0.8125	**25.400** 1.0000	**25.40** 1.000	**1.02** 0.04	IR-131616	**0.032** 0.070	**20.630** 0.8122	**20.617** 0.8117	**20.655** 0.8132	**20.645** 0.8128	HJ-162416
7/8	**22.225** 0.8750	**28.575** 1.1250	**25.40** 1.000	**1.02** 0.04	IR-141816	**0.050** 0.110	**22.217** 0.8747	**22.205** 0.8742	**22.243** 0.8757	**22.233** 0.8753	HJ-182616
	22.225 0.8750	**28.575** 1.1250	**31.75** 1.250	**1.02** 0.04	IR-141820	**0.059** 0.130	**22.217** 0.8747	**22.205** 0.8742	**22.243** 0.8757	**22.233** 0.8753	HJ-182620
15/16	**23.813** 0.9375	**28.575** 1.1250	**25.40** 1.000	**1.02** 0.04	IR-151816	**0.036** 0.080	**23.805** 0.9372	**23.792** 0.9367	**23.830** 0.9382	**23.820** 0.9378	HJ-182616
	23.813 0.9375	**28.575** 1.1250	**31.75** 1.250	**1.02** 0.04	IR-151820	**0.045** 0.100	**23.805** 0.9372	**23.792** 0.9367	**23.830** 0.9382	**23.820** 0.9378	HJ-182620
1	**25.400** 1.0000	**31.750** 1.2500	**25.40** 1.000	**1.02** 0.04	IR-162016	**0.054** 0.120	**25.392** 0.9997	**25.380** 0.9992	**25.418** 1.0007	**25.408** 1.0003	HJ-202816
	25.400 1.0000	**31.750** 1.2500	**31.75** 1.250	**1.02** 0.04	IR-162020	**0.068** 0.150	**25.392** 0.9997	**25.380** 0.9992	**25.418** 1.0007	**25.408** 1.0003	HJ-202820
1 1/8	**28.575** 1.1250	**34.925** 1.3750	**25.40** 1.000	**1.02** 0.04	IR-182216	**0.059** 0.130	**28.567** 1.1247	**28.555** 1.1242	**28.593** 1.1257	**28.583** 1.1253	HJ-223016
	28.575 1.1250	**34.925** 1.3750	**31.75** 1.250	**1.02** 0.04	IR-182220	**0.077** 0.170	**28.567** 1.1247	**28.555** 1.1242	**28.593** 1.1257	**28.583** 1.1253	HJ-223020
1 1/16	**30.163** 1.1875	**38.100** 1.5000	**31.75** 1.250	**1.52** 0.06	IR-192420	**0.100** 0.220	**30.155** 1.1872	**30.142** 1.1867	**30.180** 1.1882	**30.170** 1.1878	HJ-243320
1 1/4	**31.750** 1.2500	**38.100** 1.5000	**25.40** 1.000	**1.52** 0.06	IR-202416	**0.068** 0.150	**31.740** 1.2496	**31.725** 1.2490	**31.770** 1.2508	**31.760** 1.2504	HJ-243316

(1) r_a max is equal to the minimum bearing chamfer (r_s min).

Continued on next page.

dimensions in the bearing table for the required raceway diameter.)

- After mounting, if O.D. of inner ring exceeds the required raceway diameter for matching bearing, ring should be ground to proper diameter while mounted on shaft.
- Meets ASTMF-2431.

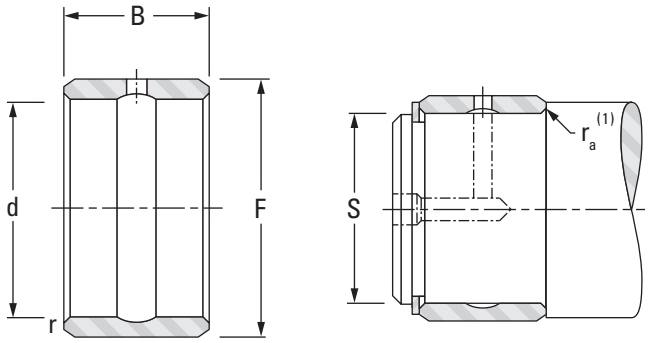

Shaft Dia.	d	F	B	$r_{s\,min}$	Bearing Designation	Approx. Wt.	S Loose Transition Fit Max.	S Loose Transition Fit Min.	S Interference Fit Max.	S Interference Fit Min.	Used With Bearing Designation
in.	**mm** in.	**mm** in.	**mm** in.	**mm** in.		**kg** lbs.	**mm** in.	**mm** in.	**mm** in.	**mm** in.	
1 1/4	**31.750** 1.2500	**38.100** 1.5000	**31.75** 1.250	**1.52** 0.06	IR-202420	**0.082** 0.180	**31.740** 1.2496	**31.725** 1.2490	**31.770** 1.2508	**31.760** 1.2504	HJ-243320
1 5/16	**33.338** 1.3125	**41.275** 1.6250	**25.40** 1.000	**1.52** 0.06	IR-212616	**0.086** 0.190	**33.327** 1.3121	**33.312** 1.3115	**33.358** 1.3133	**33.348** 1.3129	HJ-263516
	33.338 1.3125	**41.275** 1.6250	**31.75** 1.250	**1.52** 0.06	IR-212620	**0.109** 0.240	**33.327** 1.3121	**33.312** 1.3115	**33.358** 1.3133	**33.348** 1.3129	HJ-263520
1 3/8	**34.925** 1.3750	**41.275** 1.6250	**31.75** 1.250	**1.52** 0.06	IR-222620	**0.091** 0.200	**34.915** 1.3746	**34.900** 1.3740	**34.945** 1.3758	**34.935** 1.3754	HJ-263520
	34.925 1.3750	**44.450** 1.7500	**31.75** 1.250	**1.52** 0.06	IR-222820	**0.141** 0.310	**34.915** 1.3746	**34.900** 1.3740	**34.945** 1.3758	**34.935** 1.3754	HJ-283720
1 7/16	**36.513** 1.4375	**44.450** 1.7500	**25.40** 1.000	**1.52** 0.06	IR-232816	**0.095** 0.210	**36.502** 1.4371	**36.487** 1.4365	**36.533** 1.4383	**36.523** 1.4379	HJ-283716
	36.513 1.4375	**44.450** 1.7500	**31.75** 1.250	**1.52** 0.06	IR-232820	**0.118** 0.260	**36.502** 1.4371	**36.487** 1.4365	**36.533** 1.4383	**36.523** 1.4379	HJ-283720
1 1/2	**38.100** 1.5000	**44.450** 1.7500	**25.40** 1.000	**1.52** 0.06	IR-242816	**0.077** 0.170	**38.090** 1.4996	**38.075** 1.4990	**38.120** 1.5008	**38.110** 1.5004	HJ-283716
	38.100 1.5000	**44.450** 1.7500	**31.75** 1.250	**1.52** 0.06	IR-242820	**0.095** 0.210	**38.090** 1.4996	**38.075** 1.4990	**38.120** 1.5008	**38.110** 1.5004	HJ-283720
	38.100 1.5000	**50.800** 2.0000	**31.75** 1.250	**1.52** 0.06	IR-243220	**0.209** 0.460	**38.090** 1.4996	**38.075** 1.4990	**38.120** 1.5008	**38.110** 1.5004	HJ-324120
1 9/16	**39.688** 1.5625	**47.625** 1.8750	**31.75** 1.250	**1.52** 0.06	IR-253020	**0.127** 0.280	**39.677** 1.5621	**39.662** 1.5615	**39.708** 1.5633	**39.698** 1.5629	HJ-303920
	39.688 1.5625	**50.800** 2.0000	**31.75** 1.250	**1.52** 0.06	IR-253220	**0.186** 0.410	**39.677** 1.5621	**39.662** 1.5615	**39.708** 1.5633	**39.698** 1.5629	HJ-324120
1 5/8	**41.275** 1.6250	**50.800** 2.0000	**31.75** 1.250	**1.52** 0.06	IR-263220	**0.163** 0.360	**41.265** 1.6246	**41.250** 1.6240	**41.295** 1.6258	**41.285** 1.6254	HJ-324120
1 11/16	**42.863** 1.6875	**50.800** 2.0000	**25.40** 1.000	**1.52** 0.06	IR-273216	**0.109** 0.240	**42.852** 1.6871	**42.837** 1.6865	**42.883** 1.6883	**42.873** 1.6879	HJ-324116
	42.863 1.6875	**50.800** 2.0000	**31.75** 1.250	**1.52** 0.06	IR-273220	**0.136** 0.300	**42.852** 1.6871	**42.837** 1.6865	**42.883** 1.6883	**42.873** 1.6879	HJ-324120
1 3/4	**44.450** 1.7500	**57.150** 2.2500	**38.10** 1.500	**1.52** 0.06	IR-283624	**0.286** 0.630	**44.440** 1.7496	**44.425** 1.7490	**44.470** 1.7508	**44.460** 1.7504	HJ-364824
	44.450 1.7500	**57.150** 2.2500	**44.45** 1.750	**1.52** 0.06	IR-283628	**0.336** 0.740	**44.440** 1.7496	**44.425** 1.7490	**44.470** 1.7508	**44.460** 1.7504	HJ-364828
1 15/16	**49.213** 1.9375	**63.500** 2.5000	**38.10** 1.500	**2.03** 0.08	IR-314024	**0.358** 0.790	**49.202** 1.9371	**49.187** 1.9365	**49.233** 1.9383	**49.223** 1.9379	HJ-405224
	49.213 1.9375	**63.500** 2.5000	**44.45** 1.750	**2.03** 0.08	IR-314028	**0.417** 0.920	**49.202** 1.9371	**49.187** 1.9365	**49.233** 1.9383	**49.223** 1.9379	HJ-405228

(1) r_a max is equal to the minimum bearing chamfer (r_s min).

Continued on next page.

INNER RINGS – *continued*

INCH SERIES

- Check for availability.
- Ideal choice when shaft is not practical to use as inner raceway.
- Provided in inch nominal dimensions for use with inch series heavy-duty needle roller bearings.
- Designed to meet established inch tolerances.
- Selected size should be wider than matching needle roller bearing.
- Maximum shaft fillet radius ($r_{a\ max}$) cannot exceed inner ring bore chamfer ($r_{s\ min}$) as shown.
- Optional centralized lubrication groove (bore) or through-hole available. Specify when ordering.
- Designed to be axially clamped against shoulder for loose transition fit on shaft.
- After mounting, for tight transition fit (keeping inner ring from rotating relative to shaft), inner ring O.D. must not exceed raceway diameter on matching bearing. (See mounting

Shaft Dia.	d	F	B	$r_{s\ min}$	Bearing Designation	Approx. Wt.	S Loose Transition Fit Max.	S Loose Transition Fit Min.	S Interference Fit Max.	S Interference Fit Min.	Used With Bearing Designation
in.	**mm** in.	**mm** in.	**mm** in.	**mm** in.		**kg** lbs.	**mm** in.	**mm** in.	**mm** in.	**mm** in.	
2	**50.800** 2.0000	**63.500** 2.5000	**38.10** 1.500	**2.03** 0.08	IR-324024	**0.322** 0.710	**50.790** 1.9996	**50.772** 1.9989	**50.823** 2.0009	**50.810** 2.0004	HJ-405224
	50.800 2.0000	**63.500** 2.5000	**44.45** 1.750	**2.03** 0.08	IR-324028	**0.376** 0.830	**50.790** 1.9996	**50.772** 1.9989	**50.823** 2.0009	**50.810** 2.0004	HJ-405228
2 3/16	**55.563** 2.1875	**69.850** 2.7500	**44.45** 1.750	**2.03** 0.08	IR-354428	**0.467** 1.030	**55.552** 2.1871	**55.535** 2.1864	**55.585** 2.1884	**55.573** 2.1879	HJ-445628
2 1/4	**57.150** 2.2500	**69.850** 2.7500	**38.10** 1.500	**2.03** 0.08	IR-364424	**0.358** 0.790	**57.140** 2.2496	**57.122** 2.2489	**57.173** 2.2509	**57.160** 2.2504	HJ-445624
	57.150 2.2500	**69.850** 2.7500	**44.45** 1.750	**2.03** 0.08	IR-364428	**0.417** 0.920	**57.140** 2.2496	**57.122** 2.2489	**57.173** 2.2509	**57.160** 2.2504	HJ-445628
2 3/8	**60.325** 2.3750	**76.200** 3.0000	**44.45** 1.750	**2.03** 0.08	IR-384828	**0.562** 1.240	**60.315** 2.3746	**60.297** 2.3739	**60.348** 2.3759	**60.335** 2.3754	HJ-486028
2 1/2	**63.500** 2.5000	**76.200** 3.0000	**38.10** 1.500	**2.03** 0.08	IR-404824	**0.395** 0.870	**63.490** 2.4996	**63.472** 2.4989	**63.523** 2.5009	**63.510** 2.5004	HJ-486024
	63.500 2.5000	**76.200** 3.0000	**44.45** 1.750	**2.03** 0.08	IR-404828	**0.463** 1.020	**63.490** 2.4996	**63.472** 2.4989	**63.523** 2.5009	**63.510** 2.5004	HJ-486028
2 3/4	**69.850** 2.7500	**82.550** 3.2500	**44.45** 1.750	**2.03** 0.08	IR-445228	**0.503** 1.110	**69.840** 2.7496	**69.822** 2.7489	**69.873** 2.7509	**69.860** 2.7504	HJ-526828
	69.850 2.7500	**82.550** 3.2500	**50.80** 2.000	**2.03** 0.08	IR-445232	**0.576** 1.270	**69.840** 2.7496	**69.822** 2.7489	**69.873** 2.7509	**69.860** 2.7504	HJ-526832
2 15/16	**74.613** 2.9375	**88.900** 3.5000	**50.80** 2.000	**2.03** 0.08	IR-475632	**0.694** 1.530	**74.602** 2.9371	**74.585** 2.9364	**74.635** 2.9384	**74.623** 2.9379	HJ-567232
3	**76.200** 3.0000	**88.900** 3.5000	**50.80** 2.000	**2.03** 0.08	IR-485632	**0.621** 1.370	**76.190** 2.9996	**76.172** 2.9989	**76.223** 3.0009	**76.210** 3.0004	HJ-567232

(1) r_a max is equal to the minimum bearing chamfer (r_s min).

dimensions in the bearing table for the required raceway diameter).

- After mounting, if O.D. of inner ring exceeds the required raceway diameter for matching bearing, ring should be ground to proper diameter while mounted on shaft.
- Meets ASTMF-2431.

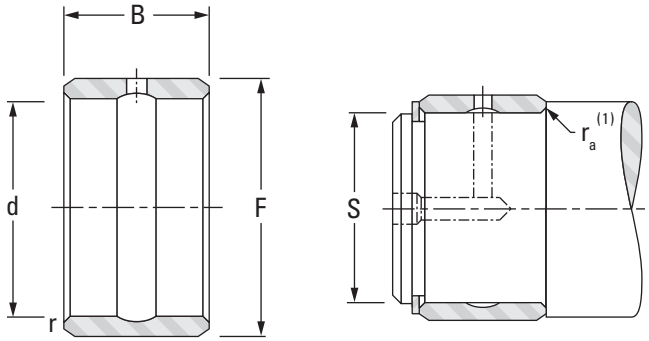

NOTES

TRACK ROLLERS

Overview: Track rollers (also known as cam followers) are characterized by their thick-walled outer rings that run directly on a track. The thick outer rings permit high load-carrying capability while minimizing both distortion and bending stresses. Sealed designs with internal thrust washers help extend service life under conditions of infrequent lubrication.

- **Sizes:** Stud-Type: 10 mm – 130 mm (0.3937 in. – 5.1180 in.) O.D.
  Yoke-Type: 10 mm – 300 mm (0.3937 in. – 11.816 in.) O.D.
- **Markets:** Ram support rollers, material handling and indexing equipment.
- **Features:** Available in two basic designs: with an inner ring for straddle mounting in a yoke or with an integral stud for cantilever mounting.
- **Benefits:** High load-carrying capability with minimized distortion and bending stresses. Extended service life under conditions of infrequent re-lubrication.

Caged Yoke-Type Track Rollers – Metric Nominal Dimensions

Bore diameter from 10 mm to 17 mm (for NA22)
00 = 10 mm **02** = 15 mm
01 = 12 mm **03** = 17 mm

Bore diameter > 17 mm (for NA22)
05 = 25 mm

NA22 **05** **2RS**

Prefix
- **NA22** track roller, yoke-type, profiled outer diameter, with inner ring, sealed
- **RNA22** track roller, yoke-type, profiled outer diameter, without inner ring, sealed
- **RSTO** track roller, yoke-type, profiled outer diameter, without inner ring, without washers
- **STO** track roller, yoke-type, profiled outer diameter, with inner ring, without washers
- **NATR** track roller, yoke-type, profiled outer diameter, with inner ring, with washers

Suffix
- **TN** molded cage of reinforced, engineered polymer
- **DZ** cylindrical outer diameter
- **ZZ** two washers for track rollers used for axial location
- **.2RS** lip contact seal on each side of the bearing
- **ZZ.DZ** two washers for track rollers used for axial location; cylindrical outer diameter
- **DZ.TN** cylindrical outer diameter; molded cage of reinforced, engineered polymer
- **.2RS.DZ** lip contact seal on each side of bearing; cylindrical outer diameter

STO **25** **DZ**

Bore diameter for STO, NATR
25 = 25 mm
45 = 45 mm

Caged Stud-Type Track Rollers – Metric Nominal Dimensions

Prefix Modification
E eccentric stud

Suffix
- **SK** hexagonal wrench socket in stud head
- **DZ.2RS** cylindrical outer diameter: lip contact seals on each end of bearing
- **.2RS** lip contact seal on each side of the bearing
- **DZ** cylindrical outer diameter

KR **E** **22** **.2RS**

Prefix
- **KR** track roller, stud-type with cage, profiled outer diameter

Outer Diameter
22 = 22 mm

Full Complement Track Rollers – Inch Nominal Dimensions

Prefix
- **CR** stud-type
- **YCR** yoke-type

Outer Diameter
8 = $^{8}/_{16}$ = ½ in. **32** = $^{32}/_{16}$ = 2 in.
16 = $^{16}/_{16}$ = 1 in. **36** = $^{36}/_{16}$ = 2 ¼ in.

CR S B E - 16

Design Modifications
- **S** seals with internal thrust washers
- **B** hex wrench socket (CR Type only)
- **C** crowned O.D.
- **E** eccentric stud (CR Type only)

Full Complement Yoke-Type Track Rollers – Metric Nominal Dimensions

Prefix
- **NUTR** track roller, yoke-type, crowned outer diameter with inner ring and washers (two paths of cylindrical rollers)
- **FG** track roller, yoke-type, crowned outer diameter standard series
- **FGU** track roller, yoke-type, crowned outer diameter light series
- **FGU** track roller, yoke-type, crowned outer diameter heavy series (larger O.D. than light series of same bore size)
- **FP** track roller, yoke-type, crowned outer diameter small series
- **RNA** track roller, yoke-type, crowned outer diameter 11000 Series (without seals)

B convex outer ring to maximum slope of 1.5%. Tolerance h9 on dim.D
L cylindrical outer ring. Tolerance h7 on dim. D

(see tables for dimensions on page B-251)

RNA L 110 12 B6

B6 convex outer ring to maximum slope of 0.15%. Tolerance h9 on dim. D

NUTR 45 100 .DZ

Suffix
- **.DZ** cylindrical outer diameter (NUTR styles only)
- **EE** two polymer shields (FG styles only)
- **EEM** two metal shields (FG styles only)
- **MM** two metal shields (FGU styles only)

Bore Diameter
6 = 6 mm
45 = 45 mm

Outer Diameter
19 = 19 mm
100 = 100 mm

FG L 6 19 EEM

Prefix Modification
L cylindrical outer diameter

Full Complement Stud-Type Track Rollers – Metric Nominal Dimensions

Prefix
- **NUKR** track roller, stud-type, crowned outer diameter (two paths of cylindrical rollers)
- **KRV** track roller, stud-type, crowned outer diameter with full complement of needle rollers
- **GC** track roller, stud-type, crowned outer diameter small series (up to 15 mm O.D.), standard series
- **GCU** track roller, stud-type, crowned outer diameter light series

Outer Diameter
16 = 16 mm
19 = 19 mm
62 = 62 mm

KRV 16 .DZ

NUKR 62 .2SK

GC L 19 EEM

Prefix Modification
- **L** cylindrical outer diameter
- **R** eccentric collar (GC, GCU styles only)
- **E** eccentric stud (NUKR style only)

Suffix
- **.DZ** cylindrical outer diameter (KRV styles only)
- **.2SK** hexagonal socket in stud head (NUKR styles only)
- **EE** two polymer shields (GC, GCR styles only)
- **EEM** two metal shields (GC, GCR styles only)
- **MM** two metal shields (GCU, GCUR styles only)

B

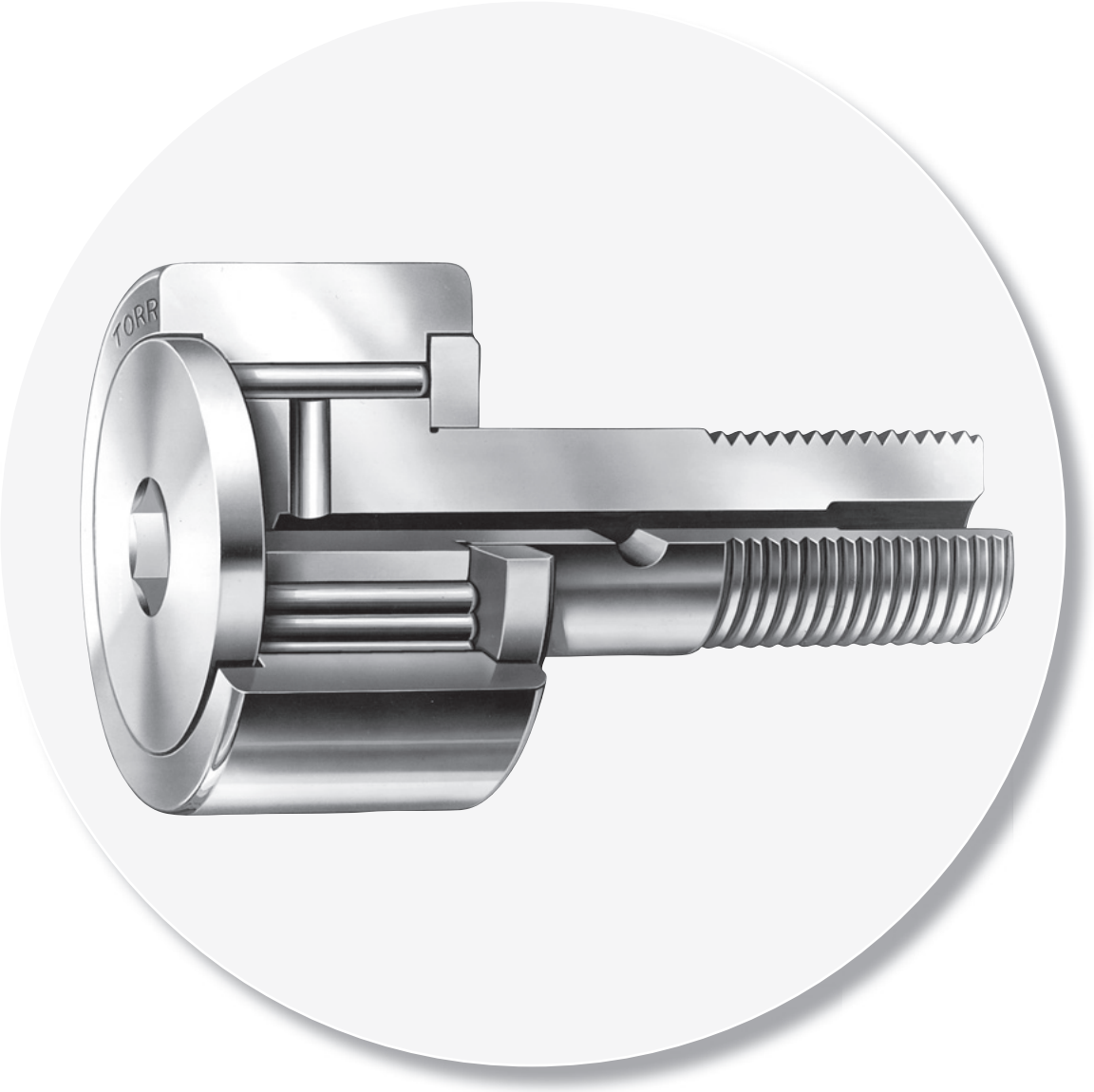

Stud-Type and Yoke-Type Track Roller

STUD-TYPE AND YOKE-TYPE TRACK ROLLERS METRIC SERIES — *Page*

Introduction B-212

STUD-TYPE METRIC SERIES

Needle Roller and Cage Assemblies (KR Series) B-222

Needle Roller and Cage Assemblies, Sealed (KR…2S Series) B-224

Full Complement with Needle Rollers (KRV Series) or Cylindrical Rollers (NUKR Series) B-226

Full Complement, Small Series, Unsealed (GC Series) B-228

Full Complement, Standard Series, with or without Seals (GC Series) B-230

Full Complement, with Metal Seals (GCU…MM Series) B-232

Full Complement, Eccentric (GCR Series) B-234

Full Complement, Eccentric, with Metal Seals (GCUR...MM Series) B-236

YOKE-TYPE METRIC SERIES

Caged, without Inner Ring, No End Washers (RSTO Series) B-238

Caged, with Inner Ring, No End Washers (STO Series) B-239

Caged, without Inner Ring, No End Washers, Sealed (RNA22 Series) B-240

Caged, with Inner Ring, No End Washers, Sealed (NA22 Series) B-241

Caged, with Inner Ring, with End Washers (NATR, STO...ZZ Series) B-242

Full Complement, with Inner Ring, with End Washers, Cylindrical Rollers (NUTR Series) B-243

Page

Full Complement, Non-Separable, Small Series, Unsealed (FP Series) B-244

Full Complement, Non-Separable, Sealed or Unsealed (FG Series) B-245

Full Complement, Non-Separable, Light Series, with Metal Seals (FGU…MM Series) B-248

Full Complement, Non-Separable, Heavy Series, with Metal Seals (FGU…MM Series) B-249

Full Complement, without Inner Ring, Unsealed (RNA…B6, RNAB, RNAL Series) B-251

Separate Inner Rings (BIC Series) B-251

STUD-TYPE AND YOKE-TYPE TRACK ROLLERS – FULL COMPLEMENT INCH SERIES

Introduction B-252

Stud-Type Track Rollers CR, CRS Series B-258

Stud-Type Track Rollers CRSB Series B-262

Yoke-Type Track Rollers YCR, YCRS Series B-266

B

STUD-TYPE AND YOKE-TYPE TRACK ROLLERS

METRIC SERIES

JTEKT track rollers listed in this catalog have been designed with outer rings of a large radial cross section to withstand heavy rolling and shock loads on track-type or cam-controlled equipment. The outer diameters of the outer rings are either crowned or cylindrical. Crowned track rollers are designed to alleviate uneven bearing loading resulting from deflection, bending or misalignment in mounting.

Stud-type track rollers are available in various open designs, as well as with lip contact seals or metal shields.

Yoke-type track rollers are designed for straddle mounting. The various metric series designs are grouped and organized as illustrated below.

REFERENCE STANDARDS ARE:

- **ISO 6278** – needle roller bearings – track rollers – boundary dimensions.
- **ISO 492** – radial bearings – tolerances.
- **DIN 620** – tolerances of ball and roller bearings.
- **ISO 281** – rolling bearings – dynamic load ratings and rating life.

Fig. B-48. Yoke-type track rollers

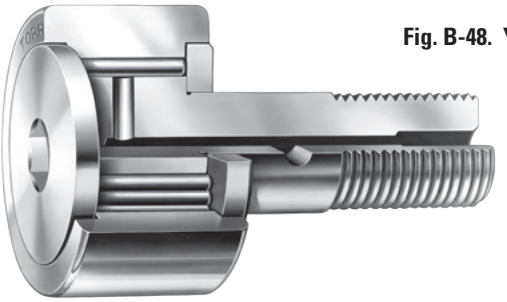

Fig. B-47. Stud-type track rollers

Suffixes – Stud-Type, Metric Series (except GC types)

.2RS	two seals
DZ	cylindrical outer diameter
DZ.2RS	cylindrical outer diameter • two seals
SK	hexagonal socket in flange end
2SK	hexagonal socket in both flange and stud ends

Suffixes – Yoke-Type, Metric Series (except FP or FG types)

DZ.TN	cylindrical outer diameter • molded cage of reinforced engineered polymer
TN	molded cage of reinforced engineered polymer
DZ	cylindrical outer diameter
ZZ	two end washers for the outer ring
ZZ.DZ	two end washers for the outer ring • cylindrical outer diameter
.2RS	two seals
.2RS.DZ	two seals • cylindrical outer diameter

Suffixes – Yoke-Type (FP, FG) and Stud-Type (GC)

EE	polymer shields
EEM	metal shields
MM	metal shields

STUD-TYPE METRIC SERIES TRACK ROLLER TYPES

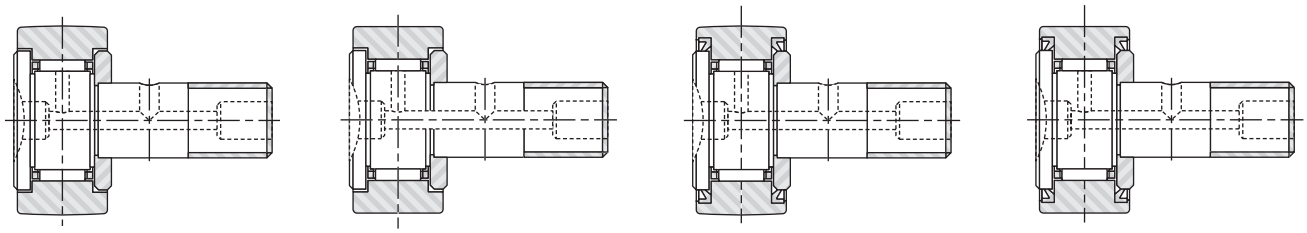

KR KR.DZ KR.2RS KR.DZ.2RS

Fig. B-49. Stud-type track rollers, caged needle rollers

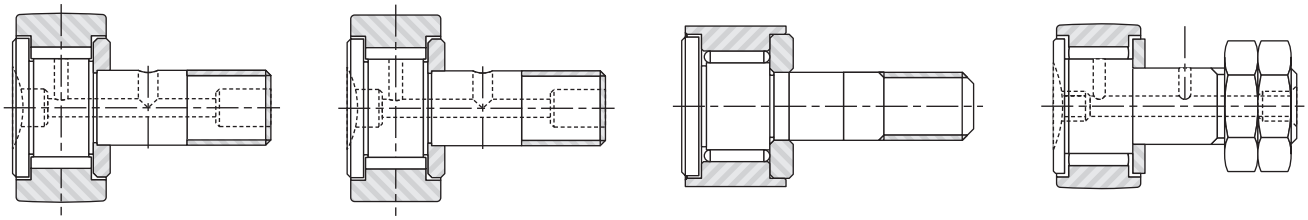

KRV KRV.DZ GC10-15/GCL10-15 GC16-90/GCL16-90

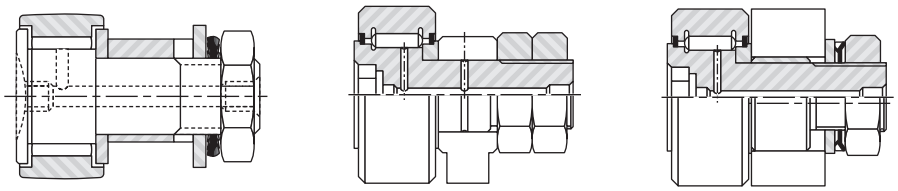

GCR/GCRL GCU/GCUL GCUR/GCURL

Fig. B-50. Stud-type track rollers, full complement needle rollers

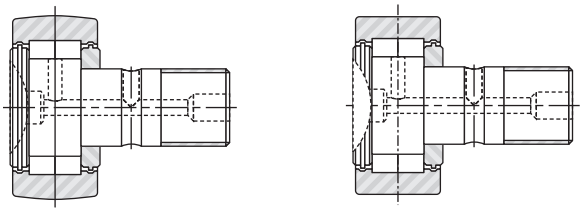

NUKR NUKR.DZ

Fig. B-51. Stud-type track rollers, full complement cylindrical rollers

B

TYPES OF METRIC SERIES YOKE-TYPE TRACK ROLLERS

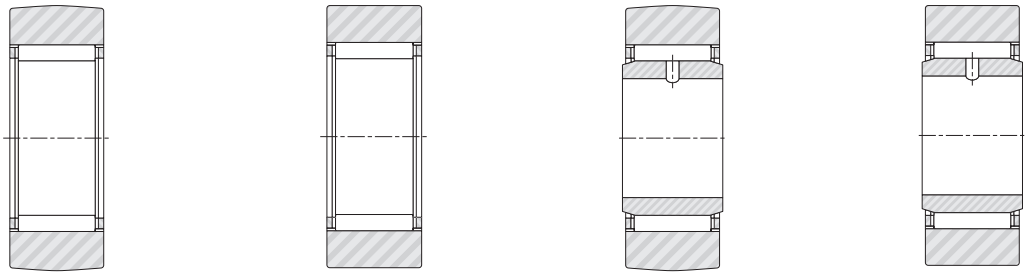

RSTO RSTO.DZ STO STO.DZ

Fig. B-52. Yoke-type track rollers without end washers

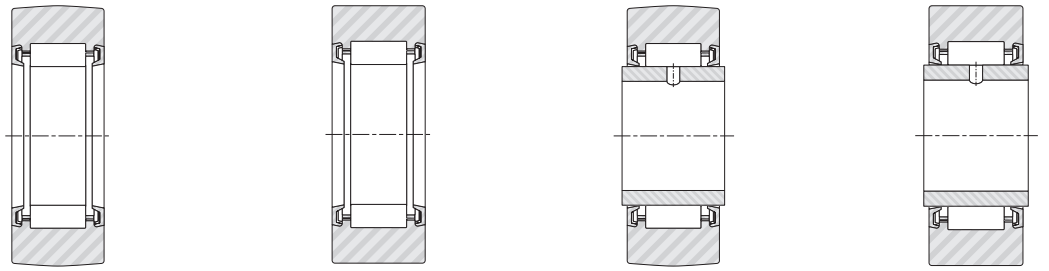

RNA22.2RS RNA22.2RS.DZ NA22.2RS NA22.2RS.DZ

Fig. B-53. Sealed yoke-type track rollers without end washers

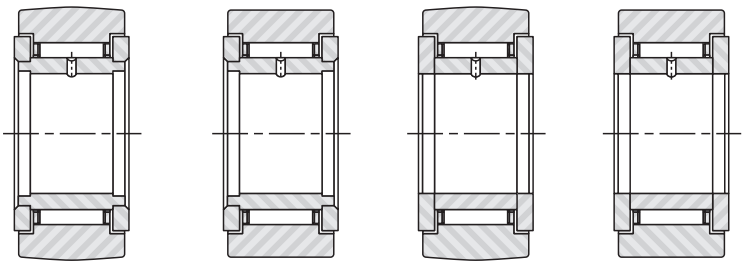

NATR NATR.DZ STO.ZZ STO.ZZ.DZ

Fig. B-54. Yoke-type track rollers with end washers

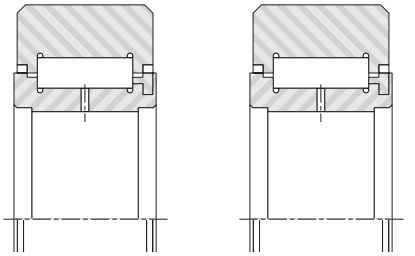

FGU/FGUL Light FGU/FGUL Heavy

Fig. B-55. Yoke-type track rollers with full complement of cylindrical rollers

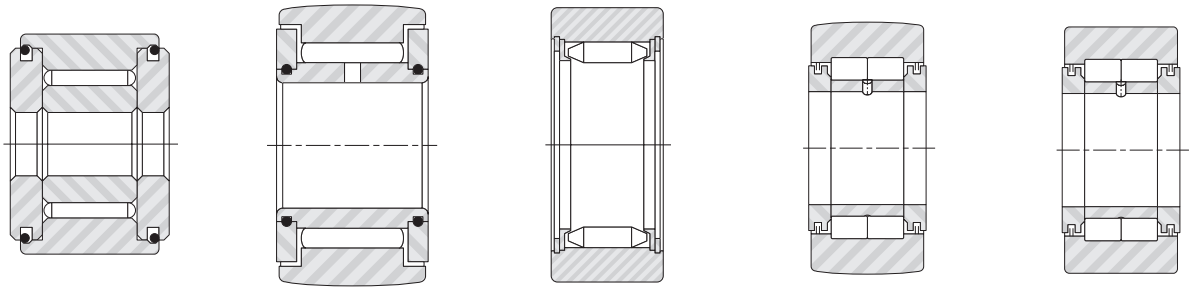

FP/FPL FG/FGL RNA1100 NUTR NUTR.DZ

Fig. B-56. Yoke-type track rollers with end washers, full complement of needle rollers

CONSTRUCTION

STUD-TYPE TRACK ROLLERS

The metric series stud-type track roller is a non-separable unit – consisting of a large radial cross section outer ring, radial needle roller and cage assembly, or a full complement of needle or cylindrical rollers, a stud and a retaining washer securely fastened to the stud.

The seals on the sealed stud-type track rollers are located in the counterbores of the outer ring and seal against the stud flange and the retaining washer, providing good retention of lubricant and exclusion of foreign material. The seals are thermally stable in a temperature range between -30˚ C and 110˚ C (-25˚ F and 225˚ F).

A screwdriver slot (standard) or a hexagonal wrench socket (customer requested) in the head of the stud facilitates mounting. Wrench sizes are listed on the dimensional tables where found among certain GC Series sizes, beginning on page B-228. Other metric series hexagonal socket sizes are listed in Table B-29.

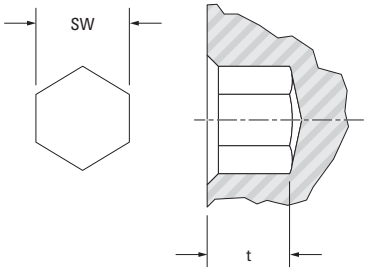

Fig. B-57. Hexagonal socket – metric series.

Table B-29. Hexagonal socket wrench sizes

Stud-type track roller O.D.			
>	≤	SW	t
mm in.	**mm** in.	**mm** in.	**mm** in.
- -	**16.000** 0.6299	**3.000** 0.1181	**2.500** 0.0984
19.000 0.7480	**26.000** 1.0236	**4.000** 0.1575	**2.500** 0.0984
30.000 1.1811	**35.000** 1.3779	**6.000** 0.2362	**4.000** 0.1575
40.000 1.5748	**52.000** 2.0472	**8.000** 0.3150	**5.000** 0.1968
62.000 2.4409	**72.000** 2.8346	**12.000** 0.4724	**7.000** 0.2756
80.000 3.1496	**90.000** 3.5433	**17.000** 0.6693	**10.000** 0.3937

ECCENTRIC STUDS FOR STUD-TYPE TRACK ROLLERS

To provide radial adjustment of the outer ring toward the track or cam surface at the time of installation, some metric series stud-type track rollers are available with eccentric studs – specified by adding the letter "E" to the designation letters: KRE and NUKRE. The GCR and GCUR Series include an eccentric bushing added to the track roller stud. Appropriate dimensions of the eccentric stud bushing are listed in Table B-30 and Table B-31 on page B-216.

Since a track roller with an eccentric stud is usually adjusted upon installation by turning the stud in the mounting hole, a close clearance fit between the outer diameter of the bushing and the mounting hole is necessary. For turning the stud, a hexagonal wrench is generally more convenient than a screwdriver. Thus, the option of a hexagonal wrench socket in the head of the stud should be exercised.

Some applications may require more secure positioning than provided by the tightened stud nut. If so, it is recommended that the mounting hole and the eccentric bushing be drilled at the time of installation to accept a locating dowel pin.

Fig. B-58. Eccentric bushing dimensions – metric series (except GCR, GCUR series)

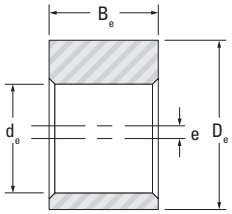

Table B-30. Eccentric bushing dimensions – metric series (except GCR, GCUR series)

Stud-type track roller O.D.		d_e	D_e	B_e	e
>	≤	Eccentric bushing dimensions			
mm in.	**mm** in.	**mm** in.	**mm** in.	**mm** in.	**mm** in.
19.000 07480	**19.000** 0.7480	**8.000** 0.3150	**11.000** 0.4331	**9.000** 0.3543	**0.500** 0.0197
22.000 0.8661	**26.000** 1.10236	**10.000** 0.3937	**13.000** 0.5118	**10.000** 0.3937	**0.500** 0.0197
30.000 1.1811	**32.000** 1.2598	**12.000** 0.4724	**15.000** 0.5905	**11.000** 0.4331	**0.500** 0.0197
35.000 1.3779	**35.000** 1.3779	**16.000** 0.6299	**20.000** 0.7874	**14.000** 0.5512	**1.000** 0.0394
40.000 1.5748	**40.000** 1.5748	**18.000** 0.7087	**22.000** 0.8661	**16.000** 0.6299	**1.000** 0.0394
47.000 1.8504	**52.000** 2.0472	**20.000** 0.7874	**24.000** 0.9449	**18.000** 0.7087	**1.000** 0.0394
62.000 2.4409	**72.000** 2.8346	**24.000** 0.9449	**28.000** 1.1024	**22.000** 0.8661	**1.000** 0.0394
80.000 3.1496	**90.000** 3.5433	**30.000** 1.1811	**35.000** 1.3779	**29.000** 1.1417	**1.500** 0.0591

B

Table B-31. Eccentric bushing dimensions metric series GCR and GCUR

Stud-type track roller O.D.		d_e	D_e	B_e	e
Over	Incl.	Eccentric bushing dimensions			
mm in.	mm in.	mm in.	mm in.	mm in.	mm in.
- -	19.000 0.7480	6.000 0.2362	9.000 0.3543	7.500 0.2953	0.500 0.0197
19.000 07480	28.000 1.1024	10.000 0.3937	14.000 0.5512	10.500 0.4134	1.000 0.0394
28.000 1.1024	32.000 1.2598	12.000 0.4724	16.000 0.6299	11.500 0.4528	1.000 0.0394
32.000 1.2598	35.000 1.3779	16.000 0.6299	21.000 0.8268	15.100 0.5945	1.500 0.0591
35.000 1.3779	40.000 1.5748	18.000 0.7087	24.000 0.9449	17.100 0.6732	1.500 0.0591
40.000 1.5748	52.000 2.0472	20.000 0.7874	27.000 1.0630	19.100 0.7520	2.000 0.0787
52.000 2.0472	72.000 2.8346	24.000 0.9449	36.000 1.4173	24.100 0.9488	3.000 0.1181
72.000 2.8346	90.000 3.5433	30.000 1.1811	42.000 1.6535	30.700 1.2087	3.000 0.1181
90.000 3.5433	110.000 4.3307	36.000 1.4173	48.000 1.8898	36.500 1.4370	3.000 0.1181
110.000 4.3307	- -	42.000 1.6535	54.000 2.1260	43.500 1.7126	3.000 0.1181

METRIC SERIES YOKE-TYPE TRACK ROLLERS WITHOUT END WASHERS

These yoke-type track rollers are available with a profiled or a cylindrical outer diameter of the outer ring, and with or without a separable inner ring. Since they are supplied without end washers, their outer rings must be guided by the adjacent end locating surfaces. Tolerance class F6 is the normal specification for the bore of the metric series radial needle roller and cage assemblies used with these yoke-type track rollers.

YOKE-TYPE TRACK ROLLERS – SERIES RSTO AND STO

Series STO have a separable inner ring and when the inner ring is removed they become series RSTO. They run directly on a hardened and ground inner raceway. Quality requirements for inner raceways are given in the engineering section of this catalog.

SEALED YOKE-TYPE TRACK ROLLERS WITHOUT END WASHERS – SERIES RNA 22.2RS AND NA22.2RS

These yoke-type track rollers have the same bore diameter and outer diameter as most of the other metric series yoke-type track rollers listed in this catalog. The thick section outer ring is made of one-piece channel-shaped bearing-quality steel – heat-treated to yield maximum load-carrying capability. The integral end flanges provide axial guidance for the large diameter needle rollers, and a cage supplies their inward retention. These track rollers have two integral lip contact seals designated by .2RS. The seals are thermally stable in a temperature range between -30° C and 110° C (-25° F and 225° F). Care should be exercised when mounting track rollers without inner rings onto inner raceways, to avoid damage to the seals.

METRIC SERIES YOKE-TYPE TRACK ROLLERS WITH END WASHERS

These yoke-type track rollers are available with a crowned or a cylindrical outer diameter to the outer ring. Metric series yoke-type track rollers with end washers – depending on the internal construction – may be end guided, either through the end washers or between the end faces of the rollers and the inside faces of the outer ring flanges.

YOKE-TYPE TRACK ROLLERS – SERIES NATR AND STO.ZZ

The series NATR yoke-type track rollers are of non-separable design, consisting of a crowned or a cylindrical outer ring, caged needle rollers, an inner ring and two retaining end washers securely fastened to the inner ring. The series STO.ZZ yoke-type track rollers are of separable design with two loose end washers. These end washers, placed in the counter bores of the outer ring, form very effective labyrinth-type shields, providing good retention of lubricant and exclusion of foreign material. A lubrication hole in the inner ring enables re-lubrication when a cross-drilled bolt or shaft – which can be serviced from the end – is used.

YOKE-TYPE TRACK ROLLERS – SERIES NUTR

The series NUTR yoke-type track rollers are of non-separable design consisting of a crowned or cylindrical outer ring, two rows of full complements of cylindrical rollers, an inner ring, two retaining end washers and two shields. The outer ring is located axially through the cylindrical rollers.

A lubricating hole in the inner ring enables re-lubrication when a cross-drilled bolt or shaft, which can be serviced from the end, is used.

The smallest track roller of this series has an outer diameter of 35.000 mm (1.3780 in.). NUTR yoke-type track rollers are well-suited to carry high loads and designs with a thicker outer ring and particularly suitable for high shock loads. Designs with thicker outer rings have a larger outer diameter which can be identified by the bearing designation (e.g., NUTR 1542).

YOKE-TYPE TRACK ROLLERS – SERIES FP AND FG

The FP and FG non-separable inner ring designs are available in crowned or cylindrical outer rings. Both employ a full complement of needle rollers and require re-lubrication via a pathway through the shaft. The FP Series is the smallest series available and is not offered with seals.

YOKE-TYPE TRACK ROLLERS – SERIES FGU (LIGHT AND HEAVY TYPES)

The FGU non-separable inner ring designs are available in crowned or cylindrical outer rings. All FGU series use a full complement of cylindrical rollers between the inner and outer rings and require re-lubrication via a pathway through the shaft. The FGU heavy series uses a thicker outer ring section and is capable of higher loads.

Both FGU series are only available with a metal shield for a roller sealing option.

YOKE-TYPE TRACK ROLLERS – SERIES RNA, RNAB, RNAL

The RNA and RNAB Series design uses a full complement of needle rollers retained with a pair of end washers. A separate, matching inner ring is listed in the tables of part numbers. The RNAL Series uses a cylindrical outer ring and is only offered in limited sizes.

DIMENSIONAL ACCURACY

The tolerances of the basic metric series caged roller and NUKR stud-type and yoke-type track rollers, whose outer rings have a cylindrical outer diameter, correspond to tolerances specified in ISO 492 Radial bearings tolerances. The outer ring tolerances given in Table B-32 apply to the outer rings used in the caged roller and NUKR stud-type and caged roller and NUTR yoke-type, metric series, track rollers. Metric series track rollers with a crowned outer diameter are the exception – their outer diameter tolerance is 0-0.05 for all caged roller sizes and NUTR, NUKR types. The remaining types have h9 tolerance on profiled outer diameters and h7 for straight diameters. Stud diameter and stud length tolerances are given in Table B-33. The inner ring tolerances, given in Table B-34 on page B-218, apply to inner rings used in metric series caged roller, NUKR Series yoke-type track rollers.

MOUNTING

STUD-TYPE TRACK ROLLERS

When the stud shank of a metric series stud-type track roller is mounted in a hole of tolerance H7, the installation force should be applied only to the center portion of the flanged end of the stud – preferably with an arbor press. The surface of the hole in the machine element which supports the stud must not deform under the expected load. And the support should be sufficiently rigid to resist bending loads. Deformation and bending will cause uneven loading of the outer ring.

Table B-33. Tolerances for stud diameter and stud length – metric series

d_1		Δd_{1S}		B_2	ΔB_2	
Stud diameter				Stud length		
>	≤	Max.	Min.		Max.	Min.
mm		µm		mm		
3	6	0	-12	all lengths	0	-1
6	10	0	-15			
10	18	0	-18			
18	30	0	-21			
30	50	0	-25			
50	80	0	-30			
80	100	0	-35			

Table B-32. Outer ring – metric series (caged roller and NUKR, NUTR types)

D		Δ_{Dmp}				Δ_{Cs}		K_{ea}
		Cylindrical		Crowned				
>	≤	Max.	Min.	Max.	Min.	Max.	Min.	Max.
mm in.	mm in.	mm in.	mm in.	mm in.	mm in.	mm in.	mm in.	mm in.
10.000 0.3937	18.000 0.7087	0.000 0.0000	-0.008 -0.0003	0.000 0.0000	-0.050 -0.0020	0.000 0.0000	-0.120 -0.0047	0.015 0.0006
18.000 0.7087	30.000 1.1811	0.000 0.0000	-0.009 -0.00035	0.000 0.0000	-0.050 -0.0020	0.000 0.0000	-0.120 -0.0047	0.015 0.0006
30.000 1.1811	50.000 1.9685	0.000 0.0000	-0.011 -0.0004	0.000 0.0000	-0.050 -0.0020	0.000 0.0000	-0.120 -0.0047	0.020 0.0008
50.000 1.9685	80.000 3.1496	0.000 0.0000	-0.013 -0.0005	0.000 0.0000	-0.050 -0.0020	0.000 0.0000	-0.120 -0.0047	0.025 0.0010
80.000 3.1496	120.000 4.7244	0.000 0.0000	-0.015 -0.0006	0.000 0.0000	-0.050 -0.0020	0.000 0.0000	-0.120 -0.0047	0.035 0.0014
120.000 4.7244	150.000 5.9055	0.000 0.0000	-0.018 -0.0007	0.000 0.0000	-0.050 -0.0020	0.000 0.0000	-0.120 -0.0047	0.040 0.0016
150.000 5.9055	180.000 7.0866	0.000 0.0000	-0.025 -0.0010	0.000 0.0000	-0.050 -0.0020	0.000 0.0000	-0.150 -0.0059	0.045 0.0018
180.000 7.0866	240.000 9.4488	0.000 0.0000	-0.030 -0.0012	0.000 0.0000	-0.050 -0.0020	0.000 0.0000	-0.200 -0.0079	0.050 0.0020

B

Table B-34. Inner ring – metric series (caged roller types)

Tolerances in **µm (0.001 mm)**

d		Δ_{dmp}		Δ_{Bs}	
>	≤	Max.	Min.	Max.	Min.
mm in.	**mm** in.	**mm** in.	**mm** in.	**mm** in.	**mm** in.
2.500 0.0984	**18.000** 0.7087	**0.000** 0.0000	**-0.008** -0.0003	**0.000** 0.0000	**-0.180** -0.0071
18.000 0.7087	**30.000** 1.1811	**0.000** 0.0000	**0.010** -0.0004	**0.000** 0.0000	**-0.210** -0.0083
30.000 1.1811	**50.000** 1.9685	**0.000** 0.0000	**-0.012** -0.0005	**0.000** 0.0000	**-0.250** -0.0098
50.000 1.9685	**80.000** 3.1496	**0.000** 0.0000	**-0.015** '-0.0006	**0.000** 0.0000	**-0.300** -0.0118
80.000 3.1496	**120.000** 4.7244	**0.000** 0.0000	**-0.020** -0.0008	**0.000** 0.0000	**-0.350** -0.0138

In mounting the stud-type track roller, the retaining washer must be firmly backed up by a flat shoulder which is square with the stud center line. The shoulder diameter must be no smaller than the minimum clamping diameter, d_a listed in the bearing tables.

The maximum inherent strength of the stud is obtained when the track roller is supported, as close as possible, to the retaining washer – which minimizes the bending moment. For this reason the edge of the housing – which supports the stud shank – should be kept as sharp as practical but free from burrs.

The clamping nut should not be tightened with a torque value higher than the maximum listed. A screwdriver slot, or hexagonal wrench socket in the flanged end of the stud, is provided for a tool to prevent the stud from turning when the nut is being tightened. Since the bottom of the screwdriver slot is not flat, it is helpful to put a radius on the tip of the screwdriver being used to hold the stud more securely. Hexagonal nuts are supplied with all metric series stud-type track rollers.

YOKE-TYPE TRACK ROLLERS

The machine element with the holes in which the mounting bolt or shaft is supported must be sufficiently rigid to resist local crushing under the applied load and to resist bending which can cause uneven loading of the needle rollers.

When applied loads are high, the h6 or j6 tolerance should be used in conjunction with a high strength shaft or bolt for mounting metric series yoke-type track rollers. When loads are moderate, a g6 tolerance may be used with a high strength shaft or bolt. For light loads, the loose transition fit with the f6 tolerance may be used with an unhardened shaft or bolt.

The yoke-type track rollers with inner rings – including those with end washers as well as inner rings – should be clamped endwise between parallel faces, perpendicular to the axis to prevent the retaining washers from coming off under load. The dimensions of machine parts, adjoining the metric series yoke-type track rollers, should be based on the minimum clamping diameter d_a to ensure that the washers are adequately supported. If the track roller cannot be end clamped, a close axial fit in the yoke is required. Care should be taken to assure that the lubricating hole is located in the unloaded zone of the raceway.

The metric series yoke-type track rollers without inner rings require a hardened and ground shaft, or bolt with a k5 tolerance. Inner raceway quality requirements are given in the engineering section.

LOAD RATINGS

DYNAMIC LOADING AS A TRACK ROLLER

When the outer ring of a stud-type or yoke-type track roller runs on a track, the contact – under a radial load – causes elastic (oval) deformation of the outer ring. As a result, a smaller zone of the raceway is loaded and the load is distributed on fewer needle rollers. This, in turn, affects the dynamic and static load ratings of the track rollers. Also, this deformation generates bending stress in the outer ring which must not exceed the maximum permitted for the material of the outer ring. The maximum permissible dynamic ($F_{r\,perm}$) radial load condition is determined by this requirement.

The rating life of stud-type or yoke-type track rollers should be calculated using the dynamic load ratings, C_w, shown in the following tables. The tables also show the maximum permissible radial load, $F_{r\,perm}$, that can be dynamically applied on stud-type or yoke-type track rollers. However, to calculate the L_{10} life of a track roller, the applied radial load must not be greater than $C_w/2$ based on ideal operating conditions of alignment, lubrication, temperature, speed and accelerations.

Example:

Given: A track roller application for a linear slide in which each roller supports a 453.59 kg (1000 lbs.) load and travels at 609.600 mm (24.0000 in.) per second.

Select a track roller and calculate the L_{10} life in hours assuming continuous operation at the given speed. Assume conditions of alignment, lubrication and temperature are ideal.

Solution: Calculate the minimum C_w required.

The applied radial load must not be greater than $C_w/2$ based on ideal operating conditions.

Therefore, $Fr < C_w/2$ or $C_w > 907.18$ kN (2000 lbs.)

For a KRV30, $C_w = 1002.4$ kN (2210 lbs.)

To calculate the speed in min^{-1}, $V = Pi \cdot D \cdot n$

Where:

V = linear velocity
Pi = 3.14
D = outside diameter of the track roller assembly

Therefore, 609.600 mm (24.000 in.)/sec. = 3.14 · 30.000 mm · n

Making appropriate substitutions and solving for n yields a value of approximately 388 min^{-1}.

The standard catalog life equation of a roller bearing is:

$$L_{10} = (C/P)10/3 \cdot (16667/n)$$

Where:

L_{10} = calculated fatigue life in hours
C = the dynamic radial load ratings based on 1000000 revolutions
P = the dynamic equivalent radial load
n = speed in min^{-1}

Substituting C_w for C and solving:

$$L_{10} = (2210/1000)\ 10/3 \cdot (16667/388) = 604 \text{ hours}$$

STATIC RATING AS A TRACK ROLLER

In addition to the basic static load rating, C_0, the tables also list the maximum permissible static radial load, $F_{0r\ perm}$, that may be applied to a stud-type or yoke-type metric series track roller. The values of $F_{0r\ perm}$ result in a calculated minimum static factor f_s of 0.7 for the worst condition of internal load distribution in metric series track roller operation. **The $F_{0r\ perm}$ values must not be exceeded**. Exceeding $F_{0r\ perm}$ may cause permanent damage to the track roller. A damaged track roller could cause the equipment in which the track roller is installed to malfunction. The static factor f_s can be calculated using the following formula:

$$f_s \geq 0.7 \left(\frac{F_{0r\ perm}}{P_{0r}} \right)$$

Where:

$F_{0r\ perm}$ = Maximum permissible static radial load
P_{0r} = Equivalent static load (F_{0r} for yoke-type track rollers)
F_{0r} = Static radial load
f_s = Static factor whose values should not be smaller than those suggested in Table B-35.

Table B-35. Suggested values for static factors f_s for metric series track rollers

Requirements for yoke – type track rollers and stud – type track rollers	Suggested f_s values	
	Max.	Min.
High shock-type loads Quiet running	2.5	1.5
Normal loading Normal quietness of running	1.5	1
Minor impact loads and rotary motion particularly quiet running not required	1	0.7

B

LUBRICATION OF STUD-TYPE TRACK ROLLERS

JTEKT metric series stud-type track rollers are supplied with a lithium soap-based, general-purpose grease. When the caged KR Series track rollers are operated at low speeds, with light loads and in clean environments, there is often no need to re-lubricate the track roller. In other applications, periodic re-lubrication may be necessary to obtain optimum performance. The full complement series of track rollers have less internal volume available for grease storage. Therefore, they may require more frequent lubrication than caged-type track rollers. Stud-type track rollers – with a screwdriver slot in the flanged end of the stud – have provisions for re-lubrication through the flanged end of the stud. Metric series stud-type track rollers, with hexagonal sockets, can not be re-lubricated from the flanged end of the stud. Both types of metric series stud-type track rollers – with outer diameters larger than 22.000 mm (0.8661 in.) (28.000 mm [1.1024 in.] for all GC variations) – allow for re-lubrication through the threaded end of the stud. In addition, caged roller and NUKR Series stud-type track rollers – with 30.000 mm (1.8110 in.) and larger outer diameters – allow for re-lubrication through a cross-drilled hole in the stud shank. The ends of the axial holes are counterbored to accept press-fit grease fittings of series VENN. The grease fittings are supplied with metric series stud-type track rollers. Hole diameters (d_4) for these grease fittings are listed in the tables of dimensions on pages later in this chapter as it applies. Note that the GC small series has no axial hole.

One or more plugs are supplied with every metric series stud-type track roller, to close off unused holes. At the flanged end, the plug must not be pushed in too deeply, as it may cover the cross-drilled lubricating hole. The plug should be pressed in using an installation tool whose dimensions are given in Table B-37. If the cross-drilled hole in the stud shank is not used, it will be covered when the track roller is properly installed.

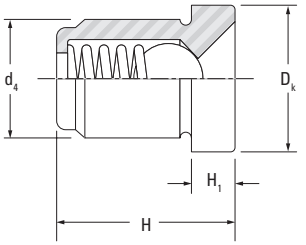

Fig. B-59. Metric series grease fittings

Table B-36. Metric series grease fittings, series VENN

Designation	d_4	D_K	H	H_1	Approx. wt.
	mm in.	**mm** in.	**mm** in.	**mm** in.	**g** lbs.
VENN 4	**4.000** 0.1575	**6.000** 0.2362	**6.000** 0.2362	**1.500** 0.0591	**0.4** 0.0009
VENN 6	**6.000** 0.2362	**8.000** 0.3147	**7.000** 0.2756	**2.000** 0.0787	**1.6** 0.0035
VENN 8	**8.000** 0.3150	**10.000** 0.3937	**12.000** 0.4724	**3.000** 0.1181	**4.7** 0.0104

During installation of the track roller it is desirable to ensure that the cross-drilled hole is positioned in the unloaded zone of the track roller raceway. The location of the cross-drilled hole can be best recognized by its alignment with the manufacturer's stamp, parallel to the screwdriver slot (when applicable).

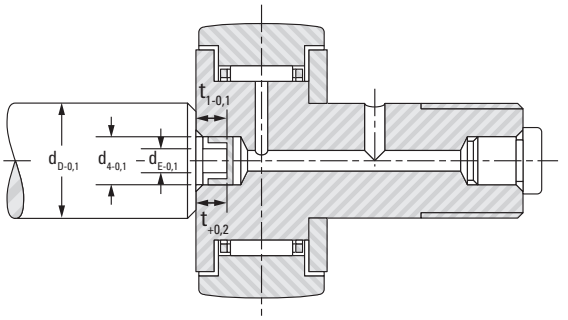

Fig. B-60. Installation tool for metric series plug

Table B-37. Installation tool for metric series plug

Stud-type track roller O.D.		d_4	d_D	d_E	t	t_1
>	≤					
mm in.	**mm** in.	**mm** in.	**mm** in.	**mm** in.	**mm** in.	**mm** in.
16.000 0.6299	**26.000** 1.0236	**3.900** 0.1535	**10.000** 0.3937	**2.700** 0.1063	**3.700** 0.1457	**4.500** 0.1772
30.000 1.1811	**40.000** 1.5748	**5.900** 0.2323	**12.000** 0.4724	**4.700** 0.1850	**4.700** 0.1850	**7.000** 0.2756
47.000 1.8504	**90.000** 3.5433	**7.900** 0.3110	**15.000** 0.5905	**6.700** 0.2638	**6.700** 0.2638	**10.000** 0.3937

LUBRICATION OF YOKE-TYPE TRACK ROLLERS

Yoke-type track rollers are produced with a lubricating hole in the inner ring so they can be re-lubricated through a cross-drilled hole in the supporting shaft or bolt. When mounting yoke-type track rollers, care should be taken that the lubrication hole is located in the unloaded raceway zone.

Oil is the preferred lubricant for yoke-type track rollers. Continuous oil lubrication, or frequent grease lubrication should be used for steady rotating conditions. Applications involving slow, intermittent oscillations are not as critical, and longer intervals between re-lubrication are permitted. Sealed yoke-type track rollers are normally supplied with an initial charge of a medium-temperature grease. Caged yoke-type track rollers have maximum grease storage capacity and, consequently, longer pregreased life than full complement types.

NEEDLE ROLLER AND CAGE ASSEMBLIES, STUD-TYPE (KR SERIES)

METRIC SERIES

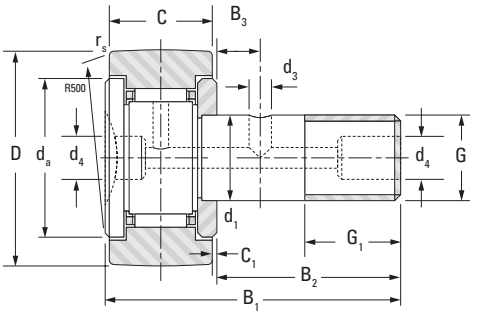

KR

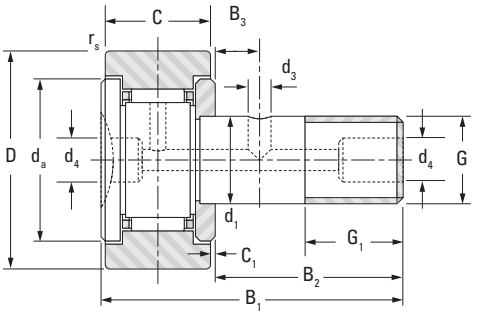

KR.DZ

Outer Dia.	h7	D	C	$r_{s\,min}$	B_1	B_2	B_3	G_1	d_4	d_3	G Thread	C_1	d_a
mm in.	**mm** in.	**mm** in.	**mm** in.	**mm** in.	**mm** in.	**mm** in.	**mm** in.	**mm** in.	**mm** in.	**mm** in.		**mm** in.	**mm** in.
16 0.6299	**6** 0.2362	**16** 0.6299	**11** 0.433	**0.3** 0.012	**28.2** 1.110	**16** 0.630		**8** 0.315	**4** 0.157		M6x1	**0.6** 0.024	**11** 0.433
19 0.7480	**8** 0.3150	**19** 0.7480	**11** 0.433	**0.3** 0.012	**32.2** 1.268	**20** 0.787		**10** 0.394	**4** 0.157		M8x1.25	**0.6** 0.024	**13** 0.512
22 0.8661	**10** 0.3937	**22** 0.8661	**12** 0.472	**0.3** 0.012	**36.0** 1.417	**23** 0.906		**12** 0.472	**4** 0.157		M10x1	**0.6** 0.024	**15** 0.591
26 1.0236	**10** 0.3937	**26** 1.0236	**12** 0.472	**0.3** 0.012	**36.0** 1.417	**23** 0.906		**12** 0.472	**4** 0.157		M10x1	**0.6** 0.024	**15** 0.591
30 0.551	**12** 0.4724	**30** 1.1811	**14** 0.551	**0.6** 0.024	**40.0** 1.575	**25** 0.984	**6** 0.236	**13** 0.512	**6** 0.236	**3** 0.118	M12x1.5	**0.6** 0.024	**21** 0.827
32 0.551	**12** 0.4724	**32** 1.2598	**14** 0.551	**0.6** 0.024	**40.0** 1.575	**25** 0.984	**6** 0.236	**13** 0.512	**6** 0.236	**3** 0.118	M12x1.5	**0.6** 0.024	**21** 0.827

Crowned Designation	Cylindrical Designation	Load Ratings					Tightening Torque	Speed Rating Grease	Wt.
		As a Bearing		As a Track Roller					
		Dynamic	Static	Dynamic		Static			
		C	C_o	C_w	$F_{r\ perm}$	$F_{Or\ perm}$			
		kN lbf.		**kN** lbf.			**N-m** lb-in.	min^{-1}	**kg** lbs.
KR16	KR16.DZ	**3.60** 810	**3.58** 800	**2.97** 670	**2.85** 640	**3.58** 800	**7** 62.0	17000	**0.019** 0.042
KR19	KR19.DZ	**4.18** 940	**4.65** 1050	**3.28** 740	**3.29** 740	**4.22** 950	**16** 142	13000	**0.031** 0.068
KR22	KR22.DZ	**5.35** 1200	**6.79** 1530	**3.94** 890	**4.04** 910	**5.45** 1230	**28** 248	10000	**0.046** 0.101
KR26	KR26.DZ	**5.35** 1200	**6.79** 1530	**4.55** 1020	**6.78** 1520	**7.24** 1630	**28** 248	10000	**0.059** 0.130
KR30	KR30.DZ	**7.89** 1770	**9.79** 2200	**6.32** 1420	**7.74** 1740	**9.31** 2090	**45** 398	8200	**0.087** 0.192
KR32	KR32.DZ	**7.89** 1770	**9.79** 2200	**6.65** 1490	**9.62** 2160	**10.3** 2320	**45** 398	8200	**0.095** 0.209

NEEDLE ROLLER AND CAGE ASSEMBLIES, SEALED, STUD-TYPE (KR...2S SERIES)

METRIC SERIES

B

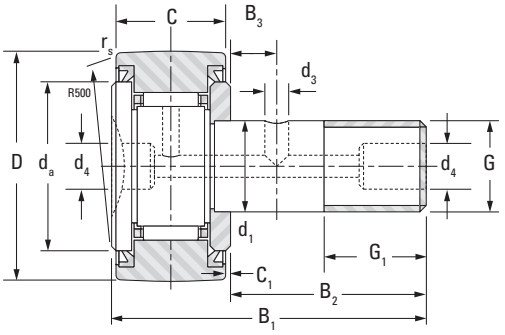

KR.2RS

Outer Dia.	d_1	D, h7	C	$r_{s\,min}$	B_1	B_2	B_3	G_1	d_4	d_3	G Thread	C_1	d_a
mm in.	**mm** in.	**mm** in.	**mm** in.	**mm** in.	**mm** in.	**mm** in.	**mm** in.	**mm** in.	**mm** in.	**mm** in.		**mm** in.	**mm** in.
16 0.6299	**6** 0.2362	**16** 0.6299	**11** 0.433	**0.3** 0.012	**28.2** 1.110	**16** 0.630		**8** 0.315	**4** 0.157		M6x1	**0.6** 0.024	**11** 0.433
19 0.7480	**8** 0.3150	**19** 0.7480	**11** 0.433	**0.3** 0.012	**32.2** 1.268	**20** 0.787		**10** 0.394	**4** 0.157		M8x1.25	**0.6** 0.024	**13** 0.512
22 0.8661	**10** 0.3937	**22** 0.8661	**12** 0.472	**0.3** 0.012	**36.2** 1.425	**23** 0.906		**12** 0.472	**4** 0.157		M10x1	**0.6** 0.024	**15** 0.591
26 1.0236	**10** 0.3937	**26** 1.0236	**12** 0.472	**0.3** 0.012	**36.2** 1.425	**23** 0.906		**12** 0.472	**4** 0.157		M10x1	**0.6** 0.024	**15** 0.591
30 1.1811	**12** 0.4724	**30** 1.1811	**14** 0.551	**0.6** 0.024	**40.2** 1.583	**25** 0.984	**6** 0.236	**13** 0.512	**6** 0.236	**3** 0.118	M12x1.5	**0.6** 0.024	**21** 0.827
32 1.2598	**12** 0.4724	**32** 1.2598	**14** 0.551	**0.6** 0.024	**40.2** 1.583	**25** 0.984	**6** 0.236	**13** 0.512	**6** 0.236	**3** 0.118	M12x1.5	**0.6** 0.024	**21** 0.827

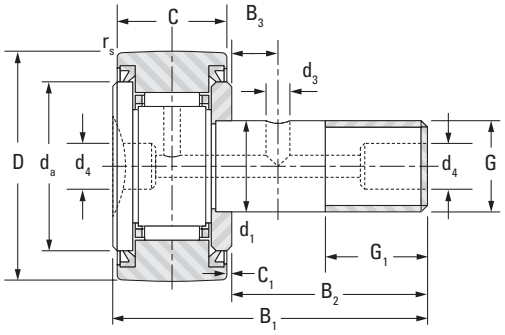

KR.DZ.2RS

Crowned Designation	Cylindrical Designation	Load Ratings					Tightening Torque	Speed Rating Grease	Wt.
		As a Bearing		As a Track Roller					
		Dynamic	Static	Dynamic		Static			
		C	C_o	C_w	$F_{r\ perm}$	$F_{Or\ perm}$			
		kN lbf.		**kN** lbf.			**N-m** lb-in.	min^{-1}	**kg** lbs.
KR16.2RS	KR16.DZ.2RS	**3.60** 810	**3.58** 800	**2.97** 670	**2.85** 640	**3.58** 800	**7.0** 61.96	17000	**0.019** 0.042
KR19.2RS	KR19.DZ.2RS	**4.18** 940	**4.65** 1050	**3.28** 740	**3.29** 740	**4.22** 950	**16** 141.61	13000	**0.031** 0.068
KR22.2RS	KR22.DZ.2RS	**5.35** 1200	**6.79** 1530	**3.94** 890	**4.04** 910	**5.45** 1230	**28** 247.82	10000	**0.046** 0.101
KR26.2RS	KR26.DZ.2RS	**5.35** 1200	**6.79** 1530	**4.55** 1020	**6.78** 1520	**7.24** 1630	**28** 247.82	10000	**0.059** 0.130
KR30.2RS	KR30.DZ.2RS	**7.89** 1770	**9.79** 2200	**6.32** 1420	**7.74** 1740	**9.31** 2090	**45** 398.28	8200	**0.087** 0.192
KR32.2RS	KR32.DZ.2RS	**7.89** 1770	**9.79** 2200	**6.65** 1490	**9.62** 2160	**10.3** 2320	**45** 398.28	8200	**0.098** 0.216

B

FULL COMPLEMENT WITH NEEDLE ROLLERS (KRV SERIES) OR CYLINDRICAL ROLLERS, STUD-TYPE (NUKR SERIES)

METRIC SERIES

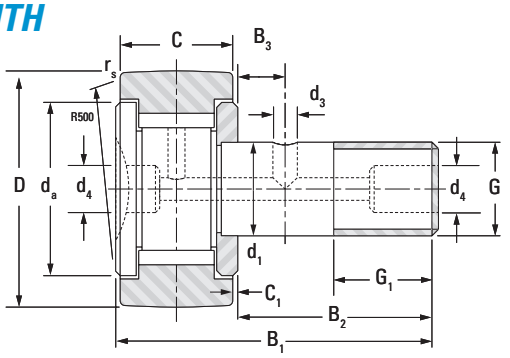

KRV

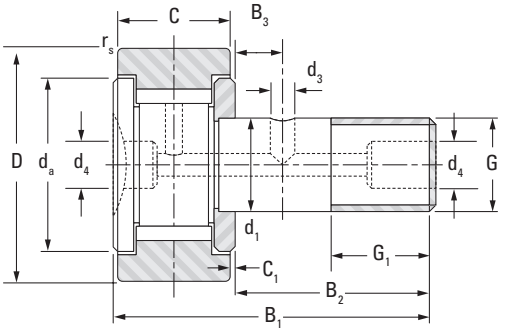

KRV.DZ

Outer Dia.	d_1	D, h7	C	$r_{s\,min}$	B_1	B_2	B_3	G_1	d_4	d_3	G Thread	C_1	d_a
mm in.	**mm** in.	**mm** in.	**mm** in.	**mm** in.	**mm** in.	**mm** in.	**mm** in.	**mm** in.	**mm** in.	**mm** in.		**mm** in.	**mm** in.
16 0.6299	**6** 0.2362	**16** 0.6299	**11** 0.433	**0.3** 0.012	**28.2** 1.110	**16** 0.630		**8** 0.315	**4** 0.157		M6x1	**0.6** 0.024	**11** 0.433
19 0.7480	**8** 0.3150	**19** 0.7480	**11** 0.433	**0.3** 0.012	**32.2** 1.268	**20** 0.787		**10** 0.394	**4** 0.157		M8x1.25	**0.6** 0.024	**13** 0.512
22 0.8661	**10** 0.3937	**22** 0.8661	**12** 0.472	**0.3** 0.012	**36.2** 1.425	**23** 0.906		**12** 0.472	**4** 0.157		M10x1	**0.6** 0.024	**15** 0.591
26 1.0236	**10** 0.3937	**26** 1.0236	**12** 0.472	**0.3** 0.012	**36.2** 1.425	**23** 0.906		**12** 0.472	**4** 0.157		M10x1	**0.6** 0.024	**15** 0.591
30 1.1811	**12** 0.4724	**30** 1.1811	**14** 0.551	**0.6** 0.024	**40.2** 1.583	**25** 0.984	**6** 0.236	**13** 0.512	**6** 0.236	**3** 0.118	M12x1.5	**0.6** 0.024	**21** 0.827
32 1.2598	**12** 0.4724	**32** 1.2598	**14** 0.551	**0.6** 0.024	**40.2** 1.583	**25** 0.984	**6** 0.236	**13** 0.512	**6** 0.236	**3** 0.118	M12x1.5	**0.6** 0.024	**21** 0.827
35 1.3780	**16** 0.6299	**35** 1.3780	**18** 0.709	**0.6** 0.024	**52** 2.047	**32.5** 1.280	**8** 0.315	**17** 0.669	**6** 0.236	**3** 0.118	M16x1.5	**0.8** 0.031	**25** 0.984
40 1.5748	**18** 0.7087	**40** 1.5748	**20** 0.787	**1** 0.039	**58** 2.283	**36.5** 1.437	**8** 0.315	**19** 0.748	**6** 0.236	**3** 0.118	M18x1.5	**0.8** 0.031	**27** 1.063
47 1.8504	**20** 0.7874	**47** 1.8504	**24** 0.945	**1** 0.039	**66** 2.598	**40.5** 1.594	**9** 0.354	**21** 0.827	**6** 0.236	**4** 0.157	M20x1.5	**0.8** 0.031	**33** 1.299
52 2.0472	**20** 0.7874	**52** 2.0472	**24** 0.945	**1** 0.039	**66** 2.598	**40.5** 1.594	**9** 0.354	**21** 0.827	**6** 0.236	**4** 0.157	M20x1.5	**0.8** 0.031	**37** 1.457
62 2.4409	**24** 0.9449	**62** 2.4409	**29** 1.142	**1** 0.039	**80** 3.150	**49.5** 1.949	**11** 0.433	**25** 0.984	**8** 0.315	**4** 0.157	M24x1.5	**0.8** 0.031	**45** 1.772
72 2.8346	**24** 0.9449	**72** 2.8346	**29** 1.142	**1.1** 0.043	**80** 3.150	**49.5** 1.949	**11** 0.433	**25** 0.984	**8** 0.315	**4** 0.157	M24x1.5	**0.8** 0.031	**51** 2.008
80 3.1496	**30** 1.1811	**80** 3.1496	**35** 1.378	**1.1** 0.043	**100** 3.937	**63** 2.480	**15** 0.591	**32** 1.260	**8** 0.315	**4** 0.157	M30x1.5	**1.0** 0.039	**52** 2.047
90 3.5433	**30** 1.1811	**90** 3.5433	**35** 1.378	**1.1** 0.043	**100** 3.937	**63** 2.480	**15** 0.591	**32** 1.260	**8** 0.315	**4** 0.157	M30x1.5	**1.0** 0.039	**52** 2.047

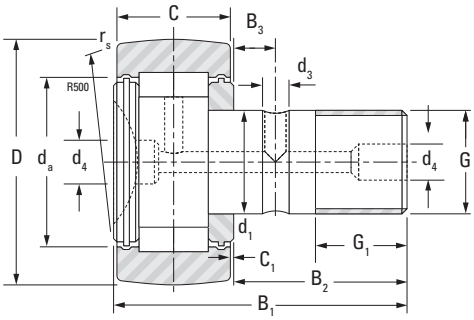

NUKR

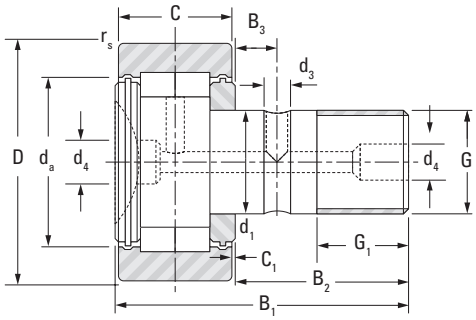

NUKR.DZ

Crowned Designation	Cylindrical Designation	Load Ratings					Tightening Torque	Speed Rating Grease	Wt.
		As a Bearing		As a Track Roller					
		Dynamic	Static	Dynamic		Static			
		C	C_o	C_w	$F_{r\ perm}$	$F_{Or\ perm}$			
		kN lbf.		**kN** lbf.			**N-m** lb-in.	min^{-1}	**kg** lbs.
KRV16	KRV16.DZ	**6.90** 1550	**8.40** 1890	**5.11** 1150	**3.49** 780	**6.28** 1410	**7** 62.0	5700	**0.019** 0.042
KRV19	KRV19.DZ	**8.08** 1820	**11.0** 2470	**5.66** 1270	**4.13** 930	**7.43** 1670	**16** 142	4300	**0.031** 0.068
KRV22	KRV22.DZ	**9.45** 2120	**14.3** 3210	**6.32** 1420	**5.04** 1130	**9.07** 2040	**28** 248	3400	**0.046** 0.101
KRV26	KRV26.DZ	**9.45** 2120	**14.3** 3210	**7.30** 1640	**8.60** 1930	**12.7** 2860	**28** 248	3400	**0.059** 0.130
KRV30	KRV30.DZ	**13.4** 3010	**19.8** 4450	**9.85** 2210	**9.20** 2070	**15.7** 3530	**45** 398	2800	**0.087** 0.192
KRV32	KRV32.DZ	**13.4** 3010	**19.8** 4450	**10.4** 2340	**11.3** 2540	**17.4** 3910	**45** 398	2800	**0.098** 0.216
NUKR35.2SK		**24.7** 5550	**29.4** 6610	**16.2** 3640	**10.1** 2270	**16.1** 3620	**53.2** 471	6100	**0.170** 0.375
NUKR40.2SK		**26.6** 5980	**33.3** 7490	**18.7** 4200	**15.0** 3370	**23.9** 5370	**77.5** 686	5300	**0.250** 0.551
NUKR47.2SK		**41.4** 9310	**53.2** 12000	**28.1** 6320	**20.5** 4610	**32.7** 7350	**109** 965	4500	**0.380** 0.838
NUKR52.2SK		**45.8** 10300	**63.1** 14200	**29.6** 6650	**22.2** 4990	**35.4** 7960	**109** 965	3700	**0.461** 1.016
NUKR62.2SK		**62.7** 14100	**83.1** 18700	**40.9** 9190	**29.6** 6650	**47.2** 10600	**193** 1708	3200	**0.790** 1.742
NUKR72.2SK		**68.9** 15500	**97.8** 22000	**46.1** 10400	**39.6** 8900	**63.1** 14200	**193** 1708	2600	**1.040** 2.293
NUKR80.2SK		**95.4** 21400	**130** 29200	**69.7** 15700	**63.2** 14200	**101** 22700	**390** 3452	2900	**1.550** 3.417
NUKR90.2SK		**95.4** 21400	**130** 29200	**77.8** 17500	**97.8** 22000	**128** 28800	**390** 3452	2900	**2.020** 4.453

FULL COMPLEMENT, SMALL SERIES, UNSEALED, STUD-TYPE (GC SERIES)

METRIC SERIES

B

GC: crowned outer ring
GCL: cylindrical outer ring

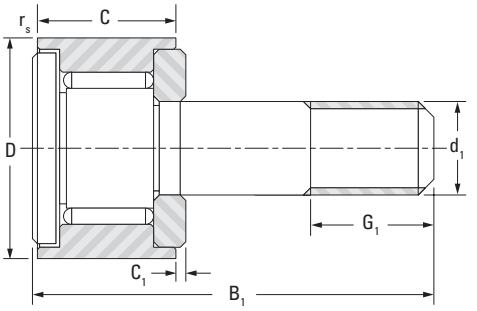

GC10-15/GCL10-15 Series

Outer Dia.	D	d_1	Thread	C	C_1	$r_{s\,min}$	B_1	G_1
mm in.	**mm** in.	**mm** in.		**mm** in.	**mm** in.	**mm** in.	**mm** in.	**mm** in.
10 0.3937	**10** 0.3937	**4** 0.1575	M4 x 0.7	**8** 0.315	**0.25** 0.010	**0.2** 0.008	**19.5** 0.768	**6** 0.236
11 0.4331	**11** 0.4331	**4** 0.1575	M4 x 0.7	**8** 0.315	**0.25** 0.010	**0.2** 0.008	**19.5** 0.768	**6** 0.236
12 0.4724	**12** 0.4724	**5** 0.1969	M5 x 0.8	**9** 0.354	**0.25** 0.010	**0.2** 0.008	**22.5** 0.886	**7** 0.276
13 0.5118	**13** 0.5118	**5** 0.1969	M5 x 0.8	**9** 0.354	**0.25** 0.010	**0.2** 0.008	**22.5** 0.886	**7** 0.276
14 0.5512	**14** 0.5512	**6** 0.2362	M6 x 1	**9.5** 0.374	**0.25** 0.010	**0.3** 0.012	**26** 1.024	**8** 0.315
15 0.5906	**15** 0.5906	**6** 0.2362	M6 x 1	**9.5** 0.374	**0.25** 0.010	**0.3** 0.012	**26** 1.024	**8** 0.315

Crowned Designation	Cylindrical Designation	Tightening Torque	Load Ratings					Speed Rating Grease	Wt.
			As a Bearing		As a Track Roller				
			C	C_o	C_w	$F_{r\ perm}$	$F_{Or\ perm}$		
		N-m lb-in.	**kN** lbf.		**kN** lbf.			min^{-1}	**kg** lbs.
GC 10	GCL 10	**0.9** 7.97	**2.80** 629	**3.09** 695	**1.92** 432	**1.01** 227	**1.82** 409	8500	**0.006** 0.014
GC 11	GCL 11	**0.9** 7.97	**2.8** 629	**3.09** 695	**2.12** 477	**1.43** 321	**2.58** 580	8500	**0.007** 0.016
GC 12	GCL 12	**1.8** 15.93	**3.74** 841	**4.74** 1070	**2.54** 571	**1.63** 366	**2.94** 661	6600	**0.011** 0.024
GC 13	GCL 13	**1.8** 15.93	**3.74** 841	**4.74** 1070	**2.16** 486	**2.75** 618	**3.89** 874	6600	**0.011** 0.024
GC 14	GCL 14	**3.0** 26.55	**4.05** 910	**5.44** 1220	**2.86** 643	**2.26** 508	**4.07** 915	5700	**0.016** 0.035
GC 15	GCL 15	**3.0** 26.55	**4.05** 910	**5.44** 1220	**3.04** 683	**2.83** 636	**4.65** 1050	5700	**0.018** 0.039

FULL COMPLEMENT, STANDARD SERIES, WITH OR WITHOUT SEALS, STUD-TYPE (GC SERIES)

METRIC SERIES

B

GC: crowned outer ring
GCL: cylindrical outer ring

EE: with plastic seals
EEM: with metal seals

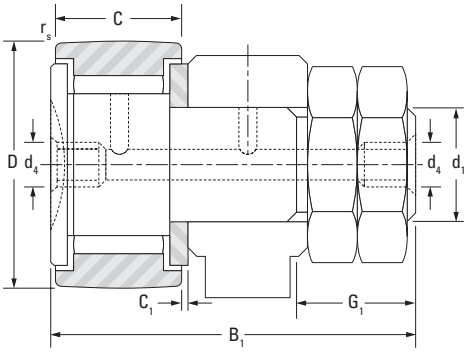

GC16-90/GCL16-90 Series

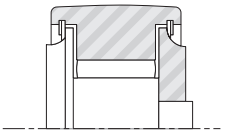

GC...EE, GC...EM

Outer Dia.	D	d_1	Pitch	C	C_1	$r_{s\,min}$	B_1	G_1	Crowned Designation	Cylindrical Designation
mm in.	**mm** in.	**mm** in.	**mm**	**mm** in.	**mm** in.	**mm** in.	**mm** in.	**mm** in.		
16 0.6299	**16** 0.6299	**6** 0.2362	**1.0**	**11** 0.433	**0.60** 0.024	**0.3** 0.012	**28.3** 1.114	**8** 0.315	GC 16	GCL 16
19 0.748	**19** 0.748	**8** 0.315	**1.25**	**11** 0.433	**0.60** 0.024	**0.3** 0.012	**32.3** 1.272	**10** 0.394	GC 19	GCL 19
22 0.8661	**22** 0.8661	**10** 0.3937	**1.25**	**12** 0.472	**0.60** 0.024	**0.3** 0.012	**36.3** 1.429	**12** 0.472	GC 22	GCL 22
24 0.9449	**24** 0.9449	**10** 0.3937	**1.25**	**12** 0.472	**0.60** 0.024	**0.3** 0.012	**36.3** 1.429	**12** 0.472	GC 24	GCL 24
26 1.0236	**26** 1.0236	**10** 0.3937	**1.25**	**12** 0.472	**0.60** 0.024	**0.3** 0.012	**36.3** 1.429	**12** 0.472	GC 26	GCL 26
28 1.1024	**28** 1.1024	**10** 0.3937	**1.25**	**12** 0.472	**0.60** 0.024	**0.3** 0.012	**36.3** 1.429	**12** 0.472	GC 28	GCL 28
30 1.1811	**30** 1.1811	**12** 0.4724	**1.5**	**14** 0.51	**0.60** 0.024	**0.6** 0.024	**40.3** 1.587	**13** 0.512	GC 30	GCL 30
32 1.2598	**32** 1.2598	**12** 0.4724	**1.5**	**14** 0.51	**0.60** 0.024	**0.6** 0.024	**40.3** 1.587	**13** 0.512	GC 32	GCL 32
35 1.378	**35** 1.378	**16** 0.6299	**1.5**	**18** 0.709	**0.80** 0.031	**0.6** 0.024	**52.3** 2.059	**17** 0.669	GC 35	GCL 35
47 1.8504	**47** 1.8504	**20** 0.7874	**1.5**	**24** 0.45	**0.80** 0.031	**1** 0.039	**66.3** 2.61	**21** 0.827	GC 47	GCL 47
52 2.0472	**52** 2.0472	**20** 0.7874	**1.5**	**24** 0.45	**0.80** 0.031	**1** 0.039	**66.3** 2.61	**21** 0.827	GC 52	GCL 52
62 2.4409	**62** 2.4409	**24** 0.9449	**1.5**	**29** 1.142	**0.80** 0.031	**1** 0.039	**80.3** 3.161	**25** 0.984	GC 62	GCL 62
72 2.8346	**72** 2.8346	**24** 0.9449	**1.5**	**29** 1.142	**0.80** 0.031	**1** 0.039	**80.3** 3.161	**25** 0.984	GC 72	GCL 72
80 3.1496	**80** 3.1496	**30** 1.1811	**1.5**	**35** 1.378	**1.00** 0.039	**1** 0.039	**100.3** 3.949	**32** 1.26	GC 80	GCL 80
85 3.3465	**85** 3.3465	**30** 1.1811	**1.5**	**35** 1.378	**1.00** 0.039	**1** 0.039	**100.3** 3.949	**32** 1.26	GC 85	GCL 85
90 3.5433	**90** 3.5433	**30** 1.1811	**1.5**	**35** 1.378	**1.00** 0.039	**1** 0.039	**100.3** 3.949	**32** 1.26	GC 90	GCL 90

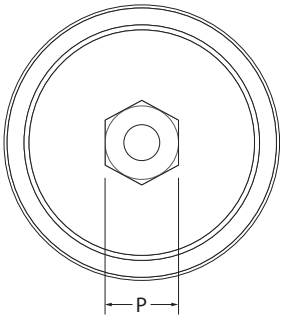

Hex Socket Roller End

Tightening Torque	Load Ratings					Speed Rating Grease	P	d_4	Wt.
	As a Bearing		As a Track Roller				Wrench		
	C	C_o	C_w	$F_{r\ perm}$	$F_{0r\ perm}$				
N-m lb-in.	**kN** lbf.		**kN** lbf.			min^{-1}	**mm**	**mm** in.	**kg** lbs.
3 26.6	**5.66** 1270	**6.51** 1460	**4.19** 942	**2.79** 627	**5.02** 1130	5700	N/A	**4** 0.157	**0.021** 0.046
8 70.8	**6.44** 1450	**8.15** 1830	**4.65** 1050	**3** 785	**6.28** 1410	4400	N/A	**4** 0.157	**0.034** 0.075
20 177	**7.3** 1640	**10.2** 2290	**5.05** 1140	**4.07** 915	**7.33** 1650	3500	N/A	**4** 0.157	**0.058** 0.128
20 177	**7.3** 1640	**10.2** 2290	**5.45** 1230	**5.42** 1220	**8.63** 1940	3500	N/A	**4** 0.157	**0.067** 0.148
20 177	**9.92** 2230	**12.9** 2900	**7.09** 1590	**5.43** 1220	**9.77** 2200	3200	N/A	**4** 0.157	**0.072** 0.159
20 177	**9.92** 2230	**12.9** 2900	**7.57** 1700	**6.95** 1560	**11.4** 2560	3200	N/A	**4** 0.157	**0.08** 0.176
26 230	**15.5** 3480	**20.4** 4590	**11.2** 2520	**8.48** 1910	**15.3** 3440	2900	**8**	**4** 0.157	**0.115** 0.254
26 230	**15.5** 3480	**20.4** 4590	**11.8** 2650	**10.6** 2380	**18.1** 4070	2900	**8**	**4** 0.157	**0.12** 0.265
64 566	**23.6** 5310	**33.1** 7440	**15.7** 3530	**10.8** 2430	**19.4** 4360	2200	**10**	**6** 0.236	**0.208** 0.459
120 1060	**36.5** 8210	**65.5** 14700	**22.5** 5060	**20.2** 4540	**36.4** 8180	1400	**14**	**6** 0.236	**0.477** 1.052
120 1060	**36.5** 8210	**65.5** 14700	**25.2** 5670	**28** 6290	**47.5** 10700	1400	**14**	**6** 0.236	**0.542** 1.195
220 1950	**43.3** 9730	**85.6** 19200	**30.5** 6860	**42.9** 9640	**64.7** 14500	1200	**12**	**6** 0.236	**0.944** 2.081
220 1950	**43.3** 9730	**85.6** 19200	**33.9** 7620	**65.8** 14800	**79.5** 17900	1200	**12**	**6** 0.236	**1.165** 2.568
450 3980	**65.1** 14600	**144** 32400	**42.7** 9600	**62.9** 14100	**95.3** 21400	870	**14**	**8** 0.315	**1.915** 4.222
450 3980	**65.1** 14600	**144** 32400	**45.1** 10100	**75.3** 16900	**106** 23800	870	**14**	**8** 0.315	**2.096** 4.621
450 3980	**65.1** 14600	**144** 32400	**47.1** 10600	**88.8** 20000	**115** 25900	870	**14**	**8** 0.315	**2.287** 5.042

FULL COMPLEMENT, WITH METAL SEALS, STUD-TYPE (GCU...MM SERIES)

METRIC SERIES

B

GCU: crowned outer ring
GCUL: cylindrical outer ring

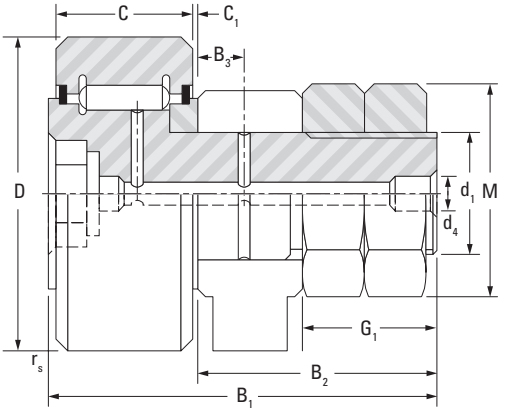

GCU, GCUL

Outer Dia.	D	d_1	C	C_1	B_1	G_1	$r_{s\,min}$	Crowned Designation	Cylindrical Designation
mm in.	**mm** in.	**mm** in.	**mm** in.	**mm** in.	**mm** in.	**mm** in.	**mm** in.		
35 1.3780	**35** 1.3780	**16** 0.6299	**18** 0.709	**0.85** 0.033	**52.3** 2.059	**17** 0.669	**0.6** 0.024	GCU 35 MM	GCUL 35 MM
40 1.5748	**40** 1.5748	**18** 0.7087	**20** 0.787	**0.85** 0.033	**58.3** 2.295	**19** 0.748	**1.0** 0.039	GCU 40 MM	GCUL 40 MM
47 1.8504	**47** 1.8504	**20** 0.7874	**24** 0.945	**0.85** 0.033	**66.3** 2.610	**21** 0.827	**1.0** 0.039	GCU 47 MM	GCUL 47 MM
52 2.0472	**52** 2.0472	**20** 0.7874	**24** 0.945	**0.85** 0.033	**66.3** 2.610	**21** 0.827	**1.0** 0.039	GCU 52 MM	GCUL 52 MM
62 2.4409	**62** 2.4409	**24** 0.9449	**29** 1.142	**0.85** 0.033	**80.3** 3.161	**25** 0.984	**1.0** 0.039	GCU 62 MM	GCUL 62 MM
72 2.8346	**72** 2.8346	**24** 0.9449	**29** 1.142	**0.85** 0.033	**80.3** 3.161	**25** 0.984	**1.1** 0.043	GCU 72 MM	GCUL 72 MM
80 3.1496	**80** 3.1496	**30** 1.1811	**35** 1.378	**1.10** 0.043	**100.3** 3.949	**32** 1.260	**1.1** 0.043	GCU 80 MM	GCUL 80 MM
90 3.5433	**90** 3.5433	**30** 1.1811	**35** 1.378	**1.10** 0.043	**100.3** 3.949	**32** 1.260	**1.1** 0.043	GCU 90 MM	GCUL 90 MM
100 3.9370	**100** 3.9370	**36** 1.4173	**40** 1.575	**1.10** 0.043	**117.3** 4.618	**38** 1.496	**2.0** 0.079	GCU 100 MM	GCUL 100 MM
110 4.3307	**110** 4.3307	**36** 1.4173	**40** 1.575	**1.10** 0.043	**117.3** 4.618	**38** 1.496	**2.0** 0.079	GCU 110 MM	GCUL 110 MM
120 4.7244	**120** 4.7244	**42** 1.6535	**46** 1.811	**1.10** 0.043	**136.3** 5.366	**44** 1.732	**2.0** 0.079	GCU 120 MM	GCUL 120 MM
130 5.1181	**130** 5.1181	**42** 1.6535	**46** 1.811	**1.10** 0.043	**136.3** 5.366	**44** 1.732	**2.0** 0.079	GCU 130 MM	GCUL 130 MM

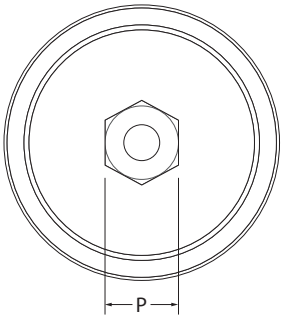

Hex Socket Roller End

Tightening Torque	Load Ratings					Speed Rating Grease	P	B_2	B_3	d_4	M	Wt.
	As a Bearing		As a Track Roller				Wrench					
	C	C_o	C_w	$F_{r\ perm}$	$F_{Or\ perm}$							
N-m lb-in.	**kN** lbf.		**kN** lbf.			min^{-1}	**mm**	**mm** in.	**mm** in.	**mm** in.	**mm** in.	**kg** lbs.
64 566	**26.4** 5930	**32.4** 7280	**15.4** 3460	**7.25** 1630	**13.1** 2940	2200	**10**	**32.8** 1.291	**8** 0.315	**6** 0.236	**26.0** 1.024	**0.200** 0.441
90 797	**26.4** 5930	**32.4** 7280	**18.7** 4200	**12.1** 2720	**21.8** 4900	2200	**12**	**36.8** 1.449	**8** 0.315	**6** 0.236	**28.6** 1.126	**0.289** 0.637
120 1060	**43.8** 9850	**57.9** 13000	**26.7** 6000	**14.3** 3210	**25.8** 5800	1600	**14**	**40.8** 1.606	**9** 0.354	**6** 0.236	**33.6** 1.323	**0.450** 0.992
120 1060	**43.8** 9850	**57.9** 13000	**30.6** 6880	**21.2** 4770	**38.2** 8590	1600	**14**	**40.8** 1.606	**9** 0.354	**6** 0.236	**33.6** 1.323	**0.520** 1.146
220 1950	**63.7** 14300	**87.4** 19600	**44.1** 9910	**30.9** 6950	**55.6** 12500	1400	**12**	**49.8** 1.961	**11** 0.433	**6** 0.236	**38.9** 1.531	**0.910** 2.006
220 1950	**63.7** 14300	**87.4** 19600	**50.8** 11400	**52.7** 11800	**84.1** 18900	1400	**12**	**49.8** 1.961	**11** 0.433	**6** 0.236	**38.9** 1.531	**1.140** 2.513
450 3980	**100** 22500	**140** 31500	**66.8** 15000	**43.8** 9850	**78.8** 17700	1000	**14**	**63.3** 2.492	**15** 0.591	**8** 0.315	**51.8** 2.039	**1.870** 4.123
450 3980	**100** 22500	**140** 31500	**75.8** 17000	**68.1** 15300	**122** 27400	1000	**14**	**63.3** 2.492	**15** 0.591	**8** 0.315	**51.8** 2.039	**2.230** 4.914
740 6550	**115** 25900	**175** 39300	**82.1** 18500	**76.6** 17200	**135** 30300	840	**17**	**75.3** 2.965	**20** 0.787	**8** 0.315	**61.0** 2.402	**3.290** 7.253
740 6550	**115** 25900	**175** 39300	**89.7** 20200	**107** 24100	**161** 36200	840	**17**	**75.3** 2.965	**20** 0.787	**8** 0.315	**61.0** 2.402	**3.800** 8.378
1 200 10620	**167** 37500	**240** 54000	**124** 27900	**107** 24100	**193** 43400	740	**19**	**88.3** 3.476	**24** 0.945	**8** 0.315	**71.0** 2.795	**5.422** 11.953
1 200 10620	**167** 37500	**240** 54000	**133** 30000	**142** 31900	**228** 51300	740	**19**	**88.3** 3.476	**24** 0.945	**8** 0.315	**71.0** 2.795	**5.780** 12.743

FULL COMPLEMENT, ECCENTRIC, STUD-TYPE (GCR SERIES)

METRIC SERIES

B

GCR: crowned outer ring
GCRL: cylindrical outer ring

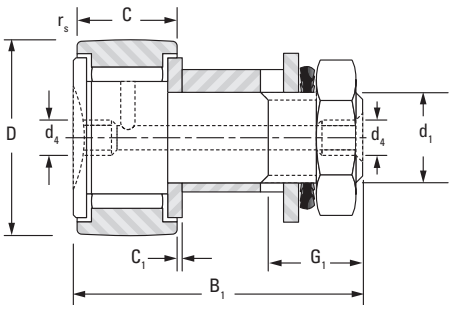

GCR 16-52

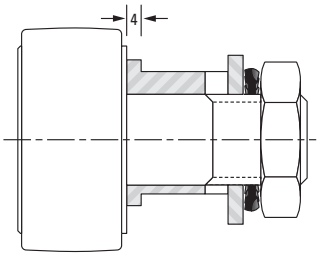

GCR 62-90

Outer Dia.	D	d_1	C	C_1	B_1	G_1	$r_{s\,min}$	Crowned Designation	Cylindrical Designation
mm in.	**mm** in.	**mm** in.	**mm** in.	**mm** in.	**mm** in.	**mm** in.	**mm** in.		
16 0.6299	**16** 0.6299	**6** 0.2362	**11** 0.433	**0.60** 0.024	**28.3** 1.114	**8** 0.315	**0.3** 0.012	GCR 16	
19 0.748	**19** 0.748	**8** 0.315	**11** 0.433	**0.60** 0.024	**32.3** 1.272	**10** 0.394	**0.3** 0.012	GCR 19	
22 0.8661	**22** 0.8661	**10** 0.3937	**12** 0.472	**0.60** 0.024	**36.3** 1.429	**12** 0.472	**0.3** 0.012	GCR 22	GCRL 22
24 0.9449	**24** 0.9449	**10** 0.3937	**12** 0.472	**0.60** 0.024	**36.3** 1.429	**12** 0.472	**0.3** 0.012	GCR 24	
26 1.0236	**26** 1.0236	**10** 0.3937	**12** 0.472	**0.60** 0.024	**36.3** 1.429	**12** 0.472	**0.3** 0.012	GCR 26	GCRL 26
28 1.1024	**28** 1.1024	**10** 0.3937	**12** 0.472	**0.60** 0.024	**36.3** 1.429	**12** 0.472	**0.3** 0.012	GCR 28	GCRL 28
30 1.1811	**30** 1.1811	**12** 0.4724	**14** 0.551	**0.60** 0.024	**40.3** 1.587	**13** 0.512	**0.6** 0.024	GCR 30	GCRL 30
32 1.2598	**32** 1.2598	**12** 0.4724	**14** 0.551	**0.60** 0.024	**40.3** 1.587	**13** 0.512	**0.6** 0.024	GCR 32	GCRL 32
35 1.378	**35** 1.378	**16** 0.6299	**18** 0.709	**0.80** 0.031	**52.3** 2.059	**17** 0.669	**0.6** 0.024	GCR 35	GCRL 35
40 1.5748	**40** 1.5748	**18** 0.7087	**20** 0.787	**0.80** 0.709	**58.3** 2.295	**19** 0.748	**1** 0.039	GCR 40	GCRL 40
47 1.8504	**47** 1.8504	**20** 0.7874	**24** 0.945	**0.80** 0.709	**66.3** 2.61	**21** 0.827	**1** 0.039	GCR 47 EE	GCRL 47
52 2.0472	**52** 2.0472	**20** 0.7874	**24** 0.945	**0.80** 0.709	**66.3** 2.61	**21** 0.827	**1** 0.039	GCR 52	GCRL 52
62 2.4409	**62** 2.4409	**24** 0.9449	**29** 1.142	**0.80** 0.709	**80.3** 3.161	**25** 0.984	**1** 0.039	GCR 62	GCRL 62
72 2.8346	**72** 2.8346	**24** 0.9449	**29** 1.142	**0.80** 0.709	**80.3** 3.161	**25** 0.984	**1** 0.039	GCR 72	GCRL 72
80 3.1496	**80** 3.1496	**30** 1.1811	**35** 1.378	**1.00** 0.039	**100.3** 3.949	**32** 1.26	**1** 0.039	GCR 80	
90 3.5433	**90** 3.5433	**30** 1.1811	**35** 1.378	**1.00** 0.039	**100.3** 3.949	**32** 1.26	**1** 0.039	GCR 90	GCRL 90

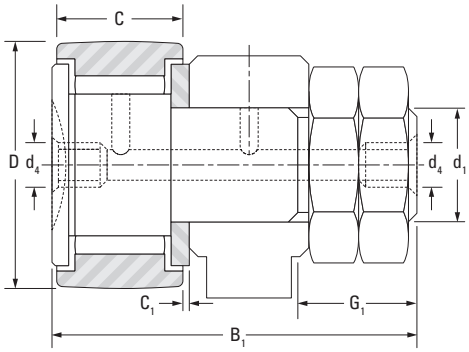

GCR..EE, GCR..EEM
GCRL..EE, GCRL..EEM

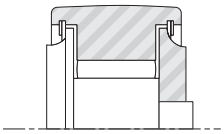

GC...EE, GC...EM

Tightening Torque	Load Ratings					Speed Rating Grease	d_4	Wt.
	As a Bearing		As a Track Roller					
	C	C_o	C_w	$F_{r\ perm}$	$F_{Or\ perm}$			
N-m lb-in.	**kN** lbf.		**kN** lbf.			min^{-1}	**mm** in.	**kg** lbs.
2 17.7	**5.66** 1270	**6.51** 1460	**4.19** 942	**2.79** 627	**5.02** 1130	5700	**4** 0.157	**0.024** 0.053
5 44.3	**6.44** 1450	**8.15** 1830	**4.65** 1050	**3** 785	**6.28** 1410	4400	**4** 0.157	**0.039** 0.086
16 142	**7.3** 1640	**10.2** 2290	**5.05** 1140	**4.07** 915	**7.33** 1650	3500	**4** 0.157	**0.057** 0.126
16 142	**7.3** 1640	**10.2** 2290	**5.45** 1230	**5.42** 1220	**8.63** 1940	3500	**4** 0.157	**0.072** 0.159
16 142	**9.92** 2230	**12.9** 2900	**7.09** 1590	**5.43** 1220	**9.77** 2200	3200	**4** 0.157	**0.080** 0.176
16 142	**9.92** 2230	**12.9** 2900	**7.57** 1700	**6.95** 1560	**11.4** 2560	3200	**4** 0.157	**0.088** 0.194
22 195	**15.5** 3480	**20.4** 4590	**11.2** 2520	**8.48** 1910	**15.3** 3440	2900	**4** 0.157	**0.118** 0.260
22 195	**15.5** 3480	**20.4** 4590	**11.8** 2650	**10.6** 2380	**18.1** 4070	2900	**4** 0.157	**0.126** 0.278
55 487	**23.6** 5310	**33.1** 7440	**15.7** 3530	**10.8** 2430	**19.4** 4360	2200	**6** 0.236	**0.220** 0.485
75 664	**29.9** 6720	**48** 10800	**18.5** 4160	**13.8** 3100	**24.8** 5580	1800	**6** 0.236	**0.321** 0.708
100 885	**36.5** 8210	**65.5** 14700	**22.5** 5060	**20.2** 4540	**36.4** 8180	1400	**6** 0.236	**0.500** 1.102
100 885	**36.5** 8210	**65.5** 14700	**25.2** 5670	**28** 6290	**47.5** 10700	1400	**6** 0.236	**0.568** 1.252
180 1590	**43.3** 9730	**85.6** 19200	**30.5** 6860	**42.9** 9640	**64.7** 14500	1200	**8** 0.315	**1.035** 2.282
180 1590	**43.3** 9730	**85.6** 19200	**33.9** 7620	**65.8** 14800	**79.5** 17900	1200	**8** 0.315	**1.278** 2.818
370 3270	**65.1** 14600	**144** 32400	**42.7** 9600	**62.9** 14100	**95.3** 21400	870	**8** 0.315	**2.074** 4.572
370 3270	**65.1** 14600	**144** 32400	**47.1** 10600	**88.8** 20000	**115** 25900	870	**8** 0.315	**2.435** 5.368

FULL COMPLEMENT, ECCENTRIC, WITH METAL SEALS, STUD-TYPE (GCUR...MM SERIES)

METRIC SERIES

B

GCUR: crowned outer ring
GCURL: cylindrical outer ring

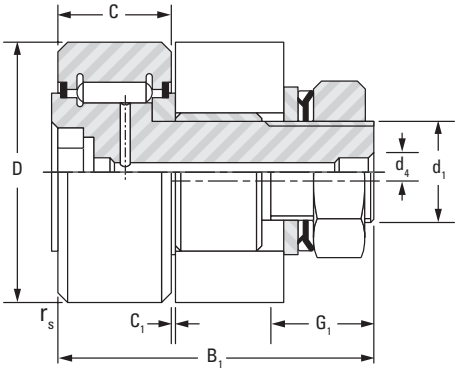

GCUR 35-52

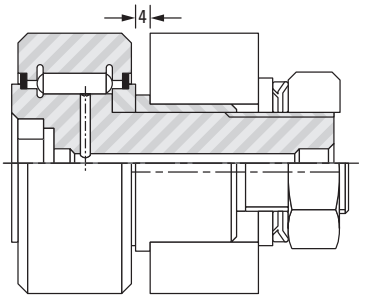

GCUR 62-130

Outer Dia.	D	d_1	C	C_1	B_1	G_1	$r_{s\,min}$	Crowned Designation	Cylindrical Designation
mm in.	**mm** in.	**mm** in.	**mm** in.	**mm** in.	**mm** in.	**mm** in.	**mm** in.		
35 1.3780	**35** 1.3780	**16** 0.6299	**18** 0.709	**0.85** 0.033	**52.3** 2.059	**17** 0.669	**0.6** 0.024	GCUR 35 MM	
40 1.5748	**40** 1.5748	**18** 0.7087	**20** 0.787	**0.85** 0.033	**58.3** 2.295	**19** 0.748	**1.0** 0.039		GCURL 40 MM
52 2.0472	**52** 2.0472	**20** 0.7874	**24** 0.945	**0.85** 0.033	**66.3** 2.610	**21** 0.827	**1.0** 0.039	GCUR 52 MM	
62 2.4409	**62** 2.4409	**24** 0.9449	**29** 1.142	**0.85** 0.033	**80.3** 3.161	**25** 0.984	**1.0** 0.039	GCUR 62 MM	
72 2.8346	**72** 2.8346	**24** 0.9449	**29** 1.142	**0.85** 0.033	**80.3** 3.161	**25** 0.984	**1.1** 0.043	GCUR 72 MM	
80 3.1496	**80** 3.1496	**30** 1.1811	**35** 1.378	**1.10** 0.043	**100.3** 3.949	**32** 1.260	**1.1** 0.043	GCUR 80 MM	
90 3.5433	**90** 3.5433	**30** 1.1811	**35** 1.378	**1.10** 0.043	**100.3** 3.949	**32** 1.260	**1.1** 0.043	GCUR 90 MM	
100 3.9370	**100** 3.9370	**36** 1.4173	**40** 1.575	**1.10** 0.043	**117.3** 4.618	**38** 1.496	**2.0** 0.079	GCUR 100 MM	
110 4.3307	**110** 4.3307	**36** 1.4173	**40** 1.575	**1.10** 0.043	**117.3** 4.618	**38** 1.496	**2.0** 0.079	GCUR 110 MM	
120 4.7244	**120** 4.7244	**42** 1.6535	**46** 1.811	**1.10** 0.043	**136.3** 5.366	**44** 1.732	**2.0** 0.079	GCUR 120 MM	
130 5.1181	**130** 5.1181	**42** 1.6535	**46** 1.811	**1.10** 0.043	**136.3** 5.366	**44** 1.732	**2.0** 0.079	GCUR 130 MM	

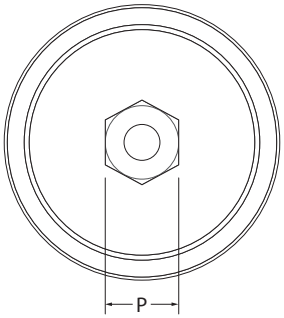

Hex Socket Roller End

Tightening Torque	Load Ratings					Speed Rating Grease	P	d_4	Wt.
	As a Bearing		As a Track Roller				Wrench		
	C	C_o	C_w	$F_{r\ perm}$	$F_{0r\ perm}$				
N-m lb-in.	**kN** lbf.		**kN** lbf.			min^{-1}	**mm**	**mm** in.	**kg** lbs.
55 487	**26.4** 5930	**32.4** 7280	**15.4** 3460	**7.25** 1630	**13.1** 2940	**2200**	**10**	**6** 0.236	**0.215** 0.474
75 664	**26.4** 5930	**32.4** 7280	**18.7** 4200	**12.1** 2720	**21.8** 4900	2200	**12**	**6** 0.236	**0.313** 0.690
100 885	**43.8** 9850	**57.9** 13000	**30.6** 6880	**21.2** 4770	**38.2** 8590	1600	**14**	**6** 0.236	**0.555** 1.224
180 1593	**63.7** 14300	**87.4** 19600	**44.1** 9910	**30.9** 6950	**55.6** 12500	1400	**12**	**6** 0.236	**1.022** 2.253
180 1593	**63.7** 14300	**87.4** 19600	**50.8** 11400	**52.7** 11800	**84.1** 18900	1400	**12**	**6** 0.236	**0.113** 0.249
370 3275	**100** 22500	**140** 31500	**66.8** 15000	**43.8** 9850	**78.8** 17700	1000	**14**	**8** 0.315	**0.182** 0.401
370 3275	**100** 22500	**140** 31500	**75.8** 17000	**68.1** 15300	**122** 27400	1000	**14**	**8** 0.315	**0.182** 0.401
610 5399	**115** 25900	**175** 39300	**82.1** 18500	**76.6** 17200	**135** 30300	840	**17**	**8** 0.315	**0.244** 0.539
610 5399	**115** 25900	**175** 39300	**89.7** 20200	**107** 24100	**161** 36200	840	**17**	**8** 0.315	**0.245** 0.540
1000 8851	**167** 37500	**240** 54000	**124** 27900	**107** 24100	**193** 43400	740	**19**	**8** 0.315	**0.328** 0.724
1000 8851	**167** 37500	**240** 54000	**133** 30000	**142** 31900	**228** 51300	740	**19**	**8** 0.315	**0.329** 0.725

CAGED, WITHOUT INNER RING, NO END WASHERS, YOKE-TYPE (RSTO SERIES)

METRIC SERIES

B

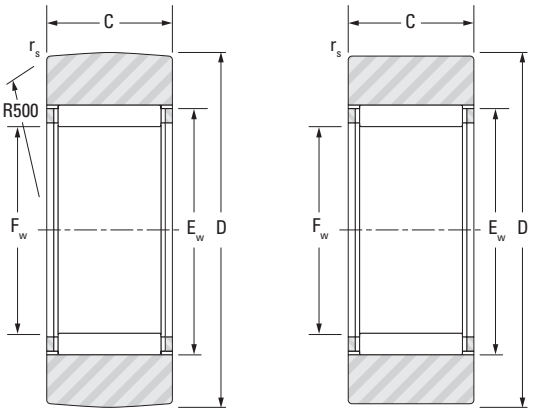

RSTO RSTO.DZ

Outer Dia.	D	C	F_w	E_w	$r_{s\,min}$	Bearing Designation		Load Ratings: As a Bearing, Dynamic C	As a Bearing, Static C_o	As a Track Roller, Dynamic C_w	As a Track Roller, Dynamic $F_{r\,perm}$	As a Track Roller, Static $F_{0r\,perm}$	Speed Rating Grease	Wt.
mm in.	**mm** in.	**mm** in.	**mm** in.	**mm** in.	**mm** in.			**kN** lbf.		**kN** lbf.			min^{-1}	**kg** lbs.
16 0.6299	**16** 0.6299	**7.8** 0.307	**7** 0.2756	**10** 0.394	**0.3** 0.012	RSTO5A.TN	RSTO5ADZ.TN	**2.74** 616	**2.44** 549	**2.49** 560	**2.97** 668	**2.44** 549	19000	**0.009** 0.020
19 0.7480	**19** 0.7480	**9.8** 0.386	**10** 0.3937	**13** 0.512	**0.3** 0.012	RSTO6	RSTO6DZ	**5.40** 1210	**6.43** 1450	**4.15** 933	**4.04** 908	**5.63** 1270	13000	**0.014** 0.031
24 0.9449	**24** 0.9449	**9.8** 0.386	**12** 0.4724	**15** 0.591	**0.3** 0.012	RSTO8	RSTO8DZ	**5.85** 1320	**7.51** 1690	**4.79** 1080	**6.67** 1500	**7.44** 1670	10000	**0.023** 0.051
30 1.1811	**30** 1.1811	**11.8** 0.465	**14** 0.5512	**20** 0.787	**0.3** 0.012	RSTO10	RSTO10DZ	**10.40** 2340	**10.6** 2380	**8.62** 1940	**7.69** 1730	**10.6** 2380	9400	**0.044** 0.097
32 1.2598	**32** 1.2598	**11.8** 0.465	**16** 0.6299	**22** 0.866	**0.3** 0.012	RSTO12	RSTO12DZ	**11.20** 2520	**11.9** 2680	**8.80** 1980	**7.65** 1720	**10.9** 2450	8100	**0.049** 0.108
35 1.3780	**35** 1.3780	**11.8** 0.465	**20** 0.7874	**26** 1.024	**0.3** 0.012	RSTO15	RSTO15DZ	**12.90** 2900	**15.3** 3440	**9.13** 2050	**6.95** 1560	**11.2** 2520	6300	**0.052** 0.115
40 1.5748	**40** 1.5748	**15.8** 0.622	**22** 0.8661	**29** 1.142	**0.3** 0.012	RSTO17	RSTO17DZ	**19.00** 4270	**23.3** 5240	**13.8** 3100	**11.4** 2560	**18.2** 4090	5800	**0.095** 0.209
47 1.8504	**47** 1.8504	**15.8** 0.622	**25** 0.9843	**32** 1.260	**0.3** 0.012	RSTO20	RSTO20DZ	**20.00** 4500	**25.3** 5690	**15.3** 3440	**16.5** 3710	**22.2** 4990	5000	**0.134** 0.295
52 2.0472	**52** 2.0472	**15.8** 0.622	**30** 1.1811	**37** 1.457	**0.3** 0.012	RSTO25	RSTO25DZ	**22.40** 5040	**31.0** 6970	**16.0** 3600	**16.9** 3800	**23.7** 5330	4100	**0.155** 0.342
62 2.4409	**62** 2.4409	**19.8** 0.780	**38** 1.4961	**46** 1.811	**0.6** 0.024	RSTO30	RSTO30DZ	**33.30** 7490	**51.0** 11470	**22.3** 5010	**23.2** 5220	**34.2** 7690	3200	**0.258** 0.569
72 2.8346	**72** 2.8346	**19.8** 0.780	**42** 1.6535	**50** 1.969	**0.6** 0.024	RSTO35	RSTO35DZ	**35.20** 7910	**56.6** 12720	**25.2** 5670	**33.3** 7490	**43.0** 9670	2900	**0.37** 0.816
80 3.1496	**80** 3.1496	**19.8** 0.780	**50** 1.9685	**58** 2.283	**0.6** 0.024	RSTO40	RSTO40DZ	**38.80** 8720	**67.8** 15240	**25.9** 5820	**34.7** 7800	**45.0** 10120	2400	**0.430** 0.948
85 3.3465	**85** 3.3465	**19.8** 0.780	**55** 2.1654	**63** 2.480	**0.6** 0.024	RSTO45		**40.30** 9060	**73.5** 16520	**26.0** 5850	**35.8** 8050	**45.5** 10230	2200	**0.447** 0.985
90 3.5433	**90** 3.5433	**19.8** 0.780	**60** 2.3622	**68** 2.677	**0.6** 0.024	RSTO50		**41.80** 9400	**79.2** 17800	**26.0** 5850	**37.1** 8340	**45.8** 10300	2000	**0.495** 1.091

CAGED, WITH INNER RING, NO END WASHERS YOKE-TYPE (STO SERIES)

METRIC SERIES

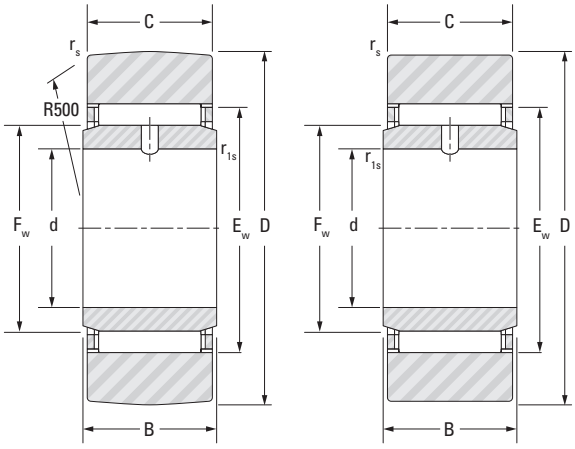

STO STO.DZ

Outer Dia.	D	d	B	C	F_w	E_w	r_s	$r_{1s\,min}$	Bearing Designation		Load Ratings: As a Bearing, Dynamic C	As a Bearing, Static C_o	As a Track Roller, Dynamic C_w	As a Track Roller, Dynamic $F_{r\,perm}$	As a Track Roller, Static $F_{0r\,perm}$	Speed Rating Grease	Wt.
mm in.	mm in.	mm in.	mm in.	mm in.	mm in.	mm in.	mm in.	mm in.			kN lbf.		kN lbf.			min^{-1}	kg lbs.
19 0.7480	19 0.7480	6 0.2362	10 0.394	9.8 0.386	10 0.3937	13 0.5118	0.3 0.012	0.3 0.012	STO6	STO6DZ	5.40 1210	6.43 1450	4.15 933	4.04 908	5.63 1270	9400	0.018 0.040
24 0.9449	24 0.9449	8 0.3150	10 0.394	9.8 0.386	12 0.4724	15 0.5906	0.3 0.012	0.3 0.012	STO8	STO8DZ	5.85 1320	7.51 1690	4.79 1080	6.67 1500	7.44 1670	8100	0.028 0.062
30 1.1811	30 1.1811	10 0.3937	12 0.472	11.8 0.465	14 0.5512	20 0.7874	0.3 0.012	0.3 0.012	STO10	STO10DZ	10.4 2340	10.6 2380	8.62 1940	7.69 1730	10.6 2380	6300	0.065 0.143
32 1.2598	32 1.2598	12 0.4724	12 0.472	11.8 0.465	16 0.6299	22 0.8661	0.3 0.012	0.3 0.012	STO12	STO12DZ	11.2 2520	11.9 2680	8.80 1980	7.65 1720	10.9 2450	5800	0.114 0.251
35 1.3780	35 1.3780	15 0.5906	12 0.472	11.8 0.465	20 0.7874	26 1.0236	0.3 0.012	0.3 0.012	STO15	STO15DZ	12.9 2900	15.3 3440	9.13 2050	6.95 1560	11.2 2520	5000	0.160 0.353
40 1.5748	40 1.5748	17 0.6693	16 0.630	15.8 0.622	22 0.8661	29 1.1417	0.3 0.012	0.3 0.012	STO17	STO17DZ	19.1 4290	23.3 5240	13.8 3100	11.4 2560	18.2 4090	4100	0.114 0.251
47 1.8504	47 1.8504	20 0.7874	16 0.630	15.8 0.622	25 0.9843	32 1.2598	0.3 0.012	0.3 0.012	STO20	STO20DZ	19.8 4450	25.3 5690	15.3 3440	16.5 3710	22.2 4990	3200	0.325 0.717
52 2.0472	52 2.0472	25 0.9843	16 0.630	15.8 0.622	30 1.1811	37 1.4567	0.3 0.012	0.3 0.012	STO25	STO25DZ	22.4 5040	31.0 6970	16.0 3600	16.9 3800	23.7 5330	2900	0.435 0.959
62 2.4409	62 2.4409	30 1.1811	20 0.787	19.8 0.780	38 1.4961	46 1.8110	0.6 0.024	0.6 0.024	STO30	STO30DZ	33.3 7490	51.0 11470	22.3 5010	23.2 5220	34.2 7690	2400	0.325 0.717
72 2.8346	72 2.8346	35 1.3780	20 0.787	19.8 0.780	42 1.6535	50 1.9685	0.6 0.024	0.6 0.024	STO35	STO35DZ	35.2 7910	56.6 12720	25.2 5670	33.3 7490	43.0 9670	2200	0.435 0.959
80 3.1496	80 3.1496	40 1.5748	20 0.787	19.8 0.780	50 1.9685	58 2.2835	0.6 0.024	1.0 0.039	STO40	STO40DZ	38.8 8720	67.8 15240	25.9 5820	34.7 7800	45.0 10120	2400	0.540 1.190
85 3.3465	85 3.3465	45 1.7717	20 0.787	19.8 0.780	55 2.1654	63 2.4803	0.6 0.024	1.0 0.039	STO45	STO45DZ	40.3 9060	73.5 16520	26.0 5850	35.8 8050	45.5 10230	2200	0.580 1.279
90 3.5433	90 3.5433	50 1.9685	20 0.787	19.8 0.780	60 2.3622	68 2.6772	0.6 0.024	1.0 0.039	STO50	STO50DZ	41.8 9400	79.2 17800	26.0 5850	37.1 8340	45.8 10300	2000	0.650 1.433

CAGED, WITHOUT INNER RING, NO END WASHERS, SEALED, YOKE-TYPE (RNA22 SERIES)

METRIC SERIES

B

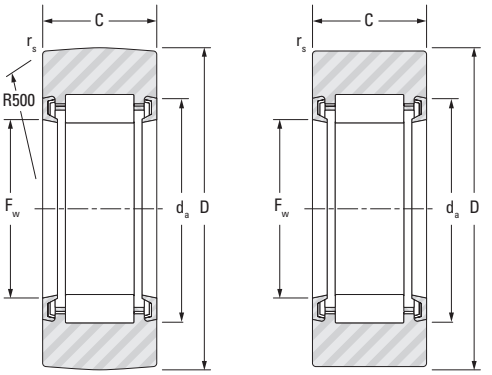

RNA22.2RS RNA22.2RS.DZ

Outer Dia.	D	C	F_w	d_a	$r_{s\,min}$	Bearing Designation		Load Ratings					Speed Rating Grease	Wt.
								As a Bearing		As a Track Roller				
								Dynamic	Static	Dynamic		Static		
								C	C_o	C_w	$F_{r\,perm}$	$F_{Or\,perm}$		
mm in.	mm in.	mm in.	mm in.	mm in.	mm in.			kN lbf.		kN lbf.			min^{-1}	kg lbs.
19 0.7480	19 0.7480	11.8 0.465	10 0.3937	14 0.551	0.3 0.012	RNA22/6.2RS	RNA22/6.2RS.DZ	4.70 1060	5.43 1220	4.13 928	3.06 688	4.59 1030	13000	0.014 0.031
24 0.9449	24 0.9449	11.8 0.465	12 0.4724	18 0.709	0.3 0.012	RNA22/8.2RS	RNA22/8.2RS.DZ	6.70 1510	6.08 1370	5.31 1190	3.37 758	5.22 1170	11000	0.025 0.055
30 1.1811	30 1.1811	13.8 0.543	14 0.5512	20 0.787	0.6 0.024	RNA2200.2RS	RNA2200.2RS.DZ	8.50 1910	9.45 2120	8.03 1810	7.85 1760	9.45 2120	9400	0.049 0.108
32 1.2598	32 1.2598	13.8 0.543	16 0.6299	22 0.866	0.6 0.024	RNA2201.2RS	RNA2201.2RS.DZ	9.00 2020	10.5 2360	8.2 1840	7.78 1750	10.1 2270	8100	0.053 0.117
35 1.3780	35 1.3780	13.8 0.543	20 0.7874	27 1.063	0.6 0.024	RNA2202.2RS	RNA2202.2RS.DZ	12.2 2740	14.5 3260	9.24 2080	6.00 1350	10.2 2290	6300	0.055 0.121
40 1.5748	40 1.5748	15.8 0.622	22 0.8661	30 1.181	1.0 0.039	RNA2203.2RS	RNA2203.2RS.DZ	16.3 3660	17.8 4000	11.9 2680	8.50 1910	13.7 3080	5900	0.090 0.198
47 1.8504	47 1.8504	17.8 0.701	25 0.9843	35 1.378	1.0 0.039	RNA2204.2RS	RNA2204.2RS.DZ	19.6 4410	20.2 4540	14.8 3330	11.0 2470	16.7 3750	5200	0.150 0.331
52 2.0472	52 2.0472	17.8 0.701	30 1.1811	40 1.575	1.0 0.039	RNA2205.2RS	RNA2205.2RS.DZ	21.6 4860	24.3 5460	15.5 3480	11.3 2540	17.7 3980	4300	0.171 0.377
62 2.4409	62 2.4409	19.8 0.780	35 1.3780	47 1.850	1.0 0.039	RNA2206.2RS	RNA2206.2RS.DZ	29.0 6520	32.8 7370	21.2 4770	15.8 3550	24.8 5580	3700	0.285 0.628
72 2.8346	72 2.8346	22.8 0.898	42 1.6535	54 2.126	1.1 0.043	RNA2207.2RS	RNA2207.2RS.DZ	40.5 9100	52.5 11800	28.6 6430	24.2 5440	37.9 8520	3000	0.490 1.080
80 3.1496	80 3.1496	22.8 0.898	48 1.8898	60 2.362	1.1 0.043	RNA2208.2RS	RNA2208.2RS.DZ	44.0 9890	60.0 13490	30.4 6830	27.8 6250	42.0 9440	2600	0.515 1.135
85 3.3465	85 3.3465	22.8 0.898	52 2.0472	64 2.520	1.1 0.043	RNA2209.2RS	RNA2209.2RS.DZ	45.6 10250	63.9 14370	30.9 6950	29.7 6680	43.7 9820	2400	0.565 1.246
90 3.5433	90 3.5433	22.8 0.898	58 2.2835	70 2.756	1.1 0.043	RNA2210.2RS	RNA2210.2RS.DZ	48.5 10900	71.3 16030	31.0 6970	29.4 6610	43.4 9760	2100	0.590 1.301

CAGED, WITH INNER RING, NO END WASHERS, SEALED, YOKE-TYPE (NA22 SERIES)

METRIC SERIES

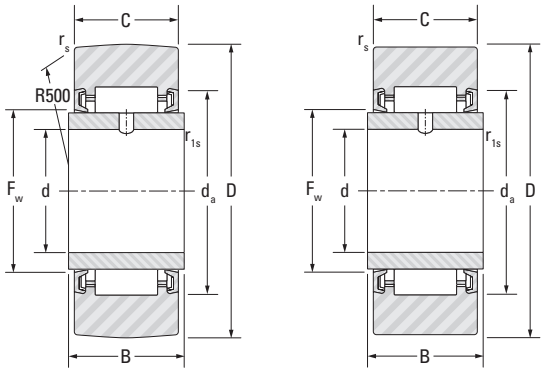

NA22.2RS NA22.2RS.DZ

Outer Dia.	D	d	B	C	F_w	d_a	r_s	$r_{1s\,min}$	Bearing Designation		Load Ratings: As a Bearing, Dynamic C	As a Bearing, Static C_o	As a Track Roller, Dynamic C_w	As a Track Roller, Dynamic $F_{r\,perm}$	As a Track Roller, Static $F_{0r\,perm}$	Speed Rating Grease	Wt.
mm in.	**mm** in.	**mm** in.	**mm** in.	**mm** in.	**mm** in.	**mm** in.	**mm** in.	**mm** in.			**kN** lbf.		**kN** lbf.			min^{-1}	**kg** lbs.
19 0.7480	**19** 0.7480	**6** 0.2362	**12** 0.472	**11.8** 0.465	**10** 0.3937	**14** 0.5512	**0.3** 0.012	**0.3** 0.012	NA22/6.2RS	NA22/6.2RS.DZ	**4.70** 1060	**5.43** 1220	**4.13** 928	**3.06** 688	**4.59** 1030	13000	**0.018** 0.040
24 0.9449	**24** 0.9449	**8** 0.3150	**12** 0.472	**11.8** 0.465	**12** 0.4724	**18** 0.7087	**0.3** 0.012	**0.3** 0.012	NA22/8.2RS	NA22/8.2RS.DZ	**6.70** 1510	**6.08** 1370	**5.31** 1190	**3.37** 758	**5.22** 1170	11000	**0.031** 0.068
30 1.1811	**30** 1.1811	**10** 0.3937	**14** 0.551	**13.8** 0.543	**14** 0.5512	**20** 0.7874	**0.6** 0.024	**0.3** 0.012	NA2200.2RS	NA2200.2RS.DZ	**8.50** 1910	**9.45** 2120	**8.03** 1810	**7.85** 1760	**9.45** 2120	9400	**0.057** 0.126
32 1.2598	**32** 1.2598	**12** 0.4724	**14** 0.551	**13.8** 0.543	**16** 0.6299	**22** 0.8661	**0.6** 0.024	**0.3** 0.012	NA2201.2RS	NA2201.2RS.DZ	**9.00** 2020	**10.5** 2360	**8.20** 1840	**7.78** 1750	**10.1** 2270	8100	**0.063** 0.139
35 1.3780	**35** 1.3780	**15** 0.5906	**14** 0.551	**13.8** 0.543	**20** 0.7874	**27** 1.0630	**0.6** 0.024	**0.3** 0.012	NA2202.2RS	NA2202.2RS.DZ	**12.2** 2740	**14.5** 3260	**9.24** 2080	**6.00** 1350	**10.2** 2290	6300	**0.070** 0.154
40 1.5748	**40** 1.5748	**17** 0.6693	**16** 0.630	**15.8** 0.622	**22** 0.8661	**30** 1.1811	**1.0** 0.039	**0.3** 0.012	NA2203.2RS	NA2203.2RS.DZ	**16.3** 3660	**17.8** 4000	**11.9** 2680	**8.50** 1910	**13.7** 3080	5900	**0.107** 0.236
47 1.8504	**47** 1.8504	**20** 0.7874	**18** 0.709	**17.8** 0.701	**25** 0.9843	**35** 1.3780	**1.0** 0.039	**0.3** 0.012	NA2204.2RS	NA2204.2RS.DZ	**19.6** 4410	**20.2** 4540	**14.8** 3330	**11.0** 2470	**16.7** 3750	5200	**0.175** 0.386
52 2.0472	**52** 2.0472	**25** 0.9843	**18** 0.709	**17.8** 0.701	**30** 1.1811	**40** 1.5748	**1.0** 0.039	**0.3** 0.012	NA2205.2RS	NA2205.2RS.DZ	**21.6** 4860	**24.3** 5460	**15.5** 3480	**11.3** 2540	**17.7** 3980	4300	**0.202** 0.445
62 2.4409	**62** 2.4409	**30** 1.1811	**20** 0.787	**19.8** 0.780	**35** 1.3780	**47** 1.8504	**1.0** 0.039	**0.3** 0.012	NA2206.2RS	NA2206.2RS.DZ	**29.0** 6520	**32.8** 7370	**21.2** 4770	**15.8** 3550	**24.8** 5580	3700	**0.324** 0.714
72 2.8346	**72** 2.8346	**35** 1.3780	**23** 0.906	**22.8** 0.898	**42** 1.6535	**54** 2.1260	**1.1** 0.043	**0.6** 0.024	NA2207.2RS	NA2207.2RS.DZ	**40.5** 9100	**52.5** 11800	**28.6** 6430	**24.2** 5440	**37.9** 8520	3000	**0.490** 1.080
80 3.1496	**80** 3.1496	**40** 1.5748	**23** 0.906	**22.8** 0.898	**48** 1.8898	**60** 2.3622	**1.1** 0.043	**0.6** 0.024	NA2208.2RS	NA2208.2RS.DZ	**44.0** 9890	**60.0** 13500	**30.4** 6830	**27.8** 6250	**42.0** 9440	2600	**0.615** 1.356
85 3.3465	**85** 3.3465	**45** 1.7717	**23** 0.906	**22.8** 0.898	**52** 2.0472	**64** 2.5197	**1.1** 0.043	**0.6** 0.024	NA2209.2RS	NA2209.2RS.DZ	**45.0** 10100	**63.9** 14400	**30.9** 6950	**29.7** 6680	**43.7** 9820	2400	**0.661** 1.457
90 3.5433	**90** 3.5433	**50** 1.9685	**23** 0.906	**22.8** 0.898	**58** 2.2835	**70** 2.7559	**1.1** 0.043	**0.6** 0.024	NA2210.2RS	NA2210.2RS.DZ	**48.0** 10800	**71.3** 16000	**31.0** 6970	**29.4** 6610	**43.4** 9760	2100	**0.712** 1.570

B

CAGED, WITH INNER RING, WITH END WASHERS, YOKE-TYPE (NATR, STO...ZZ SERIES)

METRIC SERIES

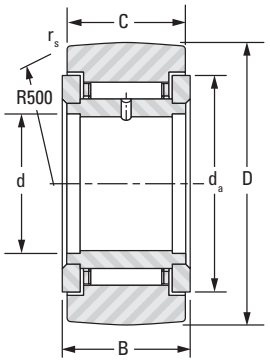

NATR

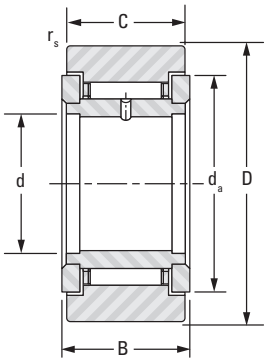

NATR.DZ

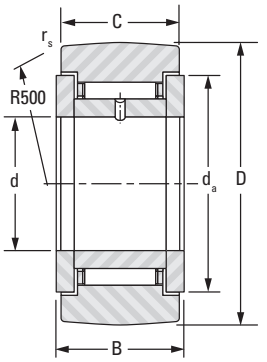

STO.ZZ

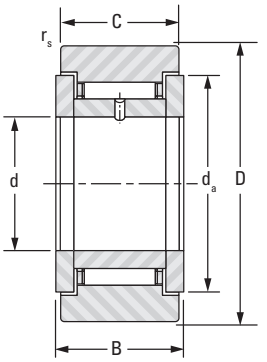

STO.ZZ.DZ

Outer Dia.	D	d	B	C	d_a	$r_{s\,min}$	Bearing Designation		Load Ratings: As a Bearing, Dynamic C	As a Bearing, Static C_o	As a Track Roller, Dynamic C_w	As a Track Roller, Dynamic $F_{r\,perm}$	As a Track Roller, Static $F_{Or\,perm}$	Speed Rating Grease	Wt.
mm in.	mm in.	mm in.	mm in.	mm in.	mm in.	mm in.			kN lbf.		kN lbf.			min^{-1}	kg lbs.
16 0.6299	16 0.6299	5 0.1969	12 0.472	11.0 0.433	13 0.512	0.3 0.012	NATR5	NATR5DZ	4.62 1040	5.19 1170	3.34 751	2.62 589	4.01 901	13000	0.017 0.037
19 0.7480	19 0.7480	6 0.2362	12 0.472	11.0 0.433	16 0.630	0.3 0.012	NATR6	NATR6DZ	4.84 1090	5.66 1270	3.84 863	4.28 962	5.28 1190	12000	0.022 0.049
	19 0.7480	6 0.2362	14 0.551	13.8 0.543	15 0.591	0.3 0.012	STO6ZZ	STO6ZZ.DZ	5.37 1210	6.47 1450	4.31 969	5.23 1180	6.17 1390	12000	0.024 0.053
24 0.9449	24 0.9449	8 0.3150	14 0.551	13.8 0.543	18 0.709	0.3 0.012	STO8ZZ	STO8ZZ.DZ	5.82 1310	7.54 1700	4.97 1120	7.54 1700	8.14 1830	9900	0.040 0.088
	24 0.9449	8 0.3150	15 0.591	14.0 0.551	20 0.787	0.3 0.012	NATR8	NATR8DZ	8.39 1890	8.67 1950	6.66 1500	5.79 1300	8.08 1820	10000	0.043 0.095
30 1.1811	30 1.1811	10 0.3937	15 0.591	14.0 0.551	24 0.945	0.6 0.024	NATR10	NATR10DZ	9.57 2150	9.45 2120	8.15 1830	8.58 1930	10.1 2270	9400	0.068 0.150
	30 1.1811	10 0.3937	16 0.630	15.8 0.622	23 0.906	0.3 0.012	STO10ZZ	STO10ZZ.DZ	10.4 2340	10.6 2380	8.94 2010	9.64 2170	11.4 2560	9400	0.071 0.157
32 1.2598	32 1.2598	12 0.4724	15 0.591	14.0 0.551	26 1.024	0.6 0.024	NATR12	NATR12DZ	10.2 2290	10.5 2360	8.32 1870	8.50 1910	10.4 2340	8100	0.075 0.165
	32 1.2598	12 0.4724	16 0.630	15.8 0.622	25 0.984	0.3 0.012	STO12ZZ	STO12ZZ.DZ	11.2 2520	11.9 2680	9.13 2050	9.54 2140	11.7 2630	8100	0.078 0.172
35 1.3780	35 1.3780	15 0.5906	16 0.630	15.8 0.622	30 1.181	0.3 0.012	STO15ZZ	STO15ZZ.DZ	12.9 2900	15.3 3440	9.47 2130	8.52 1920	12.1 2720	6300	0.089 0.196
40 1.5748	40 1.5748	17 0.6693	20 0.787	19.8 0.780	33 1.299	0.3 0.012	STO17ZZ	STO17ZZ.DZ	19.0 4270	23.3 5240	14.2 3190	13.4 3010	19.3 4340	5600	0.145 0.320
47 1.8504	47 1.8504	20 0.7874	20 0.787	19.8 0.780	37 1.457	0.3 0.012	STO20ZZ	STO20ZZ.DZ	20.0 4500	25.4 5710	15.7 3530	19.5 4380	23.5 5280	4900	0.200 0.441
52 2.0472	52 2.0472	25 0.9843	20 0.787	19.8 0.780	42 1.654	0.3 0.012	STO25ZZ	STO25ZZ.DZ	22.4 5040	31.1 6990	16.4 3690	19.8 4450	25.1 5640	4100	0.240 0.529
62 2.4409	62 2.4409	30 1.1811	25 0.984	24.8 0.976	52 2.047	0.6 0.024	STO30ZZ	STO30ZZ.DZ	33.3 7490	51.0 11500	23.0 5170	26.9 6050	36.2 8140	3200	0.412 0.908
72 2.8346	72 2.8346	35 1.3780	25 0.984	24.8 0.976	56 2.205	0.6 0.024	STO35ZZ	STO35ZZ.DZ	35.2 7910	56.6 12700	25.9 5820	39.2 8810	45.5 10200	2900	0.555 1.224
80 3.1496	80 3.1496	40 1.5748	26 1.024	25.8 1.016	64 2.520	0.6 0.024	STO40ZZ	STO40ZZ.DZ	38.8 8720	67.8 15200	26.8 6020	41.5 9330	48.1 10800	2400	0.700 1.543
85 3.3465	85 3.3465	45 1.7717	26 1.024	25.8 1.016	69 2.717	0.6 0.024	STO45ZZ	STO45ZZ.DZ	40.3 9060	73.5 16500	26.9 6050	42.4 9530	48.6 10900	2200	0.770 1.698

FULL COMPLEMENT, WITH INNER RING, WITH END WASHERS, CYLINDRICAL ROLLERS, YOKE-TYPE (NUTR SERIES)

METRIC SERIES

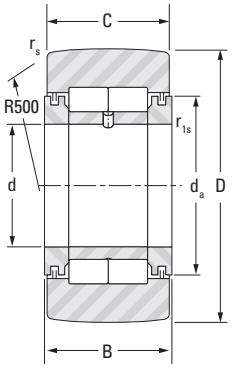

NUTR

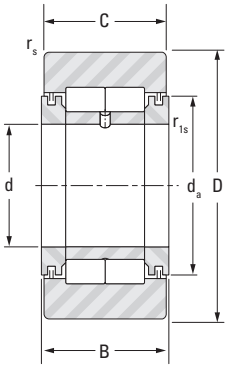

NUTR.DZ

Outer Dia.	D	d	B	C	d_a	r_s	$r_{1s\,min}$	Bearing Designation		Load Ratings: As a Bearing, Dynamic C	As a Bearing, Static C_o	As a Track Roller, Dynamic C_w	As a Track Roller, Dynamic $F_{r\,perm}$	As a Track Roller, Static $F_{Or\,perm}$	Speed Rating Grease	Wt.
mm in.	mm in.	mm in.	mm in.	mm in.	mm in.	mm in.	mm in.			kN lbf.		kN lbf.			min^{-1}	kg lbs.
35 1.3780	35 1.3780	15 0.5906	19 0.748	18 0.709	24 0.945	0.6 0.024	0.3 0.012	NUTR15	NUTR15DZ	24.7 5550	29.3 6590	16.2 3640	10.1 2270	16.1 3620	6100	0.105 0.231
40 1.5748	40 1.5748	17 0.6693	21 0.827	20 0.787	27 1.063	1.0 0.039	0.3 0.012	NUTR17	NUTR17DZ	26.6 5980	33.4 7510	18.7 4200	15.0 3370	23.9 5370	5300	0.154 0.340
42 1.6535	42 1.6535	15 0.5906	19 0.748	18 0.709	24 0.945	0.6 0.024	0.3 0.012	NUTR1542	NUTR1542DZ	22.8 5130	29.4 6610	20.0 4500	21.2 4770	28.4 6380	6100	0.166 0.366
47 1.8504	47 1.8504	17 0.6693	21 0.827	20 0.787	27 1.063	1.0 0.039	0.3 0.012	NUTR1747	NUTR1747DZ	24.5 5510	33.3 7490	22.0 4950	28.1 6320	33.6 7550	5300	0.230 0.507
	47 1.8504	20 0.7874	25 0.984	24 0.945	32 1.260	1.0 0.039	0.3 0.012	NUTR20	NUTR20DZ	39.0 8770	53.2 12000	28.1 6320	20.5 4610	32.7 7350	4500	0.254 0.560
52 2.0472	52 2.0472	20 0.7874	25 0.984	24 0.945	32 1.260	1.0 0.039	0.3 0.012	NUTR2052	NUTR2052DZ	39.0 8770	53.2 12000	31.6 7100	31.0 6970	45.9 10300	4500	0.326 0.719
	52 2.0472	25 0.9843	25 0.984	24 0.945	37 1.457	1.0 0.039	0.3 0.012	NUTR25	NUTR25DZ	43.0 9670	63.1 14200	29.6 6650	22.2 4990	35.4 7960	3700	0.291 0.642
62 2.4409	62 2.4409	25 0.9843	25 0.984	24 0.945	37 1.457	1.0 0.039	0.3 0.012	NUTR2562	NUTR2562DZ	43.0 9670	63.1 14200	36.0 8090	43.9 9870	57.8 13000	3700	0.460 1.014
	62 2.4409	30 1.1811	29 1.142	28 1.102	44 1.732	1.0 0.039	0.3 0.012	NUTR30	NUTR30DZ	60.0 13500	83.1 18700	40.8 9170	29.0 6520	46.2 10400	3200	0.480 1.058
72 2.8346	72 2.8346	30 1.1811	29 1.142	28 1.102	44 1.732	1.0 0.039	0.3 0.012	NUTR3072	NUTR3072DZ	60.0 13500	83.1 18700	48.6 10900	53.2 12000	74.2 16700	3200	0.711 1.567
	72 2.8346	35 1.3780	29 1.142	28 1.102	50 1.969	1.1 0.043	0.6 0.024	NUTR35	NUTR35DZ	65.5 14700	97.8 22000	45.9 10300	38.7 8700	61.7 13900	2600	0.655 1.444
80 3.1496	80 3.1496	35 1.3780	29 1.142	28 1.102	50 1.969	1.1 0.043	0.6 0.024	NUTR3580	NUTR3580DZ	65.5 14700	97.8 22000	51.7 11600	58.7 13200	81.9 18400	2600	0.865 1.907
	80 3.1496	40 1.5748	32 1.260	30 1.181	55 2.165	1.1 0.043	0.6 0.024	NUTR40	NUTR40DZ	88.0 19800	132 29700	60.6 13600	48.0 10800	76.5 17200	2500	0.848 1.870
85 3.3465	85 3.3465	45 1.7717	32 1.260	30 1.181	60 2.362	1.1 0.043	0.6 0.024	NUTR45	NUTR45DZ	93.0 20900	146 32800	62.0 13900	50.2 11300	80.0 18000	2200	0.917 2.022
90 3.5433	90 3.5433	40 1.5748	32 1.260	30 1.181	55 2.165	1.1 0.043	0.6 0.024	NUTR4090	NUTR4090DZ	88.0 19800	132 29700	69.1 15500	75.4 17000	111 25000	2500	1.162 2.562
	90 3.5433	50 1.9685	32 1.260	30 1.181	65 2.559	1.1 0.043	0.6 0.024	NUTR50	NUTR50DZ	98.0 22000	160 36000	63.3 14200	52.9 11900	84.3 19000	2000	0.988 2.178
100 3.9370	100 3.9370	45 1.7717	32 1.260	30 1.181	60 2.362	1.1 0.043	0.6 0.024	NUTR45100	NUTR45100DZ	93.0 20900	146 32800	74.3 16700	92.2 20700	127 28600	2200	1.412 3.113
110 4.3307	110 4.3307	50 1.9685	32 1.260	30 1.181	65 2.559	1.1 0.043	0.6 0.024	NUTR50110	NUTR50110DZ	98.0 22000	160 36000	79.0 17800	110 24700	141 31700	2000	1.727 3.807

FULL COMPLEMENT, NON-SEPARABLE, SMALL SERIES, UNSEALED, YOKE-TYPE (FP SERIES)

METRIC SERIES

B

FP: crowned outer ring
FPL: cylindrical outer ring

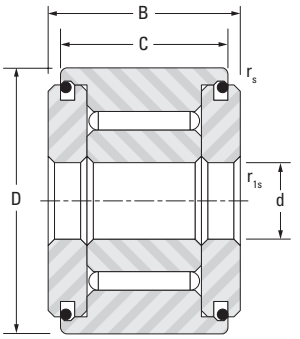

FP, FPL

Outer Dia.	D	d	C	B	$r_{s\,min}$	$r_{1s\,min}$	Designation		Load Ratings					Speed Rating Grease	Wt.
							Crowned Track Roller	Cylindrical Track Roller	As a Bearing		As a Track Roller				
									Dynamic	Static	Dynamic		Static		
									C	C_o	C_w	$F_{r\,perm}$	$F_{0r\,perm}$		
mm in.	**mm** in.	**mm** in.	**mm** in.	**mm** in.	**mm** in.	**mm** in.			**kN** lbf.		**kN** lbf.			min^{-1}	**kg** lbs.
10 0.3937	**10** 0.3937	**3** 0.1181	**8** 0.315	**8.7** 0.343	**0.2** 0.008	**0.15** 0.006	FP 3 10	FPL 3 10	**2.8** 629	**3.09** 695	**2.12** 432	**1.43** 227	**2.58** 409	8500	**0.004** 0.009
11 0.4331	**11** 0.4331	**3** 0.1181	**8** 0.315	**8.7** 0.343	**0.2** 0.008	**0.15** 0.006	FP 3 11	FPL 3 11	**2.8** 629	**3.09** 695	**2.12** 477	**1.43** 321	**2.58** 580	8500	**0.005** 0.011
12 0.4724	**12** 0.4724	**4** 0.1575	**9** 0.354	**9.7** 0.382	**0.2** 0.008	**0.15** 0.006	FP 4 12	FPL 4 12	**3.74** 841	**4.74** 1070	**2.54** 571	**1.63** 366	**2.94** 661	6600	**0.006** 0.013
13 0.5118	**13** 0.5118	**4** 0.1575	**9** 0.354	**9.7** 0.382	**0.2** 0.008	**0.15** 0.006	FP 4 13	FPL 4 13	**3.74** 841	**4.74** 1070	**2.16** 486	**2.75** 618	**3.89** 874	6600	**0.008** 0.018
14 0.5512	**14** 0.5512	**4** 0.1575	**9** 0.354	**10.2** 0.402	**0.3** 0.012	**0.15** 0.006	FP 4 14	FLP 4 14	**4.05** 910	**5.44** 1220	**2.86** 643	**2.26** 508	**4.07** 915	5700	**0.010** 0.022
15 0.5906	**15** 0.5906	**4** 0.1575	**9** 0.354	**10.2** 0.402	**0.3** 0.012	**0.15** 0.006	FP 4 15	FLP 4 15	**4.05** 910	**5.44** 1220	**3.04** 683	**2.83** 636	**4.65** 1040	5700	**0.011** 0.024

FULL COMPLEMENT, NON-SEPARABLE, SEALED OR UNSEALED, YOKE-TYPE (FG SERIES)

METRIC SERIES

FG: crowned outer ring
FGL: cylindrical outer ring

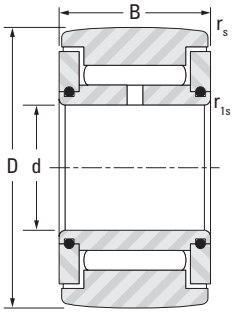

FG, FGL

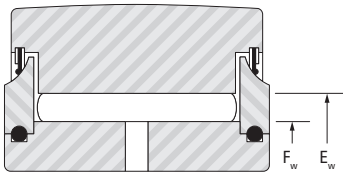

FG..EE, FG..EEM
FGL..EE, FGL..EEM

Outer Dia.	D	d	B	F_w	E_w	$r_{s\,min}$	$r_{1s\,min}$	Designation: Crowned Track Roller	Designation: Cylindrical Track Roller	Load Ratings: As a Bearing: Dynamic C	Load Ratings: As a Bearing: Static C_o	Load Ratings: As a Track Roller: Dynamic C_w	Load Ratings: As a Track Roller: Dynamic $F_{r\,perm}$	Load Ratings: As a Track Roller: Static $F_{Or\,perm}$	Speed Rating Grease	Wt.
mm in.	mm in.	mm in.	mm in.	mm in.	mm in.	mm in.	mm in.			kN lbf.		kN lbf.			min^{-1}	kg lbs.
16 0.6299	**16** 0.6299	**5** 0.1969	**12** 0.472	**7.7** 0.3031	**10.7** 0.4213	**0.3** 0.012	**0.3** 0.012	FG 5 16	FGL 5 16	**5.66** 1270	**6.51** 1460	**4.19** 942	**2.79** 627	**5.02** 1130	5700	**0.016** 0.035
19 0.7480	**19** 0.7480	**6** 0.2362	**12** 0.472	**9.7** 0.3819	**12.7** 0.5000	**0.3** 0.012	**0.3** 0.012	FG 6 19	FGL 6 19	**6.44** 1450	**8.15** 1830	**4.65** 1050	**3.49** 785	**6.28** 1410	4400	**0.019** 0.042
24 0.9449	**24** 0.9449	**8** 0.3150	**13** 0.512	**12.0** 0.4724	**15.0** 0.5906	**0.3** 0.012	**0.3** 0.012	FG 8 24	FGL 8 24	**7.3** 1640	**10.2** 2290	**5.45** 1230	**5.42** 1220	**8.63** 1940	3500	**0.037** 0.082
	24 0.9449	**8** 0.3150	**15** 0.591	**12.0** 0.4724	**15.0** 0.5906	**0.3** 0.012	**0.3** 0.012	FG 8 24 15	FGL 8 24 15	**9.08** 2040	**13.5** 3030	**6.76** 1520	**7.05** 1580	**11.4** 2560	3500	**0.044** 0.097
30 1.1811	**30** 1.1811	**10** 0.3937	**15** 0.591	**15.2** 0.5984	**20.2** 0.7953	**0.6** 0.024	**0.3** 0.012	FG 10 30	FGL 10 30	**14.2** 3190	**18.3** 4110	**10.3** 2320	**7.67** 1720	**13.8** 3100	2900	**0.066** 0.146
32 1.2598	**32** 1.2598	**12** 0.4724	**15** 0.591	**17.6** 0.6929	**22.6** 0.8898	**0.6** 0.024	**0.3** 0.012	FG 12 32	FGL 12 32	**15.5** 3480	**21.2** 4770	**10.5** 2360	**7.52** 1690	**13.5** 3030	2400	**0.077** 0.170
35 1.3780	**35** 1.3780	**15** 0.5906	**19** 0.748	**20.1** 0.7929	**25.2** 0.9921	**0.6** 0.024	**0.3** 0.012	FG 15 35	FGL 15 35	**22.5** 5060	**35.4** 7960	**14.6** 3280	**11.6** 2610	**20.9** 4700	2100	**0.103** 0.227
40 1.5748	**40** 1.5748	**17** 0.6693	**21** 0.827	**24.0** 0.9449	**30.0** 1.1811	**0.6** 0.024	**0.3** 0.012	FG 17 40	FGL 17 40	**29.9** 6720	**48.0** 10800	**18.5** 4160	**13.8** 3100	**24.8** 5580	1800	**0.155** 0.342
47 1.8504	**47** 1.8504	**20** 0.7874	**25** 0.984	**28.7** 1.1299	**34.7** 1.3661	**1.0** 0.039	**0.3** 0.012	FG 20 47	FGL 20 47	**36.5** 8210	**65.5** 14700	**22.5** 5060	**20.2** 4540	**36.4** 8180	1400	**0.295** 0.650
52 2.0472	**52** 2.0472	**25** 0.9843	**25** 0.984	**33.5** 1.3189	**39.5** 1.5551	**1.0** 0.039	**0.3** 0.012	FG 25 52	FGL 25 52	**39.7** 8920	**76.4** 17200	**23.1** 5190	**22.6** 5080	**40.3** 9060	1200	**0.310** 0.683
62 2.4409	**62** 2.4409	**30** 1.1811	**29** 1.142	**38.2** 1.5039	**44.2** 1.7402	**1.0** 0.039	**0.3** 0.012	FG 30 62	FGL 30 62	**46.5** 10500	**97.9** 22000	**28.9** 6500	**35.5** 7980	**58.2** 13100	1100	**0.490** 1.080
72 2.8346	**72** 2.8346	**35** 1.3780	**29** 1.142	**44.0** 1.7323	**50.0** 1.9685	**1.0** 0.039	**0.6** 0.024	FG 35 72	FGL 35 72	**50.0** 11200	**113** 25400	**31.4** 7060	**45.6** 10300	**68.4** 15400	920	**0.670** 1.477
80 3.1496	**80** 3.1496	**40** 1.5748	**32** 1.260	**49.7** 1.9567	**55.7** 2.1929	**1.0** 0.039	**0.6** 0.024	FG 40 80	FGL 40 80	**62.1** 14000	**155** 38400	**38.3** 8610	**63.7** 14300	**90.6** 20400	810	**0.890** 1.962
85 3.3465	**85** 3.3465	**45** 1.7717	**32** 1.260	**55.4** 2.1811	**61.4** 2.4173	**1.0** 0.039	**0.6** 0.024	FG 45 85 EE	FGL 45 85	**65.7** 14800	**173** 38900	**38.4** 8630	**67.2** 15100	**91.1** 20500	720	**0.970** 2.138
90 3.5433	**90** 3.5433	**50** 1.9685	**32** 1.260	**62.1** 2.4449	**68.1** 2.6811	**1.0** 0.039	**0.6** 0.024	FG 50 90	FGL 50 90	**69.7** 15700	**194** 43600	**37.8** 8500	**74.3** 16700	**88.7** 19900	640	**1.04** 2.293
100 3.9370	**100** 3.9370	**55** 2.1654	**36** 1.417	**70.0** 2.7559	**77.0** 3.0315	**1.5** 0.059	**0.6** 0.024	FG 55 100	FGL 55 100	**85.0** 19100	**233** 52400	**45.2** 10200	**87.9** 19800	**103** 23200	570	**1.35** 2.976
110 4.3307	**110** 4.3307	**60** 2.3622	**36** 1.417	**75.0** 2.9528	**82.0** 3.2283	**1.5** 0.059	**0.6** 0.024	FG 60 110		**88.6** 19900	**251** 56400	**48.9** 11000	**99.6** 22400	**119** 26800	530	**1.65** 3.638
120 4.7244	**120** 4.7244	**65** 2.5591	**42** 1.654	**80.0** 3.1496	**87.0** 3.4252	**1.5** 0.059	**0.6** 0.024	FG 65 120	FGL 65 120	**103** 23200	**310** 69700	**58.1** 13100	**131** 29400	**154** 34600	490	**2.35** 5.181
125 4.9213	**125** 4.9213	**70** 2.7559	**42** 1.654	**85.0** 3.3465	**92.0** 3.6220	**1.5** 0.059	**0.6** 0.024	FG 70 125	FGL 70 125	**106** 23800	**332** 74600	**58.7** 13200	**142** 31900	**157** 35300	460	**2.50** 5.512

Continued on next page.

FULL COMPLEMENT, NON-SEPARABLE, SEALED OR UNSEALED, YOKE-TYPE (FG SERIES) – *continued*

METRIC SERIES

B

FG: crowned outer ring
FGL: cylindrical outer ring

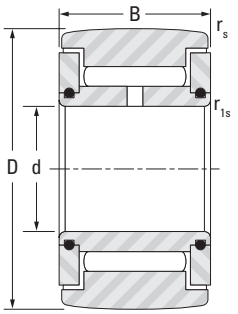

FG, FGL

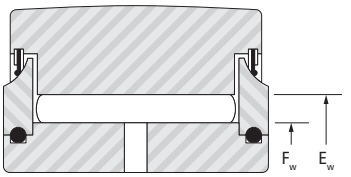

FG..EE, FG..EEM
FGL..EE, FGL..EEM

Outer Dia.	D	d	B	F_w	E_w	$r_{s\,min}$	$r_{1s\,min}$	Designation		Load Ratings					Speed Rating Grease	Wt.
								Crowned Track Roller	Cylindrical Track Roller	As a Bearing		As a Track Roller				
										Dynamic	Static	Dynamic		Static		
										C	C_o	C_w	$F_{r\,perm}$	$F_{0r\,perm}$		
mm in.	**mm** in.	**mm** in.	**mm** in.	**mm** in.	**mm** in.	**mm** in.	**mm** in.			**kN** lbf.		**kN** lbf.			min^{-1}	**kg** lbs.
130 5.1181	**130** 5.1181	**75** 2.9528	**42** 1.654	**90.0** 3.5433	**97.0** 3.8189	**1.5** 0.059	**0.6** 0.024	FG 75 130		**110** 24700	**354** 79600	**59.2** 13300	**155** 34800	**159** 35700	440	**2.65** 5.842
140 5.5118	**140** 5.5118	**80** 3.1496	**48** 1.890	**100.0** 3.9370	**108.0** 4.2520	**2.0** 0.079	**1.0** 0.039	FG 80 140	FGL 80 140	**140** 31500	**455** 102000	**72.4** 13600	**202** 45400	**189** 42500	390	**3.40** 7.496
150 5.9055	**150** 5.9055	**85** 3.3465	**48** 1.890	**107.0** 4.2126	**115.0** 4.5276	**2.0** 0.079	**1.0** 0.039	FG 85 150		**146** 32800	**490** 110000	**75.3** 16900	**227** 51000	**203** 45600	370	**4.00** 8.818
160 6.2992	**160** 6.2992	**90** 3.5433	**54** 2.126	**115.0** 4.5276	**123.0** 4.8425	**2.0** 0.079	**1.0** 0.039	FG 90 160		**168** 37800	**603** 136000	**85.7** 19300	**299** 67200	**244** 54900	340	**5.30** 11.7
170 6.6929	**170** 6.6929	**95** 3.7402	**54** 2.126	**120.0** 4.7244	**128.0** 5.0394	**2.0** 0.079	**1.0** 0.039	FG 95 170		**172** 38700	**629** 141000	**89.8** 20200	**308** 69200	**267** 60000	330	**6.00** 13.2
180 7.0866	**180** 7.0866	**100** 3.9370	**65** 2.559	**126.0** 4.9606	**136.0** 5.3543	**2.0** 0.079	**1.5** 0.059	FG 100 180		**238** 53500	**828** 186000	**126** 28300	**358** 80500	**363** 81600	310	**8.05** 17.8
200 7.8740	**200** 7.8740	**110** 4.3307	**65** 2.559	**140.0** 5.5118	**150.0** 5.9055	**2.0** 0.079	**1.5** 0.059	FG 110 200		**252** 56700	**922** 207000	**133** 29900	**427** 96000	**401** 90100	280	**10.00** 22.0
215 8.4646	**215** 8.4646	**120** 4.7244	**65** 2.559	**150.0** 5.9055	**160.0** 6.2992	**2.0** 0.079	**1.5** 0.059	FG 120 215		**261** 58700	**985** 221000	**138** 31000	**476** 107000	**430** 96700	260	**11.50** 25.3
270 10.6299	**270** 10.6299	**150** 5.9055	**78** 3.071	**186.0** 7.3228	**198.0** 7.7953	**3.0** 0.118	**1.5** 0.059	FG 150 270		**372** 83600	**1470** 330000	**200** 456000	**721** 162000	**658** 148000	210	**22.00** 48.5

NOTES

FULL COMPLEMENT, NON-SEPARABLE, LIGHT SERIES, WITH METAL SEALS YOKE-TYPE (FGU...MM SERIES)

METRIC SERIES

B

FGU: crowned outer ring
FGUL: cylindrical outer ring

FGU, FGUL

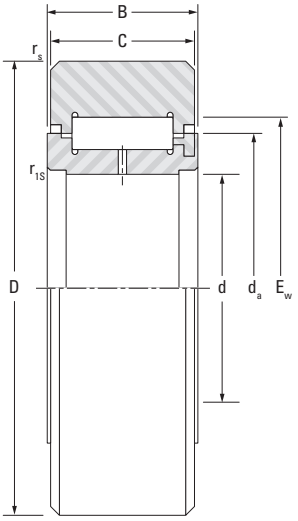

Outer Dia.	D	d	C	B	d_a	E_w	$r_{s\,min}$	$r_{1s\,min}$	Designation: Crowned Track Roller	Designation: Cylindrical Track Roller	Load Ratings: Dynamic C	Load Ratings: Dynamic $F_{r\,perm}$	Load Ratings: Static $F_{0r\,perm}$	Speed Rating Grease	Wt.
mm in.	**mm** in.	**mm** in.	**mm** in.	**mm** in.	**mm** in.	**mm** in.	**mm** in.	**mm** in.			**kN** lbf.			min^{-1}	**kg** lbs.
35 1.3780	**35** 1.3780	**15** 0.5906	**18** 0.709	**19** 0.748	**20.4** 0.8031	**28.4** 1.1181	**0.6** 0.024	**0.3** 0.012	FGU 15 35		**7.80** 1750	**17.0** 3820	**17.0** 3820	5700	**0.096** 0.212
35 1.3780	**35** 1.3780	**15** 0.5906	**18** 0.709	**19** 0.748	**20.4** 0.8031	**28.4** 1.1181	**0.6** 0.024	**0.3** 0.012	FGU 15 35 MM	FGUL 15 35 MM	**7.80** 1750	**17.0** 3820	**17.0** 3820	5700	**0.096** 0.212
40 1.5748	**40** 1.5748	**17** 0.6693	**20** 0.787	**21** 0.827	**23.0** 0.9055	**31.0** 1.2205	**0.6** 0.024	**0.3** 0.012	FGU 17 40 MM		**11.5** 2590	**20.0** 4500	**21.5** 4830	5200	**0.142** 0.313
47 1.8504	**47** 1.8504	**20** 0.7874	**24** 0.945	**25** 0.984	**27.1** 1.0669	**37.1** 1.4606	**1.0** 0.039	**0.3** 0.012	FGU 20 47 MM	FGUL 20 47 MM	**15.5** 3480	**29.5** 6630	**32.3** 7260	4400	**0.235** 0.518
52 2.0472	**52** 2.0472	**25** 0.9843	**24** 0.945	**25** 0.984	**31.8** 1.2520	**41.8** 1.6457	**1.0** 0.039	**0.3** 0.012	FGU 25 52		**17.3** 3890	**31.5** 7080	**36.0** 8090	3800	**0.268** 0.591
	52 2.0472	**25** 0.9843	**24** 0.945	**25** 0.984	**31.8** 1.2520	**41.8** 1.6457	**1.0** 0.039	**0.3** 0.012	FGU 25 52 MM	FGUL 25 52 MM	**17.3** 3890	**31.5** 7080	**36.0** 8090	3800	**0.268** 0.591
62 2.4409	**62** 2.4409	**30** 1.1811	**28** 1.102	**29** 1.142	**38.2** 1.5039	**50.2** 1.9764	**1.0** 0.039	**0.3** 0.012	FGU 30 62 MM		**24.5** 5510	**44.5** 10000	**54.00** 12100	3200	**0.454** 1.001
72 2.8346	**72** 2.8346	**35** 1.3780	**28** 1.102	**29** 1.142	**45.9** 1.8071	**57.9** 2.2795	**1.0** 0.039	**0.6** 0.024	FGU 35 72 MM	FGUL 35 72 MM	**31.3** 7040	**50.0** 11200	**66.0** 14800	2700	**0.611** 1.347
80 3.1496	**80** 3.1496	**40** 1.5748	**30** 1.181	**32** 1.260	**51.6** 2.0315	**63.6** 2.5039	**1.0** 0.039	**0.6** 0.024	FGU 40 80		**40.6** 9130	**59.0** 13300	**84.0** 18900	2400	**0.822** 1.812
	80 3.1496	**40** 1.5748	**30** 1.181	**32** 1.260	**51.6** 2.0315	**63.6** 2.5039	**1.0** 0.039	**0.6** 0.024	FGU 40 80 MM	FGUL 40 80 MM	**40.6** 9130	**59.0** 13300	**84.0** 18900	2400	**0.822** 1.812
110 4.3307	**110** 4.3307	**60** 2.3622	**34** 1.339	**36** 1.417	**71.2** 2.8031	**87.2** 3.4331	**1.5** 0.059	**0.6** 0.024	FGU 60 110 MM		**64.0** 14400	**88.0** 19800	**129** 29000	1800	**1.625** 3.583
120 4.7244	**120** 4.7244	**65** 2.5591	**40** 1.575	**42** 1.654	**76.4** 3.0079	**92.4** 3.6378	**1.5** 0.059	**0.6** 0.024	FGU 65 120		**89.0** 20000	**110** 24700	**174** 39100	1700	**2.300** 5.071
	120 4.7244	**65** 2.5591	**40** 1.575	**42** 1.654	**76.4** 3.0079	**92.4** 3.6378	**1.5** 0.059	**0.6** 0.024	FGU 65 120 MM		**89.0** 20000	**110** 24700	**174** 39100	1700	**2.300** 5.071
125 4.9213	**125** 4.9213	**70** 2.7559	**40** 1.575	**42** 1.654	**81.5** 3.2087	**97.5** 3.8386	**1.5** 0.059	**0.6** 0.024	FGU 70 125 MM		**93.0** 20900	**110** 24700	**180** 40500	1600	**2.070** 4.564
140 5.5118	**140** 5.5118	**80** 3.1496	**46** 1.811	**48** 1.890	**91.7** 3.6102	**107.7** 4.2402	**2.0** 0.079	**1.0** 0.039	FGU 80 140 MM		**130** 29200	**138** 31000	**250** 56200	1400	**3.450** 7.606
160 6.2992	**160** 6.2992	**90** 3.5433	**52** 2.047	**54** 2.126	**101.8** 4.0079	**121.8** 4.7953	**2.0** 0.079	**1.0** 0.039	FGU 90 160 MM		**166** 37300	**188** 42300	**327** 73500	1300	**5.185** 11.431
170 6.6929	**170** 6.6929	**95** 3.7402	**52** 2.047	**54** 2.126	**108.2** 4.2598	**128.2** 5.0472	**2.0** 0.079	**1.0** 0.039	FGU 95 170 MM		**184** 41400	**198** 44500	**356** 80000	1200	**5.925** 13.062
200 7.8740	**200** 7.8740	**110** 4.3307	**63** 2.480	**65** 2.559	**124.1** 4.8858	**144.1** 5.6732	**2.0** 0.079	**1.5** 0.059	FGU 110 200 MM		**310** 69700	**280** 62900	**590** 132600	1100	**10.200** 22.487
215 8.4646	**215** 8.4646	**120** 4.7244	**63** 2.480	**65** 2.559	**133.6** 5.2598	**157.6** 6.2047	**2.0** 0.079	**1.5** 0.059	FGU 120 215		**310** 69700	**310** 69700	**600** 134900	960	**11.560** 25.485

FULL COMPLEMENT, NON-SEPARABLE, HEAVY SERIES, WITH METAL SEALS YOKE-TYPE (FGU...MM SERIES)

METRIC SERIES

FGU: crowned outer ring
FGUL: cylindrical outer ring

FGU, FGUL

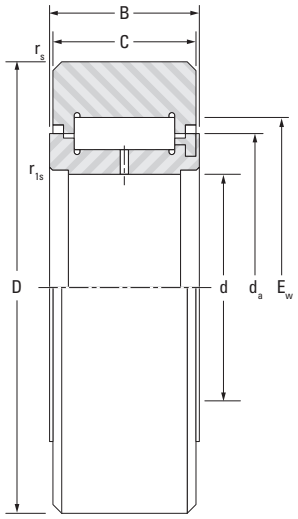

Outer Dia.	D	d	C	B	d_a	E_w	$r_{s\,min}$	$r_{1s\,min}$	Designation: Crowned Track Roller	Designation: Cylindrical Track Roller	Load Ratings: As a Bearing Dynamic C	Load Ratings: As a Bearing Static C_o	Load Ratings: As a Track Roller Dynamic C_w	Load Ratings: As a Track Roller Dynamic $F_{r\,perm}$	Load Ratings: As a Track Roller Static $F_{0r\,perm}$	Speed Rating Grease	Wt.
mm in.	**mm** in.	**mm** in.	**mm** in.	**mm** in.	**mm** in.	**mm** in.	**mm** in.	**mm** in.			**kN** lbf.		**kN** lbf.			min^{-1}	**kg** lbs.
42 1.6535	**42** 1.6535	**15** 0.5906	**18** 0.709	**19** 0.748	**20.4** 0.8031	**28.4** 1.1181	**1.0** 0.039	**0.3** 0.012	FGU 15 42	FGUL 15 42 MM	**26.4** 5930	**32.4** 7280	**19.7** 4430	**14.7** 3300	**26.4** 5930	2200	**0.153** 0.337
47 1.8504	**47** 1.8504	**17** 0.6693	**20** 0.787	**21** 0.827	**20.0** 0.7874	**28.0** 1.1024	**1.0** 0.039	**0.3** 0.012	FGU 17 47 MM	FGUL 17 47 MM	**28.3** 6360	**36.5** 8210	**21.5** 4830	**18.8** 4230	**31.9** 7170	1900	**0.214** 0.472
52 2.0472	**52** 2.0472	**20** 0.7874	**24** 0.945	**25** 0.984	**27.1** 1.0669	**37.1** 1.4606	**1.0** 0.039	**0.3** 0.012	FGU 20 52 MM	FGUL 20 52 MM	**43.8** 9850	**57.9** 13000	**30.7** 6900	**21.3** 4790	**38.3** 8610	1600	**0.268** 0.591
62 2.4409	**62** 2.4409	**25** 0.9843	**24** 0.945	**25** 0.984	**31.8** 1.2520	**41.8** 1.6457	**1.0** 0.039	**0.3** 0.012	FGU 25 62		**48.2** 10800	**68.2** 15300	**35.1** 7890	**30.7** 6900	**55.1** 12400	1400	**0.435** 0.959
72 2.8346	**72** 2.8346	**30** 1.1811	**28** 1.102	**29** 1.142	**38.2** 1.5039	**50.2** 1.9764	**1.0** 0.039	**0.3** 0.012	FGU 30 72 MM	FGUL 30 72 MM	**70** 15700	**103** 23200	**49** 11000	**40** 8990	**72** 16200	1100	**0.681** 1.501
80 3.1496	**80** 3.1496	**35** 1.3780	**28** 1.102	**29** 1.142	**45.9** 1.8071	**57.9** 2.2795	**1.0** 0.039	**0.6** 0.024	FGU 35 80	FGUL 35 80	**77.5** 17400	**124** 27900	**51** 11500	**42.4** 9530	**76.3** 17200	920	**0.82** 1.808
	80 3.1496	**35** 1.3780	**28** 1.102	**29** 1.142	**45.9** 1.8071	**57.9** 2.2795	**1.0** 0.039	**0.6** 0.024	FGU 35 80 MM		**77.5** 17400	**124** 27900	**51** 11500	**42.4** 9530	**76.3** 17200	920	**0.82** 1.808
90 3.5433	**90** 3.5433	**40** 1.5748	**30** 1.181	**32** 1.260	**51.6** 2.0315	**63.6** 2.5039	**1.0** 0.039	**0.6** 0.024	FGU 40 90 MM		**89.2** 20100	**153** 34400	**60.2** 13500	**59.3** 13300	**107** 24100	810	**1.125** 2.480
100 3.9370	**100** 3.9370	**45** 1.7717	**30** 1.181	**32** 1.260	**55.4** 2.1811	**67.4** 2.6535	**1.5** 0.059	**0.6** 0.024	FGU 45 100 MM		**92.7** 20800	**165** 37100	**64.5** 14500	**73.6** 16500	**122** 27400	750	**1.395** 3.075
110 4.3307	**110** 4.3307	**50** 1.9685	**30** 1.181	**32** 1.260	**61.1** 2.4055	**73.1** 2.8780	**1.5** 0.059	**0.6** 0.024	FGU 50 110		**97.8** 22000	**182** 40900	**68.1** 15300	**85.9** 19300	**135** 30300	680	**1.683** 3.710
	110 4.3307	**50** 1.9685	**30** 1.181	**32** 1.260	**61.1** 2.4055	**73.1** 2.8780	**1.5** 0.059	**0.6** 0.024	FGU 50 110 MM		**97.8** 22000	**182** 40900	**68.1** 15300	**85.9** 19300	**135** 30300	680	**1.683** 3.710
120 4.7244	**120** 4.7244	**55** 2.1654	**34** 1.339	**36** 1.417	**66.1** 2.6024	**82.1** 3.2323	**1.5** 0.059	**0.6** 0.024	FGU 55 120		**128** 28800	**215** 48300	**88.7** 19900	**91.8** 20600	**159** 35700	640	**2.235** 4.927
	120 4.7244	**55** 2.1654	**34** 1.339	**36** 1.417	**66.1** 2.6024	**82.1** 3.2323	**1.5** 0.059	**0.6** 0.024	FGU 55 120 MM	FGUL 55 120 MM	**128** 28800	**215** 48300	**88.7** 19900	**91.8** 20600	**159** 35700	640	**2.235** 4.927
130 5.1181	**130** 5.1181	**60** 2.3622	**34** 1.339	**36** 1.417	**71.2** 2.8031	**87.2** 3.4331	**1.5** 0.059	**0.6** 0.024	FGU 60 130 MM		**133** 29900	**232** 52200	**93.4** 21000	**106** 23800	**175** 39300	590	**2.62** 5.776
140 5.5118	**140** 5.5118	**65** 2.5591	**40** 1.575	**42** 1.654	**76.4** 3.0079	**92.4** 3.6378	**2.0** 0.079	**0.6** 0.024	FGU 65 140 MM		**156** 35100	**290** 65200	**110** 24700	**142** 31900	**222** 49900	540	**3.56** 7.848

Continued on next page.

FULL COMPLEMENT, NON-SEPARABLE, HEAVY SERIES, WITH METAL SEALS YOKE-TYPE (FGU...MM SERIES) – *continued*

METRIC SERIES

B

FGU: crowned outer ring
FGUL: cylindrical outer ring

FGU, FGUL

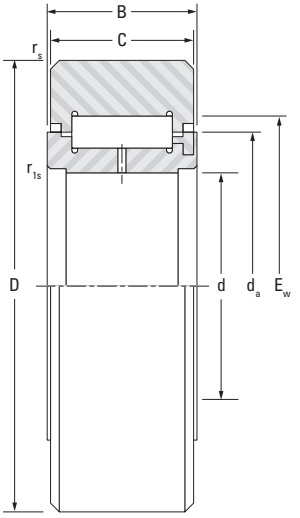

Outer Dia.	D	d	C	B	d_a	E_w	$r_{s\,min}$	$r_{1s\,min}$	Designation: Crowned Track Roller	Designation: Cylindrical Track Roller	Load Ratings: As a Bearing Dynamic C	Load Ratings: As a Bearing Static C_0	Load Ratings: As a Track Roller Dynamic C_w	Load Ratings: As a Track Roller Dynamic $F_{r\,perm}$	Load Ratings: As a Track Roller Static $F_{0r\,perm}$	Speed Rating Grease	Wt.
mm in.	**mm** in.	**mm** in.	**mm** in.	**mm** in.	**mm** in.	**mm** in.	**mm** in.	**mm** in.			**kN** lbf.		**kN** lbf.			min^{-1}	**kg** lbs.
150 5.9055	**150** 5.9055	**70** 2.7559	**40** 1.575	**42** 1.654	**81.5** 3.2087	**97.5** 3.8386	**2.0** 0.079	**0.6** 0.024	FGU 70 150 MM		**161** 36200	**310** 69700	**115** 25900	**160** 36000	**240** 54000	510	**4.09** 9.017
160 6.2992	**160** 6.2992	**75** 2.9528	**40** 1.575	**42** 1.654	**86.6** 3.4094	**102.6** 4.0394	**2.0** 0.079	**0.6** 0.024	FGU 75 160		**166** 37300	**329** 74000	**119** 26800	**178** 40000	**257** 57800	480	**4.65** 10.3
	160 6.2992	**75** 2.9528	**40** 1.575	**42** 1.654	**86.6** 3.4094	**102.6** 4.0394	**2.0** 0.079	**0.6** 0.024	FGU 75 160 MM		**166** 37300	**329** 74000	**119** 26800	**178** 40000	**257** 57800	480	**4.65** 10.3
170 6.6929	**170** 6.6929	**80** 3.1496	**46** 1.811	**48** 1.890	**91.7** 3.6102	**107.7** 4.2402	**2.0** 0.079	**1.0** 0.039	FGU 80 170		**195** 43800	**412** 92600	**140** 31500	**229** 51500	**322** 72400	450	**6.07** 13.4
	170 6.6929	**80** 3.1496	**46** 1.811	**48** 1.890	**91.7** 3.6102	**107.7** 4.2402	**2.0** 0.079	**1.0** 0.039	FGU 80 170 MM		**195** 43800	**412** 92600	**140** 31500	**229** 51500	**322** 72400	450	**6.07** 13.4
180 7.0866	**180** 7.0866	**85** 3.3465	**46** 1.811	**48** 1.890	**95.5** 3.7598	**115.5** 4.5472	**2.0** 0.079	**1.0** 0.039	FGU 85 180		**224** 50400	**426** 95800	**162** 36400	**225** 50600	**340** 76400	440	**6.724** 14.8
	180 7.0866	**85** 3.3465	**46** 1.811	**48** 1.890	**95.5** 3.7598	**115.5** 4.5472	**2.0** 0.079	**1.0** 0.039	FGU 85 180 MM	FGUL 85 180 MM	**224** 50400	**426** 95800	**162** 36400	**225** 50600	**340** 76400	440	**6.724** 14.8
190 7.4803	**190** 7.4803	**90** 3.5433	**52** 2.047	**54** 2.126	**101.8** 4.0079	**121.8** 4.7953	**2.0** 0.079	**1.0** 0.039	FGU 90 190 MM		**259** 58200	**524** 118000	**186** 41800	**277** 62300	**412** 92600	410	**8.515** 18.8
260 10.2362	**260** 10.2362	**120** 4.7244	**63** 2.480	**65** 2.559	**133.6** 5.2598	**157.6** 6.2047	**3.0** 0.118	**1.5** 0.059	FGU 120 260 MM		**396** 89000	**875** 197000	**293** 65900	**540** 121000	**730** 164000	300	**19.750** 43.6
300 11.8110	**300** 11.8110	**140** 5.5118	**75** 2.953	**78** 3.071	**152.6** 6.0079	**176.6** 6.9528	**3.0** 0.118	**1.5** 0.059	FGU 140 300 MM		**493** 111000	**1210** 272000	**367** 82500	**818** 184000	**1020** 229000	260	**31.265** 68.9

FULL COMPLEMENT, WITHOUT INNER RING, UNSEALED, YOKE-TYPE (RNA...B6, RNAB, RNAL SERIES)

SEPARATE INNER RINGS (BIC SERIES)

METRIC SERIES

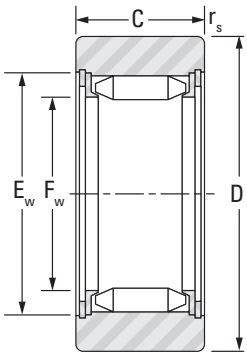

RNA...B6

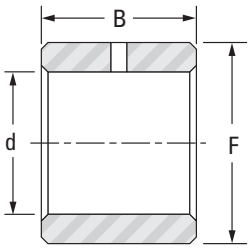

BIC

RNA...B6: Crowned outer ring to maximum slope of 0.15%. Tolerance h9 on dimension D.
RNAB: Crowned outer ring to maximum slope of 1.5%. Tolerance h9 on dimension D.
RNAL: Cylindrical outer ring. Tolerance h7 on dim. D.

Outer Dia.	D	C	F_w	E_w	r_{smin}	Track Roller Designations			Load Ratings					Speed Rating Grease	Wt.	Inner Ring Designa-tion	F	B	d	$r_{1s\,min}$	Shaft Dia.
									As a Bearing		As a Track Roller										
									Dynamic	Static	Dynamic		Static								
						RNA...B6	RNAB	RNAL	C	C_o	C_w	$F_{r\,perm}$	$F_{0r\,perm}$								
mm in.	mm in.	mm in.	mm in.	mm in.	mm in.				kN lbf.		kN lbf.			min^{-1}	kg lbs.						mm in.
19 0.7480	19 0.7480	12 0.472	7.3 0.287	12.3 0.484	0.35 0.014	RNA 11005 B6	RNAB 11005		5.31 1190	4.44 998	4.82 1080	4.44 998	4.82 1080	6500	0.019 0.042						
22 0.8661	22 0.8661	12 0.472	9.7 0.382	14.7 0.579	0.35 0.014	RNA 11007 B6	RNAB 11007	RNAL 11007	6.42 1440	5.93 1330	5.5 1240	5.26 1180	6.55 1470	4700	0.022 0.049						
28 1.1024	28 1.1024	12 0.472	12.1 0.476	17.1 0.673	0.35 0.014	RNA 11009 B6	RNAB 11009	RNAL 11009	7.37 1660	7.42 1670	6.66 1500	7.42 1670	9.06 2040	3700	0.028 0.062						
32 1.2598	32 1.2598	15 0.591	17.6 0.693	22.6 0.890	0.35 0.014	RNA 11012 B6	RNAB 11012	RNAL 11012	12.7 2850	16.4 3690	9.38 2110	9.48 2130	13.7 3080	2400	0.032 0.071	BIC 1012	17.6 0.693	15 0.591	12 0.472	0.35 0.014	12 0.472
35 1.3780	35 1.3780	15 0.591	20.8 0.819	25.8 1.016	0.65 0.026	RNA 11015 B6	RNAB 11015		13.9 3120	19.4 4360	9.60 2160	9.47 2130	14.1 3170	2000	0.035 0.077	BIC 1015	20.8 0.819	15 0.591	15 0.591	0.65 0.026	15 0.591
42 1.6535	42 1.6535	15 0.591	23.9 0.941	28.9 1.138	0.65 0.026	RNA 11017 B6	RNAB 11017	RNAL 11017	15.0 3370	22.4 5040	11.0 2470	14.4 3240	18.4 4140	1700	0.042 0.093	BIC 1017	23.9 0.941	15 0.591	17 0.669	0.68 0.026	17 0.669
47 1.8504	47 1.8504	18 0.709	28.7 1.130	34.7 1.366	0.65 0.026	RNA 11020 B6	RNAB 11020	RNAL 11020	21.7 4880	33.5 7530	14.6 3280	16.0 3600	23.3 5240	1400	0.047 0.104	BIC 2020	28.7 1.130	18 0.709	20 0.787	0.65 0.026	20 0.787
52 2.0472	52 2.0472	18 0.709	33.5 1.319	39.5 1.555	0.65 0.026	RNA 11025 B6	RNAB 11025		23.6 5310	39.1 8790	15.0 3370	17.1 3840	24.4 5490	1200	0.052 0.115	BIC 1025	33.5 1.319	18 0.709	25 0.984	0.65 0.026	25 0.984
62 2.4409	62 2.4409	22 0.866	38.2 1.504	44.2 1.740	0.65 0.026	RNA 11030 B6	RNAB 11030		34.2 7690	65.8 14800	22.6 5080	32.8 7370	44.3 9960	1100	0.062 0.137	BIC 2030	38.2 1.504	22 0.866	30 1.181	0.65 0.026	30 1.181
72 2.8346	72 2.8346	22 0.866	44.0 1.732	50.0 1.969	0.65 0.026	RNA 11035 B6			36.7 8250	75.7 17000	24.6 5530	42.4 9530	52.2 11700	920	0.072 0.159	BIC 2035	44 1.732	22 0.866	35 1.378	0.65 0.026	35 1.378
80 3.1496	80 3.1496	22 0.866	49.7 1.957	55.7 2.193	0.85 0.033		RNAB 11040		39.2 8810	85.6 19200	25.8 5800	48.7 10900	57.0 12800	810	0.080 0.176	BIC 2040	49.7 1.957	22 0.866	40 1.575	0.85 0.033	40 1.575
90 3.5433	90 3.5433	24 0.945	62.1 2.445	68.1 2.681	0.85 0.033	RNA 11050 B6			44.0 9890	107 24100	25.8 5800	53.1 11900	57.0 12800	640	0.090 0.198	BIC 11050	62.1 2.445	24 0.945	50 1.969	.085 0.033	50 1.969

STUD-TYPE AND YOKE-TYPE TRACK ROLLERS – FULL COMPLEMENT

B

INCH SERIES

Inch series track rollers listed in this catalog have been designed with the outer rings of large radial cross section to withstand heavy rolling or shock loads on track-type or cam-controlled equipment.

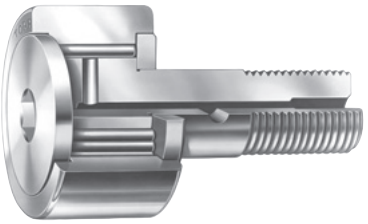

Fig. B-61. CR with stud

REFERENCE STANDARD:

- **ANSI/ABMA Std. 18.2** – needle roller bearings – radial, inch design.

Before selecting specific inch series track rollers, the engineering section in this catalog should be reviewed.

Fig. B-62. YCR for yoke mounting

IDENTIFICATION

The stud- and yoke-type, special construction features and size are designated by an identification code consisting of prefix letters followed by a dash and suffix numbers.

The initial prefix letters denote the type of track roller/cam follower. Additional prefix letters are used when it is necessary to denote special construction features. The suffix numbers following the prefix letters denote the size of the track roller. See Table B-38.

The basic types are listed below:

CR – regular stud-type, full complement needle rollers, inch series

YCR – yoke-type, full complement needle rollers, inch series

Construction feature code letters – for inch series track rollers – are used as required, in the following order:

S – seals with internal thrust washers
B – hexagonal wrench socket in stud head (stud-type only)
C – crowned outer ring
E – eccentric stud (stud-type only)

Descriptions of typical examples, with complete letter codes, combining basic type of bearing and construction features follow. See Table B-39.

Since the entire identification code might not appear on the bearing itself, the manufacturer's parts list or another reliable source should always be consulted when ordering bearings for field or service replacement to make certain the correct unit with the correct lubricant is specified.

Table B-38. Identification code – inch series

Prefix letters			Suffix numbers			Complete
Type	Plus	Construction features	Plus size	O.D.	Equals	Designation
CR	plus	SBE	plus	-16	equals	CRSBE-16
CR	plus			-16	equals	CR-16

Table B-39. Code description – inch series

Stud-types	
Description	Prefix code
With seals and internal thrust washers	CRS
With seals, internal thrust washers and crowned outer ring	CRSC
With seals, internal thrust washers, hex socket and crowned outer ring	CRSBC
With seals, internal thrust washers, hex socket, crowned outer ring and eccentric stud	CRSBCE
Yoke-types	
With seals and internal thrust washers	YCRS
With seals, internal thrust washers and profiled outer ring	YCRSC

CONSTRUCTION

JTEKT products listed on the following pages have been designed with the outer ring of the large radial cross section to withstand heavy rolling and shock loads on track-type or cam-controlled equipment.

Regular stud-type (CR) are designed with integral studs for cantilever mounting. When a regular stud-type track roller is used within the permissible dynamic load ($F_{r\ perm}$) given in the bearing tables, the ductile core of the stud provides the necessary toughness for and resistance to shock loads. A screwdriver slot or a hexagonal wrench socket, in the head of the stud, facilitates mounting.

Yoke-type (YCR) are designed for straddle mounting. Each type is available with a full complement of needle rollers.

All inch series track rollers have a black-oxide finish on all external surfaces.

SEALED TRACK ROLLERS – INCH SERIES

Inch series sealed track rollers contain a lip-type seal and an internal thrust washer. On some sizes of track rollers, the thrust washer and seal have been incorporated into a single component. Regardless of configuration, the thrust washer fits between the shoulders of the outer ring. The inside faces the steel retaining washer and flange of the stud. These washers reduce sliding friction and serve to increase the life of the bearing – particularly when it is infrequently re-lubricated, or where misalignment occurs. In all cases, the external dimensions of the sealed bearings are the same as the unsealed bearings. The seals are thermally stable in a temperature range between -30˚ C and +110˚ C (-25˚ F and +225˚ F).

CROWNED TRACK ROLLERS

These units are available with cylindrical or crowned outer rings.

Track rollers are designed with a crowned outer ring to alleviate the uneven bearing loading – resulting from deflection, bending or misalignment in mounting.

To specify a crowned ring for any inch series track roller having a cylindrical outer ring, add the letter "C" at the end of the prefix code. For example:

prefix CR – regular stud-type, full complement of needle rollers and cylindrical outer ring

prefix CRC – same as above, but with crowned outer ring.

The O.D. tolerance of crowned track rollers is 0.000 – 0.050 mm (+0.0000 - 0.0020 inch). The crown radii are listed in Table B-40.

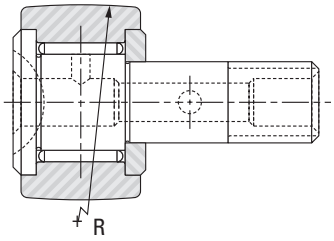

Fig. B-63. CR with stud

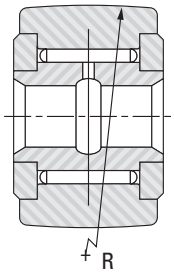

Fig. B-64.YCR for yoke mounting

Table B-40. Crown radius for types CRC, CRSC, CRSBC, YCRC, YCRSC

Size designation (suffix)	R Crown radius (approx.) mm / in.	Size designation (suffix)	R Crown radius (approx.) mm / in.
-8	**152.400** / 6.0000	-28	**508.000** / 20.0000
-8-1	**177.800** / 7.0000	-30	**508.000** / 20.0000
-10	**177.800** / 7.0000	-32	**609.600** / 24.0000
-10-1	**203.200** / 8.0000	-36	**609.600** / 24.0000
-12	**254.000** / 10.0000	-40	**762.000** / 30.0000
-14	**254.000** / 10.0000	-44	**762.000** / 30.0000
-16	**304.800** / 12.0000	-48	**762.000** / 30.0000
-18	**304.800** / 12.0000	-52	**762.000** / 30.0000
-20	**355.600** / 14.0000	-56	**762.000** / 30.0000
-22	**355.600** / 14.0000	-64	**762.000** / 30.0000
-24	**508.000** / 20.0000		
-26	**508.000** / 20.0000		

HEXAGONAL SOCKETS

Smaller sizes of regular inch series stud-type units have a screwdriver slot or a hexagonal socket in the flanged end of the stud to facilitate mounting. Larger sizes have a socket to accommodate a hexagonal wrench. Wrench sizes are listed in Table B-41 on page B-254.

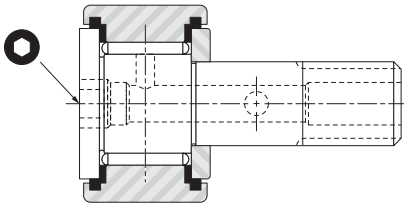

Fig. B-65. Inch series stud-type unit with hexagonal socket

B

Table B-41. Hexagonal wrench sizes – inch series

Size designation (suffix)	Wrench size	Size designation (suffix)	Wrench size
	mm in.		**mm** in.
-8	**3.175** 0.1250	**-28**	**7.937** 0.3125
-8-1	**3.175** 0.1250	**-30**	**7.937** 0.3125
-10	**3.175** 0.1250	**-32**	**11.112** 0.4375
-10-1	**3.175** 0.1250	**-36**	**11.112** 0.4375
-12	**4.762** 0.1875	**-40**	**12.700** 0.5000
-14	**4.762** 0.1875	**-44**	**12.700** 0.5000
-16	**6.350** 0.2500	**-48**	**19.050** 0.7500
-18	**6.350** 0.2500	**-52**	**19.050** 0.7500
-20	**6..350** 0.2500	**-56**	**19.050** 0.7500
-22	**6.350** 0.2500	**-64**	**19.050** 0.7500
-24	**7.937** 0.3125	**-80**	**22.225** 0.875
-26	**7.937** 0.3125	**-96**	**25.40** 1.000

ECCENTRIC STUDS

To provide radial adjustment of the outer ring toward the track or cam surface at the time of installation, the regular inch series stud-types are available with eccentric studs which are specified by adding the letter "E" to the construction feature code:

prefix CRSBE – regular stud-type track roller with full complement of needle rollers, two seals, with internal thrust washers, hexagonal wrench socket in stud head, and eccentric stud.

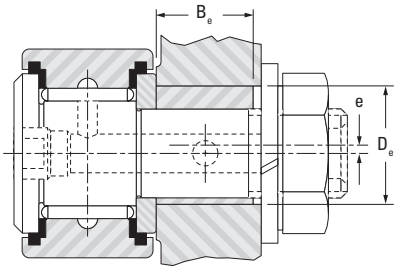

Fig. B-66. Eccentric studs – inch series

Pertinent dimensions of the eccentric stud are listed in Table B-42.

Since a track roller with an eccentric stud is usually adjusted upon installation by turning the stud in the mounting hole, a close clearance fit between the outer diameter of the bushing and the mounting hole is necessary. For turning the stud, a hexagonal wrench is generally more convenient than a screwdriver. And an option for a hexagonal wrench socket, in the head of the stud, should be exercised.

Some applications may require more secure positioning than provided by the tightened stud nut. If so, it is suggested that the housing, and eccentric bushing, be drilled at the time of installation to accept a locating dowel pin.

Table B-42. Eccentric bushing dimensions regular stud-type (type CR)

Size designation	D_e Bushing O.D. +0.001, -0.001	B_e Bushing width +0.000, -0.010	e Eccentricity
(suffix)	**mm** in.	**mm** in.	**mm** in.
-8-1	**6.350** 0.250	**9.525** 0.375	**0.254** 0.010
-10-1	**9.525** 0.375	**11.100** 0.437	**0.381** 0.015
-12	**12.700** 0.500	**12.700** 0.500	**0.381** 0.015
-14	**12.700** 0.500	**12.700** 0.500	**0.381** 0.015
-16	**15.875** 0.625	**12.700** 0.500	**0.762** 0.030
-18	**15.875** 0.625	**12.700** 0.500	**0.762** 0.030
-20	**17.450** 0.687	**15.875** 0.625	**0.762** 0.030
-22	**17.450** 0.687	**15.875** 0.625	**0.762** 0.030
-24	**22.225** 0.875	**19.050** 0.750	**0.762** 0.030
-26	**22.225** 0.875	**19.050** 0.750	**0.762** 0.030
-28	**25.400** 1.000	**22.225** 0.875	**0.762** 0.030
-30	**25.400** 1.000	**22.225** 0.875	**0.762** 0.030
-32	**30.150** 1.187	**25.400** 1.000	**0.762** 0.030
-36	**30.150** 1.187	**25.400** 1.000	**0.762** 0.030
-40	**34.925** 1.375	**28.575** 1.125	**0.762** 0.030
-44	**34.925** 1.375	**28.575** 1.125	**0.762** 0.030
-48	**44.450** 1.750	**31.750** 1.250	**1.524** 0.060
-52	**44.450** 1.750	**31.750** 1.250	**1.524** 0.060
-56	**46.025** 1.812	**34.925** 1.375	**1.524** 0.060
-64	**50.800** 2.000	**50.800** 2.000	**1.524** 0.060

- *To ensure proper clamping of the stud, the housing should be slightly wider than the maximum width of the eccentric bushing.*
- *Diameter of bushing mounting hole should be D_E plus 0.002/0.003 in. (.051-0.0102mm).*

LOAD RATINGS

DYNAMIC LOADING AS A TRACK ROLLER

When the outer ring of a stud-type or yoke-type track roller runs on a track, the contact under a radial load causes elastic (oval) deformation of the outer ring. As a result, a smaller zone of the raceway is loaded and the load is distributed on fewer needle rollers. This, in turn, affects the track roller's dynamic and static load ratings. Also, this deformation generates bending stress in the outer ring, which must not exceed the maximum permitted for the material of the outer ring. The maximum permissible dynamic ($F_{r\ perm}$) radial load condition is determined by this requirement.

The rating life of a stud-type or yoke-type track roller should be calculated using the dynamic load ratings, C_w, shown in the tables. The tables also show the maximum permissible radial load, $F_{r\ perm}$, that can be dynamically applied on the stud-type or yoke-type track rollers. However, to calculate the L_{10} life of a track roller, the applied radial load must not be greater than $C_w/4$ – based on ideal operating conditions of alignment, lubrication, temperature, speed and accelerations.

STATIC LOADING

In addition to the basic static load rating C_0, the tables also list the maximum permissible static radial load, $F_{0r\ perm}$, that may be applied to a stud-type or yoke-type track roller. The values of $F_{0r\ perm}$ result in a minimum static factor f_s of 0.7, for the worst condition of internal load distribution in inch series track roller operation. **The $F_{0r\ perm}$ values must not be exceeded.** Exceeding $F_{0r\ perm}$ may cause permanent damage to the track roller. A damaged track roller could cause the equipment in which the track roller is installed to malfunction. The static factor f_s can be calculated using the following formula:

$$f_s \geq 0.7 \left(\frac{F_{0r\ perm}}{P_{0r}} \right)$$

Where:

$F_{0r\ perm}$ = Maximum permissible static radial load
P_{0r} = Equivalent static load (F_{0r} for yoke-type track rollers)
F_{0r} = Static radial load
f_s = Static factor whose values should not be smaller than those suggested in Table B-43.

Table B-43. Suggested values for static factors f_s for inch series track rollers

Requirements for yoke – type track rollers and stud – type track rollers	Suggested f_s values	
	Max.	Min.
High shock-type loads – Quiet running	1.5	2.5
Normal loading – Normal quietness of running	1	1.5
Minor impact loads and rotary motion particularly quiet running not required	0.7	1

MOUNTING

The surface of the hole in the machine element, which supports the stud or the mounting shaft, must not deform under the expected load, and the support should be sufficiently rigid to resist bending loads.

Deformation and bending will cause uneven loading of the outer ring.

In mounting the stud-type track roller, the retaining washer must be firmly backed up by a flat shoulder which is square with the stud center line. The shoulder diameter must be no smaller than the minimum clamping diameter (d_a) listed in the bearing tables.

The maximum inherent strength of the stud is obtained when the unit is supported, as close as possible, to the retaining washer – which minimizes the bending moment. For this reason, the edge of the housing, which supports the stud shank, should be kept as sharp as possible, but free from burrs.

To minimize deflection in mounted stud-type track rollers, the stud shank should be housed with the fit (d_b) shown in the bearing tables. The clamping nut should not be tightened with a torque value higher than the maximum listed. A screwdriver slot, or hexagonal socket in the end of the stud, is provided for a tool to prevent the stud from turning when the nut is being tightened. Because the bottom of the screwdriver slot is not flat, it is helpful to put a radius on the tip of the screwdriver being used to hold the stud more securely.

When the stud shank is housed with an interference fit, installation force should be applied only to the center portion of the flanged end of the stud, preferably with an arbor press.

When the loads are high, the yoke-type track rollers should be mounted on a high strength bolt or shaft with the tight transition fit listed in the bearing tables. The bearing should be clamped between flat and parallel faces, at right angles, to the axis to prevent the retaining washers from coming off under load. If the bearing cannot be clamped, a close axial fit in the yoke is required.

When the applied loads are light to moderate, the inner ring of a yoke-type track roller may be mounted on an unhardened shaft, or a bolt with the loose transition fit listed in the bearing tables. Again, the retaining washers should be backed up axially to prevent their coming off under load.

B

LUBRICATION

All inch series stud-type track rollers with a screwdriver slot in the flanged end of the stud have provisions for lubrication, through the flanged end of the stud. The 12, and larger sizes of inch series stud-type track rollers with screwdriver slots, have provisions for re-lubrication through either end of the stud, and through a cross-drilled hole in the shank. The ends of the axial holes are counterbored to accept drive-type grease lubrication fittings. Hole diameters for these grease fittings are listed in the tables of dimensions.

Sizes 8 through 10-1 of the inch series stud-type track rollers, with a hexagonal socket in the flanged end of the stud, cannot be re-lubricated. Size 12 and up have re-lubrication provisions in the threaded end of the stud, and a cross-drilled hole in the shank. At the threaded end of the stud, the axial hole is counterbored to receive a drive type grease fitting. Sizes 12 through 22 and 48 through 64 of inch series stud-type track rollers, with hexagonal sockets, also have provisions for re-lubrication through the hex socket in the flanged end of the stud. Sizes 48 through 64 are supplied with lubrication fittings which may be installed in the axial hole in the bottom of the hexagonal slot in the head end of the stud – at a depth which allows the hexagonal wrench to be inserted in the wrench socket, without damaging the grease fitting.

Plugs are furnished with stud-type track rollers to close off unused holes. If the cross-drilled hole in the stud shank is not used, it will be covered when the track roller is installed properly.

Most inch series yoke-type track rollers are produced with lubrication holes and grooves in the inner ring bores, so they can be re-lubricated through axially and radially drilled holes in the supporting shaft or bolt.

Oil is the preferred lubricant for all types. Use continuous oil lubrication, or frequent grease lubrication for steady rotating conditions. Applications involving slow, intermittent oscillation are not as critical. And longer intervals between re-lubrication are permissible. Both stud- and yoke-type track rollers are normally supplied with medium temperature grease lubrication.

SPECIAL TRACK ROLLERS/ CAM FOLLOWERS

Track rollers can be obtained with dimensions different from those in the bearing tables, if the quantities permit economical production. For these and other modifications, please consult your representative.

FORKLIFT TRUCK

Yoke-type sealed units serve as high capacity and rugged guide rollers for lift trucks. Their design permits them to be mounted on studs welded to the structure. The seals exclude foreign matter and extend the time between re-lubrication periods.

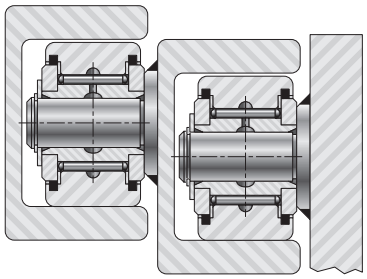

Fig. B-67. Yoke-type sealed units

HAY BALER

Stud-types are important components on many different types of farm equipment because of their required long service life under severe loads and operating conditions. Needle roller bearings provide dependable and economical operation in the windrow pickup of hay balers.

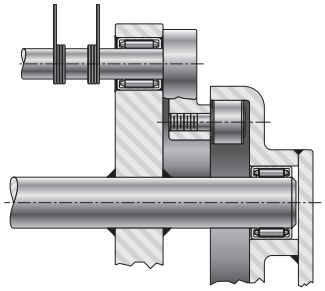

Fig. B-68. Stud-type

MACHINE WAY

Heavily loaded machine tool tables must travel freely and accurately. Stud- and yoke-type sealed units, in combination, support and guide such tables under the most severe conditions. The high capacity and the very low wear rate permit heavy loads to be carried without impairing the accuracy of the table's travel. The seals exclude dirt and chips, and make the need for re-lubrication infrequent.

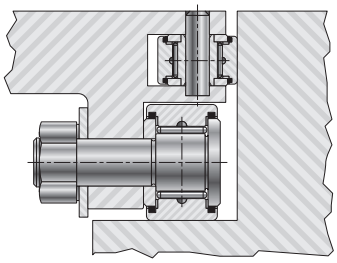

Fig. B-69. Stud- and yoke-type sealed units

RECIPROCATING SLIDE

Stud-types find wide application in feeding and advancing mechanisms on metalworking presses. The rotary motion of an eccentric cam, rotating between two cam followers, mounted on a slide imparts reciprocating linear motion to the slide. Dwell periods, as well as accuracy in both rapid and slow linear actuation of the slide, are made possible.

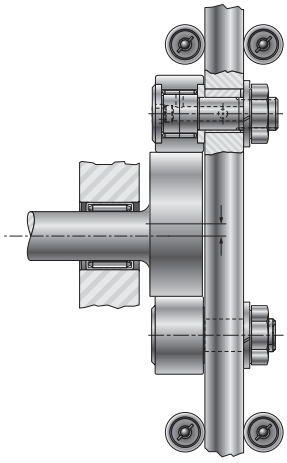

Fig. B-70. Stud-type

B

STUD-TYPE TRACK ROLLERS
CR, CRS SERIES
INCH SERIES

- Screwdriver slot in head facilitates mounting.
- Non-separable, sealed unit with outer ring, full complement of needle rollers, stud seals, self-lubricating resin internal thrust washers, and stud-fastened retaining washer.
- Seals help retain lubricant and exclude foreign matter (CRS Series).
- Re-lubrication via axially drilled hole through stud with cross-drilled holes in stud raceway and shank.
- Recessed axial hole accepts standard nominal inch drive-type grease lubrication fitting.
- Lubrication fitting plugs furnished to close off unused holes.
- Tolerance limits for outer diameters of stud and outer ring refer to "single mean diameter."
- A close fit between stud and hole required for mounting.
- Bore dimensions given below result in varying fit (0.025 mm tight to 0.013 mm loose [0.0010 in. tight to 0.0005 in. loose]).
- Retaining washer should be firmly backed up by flat housing shoulder (perpendicular to the stud axis).
- Shoulder diameter should be at least same size as minimum clamping diameter listed.
- May be mounted with two thin lock nuts, or nut and lock washer.

Outer Dia.	d_1	D	C	B_2	B_3	G_1	d_2 and d_4	d_3	G	Track Roller Designation	
	+0.025 +0.0010 **-0** -0.0000	**+0** +0.000 **-0.025** -0.001	**+0** +0.000 **-0.13** -0.005	(nom.)		Min.			UNF	Without Seals	With Seals and Internal Thrust Washers
in.	**mm** in.	**mm** in.	**mm** in.	**mm** in.	**mm** in.	**mm** in.	**mm** in.	**mm** in.	in.		
1/2	**4.826** 0.1900	**12.70** 0.500	**8.74** 0.344	**12.70** 0.500	—	**6.35** 0.250	**3.18**(2) 0.125(1)	—	10-32	CR-8	CRS-8
	4.826 0.1900	**12.70** 0.500	**9.53** 0.375	**15.88** 0.625	—	**6.35** 0.250	**3.18**(2) 0.125(1)	—	10-32	CR-8-1	CRS-8-1
5/8	**6.350** 0.2500	**15.88** 0.625	**10.31** 0.406	**15.88** 0.625	—	**7.92** 0.312	**3.18**(2) 0.125(1)	—	1/4-28	CR-10	CRS-10
	6.350 0.2500	**15.88** 0.625	**11.13** 0.438	**19.05** 0.750	—	**7.92** 0.312	**3.18**(2) 0.125(1)	—	1/4-28	CR-10-1	CRS-10-1
3/4	**9.525** 0.3750	**19.05** 0.750	**12.70** 0.500	**22.23** 0.875	**6.35** 0.250	**9.53** 0.375	**3.18** 0.188	**2.39** 0.094	3/8-24	CR-12	CRS-12
7/8	**9.525** 0.3750	**22.23** 0.875	**12.70** 0.500	**22.23** 0.875	**6.35** 0.250	**9.53** 0.375	**3.18** 0.188	**2.39** 0.094	3/8-24	CR-14	CRS-14
1	**11.113** 0.4375	**25.40** 1.000	**15.88** 0.625	**25.40** 1.000	**6.35** 0.250	**12.70** 0.500	**3.18** 0.188	**2.39** 0.094	7/16-20	CR-16	CRS-16
1 1/8	**11.113** 0.4375	**28.58** 1.125	**15.88** 0.625	**25.40** 1.000	**6.35** 0.250	**12.70** 0.500	**3.18** 0.188	**2.39** 0.094	7/16-20	CR-18	CRS-18
1 1/4	**12.700** 0.5000	**31.75** 1.250	**19.05** 0.750	**31.75** 1.250	**7.92** 0.312	**15.88** 0.625	**3.18** 0.188	**2.39** 0.094	1/2-20	CR-20	CRS-20
1 3/8	**12.700** 0.5000	**34.93** 1.375	**19.05** 0.750	**31.75** 1.250	**7.92** 0.312	**15.88** 0.625	**3.18** 0.188	**2.39** 0.094	1/2-20	CR-22	CRS-22
1 1/2	**15.875** 0.6250	**38.10** 1.500	**22.23** 0.875	**38.10** 1.500	**9.53** 0.375	**19.05** 0.750	**3.18** 0.188	**2.39** 0.094	5/8-18	CR-24	CRS-24
1 5/8	**15.875** 0.6250	**41.28** 1.625	**22.23** 0.875	**38.10** 1.500	**9.53** 0.375	**19.05** 0.750	**3.18** 0.188	**2.39** 0.094	5/8-18	CR-26	CRS-26
1 3/4	**19.050** 0.7500	**44.45** 1.750	**25.40** 1.000	**44.45** 1.750	**11.13** 0.438	**22.23** 0.875	**3.18** 0.188	**2.39** 0.094	3/4-16	CR-28	CRS-28
1 7/8	**19.050** 0.7500	**47.63** 1.875	**25.40** 1.000	**44.45** 1.750	**11.13** 0.438	**22.23** 0.875	**3.18** 0.188	**2.39** 0.094	3/4-16	CR-30	CRS-30

(1) No lubrication hole in threaded end.
(2) Oil hold (d_4) only.

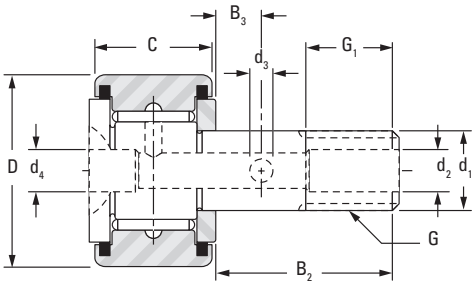

CR and CRS -12 to -64

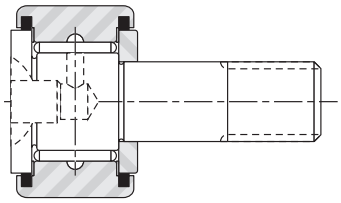

CR and CRS -8 to -10-1

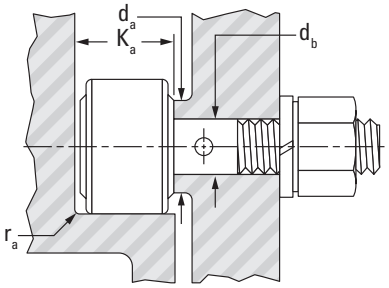

NOTE

Clamping torque is based on lubricated threads. If threads are dry, the torque values listed below may be doubled.

Load Ratings					Speed Rating Grease	Mounting Dimensions				Clamping Torque	Approx. Wt.
As a Bearing		As a Track Roller				d_b	$r_{as\ max}$	K_a	d_a		
Dynamic	Static	Dynamic		Static		Bore Dia. for Stud **+0.013** +0.0005 **-0** -0.0000	Max.	Min.	Min.		
C	C_o	C_w	$F_{r\ perm}$	$F_{Or\ perm}$							
kN lbf.		**kN** lbf.			min-1	**mm** in.	**mm** in.	**mm** in.	**mm** in.	**N-m** lb-in.	**kg** lbs.
4.44 999	**4.94** 1110	**3.01** 677	**1.04** 233	**2.49** 560	7000	**4.826** 0.1900	**0.25** 0.010	**10.41** 0.41	**7.52** 0.296	**1.69** 15	**0.010** 0.022
4.98 1120	**5.69** 1280	**3.38** 759	**1.21** 272	**2.90** 652	7000	**4.826** 0.1900	**0.25** 0.010	**11.18** 0.44	**7.52** 0.296	**1.69** 15	**0.010** 0.023
6.05 1360	**7.87** 1770	**4.37** 982	**2.26** 508	**5.43** 1220	5500	**6.350** 0.2500	**0.38** 0.015	**11.94** 0.47	**9.12** 0.359	**3.95** 35	**0.019** 0.041
6.58 1480	**8.76** 1970	**4.76** 1070	**2.53** 569	**6.09** 1370	5500	**6.350** 0.2500	**0.38** 0.015	**12.70** 0.50	**9.12** 0.359	**3.95** 35	**0.020** 0.045
10.4 2330	**15.2** 3410	**6.45** 1450	**2.88** 647	**6.89** 1550	3900	**9.525** 0.3750	**0.38** 0.015	**14.22** 0.56	**12.70** 0.500	**10.73** 95	**0.034** 0.076
10.4 2330	**15.2** 3410	**7.56** 1700	**4.80** 1080	**11.5** 2590	3900	**9.525** 0.3750	**0.38** 0.015	**14.22** 0.56	**12.70** 0.500	**10.73** 95	**0.044** 0.097
13.3 2980	**22.3** 5010	**8.94** 2010	**6.05** 1360	**14.5** 3260	3000	**11.113** 0.4375	**0.76** 0.030	**17.53** 0.69	**16.28** 0.641	**28.25** 250	**0.073** 0.161
13.3 2980	**22.3** 5010	**9.88** 2220	**8.67** 1950	**18.3** 4120	3000	**11.113** 0.4375	**0.76** 0.030	**17.53** 0.69	**16.28** 0.641	**28.25** 250	**0.089** 0.197
23.3 5240	**30.3** 6810	**16.1** 3620	**7.43** 1670	**17.8** 40.10	2600	**12.700** 0.5000	**0.76** 0.030	**20.57** 0.81	**19.43** 0.765	**39.54** 350	**0.137** 0.301
23.3 5240	**30.3** 6810	**17.7** 3980	**10.5** 2350	**25.1** 5650	2600	**12.700** 0.5000	**0.76** 0.030	**20.57** 0.81	**19.43** 0.765	**39.54** 350	**0.161** 0.354
28.4 6380	**40.8** 9160	**20.1** 4520	**10.8** 2440	**26.0** 5850	2300	**15.875** 0.6250	**0.76** 0.030	**23.88** 0.94	**22.63** 0.891	**73.44** 650	**0.239** 0.528
28.4 6380	**40.8** 9160	**21.5** 4840	**14.1** 3170	**33.8** 7610	2300	**15.875** 0.6250	**0.76** 0.030	**23.88** 0.94	**22.63** 0.891	**73.44** 650	**0.274** 0.605
35.8 8040	**56.9** 12800	**25.9** 5830	**17.7** 3980	**42.5** 9560	1900	**19.050** 0.7500	**1.02** 0.040	**26.92** 1.06	**26.59** 1.047	**141.23** 1250	**0.385** 0.848
35.8 8040	**56.9** 12800	**27.4** 6150	**22.0** 4940	**49.4** 11100	1900	**19.050** 0.7500	**1.02** 0.040	**26.92** 1.06	**26.59** 1.047	**141.23** 1250	**0.430** 0.947

Continued on next page.

B

STUD-TYPE TRACK ROLLERS
CR, CRS SERIES – *continued*

INCH SERIES

- Screwdriver slot in head facilitates mounting.
- Non-separable, sealed unit with outer ring, full complement of needle rollers, stud seals, self-lubricating resin internal thrust washers and stud-fastened retaining washer.
- Seals help retain lubricant and exclude foreign matter (CRS Series).
- Re-lubrication via axially drilled hole through stud with cross-drilled holes in stud raceway and shank.
- Recessed axial hole accepts standard nominal inch drive-type grease lubrication fitting.
- Lubrication fitting plugs furnished to close off unused holes.
- Tolerance limits for outer diameters of stud, and outer ring refer to "single mean diameter."
- A close fit between stud and hole required for mounting.
- Bore dimensions given below result in varying fit (0.025 mm tight to 0.013 mm loose [0.0010 in. tight to 0.0005 in. loose]).
- Retaining washer should be firmly backed up by flat housing shoulder (perpendicular to the stud axis).
- Shoulder diameter should be at least same size as minimum clamping diameter listed.
- May be mounted with two thin lock nuts, or nut and lock washer.

Outer Dia.	d_1	D	C	B_2	B_3	G_1	d_2 and d_4	d_3	G	Track Roller Designation	
	+0.025 +0.0010 **-0** -0.0000	**+0** +0.000 **-0.025** -0.001	**+0** +0.000 **-0.13** -0.005	(nom.)		Min.			UNF	Without Seals	With Seals and Internal Thrust Washers
in.	**mm** in.	**mm** in.	**mm** in.	**mm** in.	**mm** in.	**mm** in.	**mm** in.	**mm** in.	in.		
2	**22.225** 0.8750	**50.80** 2.000	**31.75** 1.250	**50.80** 2.000	**12.70** 0.500	**25.40** 1.000	**4.77** 0.188	**4.77** 0.188	$^7/_8$-14	CR-32	CRS-32
2 $^1/_4$	**22.225** 0.8750	**57.15** 2.250	**31.75** 1.250	**50.80** 2.000	**12.70** 0.500	**25.40** 1.000	**4.77** 0.188	**4.77** 0.188	$^7/_8$-14	CR-36	CRS-36
2 $^1/_2$	**25.400** 1.0000	**63.50** 2.500	**38.10** 1.500	**57.15** 2.250	**14.27** 0.562	**28.58** 1.125	**4.77** 0.188	**4.77** 0.188	1-14[(1)]	CR-40	CRS-40
2 $^3/_4$	**25.400** 1.0000	**69.85** 2.750	**38.10** 1.500	**57.15** 2.250	**14.27** 0.562	**28.58** 1.125	**4.77** 0.188	**4.77** 0.188	1-14[(1)]	CR-44	CRS-44
3	**31.750** 1.2500	**76.20** 3.000	**44.45** 1.750	**63.50** 2.500	**15.88** 0.625	**31.75** 1.250	**6.35** 0.250	**6.35** 0.250	1 $^1/_4$-12	CR-48	CRS-48
3 $^1/_4$	**31.750** 1.2500	**82.55** 3.250	**44.45** 1.750	**63.50** 2.500	**15.88** 0.625	**31.75** 1.250	**6.35** 0.250	**6.35** 0.250	1 $^1/_4$-12	CR-52	CRS-52
3 $^1/_2$	**34.925** 1.3750	**88.90** 3.500	**50.80** 2.000	**69.85** 2.750	**17.48** 0.688	**34.93** 1.375	**6.35** 0.250	**6.35** 0.250	1 $^3/_8$-12	CR-56	CRS-56
4	**38.100** 1.5000	**101.60** 4.000	**57.15** 2.250	**88.90** 3.500	**19.05** 0.750	**38.10** 1.500	**6.35** 0.250	**6.35** 0.250	1 $^1/_2$-12	CR-64	CRS-64

(1) UNS instead of UNF threads.

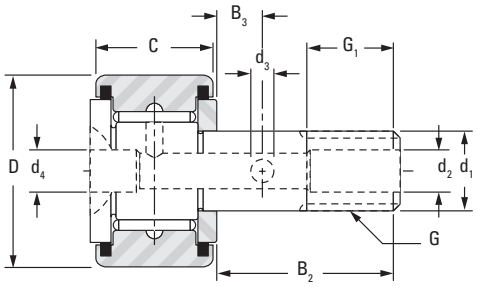

CR and CRS -12 to -64

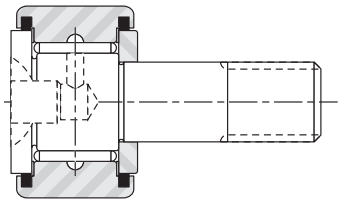

CR and CRS -8 to -10-1

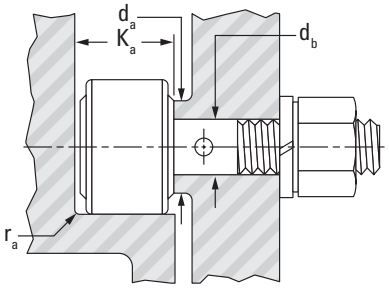

NOTE

Clamping torque is based on lubricated threads. If threads are dry, the torque values listed below may be doubled.

Load Ratings					Speed Rating Grease	Mounting Dimensions				Clamping Torque	Approx. Wt.
As a Bearing		As a Track Roller				d_b	$r_{as\ max}$	K_a	d_a		
Dynamic	Static	Dynamic		Static		Bore Dia. for Stud **+0.013** +0.0005 **-0** -0.0000	Max.	Min.	Min.		
C	C_o	C_w	$F_{r\ perm}$	$F_{Or\ perm}$							
kN lbf.		**kN** lbf.			min^{-1}	**mm** in.	**mm** in.	**mm** in.	**mm** in.	**N-m** lb-in.	**kg** lbs.
43.5 9770	**76.1** 17100	**31.8** 7160	**26.0** 5850	**60.5** 13600	1700	**22.225** 0.8750	**1.27** 0.050	**33.78** 1.33	**30.56** 1.203	**169.48** 1500	**0.621** 1.37
43.5 9770	**76.1** 17100	**34.6** 7770	**36.7** 8250	**71.2** 16000	1700	**22.225** 0.8750	**1.27** 0.050	**33.78** 1.33	**30.56** 1.203	**169.48** 1500	**0.757** 1.67
58.7 13200	**118** 26600	**44.5** 10000	**51.6** 11600	**101** 22700	1400	**25.400** 1.0000	**2.29** 0.090	**40.13** 1.58	**34.93** 1.375	**254.22** 2250	**1.134** 2.50
58.7 13200	**118** 26600	**47.2** 10600	**66.7** 15000	**113** 25500	1400	**25.400** 1.0000	**2.29** 0.090	**40.13** 1.58	**34.93** 1.375	**254.22** 2250	**1.329** 2.93
74.7 16800	**179** 40200	**51.6** 11600	**64.0** 14400	**127** 28600	990	**31.750** 1.2500	**2.29** 0.090	**46.48** 1.83	**44.45** 1.750	**389.80** 3450	**1.905** 4.20
74.7 16800	**179** 40200	**54.7** 12300	**80.1** 18000	**143** 32100	990	**31.750** 1.2500	**2.29** 0.090	**46.48** 1.83	**44.45** 1.750	**389.80** 3450	**2.182** 4.81
111 24900	**227** 51000	**82.3** 18500	**89.8** 20200	**187** 42000	950	**34.925** 1.3750	**2.29** 0.090	**52.83** 2.08	**48.82** 1.922	**474.54** 4200	**2.912** 6.42
138 31100	**321** 72200	**99.2** 22300	**121** 27200	**245** 55000	780	**38.100** 1.5000	**2.29** 0.090	**59.18** 2.33	**57.94** 2.281	**564.93** 5000	**4.291** 9.46

B

STUD-TYPE TRACK ROLLERS
CRSB SERIES
INCH SERIES

- Non-separable, sealed unit with outer ring, full complement of needle rollers, stud seals, self-lubricating resin internal thrust washers and stud-fastened retaining washer.
- Seals help retain lubricant and exclude foreign matter (CRS Series).
- Hexagonal wrench socket in stud head for mounting.
- Re-lubrication via axially drilled hole through stud with cross-drilled holes in stud raceway and shank.
- Recessed axial hole accepts standard nominal inch drive-type grease lubrication fitting.
- Lubrication fitting plugs furnished to close off unused holes.
- Tolerance limits for outer diameters of stud and outer ring refer to "single mean diameter."
- A close fit between stud and hole required for mounting.
- Bore dimensions given below result in varying fit (0.025 mm tight to 0.013 mm loose [0.0010 in. tight to 0.0005 in. loose]).
- Retaining washer should be firmly backed up by flat housing shoulder (perpendicular to the stud axis).
- Shoulder diameter should be at least same size as minimum clamping diameter listed.
- May be mounted with two thin lock nuts, or nut and lock washer.

Outer Dia.	d_1	D	C	B_2	B_3	G_1	d_4	d_2	d_3	G	Bearing Designation
	+0.025 +0.0010 **-0** -0.0000	**+0** +0.000 **-0.025** -0.001	**+0** +0.000 **-0.13** -0.005	(nom.)		Min.				UNF	
in.	**mm** in.	**mm** in.	**mm** in.	**mm** in.	**mm** in.	**mm** in.	**mm** in.	**mm** in.	**mm** in.	mm in.	
1/2	**4.826** 0.1900	**12.70** 0.500	**8.74** 0.344	**12.70** 0.500	—	**6.35** 0.250	—	—	—	10-32	CRSB-8
1/2	**4.826** 0.1900	**12.70** 0.500	**9.53** 0.375	**15.88** 0.625	—	**6.35** 0.250	—	—	—	10-32	CRSB-8-1
5/8	**6.350** 0.2500	**15.88** 0.625	**10.31** 0.406	**15.88** 0.625	—	**7.92** 0.312	—	—	—	1/4-28	CRSB-10
5/8	**6.350** 0.2500	**15.88** 0.625	**11.13** 0.438	**19.05** 0.750	—	**7.92** 0.312	—	—	—	1/4-28	CRSB-10-1
3/4	**9.525** 0.3750	**19.05** 0.750	**12.70** 0.500	**22.23** 0.875	**6.35** 0.250	**9.53** 0.375	—	**4.78** 0.188	**2.39** 0.094	3/8-24	CRSB-12
7/8	**9.525** 0.3750	**22.23** 0.875	**12.70** 0.500	**22.23** 0.875	**6.35** 0.250	**9.53** 0.375	—	**4.78** 0.188	**2.39** 0.094	3/8-24	CRSB-14
1	**11.113** 0.4375	**25.40** 1.000	**15.88** 0.625	**25.40** 1.000	**6.35** 0.250	**12.70** 0.500	—	**4.78** 0.188	**2.39** 0.094	7/16-20	CRSB-16
1 1/8	**11.113** 0.4375	**28.58** 1.125	**15.88** 0.625	**25.40** 1.000	**6.35** 0.250	**12.70** 0.500	—	**4.78** 0.188	**2.39** 0.094	7/16-20	CRSB-18
1 1/4	**12.700** 0.5000	**31.75** 1.250	**19.05** 0.750	**31.75** 1.250	**7.92** 0.312	**15.88** 0.625	—	**4.78** 0.188	**2.39** 0.094	1/2-20	CRSB-20
1 3/8	**12.700** 0.5000	**34.93** 1.375	**19.05** 0.750	**31.75** 1.250	**7.92** 0.312	**15.88** 0.625	—	**4.78** 0.188	**2.39** 0.094	1/2-20	CRSB-22
1 1/2	**15.875** 0.6250	**38.10** 1.500	**22.23** 0.875	**38.10** 1.500	**9.53** 0.375	**19.05** 0.750	—	**4.78** 0.188	**2.39** 0.094	5/8-18	CRSB-24
1 5/8	**15.875** 0.6250	**41.28** 1.625	**22.23** 0.875	**38.10** 1.500	**9.53** 0.375	**19.05** 0.750	—	**4.78** 0.188	**2.39** 0.094	5/8-18	CRSB-26
1 3/4	**19.050** 0.7500	**44.45** 1.750	**25.40** 1.000	**44.45** 1.750	**11.13** 0.438	**22.23** 0.875	—	**4.78** 0.188	**2.39** 0.094	3/4-16	CRSB-28

(1) UNS instead of UNF threads.
Furnished with lubrication hole in head end of stud and lubrication fitting installed below bottom of hex wrench socket.

For hexagonal wrench sizes, see page B-254.

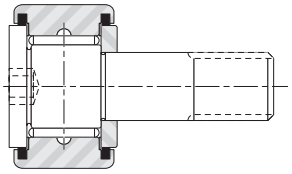

CRSB -8 to -10-1

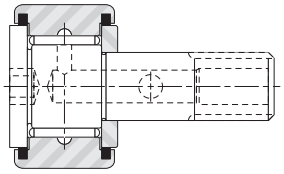

CRSB -24 to -44

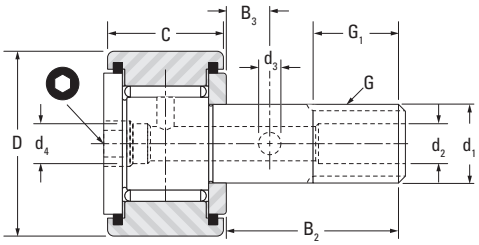

CRSB -12 to -22
CRSB -48 to -64

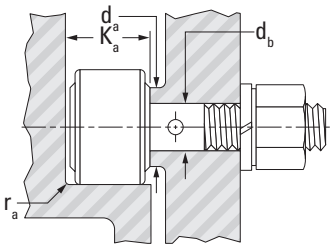

NOTE

Clamping torque is based on lubricated threads. If threads are dry, the torque values listed below may be doubled.

Load Ratings					Speed Rating Grease	Mounting Dimensions				Clamping Torque	Approx. Wt.
As a Bearing		As a Track Roller				d_b	$r_{as\ max}$	K_a	d_a		
Dynamic	Static	Dynamic		Static		Bore Dia. for Stud **+0.013** +0.0005 **-0** -0.0000	Max.	Min.	Min.		
C	C_o	C_w	$F_{r\ perm}$	$F_{Or\ perm}$							
kN lbf.		**kN** lbf.			min^{-1}	**mm** in.	**mm** in.	**mm** in.	**mm** in.	**N-m** lb-in.	**kg** lbs.
4.44 999	**4.94** 1110	**3.01** 677	**1.04** 233	**2.49** 560	7000	**4.826** 0.1900	**0.25** 0.010	**10.4** 0.41	**7.54** 0.297	**1.69** 15	**0.010** 0.022
4.98 1120	**5.69** 1280	**3.38** 759	**1.21** 272	**2.90** 652	7000	**4.826** 0.1900	**0.25** 0.010	**11.2** 0.44	**7.54** 0.297	**1.69** 15	**0.010** 0.023
6.05 1360	**7.87** 1770	**4.37** 982	**2.26** 508	**5.43** 1220	5500	**6.350** 0.2500	**0.38** 0.015	**11.9** 0.47	**9.12** 0.359	**3.95** 35	**0.019** 0.041
6.58 1480	**8.76** 1970	**4.76** 1070	**2.53** 569	**6.09** 1370	5500	**6.350** 0.2500	**0.38** 0.015	**12.7** 0.50	**9.12** 0.359	**3.95** 35	**0.020** 0.045
10.4 2330	**15.2** 3410	**6.45** 1450	**2.88** 647	**6.89** 1550	3900	**9.525** 0.3750	**0.38** 0.015	**14.2** 0.56	**12.70** 0.500	**10.73** 95	**0.034** 0.076
10.4 2330	**15.2** 3410	**7.56** 1700	**4.80** 1080	**11.5** 2590	3900	**9.525** 0.3750	**0.38** 0.015	**17.5** 0.69	**12.70** 0.500	**10.73** 95	**0.044** 0.097
13.3 2980	**22.3** 5010	**8.94** 2010	**6.05** 1360	**14.5** 3260	3000	**11.113** 0.4375	**0.76** 0.030	**17.5** 0.69	**16.28** 0.641	**28.25** 250	**0.073** 0.161
13.3 2980	**22.3** 5010	**9.88** 2220	**8.67** 1950	**18.3** 4120	3000	**11.113** 0.4375	**0.76** 0.030	**20.6** 0.81	**16.28** 0.641	**28.25** 250	**0.089** 0.197
23.3 5240	**30.3** 6810	**16.1** 3620	**7.43** 1670	**17.8** 4010	2600	**12.700** 0.5000	**0.76** 0.030	**20.6** 0.81	**19.43** 0.765	**39.54** 350	**0.137** 0.301
23.30 5240	**30.3** 6810	**17.7** 3980	**10.5** 2350	**25.1** 5650	2600	**12.700** 0.5000	**0.76** 0.030	**23.9** 0.94	**19.03** 0.765	**39.54** 350	**0.161** 0.354
28.4 6380	**40.8** 9160	**20.1** 4520	**10.9** 2440	**26.0** 5850	2300	**15.875** 0.6250	**0.76** 0.030	**23.9** 0.94	**22.63** 0.891	**73.44** 650	**0.354** 0.528
28.4 6380	**40.8** 9160	**21.5** 4840	**14.1** 3170	**33.8** 7610	2300	**15.875** 0.6250	**0.76** 0.030	**26.9** 1.06	**22.63** 0.891	**73.44** 650	**0.274** 0.605
35.8 8040	**56.94** 12800	**25.9** 5830	**17.7** 3980	**42.5** 9560	1900	**19.050** 0.7500	**1.02** 0.040	**26.9** 1.06	**26.59** 1.047	**141.23** 1250	**0.385** 0.848

Continued on next page.

B

STUD-TYPE TRACK ROLLERS
CRSB SERIES – *continued*
INCH SERIES

- Non-separable, sealed unit with outer ring, full complement of needle rollers, stud seals, self-lubricating resin internal thrust washers and stud-fastened retaining washer.
- Seals help retain lubricant and exclude foreign matter (CRS Series).
- Hexagonal wrench socket in stud head for mounting.
- Re-lubrication via axially drilled hole through stud with cross-drilled holes in stud raceway and shank.
- Recessed axial hole accepts standard nominal inch drive-type grease lubrication fitting.
- Lubrication fitting plugs furnished to close off unused holes.
- Tolerance limits for outer diameters of stud and outer ring refer to "single mean diameter."
- A close fit between stud and hole required for mounting.
- Bore dimensions given below result in varying fit (0.025 mm tight to 0.013 mm loose [0.0010 in. tight to 0.0005 in. loose]).
- Retaining washer should be firmly backed up by flat housing shoulder (perpendicular to the stud axis).
- Shoulder diameter should be at least same size as minimum clamping diameter listed.
- May be mounted with two thin lock nuts, or nut and lock washer.

Outer Dia.	d_1	D	C	B_2	B_3	G_1	d_4	d_2	d_3	G	Bearing Designation
	+0.025 +0.0010 **-0** -0.0000	**+0** +0.000 **-0.025** -0.001	**+0** +0.000 **-0.13** -0.005	(nom.)		Min.				UNF	
in.	**mm** in.	**mm** in.	**mm** in.	**mm** in.	**mm** in.	**mm** in.	**mm** in.	**mm** in.	**mm** in.	mm in.	
1 7/8	**19.050** 0.7500	**47.63** 1.875	**25.40** 1.000	**44.45** 1.750	**11.13** 0.438	**22.23** 0.875	—	**4.78** 0.188	**2.39** 0.094	3/4-16	CRSB-30
2	**22.225** 0.8750	**50.80** 2.000	**31.75** 1.250	**50.80** 2.000	**12.70** 0.500	**25.40** 1.000	—	**4.78** 0.188	**3.18** 0.125	7/8-14	CRSB-32
2 1/4	**22.225** 0.8750	**57.15** 2.250	**31.75** 1.250	**50.80** 2.000	**12.70** 0.500	**25.40** 1.000	—	**4.78** 0.188	**3.18** 0.125	7/8-14	CRSB-36
2 1/2	**25.400** 1.0000	**63.50** 2.500	**38.10** 1.500	**57.15** 2.250	**14.27** 0.562	**28.58** 1.125	—	**4.78** 0.188	**3.18** 0.125	1-14(1)	CRSB-40
2 3/4	**25.400** 1.0000	**69.85** 2.750	**38.10** 1.500	**57.15** 2.250	**14.27** 0.562	**28.58** 1.125	—	**4.78** 0.188	**3.18** 0.125	1-14(1)	CRSB-44
3	**31.750** 1.2500	**76.20** 3.000	**44.45** 1.750	**63.50** 2.500	**15.88** 0.625	**31.75** 1.250	**6.35** 0.250	**6.35** 0.250	**3.18** 0.125	1 1/4-12	CRSB-48
3 1/4	**31.750** 1.2500	**82.55** 3.250	**44.45** 1.750	**63.50** 2.500	**15.88** 0.625	**31.75** 1.250	**6.35** 0.250	**6.35** 0.250	**3.18** 0.125	1 1/4-12	CRSB-52
3 1/2	**34.925** 1.3750	**88.90** 3.500	**50.80** 2.000	**69.85** 2.750	**17.48** 0.688	**34.93** 1.375	**6.35** 0.250	**6.35** 0.250	**3.18** 0.125	1 3/8-12	CRSB-56
4	**38.100** 1.5000	**101.60** 4.000	**57.15** 2.250	**88.90** 3.500	**19.05** 0.750	**38.10** 1.500	**6.35** 0.250	**6.35** 0.250	**3.18** 0.125	1 1/2-12	CRSB-64
5	**50.80** 2.000	**127.0** 5.000	**69.85** 2.750	**128.57** 5.062	**22.352** 0.88	**65.075** 2.562	1/4 NPT	1/4 NPT	**4.77** 0.188	2-12	CRSB-80
6	**63.50** 2.500	**152.4** 6.000	**82.55** 3.250	**152.4** 6.000	**25.40** 1.00	**76.2** 3.000	1/4 NPT	1/4 NPT	**4.77** 0.188	2 1/2-12	CRSB-96

(1) UNS instead of UNF threads.
Furnished with lubrication hole in head end of stud and lubrication fitting installed below bottom of hex wrench socket.

For hexagonal wrench sizes, see page B-254.

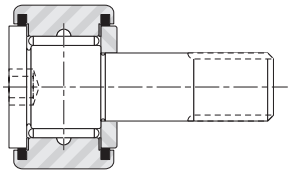

CRSB -8 to -10-1

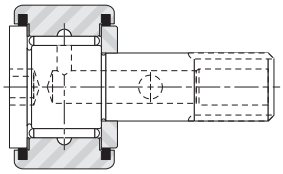

CRSB -24 to -44

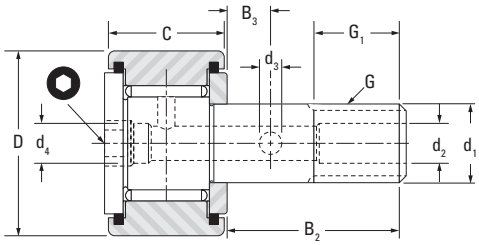

CRSB -12 to -22
CRSB -48 to -64

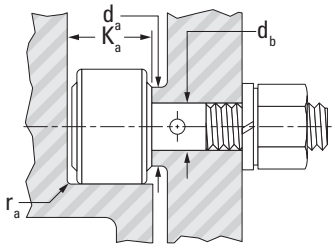

NOTE

Clamping torque is based on lubricated threads. If threads are dry, the torque values listed below may be doubled.

Load Ratings					Speed Rating Grease	Mounting Dimensions				Clamping Torque	Approx. Wt.
As a Bearing		As a Track Roller				d_b	$r_{as\ max}$	K_a	d_a		
Dynamic	Static	Dynamic		Static		Bore Dia. for Stud +0.013 +0.0005 -0 -0.0000	Max.	Min.	Min.		
C	C_o	C_w	$F_{r\ perm}$	$F_{Or\ perm}$							
kN lbf.		kN lbf.			min^{-1}	mm in.	mm in.	mm in.	mm in.	N-m lb-in.	kg lbs.
35.8 8040	56.94 12800	27.4 6150	22.0 4940	49.4 11100	1900	19.050 0.7500	1.02 0.040	33.8 1.33	26.59 1.047	84.74 750	0.430 0.947
43.5 9770	76.06 17100	31.8 7160	26.0 5850	60.5 13600	1700	22.225 0.8750	1.27 0.050	33.8 1.33	30.56 1.203	101.69 900	0.621 1.370
43.5 9770	76.06 17100	34.6 7770	36.7 8250	71.2 16000	1700	22.225 0.8750	1.27 0.050	40.1 1.58	30.56 1.203	101.69 900	0.757 1.670
58.7 13200	118.32 26600	44.5 10000	51.6 11600	101 22700	1400	25.400 1.0000	2.29 0.090	40.1 1.58	34.93 1.375	152.53 1350	1.134 2.500
58.7 13200	118.32 26600	47.2 10600	66.7 15000	113 25500	1400	25.400 1.0000	2.29 0.090	44.5 1.75	34.93 1.375	152.53 1350	1.329 2.930
74.7 16800	178.82 40200	51.6 11600	64.0 14400	127 28600	990	31.750 1.2500	2.29 0.090	46.5 1.83	44.45 1.750	231.62 2050	1.905 4.200
74.7 16800	178.82 40200	54.7 12300	80.1 18000	143 32100	990	31.750 1.2500	2.29 0.090	46.5 1.83	44.45 1.750	231.62 2050	2.182 4.810
110.8 24900	226.86 51000	82.3 18500	89.8 20200	187 42000	950	34.925 1.3750	2.29 0.090	52.8 2.08	48.82 1.922	282.46 2500	2.912 6.420
138.3 31100	321.16 72200	99.2 22300	121 27200	245 55000	780	38.100 1.5000	2.29 0.090	59.2 2.33	57.94 2.281	338.95 3000	4.291 9.460
211.0 47.300	485.0 109000	152.0 34200	193.0 43400	385.0 86600	620	50.800 2.000	3.18 0.125	73.15 2.88	73.03 2.875	564.9 5000	8.89 19.60
285.0 64100	576.0 130000	209.0 47100	238.0 53600	473.0 106000	520	63500 2.500	3.18 0.125	85.85 3.38	85.73 3.375	564.9 5000	14.86 32.76

B

YOKE-TYPE TRACK ROLLERS YCR, YCRS SERIES

INCH SERIES

- Non-separable unit with outer ring, a full complement of needle rollers, inner ring, self-lubricating resin internal thrust washers, and two retaining washers securely fastened to the inner ring.
- Seals in counterbores of outer ring seal against the retaining washers; retain lubricant and exclude foreign matter (YCRS Series).
- Dimensions shown are for unplated finished unit.
- Tolerance limits for outer diameters of stud and outer ring refer to "single mean diameter."
- The machine element with the holes in which the mounting bolt is supported must be sufficiently rigid to resist local crushing under the applied load and to resist bending which can cause uneven loading of the rollers.
- When the applied loads are high, the tight transition fit should be used in conjunction with a high strength shaft or bolt. When loads are moderate, the loose transition fit may be used with a high strength shaft or bolt. For light loads, the loose transition fit may be used with an unhardened shaft or bolt.

Outer Dia.	D	d		B	C	b	Track Roller Designation	
	+0 +0.000 **-0.03** -0.001	Max.	Min.	**+0.130** +0.0050 **-0.250** -0.0100	**+0** +0.000 **-0.13** -0.005	(nom.)	Without Seals	With Seals and Internal Thrust Washers
in.	**mm** in.	**mm** in.	**mm** in.	**mm** in.	**mm** in.	**mm** in.		
3/4	**19.05** 0.75	**6.355** 0.2502	**6.34** 0.2496	**14.288** 0.5625	**12.7** 0.5	**2.95** 0.116	YCR-12	YCRS-12
7/8	**22.23** 0.875	**6.355** 0.2502	**6.34** 0.2496	**14.288** 0.5625	**12.7** 0.5	**2.95** 0.116	YCR-14	YCRS-14
1	**25.4** 1	**7.943** 0.3127	**7.927** 0.3121	**17.463** 0.6875	**15.88** 0.625	**3.18** 0.125	YCR-16	YCRS-16
1 1/8	**28.58** 1.125	**7.943** 0.3127	**7.927** 0.3121	**17.463** 0.6875	**15.88** 0.625	**3.18** 0.125	YCR-18	YCRS-18
1 1/4	**31.75** 1.25	**9.53** 0.3752	**9.515** 0.3746	**20.638** 0.8125	**19.05** 0.75	**3.18** 0.125	YCR-20	YCRS-20
1 3/8	**34.93** 1.375	**9.53** 0.3752	**9.515** 0.3746	**20.638** 0.8125	**19.05** 0.75	**3.18** 0.125	YCR-22	YCRS-22
1 1/2	**38.1** 1.5	**11.118** 0.4377	**11.102** 0.4371	**23.813** 0.9375	**22.23** 0.875	**3.18** 0.125	YCR-24	YCRS-24
1 5/8	**41.28** 1.625	**11.118** 0.4377	**11.102** 0.4371	**23.813** 0.9375	**22.23** 0.875	**3.18** 0.125	YCR-26	YCRS-26
1 3/4	**44.45** 1.75	**12.705** 0.5002	**12.69** 0.4996	**26.988** 1.0625	**25.4** 1	**3.18** 0.125	YCR-28	YCRS-28
1 7/8	**47.63** 1.875	**12.705** 0.5002	**12.69** 0.4996	**26.988** 1.0625	**25.4** 1	**3.18** 0.125	YCR-30	YCRS-30
2	**50.8** 2	**15.88** 0.6252	**15.865** 0.6246	**33.338** 1.3125	**31.75** 1.25	**3.18** 0.125	YCR-32	YCRS-32
2 1/4	**57.15** 2.25	**15.88** 0.6252	**15.865** 0.6246	**33.338** 1.3125	**31.75** 1.25	**3.18** 0.125	YCR-36	YCRS-36
2 1/2	**63.5** 2.5	**19.055** 0.7502	**19.04** 0.7496	**39.688** 1.5625	**38.1** 1.5	**3.68** 0.145	YCR-40	YCRS-40
2 3/4	**69.85** 2.75	**19.055** 0.7502	**19.04** 0.7496	**39.688** 1.5625	**38.1** 1.5	**3.68** 0.145	YCR-44	YCRS-44
3	**76.2** 3	**25.403** 1.0001	**25.387** 0.9995	**46.038** 1.8125	**44.45** 1.75	**3.68** 0.145	YCR-48	YCRS-48
3 1/4	**82.55** 3.25	**25.403** 1.0001	**25.387** 0.9995	**46.038** 1.8125	**44.45** 1.75	**3.68** 0.145	YCR-52	YCRS-52
3 1/2	**88.9** 3.5	**28.578** 1.1251	**28.562** 1.1245	**52.388** 2.0625	**50.8** 2	**3.68** 0.145	YCR-56	YCRS-56
4	**101.6** 4	**31.753** 1.2501	**31.737** 1.2495	**58.738** 2.3125	**57.15** 2.25	**3.68** 0.145	YCR-64	YCRS-64
5	**127.0** 5.00	**44.453** 1.7501	**44.437** 1.7495	**73.025** 2.875	**69.85** 2.750	**8.64** 0.341	YCR-80	YCRS-80
6	**152.4** 6.00	**57.153** 2.2501	**57.137** 2.2495	**85.725** 3.375	**82.55** 3.250	**8.48** 0.334	YCR-96	YCRS-96

- The unit should be clamped endwise between parallel faces perpendicular to the axis to prevent the retaining washers from coming off under load. If the unit cannot be clamped, a close axial fit in the yoke is required.

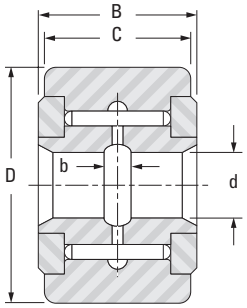

YCR

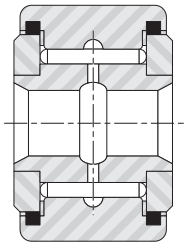

YCRS

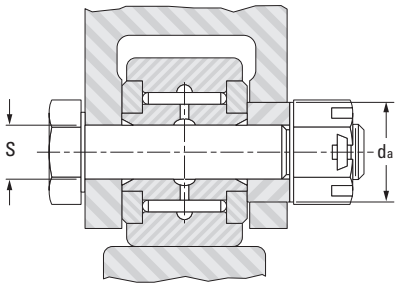

Load Ratings					Speed Rating Grease	Mounting Dimensions				d_a	Approx. Wt.
As a Bearing		As a Track Roller				Shaft Bolt Diameter (S)				Clamping Diameter Min.	
Dynamic	Static	Dynamic		Static		Loose Fit (f7)		Tight Fit (h6)			
C	C_o	C_w	$F_{r\ perm}$	$F_{Or\ perm}$		Max.	Min.	Max.	Min.		
kN lbf.		**kN** lbf.			min^{-1}	**mm** in.	**mm** in.	**mm** in.	**mm** in.	**mm** in.	**kg** lbs.
10.4 2330	**15.2** 3410	**6.45** 1450	**2.88** 647	**6.89** 1550	3900	**6.342** 0.2497	**6.332** 0.2493	**6.363** 0.2505	**6.353** 0.2501	**12.700** 0.500	**0.027** 0.06
10.4 2330	**15.2** 3410	**7.56** 1700	**4.8** 1080	**11.5** 2590	3900	**6.342** 0.2497	**6.332** 0.2493	**6.363** 0.2505	**6.353** 0.2501	**12.700** 0.500	**0.036** 0.08
13.3 2980	**22.3** 5010	**8.94** 2010	**6.05** 1360	**14.5** 3260	3000	**7.93** 0.3122	**7.92** 0.3118	**7.95** 0.313	**7.94** 0.3126	**16.272** 0.641	**0.068** 0.15
13.3 2980	**22.3** 5010	**9.88** 2220	**8.67** 1950	**18.3** 4120	3000	**7.93** 0.3122	**7.92** 0.3118	**7.95** 0.313	**7.94** 0.3126	**16.272** 0.641	**0.077** 0.17
23.3 5240	**30.3** 6810	**16.1** 3620	**7.43** 1670	**17.8** 4010	2600	**9.517** 0.3747	**9.507** 0.3743	**9.538** 0.3755	**9.528** 0.3751	**19.447** 0.766	**0.109** 0.24
23.3 5240	**30.3** 6810	**17.7** 3980	**10.5** 2350	**25.1** 5650	2600	**9.517** 0.3747	**9.507** 0.3743	**9.538** 0.3755	**9.528** 0.3751	**19.447** 0.766	**0.136** 0.3
28.4 6380	**40.7** 9160	**20.1** 4520	**10.8** 2440	**26** 5850	2300	**11.105** 0.4372	**11.095** 0.4368	**11.125** 0.438	**11.115** 0.4376	**22.622** 0.891	**0.186** 0.41
28.4 6380	**40.7** 9160	**21.5** 4840	**14.1** 3170	**33.8** 7610	2300	**11.105** 0.4372	**11.095** 0.4368	**11.125** 0.438	**11.115** 0.4376	**22.622** 0.891	**0.227** 0.5
35.8 8040	**56.9** 12800	**25.9** 5830	**17.7** 3980	**42.5** 9560	1900	**12.692** 0.4997	**12.682** 0.4993	**12.718** 0.5007	**12.708** 0.5003	**26.591** 1.047	**0.29** 0.64
35.8 8040	**56.9** 12800	**27.4** 6150	**22** 4940	**49.4** 11100	1900	**12.692** 0.4997	**12.682** 0.4993	**12.718** 0.5007	**12.708** 0.5003	**26.591** 1.047	**0.363** 0.8
43.5 9770	**76.1** 17100	**31.8** 7160	**26** 5850	**60.5** 13600	1700	**15.867** 0.6247	**15.857** 0.6243	**15.893** 0.6257	**15.883** 0.6253	**30.559** 1.203	**0.476** 1.05
43.5 9770	**76.1** 17100	**34.6** 7770	**36.7** 8250	**71.2** 16000	1700	**15.867** 0.6247	**15.857** 0.6243	**15.893** 0.6257	**15.883** 0.6253	**30.559** 1.203	**0.599** 1.32
58.7 13200	**118** 26600	**44.5** 10000	**51.6** 11600	**100** 22700	1400	**19.042** 0.7497	**19.032** 0.7493	**19.068** 0.7507	**19.058** 0.7503	**33.338** 1.313	**0.816** 1.8
58.7 13200	**118** 26600	**47.2** 10600	**66.7** 15000	**113** 25500	1400	**19.042** 0.7497	**19.032** 0.7493	**19.068** 0.7507	**19.058** 0.7503	**33.338** 1.313	**1.021** 2.25
74.7 16800	**179** 40200	**51.6** 11600	**64** 14400	**127** 28600	990	**25.39** 0.9996	**25.377** 0.9991	**25.42** 1.0008	**25.408** 1.0003	**44.450** 1.750	**1.406** 3.1
74.7 16800	**179** 40200	**54.7** 12300	**80.1** 18000	**143** 32100	990	**25.39** 0.9996	**25.377** 0.9991	**25.42** 1.0008	**25.408** 1.0003	**44.450** 1.750	**1.642** 3.62
111 24900	**227** 51000	**82.3** 18500	**89.8** 20200	**187** 42000	950	**28.565** 1.1246	**28.552** 1.1241	**28.595** 1.1258	**28.583** 1.1253	**48.816** 1.922	**2.245** 4.95
138 31100	**321** 72200	**99.2** 22300	**121** 27200	**245** 55000	780	**31.74** 1.2496	**31.727** 1.2491	**31.77** 1.2508	**31.758** 1.2503	**57.944** 2.281	**3.198** 7.05
211 47300	**485** 109000	**152** 34200	**193** 43400	**385** 86600	620	**44.440** 1.7496	**44.427** 1.7491	**44.470** 1.7508	**44.458** 1.7503	**73.025** 2.875	**6.505** 14.34
285 64100	**576** 130000	**209** 47100	**238** 53600	**473** 106000	520	**57.140** 2.2496	**57.127** 2.2491	**57.170** 2.2508	**57.158** 2.2503	**85.725** 3.375	**9.144** 20.16

NOTES

THRUST BEARINGS, ASSEMBLIES, WASHERS

Overview: Thrust needle roller and cage assemblies are complements of small diameter needle rollers, arranged in a spoke-like configuration. Needle rollers are equally spaced by means of a cage, its web section separates the rollers and provides guidance to keep them tracking in an orbital path. The purpose of these assemblies is to transmit a thrust load between two relatively rotating objects while greatly reducing friction.

Thrust needle roller and cage assemblies also can be unitized with lipped washers to serve as raceway surfaces for the needle rollers. Washers can be supplied separately or can be mechanically unitized to the thrust needle roller and cage assemblies for ease of handling.

- **Sizes:** 5 mm – 240 mm (0.1969 in. – 9.4488 in.).
- **Markets:** Automotive automatic and manual transmissions, automotive accessories (compressors, steering gears, etc.) agricultural and construction equipment.
- **Features:** One-way fool-proof assembly features, anti-rotation locking features and lubrication flow enhancements.
- **Benefits:** High-speed performance and application flexibility.

B

Needle Roller Thrust Bearings – Metric Nominal Dimensions

Prefix
- **AXK** thrust needle roller and cage assembly (without washers), one-piece M profile cage, metric series
- **FNT** thrust needle roller and cage assembly (two-piece cage design)
- **AX** thrust needle roller and cage assembly with one unitized thin or thick washer
- **AR** thrust cylindrical roller and cage assembly with one unitized light and heavy series washers
- **AXZ** thrust needle roller and cage assembly with two washers retained with a ring
- **ARZ** thrust cylindrical roller and cage assembly with two washers retained with a steel ring

Width (for AX or AR bearings) over 3 mm
3.5 = 3.5 mm

Bore
60 = 60 mm
(1) thick AX series and heavy AR(Z) series have same bore but larger O.D. dimension

Outer Diameter
85 = 85 mm

AXZ **3.5** **60** **85**

Prefix
- **K.811** cylindrical roller thrust bearing
- **K.812** cylindrical roller thrust bearing

Bore Diameter
02 = 15 mm
03 = 17 mm
(for bore ≥ 20 mm): bore code x 5 = bore diameter
04 = 4 x 5 = 20 mm

K.811 **04** **TVP**

Suffix
- **TVP** molded, reinforced polymer window-type cage
- **LPB** machined, light metal window-type cage

Thrust Washers – Metric Nominal Dimensions

Prefix
- **AS** thin thrust washer
- **LS** heavy thrust washer
- **CP** thin and thick series thrust washer for AX and AR series
- **CPR** heavy series thrust washer for AR series
- **CPN** precision series thrust washer for AX series

Width (for CP and CPR washers over 1 mm thick)
8 = 8 mm

Bore
40 = 40 mm

Outer Diameter
60 = 60 mm

LS **8** **40** **60**

Prefix
- **GS.811, GS.812** housing washer
- **WS.812, WS.812** shaft washer

Bore Diameter

for WS.811, WS.812:	for GS.811:	for GS.812:
02 = 15 mm **03** = 17 mm (for bore ≥ 20 mm): bore code x 5 = bore diameter **04** = 4 x 5 = 20 mm	**02** = 16 mm **03** = 18 mm **04** = 21 mm **05** = 26 mm (for bore ≥ 30 mm): [bore code x 5]+2 = bore diameter **06** = [6 x 5] +2 = 32 mm	**02** = 16 mm **03** = 17mm **04** = 21 mm **05** = 26 mm (for bore ≥ 30 mm): [bore code x 5]+2 = bore diameter **06** = [6 x 5] +2 = 32 mm (for bore > 85 mm): [bore code x 5]+3 = bore diameter **17** = [17 x 5] +3 = 88 mm

GS.811 **04**

Thrust Bearings – Inch Nominal Dimensions

NT cage assembly

Bore
16 = $^{16}/_{16}$ in. = 1 in.

NT **A** **16** **25**

Cage Design
A needle roller
C needle roller
H cylindrical roller

Outer Diameter
25 = $^{25}/_{16}$ in. = 1 $^{9}/_{16}$ in.

Thrust Washers – Inch Nominal Dimensions

TR thrust washer, in.

Bore
16 = $^{16}/_{16}$ in. =1 in.
10 = $^{10}/_{16}$ in. = $^{5}/_{8}$ in.

TR **B** **10** **18**

A, B, C, etc. washer thickness, in.
I, J bore-piloted washers
ID, JD outer-diameter piloted washers

Outer Diameter
18 = $^{18}/_{16}$ in. = 1 $^{1}/_{8}$ in.

B

Thrust Bearings, Assemblies and Washers

THRUST NEEDLE ROLLER AND CAGE ASSEMBLIES AND THRUST WASHERS – METRIC SERIES — *Page*

Introduction B-274
Thrust Needle Roller and Cage Assemblies, Thrust Washers B-280
Unitized Thrust Bearing Type FNTKF B-284
Unitized Thrust Bearing Type FNTK B-285
Unitized Thrust Bearing Assemblies B-286
Unitized Thrust Bearings B-288

CYLINDRICAL ROLLER THRUST BEARINGS AND THEIR COMPONENTS – METRIC SERIES

Introduction B-296
Thrust Cylindrical Roller and Cage Assemblies, Thrust Washers B-300
Needle or Roller Thrust Bearings B-304
Unitized Roller Thrust Bearing Assemblies B-306

THRUST ASSEMBLIES AND THRUST BEARINGS – INCH SERIES

Introduction B-310
Thrust Needle Roller and Cage Assemblies, Thrust Washers B-314
Thrust Cylindrical Roller and Cage Assemblies B-324
Cylindrical Roller Thrust Bearings B-326

B

THRUST NEEDLE ROLLER AND CAGE ASSEMBLIES AND THRUST WASHERS

METRIC SERIES

Thrust needle roller and cage assemblies are available in a variety of sizes. They all have very small cross sections. This catalog includes the most popular, standardized designs.

REFERENCE STANDARDS ARE:

- **ISO 3031** – rolling bearings – thrust needle roller and cage assemblies, thrust washers – dimensions and tolerances.
- **DIN 5405 Part 2** – rolling bearings – needle roller bearings – thrust needle roller and cage assemblies.
- **DIN 5405 Part 3** – rolling bearings – needle roller bearings – thrust washers.
- **ANSI/ABMA Std. 21.1-1988** – thrust needle roller and cage assemblies and thrust washers – metric design.

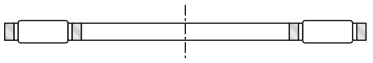

AXK, FNT
Thrust needle roller and cage assembly

LS
Heavy thrust washer

AS
Thin thrust washer

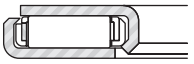

FNTKF (FNTK, FNTF)
Unitized thrust bearing assembly

WS.811
Shaft-piloted washer

GS.811
Housing-piloted washer

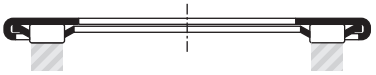

AX
Unitized thrust bearing assembly

Fig. B-71. Types of metric series thrust needle roller and cage assemblies and thrust washers

CONSTRUCTION

THRUST NEEDLE ROLLER AND CAGE ASSEMBLIES

The thrust needle roller and cage assembly (FNT series) has a two-piece steel cage and through-hardened needle rollers that are precision finished to close tolerances for optimum load distribution. The cage is comprised of two mating pieces that are securely fastened together.

AXK series thrust needle roller and cage assembly, which can be used interchangeably with the FNT assembly, has a one-piece cage. The cage is similar in design to the successful profiled radial steel cages.

These cage assemblies have a very thin section and when they must run directly against the backup surface raceways, their section may be 2.000 to 5.000 mm (0.0787 to 0.1969 in.) – equivalent to the diameter of the needle rollers used.

When the backup surfaces cannot be hardened and ground, hardened washers of different thicknesses are available.

UNITIZED THRUST BEARING ASSEMBLIES

Thrust bearing assemblies of the FNTK, FNTF and FNTKF series have been specially designed for use in applications where a unitized assembly allows for easy installation and eliminates the need for heat treatment and precision finishing of one or both thrust bearing backup surfaces.

Each FNTK, FNTF or FNTKF assembly consists of a FNT thrust needle roller and cage assembly – with one or two special-lipped washers that snap over the cage to produce a unitized thrust bearing assembly. The FNTK and FNTF assembly has one such washer. The FNTKF assembly has a washer on each side of the bearing.

The backup surfaces for these unitized thrust bearing assemblies should meet the limits of permissible out-of-squareness and coning or dishing, as shown in Fig. B-72 on page B-278. Oil is the preferred lubricant for these assemblies. However they also are available pre-greased for applications that do not allow for oil lubrication.

The rolling elements of the AX series thrust bearings are retained

and guided in radial pockets within the cage. The cage is retained in relation to the thrust washer by means of a retaining cap. The design of a one-piece steel cage employs a special curvature that guides the rolling elements, by their ends, along their centerlines.

In addition, this special curvature gives the steel cage great rigidity, while providing maximum lubricant space. This unitized assembly of components facilitates installation and provides a high-axial-load capacity, while occupying only minimal space. Note that the AX series is not interchangeable with the AXK series or FNT series thrust needle roller and cage assemblies.

THRUST WASHERS

Ideally, a thrust washer should be stationary with respect to, and piloted by, its supporting or backing member – whether or not this is an integral part of the shaft or housing. There should be no rubbing action between the thrust washer and any other machine member. Some thrust washers are designed for bore piloting and others may be piloted by their outer diameter.

THIN THRUST WASHERS (AS)

The metric series thin thrust washers are made of hardened spring steel. They may be out-of-flat due to heat treatment, but will flatten under load. Thin washers are used when the supporting or backing members cannot be adequately prepared as raceways for the needle rollers. These washers are only 1.000 mm (0.0394 in.) thick, and provide a very compact and cost-effective bearing arrangement. Although they are usually guided on the shaft, they may be housing-guided, when required by the application.

HEAVY THRUST WASHERS (LS)

These metric series thrust washers are made of bearing quality steel, hardened and precision-ground on the flat raceway surfaces. Their bores and outer diameters are not ground, but provide satisfactory surfaces for shaft-piloting or housing-piloting arrangements.

SHAFT-PILOTED WASHERS (WS.811) AND HOUSING-PILOTED WASHERS (GS.811)

These shaft-piloted and housing-piloted metric series thrust washers are primarily for use with metric series cylindrical roller thrust bearings of series 811. They are made of bearing-quality steel with hardened and precision-ground, lapped-flat raceway surfaces. The tolerances of the thrust bearing bore and outer diameter shown, in the engineering section of this catalog, apply to shaft-and housing-piloted washers.

THIN (CP) AND THICK (CPR) THRUST WASHERS

The washer incorporated in the AX series thrust bearing is made from hardened bearing steel. It forms one of the raceways for the rolling elements. The opposing raceway is generally provided by a separate thrust washer of similar design supplied by JTEKT. When the AX series thrust bearing is piloted by the revolving part, the thrust washer must be piloted by the stationary part and vice versa. If the revolving part and the stationary part are noticeably eccentric to each other, the thrust bearing with integral washer must, without exception, be piloted by the revolving part.

The second raceway for the rolling elements also may be formed by the face of a shoulder or an inserted washer, provided these have the correct hardness and geometric dimensions.

DIMENSIONAL ACCURACY

TOLERANCES FOR THRUST NEEDLE ROLLER AND CAGE ASSEMBLIES

Pages B-280 to B-283 list the nominal outer diameter, bore diameter and needle roller diameter for the FNT and AXK series of thrust needle roller and cage assemblies and also the nominal outer diameter and bore diameter of the series AS, LS, WS and GS thrust washers. Thickness tolerances for the AS and LS thrust washers also are included.

Tolerances for the outer and bore diameters of series FNT and AXK thrust needle roller and cage assemblies are given in Table B-44 and Table B-45 on page B-276.

Table B-44. Tolerances for outer diameter (D_c) and bore diameter (D_{c1}) of series FNT thrust needle roller and cage assemblies

D_c		Deviations of max. outside diameter (c12)		D_{c1}		Deviations of min. bore diameter (E11)	
>	≤	Max.	Min.	>	≤	Max.	Min.
mm in.	mm in.	mm in.	mm in.	mm in.	mm in.	mm in.	mm in.
18.000 0.7087	**30.000** 1.1811	**-0.110** -0.0043	**-0.320** -0.0126	**3.000** 0.1181	**6.000** 0.2362	**+0.095** +0.0037	**+0.020** +0.0008
30.000 1.1811	**40.000** 1.5748	**-0.120** -0.0047	**-0.370** -0.0146	**6.000** 0.2362	**10.000** 0.3937	**+0.115** +0.0045	**+0.025** +0.0010
40.000 1.5748	**50.000** 1.9685	**-0.130** -0.0051	**-0.380** -0.0150	**10.000** 0.3937	**18.000** 0.7087	**+0.142** +0.0056	**+0.032** +0.0013
50.000 1.9685	**65.000** 2.5591	**-0.140** -0.0055	**-0.440** -0.0173	**18.000** 0.7087	**30.000** 1.1811	**+0.170** +0.0067	**+0.040** +0.0016
65.000 2.5591	**80.000** 3.1496	**-0.150** -0.0059	**-0.450** -0.0177	**30.000** 1.1811	**50.000** 1.9685	**+0.210** +0.0083	**+0.050** +0.0020
80.000 3.1496	**100.000** 3.9370	**-0.170** -0.0067	**-0.520** -0.0205	**50.000** 1.9685	**80.000** 3.1496	**+0.250** +0.0098	**+0.060** +0.0024
100.000 3.9370	**120.000** 4.7244	**-0.180** -0.0071	**-0.530** -0.0209	**80.000** 3.1496	**120.000** 4.7244	**+0.292** +0.0115	**+0.072** +0.0028
120.000 4.7244	**140.000** 5.5118	**-0.200** -0.0079	**-0.600** -0.0236	**120.000** 4.7244	**180.000** 7.0866	**+0.335** +0.0132	**+0.085** +0.0033
140.000 5.5118	**160.000** 6.2992	**-0.210** -0.0083	**-0.610** -0.0240				
160.000 6.2992	**180.000** 7.0866	**-0.230** -0.0091	**-0.630** -0.0248				
180.000 7.0866	**200.000** 7.8740	**-0.240** -0.0094	**-0.700** -0.0276				

B

Table B-45. Tolerances for outer diameter (D_c) and bore diameter (D_{c1}) of series AXK thrust needle roller and cage assemblies

D_c		Deviations of max. outside diameter (c13)		D_{c1}		Deviations of min. bore diameter (E12)	
>	≤	Max.	Min.	>	≤	Max.	Min.
mm in.	mm in.	mm in.	mm in.	mm in.	mm in.	mm in.	mm in.
18.000 0.7087	**30.000** 1.1811	**-0.110** -0.0043	**-0.440** -0.0173	**3.000** 0.1181	**6.000** 0.2362	**+0.140** +0.0055	**+0.020** +0.0008
30.000 1.1811	**40.000** 1.5748	**-0.120** -0.0047	**-0.510** -0.0201	**6.000** 0.2362	**10.000** 0.3937	**+0.175** +0.0069	**+0.025** +0.0010
40.000 1.5748	**50.000** 1.9685	**-0.130** -0.0051	**-0.520** -0.0205	**10.000** 0.3937	**18.000** 0.7087	**+0.212** +0.0083	**+0.032** +0.0013
50.000 1.9685	**65.000** 2.5591	**-0.140** -0.0055	**-0.600** -0.0236	**18.000** 0.7087	**30.000** 1.1811	**+0.250** +0.0098	**+0.040** +0.0016
65.000 2.5591	**80.000** 3.1496	**-0.150** -0.0059	**-0.610** -0.0240	**30.000** 1.1811	**50.000** 1.9685	**+0.300** +0.0118	**+0.050** +0.0020
80.000 3.1496	**100.000** 3.9370	**-0.170** -0.0067	**-0.710** -0.0280	**50.000** 1.9685	**80.000** 3.1496	**+0.360** +0.4220	**+0.060** +0.0024
100.000 3.9370	**120.000** 4.7244	**-0.180** -0.0071	**-0.720** -0.0283	**80.000** 3.1496	**120.000** 4.7244	**+0.422** +0.0166	**+0.072** +0.0028
120.000 4.7244	**140.000** 5.5118	**-0.200** -0.0079	**-0.830** -0.0327	**120.000** 4.7244	**180.000** 7.0866	**+0.485** +0.0191	**+0.085** +0.0033
140.000 5.5118	**160.000** 6.2992	**-0.210** -0.0083	**-0.840** -0.0331				
160.000 6.2992	**180.000** 7.0866	**-0.230** -0.0091	**-0.860** -0.0339				
180.000 7.0866	**200.000** 7.8740	**-0.240** -0.0094	**-0.960** -0.0378				

Standard AX series needle thrust bearings, combined with a thick washer, provide rotational accuracy and axial run-out to Class 6 levels – according to ISO Standard 199 for ball thrust bearings. They can be supplied in High Precision "HP" quality – providing a precision grade above Class 5. AX series needle thrust bearings with a thin washer are of minimal thickness and provide excellent economy. They should be considered whenever the degree of support and rotational accuracy requirement allow.

Table B-46. AX Series thickness and axial run-out tolerances

	Bore Dc1 mm	Thickness Tolerance µm	Axial run-out µm		
Needle thrust bearings (thin)	≤ 60	+30 / -40 [1]	20 [1]		
	60 < Dc_1 ≤ 90	+50 / -60 [2]	25 [2]		
	90 < Dc_1 ≤ 120	+50 / -60 [2]	30 [2]		
Needle thrust bearings (thick)	Dc_1 ≤ 60	+30 / -30 [1]	20 [1]		
	60 < Dc_1 ≤ 90	+50/ -50 [2]	25 [2]	Quality	
	90 < Dc_1 ≤ 120	+50/ -50 [2]	30 [2]	HP	HSP
Thrust washers (thin) [thick]	Dc_1 ≤ 120	+50 / -60[-50]	5*	2	1
	120 < Dc_1 ≤ 180	+50 / -110[-100]	7*	3	1.5
	180 < Dc_1 ≤ 250	+50 / -160[-150]	10*	4	2

* High precision quality.
[1] Under min. load of 150 N.
[2] Under min. load of 250 N.

BORE INSPECTION PROCEDURE FOR ASSEMBLY

If an inspection of the bore diameter is desired, the bore diameter (D_{c1}) of the assembly should be checked with "go" and "no go" plug gages. The "go" plug gage size is the minimum bore diameter of the assembly. The "no go" plug gage size is the maximum bore diameter of the assembly.

The assembly, under its own weight, must fall freely from the "go" plug gage. The "no go" plug gage must not enter the bore. Where the "no go" plug gage can be forced through the bore, the assembly must not fall from the gage under its own weight.

TOLERANCES FOR THRUST WASHERS

Tolerances for the bore diameters of series WS shaft-piloted thrust washers are given in the engineering section of this catalog. Tolerances for the outer diameters of series GS housing-piloted thrust washers are also given in the engineering section of this catalog.

Tolerances for the outer and bore diameters of series AS thrust washers are given in Table B-47 on page B-277. Thickness tolerance for series AS thrust washers is ±0.050 mm (±0.0020 in.).

Tolerances for the outer and bore diameters of series LS heavy thrust washers are given in Table 48 on page B-277.

Thickness tolerance for series LS heavy thrust washers is given in bearing tables.

BORE INSPECTION PROCEDURE FOR SERIES AS AND LS THRUST WASHERS

If an inspection of the thrust washer bore diameter (d) is desired, it should be checked with "go" and "no go" plug gages. The "go" plug gage size is the minimum bore diameter of the thrust washer. The "no go" plug gage size is the maximum bore diameter of the thrust washer.

The thrust washer, under its own weight, must fall freely from the "go" plug gage. The "no go" plug gage must not enter the bore. Where the "no go" plug gage can be forced through the bore, the thrust washer must not fall from the gage under its own weight.

Table B-47. Tolerances for outer diameter (d_1) and bore diameter (d) of series AS thrust washers

d_1		Deviations of max. outside diameter (e13)		d		Deviations of min. bore diameter (E13)	
>	≤	Max.	Min.	>	≤	Max.	Min.
mm in.	mm in.	mm in.	mm in.	mm in.	mm in.	mm in.	mm in.
18.000 0.7087	**30.000** 1.1811	**-0.040** -0.0016	**-0.370** -0.0146	**3.000** 0.1181	**6.000** 0.2362	**+0.200** +0.0079	**+0.020** +0.0008
30.000 1.1811	**50.000** 1.9685	**-0.050** -0.0020	**-0.440** -0.0173	**6.000** 0.2362	**10.000** 0.3937	**+0.245** +0.0096	**+0.025** +0.0010
50.000 1.9685	**80.000** 3.1496	**-0.060** -0.0024	**-0.520** -0.0205	**10.000** 0.3937	**18.000** 0.7087	**+0.302** +0.0119	**+0.032** +0.0013
80.000 3.1496	**120.000** 4.7244	**-0.072** -0.0028	**-0.612** -0.0241	**18.000** 0.7087	**30.000** 1.1811	**+0.370** +0.0146	**+0.040** +0.0016
120.000 4.7244	**180.000** 7.0866	**-0.085** -0.0034	**-0.715** -0.0282	**30.000** 1.1811	**50.000** 1.9685	**+0.440** +0.0173	**+0.050** +0.0020
180.000 7.0866	**250.000** 9.8425	**-0.100** -0.0039	**-0.820** -0.0323	**50.000** 1.9685	**80.000** 3.1496	**+0.520** +0.0205	**+0.060** +0.0024
				80.000 3.1496	**120.000** 4.7244	**+0.612** +0.0241	**+0.072** +0.0028
				120.000 4.7244	**180.000** 7.0866	**+0.715** +0.0281	**+0.085** +0.0034

Table B-48. Tolerances for outer diameter (d_1) and bore diameter (d) of series LS heavy thrust washers

d_1		Deviations of max. outside diameter (a12)		d		Deviations of min. bore diameter (E12)	
>	≤	Max.	Min.	>	≤	Max.	Min.
mm in.	mm in.	mm in.	mm in.	mm in.	mm in.	mm in.	mm in.
18.000 0.7087	**30.000** 1.1811	**-0.300** -0.0118	**-0.510** -0.0201	**3.000** 0.1181	**6.000** 0.2362	**+0.140** +0.0055	**+0.020** +0.0008
30.000 1.1811	**40.000** 1.5748	**-0.310** -0.0122	**-0.560** -0.0221	**6.000** 0.2362	**10.000** 0.3937	**+0.175** +0.0069	**+0.025** +0.0010
40.000 1.5748	**50.000** 1.9685	**-0.320** -0.0126	**-0.570** -0.0224	**10.000** 0.3937	**18.000** 0.7087	**+0.212** +0.0084	**+0.032** +0.0013
50.000 1.9685	**65.000** 2.5591	**-0.340** -0.0134	**-0.640** -0.0252	**18.000** 0.7087	**30.000** 1.1811	**+0.250** +0.0098	**+0.040** +0.0016
65.000 2.5591	**80.000** 3.1496	**-0.360** -0.0142	**-0.660** -0.0260	**30.000** 1.1811	**50.000** 1.9685	**+0.300** +0.0118	**+0.050** +0.0020
80.000 3.1496	**100.000** 3.9370	**-0.380** -0.0150	**-0.730** -0.0290	**50.000** 1.9685	**80.000** 3.1496	**+0.360** +0.0142	**+0.060** +0.0024
100.000 3.9370	**120.000** 4.7244	**-0.410** -0.0161	**-0.760** -0.0299	**80.000** 3.1496	**120.000** 4.7244	**+0.422** +0.0166	**+0.072** +0.0028
120.000 4.7244	**140.000** 5.5118	**-0.460** -0.0181	**-0.860** -0.0339	**120.000** 4.7244	**180.000** 7.0866	**+0.485** +0.0191	**+0.085** +0.0034
140.000 5.5118	**160.000** 6.2992	**-0.520** -0.0205	**-0.920** -0.0362				
160.000 6.2992	**180.000** 7.0866	**-0.580** -0.0228	**-0.980** -0.0386				
180.000 7.0866	**200.000** 7.8740	**-0.660** -0.0260	**-1.120** -0.0441				

Thickness tolerances for series LS heavy thrust washers are given in bearing tables.

Table B-49. Mounting tolerances for shafts and housings for metric series components

Bearing components	Shaft tolerance (shaft piloting)	Housing tolerance (housing piloting)	Piloting member
Thrust cylindrical and needle roller and cage assembly. Types: AXK, FNT, K.811 and K.812	h8	H10	Shaft
Thrust cylindrical and needle roller and cage assembly. Types: AX, AR, AXZ, and ARZ	h10	H10	Shaft
Thin thrust washer. Type: AS	h10	H11	Shaft
Heavy thrust washer. Type: LS	h10	H11	Shaft
Shaft-piloted thrust washer. Type: WS.811	h6 (j6)	Clearance	Shaft
Housing-piloted thrust washer. Type: GS.811	Clearance	H7 (K7)	Housing
Thick, thin and heavy series thrust washers. Types: CP and CPR	h10	H10 required	As

B

MOUNTING TOLERANCES

THRUST NEEDLE ROLLER AND CAGE ASSEMBLIES – METRIC SERIES

On FNT and AXK series thrust needle roller and cage assemblies, the cage bore has a closer tolerance than the outer diameter. Therefore bore piloting is preferred for these assemblies. To reduce wear, it is suggested that the piloting surface for the cage be hardened to an equivalent of at least 55 HRC. Where design requirements prevent bore piloting, the FNT or AXK series thrust needle roller and cage assemblies may be piloted on the outer diameters. For such cases, suitable O.D. piloting dimensions should be determined. Mounting tolerances are given in Table B-49 on page B-277.

THRUST WASHERS

The mounting tolerances for series AS, LS, WS and GS thrust washers for use with thrust needle roller and cage assemblies are given in Table B-49 on page B-277.

To reduce the wear in the FNT and AXK series thrust assemblies, the piloting surface for the thrust washers should also be hardened to an equivalent of at least 55 HRC.

BACKUP SURFACES

In some applications, it is desirable to use the backup surfaces as raceways for the needle rollers of the thrust needle roller and cage assemblies. In such designs, these surfaces should be parallel and must be hardened to at least 58 HRC. If this hardness cannot be achieved and thrust washers cannot be used, the load ratings must be reduced as explained in the engineering section of this catalog.

Thrust raceway surfaces must be ground to a surface finish of 0.2 µm Ra (8 uin. Ra). When this requirement cannot be met, thrust washers must be used.

The raceways against which the needle rollers operate, or the surface against which the thrust washers bear, must be square with the axis of the shaft. Equally important, the raceway or surface backing of the thrust washer must not be dished or coned. The permissible limits of out-of-squareness and dishing or coning are shown in the figures below.

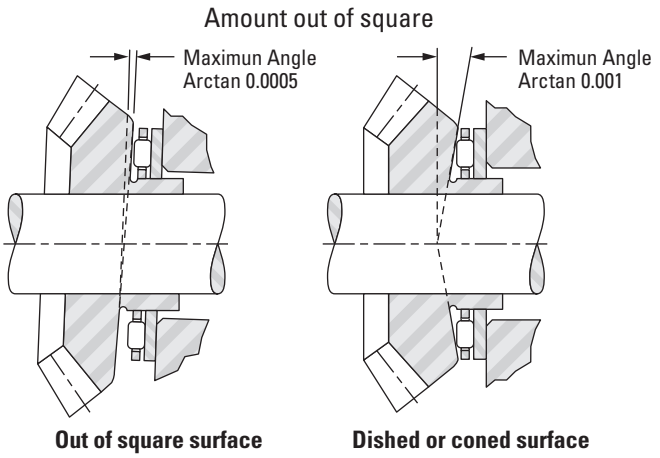

Fig. B-72. Permissible limits

Raceway contact dimensions E_a and E_b are given in the bearing tables. For the thin series AS thrust washers, full backup between the dimensions E_a and E_b should be provided.

Thin series needle thrust bearings and thin thrust washers must be supported on a flat, rigid and continuous face throughout the area of circulation of the needles bounded by dimensions E_b and E_a.

Thick series needle thrust bearings and thick thrust washers can be supported on a more restricted or discontinuous shoulder – provided that the deflection of the washer under load does not impede the smooth operation of the thrust bearing or the required axial run-out.

When an application does not involve the use of a thrust washer, the surface forming the second raceway must:

- Extend at least across the whole area of circulation of the rolling elements between dimensions E_b and E_a.
- Posess a suitable surface finish 0.2 µm Ra (8 uin. Ra) and sufficient hardness in relation to the load to be supported. A minimum hardness of 58 HRC, enables thrust bearings to carry their full load capacity. Lower hardness values reduce the capacities shown in the tables of dimensions (see tabulated sizes).

TOLERANCES FOR PILOTING SURFACES (AX SERIES)

- Piloting on the shaft: h10 on dimensions D_{c1} for thrust bearings or dimension d for thrust washers.
- Piloting in the housing: H10 on dimensions D for thrust bearings or dimension d_1 for thrust washers.

LOAD RATINGS

MINIMUM AXIAL LOAD

Slippage can occur if the applied axial load is too light and the operating speed of the thrust needle roller and cage assembly is high – particularly if accompanied by inadequate lubrication. For satisfactory operation, a certain minimum load must be applied to a thrust needle roller and cage assembly which can be calculated from:

$$F_{a\,min} = C_0/2200 \text{ [kN]}$$

Where:

C_0 = static load rating [kN]
$F_{a\,min}$ = minimum axial load [kN]

COEFFICIENT OF FRICTION

In general, the coefficient of friction of a thrust bearing (consisting of a thrust needle roller and cage assembly and thrust washers) is defined as the friction torque, divided by the product of the applied load and the bearing pitch radius. This coefficient of friction is not a constant value, but will vary considerably with load, speed and lubricant. Generally, the coefficient of friction becomes smaller as the load is increased, and larger as the speed is increased. It is suggested that a value of 0.003 to 0.004 be used for needle thrust bearings and 0.004 to 0.005 be used for cylindrical roller thrust bearings as a conservative estimate.

LUBRICATION

Oil is the preferred lubricant for thrust needle roller and cage assemblies and an ample oil flow is absolutely necessary for high speeds or for moderate speeds when the load is relatively high.

When the application must utilize grease lubrication, the thrust needle roller and cage assembly should be ordered pre-greased. When the speeds are low and rotation is not continuous, the initial charge of grease may be suitable for the life of the application. When the speeds are moderate, the designer must provide for frequent re-greasing. Because the needle rollers tend to expel the lubricant radially outward, re-lubrication passages should be directed to the bore of the cage whether oil or grease is used as the lubricant.

SPECIAL DESIGNS

Thrust needle roller and cage assemblies and thrust washers are made to special dimensions and configurations, as well as from special materials – when quantities permit economical manufacture.

Thrust needle roller and cage assemblies are particularly adaptable to low-cost integral combination with special thrust washers. When the use of such special designs is considered, the following pages should be reviewed for evaluation of proposed arrangements.

THRUST NEEDLE ROLLER AND CAGE ASSEMBLIES, THRUST WASHERS

METRIC SERIES

- Dimensions for bore and O.D. of thrust assemblies and washers are nominal.
- See page B-278 for details on piloting and backup surfaces.
- Thrust washers burnished to at least one-quarter of bore area (remainder is rough breakaway finish).
- O.D. finish of washers will be as blanked.
- Thinner washers may be out-of-flat due to distortion in hardening in the free state (expected to flatten out under load).

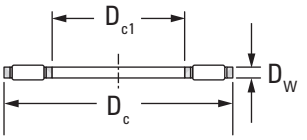

FNT, AXK

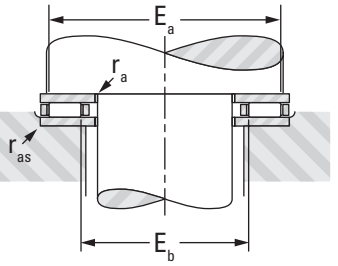

Raceway contact dimensions

Shaft Dia.	D_{c1}	D_c	D_w	E_b	E_a	$r_{a\,max}$	Assembly Designation	Wt.	C Load Ratings Dynamic	C_o Load Ratings Static	Speed Rating Oil
	Assembly Dimensions										
mm	mm in.	mm in.	mm in.	mm in.	mm in.	mm in.		kg lbs.	kN lbf.		min^{-1}
6	6 0.2362	19 0.7480	2 0.0787	8.0 0.315	18.0 0.709	0.3 0.012	FNT-619	0.002 0.004	6.82 1530	15.6 3510	21000
8	8 0.3150	21 0.8268	2 0.0787	10.0 0.394	20.0 0.787	0.3 0.012	FNT-821	0.002 0.004	7.67 1720	19.1 4290	20000
				9.6 0.378	18.6 0.732	0.3 0.012	AXK0821TN	0.001 0.002	8.34 1870	21.1 4740	20000
10	10 0.3937	24 0.9449	2 0.0787	12.0 0.472	23.0 0.906	0.3 0.012	FNT-1024	0.002 0.004	9.14 2060	25.2 5670	17000
				11.0 0.433	22.5 0.886	0.3 0.012	AXK1024	0.003 0.007	9.32 2100	25.9 5820	17000
12	12 0.4724	26 1.0236	2 0.0787	14.0 0.551	25.0 0.984	0.3 0.012	FNT-1226	0.004 0.009	9.92 2230	29.0 6520	15000
				13.0 0.512	24.5 0.965	0.3 0.012	AXK1226	0.004 0.009	10.8 2430	32.3 7260	15000
15	15 0.5906	28 1.1024	2 0.0787	17.0 0.669	27.0 1.063	0.3 0.012	FNT-1528	0.004 0.009	10.2 2290	31.3 7040	15000
				17.0 0.669	27.0 1.063	0.3 0.012	AXK1528	0.004 0.009	11.1 2500	35.2 7910	15000
17	17 0.6693	30 1.1811	2 0.0787	19.0 0.748	29.0 1.142	0.3 0.012	FNT-1730	0.004 0.009	10.8 2430	34.8 7820	14000
				22.0 0.866	34.0 1.339	0.3 0.012	AXK1730TN	0.004 0.009	11.7 2630	38.7 8700	14000
20	20 0.7874	35 1.3780	2 0.0787	22.0 0.866	34.0 1.339	0.3 0.012	FNTA-2035	0.005 0.011	13.8 3100	50.7 11400	12000
				22.0 0.866	34.0 1.339	0.3 0.012	AXK2035	0.001 0.001	12.8 2880	45.4 10200	12000
25	25 0.9843	42 1.6535	2 0.0787	27.0 1.063	41.0 1.614	0.6 0.024	FNT-2542	0.008 0.018	18.0 4050	75.3 16900	9700
				29.0 1.142	41.0 1.614	0.6 0.024	AXK2542	0.007 0.015	14.3 3210	56.8 12800	10000
30	30 1.1811	47 1.8504	2 0.0787	32.0 1.260	46.0 1.811	0.6 0.024	FNTA-3047	0.009 0.020	18.6 4180	82.4 18500	8900
				35.0 1.378	46.0 1.811	0.6 0.024	AXK3047	0.009 0.020	16.0 3600	68.1 15300	9000
35	35 1.3780	52 2.0472	2 0.0787	37.0 1.457	51.0 2.008	0.6 0.024	FNT-3552	0.010 0.022	21.7 4880	104.0 23400	7900
				40.0 1.575	51.0 2.008	0.6 0.024	AXK3552	0.010 0.022	17.4 3910	79.5 17900	8100
40	40 1.5748	60 2.3622	3 0.1181	43.0 1.693	57.0 2.244	0.6 0.024	FNT-4060	0.020 0.044	31.5 7080	132.0 29700	7100
				45.0 1.772	58.0 2.283	0.6 0.024	AXK4060	0.016 0.035	27.1 6090	110.0 24700	7000
45	45 1.7717	65 2.5591	3 0.1181	47.0 1.850	63.0 2.480	0.6 0.024	FNT-4565	0.024 0.053	37.6 8450	172.0 38700	6400
				50.0 1.969	63.0 2.480	0.6 0.024	AXK4565	0.020 0.044	29.0 6520	124.0 27900	6500
50	50 1.9685	70 2.7559	3 0.1181	52.0 2.047	68.0 2.677	0.6 0.024	FNT-5070	0.026 0.057	37.9 8520	179.0 40200	5900
				55.0 2.165	68.0 2.677	0.6 0.024	AXK5070	0.020 0.044	30.8 6920	137.0 30800	6000
55	55 2.1654	78 3.0709	3 0.1181	57.0 2.244	76.0 2.992	0.6 0.024	FNT-5578	0.033 0.073	48.5 10900	254.0 57100	5300
				60.0 2.362	76.0 2.992	0.6 0.024	AXK5578	0.026 0.057	39.4 8860	195.0 43800	5300

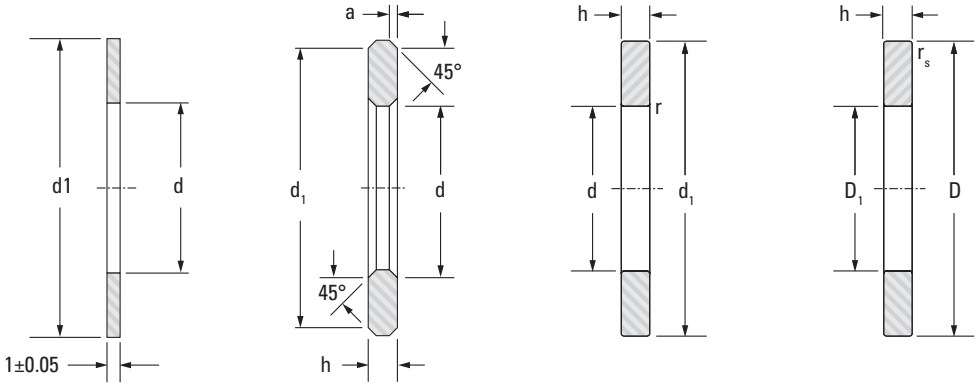

AS LS WS.811 GS.811

d	D, d_1	D_1	h (h11)	Washer Designation	Wt.	Washer Designation	a	Wt.	Washer Designation		$r_{s\,min}$	Wt.
Washer Dimensions				Thin		Heavy	Chamfer		Shaft Piloted	Housing Piloted	Radius	
mm in.	mm in.	mm in.	mm in.		kg lbs.		mm in.	kg lbs.			mm in.	kg lbs.
6 0.2362	**19** 0.7480			AS0619	**0.001** 0.002							
8 0.3150	**21** 0.8268		**2.75** 0.108	AS0821	**0.002** 0.004	LS0821	**0.30** 0.012	**0.004** 0.009				
10 0.3937	**24** 0.9449		**2.75** 0.108	AS1024	**0.003** 0.007	LS1024	**0.50** 0.020	**0.008** 0.018				
12 0.4724	**26** 1.0236		**2.75** 0.108	AS1226	**0.003** 0.007	LS1226	**0.50** 0.020	**0.009** 0.020				
15 0.5906	**28** 1.1024	**16** 0.6299	**2.75** 0.108	AS1528	**0.003** 0.007	LS1528	**0.50** 0.020	**0.010** 0.022	WS.81102	GS.81102	**0.30** 0.012	**0.010** 0.022
17 0.6693	**30** 1.1811	**18** 0.7087	**2.75** 0.108	AS1730	**0.003** 0.007	LS1730	**0.50** 0.020	**0.011** 0.024	WS.81103	GS.81103	**0.30** 0.012	**0.011** 0.024
20 0.7874	**35** 1.3780	**21** 0.8268	**2.75** 0.108	AS2035	**0.005** 0.011	LS2035	**0.50** 0.020	**0.014** 0.031	WS.81104	GS.81104	**0.30** 0.012	**0.014** 0.031
25 0.9843	**42** 1.6535	**26** 1.0236	**3.00** 0.118	AS2542	**0.007** 0.015	LS2542	**1.00** 0.039	**0.021** 0.046	WS.81105	GS.81105	**0.60** 0.024	**0.021** 0.046
30 1.1811	**47** 1.8504	**32** 1.2598	**3.00** 0.118	AS3047	**0.008** 0.018	LS3047	**1.00** 0.039	**0.023** 0.051	WS.81106	GS.81106	**0.60** 0.024	**0.023** 0.051
35 1.3780	**52** 2.0472	**37** 1.4567	**3.50** 0.138	AS3552	**0.009** 0.020	LS3552	**1.00** 0.039	**0.030** 0.066	WS.81107	GS.81107	**0.60** 0.024	**0.032** 0.071
40 1.5748	**60** 2.3622	**42** 1.6535	**3.50** 0.138	AS4060	**0.012** 0.026	LS4060	**1.00** 0.039	**0.041** 0.090	WS.81108	GS.81108	**0.60** 0.024	**0.043** 0.095
45 1.7717	**65** 2.5591	**47** 1.8504	**4.00** 0.157	AS4565	**0.013** 0.029	LS4565	**1.00** 0.039	**0.052** 0.115	WS.81109	GS.81109	**0.60** 0.024	**0.054** 0.119
50 1.9685	**70** 2.7559	**52** 2.0472	**4.00** 0.157	AS5070	**0.014** 0.031	LS5070	**1.00** 0.039	**0.056** 0.123	WS.81110	GS.81110	**0.60** 0.024	**0.059** 0.130
55 2.1654	**78** 3.0709	**57** 2.2441	**5.00** 0.197	AS5578	**0.018** 0.040	LS5578	**1.00** 0.039	**0.091** 0.201	WS.81111	GS.81111	**0.60** 0.024	**0.094** 0.207

Continued on next page.

B

THRUST NEEDLE ROLLER AND CAGE ASSEMBLIES, THRUST WASHERS - *continued*

METRIC SERIES

- Dimensions for bore and O.D. of thrust assemblies and washers are nominal.
- See page B-278 for details on piloting and backup surfaces.
- Thrust washers burnished to at least one-quarter of bore area (remainder is rough breakaway finish).
- O.D. finish of washers will be as blanked.
- Thinner washers may be out-of-flat due to distortion in hardening in the free state (expected to flatten out under load).

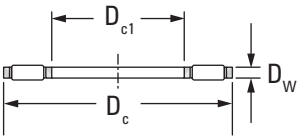

FNT, AXK

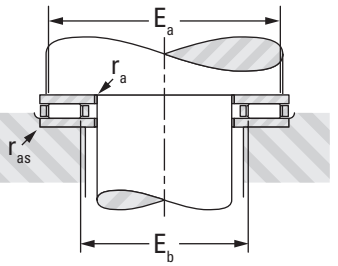

Raceway contact dimensions

Shaft Dia.	D_{c1}	D_c	D_w	E_b	E_a	$r_{a\,max}$	Assembly Designation	Wt.	C Load Ratings Dynamic	C_o Load Ratings Static	Speed Rating Oil
	Assembly Dimensions										
mm	**mm** in.	**mm** in.	**mm** in.	**mm** in.	**mm** in.	**mm** in.		**kg** lbs.	**kN** lbf.		min^{-1}
60	**60** 2.3622	**85** 3.3465	**3** 0.1181	**65.0** 2.559	**83.0** 3.268	**0.6** 0.024	AXK6085	**0.035** 0.077	**44.5** 10000	**234.0** 52600	4900
65	**65** 2.5591	**90** 3.5433	**3** 0.1181	**70.0** 2.756	**88.0** 3.465	**0.6** 0.024	AXK6590	**0.036** 0.079	**46.7** 10500	**254** 57100	4600
70	**70** 2.7559	**95** 3.7402	**4** 0.1575	**73.0** 2.874	**93.0** 3.661	**0.6** 0.024	FNTA-7095	**0.057** 0.126	**66.6** 15000	**333** 74900	4400
				74.0 2.913	**93.0** 3.661	**0.6** 0.024	AXK7095	**0.055** 0.121	**53.8** 12100	**253** 56900	4400
75	**75** 2.9528	**100** 3.9370	**4** 0.1575	**78.0** 3.071	**98.0** 3.858	**0.6** 0.024	FNT-75100	**0.064** 0.141	**71.6** 16100	**374** 84100	4100
				79.0 3.110	**98.0** 3.858	**0.6** 0.024	AXK75100	**0.058** 0.128	**55.1** 12400	**266** 59800	4200
80	**80** 3.1496	**105** 4.1339	**4** 0.1575	**83.0** 3.268	**103.0** 4.055	**0.6** 0.024	FNTA-80105	**0.062** 0.137	**71.3** 16100	**379** 85200	3900
				84.0 3.307	**103.0** 4.055	**0.6** 0.024	AXK80105	**0.092** 0.203	**56.4** 12700	**279** 62700	4000
85	**85** 3.3465	**110** 4.3307	**4** 0.1575	**89.0** 3.504	**108.0** 4.252	**0.6** 0.024	AXK85110	**0.063** 0.139	**57.6** 12900	**291** 65400	3800
90	**90** 3.5433	**120** 4.7244	**4** 0.1575	**94.0** 3.701	**118.0** 4.646	**0.6** 0.024	AXK90120	**0.081** 0.179	**72.9** 16400	**405** 91000	3500
100	**100** 3.9370	**135** 5.3150	**4** 0.1575	**105.0** 4.134	**133.0** 5.236	**0.6** 0.024	AXK100135	**0.106** 0.234	**90.2** 20300	**552** 124000	3100
110	**110** 4.3307	**145** 5.7087	**4** 0.1575	**115.0** 4.528	**143.0** 5.630	**0.6** 0.024	AXK110145	**0.117** 0.258	**93.2** 21000	**591** 133000	2800
120	**120** 4.7244	**155** 6.1024	**4** 0.1575	**125.0** 4.921	**153.0** 6.024	**0.6** 0.024	AXK120155	**0.126** 0.278	**98.5** 22100	**650** 146000	2700
130	**130** 5.1181	**170** 6.6929	**5** 0.1969	**136.0** 5.354	**167.0** 6.575	**0.6** 0.024	AXK130170	**0.198** 0.437	**132** 29700	**829** 186000	2400
140	**140** 5.5118	**180** 7.0866	**5** 0.1969	**146.0** 5.748	**177.0** 6.969	**0.6** 0.024	AXK140180	**0.221** 0.487	**136** 30600	**887** 199000	2300
150	**150** 5.9055	**190** 7.4803	**5** 0.1969	**156.0** 6.142	**187.0** 7.362	**0.6** 0.024	AXK150190	**0.225** 0.496	**141** 31700	**944** 212000	2200
160	**160** 6.2992	**200** 7.8740	**5** 0.1969	**166.0** 6.535	**197.0** 7.756	**0.6** 0.024	AXK160200	**0.249** 0.549	**146** 32800	**1000** 225000	2100

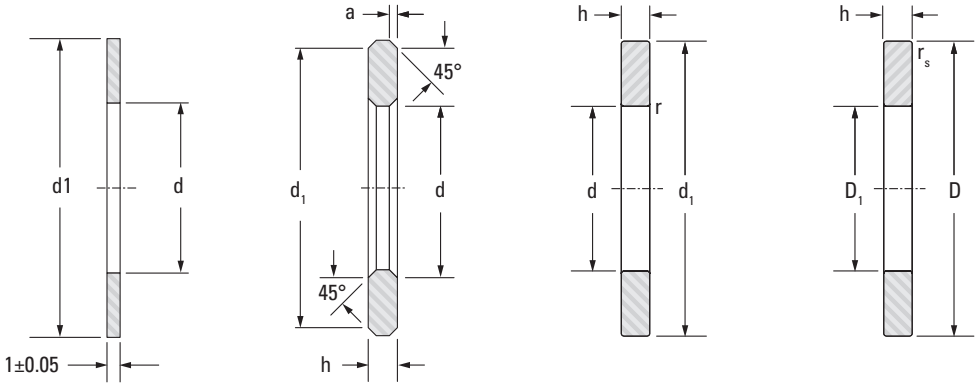

AS LS WS.811 GS.811

d	D, d_1	D_1	h (h11)	Washer Designation	Wt.	Washer Designation	a	Wt.	Washer Designation		$r_{s\,min}$	Wt.
Washer Dimensions				Thin		Heavy	Chamfer		Shaft Piloted	Housing Piloted	Radius	
mm in.	**mm** in.	**mm** in.	**mm** in.		**kg** lbs.		**mm** in.	**kg** lbs.			**mm** in.	**kg** lbs.
60 2.3622	**85** 3.3465	**62** 2.4409	**4.75** 0.187	AS6085	**0.022** 0.049	LS6085	**1.50** 0.059	**0.102** 0.225	WS.81112	GS.81112	**1.00** 0.039	**0.106** 0.234
65 2.5591	**90** 3.5433	**67** 2.6378	**5.25** 0.207	AS6590	**0.023** 0.051	LS6590	**1.50** 0.059	**0.121** 0.267	WS.81113	GS.81113	**1.00** 0.039	**0.125** 0.276
70 2.7559	**95** 3.7402	**72** 2.8346	**5.25** 0.207	AS7095	**0.025** 0.055	LS7095	**1.50** 0.059	**0.128** 0.282	WS.81114	GS.81114	**1.00** 0.039	**0.133** 0.293
75 2.9528	**100** 3.9370	**77** 3.0315	**5.75** 0.226	AS75100	**0.027** 0.060	LS75100	**1.50** 0.059	**0.150** 0.331	WS.81115	GS.81115	**1.00** 0.039	**0.155** 0.342
80 3.1496	**105** 4.1339	**82** 3.2283	**5.75** 0.226	AS80105	**0.028** 0.062	LS80105	**1.50** 0.059	**0.158** 0.348	WS.81116	GS.81116	**1.00** 0.039	**0.165** 0.364
85 3.3465	**110** 4.3307	**87** 3.4252	**5.75** 0.226	AS85110	**0.028** 0.062	LS85110	**1.50** 0.059	**0.166** 0.366	WS.81117	GS.81117	**1.00** 0.039	**0.173** 0.381
90 3.5433	**120** 4.7244	**92** 3.6220	**6.50** 0.256	AS90120	**0.038** 0.084	LS90120	**1.50** 0.059	**0.245** 0.540	WS.81118	GS.81118	**1.00** 0.039	**0.253** 0.558
100 3.9370	**135** 5.3150			AS100135	**0.050** 0.110							
110 4.3307	**145** 5.7087		**7.00** 0.276	AS110145	**0.055** 0.121	LS110145	**1.50** 0.059	**0.373** 0.822				
120 4.7244	**155** 6.1024			AS120155	**0.059** 0.130							
130 5.1181	**170** 6.6929		**9.00** 0.354	AS130170	**0.074** 0.163	LS130170	**1.50** 0.059	**0.065** 0.143				
140 5.5118	**180** 7.0866			AS140180	**0.078** 0.172							
150 5.9055	**190** 7.4803			AS150190	**0.083** 0.183							
160 6.2992	**200** 7.8740			AS160200	**0.089** 0.196							

B

UNITIZED THRUST BEARING TYPE FNTKF

METRIC SERIES

- Combines low friction and thin cross section with the convenience of complete packaged assembly.
- Used where both thrust backup surfaces are not suitably hardened or ground.
- Backup surfaces should meet limits of permissible out-of-squareness, dishing or coning. (See page B-278 for details on piloting and backup surfaces.)
- Assembly can be either shaft- or housing-piloted, but not both (see mounting dimensions shown).
- Many special sizes available. Contact your representative for availability.

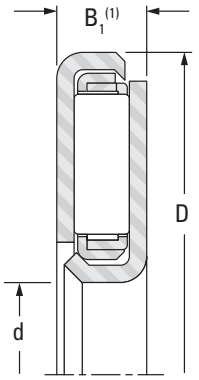

FNTKF

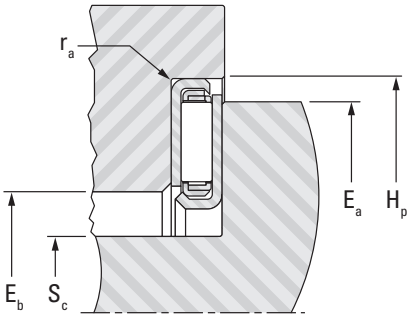

FNTKF Housing piloting

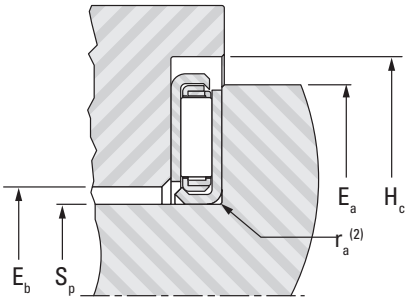

FNTKF Shaft piloting

Shaft Dia.	d	D	B_1(1)	Assembly Designation	C	C_o	Speed Rating Oil	H_p	S_c	S_p	H_c	E_a	E_b
					Load Ratings			Mounting Dimensions				Contact Dimensions Nominal	
								Housing Piloting		Shaft Piloting			
	(E13)	(e13)	-0.2, -0.008		Dynamic	Static		H10	Max.	h10	Min.		
mm	mm in.	mm in.	mm in.		kN lbf.		min-1	mm in.	mm in.	mm in.	mm in.	mm in.	mm in.
10	10 0.3937	28 1.1024	3.7 0.146	FNTKF-1028	9.88 2220	29.0 6520	16000	28 1.102	8 0.31496	10 0.394	30 1.181	25 0.984	14 0.551
13	13 0.5118	30 1.1811	3.7 0.146	FNTKF-1330	10.1 2270	31.3 7040	15000	30 1.181	11 0.433	13 0.512	32 1.260	27 1.063	17 0.669
15	15 0.5906	32 1.2598	3.7 0.146	FNTKF-1532	10.8 2430	34.8 7820	14000	32 1.260	13 0.512	15 0.591	34 1.339	29 1.142	19 0.748
18	18 0.7087	37 1.4567	3.7 0.146	FNTKF-1837	13.8 3100	50.3 11300	12000	37 1.457	16 0.630	18 0.709	39 1.535	34 1.339	22 0.866
23	23 0.9055	44 1.7323	3.7 0.146	FNTKF-2344	18.0 4050	75.3 16900	9700	44 1.732	21 0.827	23 0.906	46 1.811	41 1.614	27 1.063
28	28 1.1024	49 1.9291	3.7 0.146	FNTKF-2849	18.6 4180	82.4 18500	8900	49 1.929	26 1.024	28 1.102	51 2.008	46 1.811	32 1.260
33	33 1.2992	54 2.126	3.7 0.146	FNTKF-3354	21.6 4860	104 23400	7900	54 2.126	31 1.220	33 1.299	56 2.205	51 2.008	37 1.457
38	38 1.4961	62 2.4409	4.7 0.185	FNTKF-3862	31.4 7060	132 29700	7100	62 2.441	36 1.417	38 1.496	64 2.520	57 2.244	43 1.693
43	43 1.6929	67 2.6378	4.7 0.185	FNTKF-4367	37.8 8500	173 38900	6400	67 2.638	41 1.614	43 1.693	69 2.717	63 2.480	47 1.850
48	48 1.890	72 2.8346	4.7 0.185	FNTKF-4872	37.9 8520	179 40200	5900	72 2.835	46 1.811	48 1.890	74 2.913	68 2.677	52 2.047
53	53 2.0866	80 3.150	4.7 0.185	FNTKF-5380	48.5 10900	254 57100	5300	80 3.150	51 2.008	53 2.087	82 3.228	76 2.992	57 2.244

(1) To be measured under a 2.0 kN (450 lbf) load.
(2) r_a = 1.000 mm max. (0.0394 in. max.).

UNITIZED THRUST BEARING TYPE FNTK

METRIC SERIES

- Combine low friction and thin cross section with the convenience of complete packaged assembly.
- Integral washer allows use where one thrust backup surface is not suitably hardened or ground.
- Backup surface should meet limits of permissible out-of-squareness, dishing or coning. (See page B-278 for details on piloting and backup surfaces.)
- Backup surface finish of 0.2 µm Ra min. (8 µin. Ra min.) required.
- Assembly can be either shaft- or housing-piloted, but not both (See mounting dimensions shown).
- Many special sizes available. Contact your representative for availability.

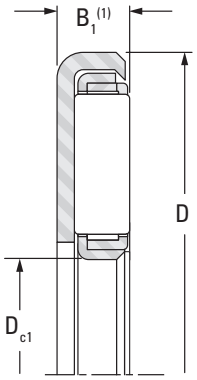

FNTK

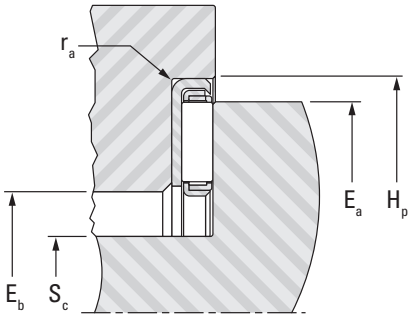

FNTK Housing Piloting

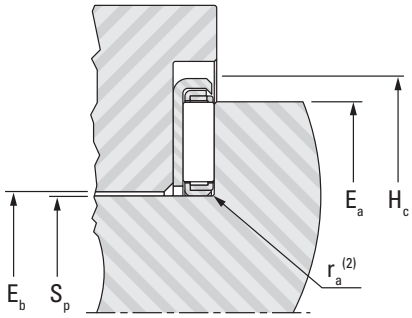

FNTK Shaft Piloting

Shaft Dia.	D_{c1}	D	B_1(1)	Assembly Designation	C	C_o	Speed Rating Oil	H_p	S_c	S_p	H_c	E_a	E_b
					Load Ratings			Mounting Dimensions				Contact Dimensions Nominal	
								Housing Piloting		Shaft Piloting			
	E11	e13	-0.1, -0.004		Dynamic	Static		H10	Max.	h10	Min.		
mm	mm in.	mm in.	mm in.		kN lbf.		min^{-1}	mm in.	mm in.	mm in.	mm in.	mm in.	mm in.
12	12 0.4724	28 1.1024	2.85 0.1122	FNTK-1228	9.88 2220	29.0 6520	16000	28 1.102	10.5 0.413	12 0.4724	29.5 1.161	25 0.9843	14 0.5512
15	15 0.5906	30 1.1811	2.85 0.1122	FNTK-1530	10.1 2270	31.3 7040	15000	30 1.181	13.5 0.531	15 0.5906	31.5 1.240	27 1.063	17 0.6693
17	17 0.6693	32 1.260	2.85 0.1122	FNTK-1732	10.8 2430	34.8 7820	14000	32 1.260	15.5 0.610	17 0.6693	33.5 1.319	29 1.1417	19 0.748
20	20 0.7874	37 1.4567	2.85 0.1122	FNTK-2037	13.8 3100	50.3 11300	12000	37 1.457	18.5 0.728	20 0.7874	38.5 1.516	34 1.3386	22 0.8661
25	25 0.9843	44 1.7323	2.85 0.1122	FNTK-2544	18.0 4050	75.3 16900	9700	44 1.732	23.5 0.925	25 0.9843	45.5 1.791	41 1.6142	27 1.063
30	30 1.1811	49 1.9291	2.85 0.1122	FNTK-3049	18.6 4180	82.4 18500	8900	49 1.929	28.5 1.122	30 1.1811	50.5 1.988	46 1.811	32 1.260
35	35 1.378	54 2.126	2.85 0.1122	FNTK-3554	21.6 4860	104 23400	7900	54 2.126	33.5 1.319	35 1.378	55.5 2.185	51 2.0079	37 1.4567
40	40 1.5748	62 2.4409	3.85 0.1516	FNTK-4062	31.4 7060	132 29700	7100	62 2.441	38.5 1.516	40 1.5748	63.5 2.500	57 2.2441	43 1.6929
45	45 1.7717	67 2.6378	3.85 0.1516	FNTK-4567	37.8 8500	173 38900	6400	67 2.638	43.5 1.713	45 1.7717	68.5 2.697	63 2.480	47 1.850
50	50 1.9685	72 2.8346	3.85 0.1516	FNTK-5072	37.9 8520	179 40200	5900	72 2.835	48.5 1.909	50 1.9685	73.5 2.894	68 2.6772	52 2.0472
55	55 2.1654	80 3.150	3.85 0.1516	FNTK-5580	48.5 10900	254 57100	5300	80 3.150	53.5 2.106	55 2.1654	81.5 3.209	76 2.9921	57 2.2441

(1) To be measured under a 2.0 kN (450 lbf) load.
(2) r_a = 1.000 mm max. (0.0394 in. max.).

B

UNITIZED THRUST BEARING ASSEMBLIES

METRIC SERIES

- Combines low friction and thin cross section with the convenience of complete packaged assembly.
- Integral washer allows use where one thrust backup surface is not suitably hardened or ground.
- Backup surface should meet limits of permissible out-of-squareness, dishing or coning. (See page B-278 for details on piloting and backup surfaces.)
- Backup surface finish of 0.2 µm Ra min. (8 µin. Ra min.) required.
- Assembly can be either shaft- or housing-piloted, but not both (see mounting dimensions shown on the opposite page).
- Many special sizes available. Contact your representative for availability.

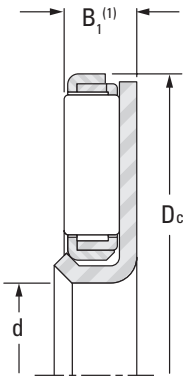

FNTF

Shaft Dia.	d	Dc	B1(1)	Assembly Designation	C	Co	Speed Rating Oil
					Load Ratings		
	(E13)	(c12)	-0.1, -0.004		Dynamic	Static	
mm	mm in.	mm in.	mm in.		kN lbf.		min-1
10	**10** 0.394	**26** 1.024	**2.85** 0.112	FNTF-1026	**9.88** 2220	**29.0** 6520	16000
13	**13** 0.512	**28** 1.102	**2.85** 0.112	FNTF-1328	**10.1** 2270	**31.3** 7040	15000
15	**15** 0.591	**30** 1.181	**2.85** 0.112	FNTF-1530	**10.8** 2430	**34.8** 7820	14000
18	**18** 0.709	**35** 1.378	**2.85** 0.112	FNTF-1835	**13.8** 3100	**50.3** 11300	12000
23	**23** 0.906	**42** 1.654	**2.85** 0.112	FNTF-2342	**18.0** 4050	**75.3** 16900	9700
28	**28** 1.102	**47** 1.850	**2.85** 0.112	FNTF-2847	**18.6** 4180	**82.4** 18500	8900
33	**33** 1.299	**52** 2.047	**2.85** 0.112	FNTF-3352	**21.6** 4860	**104** 23400	7900
38	**38** 1.496	**60** 2.362	**3.85** 0.152	FNTF-3860	**31.4** 7060	**132** 29700	7100
43	**43** 1.693	**65** 2.559	**3.85** 0.152	FNTF-4365	**37.8** 8500	**173** 38900	6400
48	**48** 1.890	**70** 2.756	**3.85** 0.152	FNTF-4870	**37.9** 8520	**179** 40200	5900
53	**53** 2.087	**78** 3.071	**3.85** 0.152	FNTF-5378	**48.5** 10900	**254** 57100	5300

(1) To be measured under a 2.0 kN (450 lbf) load.
(2) r_a = 1.000 mm max. (0.0394 in. max.).

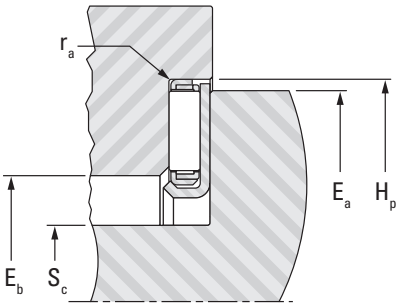

FNTF Housing piloting

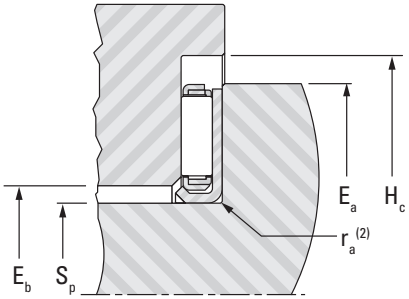

FNTF Shaft piloting

H_p	S_c	S_p	H_c	E_a	E_b
Housing Piloting		Mounting Dimensions Shaft Piloting		Contact Dimensions	
H10	Max.	h10	Min.	Nom.	Nom.
mm in.	**mm** in.	**mm** in.	**mm** in.	**mm** in.	**mm** in.
26 1.024	**8.5** 0.335	**10** 0.394	**27.5** 1.083	**25** 0.984	**14** 0.551
28 1.102	**11.5** 0.453	**13** 0.512	**29.5** 1.161	**27** 1.063	**17** 0.669
30 1.181	**13.5** 0.531	**15** 0.591	**31.5** 1.240	**29** 1.142	**19** 0.748
35 1.378	**16.5** 0.650	**18** 0.709	**36.5** 1.437	**34** 1.339	**22** 0.866
42 1.654	**21.5** 0.846	**23** 0.906	**43.5** 1.713	**41** 1.614	**27** 1.063
47 1.850	**26.5** 1.043	**28** 1.102	**48.5** 1.909	**46** 1.811	**32** 1.260
52 2.047	**31.5** 1.240	**33** 1.299	**53.5** 2.106	**51** 2.008	**37** 1.457
60 2.362	**36.5** 1.437	**38** 1.496	**61.5** 2.421	**57** 2.244	**43** 1.693
65 2.559	**41.5** 1.634	**43** 1.693	**66.5** 2.618	**63** 2.480	**47** 1.850
70 2.756	**46.5** 1.831	**48** 1.890	**71.5** 2.815	**68** 2.677	**52** 2.047
78 3.071	**51.5** 2.028	**53** 2.087	**79.5** 3.130	**76** 2.992	**57** 2.244

UNITIZED THRUST BEARINGS

METRIC SERIES

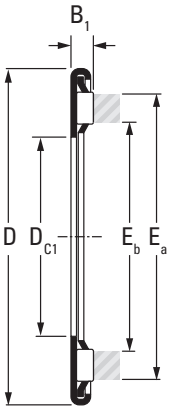

AX Thin series

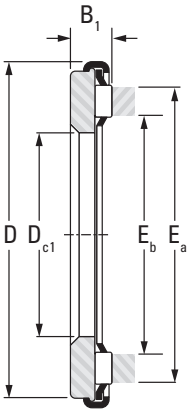

AX Thick series

Shaft Dia.	D_{c1}	D	E_a	E_b	B_1	Bearing Designation		Wt.	C	C_o	Speed Rating Oil
	Bearing Dimensions					Thin	Thick		Load Ratings Dynamic	Load Ratings Static	
mm	mm in.	mm in.	mm in.	mm in.	mm in.			kg lbs.	kN lbf.		min^{-1}
5	**5** 0.197	**13** 0.512	**10.9** 0.43	**6.3** 0.25	**2.3** 0.091	AX 5 13		**0.001** 0.002	**3.00** 670	**5.70** 1280	25000
5	**5** 0.197	**13** 0.512	**10.9** 0.43	**6.3** 0.25	**3.5** 0.138		AX 3,5 5 13	**0.002** 0.004	**3.00** 670	**5.70** 1280	25000
6	**6** 0.236	**14** 0.551	**11.9** 0.47	**7.3** 0.29	**2.3** 0.091	AX 6 14		**0.001** 0.002	**3.15** 710	**6.35** 1430	22000
	6 0.236	**14** 0.551	**11.9** 0.47	**7.3** 0.29	**3.5** 0.138		AX 3,5 6 14	**0.002** 0.004	**3.15** 710	**6.35** 1430	22000
7	**7** 0.276	**15** 0.591	**12.9** 0.51	**8.3** 0.33	**2.3** 0.091	AX 7 15		**0.002** 0.004	**3.55** 800	**7.60** 1710	22000
	7 0.276	**15** 0.591	**12.9** 0.51	**8.3** 0.33	**3.5** 0.138		AX 3,5 7 15	**0.003** 0.007	**3.55** 800	**7.60** 1710	22000
8	**8** 0.315	**16** 0.630	**13.9** 0.55	**9.3** 0.37	**2.3** 0.091	AX 8 16		**0.002** 0.004	**3.70** 830	**8.30** 1870	22000
	8 0.315	**16** 0.630	**13.9** 0.55	**9.3** 0.37	**3.5** 0.138		AX 3,5 8 16	**0.003** 0.007	**3.70** 830	**8.30** 1870	22000
9	**9** 0.354	**17** 0.669	**14.9** 0.59	**10.3** 0.41	**2.3** 0.091	AX 9 17		**0.002** 0.004	**4.05** 910	**9.50** 2140	19000
	9 0.354	**17** 0.669	**14.9** 0.59	**10.3** 0.41	**3.5** 0.138		AX 3,5 9 17	**0.004** 0.009	**4.05** 910	**9.50** 2140	19000
10	**10** 0.394	**22** 0.866	**18.6** 0.73	**12.0** 0.47	**4.0** 0.158		AX 4 10 22	**0.007** 0.015	**5.00** 1120	**10.90** 2450	15500
12	**12** 0.472	**26** 1.024	**22.6** 0.89	**15.0** 0.59	**2.8** 0.110	AX 12 26		**0.006** 0.013	**6.90** 1550	**17.70** 3980	13000
	12 0.472	**26** 1.024	**22.6** 0.89	**15.0** 0.59	**4.0** 0.158		AX 4 12 26	**0.010** 0.022	**6.90** 1550	**17.70** 3980	13000
13	**13** 0.512	**26** 1.024	**22.6** 0.89	**15.0** 0.59	**2.8** 0.110	AX 13 26		**0.006** 0.013	**6.90** 1550	**17.70** 3980	13000
	13 0.512	**26** 1.024	**22.6** 0.89	**15.0** 0.59	**4.0** 0.158		AX 4 13 26	**0.010** 0.022	**6.90** 1550	**17.70** 3980	13000
15	**15** 0.591	**28** 1.102	**24.6** 0.97	**17.0** 0.67	**2.8** 0.110	AX 15 28		**0.007** 0.015	**7.40** 1660	**20.00** 4500	11500

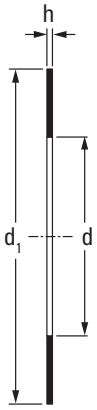

CP Thin series

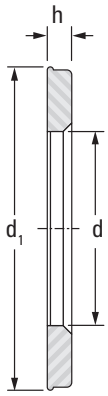

CP Thick series

d	d1	h	Wt.	Washer Designation		Washer Designation Precision	h	Precision Wt.	Shaft Dia.
Washer Dimensions				Thin	Thick				
mm in.	**mm** in.	**mm** in.	**kg** lbs.				**mm** in.	**kg** lbs.	**mm**
5 0.197	**12.4** 0.488	**0.8** 0.032	**0.001** 0.002	CP 5 13					**5**
5 0.197	**12.4** 0.488	**2.0** 0.079	**0.002** 0.004		CP 2 5 13				
6 0.236	**13.4** 0.528	**0.8** 0.032	**0.001** 0.002	CP 6 14					**6**
6 0.236	**13.4** 0.528	**2.0** 0.079	**0.002** 0.004		CP 2 6 14				
7 0.276	**14.4** 0.567	**0.8** 0.032	**0.001** 0.002	CP 7 15					**7**
7 0.276	**14.4** 0.567	**2.0** 0.079	**0.002** 0.004		CP 2 7 15				
8 0.315	**15.4** 0.606	**0.8** 0.032	**0.001** 0.002	CP 8 16					**8**
8 0.315	**15.4** 0.606	**2.0** 0.079	**0.002** 0.004		CP 2 8 16				
9 0.354	**16.4** 0.646	**0.8** 0.032	**0.001** 0.002	CP 9 17					**9**
9 0.354	**16.4** 0.646	**2.0** 0.079	**0.002** 0.004		CP 2 9 17				
10 0.394	**21.5** 0.847	**2.0** 0.079	**0.002** 0.004		CP 2 10 22				**10**
12 0.472	**25.5** 1.004	**0.8** 0.032	**0.003** 0.007	CP 12 26		CPN 2 12 26	**2.0** 0.079	**0.006** 0.013	**12**
12 0.472	**25.5** 1.004	**2.0** 0.079	**0.006** 0.013		CP 2 12 26				
13 0.512	**25.5** 1.004	**0.8** 0.032	**0.002** 0.004	CP 13 26					**13**
13 0.512	**25.5** 1.004	**2.0** 0.079	**0.006** 0.013		CP 2 13 26				
15 0.591	**27.5** 1.083	**0.8** 0.032	**0.003** 0.007	CP 15 28		CPN 2 15 28	**2.0** 0.079	**0.006** 0.013	**15**

Continued on next page.

UNITIZED THRUST BEARINGS – *continued*

METRIC SERIES

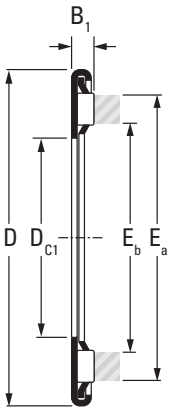

AX Thin series

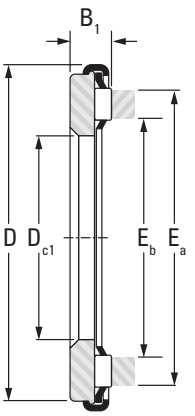

AX Thick series

Shaft Dia.	D_{c1}	D	E_a	E_b	B_1	Bearing Designation		Wt.	C	C_o	Speed Rating Oil
	Bearing Dimensions					Thin	Thick		Load Ratings		
									Dynamic	Static	
mm	**mm** in.	**mm** in.	**mm** in.	**mm** in.	**mm** in.			**kg** lbs.	**kN** lbf.		min^{-1}
15	**15** 0.591	**28** 1.102	**24.6** 0.97	**17.0** 0.67	**4.0** 0.158		AX 4 15 28	**0.009** 0.020	**7.40** 1660	**20.00** 4500	11500
17	**17** 0.669	**30** 1.181	**26.6** 1.05	**19.0** 0.75	**2.8** 0.110	AX 17 30		**0.008** 0.018	**7.80** 1750	**22.00** 4950	10500
	17 0.669	**30** 1.181	**26.6** 1.05	**19.0** 0.75	**4.0** 0.158		AX 4 17 30	**0.010** 0.022	**7.80** 1750	**22.00** 4950	10500
19	**19** 0.748	**32** 1.260	**28.6** 1.13	**21.0** 0.83	**2.8** 0.110	AX 19 32		**0.009** 0.020	**8.00** 1800	**23.30** 5240	10000
	19 0.748	**32** 1.260	**28.6** 1.13	**21.0** 0.83	**4.0** 0.158		AX 4 19 32	**0.013** 0.029	**8.00** 1800	**23.30** 5240	10000
20	**20** 0.787	**35** 1.378	**31.6** 1.24	**22.0** 0.87	**5.0** 0.197		AX 5 20 35	**0.018** 0.040	**11.80** 2650	**39.00** 8770	9000
25	**25** 0.984	**42** 1.654	**37.4** 1.47	**27.7** 1.09	**2.8** 0.110	AX 25 42		**0.012** 0.026	**13.30** 2990	**49.00** 11000	7500
	25 0.984	**42** 1.654	**37.4** 1.47	**27.7** 1.09	**5.0** 0.197		AX 5 25 42	**0.025** 0.055	**13.30** 2990	**49.00** 11000	7500
27	**27** 1.063	**44** 1.732	**39.6** 1.56	**30.0** 1.18	**2.8** 0.110	AX 27 44		**0.012** 0.026	**13.70** 3080	**52.00** 11700	7200
30	**30** 1.181	**47** 1.850	**42.4** 1.67	**32.7** 1.29	**2.8** 0.110	AX 30 47		**0.014** 0.031	**14.50** 3260	**57.00** 12800	6500
	30 1.181	**47** 1.850	**42.4** 1.67	**32.7** 1.29	**5.0** 0.197		AX 5 30 47	**0.029** 0.064	**14.50** 3260	**57.00** 12800	6500
35	**35** 1.337	**52** 2.047	**49.0** 1.93	**37.2** 1.47	**2.8** 0.110	AX 35 52		**0.019** 0.042	**18.90** 4250	**84.00** 18900	5500
	35 1.337	**52** 2.047	**49.0** 1.93	**37.2** 1.47	**5.0** 0.197		AX 5 35 52	**0.035** 0.077	**18.90** 4250	**84.00** 18900	5500
	35 1.337	**53** 2.087	**49.0** 1.93	**37.2** 1.47	**2.8** 0.110	AX 35 53		**0.019** 0.042	**18.90** 4250	**84.00** 18900	5500
	35 1.337	**53** 2.087	**49.0** 1.93	**37.2** 1.47	**5.0** 0.197		AX 5 35 53	**0.036** 0.079	**18.90** 4250	**84.00** 18900	5500

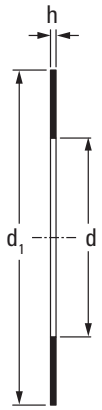

CP Thin series

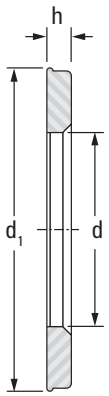

CP Thick series

d	d1	h	Wt.	Washer Designation		Washer Designation Precision	h	Precision Wt.	Shaft Dia.
Washer Dimensions				Thin	Thick				
mm in.	**mm** in.	**mm** in.	**kg** lbs.				**mm** in.	**kg** lbs.	**mm**
15 0.591	**27.5** 1.083	**2.0** 0.079	**0.006** 0.013		CP 2 15 28				
17 0.669	**29.5** 1.161	**0.8** 0.032	**0.003** 0.007	CP 17 30		CPN 7 17 30	**7.0** 0.276	**0.025** 0.055	**17**
17 0.669	**29.5** 1.161	**2.0** 0.079	**0.007** 0.015		CP 2 17 30				
19 0.748	**31.5** 1.240	**0.8** 0.032	**0.004** 0.009	CP 19 32					**19**
19 0.748	**31.5** 1.240	**2.0** 0.079	**0.009** 0.020		CP 2 19 32				
20 0.787	**34.5** 1.358	**3.0** 0.118	**0.013** 0.029		CP 3 20 35	CPN 3 20 35	**3.0** 0.118	**0.013** 0.029	**20**
25 0.984	**41.5** 1.634	**0.8** 0.032	**0.005** 0.011	CP 25 42		CPN 3 25 42	**3.0** 0.118	**0.019** 0.042	**25**
25 0.984	**41.5** 1.634	**3.0** 0.118	**0.019** 0.042		CP 3 25 42				
27 1.063	**43.7** 1.721	**0.8** 0.032	**0.006** 0.013	CP 27 44					**27**
30 1.181	**46.5** 1.831	**0.8** 0.032	**0.006** 0.013	CP 30 47		CPN 5 30 47	**5.0** 0.197	**0.037** 0.082	**30**
30 1.181	**46.5** 1.831	**3.0** 0.118	**0.022** 0.049		CP 3 30 47				
35 1.378	**51.5** 2.028	**0.8** 0.032	**0.007** 0.015	CP 35 52		CPN 3 35 52	**3.0** 0.118	**0.027** 0.060	**31**
35 1.378	**51.5** 2.028	**3.0** 0.118	**0.026** 0.057		CP 3 35 52				**35**
35 1.378	**52.5** 2.067	**0.8** 0.032	**0.007** 0.015	CP 35 53					
35 1.378	**52.5** 2.067	**3.0** 0.118	**0.027** 0.060		CP 3 35 53				

Continued on next page.

UNITIZED THRUST BEARINGS – *continued*

METRIC SERIES

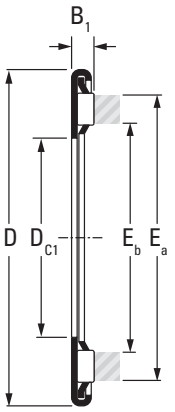

AX Thin series

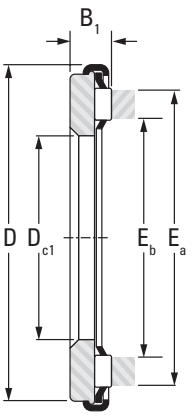

AX Thick series

Shaft Dia.	D_{c1}	D	E_a	E_b	B_1	Bearing Designation		Wt.	C	C_o	Speed Rating Oil
	Bearing Dimensions					Thin	Thick		Load Ratings Dynamic	Load Ratings Static	
mm	**mm** in.	**mm** in.	**mm** in.	**mm** in.	**mm** in.			**kg** lbs.	**kN** lbf.		min^{-1}
40	**40** 1.557	**60** 2.362	**54.9** 2.16	**43.0** 1.69	**2.8** 0.110	AX 40 60		**0.024** 0.053	**20.40** 4590	**96.00** 21600	5000
	40 1.557	**60** 2.362	**54.9** 2.16	**43.0** 1.69	**5.0** 0.197		AX 5 40 60	**0.046** 0.101	**20.40** 4590	**96.00** 21600	5000
45	**45** 1.772	**65** 2.559	**59.9** 2.36	**48.0** 1.89	**2.8** 0.110	AX 45 65		**0.025** 0.055	**21.80** 4900	**109** 24500	4500
	45 1.772	**65** 2.559	**59.9** 2.36	**48.0** 1.89	**5.0** 0.197		AX 5 45 65	**0.050** 0.110	**21.80** 4900	**109** 24500	4500
50	**50** 1.969	**70** 2.756	**65.7** 2.59	**53.3** 2.10	**2.8** 0.110	AX 50 70		**0.026** 0.057	**22.50** 5060	**118** 26500	4000
	50 1.969	**70** 2.756	**65.7** 2.59	**53.3** 2.10	**5.0** 0.197		AX 5 50 70	**0.055** 0.121	**22.50** 5060	**118** 26500	4000
55	**55** 2.165	**78** 3.071	**72.5** 2.85	**58.4** 2.30	**2.8** 0.110	AX 55 78		**0.034** 0.075	**28.50** 6410	**164** 36900	3800
	55 2.165	**78** 3.071	**72.5** 2.85	**58.4** 2.30	**6.0** 0.236		AX 6 55 78	**0.089** 0.196	**28.50** 6410	**164** 36900	3800
60	**60** 2.362	**85** 3.347	**79.2** 3.12	**63.5** 2.50	**6.0** 0.236		AX 6 60 85	**0.106** 0.234	**31.50** 7080	**193** 43400	3500
65	**65** 2.559	**90** 3.543	**84.2** 3.32	**68.5** 2.70	**3.5** 0.138	AX 3,5 65 90		**0.059** 0.130	**33.50** 7530	**210** 47200	3200
	65 2.559	**90** 3.543	**84.2** 3.32	**68.5** 2.70	**6.0** 0.236		AX 6 65 90	**0.114** 0.251	**33.50** 7530	**210** 47200	3200
70	**70** 2.759	**95** 3.740	**89.2** 3.51	**73.5** 2.89	**3.5** 0.138	AX 3,5 70 95		**0.061** 0.135	**34.50** 7760	**223** 50100	3000
	70 2.759	**95** 3.740	**89.2** 3.51	**73.5** 2.89	**6.0** 0.236		AX 6 70 95	**0.120** 0.265	**34.50** 7760	**223** 50100	3000
75	**75** 2.953	**100** 3.937	**94.2** 3.71	**78.5** 3.09	**3.5** 0.138	AX 3,5 75 100		**0.065** 0.143	**36.00** 8090	**240** 54000	2900
	75 2.953	**100** 3.937	**94.2** 3.71	**78.5** 3.09	**6.0** 0.236		AX 6 75 100	**0.127** 0.280	**36.00** 8090	**240** 54000	2900
80	**80** 3.150	**105** 4.134	**99.2** 3.91	**83.5** 3.29	**3.5** 0.138	AX 3,5 80 105		**0.069** 0.152	**36.50** 8210	**253** 56900	2700
	80 3.150	**105** 4.134	**99.2** 3.91	**83.5** 3.29	**6.0** 0.236		AX 6 80 105	**0.134** 0.295	**36.50** 8210	**253** 56900	2700
85	**85** 3.347	**110** 4.331	**104.2** 4.10	**88.5** 3.48	**3.5** 0.138	AX 3,5 85 110		**0.078** 0.172	**38.00** 8540	**270** 60700	2600

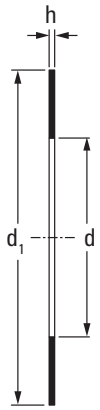

CP Thin series

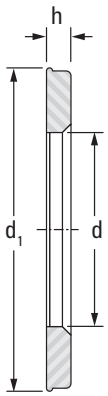

CP Thick series

d	d1	h	Wt.	Washer Designation		Washer Designation Precision	h	Precision Wt.	Shaft Dia.
Washer Dimensions				Thin	Thick				
mm in.	**mm** in.	**mm** in.	**kg** lbs.				**mm** in.	**kg** lbs.	**mm**
40 1.575	**59.5** 2.343	**0.8** 0.032	**0.009** 0.020	CP 40 60		CPN 3 40 60	**3.0** 0.118	**0.034** 0.075	**40**
40 1.575	**59.5** 2.343	**3.0** 0.118	**0.034** 0.075		CP 3 40 60				
45 1.772	**64.4** 2.535	**0.8** 0.032	**0.010** 0.022	CP 45 65		CPN 3 45 65	**3.0** 0.118	**0.037** 0.082	**45**
45 1.772	**64.4** 2.535	**3.0** 0.118	**0.037** 0.082		CP 3 45 65				
50 1.969	**69.4** 2.732	**0.8** 0.032	**0.011** 0.024	CP 50 70					**50**
50 1.969	**69.4** 2.732	**3.0** 0.118	**0.040** 0.088		CP 3 50 70				
55 2.165	**77.4** 3.047	**0.8** 0.032	**0.014** 0.031	CP 55 78					**55**
55 2.165	**77.4** 3.047	**4.0** 0.158	**0.069** 0.152		CP 4 55 78				
60 2.362	**84.3** 3.319	**4.0** 0.158	**0.083** 0.183		CP 4 60 85				**60**
65 2.559	**89.3** 3.516	**1.5** 0.059	**0.033** 0.073	CP 1,5 65 90					**65**
65 2.559	**89.3** 3.516	**4.0** 0.158	**0.088** 0.194		CP 4 65 90				
70 2.756	**94.3** 3.713	**1.5** 0.059	**0.034** 0.075	CP 1,5 70 95		CPN 4 70 95	**4.0** 0.158	**0.093** 0.205	**70**
70 2.756	**94.3** 3.713	**4.0** 0.158	**0.093** 0.205		CP 4 70 95				
75 2.953	**99.3** 3.909	**1.5** 0.059	**0.037** 0.082	CP 1,5 75 100					**75**
75 2.953	**99.3** 3.909	**4.0** 0.158	**0.099** 0.218		CP 4 75 100				
80 3.150	**104.3** 4.106	**1.5** 0.059	**0.039** 0.086	CP 1,5 80 105					**80**
80 3.150	**104.3** 4.106	**4.0** 0.158	**0.104** 0.229		CP 4 80 105				
85 3.347	**109.3** 4.303	**1.5** 0.059	**0.047** 0.104	CP 1,5 85 110					**85**

Continued on next page.

UNITIZED THRUST BEARINGS – *continued*

METRIC SERIES

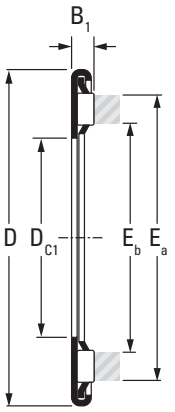

AX Thin series

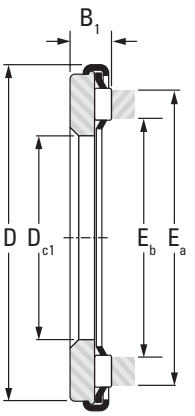

AX Thick series

Shaft Dia.	D_{c1}	D	E_a	E_b	B_1	Bearing Designation		Wt.	C	C_o	Speed Rating Oil
	Bearing Dimensions					Thin	Thick		Load Ratings Dynamic	Load Ratings Static	
mm	**mm** in.	**mm** in.	**mm** in.	**mm** in.	**mm** in.			**kg** lbs.	**kN** lbf.		min^{-1}
85	**85** 3.347	**110** 4.331	**104.2** 4.10	**88.5** 3.48	**6.0** 0.236		AX 6 85 110	**0.142** 0.313	**38.00** 8540	**270** 60700	2600
90	**90** 3.543	**120** 4.724	**112.9** 4.45	**94.2** 3.71	**4.5** 0.177	AX 4,5 90 120		**0.117** 0.258	**59.00** 13300	**360** 80900	2400
	90 3.543	**120** 4.724	**112.9** 4.45	**94.2** 3.71	**8.0** 0.315		AX 8 90 120	**0.238** 0.525	**59.00** 13300	**360** 80900	2400
100	**100** 3.937	**135** 5.315	**127.3** 5.01	**104.2** 4.10	**9.0** 0.354		AX 9 100 135	**0.364** 0.803	**73.00** 16400	**490** 110000	2100
110	**110** 4.331	**145** 5.709	**137.3** 5.41	**114.2** 4.50	**4.5** 0.177	AX 4,5 110 145		**0.168** 0.370	**77.00** 17300	**550** 124000	2000
	110 4.331	**145** 5.709	**137.3** 5.41	**114.2** 4.50	**9.0** 0.354		AX 9 110 145	**0.393** 0.867	**77.00** 17300	**550** 124000	2000
120	**120** 4.724	**155** 6.102	**147.3** 5.80	**124.2** 4.89	**4.5** 0.177	AX 4,5 120 155		**0.182** 0.401	**80.00** 18000	**590** 133000	1800
	120 4.724	**155** 6.102	**147.3** 5.80	**124.2** 4.89	**9.0** 0.354		AX 9 120 155	**0.424** 0.935	**80.00** 18000	**590** 133000	1800
130	**130** 5.118	**170** 6.693	**161.0** 6.34	**135.0** 5.32	**11.0** 0.433		AX 11 130 170	**0.660** 1.455	**106** 23800	**710** 160000	1700
140	**140** 5.512	**180** 7.087	**171.0** 6.73	**145.0** 5.71	**9.0** 0.354		AX 11 140 180	**0.670** 1.477	**111** 25000	**770** 173000	1600
150	**150** 5.906	**190** 7.480	**181.0** 7.13	**155.0** 6.10	**9.0** 0.354		AX 11 150 190	**0.710** 1.566	**115** 25900	**830** 187000	1500
160	**160** 6.299	**200** 7.874	**191.0** 7.52	**165.0** 6.50	**9.0** 0.354		AX 11 160 200	**0.760** 1.676	**118** 26500	**870** 196000	1400
170	**170** 6.693	**215** 8.465	**207.0** 8.15	**175.0** 6.89	**12.0** 0.472		AX 12 170 215	**1.000** 2.205	**165** 37100	**1160** 261000	1300
180	**180** 7.087	**225** 8.858	**217.0** 8.54	**185.0** 7.28	**12.0** 0.472		AX 12 180 225	**1.050** 2.315	**173** 38900	**1250** 281000	1200
190	**190** 7.480	**240** 9.449	**232.0** 9.13	**196.0** 7.72	**13.9** 0.547		AX 14 190 240	**1.400** 3.087	**230** 51700	**1650** 371000	1200
200	**200** 7.874	**250** 9.843	**242.0** 9.53	**206.0** 8.11	**13.9** 0.547		AX 14 200 250	**1.500** 3.308	**239** 53700	**1730** 389000	1100
220	**220** 8.661	**270** 10.630	**262.0** 10.32	**226.0** 8.90	**13.9** 0.547		AX 14 220 270	**1.600** 3.528	**248** 55800	**1850** 416000	1000
240	**240** 9.449	**300** 11.811	**286.0** 11.26	**246.0** 9.69	**14.9** 0.587		AX 15 240 300	**2.300** 5.072	**280** 62900	**2240** 504000	900

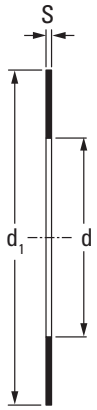

CP Thin series

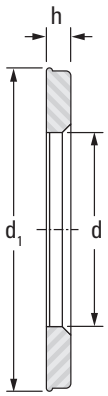

CP Thick series

d	d1	h	Wt.	Washer Designation		Washer Designation Precision	h	Precision Wt.	Shaft Dia.
Washer Dimensions				Thin	Thick				
mm in.	**mm** in.	**mm** in.	**kg** lbs.				**mm** in.	**kg** lbs.	**mm**
85 3.347	**109.3** 4.303	**4.0** 0.158	**0.111** 0.245		CP 4 85 110				
90 3.543	**118.8** 4.677	**1.5** 0.059	**0.052** 0.115	CP 1,5 90 120					**90**
90 3.543	**118.8** 4.677	**5.0** 0.197	**0.173** 0.381		CP 5 90 120				
100 3.937	**133.8** 5.268	**6.0** 0.236	**0.277** 0.611		CP 6 100 135				**100**
110 4.331	**143.8** 5.661	**1.5** 0.059	**0.075** 0.165	CP 1,5 110 145					**110**
110 4.331	**143.8** 5.661	**6.0** 0.236	**0.300** 0.662		CP 6 110 145				
120 4.724	**153.8** 6.055	**1.5** 0.059	**0.081** 0.179	CP 1,5 120 155					**120**
120 4.724	**153.8** 6.055	**6.0** 0.236	**0.323** 0.712		CP 6 120 155				
130 5.118	**168.7** 6.642	**7.0** 0.276	**0.480** 1.058		CP 7 130 170				**130**
140 5.512	**178.7** 7.035	**7.0** 0.276	**0.500** 1.103		CP 7 140 180				**140**
150 5.906	**188.7** 7.429	**7.0** 0.276	**0.530** 1.169		CP 7 150 190				**150**
160 6.299	**198.7** 7.823	**7.0** 0.276	**0.560** 1.235		CP 7 160 200				**160**
170 6.693	**213.5** 8.406	**7.0** 0.276	**0.700** 1.544		CP 7 170 215				**170**
180 7.087	**223.5** 8.799	**7.0** 0.276	**0.735** 1.621		CP 7 180 225				**180**
190 7.480	**238.3** 9.382	**8.0** 0.315	**0.950** 2.095		CP 8 190 240				**190**
200 7.874	**248.3** 9.776	**8.0** 0.315	**1.000** 2.205		CP 8 200 250				**200**
220 8.661	**268.3** 10.563	**8.0** 0.315	**1.100** 2.426		CP 8 220 270				**220**
240 9.449	**298.5** 11.752	**9.0** 0.354	**1.600** 3.528		CP 9 240 300				**240**

B

CYLINDRICAL ROLLER THRUST BEARINGS AND THEIR COMPONENTS

METRIC SERIES

Cylindrical roller thrust bearings provide rolling bearing arrangements that accommodate high-dynamic axial loads. The simple geometry of the bearing components allows the use of many design arrangements. As an example, for less demanding applications, it is possible to combine metric series, thrust cylindrical roller and cage assemblies, including the metric series heavy thrust washers (LS,CPR) and even the metric series thin thrust washers (AS, CP). These two thrust washer types are more commonly used with thrust needle roller and cage assemblies. Thrust cylindrical roller and cage assemblies also can be used without bearing thrust washers if the adjacent machine components can be prepared to serve as suitable raceways.

Cylindrical roller thrust bearings may be used where the load carrying capability of thrust needle roller and cage assemblies is insufficient. Also, the bearings can accommodate high-dynamic and static axial loads in one direction, but they are not suitable to transmit radial loads.

REFERENCE STANDARDS ARE:

- **ISO 104** – rolling bearings – thrust bearings – boundary dimensions, general plan.
- **ISO 199** – rolling bearings – thrust bearings – tolerances.
- **DIN 616** – rolling bearings – general plan for boundary dimensions.
- **DIN 722** – rolling bearing – thrust cylindrical roller bearings – single direction.

811, 812 Series
Cylindrical roller thrust bearings

K.811, K.812
Thrust cylindrical roller and cage assemblies

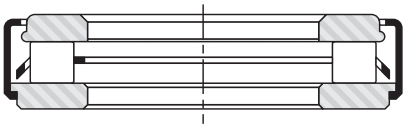

AXZ, ARZ
Unitized cylindrical roller thrust bearing

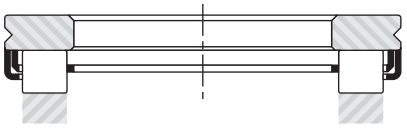

AR
Unitized thrust bearing assemblies

WS.811, WS.812
Shaft washers

GS.811, GS.812
Housing washers

Fig. B-73. Types of metric series cylindrical roller thrust bearings and their components

Suffixes	
LPB	Machined light metal window-type cage.
TVP	Molded window-type cage of glass reinforced nylon.

CONSTRUCTION

BASIC DESIGNS

Cylindrical roller thrust bearings of dimension series 811 and 812 comprise a thrust cylindrical roller and cage assembly (K), a shaft washer (WS) and a housing washer (GS). Providing the backup surfaces can be hardened and ground, they can be used as raceways for the cylindrical rollers of the thrust cylindrical roller and cage assembly resulting in a compact bearing arrangement.

Series AR is available with thin or thick CP washers or heavy CPR thrust washers.

Thrust bearing types AXZ and ARZ each have two thrust washers retained by an integral cap – giving protection against the entry of dirt and metal particles, while helping to retain the lubricant.

CAGE DESIGNS

Metric series 811 and 812 cylindrical roller thrust bearings use molded cages of glass-fiber reinforced-nylon 6/6 (suffix TVP) or machined cages of light metal (suffix LPB). The cages are designed to be piloted on the shaft. The reinforced nylon cages can be used at temperatures up to 120° C (250˚ F) continuously for extended periods. When lubricating these bearings with oil, it should be ensured that the oil does not contain additives detrimental to the cage over extended life at operating temperatures higher than 100° C (212˚ F). Also, care should be exercised that oil change intervals are observed as old oil may reduce cage life at such temperatures.

The rolling elements of the AR series thrust bearings are retained and guided in radial pockets within the cage. The cage is retained in relation to the thrust washer by means of a retaining cap. The design of a one-piece steel cage employs a special curvature that guides the rolling elements, by their ends, along their centerlines.

In addition, this special curvature gives the steel cage great rigidity, while providing maximum lubricant space. This unitized assembly of components facilitates installation and provides a high-axial load capacity while occupying only minimal space.

AR series needle thrust bearings with a thin washer are of minimal thickness and provide excellent economy. They should be considered whenever the degree of support and rotational accuracy requirement allow.

BEARING THRUST WASHERS

SHAFT WASHERS AND HOUSING WASHERS

Shaft washers of types WS.811 and WS.812, as well as housing washers of types GS.811 and GS.812, are components of the metric series cylindrical roller thrust bearings of series 811 and 812. They are made of bearing-quality steel – with hardened, precision- ground and lapped-flat raceway surfaces. The tolerances of the thrust bearing bore and outer diameter shown in Table B50 (1) and Table B50 (2) (see next page) apply to shaft- and housing-piloted metric series washers.

HEAVY THRUST WASHERS (LS), THIN THRUST WASHERS (AS)

These thrust washers are more frequently used with thrust needle roller and cage assemblies of metric series FNT or AXK. They also are suitable for use with the thrust cylindrical roller and cage assemblies K.811. The heavy thrust washer of series LS are made of bearing-quality steel – hardened and precision-ground on the flat raceway surfaces. The bore and outer diameters of the heavy thrust washers are not ground. Therefore, when used with K.811 type assemblies, they are only suggested where accurate centering is not required. The thin thrust washers of series AS may be used in applications where the loads are light. Both types of these washers are listed in the tabular part of the metric series thrust needle roller and cage assemblies section.

THIN (CP) AND THICK (CPR) THRUST WASHERS

The washer incorporated in the AR series thrust bearing is made from hardened bearing steel and forms one of the raceways for the rolling elements. The opposing raceway is generally provided by a separate thrust washer of similar design supplied by JTEKT. When the AR series thrust bearing is piloted by the revolving part, the thrust washer must be piloted by the stationary part and vice versa. If the revolving part and the stationary part are noticeably eccentric to each other, the thrust bearing with integral washer must – without exception – be piloted by the revolving part.

The second raceway for the rolling elements may also be formed by the face of a shoulder or an inserted washer – provided these have the correct hardness and geometrical dimensions.

B

DIMENSIONAL ACCURACY

The tolerances for the metric series cylindrical roller thrust bearing bore and outer diameter shown in Table B-50 (1) and B-50 (2) apply to shaft-piloted washers of series WS.811 and WS.812, as well as housing-piloted washers of series GS.811 and GS.812. Tolerances for the bore diameter of series K.811 and K.812 thrust assemblies are given on page B-300.

The tolerances for the bore and outer diameter of series AS thrust washers are shown in Table B-51 below. The tolerances for the bore and outer diameter of series LS thrust washers are given in Table B-53 on page B-299. Bore inspection procedures for thin thrust washers (AS) and heavy thrust washers (LS) are given on page B-276.

Table B-50 (1). Tolerances of cylindrical roller thrust bearings - shaft piloted washer - metric series

Nominal bore diameter d		Δ_{dmp}		V_{dsp}	S_i(1)	Δ_{dmp}		V_{dsp}	S_i(1)	Δ_{dmp}		V_{dsp}	S_i(1)
		Tolerance class PO (normal tolerance)				Tolerance class P6				Tolerance class P5			
		Deviations		Variation	Wall thickness variation	Deviations		Variation	Wall thickness variation	Deviations		Variation	Wall thickness variation
>	≤	Max.	Min.	Max.	Min.	Max.	Min.	Max.	Min.	Max.	Min.	Max.	Min.
mm in.	mm in.	mm in.	mm in.	mm in.	mm in.	mm in.	mm in.	mm in.	mm in.	mm in.	mm in.	mm in.	mm in.
	18.000 0.7087	**0.000** 0.0000	**-0.008** -0.0003	**0.006** 0.0002	**0.010** 0.0004	**0.000** 0.0000	**-0.008** -0.0003	**0.006** 0.0002	**0.005** 0.0002	**0.000** 0.0000	**-0.008** -0.0003	**0.006** 0.0002	**0.003** 0.0001
18.000 0.7087	**30.000** 1.1811	**0.000** 0.0000	**-0.010** -0.0004	**0.008** 0.0003	**0.010** 0.0004	**0.000** 0.0000	**-0.010** -0.0004	**0.008** 0.0003	**0.005** 0.0002	**0.000** 0.0000	**-0.010** -0.0004	**0.008** 0.0003	**0.003** 0.0001
30.000 1.1811	**50.000** 1.9685	**0.000** 0.0000	**-0.012** -0.0005	**0.009** 0.00035	**0.010** 0.0004	**0.000** 0.0000	**-0.012** -0.0005	**0.009** 0.00035	**0.006** 0.0002	**0.000** 0.0000	**-0.012** -0.0005	**0.009** 0.00035	**0.003** 0.0001
50.000 1.9685	**80.000** 3.1496	**0.000** 0.0000	**-0.015** -0.0006	**0.011** 0.0004	**0.010** 0.0004	**0.000** 0.0000	**-0.015** -0.0006	**0.011** 0.0004	**0.007** 0.0003	**0.000** 0.0000	**-0.015** -0.0006	**0.011** 0.0004	**0.004** 0.0002
80.000 3.1496	**120.000** 4.7244	**0.000** 0.0000	**-0.020** -0.0008	**0.015** 0.0006	**0.015** 0.0006	**0.000** 0.0000	**-0.020** -0.0008	**0.015** 0.0006	**0.008** 0.0003	**0.000** 0.0000	**-0.020** -0.0008	**0.015** 0.0006	**0.004** 0.0002
120.000 4.7244	**180.000** 7.0866	**0.000** 0.0000	**-0.025** -0.0010	**0.019** 0.00075	**0.015** 0.0006	**0.000** 0.0000	**-0.025** -0.0010	**0.019** 0.00075	**0.009** 0.00035	**0.000** 0.0000	**-0.025** -0.0010	**0.019** 0.00075	**0.005** 0.0002
180.000 7.0866	**250.000** 9.8425	**0.000** 0.0000	**-0.030** -0.0012	**0.023** 0.0009	**0.020** 0.0008	**0.000** 0.0000	**-0.030** -0.0012	**0.023** 0.0009	**0.010** 0.0004	**0.000** 0.0000	**-0.030** -0.0012	**0.023** 0.0009	**0.005** 0.0002
250.000 9.8425	**315.000** 12.4016	**0.000** 0.0000	**-0.035** -0.0014	**0.026** 0.0010	**0.025** 0.0010	**0.000** 0.0000	**-0.035** -0.0014	**0.026** 0.0010	**0.013** 0.0005	**0.000** 0.0000	**-0.035** -0.0014	**0.026** 0.0010	**0.007** 0.0003
315.000 12.4016	**400.000** 15.7480	**0.000** 0.0000	**-0.040** -0.0016	**0.030** 0.0012	**0.030** 0.0012	**0.000** 0.0000	**-0.040** -0.0016	**0.030** 0.0012	**0.015** 0.0006	**0.000** 0.0000	**-0.040** -0.0016	**0.030** 0.0012	**0.007** 0.0003
400.000 15.7480	**500.000** 19.6850	**0.000** 0.0000	**-0.045** -0.0018	**0.034** 0.0013	**0.030** 0.0012	**0.000** 0.0000	**-0.045** -0.0018	**0.034** 0.0013	**0.018** 0.0007	**0.000** 0.0000	**-0.045** -0.0018	**0.034** 0.0013	**0.009** 0.00035

*The values of the wall thickness variation Se, for the housing piloted washer are identical to Si for the shaft - piloted washers.

Table B-50 (2). Tolerances of cylindrical roller thrust bearings - housing piloted washer - metric series

Nominal outside diameter D		Δ_{Dmp}		V_{Dsp}	Δ_{Dmp}		V_{Dsp}	Δ_{Dmp}		V_{Dsp}
		Tolerance class PO (normal tolerance)			Tolerance class P6			Tolerance class P5		
		Deviations		Variation	Deviations		Variation	Deviations		Variation
>	≤	Max.	Min.	Max.	Max.	Min.	Max.	Max.	Min.	Max.
mm in.	mm in.	mm in.	mm in.	mm in.	mm in.	mm in.	mm in.	mm in.	mm in.	mm in.
	30.000 1.1811	**0.000** 0.0000	**-0.013** -0.0005	**0.010** 0.0004	**0.000** 0.0000	**-0.013** -0.0005	**0.010** 0.0004	**0.000** 0.0000	**-0.013** -0.0005	**0.010** 0.0004
30.000 1.1811	**50.000** 1.9685	**0.000** 0.0000	**-0.016** -0.0006	**0.012** 0.0005	**0.000** 0.0000	**-0.016** -0.0006	**0.012** 0.0005	**0.000** 0.0000	**-0.016** -0.0006	**0.012** 0.0005
50.000 1.9685	**80.000** 3.1496	**0.000** 0.0000	**-0.019** -0.00075	**0.014** 0.00055	**0.000** 0.0000	**-0.019** -0.00075	**0.014** 0.00055	**0.000** 0.0000	**-0.019** -0.00075	**0.014** 0.00055
80.000 3.1496	**120.000** 4.7244	**0.000** 0.0000	**-0.022** -0.0009	**0.017** 0.0007	**0.000** 0.0000	**-0.022** -0.0009	**0.017** 0.0007	**0.000** 0.0000	**-0.022** -0.0009	**0.017** 0.0007
120.000 4.7244	**180.000** 7.0866	**0.000** 0.0000	**-0.025** -0.0010	**0.019** 0.00075	**0.000** 0.0000	**-0.025** -0.0010	**0.019** 0.00075	**0.000** 0.0000	**-0.025** -0.0010	**0.019** 0.00075
180.000 7.0866	**250.000** 9.8425	**0.000** 0.0000	**-0.030** -0.0012	**0.023** 0.0009	**0.000** 0.0000	**-0.030** -0.0012	**0.023** 0.0009	**0.000** 0.0000	**-0.030** -0.0012	**0.023** 0.0009
250.000 9.8425	**315.000** 12.4016	**0.000** 0.0000	**-0.035** -0.0014	**0.026** 0.0010	**0.000** 0.0000	**-0.035** -0.0014	**0.026** 0.0010	**0.000** 0.0000	**-0.035** -0.0014	**0.026** 0.0010
315.000 12.4016	**400.000** 15.7480	**0.000** 0.0000	**-0.040** -0.0016	**0.030** 0.0012	**0.000** 0.0000	**-0.040** -0.0016	**0.030** 0.0012	**0.000** 0.0000	**-0.040** -0.0016	**0.030** 0.0012
400.000 15.7480	**500.000** 19.6850	**0.000** 0.0000	**-0.045** -0.0018	**0.034** 0.0013	**0.000** 0.0000	**-0.045** -0.0018	**0.034** 0.0013	**0.000** 0.0000	**-0.045** -0.0018	**0.034** 0.0013

Table B-51. Tolerances for outer diameter (d_1) and bore diameter (d) of series AS thrust washers

d_1		Deviations of max. O.D. (e13)		d		Deviations of min. bore diameter (E13)	
>	≤	Max.	Min.	>	≤	Max.	Min.
mm in.	mm in.	mm in.	mm in.	mm in.	mm in.	mm in.	mm in.
18.000 0.7087	**30.000** 1.1811	**-0.040** -0.0016	**-0.370** -0.0146	**3.000** 0.1181	**6.000** 0.2362	**+0.200** +0.0079	**+0.020** +0.0008
30.000 1.1811	**50.000** 1.9685	**-0.050** -0.0020	**-0.440** -0.0173	**6.000** 0.2362	**10.000** 0.3937	**+0.245** +0.0096	**+0.025** +0.0010
50.000 1.9685	**80.000** 3.1496	**-0.060** -0.0024	**-0.520** -0.0205	**10.000** 0.3937	**18.000** 0.7087	**+0.302** +0.0119	**+0.032** +0.0013
80.000 3.1496	**120.000** 4.7244	**-0.072** -0.0028	**-0.612** -0.0241	**18.000** 0.7087	**30.000** 1.1811	**+0.370** +0.0146	**+0.040** +0.0016
120.000 4.7244	**180.000** 7.0866	**-0.085** -0.0034	**-0.715** -0.0282	**30.000** 1.1811	**50.000** 1.9685	**+0.440** +0.0173	**+0.050** +0.0020
180.000 7.0866	**250.000** 9.8425	**-0.100** -0.0039	**-0.820** -0.0323	**50.000** 1.9685	**80.000** 3.1496	**+0.520** +0.0205	**+0.060** +0.0024
				80.000 3.1496	**120.000** 4.7244	**+0.612** +0.0241	**+0.072** +0.0028
				120.000 4.7244	**180.000** 7.0866	**+0.715** +0.0281	**+0.085** +0.0034

Table B-52. AR Series thickness and axial run-out tolerances

	Bore Dc1 mm	Thickness Tolerance µm	Axial run-out µm		
Needle thrust bearings (thin)	≤ 60	+30 / -40 1)	20 1)		
	60 < Dc_1 ≤ 90	+50 / -60 2)	25 2)		
	90 < Dc_1 ≤ 120	+50 / -60 2)	30 2)		
Roller thrust bearings	Dc_1 ≤ 60	+30 / -30 1)	20 1)		
	60 < Dc_1 ≤ 90	+50/ -50 2)	25 2)	Quality	
	90 < Dc_1 ≤ 120	+50/ -50 2)	30 2)	HP	HSP
Thrust washers (thin) [thick]	Dc_1 ≤ 120	+50 / -60[-50]	5*	2	1
	120 < Dc_1 ≤ 180	+50 / -110[-100]	7*	3	1.5
	180 < Dc_1 ≤ 250	+50 / -160[-150]	10*	4	2

* High precision quality. 1) Under min. load of 150 N. 2) Under min. load of 250 N.

Table B-53. Tolerances for outer diameter (d_1) and bore diameter (d) of series LS heavy thrust washers

d1		Deviations of max. O.D. (a12)		d		Deviations of min. bore diameter (E12)	
>	≤	Max.	Min.	>	≤	Max.	Min.
mm in.	mm in.	mm in.	mm in.	mm in.	mm in.	mm in.	mm in.
18.000 0.7087	**30.000** 1.1811	**-0.300** -0.0118	**-0.510** -0.0201	**3.000** 0.1181	**6.000** 0.2362	**+0.140** +0.0055	**+0.020** +0.0008
30.000 1.1811	**40.000** 1.5748	**-0.310** -0.0122	**-0.560** -0.0221	**6.000** 0.2362	**10.000** 0.3937	**+0.175** +0.0069	**+0.025** +0.0010
40.000 1.5748	**50.000** 1.9685	**-0.320** -0.0126	**-0.570** -0.0224	**10.000** 0.3937	**18.000** 0.7087	**+0.212** +0.0084	**+0.032** +0.0013
50.000 1.9685	**65.000** 2.5591	**-0.340** -0.0134	**-0.640** -0.0252	**18.000** 0.7087	**30.000** 1.1811	**+0.250** +0.0098	**+0.040** +0.0016
65.000 2.5591	**80.000** 3.1496	**-0.360** -0.0142	**-0.660** -0.0260	**30.000** 1.1811	**50.000** 1.9685	**+0.300** +0.0118	**+0.050** +0.0020
80.000 3.1496	**100.000** 3.9370	**-0.380** -0.0150	**-0.730** -0.0290	**50.000** 1.9685	**80.000** 3.1496	**+0.360** +0.0142	**+0.060** +0.0024
100.000 3.9370	**120.000** 4.7244	**-0.410** -0.0161	**-0.760** -0.0299	**80.000** 3.1496	**120.000** 4.7244	**+0.422** +0.0166	**+0.072** +0.0028
120.000 4.7244	**140.000** 5.5118	**-0.460** -0.0181	**-0.860** -0.0339	**120.000** 4.7244	**180.000** 7.0866	**+0.485** +0.0191	**+0.085** +0.0034
140.000 5.5118	**160.000** 6.2992	**-0.520** -0.0205	**-0.920** -0.0362				
160.000 6.2992	**180.000** 7.0866	**-0.580** -0.0228	**-0.980** -0.0386				
180.000 7.0866	**200.000** 7.8740	**-0.660** -0.0260	**-1.120** -0.0441				

Thickness tolerances for series LS heavy thrust washers are given in bearing tables.

MOUNTING TOLERANCES

Shaft and housing tolerances for mounting metric series thrust cylindrical roller and cage assemblies are given in Table B-54, shown below. If the cylindrical rollers of the thrust cylindrical roller and cage assemblies are to run directly on the adjacent support surfaces, they must be hardened to at least 58 HRC. Raceway contact dimensions E_a and E_b must be observed.

Table B-54. Mounting tolerances for shafts and housings for metric series components

Bearing components	Shaft tolerance (shaft piloting)	Housing tolerance (housing piloting)	Piloting member
Thrust needle and thrust cylindrical roller and cage assembly. Types: AXK, FNT, K.811 and K.812	h8	H10	Shaft
Thrust needle and thrust cylindrical roller and cage assembly. Types: AX, AR, AXZ, and ARZ	h10	H10	Shaft
Thin thrust washer. Type: AS	h10	H11	shaft
Heavy thrust washer. Type: LS	h10	H11	Shaft
Shaft-piloted thrust washer. Type: WS.811	h6 (j6)	clearance	Shaft
Housing-piloted thrust washer. Type: GS.811	Clearance	H7 (K7)	Housing
Thick, thin and heavy series thrust washers. Types: CP and CPR	h10	H10 required	As

The backup surfaces for the shaft washers WS.811 and WS.812 as well as the housing washers GS.811 and GS.812 of cylindrical roller thrust bearings must be square with the axis of the shaft. Equally important, the raceway or the surface backing the thrust washer must not be dished or coned. The permissible limits of the squareness and dishing or coning are shown in figures below. When using the thin (AS) thrust washers the cylindrical rollers of the thrust cage assembly must be supported over their entire length.

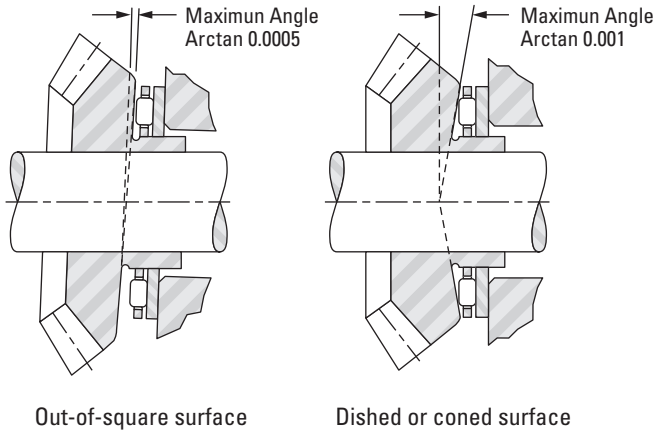

Fig. B-74. Permissible limits

Bearing thrust washers should make close contact with the shaft or housing shoulder and must not touch the fillet radius. Therefore, the maximum fillet radius $r_{a\,max}$ must be no greater than the minimum chamfer $r_{s\,min}$ of the shaft washer (WS) and the housing washer (GS). See tabular pages B-301 and B-303.

Since roller thrust bearings generally run under considerable loads their incorporated washer (and thrust washer) should be supported on a shoulder covering the whole area of circulation of the rollers bounded by dimensions E_b and E_a.

LOAD RATINGS

MINIMUM AXIAL LOAD

To prevent slippage, a cylindrical roller thrust bearing must always be axially loaded. For satisfactory operation, a certain minimum load must be applied between the cylindrical rollers and their raceways. This can be calculated from:

$F_{a\,min}$ = $C_0/2200$ [kN]

Where:

C_0 = static load rating [kN]
$F_{a\,min}$ = minimum axial load [kN]

THRUST CYLINDRICAL ROLLER AND CAGE ASSEMBLIES, THRUST WASHERS

METRIC SERIES

B

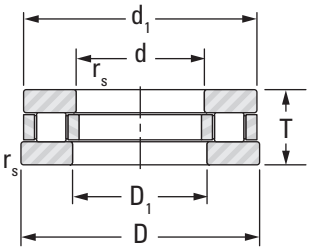

811, 812

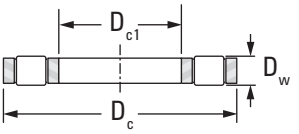

K.811, K.812

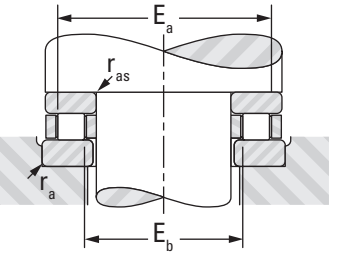

Raceway contact dimensions

Shaft Dia.	D_{c1}	D_c	D_w	T	E_b max	E_a min	$r_{as\,max}$ $r_{a\,max}$	Assembly Designation	C	C_o	Speed Rating Oil	Wt.
	Assembly Dimensions								Load Ratings			
	(E11)	(a13)							Dynamic	Static		
mm	mm in.	mm in.	mm in.	mm in.	mm in.	mm in.	mm in.		kN lbf.		min^{-1}	kg lbs.
15	15 0.5906	28 1.1024	3.5 0.1378	9 0.354	18 0.709	25 0.984	0.3 0.012	K.81102LPB	12.8 2880	28.6 6430	12000	0.006 0.013
	15 0.5906	28 1.1024	3.5 0.1378	9 0.354	18 0.709	25 0.984	0.3 0.012	K.81102TVP	12.8 2880	28.6 6430	12000	0.006 0.013
17	17 0.6693	30 1.1811	3.5 0.1378	– –	20 0.787	27 1.063	0.3 0.012	K.81103LPB	14.2 3190	33.4 7510	11000	0.008 0.018
	17 0.6693	30 1.1811	3.5 0.1378	9 0.354	20 0.787	27 1.063	0.3 0.012	K.81103TVP	14.2 3190	33.4 7510	11000	0.008 0.018
20	20 0.7874	35 1.3780	4.5 0.1772	10 0.394	23 0.906	32 1.260	0.3 0.012	K.81104TVP	23.6 5310	56.8 12800	9500	0.009 0.020
25	25 0.9843	42 1.6535	5.0 0.1969	11 0.433	28 1.102	39 1.535	0.6 0.024	K.81105TVP	31.2 7010	81.0 18200	8000	0.014 0.031
30	30 1.1811	47 1.8504	5.0 0.1969	– –	33 1.299	44 1.732	0.6 0.024	K.81106LPB	33.0 7420	91.1 20500	6700	0.026 0.057
	30 1.1811	47 1.8504	5.0 0.1969	11 0.433	33 1.299	44 1.732	0.6 0.024	K.81106TVP	33.0 7420	91.1 20500	6700	0.016 0.035
	30 1.1811	52 2.0472	7.5 0.2953	– –	33 1.299	49 1.929	0.6 0.024	K.81206LPB	56.9 12800	141 31700	6300	0.052 0.115
	30 1.1811	52 2.0472	7.5 0.2953	16 0.630	33 1.299	49 1.929	0.6 0.024	K.81206TVP	56.9 12800	141 31700	6300	0.034 0.075
35	35 1.3780	52 2.0472	5.0 0.1969	– –	38 1.496	49 1.929	0.6 0.024	K.81107LPB	34.8 7820	101 22700	6000	0.025 0.055
	35 1.3780	52 2.0472	5.0 0.1969	12 0.472	38 1.496	49 1.929	0.6 0.024	K.81107TVP	34.8 7820	101 22700	6000	0.020 0.044
	35 1.3780	62 2.4409	7.5 0.2953	– –	41 1.614	56 2.205	1.0 0.039	K.81207LPB	61.6 13800	164 36900	5300	0.073 0.161
	35 1.3780	62 2.4409	7.5 0.2953	18 0.709	41 1.614	56 2.205	1.0 0.039	K.81207TVP	61.6 13800	164 36900	5300	0.055 0.121
40	40 1.5748	60 2.3622	6.0 0.2362	– –	44 1.732	56 2.205	0.6 0.024	K.81108LPB	49.8 11200	148 33300	5300	0.044 0.097
	40 1.5748	60 2.3622	6.0 0.2362	13 0.512	44 1.732	56 2.205	0.6 0.024	K.81108TVP	49.8 11200	148 33300	5300	0.031 0.068
	40 1.5748	68 2.6772	9.0 0.3543	19 0.748	45 1.772	63 2.480	1.0 0.039	K.81208TVP	86.8 19500	233 52400	4800	0.076 0.168
45	45 1.7717	65 2.5591	6.0 0.2362	– –	49 1.929	61 2.402	0.6 0.024	K.81109LPB	52.3 11800	163 36600	4800	0.035 0.077
	45 1.7717	65 2.5591	6.0 0.2362	14 0.551	49 1.929	61 2.402	0.6 0.024	K.81109TVP	52.3 11800	163 36600	4800	0.035 0.077
	45 1.7717	73 2.8740	9.0 0.3543	– –	50 1.969	68 2.677	1.0 0.039	K.81209TVP	94.2 21200	266 59800	4500	0.083 0.183

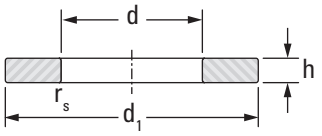

WS.811, WS.812

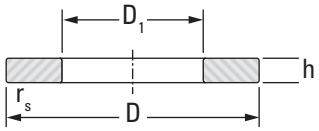

GS.811, GS.812

d	D_1	D, d_1	h		$r_{s\,min}$	Washer Designation		Wt.	Shaft Dia.
Washer Dimensions			Max.	Min.					
mm in.	**mm** in.	**mm** in.	**mm** in.	**mm** in.	**mm** in.	Shaft Piloted	Housing Piloted	**kg** lbs.	**mm**
15 0.591	**16** 0.630	**28** 1.102	**2.75** 0.108	**2.64** 0.104	**0.3** 0.012	WS.81102	GS.81102	**0.010** 0.022	**15**
15 0.591	**16** 0.630	**28** 1.102	**2.75** 0.108	**2.64** 0.104	**0.3** 0.012	WS.81102	GS.81102	**0.010** 0.022	
17 0.669	**18** 0.709	**30** 1.181	**2.75** 0.108	**2.64** 0.104	**0.3** 0.012	WS.81103	GS.81103	**0.011** 0.024	**17**
17 0.669	**18** 0.709	**30** 1.181	**2.75** 0.108	**2.64** 0.104	**0.3** 0.012	WS.81103	GS.81103	**0.011** 0.024	
20 0.787	**21** 0.827	**35** 1.378	**2.75** 0.108	**2.62** 0.103	**0.3** 0.012	WS.81104	GS.81104	**0.014** 0.031	**20**
25 0.984	**26** 1.024	**42** 1.654	**3.00** 0.118	**2.87** 0.113	**0.6** 0.024	WS.81105	GS.81105	**0.021** 0.046	**25**
30 1.181	**32** 1.260	**47** 1.850	**3.00** 0.118	**2.87** 0.113	**0.6** 0.024	WS.81106	GS.81106	**0.023** 0.051	**30**
30 1.181	**32** 1.260	**47** 1.850	**3.00** 0.118	**2.87** 0.113	**0.6** 0.024	WS.81106	GS.81106	**0.023** 0.051	
30 1.181	**32** 1.260	**52** 2.047	**4.25** 0.167	**4.12** 0.162	**0.6** 0.024	WS.81206	GS.81206	**0.047** 0.104	
30 1.181	**32** 1.260	**52** 2.047	**4.25** 0.167	**4.12** 0.162	**0.6** 0.024	WS.81206	GS.81206	**0.047** 0.104	
35 1.378	**37** 1.457	**52** 2.047	**3.50** 0.138	**3.34** 0.131	**0.6** 0.024	WS.81107	GS.81107	**0.032** 0.071	**35**
35 1.378	**37** 1.457	**52** 2.047	**3.50** 0.138	**3.34** 0.131	**0.6** 0.024	WS.81107	GS.81107	**0.032** 0.071	
35 1.378	**37** 1.457	**62** 2.441	**5.25** 0.207	**5.09** 0.200	**1.0** 0.039	WS.81207	GS.81207	**0.085** 0.187	
35 1.378	**37** 1.457	**62** 2.441	**5.25** 0.207	**5.09** 0.200	**1.0** 0.039	WS.81207	GS.81207	**0.085** 0.187	
40 1.575	**42** 1.654	**60** 2.362	**3.50** 0.138	**3.34** 0.131	**0.6** 0.024	WS.81108	GS.81108	**0.043** 0.095	**40**
40 1.575	**42** 1.654	**60** 2.362	**3.50** 0.138	**3.34** 0.131	**0.6** 0.024	WS.81108	GS.81108	**0.043** 0.095	
40 1.575	**42** 1.654	**68** 2.677	**5.00** 0.197	**4.84** 0.191	**1.0** 0.039	WS.81208	GS.81208	**0.093** 0.205	
45 1.772	**47** 1.850	**65** 2.559	**4.00** 0.157	**3.84** 0.151	**0.6** 0.024	WS.81109	GS.81109	**0.054** 0.119	**45**
45 1.772	**47** 1.850	**65** 2.559	**4.00** 0.157	**3.84** 0.151	**0.6** 0.024	WS.81109	GS.81109	**0.054** 0.119	
45 1.772	**47** 1.850	**73** 2.874	**5.50** 0.217	**5.34** 0.210	**1.0** 0.039	WS.81209	GS.81209	**0.112** 0.247	

Continued on next page.

THRUST CYLINDRICAL ROLLER AND CAGE ASSEMBLIES, THRUST WASHERS — *continued*

METRIC SERIES

B

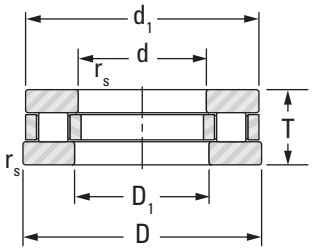

811, 812

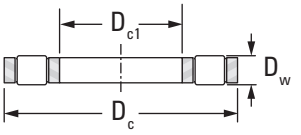

K.811, K.812

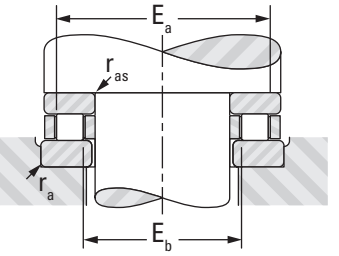

Raceway contact dimensions

Shaft Dia.	D_{c1}	D_c	D_w	T	E_b max	E_a min	$r_{as\,max}$ $r_{a\,max}$	Assembly Designation	C	C_o	Speed Rating Oil	Wt.
	Assembly Dimensions								Load Ratings			
	(E11)	(a13)							Dynamic	Static		
mm	mm in.	mm in.	mm in.	mm in.	mm in.	mm in.	mm in.		kN lbf.		min^{-1}	kg lbs.
50	50 1.9685	70 2.7559	6.0 0.2362	14 0.551	54 2.126	66 2.598	0.6 0.024	K.81110LPB	54.8 12300	177 39800	4300	0.052 0.115
	50 1.9685	70 2.7559	6.0 0.2362	14 0.551	54 2.126	66 2.598	0.6 0.024	K.81110TVP	54.8 12300	177 39800	4300	0.042 0.093
	50 1.9685	78 3.0709	9.0 0.3543	22 0.866	55 2.165	73 2.874	1.0 0.039	K.81210TVP	101 22700	299 67200	4000	0.089 0.196
55	55 2.1654	78 3.0709	6.0 0.2362	16 0.630	60 2.362	73 2.874	0.6 0.024	K.81111TVP	60.3 13600	207 46500	4000	0.066 0.146
	55 2.1654	90 3.5433	11.0 0.4331	– –	61 2.402	84 3.307	1.0 0.039	K.81211LPB	138 31000	403 90600	3600	0.156 0.344
	55 2.1654	90 3.5433	11.0 0.4331	25 0.984	61 2.402	84 3.307	1.0 0.039	K.81211TVP	138 31000	403 90600	3600	0.140 0.309
60	60 2.3622	85 3.3465	7.5 0.2953	17 0.669	65 2.559	80 3.150	1.0 0.039	K.81112TVP	84.4 19000	281 63200	3600	0.103 0.227
	60 2.3622	95 3.7402	11.0 0.4331	26 1.024	66 2.598	89 3.504	1.0 0.039	K.81212LPB	129 29000	378 85000	3400	0.166 0.366
65	65 2.5591	90 3.5433	7.5 0.2953	18 0.709	70 2.756	85 3.346	1.0 0.039	K.81113TVP	88.3 19900	305 68600	3400	0.109 0.240
	65 2.5591	100 3.9370	11.0 0.4331	27 1.063	71 2.795	94 3.701	1.0 0.039	K.81213LPB	134 30100	403 90600	3200	0.176 0.388
70	70 2.7559	95 3.7402	7.5 0.2953	18 0.709	75 2.953	90 3.543	1.0 0.039	K.81114TVP	92.1 20700	328 73700	3200	0.056 0.123
	70 2.7559	105 4.1339	11.0 0.4331	27 1.063	76 2.992	99 3.898	1.0 0.039	K.81214LPB	138 31000	428 96200	3000	0.186 0.410
75	75 2.9528	100 3.9370	7.5 0.2953	19 0.748	80 3.150	95 3.740	1.0 0.039	K.81115LPB	86.1 19400	305 68600	3000	0.091 0.201
	75 2.9528	110 4.3307	11.0 0.4331	27 1.063	81 3.189	104 4.094	1.0 0.039	K.81215LPB	143 32100	453 101800	2800	0.197 0.434
80	80 3.1496	105 4.1339	7.5 0.2953	19 0.748	85 3.346	100 3.937	1.0 0.039	K.81116LPB	87.5 19700	316 71000	2800	0.103 0.227
	80 3.1496	115 4.5276	11.0 0.4331	28 1.102	86 3.386	109 4.291	1.0 0.039	K.81216LPB	147 33000	478 107500	2600	0.208 0.459
85	85 3.3465	110 4.3307	7.5 0.2953	19 0.748	90 3.543	105 4.134	1.0 0.039	K.81117LPB	88.9 20000	328 73700	2600	0.108 0.238
	85 3.3465	125 4.9213	12.0 0.4724	31 1.220	93 3.661	117 4.606	1.0 0.039	K.81217LPB	174 39100	572 128600	2400	0.376 0.829
90	90 3.5433	120 4.7244	9.0 0.3543	22 0.866	96 3.780	114 4.488	1.0 0.039	K.81118LPB	119 26800	432 97100	2400	0.156 0.344
	90 3.5433	135 5.3150	14.0 0.5512	35 1.378	98 3.858	127 5.000	1.0 0.039	K.81218LPB	215 48300	691 155300	2400	0.540 1.190

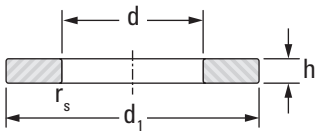

WS.811, WS.812

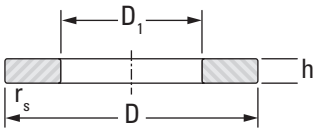

GS.811, GS.812

d	D_1	D, d_1	h		$r_{s\,min}$	Washer Designation		Wt.	Shaft Dia.
Washer Dimensions			Max.	Min.					
mm in.	**mm** in.	**mm** in.	**mm** in.	**mm** in.	**mm** in.	Shaft Piloted	Housing Piloted	**kg** lbs.	**mm**
50 1.969	**52** 2.047	**70** 2.756	**4.00** 0.157	**3.84** 0.151	**0.6** 0.024	WS.81110	GS.81110	**0.059** 0.130	**50**
50 1.969	**52** 2.047	**70** 2.756	**4.00** 0.157	**3.84** 0.151	**0.6** 0.024	WS.81110	GS.81110	**0.059** 0.130	
50 1.969	**52** 2.047	**78** 3.071	**6.5** 0.256	**6.34** 0.250	**1.0** 0.039	WS.81210	GS.81210	**0.144** 0.317	**55**
55 2.165	**57** 2.244	**78** 3.071	**5.00** 0.197	**4.81** 0.189	**0.6** 0.024	WS.81111	GS.81111	**0.094** 0.207	
55 2.165	**57** 2.244	**90** 3.543	**7.00** 0.276	**6.81** 0.268	**1.0** 0.039	WS.81211	GS.81211	**0.219** 0.483	
55 2.165	**57** 2.244	**90** 3.543	**7.00** 0.276	**6.81** 0.268	**1.0** 0.039	WS.81211	GS.81211	**0.219** 0.483	
60 2.362	**62** 2.441	**85** 3.346	**4.75** 0.187	**4.56** 0.180	**1.0** 0.039	WS.81112	GS.81112	**0.106** 0.234	**60**
60 2.362	**62** 2.441	**95** 3.740	**7.50** 0.295	**7.31** 0.288	**1.0** 0.039	WS.81212	GS.81212	**0.251** 0.553	
65 2.559	**67** 2.638	**90** 3.543	**5.25** 0.207	**5.06** 0.199	**1.0** 0.039	WS.81113	GS.81113	**0.125** 0.276	**65**
65 2.559	**67** 2.638	**100** 3.937	**8.00** 0.315	**7.81** 0.307	**1.0** 0.039	WS.81213	GS.81213	**0.285** 0.628	
70 2.756	**72** 2.835	**95** 3.740	**5.25** 0.207	**5.06** 0.199	**1.0** 0.039	WS.81114	GS.81114	**0.133** 0.293	**70**
70 2.756	**72** 2.835	**105** 4.134	**8.00** 0.315	**7.81** 0.307	**1.0** 0.039	WS.81214	GS.81214	**0.302** 0.666	
75 2.953	**77** 3.031	**100** 3.937	**5.75** 0.226	**5.56** 0.219	**1.0** 0.039	WS.81115	GS.81115	**0.155** 0.342	**75**
75 2.953	**77** 3.031	**110** 4.331	**8.00** 0.315	**7.81** 0.307	**1.0** 0.039	WS.81215	GS.81215	**0.319** 0.703	
80 3.150	**82** 3.228	**105** 4.134	**5.75** 0.226	**5.56** 0.219	**1.0** 0.039	WS.81116	GS.81116	**0.165** 0.364	**80**
80 3.150	**82** 3.228	**115** 4.528	**8.50** 0.335	**8.31** 0.327	**1.0** 0.039	WS.81216	GS.81216	**0.357** 0.787	
85 3.346	**87** 3.425	**110** 4.331	**5.75** 0.226	**5.53** 0.218	**1.0** 0.039	WS.81117	GS.81117	**0.173** 0.381	**85**
85 3.346	**88** 3.465	**125** 4.921	**9.50** 0.374	**9.28** 0.365	**1.0** 0.039	WS.81217	GS.81217	**0.492** 1.085	
90 3.543	**92** 3.622	**120** 4.724	**6.50** 0.256	**6.28** 0.247	**1.0** 0.039	WS.81118	GS.81118	**0.253** 0.558	**90**
90 3.543	**93** 3.661	**135** 5.315	**10.50** 0.413	**10.28** 0.405	**1.1** 0.043	WS.81218	GS.81218	**0.655** 1.444	

NEEDLE OR ROLLER THRUST BEARINGS

METRIC SERIES

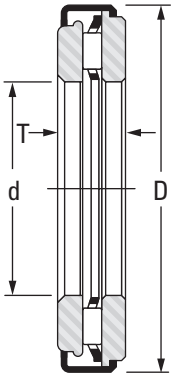

AXZ

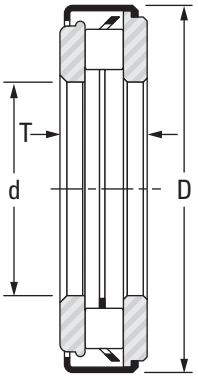

ARZ Light

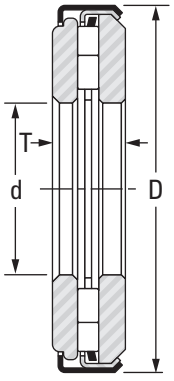

ARZ Heavy

Shaft Dia.	d	D	T	AXZ	ARZ Light	ARZ Heavy	C	C_0	Speed Rating Oil	Wt.
				Bearing Designations			Load Ratings			
mm	**mm** in.	**mm** in.	**mm** in.				**kN** lbf.		min^{-1}	**kg** lbs.
5	**5** 0.197	**13** 0.512	**5.5** 0.217	AXZ 5,5 5 13			**3.00** 670	**5.70** 1300	25000	**0.004** 0.008
6	**6** 0.236	**14** 0.551	**5.5** 0.217	AXZ 5,5 6 14			**3.15** 710	**6.35** 1400	22000	**0.004** 0.009
7	**7** 0.276	**15** 0.591	**5.5** 0.217	AXZ 5,5 7 15			**3.55** 800	**7.60** 1700	22000	**0.005** 0.010
8	**8** 0.315	**16** 0.630	**5.5** 0.217	AXZ 5,5 8 16			**3.70** 830	**8.30** 1900	22000	**0.005** 0.011
9	**9** 0.354	**17** 0.669	**5.5** 0.217	AXZ 5,5 9 17			**4.05** 910	**9.50** 2100	19000	**0.005** 0.012
10	**10** 0.394	**22.4** 0.882	**6** 0.236	AXZ 6 10 22,4			**5.00** 1120	**10.9** 2500	15500	**0.011** 0.025
	10 0.394	**22.4** 0.882	**6.5** 0.256		ARZ 6,5 10 22,4		**8.20** 1840	**17.9** 4000	15500	**0.012** 0.026
12	**12** 0.472	**26.4** 1.039	**6** 0.236	AXZ 6 12 26,4			**6.90** 1550	**17.7** 4000	13000	**0.017** 0.037
	12 0.472	**26.4** 1.039	**7** 0.275		ARZ 7 12 26,4		**12.7** 2860	**29.5** 6600	13000	**0.017** 0.037
15	**15** 0.591	**28.4** 1.118	**6** 0.236	AXZ 6 15 28,4			**7.40** 1660	**20.0** 4500	11500	**0.016** 0.034
	15 0.591	**28.4** 1.118	**7** 0.275		ARZ 7 15 28,4		**14.0** 3150	**34.0** 7600	11500	**0.019** 0.042
17	**17** 0.669	**30** 1.197	**6** 0.236	AXZ 6 17 30,4			**7.80** 1750	**22.0** 4900	10500	**0.018** 0.039
	17 0.669	**30.4** 1.197	**7** 0.275		ARZ 7 17 30,4		**15.0** 3370	**39.0** 8800	10500	**0.022** 0.049
20	**20** 0.787	**35** 1.394	**8** 0.315	AXZ 8 20 35,4			**11.80** 2650	**39.0** 8800	9000	**0.033** 0.072
	20 0.787	**35.4** 1.394	**10** 0.394		ARZ 10 20 35,4		**22.0** 4950	**54.0** 12100	9000	**0.038** 0.084
25	**25** 0.984	**43** 1.693	**8** 0.315	AXZ 8 25 43			**13.30** 2990	**49.0** 11000	7500	**0.047** 0.104
	25 0.984	**43** 1.693	**10** 0.394		ARZ 10 25 43		**25.5** 5730	**70.0** 15700	7500	**0.057** 0.126
	25 0.984	**53** 2.087	**11** 0.433			ARZ 11 25 53	**32.5** 7310	**122** 27400	6500	**0.122** 0.269
30	**30** 1.181	**48** 1.890	**8** 0.315	AXZ 8 30 48			**14.50** 3260	**57.0** 12800	6500	**0.054** 0.119
	30 1.181	**48** 1.890	**10** 0.394		ARZ 10 30 48		**26.5** 5960	**77.0** 17300	6500	**0.065** 0.143
	30 1.181	**61** 2.402	**14** 0.551			ARZ 14 30 61	**46.0** 10340	**162** 36400	5600	**0.196** 0.432

Continued on next page.

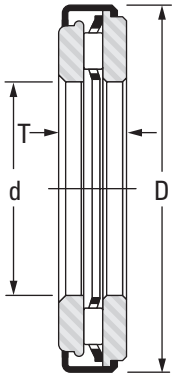

AXZ

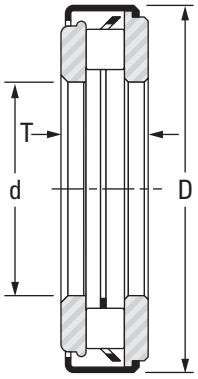

ARZ Light

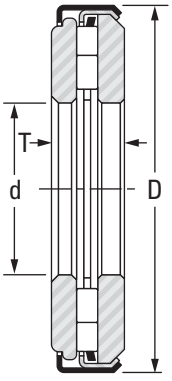

ARZ Heavy

Shaft Dia.	d	D	T	AXZ	ARZ Light	ARZ Heavy	C	C_0	Speed Rating Oil	Wt.
				Bearing Designations			Load Ratings			
mm	**mm** in.	**mm** in.	**mm** in.				**kN** lbf.		min^{-1}	**kg** lbs.
35	**35** 1.378	**54** 2.126	**8** 0.315	AXZ 8 35 54			**18.90** 4250	**84.0** 18900	5500	**0.066** 0.146
	35 1.378	**54** 2.126	**11** 0.433		ARZ 11 35 54		**33.8** 7600	**94.0** 21100	5500	**0.087** 0.192
	35 1.378	**69** 2.717	**14** 0.551			ARZ 14 35 69	**51.0** 11470	**194.0** 43600	4900	**0.246** 0.542
40	**40** 1.575	**61** 2.402	**8** 0.315	AXZ 8 40 61			**20.40** 4590	**96.0** 21600	5000	**0.084** 0.185
	40 1.575	**61** 2.402	**12** 0.472		ARZ 12 40 61		**46.0** 10340	**129** 29000	5000	**0.114** 0.251
	40 1.575	**79** 3.110	**17** 0.669			ARZ 17 40 79	**71.0** 15960	**265** 59600	4200	**0.387** 0.853
45	**45** 1.772	**66** 2.598	**8** 0.315	AXZ 8 45 66			**21.80** 4900	**109** 24500	4500	**0.092** 0.203
	45 1.772	**66** 2.598	**12** 0.472		ARZ 12 45 66		**49.0** 11000	**143** 32100	4500	**0.126** 0.278
	45 1.772	**86** 3.386	**22** 0.866			ARZ 22 45 86	**92.0** 20700	**340** 76400	3800	**0.595** 1.312
50	**50** 1.969	**71** 2.795	**8** 0.315	AXZ 8 50 71			**22.50** 5100	**118** 26500	4000	**0.100** 0.220
	50 1.969	**71** 2.795	**12** 0.472		ARZ 12 50 71		**51.0** 11500	**157** 35300	4000	**0.137** 0.302
	50 1.969	**96** 3.780	**22** 0.866			ARZ 22 50 96	**108.0** 24300	**430** 96700	3400	**0.756** 1.66
55	**55** 2.165	**106** 4.173	**22** 0.866			ARZ 22 55 106	**125.0** 28100	**530** 119100	3100	**0.917** 2.022
60	**60** 2.362	**86** 3.386	**10** 0.394	AXZ 10 60 86			**31.50** 7100	**193** 43400	3500	**0.194** 0.428
	60 2.362	**86** 3.386	**14** 0.551		ARZ 14 60 86		**71.0** 16000	**255** 57300	3500	**0.246** 0.542
	60 2.362	**111** 4.370	**22** 0.866			ARZ 22 60 111	**130.0** 29200	**580** 130400	2900	**0.977** 2.15
65	**65** 2.559	**116** 4.567	**22** 0.866			ARZ 22 65 116	**135.0** 30300	**620** 139400	2800	**1.040** 2.29
70	**70** 2.756	**96** 3.780	**10** 0.394	AXZ 10 70 96			**34.50** 7800	**223** 50100	3000	**0.220** 0.485
	70 2.756	**96** 3.780	**14** 0.551		ARZ 14 70 96		**77.0** 17300	**295** 66300	3000	**0.279** 0.615
80	**80** 3.150	**106** 4.173	**10** 0.394	AXZ 10 80 106			**36.50** 8200	**253** 56900	2700	**0.256** 0.564
	80 3.150	**106** 4.173	**14** 0.551		ARZ 14 80 106		**82.0** 18400	**330** 74200	2700	**0.312** 0.688

UNITIZED ROLLER THRUST BEARING ASSEMBLIES

METRIC SERIES

B

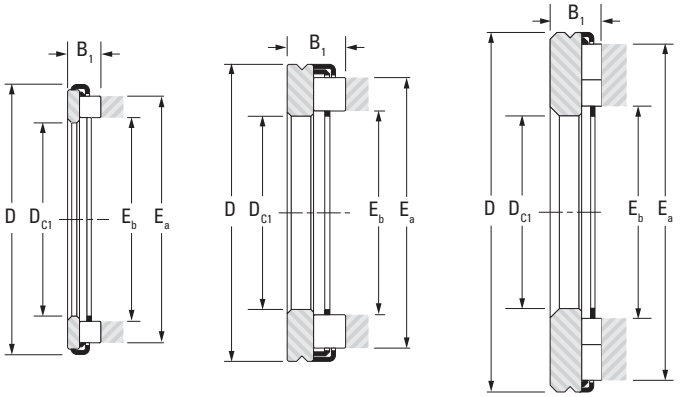

AR Light

AR Heavy

Shaft Dia.	D_{c1}	D	B_1	E_a	E_b	AR	AR	Wt.	C	C_0	Speed Rating Oil
	Assembly Dimensions					Assembly Designation			Load Ratings		
						Light Series	Heavy Series		Dynamic	Static	
mm	**mm** in.	**mm** in.	**mm** in.	**mm** in.	**mm** in.			**kg** lbs.	**kN** lbf.		min^{-1}
10	**10** 0.394	**22** 0.866	**4.5** 0.177	**18.5** 0.73	**12.2** 0.48	AR 4,5 10 22		**0.007** 0.016	**8.2** 1840	**17.9** 4020	15500
12	**12** 0.472	**26** 1.024	**5** 0.197	**22.9** 0.90	**14.8** 0.58	AR 5 12 26		**0.011** 0.024	**12.7** 2860	**29.5** 6630	13000
15	**15** 0.591	**28** 1.103	**5** 0.197	**24.9** 0.98	**16.8** 0.66	AR 5 15 28		**0.011** 0.024	**14.0** 3150	**34.0** 7640	11500
17	**17** 0.669	**30** 1.181	**5** 0.197	**26.9** 1.06	**18.8** 0.74	AR 5 17 30		**0.013** 0.028	**15.0** 3370	**39.0** 8770	10500
20	**20** 0.787	**35** 1.378	**7** 0.276	**31.6** 1.24	**22.0** 0.87	AR 7 20 35		**0.022** 0.049	**22.0** 4950	**54.0** 12100	9000
25	**25** 0.984	**42** 1.654	**7** 0.276	**37.3** 1.47	**27.7** 1.09	AR 7 25 42		**0.031** 0.068	**25.5** 5730	**70.0** 15700	7500
	25 0.984	**52** 2.047	**7** 0.276	**47.0** 1.85	**29.0** 1.14		AR 7 25 52	**0.070** 0.154	**32.5** 7310	**122.0** 27400	6500
30	**30** 1.181	**47** 1.851	**7** 0.276	**42.3** 1.67	**32.7** 1.29	AR 7 30 47		**0.036** 0.079	**26.5** 5960	**77.0** 17300	6500
	30 1.181	**60** 2.362	**9** 0.354	**53.5** 2.11	**33.5** 1.32		AR 9 30 60	**0.113** 0.249	**46.0** 10340	**162.0** 36400	5600
35	**35** 1.378	**53** 2.103	**8** 0.315	**47.8** 1.88	**37.8** 1.49	AR 8 35 53,4		**0.052** 0.115	**33.8** 7600	**94.0** 21100	5500
	35 1.378	**68** 2.677	**9** 0.354	**60.6** 2.39	**39.0** 1.54		AR 9 35 68	**0.144** 0.317	**51.0** 11500	**194.0** 43600	4900
40	**40** 1.575	**60** 2.378	**9** 0.354	**54.8** 2.16	**42.8** 1.69	AR 9 40 60,4		**0.070** 0.154	**46.0** 10300	**129.0** 29000	5000
	40 1.575	**78** 3.071	**11** 0.433	**70.0** 2.76	**44.0** 1.73		AR 11 40 78	**0.225** 0.496	**71.0** 16000	**265.0** 59600	4200
45	**45** 1.772	**65** 2.575	**9** 0.354	**59.8** 2.35	**47.8** 1.88	AR 9 45 65,4		**0.077** 0.170	**49.0** 11000	**143.0** 32100	4500
	45 1.772	**85** 3.347	**14** 0.551	**77.0** 3.03	**49.0** 1.93		AR 14 45 85	**0.350** 0.772	**92.0** 20700	**340.0** 76400	3800
50	**50** 1.968	**70** 2.772	**9** 0.354	**64.8** 2.55	**52.8** 2.08	AR 9 50 70,4		**0.082** 0.181	**51.0** 11500	**15 7.0** 35300	4000
	50 1.968	**95** 3.740	**14** 0.551	**86.0** 3.39	**54.0** 2.13		AR 14 50 95	**0.448** 0.988	**108.0** 24300	**430.0** 96700	3400
55	**55** 2.165	**78** 3.087	**10** 0.394	**72.5** 2.85	**58.5** 2.30	AR 10 55 78,4		**0.125** 0.276	**61.0** 13700	**203.0** 45600	3800
	55 2.165	**105** 4.134	**14** 0.551	**96.2** 3.79	**60.2** 2.37		AR 14 55 105	**0.537** 1.184	**125.0** 28100	**530.0** 119100	3100

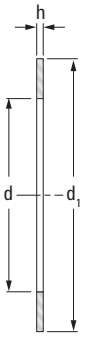

CP Thin

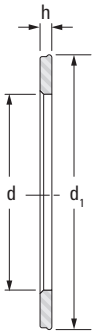

CP Thick

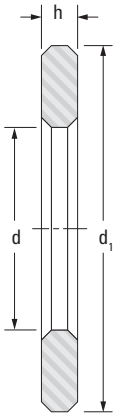

CP Heavy

d	d1	Thin Series	h	Wt.	Thick Series	h	Wt.	Heavy Series	h	Wt.	Shaft Dia.
Washer Dimension											
mm in.	**mm** in.		**mm** in.	**kg** lbs.		**mm** in.	**kg** lbs.		**mm** in.	**kg** lbs.	**mm**
10 0.396	**22** 0.846	CP 10 22	**0.8** 0.031	**0.004** 0.009	CP 2 10 22	**2** 0.079	**0.002** 0.004				**10**
12 0.474	**25** 1.003	CP 12 26	**0.8** 0.031	**0.003** 0.006	CP 2 12 26	**2** 0.079	**0.006** 0.014				**12**
15 0.593	**27** 1.081	CP 15 28	**0.8** 0.031	**0.003** 0.006	CP 2 15 28	**2** 0.079	**0.006** 0.013				**15**
17 0.671	**29** 1.160	CP 17 30	**0.8** 0.031	**0.003** 0.006	CP 2 17 30	**2** 0.079	**0.007** 0.015				**17**
20 0.789	**34** 1.357	CP 20 35	**0.8** 0.031	**0.004** 0.008	CP 3 20 35	**3** 0.118	**0.013** 0.029				**20**
25 0.988	**42** 1.634	CP 25 42	**0.8** 0.031	**0.005** 0.012	CP 3 25 42	**3** 0.118	**0.019** 0.042				**25**
25 0.992	**52** 2.045							CPR 4 25 52	**4** 0.157	**0.052** 0.115	**25**
30 1.183	**46** 1.830	CP 30 47	**0.8** 0.031	**0.006** 0.013	CP 3 30 47	**3** 0.118	**0.022** 0.049				**30**
30 1.189	**60** 2.360							CPR 5 30 60	**5** 0.197	**0.083** 0.183	
35 1.380	**51** 2.026	CP 35 52	**0.8** 0.031	**0.007** 0.015	CP 3 35 52	**3** 0.118	**0.026** 0.057				**35**
35 1.386	**68** 2.675							CPR 5 35 68	**5** 0.197	**0.102** 0.225	
40 1.577	**59** 2.341	CP 40 60	**0.8** 0.031	**0.009** 0.021	CP 3 40 60	**3** 0.118	**0.034** 0.075				**40**
40 1.583	**78** 3.069							CPR 6 40 78	**6** 0.236	**0.162** 0.357	
45 1.774	**64** 2.533	CP 45 65	**0.8** 0.031	**0.010** 0.022	CP 3 45 65	**3** 0.118	**0.037** 0.082				**45**
45 1.780	**85** 3.344							CPR 8 45 85	**8** 0.315	**0.245** 0.540	
50 1.970	**69** 2.731	CP 50 70	**0.8** 0.031	**0.011** 0.024	CP 3 50 70	**3** 0.118	**0.040** 0.088				**50**
50 1.970	**95** 2.731		0.031	0.024		0.118	0.088	CPR 8 50 95	**8** 0.315	**0.308** 0.679	
55 2.167	**77** 3.046	CP 55 78	**0.8** 0.031	**0.014** 0.031	CP 4 55 78	**4** 0.157	**0.069** 0.152				**55**
55 2.174	**105** 4.131							CPR 8 55 105	**8** 0.315	**0.380** 0.838	

Continued on next page.

UNITIZED ROLLER THRUST BEARING ASSEMBLIES – *continued*

METRIC SERIES

B

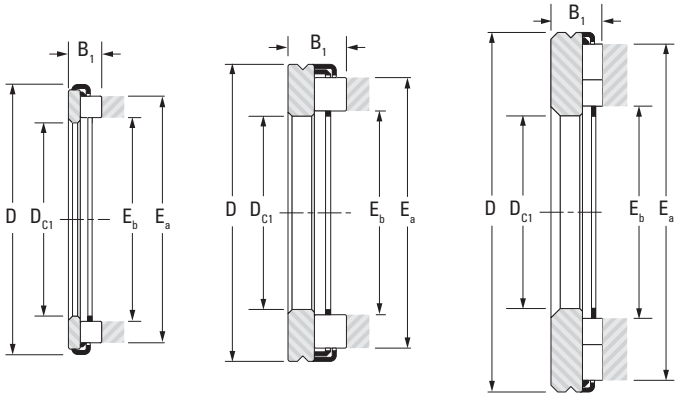

AR Light

AR Heavy

Shaft Dia.	D_{c1}	D	B_1	E_a	E_b	AR	AR	Wt.	C	C_0	Speed Rating Oil
	Assembly Dimensions					Assembly Designation			Load Ratings		
						Light Series	Heavy Series		Dynamic	Static	
mm	**mm** in.	**mm** in.	**mm** in.	**mm** in.	**mm** in.			**kg** lbs.	**kN** lbf.		min^{-1}
60	**60** 2.362	**85** 3.362	**10** 0.394	**79.5** 3.13	**63.5** 2.50	AR 10 60 85,4		**0.150** 0.331	**71.0** 16000	**255.0** 57300	3500
	60 2.362	**110** 4.331	**14** 0.551	**101.2** 3.98	**65.2** 2.57		AR 14 60 110	**0.572** 1.261	**130.0** 29200	**580.0** 130400	2900
65	**65** 2.559	**90** 3.559	**10** 0.394	**84.5** 3.33	**68.5** 2.70	AR 10 65 90,4		**0.160** 0.353	**74.0** 16600	**275.0** 61800	3200
	65 2.559	**115** 4.528	**14** 0.551	**106.2** 4.18	**70.2** 2.76		AR 14 65 115	**0.610** 1.345	**135.0** 30300	**620.0** 139400	2800
70	**70** 2.756	**95** 3.756	**10** 0.394	**89.5** 3.52	**73.5** 2.89	AR 10 70 95,4		**0.170** 0.375	**77.0** 17300	**295.0** 66300	3000
	70 2.756	**125** 4.921	**16** 0.630	**116.0** 4.57	**76.0** 2.99		AR 16 70 125	**0.775** 1.709	**174.0** 39100	**710.0** 159600	2600
75	**75** 2.953	**100** 3.938	**10** 0.394	**94.5** 3.72	**78.5** 3.09	AR 10 75 100,4		**0.180** 0.397	**80.0** 18000	**313.0** 70400	2800
	75 2.953	**135** 5.315	**16** 0.630	**126.0** 4.96	**82.0** 3.23		AR 16 75 135	**0.893** 1.969	**198.0** 44500	**860.0** 193300	2400
80	**80** 3.150	**105** 4.150	**10** 0.394	**99.5** 3.92	**83.5** 3.29	AR 10 80 105,4		**0.190** 0.419	**82.0** 18400	**330.0** 74200	2700
	80 3.150	**140** 5.512	**16** 0.630	**131.0** 5.16	**87.0** 3.43		AR 16 80 140	**0.960** 2.116	**208.0** 46800	**940.0** 211300	2300
85	**85** 3.346	**150** 5.906	**18** 0.709	**138.0** 5.43	**92.0** 3.62		AR 18 85 150	**1.256** 2.769	**230.0** 51700	**1010.0** 227100	2100
90	**90** 3.550	**155** 6.103	**18** 0.709	**143.0** 5.63	**97.0** 3.82	AR 18 90 155		**1.330** 2.932	**245.0** 55100	**1090.0** 245000	2000
100	**100** 3.937	**170** 6.693	**20** 0.787	**157.0** 6.18	**109.0** 4.29		AR 20 100 170	**1.740** 3.836	**280.0** 62900	**1250.0** 281000	1800
110	**110** 4.331	**190** 7.481	**24** 0.945	**178.0** 7.01	**118.0** 4.65		AR 24 110 190	**2.500** 5.512	**365.0** 82100	**1600.0** 359700	1700
120	**120** 4.724	**210** 8.268	**24** 0.945	**199.0** 7.83	**127.0** 5.00		AR 24 120 210	**3.200** 7.055	**470.0** 105700	**2300.0** 517100	1500
130	**130** 5.118	**225** 8.858	**24** 0.945	**214.0** 8.43	**138.0** 5.43		AR 24 130 225	**3.600** 7.937	**510.0** 114700	**2640.0** 593500	1400
140	**140** 5.511	**240** 9.449	**28** 1.102	**229.0** 9.02	**149.0** 5.87		AR 28 140 240	**4.800** 10.582	**600.0** 134900	**2980.0** 669900	1300

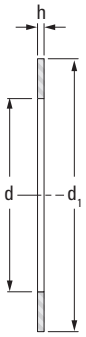

CP Thin

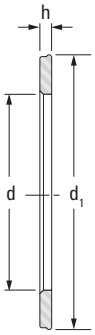

CP Thick

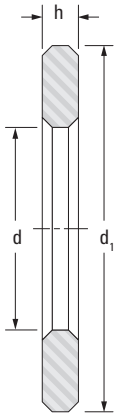

CP Heavy

d	d1	Thin Series	h	Wt.	Thick Series	h	Wt.	Heavy Series	h	Wt.	Shaft Dia.
Washer Dimension											
mm in.	**mm** in.		**mm** in.	**kg** lbs.		**mm** in.	**kg** lbs.		**mm** in.	**kg** lbs.	**mm**
60 2.366	**84** 3.318	CP 60 85	**0.8** 0.031	**0.017** 0.037	CP 4 60 85	**4** 0.157	**0.083** 0.183				**60**
60 2.371	**110** 4.328							CPR 8 60 110	**8** 0.315	**0.405** 0.893	
65 2.563	**89** 3.515	CP 1,5 65 90	**1.5** 0.059	**0.033** 0.073	CP 4 65 90	**4** 0.157	**0.088** 0.194				**65**
65 2.568	**115** 4.525							CPR 8 65 115	**8** 0.315	**0.430** 0.948	
70 2.760	**94** 3.711	CP 1,5 70 95	**1.5** 0.059	**0.034** 0.076	CP 4 70 95	**4** 0.157	**0.093** 0.205				**70**
70 2.765	**125** 4.918							CPR 8 70 125	**8** 0.315	**0.510** 1.12	
75 2.967	**99** 3.894	CP 1,5 75 100	**1.5** 0.059	**0.037** 0.082	CP 4 75 100	**4** 0.157	**0.099** 0.218				**75**
75 2.961	**135** 5.312							CPR 8 75 135	**8** 0.315	**0.595** 1.31	
80 3.163	**104** 4.091	CP 1,5 80 105	**1.5** 0.059	**0.039** 0.086	CP 4 80 105	**4** 0.157	**0.104** 0.229				**80**
80 3.159	**140** 5.508							CPR 8 80 140	**8** 0.315	**0.630** 1.39	
85 3.356	**150** 5.902							CPR 9 85 150	**9** 0.354	**0.815** 1.80	**85**
90 3.553	**155** 6.099							CPR 9 90 155	**9** 0.354	**0.840** 1.85	**90**
100 3.946	**170** 6.690							CPR 10 100 170	**10** 0.394	**1.13** 2.49	**100**
110 4.340	**190** 7.476							CPR 12 110 190	**12** 0.472	**1.70** 3.75	**110**
120 4.735	**210** 8.264							CPR 12 120 210	**12** 0.472	**2.10** 4.63	**120**
130 5.128	**225** 8.854							CPR 12 130 225	**12** 0.472	**2.40** 5.29	**130**
140	**240**							CPR 14 140 240	**14** 0.550	**3.20** 7.05	**140**

B

THRUST ASSEMBLIES AND THRUST BEARINGS – INCH SERIES

Thrust assemblies and thrust bearings of inch series are available in a variety of sizes. This catalog includes the most popular, standardized designs. If the backup surfaces cannot be used as raceways, hardened thrust washers are available.

REFERENCE STANDARDS ARE:

- **ANSI/ABMA Std. 21.2** – thrust needle roller and case assemblies and thrust washers – inch design.
- **ANSI/ABMA Std. 24.2** – thrust bearings of ball and cylindrical roller types – inch design.

NTA
Thrust needle roller and cage assembly

NTH
Thrust cylindrical roller and cage assembly

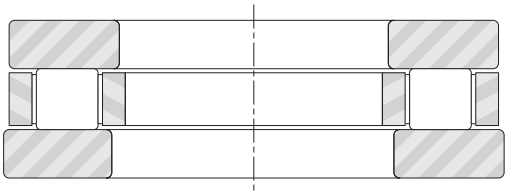

NTHA
Cylindrical roller thrust bearing

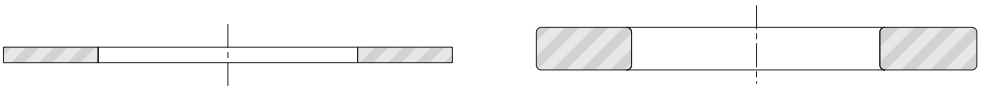

TRA…TRD
Thrust washers

Fig. B-75. Types of inch series thrust assemblies, thrust bearings and thrust washers

IDENTIFICATION

NTA is the complete prefix code for a thrust needle roller and cage assembly with inch nominal dimensions using needle rollers of the smallest practical diameter.

Thrust cylindrical roller and cage assemblies with inch nominal dimensions are identified by the prefix letters NTH. They use large diameter cylindrical rollers, providing higher load ratings.

Thrust washers of inch nominal dimensions are identified by the prefix letters TR followed by another letter such as A, B or C etc. – indicating washer thickness. TRA is the complete prefix code for the thinnest thrust washer made to inch nominal dimensions.

Most thrust washers are intended to be piloted on their bores. Some washers, however, are designed to be piloted on their outer diameters. Such washers are identified by the letter D, following the thickness code letter. Thus TRJD is the complete prefix code for a thrust washer with inch nominal dimensions of J thickness and designed to be piloted by its outer diameter.

Cylindrical roller thrust bearings, with prefix code NTHA, are made up of one NTH assembly – one TRI or TRJ bore-piloted washer and one TRID or TRJD outer-diameter piloted washer.

Because the bearing designation for thrust assemblies does not appear on the bearing itself, the manufacturer's parts list or another reliable source should always be consulted when ordering bearings for service or field replacement – to make certain that the correct bearing with the correct lubricant is used.

CONSTRUCTION

Thrust needle roller and cage assemblies (NTA) and thrust cylindrical roller and cage assemblies (NTH) have hardened cages and through-hardened, precision-ground rollers. The cages are securely fastened assemblies of two mating pieces. This construction minimizes cage stress and assures that the roller retaining function of the cage is unaffected by normal wear. The needle rollers and the cylindrical rollers are precision ground and lapped to close tolerance for optimum load distribution.

Thrust washers for the thrust needle roller and cage assemblies are designed for bore piloting. The thinner thrust washers are tumble burnished and may be out-of-flat due to heat treatment – but will flatten under load. The raceway surfaces of thick thrust washers are ground and lapped.

Thrust washers for the thrust cylindrical roller and cage assemblies are available in both bore-piloted and outer-diameter piloted types. Their piloting surfaces are ground and raceway surfaces are ground and lapped.

DIMENSIONAL ACCURACY

TOLERANCES FOR THRUST NEEDLE ROLLER AND CAGE ASSEMBLIES

Pages B-314 to B-322, list the nominal outer diameter, bore diameter and the needle roller diameter for the inch thrust needle roller and cage assemblies. And their corresponding thrust washers appear in the bearing tables.

Tolerances for the bore diameters and outer diameters of inch thrust assemblies are given in Table B-55.

Table B-55. Tolerances for bore (D_{c1}) and outer (D_c) diameters of nominal inch thrust needle (NTA) and cylindrical (NTH) roller and cage assemblies

NTA thrust needle roller and cage assemblies				
D_w	Deviations			
Needle roller diameter (nominal)	D_{c1}		D_c	
	Bore diameter		Outer diameter	
	Max.	Min.	Max.	Min.
mm **in.**	mm **in.**	mm **in.**	mm **in.**	mm **in.**
1.981 **0.078**	+0.178 **+0.007**	+0.051 **+0.002**	-0.254 **-0.010**	-0.508 **-0.020**
3.175 **0.125**	+0.254 **+0.010**	+0.051 **+0.002**	-0.254 **-0.010**	-0.635 **-0.025**
NTH thrust cylindrical roller and cage assemblies				
All diameters	+0.381 **+0.015**	0.000 **0.000**	-0.127 **-0.005**	-0.508 **-0.020**

BORE INSPECTION PROCEDURE FOR ASSEMBLY

The bore diameter (D_{c1}) of the assembly should be checked with "go" and "no go" plug gages. The "go" plug gage size is the minimum bore diameter of the assembly. The "no go" plug gage size is the maximum bore diameter of the assembly.

The assembly must fall freely from the "go" plug gage under its own free weight. The "no go" plug gage must not enter the bore. Where the "no go" plug gage can be forced through the bore, the assembly must not fall from the gage under its own weight.

TOLERANCES FOR THRUST WASHERS

Tolerances for the outer diameters and bore diameters of nominal inch thrust washers are given in Tables B-56 (1) and B-56 (2).

Table B-56 (1) . Tolerances for outer diameter (d_1) of nominal inch (TRA, TRB, etc.) thrust washers

d_1:Nominal outer diameter				Deviations			
>		≤		Max.		Min.	
mm	**in.**	mm	**in.**	mm	**in.**	mm	**in.**
6.000	**0.24**	133.400	**5.25**	-0.025	**-0.010**	-0.760	**-0.030**

Table B-56 (2) . Tolerances for bore diameter (d) of nominal inch (TRA, TRB, etc.) thrust washers

d:Nominal bore diameter				Deviations			
>		≤		Max.		Min.	
mm	**in.**	mm	**in.**	mm	**in.**	mm	**in.**
6.000	**0.24**	57.200	**2.25**	+0.300	**+0.012**	+0.050	**+0.002**
57.200	**2.25**	133.400	**5.25**	+0.430	**+0.017**	+0.050	**+0.002**

BORE INSPECTION PROCEDURE FOR THRUST WASHER

The bore diameter (d) of the thrust washer should be checked with "go" and "no go"" plug gages. The "go" plug gage size is the minimum bore diameter of the thrust washer. The "no go" plug gage size is the maximum bore diameter of the thrust washer.

The thrust washer, under its own weight, must fall freely from the "go" plug gage. The "no go" plug gage must not enter the bore. Where the "no go" plug gage can be forced through the bore, the thrust washer must not fall from the gage under its own weight.

TOLERANCES FOR CYLINDRICAL ROLLER THRUST BEARINGS

The tolerances for inch series cylindrical roller thrust bearings, cylindrical roller cage and thrust assemblies and their corresponding component thrust washers appear in the bearing tables.

MOUNTING TOLERANCES

THRUST NEEDLE ROLLER AND CAGE ASSEMBLIES

On NTA inch type thrust needle roller and cage assemblies, the cage bore has a larger contact area and a closer tolerance than the outer diameter. Therefore, bore piloting is preferred for these assemblies. To reduce wear, it is suggested that the piloting surface for the cage be hardened to an equivalent of at least 55 HRC.

Where design requirements prevent bore piloting, the NTA thrust needle roller and cage assemblies may be piloted on the outer diameters. It should be noted that the "diameter to clear washer O.D." given in the bearing tables is not suitable for outer diameter piloting. For such cases, suitable O.D. piloting dimensions should be determined in consultation with your representative.

THRUST WASHERS FOR USE WITH NTA THRUST NEEDLE ROLLER AND CAGE ASSEMBLIES

Ideally, a thrust washer should be stationary with respect to and piloted by its supporting or backing member – whether or not this is an integral part of the shaft or housing. There should be no rubbing action between the thrust washer and any other machine member. The economics of design, however, often preclude these ideal conditions and thrust washers must be employed in another manner. In such cases, design details should be determined in consultation with your representative.

THRUST CYLINDRICAL ROLLER AND CAGE ASSEMBLIES

Type NTH assembly cage has a relatively large contact area on both the bore and the outer diameter. Thus, these assemblies can be piloted by either the shaft or the housing. In order to reduce wear, it is suggested that the piloting surface for the cage be hardened to an equivalent of at least 55 HRC.

When the shaft is used as the piloting surface the outer diameter of the cage must clear the housing under all conditions. Conversely, when the housing is the piloting surface, the shaft must clear the cage bore under all conditions. The mounting dimensions are given in the bearing tables for both shaft and housing piloting. Bore inspection procedure for the assembly given on page B-311 should be used for checking the bore of NTH assemblies.

THRUST WASHERS FOR USE WITH THRUST CYLINDRICAL ROLLER AND CAGE ASSEMBLIES

Types TRID and TRJD thrust washers for use with thrust cylindrical roller and cage assemblies are designed to pilot from the housing and to clear the shaft. Types TRI and TRJ thrust washers are designed to pilot from the shaft and clear the housing. The thrust washers should be stationary with respect to their piloting (or locating) machine members. There should be no rubbing action between the washer and any other machine member.

BACKUP SURFACES

In some applications, it is desirable to use the backup surfaces as raceways for the rollers of the thrust assemblies. When this is done, these surfaces must be hardened to an equivalent of at least 58 HRC. If this hardness cannot be achieved and thrust washers cannot be used, the load ratings must be reduced as explained in the engineering section of this catalog.

Thrust raceway surfaces must be ground to a surface of 8 µin. Ra (0.20 µm Ra). When this requirement cannot be met, thrust washers must be used.

The raceways against which the rollers operate or the surfaces against which the thrust washers bear must be square with the axis of the shaft. Equally important, the raceway or surface backing the thrust washer must not be dished or coned. The permissible limits of out-of-squareness and dishing or coning are shown in the figures below.

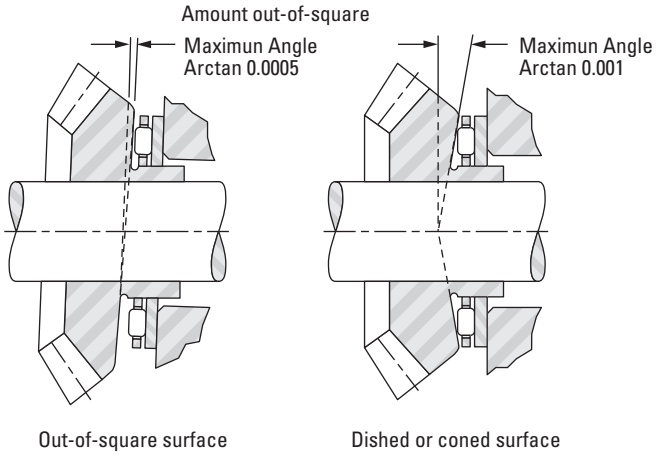

Fig. B-76. Permissible limits

TYPE NTHA CYLINDRICAL ROLLER THRUST BEARING

The NTHA cylindrical roller thrust bearing consists of the NTH thrust cylindrical roller and cage assembly and two thrust washers. This bearing is sold as a unit.

A typical mounting of the thrust bearing on a rotating shaft is shown in Fig. B-77. The bore of the rotating shaft supported thrust washer is ground for an accurate fit on the shaft. The outer diameter of the stationary housing supported thrust washer is ground for a proper fit in the housing.

The NTHA cylindrical roller thrust bearing cage is normally shaft piloted. In the event it is necessary to pilot the cage by the housing – Fig. B-78 illustrates a possible mounting arrangement. When other mounting arrangements are dictated by the application, they should be determined in consultation with your representative.

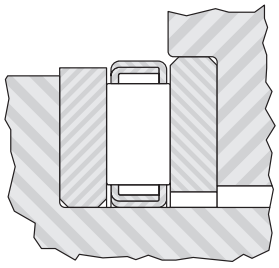

Fig. B-77.
Typical mounting of a thrust bearing when the shaft rotates

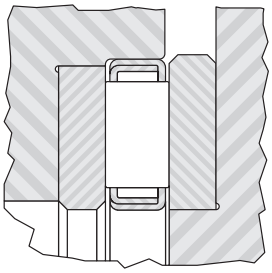

Fig. B-78.
NTHA possible mounting arrangement

LOAD RATINGS

MINIMUM AXIAL LOAD

Slippage can occur if the applied axial load is too light and the operating speed of the thrust needle roller and cage assembly is high – particularly if accompanied by inadequate lubrication. For satisfactory operation, a certain minimum load must be applied to a thrust needle roller and cage assembly which can be calculated from:

$F_{a\,min}$ = $C_0/2200$ [kN]

Where:

C_0 = static load rating [kN]
$F_{a\,min}$ = minimum axial load [kN]

COEFFICIENT OF FRICTION

In general, the coefficient of friction of a thrust bearing (consisting of a thrust needle or cylindrical roller and cage assembly and thrust washers) is defined as the friction torque divided by the product of the applied load and the bearing pitch radius. This coefficient of friction is not a constant value, but will vary considerably with load, speed and lubricant. Generally, the coefficient of friction becomes smaller as the load is increased, and larger as the speed is increased. It is suggested that a value of 0.004 to 0.005 be used as a conservative estimate.

LUBRICATION

Oil is the preferred lubricant for thrust needle or cylindrical roller and cage assemblies. An ample oil flow is absolutely necessary for high speeds or for moderate speeds when the load is relatively high.

When the application must utilize grease lubrication, the thrust needle roller and cage assembly should be ordered pre-greased. When the speeds are low and rotation is not continuous, the initial charge of grease may be suitable for the life of the application. When the speeds are moderate, the designer must provide for frequent re-greasing. Because the rollers tend to expel the lubricant radially outward, re-lubrication passages should be directed to the bore of the cage, whether oil or grease is used as the lubricant.

SPECIAL DESIGNS

Thrust needle roller and cage assemblies and thrust washers are also made to special dimensions and configurations, as well as from special materials – when quantities permit economical manufacture.

Thrust needle roller and cage assemblies are particularly adaptable to low-cost integral combinations, with special thrust washers. When the use of such special designs are considered, the following pages should be reviewed for evaluation of proposed arrangements.

THRUST NEEDLE ROLLER AND CAGE ASSEMBLIES, THRUST WASHERS

INCH SERIES

- Dimensions for bore and O.D. of thrust assemblies and washers are nominal.
- See page B-312 for details on piloting and backup surfaces.
- Thrust washers burnished at least one-quarter of bore area (remainder is rough breakaway finish).
- O.D. finish of washers will be as blanked.
- Thinner washers may be out-of-flat due to distortion in hardening in the free state (expected to flatten out under load).

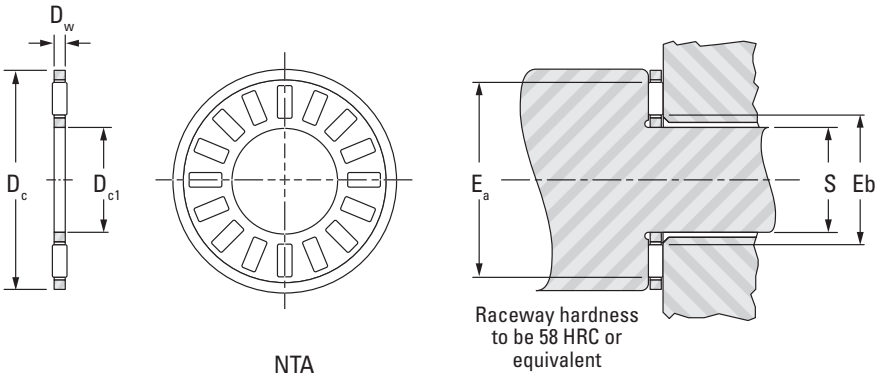

Shaft Dia.	D_{c1}	D_c	D_w	E_b	E_a	Assembly Designation	C	C_o	Speed Rating[1]	Wt.
	Assembly Dimensions						Load Ratings			
							Dynamic	Static		
in.	**mm** in.	**mm** in.	**mm** in.	**mm** in.	**mm** in.		**kN** lbf.		min^{-1}	**kg** lbs.
1/4	**6.35** 0.250	**17.45** 0.687	**1.984** 0.0781	**8.636** 0.340	**14.732** 0.580	NTA-411	**5.12** 1150	**10.76** 2420	26000	**0.001** 0.003
5/16	**7.92** 0.312	**19.05** 0.75	**1.984** 0.0781	**10.16** 0.400	**16.256** 0.640	NTA-512	**5.83** 1310	**13.17** 2 960	24000	**0.002** 0.004
3/8	**9.53** 0.375	**20.625** 0.812	**1.984** 0.0781	**11.68** 0.460	**18.034** 0.710	NTA-613	**6.05** 1360	**14.32** 3220	22000	**0.002** 0.004
1/2	**12.70** 0.500	**23.80** 0.937	**1.984** 0.0781	**14.99** 0.590	**21.08** 0.830	NTA-815	**7.16** 1610	**19.13** 4300	19000	**0.002** 0.005
9/16	**14.275** 0.562	**25.40** 1.000	**1.9837** 0.0781	**16.51** 0.650	**22.606** 0.890	NTA-916	**7.70** 1730	**21.53** 4840	18000	**0.003** 0.006
5/8	**15.88** 0.625	**28.575** 1.125	**1.9837** 0.0781	**18.03** 0.710	**25.908** 1.020	NTA-1018	**9.79** 2200	**30.38** 6830	15000	**0.003** 0.007

[1]Speed ratings listed are based on adequate oil lubrication. See page B-313 for lubrication information.
Suggestions for an application requiring O.D. piloting should be determined in consultation with your representative.

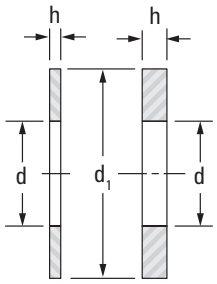

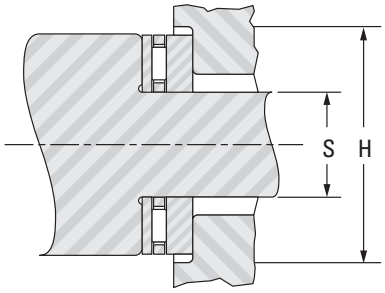

Thrust Washer Designation	d	d1	h		S		H (2)	Washer Wt.	Shaft Dia.
	Washer Dimensions				Piloting Dimensions		Dia. To Clear O.D.		
			Max.	Min.	Max.	Min.			
	mm in.	**mm** in.	**mm** in.	**mm** in.	**mm** in.	**mm** in.	**mm** in.	**kg** lbs.	in.
TRA-411	**6.35** 0.250	**17.45** 0.687	**0.81** 0.032	**0.76** 0.030	**6.35** 0.250	**6.27** 0.247	**18.26** 0.719	**0.001** 0.003	1/4
TRB-411	**6.35** 0.250	**17.45** 0.687	**1.60** 0.063	**1.52** 0.060	**6.35** 0.250	**6.27** 0.247	**18.26** 0.719	**0.002** 0.005	
TRC-411	**6.35** 0.250	**17.45** 0.687	**2.41** 0.095	**2.34** 0.092	**6.35** 0.250	**6.27** 0.247	**18.26** 0.719	**0.004** 0.008	
TRA-512	**7.92** 0.312	**19.05** 0.750	**0.81** 0.032	**0.76** 0.030	**7.92** 0.312	**7.85** 0.309	**19.84** 0.781	**0.001** 0.003	5/16
TRB-512	**7.92** 0.312	**19.05** 0.750	**1.60** 0.063	**1.52** 0.060	**7.92** 0.312	**7.85** 0.309	**19.84** 0.781	**0.003** 0.006	
TRA-613	**9.53** 0.375	**20.62** 0.812	**0.81** 0.032	**0.76** 0.030	**9.53** 0.375	**9.45** 0.372	**21.44** 0.844	**0.001** 0.003	3/8
TRB-613	**9.53** 0.375	**20.62** 0.812	**1.60** 0.063	**1.52** 0.060	**9.53** 0.375	**9.45** 0.372	**21.44** 0.844	**0.003** 0.006	
TRC-613	**9.53** 0.375	**20.62** 0.812	**2.41** 0.095	**2.34** 0.092	**9.53** 0.375	**9.45** 0.372	**21.44** 0.844	**0.004** 0.009	
TRA-815	**12.70** 0.500	**23.80** 0.937	**0.81** 0.032	**0.76** 0.030	**12.70** 0.500	**12.62** 0.497	**24.61** 0.969	**0.002** 0.004	1/2
TRB-815	**12.70** 0.500	**23.80** 0.937	**1.60** 0.063	**1.52** 0.060	**12.70** 0.500	**12.62** 0.497	**24.61** 0.969	**0.004** 0.008	
TRC-815	**12.70** 0.500	**23.80** 0.937	**2.41** 0.095	**2.34** 0.092	**12.70** 0.500	**12.62** 0.497	**24.61** 0.969	**0.005** 0.012	
TRA-916	**14.27** 0.562	**25.40** 1.000	**0.81** 0.032	**0.76** 0.030	**14.27** 0.562	**14.20** 0.559	**26.19** 1.031	**0.002** 0.005	9/16
TRB-916	**14.27** 0.562	**25.40** 1.000	**1.60** 0.063	**1.52** 0.060	**14.27** 0.562	**14.20** 0.559	**26.19** 1.031	**0.004** 0.008	
TRC-916	**14.27** 0.562	**25.40** 1.000	**2.41** 0.095	**2.34** 0.092	**14.27** 0.562	**14.20** 0.559	**26.19** 1.031	**0.006** 0.013	
TRA-1018	**15.88** 0.625	**28.58** 1.125	**0.81** 0.032	**0.76** 0.030	**15.88** 0.625	**15.80** 0.622	**29.36** 1.156	**0.003** 0.006	5/8
TRB-1018	**15.88** 0.625	**28.58** 1.125	**1.60** 0.063	**1.52** 0.060	**15.88** 0.625	**15.80** 0.622	**29.36** 1.156	**0.005** 0.012	
TRC-1018	**15.88** 0.625	**28.58** 1.125	**2.41** 0.095	**2.34** 0.092	**15.88** 0.625	**15.80** 0.622	**29.36** 1.156	**0.008** 0.018	
TRD-1018	**15.88** 0.625	**28.58** 1.125	**3.20** 0.126	**3.12** 0.123	**15.88** 0.625	**15.80** 0.622	**29.36** 1.156	**0.011** 0.024	
TRE-1018	**15.88** 0.625	**28.58** 1.125	**3.99** 0.157	**3.91** 0.154	**15.88** 0.625	**15.80** 0.622	**29.36** 1.156	**0.013** 0.029	

(2)If the shaft and the housing adjacent to the bearing O.D. are not concentric, the T.I.R. between the shaft and housing should be added to this dimension.

Continued on next page.

THRUST NEEDLE ROLLER AND CAGE ASSEMBLIES, THRUST WASHERS – *continued*

INCH SERIES

- Dimensions for bore and O.D. of thrust assemblies and washers are nominal.
- See page B-312 for details on piloting and backup surfaces.
- Thrust washers burnished at least one-quarter of bore area (remainder is rough breakaway finish).
- O.D. finish of washers will be as blanked.
- Thinner washers may be out-of-flat due to distortion in hardening in the free state (expected to flatten out under load).

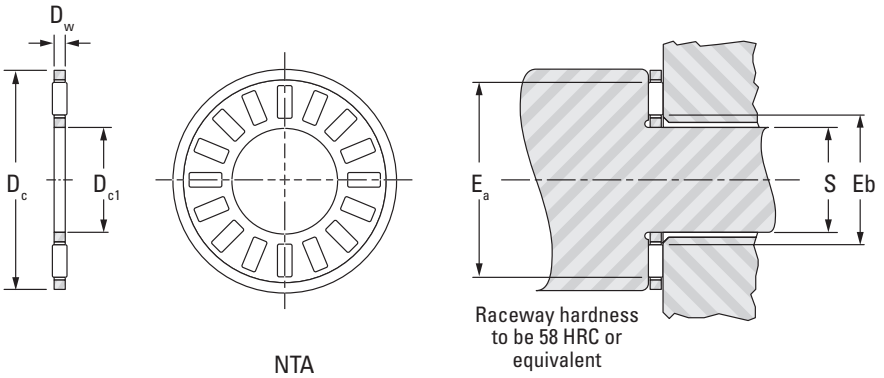

Shaft Dia.	D_{c1}	D_c	D_w	E_b	E_a	Assembly Designation	C	C_o	Speed Rating[1]	Wt.
	Assembly Dimensions						Load Ratings			
							Dynamic	Static		
in.	**mm** in.	**mm** in.	**mm** in.	**mm** in.	**mm** in.		**kN** lbf.		min^{-1}	**kg** lbs.
3/4	**19.05** 0.750	**31.75** 1.250	**1.9837** 0.0781	**21.34** 0.840	**28.956** 1.140	NTA-1220	**10.90** 2450	**36.48** 8200	14000	**0.004** 0.009
7/8	**22.23** 0.875	**36.50** 1.437	**1.984** 0.0781	**24.38** 0.960	**33.782** 1.330	NTA-1423	**13.43** 3020	**49.82** 11200	12000	**0.005** 0.011
7/8	**22.23** 0.875	**42.85** 1.687	**1.984** 0.0781	**25.91** 1.020	**39.878** 1.570	NTC-1427	**18.46** 4150	**78.29** 17600	9800	**0.008** 0.017
1	**25.40** 1.000	**39.675** 1.562	**1.984** 0.0781	**27.69** 1.090	**36.83** 1.450	NTA-1625	**13.83** 3110	**53.82** 12100	11000	**0.006** 0.013
1 1/8	**28.58** 1.125	**44.45** 1.75	**1.9837** 0.0781	**30.73** 1.210	**41.656** 1.640	NTA-1828	**16.68** 3750	**71.17** 16000	9600	**0.009** 0.019

[1]Speed ratings listed are based on adequate oil lubrication. See page B-313 for lubrication information.
Suggestions for an application requiring O.D. piloting should be determined in consultation with your representative.

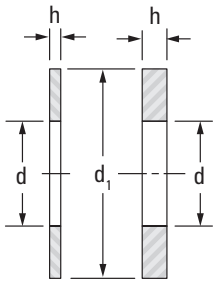

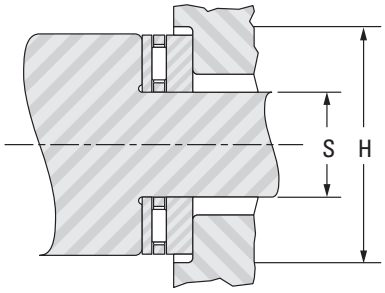

Thrust Washer Designation	d	d_1	h		S		H [2]	Washer Wt.	Shaft Dia.
	Washer Dimensions				Piloting Dimensions		Dia. To Clear O.D.		
			Max.	Min.	Max.	Min.			
	mm in.	**mm** in.	**mm** in.	**mm** in.	**mm** in.	**mm** in.	**mm** in.	**kg** lbs.	in.
TRA-1220	**19.05** 0.750	**31.75** 1.250	**0.81** 0.032	**0.76** 0.030	**19.05** 0.750	**18.97** 0.747	**32.54** 1.281	**0.003** 0.007	3/4
TRB-1220	**19.05** 0.750	**31.75** 1.250	**1.60** 0.063	**1.52** 0.060	**19.05** 0.750	**18.97** 0.747	**32.54** 1.281	**0.006** 0.013	
TRC-1220	**19.05** 0.750	**31.75** 1.250	**2.41** 0.095	**2.34** 0.092	**19.05** 0.750	**18.97** 0.747	**32.54** 1.281	**0.010** 0.021	
TRD-1220	**19.05** 0.750	**31.75** 1.250	**3.20** 0.126	**3.12** 0.123	**19.05** 0.750	**18.97** 0.747	**32.54** 1.281	**0.012** 0.026	
TRE-1220	**19.05** 0.750	**31.75** 1.250	**3.99** 0.157	**3.91** 0.154	**19.05** 0.750	**18.97** 0.747	**32.54** 1.281	**0.015** 0.033	
TRA-1423	**22.23** 0.875	**36.50** 1.437	**0.81** 0.032	**0.76** 0.030	**22.23** 0.875	**22.15** 0.872	**37.31** 1.469	**0.004** 0.009	7/8
TRB-1423	**22.23** 0.875	**36.50** 1.437	**1.60** 0.063	**1.52** 0.060	**22.23** 0.875	**22.15** 0.872	**37.31** 1.469	**0.008** 0.017	
TRC-1423	**22.23** 0.875	**36.50** 1.437	**2.41** 0.095	**2.34** 0.092	**22.23** 0.875	**22.15** 0.872	**37.31** 1.469	**0.012** 0.026	
TRD-1423	**22.23** 0.875	**36.50** 1.437	**3.20** 0.126	**3.12** 0.123	**22.23** 0.875	**22.15** 0.872	**37.31** 1.469	**0.015** 0.034	
TRB-1427	**22.23** 0.875	**42.86** 1.688	**1.60** 0.063	**1.52** 0.060	**22.23** 0.875	**22.15** 0.872	**43.66** 1.719	**0.013** 0.029	
TRC-1427	**22.23** 0.875	**42.86** 1.688	**2.41** 0.095	**2.34** 0.092	**22.23** 0.875	**22.15** 0.872	**43.66** 1.719	**0.020** 0.044	
TRD-1427	**22.23** 0.875	**42.86** 1.688	**3.20** 0.126	**3.12** 0.123	**22.23** 0.875	**22.15** 0.872	**43.66** 1.719	**0.026** 0.057	
TRA-1625	**25.40** 1.000	**39.67** 1.562	**0.81** 0.032	**0.76** 0.030	**25.40** 1.000	**25.32** 0.997	**40.49** 1.594	**0.005** 0.010	1
TRB-1625	**25.40** 1.000	**39.67** 1.562	**1.60** 0.063	**1.52** 0.060	**25.40** 1.000	**25.32** 0.997	**40.49** 1.594	**0.009** 0.019	
TRD-1625	**25.40** 1.000	**39.67** 1.562	**3.20** 0.126	**3.12** 0.123	**25.40** 1.000	**25.32** 0.997	**40.49** 1.594	**0.017** 0.038	
TRE-1625	**25.40** 1.000	**39.67** 1.562	**3.99** 0.157	**3.91** 0.154	**25.40** 1.000	**25.32** 0.997	**40.49** 1.594	**0.021** 0.047	
TRA-1828	**28.58** 1.125	**44.45** 1.750	**0.81** 0.032	**0.76** 0.030	**28.58** 1.125	**28.50** 1.122	**45.24** 1.781	**0.006** 0.013	1 1/8
TRB-1828	**28.58** 1.125	**44.45** 1.750	**1.60** 0.063	**1.52** 0.060	**28.58** 1.125	**28.50** 1.122	**45.24** 1.781	**0.011** 0.024	
TRC-1828	**28.58** 1.125	**44.45** 1.750	**2.41** 0.095	**2.34** 0.092	**28.58** 1.125	**28.50** 1.122	**45.24** 1.781	**0.017** 0.037	

[2] If the shaft and the housing adjacent to the bearing O.D. are not concentric, the T.I.R. between the shaft and housing should be added to this dimension.

Continued on next page.

THRUST NEEDLE ROLLER AND CAGE ASSEMBLIES, THRUST WASHERS – *continued*

INCH SERIES

- Dimensions for bore and O.D. of thrust assemblies and washers are nominal.
- See page B-312 for details on piloting and backup surfaces.
- Thrust washers burnished at least one-quarter of bore area (remainder is rough breakaway finish).
- O.D. finish of washers will be as blanked.
- Thinner washers may be out-of-flat due to distortion in hardening in the free state (expected to flatten out under load).

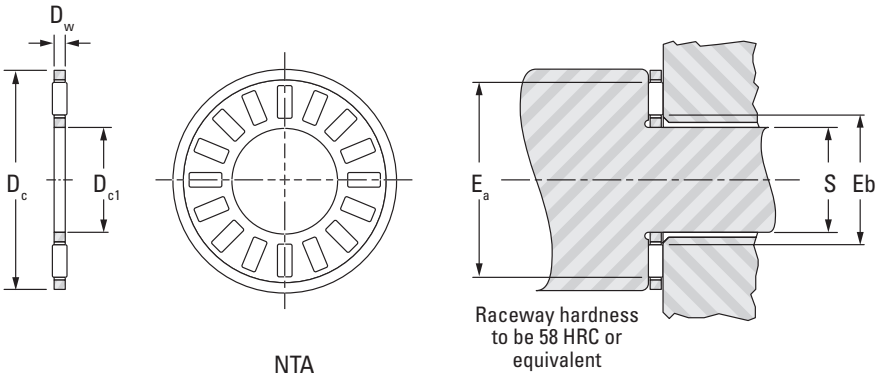

Shaft Dia.	D_{c1}	D_c	D_w	E_b	E_a	Assembly Designation	C	C_o	Speed Rating[1]	Wt.
	Assembly Dimensions						Load Ratings			
							Dynamic	Static		
in.	**mm** in.	**mm** in.	**mm** in.	**mm** in.	**mm** in.		**kN** lbf.		min^{-1}	**kg** lbs.
1 1/4	**31.75** 1.250	**49.20** 1.937	**1.9837** 0.0781	**34.04** 1.340	**46.228** 1.820	NTA-2031	**20.15** 4530	**93.41** 21000	8600	**0.010** 0.021
1 3/8	**34.93** 1.375	**52.375** 2.062	**1.9837** 0.0781	**37.08** 1.460	**49.53** 1.950	NTA-2233	**21.35** 4800	**103.20** 23200	8000	**0.010** 0.023
1 1/2	**38.10** 1.500	**55.55** 2.187	**1.9837** 0.0781	**40.39** 1.590	**52.578** 2.070	NTA-2435	**23.22** 5220	**117.88** 26500	7600	**0.011** 0.025
1 3/4	**44.45** 1.750	**63.50** 2.500	**1.984** 0.0781	**46.74** 1.840	**58.928** 2.320	NTA-2840	**25.31** 5690	**137.45** 30900	6800	**0.014** 0.031

[1]Speed ratings listed are based on adequate oil lubrication. See page B-313 for lubrication information.
Suggestions for an application requiring O.D. piloting should be determined in consultation with your representative.

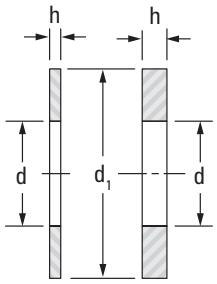

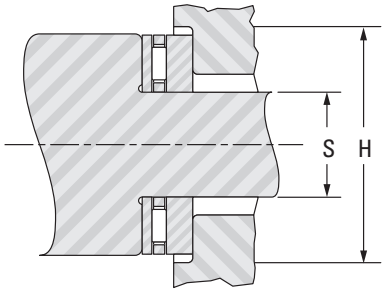

Thrust Washer Designation	d	d_1	h		S		H [2]	Washer Wt.	Shaft Dia.
	Washer Dimensions				Piloting Dimensions		Dia. To Clear O.D.		
			Max.	Min.	Max.	Min.			
	mm in.	**mm** in.	**mm** in.	**mm** in.	**mm** in.	**mm** in.	**mm** in.	**kg** lbs.	in.
TRD-1828	**28.58** 1.125	**44.45** 1.750	**3.20** 0.126	**3.12** 0.123	**28.58** 1.125	**28.50** 1.122	**45.24** 1.781	**0.022** 0.048	
TRA-2031	**31.75** 1.250	**49.20** 1.937	**0.81** 0.032	**0.76** 0.030	**31.75** 1.250	**31.67** 1.247	**50.01** 1.969	**0.007** 0.015	1 1/4
TRB-2031	**31.75** 1.250	**49.20** 1.937	**1.60** 0.063	**1.52** 0.060	**31.75** 1.250	**31.67** 1.247	**50.01** 1.969	**0.014** 0.030	
TRC-2031	**31.75** 1.250	**49.20** 1.937	**2.41** 0.095	**2.34** 0.092	**31.75** 1.250	**31.67** 1.247	**50.01** 1.969	**0.020** 0.044	
TRD-2031	**31.75** 1.250	**49.20** 1.937	**3.20** 0.126	**3.12** 0.123	**31.75** 1.250	**31.67** 1.247	**50.01** 1.969	**0.026** 0.058	
TRF-2031	**31.75** 1.250	**49.20** 1.937	**4.78** 0.188	**4.70** 0.185	**31.75** 1.250	**31.67** 1.247	**50.01** 1.969	**0.041** 0.090	
TRA-2233	**34.93** 1.375	**52.37** 2.062	**0.81** 0.032	**0.76** 0.030	**34.93** 1.375	**34.85** 1.372	**53.19** 2.094	**0.007** 0.016	1 3/8
TRB-2233	**34.93** 1.375	**52.37** 2.062	**1.60** 0.063	**1.52** 0.060	**34.93** 1.375	**34.85** 1.372	**53.19** 2.094	**0.015** 0.033	
TRC-2233	**34.93** 1.375	**52.37** 2.062	**2.41** 0.095	**2.34** 0.092	**34.93** 1.375	**34.85** 1.372	**53.19** 2.094	**0.018** 0.040	
TRD-2233	**34.93** 1.375	**52.37** 2.062	**3.20** 0.126	**3.12** 0.123	**34.93** 1.375	**34.85** 1.372	**53.19** 2.094	**0.029** 0.065	
TRE-2233	**34.93** 1.375	**52.37** 2.062	**3.99** 0.157	**3.91** 0.154	**34.93** 1.375	**34.85** 1.372	**53.19** 2.094	**0.037** 0.081	
TRF-2233	**34.93** 1.375	**52.37** 2.062	**4.78** 0.188	**4.70** 0.185	**34.93** 1.375	**34.85** 1.372	**53.19** 2.094	**0.044** 0.097	
TRA-2435	**38.10** 1.500	**55.55** 2.187	**0.81** 0.032	**0.76** 0.030	**38.10** 1.500	**38.02** 1.497	**56.36** 2.219	**0.008** 0.017	1 1/2
TRB-2435	**38.10** 1.500	**55.55** 2.187	**1.60** 0.063	**1.52** 0.060	**38.10** 1.500	**38.02** 1.497	**56.36** 2.219	**0.015** 0.034	
TRC-2435	**38.10** 1.500	**55.55** 2.187	**2.41** 0.095	**2.34** 0.092	**38.10** 1.500	**38.02** 1.497	**56.36** 2.219	**0.023** 0.050	
TRD-2435	**38.10** 1.500	**55.55** 2.187	**3.20** 0.126	**3.12** 0.123	**38.10** 1.500	**38.02** 1.497	**56.36** 2.219	**0.030** 0.067	
TRF-2435	**38.10** 1.500	**55.55** 2.187	**4.78** 0.188	**4.70** 0.185	**38.10** 1.500	**38.02** 1.497	**56.36** 2.219	**0.045** 0.100	
TRA-2840	**44.45** 1.750	**63.50** 2.500	**0.81** 0.032	**0.76** 0.030	**44.45** 1.750	**44.37** 1.747	**64.29** 2.531	**0.010** 0.021	1 3/4
TRB-2840	**44.45** 1.750	**63.50** 2.500	**1.60** 0.063	**1.52** 0.060	**44.45** 1.750	**44.37** 1.747	**64.29** 2.531	**0.020** 0.044	

[2] If the shaft and the housing adjacent to the bearing O.D. are not concentric, the T.I.R. between the shaft and housing should be added to this dimension.

Continued on next page.

THRUST NEEDLE ROLLER AND CAGE ASSEMBLIES, THRUST WASHERS – *continued*

INCH SERIES

- Dimensions for bore and O.D. of thrust assemblies and washers are nominal.
- See page B-312 for details on piloting and backup surfaces.
- Thrust washers burnished at least one-quarter of bore area (remainder is rough breakaway finish).
- O.D. finish of washers will be as blanked.
- Thinner washers may be out-of-flat due to distortion in hardening in the free state (expected to flatten out under load).

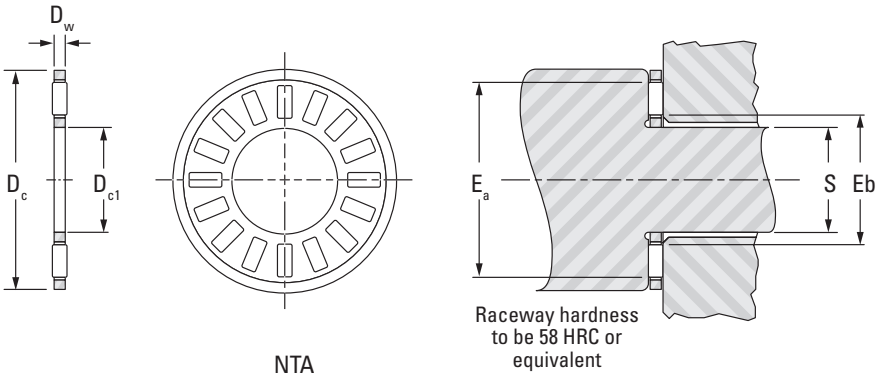

Shaft Dia.	D_{c1}	D_c	D_w	E_b	E_a	Assembly Designation	C	C_o	Speed Rating[1]	Wt.
	Assembly Dimensions						Load Ratings			
							Dynamic	Static		
in.	**mm** in.	**mm** in.	**mm** in.	**mm** in.	**mm** in.		**kN** lbf.		min^{-1}	**kg** lbs.
2	**50.80** 2.000	**69.85** 2.750	**1.9837** 0.0781	**53.09** 2.090	**65.278** 2.570	NTA-3244	**24.02** 5400	**132.56** 29800	6100	**0.015** 0.033
2 1/8	**53.98** 2.125	**73.025** 2.875	**1.984** 0.0781	**56.39** 2.220	**68.58** 2.700	NTA-3446	**24.42** 5490	**137.45** 30900	5800	**0.016** 0.036
2 1/4	**57.15** 2.250	**76.20** 3.000	**1.984** 0.0781	**59.44** 2.340	**71.628** 2.820	NTA-3648	**24.78** 5570	**142.34** 32000	5600	**0.017** 0.038
2 1/4	**57.15** 2.250	**79.375** 3.125	**3.175** 0.1250	**59.94** 2.360	**75.184** 2.960	NTA-3650	**37.68** 8470	**177.04** 39800	5300	**0.029** 0.064
2 1/2	**63.50** 2.500	**82.55** 3.250	**1.9837** 0.0781	**65.79** 2.590	**77.978** 3.070	NTA-4052	**25.53** 5740	**152.13** 34200	5100	**0.019** 0.041

[1]Speed ratings listed are based on adequate oil lubrication. See page B-313 for lubrication information.
Suggestions for an application requiring O.D. piloting should be determined in consultation with your representative.

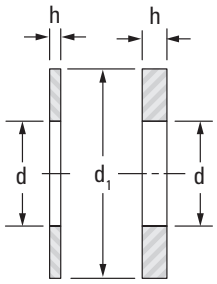

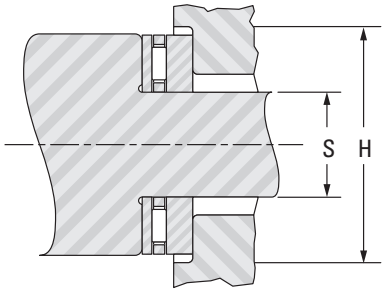

Thrust Washer Designation	d	d_1	h		S		H [2]	Washer Wt.	Shaft Dia.
	Washer Dimensions				Piloting Dimensions		Dia. To Clear O.D.		
			Max.	Min.	Max.	Min.			
	mm in.	**mm** in.	**mm** in.	**mm** in.	**mm** in.	**mm** in.	**mm** in.	**kg** lbs.	in.
TRC-2840	**44.45** 1.750	**63.50** 2.500	**2.41** 0.095	**2.34** 0.092	**44.45** 1.750	**44.37** 1.747	**64.29** 2.531	**0.029** 0.063	
TRD-2840	**44.45** 1.750	**63.50** 2.500	**3.20** 0.126	**3.12** 0.123	**44.45** 1.750	**44.37** 1.747	**64.29** 2.531	**0.038** 0.084	
TRF-2840	**44.45** 1.750	**63.50** 2.500	**4.78** 0.188	**4.70** 0.185	**44.45** 1.750	**44.37** 1.747	**64.29** 2.531	**0.057** 0.126	
TRA-3244	**50.80** 2.000	**69.85** 2.750	**0.81** 0.032	**0.76** 0.030	**50.80** 2.000	**50.72** 1.997	**70.64** 2.781	**0.011** 0.024	2
TRB-3244	**50.80** 2.000	**69.85** 2.750	**1.60** 0.063	**1.52** 0.060	**50.80** 2.000	**50.72** 1.997	**70.64** 2.781	**0.022** 0.048	
TRC-3244	**50.80** 2.000	**69.85** 2.750	**2.41** 0.095	**2.34** 0.092	**50.80** 2.000	**50.72** 1.997	**70.64** 2.781	**0.033** 0.072	
TRD-3244	**50.80** 2.000	**69.85** 2.750	**3.20** 0.126	**3.12** 0.123	**50.80** 2.000	**50.72** 1.997	**70.64** 2.781	**0.044** 0.096	
TRF-3244	**50.80** 2.000	**69.85** 2.750	**4.78** 0.188	**4.70** 0.185	**50.80** 2.000	**50.72** 1.997	**70.64** 2.781	**0.066** 0.145	
TRA-3446	**53.98** 2.125	**73.03** 2.875	**0.81** 0.032	**0.76** 0.030	**53.98** 2.125	**53.90** 2.122	**73.81** 2.906	**0.012** 0.026	2 1/8
TRB-3446	**53.98** 2.125	**73.03** 2.875	**1.60** 0.063	**1.52** 0.060	**53.98** 2.125	**53.90** 2.122	**73.81** 2.906	**0.024** 0.052	
TRC-3446	**53.98** 2.125	**73.03** 2.875	**2.41** 0.095	**2.34** 0.092	**53.98** 2.125	**53.90** 2.122	**73.81** 2.906	**0.035** 0.078	
TRD-3446	**53.98** 2.125	**73.03** 2.875	**3.20** 0.126	**3.12** 0.123	**53.98** 2.125	**53.90** 2.122	**73.81** 2.906	**0.047** 0.103	
TRA-3648	**57.15** 2.250	**76.20** 3.000	**0.81** 0.032	**0.76** 0.030	**57.15** 2.250	**57.07** 2.247	**76.99** 3.031	**0.012** 0.026	2 1/4
TRB-3648	**57.15** 2.250	**76.20** 3.000	**1.60** 0.063	**1.52** 0.060	**57.15** 2.250	**57.07** 2.247	**76.99** 3.031	**0.022** 0.048	
TRC-3648	**57.15** 2.250	**76.20** 3.000	**2.41** 0.095	**2.34** 0.092	**57.15** 2.250	**57.07** 2.247	**76.99** 3.031	**0.037** 0.081	
TRD-3648	**57.15** 2.250	**76.20** 3.000	**3.20** 0.126	**3.12** 0.123	**57.15** 2.250	**57.07** 2.247	**76.99** 3.031	**0.048** 0.105	
TRF-3648	**57.15** 2.250	**76.20** 3.000	**4.78** 0.188	**4.70** 0.185	**57.15** 2.250	**57.07** 2.247	**76.99** 3.031	**0.071** 0.157	
					57.15 2.250	**57.07** 2.247	**76.99** 3.156		2 1/4
TRA-4052	**63.50** 2.500	**82.55** 3.250	**0.81** 0.032	**0.76** 0.030	**63.50** 2.500	**63.42** 2.497	**83.34** 3.281	**0.013** 0.029	2 1/2
TRB-4052	**63.50** 2.500	**82.55** 3.250	**1.60** 0.063	**1.52** 0.060	**63.50** 2.500	**63.42** 2.497	**83.34** 3.281	**0.027** 0.059	

[2]If the shaft and the housing adjacent to the bearing O.D. are not concentric, the T.I.R. between the shaft and housing should be added to this dimension.

Continued on next page.

THRUST NEEDLE ROLLER AND CAGE ASSEMBLIES, THRUST WASHERS – *continued*

INCH SERIES

- Dimensions for bore and O.D. of thrust assemblies and washers are nominal.
- See page B-312 for details on piloting and backup surfaces.
- Thrust washers burnished at least one-quarter of bore area (remainder is rough breakaway finish).
- O.D. finish of washers will be as blanked.
- Thinner washers may be out-of-flat due to distortion in hardening in the free state (expected to flatten out under load).

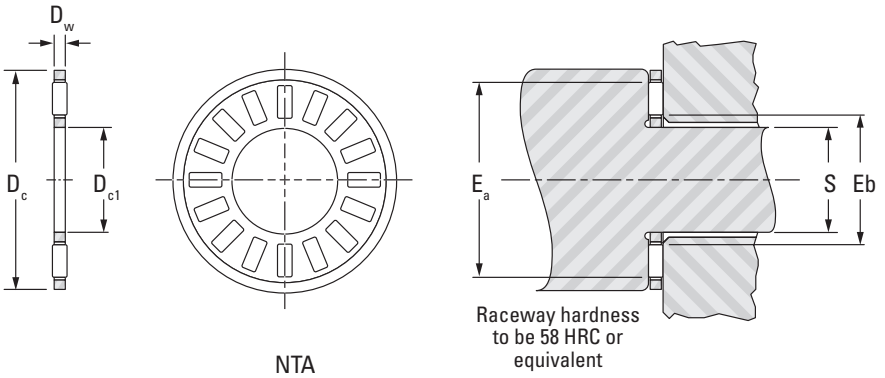

Shaft Dia.	D_{c1}	D_c	D_w	E_b	E_a	Assembly Designation	C	C_o	Speed Rating[1]	Wt.
	Assembly Dimensions						Load Ratings			
							Dynamic	Static		
in.	**mm** in.	**mm** in.	**mm** in.	**mm** in.	**mm** in.		**kN** lbf.		min^{-1}	**kg** lbs.
2 3/4	**69.85** 2.750	**92.075** 3.625	**3.175** 0.1250	**72.64** 2.860	**87.884** 3.460	NTA-4458	**47.60** 10700	**255.8** 57500	4600	**0.037** 0.082
3	**76.20** 3.000	**95.25** 3.750	**1.9837** 0.0781	**78.49** 3.090	**90.678** 3.570	NTA-4860	**26.96** 6060	**172.1** 38700	4400	**0.022** 0.048
3 1/4	**82.55** 3.250	**104.78** 4.125	**3.175** 0.1250	**85.34** 3.360	**100.58** 3.960	NTA-5266	**51.60** 11600	**294.9** 66300	4000	**0.042** 0.092
3 3/4	**95.25** 3.750	**117.48** 4.625	**3.175** 0.1250	**98.04** 3.860	**113.28** 4.460	NTA-6074	**56.05** 12600	**344.3** 77400	3500	**0.050** 0.11
4 1/8	**104.78** 4.125	**128.57** 5.062	**3.175** 0.125	**107.44** 4.230	**124.46** 4.900	NTA-6681	**63.61** 14300	**414.6** 93200	3200	**0.062** 0.136

[1]Speed ratings listed are based on adequate oil lubrication. See page B-313 for lubrication information.
Suggestions for an application requiring O.D. piloting should be determined in consultation with your representative.

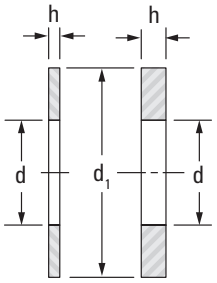

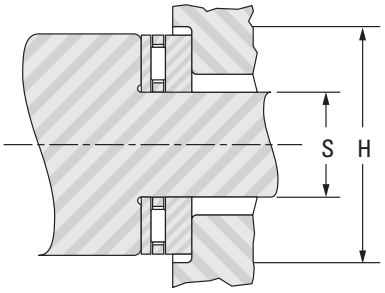

Thrust Washer Designation	d	d_1	h		S		H [2]	Washer Wt.	Shaft Dia.
	Washer Dimensions				Piloting Dimensions		Dia. To Clear O.D.		
			Max.	Min.	Max.	Min.			
	mm in.	**mm** in.	**mm** in.	**mm** in.	**mm** in.	**mm** in.	**mm** in.	**kg** lbs.	in.
TRC-4052	**63.50** 2.500	**82.55** 3.250	**2.41** 0.095	**2.34** 0.092	**63.50** 2.500	**63.42** 2.497	**83.34** 3.281	**0.041** 0.09	
TRC-4052	**63.50** 2.500	**82.55** 3.250	**3.20** 0.126	**3.12** 0.123	**63.50** 2.500	**63.42** 2.497	**83.34** 3.281	**0.054** 0.119	
TRA-4458	**69.85** 2.750	**92.08** 3.625	**0.81** 0.032	**0.76** 0.030	**69.85** 2.750	**69.77** 2.747	**92.86** 3.656	**0.018** 0.039	2 3/4
TRB-4458	**69.85** 2.750	**92.08** 3.625	**1.60** 0.063	**1.52** 0.060	**69.85** 2.750	**69.77** 2.747	**92.86** 3.656	**0.035** 0.077	
TRC-4458	**69.85** 2.750	**92.08** 3.625	**2.41** 0.095	**2.34** 0.092	**69.85** 2.750	**69.77** 2.747	**92.86** 3.656	**0.051** 0.113	
TRD-4458	**69.85** 2.750	**92.08** 3.625	**3.20** 0.126	**3.12** 0.123	**69.85** 2.750	**69.77** 2.747	**92.86** 3.656	**0.069** 0.152	
TRF-4458	**69.85** 2.750	**92.08** 3.625	**4.78** 0.188	**4.70** 0.185	**69.85** 2.750	**69.77** 2.747	**92.86** 3.656	**0.104** 0.229	
TRA-4860	**76.20** 3.000	**95.25** 3.750	**0.81** 0.032	**0.76** 0.030	**76.20** 3.000	**76.12** 2.997	**96.04** 3.781	**0.015** 0.034	3
TRB-4860	**76.20** 3.000	**95.25** 3.750	**1.60** 0.063	**1.52** 0.060	**76.20** 3.000	**76.12** 2.997	**96.04** 3.781	**0.032** 0.07	
TRD-4860	**76.20** 3.000	**95.25** 3.750	**3.20** 0.126	**3.12** 0.123	**76.20** 3.000	**76.12** 2.997	**96.04** 3.781	**0.061** 0.135	
TRA-5266	**82.55** 3.250	**104.78** 4.125	**0.81** 0.032	**0.76** 0.030	**82.55** 3.250	**82.47** 3.247	**105.56** 4.156	**0.020** 0.044	3 1/4
TRD-5266	**82.55** 3.250	**104.78** 4.125	**3.20** 0.126	**3.12** 0.123	**82.55** 3.250	**82.47** 3.247	**105.56** 4.156	**0.080** 0.176	
TRA-6074	**95.25** 3.750	**117.48** 4.625	**0.81** 0.032	**0.76** 0.030	**95.25** 3.750	**95.17** 3.747	**118.26** 4.656	**0.023** 0.05	3 3/4
TRB-6074	**95.25** 3.750	**117.48** 4.625	**1.60** 0.063	**1.52** 0.060	**95.25** 3.750	**95.17** 3.747	**118.26** 4.656	**0.046** 0.101	
TRC-6074	**95.25** 3.750	**117.48** 4.625	**2.41** 0.095	**2.34** 0.092	**95.25** 3.750	**95.17** 3.747	**118.26** 4.656	**0.069** 0.152	
TRD-6074	**95.25** 3.750	**117.48** 4.625	**3.20** 0.126	**3.12** 0.123	**95.25** 3.750	**95.17** 3.747	**118.26** 4.656	**0.092** 0.202	
TRA-6681	**104.78** 4.125	**128.57** 5.062	**0.81** 0.032	**0.76** 0.030	**104.78** 4.125	**104.70** 4.122	**129.39** 5.094	**0.027** 0.059	4 1/8
TRC-6681	**104.78** 4.125	**128.57** 5.062	**2.41** 0.095	**2.34** 0.092	**104.78** 4.125	**104.70** 4.122	**129.39** 5.094	**0.081** 0.178	
TRD-6681	**104.78** 4.125	**128.57** 5.062	**3.20** 0.126	**3.12** 0.123	**104.78** 4.125	**104.70** 4.122	**129.39** 5.094	**0.109** 0.24	
TRF-6681	**104.78** 4.125	**128.57** 5.062	**4.78** 0.188	**4.70** 0.185	**104.78** 4.125	**104.70** 4.122	**129.39** 5.094	**0.161** 0.354	

[2] If the shaft and the housing adjacent to the bearing O.D. are not concentric, the T.I.R. between the shaft and housing should be added to this dimension.

B

THRUST CYLINDRICAL ROLLER AND CAGE ASSEMBLIES

INCH SERIES

- Backup surfaces should be flat and square with the centerline of the shaft.
- See pages B-312 for details on piloting and backup surfaces.

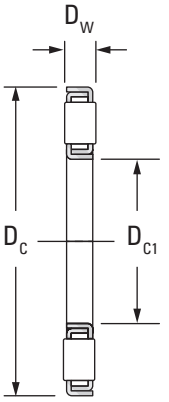

NTH

Shaft Dia.	D_{c1}	D_c	D_w	Assembly Designation	C Load Ratings Dynamic	C_o Load Ratings Static	Speed Rating[1]
in.	**mm** in.	**mm** in.	**mm** in.		**kN** lbf.		min^{-1}
1 1/2	**38.15** 1.502	**75.44** 2.970	**6.35** 0.250	NTH-2448	**81.8** 18400	**280** 62900	5700
2	**50.85** 2.002	**91.31** 3.595	**9.53** 0.375	NTH-3258	**129** 29000	**407** 91600	4700
2 1/8	**54.03** 2.127	**94.49** 3.720	**9.53** 0.375	NTH-3460	**133** 30000	**433** 97400	4500
2 1/4	**57.20** 2.252	**97.66** 3.845	**9.53** 0.375	NTH-3662	**138** 31100	**458** 103000	4400
2 3/8	**60.38** 2.377	**100.84** 3.970	**9.53** 0.375	NTH-3864	**143** 32100	**484.9** 109000	4200
2 1/2	**63.55** 2.502	**104.01** 4.095	**9.53** 0.375	NTH-4066	**147** 33000	**511** 115000	4100
2 5/8	**66.73** 2.627	**109.60** 4.315	**9.53** 0.375	NTH-4270	**156** 35100	**556** 125000	3900
2 3/4	**69.98** 2.755	**112.78** 4.440	**9.53** 0.375	NTH-4472	**161** 36100	**587** 132000	3800
3	**76.33** 3.005	**119.13** 4.690	**9.53** 0.375	NTH-4876	**169** 38000	**641** 144000	3600
3 1/4	**82.68** 3.255	**125.48** 4.940	**9.53** 0.375	NTH-5280	**178** 39900	**698** 157000	3400
3 1/2	**89.03** 3.505	**132.26** 5.207	**9.53** 0.375	NTH-5684	**180** 40500	**725** 163000	3200

[1] Speed ratings listed are based on adequate oil lubrication. See page B-313 for lubrication information.

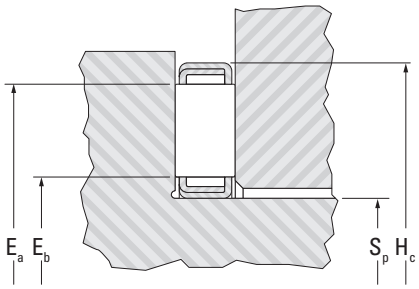

Shaft Piloted

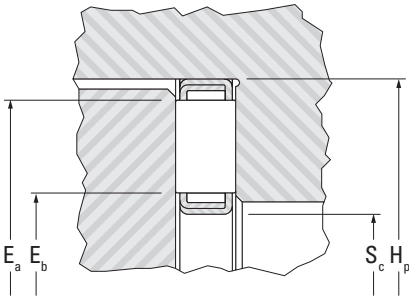

Housing Piloted

Assembly Wt.	S_p	H_c	S_c	H_p	E_b	E_a	Shaft Dia.
	Piloting Dimensions						
	Shaft Piloting		Housing Piloting		Raceway Contact		
	+0, +0.000			**+0.13,** +0.005			
	-0.13, -0.005	Min.	Max.	**-0,** -0.000			
kg lbs.	**mm** in.	**mm** in.	**mm** in.	**mm** in.	**mm** in.	**mm** in.	in.
0.10 0.23	**38.10** 1.500	**76.96** 3.030	**36.63** 1.442	**75.57** 2.975	**44.70** 1.760	**68.83** 2.710	1 1/2
0.21 0.47	**50.80** 2.000	**92.84** 3.655	**49.33** 1.942	**91.44** 3.600	**57.40** 2.260	**84.33** 3.320	2
0.22 0.49	**53.98** 2.125	**96.01** 3.780	**52.5** 2.067	**94.62** 3.725	**60.71** 2.390	**87.38** 3.440	2 1/8
0.24 0.52	**57.15** 2.250	**99.19** 3.905	**55.68** 2.192	**97.79** 3.850	**63.75** 2.510	**90.68** 3.570	2 1/4
0.24 0.54	**60.33** 2.375	**102.36** 4.030	**58.85** 2.317	**100.97** 3.975	**67.06** 2.640	**93.73** 3.690	2 3/8
0.26 0.57	**63.50** 2.500	**105.54** 4.155	**62.03** 2.442	**104.14** 4.100	**70.10** 2.760	**97.03** 3.820	2 1/2
0.28 0.62	**66.68** 2.625	**111.13** 4.375	**65.2** 2.567	**109.73** 4.320	**73.41** 2.890	**102.36** 4.030	2 5/8
0.29 0.64	**69.85** 2.750	**114.30** 4.500	**68.45** 2.695	**112.90** 4.445	**76.45** 3.010	**105.66** 4.160	2 3/4
0.31 0.69	**76.20** 3.000	**120.65** 4.750	**74.8** 2.945	**119.25** 4.695	**82.80** 3.260	**112.01** 4.410	3
0.34 0.75	**82.55** 3.250	**127.00** 5.000	**81.15** 3.195	**125.60** 4.945	**89.15** 3.510	**118.36** 4.660	3 1/4
0.37 0.81	**88.90** 3.500	**133.78** 5.267	**87.5** 3.445	**132.38** 5.212	**95.76** 3.770	**125.73** 4.950	3 1/2

B

CYLINDRICAL ROLLER THRUST BEARINGS

- The NTHA thrust cylindrical roller bearing consists of an NTH roller and cage assembly, one bore piloted washer and one O.D. piloted washer. The NTHA bearing is identified and sold as a unit and is manufactured to inch-nominal dimensions only.
- Load ratings given are identical to the corresponding NTH thrust cylindrical roller and cage assembly.
- It is suggested that the roller and cage assembly be bore piloted when applying NTHA bearings. When different arrangements of piloting are required, please contact your representative.
- Backup surfaces should be flat and square with the center line of the shaft.
- To order individual thrust washers, see washer designation below.

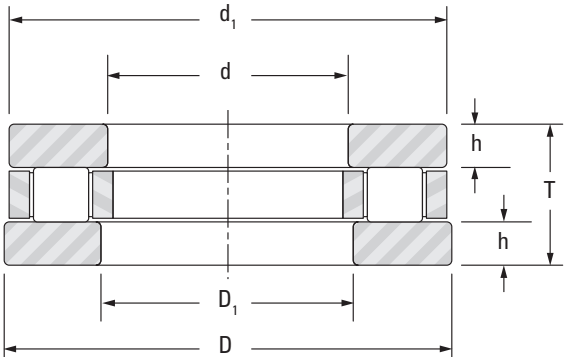

NTHA

Shaft Dia.	d		d1	D		D1	T +0.000 −0.006	Bearing Designation	Bearing Wt.
	Shaft-Piloted Washer			Housing-Piloted Washer					
	Max.	Min.	Nom.	Max.	Min.	Nom.			
in.	**mm** in.	**mm** in.	**mm** in.	**mm** in.	**mm** in.	**mm** in.	**mm** in.		**kg** lbs.
1 1/2	**38.100** 1.5000	**38.082** 1.4993	**74.613** 2 15/16	**76.218** 3.0007	**76.200** 3.0000	**39.688** 1 9/16	**20.62** 0.812	NTHA-2448	**0.47** 1.03
2	**50.800** 2.0000	**50.775** 1.9990	**90.488** 3 9/16	**92.098** 3.6259	**92.075** 3.6250	**52.388** 2 1/16	**25.40** 1.000	NTHA-3258	**0.76** 1.68
2 1/8	**53.975** 2.1250	**53.950** 2.1240	**93.663** 3 11/16	**95.278** 3.7511	**95.250** 3.7500	**55.563** 2 3/16	**25.40** 1.000	NTHA-3460	**0.80** 1.76
2 1/4	**57.150** 2.2500	**57.122** 2.2489	**96.838** 3 13/16	**98.453** 3.8761	**98.425** 3.8750	**58.738** 2 5/16	**25.40** 1.000	NTHA-3662	**0.83** 1.84
2 3/8	**60.325** 2.3750	**60.297** 2.3739	**100.013** 3 15/16	**101.628** 4.0011	**101.600** 4.0000	**61.913** 2 7/16	**25.40** 1.000	NTHA-3864	**0.87** 1.91
2 1/2	**63.500** 2.5000	**63.472** 2.4989	**103.188** 4 1/16	**104.808** 4.1263	**104.775** 4.1250	**65.088** 2 9/16	**25.40** 1.000	NTHA-4066	**0.90** 1.99
2 5/8	**66.675** 2.6250	**66.645** 2.6238	**108.744** 4 9/32	**110.345** 4.3443	**110.312** 4.3430	**68.263** 2 11/16	**25.40** 1.000	NTHA-4270	**1.01** 2.22
2 3/4	**69.850** 2.7500	**69.820** 2.7488	**111.919** 4 13/32	**113.520** 4.4693	**113.487** 4.4680	**71.438** 2 13/16	**25.40** 1.000	NTHA-4472	**1.04** 2.29
3	**76.200** 3.0000	**76.170** 2.9988	**118.269** 4 21/32	**119.875** 4.7195	**119.837** 4.7180	**77.788** 3 1/16	**25.40** 1.000	NTHA-4876	**1.12** 2.46
3 1/4	**82.550** 3.2500	**82.517** 3.2487	**124.619** 4 29/32	**126.225** 4.9695	**126.187** 4.9680	**84.138** 3 5/16	**25.40** 1.000	NTHA-5280	**1.19** 2.62
3 1/2	**88.900** 3.5000	**88.867** 3.4987	**130.969** 5 5/32	**132.575** 5.2195	**132.537** 5.2180	**90.488** 3 9/16	**25.40** 1.000	NTHA-5684	**1.27** 2.80

(1) $r_{a\,max}$ is equal to minimum washer chamfer $r_{s\,min}$.

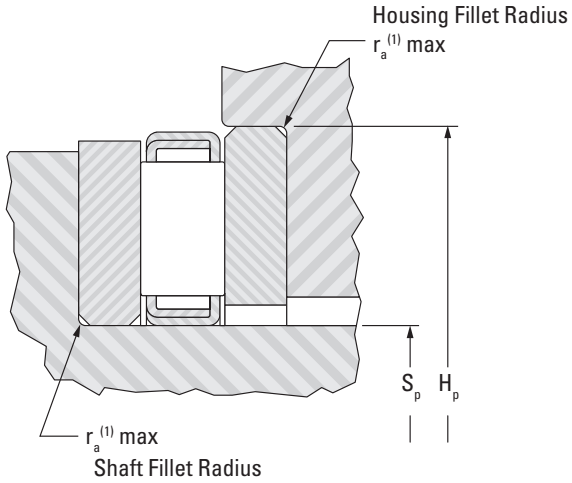

C	C_o	Speed Rating Oil	S_p	H_p	$r_{s\,min}$	h	Bore Piloted Washer	Washer Wt.	O.D. Piloted Washer	Washer Wt.	Shaft Dia.
Load Ratings			Piloting Dimensions								
			+0, +0.000	**+0.13,** +0.005		**+0,** +0.000					
Dynamic	Static		**-0.13,** -0.005	**-0,** -0.000		**-0.076,** -0.0030					
kN lbf.		min^{-1}	**mm** in.	**mm** in.	**mm** in.	**mm** in.		**kg** lbs.		**kg** lbs.	in.
81.8 18400	**280** 62900	5700	**38.082** 1.4993	**76.218** 3.0007	**0.81** 0.032	**7.137** 0.2810	TRI-2448	**0.18** 0.39	TRID-2448	**0.18** 0.39	1 1/2
129 29000	**408** 91600	4700	**50.775** 1.9990	**92.098** 3.6259	**1.57** 0.062	**7.938** 0.3125	TRJ-3258	**0.26** 0.57	TRJD-3258	**0.27** 0.59	2
133 30000	**433** 97400	4500	**53.950** 2.1240	**95.278** 3.7511	**1.57** 0.062	**7.938** 0.3125	TRJ-3460	**0.27** 0.60	TRJD-3460	**.028** 0.61	2 1/8
138 31100	**458** 103000	4400	**57.122** 2.2489	**98.453** 3.8761	**1.57** 0.062	**7.938** 0.3125	TRJ-3662	**0.28** 0.62	TRJD-3662	**0.29** 0.64	2 1/4
143 32100	**485** 109000	4200	**60.297** 2.3739	**101.628** 4.0011	**1.57** 0.062	**7.938** 0.3125	TRJ-3864	**0.29** 0.65	TRJD-3864	**0.30** 0.66	2 3/8
147 33000	**512** 115000	4100	**63.472** 2.4989	**104.808** 4.1263	**1.57** 0.062	**7.938** 0.3125	TRJ-4066	**0.30** 0.67	TRJD-4066	**0.31** 0.69	2 1/2
156 35100	**556** 125000	3900	**66.645** 2.6238	**110.345** 4.3443	**1.57** 0.062	**7.938** 0.3125	TRJ-4270	**0.34** 0.75	TRJD-4270	**0.35** 0.77	2 5/8
161 36100	**587** 132000	3800	**69.820** 2.7488	**113.520** 4.4693	**1.57** 0.062	**7.938** 0.3125	TRJ-4472	**0.35** 0.78	TRJD-4472	**0.36** 0.80	2 3/4
169 38000	**641** 144000	3600	**76.170** 2.9988	**119.875** 4.7195	**1.57** 0.062	**7.938** 0.3125	TRJ-4876	**0.38** 0.83	TRJD-4876	**0.39** 0.85	3
177 39900	**698** 157000	3400	**82.517** 3.2487	**126.225** 4.9695	**1.57** 0.062	**7.938** 0.3125	TRJ-5280	**0.40** 0.89	TRJD-5280	**0.41** 0.91	3 1/4
180 40500	**725** 163000	3200	**88.867** 3.4987	**132.575** 5.2195	**1.57** 0.062	**7.938** 0.3125	TRJ-5684	**0.43** 0.94	TRJD-5284	**0.43** 0.96	3 1/2

NOTES

COMBINED NEEDLE ROLLER BEARINGS

Overview: Combined bearings incorporate a radial needle roller bearing and a thrust roller bearing into a convenient unitized package.

- **Sizes:** 5.000 mm – 70.000 mm (0.1966 in. – 2.7559 in.) bore.
- **Markets:** Industrial applications, machine tools, and automotive transmissions.
- **Features:** Available with needle roller or cylindrical roller thrust component, machined and drawn outer rings are available, some sizes available with integral dust caps.
- **Benefits:** An effective alternative to separate radial and thrust bearings.

Combined Needle Roller Bearings – Metric Nominal Dimensions

Prefix
- **RAX** radial needle roller and thrust needle (or cylindrical) roller bearing without inner ring or thrust washer
- **RAXF** closed-end drawn cup design radial needle roller and needle thrust roller bearing without inner ring or thrust washer
- **RAXZ** unitized machined outer ring thrust cylindrical roller and radial needle roller bearing
- **NAXR** machined outer ring thrust cylindrical roller and radial needle roller bearing without inner ring

RAXF 7 15 TC

NAXR 20 Z.TN

Suffix
- **TN** molded polymer retainer
- **Z** thrust washer retaining dust cap
- **TB** radial play under rollers set to lower half of F6 tolerance
- **TC** radial play under rollers set to upper half of F6 tolerance

Bore Diameter
20 = 20.000 mm

Series (RAX)
- **700** drawn cup design radial needle roller and needle thrust roller bearing without inner ring or thrust washer
- **400** machined ring radial needle roller and thrust needle roller bearing without inner ring or thrust washer
- **500** machined ring radial needle roller and thrust cylindrical roller bearing

Inner Rings for Combined Needle Roller Bearings – Metric Nominal Dimensions

Prefix
- **JR** inner ring for use with NAXR series bearings
- **IM** inner ring for use RAX series bearings

JR 25 x 30 x 18

IM 10 14 16 P

Bore Diameter
25 = 25.000 mm

Width
18 = 18.000 mm

Outer Diameter
14 = 14.000 mm

Suffix (IM Series)
P ISO 492 toleranced inner ring

Thrust Washers for Combined Needle Roller Bearings - Metric Nominal Dimensions

Prefix
- **CP** thrust washer for metric needle roller bearings

CP 15 28 — thin washer designation

CP 2 15 28 — thick washer designation

Thickness
2 = 2.000 mm

Outer Diameter
28 = 28.000 mm

Bore Diameter
15 = 15.000 mm

B

Combined Needle Roller Bearings

Page

Introduction B-332

Cylindrical Roller Thrust Series – Metric Series... . . . . B-334

Needle Roller and Cylindrical Roller Thrust Series –
Metric Series B-338

Drawn Cup, Needle Roller Thrust Series
Open and Closed Bearings – Metric Series B-342

B

COMBINED BEARINGS

METRIC SERIES

Combined bearings consist of a radial bearing (needle roller bearing) and a thrust bearing (roller or needle bearing). The thrust roller bearing is usually a cylindrical roller thrust bearing.

Combined bearings make an effective alternative in place of two separate bearings – in terms of cost, handling and packaging. Combined bearings can be used with or without matching inner rings and thrust washers – though these are listed opposite the bearing part numbers, where possible, on the following pages of tables for convenience.

REFERENCE STANDARDS ARE:

- **DIN 5429, Part 1** – needle roller – thrust cylindrical roller bearings, series NAXR, NAXR.Z.
- **ISO 1206** – needle roller bearings – light and medium series – dimensions and tolerances.

Needle roller-needle roller thrust bearings

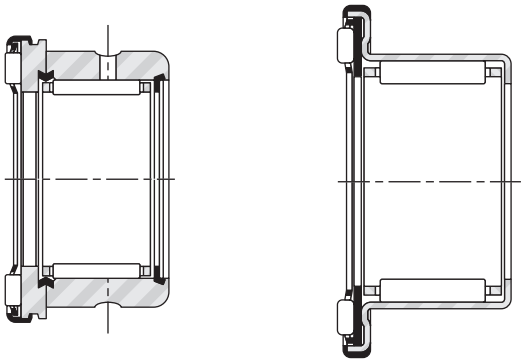

RAX 400 RAX 700

Needle roller-cylindrical roller thrust bearings

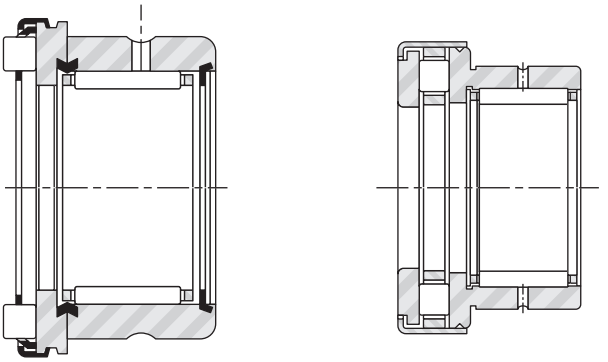

RAX 500 NAXR.Z

Fig. B-79. Types of metric series combined bearings

Suffixes	
TN	molded cage of reinforced engineered polymer
Z	retained with a dust cap
Z.TN	retained with a dust cap, molded cage of reinforced engineered polymer
TB	radial play under rollers set to lower half of F6 tolerance limits
TC	radial play under rollers set to upper half of F6 tolerance limits

CONSTRUCTION

Needle roller-cylindrical roller thrust bearings of series NAXR and RAXZ 500 are available with dust caps. They have the highest axial load-carrying capability of all combined bearings.

Combined bearings of series RAX 700 use a thin, one-piece outer ring design, similar in construction to metric drawn cups. The RAX 700 Series is available with an open or closed (RAXF) design, as are standard drawn cups. These bearings use needle rollers for both their radial and thrust complements.

The RAX 400 Series uses needle rollers for both their radial and thrust complements, as with the RAX 700 Series, but are constructed from two separate machined rings, joined with a strong metal insert. The RAX 500 Series, fabricated like the 400 Series, uses heavier cylindrical rollers for their thrust complement. Both series are available with matching thrust washers and inner rings. These series should be considered for applications requiring higher load capacity and running accuracy.

Each of the previous two bearing types may be best used without inner rings because the radial internal clearances are smaller if the needle roller and cage assemblies operate directly on a hardened and ground shaft. Tolerance class F6 is the normal specification for the needle roller complement bore diameters of the unmounted bearings.

RAX 400 and 500 Series (without inner rings) can be supplied with a smaller radial clearance, if desired. Refer to the suffix options TB and TC, as listed in the chart above.

Quality requirements for shafts, when used as a bearing raceway, are given in the engineering section of this catalog. When it becomes impractical to meet the shaft raceway design requirements, standard inner rings may be used with these bearings.

DIMENSIONAL ACCURACY

TOLERANCES

Metric series combined bearings (except Series RAX 700) are manufactured to the normal tolerances which apply to the metric series radial bearings and standard thrust bearings, as shown in the engineering section. The only exceptions are the diameter tolerances of the shaft-piloted washer and the bearing width tolerances. The shaft-piloted washer bore tolerance is E7 for the NAXR and NAXR.Z Series bearings. The thickness tolerance of the combined bearings thrust component (C_1) can be found in Table B-58. The matching thrust washer thickness tolerance may be found in the metric unitized thrust bearing section of this catalog.

Because of the nature of the RAX 700 Series design, these bearings must be inspected with suitable plug ("go" and "no go") and ring gage. The plug and ring gage sizes are listed in the inspection columns of the RAX700 Series product table.

BEARING MOUNTING

MOUNTING DIMENSIONS

Simple, through-bored housings are adequate for combined bearings. The mounting tolerances for the mechanical-ring combined bearings are provided in Table B-57.

The shaft-piloted washers of combined bearings must be supported, at least over half of their width. Other quality requirements for shafts and housings are given in the engineering section. Requirements for fillets, recesses and shoulder heights are the same as for needle roller bearings, as shown in the Mounting Dimensions paragraph on pages B-153 and B-154.

When mounting these bearings in their housings with a tight fit, relatively high press-in forces will be required which may brinell the raceways of the thrust bearing arrangements. Particular care should be exercised when installing needle roller-cylindrical roller thrust bearings with dust caps – and where the roller assembly of the thrust bearings cannot be removed. In order to avoid brinelling of the thrust bearing raceways, the bearings should be installed with uniform, continuous pressure against the installation tool, avoiding sudden impact forces. At times it may even be desirable to heat the housing before bearing mounting.

Table B-57. Mounting tolerances

Rotation conditions	ISO tolerance zone for housing	d >	d ≤	With inner ring	Without inner ring
		Nominal shaft diameter		ISO tolerance zone for shaft	
		mm in.	**mm** in.		
Load stationary relative to housing	K6 (M6)[1]	**10.000** 0.3937	**40.000** 1.5748	k6	h6
		40.000 1.5748	**70.000** 2.7559	m6	h6
Load rotates relative to housing	M6 (N6)[1]	All diameters		g6	f6
RAX 700 RAXF 700	H6 (H7)	All diameters		k5	h5 (h6)

[1] Tighter fit for more secure arrangement.

Table B-58. Thrust component thickness (C_1) tolerances

Bearing series	Tolerance	
	mm	in.
NAXR, NAXR.Z	**+0.000 / -0.109**	+0.0000 / -0.0043
RAXZ 500	**+0.009 / -0.109**	+0.0039 / -0.0043
RAX 400, RAX 500	**+0.051 / -0.061**	+0.0020 / -0.0024
RAX 700, RAXF 700	**+0.009 / -0.009**	+0.0039 / -0.0039

LUBRICATION

When the applied axial loads are relatively high and the application allows the use of oil as the desired method of lubrication, bearing types NAXR and NAXK should be given consideration. Combined bearings with a dust cap may use oil lubrication, although their design makes them better suited for use with grease lubrication.

Combined bearings are typically shipped protected with a corrosion-preventive compound that is not a lubricant. The bearings may be used in oil- or grease-lubricated applications, without removal of the corrosion-preventive compound. However, it may be advisable to remove the corrosion-preventive compound before packing the bearings (with a suitable grease) to obtain optimum grease performance and to minimize the possibility of confusing grease bearings with bearings containing corrosion preventive.

LOAD RATINGS

Minimum axial load for combined bearings excluding RAX700:

The minimum axial load $F_{amin} = C_0 / 2200$ (kN)

Where:

C_0 = static load rating (kN)

DYNAMIC EQUIVALENT LOAD

Combined bearings can accommodate radial and axial loads.

Radial needle roller complement

$P = F_r$ (kN)

Cylindrical or needle roller thrust complement

$P_a = F_a$ (kN)

STATIC EQUIVALENT LOAD

For all combined bearings series:

Radial needle roller complement

$P_0 = F_r$ (kN)

Cylindrical or needle roller thrust complement

$P_{0a} = F_a$ (kN)

CYLINDRICAL ROLLER THRUST SERIES

METRIC SERIES

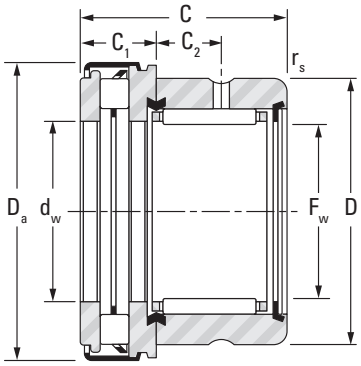

RAXZ 500

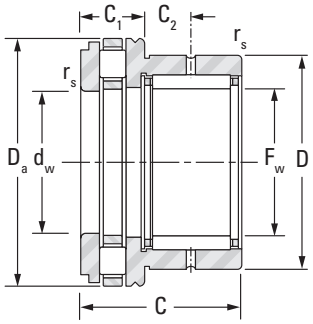

NAXR

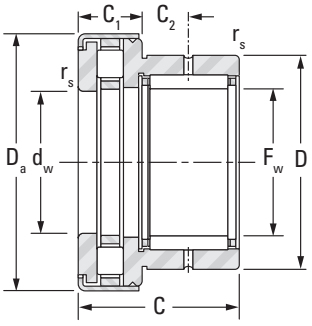

NAXR.Z

Shaft Diameter	F_w	D	C	d_w E7	D_a	C_1	C_2	$r_{s\,min}$
mm in.	mm in.	mm in.	mm in.	mm in.	mm in.	mm in.	mm in.	mm in.
10 0.394	**10** 0.394	**19** 0.748	**21.5** 0.846	**10** 0.394	**22.4** 0.882	**7.5** 0.295	**6** 0.236	**0.35** 0.014
12 0.472	**12** 0.472	**21** 0.827	**22** 0.866	**12** 0.472	**26.4** 1.039	**8** 0.315	**6** 0.236	**0.35** 0.014
15 0.591	**15** 0.591	**24** 0.945	**23** 0.906	**15** 0.591	**28** 1.102	**9** 0.354	**6.5** 0.256	**0.3** 0.012
	15 0.591	**24** 0.945	**23** 0.906	**15** 0.591	**29** 1.142	**9** 0.354	**6.5** 0.256	**0.3** 0.012
	15 0.591	**24** 0.945	**22** 0.866	**15** 0.591	**28.4** 1.118	**8** 0.315	**6** 0.236	**0.35** 0.014
17 0.669	**17** 0.669	**26** 1.024	**25** 0.984	**17** 0.669	**30** 1.181	**9** 0.354	**8.0** 0.315	**0.3** 0.012
	17 0.669	**26** 1.024	**25** 0.984	**17** 0.669	**31** 1.220	**9** 0.354	**8.0** 0.315	**0.3** 0.012
	17 0.669	**26** 1.024	**24** 0.945	**17** 0.669	**30.4** 1.197	**8** 0.315	**8** 0.315	**0.65** 0.026
20 0.787	**20** 0.787	**30** 1.181	**30** 1.181	**20** 0.787	**35** 1.378	**10** 0.394	**10.5** 0.413	**0.3** 0.012
	20 0.787	**30** 1.181	**30** 1.181	**20** 0.787	**36** 1.417	**10** 0.394	**10.5** 0.413	**0.3** 0.012
	20 0.787	**30** 1.181	**29** 1.142	**20** 0.787	**35.4** 1.394	**11** 0.433	**9** 0.354	**0.85** 0.033
25 0.984	**25** 0.984	**37** 1.457	**30** 1.181	**25** 0.984	**42** 1.654	**11** 0.433	**9.5** 0.374	**0.6** 0.024
	25 0.984	**37** 1.457	**30** 1.181	**25** 0.984	**43** 1.693	**11** 0.433	**9.5** 0.374	**0.6** 0.024
	25 0.984	**37** 1.457	**29** 1.142	**25** 0.984	**43** 1.693	**11** 0.433	**9** 0.354	**0.85** 0.033
30 1.181	**30** 1.181	**42** 1.654	**30** 1.181	**30** 1.181	**47** 1.850	**11** 0.433	**9.5** 0.374	**0.6** 0.024
	30 1.181	**42** 1.654	**30** 1.181	**30** 1.181	**48** 1.890	**11** 0.433	**9.5** 0.374	**0.6** 0.024
	30 1.181	**42** 1.654	**29** 1.142	**30** 0.181	**48** 1.890	**11** 0.433	**9** 0.354	**0.85** 0.033
35 1.378	**35** 1.378	**47** 1.850	**30** 1.181	**35** 1.378	**52** 2.047	**12** 0.472	**9.0** 0.354	**0.6** 0.024
	35 1.378	**47** 1.850	**30** 1.181	**35** 1.378	**53** 2.087	**12** 0.472	**9.0** 0.354	**0.6** 0.024
	35 1.378	**47** 1.850	**30** 1.181	**35** 1.378	**54** 2.126	**12** 0.472	**9** 0.354	**0.85** 0.033

Bearing Designation			Speed Rating	Load Ratings				Wt.	Matching Inner Ring Designation	Shaft Diameter
				Radial		Thrust				
				Dynamic	Static	Dynamic	Static			
RAXZ	NAXR	NAXR.Z		C	C_0	C	C_0			
			min^{-1}	kN lbf.		kN lbf.		kg lbs.		mm in.
RAXZ 510			15500	**5.9** 1330	**7.2** 1610	**8.2** 1840	**17.9** 4020	**0.026** 0.057	IM 7 10 16 P	**10** 0.394
RAXZ 512			13000	**6.8** 1520	**9.0** 2030	**12.7** 2860	**29.5** 6630	**0.033** 0.073	IM 9 12 16 P	**12** 0.472
	NAXR15		12000	**9.7** 2180	**12.6** 2830	**12.1** 2720	**26.3** 5910	**0.032** 0.071	JR12x15x16	**15** 0.591
		NAXR15.Z	12000	**9.7** 2180	**12.6** 2830	**12.1** 2720	**26.3** 5910	**0.035** 0.077	JR12x15x16	
RAXZ 515			11500	**9.7** 2170	**12.6** 2830	**14.0** 3150	**34.0** 7640	**0.036** 0.079	IM 12 15 16 P	
	NAXR17		11000	**11.4** 2560	**16.1** 3620	**12.6** 2830	**28.6** 6430	**0.050** 0.110	JR14x17x17	**17** 0.669
		NAXR17.Z	11000	**11.4** 2560	**16.1** 3620	**12.6** 2830	**28.6** 6430	**0.053** 0.117	JR14x17x17	
RAXZ 517			10500	**11.8** 2650	**16.3** 3660	**15.0** 3370	**39.0** 8770	**0.044** 0.097	IM 14 17 17 P	
	NAXR20TN		9500	**14.8** 3330	**23.7** 5330	**23.6** 5310	**56.8** 12800	**0.090** 0.198	JR17x20x20	**20** 0.787
		NAXR20Z.TN	9500	**14.8** 3330	**23.7** 5330	**23.6** 5310	**56.8** 12800	**0.095** 0.209	JR17x20x20	
RAXZ 520			9000	**14.8** 3330	**23.7** 5330	**22.0** 4950	**54.0** 12100	**0.070** 0.154	IM 15 20 20 P	
	NAXR25TN		8000	**18.8** 4230	**29.8** 6700	**31.2** 7010	**81.0** 18200	**0.146** 0.322	JR20x25x20	**25** 0.984
		NAXR25Z.TN	8000	**18.8** 4230	**29.8** 6700	**31.2** 7010	**81.0** 18200	**0.152** 0.335	JR20x25x20	
RAXZ 525			7500	**15.1** 3390	**26.2** 5890	**25.5** 5730	**70.0** 15700	**0.105** 0.231	IM 20 25 20 P	
	NAXR30TN		6700	**20.2** 4540	**34.6** 7780	**33.0** 7420	**91.1** 20500	**0.162** 0.357	JR25x30x20	**30** 1.181
		NAXR30Z.TN	6700	**20.2** 4540	**34.6** 7780	**33.0** 7420	**91.1** 20500	**0.169** 0.373	JR25x30x20	
RAXZ 530			6500	**20.2** 4540	**34.6** 7780	**26.5** 5960	**77.0** 17300	**0.118** 0.260	IM 25 30 20 P	
	NAXR35		6000	**22.1** 4970	**40.8** 9170	**30.9** 6950	**86.0** 19300	**0.186** 0.410	JR30x35x20	**35** 1.378
		NAXR35.Z	6000	**22.1** 4970	**40.8** 9170	**30.9** 6950	**86.0** 19300	**0.195** 0.430	JR30x35x20	
RAXZ 535			5500	**22.1** 4970	**40.8** 9170	**33.8** 7600	**94.0** 21100	**0.146** 0.322	IM 30 35 20 P	

Continued on next page.

CYLINDRICAL ROLLER THRUST SERIES – *continued*

METRIC SERIES

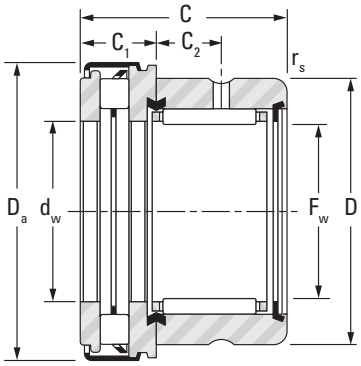

RAXZ 500

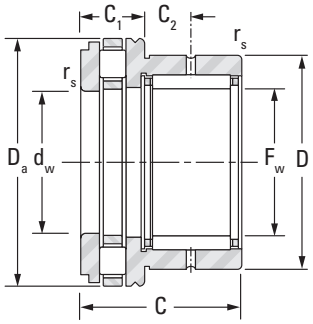

NAXR

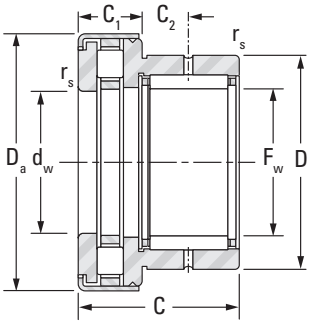

NAXR.Z

Shaft Diameter	F_w	D	C	d_w E7	D_a	C_1	C_2	$r_{s\,min}$
mm in.	**mm** in.	**mm** in.	**mm** in.	**mm** in.	**mm** in.	**mm** in.	**mm** in.	**mm** in.
40 1.575	**40** 1.575	**52** 2.047	**32** 1.260	**40** 1.575	**60** 2.362	**13** 0.512	**10.0** 0.394	**0.6** 0.024
	40 1.575	**52** 2.047	**32** 1.260	**40** 1.575	**61** 2.402	**13** 0.512	**10.0** 0.394	**0.6** 0.024
	40 1.575	**52** 2.047	**31** 1.220	**40** 1.575	**61** 2.402	**13** 0.512	**9** 0.354	**0.85** 0.033
45 1.772	**45** 1.772	**58** 2.283	**32** 1.260	**45** 1.772	**65** 2.559	**14** 0.551	**9.0** 0.354	**0.6** 0.024
	45 1.772	**58** 2.283	**32** 1.260	**45** 1.772	**66** 2.598	**14** 0.551	**9.0** 0.354	**0.6** 0.024
	45 1.772	**58** 2.283	**31** 1.220	**45** 1.772	**66** 2.598	**13** 0.512	**9** 0.354	**0.85** 0.033
50 1.969	**50** 1.969	**62** 2.441	**35** 1.378	**50** 1.969	**70** 2.756	**14** 0.551	**10.0** 0.394	**0.6** 0.024
	50 1.969	**62** 2.441	**35** 1.378	**50** 1.969	**71** 2.795	**14** 0.551	**10.0** 0.394	**0.6** 0.024
	50 1.969	**62** 2.441	**34** 1.339	**50** 1.969	**71** 2.795	**13** 0.512	**11** 0.433	**1.3** 0.051
60 2.362	**60** 2.362	**72** 2.835	**36** 1.417	**60** 2.362	**86** 3.386	**15** 0.591	**11** 0.433	**1.3** 0.051
70 2.756	**70** 2.756	**85** 3.346	**36** 1.417	**70** 2.756	**96** 3.780	**15** 0.591	**11** 0.433	**1.3** 0.051

B

Bearing Designation			Speed Rating	Load Ratings				Wt.	Matching Inner Ring Designation	Shaft Diameter
				Radial		Thrust				
				Dynamic	Static	Dynamic	Static			
RAXZ	NAXR	NAXR.Z		C	C_0	C	C_0			
			min^{-1}	**kN** lbf.		**kN** lbf.		**kg** lbs.		**mm** in.
	NAXR40		5300	**23.8** 5350	**47.0** 10600	**44.5** 10000	**126.0** 28300	**0.288** 0.635	JR35x40x20	**40** 1.575
		NAXR40.Z	5300	**23.8** 5350	**47.0** 10600	**44.5** 10000	**126.0** 28300	**0.299** 0.659	JR35x40x20	
RAXZ 540			5000	**23.8** 5350	**47.0** 10600	**46.0** 10300	**129.0** 29000	**0.174** 0.384	IM 35 40 20 P	
	NAXR45TN		4800	**24.9** 5600	**51.8** 11600	**47.0** 10600	**140.0** 31500	**0.360** 0.794	JR40x45x20	**45** 1.772
		NAXR45Z.TN	4800	**24.9** 5600	**51.8** 11600	**47.0** 10600	**140.0** 31500	**0.370** 0.816	JR40x45x20	
RAXZ 545			4500	**24.9** 5600	**51.8** 11600	**49.0** 11000	**143.0** 32100	**0.206** 0.454	IM 40 45 20 P	
	NAXR50		4300	**30.2** 6790	**68.5** 15400	**49.7** 11200	**155.0** 34800	**0.432** 0.952	JR45x50x25	**50** 1.969
		NAXR50.Z	4300	**30.2** 6790	**68.5** 15400	**49.7** 11200	**155.0** 34800	**0.452** 0.996	JR45x50x25	
RAXZ 550			4000	**30.2** 6790	**68.5** 15400	**51.0** 11500	**157.0** 35300	**0.232** 0.511	IM 45 50 25 P	
RAXZ 560			3500	**31.9** 7170	**78.1** 17600	**71.0** 16000	**255.0** 57300	**0.327** 0.721	IM 55 60 25 P	**60** 2.362
RAXZ 570			3000	**36.1** 8120	**84.7** 19000	**77.0** 17300	**295.0** 66300	**0.435** 0.959	IM 60 70 25 P	**70** 2.756

NEEDLE ROLLER AND CYLINDRICAL ROLLER THRUST SERIES

METRIC SERIES

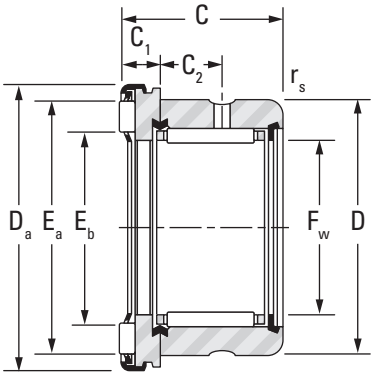

RAX 400

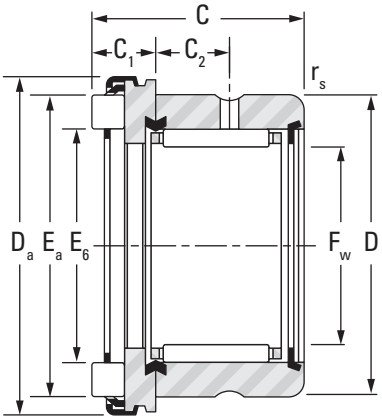

RAX 500

Shaft Diameter	F_w	C	D	D_a	E_b	E_a	C_1	C_2
mm in.	mm in.	mm in.	mm in.	mm in.	mm in.	mm in.	mm in.	mm in.
10 0.3937	**10** 0.3937	**19** 0.748	**19** 0.7480	**22** 0.8661	**12** 0.47	**18.6** 0.73	**5** 0.197	**6** 0.236
	10 0.3937	**19.5** 0.768	**19** 0.7480	**22** 0.8661	**12.2** 0.48	**18.5** 0.73	**5.5** 0.217	**6** 0.236
12 0.4724	**12** 0.4724	**19** 0.748	**21** 0.8268	**26** 1.0236	**15** 0.59	**22.6** 0.89	**5** 0.197	**6** 0.236
15 0.5906	**15** 0.5906	**19** 0.748	**24** 0.9449	**28** 1.1024	**17** 0.67	**24.6** 0.97	**5** 0.197	**6** 0.236
	15 0.5906	**20** 0.787	**24** 0.9449	**28** 1.1024	**16.8** 0.66	**24.9** 0.98	**6** 0.236	**6** 0.236
17 0.6693	**17** 0.6693	**21** 0.827	**26** 1.0236	**30** 1.1811	**19** 0.75	**26.6** 1.05	**5** 0.197	**8** 0.315
	17 0.6693	**22** 0.866	**26** 1.0236	**30** 1.1811	**18.8** 0.74	**26.9** 1.06	**6** 0.236	**8** 0.315
20 0.7874	**20** 0.7874	**24** 0.945	**30** 1.1811	**35** 1.3780	**22** 0.87	**31.6** 1.24	**6** 0.236	**9** 0.354
	20 0.7874	**26** 1.024	**30** 1.1811	**35** 1.3780	**22** 0.87	**31.6** 1.24	**8** 0.315	**9** 0.354
25 0.9843	**25** 0.9843	**24** 0.945	**37** 1.4567	**42** 1.6535	**27.7** 1.09	**37.4** 1.47	**6** 0.236	**9** 0.354
	25 0.9843	**26** 1.024	**37** 1.4567	**42** 1.6535	**27.7** 1.09	**37.4** 1.47	**8** 0.315	**9** 0.354
30 1.1811	**30** 1.1811	**24** 0.945	**42** 1.6535	**47** 1.8504	**32.7** 1.29	**42.4** 1.67	**6** 0.236	**9** 0.354
	30 1.1811	**26** 1.024	**42** 1.6535	**47** 1.8504	**32.7** 1.29	**42.3** 1.67	**8** 0.315	**9** 0.354
35 1.3780	**35** 1.3780	**24** 0.945	**47** 1.8504	**53** 2.0866	**37.2** 1.46	**49** 1.93	**6** 0.236	**9** 0.354
	35 1.3780	**27** 1.063	**47** 1.8504	**53.4** 2.1024	**37.8** 1.49	**47.8** 1.88	**9** 0.354	**9** 0.354
40 1.5748	**40** 1.5748	**24** 0.945	**52** 2.0472	**60** 2.3622	**43** 1.69	**54.9** 2.16	**6** 0.236	**9** 0.354
45 1.7717	**45** 1.7717	**24** 0.945	**58** 2.2835	**65** 2.5591	**48** 1.89	**59.9** 2.36	**6** 0.236	**9** 0.354
	45 1.7717	**28** 1.102	**58** 2.2835	**65.4** 2.5748	**47.8** 1.88	**59.8** 2.35	**10** 0.394	**9** 0.354

B

Bearing Designation		Speed Rating	Load Ratings				Wt.	Matching Inner Ring	Thin Plate	Thick Plate	Shaft Diameter
			Radial		Thrust						
			Dynamic	Static	Dynamic	Static					
400 Series	500 Series		C	C_0	C	C_0					
		min^{-1}	kN lbf.		kN lbf.		kg lbs.				mm in.
RAX 410		15500	**5.90** 1330	**7.16** 1610	**5.00** 1120	**10.9** 2450	**0.025** 0.055		CP 10 22	CP 2 10 22	**10** 0.3937
	RAX 510	15500	**5.90** 1330	**7.16** 1610	**8.20** 1840	**17.9** 4020	**0.026** 0.057		CP 10 22	CP 2 10 22	
RAX 412		13000	**6.78** 1520	**9.03** 2030	**7.10** 1600	**18.5** 4160	**0.032** 0.071	IM 9 12 16 P	CP 12 26	CP 2 12 26	**12** 0.4724
RAX 415		11500	**9.66** 2170	**12.6** 2830	**7.60** 1710	**20.8** 4680	**0.034** 0.075	IM 12 15 16 P	CP 15 28	CP 2 15 28	**15** 0.5906
	RAX 515	11500	**9.66** 2170	**12.6** 2830	**14.0** 3150	**34.0** 7640	**0.036** 0.079	IM 12 15 16 P	CP 15 28	CP 2 15 28	
RAX 417		10500	**11.8** 2650	**16.3** 3660	**8.10** 1820	**23.0** 5170	**0.041** 0.090	IM 14 17 17 P	CP 17 30	CP 2 17 30	**17** 0.6693
	RAX 517	10500	**11.8** 2650	**16.3** 3660	**15.0** 3370	**39.0** 8770	**0.044** 0.097	IM 14 17 17 P	CP 17 30	CP 2 17 30	
RAX 420		9000	**14.8** 3330	**23.7** 5330	**11.8** 2650	**39.0** 8770	**0.066** 0.146	IM 15 20 20 P	CP 20 35	CP 3 20 35	**20** 0.7874
	RAX 520	9000	**14.8** 3330	**23.7** 5330	**22.0** 4950	**54.0** 12100	**0.070** 0.154	IM 15 20 20 P	CP 20 35	CP 3 20 35	
RAX 425		7500	**15.1** 3390	**26.2** 5890	**13.3** 2990	**49.0** 11000	**0.099** 0.218	IM 20 25 20 P	CP 25 42	CP 3 25 42	**25** 0.9843
	RAX 525	7500	**15.1** 3390	**26.2** 5890	**25.5** 5730	**70.0** 15700	**0.105** 0.231	IM 20 25 20 P	CP 25 42	CP 3 25 42	
RAX 430		6500	**20.2** 4540	**34.6** 7780	**14.5** 3260	**57.0** 12800	**0.111** 0.245	IM 25 30 20 P	CP 30 47	CP 3 30 47	**30** 1.1811
	RAX 530	6500	**20.2** 4540	**34.6** 7780	**26.5** 5960	**77.0** 17300	**0.118** 0.260	IM 25 30 20 P	CP 30 47	CP 3 30 47	
RAX 435		5500	**22.1** 4970	**40.8** 9170	**18.9** 4250	**84.0** 18900	**0.130** 0.287	IM 30 35 20 P	CP 35 52	CP 3 35 52	**35** 1.3780
	RAX 535	5500	**22.1** 4970	**40.8** 9170	**33.8** 7600	**94.0** 21100	**0.146** 0.322	IM 30 35 20 P	CP 35 52	CP 3 35 52	
RAX 440		5000	**23.8** 5350	**47.0** 10600	**20.4** 4590	**96.0** 21600	**0.150** 0.331	IM 35 40 20 P	CP 40 60	CP 3 40 60	**40** 1.5748
RAX 445		4500	**24.9** 5600	**51.8** 11600	**21.8** 4900	**109.0** 24500	**0.179** 0.395	IM 40 45 20 P	CP 45 65	CP 3 45 65	**45** 1.7717
	RAX 545	4500	**24.9** 5600	**51.8** 11600	**49.0** 11000	**143.0** 32100	**0.206** 0.454	IM 40 45 20 P	CP 45 65	CP 3 45 65	

Continued on next page.

NEEDLE ROLLER AND CYLINDRICAL ROLLER THRUST SERIES – *continued*

METRIC SERIES

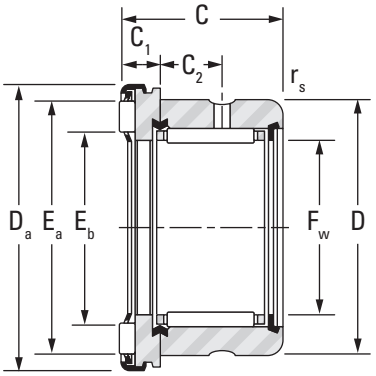

RAX 400

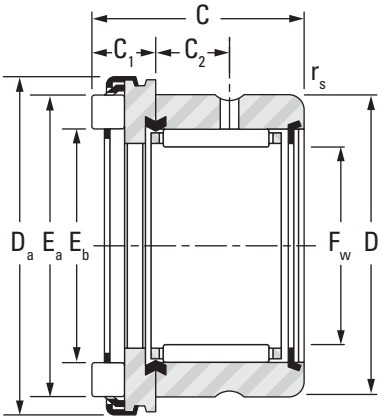

RAX 500

Shaft Diameter	F_w	C	D	D_a	E_b	E_a	C_1	C_2
mm in.	**mm** in.	**mm** in.	**mm** in.	**mm** in.	**mm** in.	**mm** in.	**mm** in.	**mm** in.
50 1.9685	**50** 1.9685	**27** 1.063	**62** 2.4409	**70** 2.7559	**53.3** 2.10	**65.7** 2.59	**6** 0.236	**11** 0.433
	50 1.9685	**31** 1.220	**62** 2.4409	**70.4** 2.7717	**52.8** 2.08	**64.8** 2.55	**10** 0.394	**11** 0.433
60 2.3622	**60** 2.3622	**28** 1.102	**72** 2.8346	**85** 3.3465	**63.5** 2.50	**79.2** 3.12	**7** 0.276	**11** 0.433
	60 2.3622	**32** 1.260	**72** 2.8346	**85.4** 3.3622	**63.5** 2.50	**79.5** 3.13	**11** 0.433	**11** 0.433
70 2.7559	**70** 2.7559	**28** 1.102	**85** 3.3465	**95** 3.7402	**73.5** 2.89	**89.2** 3.51	**7** 0.276	**11** 0.433
	70 2.7559	**32** 1.260	**85** 3.3465	**95.4** 3.7559	**73.5** 2.89	**89.5** 3.52	**11** 0.433	**11** 0.433

Bearing Designation		Speed Rating	Load Ratings				Wt.	Matching Inner Ring	Thin Plate	Thick Plate	Shaft Diameter
			Radial		Thrust						
			Dynamic	Static	Dynamic	Static					
400 Series	500 Series		C	C_0	C	C_0					
		min^{-1}	**kN** lbf.		**kN** lbf.		**kg** lbs.				**mm** in.
RAX 450		4000	**30.2** 6790	**68.5** 15400	**22.5** 5060	**118.0** 26500	**0.205** 0.452	IM 45 50 25 P	CP 50 70	CP 3 50 70	**50** 1.9685
	RAX 550	4000	**30.2** 6790	**68.5** 15400	**51.0** 11500	**157.0** 35300	**0.232** 0.511	IM 45 50 25 P	CP 50 70	CP 3 50 70	
RAX 460		3500	**31.9** 7170	**78.1** 17600	**31.5** 7080	**193.0** 43400	**0.282** 0.622	IM 55 60 25 P	CP 60 85	CP 4 60 85	**60** 2.3622
	RAX 560	3500	**31.9** 7170	**78.1** 17600	**71.0** 16000	**255.0** 57300	**0.327** 0.721	IM 55 60 25 P	CP 60 85	CP 4 60 85	
RAX 470		3000	**36.1** 8120	**84.7** 19000	**34.5** 7760	**223.0** 50100	**0.386** 0.851	IM 60 70 25 P	CP 1,5 70 95	CP 4 70 95	**70** 2.7559
	RAX 570	3000	**36.1** 8120	**84.7** 19000	**77.0** 17300	**295.0** 66300	**0.435** 0.959	IM 60 70 25 P	CP 1,5 70 95	CP 4 70 95	

DRAWN CUP, NEEDLE ROLLER THRUST SERIES OPEN AND CLOSED BEARINGS

METRIC SERIES

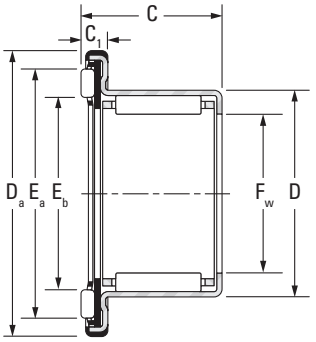

RAX 700

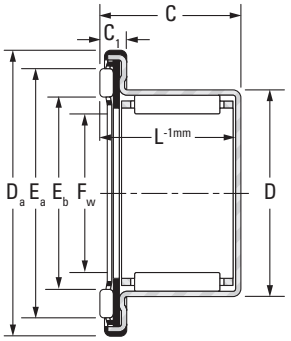

RAXF 700

Shaft Diameter	F_w	D	C	D_a	E_b	E_a	C_1	Bearing Designation	
								Open-Ends	Closed-End
mm in.	**mm** in.	**mm** in.	**mm** in.	**mm** in.	**mm** in.	**mm** in.	**mm** in.		
5 0.1969	**5** 0.1969	**9** 0.3543	**11** 0.433	**15.5** 0.6102	**7.2** 0.28	**11.2** 0.44	**3.3** 0.130	RAX 705	
12 0.4724	**12** 0.4724	**18** 0.7087	**14.2** 0.559	**27.5** 1.0827	**15** 0.59	**22.6** 0.89	**4.2** 0.165	RAX 712	RAXF 712
14 0.5512	**14** 0.5512	**20** 0.7874	**14.2** 0.559	**29.5** 1.1614	**17** 0.67	**24.6** 0.97	**4.2** 0.165	RAX 714	RAXF 714
15 0.5906	**15** 0.5906	**21** 0.8268	**14.2** 0.559	**31.5** 1.2402	**19** 0.75	**26.6** 1.05	**4.2** 0.165	RAX 715	RAXF 715
18 0.7087	**18** 0.7087	**24** 0.9449	**18.2** 0.717	**33.5** 1.3189	**21** 0.83	**28.6** 1.13	**4.2** 0.165	RAX 718	RAXF 718
20 0.7874	**20** 0.7874	**26** 1.0236	**18.2** 0.717	**36.5** 1.4370	**22** 0.87	**31.6** 1.24	**4.2** 0.165	RAX 720	RAXF 720
25 0.9843	**25** 0.9843	**33** 1.2992	**22.2** 0.874	**45.5** 1.7913	**30** 1.18	**39.6** 1.56	**4.2** 0.165	RAX 725	RAXF 725
30 1.1811	**30** 1.1811	**38** 1.4961	**22.2** 0.874	**50.5** 1.9882	**35** 1.38	**44.7** 1.76	**4.2** 0.165	RAX 730	RAXF 730
35 1.3780	**35** 1.3780	**43** 1.6929	**22.2** 0.874	**56.5** 2.2244	**39** 1.54	**50.9** 2.00	**4.2** 0.165	RAX 735	
40 1.5748	**40** 1.5748	**48** 1.8898	**22.2** 0.874	**61.5** 2.4213	**43** 1.69	**54.9** 2.16	**4.2** 0.165	RAX 740	RAXF 740
45 1.7717	**45** 1.7717	**52** 2.0472	**22.2** 0.874	**66.5** 2.6181	**48** 1.89	**59.9** 2.36	**4.2** 0.165	RAX 745	

B

L-1	Speed Rating	Load Ratings				Wt.	Inspection			Matching Inner Ring	Thin Plate	Thick Plate	Shaft Diameter
		Radial		Thrust									
		Dynamic	Static	Dynamic	Static		Ring Gage	Go Plug	No Go Plug				
		C	C_0	C	C_0								
mm in.	min^{-1}	**kN** lbf.		**kN** lbf.		**kg** lbs.	**mm** in.	**mm** in.	**mm** in.				**mm** in.
–	25000	**2.15** 480	**1.95** 440	**3.15** 710	**6.35** 1430	**0.005** 0.010	**9.000** 0.3543	**5.009** 0.1972	**5.036** 0.1983				
13.2 0.520	13000	**6.30** 1420	**7.20** 1620	**6.90** 1550	**17.7** 3980	**0.017** 0.036	**18.000** 0.7087	**12.009** 0.4728	**12.035** 0.4738	IM 8 12 12,4	CP 12 26	CP 2 12 26	**12** 0.4724
13.2 0.520	11500	**6.90** 1550	**8.50** 1910	**7.40** 1660	**20.0** 4500	**0.018** 0.040	**20.000** 0.7874	**14.009** 0.5515	**14.035** 0.5526	IM 10 14 12,4	CP 14 26	CP 2 14 26	**14** 0.5512
13.2 0.520	10500	**7.40** 1660	**9.30** 2090	**7.80** 1750	**22.0** 4950	**0.020** 0.044	**21.000** 0.8268	**15.009** 0.5909	**15.035** 0.5919	IM 12 15 12,4	CP 15 28	CP 2 15 28	**15** 0.5906
17.2 0.677	10000	**11.5** 2590	**17.7** 3980	**8.00** 1800	**23.0** 5170	**0.027** 0.060	**24.000** 0.9449	**18.009** 0.7090	**18.035** 0.7100	IM 13 18 16,4	CP 18 30	CP 2 18 30	**18** 0.7087
17.2 0.677	9000	**12.2** 2740	**19.5** 4380	**11.8** 2650	**39.0** 8770	**0.031** 0.068	**26.000** 1.0236	**20.009** 0.7878	**20.035** 0.7888	IM 15 20 16,4	CP 20 35	CP 3 20 35	**20** 0.7874
21.2 0.835	7200	**20.5** 4610	**32.0** 7190	**13.7** 3080	**52.0** 11700	**0.055** 0.121	**33.000** 1.2992	**20.015** 0.7880	**25.041** 0.9859	IM 20 25 20,4	CP 25 42	CP 3 25 42	**25** 0.9843
21.2 0.835	6300	**22.3** 5010	**37.5** 8430	**14.9** 3350	**60.0** 13500	**0.063** 0.139	**38.000** 1.4961	**30.015** 1.1817	**30.041** 1.1827	IM 25 30 20,4	CP 30 47	CP 3 30 47	**30** 1.1811
21.2 0.835	5500	**24.5** 5510	**45.0** 10120	**19.4** 4360	**88.0** 19800	**0.075** 0.165	**43.000** 1.6929	**35.015** 1.3785	**35.041** 1.3796	IM 30 35 20,4	CP 35 52	CP 3 35 52	**35** 1.3780
21.2 0.835	5000	**26.2** 5890	**51.0** 11470	**20.4** 4590	**96.0** 21600	**0.086** 0.190	**48.000** 1.8898	**40.015** 1.5754	**40.041** 1.5764	IM 35 40 20,4	CP 40 60	CP 3 40 60	**40** 1.5748
21.2 0.835	4500	**24.8** 5580	**55.0** 12360	**21.8** 4900	**109** 24500	**0.088** 0.194	**52.000** 2.0472	**45.015** 1.7722	**45.041** 1.7733	IM 40 45 20,4	CP 45 65	CP 3 45 65	**45** 1.7717

NOTES

NEEDLE ROLLERS, ACCESSORIES

NEEDLE/CYLINDRICAL ROLLERS

Overview: Loose needle and cylindrical rollers are mainly used as bearing rolling elements to reduce friction and torque in rotating and pivoting applications. However, these precision rollers have many other uses, such as shafts or locating pins.

- **Sizes:** Diameters from 1 mm (0.0394 in.) to 15 mm (0.5906 in.). Lengths from 2.5 mm (0.0984 in.) to 69 mm (2.7165 in.).
- **Markets:** Vehicle and industrial transmissions, universal joints, and two-cycle engines.
- **Features:** Cylindrical and needle sizes are available. Needle rollers are available with flat and rounded-ends; metric series needle rollers available in Grade 2, 3 or 5.
- **Benefits:** Provide the maximum load-carrying capacity, within the smallest envelope, at a low cost.

METRIC INNER RINGS

Overview: Inner rings are made from bearing-quality steel, and their O.D. and bore are precision-ground. They function as the inner raceway for a needle roller bearing by providing a surface that meets all shaft raceway design requirements (hardness, surface finish, roundness, etc.).

- **Sizes:** 5 mm (0.1969 in.) bore to 180 mm (7.0866 in.) outer diameter.
- **Markets:** Automotive, truck, power transmissions, and industrial applications.
- **Features:** Available with and without chamfers, some are available with a profiled outer diameter.
- **Benefits:** When it is not practical to manufacture the shaft to raceway quality, an inner ring allows a customer to obtain acceptable bearing performance.

B

Standard Inner Rings for Needle Roller Bearings – Metric Nominal Dimensions

Prefix
- **JR** inner ring for use with caged metric needle roller bearing
- **JRZ** inner ring without mounting chamfers
- **IM** inner ring for use with metric needle roller bearings

JRZ 25 x 30 x 18 JS1

IM 10 14 16 P

Bore Diameter
25 = 25 mm

Outer Diameter
14 = 14 mm

Width
18 = 18 mm

Suffix
- **JS1** lubrication hole
- **P** ISO 492 toleranced inner ring

Extra Wide Inner Rings for Needle Roller Bearings – Metric Nominal Dimensions

Series
- **10** 10 series
- **20** 20 series
- **220** 220 series
- **30** 30 series
- **31** 31 series

Width
25 = 25 mm

BIC 20 25

Prefix
- **BIC** inner ring with oil hole for use with metric needle roller bearings
- **BIG, BIP, BIK** extra wide inner ring for use with metric needle roller bearings
- **BICG** extra wide inner ring with oil hole for use with metric needle roller bearings

Inner Rings for Full Complement Needle Roller Bearings – Metric Nominal Dimensions

Prefix
- **IM** inner ring for use with metric needle roller bearings
- **IMC** inner ring with oil hole for use with metric needle roller bearings

Series
- **190** 190 series
- **206** 206 series
- **49** 49 series

Width (190, 206 Series)
25 = 25 mm

IM 190 25

Bore Size (49 Series)
00 = 10 mm
01 = 12 mm
02 = 15 mm
03 = 17 mm
bore code x 5 = bore size (mm)

IM 49 03

IM 10 14 16 R6

Bore Diameter
10 = 10 mm

Width
16 = 16 mm

Outer Diameter
14 = 14 mm

Suffix
R6 crowned raceway

Loose Rollers – Metric Nominal Dimensions

Prefix
- **NRO** metric needle roller
- **.A** rounded-end design
- **.B** flat-end design
- **ZRO** metric cylindrical roller

Suffix
G2 needle roller grade

NRO .B 1,5 x 11,8 G2

Nominal Diameter
1,5 = 1.5 mm

Nominal Length
11,8 = 11.8 mm

B

Needle Rollers, Accessories

Page

Introduction – Needle Rollers – Metric Series B-350

Introduction – Needle Rollers – Inch Series B-358

Introduction – Cylindrical Rollers – Metric Series B-363

Inner Rings – Metric Series B-365

Inner Rings for Full Complement Drawn Cup
Needle Roller Bearings – Metric Series B-376

Inner Rings for Machine – Tool Quality
Precision – Combined Bearings – Metric Series B-379

Inner Rings with Oil Holes/Extra Wide, RNA Bearings. B-380

End Washers – Metric Series. B-383

NEEDLE ROLLERS – METRIC SERIES

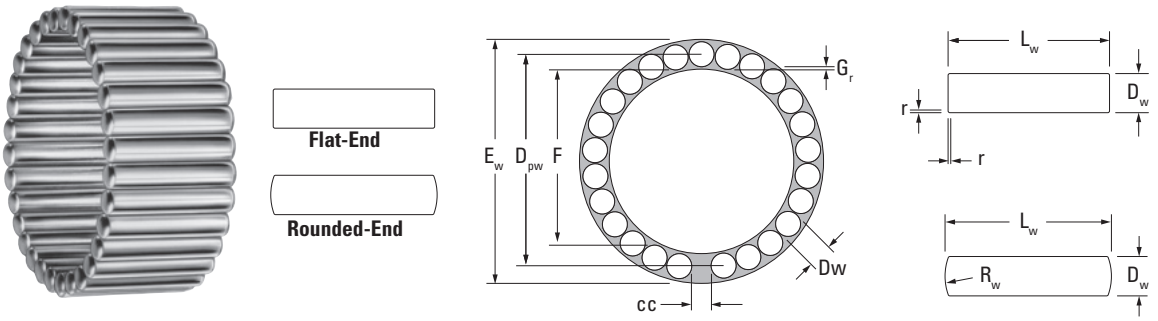

Fig. B-80. Metric Series needle rollers

Needle rollers are made from rolling bearing-quality steel, hardened to 60-64 HRC or equivalent. Nominal metric needle rollers in various grades are standardized at national and international levels. The grades determine the dimensional and form tolerances of the needle rollers. Metric series needle rollers may differ by their end form: type A has rounded-end and type B has flat-ends. JTEKT prefers to supply needle roller in the most economical flat-end, or type B design, in G2 grade. Metric series needle rollers of type A also may be made available on request and in other G3 or G5 grades.

METRIC SERIES NEEDLE ROLLER DIMENSIONS

Nominally metric needle rollers, conforming to the International Standard ISO 3096, are shown in Table B-60 on page B-352. The symbols used in Table B-60 on page B-352, as well as in subsequent tables and figures, are summarized in Table B-63 on page B-354. Needle rollers with flat-ends, which are the preferred design, are shown in Table B-60 on page B-352. Chamfer dimension limits are also shown, the use of which results in the maximum possible effective contact length between roller and raceway. Yet, the relief at the needle roller ends help to reduce stress concentration – resulting in more uniform stress distribution, optimum load ratings, and longer life.

Every needle roller gage is separately packed, and packages are marked accordingly.

REFERENCE STANDARDS ARE:

- **ISO 3096** – rolling bearings – needle rollers – dimensions and tolerances.
- **DIN 5402** – rolling bearing components – needle rollers.

EXAMPLE OF METRIC SERIES NEEDLE ROLLER DESIGNATION AND PACKAGE MARKING:

NRO.B1,5x13,8G2
M2M4

NRO	–	Needle roller
.B	–	Flat-end needle rollers
1,5	–	Nominal diameter D_w = 1.500 mm
13,8	–	Nominal length L_w = 13.800 mm
G2	–	Needle roller grade (see Table B-59 on page B-351.)
M2M4	–	Deviation of needle roller gage -2.000/-4.000 µm

The actual finished diameter is between 1.498 and 1.496 mm.

In the marking of the needle roller gage, P identifies zero (0) or plus (+), and M identifies minus (-). If a shipment of needle rollers of the same size comprises several boxes, each box contains needle rollers of the same grade. The gage may vary from box to box. Each individual box, however, contains needle rollers of the particular gage identified on the box.

METRIC SERIES NEEDLE ROLLER TOLERANCES

Table B-59. Variation of Gage Lot Diameter, Preferred Gages and Circularity Deviation (values in µm)

Grade	Variation of Gage Lot Diameter V_{DwL} Max.	Gages High/Low Deviation of Mean Diameter D_{wmp}										Circularity Deviation Max.
2	2	Max.	0	-1	-2	-3	-4	-5	-6	-7	-8	1
		Min.	-2	-3	-4	-5	-6	-7	-8	-9	-10	
3	3	Max.	0		-1.5	-3		-4.5	-6		-7	1.5
		Min.	-3		-4.5	-6		-7.5	-9		-10	
5	5	Max.	0			-3			-5			2.5
		Min.	-5			-8			-10			

Note 1 - Tolerance values apply only at the middle of the needle roller length.
Note 2 - Needle rollers of any nominal dimensions and any of the quoted grades will be supplied sub-divided into the gages listed in Table B-59 at our option, if nothing to the contrary is agreed upon at the time of ordering.

B

Table B-60. Dimensions of metric series needle rollers

D_w Dia.	L_w Length	Needle Roller Designation	Wt. 1000 pcs Approx.	$r_{s\,min}$ Chamfer Dimension Limits	Rad.	Axial
mm in.	mm in.		kg lbs.	mm in.	mm in.	mm in.
1.5 0.0591	5.8 0.228	NRO.B1,5x5,8G2	0.080 0.176	0.1 0.004	0.4 0.016	0.6 0.024
1.5 0.0591	6.8 0.268	NRO.B1.5x6,8G2	0.094 0.207	0.1 0.004	0.4 0.016	0.6 0.024
1.5 0.0591	7.8 0.307	NRO.B1.5x7,8G2	0.108 0.238	0.1 0.004	0.4 0.016	0.6 0.024
1.5 0.0591	9.8 0.386	NRO.B1,5x9,8G2	0.136 0.300	0.1 0.004	0.4 0.016	0.6 0.024
1.5 0.0591	11.8 0.465	NRO.B1,5x11,8G2	0.164 0.362	0.1 0.004	0.4 0.016	0.6 0.024
1.5 0.0591	13.8 0.543	NRO.B1,5x13,8G2	0.191 0.421	0.1 0.004	0.4 0.016	0.6 0.024
2 0.0787	7.8 0.307	NRO.B2x7,8G2	0.190 0.419	0.1 0.004	0.6 0.024	0.8 0.031
2 0.0787	9.8 0.386	NRO.B2x9,8G2	0.240 0.529	0.1 0.004	0.6 0.024	0.8 0.031
2 0.0787	11.8 0.465	NRO.B2x11,8G2	0.290 0.639	0.1 0.004	0.6 0.024	0.8 0.031
2 0.0787	13.8 0.543	NRO.B2x13,8G2	0.340 0.750	0.1 0.004	0.6 0.024	0.8 0.031
2 0.0787	15.8 0.622	NRO.B2x15,8G2	0.390 0.860	0.1 0.004	0.6 0.024	0.8 0.031
2 0.0787	17.8 0.701	NRO.B2x17,8G2	0.440 0.970	0.1 0.004	0.6 0.024	0.8 0.031
2 0.0787	19.8 0.780	NRO.B2x19,8G2	0.490 1.080	0.1 0.004	0.6 0.024	0.8 0.031
2 0.0787	21.8 0.858	NRO.B2x21,8G2	0.540 1.190	0.1 0.004	0.6 0.024	0.8 0.031
2.5 0.0984	7.8 0.307	NRO.B2,5x7,8G2	0.300 0.661	0.1 0.004	0.6 0.024	0.8 0.031
2.5 0.0984	9.8 0.386	NRO.B2,5x9,8G2	0.380 0.838	0.1 0.004	0.6 0.024	0.8 0.031
2.5 0.0984	11.8 0.465	NRO.B2,5x11,8G2	0.450 0.992	0.1 0.004	0.6 0.024	0.8 0.031
2.5 0.0984	13.8 0.543	NRO.B2,5x13,8G2	0.530 1.168	0.1 0.004	0.6 0.024	0.8 0.031
2.5 0.0984	15.8 0.622	NRO.B2,5x15,8G2	0.610 1.345	0.1 0.004	0.6 0.024	0.8 0.031
2.5 0.0984	17.8 0.701	NRO.B2,5x17,8G2	0.690 1.521	0.1 0.004	0.6 0.024	0.8 0.031
2.5 0.0984	19.8 0.780	NRO.B2,5x19,8G2	0.760 1.676	0.1 0.004	0.6 0.024	0.8 0.031
2.5 0.0984	21.8 0.858	NRO.B2,5x21,8G2	0.840 1.852	0.1 0.004	0.6 0.024	0.8 0.031
2.5 0.0984	23.8 0.937	NRO.B2,5x23,8G2	0.920 2.028	0.1 0.004	0.6 0.024	0.8 0.031
3 0.1181	9.8 0.386	NRO.B3x9,8G2	0.540 1.190	0.1 0.004	0.6 0.024	0.8 0.031
3 0.1181	11.8 0.465	NRO.B3x11,8G2	0.650 1.433	0.1 0.004	0.6 0.024	0.8 0.031
3 0.1181	13.8 0.543	NRO.B3x13,8G2	0.760 1.676	0.1 0.004	0.6 0.024	0.8 0.031
3 0.1181	15.8 0.622	NRO.B3x15,8G2	0.870 1.918	0.1 0.004	0.6 0.024	0.8 0.031
3 0.1181	17.8 0.701	NRO.B3x17,8G2	0.990 2.183	0.1 0.004	0.6 0.024	0.8 0.031
3 0.1181	19.8 0.780	NRO.B3x19,8G2	1.100 2.425	0.1 0.004	0.6 0.024	0.8 0.031
3 0.1181	21.8 0.858	NRO.B3x21,8G2	1.210 2.668	0.1 0.004	0.6 0.024	0.8 0.031
3 0.1181	23.8 0.937	NRO.B3x23,8G2	1.320 2.910	0.1 0.004	0.6 0.024	0.8 0.031
3 0.1181	25.8 1.016	NRO.B3x25,8G2	1.430 3.153	0.1 0.004	0.6 0.024	0.8 0.031
3 0.1181	27.8 1.094	NRO.B3x27,8G2	1.540 3.395	0.1 0.004	0.6 0.024	0.8 0.031
3.5 0.1378	11.8 0.465	NRO.B3,5x11,8G2	0.910 2.006	0.1 0.004	0.9 0.035	1.0 0.039
3.5 0.1378	13.8 0.543	NRO.B3,5x13,8G2	1.040 2.293	0.1 0.004	0.9 0.035	1.0 0.039
3.5 0.1378	15.8 0.622	NRO.B3,5x15,8G2	1.190 2.624	0.1 0.004	0.9 0.035	1.0 0.039
3.5 0.1378	17.8 0.701	NRO.B3,5x17,8G2	1.340 2.954	0.1 0.004	0.9 0.035	1.0 0.039
3.5 0.1378	21.8 0.858	NRO.B3,5x21,8G2	1.640 3.616	0.1 0.004	0.9 0.035	1.0 0.039
3.5 0.1378	23.8 0.937	NRO.B3,5x23,8G2	1.850 4.079	0.1 0.004	0.9 0.035	1.0 0.039
3.5 0.1378	25.8 1.016	NRO.B3,5x25,8G2	1.950 4.299	0.1 0.004	0.9 0.035	1.0 0.039
3.5 0.1378	29.8 1.173	NRO.B3,5x29,8G2	2.250 4.960	0.1 0.004	0.9 0.035	1.0 0.039
3.5 0.1378	34.8 1.370	NRO.B3,5x34,8G2	2.650 5.842	0.1 0.004	0.9 0.035	1.0 0.039
4 0.1575	11.8 0.465	NRO.B4x11,8G2	1.600 3.527	0.1 0.004	0.9 0.035	1.0 0.039
4 0.1575	13.8 0.543	NRO.B4x13,8G2	1.360 2.998	0.1 0.004	0.9 0.035	1.0 0.039
4 0.1575	15.8 0.622	NRO.B4x15,8G2	1.550 3.417	0.1 0.004	0.9 0.035	1.0 0.039
4 0.1575	17.8 0.701	NRO.B4x17,8G2	1.750 3.858	0.1 0.004	0.9 0.035	1.0 0.039
4 0.1575	19.8 0.780	NRO.B4x19,8G2	1.950 4.299	0.1 0.004	0.9 0.035	1.0 0.039
4 0.1575	21.8 0.858	NRO.B4x21,8G2	2.150 4.740	0.1 0.004	0.9 0.035	1.0 0.039
4 0.1575	23.8 0.937	NRO.B4x23,8G2	2.350 5.181	0.1 0.004	0.9 0.035	1.0 0.039
4 0.1575	25.8 1.016	NRO.B4x25,8G2	2.550 5.622	0.1 0.004	0.9 0.035	1.0 0.039
4 0.1575	27.8 1.094	NRO.B4x27,8G2	2.740 6.041	0.1 0.004	0.9 0.035	1.0 0.039
4 0.1575	29.8 1.173	NRO.B4x29,8G2	2.950 6.504	0.1 0.004	0.9 0.035	1.0 0.039
4 0.1575	34.8 1.370	NRO.B4x34,8G2	3.400 7.496	0.1 0.004	0.9 0.035	1.0 0.039
4 0.1575	39.8 1.567	NRO.B4x39,8G2	3.900 8.598	0.1 0.004	0.9 0.035	1.0 0.039
5 0.1969	15.8 0.622	NRO.B5x15,8G2	2.430 5.357	0.1 0.004	0.9 0.035	1.0 0.039
5 0.1969	19.8 0.780	NRO.B5x19,8G2	3.050 6.724	0.1 0.004	0.9 0.035	1.0 0.039
5 0.1969	21.8 0.858	NRO.B5x21,8G2	3.360 7.408	0.1 0.004	0.9 0.035	1.0 0.039
5 0.1969	23.8 0.937	NRO.B5x23,8G2	3.670 8.091	0.1 0.004	0.9 0.035	1.0 0.039
5 0.1969	25.8 1.016	NRO.B5x25,8G2	3.980 8.774	0.1 0.004	0.9 0.035	1.0 0.039
5 0.1969	27.8 1.094	NRO.B5x27,8G2	4.290 9.458	0.1 0.004	0.9 0.035	1.0 0.039
5 0.1969	29.8 1.173	NRO.B5x29,8G2	4.600 10.141	0.1 0.004	0.9 0.035	1.0 0.039
5 0.1969	34.8 1.370	NRO.B5x34,8G2	5.400 11.905	0.1 0.004	0.9 0.035	1.0 0.039
5 0.1969	39.8 1.567	NRO.B5x39,8G2	6.150 13.558	0.1 0.004	0.9 0.035	1.0 0.039
5 0.1969	49.8 1.961	NRO.B5x49,8G2	7.500 16.535	0.1 0.004	0.9 0.035	1.0 0.039
6 0.2362	17.8 0.701	NRO.B6x17,8G2	3.950 8.708	0.1 0.004	0.9 0.035	1.0 0.039

END FORM TOLERANCES

Table B-61 specifies the applicable end configuration for rounded end and flat end needle rollers of all grades.

Table B-61. End configuration limits for metric needle rollers

Rounded End Needle Rollers End Radius		Nominal Diameter of Needle Roller		Flat End Needle Rollers Chamfer Dimension Limits (Dimensions in millimeters)		
Min.	Max.	>	≤		Radial	Axial
R_w (1)		D_w		$r_{s\,min}$ (1)	$r_{s\,max}$	
		—	1	0.1	0.3	0.5
$\frac{D_w}{2}$	$\frac{L_w}{2}$	1	1.5	0.1	0.4	0.6
		1.5	3	0.1	0.6	0.8
		3	6	0.1	0.9	1

(1) The chamfer of a needle roller shall clear a fillet radius equal to $r_{s\,min}$, which should also be considered for designs using rounded end needle rollers.

NEEDLE ROLLER LENGTH TOLERANCE

Tolerances on the length L_w for needle rollers of all grades: h13, see Table B-62.

Table B-62. Tolerances for needle roller length, nominal metric needle rollers

Nominal Length, L_w mm		Tolerance Limits mm (ISO h13)	
>	≤	Max.	Min.
3	6	0	-0.18
6	10	0	-0.22
10	18	0	-0.27
18	30	0	-0.33
30	50	0	-0.39

DESIGN CALCULATIONS FOR NEEDLE ROLLER BEARING COMPLEMENTS

In the majority of full complement needle roller applications, needle roller complements of less than 35 needle rollers per row and a ratio of length to diameter between 4:1 and 8:1, is advantageous. Other combinations of quantity and length-to-diameter ratios of needle rollers have been used successfully. Specific design requirements usually dictate the appropriate selection.

In general, needle roller complements for rotating motion should employ a smaller number of large diameter needle rollers, while needle roller complements subjected to oscillating motion (especially under high loads) should employ a large number of smaller diameter needle rollers.

Oscillating applications with small angular travel encourage the development of fretting corrosion. The best performance under these conditions has been achieved by using the largest practical number of small diameter needle rollers.

CALCULATION OF RACEWAY DIAMETERS

The calculation of inner and outer raceway diameters may be carried out using either the formula given in Table B-63 on page B-354 or the raceway calculation form in Table B-64 on page B-354. To assist the designer in making these calculations, the values of K, required for calculation of needle roller complements of six through 60 needle rollers, are listed in Table B-65 on page B-354. Values of K, for other numbers of needle rollers, can be calculated using the formulas given in Table B-63 on page B-354.

Table B-66 on page B-355 lists the suggested values for minimum radial internal clearance ($G_{r\,min}$) and the minimum circumferential clearance divided by π (cc_{min}/π), to be used for calculating needle roller complements for normal rotating applications – where the speeds, loads and shaft deflections are moderate.

Applications with poor lubrication, unusual motion, large misalignment, raceway distortions, load reversals, high speeds, etc., cannot be characterized as normal rotating applications. These miscellaneous applications require adjustment of the minimum clearances, listed in Table B-66 on page B-355. The factors in Table B-67 on page B-355 may be used for general guidance in the adjustment of minimal clearances. For any of the listed miscellaneous applications or any application where abnormal factors such as those listed above exist, and particularly when the inner raceway diameter will exceed 50.000 mm (1.9685 in.), consult your representative for design assistance.

B

Table B-63. Design factors for needle rollers

Z	Number of needle rollers per bearing path
K	Chordal factor, K = 1/sin (180°/Z)
cc	Total circumferential clearance. See Tables B-66 and B-67 on page B-355 for cc_{min}/π values.
G_r	Radial internal clearance. See Tables B-66 and B-67 on page B-355 for $G_{r\,min}$ values
D_{pw}	Pitch diameter: $D_{pw} = KD_{w\,max} + (cc_{min}/\pi) = E_{min} - D_{w\,max}$ $= F_{max} + G_{r\,min} + D_{w\,max}$
E	Outer raceway bore diameter: $E_{min} = D_{pw} + D_{w\,max} = (K + 1)D_{w\,max} + (cc_{min}/\pi)$ $= F_{max} + G_{r\,min} + 2D_{w\,max}$
F	Inner raceway diameter: $F_{max} = D_{pw} - D_{w\,max} - G_{r\,min}$ $= (K-1)D_{w\,max} + (cc_{min}/\pi) - G_{r\,min}$ $= E_{min} - 2D_{w\,max} - G_{r\,min}$
D_w	Nominal needle roller diameter
D_{we}	Needle roller diameter applicable in the calculation of load ratings: $D_{we} = D_{pw} - F_{max} - G_{r\,min} = \frac{D_{pw} - cc_{min}/\pi}{K}$ $= \frac{F_{max} + G_{r\,min} - (cc_{min}/\pi)}{(K-1)}$ $= E_{min} - D_{pw} = \frac{E_{min} - cc_{min}/\pi}{(K+1)}$
L_w	Overall needle roller length
R_w	End radius, rounded-end needle roller
r_s	Corner rounding, flat-end needle roller
L_{we}	Needle roller length applicable in the calculation of load ratings, for rounded-end needle rollers: $L_{we} = L_{w\,max} - (L_{w\,max} - \sqrt{L_{w\,max}^2 - D_{we}^2})$ For flat-end needle rollers: $L_{we} = L_{w\,max} - (2r_{s\,min})$

Note: If length of contact of the needle roller with the raceway is reduced because of undercuts, chamfers, etc. — L_{we} must be reduced correspondingly.

RACEWAY DIAMETER TOLERANCES

Tables B-68(1) and (2) on page B-355 lists the recommended tolerances that should be applied to the dimensions for the maximum inner raceway and minimum outer raceway diameter after they have been calculated using the information given in Table B-63 or Table B-64.

Table B-64. Raceway calculation form

Step	Source	Design factor	**mm** (in.)
1	Given	Dw, needle roller diameter	**3.000** max. (0.1181)
2	Table B-65	K, for 30 needle rollers	**9.56677** (0.3766)
3	(1) X (2)	KDw	**28.700** (1.1299)
4	Table B-66 on page B-355	ccmin/π = 0.025	**0.025** min. (0.0010 min.)
5	(3) + (4)	Dpw pitch diameter	**28.725** (1.1309)
6	Given	Dw, needle roller diameter	**3.000** max. (0.1181 max.)
7	(5) - (6)		**25.725** (1.0128)
8	Table B-66 on page B-355	Gr, radial clearance	**0.013** min. (0.0005 min.)
9	(7) - (8)	F, inner raceway diameter	**25.712** max. (1.0122 min.) **25.703** min.[1] (1.0119 min.)
10	(5) + (6)	E, outer raceway diameter	**31.725** min. (1.2490 min.) **31.741** max.[1] (1.2496 min.)

[1] Tolerance from Tables B-68(1) and (2) on page B-355.

Table B-65. K values

K values		K values		K values		K values		K values		K values	
Z	K	Z	K	Z	K	Z	K	Z	K	Z	K
6	2.00000	16	5.12583	26	8.29623	36	11.47371	46	14.65364	56	17.86471
7	2.30476	17	5.44219	27	8.61379	37	11.79163	47	14.97171	57	18.15285
8	2.61313	18	5.75877	28	8.93140	38	12.10957	48	15.28979	58	18.47100
9	2.92380	19	6.07553	29	9.24907	39	12.42752	49	15.60788	59	18.78916
10	3.23607	20	6.39245	30	9.56677	40	12.74549	50	15.92597	60	19.10732
11	3.54947	21	6.70951	31	9.88452	41	13.06348	51	16.24408		
12	3.86370	22	7.02667	32	10.20230	42	13.38149	52	16.56219		
13	4.17858	23	7.34394	33	10.52011	43	13.69951	53	16.88031		
14	4.49396	24	7.66130	34	10.83795	44	14.01754	54	17.19843		
15	4.80973	25	7.97873	35	11.15582	45	14.33559	55	17.51657		

CLEARANCES IN NEEDLE ROLLER COMPLEMENTS

Needle rollers, supplied in bulk, are generally used for full complement assemblies. Successful operation of a full complement of needle rollers not only requires careful selection of radial internal clearance, but more importantly, depends on proper circumferential clearance – or the total clearance between needle rollers.

Needle roller guidance, in a full complement assembly, depends largely on contact between needle rollers. Too little circumferential clearance causes overheating. Too much circumferential clearance in a heavily loaded full complement of needle rollers causes loss of needle roller guidance and results in needle roller skew and resultant end thrusting.

Control of radial clearance and circumferential clearance is influenced by the needle roller diameter tolerance, as well as the tolerances of the inner and outer raceway diameters.

END CLEARANCE

The total needle roller end clearance, or endplay, normally should be 0.20 mm (0.008 in.) minimum per path of needle rollers.

Table B-66. Minimum clearances, normal rotating applications

F Nominal Inner Raceway Diameter **mm** in.		CCmin/π	Gr min
>	≤	**mm** in.	**mm** in.
- -	**3** 0.1181	**0.025** 0.0010	**0.006** 0.0002
3 0.1181	**6** 0.2362	**0.102** 0.0040	**0.008** 0.0003
6 0.2362	**10** 0.3937	**0.127** 0.0050	**0.009** 0.0004
10 0.3937	**18** 0.7087	**0.127** 0.0050	**0.011** 0.0004
18 0.7087	**30** 1.1811	**0.127** 0.0050	**0.013** 0.0005
30 1.1811	**50** 1.9685	**0.127** 0.0050	**0.016** 0.0006
50 1.9685	**80** 3.1496	**0.127** 0.0050	**0.019** 0.0007
80 3.1496	**120** 4.7244	**0.127** 0.0050	**0.022** 0.0009

Table B-67. Minimum clearances, miscellaneous applications

Application	cc_{min}/π	$G_{r\,min}$
universal joint	1/3 • normal	1/2 • normal
transmission pilot	normal	3 • normal
constant mesh gear	0.2 • roller dia.	normal
transmission planet	normal	normal
crank pin for two cycle engine	5 • normal	7 • normal

Table B-68(1). Recommended raceway diameter tolerances

F Nominal Inner Raceway Diameter **mm** in.		Tolerance Limits (ISO h5) **mm** in.	
>	≤	Max.	Min.
3 0.1181	**6** 0.2362	**0** 0	**-0.005** -0.0002
6 0.2362	**10** 0.3937	**0** 0	**-0.006** -0.0002
10 0.3937	**18** 0.7087	**0** 0	**-0.008** -0.0003
18 0.7087	**30** 1.1811	**0** 0	**-0.009** -0.0004
30 1.1811	**50** 1.9685	**0** 0	**-0.011** -0.0004
50 1.9685	**80** 3.1496	**0** 0	**-0.013** -0.0005
80 3.1496	**120** 4.7244	**0** 0	**-0.015** -0.0006

Table B-68(2). Recommended raceway diameter tolerances

F Nominal Outer Raceway Diameter **mm** in.		Tolerance Limits (ISO H6) **mm** in.	
>	≤	Max.	Min.
3 0.1181	**6** 0.2362	**0.008** 0.0003	**0** 0
6 0.2362	**10** 0.3937	**0.009** 0.0004	**0** 0
10 0.3937	**18** 0.7087	**0.011** 0.0004	**0** 0
18 0.7087	**30** 1.1811	**0.013** 0.0005	**0** 0
30 1.1811	**50** 1.9685	**0.016** 0.0006	**0** 0
50 1.9685	**80** 3.1496	**0.019** 0.0007	**0** 0
80 3.1496	**120** 4.7244	**0.022** 0.0009	**0** 0

B

LOAD RATING AND LIFE CALCULATIONS FOR FULL COMPLEMENTS OF NEEDLE ROLLERS

Before selecting the quantity and size of needle rollers to be used in a needle roller complement, it is usually necessary to calculate the load rating required using the applied load, speed and desired life. For a review of bearing size selection, see the engineering section of the this catalog.

Because it is not practical to tabulate the dynamic and static load ratings for the great number of needle roller complements that can be assembled by using different quantities, diameters and lengths of rollers, formulae are provided for the necessary calculations. See Tables B-61 and B-62 on page B-353 and Table B-63 on page B-354 for calculation of Lwe.

For convenience, values of f_c and values of $Z^{3/4}$ have been combined into single factors ($f_c Z^{3/4}$). These factors, for a wide range of roller complements, are tabulated in Table B-69.

Table B-69. Values of fc $Z^{3/4}$ for metric units

Z	$f_c Z^{3/4}$ kN - units **mm** in.	Z	$f_c Z^{3/4}$ kN - units **mm** in.
6	**0.267** 0.0105	34	**1.288** 0.0507
7	**0.336** 0.0132	35	**1.310** 0.0516
8	**0.400** 0.0158	36	**1.331** 0.0524
9	**0.459** 0.0181	37	**1.353** 0.0533
10	**0.514** 0.0202	38	**1.374** 0.0541
11	**0.565** 0.0222	39	**1.394** 0.0549
12	**0.613** 0.0241	40	**1.415** 0.0557
13	**0.658** 0.0259	41	**1.435** 0.0565
14	**0.701** 0.0276	42	**1.454** 0.0572
15	**0.742** 0.0292	43	**1.474** 0.0580
16	**0.781** 0.0308	44	**1.493** 0.0588
17	**0.818** 0.0322	45	**1.512** 0.0595
18	**0.853** 0.0336	46	**1.531** 0.0603
19	**0.887** 0.0349	47	**1.549** 0.0610
20	**0.919** 0.0362	48	**1.568** 0.0617
21	**0.951** 0.0374	49	**1.586** 0.0624
22	**0.981** 0.0386	50	**1.604** 0.0632
23	**1.011** 0.0398	51	**1.621** 0.0638
24	**1.039** 0.0409	52	**1.639** 0.0645
25	**1.067** 0.0420	53	**1.656** 0.0652
26	**1.094** 0.0430	54	**1.673** 0.0659
27	**1.120** 0.0441	55	**1.690** 0.0665
28	**1.145** 0.0451	56	**1.707** 0.0672
29	**1.170** 0.0461	57	**1.724** 0.0679
30	**1.195** 0.0471	58	**1.740** 0.0685
31	**1.219** 0.0480	59	**1.757** 0.0692
32	**1.242** 0.0489	60	**1.773** 0.0698
33	**1.265** 0.0498		

BASIC DYNAMIC LOAD RATINGS

The basic dynamic load rating C, for any roller bearing, can be calculated from the formula:

$$C = f_c(iL_{we}\cos\alpha)^{7/9} Z^{3/4} D_{we}^{29/27}$$

Where:

f_c = a factor which depends on the geometry of the bearing components, the accuracy to which the various components are made, and the material. Maximum values are listed in such standards as ISO 281 and USA ANSI-ABMA Standard 11.

i = number of rows of rollers in any one bearing.

α = nominal angle of contact. Since $\alpha = 0$ for a radial roller bearing, $\cos\alpha = 1$.

Other symbols are explained in Table B-63 on page B-354.

For single-path radial roller bearings, where $i = 1$ and $\cos\alpha = 1$, the basic dynamic load rating formula can be written as:

$$C = f_c Z^{3/4} L_{we}^{7/9} D_{we}^{29/27}$$

Example:

Calculate the basic dynamic load rating for a full complement of 28 flat-end rollers, 3.000 mm (0.1181 in.) diameter and 17.800 mm (0.7008 in.) length.

$C = f_c Z^{3/4} L_{we}^{7/9} D_{we}^{29/27}$

$f_c Z^{3/4}$ from Table B-69 on page B-356 = 1.145

$D_{we}^{29/27} = 3^{29/27} = 3.254$

$L_{we} = 17.8 - 0.2 = 17.6$ mm

$L_{we}^{7/9} = 17.6^{7/9} = 9.305$

$C = 1.145 \times 9.305 \times 3.254 = 34.7$ kN

When a couple load (overturning moment) is imposed on a single row of needle rollers, the resulting uneven distribution of load can seriously affect bearing life. In such cases, two rows of needle rollers are generally suggested.

Your representative should be consulted before a final selection of a needle roller complement is made.

BASIC STATIC LOAD RATING

The basic static load rating (C_0) for any roller bearing, including needle roller bearings, can be calculated from the following formula included in ISO 76, USA ANSI-ABMA Standard 11, and other Standards:

$$C_o = f_0\left(1 - \frac{D_{we}\cos\alpha}{D_{pw}}\right) iZL_{we}D_{we}\cos\alpha$$

Where:

f_0 = 0.044 when kilo-newton and millimeter units are used.

D_{pw} = pitch diameter of the needle roller complement (mm).

i = number of rows of rollers in any one bearing.

α = nominal angle of contact. Since $\alpha = 0$ for radial roller bearing, $\cos\alpha = 1$.

The other symbols are described in Table B-63 on page B-354 .

NEEDLE ROLLERS – INCH SERIES

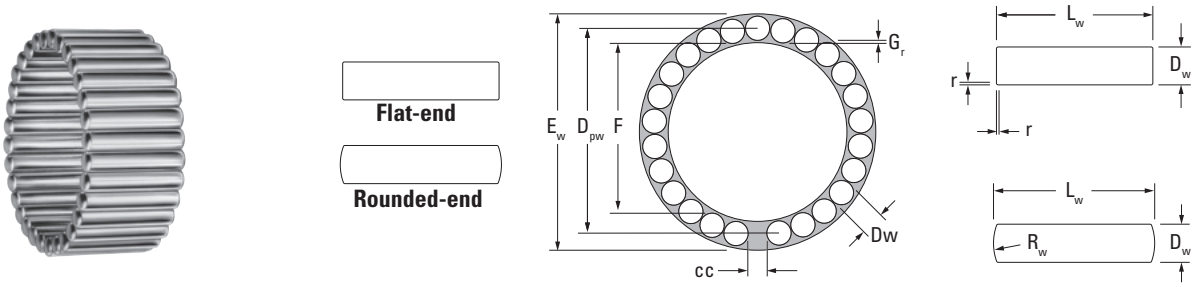

Fig. B-81. Inch series needle rollers

INTRODUCTION

Before selecting a specific needle roller complement, the engineering section should be reviewed for detailed information concerning:

- Bearing type selection.
- Bearing life and reliability.
- Definition of load ratings.
- Life and load relationships.
- Effect of raceway hardness.
- Example of life calculation.
- Lubrication.
- Shaft design.
- Housing design.

In addition to these general considerations, material which follows should also be reviewed when selecting a needle roller complement.

Standard inch series needle rollers are furnished in two styles – rounded-end or the most economical design: flat-end. Materials, dimensions and tolerances for standard needle rollers are specified in this section.

When required, needle rollers having spherical ends, conical ends, trunnion ends or crank pin ends, as well as other end designs, can be furnished. Your representative should be consulted before final needle roller selection is made.

INCH SERIES – NEEDLE ROLLER DIMENSIONS

Needle rollers are made from rolling-bearing-quality steel hardened to 60-64 HRC or equivalent. Nominally inch needle rollers are given in Table B-70. Your representative should be consulted for availability. The symbols used in Tables B-70, as well as in subsequent tables and figures, are summarized in Table B-71 on page B-360.

Needle rollers with rounded-ends permit the use of a more generous fillet between the raceway and the locating shoulder than is possible with flat-end rollers. Also, due to the length of the rounded-end, the possibility of the roller's cylindrical surface operating over the edge of the raceway is less – reducing the chance of occurrence of harmful stress concentrations. On the other hand, where design considerations permit their use, flat-end rollers achieve the maximum possible effective contact length between roller and raceway along with maximum load ratings and longer life.

Table B-70. Preferred needle roller sizes

D_w	L_w																						
Nominal dia.	Nominal length																						
mm	**3.048**	**4.064**	**4.826**	**5.588**	**6.350**	**7.112**	**7.874**	**9.652**	**11.176**	**12.700**	**14.224**	**15.748**	**19.050**	**22.352**	**25.400**	**28.448**	**31.750**	**35.052**	**38.100**	**44.450**	**50.800**	**57.150**	**63.500**
in.	0.12	0.16	0.19	0.22	0.25	0.28	0.31	0.38	0.44	0.5	0.56	0.62	0.75	0.88	1	1.12	1.25	1.38	1.5	1.75	2	2.25	2.5
1.588 0.0625					•	•	•	•	•	•	•	•	•										
1.984 0.0781							•	•	•	•	•	•	•	•									
2.383 0.0938								•	•	•	•	•	•	•	•								
3.175 0.1250										•	•	•	•	•	•	•	•	•					
3.967 0.1562												•	•	•	•	•	•	•	•				
4.763 0.1875													•	•	•	•	•	•	•	•			
5.558 0.2188														•	•	•	•	•	•	•	•		
6.350 0.2500															•	•	•	•	•	•	•	•	•

• Indicates preferred needle roller sizes. Consult with your representative.

CLEARANCES IN NEEDLE ROLLER COMPLEMENTS

Needle rollers, supplied in bulk, are generally used to assemble full complement bearings. Successful operation of a full complement of rollers not only requires careful selection of radial clearance, but more importantly, depends on proper circumferential clearance – or the total clearance between rollers.

Circumferential guidance in a full complement of needle rollers depends largely on roller-to-roller contact. Too little circumferential clearance causes overheating. Too much circumferential clearance, in a heavily loaded full complement of needle rollers, causes loss of roller guidance and results in roller skew and heavy end thrust.

Control of radial clearance and circumferential clearance is influenced by the roller diameter tolerance, as well as the tolerances of the inner and outer raceway diameters.

END CLEARANCE

The total needle roller end clearance, or endplay, normally should be 0.2 mm (0.008 in.) minimum per path of needle rollers.

NOMINAL-INCH NEEDLE ROLLER TOLERANCES

Unless otherwise specified, inch needle rollers are normally manufactured with a tolerance of +0.000 mm -0.005 mm (+0.0000 in. -0.0002 in.). This tolerance has proven acceptable and ensures satisfactory control of circumferential clearance. The needle roller length tolerance may vary with the end configuration. The normal roller length tolerance for rounded-end rollers is +0.000 mm -0.508 mm (+0.0000 in. -0.0200 in.) .

JTEKT also manufactures needle rollers with 0.0025 mm (0.0001 in.) diameter tolerance. These offer enhanced load-carrying capability and improved control of circumferential clearance. For needle rollers of greater precision, please consult with your representative.

Nominal dimensions for typical inch series needle rollers are shown in Table B-70 on page B-358. JTEKT supply rollers with smaller and larger length-to-diameter ratios for special applications. Rollers with dimensions other than those shown in Table B-70 on page B-358 can be obtained, provided the quantities permit economical production. For example, although the largest needle rollers shown in Table B-70 on page B-358 are 6.35 mm (0.2500 in.) [the usual limits for needle rollers], JTEKT can produce quantities of rollers as large as 15.900 mm (0.6250 in.) diameter.

Your representative should be contacted with the following information about the required needle rollers:

- Nominal metric or inch.
- Diameter and tolerance (e.g., 3.175 mm, + 0.000 mm, -0.005 mm [0.1250 in., + 0.0000 in. -0.0002 in.]).
- Length and tolerance (e.g., 14.224 mm, + 0.000 mm, -0.508 mm [0.5600 in., + 0.0000 in. -0.0200 in.]).
- End form (e.g., rounded-end or flat-end).
- Material (e.g., high-carbon chrome steel).
- Special features required (e.g., controlled stress).
- Quantity required.

DESIGN CALCULATIONS FOR NEEDLE ROLLER BEARING COMPLEMENTS

In the majority of full complement needle roller applications, roller complements of less than 35 needle rollers per row and a ratio of roller length to roller diameter between 4:1 and 8:1 is advantageous. Other combinations of quantity and length-to-diameter ratios of needle rollers have been used successfully. Specific design requirements usually dictate the appropriate selection.

In general, roller complements for rotating motion should employ a smaller number of larger-diameter needle rollers, while roller complements subjected to oscillating motion (especially under high loads) should employ a larger number of smaller-diameter needle rollers.

Oscillating applications with small angular travel encourage the development of fretting corrosion. The best performance under these conditions has been achieved by using the largest practical number of small-diameter needle rollers.

CALCULATION OF RACEWAY DIAMETERS

It may be convenient to use the Bearing Calculation Form in Table B-72 on page B-360 to calculate the maximum inner raceway and the minimum outer raceway diameters of a bearing. The formula given in Table B-71 on page B-360 can also be used. To assist the designer in making these calculations, the values of K, required for calculation of needle roller complements of 6 through 60 needle rollers, are listed in Table B-75 on page B-361. Values of K for other numbers of needle rollers will be furnished on request or can be calculated from the formula given in Table B-71 on page B-360.

Table B-73 on page B-360 lists the suggested values for minimum radial clearance and ($G_{r\ min}$) minimum circumferential clearance divided by π ($cc_{min/\pi}$), to be used for calculating needle roller complements for normal rotating applications where the speeds, loads and shaft deflections are moderate.

Applications with poor lubrication, unusual motion, large misalignment, raceway distortions, load reversals, high speeds, etc., can not be characterized as normal rotating applications. These miscellaneous applications require adjustment of the minimum clearances listed in Table B-73 on page B-360. The factors in Tables B-74 on page B-360 may be used for general guidance in the adjustment of the minimal clearances. For any of the listed miscellaneous applications or any application where abnormal factors such as those listed above exist – and particularly when the inner raceway diameter will exceed 50.800 mm (2.0000 in.) – your representative should be consulted for design assistance.

B

Table B-71. Design factors for needle rollers

Z	Number of needle rollers per bearing path
K	Chordal factor, K = 1/sin (180°/ Z)
cc	Total circumferential clearance. See Tables B-77 and B-78 for cc_{min}/π values.
G_r	Radial internal clearance. See Tables B-77 and B-78 for $G_{r\,min}$ values
D_{pw}	Pitch diameter: $D_{pw} = KD_{w\,max} + (cc_{min}/\pi) = E_{min} - D_{w\,max}$ $= F_{max} + G_{r\,min} + D_{w\,max}$
E	Outer raceway bore diameter: $E_{min} = D_{pw} + D_{w\,max} = (K + 1)D_{w\,max} + (cc_{min}/\pi)$ $= F_{max} + G_{r\,min} + 2D_{w\,max}$
F	Inner raceway diameter: $F_{max} = D_{pw} - D_{w\,max} - G_{r\,min}$ $= (K-1)\,D_{w\,max} + (cc_{min}/\pi) - G_{r\,min}$ $= E_{min} - 2D_{w\,max} - G_{r\,min}$
D_w	Nominal needle roller diameter
D_{we}	Needle roller diameter applicable in the calculation of load ratings: $D_{we} = D_{pw} - F_{max} - G_{r\,min} = \frac{D_{pw} - cc_{min}/\pi}{K}$ $= \frac{F_{max} + G_{r\,min} - (cc_{min}/\pi)}{(K-1)}$ $= E_{min} - D_{pw} = \frac{E_{min} - cc_{min}/\pi}{(K+1)}$
L_w	Overall needle roller length
R_w	End radius, rounded-end needle roller
r_s	Corner rounding, flat-end needle roller
L_{we}	Needle roller length applicable in the calculation of load ratings, for rounded-end needle rollers: $L_{we} = L_{w\,max} - (0.4D_{we})$ For flat-end needle rollers: $L_{we} = L_{w\,max} - (2r_{s\,min})$

Note: If length of contact of the needle roller with the raceway is reduced because of undercuts, chamfers, etc. – L_{we} must be reduced correspondingly.

RACEWAY DIAMETER TOLERANCE LIMITS

Tables B-76(1) and (2) on page B-361 lists the recommended tolerances that should be applied to the dimensions for the maximum inner raceway and the minimum outer raceway diameter after they have been calculated using the Bearing Calculation Form, Table B-72.

Table B-72. Bearing calculation form

Step	Source	Design factor	mm (in.)	
1	Given	D_w, roller diameter	**3.175** (0.1250) max.	Min.
2	Table B-75	K, for 30 rollers	**242.996** (9.56677)	
3	(1) x (2)	KD_w	**30.373** (1.1958)	
4	Table B-73	cc_{min}/π = 0.001 in.	**0.025** (0.0010) min.	Max.
5	(3) + (4)	D_{pw}, pitch diameter	**30.399** (1.1968)	
6	Given	D_w, roller diameter	**3.175** (0.1250) max.	Min.
7	(5) - (6)		**27.224** (1.0718)	
8	Table B-73	G_r, radial clearance	**0.013** (0.0005) min.	Max.
9	(7) - (8)	F, inner raceway diameter	**27.211** (1.0713) max.	**27.201** (1.0709) min.[1]
10	(5) + (6)	E, outer raceway diameter	**33.574** (1.3218) min.	**33.589** (1.3224) max.[1]

[1] From Tables B-76(1) and (2) on page B-361.

Table B-73. Minimum clearances, normal rotating applications

F Nominal Inner Raceway Diameter mm **in.**		CCmin/π	Gr min
>	≤	mm **in.**	mm **in.**
- **-**	3 **0.1181**	0.025 **0.0010**	0.006 **0.0002**
3 **0.1181**	6 **0.2362**	0.102 **0.0040**	0.008 **0.0003**
6 **0.2362**	10 **0.3937**	0.127 **0.0050**	0.009 **0.0004**
10 **0.3937**	18 **0.7087**	0.127 **0.0050**	0.011 **0.0004**
18 **0.7087**	30 **1.1811**	0.127 **0.0050**	0.013 **0.0005**
30 **1.1811**	50 **1.9685**	0.127 **0.0050**	0.016 **0.0006**
50 **1.9685**	80 **3.1496**	0.127 **0.0050**	0.019 **0.0007**
80 **3.1496**	120 **4.7244**	0.127 **0.0050**	0.022 **0.0009**

Table B-74. Minimum clearances, miscellaneous applications

Application	cc_{min}/π	$G_{r\,min}$
universal joint	1/3 • normal	1/2 • normal
transmission pilot	normal	3 • normal
constant mesh gear	0.2 • roller dia.	normal
transmission planet	normal	normal
crank pin for two cycle engine	5 • normal	7 • normal

Table B-75. K values

Z	K	Z	K	Z	K	Z	K
6	2.00000	21	6.70951	36	11.47371	51	16.24408
7	2.30476	22	7.02667	37	11.79163	52	16.56219
8	2.61313	23	7.34394	38	12.10957	53	16.88031
9	2.92380	24	7.66130	39	12.42752	54	17.19843
10	3.23607	25	7.97873	40	12.74549	55	17.51657
11	3.54947	26	8.29623	41	13.06348	56	17.83471
12	3.86370	27	8.61379	42	13.38149	57	18.15285
13	4.17858	28	8.93140	43	13.69951	58	18.47100
14	4.49396	29	9.24907	44	14.01754	59	18.78916
15	4.80973	30	9.56677	45	14.33559	60	19.10732
16	5.12583	31	9.88452	46	14.65364		
17	5.44219	32	10.20230	47	14.97171		
18	5.75877	33	10.52011	48	15.28979		
19	6.07553	34	10.83795	49	15.60788		
20	6.39245	35	11.15582	50	15.92597		

Table B-76(1). Recommended raceway diameter tolerances

F Nominal Inner Raceway Diameter mm **in.**		Tolerance Limits (ISO h5) mm **in.**	
>	≤	Max.	Min.
3 **0.1181**	6 **0.2362**	0 **0**	-0.005 **-0.0002**
6 **0.2362**	10 **0.3937**	0 **0**	-0.006 **-0.0002**
10 **0.3937**	18 **0.7087**	0 **0**	-0.008 **-0.0003**
18 **0.7087**	30 **1.1811**	0 **0**	-0.009 **-0.0004**
30 **1.1811**	50 **1.9685**	0 **0**	-0.011 **-0.0004**
50 **1.9685**	80 **3.1496**	0 **0**	-0.013 **-0.0005**
80 **3.1496**	120 **4.7244**	0 **0**	-0.015 **-0.0006**

Table B-76(2). Recommended raceway diameter tolerances

F Nominal Outer Raceway Diameter mm **in.**		Tolerance Limits (ISO H6) mm **in.**	
>	≤	Max.	Min.
3 **0.1181**	6 **0.2362**	0.008 **0.0003**	0 **0**
6 **0.2362**	10 **0.3937**	0.009 **0.0004**	0 **0**
10 **0.3937**	18 **0.7087**	0.011 **0.0004**	0 **0**
18 **0.7087**	30 **1.1811**	0.013 **0.0005**	0 **0**
30 **1.1811**	50 **1.9685**	0.016 **0.0006**	0 **0**
50 **1.9685**	80 **3.1496**	0.019 **0.0007**	0 **0**
80 **3.1496**	120 **4.7244**	0.022 **0.0009**	0 **0**

KEYSTONED ROLLER ASSEMBLIES

Retention of the rollers in the outer raceway by keystoning can be helpful in assembly operations. The following formula may be used to check the bearing design to be sure that a given number of rollers, Z, will keystone.

$$YD_{w\,min} > E_{max} = \text{keystone condition}$$

That is, the product of the keystone constant Y, given below, and the minimum roller diameter $D_{w\,min}$, must be greater than the maximum outer race bore, E_{max}.

Roller complements with 14 or more rollers usually will not keystone unless steps are taken to reduce the circumferential clearance. It is suggested that your representative be consulted when designing a keystoned roller complement with 14 or more rollers.

Table B-77. Keystone constant

Z	Y	Z	Y
8	3.67633	14	5.51128
9	3.97094	15	5.82467
10	4.27277	16	6.13885
11	4.57895	17	6.45365
12	4.88797	18	6.76893
13	5.19892	19	7.08461

B

LOAD RATING AND LIFE CALCULATIONS FOR FULL COMPLEMENTS OF NEEDLE ROLLERS

Before selecting the quantity and size of needle rollers to be used in a needle roller complement, it is usually necessary to calculate the load rating required using the applied load, speed and desired life.

Since it is not practical to tabulate the dynamic and static load ratings for the great number of needle roller complements that can be assembled by using different quantities, diameters and lengths of rollers, formulae are provided for the necessary calculations.

For convenience, values of f_c and values of $Z^{3/4}$ have been combined into single factors ($f_c Z^{3/4}$). These factors for a wide range of needle roller complements are contained in Table B-78.

Table B-78. Values of $f_c Z^{3/4}$ for inch units

Z	$f_c Z^{3/4}$ lbf - units	Z	$f_c Z^{3/4}$ lbf - units
	in.		in.
6	24000	36	119600
7	30200	37	121500
8	35900	38	123400
9	41200	39	125200
10	46100	40	127100
11	50700	41	128900
12	55100	42	130600
13	59100	43	132400
14	63000	44	134100
15	66600	45	135800
16	70100	46	137500
17	73400	47	139200
18	76600	48	140800
19	79700	49	142400
20	82600	50	144000
21	85400	51	145600
22	88100	52	147200
23	90800	53	148800
24	93300	54	150300
25	95800	55	151800
26	98200	56	153300
27	100600	57	154800
28	102900	58	156300
29	105100	59	157800
30	107300	60	159200
31	109500		
32	111600		
33	113600		
34	115600		
35	117600		

BASIC DYNAMIC LOAD RATINGS

The basic dynamic load rating, C, for any roller bearing can be calculated from the formula:

$$C = f_c (i\ L_w \cos\alpha)^{7/9} Z^{3/4} D_w^{29/27}$$

Where:

f_c = a factor which depends on the geometry of the bearing components, the accuracy to which the various components are made, and the material. Maximum values are listed in such standards as ISO 281 and USA ANSI-ABMA Standard 11.

i = number of rows of needle rollers in any one bearing.

α = nominal angle of contact. Since $\alpha = 0$ for a radial needle roller bearing, $\cos\alpha = 1$.

Other symbols are explained in Table B-71 on page B-360.

For single-path radial needle roller bearings, where i = 1 and $\cos\alpha = 1$, the basic dynamic load rating formula can be written as:

$$C_r = f_c Z^{3/4} L_{we}^{7/9} D_w^{29/27}$$

Example:

Calculate the basic dynamic load rating in lbf for a full complement of 28 rounded-end rollers, 0.1250 in. diameter and 0.750 in. length.

$C = f_c Z^{3/4} L_{we}^{7/9} D_{we}^{29/27}$

$f_c Z^{3/4}$ from Table B-78 = 102900

Where:

$D_{we}^{29/27} = 0.1250^{29/27} = 0.1072$

$L_{we} = 0.750 - (0.4)\ 0.1250 = 0.700$ (see Table B-71 on page B-360)

$L_{we}^{7/9} = 0.700^{7/9} = 0.758$

$C = 102900 \times 0.1072 \times 0.758 = 8360$ lbf

When a couple load (overturning moment) is imposed on a single row of needle rollers, the resulting uneven distribution of load can seriously affect bearing life. In such cases, two rows of needle rollers are generally suggested.

Your representative should be consulted before a final selection of a needle roller complement is made.

BASIC STATIC LOAD RATING

The basic static load rating (C_0) for any roller bearing, including needle roller bearings, can be calculated from the following formula included in ISO 76, USA ANSI-ABMA Standard 11 and other Standards:

$$C_o = f_0 \left(1 - \frac{D_{we}\cos\alpha}{D_{pw}}\right) i Z L_{we} D_{we} \cos\alpha$$

Where:

f_0 = 6430 when pound-force and inch units are used

D_{pw} = pitch diameter of the needle roller complement (inch).

i = number of rows of rollers in any one bearing.

α = nominal angle of contact. Since $\alpha = 0$ for radial roller bearing, $\cos\alpha = 1$.

The other symbols are described in Table B-71 on page B-360.

CYLINDRICAL ROLLERS – METRIC SERIES

JTEKT cylindrical rollers are made from bearing-quality steel and hardened to 58-65 HRC or equivalent. Nominal metric cylindrical rollers are sorted into gages based on the mean deviation from nominal diameter and nominal length. The relieved ends of the cylindrical rollers, when used in bearing complements, help to reduce stress concentration at the ends of rollers, both under misalignment or ideal alignment. This results in a more uniform stress distribution along the roller-raceway contact length and optimum bearing performance.

METRIC SERIES CYLINDRICAL ROLLER DIMENSIONS

Nominally metric cylindrical rollers conforming to DIN 5402 sheet 1 are shown in Table B-79. Chamfer dimension limits of these cylindrical rollers with flat-ends are also shown in Table B-79. The use of these chamfer limits results in the maximum possible effective contact length between roller and raceway, along with the already mentioned relieved ends, producing the maximum possible load ratings and longer life.

Each cylindrical roller gage is packed separately, and the mean deviations of diameter and length gages are shown on the package (below the roller designation).

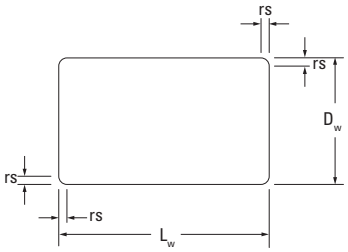

Table B-79. Dimensions of metric series cylindrical rollers

D_w Nominal diameter	L_w Nominal length	$r_{s\,min}$	$r_{s\,max}$	Cylindrical roller designation	Wt. 100 pieces approx.
mm in.	**mm** in.	**mm** in.	**mm** in.		**kg** lbs.
3 0.1181	**5** 0.1969	**0.2** 0.0079	**0.4** 0.0158	ZRO.3x5	**0.027** 0.060
3.5 0.1378	**5** 0.1969	**0.2** 0.0079	**0.4** 0.0158	ZRO.3,5x5	**0.037** 0.082
4 0.1575	**4** 0.1575	**0.2** 0.0079	**0.4** 0.0158	ZRO.4x4	**0.039** 0.086
4 0.1575	**6** 0.2362	**0.2** 0.0079	**0.4** 0.0158	ZRO.4x6	**0.058** 0.128
4 0.1575	**8** 0.3150	**0.2** 0.0079	**0.4** 0.0158	ZRO.4x8	**0.078** 0.172
5 0.1969	**5** 0.1969	**0.2** 0.0079	**0.6** 0.236	ZRO.5x5	**0.075** 0.165
5 0.1969	**8** 0.3150	**0.2** 0.0079	**0.6** 0.0236	ZRO.5x8	**0.121** 0.267
5.5 0.2165	**8** 0.3150	**0.2** 0.0079	**0.6** 0.0236	ZRO.5,5x8	**0.146** 0.322
6 0.2362	**6** 0.2362	**0.2** 0.0079	**0.6** 0.0236	ZRO.6x6	**0.13** 0.287
6 0.2362	**12** 0.4724	**0.2** 0.0079	**0.6** 0.0236	ZRO.6x12	**0.261** 0.575
6.5 0.2559	**9** 0.3543	**0.2** 0.0079	**0.6** 0.0236	ZRO.6,5x9	**0.23** 0.507
7 0.2756	**7** 0.2756	**0.2** 0.0079	**0.6** 0.0236	ZRO.7x7	**0.206** 0.454
7 0.2756	**10** 0.3937	**0.2** 0.0079	**0.6** 0.0236	ZRO.7x10	**0.296** 0.653
7 0.2756	**14** 0.5512	**0.2** 0.0079	**0.6** 0.0236	ZRO.7x14	**0.417** 0.919
7.5 0.2953	**7.5** 0.2953	**0.2** 0.0079	**0.6** 0.0236	ZRO.7,5x7.5	**0.254** 0.560
7.5 0.2953	**9** 0.3543	**0.2** 0.0079	**0.6** 0.0236	ZRO.7,5x9	**0.312** 0.688
7.5 0.2953	**11** 0.4331	**0.2** 0.0079	**0.6** 0.0236	ZRO.7,5x11	**0.374** 0.825
8 0.3150	**8** 0.3150	**0.2** 0.0079	**0.6** 0.0236	ZRO.8x8	**0.308** 0.679
8 0.3150	**12** 0.4724	**0.2** 0.0079	**0.6** 0.0236	ZRO.8x12	**0.465** 1.025
9 0.3543	**10** 0.3937	**0.3** 0.0118	**0.7** 0.0276	ZRO.9x10	**0.5** 1.102
9 0.3543	**14** 0.5512	**0.3** 0.0118	**0.7** 0.0276	ZRO.9x14	**0.68** 1.499
10 0.3937	**10** 0.3937	**0.3** 0.0118	**0.7** 0.0276	ZRO.10x10	**0.6** 1.323
10 0.3937	**11** 0.4331	**0.3** 0.0118	**0.7** 0.0276	ZRO.10x11	**0.68** 1.499
10 0.3937	**14** 0.5512	**0.3** 0.0118	**0.7** 0.0276	ZRO.10x14	**0.85** 1.874
11 0.4331	**15** 0.5906	**0.3** 0.0118	**0.7** 0.0276	ZRO.11x15	**1.1** 2.425
12 0.4724	**14** 0.5512	**0.3** 0.0118	**0.7** 00276	ZRO.12x14	**1.23** 2.712
13 0.5118	**20** 0.7874	**0.4** 0.0158	**0.8** 0.0315	ZRO.13x20	**2.04** 4.497
14 0.5512	**14** 0.5512	**0.4** 0.0158	**0.8** 0.0315	ZRO.14x14	**1.66** 3.660
14 0.5512	**20** 0.7874	**0.4** 0.0158	**0.8** 0.0315	ZRO.14x20	**2.38** 5.247

Note: Mass in accordance with DIN 5402.

B

EXAMPLE OF METRIC SERIES CYLINDRICAL ROLLER DESIGNATION AND PACKAGE MARKING:

ZR0.6 x 8
P0/M6

Nominal diameter: D_w = 6.000 mm
Nominal length: L_w = 8.000 mm
Mean deviation of the diameter ±0.0010 mm (see Table B-80)
Mean deviation of the length -0.006 mm (see Table B-81)
The actual finished diameter is between 5.999 and 6.001 mm
The actual finished length is between 7.991 and 7.997 mm

In the marking of the cylindrical roller gage, P identifies zero (0) or plus (+), M identifies minus (-). If a shipment of cylindrical rollers of the same size comprises several boxes, each box contains cylindrical rollers of the identical gage, although the gage may vary from box to box.

Table B-80. Diameter and form accuracy of metric series cylindrical rollers

Nominal Diameter D_w		Total Diameter Deviation		Variation of Gage	Mean Deviation of Gage DIN/ISO 1101															Circularity Deviation
>	≤	Max.	Min.																	Max.
mm	mm	µm	µm	µm	µm															µm
—	20	+7	-9	2	+6	+5	+4	+3	+2	+1	0	-1	-2	-3	-4	-5	-6	-7	-8	0.8

Table B-81. Length gages of metric series cylindrical rollers

Nominal Length L_w		Total Length Deviation		Variation of Gage	Mean Deviation of Gage				Axial Runout DIN/ISO 1101
>	≤	Max.	Min.						
mm	mm	µm	µm	µm	µm				µm
—	48	+9	-15	6	+6	0	-6	-12	6

INNER RINGS – METRIC SERIES

When it is impractical to meet the shaft raceway design requirements (hardness, surface finish, case depth, etc.) outlined in the engineering section of this catalog, standard inner rings may be used.

Inner rings are made of rolling bearing steel and after hardening, their bores, raceways and end surfaces are ground. Metric series inner rings may be used to provide inner raceway surfaces for metric series radial needle roller and cage assemblies, metric series needle roller bearings and metric series drawn cup needle roller bearings. The extended inner rings are suitable for use with bearings containing lip contact seals and for applications in which axial movement may be present.

CONSTRUCTION

Metric series inner rings are available with combinations of three primary design features. The inner rings may be purchased: without chamfers at the end of the raceway surface to allow for maximum possible raceway contact area, with lubrication holes to allow for increased lubrication to the bearing area, or with a profiled outer diameter for use in applications having a greater degree of misalignment. Table B-82 outlines the features offered in the different series.

Table B-82. Outline of features

Series	Lube Hole	Chamfers	Raceway Profile
JR		X	
JR.JS1	X	X	
JRZ.JS1	X		
IM		X	
IM...P		X	
IMC	X	X	
IM...R6		X	X

The lubrication holes are located nominally at the center of the inner ring width. The nominal diameters for the lubrication holes for inner rings listed in this section are shown in Table B-83.

Table B-83. Nominal diameters for the lubrication holes for inner ring

Series Designation	Inner Ring Bore Diameter		Nominal Lubrication Hole Diameter
	mm		mm
	>	≤	
JR.JS1 JRZ.JS1		20	2.0
	20	40	2.5
	40	80	3.0
	80		3.5
IMC	All catalogue parts		2.2

The BIC and BICG Series inner rings have chamfers and oil holes and are designed to be used with the full complement, metric, needle roller bearings of Series RNA1000, RNA2000 and RNA3000. These inner rings are intended for RNA bearings of the same number; for example a BIC2020 would be used with a RNA2020.

DIMENSIONAL ACCURACY

The tolerances of size, form, and runout for metric series inner rings meet the requirements of ISO normal tolerance class for radial bearings (see the engineering section of this catalog). Most metric series inner rings are produced with outer diameter raceway tolerance in accordance with h5 which, in most cases, is suitable for combining the metric series needle roller bearings to give the normal clearance class and for use with metric caged drawn cup bearings. An exception is the inner rings for metric, full complement drawn cup needle roller bearings; these inner rings are produced with outside diameter raceway tolerance in accordance with g5. Other raceway tolerances may also be found on inner rings for combining with needle roller bearings to give one of the clearance classes, or other specially requested radial internal clearance requirement.

Table B-84 lists the dimensional accuracy of the IM series inner rings.

Table B-84. Dimensional accuracy of IM series inner ring

Part Designation	OD Tolerance	Other Feature Tolerances
IM & IMC with P suffix	h5	ISO 492 Normal Tolerance Class
IM & IMC without P suffix	g5	Consult engineering
Series 49 (e.g. IM4901, IM4902)	Consult engineering	ISO 492 Normal Tolerance Class
Series IM 19000 & IM 20600	+0.000 / -0.005 mm	Consult engineering

MOUNTING OF INNER RINGS

Inner rings may be mounted on the shaft with either a loose transition fit or an interference fit. These fits, used in conjunction with the proper fit of the bearing outer ring, will provide the correct operating clearances for most applications.

Regardless of the fit of the inner ring on the shaft, the inner ring should be axially located by shaft shoulders or other positive means. The shaft shoulder diameter adjacent to the inner ring must not exceed the inner ring outer diameter (per suggestions on page B-153 of the metric series needle roller bearing section).

When metric series inner rings are to be used with the metric series needle roller bearings, appropriate shaft tolerances should be selected from Table B-19 on page B-153 in the heavy-duty needle roller bearing section. When metric series inner rings are to be used with drawn- cup bearings, the suggested shaft tolerances are given in the "inner rings" discussion on page B-48 of the metric series drawn cup needle roller bearings section of this catalog.

INCH SERIES INNER RINGS

Inch series inner rings for use with inch series drawn cup bearings are tabulated on page B-122 of this catalog. See page B-202 for inch series inner rings for use with inch series heavy-duty needle roller bearings.

END WASHERS – METRIC SERIES

When the metric series radial needle roller and cage assembly used in series NAO and RNAO needle roller bearings without flanges cannot be axially located by suitable shoulders or side faces, end washers of series SNSH may be used. These end washers, which are made of spring steel, are designed to be guided in the housing bore. They are tabulated on page B-383.

INNER RINGS
METRIC SERIES

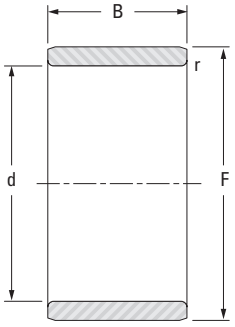

JR, IM..P

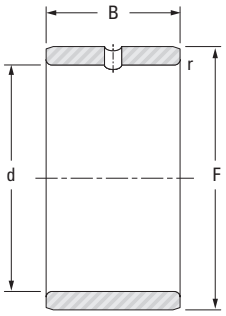

JR.JS1

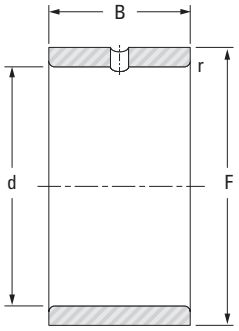

JRZ.JS1

Shaft Dia.	d	F [1]	B	$r_{s\,min}$	Inner Ring Designation	Wt.
mm in.	**mm** in.	**mm** in.	**mm** in.	**mm** in.		**kg** lbs.
5 0.1969	**5** 0.1969	**8** 0.3150	**8** 0.3150	**0.3** 0.01	JR5x8x8JS1	**0.002** 0.004
	5 0.1969	**8** 0.3150	**12** 0.4724	**0.3** 0.01	JR5x8x12	**0.003** 0.007
	5 0.1969	**8** 0.3150	**16** 0.630	**0.3** 0.01	JR5x8x16	**0.004** 0.009
6 0.2362	**6** 0.2362	**9** 0.3543	**8** 0.315	**0.3** 0.01	JR6x9x8JS1	**0.002** 0.004
	6 0.2362	**9** 0.3543	**12** 0.4724	**0.3** 0.01	JR6x9x12	**0.003** 0.007
	6 0.2362	**9** 0.3543	**16** 0.630	**0.3** 0.01	JR6x9x16	**0.004** 0.009
	6 0.2362	**10** 0.3937	**10** 0.394	**0.3** 0.01	JR6x10x10	**0.004** 0.009
	6 0.2362	**10** 0.3937	**10** 0.394	**0.3** 0.01	JR6x10x10JS1	**0.004** 0.009
	6 0.2362	**10** 0.3937	**12** 0.4724	**0.3** 0.01	JRZ6x10x12JS1	**0.005** 0.011
7 0.2756	**7** 0.2756	**10** 0.3937	**10.5** 0.413	**0.3** 0.01	JR7x10x10.5	**0.003** 0.007
	7 0.2756	**10** 0.3937	**12** 0.4724	**0.3** 0.01	JR7x10x12	**0.004** 0.009
	7 0.2756	**10** 0.3937	**16** 0.630	**0.3** 0.01	JR7x10x16	**0.005** 0.011
8 0.3150	**8** 0.3150	**12** 0.4724	**10** 0.394	**0.3** 0.01	JR8x12x10	**0.005** 0.011
	8 0.3150	**12** 0.4724	**10** 0.394	**0.3** 0.01	JR8x12x10JS1	**0.005** 0.011
	8 0.3150	**12** 0.4724	**10.5** 0.413	**0.3** 0.01	JR8x12x10.5	**0.005** 0.011
	8 0.3150	**12** 0.4724	**12** 0.472	**0.3** 0.01	JRZ8xl2x12JS1	**0.006** 0.013
	8 0.3150	**12** 0.4724	**12.5** 0.492	**0.3** 0.01	JR8x12x12.5	**0.006** 0.013
	8 0.3150	**12** 0.4724	**16** 0.630	**0.3** 0.01	IM 8 12 16 P	**0.007** 0.016
9 0.3543	**9** 0.3543	**12** 0.4724	**12** 0.4724	**0.3** 0.01	JR9x12x12	**0.005** 0.011
	9 0.3543	**12** 0.4724	**16** 0.630	**0.3** 0.01	JR9x12x16	**0.006** 0.013
10 0.3937	**10** 0.3937	**13** 0.5118	**12.5** 0.492	**0.3** 0.01	JR10x13x12.5	**0.005** 0.011
	10 0.3937	**14** 0.5512	**11** 0.433	**0.3** 0.01	JR10x14x11JS1	**0.007** 0.015
	10 0.3937	**14** 0.5512	**12** 0.4724	**0.3** 0.01	JR10x14x12	**0.007** 0.015
	10 0.3937	**14** 0.5512	**12** 0.4724	**0.3** 0.01	JR10x14x12JS1	**0.007** 0.015

[1] Inner rings for metric full complement needle roller bearings are produced with outside diameter tolerance g5.

Continued on next page.

INNER RINGS – *continued*

METRIC SERIES

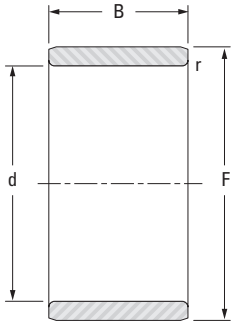

JR, IM..P

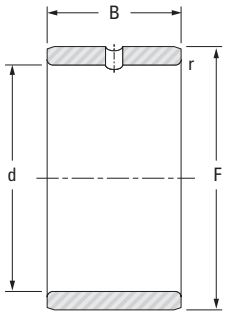

JR.JS1

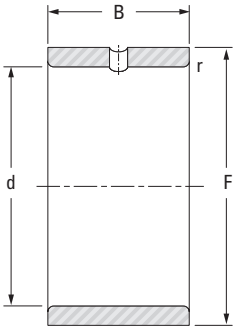

JRZ.JS1

Shaft Dia.	d	F [1]	B	$r_{s\,min}$	Inner Ring Designation	Wt.
mm in.	**mm** in.	**mm** in.	**mm** in.	**mm** in.		**kg** lbs.
10 0.3937	**10** 0.3937	**14** 0.5512	**13** 0.512	**0.3** 0.01	JR10x14x13	**0.007** 0.015
	10 0.3937	**14** 0.5512	**14** 0.551	**0.3** 0.01	JRZ10x14x14JS1	**0.008** 0.018
	10 0.3937	**14** 0.5512	**16** 0.630	**0.3** 0.01	JR10x14x16	**0.009** 0.020
	10 0.3937	**14** 0.5512	**20** 0.787	**0.3** 0.01	JR10x14x20	**0.012** 0.026
12 0.4724	**12** 0.4724	**15** 0.5906	**12.5** 0.492	**0.3** 0.01	JR12x15x12.5	**0.006** 0.013
	12 0.4724	**15** 0.5906	**16** 0.630	**0.3** 0.01	JR12x15x16	**0.008** 0.018
	12 0.4724	**15** 0.5906	**16.5** 0.650	**0.3** 0.01	JR12x15x16.5	**0.008** 0.018
	12 0.4724	**15** 0.5906	**18.5** 0.728	**0.3** 0.01	JR12x15x18.5	**0.009** 0.020
	12 0.4724	**15** 0.5906	**22.4** 0.882	**0.2** 0.01	IM 12 15 22,4 P	**0.011** 0.024
	12 0.4724	**15** 0.5906	**22.5** 0.886	**0.3** 0.01	JR12x15x22.5	**0.011** 0.024
	12 0.4724	**16** 0.6299	**12** 0.472	**0.3** 0.01	JR12x16x12	**0.008** 0.018
	12 0.4724	**16** 0.6299	**12** 0.472	**0.3** 0.01	JR12x16x12JS1	**0.008** 0.018
	12 0.4724	**16** 0.6299	**13** 0.512	**0.3** 0.01	JR12x16x13	**0.008** 0.018
	12 0.4724	**16** 0.6299	**14** 0.551	**0.3** 0.01	JRZ12x16x14JS1	**0.010** 0.022
	12 0.4724	**16** 0.6299	**16** 0.630	**0.3** 0.01	JR12x16x16	**0.011** 0.024
	12 0.4724	**16** 0.6299	**20** 0.787	**0.3** 0.01	JR12x16x20	**0.014** 0.031
	12 0.4724	**16** 0.6299	**22** 0.866	**0.3** 0.01	JR12x16x22	**0.015** 0.033
13 0.5118	**13** 0.5118	**18** 0.7087	**16** 0.630	**0.35** 0.014	IM 13 18 16 P	**0.015** 0.033
14 0.5512	**14** 0.5512	**17** 0.6693	**17** 0.669	**0.3** 0.01	JR14x17x17	**0.009** 0.020
15 0.5906	**15** 0.5906	**18** 0.7087	**16.5** 0.650	**0.3** 0.01	JR15x18x16.5	**0.010** 0.022
	15 0.5906	**19** 0.7480	**16** 0.630	**0.3** 0.01	JR15x19x16	**0.013** 0.029
	15 0.5906	**19** 0.7480	**20** 0.787	**0.3** 0.01	JR15x19x20	**0.017** 0.037
	15 0.5906	**20** 0.7874	**12** 0.472	**0.3** 0.01	JR15x20x12	**0.012** 0.026
	15 0.5906	**20** 0.7874	**12** 0.472	**0.3** 0.01	JR15x20x12JS1	**0.012** 0.026

[1] Inner rings for metric full complement needle roller bearings are produced with outside diameter tolerance g5.

Continued on next page.

INNER RINGS – *continued*

METRIC SERIES

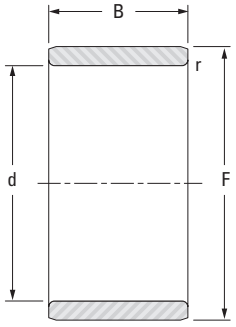

JR, IM..P

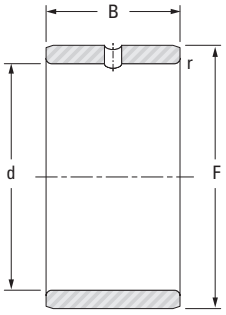

JR.JS1

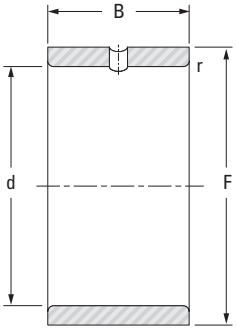

JRZ.JS1

Shaft Dia.	d	F [1]	B	$r_{s\,min}$	Inner Ring Designation	Wt.
mm in.	**mm** in.	**mm** in.	**mm** in.	**mm** in.		**kg** lbs.
15 0.5906	**15** 0.5906	**20** 0.7874	**13** 0.512	**0.3** 0.01	JR15x20x13	**0.014** 0.031
	15 0.5906	**20** 0.7874	**14** 0.551	**0.3** 0.01	JRZ15x20x14JS1	**0.015** 0.033
	15 0.5906	**20** 0.7874	**16** 0.630	**0.3** 0.01	JR15x20x16	**0.017** 0.037
	15 0.5906	**20** 0.7874	**20** 0.787	**0.35** 0.014	IM 15 20 20 P	**0.021** 0.045
	15 0.5906	**20** 0.7874	**23** 0.906	**0.3** 0.01	JR15x20x23	**0.025** 0.055
	15 0.5906	**20** 0.7874	**26** 1.024	**0.3** 0.01	JR15x20x26	**0.028** 0.062
17 0.6693	**17** 0.6693	**20** 0.7874	**16.5** 0.650	**0.3** 0.01	JR17x20x16.5	**0.011** 0.024
	17 0.6693	**20** 0.7874	**20** 0.787	**0.3** 0.01	JR17x20x20	**0.014** 0.031
	17 0.6693	**20** 0.7874	**20.5** 0.807	**0.3** 0.01	JR17x20x20.5	**0.014** 0.031
	17 0.6693	**20** 0.7874	**30.5** 1.201	**0.3** 0.01	JR17x20x30.5	**0.021** 0.046
	17 0.6693	**21** 0.8268	**16** 0.630	**0.3** 0.01	JR17x21x16	**0.015** 0.033
	17 0.6693	**21** 0.8268	**20** 0.787	**0.3** 0.01	JR17x21x20	**0.019** 0.042
	17 0.6693	**22** 0.8661	**13** 0.512	**0.3** 0.01	JR17x22x13	**0.015** 0.033
	17 0.6693	**22** 0.8661	**13** 0.512	**0.35** 0.014	IM 4903	**0.015** 0.033
	17 0.6693	**22** 0.8661	**16** 0.630	**0.3** 0.01	JR17x22x16	**0.019** 0.042
	17 0.6693	**22** 0.8661	**16** 0.630	**0.3** 0.01	JR17x22x16JS1	**0.019** 0.042
	17 0.6693	**22** 0.8661	**16** 0.630	**0.3** 0.01	JRZ17x22x16JS1	**0.019** 0.042
	17 0.6693	**22** 0.8661	**20** 0.787	**0.35** 0.014	IM 17 22 20 P	**0.023** 0.051
	17 0.6693	**22** 0.8661	**23** 0.906	**0.3** 0.01	JR17x22x23	**0.028** 0.062
	17 0.6693	**22** 0.8661	**26** 1.024	**0.3** 0.01	JR17x22x26	**0.031** 0.068
	17 0.6693	**22** 0.8661	**32** 1.260	**0.3** 0.01	JR17x22x32	**0.038** 0.084
20 0.7874	**20** 0.7874	**24** 0.9449	**16** 0.630	**0.3** 0.01	JR20x24x16	**0.018** 0.040
	20 0.7874	**24** 0.9449	**20** 0.787	**0.3** 0.01	JR20x24x20	**0.022** 0.049
	20 0.7874	**25** 0.9843	**16** 0.630	**0.3** 0.01	JR20x25x16	**0.022** 0.049

[1] Call for O.D. tolerance

Continued on next page.

INNER RINGS – *continued*

METRIC SERIES

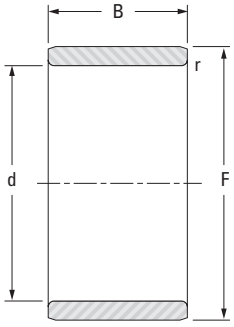

JR, IM..P

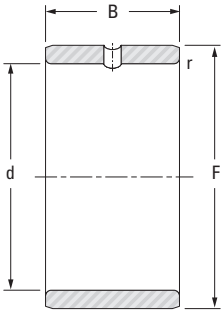

JR.JS1

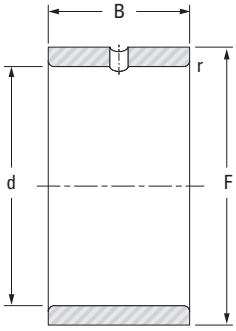

JRZ.JS1

Shaft Dia.	d	F [1]	B	$r_{s\,min}$	Inner Ring Designation	Wt.
mm in.	**mm** in.	**mm** in.	**mm** in.	**mm** in.		**kg** lbs.
20 0.7874	**20** 0.7874	**25** 0.9843	**16** 0.630	**0.3** 0.01	JR20x25x16JS1	**0.022** 0.049
	20 0.7874	**25** 0.9843	**17** 0.669	**0.3** 0.01	JR20x25x17	**0.023** 0.051
	20 0.7874	**25** 0.9843	**18** 0.709	**0.3** 0.01	JRZ20x25x18JS1	**0.025** 0.055
	20 0.7874	**25** 0.9843	**20** 0.787	**0.3** 0.01	JR20x25x20	**0.028** 0.062
	20 0.7874	**25** 0.9843	**20.5** 0.807	**0.3** 0.01	JR20x25x20.5	**0.029** 0.064
	20 0.7874	**25** 0.9843	**26** 1.024	**0.3** 0.01	JR20x25x26	**0.036** 0.079
	20 0.7874	**25** 0.9843	**26.5** 1.043	**0.3** 0.01	JR20x25x26.5	**0.037** 0.082
	20 0.7874	**25** 0.9843	**30** 1.181	**0.3** 0.01	JR20x25x30	**0.042** 0.093
	20 0.7874	**25** 0.9843	**32** 1.260	**0.3** 0.01	JR20x25x32	**0.044** 0.097
	20 0.7874	**25** 0.9843	**38.5** 1.516	**0.3** 0.01	JR20x25x38.5	**0.054** 0.119
22 0.8661	**22** 0.8661	**26** 1.0236	**16** 0.630	**0.3** 0.01	JR22x26x16	**0.019** 0.042
	22 0.8661	**26** 1.0236	**20** 0.787	**0.3** 0.01	JR22x26x20	**0.023** 0.051
	22 0.8661	**28** 1.1024	**17** 0.669	**0.3** 0.01	JR22x28x17	**0.030** 0.066
	22 0.8661	**28** 1.1024	**20.5** 0.807	**0.3** 0.01	JR22x28x20.5	**0.038** 0.084
	22 0.8661	**28** 1.1024	**30** 1.181	**0.3** 0.01	JR22x28x30	**0.056** 0.123
23 0.9055	**23** 0.9055	**28** 1.1024	**20** 0.787	**0.35** 0.014	IM 23 28 20 P	**0.030** 0.066
25 0.9843	**25** 0.9843	**29** 1.1417	**20** 0.787	**0.3** 0.01	JR25x29x20	**0.027** 0.060
	25 0.9843	**29** 1.1417	**30** 1.181	**0.3** 0.01	JR25x29x30	**0.040** 0.088
	25 0.9843	**30** 1.1811	**16** 0.630	**0.3** 0.01	JR25x30x16	**0.027** 0.060
	25 0.9843	**30** 1.1811	**16** 0.630	**0.3** 0.01	JR25x30x16JS1	**0.027** 0.060
	25 0.9843	**30** 1.1811	**17** 0.669	**0.3** 0.01	JR25x30x17	**0.028** 0.062
	25 0.9843	**30** 1.1811	**18** 0.709	**0.3** 0.01	JRZ25x30x18JS1	**0.031** 0.068
	25 0.9843	**30** 1.1811	**20** 0.787	**0.3** 0.01	JR25x30x20	**0.034** 0.075
	25 0.9843	**30** 1.1811	**20.5** 0.807	**0.3** 0.01	JR25x30x20.5	**0.035** 0.077

[1] Call for O.D. tolerance

Continued on next page.

INNER RINGS – *continued*

METRIC SERIES

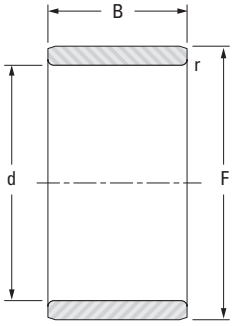

JR, IM..P

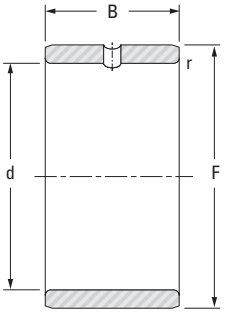

JR.JS1

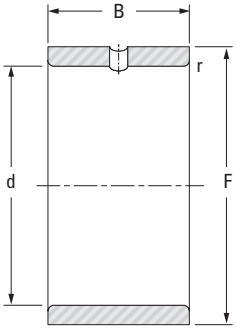

JRZ.JS1

Shaft Dia.	d	F [1]	B	$r_{s\,min}$	Inner Ring Designation	Wt.
mm in.	**mm** in.	**mm** in.	**mm** in.	**mm** in.		**kg** lbs.
25 0.9843	**25** 0.9843	**30** 1.1811	**26** 1.024	**0.3** 0.01	JR25x30x26	**0.044** 0.097
	25 0.9843	**30** 1.1811	**26.5** 1.043	**0.3** 0.01	JR25x30x26.5	**0.045** 0.099
	25 0.9843	**30** 1.1811	**30** 1.181	**0.3** 0.01	JR25x30x30	**0.051** 0.112
	25 0.9843	**30** 1.1811	**32** 1.260	**0.3** 0.01	JR25x30x32	**0.054** 0.119
	25 0.9843	**30** 1.1811	**38.5** 1.516	**0.3** 0.01	JR25x30x38.5	**0.066** 0.146
28 1.1024	**28** 1.1024	**32** 1.2598	**17** 0.669	**0.3** 0.01	JR28x32x17	**0.028** 0.062
	28 1.1024	**32** 1.2598	**20** 0.787	**0.3** 0.01	JR28x32x20	**0.030** 0.066
	28 1.1024	**32** 1.2598	**30** 1.181	**0.3** 0.01	JR28x32x30	**0.044** 0.097
30 1.1811	**30** 1.1811	**35** 1.3780	**16** 0.630	**0.3** 0.01	JR30x35x16	**0.031** 0.068
	30 1.1811	**35** 1.3780	**17** 0.669	**0.3** 0.01	JR30x35x17	**0.033** 0.073
	30 1.1811	**35** 1.3780	**17** 0.669	**0.35** 0.014	IM 4906	**0.033** 0.073
	30 1.1811	**35** 1.3780	**18** 0.709	**0.3** 0.01	JRZ30x35x18JS1	**0.036** 0.079
	30 1.1811	**35** 1.3780	**20** 0.787	**0.3** 0.01	JR30x35x20	**0.039** 0.086
	30 1.1811	**35** 1.3780	**20** 0.787	**0.3** 0.01	JRZ30x35x20JS1	**0.039** 0.086
	30 1.1811	**35** 1.3780	**20.5** 0.807	**0.3** 0.01	JR30x35x20.5	**0.040** 0.088
	30 1.1811	**35** 1.3780	**26** 1.024	**0.3** 0.01	JR30x35x26	**0.054** 0.119
	30 1.1811	**35** 1.3780	**30** 1.181	**0.3** 0.01	JR30x35x30	**0.057** 0.126
	30 1.1811	**35** 1.3780	**32** 1.260	**0.3** 0.01	JR30x35x32	**0.062** 0.137
	30 1.1811	**38** 1.4961	**20** 0.787	**0.6** 0.02	JR30x38x20JS1	**0.067** 0.148
32 1.2598	**32** 1.2598	**37** 1.4567	**20** 0.787	**0.3** 0.01	JR32x37x20	**0.043** 0.095
	32 1.2598	**37** 1.4567	**30** 1.181	**0.3** 0.01	JR32x37x30	**0.064** 0.141
	32 1.2598	**40** 1.5748	**20** 0.787	**0.6** 0.02	JR32x40x20	**0.069** 0.152
	32 1.2598	**40** 1.5748	**36** 1.417	**0.6** 0.02	JR32x40x36	**0.128** 0.282
35 1.3780	**35** 1.3780	**40** 1.5748	**17** 0.669	**0.3** 0.01	JR35x40x17	**0.040** 0.088

[1] Call for O.D. tolerance

Continued on next page.

INNER RINGS – *continued*

METRIC SERIES

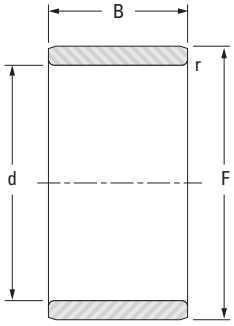

JR, IM..P

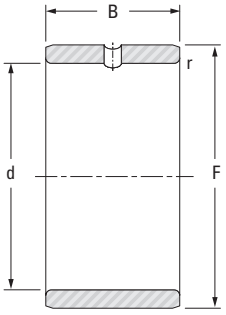

JR.JS1

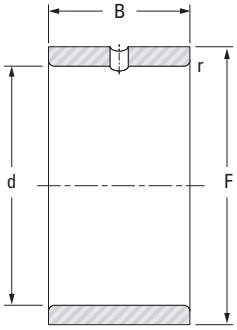

JRZ.JS1

Shaft Dia.	d	F [1]	B	$r_{s\,min}$	Inner Ring Designation	Wt.
mm in.	**mm** in.	**mm** in.	**mm** in.	**mm** in.		**kg** lbs.
35 1.3780	**35** 1.3780	**40** 1.5748	**20** 0.787	**0.3** 0.01	JR35x40x20	**0.046** 0.101
	35 1.3780	**40** 1.5748	**20.5** 0.807	**0.3** 0.01	JR35x40x20.5	**0.049** 0.108
	35 1.3780	**40** 1.5748	**22** 0.866	**0.3** 0.01	JR35x40x22	**0.052** 0.115
	35 1.3780	**40** 1.5748	**30** 1.181	**0.3** 0.01	JR35x40x30	**0.071** 0.157
	35 1.3780	**40** 1.5748	**34** 1.339	**0.3** 0.01	JR35x40x34	**0.080** 0.176
	35 1.3780	**40** 1.5748	**40** 1.575	**0.3** 0.01	JR35x40x40	**0.094** 0.207
	35 1.3780	**42** 1.6535	**20** 0.787	**0.6** 0.02	JR35x42x20	**0.065** 0.143
	35 1.3780	**42** 1.6535	**20** 0.787	**0.6** 0.02	JR35x42x20JS1	**0.065** 0.143
	35 1.3780	**42** 1.6535	**23** 0.906	**0.6** 0.02	JRZ35x42x23JS1	**0.074** 0.163
	35 1.3780	**42** 1.6535	**36** 1.417	**0.6** 0.02	JR35x42x36	**0.122** 0.269
	35 1.3780	**44** 1.7323	**22** 0.866	**0.6** 0.02	JR35x44x22	**0.097** 0.214
37 1.4567	**37** 1.4567	**42** 1.6535	**20** 0.787	**0.35** 0.014	IM 37 42 20 P	**0.046** 0.101
38 1.4961	**38** 1.4961	**43** 1.6929	**20** 0.787	**0.3** 0.01	JR38x43x20	**0.050** 0.110
	38 1.4961	**43** 1.6929	**30** 1.181	**0.3** 0.01	JR38x43x30	**0.075** 0.165
40 1.5748	**40** 1.5748	**45** 1.7717	**17** 0.669	**0.3** 0.01	JR40x45x17	**0.044** 0.097
	40 1.5748	**45** 1.7717	**20** 0.787	**0.3** 0.01	JR40x45x20	**0.052** 0.115
	40 1.5748	**45** 1.7717	**20.5** 0.807	**0.3** 0.01	JR40x45x20.5	**0.054** 0.119
	40 1.5748	**45** 1.7717	**25** 0.984	**0.35** 0.014	IM 40 45 25 P	**0.062** 0.137
	40 1.5748	**45** 1.7717	**30** 1.181	**0.3** 0.01	JR40x45x30	**0.078** 0.172
	40 1.5748	**45** 1.7717	**34** 1.339	**0.3** 0.01	JR40x45x34	**0.089** 0.196
	40 1.5748	**45** 1.7717	**40** 1.575	**0.3** 0.01	JR40x45x40	**0.115** 0.254
	40 1.5748	**48** 1.8898	**22** 0.866	**0.6** 0.02	JR40x48x22	**0.094** 0.207
	40 1.5748	**48** 1.8898	**23** 0.906	**0.6** 0.02	JRZ40x48x23JS1	**0.100** 0.220
	40 1.5748	**48** 1.8898	**40** 1.575	**0.6** 0.02	JR40x48x40	**0.173** 0.381

[1] Call for O.D. tolerance

Continued on next page.

INNER RINGS – *continued*

METRIC SERIES

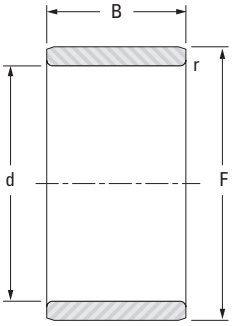

JR, IM..P

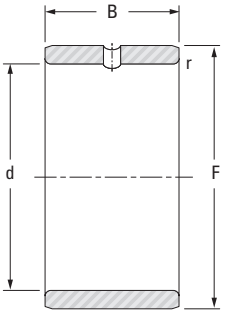

JR.JS1

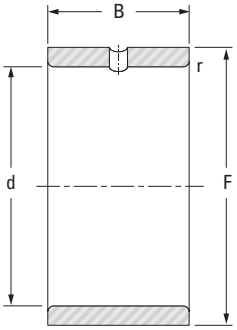

JRZ.JS1

Shaft Dia.	d	F [1]	B	$r_{s\,min}$	Inner Ring Designation	Wt.
mm in.	**mm** in.	**mm** in.	**mm** in.	**mm** in.		**kg** lbs.
40 1.5748	**40** 1.5748	**50** 1.9685	**20** 0.787	**1** 0.04	JR40x50x20	**0.110** 0.243
42 1.6535	**42** 1.6535	**47** 1.8504	**20** 0.787	**0.3** 0.01	JR42x47x20	**0.055** 0.121
	42 1.6535	**47** 1.8504	**30** 1.181	**0.3** 0.01	JR42x47x30	**0.083** 0.183
45 1.7717	**45** 1.7717	**50** 1.9685	**20** 0.787	**0.3** 0.01	JR45x50x20	**0.058** 0.128
	45 1.7717	**50** 1.9685	**25** 0.984	**0.6** 0.02	JR45x50x25	**0.073** 0.161
	45 1.7717	**50** 1.9685	**25.5** 1.004	**0.3** 0.01	JR45x50x25.5	**0.075** 0.165
	45 1.7717	**50** 1.9685	**35** 1.378	**0.6** 0.02	JR45x50x35	**0.103** 0.227
	45 1.7717	**50** 1.9685	**40** 1.575	**0.3** 0.01	JR45x50x40	**0.117** 0.258
	45 1.7717	**52** 2.0472	**22** 0.866	**0.6** 0.02	JR45x52x22	**0.090** 0.198
	45 1.7717	**52** 2.0472	**22** 0.866	**0.85** 0.033	IM 4909	**0.087** 0.192
	45 1.7717	**52** 2.0472	**23** 0.906	**0.6** 0.02	JR45x52x23	**0.096** 0.212
	45 1.7717	**52** 2.0472	**23** 0.906	**0.6** 0.02	JRZ45x52x23JS1	**0.096** 0.212
	45 1.7717	**52** 2.0472	**40** 1.575	**0.6** 0.02	JR45x52x40	**0.167** 0.368
	45 1.7717	**55** 2.1654	**20** 0.787	**1** 0.04	JR45x55x20	**0.133** 0.293
	45 1.7717	**55** 2.1654	**20** 0.787	**1** 0.04	JR45x55x20JS1	**0.133** 0.293
	45 1.7717	**55** 2.1654	**22** 0.866	**1** 0.04	JR45x55x22	**0.135** 0.298
	45 1.7717	**55** 2.1654	**40** 1.575	**1** 0.04	JR45x55x40	**0.247** 0.545
50 1.9685	**50** 1.9685	**55** 2.1654	**20** 0.787	**0.3** 0.01	JR50x55x20	**0.065** 0.143
	50 1.9685	**55** 2.1654	**25** 0.984	**0.6** 0.02	JR50x55x25	**0.081** 0.179
	50 1.9685	**55** 2.1654	**35** 1.378	**0.65** 0.026	IM 50 55 35 P	**0.107** 0.236
	50 1.9685	**55** 2.1654	**35** 1.378	**0.6** 0.02	JR50x55x35	**0.113** 0.249
	50 1.9685	**55** 2.1654	**40** 1.575	**0.3** 0.01	JR50x55x40	**0.130** 0.287
	50 1.9685	**58** 2.2835	**22** 0.866	**0.6** 0.02	JR50x58x22	**0.117** 0.258
	50 1.9685	**58** 2.2835	**23** 0.906	**0.6** 0.02	JRZ50x58x23JS1	**0.122** 0.269

[1] Call for O.D. tolerance

Continued on next page.

INNER RINGS – *continued*

METRIC SERIES

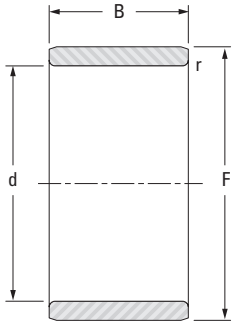

JR, IM..P

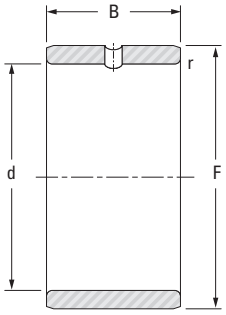

JR.JS1

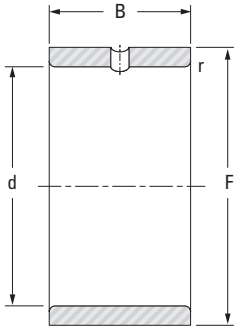

JRZ.JS1

Shaft Dia.	d	F [1]	B	$r_{s\,min}$	Inner Ring Designation	Wt.
mm in.	**mm** in.	**mm** in.	**mm** in.	**mm** in.		**kg** lbs.
50 1.9685	**50** 1.9685	**58** 2.2835	**40** 1.575	**0.6** 0.02	JR50x58x40	**0.213** 0.470
	50 1.9685	**60** 2.3622	**20** 0.787	**1** 0.04	JR50x60x20	**0.155** 0.342
	50 1.9685	**60** 2.3622	**20** 0.787	**1** 0.04	JR50x60x20JS1	**0.155** 0.342
	50 1.9685	**60** 2.3622	**25** 0.984	**1** 0.04	JR50x60x25	**0.170** 0.375
	50 1.9685	**60** 2.3622	**40** 1.575	**1** 0.04	JR50x60x40	**0.310** 0.683
55 2.1654	**55** 2.1654	**60** 2.3622	**25** 0.984	**0.6** 0.02	JR55x60x25	**0.088** 0.194
	55 2.1654	**60** 2.3622	**35** 1.378	**0.65** 0.026	IM 55 60 35 P	**0.118** 0.260
	55 2.1654	**60** 2.3622	**35** 1.378	**0.6** 0.02	JR55x60x35	**0.124** 0.273
	55 2.1654	**63** 2.4803	**25** 0.984	**1** 0.04	JR55x63x25	**0.141** 0.311
	55 2.1654	**63** 2.4803	**45** 1.772	**1** 0.04	JR55x63x45	**0.286** 0.631
	55 2.1654	**65** 2.5591	**30** 1.181	**1** 0.04	JR55x65x30	**0.222** 0.489
	55 2.1654	**65** 2.5591	**60** 2.362	**1** 0.04	JR55x65x60	**0.444** 0.979
58 2.2835	**58** 2.2835	**65** 2.5591	**25** 0.984	**0.85** 0.033	IM 58 65 25 P	**0.125** 0.276
60 2.3622	**60** 2.3622	**68** 2.6772	**25** 0.984	**0.6** 0.02	JR60x68x25	**0.153** 0.337
	60 2.3622	**68** 2.6772	**35** 1.378	**0.6** 0.02	JR60x68x35	**0.220** 0.485
	60 2.3622	**68** 2.6772	**45** 1.772	**1** 0.04	JR60x68x45	**0.284** 0.626
	60 2.3622	**70** 2.7559	**25** 0.984	**1** 0.04	JR60x70x25	**0.200** 0.441
	60 2.3622	**70** 2.7559	**30** 1.181	**1** 0.04	JR60x70x30	**0.240** 0.529
	60 2.3622	**70** 2.7559	**35** 1.378	**0.85** 0.033	IM 60 70 35 P	**0.280** 0.616
	60 2.3622	**70** 2.7559	**60** 2.362	**1** 0.04	JR60x70x60	**0.480** 1.058
65 2.5591	**65** 2.5591	**72** 2.8346	**25** 0.984	**1** 0.04	JR65x72x25	**0.143** 0.315
	65 2.5591	**72** 2.8346	**45** 1.772	**1** 0.04	JR65x72x45	**0.266** 0.586
65 2.5591	**65** 2.5591	**73** 2.8740	**25** 0.984	**0.6** 0.02	JR65x73x25	**0.170** 0.375
	65 2.5591	**73** 2.8740	**35** 1.378	**0.6** 0.02	JR65x73x35	**0.240** 0.529

[1] Call for O.D. tolerance

Continued on next page.

INNER RINGS – *continued*

METRIC SERIES

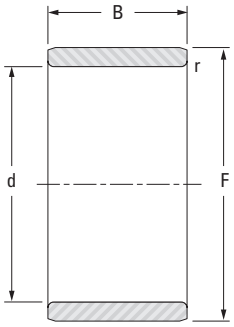

JR, IM..P

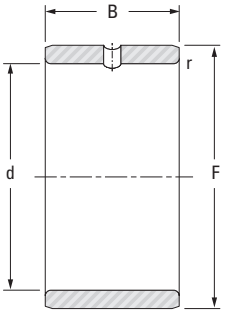

JR.JS1

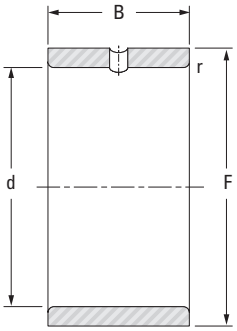

JRZ.JS1

Shaft Dia.	d	F [1]	B	$r_{s\,min}$	Inner Ring Designation	Wt.
mm in.	**mm** in.	**mm** in.	**mm** in.	**mm** in.		**kg** lbs.
65 2.5591	**65** 2.5591	**75** 2.9528	**28** 1.102	**1** 0.04	JR65x75x28	**0.240** 0.529
	65 2.5591	**75** 2.9528	**30** 1.181	**1** 0.04	JR65x75x30	**0.260** 0.573
	65 2.5591	**75** 2.9528	**60** 2.362	**1** 0.04	JR65x75x60	**0.520** 1.146
70 2.7559	**70** 2.7559	**80** 3.1496	**25** 0.984	**1** 0.04	JR70x80x25	**0.230** 0.507
	70 2.7559	**80** 3.1496	**30** 1.181	**1** 0.04	JR70x80x30	**0.270** 0.595
	70 2.7559	**80** 3.1496	**35** 1.378	**1** 0.04	JR70x80x35	**0.320** 0.705
	70 2.7559	**80** 3.1496	**54** 2.126	**1** 0.04	JR70x80x54	**0.500** 1.102
	70 2.7559	**80** 3.1496	**60** 2.362	**1** 0.04	JR70x80x60	**0.556** 1.226
75 2.9528	**75** 2.9528	**85** 3.3465	**25** 0.984	**1** 0.04	JR75x85x25	**0.240** 0.529
	75 2.9528	**85** 3.3465	**30** 1.181	**1** 0.04	JR75x85x30	**0.289** 0.637
	75 2.9528	**85** 3.3465	**35** 1.378	**1** 0.04	JR75x85x35	**0.338** 0.745
	75 2.9528	**85** 3.3465	**54** 2.126	**1** 0.04	JR75x85x54	**0.530** 1.168
80 3.1496	**80** 3.1496	**90** 3.5433	**25** 0.984	**1** 0.04	JR80x90x25	**0.260** 0.573
	80 3.1496	**90** 3.5433	**30** 1.181	**1** 0.04	JR80x90x30	**0.306** 0.675
	80 3.1496	**90** 3.5433	**35** 1.378	**1** 0.04	JR80x90x35	**0.355** 0.783
	80 3.1496	**90** 3.5433	**54** 2.126	**1** 0.04	JR80x90x54	**0.565** 1.246
85 3.3465	**85** 3.3465	**95** 3.7402	**26** 1.024	**1** 0.04	JR85x95x26	**0.290** 0.639
	85 3.3465	**95** 3.7402	**30** 1.181	**1** 0.04	JR85x95x30	**0.334** 0.736
	85 3.3465	**95** 3.7402	**36** 1.417	**1** 0.04	JR85x95x36	**0.397** 0.875
	85 3.3465	**100** 3.9370	**35** 1.378	**1.1** 0.04	JR85x100x35	**0.595** 1.312
	85 3.3465	**100** 3.9370	**63** 2.480	**1.1** 0.04	JR85x100x63	**1.080** 2.381
90 3.5433	**90** 3.5433	**100** 3.9370	**26** 1.024	**1** 0.04	JR90x100x26	**0.300** 0.661
	90 3.5433	**100** 3.9370	**30** 1.181	**1** 0.04	JR90x100x30	**0.350** 0.772
	90 3.5433	**100** 3.9370	**36** 1.417	**1** 0.04	JR90x100x36	**0.422** 0.930

[1] Call for O.D. tolerance

Continued on next page.

INNER RINGS – *continued*

METRIC SERIES

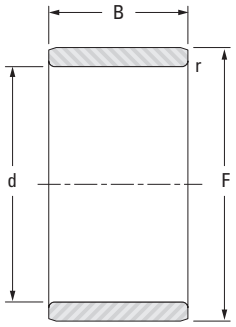

JR, IM..P

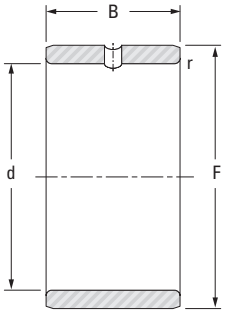

JR.JS1

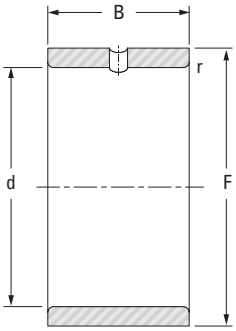

JRZ.JS1

Shaft Dia.	d	F [1]	B	$r_{s\,min}$	Inner Ring Designation	Wt.
mm in.	**mm** in.	**mm** in.	**mm** in.	**mm** in.		**kg** lbs.
90 3.5433	**90** 3.5433	**105** 4.1339	**32** 1.260	**1.1** 0.04	JR90x105x32	**0.580** 1.279
	90 3.5433	**105** 4.1339	**35** 1.378	**1.1** 0.04	JR90x105x35	**0.624** 1.376
	90 3.5433	**105** 4.1339	**63** 2.480	**1.1** 0.04	JR90x105x63	**1.140** 2.513
95 3.7402	**95** 3.7402	**105** 4.1339	**26** 1.024	**1** 0.04	JR95x105x26	**0.310** 0.683
	95 3.7402	**105** 4.1339	**36** 1.417	**1** 0.04	JR95x105x36	**0.430** 0.948
	95 3.7402	**110** 4.3307	**35** 1.378	**1.1** 0.04	JR95x110x35	**0.653** 1.440
	95 3.7402	**110** 4.3307	**63** 2.480	**1.1** 0.04	JR95x110x63	**1.200** 2.646
100 3.9370	**100** 3.9370	**110** 4.3307	**30** 1.181	**1.1** 0.04	JR100x110x30	**0.384** 0.847
	100 3.9370	**110** 4.3307	**40** 1.575	**1.1** 0.04	JR100x110x40	**0.510** 1.124
	100 3.9370	**115** 4.5276	**40** 1.575	**1.1** 0.04	JR100x115x40	**0.790** 1.742
110 4.3307	**110** 4.3307	**120** 4.7244	**30** 1.181	**1** 0.04	JR110x120x30	**0.425** 0.937
	110 4.3307	**125** 4.9213	**40** 1.575	**1.1** 0.04	JR110x125x40	**0.870** 1.918
120 4.7244	**120** 4.7244	**130** 5.1181	**30** 1.181	**1** 0.04	JR120x130x30	**0.460** 1.014
	120 4.7244	**135** 5.3150	**45** 1.772	**1.1** 0.04	JR120x135x45	**1.060** 2.337
130 5.1181	**130** 5.1181	**145** 5.7087	**35** 1.378	**1.1** 0.04	JR130x145x35	**0.890** 1.962
	130 5.1181	**150** 5.9055	**50** 1.969	**1.5** 0.06	JR130x150x50	**1.730** 3.814
140 5.5118	**140** 5.5118	**155** 6.1024	**35** 1.378	**1.1** 0.04	JR140x155x35	**0.955** 2.105
	140 5.5118	**160** 6.2992	**50** 1.969	**1.5** 0.06	JR140x160x50	**1.860** 4.101
150 5.9055	**150** 5.9055	**165** 6.4961	**40** 1.575	**1.1** 0.04	JR150x165x40	**1.170** 2.579
160 6.2992	**160** 6.2992	**175** 6.8898	**40** 1.575	**1.1** 0.04	JR160x175x40	**1.240** 2.734
170 6.6929	**170** 6.6929	**185** 7.2835	**45** 1.772	**1.1** 0.04	JR170x185x45	**1.480** 3.263
180 7.0866	**180** 7.0866	**195** 7.6772	**45** 1.772	**1.1** 0.04	JR180x195x45	**1.560** 3.439

[1] Call for O.D. tolerance

INNER RINGS FOR FULL COMPLEMENT DRAWN CUP NEEDLE ROLLER BEARINGS

METRIC SERIES

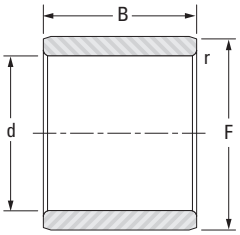

IM

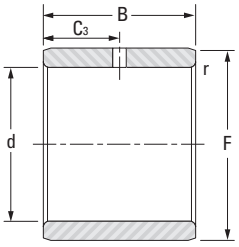

IMC

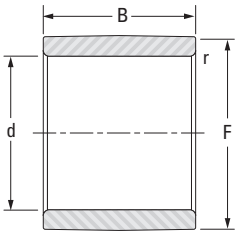

IM…R6

Shaft Dia.	d	F (1)	B	Hole Location(2) C_3	$r_{s\,min}$	Inner Ring Designation	Wt.
mm in.	**mm** in.	**mm** in.	**mm** in.	**mm** in.	**mm** in.		**kg** lbs.
8 0.3150	**8** 0.3150	**12** 0.4724	**12.4** 0.488		**0.3** 0.01	IM 8 12 12.4	**0.006** 0.013
9 0.3543	**9** 0.3543	**13** 0.5118	**12.4** 0.488		**0.3** 0.01	IM 9 13 12.4	**0.006** 0.013
	9 0.3543	**13** 0.5118	**12.4** 0.488		**0.3** 0.01	IM 9 13 12.4 R6	**0.006** 0.013
10 0.3937	**10** 0.3937	**14** 0.5512	**12.4** 0.488		**0.3** 0.01	IM 10 14 12.4	**0.007** 0.015
	10 0.3937	**14** 0.5512	**16.4** 0.646		**0.3** 0.01	IM 10 14 16.4	**0.009** 0.020
11 0.4331	**11** 0.4331	**15** 0.5906	**12.4** 0.488		**0.3** 0.01	IM 11 15 12.4	**0.008** 0.018
12 0.4724	**12** 0.4724	**15** 0.5906	**12.4** 0.488		**0.2** 0.01	IM 12 15 12.4	**0.006** 0.013
	12 0.4724	**16** 0.6299	**12.4** 0.488		**0.2** 0.01	IM 12 16 12.4	**0.008** 0.018
	12 0.4724	**16** 0.6299	**12.4** 0.488		**0.3** 0.01	IM 12 16 12.4 R6	**0.008** 0.018
	12 0.4724	**16** 0.6299	**12.4** 0.488	**6.2** 0.24	**0.3** 0.01	IMC 12 16 12.4	**0.008** 0.018
13 0.5118	**13** 0.5118	**17** 0.6693	**12.4** 0.488		**0.3** 0.01	IM 13 17 12.4	**0.009** 0.020
	13 0.5118	**18** 0.7087	**12.4** 0.488		**0.35** 0.014	IM 13 18 12.4	**0.011** 0.025
	13 0.5118	**18** 0.7087	**12.4** 0.488		**0.35** 0.014	IM 13 18 12.4 R6	**0.011** 0.025
	13 0.5118	**18** 0.7087	**16.4** 0.646		**0.35** 0.014	IM 13 18 16.4	**0.015** 0.033
15 0.5906	**15** 0.5906	**20** 0.7874	**12.4** 0.488		**0.35** 0.014	IM 15 20 12.4	**0.013** 0.028
	15 0.5906	**20** 0.7874	**16.4** 0.646		**0.35** 0.014	IM 15 20 16.4	**0.017** 0.037
	17 0.6693	**22** 0.8661	**16.4** 0.646		**0.35** 0.014	IM 17 22 16.4	**0.019** 0.041
	17 0.6693	**22** 0.8661	**16.4** 0.646		**0.35** 0.014	IM 17 22 16.4 R6	**0.019** 0.041
17 0.6693	**17** 0.6693	**22** 0.8661	**16.4** 0.646	**8.2** 0.32	**0.35** 0.014	IMC 17 22 16.4	**0.019** 0.041
20 0.7874	**20** 0.7874	**25** 0.9843	**16.4** 0.646		**0.35** 0.014	IM 20 25 16.4	**0.022** 0.047
	20 0.7874	**25** 0.9843	**16.4** 0.646		**0.35** 0.014	IM 20 25 16.4 R6	**0.022** 0.047
	20 0.7874	**25** 0.9843	**16.4** 0.646	**8.2** 0.32	**0.35** 0.014	IMC 20 25 16.4	**0.022** 0.047
	20 0.7874	**25** 0.9843	**20.4** 0.803		**0.35** 0.014	IM 20 25 20.4	**0.027** 0.060

(1) Call for O.D. tolerance

(2) Single 2.000 mm (0.0787 in.) dia. through hole

Continued on next page.

INNER RINGS FOR FULL COMPLEMENT DRAWN CUP NEEDLE ROLLER BEARINGS – *continued*

METRIC SERIES

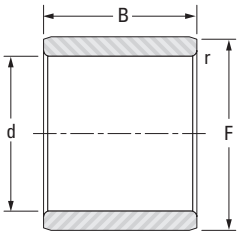

IM

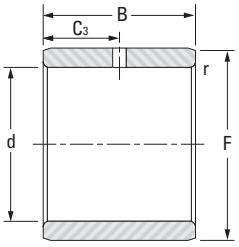

IMC

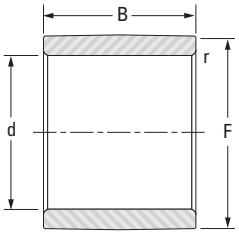

IM…R6

Shaft Dia.	d	F [1]	B	Hole Location[2] C_3	$r_{s\,min}$	Inner Ring Designation	Wt.
mm in.	**mm** in.	**mm** in.	**mm** in.	**mm** in.	**mm** in.		**kg** lbs.
20 0.7874	**20** 0.7874	**25** 0.9843	**20.4** 0.803	**10.2** 0.40	**0.35** 0.014	IMC 20 25 20.4	**0.027** 0.060
	20 0.7874	**25** 0.9843	**25.0** 0.984		**0.35** 0.014	IM 20 25 25	**0.033** 0.073
23 0.9055	**23** 0.9055	**28** 1.1024	**20.4** 0.803		**0.35** 0.014	IM 23 28 20.4	**0.031** 0.067
25 0.9843	**25** 0.9843	**30** 1.1811	**16.4** 0.646		**0.35** 0.014	IM 25 30 16.4	**0.027** 0.060
	25 0.9843	**30** 1.1811	**16.4** 0.646		**0.35** 0.014	IM 25 30 16.4 R6	**0.027** 0.060
	25 0.9843	**30** 1.1811	**16.4** 0.646	**8.2** 0.32	**0.35** 0.014	IMC 25 30 16.4	**0.027** 0.058
	25 0.9843	**30** 1.1811	**20.4** 0.803		**0.35** 0.014	IM 25 30 20.4	**0.033** 0.073
	25 0.9843	**30** 1.1811	**20.4** 0.803	**10.2** 0.40	**0.35** 0.014	IMC 25 30 20.4	**0.033** 0.073
	25 0.9843	**30** 1.1811	**25** 0.984		**0.35** 0.014	IM 25 30 25	**0.040** 0.088
30 1.1811	**30** 1.1811	**35** 1.3780	**16.4** 0.646		**0.35** 0.014	IM 30 35 16.4	**0.031** 0.068
	30 1.1811	**35** 1.3780	**16.4** 0.646		**0.35** 0.014	IM 30 35 16.4 R6	**0.031** 0.068
	30 1.1811	**35** 1.3780	**16.4** 0.646	**8.2** 0.32	**0.35** 0.014	IMC 30 35 16.4	**0.031** 0.068
	30 1.1811	**35** 1.3780	**20.4** 0.803		**0.35** 0.014	IM 30 35 20.4	**0.039** 0.086
	30 1.1811	**35** 1.3780	**20.4** 0.803		**0.35** 0.014	IM 30 35 20.4 R6	**0.039** 0.086
	30 1.1811	**35** 1.3780	**20.4** 0.803	**10.2** 0.40	**0.35** 0.014	IMC 30 35 20.4	**0.039** 0.086
	30 1.1811	**35** 1.3780	**25.0** 0.984		**0.35** 0.014	IM 30 35 25	**0.048** 0.106
35 1.3780	**35** 1.3780	**40** 1.5748	**16.4** 0.646		**0.35** 0.014	IM 35 40 16.4	**0.036** 0.079
	35 1.3780	**40** 1.5748	**16.4** 0.646		**0.35** 0.014	IM 35 40 16.4 R6	**0.036** 0.079
	35 1.3780	**40** 1.5748	**20.4** 0.803		**0.35** 0.014	IM 35 40 20.4	**0.045** 0.099
	35 1.3780	**40** 1.5748	**20.4** 0.803		**0.35** 0.014	IM 35 40 20.4 R6	**0.045** 0.099
	35 1.3780	**40** 1.5748	**20.4** 0.803	**10.2** 0.40	**0.35** 0.014	IMC 35 40 20.4	**0.045** 0.099
	35 1.3780	**40** 1.5748	**25** 0.984		**0.35** 0.014	IM 35 40 25	**0.055** 0.121
40 1.5748	**40** 1.5748	**44** 1.7323	**16.4** 0.646		**0.3** 0.01	IM 40 44 16.4	**0.032** 0.071

[1] Call for O.D. tolerance

[2] Single 2.000 mm (0.0787 in.) dia. through hole

Continued on next page.

INNER RINGS FOR FULL COMPLEMENT DRAWN CUP NEEDLE ROLLER BEARINGS – *continued*

METRIC SERIES

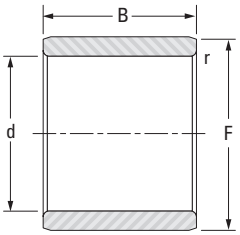

IM

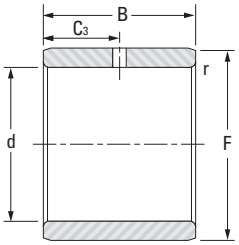

IMC

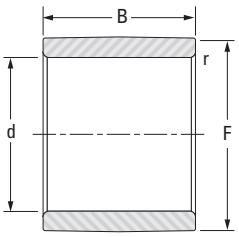

IM…R6

Shaft Dia.	d	F [1]	B	Hole Location[2] C_3	$r_{s\,min}$	Inner Ring Designation	Wt.
mm in.	**mm** in.	**mm** in.	**mm** in.	**mm** in.	**mm** in.		**kg** lbs.
40 1.5748	**40** 1.5748	**44** 1.7323	**16.4** 0.646		**0.3** 0.01	IM 40 44 16.4 R6	**0.032** 0.071
	40 1.5748	**44** 1.7323	**16.4** 0.646	**8.2** 0.32	**0.3** 0.01	IMC 40 44 16.4	**0.032** 0.071
	40 1.5748	**45** 1.7717	**20.4** 0.803		**0.35** 0.014	IM 40 45 20.4	**0.051** 0.112
	40 1.5748	**44** 1.7323	**20.4** 0.803	**10.2** 0.40	**0.35** 0.014	IMC 40 45 20.4	**0.051** 0.112
45 1.7717	**45** 1.7717	**50** 1.9685	**20.4** 0.803		**0.65** 0.026	IM 45 50 20.4	**0.056** 0.123
	45 1.7717	**50** 1.9685	**20.4** 0.803		**0.65** 0.026	IM 45 50 20.4 R6	**0.056** 0.123
	45 1.7717	**50** 1.9685	**25** 0.984		**0.65** 0.026	IM 45 50 25	**0.069** 0.152
	45 1.7717	**60** 2.3622	**25** 0.984		**0.65** 0.026	IM 45 50 25 R6	**0.069** 0.152
50 1.9685	**50** 1.9685	**55** 2.1654	**20.4** 0.803		**0.65** 0.026	IM 50 55 20.4 R6	**0.062** 0.137
	50 1.9685	**55** 2.1654	**20.4** 0.803		**0.65** 0.026	IM 50 55 20.4	**0.062** 0.137

[1] Call for O.D. tolerance

[2] Single 2.000 mm (0.0787 in.) dia. through hole

INNER RINGS FOR MACHINE-TOOL QUALITY PRECISION-COMBINED BEARINGS

METRIC SERIES

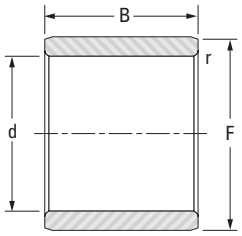

IM

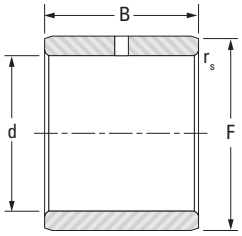

IMC

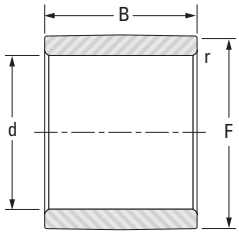

IM…R6

Shaft Dia.	d	F [1]	B	$r_{s\,min}$ +0.0 -0.005 / +0.0 +0.0002	Inner Ring Designation	Wt.
mm in.	**mm** in.	**mm** in.	**mm** in.	**mm** in.		**kg** lbs.
17 0.6693	**17** 0.6693	**20** 0.7874	**27.5** 1.083	**0.2** 0.01	IM 19017	**0.019** 0.042
	17 0.6693	**20** 0.7874	**32** 1.240	**0.2** 0.01	IM 20617	**0.021** 0.046
	17 0.6693	**22** 0.8665	**13** 0.512	**0.35** 0.014	IM 4903	**0.015** 0.033
20 0.7874	**20** 0.7874	**25** 0.9843	**27.5** 1.083	**0.35** 0.014	IM 19020	**0.038** 0.084
	20 0.7874	**25** 0.9843	**32** 1.240	**0.35** 0.014	IM 20620	**0.044** 0.097
25 0.9843	**25** 0.9843	**30** 1.1811	**27.5** 1.083	**0.35** 0.014	IM 19025	**0.042** 0.093
	25 0.9843	**30** 1.1811	**32** 1.240	**0.35** 0.014	IM 20625	**0.052** 0.115
30 1.1811	**30** 1.1811	**35** 1.3780	**17** 0.669	**0.35** 0.014	IM 4906	**0.033** 0.072
	30 1.1811	**35** 1.3780	**27.5** 1.083	**0.35** 0.014	IM 19030	**0.053** 0.117
	30 1.1811	**35** 1.3780	**32** 1.240	**0.35** 0.014	IM 20630	**0.061** 0.134
35 1.3780	**35** 1.3780	**40** 1.5748	**27.5** 1.083	**0.35** 0.014	IM 19035	**0.063** 0.139
	35 1.3780	**40** 1.5748	**32** 1.240	**0.35** 0.014	IM 20635	**0.072** 0.159
40 1.5748	**40** 1.5748	**45** 1.7717	**27.5** 1.083	**0.35** 0.014	IM 19040	**0.069** 0.152
	40 1.5748	**45** 1.7717	**32** 1.240	**0.35** 0.014	IM 20640	**0.080** 0.176
45 1.7717	**45** 1.7717	**50** 1.9685	**30.5** 1.201	**0.65** 0.026	IM 19045	**0.085** 0.187
	45 1.7717	**50** 1.9685	**35** 1.358	**0.65** 0.026	IM 20645	**0.096** 0.212
	45 1.7717	**52** 2.0476	**22** 0.866	**0.85** 0.033	IM 4909	**0.087** 0.192

[1] Call for O.D. tolerance

INNER RINGS WITH OIL HOLES/EXTRA WIDE, RNA BEARINGS

METRIC SERIES

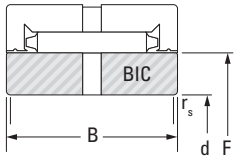

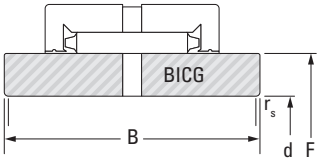

Shaft Dia.	d	F [1]	B	$r_{s\,min}$	Inner Ring Designation	Wt.
mm in.	**mm** in.	**mm** in.	**mm** in.	**mm** in.		**kg** lbs.
12 0.4724	**12** 0.4724	**17.6** 0.6929	**15** 0.591	**1** 0.04	BIC 1012	**0.016** 0.035
	12 0.4724	**17.6** 0.6929	**20** 0.787	**1** 0.04	BIP 1012	**0.020** 0.044
15 0.5906	**15** 0.5906	**20.8** 0.8189	**15** 0.591	**1** 0.04	BIC 1015	**0.018** 0.040
	15 0.5906	**22.1** 0.8701	**22** 0.866	**1** 0.04	BIC 2015	**0.035** 0.077
17 0.6693	**17** 0.6693	**23.9** 0.9409	**15** 0.591	**1** 0.04	BIC 1017	**0.026** 0.057
20 0.7874	**20** 0.7874	**28.7** 1.1299	**18** 0.709	**1** 0.04	BIC 1020	**0.046** 0.101
	20 0.7874	**28.7** 1.1299	**22** 0.866	**1** 0.04	BIC 2020	**0.056** 0.123
	20 0.7874	**28.7** 1.1299	**22** 0.866	**1** 0.04	BIP 1020	**0.056** 0.123
25 0.9843	**25** 0.9843	**33.5** 1.3189	**18** 0.709	**1** 0.04	BIC 1025	**0.054** 0.119
	25 0.9843	**33.5** 1.3189	**22** 0.866	**1** 0.04	BIC 2025	**0.065** 0.143
	25 0.9843	**33.5** 1.3189	**30** 1.181	**1** 0.04	BIC 22025	**0.500** 1.102
	25 0.9843	**33.5** 1.3189	**32** 1.260	**1** 0.04	BIG 2025	**0.095** 0.209
	25 0.9843	**33.5** 1.3189	**42** 1.654	**1** 0.04	BIK 2025	**0.125** 0.276
30 1.1811	**30** 1.1811	**38.2** 1.5039	**18** 0.709	**1** 0.04	BIC 1030	**0.060** 0.132
	30 1.1811	**38.2** 1.5039	**22** 0.866	**1** 0.04	BIC 2030	**0.074** 0.163
	30 1.1811	**44.0** 1.7323	**30** 1.181	**1** 0.04	BIC 3030	**0.188** 0.414
	30 1.1811	**38.2** 1.5039	**32** 1.260	**1** 0.04	BIG 2030	**0.108** 0.238
	30 1.1811	**44.0** 1.7323	**40** 1.575	**1** 0.04	BIG 3030	**0.247** 0.545
35 1.3780	**35** 1.3780	**44.0** 1.7323	**18** 0.709	**1** 0.04	BIC 1035	**0.077** 0.170
	35 1.3780	**44.0** 1.7323	**22** 0.866	**1** 0.04	BIC 2035	**0.093** 0.205
	35 1.3780	**44.0** 1.7323	**32** 1.260	**1** 0.04	BIG 2035	**0.135** 0.298
40 1.5748	**40** 1.5748	**49.7** 1.9567	**18** 0.709	**1.5** 0.06	BIC 1040	**0.094** 0.207
	40 1.5748	**49.7** 1.9567	**22** 0.866	**1.5** 0.06	BIC 2040	**0.115** 0.254
	40 1.5748	**55.4** 2.1811	**36** 1.417	**1.5** 0.06	BIC 3040	**0.321** 0.708

[1] Call for O.D. tolerance

Continued on next page.

INNER RINGS WITH OIL HOLES/EXTRA WIDE, RNA BEARINGS – *continued*

METRIC SERIES

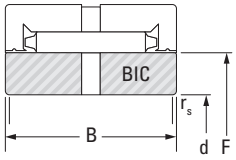

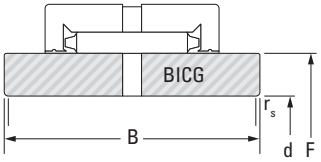

Shaft Dia.	d	F [1]	B	$r_{s\,min}$	Inner Ring Designation	Wt.
mm in.	**mm** in.	**mm** in.	**mm** in.	**mm** in.		**kg** lbs.
	40 1.5748	**49.7** 1.9567	**32** 1.260	**1.5** 0.06	BIG 2040	**0.170** 0.375
	40 1.5748	**49.7** 1.9567	**22** 0.866	**1.5** 0.06	BIP 1040	**0.115** 0.254
45 1.7717	**45** 1.7717	**55.4** 2.1811	**18** 0.709	**1.5** 0.06	BIC 1045	**0.113** 0.249
	45 1.7717	**55.4** 2.1811	**22** 0.866	**1.5** 0.06	BIC 2045	**0.139** 0.306
	45 1.7717	**62.1** 2.4449	**38** 1.496	**1.5** 0.06	BIC 3045	**0.422** 0.930
	45 1.7717	**55.4** 2.1811	**32** 1.260	**1.5** 0.06	BIG 2045	**0.210** 0.463
50 1.9685	**50** 1.9685	**62.1** 2.4449	**20** 0.787	**2** 0.08	BIC 1050	**0.163** 0.359
	50 1.9685	**62.1** 2.4449	**24** 0.945	**2** 0.08	BIC 11050	**0.196** 0.432
	50 1.9685	**62.1** 2.4449	**28** 1.102	**2** 0.08	BIC 2050	**0.228** 0.503
	50 1.9685	**68.8** 2.7087	**38** 1.496	**2** 0.08	BIC 3050	**0.515** 1.135
	50 1.9685	**62.1** 2.4449	**38** 1.496	**2** 0.08	BIG 2050	**0.312** 0.688
	50 1.9685	**62.1** 2.4449	**28** 1.102	**2** 0.08	BIP 1050	**0.228** 0.503
55 2.1654	**55** 2.1654	**68.8** 2.7087	**20** 0.787	**2** 0.08	BIC 1055	**0.205** 0.452
	55 2.1654	**72.6** 2.8583	**38** 1.496	**2** 0.08	BIC 3055	**0.525** 1.157
	55 2.1654	**72.6** 2.8583	**48** 1.890	**2** 0.08	BICG 3055	**0.660** 1.455
	55 2.1654	**68.8** 2.7087	**38** 1.496	**2** 0.08	BIG 2055	**0.390** 0.860
	55 2.1654	**68.8** 2.7087	**28** 1.102	**2** 0.08	BIP 1055	**0.288** 0.635
60 2.3622	**60** 2.3622	**72.6** 2.8583	**28** 1.102	**2** 0.08	BIC 2060	**0.282** 0.622
	60 2.3622	**78.3** 3.0827	**38** 1.496	**2** 0.08	BIC 3060	**0.583** 1.285
	60 2.3622	**72.6** 2.8583	**38** 1.496	**2** 0.08	BICG 2060	**0.385** 0.849
	60 2.3622	**72.6** 2.8583	**38** 1.496	**2** 0.08	BIG 2060	**0.385** 0.849
65 2.5591	**65** 2.5591	**83.1** 3.2717	**38** 1.496	**2** 0.08	BIC 3065	**0.623** 1.373
	65 2.5591	**78.3** 3.0827	**38** 1.496	**2** 0.08	BIG 2065	**0.437** 0.963
70 2.7559	**70** 2.7559	**88.0** 3.4646	**38** 1.496	**2** 0.08	BIC 3070	**0.662** 1.459

[1] Call for O.D. tolerance

Continued on next page.

INNER RINGS WITH OIL HOLES/EXTRA WIDE, RNA BEARINGS — *continued*

METRIC SERIES

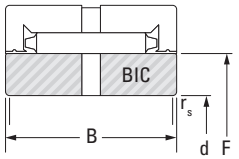

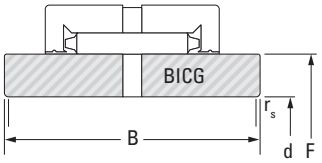

Shaft Dia.	d	F [1]	B	$r_{s\,min}$	Inner Ring Designation	Wt.
mm in.	**mm** in.	**mm** in.	**mm** in.	**mm** in.		**kg** lbs.
70 2.7559	**70** 2.7559	**88.0** 3.4646	**48** 1.890	**2** 0.08	BIG 3070	**0.820** 1.808
	70 2.7559	**88.0** 3.4646	**58** 2.283	**2** 0.08	BIK 3070	**1.010** 2.227
75 2.9528	**75** 2.9528	**88.0** 3.4646	**32** 1.260	**2** 0.08	BIC 2075	**0.410** 0.904
	75 2.9528	**88.0** 3.4646	**42** 1.654	**2** 0.08	BIG 2075	**0.538** 1.186
	75 2.9528	**96.0** 3.7795	**58** 2.283	**2** 0.08	BIK 3075	**1.260** 2.778
80 3.1496	**80** 3.1496	**96.0** 3.7795	**24** 0.945	**2** 0.08	BIC 1080	**0.410** 0.904
	80 3.1496	**96.0** 3.7795	**32** 1.260	**2** 0.08	BIC 2080	**0.545** 1.202
	80 3.1496	**99.5** 3.9173	**38** 1.496	**2** 0.08	BIC 3080	**0.805** 1.775
	80 3.1496	**96.0** 3.7795	**42** 1.654	**2** 0.08	BIG 2080	**0.714** 1.574
90 3.5433	**90** 3.5433	**104.7** 4.1220	**32** 1.260	**2** 0.08	BIC 2090	**0.531** 1.171
	90 3.5433	**109.1** 4.2953	**43** 1.693	**2** 0.08	BIC 3090	**0.990** 2.183
	90 3.5433	**109.1** 4.2953	**53** 2.087	**2** 0.08	BIG 3090	**1.220** 2.690
	90 3.5433	**109.1** 4.2953	**63** 2.480	**2** 0.08	BIK 3090	**1.480** 3.263
95 3.7402	**95** 3.7402	**109.1** 4.2953	**32** 1.260	**2** 0.08	BIC 2095	**0.548** 1.208
	95 3.7402	**114.7** 4.5157	**43** 1.693	**2** 0.08	BIC 3095	**1.075** 2.370
	95 3.7402	**114.7** 4.5157	**63** 2.480	**2** 0.08	BIK 3095	**1.585** 3.494
100 3.9370	**100** 3.9370	**119.2** 4.6929	**43** 1.693	**2** 0.08	BIC 3100	**1.090** 2.403
	100 3.9370	**114.7** 4.5157	**42** 1.654	**2** 0.08	BIG 2100	**0.800** 1.764
105 4.1339	**105** 4.1339	**119.2** 4.6929	**32** 1.260	**2** 0.08	BIC 2105	**0.615** 1.356
	105 4.1339	**124.7** 4.9094	**55** 2.165	**2** 0.08	BIG 3105	**1.505** 3.318
110 4.3307	**110** 4.3307	**124.7** 4.9094	**34** 1.339	**2** 0.08	BIC 2110	**0.705** 1.554
	110 4.3307	**124.7** 4.9094	**44** 1.732	**2** 0.08	BIG 2110	**0.920** 2.028
125 4.9213	**125** 4.9213	**142.5** 5.6102	**44** 1.732	**2** 0.08	BICG 2125	**1.340** 2.954
	125 4.9213	**142.5** 5.6102	**44** 1.732	**2** 0.08	BIG 2125	**1.325** 2.921
130 5.1181	**130** 5.1181	**158.0** 6.2205	**52** 2.047	**2** 0.08	BIC 3130	**2.530** 5.578

[1] Call for O.D. tolerance

END WASHERS
METRIC SERIES

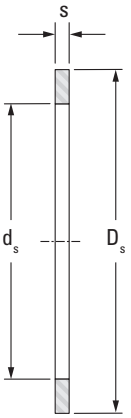

SNSH

d_s	D_s	S	End Washer Designation	Wt.
mm in.	**mm** in.	**mm** in.		**kg** lbs.
8.0 0.315	**18** 0.709	**2.0** 0.079	SNSH8X18X2	**0.003** 0.007
8.5 0.335	**15** 0.591	**0.5** 0.020	SNSH8.5X15X0.5	**0.0005** 0.001
10.5 0.413	**17** 0.669	**0.5** 0.020	SNSH10.5X17X0.5	**0.0006** 0.001
10.5 0.413	**20** 0.787	**0.5** 0.020	SNSH10.5X20X0.5	**0.0009** 0.002
12.5 0.492	**19** 0.748	**0.5** 0.020	SNSH12.5X19X0.5	**0.0006** 0.001
12.5 0.492	**22** 0.866	**0.5** 0.020	SNSH12.5X22X0.5	**0.0010** 0.002
14.5 0.571	**22** 0.866	**0.5** 0.020	SNSH14.5X22X0.5	**0.0008** 0.002
14.5 0.571	**26** 1.024	**0.5** 0.020	SNSH14.5X26X0.5	**0.0014** 0.003
15.5 0.610	**23** 0.906	**0.5** 0.020	SNSH15.5X23X0.5	**0.0009** 0.002
16.5 0.650	**24** 0.945	**0.5** 0.020	SNSH16.5X24X0.5	**0.0009** 0.002
16.5 0.650	**28** 1.102	**0.5** 0.020	SNSH16.5X28X0.5	**0.0016** 0.004
17.5 0.689	**25** 0.984	**0.5** 0.020	SNSH17.5X25X0.5	**0.001** 0.002
18.5 0.728	**26** 1.024	**0.5** 0.020	SNSH18.5X26X0.5	**0.001** 0.002
18.5 0.728	**30** 1.181	**0.5** 0.020	SNSH18.5X30X0.5	**0.002** 0.004
20.5 0.807	**28** 1.102	**0.5** 0.020	SNSH20.5X28X0.5	**0.001** 0.002
20.5 0.807	**32** 1.260	**0.5** 0.020	SNSH20.5X32X0.5	**0.002** 0.004

d_s	D_s	S	End Washer Designation	Wt.
mm in.	**mm** in.	**mm** in.		**kg** lbs.
22.5 0.886	**30** 1.181	**0.5** 0.020	SNSH22.5X30X0.5	**0.001** 0.003
22.5 0.886	**35** 1.378	**0.5** 0.020	SNSH22.5X35X0.5	**0.002** 0.005
25.5 1.004	**35** 1.378	**0.5** 0.020	SNSH25.5X35X0.5	**0.002** 0.004
25.5 1.004	**37** 1.457	**0.5** 0.020	SNSH25.5X37X0.5	**0.002** 0.005
28.5 1.122	**40** 1.575	**0.5** 0.020	SNSH28.5X40X0.5	**0.002** 0.005
30.5 1.201	**40** 1.575	**0.5** 0.020	SNSH30.5X40X0.5	**0.002** 0.005
35.5 1.398	**47** 1.850	**0.5** 0.020	SNSH35.5X47X0.5	**0.003** 0.006
40.5 1.594	**50** 1.969	**0.5** 0.020	SNSH40.5X50X0.5	**0.003** 0.006
41.0 1.614	**55** 2.165	**1.0** 0.039	SNSH41X55X1	**0.008** 0.018
45.5 1.791	**55** 2.165	**0.5** 0.020	SNSH45.5X55X0.5	**0.003** 0.007
46.0 1.811	**62** 2.441	**1.0** 0.039	SNSH46X62X1	**0.011** 0.024
51.0 2.008	**65** 2.559	**1.0** 0.039	SNSH51X65X1	**0.010** 0.022
56.0 2.205	**72** 2.835	**1.0** 0.039	SNSH56X72X1	**0.013** 0.029
61.0 2.402	**78** 3.071	**1.0** 0.039	SNSH61X78X1	**0.015** 0.033
66.0 2.598	**85** 3.346	**1.0** 0.039	SNSH66X85X1	**0.018** 0.040

NOTES

C

APPLICATIONS

C NEEDLE ROLLER BEARING APPLICATIONS

C

APPLICATIONS

C

Needle Roller Bearing Applications

	Page
Automatic Transmissions	C-4
Manual Transmissions	C-6
Valvetrain Components	C-8
Steering Columns	C-9
Automotive Accessories	C-10
Drivetrain Components	C-12
Power Transmissions	C-13
Sport Vehicles	C-14
Marine Applications	C-16
Power Tools	C-18
Consumer Products	C-19
Mechanical Pumps	C-20
Industrial Machinery	C-21

C

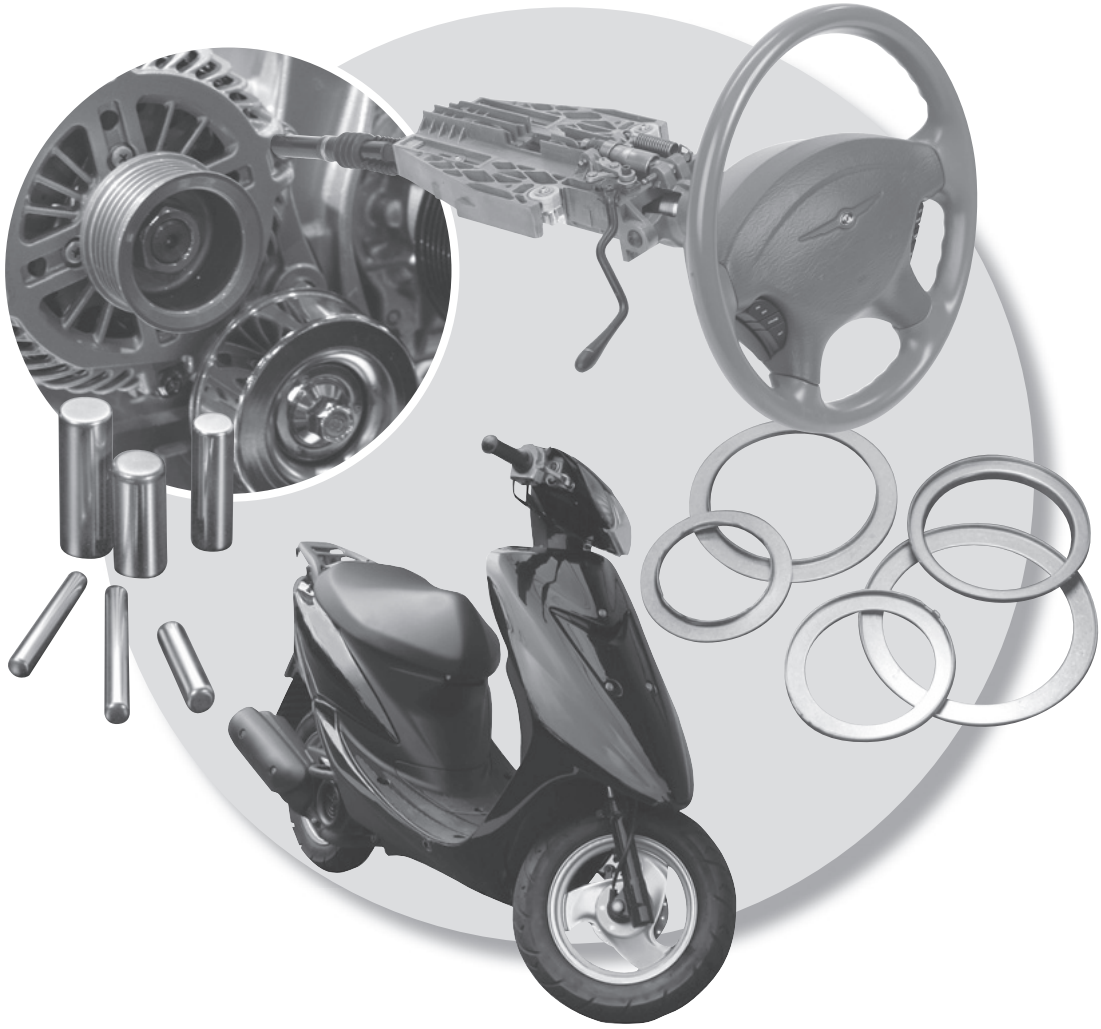

AUTOMATIC TRANSMISSIONS

As power density and performance demands continue to increase in automatic transmissions, JTEKT has developed a large array of innovative bearing designs. These offerings help reduce mass, increase power ratings, minimize assembly time, and reduce costs. Analytical evaluations, in-house testing, and new material developments allow JTEKT to solve the most demanding automotive design problems.

FRICTION REDUCTION/FUEL ECONOMY

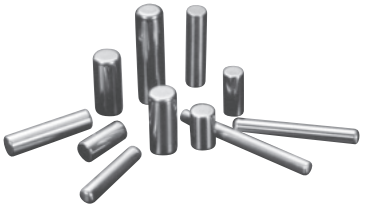

Needle rollers for planet gears

Planet thrust washers

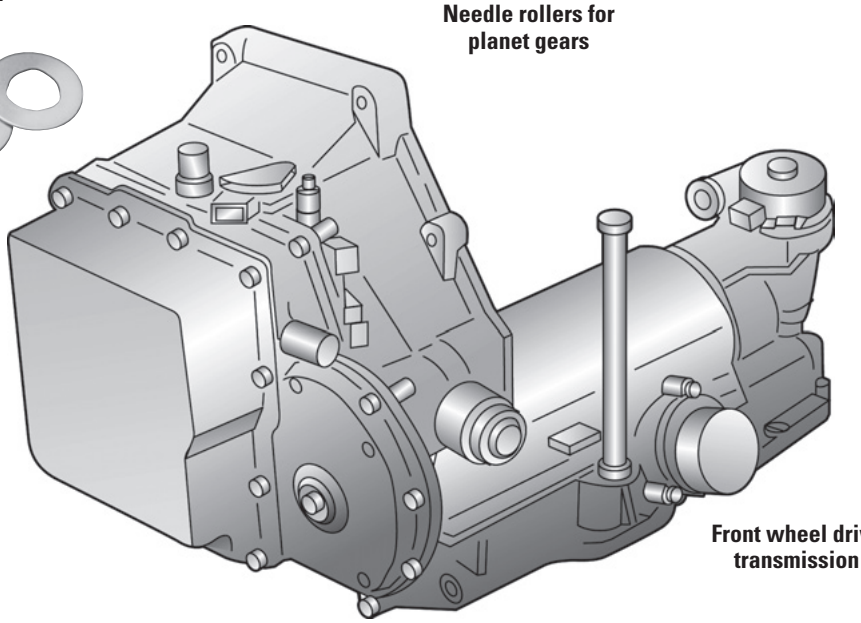

Front wheel drive transmission

Caged drawn cup bearings

Drawn raceway sleeves

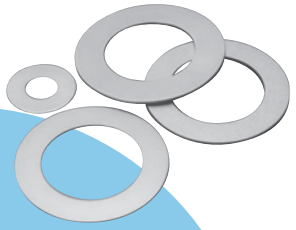

Bearing thrust washers

Unitized thrust bearing assemblies

Inverted drawn cup bearings

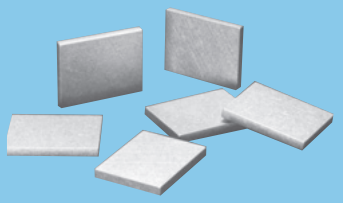

Pump vanes for transmission pumps

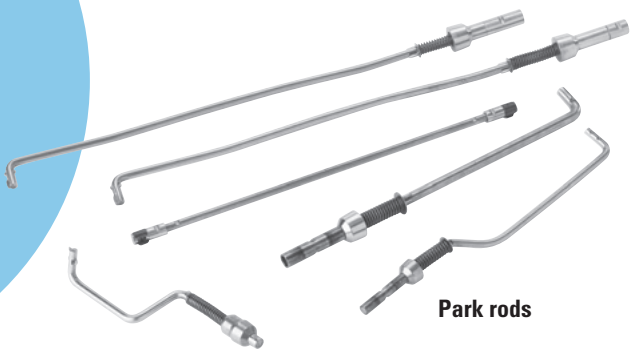

Park rods

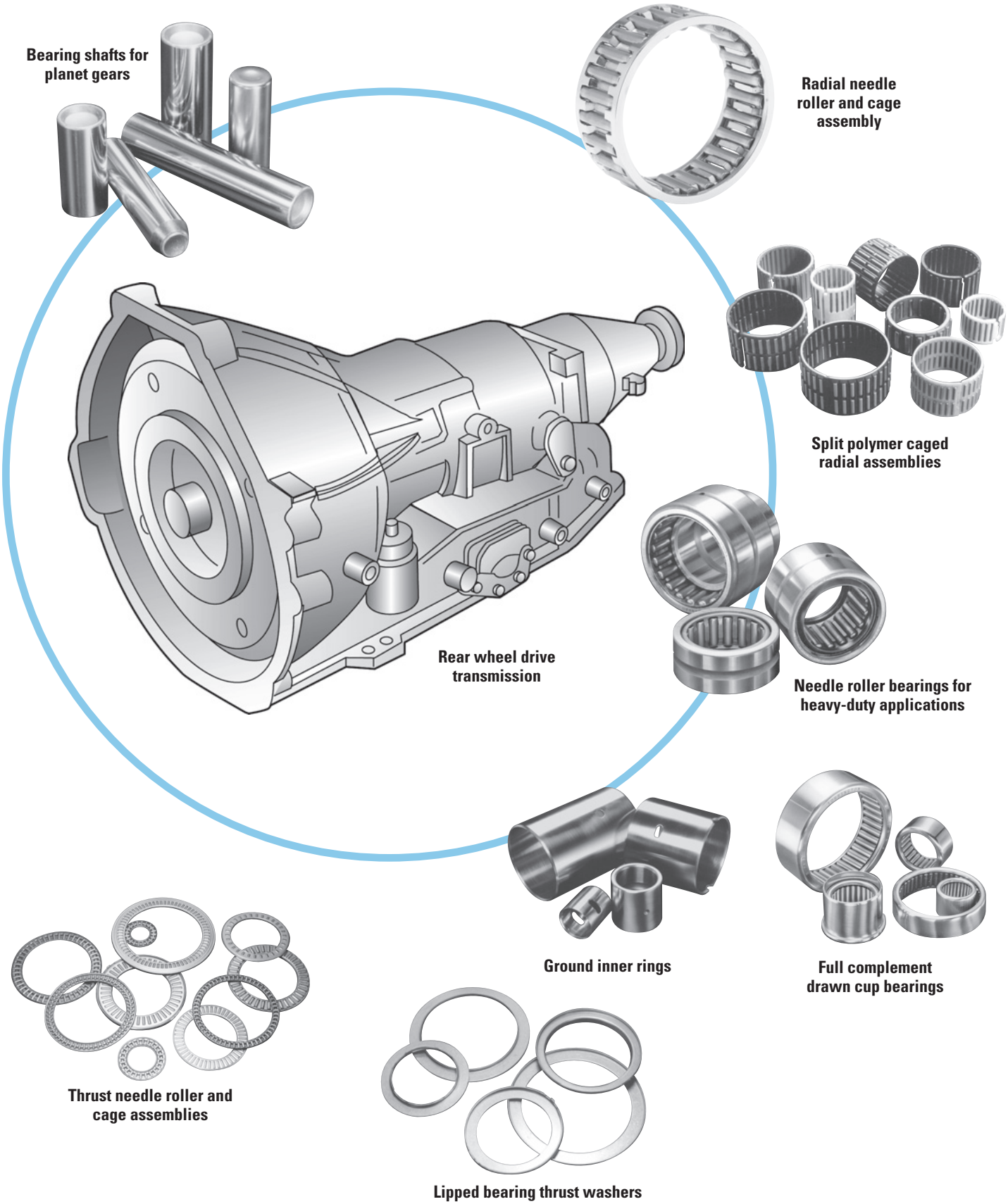
Bearing shafts for planet gears
Radial needle roller and cage assembly
Split polymer caged radial assemblies
Rear wheel drive transmission
Needle roller bearings for heavy-duty applications
Ground inner rings
Full complement drawn cup bearings
Thrust needle roller and cage assemblies
Lipped bearing thrust washers

MANUAL TRANSMISSIONS

JTEKT offers a wide range of highly reliable bearings tailored specifically for manual transmissions. These bearings allow designers to minimize cross sections while attaining peak load-carrying capability in a very cost-effective package. JTEKT has considerable experience with providing in-depth engineering analysis and creative design solutions for the most demanding transmission applications.

FUEL ECONOMY

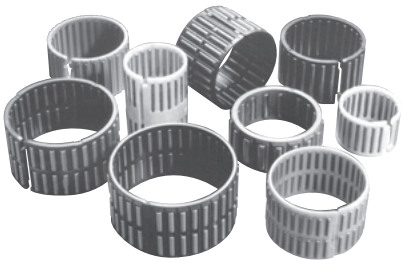

Radial needle roller and cage assemblies (Split polymer type)

Caged drawn cup bearings

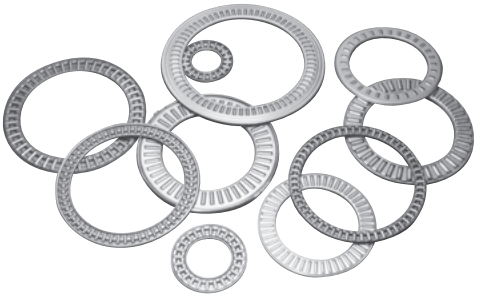

Thrust needle roller and cage assemblies

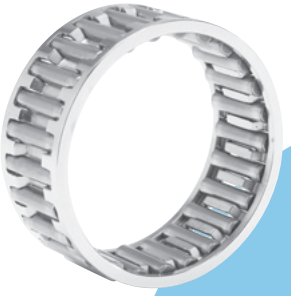

Radial needle roller and cage assembly

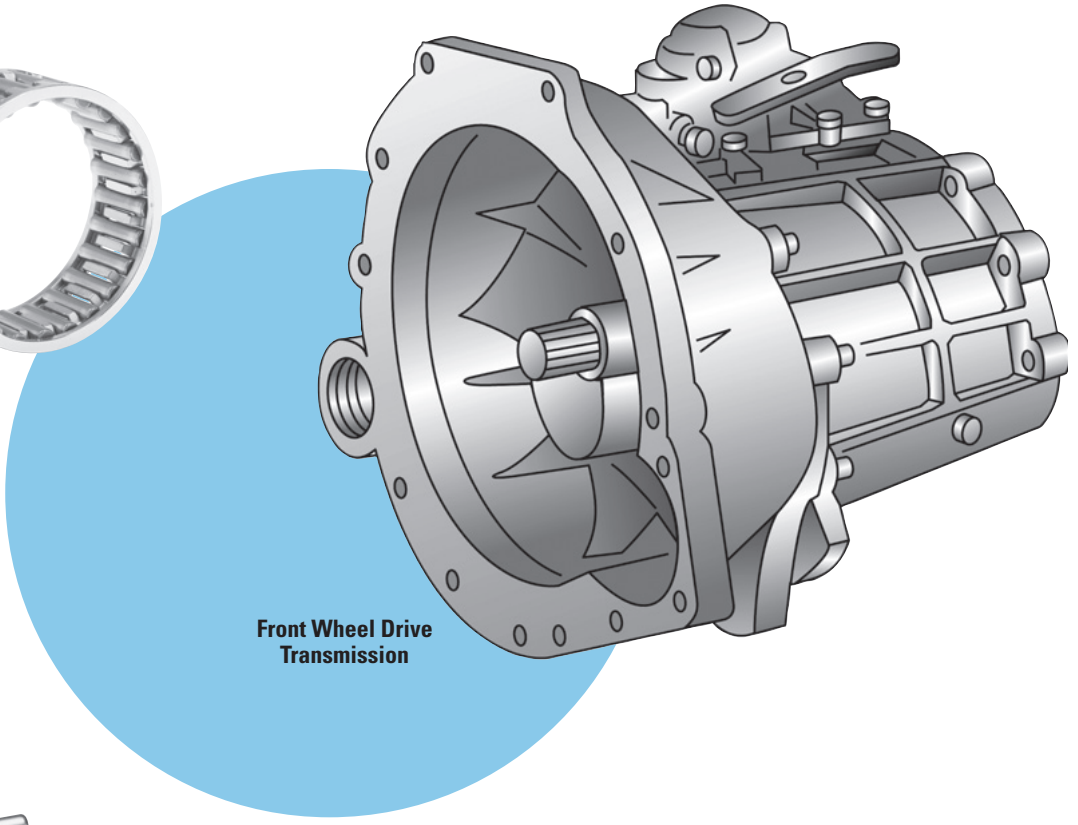

Front Wheel Drive Transmission

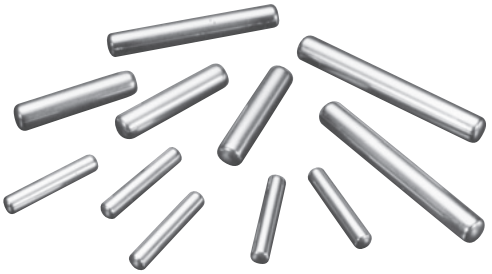

Needle rollers

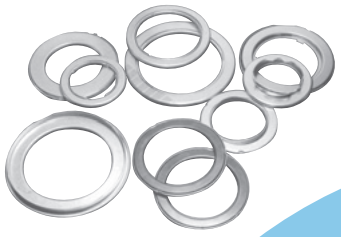

Unitized thrust bearing assemblies

Heavy wall drawn cup bearing

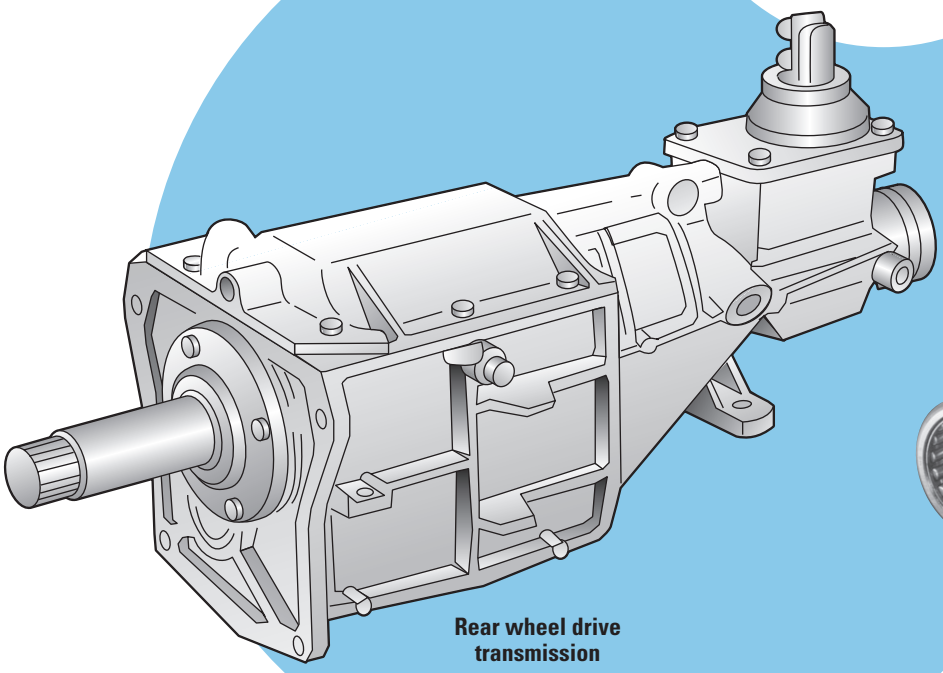

Rear wheel drive transmission

Needle roller bearings for heavy-duty applications

Drawn raceway sleeves

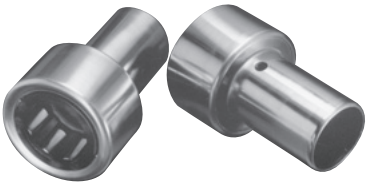

Full complement drawn cup bearings

Full complement drawn cup bearings

C

VALVETRAIN COMPONENTS

JTEKT's technical and analytical leadership in valvetrain components results in superior products that optimize mass, stiffness, moment of inertia and noise. These design features contribute to the demands of increased engine operating speeds, improved fuel economy and better overall performance.

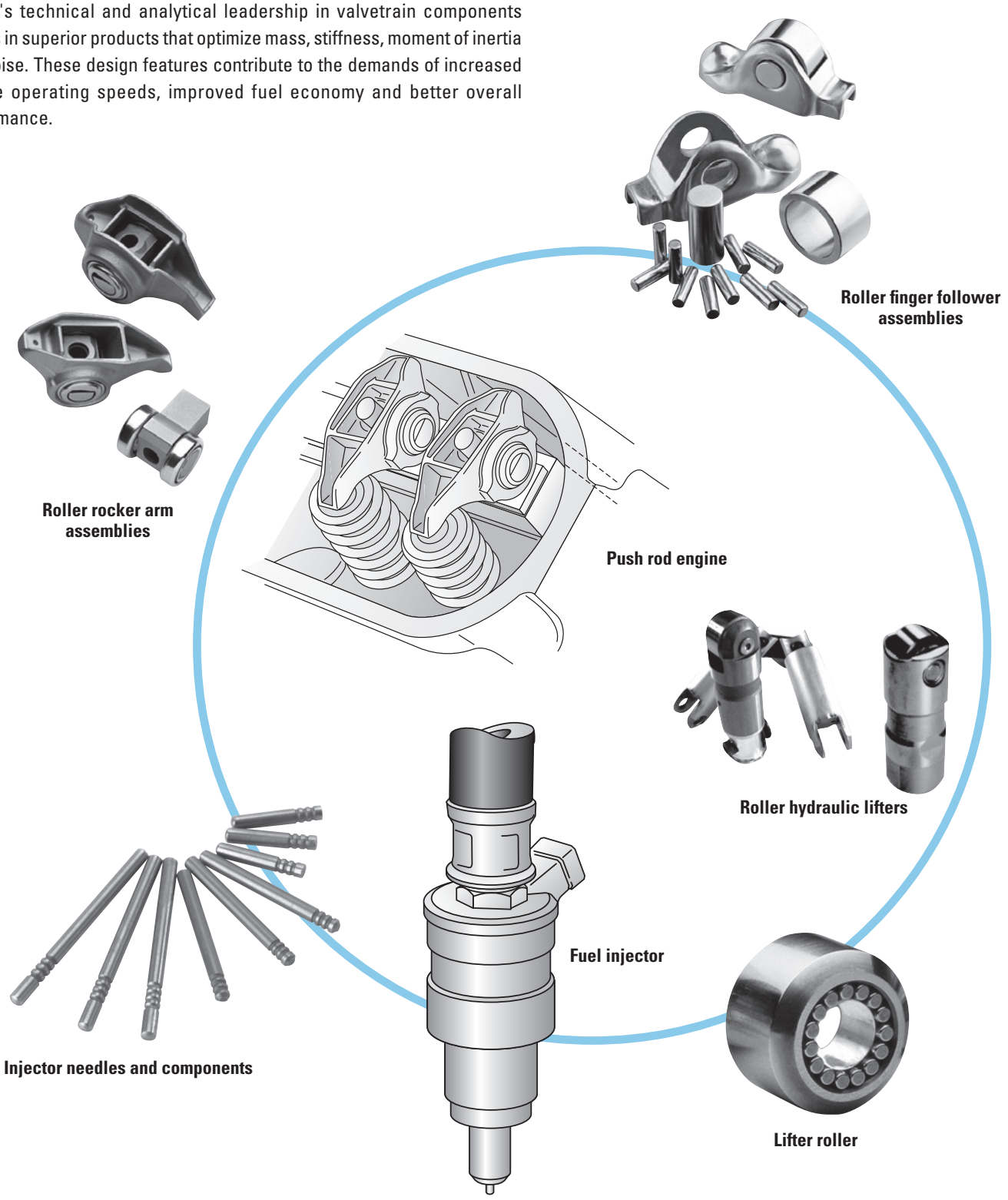

STEERING COLUMNS

JTEKT offers bearings and components dedicated strictly to steering column systems. JTEKT has the technical skills to produce innovative designs for the most demanding applications.

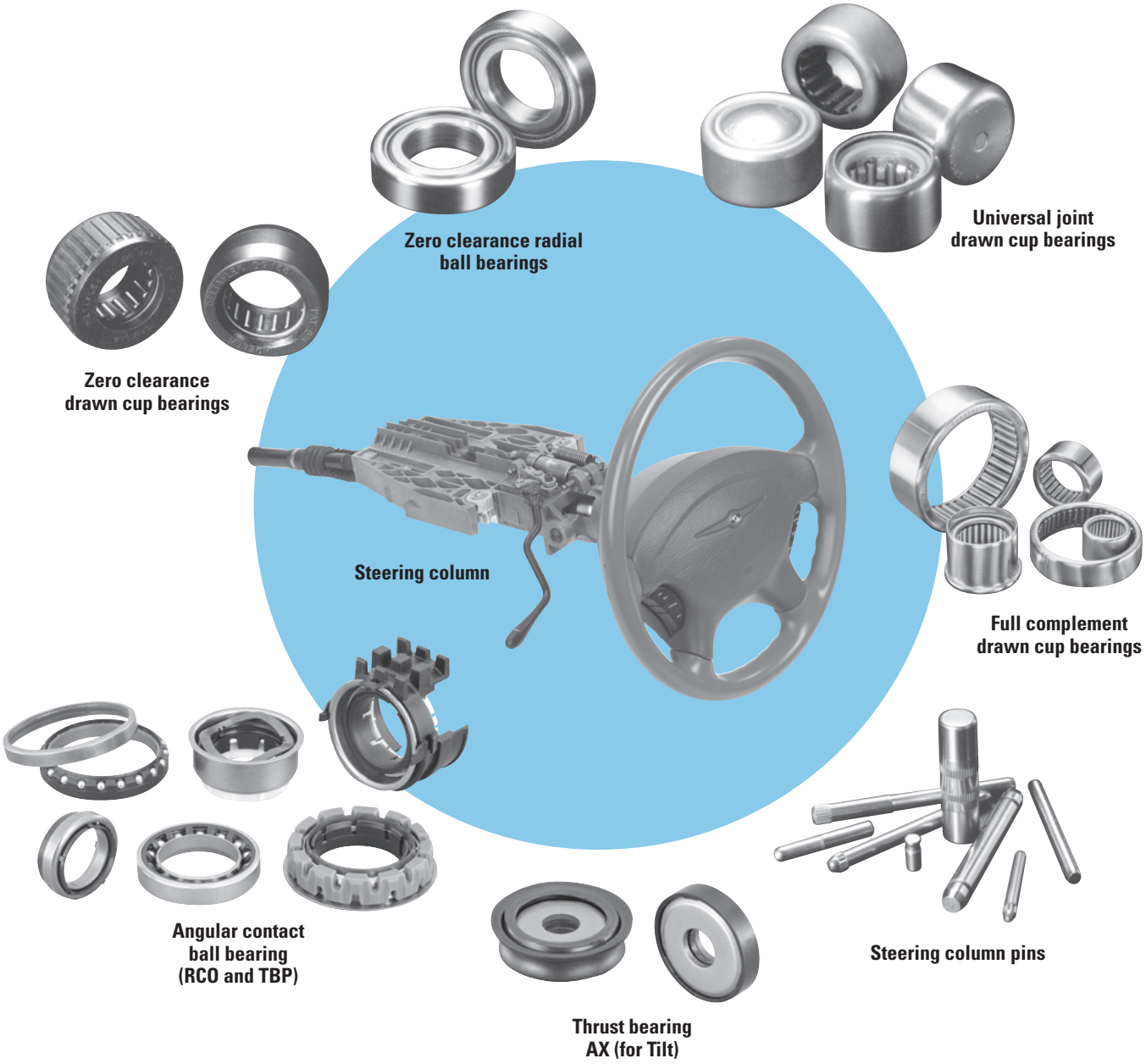

C

AUTOMOTIVE ACCESSORIES

Tough, compact, lightweight and innovative describe JTEKT's product offering for the automotive accessories market. Advanced analytical optimization techniques, testing and manufacturing technologies allow JTEKT to provide complete packages that result in high reliability while lowering system costs.

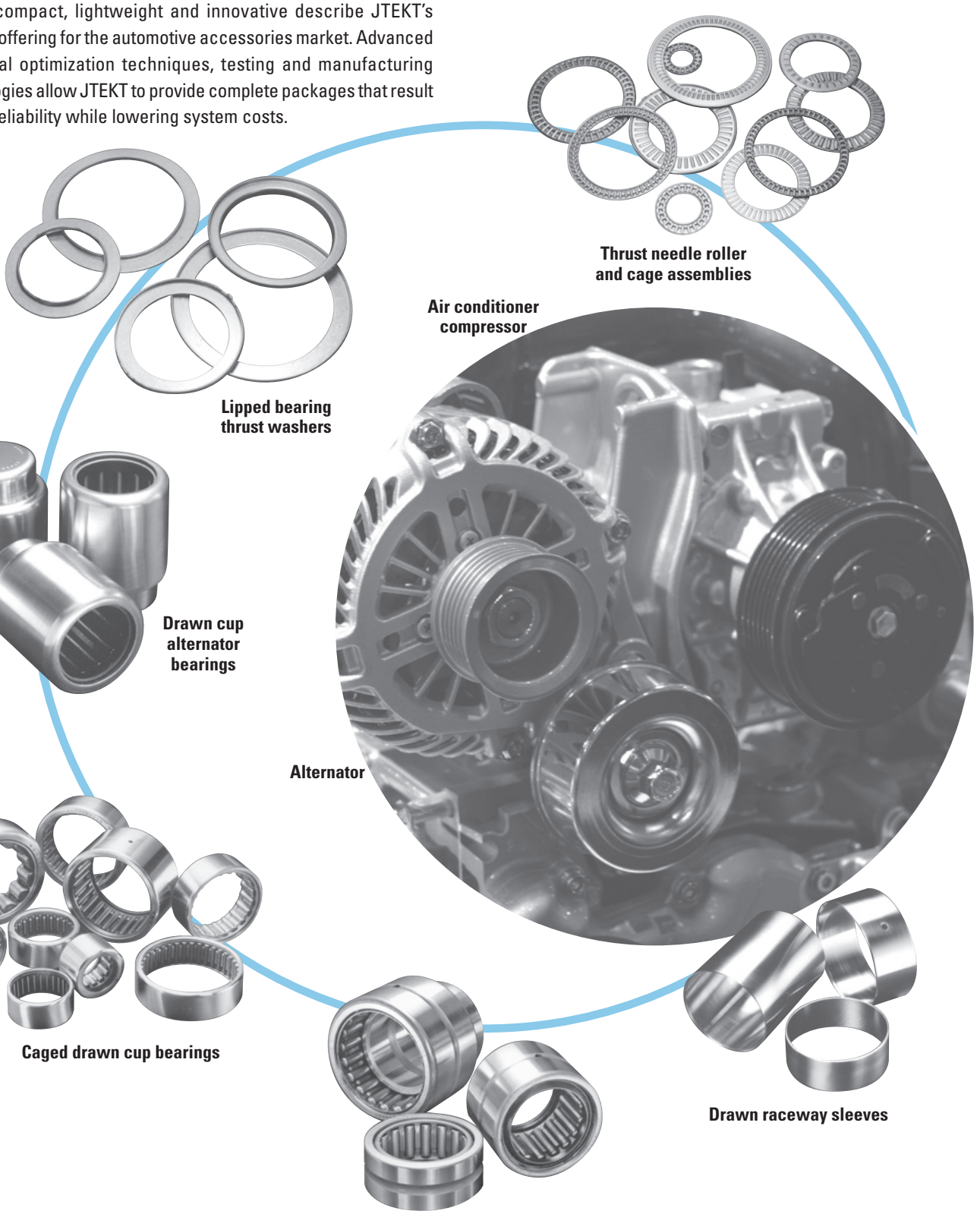

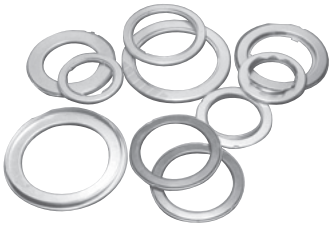

Unitized thrust bearing assemblies

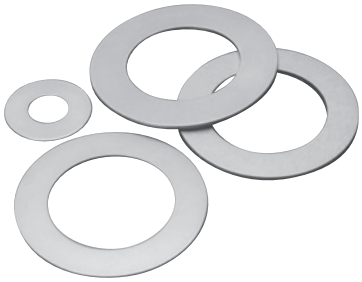

Bearing thrust washers

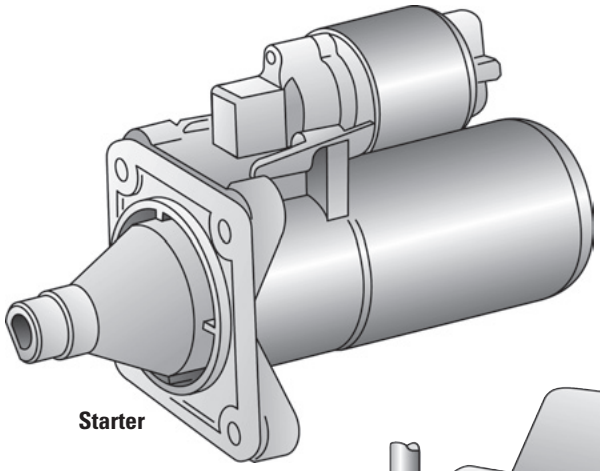

Starter

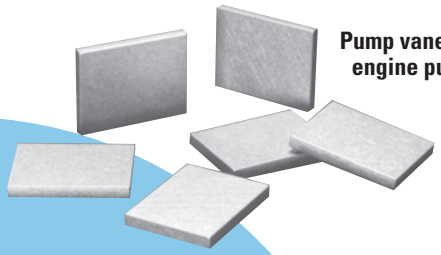

Pump vanes for engine pump

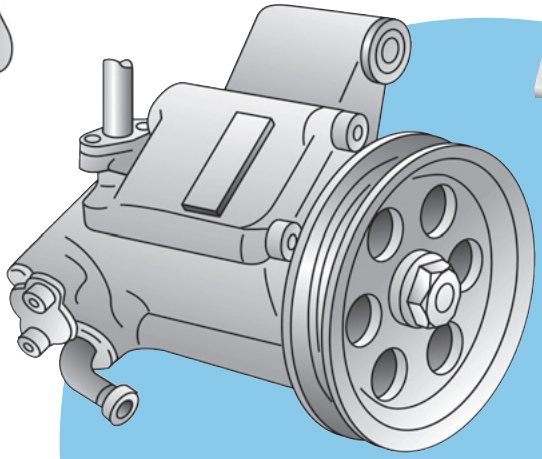

Power steering pump

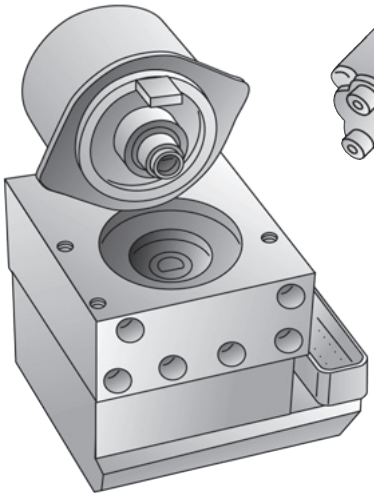

ABS unit

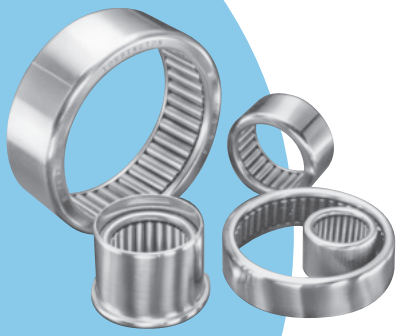

Full complement drawn cup bearings

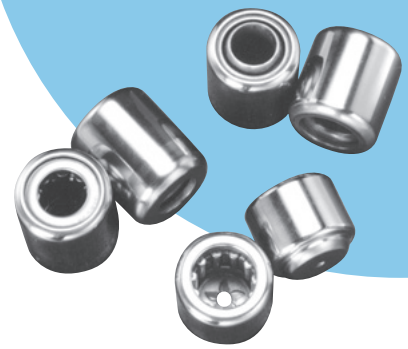

Drawn cup ABS bearings

C

DRIVETRAIN COMPONENTS

JTEKT is a leading supplier of bearings for the harsh environment of drivetrain components. Our heavy wall drawn cup bearing is an industry standard for performance and reliability in semi-float axle applications. With a history of JTEKT's innovative engineering, in-house testing and field experience, vehicle drivetrain engineers can confidently specify JTEKT bearings to meet their design demands.

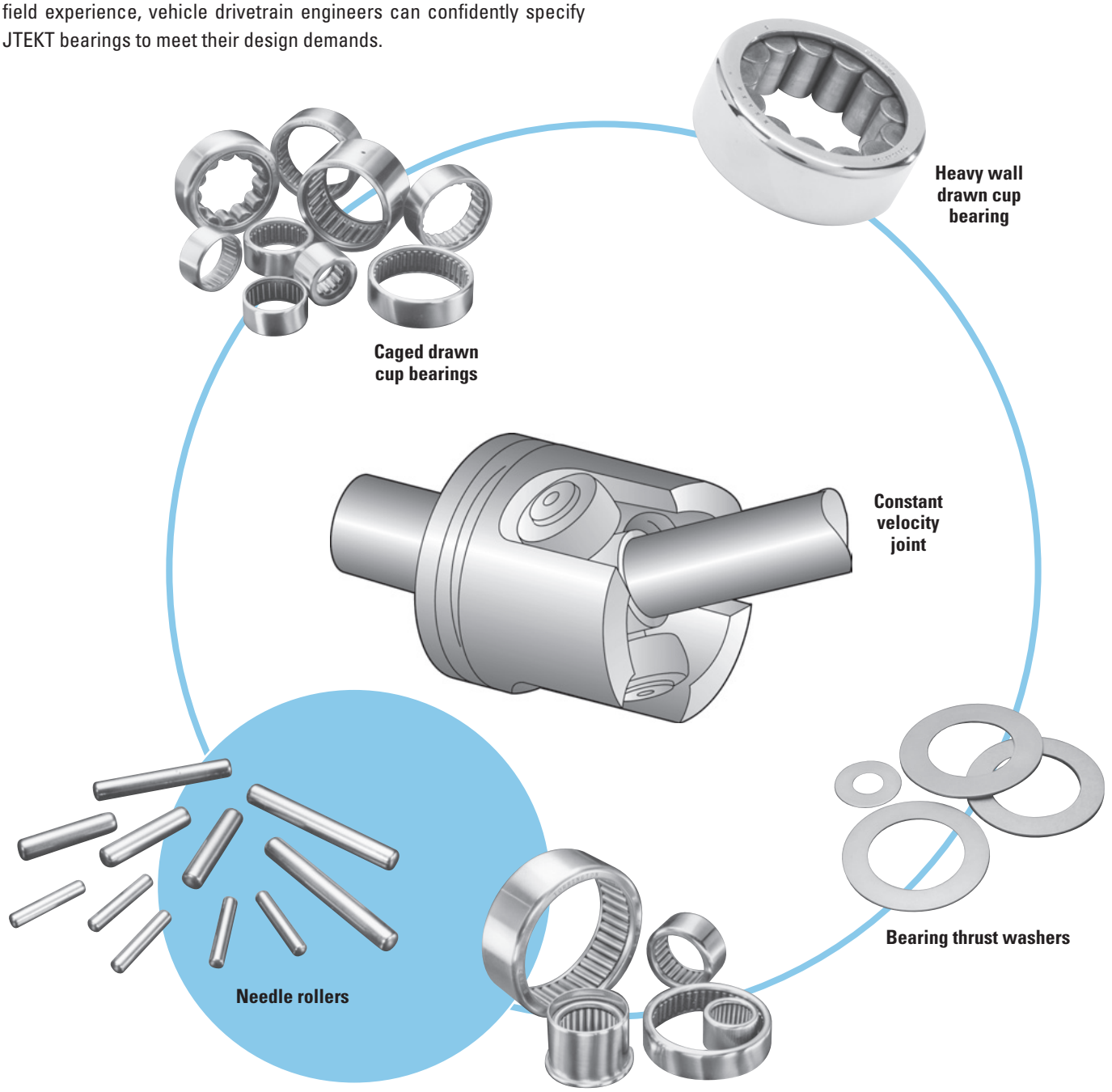

POWER TRANSMISSIONS

Whether supplied as individual components or as unit assemblies, JTEKT offers products that provide maximum load and speed capability within a small envelope. Our compact, efficient and long-life designs allow power transmission builders to increase power density and extend product life while minimizing lubrication demands and reducing overall package size.

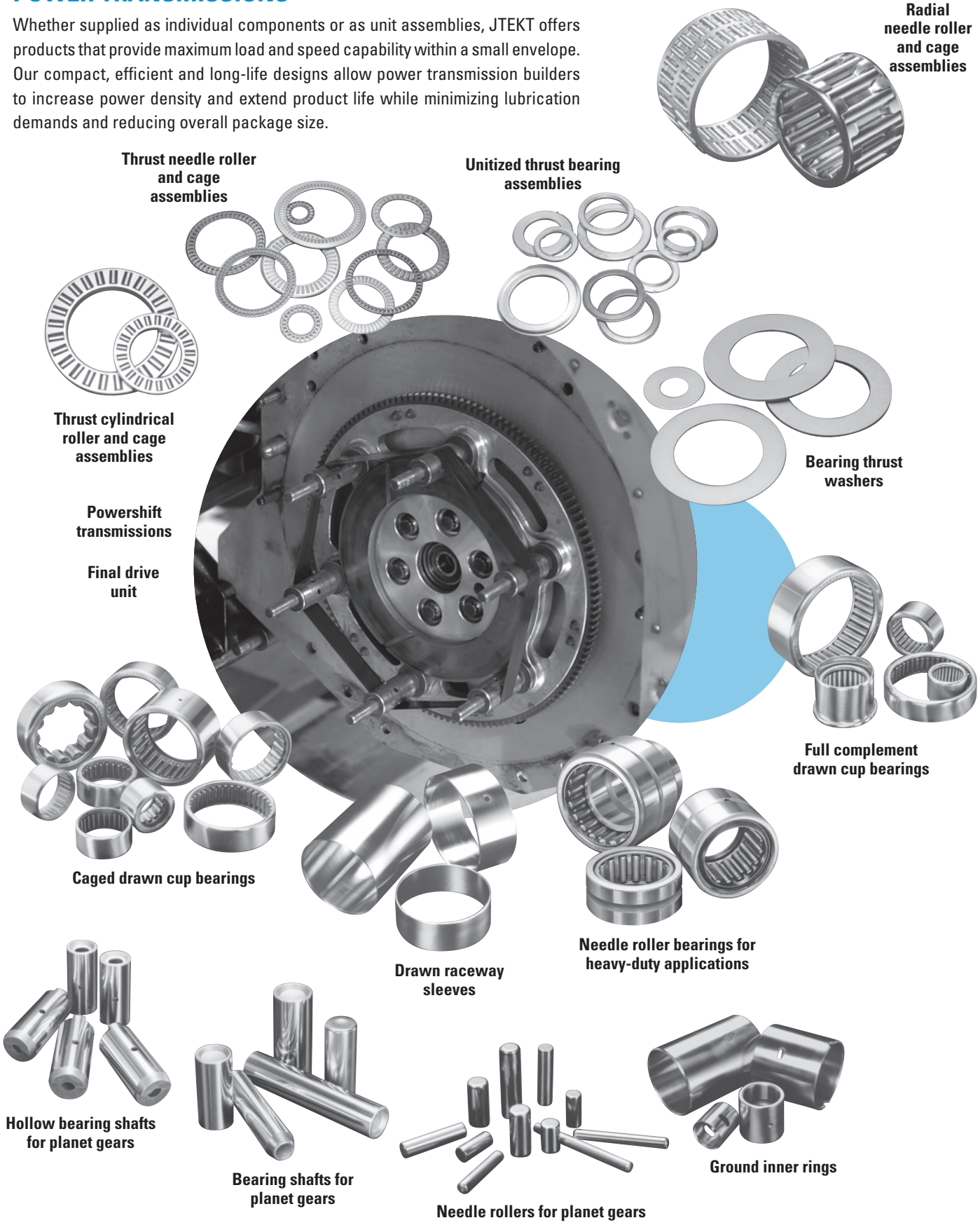

C

SPORT VEHICLES

In anticipation of the wide range of sport vehicle applications, JTEKT has developed a broad line of reliable, low-profile and low-cost bearing solutions. These designs can be optimized for a wide range of application demands including high speed, high load, temperature extremes or low mass. JTEKT has an engineered solution for your unique and demanding applications.

Radial needle roller and cage assembly

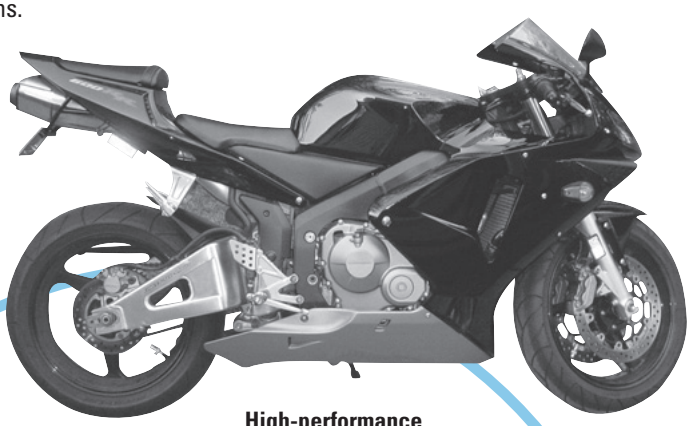

High-performance motorcycle

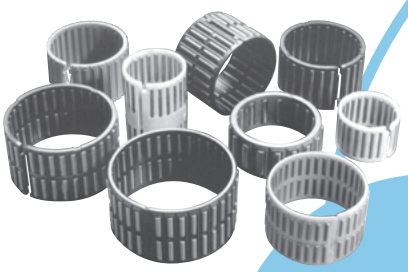

Radial needle roller and cage assemblies (Split polymer type)

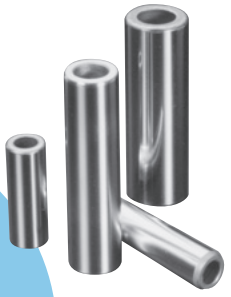

Hollow wristpins

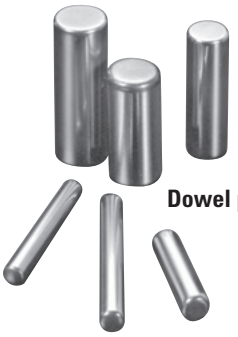

Dowel pins

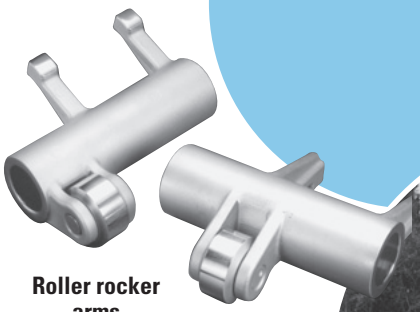

Roller rocker arms

Off-road motorcycle

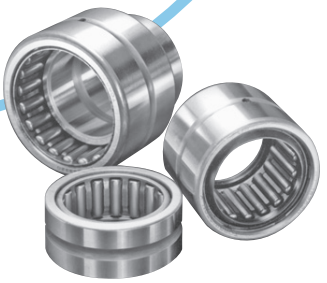

Needle roller bearings for heavy-duty applications

Unitized thrust bearing assemblies

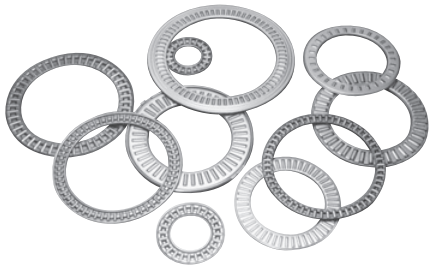

Thrust needle roller and cage assemblies

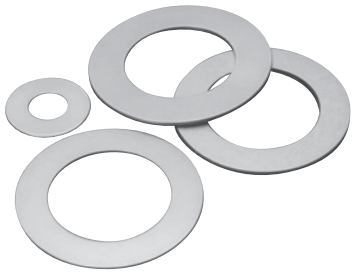

Bearing thrust washers

Snowmobile

Ground inner rings

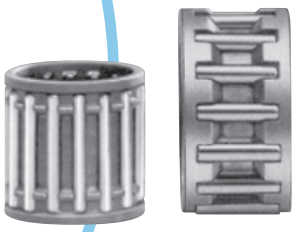

Wrist pin and crank pin bearings

Drawn raceway sleeves

Scooter

MARINE APPLICATIONS

Split housings, high speeds and limited amounts of lubrication are some of the major design requirements that JTEKT has overcome in successfully designing bearings for marine power head and drivetrain applications. JTEKT's history of supplying this industry proves that tough environmental challenges can be resolved with creative engineering solutions and products at an economical price.

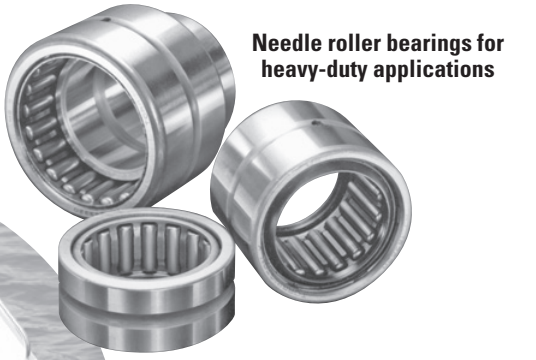

Needle roller bearings for heavy-duty applications

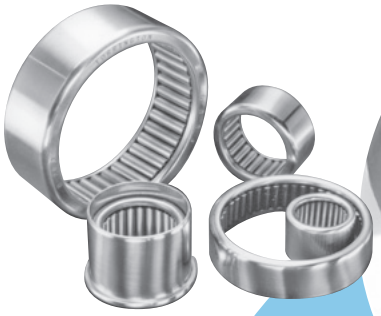

Full complement drawn cup bearings

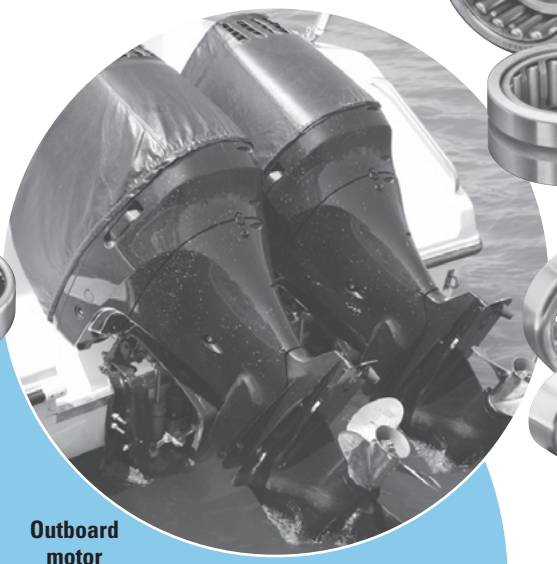

Outboard motor

Caged drawn cup bearings

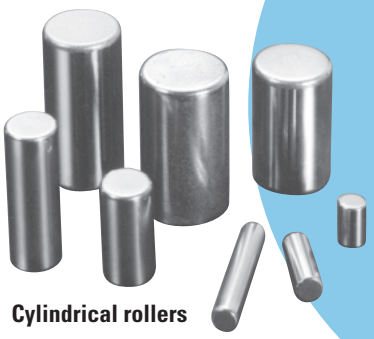

Cylindrical rollers

Personal watercraft

Caged radial assembly

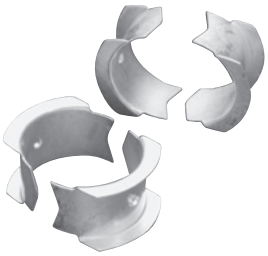

Connecting rod and center-main double split liners

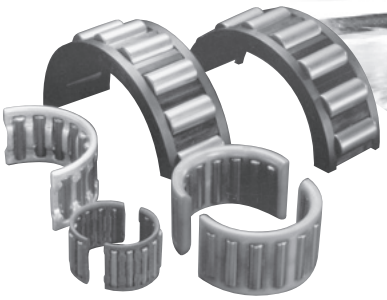

Radial needle roller and cage assemblies for crankpins (Split steel or polymer type)

Radial needle roller and cage assemblies for main bearings (Split polymer type)

Unitized thrust bearing assemblies

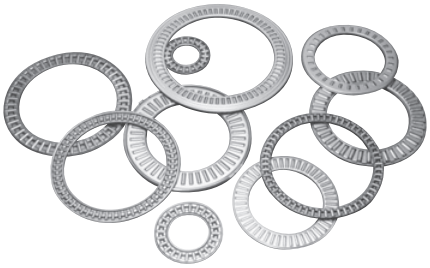

Thrust needle roller and cage assemblies

Bearing thrust washers

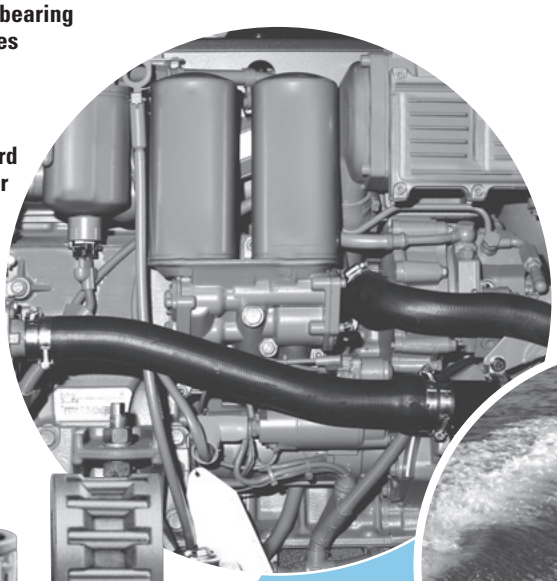

Inboard motor

Wrist pin and crank pin bearings

Outboard motor

Double split outer rings

Ground inner rings

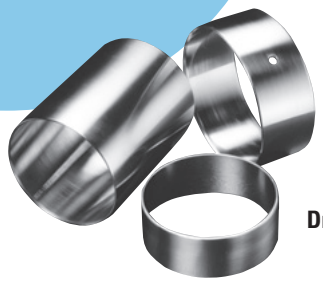

Drawn raceway sleeves

Dowel pins

POWER TOOLS

JTEKT continues to bring lightweight, durable, economical and compact products to the power tool market. We have anticipated customer expectations, become increasingly stringent and have responded with many innovative products. Greater performance within the existing package, subassemblies for more efficient manufacturing, and lubrication enhancing designs make JTEKT bearings the ideal solution for the power tool market.

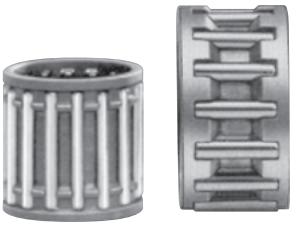

Wrist pin and crank pin bearings

Full complement drawn cup bearings

Caged drawn cup bearings

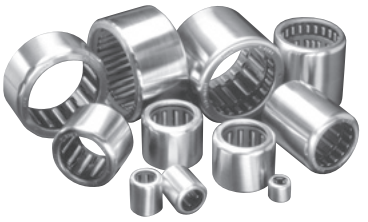

Drawn cup roller clutches

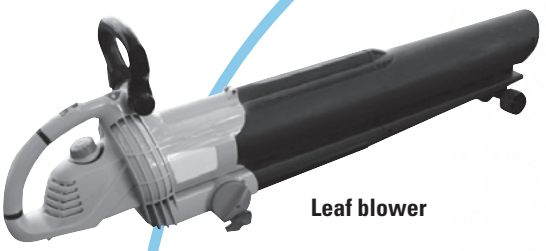

Leaf blower

String trimmer

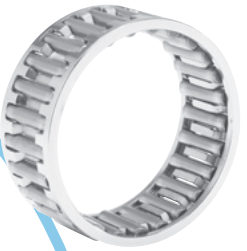

Radial needle roller and cage assembly

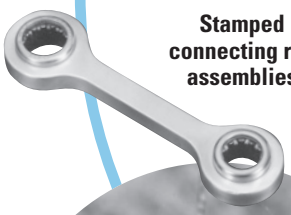

Stamped connecting rod assemblies

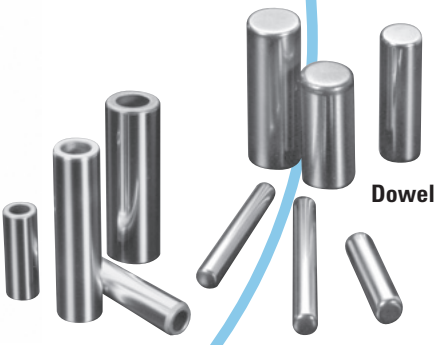

Dowel pins

Hollow wristpins

Chainsaw

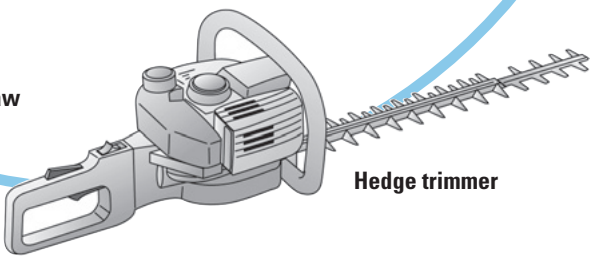

Hedge trimmer

CONSUMER PRODUCTS

Among a vast product offering, JTEKT has design solutions that are ideally matched to the consumer product market. Low friction, light weight, quick assembly and economical designs make JTEKT bearings the product of choice for these diverse applications.

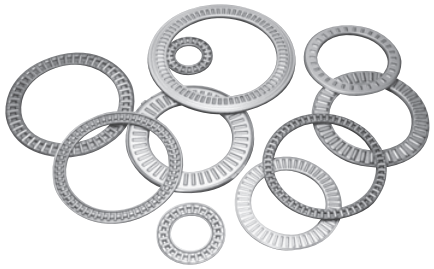

Thrust needle roller and cage assemblies

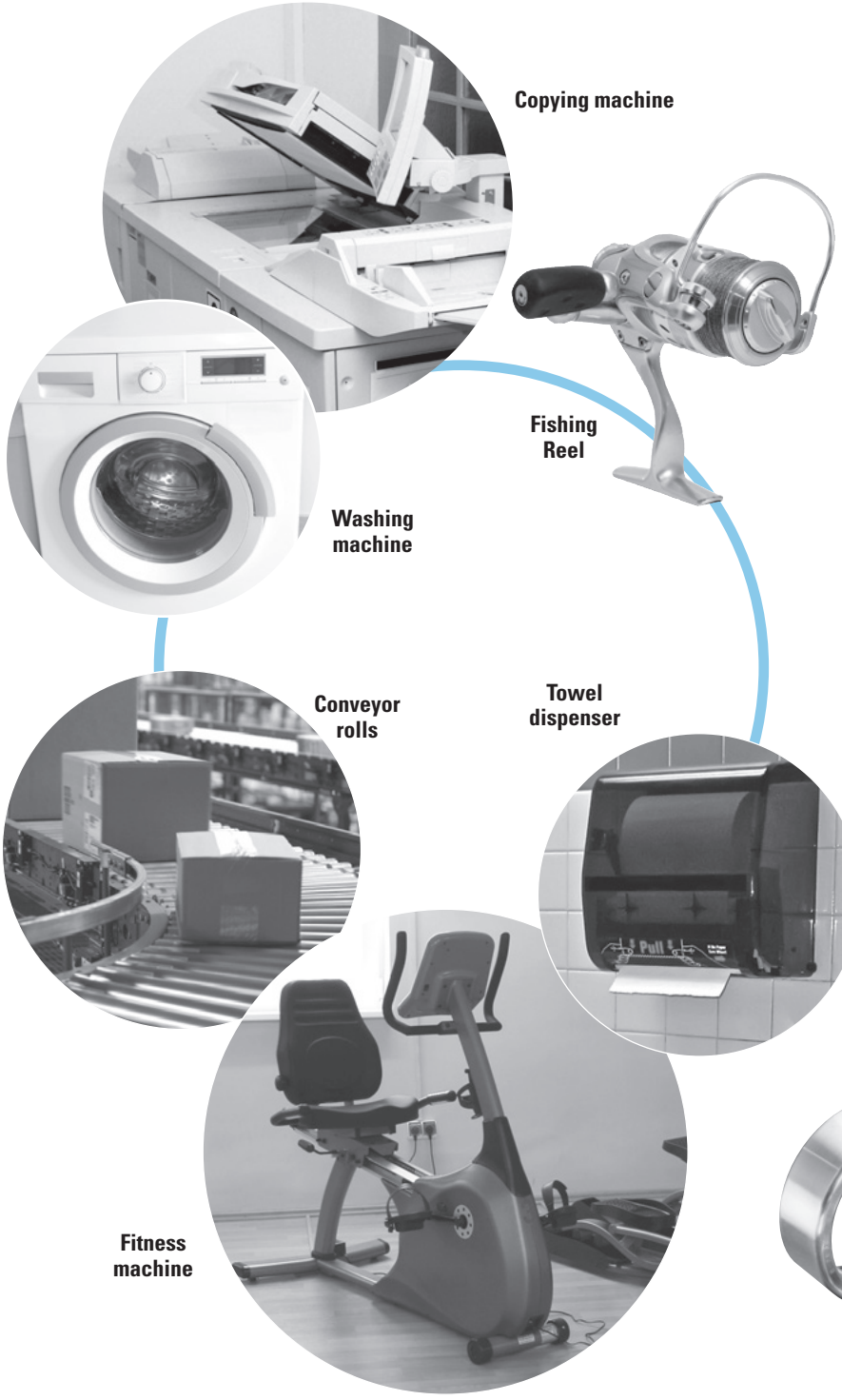

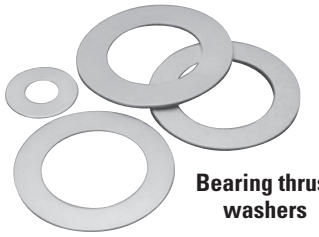

Bearing thrust washers

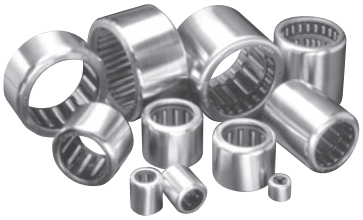

Drawn cup roller clutches

Caged drawn cup bearings

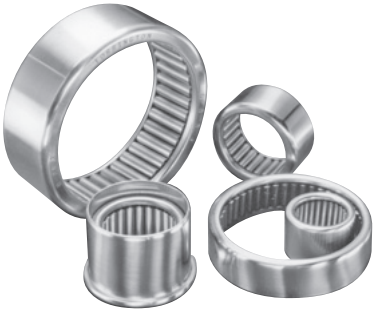

Full complement drawn cup bearings

MECHANICAL PUMPS

Reliable and compact JTEKT bearing designs help pump designers achieve maximum efficiency and reliability in high-pressure industrial applications. Product innovations such as the controlled-stress needle roller bearings provide designers the flexibility they need to tailor their pump packages to meet specific requirements.

Caged drawn cup bearings

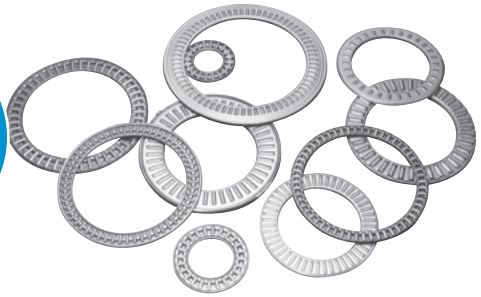

Thrust needle roller and cage assemblies

Needle roller bearings for heavy-duty applications

Bearing thrust washers

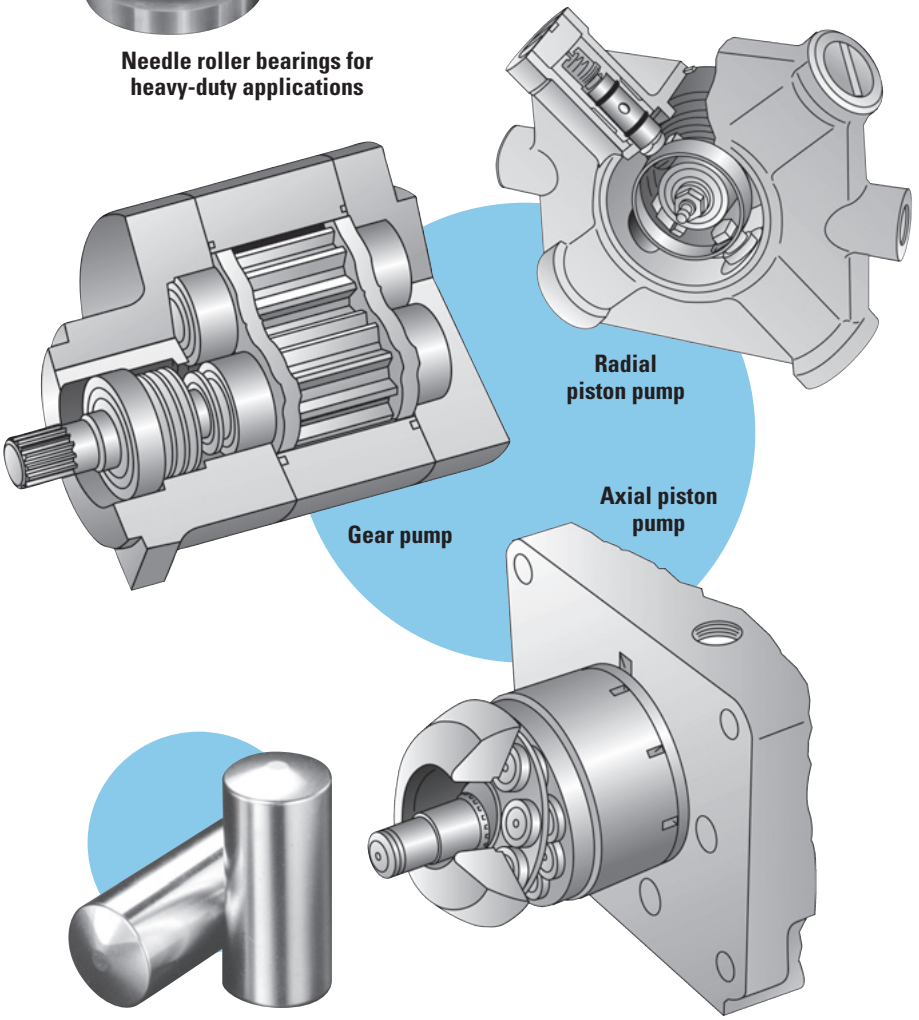

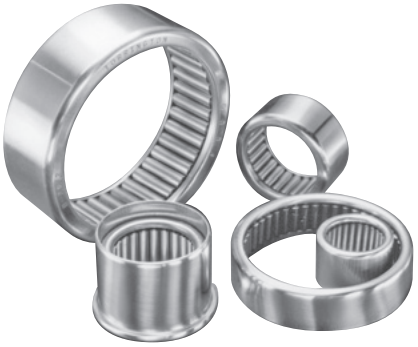

Full complement drawn cup bearings

Pistons for hydraulic pumps

INDUSTRIAL MACHINERY

Track rollers provide smooth operation of telescopic masts in fork lift trucks and many heavy lift applications. JTEKT's cylindrical roller thrust bearings and heavy-duty needle roller bearings provide ideal solutions for applications that require high load-carrying capability in small cross sectional areas.

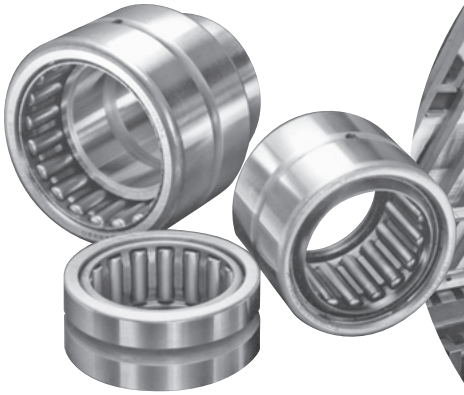

Needle roller bearings for heavy-duty applications

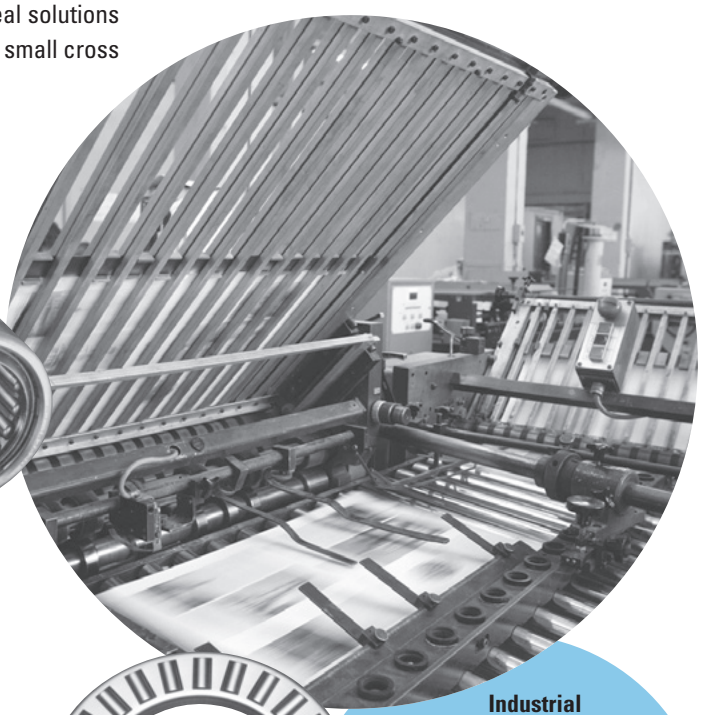

Industrial machines

Fork lift truck

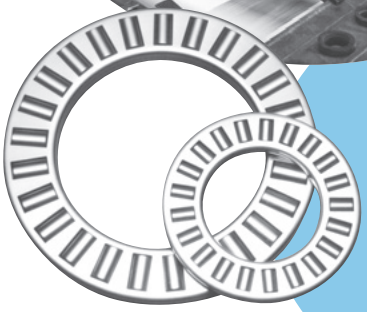

Thrust cylindrical roller and cage assemblies

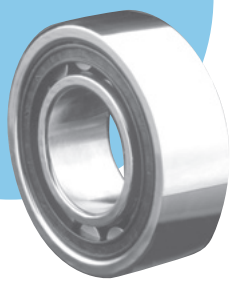

Cylindrical roller bearing

Track rollers

NOTES

SUPPLEMENTARY TABLES

D

D SUPPLEMENTARY TABLES

SUPPLEMENTARY TABLES

D

D

Supplementary Tables

Page

Conversion Table D-4

Designation Suffixes D-8

Symbols and Terms D-9

Index D-11

D

STEEL HARDNESS NUMBERS[1]

Table D-1. Approximate hardness conversion numbers for steel, based on Rockwell C

		Brinell Hardness Number 10 mm Ball 3000 kg Load			Rockwell Hardness Number			Rockwell Superficial Hardness Number Superficial Brale Penetrator						
Rockwell C-Scale Hardness Number	Diamond Pyramid Hardness Number Vickers	Standard Ball	Hultgren Ball	Tungsten Carbide Ball	A-Scale 60 kg Load Brale Penetrator	B-Scale 15 kg Load 1/16 in. (1.59 mm) Dia.	D-Scale 100 kg Brale Penetrator	15-N Acale 15 kg Load	30-N Scale 30 kg Load	45-N Scale 45 kg Load	Shore Sclero-scope Hardness Number	Tensil Strength (approx.) MPa	Tensil Strength (approx.) 1000 psi	Rockwell C-Scale Hardness Number
68	940	—	—	—	85.6	—	76.9	93.2	84.4	75.4	97	—	—	68
67	900	—	—	—	85	—	76.1	92.9	83.6	74.2	95	—	—	67
66	865	—	—	—	84.5	—	75.4	92.5	82.8	73.3	92	—	—	66
65	832	—	—	739	83.9	—	74.5	92.2	81.9	72	91	—	—	65
64	800	—	—	722	83.4	—	73.8	91.8	81.1	71	88	—	—	64
63	772	—	—	705	82.8	—	73	91.4	80.1	69.9	87	—	—	63
62	746	—	—	688	82.3	—	72.2	91.1	79.3	68.8	85	—	—	62
61	720	—	—	670	81.8	—	71.5	90.7	78.4	67.7	83	—	—	61
60	697	—	613	654	81.2	—	70.7	90.2	77.5	66.6	81	—	—	60
59	674	—	599	634	80.7	—	69.9	89.8	76.6	65.5	80	2250	326	59
58	653	—	587	615	80.1	—	69.2	89.3	75.7	64.3	78	2170	315	58
57	633	—	575	595	79.6	—	68.5	88.9	74.8	63.2	76	2100	305	57
56	613	—	561	577	79	—	67.7	88.3	73.9	62	75	2030	295	56
55	595	—	546	560	78.5	—	66.9	87.9	73	60.9	74	1980	287	55
54	577	—	534	543	78	—	66.1	87.4	72	59.8	72	1920	278	54
53	560	—	519	525	77.4	—	65.4	86.9	71.2	58.6	71	1850	269	53
52	544	500	508	512	76.8	—	64.6	86.4	70.2	57.4	69	1810	262	52
51	528	487	494	496	76.3	—	63.8	85.9	69.4	56.1	68	1740	253	51
50	513	475	481	481	75.9	—	63.1	85.5	68.5	55	67	1690	245	50
49	498	464	469	469	75.2	—	62.1	85	67.6	53.8	66	1650	239	49
48	484	451	455	455	74.7	—	61.4	84.5	66.7	52.5	64	1600	232	48
47	471	442	443	443	74.1	—	60.8	83.9	65.8	51.4	63	1550	225	47
45	446	421	421	421	73.1	—	59.2	83	64	49	60	1460	212	45
44	434	409	409	409	72.5	—	58.5	82.5	63.1	47.8	58	1420	206	44
43	423	400	400	400	72	—	57.7	82	62.2	46.7	57	1390	201	43
42	412	390	390	390	71.5	—	56.9	81.5	61.3	45.5	56	1350	196	42
41	402	381	381	381	70.9	—	56.2	80.9	60.4	44.3	55	1320	191	41
40	392	371	371	371	70.4	—	55.4	80.4	59.5	43.1	54	1280	186	40
39	382	362	362	362	69.9	—	54.6	79.9	58.6	41.9	52	1250	181	39
38	372	353	353	353	69.4	—	53.8	79.4	57.7	40.8	51	1210	176	38
37	363	344	344	344	68.9	—	53.1	78.8	56.8	39.6	50	1190	172	37
36	354	336	336	336	68.4	(109)	52.3	78.3	55.9	38.4	49	1160	168	36
35	345	327	327	327	67.9	(108.5)	51.5	77.7	55	37.2	48	1120	163	35
34	336	319	319	319	67.4	(108)	50.8	77.2	54.2	36.1	47	1100	159	34
33	327	311	311	311	66.8	(107.5)	50	76.6	53.3	34.9	46	1060	154	33
32	318	301	301	301	66.3	(107)	49.2	76.1	52.1	33.7	44	1030	150	32
31	310	294	294	294	65.8	(106)	48.4	75.6	51.3	32.5	43	1010	146	31
30	302	286	286	286	65.3	(105.5)	47.7	75	50.4	31.3	42	980	142	30
29	294	279	279	279	64.7	(104.5)	47	74.5	49.5	30.1	41	950	138	29
28	286	271	271	271	64.3	(104)	46.1	73.9	48.6	28.9	41	920	134	28
27	279	264	264	264	63.8	(103)	45.2	73.3	47.7	27.8	40	900	131	27
26	272	258	258	258	63.3	(102.5)	44.6	72.8	46.8	26.7	38	880	127	26
25	266	253	253	253	62.8	(101.5)	43.8	72.2	45.9	25.5	38	850	124	25
24	260	247	247	247	62.4	(101)	43.1	71.6	45	24.3	37	830	121	24
23	254	243	243	243	62	100	42.1	71	44	23.1	36	810	118	23
22	248	237	237	237	61.5	99	41.6	70.5	43.2	22	35	790	115	22
21	243	231	231	231	61	98.5	40.9	69.9	42.3	20.7	35	780	113	21
20	238	226	226	226	60.5	97.8	40.1	69.4	41.5	19.6	34	760	110	20

[1] Source ASTM

CONVERSION TABLE

TO CONVERT FROM	TO		MULTIPLY BY
Acceleration			
foot/second^2	meter/second^2	m/s^2	0.3048
inch/second^2	meter/second^2	m/s^2	0.0254
Area			
foot^2	meter^2	m^2	0.09290304
inch^2	meter^2	m^2	0.00064516
inch^2	millimeter^2	mm^2	645.16
yard^2	meter^2	m^2	0.836127
mile^2 (U.S. statute)	meter^2	m^2	2589988
Bending Moment or Torque			
dyne-centimeter	newton-meter	N-m	0.0000001
kilogram-force-meter	newton-meter	N-m	9.806650
pound-force-inch	newton-meter	N-m	0.1129848
pound-force-foot	newton-meter	N-m	1.355818
Energy			
BTU (International Table)	joule	J	1055.056
foot-pound-force	joule	J	1.355818
kilowatt-hour	megajoule	MJ	3.6
Force			
kilogram-force	newton	N	9.806650
kilopound-force	newton	N	9.806650
pound-force (lbf avoirdupois)	newton	N	4.448222
Length			
fathom	meter	m	1.8288
foot	meter	m	0.3048
inch	millimeter	mm	25.4
microinch	micrometer	µm	0.0254
micron (µm)	millimeter	mm	0.0010
mile (U.S. statute)	meter	m	1609.344
yard	meter	m	0.9144
nautical mile (UK)	meter	m	1853.18
Mass			
kilogram-force-second^2/meter (mass)	kilogram	kg	9.806650
kilogram-mass	kilogram	kg	1.0
pound-mass (lbm avoirdupois)	kilogram	kg	0.4535924
ton (long, 2240 lbm)	kilogram	kg	1016.047
ton (short, 2000 lbm)	kilogram	kg	907.1847
tonn	kilogram	kg	1000.000
Power			
BTU (International Table)/hour	watt	W	0.293071
BTU (International Table)/minute	watt	W	17.58427
horsepower (550 ft lbf/s)	kilowatt	kW	0.745700
BTU (thermochemical)/minute	watt	W	17.57250
Pressure or Stress (Force/Area)			
newton/meter^2	pascal	Pa	1 .0000
kilogram-force/centimeter^2	pascal	Pa	98066.50
kilogram-force/meter^2	pascal	Pa	9.806650
kilogram-force/millimeter^2	pascal	Pa	9806650
pound-force/foot^2	pascal	Pa	47.88026
pound-force/inch^2 (psi)	megapascal	MPa	0.006894757
Temperature			
degree Celsius	kelvin	k	$t_k = t_c + 273.15$
degree Fahrenheit	kelvin	k	$k = 5/9\ (t_f + 459.67)$
degree Fahrenheit	Celsius	°C	$t_c = 5/9\ (t_f - 32)$
Velocity			
foot/minute	meter/second	m/s	0.00508
foot/second	meter/second	m/s	0.3048
inch/second	meter/second	m/s	0.0254
kilometer/hour	meter/second	m/s	0.27778
mile/hour (U.S. statute)	meter/second	m/s	0.44704
mile/hour (U.S. statute)	kilometer/hour	km/h	1.609344
Volume			
foot^3	meter^3	m^3	0.02831685
gallon (U.S. liquid)	liter	l	3.785412
liter	meter^3	m^3	0.001
inch^3	meter^3	m^3	0.00001638706
inch^3	centimeter^3	cm^3	16.38706
inch^3	millimeter^3	mm^3	16387.06
ounce (U.S. fluid)	centimeter^3	cm^3	29.57353
yard^3	meter^3	m^3	0.7645549

VISCOSITY CONVERSION TABLE

SUS Saybolt (sec.)	R" Redwood (sec.)	E Engler (deg.)	cSt Centistokes (mm^2/s)
35	32.2	1.18	2.7
40	36.2	1.32	4.3
45	40.6	1.46	5.9
50	44.9	1.60	7.4
55	49.1	1.75	8.9
60	53.5	1.88	10.4
65	57.9	2.02	11.8
70	62.3	2.15	13.1
75	67.6	2.31	14.5
80	71.0	2.42	15.8
85	75.1	2.55	17.0
90	79.6	2.68	18.2
95	84.2	2.81	19.4
100	88.4	2.95	20.6
110	97.1	3.21	23.0
120	105.9	3.49	25.0
130	114.8	3.77	27.5
140	123.6	4.04	29.8
150	132.4	4.32	32.1
160	141.1	4.59	34.3
170	150.0	4.88	36.5
180	158.8	5.15	38.8
190	167.5	5.44	41.0
200	176.4	5.72	43.2
220	194.0	6.28	47.5
240	212	6.85	51.9
260	229	7.38	56.5
280	247	7.95	60.5
300	265	8.51	64.9
325	287	9.24	70.3
350	309	9.95	75.8
375	331	10.7	81.2
400	353	11.4	86.8
425	375	12.1	92.0
450	397	12.8	97.4
475	419	13.5	103
500	441	14.2	108
550	485	15.6	119
600	529	17.0	130
650	573	18.5	141
700	617	19.9	152
750	661	21.3	163
800	705	22.7	173
850	749	24.2	184
900	793	25.6	195
950	837	27.0	206
1000	882	28.4	217
1200	1058	34.1	260
1400	1234	39.8	302
1600	1411	45.5	347
1800	1587	51	390
2000	1763	57	433
2500	2204	71	542
3000	2646	85	650
3500	3087	99	758
4000	3526	114	867
4500	3967	128	974
5000	4408	142	1082
5500	4849	156	1150
6000	5290	170	1300
6500	5730	185	1400
7000	6171	199	1510
7500	6612	213	1630
8000	7053	227	1740
8500	7494	242	1850
9000	7934	256	1960
9500	8375	270	2070
10000	8816	284	2200

D

INCH FRACTIONS TO DECIMALS AND MILLIMETERS

4ths	8ths	16ths	32nds	64ths	Inches	millimeters
				1/64	.015625	0.3969
			1/32		.03125	0.7937
				3/64	.046875	1.1906
		1/16			.0625	1.5875
				5/64	.078125	1.9844
			3/32		.09375	2.3812
				7/64	.109375	2.7781
	1/8				.125	3.1750
				9/64	.140625	3.5719
			5/32		.15625	3.9685
				11/64	.171875	4.3656
		3/16			.1875	4.7625
				13/64	.203125	5.1594
			7/32		.21875	5.5562
				15/64	.234375	5.9531
1/4					.250	6.3500
				17/64	.265625	6.7459
			9/32		.28125	7.1438
				19/64	.296875	7.5406
		5/16			.3125	7.9375
				21/64	.328125	8.3344
			11/32		.34375	8.7312
				23/64	.359375	9.1281
	3/8				.375	9.5250
				25/64	.390625	9.9219
			13/32		.40625	10.3187
				27/64	.421875	10.7156
		7/16			.4375	11.1125
				29/64	.453125	11.5094
			15/32		.46875	11.9062
				31/64	.484375	12.3031
					.500	12.700

4ths	8ths	16ths	32nds	64ths	Inches	millimeters
				33/64	.515625	13.0969
			17/32		.53125	13.4937
				35/64	.546875	13.8906
		9/16			.5625	14.2875
				37/64	.578125	14.6844
			19/32		.59375	15.0812
				39/64	.609375	15.4781
	5/8				.625	15.8750
				41/64	.640625	16.2719
			21/32		.65625	16.6687
				43/64	.671875	17.0656
		11/16			.6875	17.4625
				45/64	.703125	17.8594
			23/32		.71875	18.2562
				47/64	.734375	18.6531
3/4					.750	19.0500
				49/64	.765625	19.4469
			25/32		.78125	19.8437
				51/64	.796875	20.2406
		13/16			.8125	20.6375
				53/64	.828125	21.0344
			27/32		.84375	21.4312
				55/64	.859375	21.8281
	7/8				.875	22.2250
				57/64	.890625	22.6219
			29/32		.90625	23.0187
				59/64	.921875	23.4156
		15/16			.9375	23.8125
				61/64	.953125	24.2094
			31/32		.96875	24.6062
				63/64	.984375	25.0031
					1.000	25.400

ROUNDING OFF

- If the figure beyond the last figure to be retained is less than five, the last figure retained should not be changed.
- If the figures beyond the last figure to be retained amount to more than five, the last figure retained should be increased by one.
- If the figure beyond the last figure to be retained is five, followed by zeros, and the last figure to be retained is an "even" number, it should be unchanged; if it is "odd" it should be increased by one.

Table D-2. Inches to millimeters – units

inches		0	1	2	3	4	5	6	7	8	9
0	0.0000	0.000	25.400	50.800	76.200	101.600	127.000	152.400	177.800	203.200	228.600
1/16	0.0625	1.588	26.988	52.388	77.788	103.188	128.588	153.988	179.388	204.788	230.188
1/8	0.1250	3.175	28.575	53.975	79.375	104.775	130.175	155.575	180.975	206.375	231.775
3/16	0.1875	4.763	30.162	55.562	80.962	106.362	131.762	157.162	182.562	207.962	233.362
1/4	0.2500	6.350	31.750	57.150	82.550	107.950	133.350	158.750	184.150	209.550	234.950
5/16	0.3125	7.938	33.338	58.738	84.138	109.538	134.938	160.338	185.735	211.138	236.538
3/8	0.3750	9.525	34.925	60.325	85.725	111.125	136.525	161.925	187.325	212.725	238.125
7/16	0.4375	11.112	36.512	61.912	87.312	112.712	138.112	163.512	188.912	214.312	239.712
1/2	0.5000	12.700	38.100	63.500	88.900	114.300	139.700	165.100	190.500	215.900	241.300
9/16	0.5625	14.288	39.688	65.088	90.488	115.888	141.288	166.688	192.088	217.488	242.888
5/8	0.6250	15.875	41.275	66.675	92.075	117.475	142.875	168.275	193.675	219.075	244.475
11/16	0.6875	17.462	42.862	68.262	93.662	119.062	144.462	169.862	195.262	220.662	246.062
3/4	0.7500	19.050	44.450	69.850	95.250	120.650	146.050	171.450	196.850	222.250	247.650
13/16	0.8125	20.638	46.038	71.438	96.838	122.238	147.638	173.038	198.438	223.838	249.238
7/8	0.8750	22.225	47.625	73.025	98.425	123.825	149.225	174.625	200.025	225.425	250.825
15/16	0.9375	23.812	49.212	74.612	100.012	125.412	150.812	176.212	201.612	227.012	252.412

inches		10	11	12	13	14	15
0	0.0000	254.000	279.400	304.800	330.200	355.600	381.000
1/16	0.0625	255.588	280.988	306.388	331.788	357.188	382.588
1/8	0.1250	257.175	282.575	307.975	333.375	358.775	384.175
3/16	0.1875	258.762	284.162	309.562	334.962	360.362	385.762
1/4	0.2500	260.350	285.750	311.150	336.550	361.950	387.350
5/16	0.3125	261.938	287.338	312.738	338.138	363.538	388.938
3/8	0.3750	263.525	288.925	314.325	339.725	365.125	390.525
7/16	0.4375	265.112	290.512	315.912	341.312	366.712	392.112
1/2	0.5000	266.700	292.100	317.500	342.900	368.300	393.700
9/16	0.5625	268.288	293.688	319.088	344.488	369.888	395.288
5/8	0.6250	269.875	295.275	320.675	346.075	371.475	396.875
11/16	0.6875	271.462	296.862	322.262	347.662	373.062	398.462
3/4	0.7500	273.050	298.450	323.850	349.250	374.650	400.050
13/16	0.8125	274.638	300.038	325.438	350.838	376.238	401.638
7/8	0.8750	276.225	301.625	327.025	352.425	377.825	403.225
15/16	0.9375	277.812	303.212	328.612	354.012	379.412	404.812

B.S.I. Norm No. 350
A.S.A. Norm No. B48.1 } 1 inch = 25.400 mm (exact)

DIN 4890, 1 mm = $\frac{1}{25.4}$ inches

D

Table D-3. Units

inches		10
0	—	254
1	25.4	279.4
2	50.8	304.8
3	76.2	330.2
4	101.6	355.6
5	127	381
6	152.4	406.4
7	177.8	431.8
8	203.2	457.2
9	228.6	482.6

Table D-4. Fractions

1/10"		1/100"		1/1000"		1/10000"	
inch	mm	inches	mm	inches	mm	inches	mm
0.1	2.54	0.01	0.254	0.001	0.0254	0.0001	0.00254
0.2	5.08	0.02	0.508	0.002	0.0508	0.0002	0.00508
0.3	7.62	0.03	0.762	0.003	0.0762	0.0003	0.00762
0.4	10.16	0.04	1.016	0.004	0.1016	0.0004	0.01016
0.5	12.70	0.05	1.270	0.005	0.1270	0.0005	0.01270
0.6	15.24	0.06	1.524	0.006	0.1524	0.0006	0.01524
0.7	17.78	0.07	1.778	0.007	0.1778	0.0007	0.01778
0.8	20.32	0.08	2.032	0.008	0.2032	0.0008	0.02032
0.9	22.86	0.09	2.286	0.009	0.2286	0.0009	0.02286

Table D-5. Millimeters to Inches – Units

mm		10	20	30	40	50	60	70	80	90
0	—	0.39370	0.78740	1.18110	1.57480	1.96850	2.36220	2.75591	3.14961	3.54331
1	0.03937	0.43307	0.82677	1.22047	1.61417	2.00787	2.40157	2.79528	3.18898	3.58268
2	0.07874	0.47244	0.86614	1.25984	1.65354	2.04724	2.44094	2.83465	3.22835	3.62205
3	0.11811	0.51181	0.90551	1.29921	1.69291	2.08661	2.48031	2.87402	3.26772	3.66142
4	0.15748	0.55118	0.94488	1.33858	1.73228	2.12598	2.51969	2.91339	3.30709	3.70079
5	0.19685	0.59055	0.98425	1.37795	1.77165	2.16535	2.55906	2.95276	3.34646	3.74016
6	0.23622	0.62992	1.02362	1.41732	1.71102	2.20472	2.59843	2.99213	3.38583	3.77953
7	0.27559	0.66929	1.06299	1.45669	1.85039	2.24409	2.63780	3.03150	3.42520	3.81890
8	0.31496	0.70866	1.10236	1.49606	1.88976	2.28346	2.67717	3.07087	3.46457	3.85827
9	0.35433	0.74803	1.14173	1.53543	1.92913	2.32283	2.71654	3.11024	3.50394	3.89764

Table D-6. Millimeters to Inches – Units

mm		100	200	300
0	—	3.93701	7.87402	11.81100
10	0.39370	4.33071	8.26772	12.20470
20	0.78740	4.72441	8.66142	12.59840
30	1.18110	5.11811	9.05512	12.99210
40	1.57480	5.51181	9.44882	13.38580
50	1.96850	5.90551	9.84252	13.77950
60	2.36220	6.29921	10.23620	14.17320
70	2.75591	6.69291	10.62990	14.56690
80	3.14961	7.08661	11.02360	14.96060
90	3.54331	7.48031	11.41730	15.35430

Table D-7. Fractions

1/10 mm		1/100 mm		1/1000 mm	
mm	inches	mm	inches	mm	inches
0.1	0.00394	0.01	0.00039	0.001	0.000039
0.2	0.00787	0.02	0.00079	0.002	0.000079
0.3	0.01181	0.03	0.00118	0.003	0.000118
0.4	0.01575	0.04	0.00157	0.004	0.000157
0.5	0.01969	0.05	0.00197	0.005	0.000197
0.6	0.02362	0.06	0.00236	0.006	0.000236
0.7	0.02756	0.07	0.00276	0.007	0.000276
0.8	0.03150	0.08	0.00315	0.008	0.000315
0.9	0.03543	0.09	0.00354	0.009	0.000354

DESIGNATION SUFFIXES

Suffix	Description	Applies to
.2RS	Two seals	Metric series: Needle roller bearings; drawn cup needle roller bearings; track rollers. Inch series: Needle roller bearings
2SK	Hexagonal wrench socket in both flange stud ends	Metric series: Track roller – stud-type
AS1	One lubricating hole in the outer ring	Metric series: Drawn cup needle roller bearings
BE	Radial needle roller and cage assembly for crank pin applications	Metric series: Radial needle roller and cage assembly
DZ	Cylindrical outer diameter	Metric series: Track rollers
EE	Two polymer shields	Metric series: Track rollers (types FG, GC, GCR)
EEM	Two metal shields	Metric series: Track rollers (types FG, GC, GCR)
F	Machined cage	Metric series: Radial needle roller and cage assembly
F	Plastic cage	Inch series: Drawn cup needle roller bearing
FH	Machined cage, case hardened	Metric series: Radial needle roller and cage assembly
FS	Single roller per pocket, stainless steel spring (red cage)	Inch series: Drawn cup clutch
G2, G3, G5	Roller diameter tolerance grade	Metric series: Needle rollers
GF	Grease fitting in closed end	Inch series: Drawn cup needle roller bearings
H	Hardened steel cage	Metric series: Radial needle roller and cage assembly
JS1	Lubricating hole in the inner ring	Metric series: Inner ring
K	Light series clutch	Metric series: Drawn cup clutch
L	.005 in width tolerance	Inch series: Inner rings (with four-digit number)
LPB	Machined light metal window-type cage	Metric series: Cylindrical roller thrust bearings
M#	Roller gage, minus	Metric series: Needle rollers, cylindrical rollers
MM	Two metal shields	Metric seriesL Track rollers (types FG, GC, GCR)
OH	Lubrication hole	Inch series: Drawn cup needle roller bearings, inner rings
OHE	Lubrication hole in closed end	Inch series: Drawn cup needle roller bearings
P	Meets ISO 492 tolerance	Metric series: Inner ring (type IM)
P, P#	Roller gage, 0 or plus	Metric series: Needle rollers, cylindrical rollers
R6	Crowned raceway	Metric series: Inner ring (type IM)
RS	One seal	Metric series: Needle roller bearings, drawn cup needle roller bearings. Inch Series: Needle roller bearings
SE	Radial needle roller and cage assembly for wrist pin applications	Metric series: Radial needle roller and cage assembly
SK	Hexagonal wrench socket in flange end	Metric series: Track roller – stud-type
TB	Bore diameter of needle roller complement set to the lower half of F6 tolerance	Metric series: Combined bearings (types RAX400, RAX500)
TC	Bore diameter of needle roller complement set to the upper half of F6 tolerance	Metric series: Combined bearings (types RAX400, RAX500)
TN	Molded cage of reinforced engineered polymer	Metric series: Needle roller bearings, radial needle roller and cage assemblies, track rollers
TVP	Molded window-type cage of glass-reinforced nylon	Metric series: Cylindrical roller thrust bearings
VH	Machined cage, hardened and tempered	Metric series: Radial needle roller and cage assembly
Z	Shielded and retained with a dust cap	Metric series: Combined bearings
ZW	Double row of rollers	Metric series: Radial needle roller and cage assembly
ZZ	Two end washers for the outer ring	Metric series: Track rollers – yoke-type

SYMBOLS AND TERMS

Symbol	Term	Units
α	Nominal contact angle of a bearing (in a typical radial bearing $\alpha = 0°$, in a typical thrust bearing $\alpha = 90°$)	degrees
a_1	Reliability life factor	unitless
a_2	Material life factor	unitless
a_3	Operating conditions life factor	unitless
a_{3d}	Debris life factor	unitless
a_{3h}	Hardness life factor	unitless
a_{3k}	Load zone life factor	unitless
a_{3l}	Lubrication life factor	unitless
a_{3m}	Misalignment life factor	unitless
a_{3p}	Low load life factor	unitless
B	Nominal inner ring width, nominal bearing width, nominal roller thrust bearing (with washers) thickness	mm, in
B_c	Cage width of radial roller and cage assembly	mm, in
B_s	Single inner ring width	mm, in
C	Basic dynamic load rating, radial or axial	kN, lbf
C	Nominal outer ring width	mm, in
C_a	Basic dynamic axial load rating, per ISO 281	kN, lbf
cc	Total circumferential clearance	mm, in
C_0	Basic static radial load rating, per ISO 76	kN, lbf
C_{0a}	Basic static axial load rating, per ISO 76	kN, lbf
C_r	Basic dynamic radial load rating, per ISO 281	kN, lbf
C_s	Single outer ring width	mm, in
C_w	Dynamic radial load rating for a track roller	kN, lbf
d	Nominal bore diameter of a bearing inner ring or shaft piloted thrust washer	mm, in
D	Nominal outer diameter of a bearing outer ring or housing piloted thrust washer	mm, in
D_1	Nominal inside diameter of a housing piloted thrust washer	mm, in
d_1	Nominal stud diameter (stud-type track roller/cam follower)	mm, in
d_1	Nominal outer diameter of a shaft piloted thrust washer	mm, in
d_a	Clamping diameter (yoke- or stud-type track roller/cam follower)	mm, in
d_b	Housing bore diameter for stud (stud-type track roller/cam follower)	mm, in
d_m	Mean bearing diameter	mm, in
Δ_{Bs}	Deviation of a single inner ring width $\Delta_{Bs} = B_s - B$	mm, in
D_c	Nominal outer diameter of a thrust needle roller and cage assembly	mm, in
D_{c1}	Nominal bore of a thrust needle roller and cage assembly	mm, in
Δ_{Cs}	Deviation of a single outer ring width $\Delta_{Cs} = C_s - C$	mm, in

Symbol	Term	Units
Δ_{dmp}	Deviation of mean bore diameter in a single plane $\Delta_{dmp} = d_{mp} - d$	mm, in
Δ_{Dmp}	Deviation of mean outer diameter in a single plane $\Delta_{Dmp} = D_{mp} - D$	mm, in
d_{mb}	Mean diameter of a bearing $(d + D)/2$	mm, in
d_{mp}	Mean bore diameter in a single plane $d_{mp} = (d_{sp\,max} + d_{sp\,min})/2$	mm, in
D_{mp}	Mean outer diameter in a single plane $D_{mp} = (D_{sp\,max} + D_{sp\,min})/2$	mm, in
D_{pw}	Pitch diameter of rolling element complement	mm, in
d_s, d_{sp}	Single bore diameter	mm, in
D_s, D_{sp}	Single outer diameter	mm, in
D_w	Nominal needle roller diameter	mm, in
D_{we}	Needle roller diameter applicable in the calculation of load ratings	mm, in
E_a	Nominal raceway contact outer diameter for a thrust needle/cylindrical roller and cage assembly	mm, in
E_b	Nominal raceway contact inside diameter for a thrust needle/cylindrical roller and cage assembly	mm, in
E_w	Nominal outer diameter of rolling element complement	mm, in
F	Load on bearing	kN, lbf
F	Nominal outer diameter on an inner ring	mm, in
F_a	Bearing axial load	kN, lbf
F_{az}	Bearing allowable axial load	kN, lbf
f_b	Bearing type factor for determining lubrication interval	unitless
f_c	Bearing geometry factor, ref. ISO 281	unitless
$F_{0r\,perm}$	Maximum permissible static load for a track roller	kN, lbf
F_r	Bearing radial load	kN, lbf
$F_{r\,perm}$	Maximum permissible radial load for a track roller	kN, lbf
F_w	Nominal bore diameter of rolling element complement	mm, in
$F_{ws\,min}$	The smallest of the single bore diameters of the rolling element complement	mm, in
G	Stud-type track roller threads	threads
G_r	Radial internal clearance (bearing capable of taking purely radial load, non-preloaded)	mm, in
h	Nominal thrust washer thickness	mm, in
H	Cylindrical roller bearing outer ring rib diameter	mm, in
H	Housing bore diameter	mm, in
HF_s	Static load rating adjustment factor for raceway hardness	unitless
i	Number of rows of rollers in a bearing	unitless
l	Thrust needle roller approximate length	mm, in
K	Chordal factor [K = 1/sin(180°/Z)]	unitless

D

Symbol	Term	Units
K_a	Mounting overhang space (stud type track roller/cam follower)	mm, in
K_{ea}	Radial runout of outer ring of assembled (radial) bearing	mm, in
K_{ia}	Radial runout of inner ring of assembled (radial) bearing	mm, in
λ	Ratio of lubricant film thickness (in the contact) to the composite surface finish of the mating components.	unitless
L_{10}	Predicted life, in revolutions, that 90 percent of a group of apparently identical bearings will complete or exceed before reaching a defined criterion	hours or 10^6 Rev.
L_w	Overall roller length	mm, in
L_{we}	Roller length applicable in the calculation of load ratings	mm, in
M	Minimum load (axial) constant for combined needle roller thrust ball bearing	mm, in
M	Bearing operating torque or moment	N-m, N-mm lb-in
n	Speed, rotational	min^{-1}
P	Equivalent dynamic radial load	kN, lbf
P_a	Equivalent dynamic axial load	kN, lbf
P_o	Equivalent static radial load	kN, lbf
P_{oa}	Equivalent static axial load	kN, lbf
P_{or}	Equivalent static radial load	kN, lbf
P_r	Equivalent dynamic radial load	kN, lbf
R	Cam follower outer ring crown radius	mm, in
r	Chamfer dimension, (radial and/or axial)	mm, in
r_{1s}	Single chamfer dimension (radial)	mm, in
$r_{1s\,max}$	Largest permissible single chamfer dimension (radial)	mm, in
$r_{1s\,min}$	Smallest permissible single chamfer dimension (radial)	mm, in
$r_{2s\,max}$	Largest permissible single chamfer dimension (axial)	mm, in
r_a	Chamfer dimension on a mating surface	mm, in
R_a	Surface roughness parameter based on the arithmetic average departure of the surface from the theoretical centerline, formally AA or CLA	µm, µin
r_{as}	Single chamfer dimension on a mating surface	mm, in
R_q	Surface roughness parameter based on root mean square average departure of the surface from the theoretical centerline, formally RMS	µm, µin
r_s	Single chamfer dimension (radial and/or axial)	mm, in
$r_{s\,min}$	Smallest permissible single chamfer dimension (radial and/or axial)	mm, in
R_w	End radius rounded end roller	mm, in
s	Nominal thrust washer thickness	mm, in
S	Shaft raceway diameter	mm, in

Symbol	Term	Units
S_d	Deviation from perpendicularity of inner ring face with respect to the bore (previously known as runout of inner ring face with respect to the bore)	mm, in
S_D	Deviation from perpendicularity of outer ring outside surface generatrix with respect to the face	mm, in
S_e	Variation in thickness between housing washer raceway and back face (thrust bearing, flat back face)	mm, in
S_i	Variation in thickness between shaft washer raceway and back face (thrust bearing, flat back face)	mm, in
T	Thickness of thrust bearing (thrust roller and cage assembly with washers)	mm, in
v	Lubricant kinematic viscosity	cSt (mm^2/s)
V_{Bs}	Variation of a single inner ring width $V_{Bs} = B_{s\,max} - B_{s\,min}$	mm, in
V_{Cs}	Variation of a single outer ring width $V_{Cs} - C_{s\,max} - C_{s\,min}$	mm, in
V_{Dmp}	Variation of a mean outer diameter	mm, in
V_{dmp}	Variation of a mean bore diameter	mm, in
V_{dsp}	Variation of a single bore diameter in a single plane	mm, in
V_{Dsp}	Variation of a single outer diameter in a single plane	mm, in
X	Dynamic radial load factor	unitless
Y	Dynamic axial radial load	unitless
Z	Number of rollers per row	unitless

INDEX

CODE	DESCRIPTION	PAGE
811, 812	Cylindrical roller thrust bearing with separable washers, this bearing consists of a thrust cylindrical roller and cage assembly, one shaft-piloted washer and one housing-piloted washer, metric series	B300-B303
AR	Thrust cylindrical roller and cage assembly, with one unitized washer, metric series	B306-B309
ARZ	Thrust cylindrical roller and cage assembly, with two unitized washers, metric series	B304-B305
AS	Thrust washer, stamped, for AXK series, metric series	B280-B283
AX	Thrust needle roller and cage assembly, with one unitized washer, metric series	B288-B295
AXK	Thrust needle roller and cage assembly (without washers), one-piece M profile cage, metric series	B280-B283
AXZ	Thrust needle roller and cage assembly, with two unitized washers, metric series	B304-B305
B	Drawn cup needle roller bearing, full complement, inch series	B94-B107
BH	Drawn cup needle roller bearing, full complement, heavy series, inch series	B94-B107
BIC	Inner ring for needle roller bearings, with lubrication hole, metric series	B380-B382
BICG	Inner ring for needle roller bearings, extra wide, with lubrication hole, metric series	B380-B382
BIG, BIK, BIP	Inner ring for needle roller bearings, extra wide, no lubrication hole, metric series	B380-B382
BK	Drawn cup needle roller bearing, caged, closed end, metric series	B52-B61
BK RS	Drawn cup needle roller bearing, caged with one seal, metric series	B62-B65
BK .2RS	Drawn cup needle roller bearing, caged with two seals, metric series	B62-B65
CP	Thrust washer, for AX and AR series, metric series	B288-B295 & B306-B309
CPN	Thrust washer, for AX series, precision, metric series	B288-B295
CPR	Thrust washer, for AR series, heavy, metric series	B306-B309
CR	Needle roller bearing, track rollers, stud type, full complement, cylindrical outer ring outer diameter, inch series	B258-B261
CRS	Needle roller bearing, track rollers, stud type, full complement, with seals and internal thrust washers, cylindrical outer ring outer diameter, inch series	B258-B261
CRSBCE	Needle roller bearing, track roller, stud type, full complement, with seals and internal thrust washers, hex socket, crowned outer ring outer diameter, eccentric stud, inch series	B252
CRSB	Needle roller bearing, track roller, stud type, full complement, with seals and internal thrust washers, hex socket, inch series	B262-B265
CRSC	Needle roller bearing, track roller, stud type, full complement, with seals and internal thrust washers, crowned outer ring outside diameter, inch series	B252
DF	Drawn cup needle roller clutch and bearing assembly, with axial grooves, metric series	B143
DL	Drawn cup needle roller bearing, full complement, open ends, metric series	B78-B83
DLF	Drawn cup needle roller bearing, full complement, closed end, metric series	B78-B83
DLH	Drawn cup needle roller bearing, full complement, open ends, with oil hole, metric series	B78-B83
FC	Drawn cup needle roller clutch, regular series, single roller per stainless steel spring, metric series	B134-B135
FCB	Drawn cup needle roller clutch and bearing assembly, regular series, single roller per stainless steel spring, metric series	B136-B137
FCBL	Drawn cup needle roller clutch and bearing assembly, light series, single roller per stainless steel spring, metric series	B136-B137
FCBN	Drawn cup needle roller clutch and bearing assembly, light series, single roller per stainless steel spring, metric series	B136-B137
FCL	Drawn cup needle roller clutch, light series, single roller per stainless steel spring, metric series	B134-B135
FCP	Drawn cup needle roller clutch and bearing assembly, with axial grooves, metric series	B143
FCS	Drawn cup needle roller clutch, regular series, multi-roller per stainless steel spring, metric series	B134-B135

D

CODE	DESCRIPTION	PAGE
FG	Needle roller bearing, track roller, yoke type, full complement, crowned outer ring outside diameter, with inner ring, metric series	B245-B246
FGL	Needle roller bearing, track roller, yoke type, full complement, cylindrical outer ring outside diameter, with inner ring, metric series	B245-B246
FGU	Cylindrical roller bearing, track roller, yoke type, full complement, crowned outer ring outside diameter, with inner ring, metric series	B248-B250
FGUL	Cylindrical roller bearing, track roller, yoke type, full complement, cylindrical outer ring outside diameter, with inner ring, metric series	B248-B250
FNT, FNTA	Thrust needle roller and cage assembly (without washers), two-piece cage, metric series	B280-B283
FNTF	Thrust needle roller and cage assembly (with one washer), non-separable design with one I.D. lipped thrust washer, metric series	B286-B287
FNTK	Thrust needle roller and cage assembly (with one washer), non-separable design with one O.D. lipped thrust washer, metric series	B285
FNTKF	Thrust needle roller and cage assembly, with non-separable washers, one I.D. lipped washer and one O.D. lipped washer, metric series	B284
FP	Needle roller bearing, track roller, yoke type, full complement, crowned outer ring outside diameter, with inner ring, metric series	B244
FPL	Needle roller bearing, track roller, yoke type, full complement, cylindrical outer ring outside diameter, inner ring, metric series	B244
GB	Drawn cup needle roller bearing, full complement, extra-precision, inch series	B110
GBH	Drawn cup needle roller bearing, full complement, extra-precision, heavy series, inch series	B110
GC	Needle roller bearing, track roller, stud type, full complement, crowned outer ring outside diameter, metric series	B228-B231
GCL	Needle roller bearing, track roller, stud type, full complement, cylindrical outer ring outside diameter, metric series	B228-B231
GCR	Needle roller bearing, track roller, stud type, full complement, crowned outer ring outside diameter, eccentric collar, metric series	B234-B235
GCRL	Needle roller bearing, track roller, stud type, full complement, cylindrical outer ring outside diameter, eccentric collar, metric series	B234-B235
GCU	Cylindrical roller bearing, track roller, stud type, full complement, crowned outer ring outside diameter, metric series	B232-B233
GCUL	Cylindrical roller bearing, track roller, stud type, full complement, cylindrical outer ring outside diameter, metric series	B232-B233
GCUR	Cylindrical roller bearings, track roller, stud type, full complement, crowned outer ring outside diameter, eccentric collar, metric series	B236-B237
GCURL	Cylindrical roller bearings, track roller, stud type, full complement, cylindrical outer ring outside diameter, eccentric collar, metric series	B236-B237
GS.811, GS.812	Thrust washer, housing piloted, metric series	B280-B283 & B300-B303
HJ	Needle roller bearing with integral flanges, lubricating groove and a lubricating hole in the outer ring, without inner ring, inch series	B196-B199
HJ RS	Needle roller bearing with integral flanges, lubricating groove and a lubricating hole in the outer ring, without inner ring, with one seal, inch series	B200-B201
HJ .2RS	Needle roller bearing with integral flanges, lubricating groove and a lubricating hole in the outer ring, with two seals, without inner ring, inch series	B200-B201
HK	Drawn cup needle roller bearing, caged, metric series	B52-B61
HK RS	Drawn cup needle roller bearing, caged with one seal, metric series	B62-B65
HK .2RS	Drawn cup needle roller bearing, caged with two seals, metric series	B62-B65
IM	Inner ring for full complement drawn cup needle roller bearing, no lubrication hole, metric series	B84-B86 & B376-B379
IMC	Inner ring for full complement drawn cup needle roller bearing, with lubrication hole, metric series	B84-B86 & B376-B378

CODE	DESCRIPTION	PAGE
IM.R6	Inner ring for full complement drawn cup needle roller bearing, no lubrication hole, without raceway chamfer, metric series	B84-B86 & B376-B378
IR (≤4 digit)	Inner ring for drawn cup needle roller bearing, inch series	B122-B124
IR (6 digit)	Inner ring for needle roller bearing, inch series	B196-B200 & B202-B205
IRA	Inner ring for drawn cup needle roller bearing, extended width, inch series	B122-B124
J	Drawn cup needle roller bearing, caged, inch series	B112-B119
JH	Drawn cup needle roller bearing, caged, heavy series, inch series	B112-B119
JP-F	Drawn cup needle roller bearing, plastic finger cage, inch series	B112
JR	Inner ring for needle roller bearing, no lubrication hole, metric series	B67-B76 & B366-B375
JR.JS1	Inner ring for needle roller bearing, with lubrication hole, metric series	B67-B76 & B366-B375
JRZ.JS1	Inner ring for needle roller bearing, with lubrication hole, without raceway chamfer, metric series	B67-B76 & B366-B375
JT	Drawn cup needle roller bearing with one seal, caged, inch series	B120-B121
JTT	Drawn cup needle roller bearing with two seals, caged, inch series	B120-B121
K	Radial needle roller and cage assembly, metric series	B8-B27
K.BE	Radial needle roller and cage assembly for crank pin applications, metric series	B33-B34
K.H	Radial needle roller and cage assembly, hardened steel cage, metric series	B8-B27
K.SE	Radial needle roller and cage assembly for wrist pin applications, metric series	B35-B36
K.TN	Radial needle roller and cage assembly, molded cage of reinforced engineered polymer, metric series	B8-B27
K.TNZW	Radial needle roller and cage assembly, molded cage of reinforced engineered polymer, double-row, metric series	B8-B27
K.ZW	Radial needle roller and cage assembly, double-row, metric series	B8-B27

CODE	DESCRIPTION	PAGE
K.811, K.812	Thrust cylindrical roller and cage assembly (without washers), metric series	B300-B303
KR	Needle roller bearing, track roller, stud type, with cage, crowned outer ring outer diameter, metric series	B222-B223
KR.2RS	Needle roller bearing, track roller, stud type, with cage, with seals, crowned outer ring outer diameter, metric series	B224-B225
KR.DZ	Needle roller bearing, track roller, stud type, with cage, cylindrical outer ring outer diameter, metric series	B222-B223
KRV	Needle roller bearing, track roller, stud type, full complement, crowned outer ring outer diameter metric series	B226-B227
KRV.DZ	Needle roller bearing, track roller, stud type, full complement, cylindrical outer ring outer diameter, metric series	B226-B227
LS	Thrust washer for AXK series, heavy, metric series	B280-B283
M-1	Drawn cup needle roller bearing, full complement, closed end, inch series	B94-B107
MH-1	Drawn cup needle roller bearing, full complement, heavy series, closed end, inch series	B94-B107
MJ-1	Drawn cup needle roller bearing, caged, closed end, inch series	B112-B119
MJH-1	Drawn cup needle roller bearing, caged, heavy series, closed end, inch series	B112-B119
NA1000	Needle roller bearing, full complement, with inner ring, metric series	B182-B184
NA2000	Needle roller bearing, full complement, with inner ring, metric series	B182-B184
NA22000	Needle roller bearing, full complement, with inner ring, metric series	B182
NA22.2RS	Needle roller bearing, track roller, yoke type, with cage, with seals, with integral flanges, crowned outer ring outer diameter, with inner ring, metric series	B241
NA22.2RS.DZ	Needle roller bearing, track roller, yoke type, with cage, with seals, with integral flanges, cylindrical outer ring outer diameter, with inner ring, metric series	B241
NA3000	Needle roller bearing, full complement, with inner ring, metric series	B182-B184

D

CODE	DESCRIPTION	PAGE
NA48	Needle roller bearing, caged, with integral flanges, lubricating groove and one lubrication hole in the outer ring, with inner ring, metric series	B162
NA49	Needle roller bearing, caged, with integral flanges, lubricating groove and one lubricating hole in the outer ring, with inner ring, metric series	B157-B162
NA49.RS	Needle roller bearing, caged, with integral flanges, lubricating groove and one lubricating hole in the outer ring, with inner ring, with one seal, metric series	B170
NA49.2RS	Needle roller bearing, caged, with integral flanges, lubricating groove and one lubricating hole in the outer ring, with inner ring, with two seals, metric series	B170
NA69	Needle roller bearing, caged, with flanges (inserted or integral), lubricating groove and one Lubricating hole in the outer ring, with inner ring (sizes with 32 mm and larger bores have two needle roller and cage assemblies), metric series	B157-B162
NAO	Needle roller bearing, caged, without flanges, with inner ring, metric series	B172-B174
NATR	Needle roller bearing, track roller, yoke type, with cage, crowned outer ring outer diameter, with end washers, non-separable design with inner ring, metric series	B242
NATR.DZ	Needle roller bearing, track roller, yoke type, with cage, cylindrical outer ring outer diameter, with end washers, non-separable design with inner ring, metric series	B242
NAXR	Combination machined race needle roller and thrust cylindrical roller bearing, with cage, single directional axial load capability, without inner ring, metric series	B334-B337
NAXR.Z	Combination machined race needle roller and thrust cylindrical roller bearing, with cage, single directional axial load capability, with dust cap, without inner ring, metric series	B334-B337
NJ	Cylindrical roller radial bearing, with two ribs on outer ring, one rib on inner ring, metric series	B190-B192
NK	Needle roller bearing, caged, with flanges (inserted or integral), without inner ring, metric series	B163-B169
NKJ	Needle roller bearing, caged, with flanges (inserted or integral), with inner ring, metric series	B157-B162
NKJS	Needle roller bearing with integral flanges, lubricating groove and one lubricating hole in the outer ring, with inner ring, metric series	B157-B162
NKS	Needle roller bearing, caged, with integral flanges, lubricating groove and one lubricating hole in the outer ring, without inner ring, metric series	B163-B169
NRO.B	Needle roller, flat end, metric series	B352
NTA	Thrust needle roller and cage assembly (without washers), two-piece cage, inch series	B314-B323
NTH	Thrust cylindrical roller and cage assembly (without washers), inch series	B324-B325
NTHA	Thrust cylindrical roller bearing with separable washers, one shaft-piloted washer and one housing-piloted washer, inch series	B326-B327
NU	Cylindrical roller radial bearing, with two ribs on outer ring, cylindrical inner ring, metric series	B190-B192
NUKR	Cylindrical roller bearing, track roller, stud-type, full complement, with shields, crowned outer ring outer diameter, metric series	B226-B227
NUKR.DZ	Cylindrical roller bearing, track roller, stud-type, full complement, with shields, cylindrical outer ring outer diameter, metric series	B226-B227
NUP	Cylindrical roller radial bearing, with two ribs on outer ring, one fixed rib and one loose rib/flat washer on inner ring, metric serie	B190-B192
NUTR	Cylindrical roller bearing, track roller, yoke-type, full complement, crowned outer ring outer diameter, with end washers, non-separable design with inner ring, metric series	B243
NUTR.DZ	Cylindrical roller bearing, track roller, yoke-type, full complement, cylindrical outer ring outer diameter, with end washers, non-separable design with inner ring, metric series	B243
RAX400	Combined machined race needle roller and thrust needle roller bearing, with cage, single directional axial load capability, without inner ring, metric series	B338-B341

CODE	DESCRIPTION	PAGE
RAX 500	Combined machined race needle roller and thrust cylindrical roller bearing, with cage, single directional axial load capability, without inner ring, metric series	B338-B341
RAX700	Combined drawn cup needle roller (with open ends) and thrust needle roller bearing, with cage, single directional axial load capability, without inner ring, metric series	B342-B343
RAXF700	Combined drawn cup needle roller (with closed end) and thrust needle roller bearing, with cage, single directional axial load capability, without inner ring, metric series	B342-B343
RAXZ500	Combined machined race needle roller and thrust needle roller bearing, with cage, single directional axial load capability, without inner ring, with unitized thrust washer, metric series	B334-B337
RC	Drawn cup needle roller clutch, single roller per integral spring, inch series	B138-B139
RC-FS	Drawn cup needle roller clutch, single roller per stainless steel spring, inch series	B138-B139
RCB	Drawn cup needle roller clutch and bearing assembly, single roller per integral spring, inch series	B140-B141
RCB-FS	Drawn cup needle roller clutch and bearing assembly, single roller per stainless steel spring, inch series	B140-B141
RNA1000	Needle roller bearing, full complement, without inner ring, metric series	B178-B181
RNA11000, RNAB11000	Needle roller bearing, track roller, yoke type, full complement, crowned outer ring outside diameter, without inner ring, metric series	B251
RNA2000	Needle roller bearing, full complement, without inner ring, metric series	B178-B181
RNA22.2RS	Needle roller bearing, track roller, yoke type, with cage, with seals, with integral flanges, crowned outer ring outer diameter, without inner ring, metric series	B240
RNA22.2RS.DZ	Needle roller bearing, track roller, yoke type, with cage, with seals, with integral flanges, cylindrical outer ring outer diameter, without inner ring, metric series	B240
RNA22000	Needle roller bearing, full complement, without inner ring, metric series	B178-B179
RNA3000	Needle roller bearing, full complement, without inner ring, metric series	B178-B181

CODE	DESCRIPTION	PAGE
RNA48	Needle roller bearing, caged, with integral flanges, lubricating groove and one lubricating hole in the outer ring, without inner ring, metric series	B169
RNA49	Needle roller bearing, caged, with integral flanges, lubricating groove and one lubricating hole in the outer ring, without inner ring, metric series	B163-B169
RNA49RS	Needle roller bearing, caged, with integral flanges, lubricating groove and one lubricating hole in the outer ring, without inner ring, with one seal, metric series	B171
RNA49.2RS	Needle roller bearing, caged, with integral flanges, lubricating groove and one lubricating hole in the outer ring, without inner ring, with two seals, metric series	B171
RNA69	Needle roller bearing, caged, with flanges (inserted or integral), lubricating groove and one lubricating hole in the outer ring, without inner ring (sizes with 40 mm and larger bores have two needle roller and cage assemblies), metric series	B164-B169
RNAL11000	Needle roller bearing, track roller, yoke type, full complement, crowner outer ring outside diameter, without inner ring, metric series	B251
RNAO	Needle roller bearing without flanges, without inner ring, metric series	B175-B177
RSTO	Needle roller bearing, track roller, yoke type, with cage, crowned outer ring outer diameter, separable design without inner ring, metric series	B238
RSTO.DZ	Needle roller bearing, track roller, yoke type, with cage, cylindrical outer ring outer diameter, separable design without inner ring, metric series	B238
SNSH	End washers, for use with NAO and RNAO needle roller bearings, metric series	B172-B177 & B383
STO	Needle roller bearing, track roller, yoke type, with cage, crowned outer ring outer diameter, separable design with inner ring, metric series	B239
STO.DZ	Needle roller bearing, track roller, yoke type, with cage, cylindrical outer ring outer diameter, separable design with inner ring, metric series	B239

D

CODE	DESCRIPTION	PAGE
STO.ZZ	Needle roller bearing, track roller, yoke type, with cage, crowned outer ring outer diameter, with end washers, separable design with inner ring, metric series	B242
STO.ZZ.DZ	Needle roller bearing, track roller, yoke type, with cage, cylindrical outer ring outer diameter, with end washers, separable design with inner ring, metric series	B242
TR	Thrust washer A, B, C, etc. indicates (A,B,C, etc) washer thickness, inch series	B314-B323
TRI	Thrust washer, shaft piloted, inch series	B326-B327
TRID	Thrust washer, housing piloted, inch series	B326-B327
TRJ	Thrust washer, shaft piloted, inch series	B326-B327
TRJD	Thrust washer, housing piloted, inch series	B326-B327
VEEN	Grease fitting for stud-type track rollers, metric series	B220
WJ	Radial needle roller and cage single-row assembly, inch series	B39-B41
WJC	Radial needle roller and cage assembly, inch series	B39-B41
WS.811, WS.812	Thrust washer, shaft piloted, metric series	B280-B283 & B300-B303
YCR	Needle roller bearing, track roller, yoke type, full complement, cylindrical outer ring outer diameter, with end washers, non-separable design with inner ring, inch series	B266-B267
YCRS	Needle roller bearing, track roller, yoke type, full complement, with seals and internal thrust washers, cylindrical outer ring outer diameter, with end washers, non-separable design with inner ring, inch series	B266-B267
YCRSC	Needle roller bearing, track roller, yoke type, full complement, with seals and internal thrust washers, crowned outer ring outer diameter, with end washers, non-separable design with inner ring, inch series	B252
ZRO	Cylindrical roller, metric series	B363

NOTES

GLOBAL NETWORK
BEARING BUSINESS OPERATIONS

JTEKT CORPORATION NAGOYA HEAD OFFICE
No.7-1, Meieki 4-chome, Nakamura-ku, Nagoya, Aichi 450-8515, JAPAN
TEL : 81-52-527-1900
FAX : 81-52-527-1911

JTEKT CORPORATION OSAKA HEAD OFFICE
No.5-8, Minamisemba 3-chome, Chuo-ku, Osaka 542-8502, JAPAN
TEL : 81-6-6271-8451
FAX : 81-6-6245-3712

Sales & Marketing Headquarters
No.5-8, Minamisemba 3-chome, Chuo-ku, Osaka 542-8502, JAPAN
TEL : 81-6-6245-6087
FAX : 81-6-6244-9007

OFFICES

KOYO CANADA INC.
5324 South Service Road, Burlington, Ontario L7L 5H5, CANADA
TEL : 1-905-681-1121
FAX : 1-905-681-1392

KOYO CORPORATION OF U.S.A.
-Cleveland Office-
29570 Clemens Road, P.O.Box 45028 Westlake,
OH 44145, U.S.A.
TEL : 1-440-835-1000
FAX : 1-440-835-9347
-Detroit Office-
47771 Halyard Drive, Plymouth, MI 48170, U.S.A.
TEL : 1-734-454-1500
FAX : 1-734-454-4076

KOYO BEARINGS USA LLC
-Canton Office-
4895 Dressler Road NW, Suite B, Canton, OH 44718, U.S.A
TEL : 1-330-994-0900
FAX : 1-330-994-0960

KOYO MEXICANA, S.A. DE C.V.
Rio Nazas No.171, 3er piso, Col. Cuauhtemoc, México, D.F. C.P. 06500,
MEXICO
TEL : 52-55-5207-3860
FAX : 52-55-5207-3873

KOYO LATIN AMERICA, S.A.
Edificio Banco del Pacifico Planta Baja, Calle Aquilino de la Guardia y
Calle 52, Panama, REPUBLICA DE PANAMA
TEL : 507-208-5900
FAX : 507-264-2782/507-269-7578

KOYO ROLAMENTOS DO BRASIL LTDA.
Rua Desembargador Eliseu Ghilherme 304, 7-Andar, Paraiso,
CEP 04004-30, BRASIL
TEL : 55-11-3887-9173
FAX : 55-11-3887-3039

KOYO BEARINGS INDIA PVT. LTD.
C/o Stylus Commercial Services PVT LTD, Ground Floor, The Beech, E-1,
Manyata Embassy Business Park, Outer Ring Road, Bengaluru-560045,
INDIA
TEL : 91-80-4276-4567 (Reception Desk of Service Office)
FAX : 91-80-4276-4568

JTEKT (THAILAND) CO., LTD.
172/1 Moo 12 Tambol Bangwua, Amphur Bangpakong,
Chachoengsao 24180, THAILAND
TEL : 66-38-533-310-7
FAX : 66-38-532-776

PT. JTEKT INDONESIA
MM2100 Industrial Town Block DD-3, Cikarang Barat, Bekasi 17520,
INDONESIA
TEL : 62-21-8998-3273
FAX : 62-21-8998-3274

KOYO SINGAPORE BEARING (PTE.) LTD.
27, Penjuru Lane, #09-01 C&P Logistics Hub 2, SINGAPORE 609195
TEL : 65-6274-2200
FAX : 65-6862-1623
-MIDDLE EAST (BRANCH)-
6EA312, Dubai Airport Free Zone, P.O. Box 54816, Dubai, U.A.E.
TEL : 971-4-2993600
FAX : 971-4-2993700

PHILIPPINE KOYO BEARING CORPORATION
6th Floor One World Square Building, #10 Upper McKinley Road, McKinley
Town Center, Fort Bonifacio, 1634 Taguig City, PHILIPPINES
TEL : 63-2-856-5046/5047
FAX : 63-2-856-5045

JTEKT KOREA CO., LTD.
Inwoo Building 6F, 539-11, Shinsa-Dong,
Kangnam-Ku, Seoul, KOREA
TEL : 82-2-549-7922
FAX : 82-2-549-7923

JTEKT (CHINA) CO., LTD.
Room.25A2, V-CAPITAL Building, 333 Xianxia Road, Changning District,
Shanghai, CHINA
TEL : 86-21-5178-1000
FAX : 86-21-5178-1008

KOYO (SHANGHAI) CO., LTD.
Room.25A2, V-CAPITAL Building, 333 Xianxia Road, Changning District,
Shanghai, CHINA
TEL : 86-21-5178-1000
FAX : 86-21-5178-1008

KOYO AUSTRALIA PTY. LTD.
Unit 2, 8 Hill Road , Homebush Bay, NSW 2127, AUSTRALIA
TEL : 61-2-8719-5300
FAX : 61-2-8719-5333

JTEKT EUROPE BEARINGS B.V.
Markerkant 13-01, 1314 AL Almere, THE NETHERLANDS
TEL : 31-36-5383333
FAX : 31-36-5347212
-Sosnowiec Branch Office-
Warszawska 3 Sosnowiec 41-200 Poland
TEL : 48-32-720-1444
FAX : 48-32-746-7746

KOYO KULLAGER SCANDINAVIA A.B.
Johanneslundsvägen 4, 194 61 Upplands Väsby, SWEDEN
TEL : 46-8-594-212-10
FAX : 46-8-594-212-29

KOYO (U.K.) LTD.
Whitehall Avenue, Kingston, Milton Keynes MK10 OAX,
UNITED KINGDOM
TEL : 44-1908-289300
FAX : 44-1908-289333
-Desford Office-
Suite 3, The Coach House, Desford, Leicester LE9 9JJ UK
TEL : 44-1455-826200
FAX : 44-1544-826201

KOYO ROMANIA REPRESENTATIVE OFFICE
Str. Frederic Jolliot-Curie, Nr.3, Etaj 1, Ap.2, Sector 5
Bucharest, ROMANIA
TEL : 40-21-410-4170/4182/0984
FAX : 40-21-410-1178

KOYO DEUTSCHLAND GMBH.
Bargkoppelweg 4, D-22145 Hamburg, GERMANY
TEL : 49-40-67-9090-0
FAX : 49-40-67-9203-0

KOYO FRANCE S.A.
8 Rue Guy Moquet, B.P.189 Z.I., 95105 Argenteuil Cedex, FRANCE
TEL : 33-1-3998-4202
FAX : 33-1-3998-4244/4249
-Rueil Office-
2 rue Eugene & Armand Peugeot, 92563 Rueil-Malmaison Cedex, France
TEL : 33-1-4129-0955
FAX : 33-1-4129-0091

KOYO BEARINGS VIERZON MAROMME SAS
-Colmar Office-
1 Rue Denis Papin-BP CS60035. Colmar Cedex. 68025 France
TEL : 33-3-8977-9497
FAX : 33-3-8977-9548

KOYO IBERICA, S.L.
Avda.da la Industria, 52-2 izda 28820
Coslada Madrid, SPAIN
TEL :34-91-329-0818
FAX :34-91-747-1194

KOYO ITALIA S.R.L.
Via Bronzino 9, 20133 Milano, ITALY
TEL : 39-02-2951-0844
FAX : 39-02-2951-0954

BEARING PLANTS

KOYO BEARINGS CANADA INC.
4 Victoria Street, Bedford, QC J0J-1A0, CANADA
TEL : 1-450-248-3316
FAX : 1-450-248-4196

KOYO CORPORATION OF U.S.A. (MANUFACTURING DIVISION)
-Orangeburg Plant-
2850 Magnolia Street, Orangeburg, SC 29115, U.S.A.
TEL : 1-803-536-6200
FAX : 1-803-534-0599
-Richland Plant-
1006 Northpoint Blvd., Blythewood, SC 29016, U.S.A.
TEL : 1-803-691-4624/4633
FAX : 1-803-691-4655
-Washington Plant-
146 Cutting Edge Court Telford, TN 37690, U.S.A.
TEL : 1-423-913-1006
FAX : 1-423-913-1008

KOYO BEARINGS USA LLC
-Dahlonega Plant-
615 Torrington Drive Dahlonega, GA 30533, U.S.A.
TEL : 1-706-864-7691
FAX : 1-706-864-8258
-Cairo Plant-
2525 Torrington Drive, Cairo, GA 39828, U.S.A.
TEL : 1-229-377-6650
FAX : 1-229-377-9760
-Sylvania Plant-
400 Friendship Road, Sylvania, GA 30467, U.S.A.
TEL : 1-912-564-7151
FAX : 1-912-564-2101
-Walhalla Plant-
430 Torrington Road, Po Box 100, Walhalla, SC 29691, U.S.A.
TEL : 1-864-638-3683
FAX : 1-864-638-2434

JTEKT (THAILAND) CO., LTD.
172/1 Moo 12 Tambol Bangwua, Amphur Bangpakong, Chachoengsao 24180, THAILAND
TEL : 66-38-531-988/993
FAX : 66-38-531-996

KOYO MANUFACTURING (PHILIPPINES) CORP.
Lima Technology Center, Municipality of Malvar, Batangas Province, 4233 PHILIPPINES
TEL : 63-43-981-0088
FAX : 63-43-981-0001

KOYO JICO KOREA CO., LTD
28-12, Yulpo-Ri, Koduc-Myun, Pyung Teak-City, Kyungki-Do, KOREA
TEL : 82-31-668-6381
FAX : 82-31-668-6384

KOYO BEARING DALIAN CO., LTD.
No.II A-2 Dalian Export Processing Zone, 116600, CHINA
TEL : 86-411-8731-0972/0974
FAX : 86-411-8731-0973

WUXI KOYO BEARING CO., LTD.
Wuxi Li Yuan Economic Development Zone, Wuxi, 214072, CHINA
TEL : 86-510-85161901
FAX : 86-510-85161143

KOYO NEEDLE BEARINGS (WUXI) CO., LTD.
Di Cui Road, Liyuan Development Zone, Jiangyu Province, 214072, CHINA
TEL : 86-51085160998
FAX : 86-51085163262

DALIAN KOYO WAZHOU AUTOMOBILE BEARING CO., LTD.
No.96, Liaohe East Road, D.D Port, Dalian, 116620, CHINA
TEL : 86-411-8740-7272
FAX : 86-411-8740-7373

KOYO LIOHO (FOSHAN) AUTOMOTIVE PARTS CO., LTD.
No.12, Wusha Section Of Shunpan Road, Daliang Town, Shunde Of Foshan, Guandong, Province, CHINA
(SHUNDE INDUSTRIAL PARK)
TEL : 86-757-22829589
FAX : 86-757-22829586

KOYO AUTOMOTIVE PARTS (WUXI) CO.,LTD.
B6-A New District, Wuxi, 214028, CHINA
TEL : 86-510-8533-0909
FAX : 86-510-8533-0155

KOYO BEARINGS (EUROPE) LTD.
P.O.Box 101, Elmhirst Lane, Dodworth, Barnsley, South Yorkshire, S75 3TA, UNITED KINGDOM
TEL : 44-1226-733200
FAX : 44-1226-204029

KOYO ROMANIA S.A.
Turnu Magurele Street No.1, 140003, ALEXANDRIA Teleorman County, ROMANIA
TEL : 40-247-306-400
FAX : 40-247-306-421

KOYO BEARINGS DEUTSCHLAND GMBH
Werkstrasse 5, D-33790 Halle, Halle Westfalen, 33790, Fed.Rep.of Germany
TEL : 49-5201-7070
FAX : 49-5201-707416

KOYO BEARINGS VIERZON MAROMME SAS
-Maromme Plant-
Zone Industrielle De La, BP 1033 7 Rue Ampere, Maromme, 76151, FRANCE
TEL : 33-23282-3838
FAX : 33-23576-6624
-Vierzon Plant-
61 Route De Foecy, BP 238, Vierzon Cedex, 18102 FRANCE
TEL : 33-24852-6200
FAX : 33-24852-6250

KOYO BEARINGS MOULT SAS
Zone Industrielle De Mou, Moult, 14370, FRANCE
TEL : 33-23127-9600
FAX : 33-23123-4693

KOYO BEARINGS ČESKÁ REPUBLIKA S.R.O.
Pavelkova 253/5, Bystrovany, Olomouc, 77900, CZECH REP
TEL : 42-585-126-501
FAX : 42-585-126-503

KOYO BEARINGS ESPAÑA S.A.
Doctor Diaz Emparanza, 3, Bilbao, 48002, SPAIN
TEL : 34-94-4431400
FAX : 34-94-4440905

TECHNICAL CENTERS

JTEKT CORPORATION NORTH AMERICAN TECHNICAL CENTER
47771 Halyard Drive, Plymouth, MI 48170, U.S.A.
TEL : 1-734-454-1500
FAX : 1-734-454-4076

JTEKT (CHINA) CO., LTD. TECHNICAL CENTER
Room.25A2, V-CAPITAL Building, 333 Xianxia Road, Changning District, Shanghai, CHINA
TEL : 86-21-5178-1000
FAX : 86-21-5178-1008

JTEKT CORPORATION EUROPEAN TECHNICAL CENTRE
Markerkant 13-02, 1314 AL Almere, THE NETHERLANDS
TEL : 31-36-5383350
FAX : 31-36-5302656

KOYO BEARINGS USA LLC GREENVILLE TECHNOLOGY CENTER
7 Research Drive, Greenville, SC 29607, U.S.A.
TEL : 1-864-770-2100
FAX : 1-864-770-2399

KOYO BEARINGS DEUTSCHLAND GMBH KUENSEBECK TECHNOLOGY CENTER
Werkstrasse 5, D-33790 Halle, Halle Westfalen, 33790, Fed.Rep.of Germany
TEL : 49-5201-7070
FAX : 49-5201-707416

KOYO BEARINGS ČESKÁ REPUBLIKA S.R.O. BRNO TECHNOLOGY CENTER
Technologicky Park Brno, Techinicka 15, 61600 Brno, 61600 CZECH REP
TEL : 420-541-191803
FAX : 420-541-191801

Koyo®

Torrington® Needle Roller Bearings

Value & Technology

JTEKT

JTEKT CORPORATION

PRINTED WITH SOY INK™

This catalog has been printed on paper of recycled paper pulp using environmentally friendly soy ink.

CAT. NO. B2016E-2
Printed in Japan '10.11-4CDS
Torrington® is a registered trademark of the Timken Company.