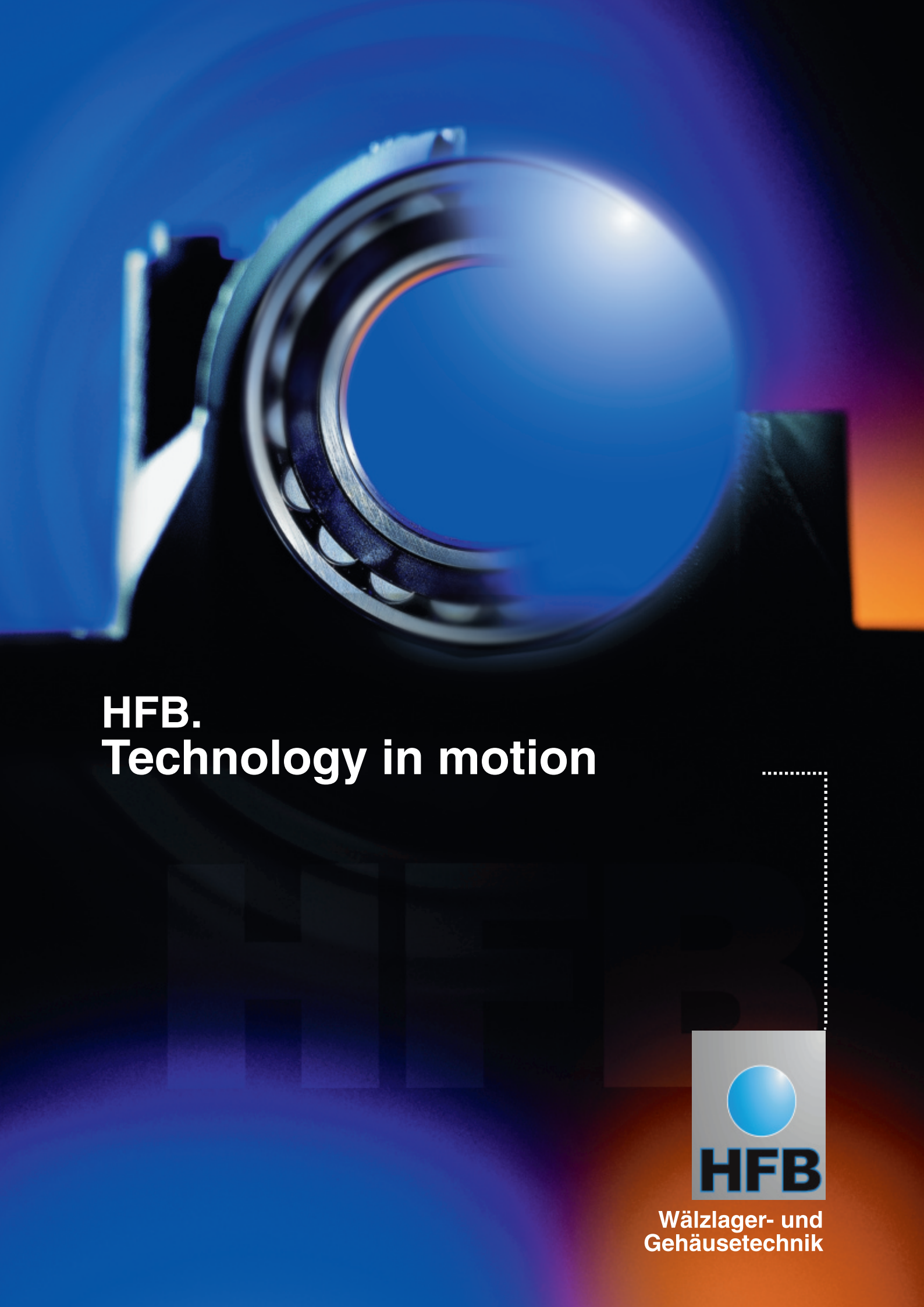

HFB.
Technology in motion

HFB

Wälzlager- und
Gehäusetechnik

This catalogue gives an overview of the standard ranges of housings manufactured by HFB and gives the designer the opportunity to find the needed products for the various applications, quickly and accurately.

In addition, we supply numerous housing variations to customer´s specifications.

When required, we are always prepared to assist with the selection of an appropriate assembly for a specific application; this applies also to the selection of the correct material.

Contents | Page

7225(00)	-	Flanged Bearing Housing	99-101
BL	-	Fan Bearing Housing	54-57
BTL	-	Plummer Block Housing	82-91
C-FUU	-	Flanged Bearing with Protective Cover	188
C-OIU	-	Flanged Bearing Housing with Protective Cover	190
C-SIU	-	Plummer Block with Protective Cover	186
C-TIU	-	S type Bearing with Protective Cover	191
C-UCFC	-	Flanged Bearing Housing with Protective Cover	189
C-UCP	-	Plummer Block with Protective Cover	187
CM-FUU	-	Flanged Bearing with Protective Cover	188
CM-OIU	-	Flanged Bearing Housing with Protective Cover	190
CM-SIU	-	Plummer Block with Protective Cover	186
CM-TIU	-	S type Bearing with Protective Cover	191
CM-UCFC	-	Flanged Bearing Housing with Protective Cover	189
CM-UCP	-	Plummer Block with Protective Cover	187
DFI	-	Flanged Bearing Housing	152
DFIS	-	Flanged Bearing Housing	152
DIN 115	-	Clamp Coupling	118-119
DIN 502	-	Flanged Bearing	110
DIN 503	-	Flanged Bearing	111
DIN 504	-	Plummer Block Housing (Eye Bearing)	112
DIN 505 L	-	Plummer Block Housing (Cover Bearing)	113
DIN 506 A	-	Plummer Block Housing (Cover Bearing)	114
EK		Flexible Coupling	116-117
FI	-	Flanged Bearing Housing	146-148
FIK	-	Flanged Bearing Housing	146-148
FIS	-	Flanged Bearing Housing	146.148
FIU	-	Flanged Bearing HousingTest	146-148
FIZ	-	Flanged Bearing Housing	155-156
FIZH	-	Flanged Bearing Housing	155-156
FIZH-R3	-	Flanged Bearing Housing	155-156
FIZK	-	Flanged Bearing Housing	155-156
FIZ .. K	-	Drum Inner Bearing	108
FIZS	-	Flanged Bearing Housing	155-156
FIZU	-	Flanged Bearing Housing	155-156
FSNI 5	-	Plummer Block Housing	30-31
FUH	-	Flanged Bearing Housing	146-149
FUH-R3	-	Flanged Bearing Housing	146-149
FUU	-	Flanged Bearing Housing	146-149

Contents

Page

FUU-Spezial	-	Flanged Bearing Housing	150
FUU-Spezial Laby	-	Flanged Bearing Housing	151
FWSR	-	Flanged Bearing Housing	180-181
FWSRU	-	Flanged Bearing Housing	180-181
GOF 2	-	Plummer Block Housing	74-75
GOF 5	-	Plummer Block Housing	76-77
GOS 2	-	Plummer Block Housing	66-67
GOS 3	-	Plummer Block Housing	70-71
GOS 5	-	Plummer Block Housing	68-69
GOS 6	-	Plummer Block Housing	72-73
GUF 2	-	Plummer Block Housing	74-75
GUF 5	-	Plummer Block Housing	76-77
HC	-	Ball Bearing with Eccentric Collar fixing	127
HC-R3	-	Ball Bearing with Eccentric Collar fixing	128
HCP	-	Plummer Block Housing	142-145
I - 1200(00)	-	Flanged Bearing Housing	98
OI	-	Flanged Bearing Housing	161-162
OIH	-	Flanged Bearing Housing	161-162
OIH-R3	-	Flanged Bearing Housing	161-162
OIK	-	Flanged Bearing Housing	161-162
OIU	-	Flanged Bearing Housing	161-162
OIZH	-	Flanged Bearing Housing	161-162
OIZU	-	Flanged Bearing Housing	161-162
OWI	-	Flanged Bearing Housing	163
OWIK	-	Flanged Bearing Housing	154
OWIKS	-	Flanged Bearing Housing	154
OWIS	-	Flanged Bearing Housing	163
PDNI	-	Fan Bearing Housing	50-53
PF	-	Pressed Steel Flanged Bearing Housing	183
PFD	-	Pressed Steel Flanged Bearing Housing	185
PFDS	-	Pressed Steel Flanged Bearing Housing	185
PFL	-	Pressed Steel Flanged Bearing Housing	184
PFLS	-	Pressed Steel Flanged Bearing Housing	184
PFS	-	Pressed Steel Flanged Bearing Housing	183
PP	-	Pressed Steel Bearing Housing	182
PPS	-	Pressed Steel Bearing Housing	182

Contents | Page

RIZ	-	Flanged Bearing Housing	157-158
RIZH, RIZH 3	-	Flanged Bearing Housing	157-158
RIZH-R3	-	Flanged Bearing Housing	157-158
RIZK	-	Flanged Bearing Housing	157-158
RIZS	-	Flanged Bearing Housing	157-158
RIZU	-	Flanged Bearing Housing	157-158
S 30 .. K	-	Plummer Block Housing	45-47
SA	-	Ball Bearing with Eccentric Collar fixing	126
SAP	-	Plummer Block Housing	142-145
SB	-	Ball Bearing with Grubscrew fixing	124
SBL	-	Tension Bearing Housing	78
SBP	-	Plummer Block Housing	142-145
SD 31 .. TS	-	Plummer Block Housing	35-37
SD 30 .. TS	-	Plummer Block Housing	39-41
SD 5 ..	-	Plummer Block Housing	42-43
SFI	-	Flanschlagergehäuse	153
SFIS	-	Flanschlagergehäuse	153
SI	-	Plummer Block Housing	130-135
SIG	-	Plummer Block Housing	138-141
SIGH	-	Plummer Block Housing	138-141
SIGH-R3	-	Plummer Block Housing	138-141
SIGK	-	Plummer Block Housing	138-141
SIGS	-	Plummer Block Housing	138-141
SIGU	-	Plummer Block Housing	138-141
SIH, SIH 3	-	Plummer Block Housing	130-137
SIH-R3	-	Plummer Block Housing	130-137
SIK	-	Plummer Block Housing	130-137
SIS	-	Plummer Block Housing	130-133
SIU	-	Plummer Block Housing	130-137
SKI	-	Plummer Block Housing	164-165
SKIH	-	S type Bearing Housing	164-165
SKIH-R3	-	S type Bearing Housing	164-165
SKIK	-	S type Bearing Housing	164-165
SKIS	-	S type Bearing Housing	164-165
SKIU	-	S type Bearing Housing	164-165
SLG	-	Take-up Bearing Housing	96-97
SM-DK	-	Housed Bearing Units with Plastic Protective	192

Contents

			Page
SNI 2	-	Plummer Block Housing	10-11, 20-27
SNI 3	-	Plummer Block Housing	20-27
SNI 5	-	Plummer Block Housing	10-19
SNI 6	-	Plummer Block Housing	12-19
SSNI 5	-	Plummer Block Housing	28-29
STL	-	Drum Take-up Bearing	92-95
STLU	-	Hanger Bearing Housing	180-181
TI	-	S type Bearing Housing	166-169
TIH, TIH 3	-	S type Bearing Housing	166-171
TIH-R3	-	S type Bearing Housing	166-171
TIK	-	S type Bearing Housing	166-171
TIRU	-	S type Bearing Housing	179
TIS	-	S type Bearing Housing	166-169
TIU	-	S type Bearing Housing	166-171
TN 2	-	Plummer Block Housing	106-107
TVL	-	Carriage Bearing Housing	103
TVN	-	Carriage Bearing Housing	103
TVN 2	-	Carriage Bearing Housing	104
TVN 3	-	Carriage Bearing Housing	105
UC, UC 3	-	Ball Bearing with Grubscrew fixing	125
UCF 3	-	Flanged Bearing Housing	172-173
UCFC	-	Flanged Bearing Housing	159
UCFL	-	Flanged Bearing Housing	160
UCP	-	Plummer Block Housing	142-145
UCP 3	-	Plummer Block Housing	174-175
UC-SS	-	Ball Bearing with Grubscrew fixing - Stainless Steel	194
UCT 3	-	S type Bearing Housing	176-177
UK	-	Ball Bearing with Grubscrew fixing	129
UKP	-	Plummer Block Housing	142-145
ZLF 200	-	Flanged Double Bearing	60
ZLF 30-45	-	Flanged Double Bearing	63
ZLF 30-45 HT	-	Flanged Double Bearing	64
ZLFB	-	Flanged Double Bearing	61
ZLFB-N	-	Flanged Double Bearing	62
ZLGO	-	Fan Bearing Housing	58-59

SNI - SN - PLUMMER BLOCK HOUSINGS

SNI- and SN - Plummer Block Housings are split bearing housings for the fitting of self aligning ball or spherical roller bearings which are fixed to the shaft either by shrink fitting or with an adapter sleeve. They are designed for grease lubrication only and can be supplied with lubrication holes if required. The dimensions of SNI- Housings comply with specifications laid down in

DIN 736 & 737, whereas those of the SN- Housings correspond to DIN 736 till 739.

The bearing seat of SNI-Housings is manufactured in tolerance H8, that of SN-Housings in tolerance H7. A locating bearing is obtained by fitting one or two fixing rings between housing shoulder and bearing outer ring.

These Plummer Block Housings are supplied as standard with felt seals. For special applications such as high temperatures, heavy dirt loads etc, it is possible to fit these housings with a variety of seal arrangements.

When used as an end bearing (Arrangement A) a cover plate is supplied for one side instead of the normal seal.

Under the reference SSNI these housings can be supplied with reinforced base. Normally the housings do not have holes in the base. On request however, they can be supplied with either 2 or 4 mounting holes.

Materials

SNI- and SN- Plummer Block Housings are manufactured from Grey Cast Iron GG20. Housings from Spheroidal Cast Iron GGG 40 or Cast Steel GS 45 are also available for applications where housings with greater strength are required.

Loadability of the Housings

SNI- and SN- Plummer Block Housings are designed for loads applied vertically to the bridging surface. In these instances the permissible load is determined by the load rating of fitted bearing. Should loads be applied at other angles, checks should be carried out to determine whether they are still valid for the housing, the housing connecting bolts and the mounting bolts.

Values of the housing breaking load Q, for various load directions are listed in the table on page 26. A factor of 1.8 x applies to housings from material GGG 40 & GS 45.

Bolts to strength class 8.8 are supplied as standard for joining the housing upper and lower parts.

Maximum values for the connecting bolts for various load directions are listed in the table on page 27.

It is to be ensured that, when loading the housings, the connecting bolts and holding down bolts are tightened correctly.

Lubrication

SNI- and SN- Plummer Block Housings are designed solely for grease lubrication. In the majority of cases the grease filling applied during initial assembly will be sufficient to last until the general inspection. Under certain conditions however, regreasing may be necessary. We can affix the adequate lubrication hole to the housing, if required. For bearing applications in the ventilation or fan assembly where due to high speeds, a continuous lubrication is necessary, we supply SN housing variations SN..VS, SN..R with grease regulators, (see page 29)

Seals for Plummer Block Housings

Depending on the application, the plummer block can be fitted with various seals. Felt seals are simple seals which allow a circumferential speed of 4m/s. Before fitting felt seals they should be soaked in warm oil for several minutes. Should temperatures be in excess of 100 °C the felt seal should be replaced with a temperature resistant seal.

The double lip seal is split and allows a circumferential speed of 8m/s. Attention should be paid to ensure that the gap between the two sealing lips is filled with grease during assembly and that the sliding surface on the shaft is polished.

With high speeds and difficult operating conditions we recommend fitting either single or double labyrinth seals. Perbunan cord supplied with the seals is inserted between the labyrinth seal and shaft and ensures that the seals rotate with the shaft. An out of alignment of upto 0.3° between shaft and housing is permissible.

With continuous temperatures above 100 °C, a cord of heat resistant material must be used. When regreasing the bearing centre should also be regreased where possible.

If the double labyrinth seal is used, it is possible to fill the labyrinth with grease by using a grease nipple, thus an additional sealing is achieved.

For extremely difficult and raw operating conditions we offer diverse special seals. Please contact our technical department in such cases.

Types of Seal

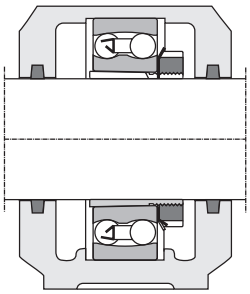

Felt strip or graphited cord seal

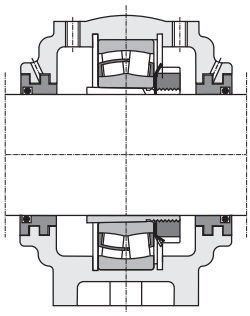

Double Labyrinth seal

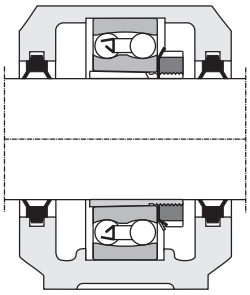

Double lip seal

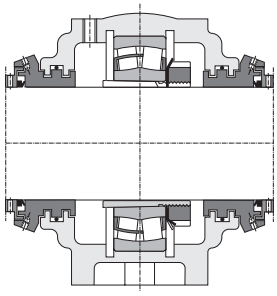

Taconite seal
(Standard execution)

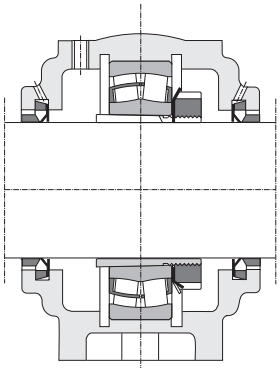

V- ring seal

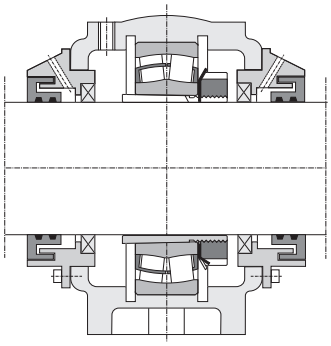

Taconite seal
(Special execution)

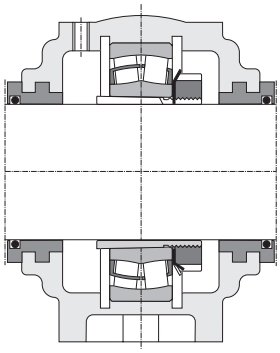

Labyrinth seal

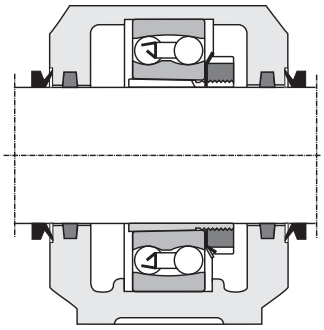

Felt strip with Labyrinth seal

Dimensions of the lubrication disks

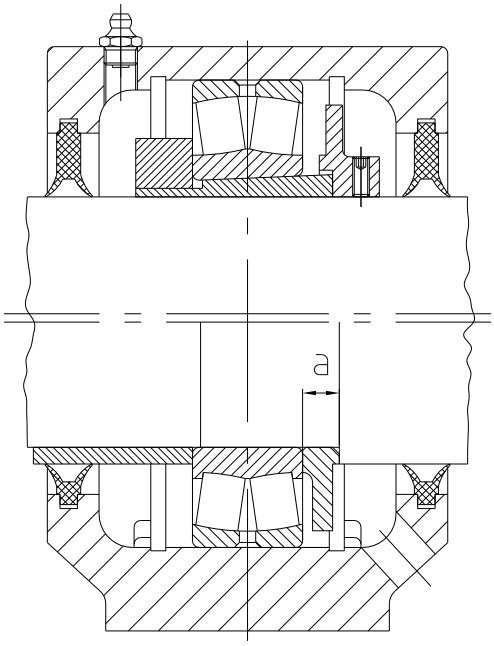

Series 200		Series 300	
Size	"a" in mm	Size	"a" in mm
214	18,0	305-307	9,0
216	11,0	308-311	10,0
218	24,2	312-316	11,0
220	26,1	317	12,0
222	28,5	318	13,0
224	24,0	319	14,0
226	28,0	320-324	15,0
228	31,0	326+328	16,0
230	32,5	330+332	18,0
232	35,0		

SNI Plummer Block Housings

Breaking Loads for SNI Plummer Blocks

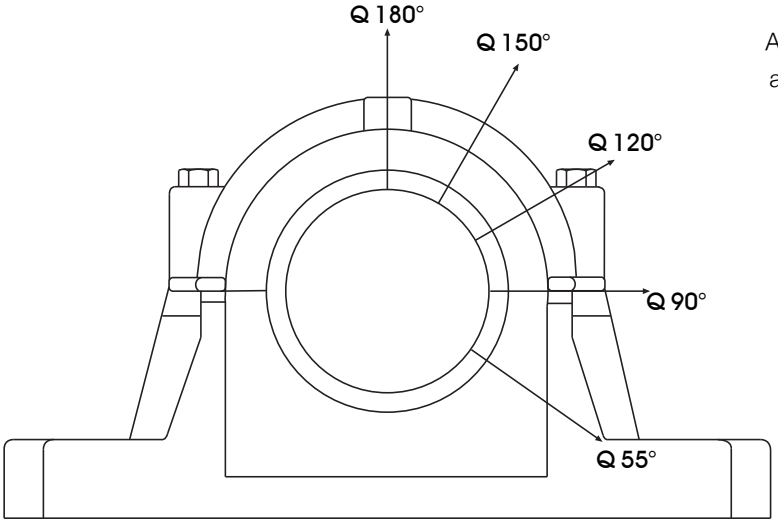

According to the operating conditions and the requirements of the operating savety it must be calculated with a correspending safety coefficient.

The breaking loads are for GG. A factor of x 1.8 applies to housing from GGG / GS.

Housing Ref No	Breaking Load kN Q 180°	Q 150°	Q 120°	Q 90°	Q 55°
SNI 208 - 307	110	85	95	130	215
SNI 209	115	90	100	140	230
SNI 210	130	110	120	155	265
SNI 211	140	115	125	170	275
SNI 212	150	120	130	180	300
SNI 213	170	130	150	205	340
SNI 215	205	160	185	250	410
SNI 216	215	175	190	260	430
SNI 217	240	190	205	290	480
SNI 218	275	215	250	340	550
SNI 506	85	65	80	100	170
SNI 507 - 606	95	80	85	115	190
SNI 508 - 607	110	85	95	130	215
SNI 509	115	90	100	140	230
SNI 510 - 608	130	110	120	155	265
SNI 511 - 609	140	115	125	170	275
SNI 512 - 610	150	120	130	180	300
SNI 513 - 611	170	130	150	205	340
SNI 515 - 612	205	160	185	250	410
SNI 516 - 613	215	175	190	260	430
SNI 517	240	190	205	290	480
SNI 518 - 615	275	215	250	340	550
SNI 519 - 616	290	230	260	350	580
SNI 520 - 617	310	250	280	370	620
SNI 522 - 619	340	275	310	410	680
SNI 524 - 620	400	320	350	470	790
SNI 526	450	360	410	540	900
SNI 528	530	430	470	630	1050
SNI 530	600	480	540	730	1200
SNI 532	720	570	640	860	1450

Permissible loading for SNI Plummer Block clamping bolts

Housing Ref No	Clamping Bolts DIN EN 24014 8.8	Torque Nm	max. Permissible Load kN for the two connecting bolts		
			F180°	F150°	F120°
SNI 208	M10 x 55	50	25	30	50
SNI 209	M10 x 55	50	25	30	50
SNI 210	M10 x 55	50	25	30	50
SNI 211	M12 x 60	80	40	45	80
SNI 212	M12 x 60	80	40	45	80
SNI 213	M12 x 65	80	40	45	80
SNI 215	M12 x 65	80	40	45	80
SNI 216	M16 x 70	150	85	100	170
SNI 217	M16 x 80	150	85	100	170
SNI 218	M16 x 85	150	85	100	170
SNI 506	M10 x 45	50	25	30	50
SNI 507 - 606	M10 x 50	50	25	30	50
SNI 508 - 607	M10 x 55	50	25	30	50
SNI 509	M10 x 55	50	25	30	50
SNI 510 - 608	M10 x 55	50	25	30	50
SNI 511 - 609	M12 x 60	80	40	45	80
SNI 512 - 610	M12 x 60	80	40	45	80
SNI 513 - 611	M12 x 65	80	40	45	80
SNI 515 - 612	M12 x 65	80	40	45	80
SNI 516 - 613	M16 x 70	150	85	100	170
SNI 517	M16 x 80	150	85	100	170
SNI 518 - 615	M16 x 85	150	85	100	170
SNI 519 - 616	M16 x 90	150	85	100	170
SNI 520 - 617	M20 x 100	200	130	150	260
SNI 522 - 619	M20 x 100	200	130	150	260
SNI 524 - 620	M20 x 110	200	130	150	260
SNI 526	M20 x 120	200	130	150	260
SNI 528	M20 x 120	200	130	150	260
SNI 530	M20 x 130	200	130	150	260
SNI 532	M20 x 130	200	130	150	260

* for other seals see on page 7

Plummer Block (split)

Series SNI 5 and SNI 6

For self aligning ball bearings or spherical roller bearings with adapter sleeve

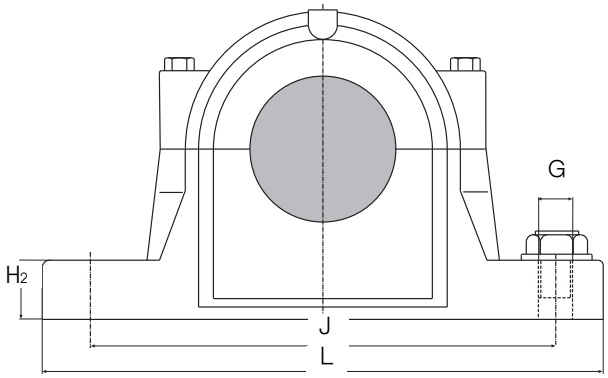

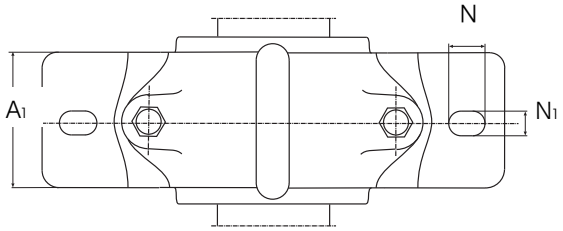

Housing Ref No	Weight kg	d_1	D^{H8}	H	H_1	A	L mm	A_1	A_2	H_2	F	J	N_1	N	G
SNI 506	2,0	25	62	50	88	78	185	52	86	22	32	150	15	20	M 12
SNI 606	2,1	25	72	50	90	85	185	52	93	22	34	150	15	20	M 12
SNI 507	2,1	30	72	50	93	83	185	52	91	22	34	150	15	20	M 12
SNI 607	2,8	30	80	60	105	93	205	60	101	25	39	170	15	20	M 12
SNI 508	2,8	35	80	60	105	86	205	60	94	25	39	170	15	20	M 12
SNI 608	3,1	35	90	60	110	96	205	60	104	25	41	170	15	20	M 12
SNI 509	2,9	40	85	60	110	86	205	60	96	25	30	170	15	20	M 12
SNI 609	4,5	40	100	70	128	108	255	70	118	28	44	210	18	24	M 16
SNI 510	3,1	45	90	60	113	92	205	60	102	25	41	170	15	20	M12
SNI 610	5,0	45	110	70	132	118	255	70	128	30	48	210	18	24	M 16

Plummer Block (split)

Series SNI 5 and SNI 6

For self aligning ball bearings or spherical roller bearings with adapter sleeve

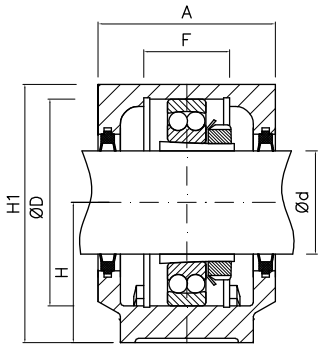

Housing with double lip seal

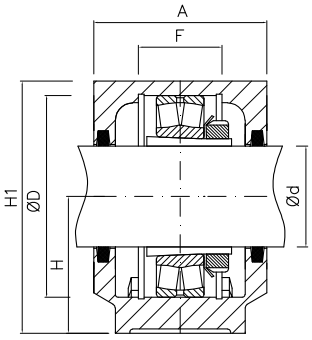

Housing with felt seal

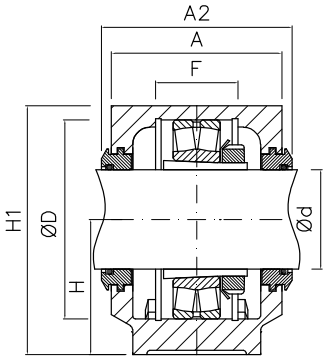

Housing with labyrinth seal

Reference Housing	Lip seal	Labyrinth seal	End cover	Housing with felt seal	End cover	Matching bearing with Adapter sleeve		Fixing ring Qty and ref No
SNI 506	LDZ 506	TS 6 SNI	DK 506 UA	SNI 506	DK 506 NA	1206 K	H 206	2 x FR 8/62
						2206 K	H 306	2 x FR 6/62
						22206 K	H 306	2 x FR 6/62
SNI 507 - 606	LDZ 606	TS 606 SNI	DK 507 UA	SNI 606	DK 506 NA	1306 K	H 306	2 x FR 7,5/72
						2306 K	H 2306	2 x FR 3,5/72
SNI 507 - 606	LDZ 507	TS 7 SNI	DK 507 UA	SNI 507	DK 507 NA	1207 K	H 207	2 x FR 8,5/72
						2207 K	H 307	2 x FR 5,5/72
						22207 K	H 307	2 x FR 5,5/72
SNI 508 - 607	LDZ 607	TS 607 SNI	DK 508 UA	SNI 607	DK 507 NA	1307 K	H 307	2 x FR 9/80
						2307 K	H 2307	2 x FR 4/80
SNI 508 - 607	LDZ 508	TS 8 SNI	DK 508 UA	SNI 508	DK 508 NA	1208 K	H 208	2 x FR 10,5/80
						2208 K	H 308	2 x FR 8/80
						22208 K	H 308	2 x FR 8/80
SNI 510 - 608	LDZ 608	TSI 608	DK 510 UA	SNI 608	DK 508 NA	1308 K	H 308	2 x FR 9/90
						2308 K	H 2308	2 x FR 4/90
						21308 K	H 308	2 x FR 9/90
						22308 K	H 2308	2 x FR 4/90
SNI 509	LDZ 509	TS 9 SNI	DK 509 UA	SNI 509	DK 509 NA	1209 K	H 209	2 x FR 5,5/85
						2209 K	H 309	2 x FR 3,5/85
						22209 K	H 309	2 x FR 3,5/85
SNI 511 - 609	LDZ 609	TS 609 SNI	DK 511 UA	SNI 609	DK 509 NA	1309 K	H 309	2 x FR 9,5/100
						2309 K	H 2309	2 x FR 4/100
						21309 K	H 309	2 x FR 9,5/100
						22309 K	H 2309	2 x FR 4/100
SNI 510 - 608	LDZ 510	TS 10 SNI	DK 510 UA	SNI 510	DK 510 NA	1210 K	H 210	2 x FR 10,5/90
						2210 K	H 310	2 x FR 9/90
						22210 K	H 310	2 x FR 9/90
SNI 512 - 610	LDZ 610	TS 610 SNI	DK 512 UA	SNI 610	DK 610 NA	1310 K	H 310	2 x FR 10,5/110
						2310 K	H 2310	2 x FR 4/110
						21310 K	H 310	2 x FR 10,5/110
						22310 K	H 2310	2 x FR 4/110

* for other seals see on page 7

Plummer Block (split)

Series SNI 5 and SNI 6

For self aligning ball bearings or spherical roller bearings with adapter sleeve

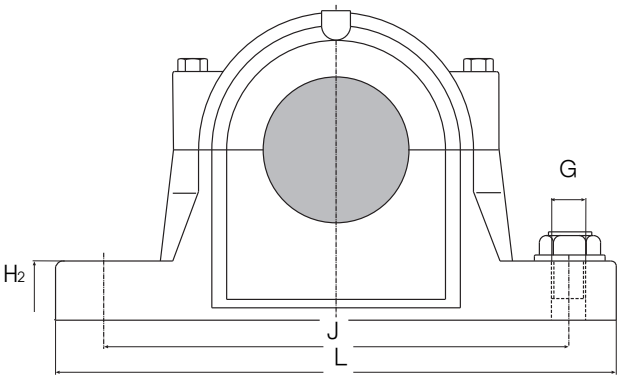

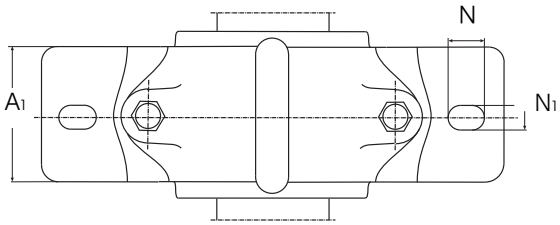

Housing Ref No	Weight kg	d_1	D^{H8}	H	H_1	A	L mm	A_1	A_2	H_2	F	J	N_1	N	G
SNI 511	4,5	50	100	70	127	95	255	70	105	28	44	210	18	24	M 16
SNI 611	6,5	50	120	80	148	110	275	80	120	30	51	230	18	24	M 16
SNI 512	5,0	55	110	70	133	105	255	70	115	30	48	210	18	24	M 16
SNI 612	7,0	55	130	80	154	115	280	80	125	30	56	230	18	24	M 16
SNI 513	6,5	60	120	80	148	110	275	80	120	30	51	230	18	24	M 16
SNI 613	9,8	60	140	95	175	120	315	90	130	32	58	260	22	28	M 20
SNI 515	7,0	65	130	80	154	115	280	80	125	30	56	230	18	24	M 16
SNI 615	12,5	65	160	100	191	140	345	100	150	35	65	290	22	28	M 20

Plummer Block (split)

Series SNI 5 and SNI 6

For self aligning ball bearings or spherical roller bearings with adapter sleeve

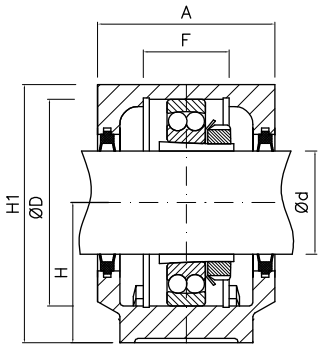

Housing with double lip seal

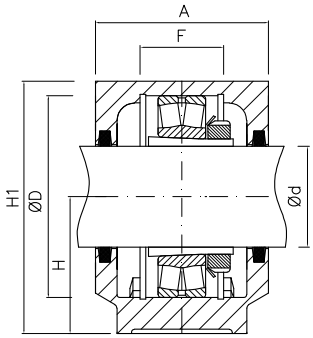

Housing with felt seal

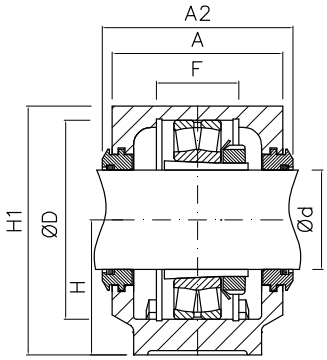

Housing with labyrinth seal

Reference Housing	Lip seal	Labyrinth seal	End cover	Housing with felt seal	End cover	Matching bearing with Adapter sleeve		Fixing ring Qty and ref No
SNI 511-609	LDZ 511	TS 11 SNI	DK 511 UA	SNI 511	DK 511 NA-510 UA	1211 K	H 211	2 x FR 11,5/100
						2211 K	H 311	2 x FR 9,5/100
						22211 K	H 311	2 x FR 9,5/100
SNI 513-611	LDZ 611	TS 611 SNI	DK 513 UA	SNI 611	DK 511 NA-510 UA	1311 K	H 311	2 x FR 11/120
						2311 K	H 2311	2 x FR 4/120
						21311 K	H 311	2 x FR 11/120
						22311 K	H 2311	2 x FR 4/120
SNI 512-610	LDZ 512	TS 12 SNI	DK 512 UA	SNI 512	DK 512 NA-511 UA	1212 K	H 212	2 x FR 13/110
						2212 K	H 312	2 x FR 10/110
						22212 K	H 312	2 x FR 10/110
SNI 515-612	LDZ 612	TS 612 SNI	DK 515 UA	SNI 612	DK 512 NA-511 UA	1312 K	H 312	2 x FR 12,5/130
						2312 K	H 2312	2 x FR 5/130
						21312 K	H 312	2 x FR 12,5/130
						22312 K	H 2312	2 x FR 5/130
SNI 513-611	LDZ 513	TS 13 SNI	DK 513 UA	SNI 513	DK 513 NA-512 UA	1213 K	H 213	2 x FR 14/120
						2213 K	H 313	2 x FR 10/120
						22213 K	H 313	2 x FR 10/120
SNI 516-613	LDZ 613	TS 613 SNI	DK 516 UA	SNI 613	DK 513 NA-512 UA	1313 K	H 313	2 x FR 12,5/140
						2313 K	H 2313	2 x FR 5/140
						21313 K	H 313	2 x FR 12,5/140
						22313 K	H 2313	2 x FR 5/140
SNI 515-612	LDZ 515	TS 15 SNI	DK 515 UA	SNI 515	DK 515 NA-513 UA	1215 K	H 215	2 x FR 15,5/130
						2215 K	H 315	2 x FR 12,5/130
						22215 K	H 315	2 x FR 12,5/130
SNI 518-615	LDZ 615	TS 615 SNI	DK 518 UA	SNI 615	DK 515 NA-513 UA	1315 K	H 315	2 x FR 14/160
						2315 K	H 2315	2 x FR 5/160
						21315 K	H 315	2 x FR 14/160
						22315 K	H 2315	2 x FR 5/160

* for other seals see on page 7

Plummer Block (split)

Series SNI 5 and SNI 6

For self aligning ball bearings or spherical roller bearings with adapter sleeve

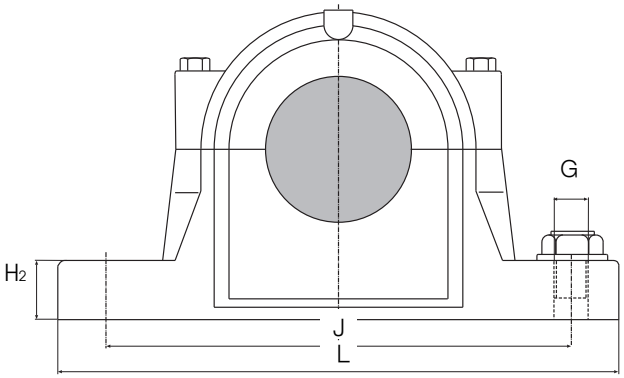

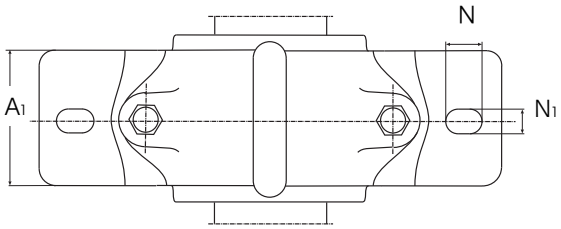

Housing Ref No	Weight kg	d_1	D^{H8}	H	H_1	A	L mm	A_1	A_2	H_2	F	J	N_1	N	G
SNI 516	9,6	70	140	95	175	120	315	90	134	32	58	260	22	28	M 20
SNI 616	14,0	70	170	112	208	145	345	100	159	35	68	290	22	28	M 20
SNI 517	10,0	75	150	95	181	125	320	90	139	32	61	260	22	28	M 20
SNI 617	17,0	75	180	112	214	160	380	110	174	40	70	320	26	32	M 24
SNI 518	12,5	80	160	100	191	140	345	100	155	35	65	290	22	28	M 20
SNI 519	14,0	85	170	112	208	145	345	100	160	35	68	290	22	28	M 20
SNI 619	22,0	85	200	125	237	175	410	120	190	45	80	350	26	32	M 24

Plummer Block (split)

Series SNI 5 and SNI 6

For self aligning ball bearings or spherical roller bearings with adapter sleeve

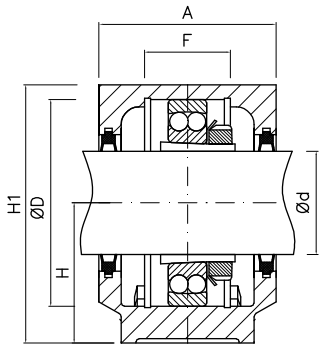

Housing with double lip seal

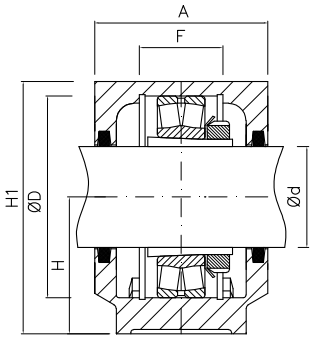

Housing with felt seal

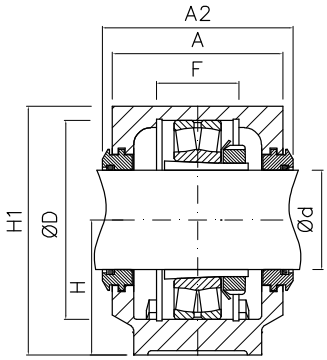

Housing with labyrinth seal

Reference Housing	Lip seal	Labyrinth seal	End cover	Housing with felt seal	End cover	Matching bearing with Adapter sleeve		Fixing ring Qty and ref No
SNI 516-613	LDZ 516	TS 16 SNI	DK 516 UA	SNI 516	DK 516 NA	1216 K	H 216	2 x FR 16/140
						2216 K	H 316	2 x FR 12,5/140
						22216 K	H 316	2 x FR 12,5/140
SNI 519-616	LDZ 616	TS 616 SNI	DK 519 UA	SNI 616	DK 516 NA	1316 K	H 316	2 x FR 14,5/170
						2316 K	H 2316	2 x FR 5/170
						21316 K	H 316	2 x FR 14,5/170
						22316 K	H 2316	2 x FR 5/170
SNI 517	LDZ 517	TS 17 SNI	DK 517 UA	SNI 517	DK 517 NA-515 UA	1217 K	H 217	2 x FR 16,5/150
						2217 K	H 317	2 x FR 12,5/150
						22217 K	H 317	2 x FR 12,5/150
SNI 520-617	LDZ 617	TS 617 SNI	DK 520 UA	SNI 617	DK 517 NA-515 UA	1317 K	H 317	2 x FR 14,5/180
						2317 K	H 2317	2 x FR 5/180
						21317 K	H 317	2 x FR 14,5/180
						22317 K	H 2317	2 x FR 5/180
SNI 518-615	LDZ 518	TS 18 SNI	DK 518 UA	SNI 518	DK 518 NA-516 UA	1218 K	H 218	2 x FR 17,5/160
						2218 K	H 318	2 x FR 12,5/160
						22218 K	H 318	2 x FR 12,5/160
						23218 K	H 2318	2 x FR 6,25/160
SNI 519-616	LDZ 519	TS 19 SNI	DK 519 UA	SNI 519	DK 519 NA-517 UA	1219 K	H 219	2 x FR 18/170
						2219 K	H 319	2 x FR 12,5/170
						22219 K	H 319	2 x FR 12,5/170
SNI 522-619	LDZ 619	TS 619 SNI	DK 522 UA	SNI 619	DK 519 NA-517 UA	1319 K	H 319	2 x FR 17,5/200
						2319 K	H 2319	2 x FR 6,5/200
						21319 K	H 319	2 x FR 17,5/200
						22319 K	H 2319	2 x FR 6,5/200

* for other seals see on page 7

Plummer Block (split)

Series SNI 5 and SNI 6

For self aligning ball bearings or spherical roller bearings with adapter sleeve

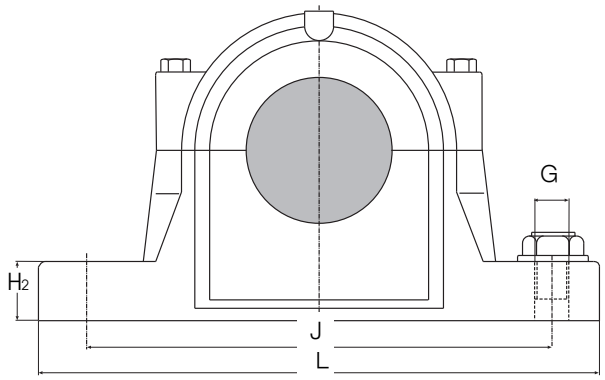

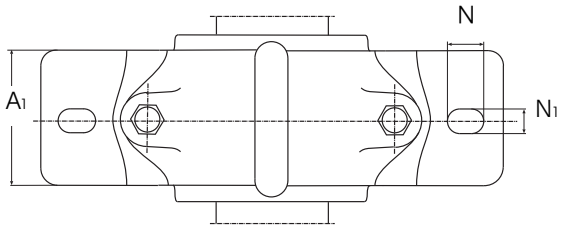

Housing Ref No	Weight kg	d_1	D^{H8}	H	H_1	A	L mm	A_1	A_2	H_2	F	J	N_1	N	G
SNI 520	17,0	90	180	112	214	160	380	110	175	40	70	320	26	32	M 24
SNI 620	26,0	90	215	140	271	185	410	120	200	45	86	350	26	32	M 24
SNI 522	22,0	100	200	125	237	175	410	120	190	45	80	350	26	32	M 24
SNI 524	26,0	110	215	140	271	185	410	120	199	45	86	350	26	32	M 24
SNI 526	32,0	115	230	150	290	190	445	130	205	50	90	380	28	35	M 24
SNI 528	42,0	125	250	150	302	205	500	150	220	50	98	420	35	42	M 30
SNI 530	50,0	135	270	160	323	220	530	160	235	60	106	450	35	42	M 30
SNI 532	56,0	140	290	170	344	235	550	160	250	60	114	470	35	42	M 30

Plummer Block (split)

Series SNI 5 and SNI 6

For self aligning ball bearings or spherical roller bearings with adapter sleeve

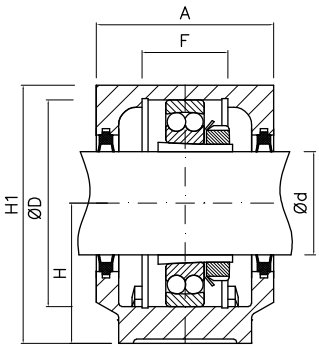

Housing with double lip seal

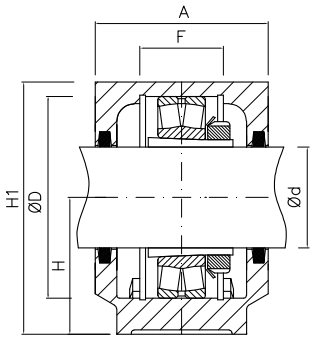

Housing with felt seal

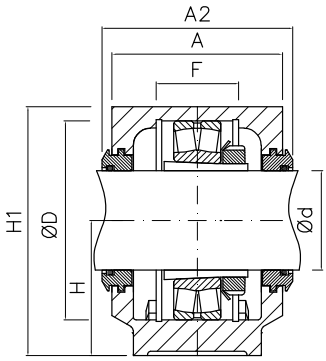

Housing with labyrinth seal

Reference Housing	Lip seal	Labyrinth seal	End cover	Housing with felt seal	End cover	Matching bearing with Adapter sleeve		Fixing ring Qty and ref No
SNI 520-617	LDZ 520	TS 20 SNI	DK 520 UA	SNI 520	DK 520 NA-518 UA	1220 K	H 220	2 x FR 18/180
						2220 K	H 320	2 x FR 12/180
						22220 K	H 320	2 x FR 12/180
						23220 K	H 2320	2 x FR 4,85/180
SNI 524-620	LDZ 620	TS 620 SNI	DK 524 UA	SNI 620	DK 520 NA-518UA	1320 K	H 320	2 x FR 19,5/215
						2320 K	H 2320	2 x FR 6,5/215
						21320 K	H 320	2 x FR 19,5/215
						22320 K	H 2320	2 x FR 6,5/215
SNI 522-619	LDZ 522	TS 22 SNI	DK 522 UA	SNI 522	DK 522 NA	1222 K	H 222	2 x FR 21/200
						2222 K	H 322	2 x FR 13,5/200
						22222 K	H 322	2 x FR 13,5/200
						23222 K	H 2322	2 x FR 5,1/200
SNI 524-620	LDZ 524	TS 24 SNI	DK 524 UA	SNI 524	DK 524 NA	22224 K	H 3124	2 x FR 14/215
						23224 K	H 2324	2 x FR 5/215
SNI 526	LDZ 526	TS 26 SNI	DK 526 UA	SNI 526	DK 526 NA-519 UA	22226 K	H 3126	2 x FR 13/230
						23226 K	H 2326	2 x FR 5/230
SNI 528	LDZ 528	TS 28 SNI	DK 528 UA	SNI 528	DK 528 NA-522 UA	22228 K	H 3128	2 x FR 15/250
						23228 K	H 2328	2 x FR 5/250
SNI 530	LDZ 530	TS 30 SNI	DK 530 UA	SNI 530	DK 530 NA-524 UA	22230 K	H 3130	2 x FR 16,5/270
						23230 K	H 2330	2 x FR 5/270
SNI 532	LDZ 532	TS 32 SNI	DK 532 UA	SNI 532	DK 532 NA-526 UA	22232 K	H 3132	2 x FR 17/290
						23232 K	H 2332	2 x FR 5/290

* for other seals see on page 7

Plummer Block (split)

Series SNI 2 and SNI 3

For self-aligning ball bearings or spherical roller bearings with cylindrical bore

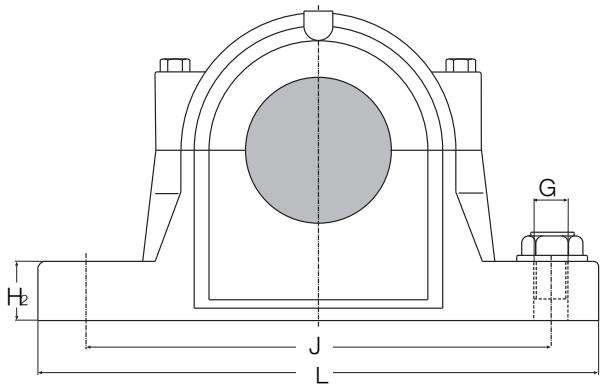

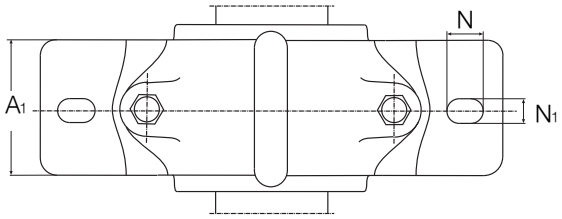

Housing Ref No	Weight kg	d_1	d_2	D^{H8}	H	H_1	A mm	L	A_1	A_2	H_2	F	J	N_1	N	G
SNI 208	2,8	40	50	80	60	105	86	205	60	94	25	39	170	15	20	M 12
SNI 308	3,1	40	50	90	60	110	96	205	60	104	25	41	170	15	20	M 12
SNI 209	2,9	45	55	85	60	110	86	205	60	96	25	30	170	15	20	M 12
SNI 309	4,5	45	55	100	70	128	108	255	70	118	28	44	210	18	24	M 16
SNI 210	3,1	50	60	90	60	113	92	205	60	102	25	41	170	15	20	M 12
SNI 310	5,0	50	60	110	70	132	118	255	70	128	30	48	210	18	24	M 16

Plummer Block (split)

Series SNI 2 and SNI 3

For self-aligning ball bearings or spherical roller bearings with cylindrical bore

(distance sleeves are not included in delivery)

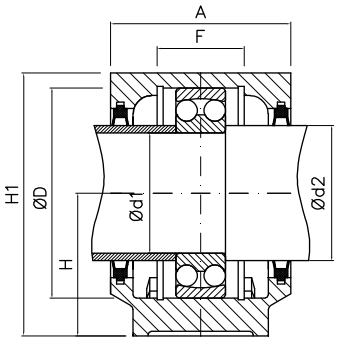

Housing with double lip seal

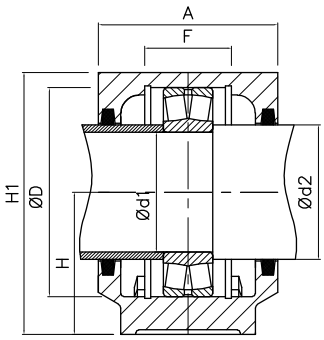

Housing with felt seal

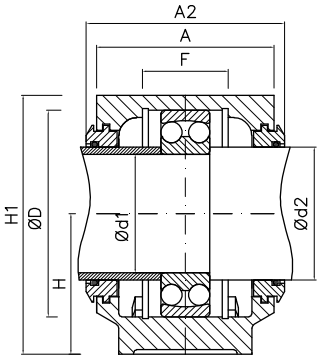

Housing with labyrinth seal

Reference Housing	Lip seal	Labyrinth seal	End cover	Housing with felt seal	End cover	Matching bearing	Fixing ring Qty and ref No
SNI 208	LDZ 208	TS 208 SNI	DK 510 UA	SNI 208	DK 511 NA-510 UA	1208	2 x FR 10,5/80
						2208	2 x FR 8/80
						22208	2 x FR 8/80
SNI 510-608	LDZ 308	TS 308 SNI	DK 510 UA	SNI 308	DK 511 NA-510 UA	1308	2 x FR 9/90
						2308	2 x FR 4/90
						21308	2 x FR 9/90
						22308	2 x FR 4/90
SNI 209	LDZ 209	TS 209 SNI	DK 511 UA	SNI 209	DK 512 NA-511 UA	1209	2 x FR 5,5/85
						2209	2 x FR 3,5/85
						22209	2 x FR 3,5/85
SNI 511-609	LDZ 309	TS 309 SNI	DK 511 UA	SNI 309	DK 512 NA-511 UA	1309	2 x FR 9,5/100
						2309	2 x FR 4/100
						21309	2 x FR 9,5/100
						22309	2 x FR 4/100
SNI 210	LDZ 210	TS 210 SNI	DK 512 UA	SNI 210	DK 513 NA-512 UA	1210	2 x FR 10,5/90
						2210	2 x FR 9/90
						22210	2 x FR 9/90
SNI 512-610	LDZ 310	TS 310 SNI	DK 512 UA	SNI 310	DK 513 NA-512 UA	1310	2 x FR 10,5/110
						2310	2 x FR 4/110
						21310	2 x FR 10,5/110
						22310	2 x FR 4/110

* for other seals see on page 7

Plummer Block (split)

Series SNI 2 and SNI 3

For self-aligning ball bearings or spherical roller bearings with cylindrical bore

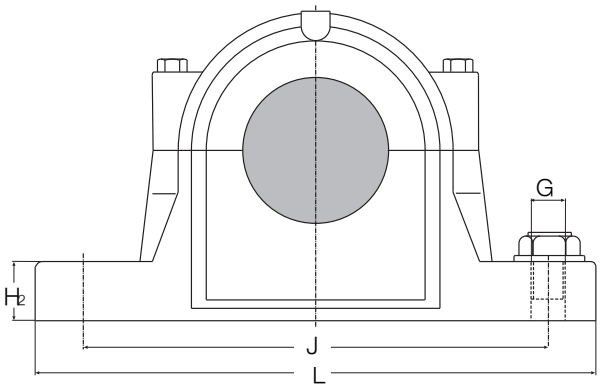

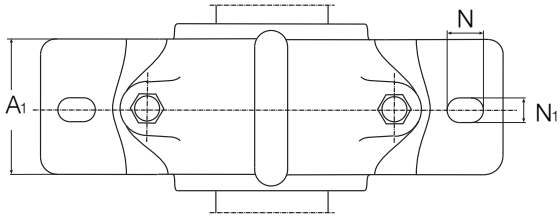

Housing Ref No	Weight kg	d_1	d_2	D^{H8}	H	H_1	A mm	L	A_1	A_2	H_2	F	J	N_1	N	G
SNI 211	4,5	55	65	100	70	127	95	255	70	105	28	44	210	18	24	M 16
SNI 311	6,5	55	65	120	80	148	110	275	80	120	30	51	230	18	24	M 16
SNI 212	5,0	60	70	110	70	133	105	255	70	115	30	48	210	18	24	M 16
SNI 312	7,0	60	70	130	80	154	115	280	80	125	30	56	230	18	24	M 16
SNI 213	6,5	65	75	120	80	148	110	275	80	120	30	51	230	18	20	M 16
SNI 313	9,8	65	75	140	95	175	120	315	90	130	32	58	260	22	28	M 20
SNI 215	7,0	75	85	130	80	154	115	280	80	125	30	56	230	18	24	M 16
SNI 315	12,5	75	85	160	100	191	140	345	100	150	35	65	290	22	28	M 20

Plummer Block (split)

Series SNI 2 and SNI 3

For self-aligning ball bearings or spherical roller bearings with cylindrical bore

(distance sleeves are not included in delivery)

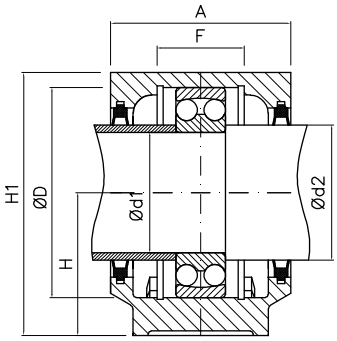

Housing with double lip seal

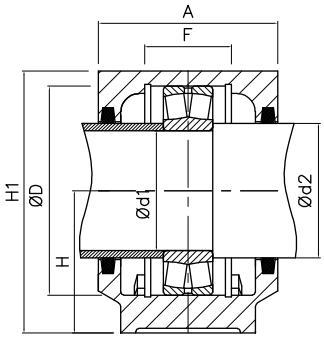

Housing with felt seal

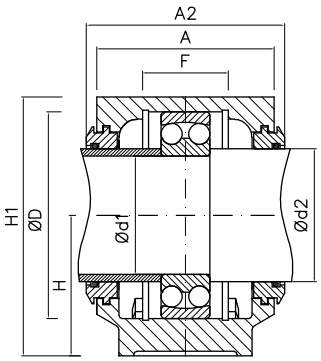

Housing with labyrinth seal

Reference Housing	Lip seal	Labyrinth seal	End cover	Housing with felt seal	End cover	Matching bearing	Fixing ring Qty and ref No
SNI 211	LDZ 211	TS 211 SNI	DK 513 UA	SNI 211	DK 515 NA-513 UA	1211	2 x FR 11,5/100
						2211	2 x FR 9,5/100
						22211	2 x FR 9,5/100
SNI 513-611	LDZ 311	TS 311 SNI	DK 513 UA	SNI 311	DK 515 NA-513 UA	1311	2 x FR 11/120
						2311	2 x FR 4/120
						21311	2 x FR 11/120
						22311	2 x FR 4/120
SNI 212	LDZ 212	TS 212 SNI	DK 515 UA	SNI 212	DK 516 NA	1212	2 x FR 13/110
						2212	2 x FR 10/110
						22212	2 x FR 10/110
SNI 515-612	LDZ 312	TS 312 SNI	DK 515 UA	SNI 312	DK 516 NA	1312	2 x FR 12,5/130
						2312	2 x FR 5/130
						21312	2 x FR 12,5/130
						22312	2 x FR 5/130
SNI 213	LDZ 213	TS 213 SNI	DK 516 UA	SNI 213	DK 517 NA-515 UA	1213	2 x FR 14/120
						2213	2 x FR 10/120
						22213	2 x FR 10/120
SNI 516-613	LDZ 313	TS 313 SNI	DK 516 UA	SNI 313	DK 517 NA-515 UA	1313	2 x FR 12,5/140
						2313	2 x FR 5/140
						21313	2 x FR 12,5/140
						22313	2 x FR 5/140
SNI 215	LDZ 215	TS 215 SNI	DK 518 UA	SNI 215	DK 519 NA-517 UA	1215	2 x FR 15,5/130
						2215	2 x FR 12,5/130
						22215	2 x FR 12,5/130
SNI 518-615	LDZ 315	TS 315 SNI	DK 518 UA	SNI 315	DK 519 NA-517 UA	1315	2 x FR 14/160
						2315	2 x FR 5/160
						21315	2 x FR 14/160
						22315	2 x FR 5/160

* for other seals see on page 7

Plummer Block (split)

Series SNI 2 and SNI 3

For self-aligning ball bearings or spherical roller bearings with cylindrical bore

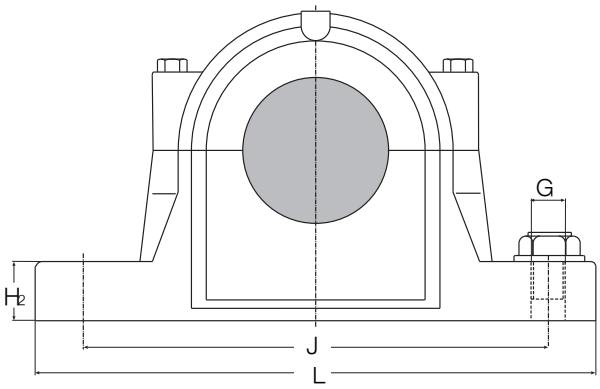

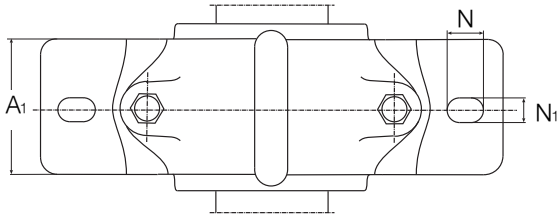

Housing Ref No	Weight kg	d_1	d_2	D^{H8}	H	H_1	A mm	L	A_1	A_2	H_2	F	J	N_1	N	G
SNI 216	9,6	80	90	140	95	175	120	315	90	134	32	58	260	22	28	M 16
SNI 316	14,0	80	90	170	112	208	145	345	100	159	35	68	290	22	28	M 16
SNI 217	10,0	85	95	150	95	181	125	320	90	139	32	61	260	22	28	M 16
SNI 317	17,0	85	95	180	112	214	160	380	110	174	40	70	320	26	32	M 16
SNI 218	12,5	90	100	160	100	191	140	345	100	155	35	65	290	22	28	M 16
SNI 219	14,0	95	110	170	112	208	145	345	100	160	35	68	290	22	28	M 16
SNI 319	22,0	95	110	200	125	237	175	410	120	190	45	80	350	26	32	M 20

Plummer Block (split)

Series SNI 2 and SNI 3

For self-aligning ball bearings or spherical roller bearings with cylindrical bore

(distance sleeves are not included in delivery)

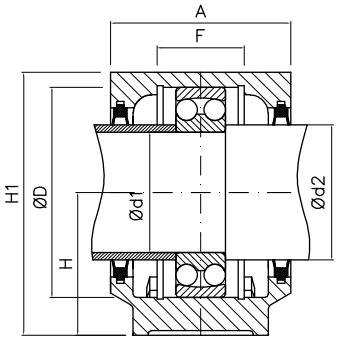

Housing with double lip seal

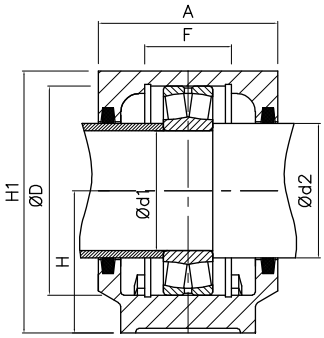

Housing with felt seal

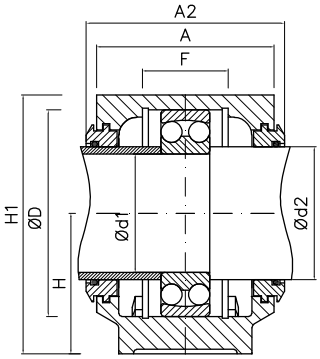

Housing with labyrinth seal

Reference Housing	Lip seal	Labyrinth seal	End cover	Housing with felt seal	End cover	Matching bearing	Fixing ring Qty and ref No
SNI 216	LDZ 216	TS 216 SNI	DK 216 UA	SNI 216	DK 520 NA-518 UA	1216	2 x FR 16/140
						2216	2 x FR 12,5/140
						22216	2 x FR 12,5/140
SNI 519-616	LDZ 316	TS 316 SNI	DK 519 UA	SNI 316	DK 520 NA-518 UA	1316	2 x FR 14,5/170
						2316	2 x FR 5/170
						21316	2 x FR 14,5/170
						22316	2 x FR 5/170
SNI 217	LDZ 217	TS 217 SNI	DK 217 UA	SNI 217		1217	2 x FR 16,5/150
						2217	2 x FR 12,5/150
						22217	2 x FR 12,5/150
SNI 520-617	LDZ 317	TS 317 SNI	DK 520 UA	SNI 317		1317	2 x FR 14,5/180
						2317	2 x FR 5/180
						21317	2 x FR 14,5/180
						22317	2 x FR 5/180
SNI 218	LDZ 218	TS 218 SNI	DK 218 UA	SNI 218	DK 522 NA	1218	2 x FR 17,5/160
						2218	2 x FR 12,5/160
						22218	2 x FR 12,5/160
						23218	2 x FR 6,25/160
SNI 519-616	LDZ 219	TS 219 SNI	DK 519 UA	SNI 219	DK 524 NA	1219	2 x FR 18/170
						2219	2 x FR 12,5/170
						22219	2 x FR 12,5/170
SNI 522-619	LDZ 319	TS 319 SNI	DK 522 UA	SNI 319	DK 524 NA	1319	2 x FR 17,5/200
						2319	2 x FR 6,5/200
						21319	2 x FR 17,5/200
						22319	2 x FR 6,5/200

* for other seals see on page 7

Plummer Block (split)

Series SNI 2 and SNI 3

For self-aligning ball bearings or spherical roller bearings with cylindrical bore

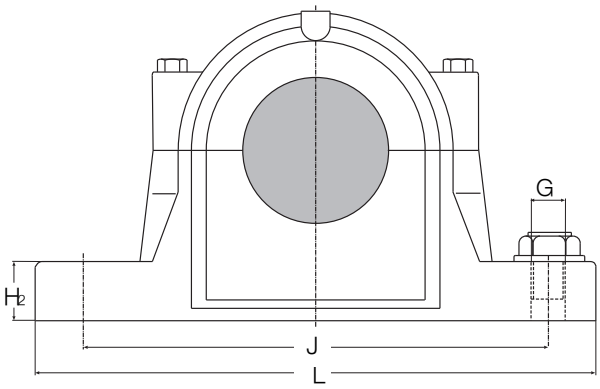

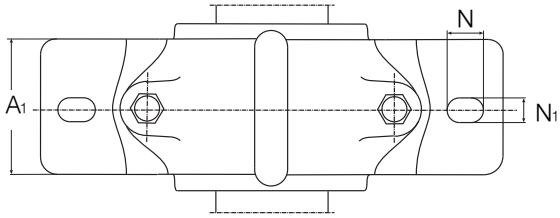

Housing Ref No	Weight kg	d_1	d_2	D^{H8}	H	H_1	A mm	L	A_1	A_2	H_2	F	J	N_1	N	G
SNI 220	17,0	100	115	180	112	214	160	380	110	175	40	70	320	26	32	M 24
SNI 320	26,0	100	115	215	140	271	185	410	120	200	45	86	350	26	32	M 24
SNI 222	22,0	110	125	200	125	237	175	410	120	190	45	80	350	26	32	M 24
SNI 224	26,0	120	135	215	140	271	185	410	120	199	45	86	350	26	32	M 24
SNI 226	32,0	130	145	230	150	290	190	445	130	205	50	90	380	28	35	M 24
SNI 228	42,0	140	155	250	150	302	205	500	150	220	50	98	420	35	42	M 30
SNI 230	50,0	150	165	270	160	323	220	530	160	235	60	106	450	35	42	M 30
SNI 232	56,0	160	175	290	170	344	235	550	160	250	60	114	470	35	42	M 30

Plummer Block (split)

Series SNI 2 and SNI 3

For self-aligning ball bearings or spherical roller bearings with cylindrical bore

(distance sleeves are not included in delivery)

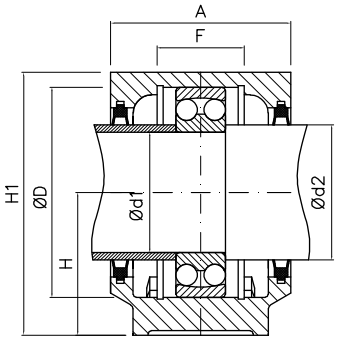

Housing with double lip seal

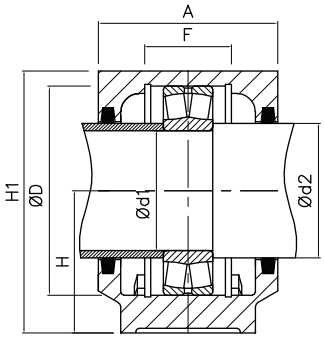

Housing with felt seal

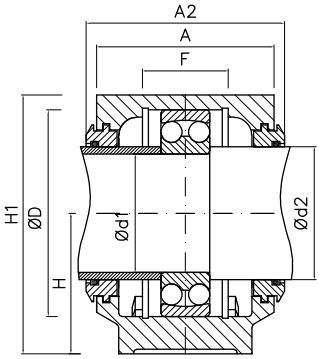

Housing with labyrinth seal

Reference Housing	Lip seal	Labyrinth seal	End cover	Housing with felt seal	End cover	Matching bearing	Fixing ring Qty and ref No
SNI 520-617	LDZ 220	TS 220 SNI	DK 520 UA	SNI 220	DK 526 NA-519 UA	1220	2 x FR 18/180
						2220	2 x FR 12/180
						22220	2 x FR 12/180
						23220	2 x FR 4,85/180
SNI 524-620	LDZ 320	TS 320 SNI	DK 524 UA	SNI 320	DK 526 NA-519 UA	1320	2 x FR 19,5/215
						2320	2 x FR 6,5/215
						21320	2 x FR 19,5/215
						22320	2 x FR 6,5/215
SNI 522-619	LDZ 222	TS 222 SNI	DK 522 UA	SNI 222	DK 528 NA-522 UA	1222	2 x FR 21/200
						2222	2 x FR 13,5/200
						22222	2 x FR 13,5/200
						23222	2 x FR 5,1/200
SNI 524-620	LDZ 224	TS 224 SNI	DK 524 UA	SNI 224	DK 530 NA-524 UA	22224	2 x FR 14/215
						23224	2 x FR 5/215
SNI 226	LDZ 226	TS 226 SNI	DK 526 UA	SNI 226		22226	2 x FR 13/230
						23226	2 x FR 5/230
SNI 528	LDZ 228	TS 228 SNI	DK 528 UA	SNI 228		22228	2 x FR 15/250
						23228	2 x FR 5/250
SNI 530	LDZ 230	TS 230 SNI	DK 530 UA	SNI 230		22230	2 x FR 16,5/270
						23230	2 x FR 5/270
SNI 532	LDZ 232	TS 232 SNI	DK 532 UA	SNI 232		22232	2 x FR 17/290
						23232	2 x FR 5/290

* for other seals see on page 7

Plummer Blocks (split)

Series SSNI 5 and SSNI 6 with reinforced base

For self-aligning ball bearings or spherical roller bearings with adapter sleeve

Main dimension are the same as SNI housings

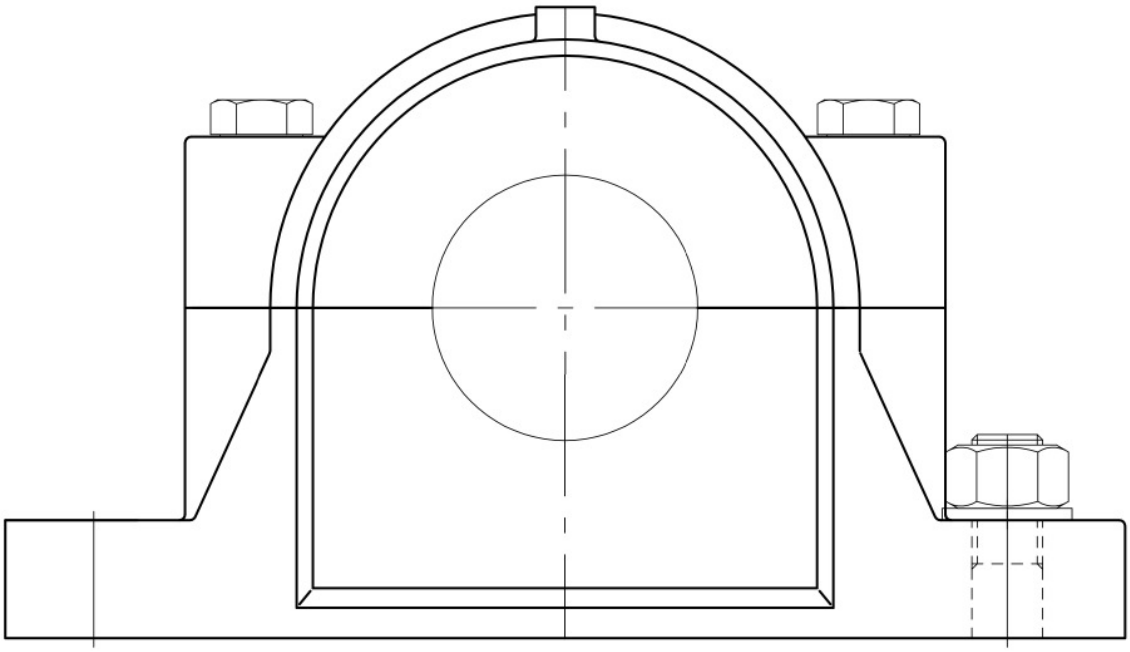

Standard delivery is without mounting bolt holes. On request we deliver with 2 or 4 bolt holes according to the dimensions table.
Material GGG 40 + GS 45

Housing	2 Bolt holes		4 Bolt holes			4 Slotted holes			
Ref. No.	N	J	N_1	J_1	e_1	N_2	N_3	J_2	e_2
SSNI 508-607									
SSNI 509	15	170	11	160	34				
SSNI 510-608	15	70	11	160	34				
SSNI 511-609	18	210	14	200	40	15	20	210	35
SSNI 512-610	18	210	14	200	40	15	20	210	35
SSNI 513-611	18	230	14	220	48	15	20	230	40
SSNI 515-612	18	230	14	220	48	15	20	230	40
SSNI 516-613	20	260	18	252	52	18	24	260	50
SSNI 517	20	260	18	252	52	18	24	260	50

Plummer Blocks (split)

Series SSNI 5 and SSNI 6 with reinforced base

For self-aligning ball bearings or spherical roller bearings with adapter sleeve

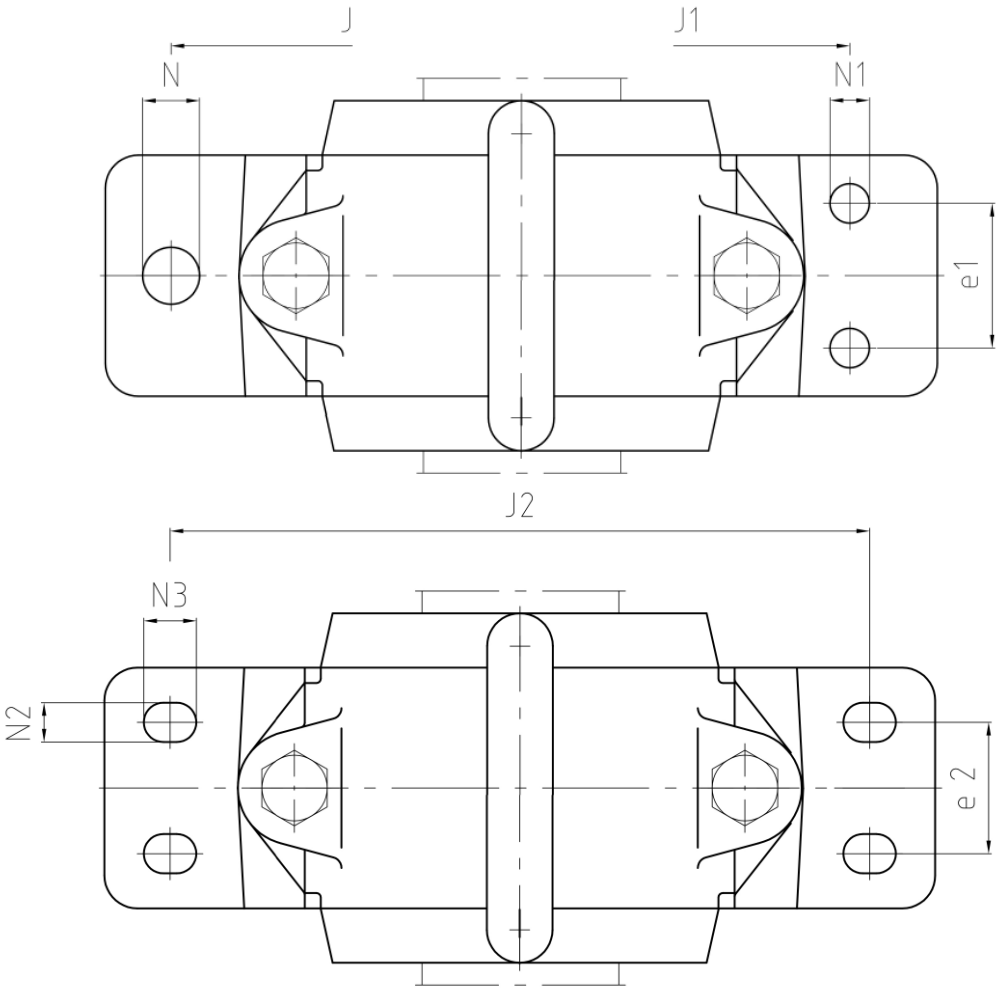

Reference Housing	2 Bolt holes N	J	4 Bolt holes N_1	J_1	e_1	4 Sloted holes N_2	N_3	J_2	e_2
SSNI 518-615	22	290	18	280	58	18	24	290	50
SSNI 519-616			18	280	58	18	24	290	50
SSNI 520-617	26	320	18	300	66	18	24	320	60
SSNI 522-619	26	350	18	320	74	18	24	350	70
SSNI 524-620	26	350	18	330	74	18	24	350	70
SSNI 526	28	380	22	370	80	22	28	380	70
SSNI 528	35	420	26	400	92	26	32	420	80
SSNI 530	35	450	26	430	100	26	32	450	90
SSNI 532	35	470	26	450	100	26	32	470	90

* for other seals see on page 7

Plummer Blocks (split)

Series FSNI 5 and FSNI 6

For self-aligning ball bearings or spherical roller bearings with adapter sleeve

Housing with four slotted holes

Main dimension are the same as SNI housings

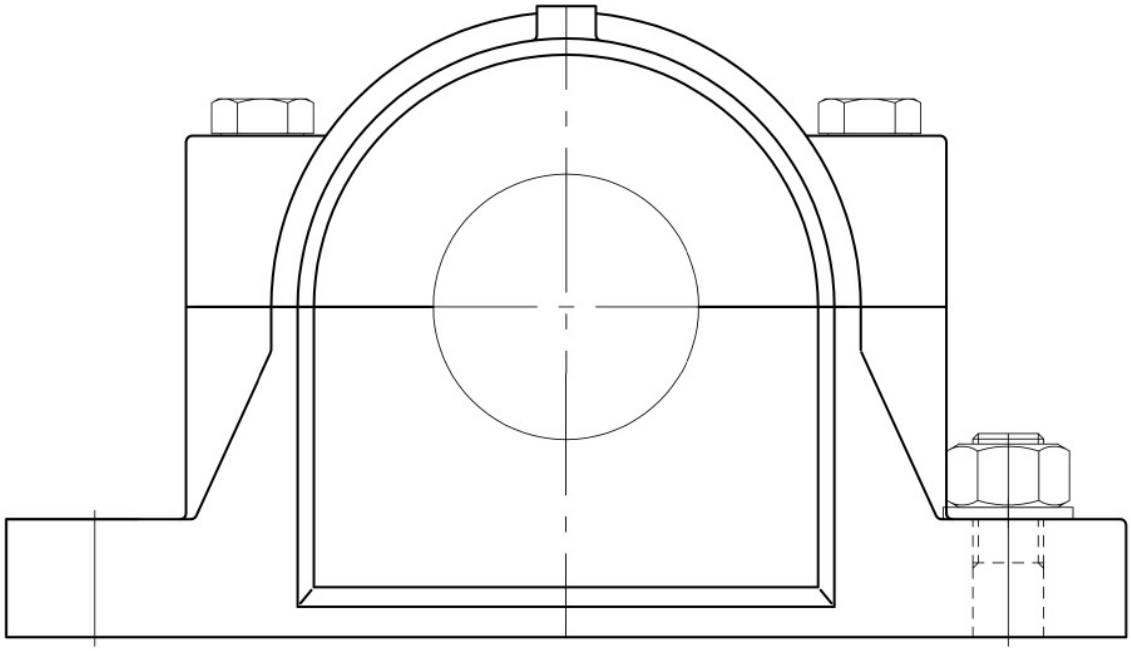

Material on request GG or GGG 40

Housing Ref. No	N	N_1	J	e
FSNI 511-609	20	15	210	35
FSNI 512-610	20	15	210	35
FSNI 513-611	20	15	230	40
FSNI 515-612	20	15	230	40
FSNI 516-613	24	18	260	50
FSNI 517	24	18	260	50
FSNI 518-615	24	18	290	50
FSNI 519-616	24	18	290	50

Plummer Blocks (split)

Series FSNI 5 and FSNI 6

For self-aligning ball bearings or spherical roller bearings with adapter sleeve

Housing with four slotted holes

Main dimension are the same as SNI housings

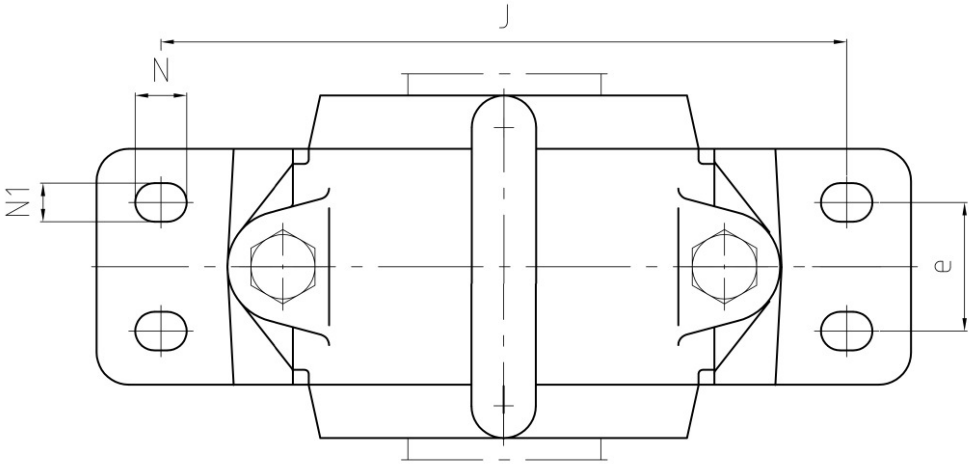

Material on request GG or GGG 40

Housing Ref. No	N	N_1	J	e
FSNI 520-617	24	18	320	60
FSNI 522-619	24	18	350	70
FSNI 524-620	24	18	350	70
FSNI 526	28	22	380	70
FSNI 528	32	26	420	80
FSNI 530	32	26	450	90
FSNI 532	32	26	470	90

* for other seals see on page 7

Plummer Blocks (split) DIN 736 + 737

Series SN 5, SN 6, SN 2 und SN 3
Series SSN 5, SSN 6, SSN 2 und SSN 3
available on request

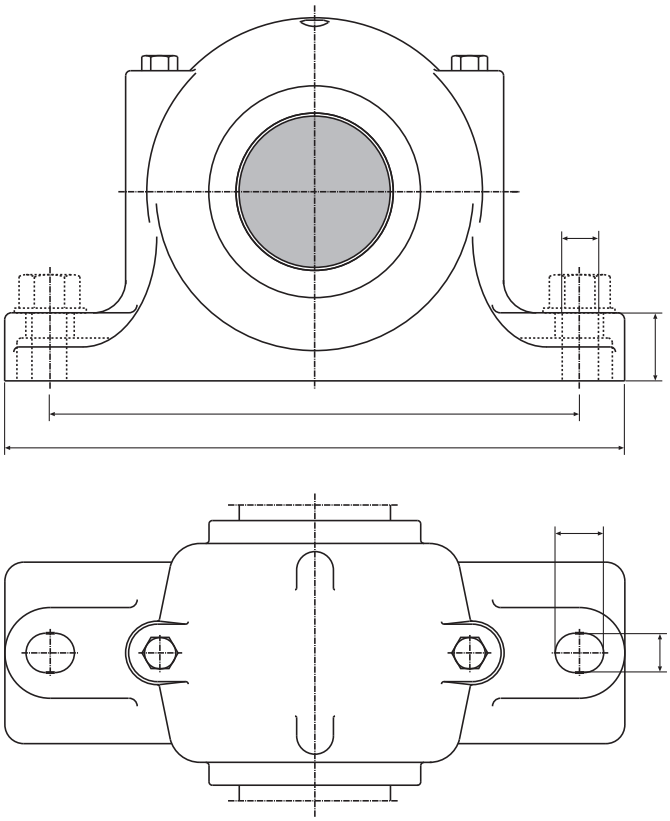

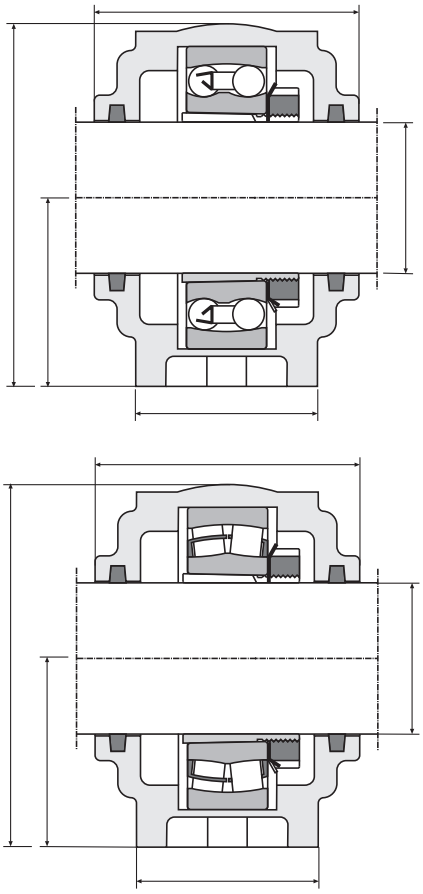

Plummer Blocks (split) DIN 736 + 737

Reihe SN 5, SN 6, SN 2 und SN 3
Reihe SSN 5, SSN 6, SSN 2 und SSN 3
available on request

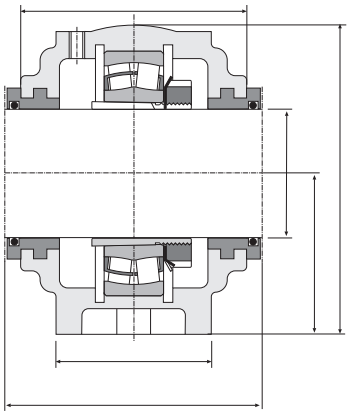

SN...TS

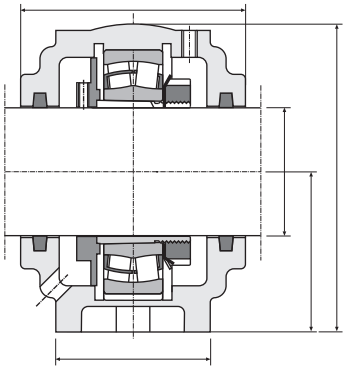

SN...R

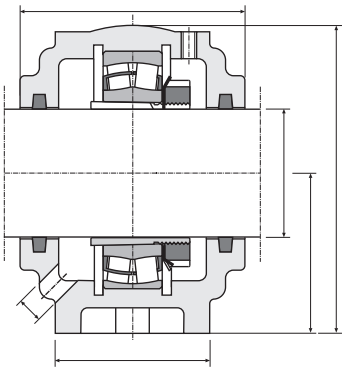

SN...VS

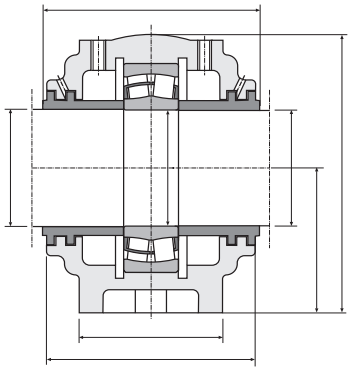

SN...DSS

* for other seals see on page 7

SD Plummer Block Housings

SD Series 31.. + 30.. housings are split plummer blocks for spherical roller bearings with adapter sleeves. They are fitted with labyrinth seals. Housings for shaft ends are supplied with an end cover in grey cast iron.

Material

SD Plummer Block Housings are manufactured as standard, from Grey Cast Iron GG25. Housings from Spheroidal Cast Iron GGG40 or Cast Steel GS45 are available for bearing applications requiring higher loading.

Loading

SD Plummer Block Housings are designed for loads applied vertically to the bridging surface. In these instances the permissible load is determined by the load rating of fitted bearing. Should loads be applied at other angles, checks should be carried out to determine whether the housing connecting bolts and the mounting bolts are still suitable.

Loading of the housings

If these housings are used at various directions the guide values for breaking loads will change. A factor of about 1.8 x is applied to housings SD from material GGG 40 and GS 45.

Loading of the connecting bolts

Bolts to strength class 8.8 are supplied as standard for joining the housing upper and lower parts. Maximum values for radial loadings applied at various loading directions can be obtained from the adjacent table.

Torque

The fixing and connecting bolts must be tightened in accordance with guidelines. Values for relative torques can be obtained from the adjacent table.

Seals

To allow fitting of the labyrinth seal on the shaft, Perbunan cord is laid between the shaft and labyrinth seal.

This also functions as a seal and allows minor axial movement of the labyrinth seal during heat expansion of the shaft. If the shaft terminates in the housing, an end cover in grey cast iron is supplied instead of the labyrinth seal.

Housing series SD 5… are supplied as standard, with double felt seals (on request also with labyrinth seals).

For grease lubrication, SD housings have two grease fittings on the top of the housing. One in center position of the bearing outer ring and one on side. The holes are plugged, two grease nipples R1/4'' are inclluded to the delivery.

Breaking loads for SD 31.. - Plummer Block Housings

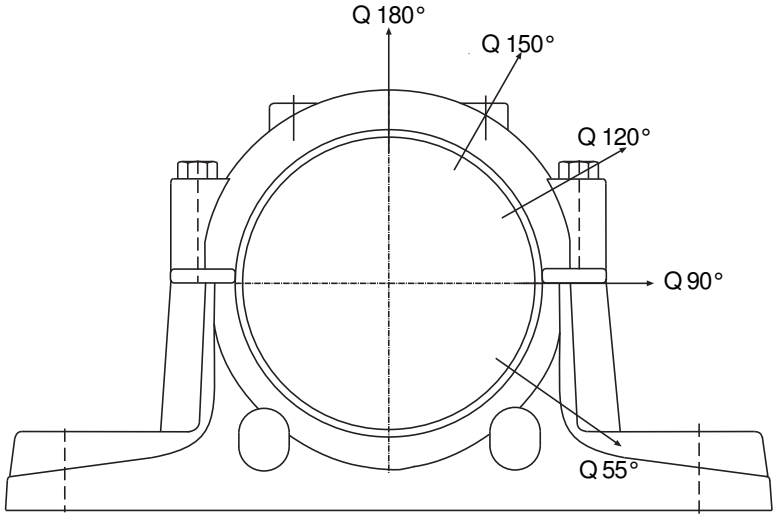

Housing Ref No	Breaking loads kN					Connecting bolts Torque		Maximum load kN		
	Q 180°	Q 150°	Q120°	Q 90°	Q55°	DIN 931 8.8	Nm	Q 180°	Q 150°	Q 120°
SD 3134 TS	850	680	760	1000	2100	M24 x 140	350	380	440	760
SD 3136 TS	950	760	850	1150	2400	M24 x 140	350	380	440	760
SD 3138 TS	1100	880	1000	1300	2700	M24 x 150	350	380	440	760
SD 3140 TS	1300	1000	1100	1600	3200	M24 x 150	350	380	440	760
SD 3144 TS	1600	1300	1400	1900	4000	M24 x 150	350	380	440	760
SD 3148 TS	1700	1400	1500	2000	4200	M30 x 180	400	620	720	1260
SD 3152 TS	1900	1500	1700	2300	4700	M30 x 180	400	620	720	1260
SD 3156 TS	2000	1600	1800	2400	5000	M30 x 200	400	620	720	1260
SD 3160 TS	2400	1900	2200	2900	6000	M30 x 200	400	620	720	1260
SD 3164 TS	2800	2200	2500	3400	7000	M30 x 200	400	620	720	1260

* for other seals see on page 7

Plummer Block Housings (split)

Series SD 31..TS

For spherical roller bearings with adapter sleeve

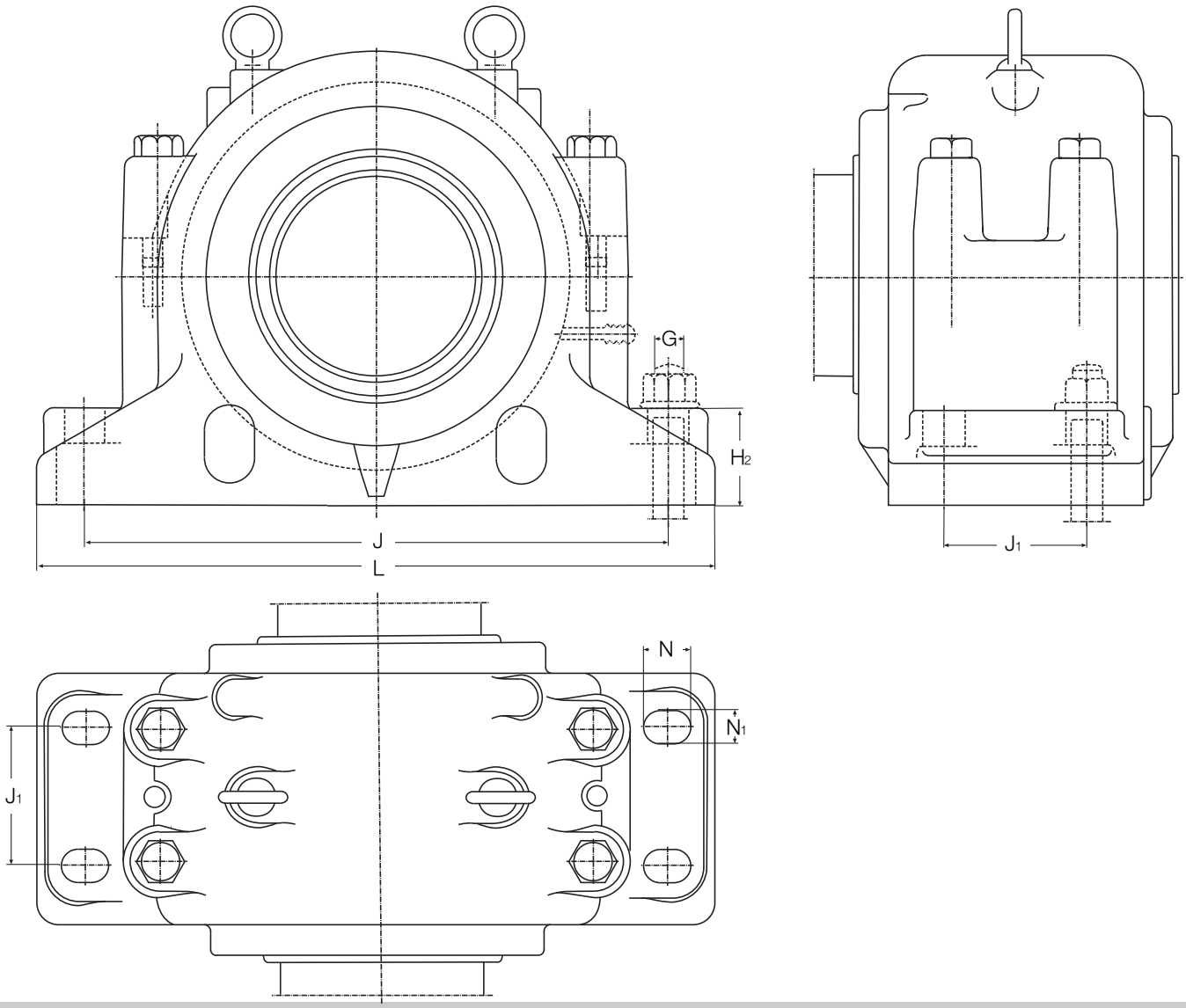

Housing Ref No	Weight kg	d	A	A_1	A_2	H_1	H	H_2	J	J_1	L	G	N_1	N	X	S
								mm								
SD 3134 TS	65,0	150	230	180	240	335	170	70	430	100	510	24	28	34	78	14
SD 3136 TS	75,0	160	240	190	250	355	180	75	450	110	530	24	28	34	83	15
SD 3138 TS	95,0	170	260	210	270	375	190	80	480	120	560	24	28	34	88	10
SD 3140 TS	120,0	180	280	230	290	410	210	85	510	130	610	30	35	42	93	10
SD 3144 TS	135,0	200	290	240	300	435	220	90	540	140	640	30	35	42	100	12
SD 3148 TS	180,0	220	310	260	320	475	240	95	600	150	700	30	35	42	106	12
SD 3152 TS	215,0	240	320	280	330	515	260	100	650	160	770	36	42	50	116	13
SD 3156 TS	250,0	260	320	280	330	550	280	105	670	160	790	36	42	50	119	16
SD 3160 TS	300,0	280	350	310	360	590	300	110	710	190	830	36	42	50	125	22
SD 3164 TS	330,0	300	370	330	380	630	320	115	750	200	880	36	42	50	135	23
SD 3168 TS	380,0	320	400	360	410	675	340	120	810	220	950	40	42	52	135	23
SD 3172 TS	420,0	340	400	360	410	695	350	120	840	220	1000	40	42	52	165	30
SD 3176 TS	490,0	360	400	360	410	715	360	120	870	220	1040	40	42	52	175	30
SD 3180 TS	570,0	380	430	390	440	775	380	125	950	240	1120	46	48	60	190	30
SD 3184 TS	610,0	400	460	420	470	810	410	130	1000	260	1170	46	48	60	210	35

Plummer Block Housings (split)

Series SD 31..TS

For spherical roller bearings with adapter sleeve

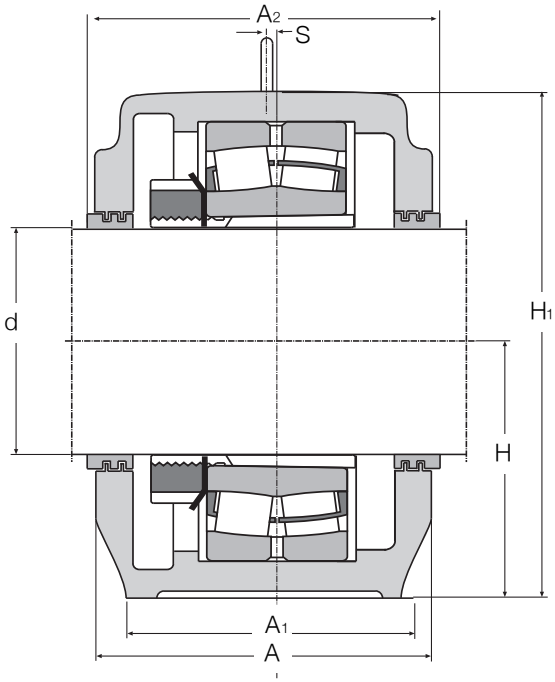

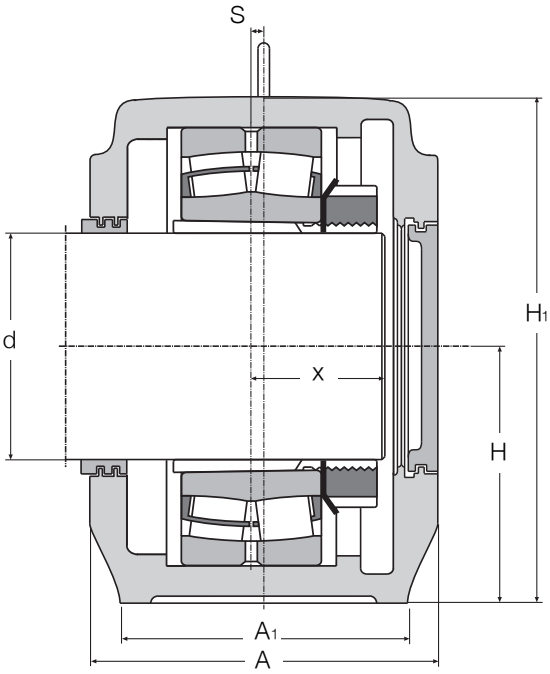

** on request

Housing Ref No	Labyrinth seal	Bearing with adapter sleeve	Matching fixing rings	Qty	Cord Ø x Length	Grease Quantity First fill kg
SD 3134	TS 34	23134 K H 3134	FR 10/280	2	4 x 530	1,8
SD 3136	TS 36	23136 K H 3136	FR 10/300	2	4 x 560	2,2
SD 3138	TS 38	23138 K H 3138	FR 10/320	2	4 x 590	2,9
SD 3140	TS 40	23140 K H 3140	FR 10/340	2	4 x 620	3,8
SD 3144	TS 44	23144 K H 3144	FR 10/370	2	4 x 680	4,4
SD 3148	TS 48	23148 K H 3148	FR 10/400	2	4 x 750	5,5
SD 3152	TS 52	23152 K H 3152	FR 10/440	2	4 x 810	7,0
SD 3156	TS 56	23156 K H 3156	FR 10/460	2	4 x 870	7,4
SD 3160	TS 60	23160 K H 3160	FR 10/500	2	4 x 940	10,5
SD 3164	TS 64	23164 K H 3164	FR 10/540	2	4 x 1000	13,0
SD 3168	TS 68	23168 K H 3168	FR 10/580	2	4 x 1050	**
SD 3172	TS 72	23172 K H 3172	FR 10/600	2	4 x 1090	**
SD 3176	TS 76	23176 K H 3176	FR 10/620	2	4 x 1150	**
SD 3180	TS 80	23180 K H 3180	FR 10/650	2	4 x 1220	**
SD 3184	TS 84	23184 K H 3184	FR 10/700	2	4 x 1280	**

* for other seals see on page 7

Breaking loads for SD 30.. - Plummer Block Housings

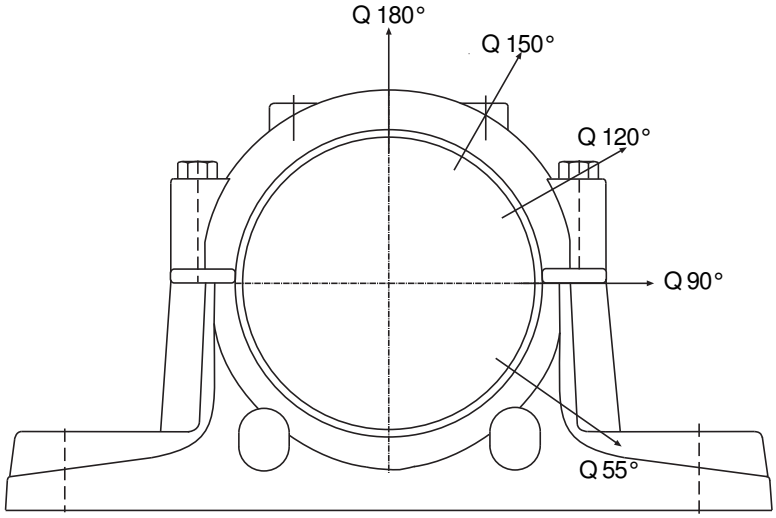

Housing Ref No	Breaking loads kN					Connecting bolts Torque		Maximum load kN		
	Q 180°	Q 150°	Q120°	Q 90°	Q55°	DIN 931 8.8	Nm	F180°	F150°	F120°
SD 3036 TS	850	680	760	1000	2100	M 24 x 140	350	380	440	760
SD 3038 TS	950	760	850	1150	2400	M 24 x 140	350	380	440	760
SD 3040 TS	1100	880	1000	1300	2700	M 24 x 150	350	380	440	760
SD 3044 TS	1300	1000	1100	1600	3200	M 24 x 150	350	380	440	760
SD 3048 TS	1600	1300	1400	1900	4000	M 24 x 150	350	380	440	760
SD 3052 TS	1700	1400	1500	2000	4200	M 30 x 180	400	620	720	1260
SD 3056 TS	1900	1500	1700	2300	4700	M 30 x 200	400	620	720	1260
SD 3060 TS	2000	1600	1800	2400	5000	M 30 x 200	400	620	720	1260
SD 3064 TS	2400	1900	2200	2900	6000	M 30 x 200	400	620	720	1260

* for other seals see on page 7

Plummer Block Housings (split)

Series SD 30..TS

For spherical roller bearings with adapter sleeve

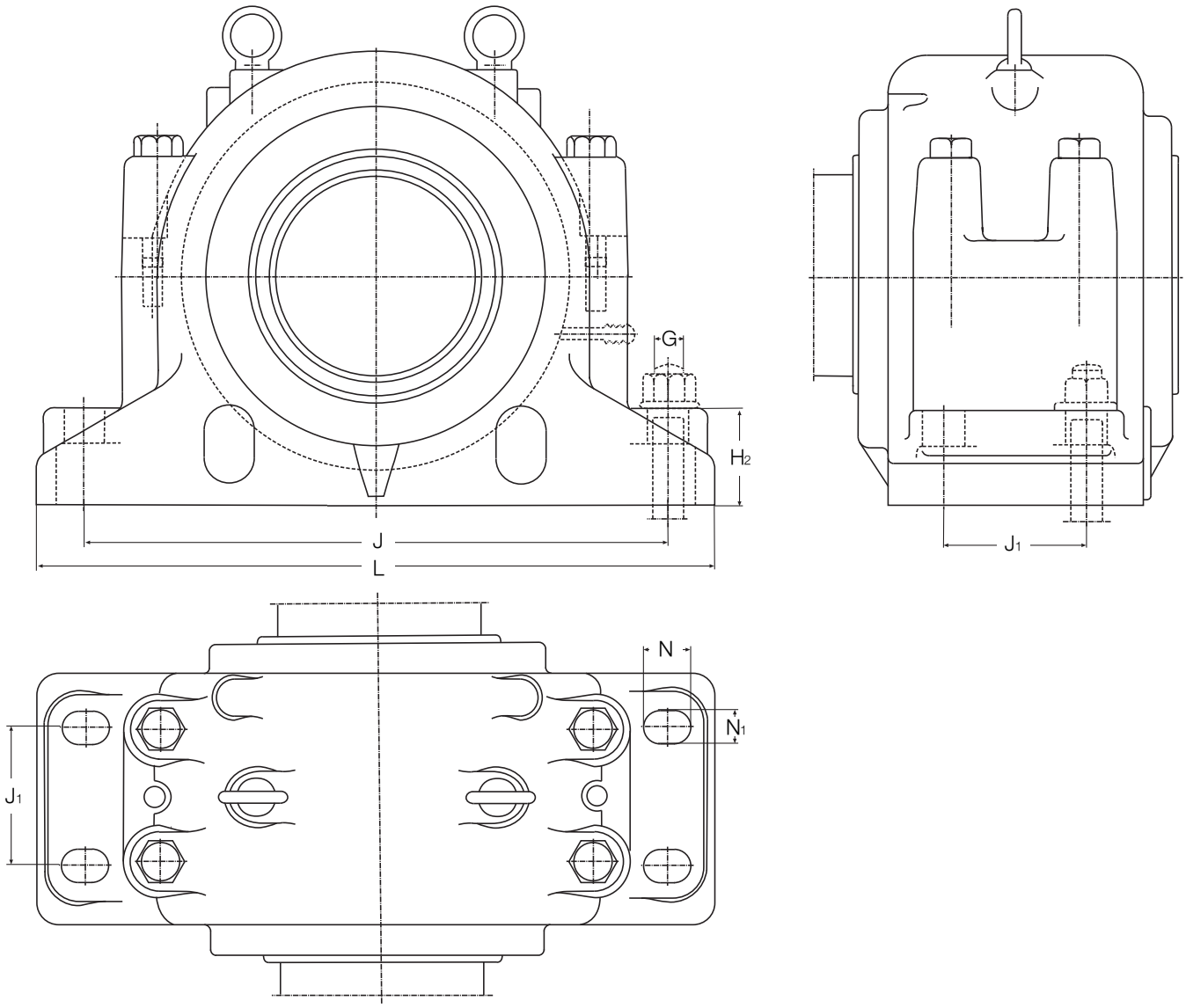

Housing Ref No	Weight kg	d	A	A_1	A_2	H_1	H	H_2	J	J_1	L	G	N_1	N	X	S
		mm														
SD 3036 TS	70	160	230	180	240	335	170	70	430	100	510	24	28	34	78	14
SD 3038 TS	78	170	240	190	250	355	180	75	450	110	530	24	28	34	83	15
SD 3040 TS	95	180	260	210	270	375	190	80	480	120	560	24	28	34	88	10
SD 3044 TS	125	200	280	230	290	410	210	85	510	130	610	30	35	42	93	10
SD 3048 TS	140	220	290	240	300	435	220	90	540	140	640	30	35	42	100	12
SD 3052 TS	185	240	310	260	320	475	240	95	600	150	700	30	35	42	106	12
SD 3056 TS	220	260	320	280	330	515	260	100	650	160	770	36	42	50	116	13
SD 3060 TS	250	280	320	280	330	550	280	105	670	160	790	36	42	50	119	16
SD 3064 TS	300	300	350	310	360	590	300	110	710	190	830	36	42	50	125	22
SD 3068 TS	340	320	370	330	380	630	320	115	750	200	880	36	42	50	135	23
SD 3072 TS	340	340	370	330	380	630	320	115	750	200	880	36	42	50	135	23
SD 3076 TS	410	360	400	360	410	675	340	120	810	220	950	36	42	50	140	24
SD 3080 TS	420	380	400	360	410	695	350	120	840	220	1000	40	42	52	160	30
SD 3084 TS	490	400	400	360	410	715	360	120	870	220	1040	40	42	52	160	30
SD 3088 TS	570	410	430	390	440	755	380	125	950	240	1120	46	48	60	170	30

Plummer Block Housings (split)

Series SD 30..TS

For spherical roller bearings with adapter sleeve

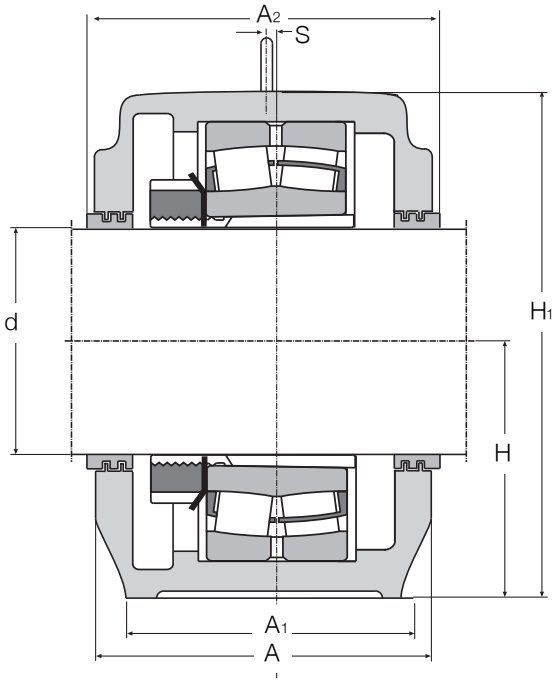

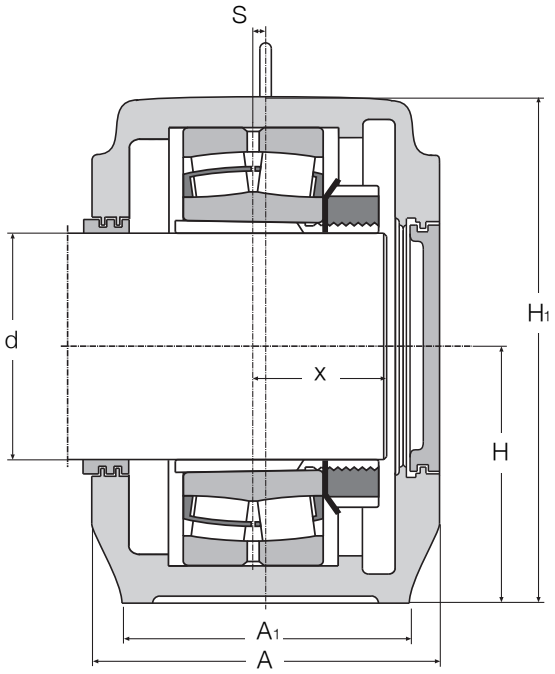

Housing Ref No	Labyrinth seal	Bearing with adapter sleeve	Matching fixing rings	Qty	Cord Ø x Length
SD 3036	TS 36	23036 K H 3036	FR 17/280	2	4 x 560
SD 3038	TS 38	23038 K H 3038	FR 10/290	4	4 x 590
SD 3040	TS 40	23040 K H 3040	FR 10/310	4	4 x 620
SD 3044	TS 44	23044 K H 3044	FR 10/340	4	4 x 680
SD 3048	TS 48	23048 K H 3048	FR 12/360	4	4 x 750
SD 3052	TS 52	23052 K H 3052	FR 22/400	2	4 x 810
SD 3056	TS 56	23056 K H 3056	FR 10/420	6	4 x 870
SD 3060	TS 60	23060 K H 3060	FR 25/460	2	4 x 940
SD 3064	TS 64	23064 K H 3064	FR 10/480	6	4 x 1000
SD 3068	TS 68	23068 K H 3036	FR 16/520	4	4 x 1050
SD 3072	TS 72	23072 K H 3072	FR 16/540	4	4 x 1120
SD 3076	TS 76	23076 K H3076	FR 16/560	4	4 x 1180
SD 3080	TS 80	23080 K H 3080	FR 16/600	4	4 x 1250
SD 3084	TS 84	23084 K H 3084	FR 16/620	4	4 x 1310
SD 3088	TS 88	23088 K H 3088	FR 16/650	4	4 x 1350

* for other seals see on page 7

Plummer Block Housings (split)

Series SD 5.. from Grey Cast Iron GG25
For spherical roller bearings with adapter sleeve

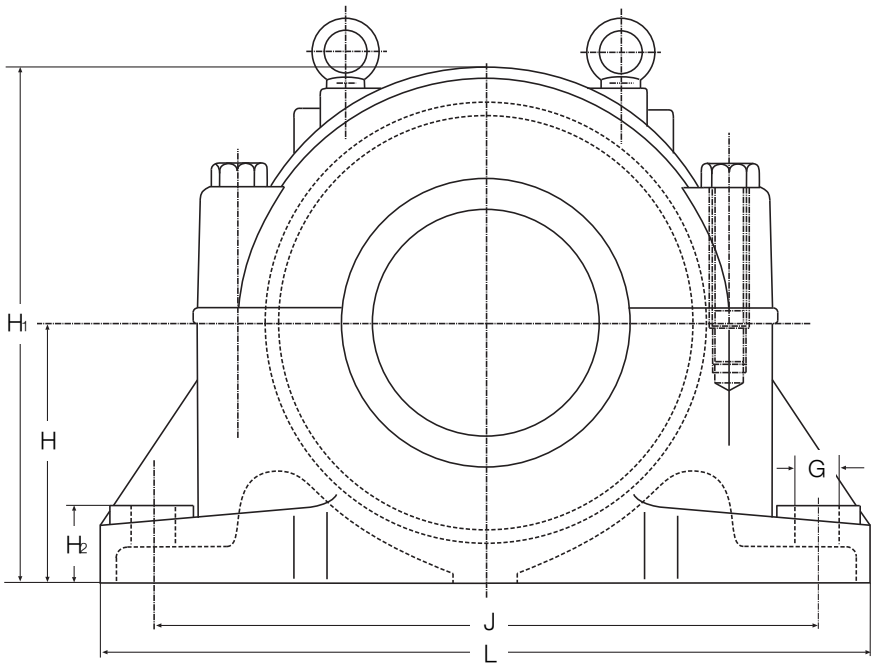

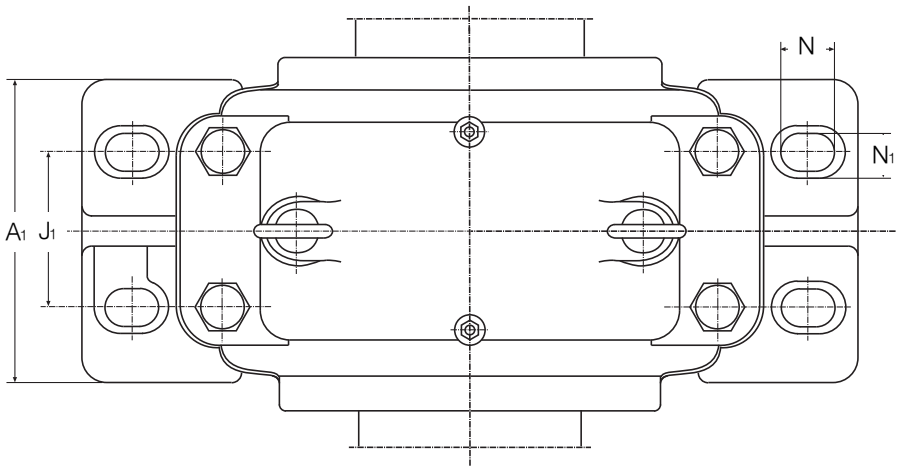

Housing Ref No	Weight kg	d_1	H	H_1	A	L	A_1 mm	J_1	H_2	J	N_1	N	G	D	X
SD 530	76	135	160	320	240	550	220	120	55	450	33	45	M 27	270	70
SD 532	87	140	170	340	250	580	230	130	55	480	33	45	M 27	290	75
SD 534	105	150	180	360	270	620	250	140	60	510	36	50	M 30	310	80
SD 536	118	160	190	380	280	650	260	150	60	540	36	50	M 30	320	80
SD 538	136	170	200	400	290	700	280	160	65	570	40	55	M 33	340	85
SD 540	170	180	210	420	300	740	290	170	65	610	40	55	M 33	360	90
SD 544	216	200	240	475	330	820	320	190	70	680	42	62	M 36	400	95
SD 548	258	220	260	515	340	880	330	200	85	740	45	65	M 39	440	100
SD 552	323	240	280	555	370	940	360	210	85	790	45	65	M 39	480	110
SD 556	404	260	300	590	390	990	380	230	100	830	52	77	M 45	500	110
SD 560	480	280	325	640	410	1060	400	250	100	890	52	77	M 45	540	120
SD 564	605	300	355	690	440	1110	430	270	110	930	56	85	M 48	580	125

Plummer Block Housings (split)

Series SD 5.. from Grey Cast Iron GG25
For spherical roller bearings with adapter sleeve

Arrangement AL

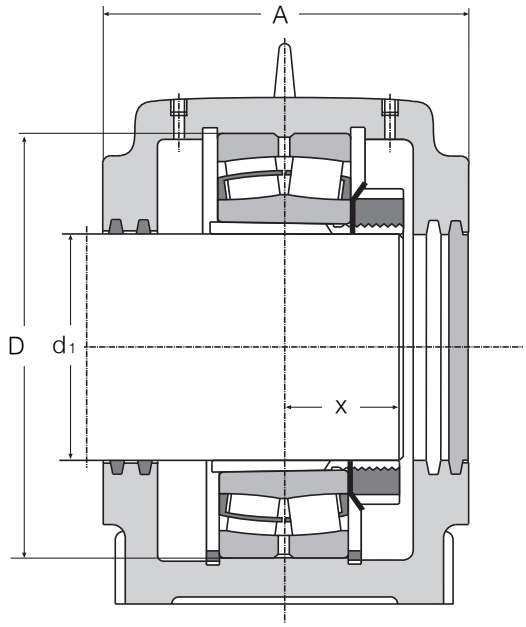

Arrangement BL

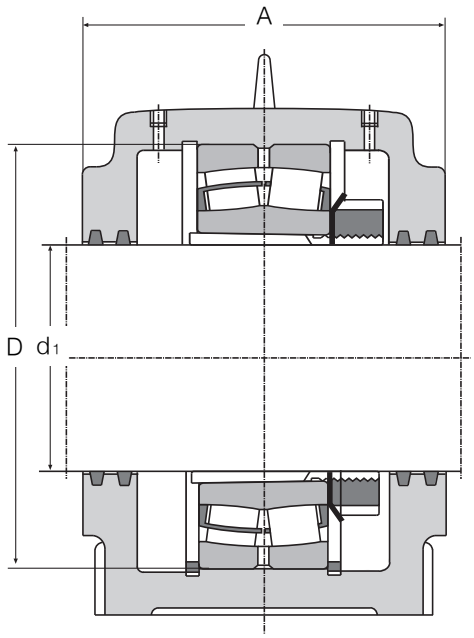

Arrangement AF

Arrangement BF

Housing Ref No	Matching bearing with adapter sleeve		Matching fixing rings Ref	Qty	Felt strip DIN 5419 Ref	Arrangement A Qty	Arrangement B Qty
SD 530	22230 K	H 3130	FR 10/270	2	16 x 12 x 250	4	8
SD 532	22232 K	H 3132	FR 10/290	2	16 x 12 x 260	4	8
SD 534	22234 K	H 3134	FR 10/310	2	16 x 12 x 275	4	8
SD 536	22236 K	H 3136	FR 10/320	2	16 x 12 x 290	4	8
SD 538	22238 K	H 3138	FR 10/340	2	16 x 12 x 305	4	8
SD 540	22240 K	H 3140	FR 10/360	2	16 x 12 x 320	4	8
SD 544	22244 K	H 3144	FR 10/400	2	16 x 12 x 350	4	8
SD 548	22248 K	H 3148	FR 10/440	2	16 x 12 x 380	4	8
SD 552	22252 K	H 3152	FR 10/480	2	16 x 12 x 415	4	8
SD 556	22256 K	H 3156	FR 10/500	2	16 x 12 x 445	4	8
SD 560	22260 K	H 3160	FR 10/540	2	16 x 12 x 480	4	8
SD 564	22264 K	H 3164	FR 10/580	2	16 x 12 x 510	4	8

* for other seals see on page 7

S 30.. K Plummer Block Housings

S 30..K Plummer Block Housings are split housings for the fitting of series 230..K spherical roller bearings. These housings can be supplied suitable for spherical roller bearings with cylindrical bore, on request.

S 30..K housings are supplied as standard with felt seals. For extreme operating conditions however, the housings are available with additional V-ring or labyrinth seals.

If the shaft terminates in the housing, an end cover (material GG20) is supplied instead of the seal.

S 30..K Plummer Block Housings are manufactured as standard, from Grey Cast Iron GG25. Housings from Spheroidal Cast Iron GGG40 or Cast Steel GS45 are also available for bearing applications requiring higher loads.

This housing series is designed for grease lubrication. In the majority of applications the grease applied during assembly is sufficient to last until the general inspection.

Should regeasing be necessary due to operating conditions, this can be carried out using the grease hole incorporated as standard.

Breaking loads for S 30.. K Plummer Block Housings

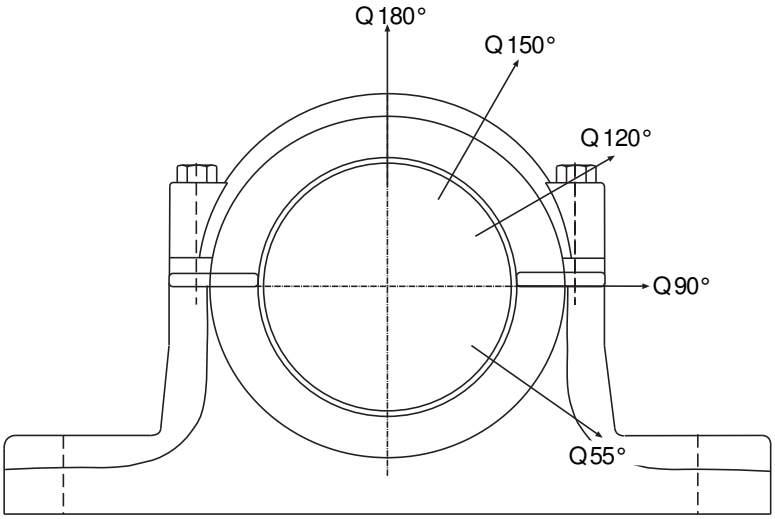

Housing Ref No	Breaking loads kN					Connecting bolts	Torque	Maximum load kN		
	Q 180°	Q 150°	Q120°	Q 90°	Q55°	DIN 931 8.8	Nm	Q 180°	Q 150°	Q 120°
S 3024 K	270	215	245	320	540	M20 x 100	200	130	150	260
S 3026 K	310	250	280	370	620	M20 x 100	200	130	150	260
S 3028 K	350	280	315	420	700	M20 x 100	200	130	150	260
S 3030 K	390	310	350	470	780	M20 x 110	200	130	150	260
S 3032 K	430	345	390	520	860	M20 x 130	200	130	150	260
S 3034 K	500	400	450	600	1000	M24 x 120	350	130	150	260
S 3036 K	580	465	520	700	1160	M24 x 130	350	130	150	260
S 3038 K	650	520	585	780	1300	M24 x 130	350	130	150	260
S 3040 K	740	590	665	890	1500	M24 x 140	350	180	210	360
S 3044 K	850	680	765	1020	1700	M30 x 150	400	180	210	360
S 3048 K	940	750	845	1130	1900	M30 x 170	400	180	210	360
S 3052 K	1100	880	990	1320	2200	M36 x 180	600	320	370	640
S 3056 K	1240	1000	1120	1500	2500	M36 x 220	600	320	370	640

* for other seals see on page 7

Plummer Block Housings (split)

Series S 30.. K

For spherical roller bearings with adapter sleeve

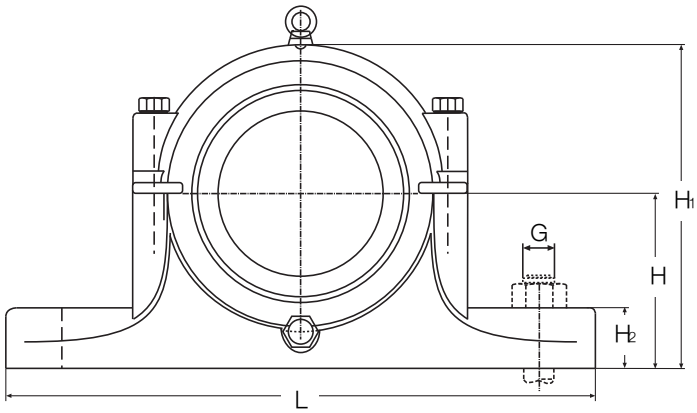

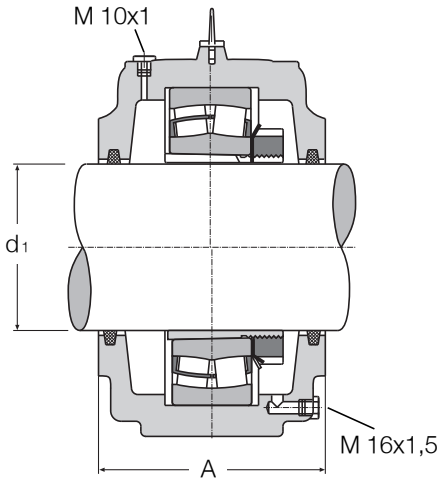

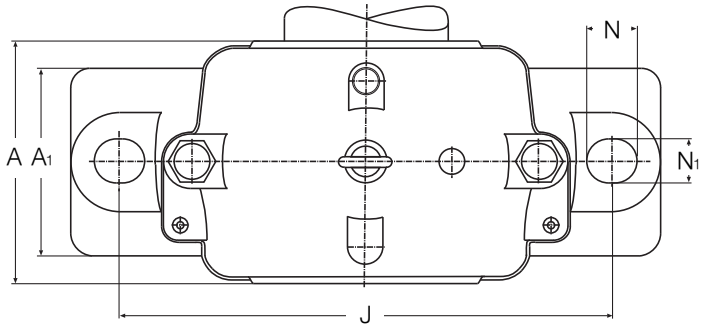

Housing Ref No	Weight kg	d_1	H	H_1	A	L mm	A_1	H_2	J	N_1	N	G
S 3024 K	16,5	110	112	215	150	390	110	40	320	30	36	M 24
S 3026 K	19,3	115	125	239	160	420	120	45	350	30	36	M 24
S 3028 K	24,6	125	140	259	170	420	120	45	350	30	36	M 24
S 3030 K	29,0	135	150	278	175	460	130	45	380	30	36	M 24
S 3032 K	37,0	140	150	288	190	470	130	50	390	30	36	M 24
S 3034 K	45,0	150	160	320	200	540	160	55	450	36	48	M 30
S 3036 K	65,0	160	170	340	210	560	160	55	470	36	48	M 30
S 3038 K	67,0	170	170	353	210	560	160	55	470	36	48	M 30
S 3040 K	72,0	180	180	373	235	615	170	60	515	36	48	M 30
S 3044 K	98,0	200	200	408	255	690	190	70	580	42	50	M 36
S 3048 K	110,0	220	210	433	265	720	200	75	610	42	50	M 36
S 3052 K	148,0	240	240	485	285	820	220	80	680	52	70	M 45
S 3056 K	165,0	260	250	505	295	860	230	80	720	52	70	M 45

Plummer Block Housings (split)

Series S 30.. K

For spherical roller bearings with adapter sleeve

Housing Ref No	Matching bearing with adapter sleeve	Grease Qty first fill kg	Matching fixing rings Ref	Qty	Felt strip DIN 5419 Ref	Qty
S 3024 K	23024 K H 3024	0,50	FR 180/10	1	10 x 8,5-195	4
S 3026 K	23026 K H 3026	0,80	FR 200/10	1	10 x 8,5-200	4
S 3028 K	23028 K H 3028	0,90	FR 210/10	1	14 x 11-225	4
S 3030 K	23030 K H 3030	1,10	FR 225/10	1	14 x 11-240	4
S 3032 K	23032 K H 3032	1,20	FR 240/10	1	14 x 11-250	4
S 3034 K	23034 K H 3034	1,40	FR 260/10	1	16 x 12-270	4
S 3036 K	23036 K H 3036	1,70	FR 280/10	1	16 x 12-285	4
S 3038 K	23038 K H 3038	1,90	FR 290/10	1	16 x 12-300	4
S 3040 K	23040 K H 3040	2,20	FR 310/10	1	16 x 12-315	4
S 3044 K	23044 K H 3044	2,90	FR 340/10	1	16 x 12-350	4
S 3048 K	23048 K H 3048	4,00	FR 360/10	1	16 x 12-380	4
S 3052 K	23052 K H 3052	4,50	FR 400/10	1	16 x 12-410	4
S 3056 K	23056 K H 3056	5,10	FR 420/10	1	16 x 12-445	4

* for other seals see on page 7

Two Bearing Housings series PDNI and BL

These bearing units are mainly used in fan assemblies. They can however, be used without hesitation in other applications. e.g. in

- Circular saws
- Milling machine shafts
- Belt drives
- Or similar bearing applications

The bearing units PDNI and BL offer the following advantages

- Simple assembly
- Low maintenance costs
- Efficient sealing against dust and dirt
- Single piece housing (torsionally rigid)
- 6 possible bearing combinations allow it to be used for various requirements.

The housing body, cover and grease control disc are manufactured from grey cast iron GG20.

The two bearing housings are designed for grease lubrication and both bearing positions are equipped with grease nipples. The two bearing housings are supplied complete with seals and grease control disc.

The two bearing housings series PDNI and BL can also be supplied as a completely assembled bearing unit with shaft, bearing and grease filling (Shell Alvania RL3). The incorporated shafts are made from Material St 52.3.

On request, other shaft materials are available.

Two Bearing Housings ZLGO

Two bearing housings ZLGO are fitted with a floating and a locating bearing. A cylindrical roller bearing type NU is used for the floating bearing whilst a ball bearing is used for the locating bearing.

A sliding disc provides sufficient oil to each bearing position.

Various holes are incorporated in the housing through which it is possible, for instance, to fill oil or when required, for example at inspection or oil change, to drain off oil. The prescribed oil level can be controlled by means of an oil level gauge fitted for this purpose.

The incorporated splash rings and side covers are so arranged that under normal operating conditions it is not possible for oil to leak out.

Regreasing chambers in the housing covers prevent the ingress of dirt.

Fan Bearing Housings

Series PDNI
With grease control discs
for ball bearings (without shaft)

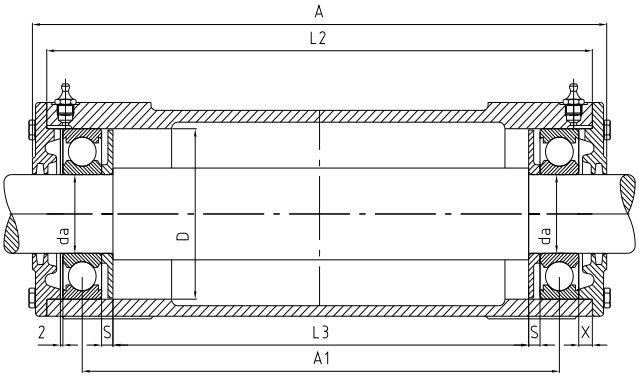

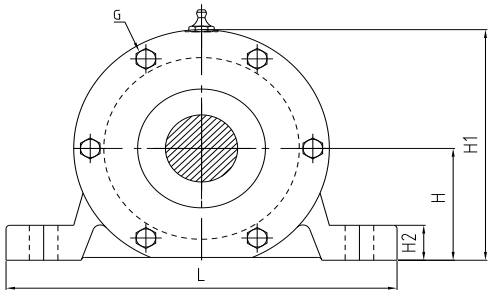

Dimension L_3 - does not leave spare for the spring washer

Housing Ref No	d_a	H	H_1	L_2	A	A_1	L_3	L	b	H_2	J_1	J	S	X	N	D
								mm								
PDNI 306	30	50	100	210	226	171,5	140,8	160	40	18	150	130	6,1	9,5	15	72
PDNI 307	35	60	116	239	260	195,5	160,8	190	45	18	175	150	7,1	11	15	80
PDNI 308	40	60	121	298	315	255,5	215,0	190	52	20	225	150	9,1	9,4	15	90
PDNI 309	45	70	137	340	360	279,5	237,0	210	52	22	250	170	9,1	17,4	15	100
PDNI 310	50	70	142	360	377	311,5	267,0	210	60	25	275	170	9,1	10,4	15	110
PDNI 311	55	80	158	400	422	335,5	289,0	260	60	25	300	210	9,1	17,4	19	120
PDNI 312	60	80	165	437	460	383,5	355,0	260	70	25	340	210	9,1	10,9	19	130
PDNI 313	65	95	185	470	492	402,5	350,0	280	70	25	360	230	10,1	16,9	19	140
PDNI 314	70	95	190	490	512	420,5	366,0	290	70	25	380	230	10,1	16,9	19	150
PDNI 315	75	100	200	508	547	448,5	390,0	320	80	30	400	260	11,1	10,9	19	160
PDNI 316	80	112	220	525	556	466,0	406,0	320	80	30	420	260	11,1	9,4	19	170
PDNI 317	85	112	225	559	590	486,0	423,8	350	80	30	440	290	11,1	15,5	19	180
PDNI 318	90	112	230	575	605	510,0	448,0	350	85	30	460	290	10,0	10,5	19	190
PDNI 319	95	125	253	605	648	540,0	472,0	400	90	36	480	320	12,0	9,5	24	200
PDNI 320	100	130	264	635	673	570,0	501,0	400	95	40	500	320	8,5	11,5	24	215

Fan Bearing Housings

Series PDNI
With grease control discs
for ball bearings (without shaft)

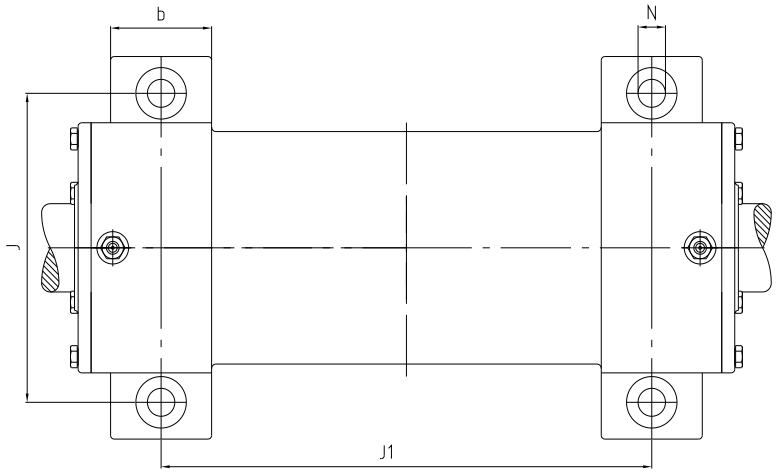

Housing Ref No	Matching bearing	Weight kg	Cover screws G	Permissible Speed with grease lubrication	Compensating spring washer
PDNI 306	6306 C3	6,60	4 x M 6	9000	AS 72
PDNI 307	6307 C3	9,20	4 x M 6	8500	AS 80
PDNI 308	6308 C3	11,8	4 x M 6	7500	AS 90
PDNI 309	6309 C3	15,0	4 x M 6	6700	AS 100
PDNI 310	6310 C3	17,8	6 x M 6	6300	AS 110
PDNI 311	6311 C3	27,5	4 x M 8	5600	AS 120
PDNI 312	6312 C3	32,0	6 x M 8	5000	AS 130
PDNI 313	6313 C3	34,0	6 x M 8	4800	AS 140
PDNI 314	6314 C3	37,0	6 x M 8	4500	AS 150
PDNI 315	6315 C3	48,0	6 x M 8	4300	AS 160
PDNI 316	6316 C3	51,0	6 x M 10	3800	AS 170
PDNI 317	6317 C3	65,0	6 x M 10	3600	AS 180
PDNI 318	6318 C3	69,0	6 x M 10	3400	AS 190
PDNI 319	6319 C3	83,0	6 x M 10	3200	AS 200
PDNI 320	6320 C3	93,0	6 x M 10	3000	AS 215

Fan Bearing Housings

Series PDNI
Complete with bearing and shaft
floating arrangement

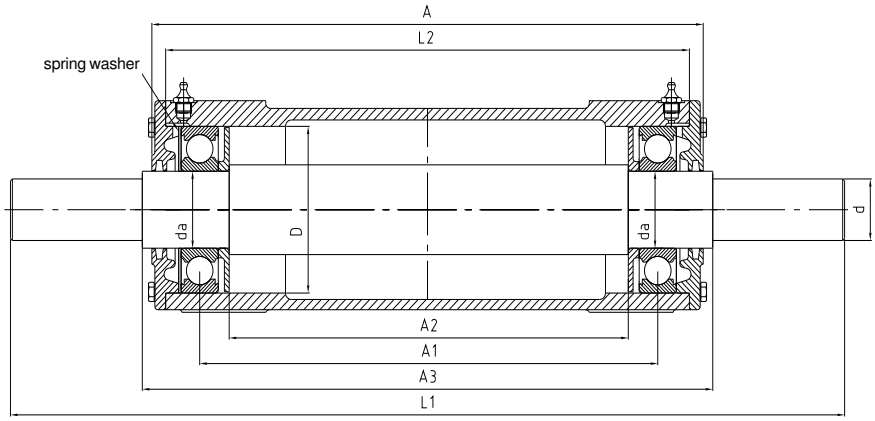

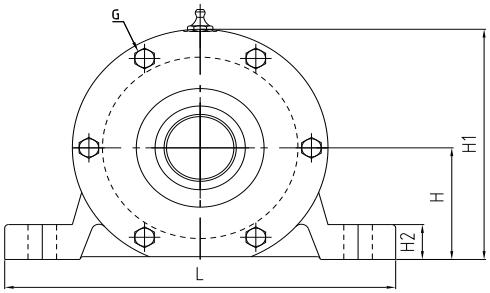

Housing Ref No	d	d_a	H	H_1	L_2	L_1	A	A_1	A_2	A_3	L	b	H_2	J_1	J	w	N	D
									mm									
PDNI 306	24	30	50	100	210	340	226	171,5	140,0	240	160	40	18	150	130	45,0	15	72
PDNI 307	28	35	60	116	239	394	260	195,5	160,0	274	190	45	18	175	150	49,5	15	80
PDNI 308	32	40	60	121	298	491	315	255,5	214,0	331	190	52	20	225	150	53,0	15	90
PDNI 309	38	45	70	137	340	536	360	279,5	236,0	376	210	52	22	250	170	63,0	15	100
PDNI 310	42	50	70	142	360	613	377	311,5	266,0	393	210	60	25	275	170	59,0	15	110
PDNI 311	48	55	80	158	400	658	422	335,5	288,0	438	260	60	25	300	210	69,0	19	120
PDNI 312	48	60	80	165	437	696	460	383,5	334,0	476	260	70	25	340	210	68,0	19	130
PDNI 313	55	65	95	185	470	728	492	402,5	349,0	508	280	70	25	360	230	74,0	19	140
PDNI 314	60	70	95	190	490	812	512	420,5	365,0	532	290	70	25	380	230	76,0	19	150
PDNI 315	65	75	100	200	508	847	547	448,5	389,0	567	320	80	30	400	260	83,5	19	160
PDNI 316	70	80	112	220	525	856	556	466,5	405,0	576	320	80	30	420	260	78,0	19	170
PDNI 317	75	85	112	225	559	890	590	486,0	422,5	610	350	80	30	440	290	85,0	19	180
PDNI 318	80	90	112	230	575	965	605	510,0	446,5	625	350	85	30	460	290	82,5	19	190
PDNI 319	85	95	125	253	605	1008	648	540,0	470,5	668	400	90	36	480	320	94,0	24	200
PDNI 320	90	100	130	264	635	1033	673	570,0	500,0	693	400	95	40	500	320	96,5	24	215

Fan Bearing Housings

Series PDNI

Complete with bearing and shaft

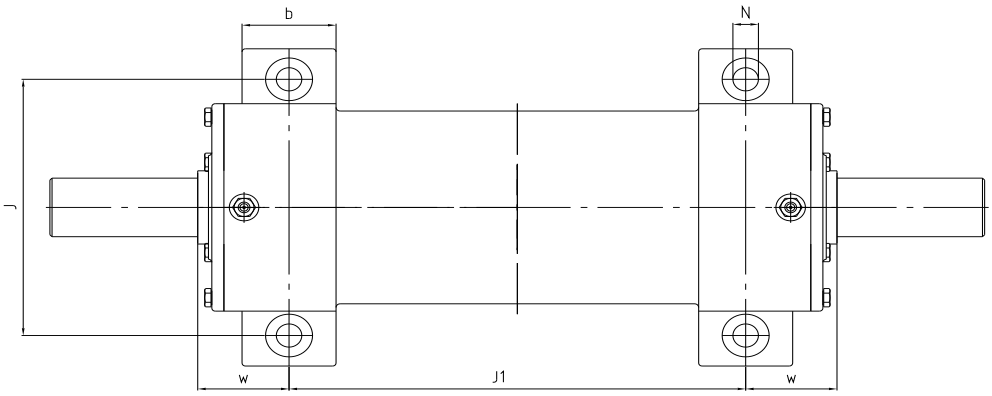

Shafts with key according to DIN 6885, page 1

Shaft ends with thread shape D according to DIN 332, page 2

Housing RefNo	Fitted bearing	Weight kg	Grease quantity (g) by		Cover screws G	Permissible speed with grease lubrication	Compensating Spring washer
			First fill	Regreasing			
PDNI 306	6306 C3	9,5	60	5	4 x M 6	9000	AS 72
PDNI 307	6307 C3	13,7	80	5	4 x M 6	8500	AS 80
PDNI 308	6308 C3	19,0	110	10	4 x M 6	7500	AS 90
PDNI 309	6309 C3	23,5	140	10	4 x M 6	6700	AS 100
PDNI 310	6310 C3	30,0	190	10	6 x M 6	6300	AS 110
PDNI 311	6311 C3	39,0	240	15	4 x M 8	5600	AS 120
PDNI 312	6312 C3	52,0	300	15	6 x M 8	5000	AS 130
PDNI 313	6313 C3	56,5	390	15	6 x M 8	4800	AS 140
PDNI 314	6314 C3	67,0	480	20	6 x M 8	4500	AS 150
PDNI 315	6315 C3	80,0	590	20	6 x M 8	4300	AS 160
PDNI 316	6316 C3	90,0	700	20	6 x M 10	3800	AS 170
PDNI 317	6317 C3	112,0	830	25	6 x M 10	3600	AS 180
PDNI 318	6318 C3	130,0	1000	25	6 x M 10	3400	AS 190
PDNI 319	6319 C3	150,0	1150	30	6 x M 10	3200	AS 200
PDNI 320	6320 C3	177,0	1350	40	6 x M 10	3000	AS 215

Fan Bearing Housings

Series BL
With grease control discs
for ball bearings (without shaft)

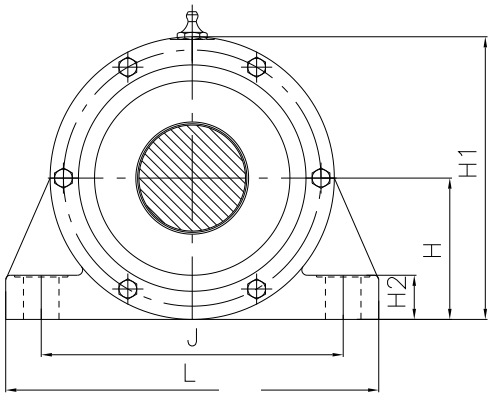

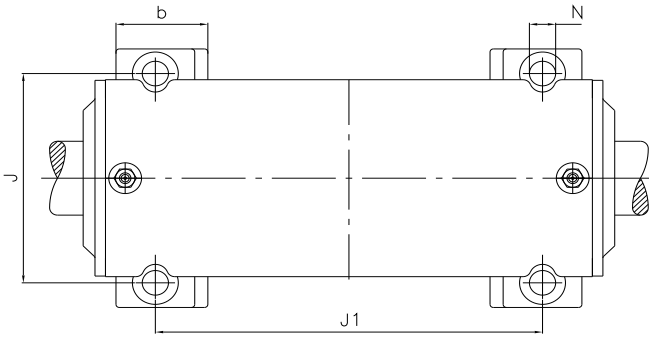

Housing Ref No	d_a	D	H	H_1	H_2	L mm	J	N	A	L_2	J_1	b
BL 25	25	62	50	95	16	155	120	11,5	218	184	135	41
BL 30	30	72	50	100	18	170	130	15	300	266	210	50
BL 35	35	80	60	120	20	190	150	15	330	296	240	50
BL 40	40	90	60	120	20	190	150	15	330	296	240	50
BL 40 S	40	90	60	120	20	190	150	15	450	416	360	50
BL 45	45	100	70	140	23	190	150	15	365	331	263	60
BL 45/K	45	100	70	140	28	200	160	16	260	226	165	64
BL 45/H	45	85	60	118	20	190	150	15	305	282	200	42
BL 50	50	110	70	140	23	190	150	15	365	331	263	60
BL 50 S	50	110	70	140	23	190	150	15	550	516	448	60
BLC 50	50	110	80	150	22	230	175	18	455	421	375	75
BL 55	55	120	80	160	25	210	170	20	405	371	295	70
BL 60	60	130	80	160	25	210	170	20	405	371	295	70
BL 60 SS	60	130	80	160	25	210	170	20	740	706	595	65
BLC 60	60	130	95	175	25	260	200	20	515	481	420	75
BLK 60	60	130	80	160	22	224	190	15	365	349	263	62
BL 70	70	150	95	190	28	270	210	24	450	416	330	80
BL 75	75	160	95	190	28	270	210	24	450	416	330	80
BL 80	80	170	112	217	30	290	230	24	490	450	350	75
BLK 80	80	170	105	210	30	300	250	20	395	375	295	70
BLL 80	80	170	120	240	35	335	280	24	590	566	450	88
BLK 90	90	190	120	240	35	355	280	24	440	416	330	78
BLL 90	90	190	120	240	35	335	280	24	590	566	450	88
BL 95	95	200	125	245	35	340	280	24	540	500	400	80
BL 100	100	215	145	290	40	400	335	24	590	562	450	104
BL 110	110	240	145	290	40	400	335	24	590	562	450	104

Fan Bearing Housings

Series BL

With grease control discs
for ball bearings (without shaft)

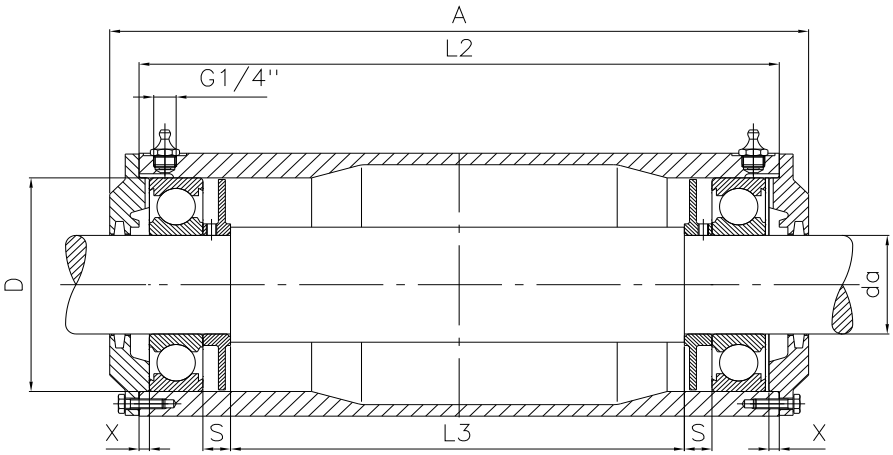

Shafts with key according to DIN 6885, page 1

Shaft ends with thread shape D according to DIN 332, page 2

Dimansion L_3 - does not leave space for the spring washer

Housing Ref No	Matching bearing	Weight kg	Compensating spring washer	Permissible speed rpm	Grease quantity (g) First fill	Grease quantity (g) Regreasing	s	x	L_3
BL 25	6305	6,5	AS 62	11000	50	-	14	7	108
BL 30	6306	8	AS 72	9000	60	5	14	7	186
BL 35	6307	9	AS 80	8500	80	5	16	7	208
BL 40	6308	10	AS 90	7500	110	10	16	7	204
BL 40 S	6308	16	AS 90	7500	110	10	16	7	324
BL 45	6309	14	AS 100	6700	140	10	16	7	235
BL 45/K	6309	12	AS 100	6700	140	10	16	7	130
BL 45/H	6209	14	AS 85	7500	120	10	8	15	198
BL 50	6310	13	AS 110	6300	190	10	16	7	231
BL 50 S	6310	21	AS 110	6300	190	10	16	7	416
BLC 50	6310	15	AS 110	6300	190	10	16	7	321
BL 55	6311	22	AS 120	5600	240	15	16	6	269
BL 60	6312	21	AS 130	5000	300	15	16	6	265
BL 60 SS	6312	35	AS 130	5000	300	15	16	6	600
BLC 60	6312	25	AS 130	5000	300	15	16	6	375
BLK 60	6312	21	AS 130	5000	300	15	16	12	231
BL 70	6314	31	AS 150	4500	480	20	20	6	294
BL 75	6315	32	AS 160	4300	590	20	20	6	290
BL 80	6316	50	AS 170	3800	700	20	20	6	320
BLK 80	6316	44	AS 170	3800	700	20	20	15	227
BLL 80	6316	75	AS 170	3800	700	20	20	16	416
BLK 90	6318	64	AS 190	3400	1000	25	20	16	258
BLL 90	6318	85	AS 190	3400	1000	25	20	16	408
BL 95	6319	60	AS 200	3200	1150	30	25	6	348
BL 100	6320	95	AS 215	3000	1450	35	25	16	386
BL 110	6322	86	AS 240	2600	1900	40	25	16	380

Fan Bearing Housings

Series BL ...

Completely assembled
with bearing and shaft

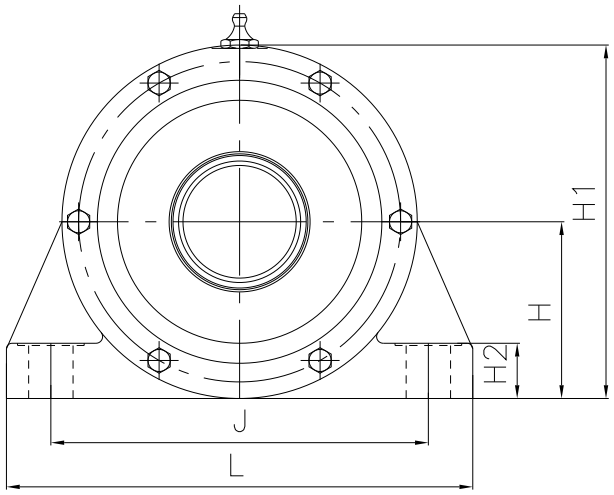

Housing Ref No	d_a	d	L_1	V	W	X	A	A_1	L_2	J_1	J	L	H	H_1	H_2	N
									mm							
BL 25	25	24	358	50	21	19	218	151	184	135	120	155	50	195	16	11,5
BL 30	30	28	470	50	50	20	300	231	266	210	130	170	50	100	18	15,0
BL 35	35	32	530	60	55	25	330	259	296	240	150	190	60	120	20	15,0
BL 40	40	38	530	60	55	25	330	257	296	240	150	190	60	120	20	15,0
BL 45	45	42	575	65	55	25	365	290	331	263	150	190	70	140	23	15,0
BL 50	50	48	585	70	55	25	365	288	331	263	150	190	70	140	23	15,0
BL 55	55	50	645	80	55	25	405	328	371	295	170	210	80	160	25	20,0
BL 60	60	55	645	80	55	25	405	326	371	295	170	210	80	160	25	20,0
BL 70	70	65	755	110	60	25	450	367	416	330	210	270	95	190	28	24,0
BL 75	75	70	755	110	60	25	450	365	416	330	210	270	95	190	28	24,0
BL 80	80	75	805	110	70	25	490	396	450	350	230	290	112	217	30	24,0
BLL 80	80	75	935	120	80	25	590	492	566	450	280	335	120	240	35	24,0
BLL 90	90	85	935	120	80	25	590	488	566	450	280	335	120	240	35	24,0
BLK 100	100	90	985	120/170	80	25	590	480	562	450	335	400	145	290	40	24,0
BLK 110	110	100	985	120/170	80	25	590	480	562	450	335	400	145	290	40	24,0

Fan Bearing Housings

Series BL ...
Completely assembled
with bearing and shaft

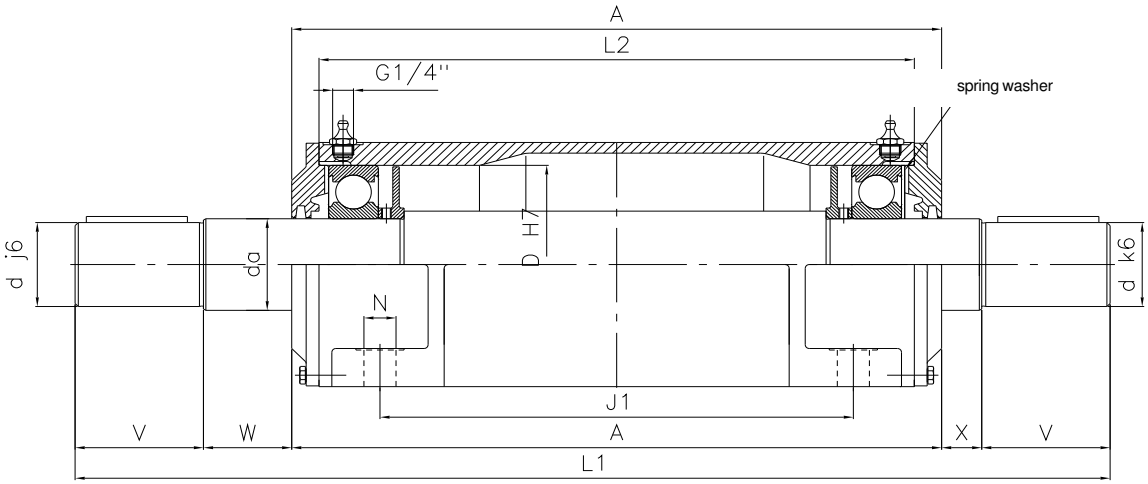

Shafts with key according to DIN 6885, page 1

Shaft ends with thread shape D according to DIN 332, page 2

Fitted Bearing	D	Compensating Spring washer	Grease quantity (g) per bearing for regreasing	Speed rpm	Weight kg
6305 C3	62	AS 62	5	11000	9
6306 C3	72	AS 72	5	9500	12
6307 C3	80	AS 80	5	8500	17
6308 C3	90	AS 90	10	7500	18
6309 C3	100	AS 100	10	6700	28
6310 C3	110	AS 110	15	5300	37
6311 C3	120	AS 120	15	5300	37
6312 C3	130	AS 130	15	5000	39
6314 C3	150	AS 150	20	4300	63
6315 C3	160	AS 160	20	4000	64
6316 C3	170	AS 170	20	3800	84
6316 C3	170	AS 170	20	3400	132
6318 C3	190	AS 190	25	3400	134
6320 C3	215	AS 215	35	3000	198
6322 C3	240	AS 240	40	2600	196

Housed Bearing Unit

Series ZLGO
for oil lubrication

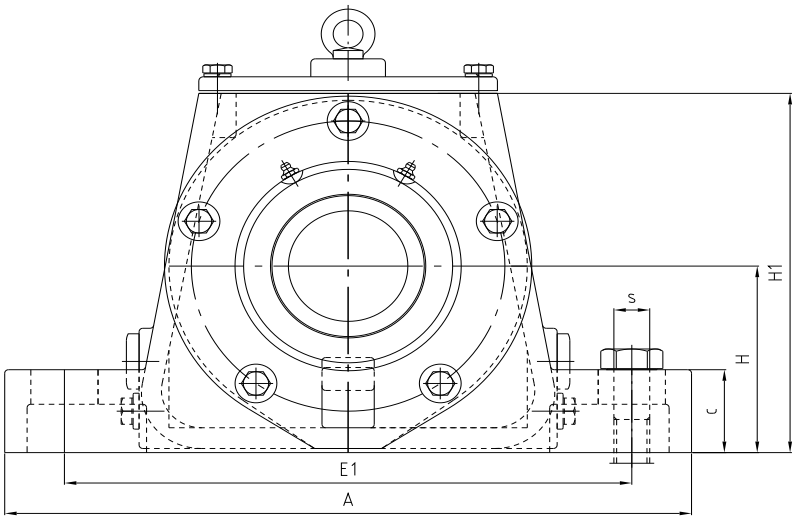

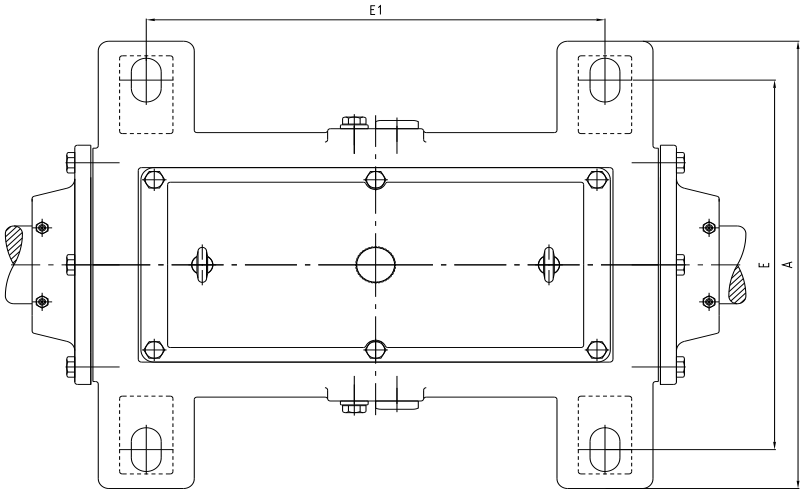

Housing	Dimensions in mm																
Ref No	d	d_2	d_3	d_4	d_g	A	B	C	L_1	H	H_1	L	E	E_1	L_2	L_3	s
ZLGO 40 A	40	50	42	37	M40 x 1,5	290	295	40	250	80	165	380	230	235	410	135	M16
ZLGO 45 A	45	55	47	40	M45 x 1,5	290	295	40	250	80	165	380	230	235	410	135	M16
ZLGO 50 A	50	60	52	45	M50 x 1,5	320	348	45	300	95	192	432	260	285	444	175	M16
ZLGO 55 A	55	65	57	50	M55 x 2	320	348	45	300	95	192	432	260	285	444	175	M16
ZLGO 60 A	60	70	62	55	M60 x 2	370	390	50	340	110	222	480	300	320	490	205	M20
ZLGO 65 A	65	75	67	60	M65 x 2	370	390	50	340	110	222	480	300	320	490	205	M20
ZLGO 70 A	70	80	72	65	M70 x 2	400	450	55	400	120	245	556	330	370	573	265	M20
ZLGO 75 A	75	85	77	70	M75 x 2	400	450	55	400	120	245	556	330	370	573	265	M20
ZLGO 80 A	80	90	82	75	M80 x 2	460	520	60	460	135	272	645	380	430	655	301	M24
ZLGO 85 A	85	95	87	80	M85 x 2	460	520	60	460	135	272	645	380	430	655	299	M24
ZLGO 90 A	90	105	92	85	M90 x 2	560	585	70	520	150	307	736	445	490	756	357	M36
ZLGO 95 A	95	110	97	90	M95 x 2	560	585	70	520	150	307	736	445	490	746	357	M36
ZLGO 100 A	100	115	102	95	M100 x 2	560	585	70	520	150	307	736	445	490	766	268	M36
ZLGO 110 A	110	125	112	105	M110 x 2	560	585	70	520	150	307	736	445	490	746	364	M36
ZLGO 120 A	120	140	122	115	M120 x 2	600	955	75	900	160	330	1105	480	860	1125	730	M36
ZLGO 130 A	130	150	132	125	M130 x 2	690	830	90	750	200	397	1024	550	710	1050	554	M42
ZLGO 140 A	140	160	142	135	M140 x 2	690	830	90	750	200	397	1024	550	710	1050	554	M24

Housed Bearing Unit

Series ZLGO
for oil lubrication

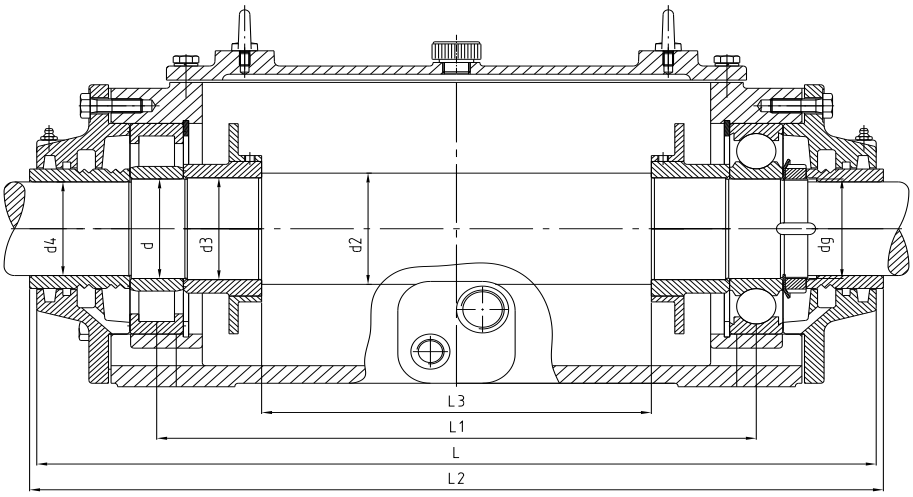

Housing	Bearing		Nut	Safety	Weight	Oil Qty
Ref No	Floating	Locating		Washer	kg	l
ZLGO 40 A	NU 308 C3	6308 C3	KM 8	MB 8	23	0,9
ZLGO 45 A	NU 309 C3	6309 C3	KM 9	MB 9	24	0,9
ZLGO 50 A	NU 310 C3	6310 C3	KM 10	MB 10	27	1,5
ZLGO 55 A	NU 311 C3	6311 C3	KM 11	MB 11	30	1,5
ZLGO 60 A	NU 312 C3	6312 C3	KM 12	MB 12	55	2,2
ZLGO 65 A	NU 313 C3	6313 C3	KM 13	MB 13	56	2,2
ZLGO 70 A	NU 314 C3	6314 C3	KM 14	MB 14	72	3,0
ZLGO 75 A	NU 315 C3	6315 C3	KM 15	MB 15	70	3,0
ZLGO 80 A	NU 316 C3	6316 C3	KM 16	MB 16	105	4,0
ZLGO 85 A	NU 317 C3	6317 C3	KM 17	MB 17	120	4,0
ZLGO 90 A	NU 318 C3	6318 C3	KM 18	MB 18	140	6,0
ZLGO 95 A	NU 319 C3	6319 C3	KM 19	MB 19	145	6,0
ZLGO 100 A	NU 220 C3	6220 C3	KM 20	MB 20	145	6,0
ZLGO 110 A	NU 222 C3	6222 C3	KM 22	MB 22	150	6,0
ZLGO 120 A	NU 224 C3	6224 C3	KM 24	MB 24	220	10,0
ZLGO 130 A	NU 226 C3	6226 C3	KM 26	MB 26	340	18,0
ZLGO 140 A	NU 228 C3	6228 C3	KM 28	MB 28	350	20,0

Flanged Double Bearing

Series ZLF

Lifetime lubricated and maintenance free

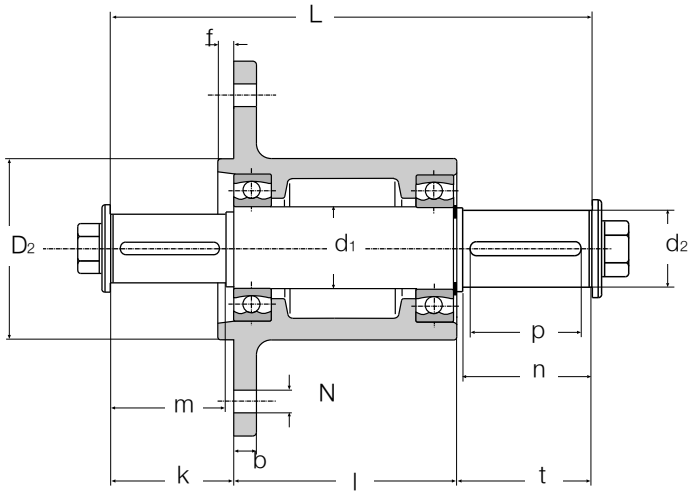

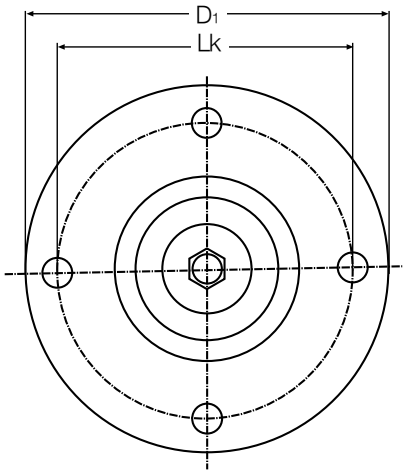

Two Bearing - Flange

Series ZLF2 flanged bearings are supplied as a complete unit comprising housing, shaft, 63..2 RS series ball bearings, feather keys and end disc. The grease filling of the sealed bearing is suitable for a lifetime operation of 20,000 to 30,000 operating hours.

The max. allowed temperature during the operation is 70°C, in standstill 90°C.

Housing Ref No	d_1	d_2	D_1	D_2	Lk	f	N	n	m	k	l	t	b	L	p	Weight
								mm								kg
ZLF 204	20	18	135	70	110	5	6 x 9,5	50	38	45	85	53	10,0	183	32	2,5
ZLF 205	25	22	120	80	100	5	4 x 9,5	50	45	35	100	55	10,0	190	32	3,6
ZLF 206	30	28	150	90	125	6	4 x 11,5	50	60	50	112	55	12,5	217	36	5,0
ZLF 207	35	32	180	100	140	6	6 x 11,5	55	65	55	125	60	14,0	240	40	7,5
ZLF 208	40	35	200	112	160	6	6 x 11,5	55	75	65	140	60	16,0	265	40	10,5

Flanged Double Bearing

Series ZLFB

Lifetime lubricated and maintenance free

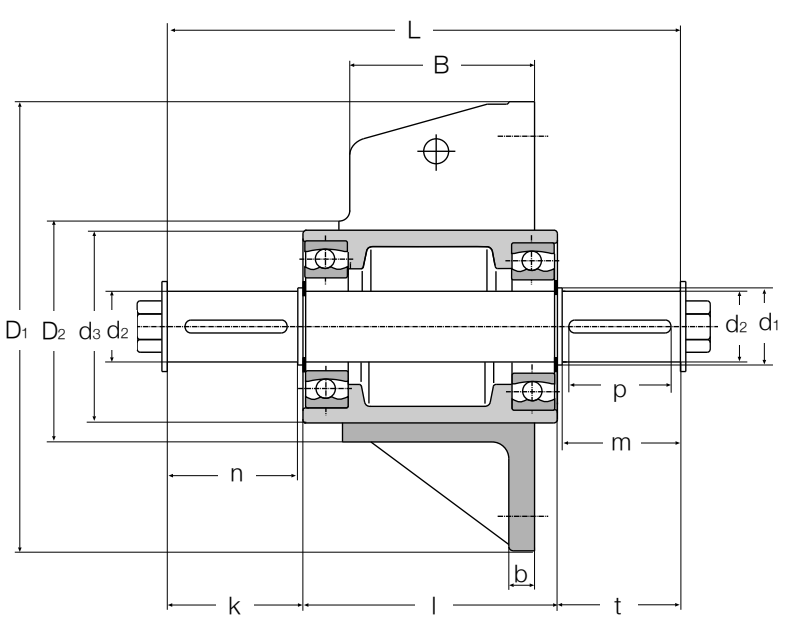

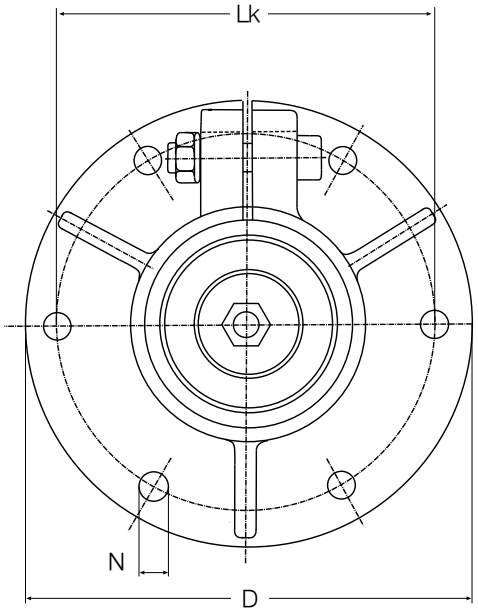

N = 4 x for ZLFB 15

N = 6 x for ZLFB 20 - 60

Two bearing - Flange ZLFB

Series ZLFB flanged bearings are supplied as a complete unit comprising housing, shaft complete with feather key, end disc and 63..2 RS series ball bearings. The grease filling of the sealed bearing is suitable for lifetime operation (approx 20,000 to 30,000 operating hours under normal operating conditions). The clamping flange allows axial adjustment of the impeller.

The max. allowed temperature during the operation is 70°C, in standstill 90°C.

Housing Ref No	d_1	d_2	d_3	D_1	D_2	Lk Ø	N	n mm	m	k	l	t	L	b	B	p	Weight kg
ZLFB 15	15	14	48	120	56	100	7,0	28	38	31,0	78	41,0	150	6	40	22	1,5
ZLFB 20	20	18	70	125	80	110	9,5	50	45	52,5	90	47,5	190	10	50	32	3,0
ZLFB 20/ISO	20	19	70	125	80	110	9,5	50	45	52,5	90	47,5	190	10	50	32	3,0
ZLFB 25	25	22	70	125	80	110	9,5	50	45	52,5	90	47,5	190	10	50	32	3,0
ZLFB 25/ISO	25	24	70	125	80	110	9,5	50	45	52,5	90	47,5	190	10	50	32	3,0
ZLFB 30	30	28	90	190	100	160	11,5	50	60	53,5	100	63,5	217	14	70	36	3,2
ZLFB 35	35	32	90	190	100	160	11,5	55	65	59,0	112	69,0	240	14	70	40	7,5
ZLFB 40	40	35	105	225	120	190	11,5	55	75	61,5	127	76,5	265	16	90	40	12,5
ZLFB 50	50	45	125	300	145	265	11,5	75	75	77,5	170	77,5	325	16	120	56	23,5
ZLFB 60	60	55	150	350	175	310	11,5	90	90	95,0	210	95,0	400	20	150	80	43,0

Flanged Double Bearing

Series ZLFB...N
Regreaseable

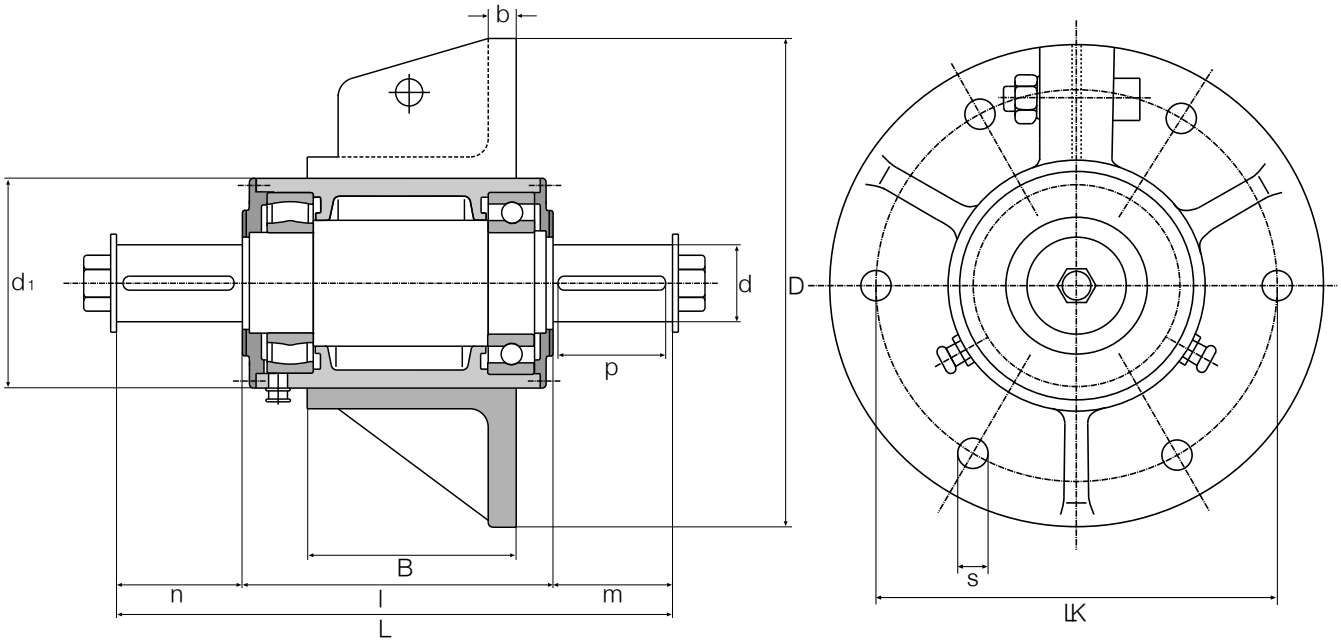

Two bearing - Flange ZLFB..NS regreaseable

Series ZLFB..NS flanged bearings are supplied as a complete unit comprising housing, clamping flange, shaft complete with feather key and end disc, drive end cylindrical roller bearing and impeller end ball bearing.

Regreasing of the bearings is carried out independently using grease nipples at each bearing position.

The bearings are pre-greased with Kübler Staburags NBU 12 able to withstand operating temperatures of 120° C and intermittent peak temperatures of 160° C.

The clamping flange allows axial adjustment of the impeller.

Housing	Dimensions in mm												Fitted bearing		Weight
Ref No					6 hole								Impeller	Drive	
	d_{k6}	d_1	D	Lk	Øs	L	n	m	l	B	b	p	end	end	kg
ZLFB 20 N	18	70	125	110	9,5	190	42,5	37,5	110	50	10	28	6205 C3	NU 2205 C3	3,4
ZLFB 25 N	22	70	125	110	9,5	190	42,5	37,5	110	50	10	28	6205 C3	NU 2205 C3	3,5
ZLFB 30 N	28	90	190	160	11,5	217	41,0	51,0	125	70	14	36	6207 C3	NU 2207 C3	7,9
ZLFB 40 N	35	105	225	190	11,5	265	46,0	66,0	153	90	16	40	6209 C3	NU 2209 C3	14,1
ZLFB 50 N	45	125	300	265	11,5	325	75,0	75,0	175	100	16	56	6211 C3	NU 2211 C3	26,0
ZLFB 60 N	55	150	350	310	11,5	400	90,0	90,0	220	150	20	80	6312 C3	NU 312 C3	46,0

Flanged Double Bearing

Series ZLF
Regreaseable

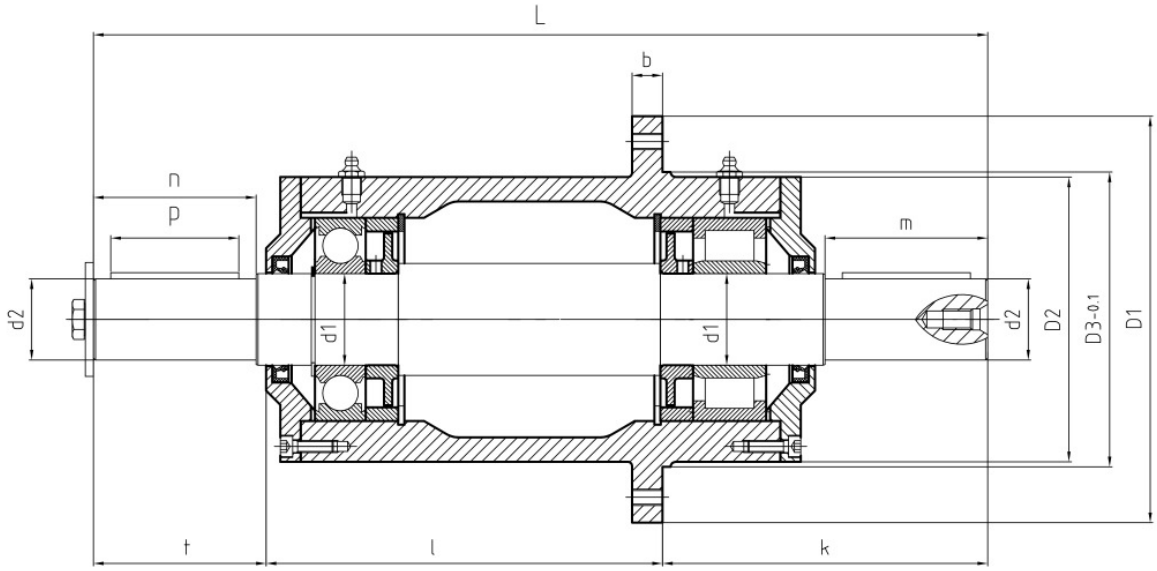

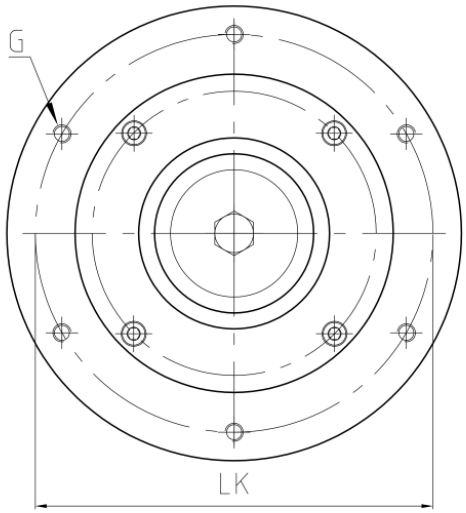

Series ZLF regreasable are supplied as a complete unit. Mounted with a deep groove ball bearing on the non expansion side and a zylindrical roller bearing on the floating side. The housing has a integrated flange and two oil seals. The bearings are pregreased with Klüber Staburags N 12 MF.

Ref No	d1	d2	D1	D2	D3	LK	G	n	m	k	l	t	b	L	p	Weight kg
ZLF 30	30	28	150	100	105	130	4xM8	60	60	120	155	65	15	340	40	5,60
ZLF 35	35	32	180	120	125	155	6xM8	60	60	130	185	65	15	380	40	6,00
ZLF 40	40	38	180	120	125	155	6xm8	80	80	150	185	85	15	420	63	7,20
ZLF 45	45	40	200	140	145	175	6xM8	80	80	160	195	85	15	440	63	8,00

	Bearings
ZLF 30	6206 C3 / NU 206 ECP
ZLF 35	6307 C3 / NU 307 ECP
ZLF 40	6308 C3 / NU 2308 ECP
ZLF 45	6309 C3 / NU 2309 ECP

Flanged Double Bearing

Series ZLF HT (high temperature)
Regreaseable

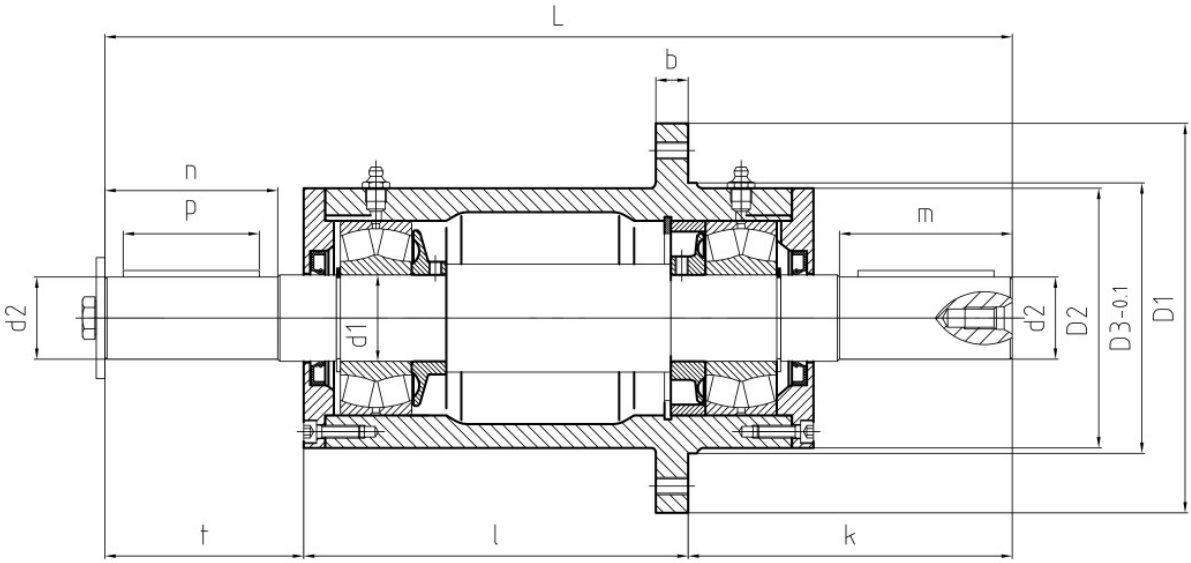

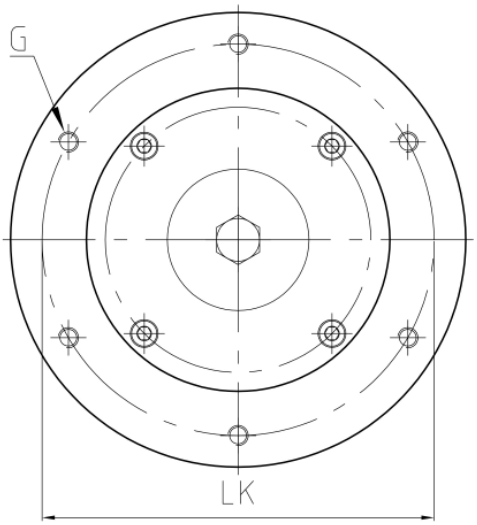

Ref No	d 1	d 2	D1	D2	D3	LK	G	n	m	k	l	t	b	L	p	Weight kg
ZLF 30 HT	30	28	150	100	105	130	4xM8	60	60	120	148	72	15	340	40	5,60
ZLF 35 HT	35	32	180	120	125	155	6xM8	60	60	130	178	72	15	380	40	6,00
ZLF 40 HT	40	38	180	120	125	155	6xm8	80	80	150	178	92	15	420	63	7,20
ZLF 45 HT	45	40	200	140	145	175	6xM8	80	80	160	178	92	15	440	63	8,00

	Bearings
ZLF 30 HT	2 x 22203 C3
ZLF 35 HT	2 x 22207 C3
ZLF 40 HT	2 x 22308 C3
ZLF 45 HT	2 x 22309 C3

Plummer Block Housings Series GOS/GOF for oil lubrication (A)

The plummer block housings series GOS/GOF are housings for high speeds and/or temperatures. These housings are equipped with oil splash ring lubrication and mainly used in fan assemblies.

GOS/GOF plummer block housings are manufactured from Grey Cast Iron GG 25. Housings from GGG 40 or GS 45 are also available. The oil splash ring is made from steel.

The sealing of these housings is guaranteed by labyrinth seals. Where used as an end bearing (Arrangement A) a closed end cover from grey cast iron is supplied instead of the labyrinth seal for one side.

Alternatively the housings can be used for floating or locating bearings.

Air vents and oil level gauges are supplied with the housings.

The only difference between GOS and GOF housings are their different overall dimensions and the construction of connecting the upper and lower parts of the housings.

On request the plummer block units series GOF can be supplied with oil circulating lubrication designated as GUF.

Plummer Block Housings (split)

Series GOS 2

with oil splash ring lubrication for spherical roller bearings with cylindrical bore

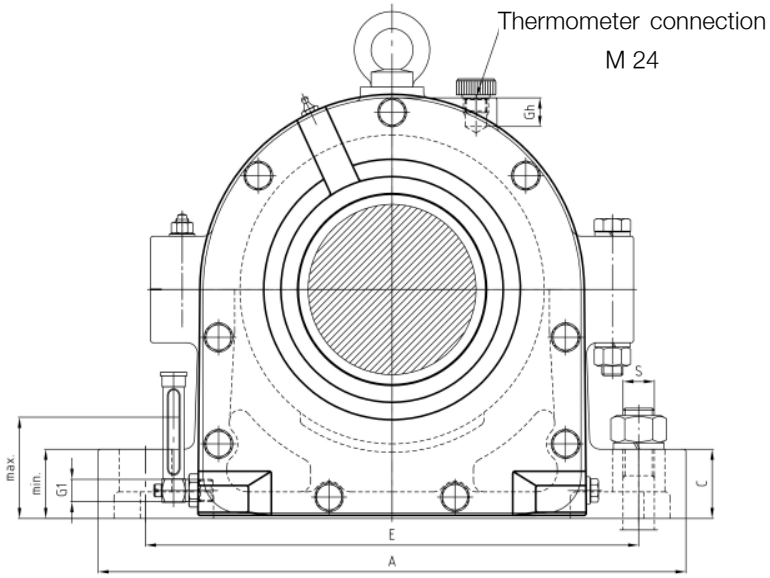

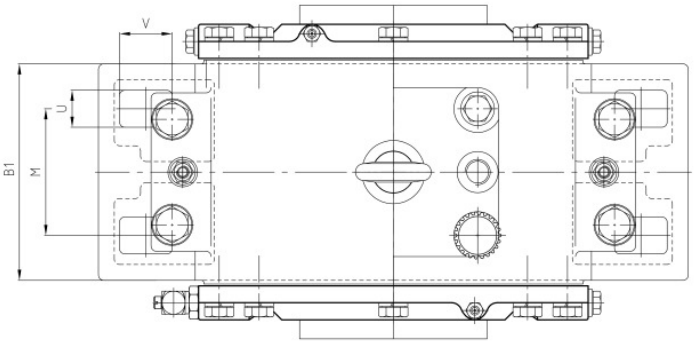

Housing Ref No	Shaft d	d_1	d_2	H_1	H	A	E	C	S	S_1	V	U	M	B_1	B	L	L_1	L_2	A_1	G_1	G_2	G_h
												mm										
GOS 217	85	83	96	125	230	330	260	35	M20	5	40	24	60	110	182	180	172,5	90,0	7,5	R½	R⅜	27
GOS 218	90	88	100	135	245	360	290	45	M20	5	40	24	70	120	190	190	180,0	95,0	10,0	R½	R⅜	27
GOS 219	95	93	105	140	255	360	290	45	M20	5	40	24	80	135	210	200	192,0	100,0	8,0	R½	R⅜	27
GOS 220	100	98	110	145	270	400	320	50	M24	5	45	28	75	130	205	206	196,0	103,0	10,0	R½	R½	27
GOS 222	110	108	120	160	290	420	347	50	M24	5	45	28	75	145	216	229	216,0	114,5	13,0	R½	R½	27
GOS 224	120	118	135	170	315	420	347	55	M24	8	45	28	90	170	245	276	258,0	138,0	18,0	R½	R½	27
GOS 226	130	128	145	180	335	450	377	60	M24	8	45	28	100	180	260	270	255,0	135,0	15,0	R½	R½	32
GOS 228	140	138	160	190	355	500	415	65	M30	8	45	35	100	190	265	280	265,0	140,0	15,0	R½	R¾	33
GOS 230	150	148	170	200	375	540	450	65	M30	8	50	35	115	190	265	280	265,0	140,0	15,0	R½	R¾	44
GOS 232	160	158	178	215	405	560	470	65	M30	10	50	35	120	205	280	316	298,0	158,0	18,0	R½	R¾	38
GOS 234	170	168	195	235	440	610	515	70	M30	10	55	35	130	230	310	350	330,0	175,0	20,0	R½	R¾	46
GOS 236	180	177	205	245	455	650	545	75	M30	10	65	35	150	240	320	360	340,0	180,0	20,0	R½	R¾	44
GOS 238	190	188	220	260	480	720	590	85	M36	12	70	42	150	250	335	370	350,0	185,0	20,0	R½	R¾	50
GOS 240	200	198	227	275	510	730	600	85	M36	12	70	42	160	260	350	378	358,0	189,0	20,0	R½	R¾	44
GOS 244	220	218	255	305	565	820	670	95	M36	12	70	42	180	280	370	404	384,5	202,0	19,5	R½	R¾	48
GOS 248	240	238	270	340	625	900	740	100	M36	12	80	42	190	290	380	420	400,0	210,0	20,0	R½	R¾	56

Plummer Block Housings (split)

Series GOS 2

with oil splash ring lubrication for spherical roller bearings with cylindrical bore

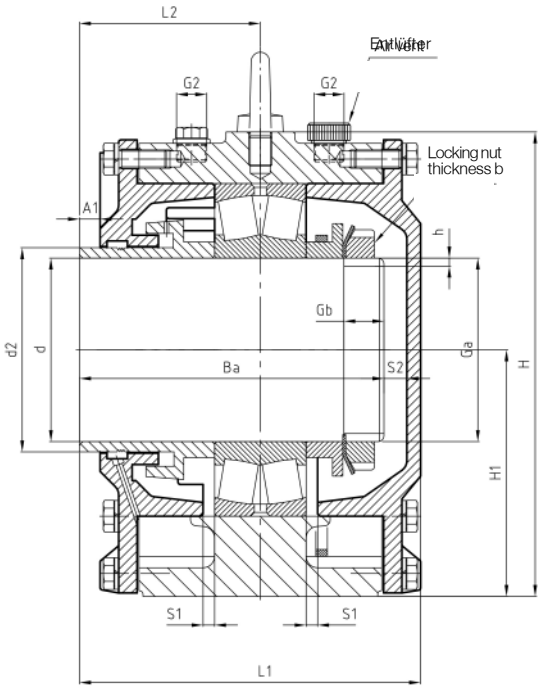

Arrangement AF

Arrangement AL

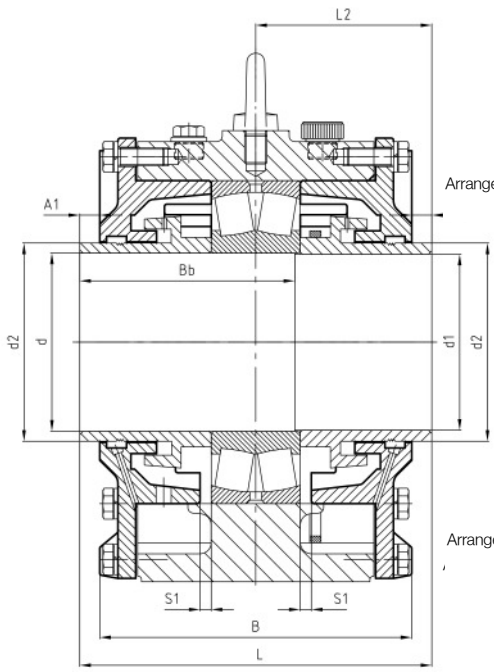

Arrangement BF

Arrangement BL

Bearing Ref	Connection Dimensions B_a	B_b	G_a	G_b	b	h	r	s_2	Oil Volume Liter	Oil level max.	min	Locking Nut	Safety Washer	Weight Arrangement A kg	B
	mm									mm					
22217	150	105	M 85x2	22	11	4	1,6	14,5	0,7	63	42	KM 17	MB 17	22,5	23,5
22218	161	112	M 90x2	23	11	4	1,6	11,0	0,8	68	45	KM 18	MB 18	35,0	37,0
22219	171	118	M 95x2	24	11	4	1,6	11,0	0,9	70	50	KM 19	MB 19	39,0	41,0
22220	177	123	M 100x2	25	13	4	1,6	9,0	1,0	70	50	KM 20	MB 20	44,0	46,0
22222	192	138	M 110x2	26	13	5	1,6	14,0	1,3	70	50	KM 22	MB 22	54,0	57,0
22224	225	164	M 120x2	28	15	6	1,6	23,0	1,7	80	60	KM 24	MB 24	74,0	76,0
22226	226	164	M 130x2	30	15	6	2,5	19,0	2,3	85	60	KM 26	MB 26	84,0	89,0
22228	234	170	M 140x2	30	17	6	2,5	19,0	2,4	85	60	KM 28	MB 28	107,0	114,0
22230	239	173	M 150x2	32	17	6	2,5	16,0	2,8	90	60	KM 30	MB 30	125,0	131,0
22232	266	193	M 160x3	35	19	7	2,5	20,0	3,3	95	65	KM 32	MB 32	154,0	162,0
22234	290	213	M 170x3	37	19	7	3,0	28,0	5,0	105	75	KM 34	MB 34	189,0	197,0
22236	296	218	M 180x3	38	21	7	5,0	32,0	5,2	115	80	KM 36	MB 36	208,0	217,0
22238	317	226	M 190x3	39	21	7	6,0	18,0	5,8	120	85	KM 38	MB 38	238,0	249,0
22240	315	233	M 200x3	40	21	7	6,0	28,0	7,0	125	85	KM 40	MB 40	281,0	294,0
22244	342	251	Tr 220x4	44	25	8	6,0	27,0	8,5	140	95	HM 44T	MB 44	371,0	392,0
22248	360	266	Tr 240x4	47	25	8	6,0	25,0	9,5	155	110	HM 48T	MB 48	445,0	475,0

Plummer Block Housings (split)

Series GOS 5

with oil splash ring lubrication for spherical roller bearings with adapter sleeve

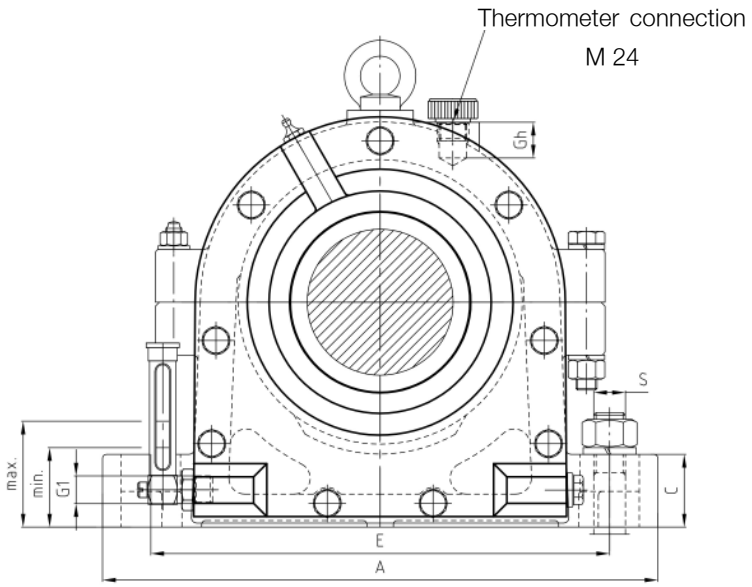

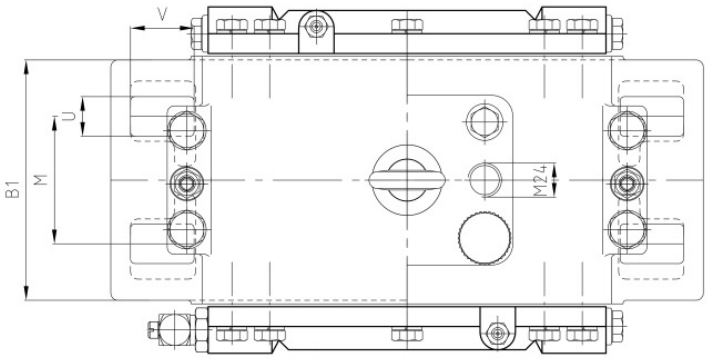

Housing Ref No	Shaft d	d_2	H_1	H	A	E	C	S	S_1	V	U	M	B_1	B	L	L_1	L_2	A_1	G_1	G_2	G_h
										mm											
GOS 517	75	96	125	230	330	260	35	M20	5	40	24	60	110	182	180	172,5	90,0	7,5	R½	R⅜	27
GOS 518	80	100	135	245	360	290	45	M20	5	40	24	70	120	190	190	180,0	95,0	10,0	R½	R⅜	27
GOS 519	85	105	140	255	360	290	40	M20	5	40	24	80	135	210	200	192,0	100,0	8,0	R½	R⅜	27
GOS 520	90	110	145	270	400	320	50	M24	5	45	28	75	130	205	206	196,0	103,0	10,0	R½	R½	27
GOS 522	100	120	160	290	420	347	50	M24	5	45	28	75	145	216	229	216,0	114,5	13,0	R½	R½	27
GOS 524	110	135	170	315	420	347	55	M24	8	45	28	90	170	245	276	258,0	138,0	18,0	R½	R½	27
GOS 526	115	145	180	335	450	377	60	M24	8	45	28	100	180	260	270	255,0	135,0	15,0	R½	R½	32
GOS 528	125	160	190	355	500	415	65	M30	8	45	35	100	190	265	280	265,0	140,0	15,0	R½	R¾	33
GOS 530	135	170	200	375	540	450	65	M30	8	50	35	115	190	265	280	265,0	140,0	15,0	R½	R¾	44
GOS 532	140	178	215	405	560	470	65	M30	10	50	35	120	205	280	316	298,0	158,0	18,0	R½	R¾	38
GOS 534	150	195	235	440	610	515	70	M30	10	55	35	130	230	310	350	330,0	175,0	20,0	R½	R¾	46
GOS 536	160	205	245	455	650	545	75	M30	10	65	35	150	240	320	360	340,0	180,0	20,0	R½	R¾	44
GOS 538	170	220	260	480	720	590	85	M36	12	70	42	150	250	335	370	350,0	185,0	20,0	R½	R¾	50
GOS 540	180	227	275	510	730	600	85	M36	12	70	42	160	260	350	378	35,08	189,0	20,0	R½	R¾	44
GOS 544	200	255	305	565	820	670	95	M36	12	80	42	180	280	370	404	384,5	202,0	19,5	R½	R¾	48
GOS 548	220	270	340	625	900	740	100	M36	12	80	42	190	290	380	420	400,0	210,0	20,0	R½	R¾	56

Plummer Block Housings (split)

Series GOS 5

with oil splash ring lubrication for spherical roller bearings with adapter sleeve

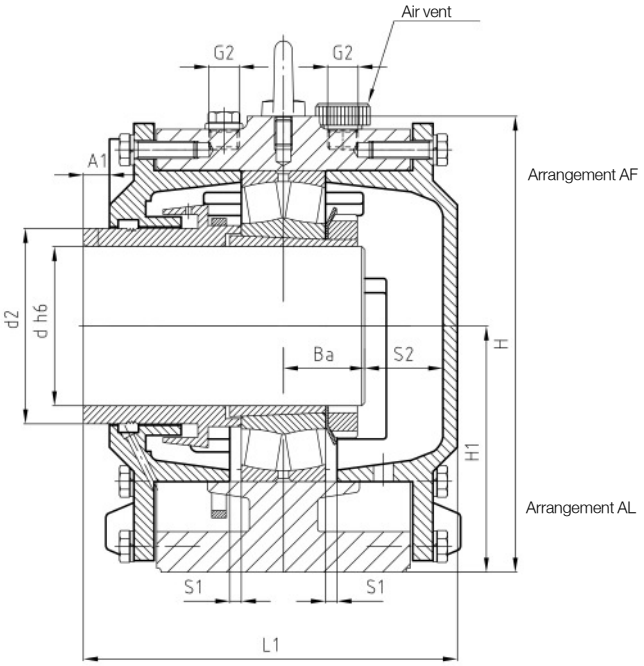

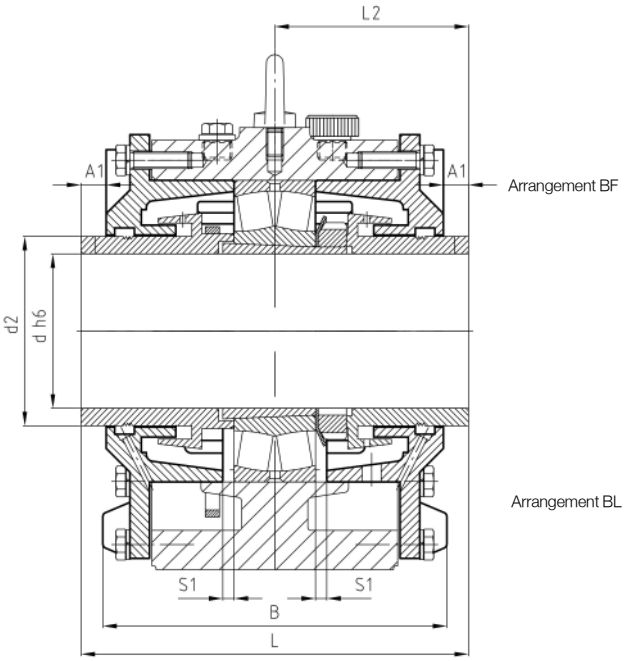

Bearing Ref	B_a mm	S_2	Oil Volume Liter	Oil level max. mm	Oil level min mm	Matching adapter sleeve	Weight Arrangement A kg	Weight Arrangement B kg
22217 K	40	34,5	0,7	63	42	H 317	33	34
22218 K	42	35,0	0,8	68	45	H 318	38	39
22219 K	44	38,0	0,9	70	50	H 319	40	42
22220 K	46	37,0	1,0	70	50	H 320	45	47
22222 K	52	36,5	1,3	77	50	H 322	56	59
22224 K	56	54,0	1,7	80	60	H 3124	71	75
22226 K	58	52,0	2,3	85	60	H 3126	88	94
22228 K	63	51,0	2,4	85	60	H 3128	113	119
22230 K	66	49,0	2,8	90	60	H 3130	131	137
22232 K	73	55,0	3,3	95	65	H 3132	159	166
22234 K	77	65,0	5,0	105	75	H 3134	198	208
22236 K	78	70,0	5,2	115	80	H 3136	215	225
22238 K	82	68,0	5,8	120	85	H 3138	244	255
22240 K	86	69,0	7,0	125	85	H 3140	286	303
22244 K	95	72,0	8,5	140	95	H 3144	385	403
22248 K	105	70,0	9,5	155	110	H 3148	455	490

Plummer Block Housings (split)

Series GOS 3

with oil splash ring lubrication for spherical roller bearings with cylindrical bore

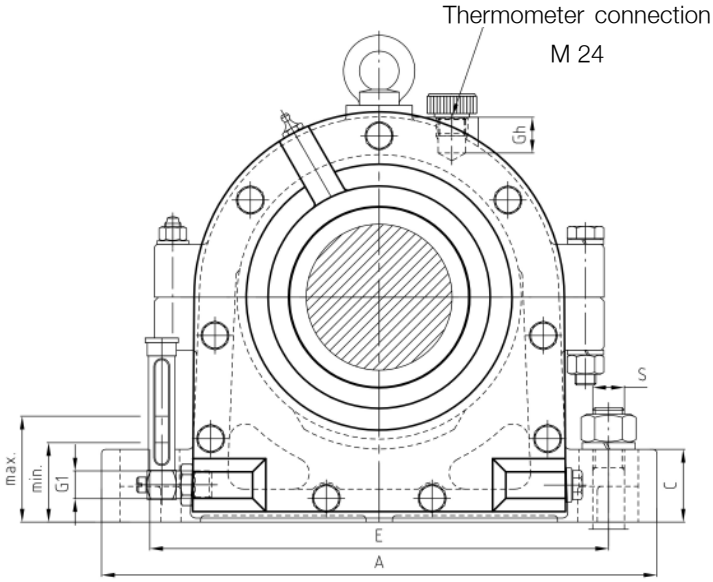

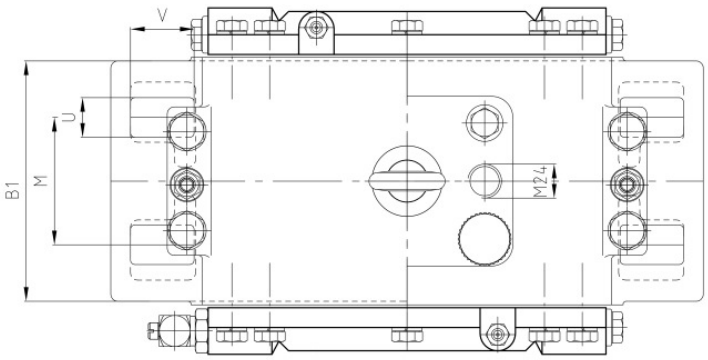

Housing Ref No	Shaft d	d_1	d_2	H_1	H	A	E	C	S	S_1	V	U	M	B_1	B	L	L_1	L_2	A_1	G_1	G_2	G_h
											mm											
GOS 310	50	49	58	95	168	270	210	30	M16	3	30	19	50	92	145	150	142,5	75,0	7,5	R1/4	R3/8	27
GOS 311	55	53	65	100	180	290	233	30	M16	3	33	19	50	95	148	155	147,5	77,5	7,5	R1/4	R3/8	27
GOS 312	60	58	70	110	198	290	230	30	M16	5	34	19	55	100	152	170	162,5	85,0	7,5	R1/4	R3/8	27
GOS 314	70	65	80	125	230	330	260	35	M20	5	40	24	60	110	182	180	172,5	90,0	7,5	R1/2	R3/8	27
GOS 316	80	78	95	140	255	360	290	40	M20	5	40	24	80	135	210	214	199,0	107,0	15,0	R1/2	R3/8	27
GOS 318	90	88	104	155	280	400	317	50	M24	5	45	28	95	165	246	240	225,0	120,0	15,0	R1/2	R1/2	32
GOS 320	100	98	115	170	315	420	347	55	M24	8	45	28	90	170	245	270	255,0	135,0	15,0	R1/2	R1/2	27
GOS 322	110	108	130	190	355	500	415	65	M30	8	45	35	100	190	265	290	270,0	145,0	20,0	R1/2	R3/4	33
GOS 324	120	118	140	200	375	540	450	65	M30	8	50	35	115	190	265	306	285,5	153,0	20,5	R1/2	R3/4	44
GOS 326	130	128	150	215	405	560	470	65	M30	8	50	35	120	205	285	320	300,0	160,0	20,0	R1/2	R3/4	38
GOS 328	140	138	165	230	425	630	510	80	M30	8	60	35	120	220	300	340	320,0	170,0	20,0	R1/2	R3/4	42
GOS 330	150	148	175	245	455	650	545	75	M30	10	65	35	150	240	320	350	335,0	175,0	15,0	R1/2	R3/4	44
GOS 332	160	158	190	260	480	720	590	85	M36	10	70	42	150	250	335	370	350,0	185,0	20,0	R1/2	R3/4	50
GOS 334	170	168	197	275	510	730	600	85	M36	12	70	42	160	260	350	378	358,0	189,0	20,0	R1/2	R3/4	44
GOS 336	180	178	210	305	565	820	670	95	M36	12	80	42	180	280	370	404	384,5	202,0	19,5	R1/2	R3/4	48

Plummer Block Housings (split)

Series GOS 3

with oil splash ring lubrication for spherical roller bearings with cylindrical bore

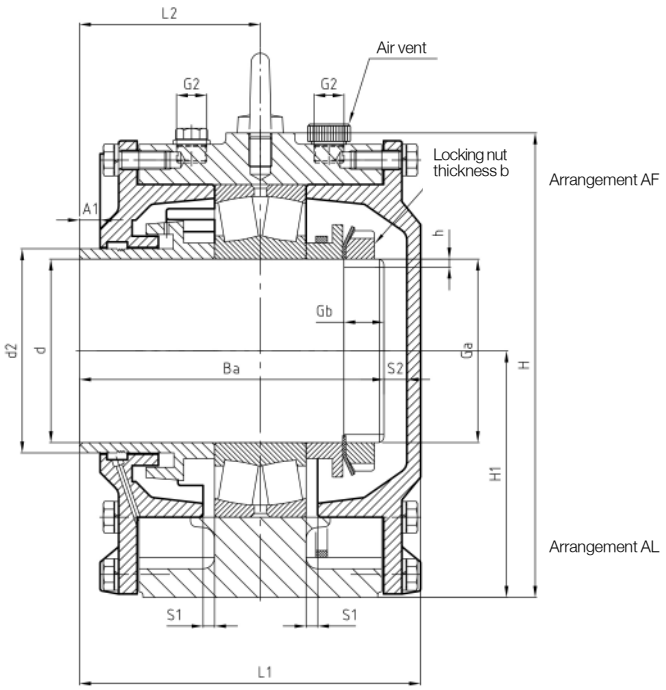

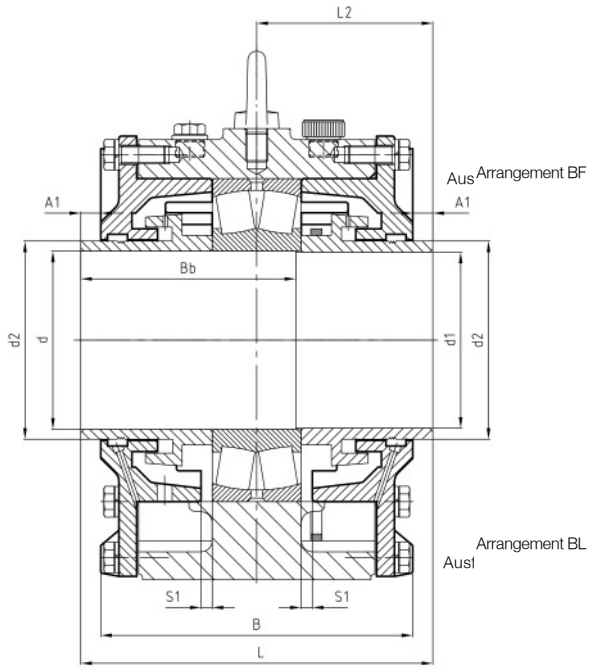

Bearing Ref	Connection Dimensions B_a	B_b	G_a	G_b	b	h	r	s_2	Oil Volume Liter	Oil level max.	min	Locking Nut	Safety Washer	Weight Arrangement A kg	B
	mm									mm					
22310	128	92	M50x1,5	18	7	3	1,6	8,5	0,3	53	33	KM 10	MB 10	22	23
22311	134	96	M55x2	17	9	3	1,6	7,5	0,4	53	37	KM 11	MB 11	24	26
22312	147	105	M60x2	17	9	3	1,6	7,5	0,5	60	40	KM 12	MB 12	25	27
22314	156	112	M70x2	18	9	4	1,6	8,5	0,6	65	45	KM 14	MB 14	31	32
22316	181	133	M80x2	22	11	4	1,6	8,0	1,0	73	45	KM 16	MB 16	39	42
22318	198	148	M90x2	22	11	4	1,6	17,0	1,4	80	55	KM 18	MB 18	51	53
22320	226	168	M100x2	27	13	4	2,5	19,0	1,8	85	57	KM 20	MB 20	70	73
22322	243	180	M110x2	28	13	5	2,5	17,0	2,0	95	67	KM 22	MB 22	105	110
22324	254	192	M120x2	28	15	6	2,5	19,0	2,8	100	65	KM 24	MB 24	125	127
22326	265	202	M130x2	30	15	6	3,0	26,0	3,4	105	70	KM 26	MB 26	152	158
22328	287	215	M140x2	30	17	6	3,0	21,0	4,2	115	70	KM 28	MB 28	180	188
22330	292	225	M150x2	33	17	6	6,0	31,0	6,0	120	75	KM 30	MB 30	201	211
22332	315	240	M160x3	36	19	7	6,0	20,0	6,5	125	80	KM 32	MB 32	230	240
22334	321	244	M170x3	37	19	7	6,0	22,0	7,5	130	85	KM 34	MB 34	270	283
22336	342	260	M180x3	38	21	7	6,0	27,0	10,5	155	90	KM 36	MB 36	360	380

Plummer Block Housings (split)

Series GOS 6

with oil splash ring lubrication for spherical roller bearings

with adapter sleeve

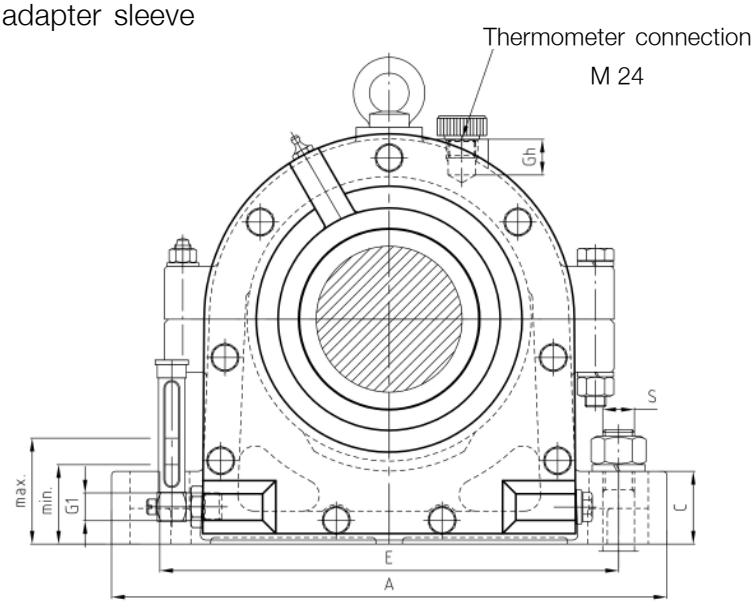

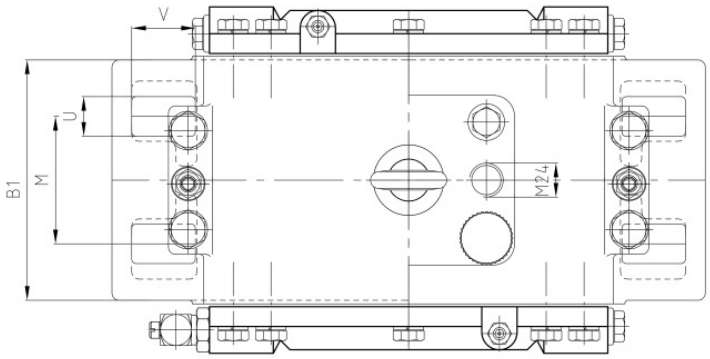

Housing Ref No	Shaft d	d_2	H_1	H	A	E	C	S	S_1	V	U	M mm	B_1	B	L	L_1	L_2	A_1	G_1	G_2	G_h
GOS 610	45	58	95	168	270	210	30	M16	3	30	19	50	92	145	150	142,5	75,0	7,5	R¼	R⅜	27
GOS 611	50	65	100	180	290	233	30	M16	3	33	19	50	95	148	155	147,5	77,5	7,5	R¼	R⅜	27
GOS 612	55	70	110	198	290	230	30	M16	5	34	19	55	100	152	170	162,5	85,0	7,5	R¼	R⅜	27
GOS 614	60	80	125	230	330	260	35	M20	5	40	24	60	110	182	180	172,5	90,0	7,5	R½	R⅜	27
GOS 616	70	95	140	255	360	290	40	M20	5	40	24	80	135	210	214	199,0	107,0	15,0	R½	R⅜	27
GOS 618	80	104	155	280	400	317	50	M24	5	45	28	95	165	246	240	225,0	120,0	15,0	R½	R½	32
GOS 620	90	115	170	315	420	347	55	M24	8	45	28	90	170	245	270	255,0	135,0	15,0	R½	R½	27
GOS 622	100	130	190	355	500	415	65	M30	8	45	35	100	190	265	290	270,0	145,0	20,0	R½	R¾	33
GOS 624	110	140	200	375	540	450	65	M30	8	50	35	115	190	265	306	285,5	153,0	20,5	R½	R¾	44
GOS 626	115	150	215	405	560	470	65	M30	8	50	35	120	205	285	320	300,0	160,0	20,0	R½	R¾	38
GOS 628	125	165	230	425	630	510	80	M30	8	60	35	120	220	300	340	320,0	170,0	20,0	R½	R¾	42
GOS 630	135	175	245	455	650	545	75	M30	10	65	35	150	240	320	350	335,0	175,0	15,0	R½	R¾	44
GOS 632	140	190	260	480	720	590	85	M36	10	70	42	150	250	335	370	350,0	185,0	20,0	R½	R¾	50
GOS 634	150	197	275	510	730	600	85	M36	12	70	42	160	260	350	378	358,0	189,0	20,0	R½	R¾	44
GOS 636	160	210	305	565	820	670	95	M36	12	80	42	180	280	370	404	384,5	202,0	19,5	R½	R¾	48

Plummer Block Housings (split)

Series GOS 6

with oil splash ring lubrication for spherical roller bearings with adapter sleeve

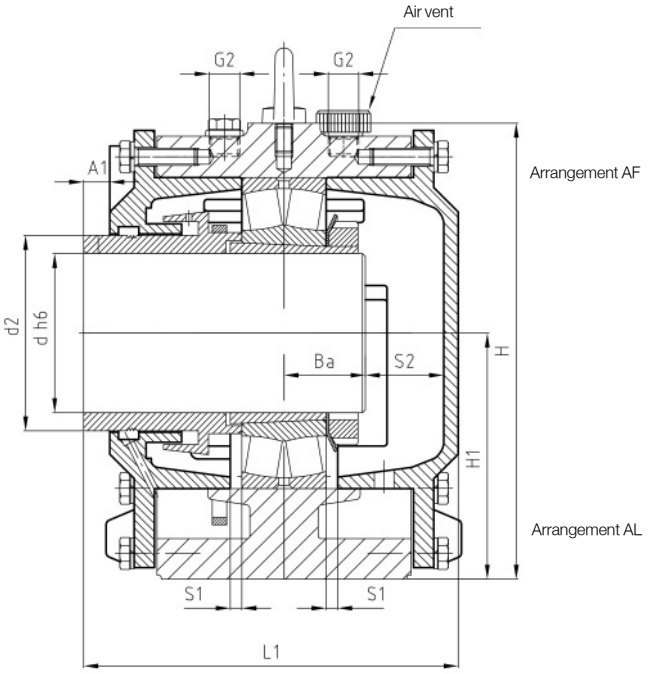

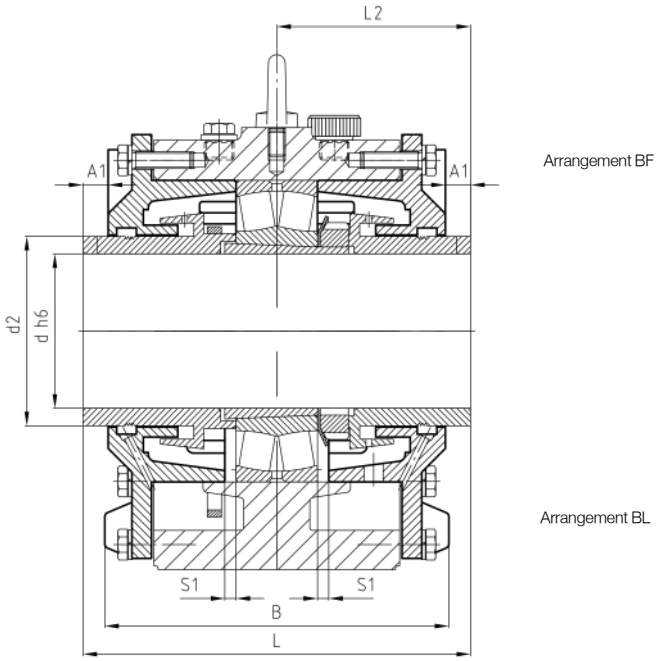

Bearing Ref	B_a	S_2	Oil Volume	Oil level max	Oil level min	Matching adapter	Weight Arrangement A	Weight Arrangement B
	mm		Liter	mm		sleeve	kg	
22310 K	36	25	0,3	53	33	H 2310	23	24
22311 K	37	27	0,4	53	37	H 2311	25	26
22312 K	40	29	0,5	60	40	H 2312	25	26
22314 K	43	31	0,6	65	45	H 2314	32	33
22316 K	50	32	1,0	73	45	H 2316	41	43
22318 K	54	41	1,4	80	55	H 2318	52	55
22320 K	62	48	1,8	85	57	H 2320	71	74
22322 K	66	49	2,0	95	67	H 2322	107	112
22324 K	70	50	2,8	100	65	H 2324	124	130
22326 K	75	53	3,4	105	70	H 2326	155	163
22328 K	80	58	4,2	115	70	H 2328	183	190
22330 K	85	63	6,0	120	75	H 2330	207	215
22332 K	90	60	6,5	125	80	H 2332	237	246
22334 K	94	60	7,5	130	85	H 2334	280	293
22336 K	98	69	10,5	155	90	H 2336	375	390

Plummer Block Housings (split)

Series GOF 2
with oil splash ring lubrication

Series GUF 2
circulating oil lubrication for
Spherical roller bearings with cylindrical bore

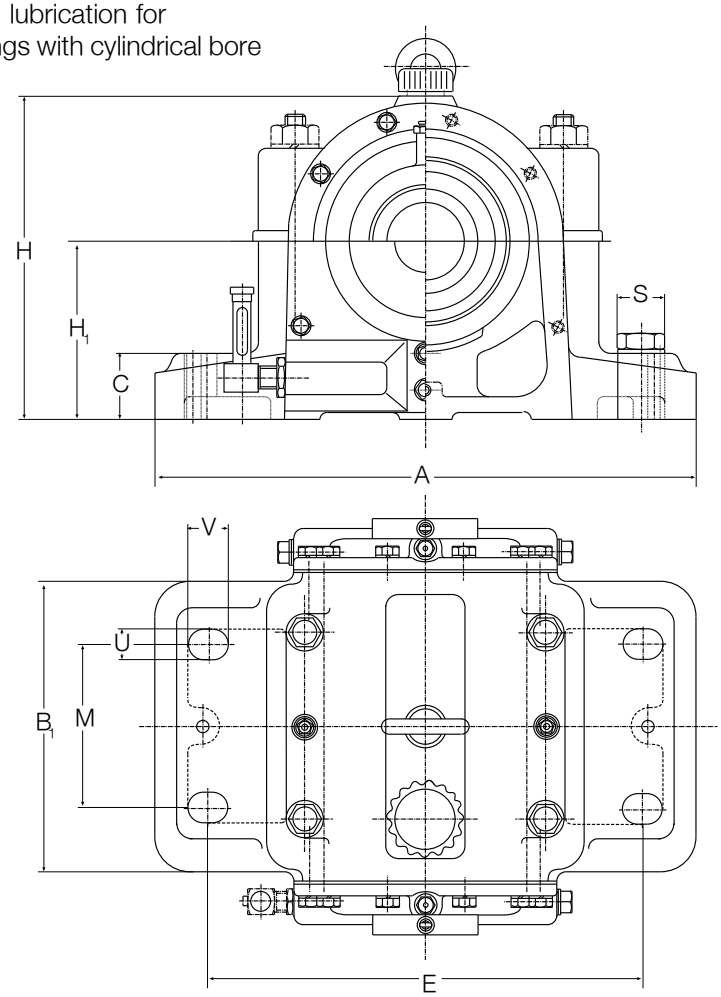

Housing Ref No	Shaft d	d_1	d_2	d_3	H_1	H	A	E	C	S	M	B mm	B_1	B_2	B_3	U	V	L	l_1	Weight kg
GOF 214	70	67	75	M 70x2	125	215	350	290	45	M16	60	190	110	120	193	20	30	45	17	30
GOF 217	85	82	90	M 85x2	135	240	410	340	48	M20	80	225	150	160	235	25	35	62	19	45
GOF 218	90	87	95	M 90x2	135	250	410	340	48	M20	80	225	150	160	235	25	35	61	20	50
GOF 219	95	92	100	M 95x2	150	275	490	400	50	M24	80	250	160	170	260	30	45	67	20	62
GOF 220	100	97	110	M100x2	150	280	490	400	50	M24	80	250	160	170	265	30	45	60	22	68
GOF 222	110	107	116	M110x2	165	305	510	420	50	M24	80	250	165	175	265	30	45	70	22	75
GOF 224	120	117	126	M120x2	175	325	550	440	55	M30	80	250	165	175	265	36	50	72	23	80
GOF 226	130	127	136	M130x2	190	350	570	460	65	M30	90	260	175	185	275	36	50	77	24	90
GOF 228	140	137	150	M140x2	190	365	570	460	65	M30	100	260	175	180	275	36	50	73	24	100
GOF 230	150	147	156	M150x2	220	400	660	530	70	M36	100	275	190	200	290	42	60	82	27	120
GOF 232	160	155	170	M160x3	220	410	660	530	70	M36	110	290	200	210	305	42	60	80	30	135
GOF 234	170	165	176	M170x3	260	465	710	580	85	M36	110	300	200	210	315	42	60	90	30	160
GOF 236	180	175	190	M180x3	260	465	710	580	85	M36	110	300	200	210	315	42	60	90	32	165
GOF 238	190	185	196	M190x3	270	485	820	670	90	M42	130	350	240	250	365	48	70	95	32	240
GOF 240	200	195	210	M200x3	280	510	830	670	90	M42	130	360	240	260	375	48	70	100	34	250
GOF 244	220	212	230	Tr220x4	310	565	880	720	105	M42	130	380	240	280	395	48	70	108	36	310
GOF 248	240	235	260	Tr240x4	340	625	980	820	120	M42	165	400	280	300	415	48	70	120	40	390

Plummer Block Housings (split)

Series GOF 2
with oil splash ring lubrication

Series GUF 2
circulating oil lubrication for
Spherical roller bearings with cylindrical bore

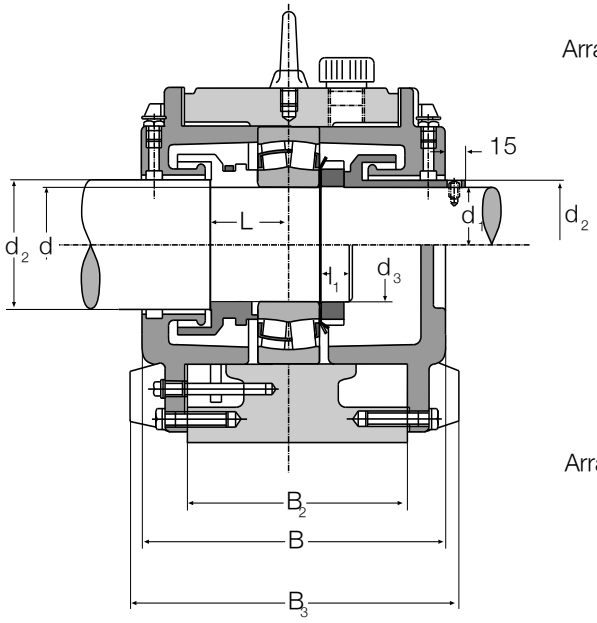

Housing Ref No	Matching Bearing	Locking Nut	Safety Washer	Oil volume Liter	Oil level min - max mm
GOF 214	22214	KM 14	MB 14	1,0	50 - 65
GOF 217	22217	KM 17	MB 17	1,2	50 - 65
GOF 218	22218	KM 18	MB 18	1,3	45 - 60
GOF 219	22219	KM 19	MB 19	1,4	55 - 70
GOF 220	22220	KM 20	MB 20	1,5	50 - 65
GOF 222	22222	KM 22	MB 22	1,9	50 - 70
GOF 224	22224	KM 24	MB 24	2,1	50 - 70
GOF 226	22226	KM 26	MB 26	2,1	55 - 75
GOF 228	22228	KM 28	MB 28	3,5	55 - 70
GOF 230	22230	KM 30	MB 30	4,0	65 - 90
GOF 232	22232	KM 32	MB 32	4,0	60 - 90
GOF 234	22234	KM 34	MB 34	5,7	90 - 105
GOF 236	22236	KM 36	MB 36	5,7	75 - 110
GOF 238	22238	KM 38	MB 38	7,0	70 - 100
GOF 240	22240	KM 40	MB 40	8,0	75 - 100
GOF 244	22244	KM 44	MB 44	10,0	80 - 110
GOF 248	22248	KM 48	MB 48	14,0	100 - 125

Plummer Block Housings (split)

Series GOF 5
with oil splash ring lubrication

Series GUF 5
circulating oil lubrication for
Spherical roller bearings with adapter sleeve

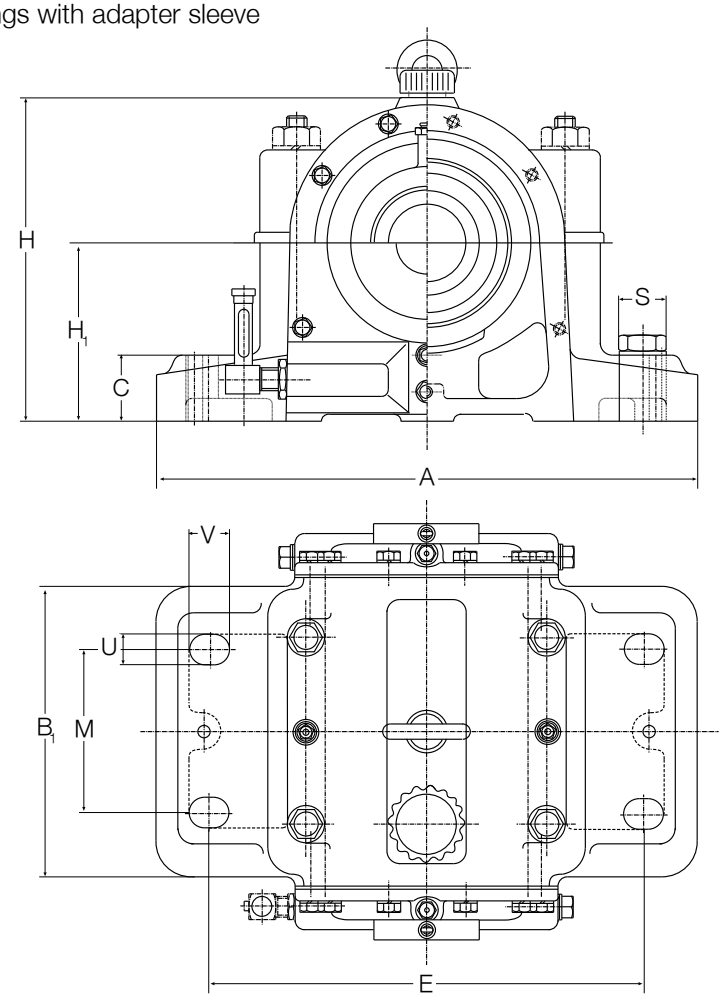

Housing Ref No	Shaft d	H_1	H	A	E	C	S	M	B mm	B_1	B_2	B_3	U	V	I	Weight kg
GOF 517	75	135	240	410	340	48	M 20	80	225	150	160	235	25	35	42	45
GOF 518	80	135	250	410	340	48	M 20	80	225	150	160	235	25	35	45	50
GOF 519	85	150	275	490	400	50	M 24	80	250	160	170	260	30	45	45	62
GOF 520	90	150	280	490	400	50	M 24	80	250	160	170	265	30	45	50	68
GOF 522	100	165	305	510	420	50	M 24	80	250	165	175	265	30	45	60	75
GOF 524	110	175	325	550	440	55	M 30	80	250	165	175	265	36	50	60	80
GOF 526	115	190	350	570	460	65	M 30	90	260	175	185	275	36	50	65	90
GOF 528	125	190	365	570	460	65	M 30	100	260	175	180	275	36	50	65	100
GOF 530	135	220	400	660	530	70	M 36	100	275	190	200	290	42	60	70	120
GOF 532	140	220	410	660	530	70	M 36	110	290	200	210	305	42	60	75	135
GOF 534	150	260	465	710	580	85	M 36	110	300	200	210	305	42	60	80	160
GOF 536	160	260	465	710	580	85	M 36	110	300	200	210	305	42	60	80	165
GOF 538	170	270	485	820	670	90	M 42	130	350	240	250	365	48	70	85	240
GOF 540	180	280	510	830	670	90	M 42	130	360	240	260	375	48	70	90	250
GOF 544	200	310	565	880	720	105	M 42	130	380	240	280	395	48	70	100	310
GOF 548	220	340	625	980	820	120	M 42	165	400	280	300	415	48	70	110	390

Plummer Block Housings (split)

Series GOF 5
with oil splash ring lubrication

Series GUF 5
circulationg oil lubrication for
Spherical roller bearings with adapter sleeve

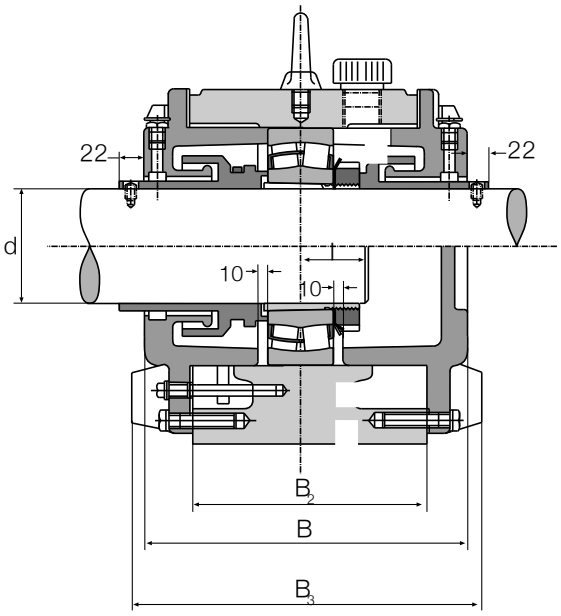

Arrangement BF

Arrangement AL

Housing Ref No	Matching Bearing	Locking Nut	Oil volume Liter	Oil level min - max mm
GOF 517	22217 K	H 317	1,2	50 - 65
GOF 518	22218 K	H 318	1,3	45 - 60
GOF 519	22219 K	H 319	1,4	55 - 70
GOF 520	22220 K	H 320	1,5	50 - 65
GOF 522	22222 K	H 322	1,9	50 - 70
GOF 524	22224 K	H 3124	2,1	50 - 70
GOF 526	22226 K	H 3126	2,1	55 - 70
GOF 528	22228 K	H 3128	3,5	55 - 75
GOF 530	22230 K	H 3130	4,0	65 - 90
GOF 532	22232 K	H 3132	4,0	60 - 80
GOF 534	22234 K	H 3134	5,7	90 - 105
GOF 536	22236 K	H 3136	5,7	75 - 110
GOF 538	22238 K	H 3138	7,0	70 - 100
GOF 540	22240 K	H 3140	8,0	75 - 100
GOF 544	22244 K	H 3144	10,0	80 - 110
GOF 548	22248 K	H 3148	14,0	100 - 125

Tension Bearing Housings

Series SBL

for Self aligning ball bearings with Adapter sleeve

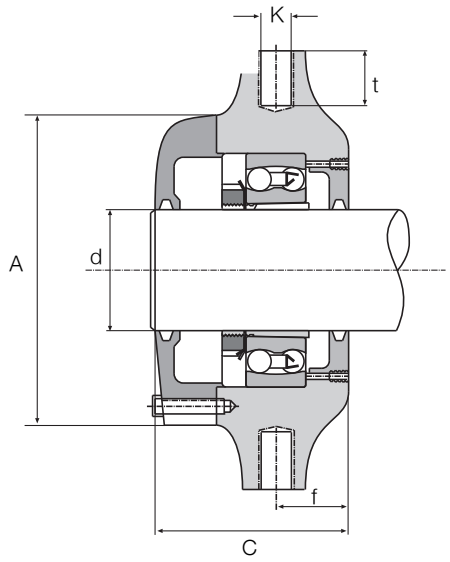

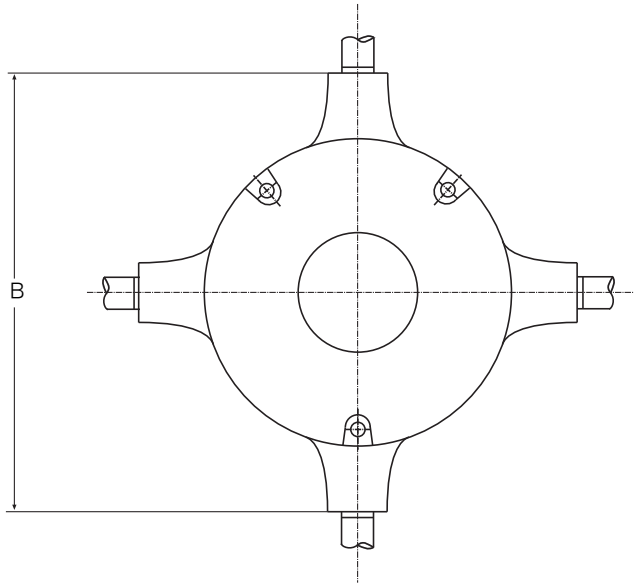

Housing Ref No	Weight kg	d	A	B	C mm	t	f	K	Quantity Tensioners	Matching Bearing with adapter sleeve	
SBL 25	2,3	25	100	150	70	22	29	R 3/8"	4	1306 K	H 306
SBL 30	2,7	30	120	170	75	25	30	R 1/2"	3	1307 K	H 307
SBL 40	3,8	40	140	190	85	28	32	R 1/2"	4	1309 K	H 309
SBL 50	5,5	50	160	210	95	28	40	R 1/2"	4	1311 K	H 311
SBL 60	9,3	60	185	250	110	32	42	R 1"	4	1313 K	H 313
SBL 70	14,0	70	205	290	130	40	48	R 1"	4	2316 K	H 2316

Coating disk (split)

material Alu 235

The coaling disks are split and provide following advantages:

- simple and fast assembly
- high quality of conducting heat
- ideal transmission of heat
- essential decrease of bearing temperature
- several cooling disks parallel increase the cooling effect

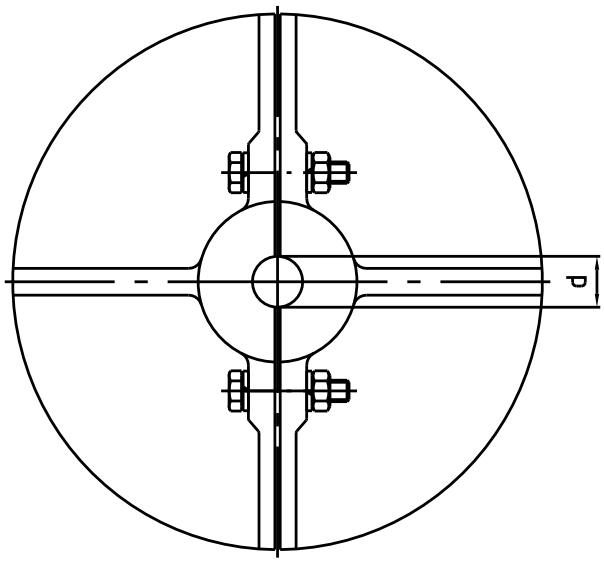

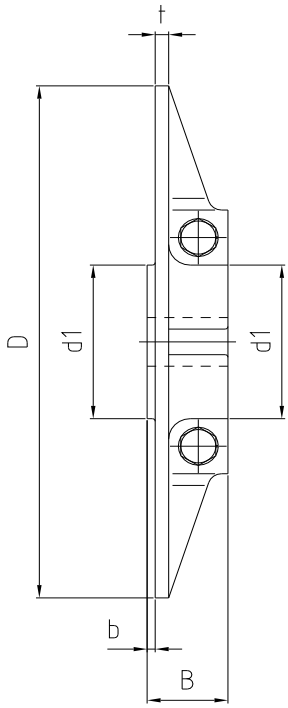

Ref No	D	d1	B	b	t mm	d	d_{max}	B_{min}	D_{min}	N_{max} min	Weight kg
KS 150	150	60	30	3	5	10	50	23	106	8900	0,70
KS 200	200	60	30	3	5	19	50	23	106	6700	1,00
KS 250	250	85	34	3	6	28	70	29	150	5350	2,00
KS 315	112	54	5	7		38	95	39	180	4250	4,00
KS 400	400	145	68	4	8	53	125	45	340	3350	8,50
KS 500	500	180	68	5	10	80	165	48	380	2700	12,50
KS 600	630	225	78	5	11	100	200	52	500	2100	20,00

BTL Plummer Block Housings

BTL Plummer Block Housings are manufactured from material GS45. Material quality GGG or GG is also possible, on request. These housings are solid and suitable for fitting spherical roller bearings with cylindrical bore or with adapter sleeves. Depending on requirements these housings are supplied as either locating or floating bearings.

These housings are equipped with double labyrinth seals (pic. 01) at both ends and designed for grease lubrication. BTL Plummer Block Housings can also be ade with a taconite seal (pic. 02). For necessary regreasing, two grease holes are incorporated midway between the bearings. The labyrinth seals can also be supplied with separate grease holes if required.

STL Drum Take-up Bearing Housings

STL Plummer Block Housings are manufactured from material GS45. Material quality GGG or GG is also possible on request. These housings are split and designed for fitting spherical roller bearings with cylindrical bore or with adapter sleeves. Depending on requirements these housings are supplied as either locating or floating bearings.

HFB Drum Take-up Bearing Housings are equipped with double labyrinth seals at both ends and designed for grease lubrication. For necessary regreasing, two grease holes are incorporated midway between the bearings. The labyrinth seals can also be supplied with separate grease holes if required.

Where used as an end bearing housing (Arrangement A) a cast end cover is fitted instead of the labyrinth cover

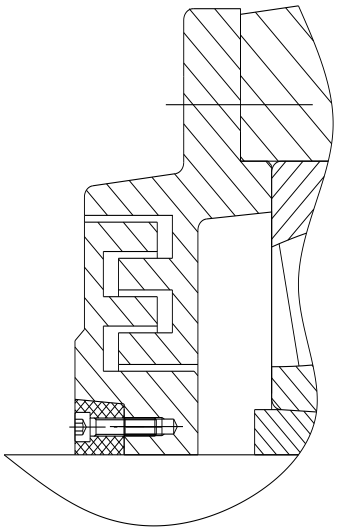

Abb. 01

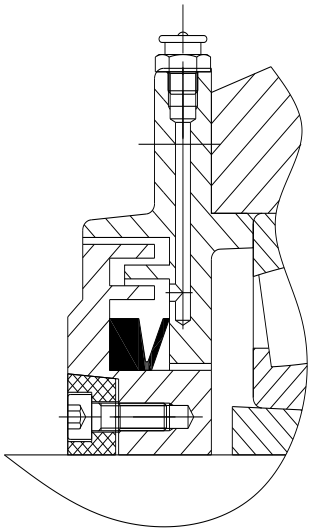

Abb. 02

Plummer Block Bearing Housing

Series BTL

for spherical roller bearings with adapter sleeve

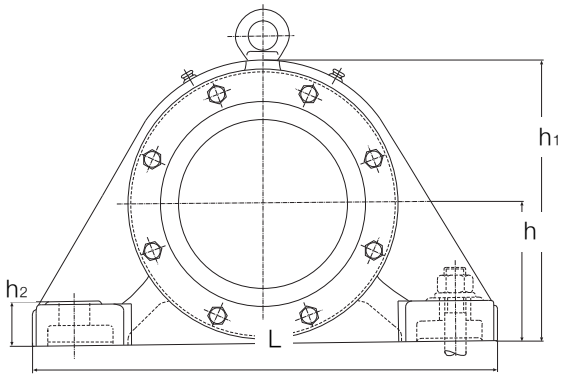

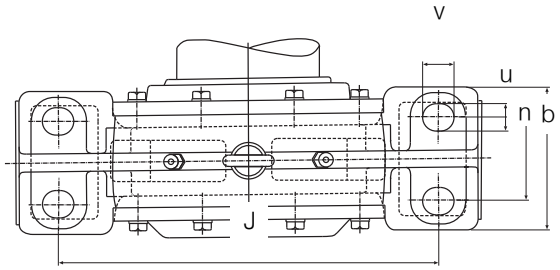

Housing Ref No	d_1	L	b	h_2	J	n	h	h_1 mm	u	v	g_2	g_4	g_3	g_5	g
BTL 2211 K	50	250	80	25	200	40	80	160	15	20	109	35,0	49,0	60,0	50
BTL 2213 K	60	300	100	32	240	50	90	180	19	26	113	48,0	48,0	65,0	50
BTL 2215 K	65	280	80	30	230	40	95	185	19	25	110	45,0	50,0	60,0	50
BTL 2216 K	70	320	100	35	250	55	100	200	23	32	145	58,0	67,0	78,0	60
BTL 2218 K	80	370	110	38	290	60	110	220	23	32	123	51,0	53,0	70,0	55
BTL 2220 K	90	400	120	40	320	65	130	255	30	35	168	63,0	78,0	90,0	65
BTL 3122 K	100	400	150	40	300	80	130	263	25	35	171	83,0	78,0	93,0	80
BTL 2222 K		440	130	42	350	70	140	280	30	35	177	66,5	82,5	94,5	73
BTL 3222 K		440	130	42	350	70	140	280	30	35	194	75,0	91,0	103,0	90
BTL 3024 K	110	370	110	35	300	60	115	230	23	35	146	63,0	63,0	83,0	60
BTL 3124 K		410	150	40	330	80	140	280	25	35	175	75,0	75,0	100,0	85
BTL 2224 K		470	140	42	370	75	150	300	30	35	183	69,0	84,0	99,0	77
BTL 3224 K		470	140	42	370	75	150	300	30	35	201	78,0	93,0	108,0	95
BTL 3026 K	115	410	120	38	340	60	130	260	23	35	156	65,0	68,0	88,0	70
BTL 3126 K		430	150	40	350	80	145	295	25	35	190	85,0	85,0	105,0	90
BTL 2226 K		500	150	45	400	85	160	315	30	40	195	70,0	95,0	100,0	84
BTL 3226 K		500	150	45	400	85	160	315	30	40	211	78,0	103,0	108,0	100
BTL 3028 K	125	430	130	40	360	70	140	275	30	35	156	68,0	68,0	88,0	70
BTL 3128 K		470	160	45	380	85	155	315	23	33	198	95,0	87,0	111,0	95
BTL 2228 K		530	160	50	430	85	170	345	30	42	206	78,0	98,0	108,0	88
BTL 3228 K		530	160	50	430	85	170	345	30	42	226	88,0	108,0	118,0	110
BTL 3030 K	135	455	140	42	370	80	145	290	30	35	176	71,0	78,0	98,0	80
BTL 3130 K		580	200	60	450	110	170	345	30	54	207	93,5	93,5	113,5	102
BTL 2230 K		550	170	54	450	90	180	365	36	45	213	81,5	101,5	111,5	97
BTL 3230 K		550	170	54	450	90	180	365	36	45	236	93,0	113,0	123,0	120
BTL 3032 K	140	480	150	45	390	90	155	310	30	35	181	78,0	78,0	103,0	85
BTL 3132 K		540	200	55	430	110	180	360	30	40	232	107,0	103,0	129,0	110
BTL 2232 K		600	180	58	490	105	190	385	36	45	227	86,0	106,0	121,0	106
BTL 3232 K		600	180	58	490	105	190	385	36	45	251	98,0	118,0	133,0	130
BTL 3034 K	150	510	160	50	420	95	165	330	36	45	191	83,0	83,0	108,0	90
BTL 3134 K		570	200	55	470	110	190	380	36	45	249	113,0	113,0	136,0	120
BTL 2234 K		640	200	62	525	110	200	405	36	45	247	91,0	116,0	131,0	111
BTL 3234 K		640	200	62	525	110	200	405	36	45	271	103,0	128,0	143,0	135

Plummer Block Bearing Housing

Series BTL

for spherical roller bearings with adapter sleeve

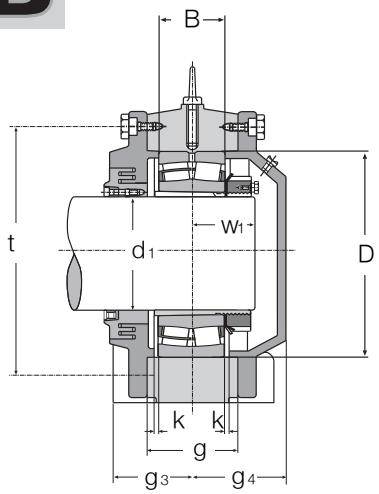

Arrangement AF

Arrangement AL

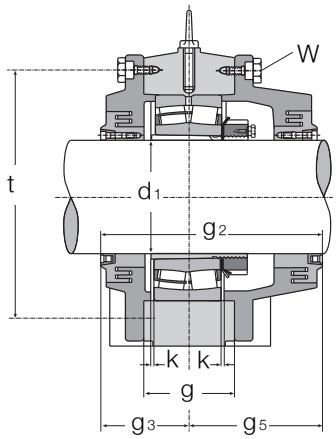

Arrangement BF

Arrangement BL

Matching Bearing Ref	Bearing Dimensions D	B	Mounting Bolts W	Qyt.	Eye Bolt	Overall Dimensions t	k	W_1	Weight with Bearing kg	Sleeve
22211 K	100	25,0	M8	12	M8	122	2,0	27	18	H 311
22213 K	120	31,0	M8	16	M8	156	2,0	32	22	H 313
22215 K	130	31,0	M8	16	M8	150	2,0	33	28	H 315
22216 K	140	33,0	M8	16	M8	155	2,0	36	31	H 316
22218 K	160	40,0	M8	12	M10	185	2,0	42	50	H 318
22220 K	180	46,0	M12	12	M12	205	2,5	50	55	H 320
23122 K	180	56,0	M12	16	M12	215	2,5	63	48	H 3122
22222 K	200	53,0	M12	12	M16	230	2,5	54	60	H 3222
23222 K	200	69,8	M12	12	M16	230	2,5	60	48	H 2322
23024 K	180	46,0	M10	12	M12	200	2,5	48	31	H 3024
23124 K	200	62,0	M12	16	M12	230	2,5	55	60	H 3124
22224 K	215	58,0	M12	12	M16	245	2,5	56	70	H 3124
23224 K	215	76,0	M12	12	M16	245	2,5	63	55	H 2324
23026 K	200	52,0	M10	16	M12	225	2,0	50	39	H 3026
23126 K	210	64,0	M12	16	M12	240	3,0	65	68	H 3126
22226 K	230	64,0	M12	12	M16	260	3,0	57	80	H 3126
23226 K	230	80,0	M12	12	M16	260	3,0	65	70	H 2326
23028 K	210	53,0	M10	16	M12	235	3,0	53	45	H 3028
23128 K	225	68,0	M12	16	M16	260	3,0	74	75	H 3128
22228 K	250	68,0	M16	12	M20	285	3,0	64	95	H 3128
23228 K	250	88,0	M16	12	M20	285	3,0	72	90	H 2328
23030 K	225	56,0	M12	16	M12	250	2,0	55	52	H 3030
23130 K	250	80,0	M12	16	M16	285	2,0	90	95	H 3130
22230 K	270	73,0	M16	12	M20	305	3,0	68	110	H 3130
23230 K	270	96,0	M16	12	M20	305	3,0	80	105	H 2330
23032 K	240	60,0	M12	16	M12	265	2,0	60	65	H 3032 HG
23132 K	270	86,0	M12	16	M12	310	3,0	86	110	H 3132 HG
22232 K	290	80,0	M16	12	M20	330	3,0	72	130	H 3132 HG
23232 K	290	104,0	M16	12	M20	330	3,0	85	130	H 2332 HG
23034 K	260	67,0	M12	16	M12	285	2,0	65	75	H 3034 HG
23134 K	280	88,0	M12	16	M16	330	3,0	90	130	H 3134 HG
22234 K	310	86,0	M16	16	M20	345	3,0	77	145	H 3134 HG
23234 K	310	110,0	M16	16	M20	345	3,0	88	170	H 2334 HG

Plummer Block Bearing Housing

Series BTL

for spherical roller bearings with adapter sleeve

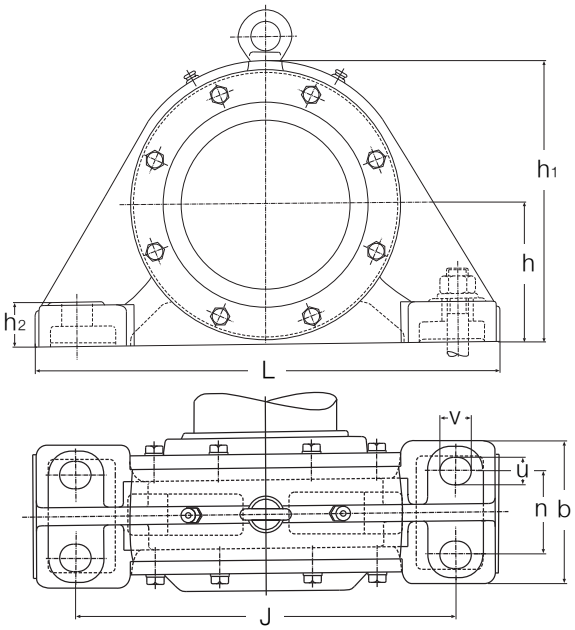

Housing Ref No	d_1	L	b	h_2	J	n	h	h_1 mm	u	v	g_2	g_4	g_3	g_5	g
BTL 3036 K	160	540	170	52	450	100	180	360	36	45	201	88,0	88,0	113,0	100
BTL 3136 K		600	200	58	490	105	200	395	36	45	250	105,0	115,0	135,0	125
BTL 2236 K		680	210	65	550	120	210	425	36	45	255	95,0	120,0	135,0	114
BTL 3236 K		680	210	65	550	120	210	425	36	45	285	110,0	135,0	150,0	140
BTL 3038 K	170	570	180	55	480	105	185	370	36	45	211	88,0	93,0	118,0	105
BTL 3138 K		680	210	65	550	120	210	425	36	45	266	113,0	123,0	143,0	130
BTL 2238 K		710	220	85	560	120	220	455	36	45	275	105,0	130,0	145,0	135
BTL 3238 K		710	220	85	560	120	220	455	36	45	291	113,0	138,0	153,0	150
BTL 3040 K	180	600	190	60	510	110	200	400	36	45	226	98,0	98,0	128,0	110
BTL 3140 K		710	220	85	560	120	220	455	42	52	276	118,0	128,0	148,0	135
BTL 2240 K		780	240	75	640	140	235	475	36	50	270	105,0	125,0	145,0	135
BTL 3240 K		780	240	75	640	140	235	475	42	52	296	118,0	138,0	158,0	165
BTL 3044 K	200	640	200	65	540	115	215	430	42	52	241	103,0	103,0	138,0	115
BTL 3144 K		780	240	75	640	140	235	475	42	52	295	125,0	135,0	160,0	150
BTL 2244 K		890	270	80	720	140	270	550	36	50	309	152,0	142,0	167,0	160
BTL 3244 K		850	250	80	700	140	260	525	42	52	329	132,0	147,0	182,0	175
BTL 3048 K	220	680	210	70	560	120	225	455	42	52	251	108,0	108,0	143,0	120
BTL 3148 K		890	250	80	720	140	270	550	42	52	334	132,0	152,0	182,0	160
BTL 2248 K		900	250	90	750	140	290	585	42	52	320	130,0	140,0	180,0	150
BTL 3248 K		900	250	90	750	140	290	585	42	52	356	148,0	158,0	198,0	190
BTL 3052 K	240	720	220	75	600	130	250	500	42	52	261	113,0	113,0	148,0	130
BTL 3152 K		900	250	90	750	140	290	585	42	52	336	140,5	150,5	185,5	175
BTL 2252 K		960	290	95	800	160	310	625	42	65	330	135,0	145,0	185,0	161
BTL 3252 K		960	290	95	800	160	310	625	42	65	375	157,5	167,5	207,5	205
BTL 3056 K	260	760	240	80	630	140	260	520	42	65	281	118,0	118,0	163,0	135
BTL 3156 K		900	250	90	750	140	290	585	42	65	351	148,0	158,0	193,0	175
BTL 2256 K		1000	300	100	840	170	320	645	42	65	360	145,0	160,0	200,0	175
BTL 3256 K		1000	300	100	840	170	320	645	42	65	400	165,0	180,0	220,0	210

Plummer Block Bearing Housing

Series BTL

for spherical roller bearings with adapter sleeve

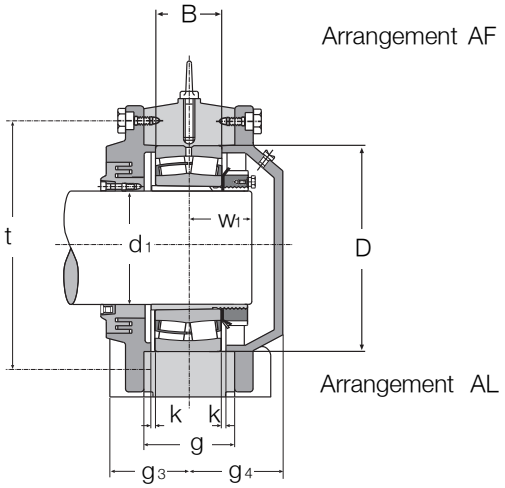

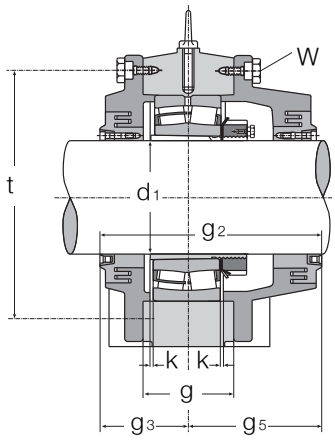

Matching Bearing Ref	Bearing Dimensions D	B	Mounting Bolts W	Qyt.	Eye Bolt	Overall Dimensions t	k	W_1	Weight with Bearing kg	Sleeve
23036 K	280	74	M12	16	M16	310	3	72	95	H 3036 HG
23136 K	300	96	M16	16	M20	350	3	80	150	H 3136 HG
22236 K	320	86	M16	16	M20	360	3	80	175	H 3136 HG
23236 K	320	112	M16	16	M20	360	3	90	190	H 2336 HG
23038 K	290	75	M16	16	M16	325	3	80	110	H 3038 HG
23138 K	320	104	M16	16	M20	370	3	95	180	H 3138 HG
22238 K	340	92	M16	16	M20	385	3	85	220	H 3138 HG
23238 K	340	120	M16	16	M20	385	3	96	235	H 2338 HG
23040 K	310	82	M16	16	M20	340	3	74	125	H 3040 HG
23140 K	340	112	M16	16	M24	380	2	100	235	H 3140 HG
22240 K	360	98	M16	16	M24	405	4	88	240	H 3140 HG
23240 K	360	128	M16	16	M24	405	4	100	275	H 2340 HG
23044 K	340	90	M16	16	M20	375	3	78	140	H 3044 HG
23144 K	370	120	M16	16	M24	420	4	100	260	H 3144 HG
22244 K	400	108	M20	16	M24	455	3	95	380	H 3144 HG
23244 K	400	144	M20	16	M24	445	4	110	340	H 2344 HG
23048 K	360	92	M16	16	M20	400	4	85	180	H 3048 HG
23148 K	400	128	M20	16	M24	455	4	100	285	H 3148 HG
22248 K	440	120	M20	16	M24	490	4	105	410	H 3148 HG
23248 K	440	160	M20	16	M24	490	5	120	455	H 2348 HG
23052 K	400	104	M16	16	M20	440	4	87	225	H 3052 HG
23152 K	440	144	M20	16	M24	490	4	110	370	H 3152 HG
22252 K	480	130	M20	16	M24	535	3	110	500	H 3152 HG
23252 K	480	174	M20	16	M24	535	3	125	550	H 2352 HG
23056 K	420	106	M16	16	M20	460	4	92	255	H 3056 HG
23156 K	460	146	M24	16	M24	510	4	120	460	H 3156 HG
22256 K	500	130	M24	16	M30	555	4	115	560	H 3156 HG
23256 K	500	176	M24	16	M30	555	4	135	675	H 2356 HG

Plummer Block Bearing Housing

Series BTL

for spherical roller bearings with adapter sleeve

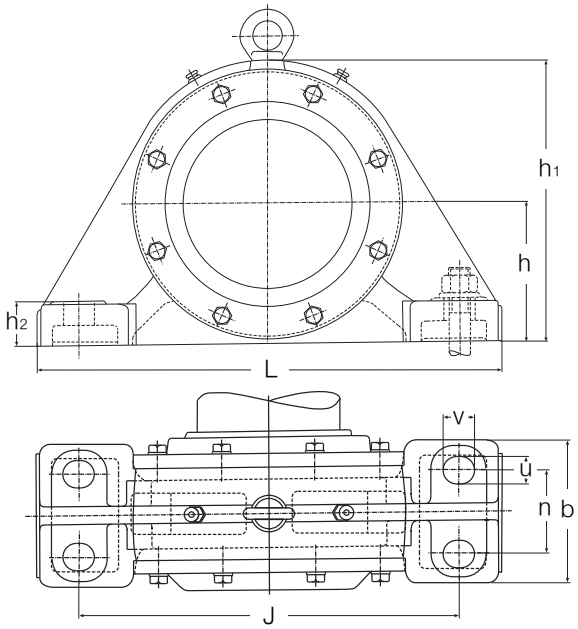

Housing Ref No	d_1	L	b	h_2	J	n	h	h_1 mm	u	v	g_2	g_4	g_3	g_5	g
BTL 3060 K	280	820	250	85	690	150	285	570	42	65	301	133	128	173	140
BTL 3160 K		1000	300	100	840	170	320	645	42	65	385	155	170	215	190
BTL 2260 K		1100	330	105	920	180	350	705	56	75	370	160	175	195	177
BTL 3260 K		1100	330	105	920	180	350	705	56	75	404	187	182	222	230
BTL 3064 K	300	860	260	90	730	160	295	590	42	65	301	133	128	173	150
BTL 3164 K		1150	300	100	940	160	350	700	42	65	395	192	180	215	210
BTL 2264 K		1150	360	115	960	200	370	745	56	75	405	175	180	225	220
BTL 3264 K		1150	360	115	960	200	370	745	60	75	429	187	192	237	250
BTL 3068 K	320	900	270	95	770	170	315	630	42	65	311	143	133	178	160
BTL 3168 K		1150	360	115	960	200	370	735	56	75	445	200	200	245	220
BTL 2268 K		1200	380	125	980	200	390	790	64	75	437	207	194	243	205
BTL 3268 K		1200	380	125	980	200	390	785	60	75	484	217	212	272	265
BTL 3072 K	340	960	280	100	820	180	330	660	42	65	325	150	140	185	170
BTL 3172 K		1200	370	115	1000	200	380	760	56	75	450	200	200	250	225
BTL 2272 K		1280	400	130	1040	210	410	820	64	80	450	195	200	250	213
BTL 3272 K		1280	400	130	1040	210	410	820	72	80	509	222	227	282	275
BTL 3076 K	360	1000	300	105	840	190	340	680	56	75	329	152	142	187	160
BTL 3176 K		1200	380	125	1000	200	390	790	60	75	459	202	202	257	230
BTL 2276 K		1350	405	135	1100	225	425	865	64	85	465	230	200	265	230
BTL 3276 K		1350	405	135	1100	225	425	860	68	85	529	257	232	297	295
BTL 3080 K	380	1060	320	110	900	200	360	720	56	75	351	158	148	203	175
BTL 3180 K		1280	400	130	1040	210	410	820	68	80	460	205	200	260	235
BTL 2280 K		1430	450	145	1160	240	450	900	64	85	485	210	210	275	229
BTL 3280 K		1430	450	145	1160	240	450	900	72	85	569	252	252	317	300
BTL 3084 K	400	1100	340	115	940	210	375	755	56	75	351	163	148	203	180
BTL 3184 K		1350	420	135	1100	210	450	900	68	85	510	230	210	300	260
BTL 2284 K		1500	470	150	1220	255	470	950	72	90	495	215	215	280	238
BTL 3284 K		1500	470	150	1220	255	470	950	72	90	575	255	255	320	315

Plummer Block Bearing Housing

Series BTL

for spherical roller bearings with adapter sleeve

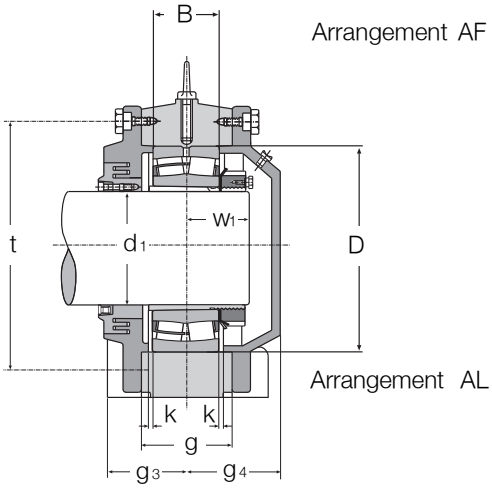

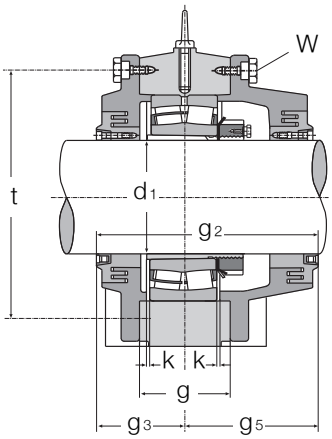

Matching Bearing Ref	Bearing Dimensions D	B	Mounting Bolts W	Qyt.	Eye Bolt	Overall Dimensions t	k	W_1	Weight with Bearing kg	Sleeve
23060 K	460	118	M16	16	M20	510	4	110	320	H 3060 HG
23160 K	500	160	M24	16	M30	550	4	130	565	H 3160 HG
22260 K	540	140	M24	16	M30	600	4	120	660	H 3160 HG
23260 K	540	192	M24	16	M30	600	4	145	805	H 3260 HG
23064 K	480	121	M16	16	M20	530	4	110	355	H 3064 HG
23164 K	540	176	M24	16	M30	590	4	135	710	H 3164 HG
22264 K	580	150	M24	16	M30	640	5	130	810	H 3164 HG
23264 K	580	208	M24	16	M30	640	5	145	955	H 3264 HG
23068 K	520	133	M20	16	M24	565	5	112	425	H 3068 HG
23168 K	580	190	M24	16	M30	630	4	140	790	H 3168 HG
22268 K	620	165	M24	16	M30	680	5	150	910	H 3168 HG
23268 K	620	224	M24	16	M36	680	5	175	1120	H 3268 HG
23072 K	540	134	M20	16	M24	590	5	120	475	H 3072 HG
23172 K	600	192	M24	16	M30	650	4	155	885	H 3172 HG
22272 K	650	170	M24	16	M36	710	5	155	1000	H 3172 HG
23272 K	650	232	M24	16	M36	710	5	185	1365	H 3272 HG
23076 K	560	135	M20	16	M24	610	7	123	515	H 3076 HG
23176 K	620	194	M30	16	M30	680	5	170	1025	H 3176 HG
22276 K	680	175	M30	16	M36	745	5	160	1250	H 3176 HG
23276 K	680	240	M30	16	M36	745	5	190	1565	H 3276 HG
23080 K	600	148	M20	16	M24	650	7	135	595	H 3080 HG
23180 K	650	200	M30	16	M30	710	5	170	1080	H 3180 HG
22280 K	720	185	M30	16	M36	790	5	165	1350	H 3180 HG
23280 K	720	256	M30	16	M36	790	5	200	1755	H 3280 HG
23084 K	620	150	M20	16	M24	670	7	137	640	H 3084 HG
23184 K	700	224	M30	16	M30	760	7	190	1300	H 3184 HG
22284 K	760	195	M30	16	M36	835	5	180	1500	H 3184 HG
23284 K	760	272	M30	16	M36	835	5	215	1960	H 3284 HG

Plummer Block Bearing Housing

Series BTL

for spherical roller bearings with adapter sleeve

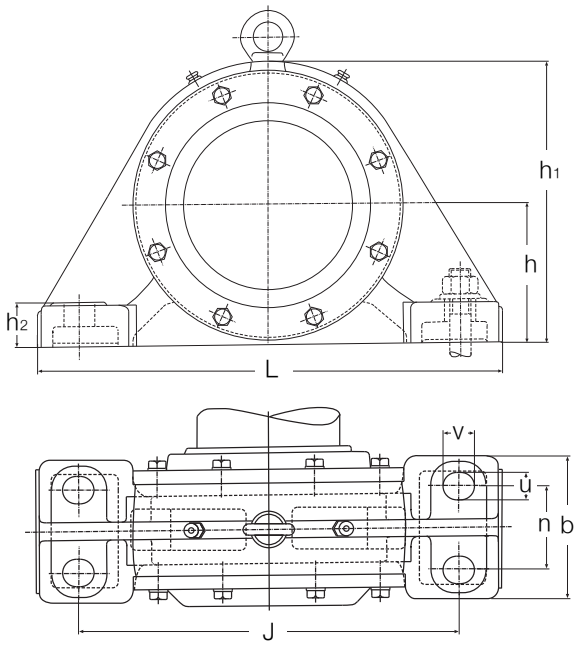

Housing Ref No	d_1	L	b	h_2	J	n	h	h_1 mm	u	v	g_2	g_4	W_2	g_5	g
BTL 3220	100	410	120	40	320	63	130	255	23	32	140	65	70	70	80
BTL 3222	110	440	130	42	350	70	140	280	30	35	161	68	78	83	90
BTL 3024	120	370	110	35	300	60	115	230	23	35	130	65	65	65	60
BTL 3224		470	140	42	370	75	150	300	30	35	171	78	83	88	95
BTL 3026	130	410	120	38	340	60	130	260	23	35	136	65	68	68	70
BTL 3226		500	150	45	400	85	160	315	30	40	196	78	98	98	100
BTL 3028	140	430	130	40	360	70	140	275	30	35	136	68	68	68	70
BTL 3228		530	160	50	430	85	170	345	30	42	196	88	98	98	110
BTL 3030	150	455	140	42	370	80	145	290	30	35	156	71	78	78	80
BTL 3230		550	170	54	450	90	180	365	36	45	210	95	105	105	120
BTL 3032	160	480	150	45	390	90	155	310	30	35	156	78	78	78	85
BTL 3232		600	180	58	490	105	190	385	36	45	230	98	115	115	130
BTL 3034	170	510	160	50	420	95	165	330	36	45	166	83	83	83	90
BTL 3234		640	200	62	525	110	200	405	36	45	256	103	128	128	135
BTL 3036	180	540	170	52	450	100	180	360	36	45	176	88	88	88	100
BTL 3236		680	210	65	550	120	210	425	36	45	270	110	135	135	140
BTL 3038	190	570	180	55	480	105	185	370	36	45	186	88	93	93	105
BTL 3238		710	220	85	560	120	220	455	36	45	256	113	128	128	150
BTL 3040	200	600	190	60	510	110	200	400	36	45	196	98	98	98	110
BTL 3240		780	240	75	640	140	235	475	42	52	276	118	138	138	165

Plummer Block Bearing Housing

Series BTL

for spherical roller bearings with adapter sleeve

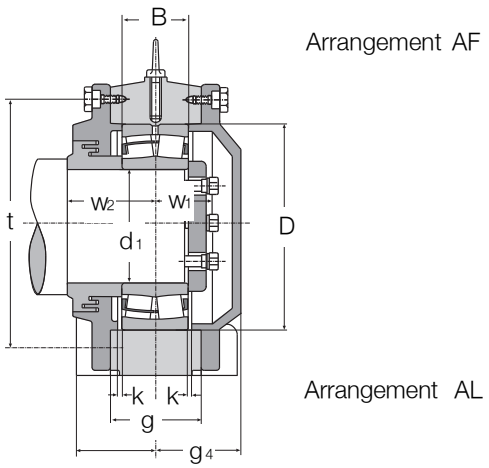

Arrangement AF

Arrangement AL

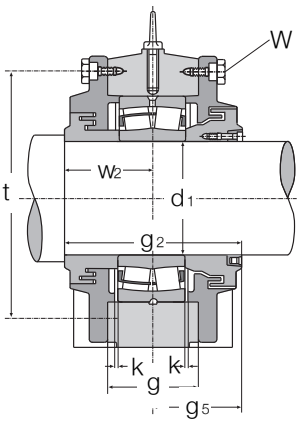

Arrangement BF

Arrangement BL

Matching Bearing Ref	Bearing Dimensions d	D	B	Mounting Bolts W	Qyt.	Eye Bolt	Overall Dimensions t	k	W1	Weight with Bearing kg
23220	100	180	60,3	M10	12	M12	205	2,5	47	45
23222	110	200	69,8	M12	12	M16	230	2,5	57	45
23024	120	180	46,0	M10	12	M12	200	2,5	47	30
23224	120	215	76,0	M12	12	M16	245	2,5	62	52
23026	130	200	52,0	M12	16	M12	225	2,0	50	35
23226	130	230	80,0	M12	12	M16	260	3,0	64	65
23028	140	210	53,0	M10	16	M12	235	3,0	51	43
23228	140	250	88,0	M16	12	M20	285	3,0	68	78
23030	150	225	56,0	M12	16	M12	250	2,0	57	50
23230	150	270	96,0	M16	12	M20	305	3,0	76	95
23032	160	240	60,0	M12	16	M12	265	4,0	59	58
23232	160	290	104,0	M16	12	M20	330	3,0	80	128
23034	170	260	67,0	M12	16	M12	285	2,0	63	70
23234	170	310	110,0	M16	16	M20	345	3,0	82	162
23036	180	280	74,0	M12	16	M16	310	3,0	66	91
23236	180	320	112,0	M16	16	M20	360	3,0	84	178
23038	190	290	75,0	M16	16	M16	325	3,0	67	102
23238	190	340	120,0	M16	16	M20	385	4,0	88	225
23040	200	310	82,0	M16	16	M20	340	3,0	70	120
23240	200	360	128,0	M16	16	M24	405	4,0	101	265

Plummer Block Bearing Housing

Series BTL

for spherical roller bearings with adapter sleeve

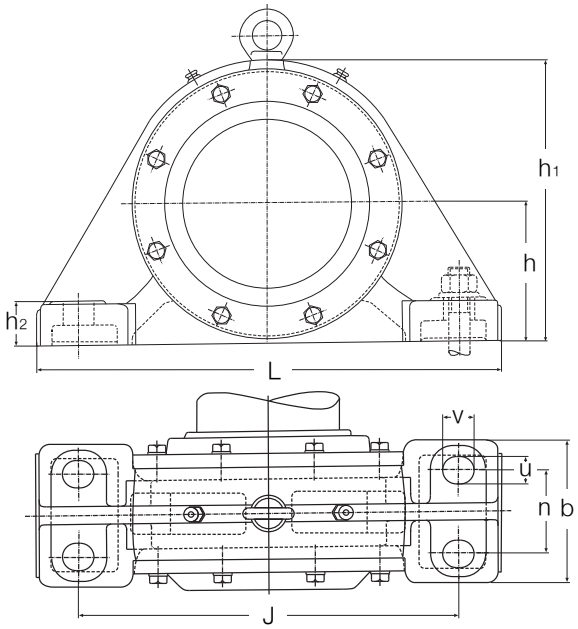

Housing Ref No	d_1	L	b	h_2	J	n	h	h_1 mm	u	v	g_2	g_4	W_2	g_5	g
BTL 3044	220	640	200	65	540	115	215	430	42	52	206	103	103	103	115
BTL 3244		850	250	80	700	140	260	525	42	52	294	132	147	147	175
BTL 3048	240	680	210	70	560	120	225	455	42	52	216	108	108	108	120
BTL 3248		900	250	90	750	140	290	585	42	52	313	138	150	163	190
BTL 3052	260	720	220	75	600	130	250	500	42	52	226	113	113	113	130
BTL 3252		960	290	95	800	160	310	625	42	65	335	157	167	167	205
BTL 3056	280	760	240	80	630	140	260	520	42	65	236	118	118	118	135
BTL 3256		1000	300	100	840	170	320	645	42	65	360	165	180	180	210
BTL 3060	300	820	250	85	690	150	285	570	42	65	266	133	133	133	140
BTL 3260		1100	330	105	920	180	350	705	56	75	377	162	187	190	230
BTL 3064	320	860	260	90	730	160	295	590	42	65	266	133	133	133	150
BTL 3264		1150	360	115	960	200	370	745	60	75	384	187	192	192	250
BTL 3068	340	900	270	95	770	170	315	630	42	65	268	143	133	135	160
BTL 3268		1200	380	125	980	200	390	785	60	75	424	217	212	212	265
BTL 3072	360	960	280	100	820	180	330	660	42	65	276	148	138	138	170
BTL 3272		1280	400	130	1040	210	410	820	72	80	454	222	227	227	275
BTL 3076	380	1000	300	105	840	190	340	680	56	75	284	152	142	142	160
BTL 3276		1350	405	135	1110	225	425	860	72	85	464	257	232	232	295
BTL 3080	400	1060	320	110	900	200	360	720	56	75	296	158	148	148	175
BTL 3280		1430	450	145	1160	240	450	900	72	85	504	252	252	252	300
BTL 3084	420	1100	340	115	940	210	375	755	56	75	296	158	148	148	180
BTL 3284		1500	470	150	1220	255	470	950	72	90	510	255	255	255	315

Plummer Block Bearing Housing

Series BTL

for spherical roller bearings with adapter sleeve

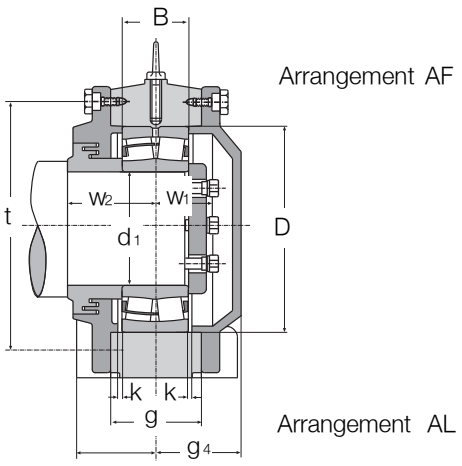

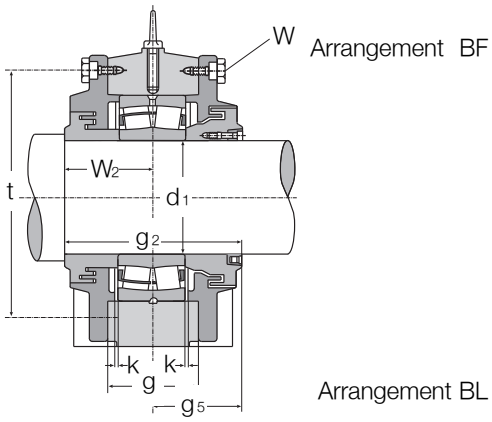

Matching Bearing Ref	Bearing Dimensions d	D	B	Mounting Bolts W	Qyt.	Eye Bolt	Overall Dimensions t	k	W_1	Weight with Bearing kg
23044	220	340	90	M16	16	M20	375	3	78	135
23244	220	400	144	M20	16	M24	445	4	106	330
23048	240	360	92	M16	16	M20	400	4	79	170
23248	240	440	160	M20	16	M24	490	3	114	440
23052	260	400	104	M16	16	M20	440	4	85	215
23252	260	480	174	M20	16	M24	535	3	121	530
23056	280	420	106	M16	16	M20	460	4	91	240
23256	280	500	176	M24	16	M30	555	4	127	650
23060	300	460	118	M16	16	M20	510	4	97	300
23260	300	540	192	M24	16	M30	600	4	133	770
23064	320	480	121	M16	16	M20	530	4	100	335
23264	320	580	208	M24	16	M30	640	5	146	915
23068	340	520	133	M20	16	M24	565	5	110	395
23268	340	620	224	M24	16	M36	680	5	154	1050
23072	360	540	134	M20	16	M24	590	5	110	450
23272	260	650	232	M24	16	M36	710	5	170	1300
23076	380	560	135	M20	16	M24	610	7	110	490
23276	380	680	240	M30	16	M36	745	5	180	1500
23080	400	600	148	M20	16	M24	650	7	116	560
23280	400	720	256	M30	16	M36	790	5	200	1680
23084	420	620	150	M20	16	M24	670	7	117	600
23284	420	760	272	M30	16	M36	835	5	210	187

Drum Take-up Bearings

Series STL

for spherical roller bearings with adapter sleeve

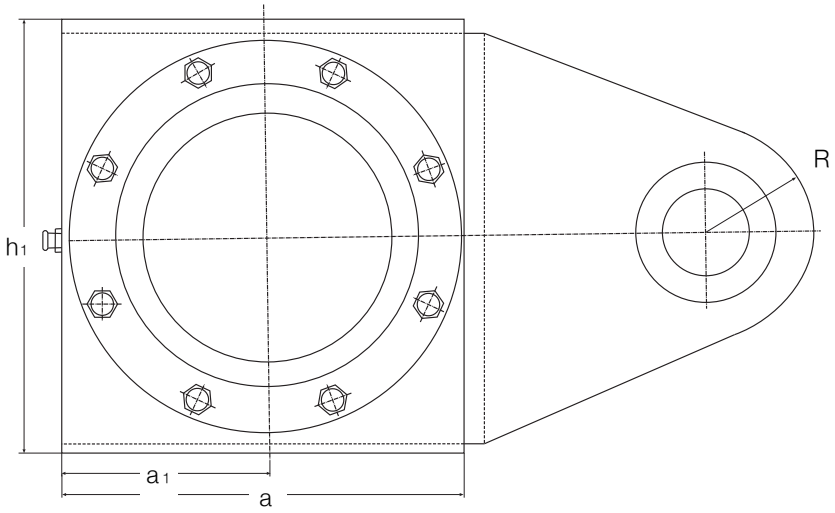

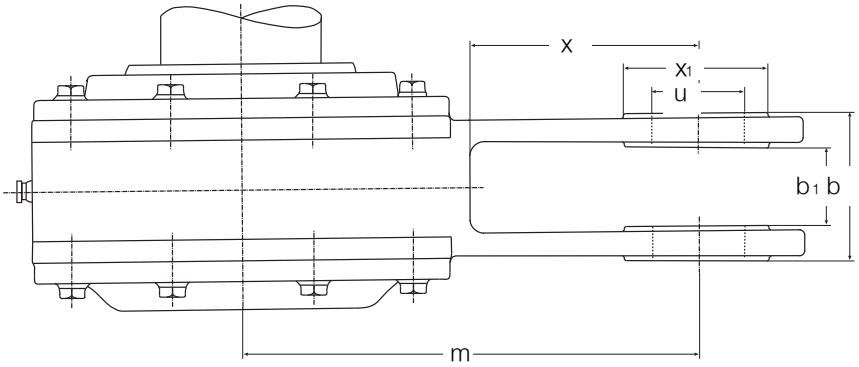

Housing Ref No	d_1	a	a_1	h_1	f	m	x	x_1 mm	u	b	b_1	g_2	g_4	g_3	g_5	g	f_1
STL 2211 K	50	150	75	150	135	105	30	60	20	42	22	109	35	49	60	50	34
STL 2212 K	55	165	82,5	165	150	120	37	60	25	50	26	120	40	54	66	60	43
STL 2213 K	60	160	80	180	155	145	65	60	30	66	30	135	53	62	73	78	53
STL 2216 K	70	180	90	200	175	155	65	60	30	66	30	145	58	67	78	78	53
STL 2218 K	80	210	105	230	200	170	65	60	30	66	30	168	63	78	90	78	53
STL 2220 K	90	235	117,5	250	220	185	67,5	65	35	70	36	170	65	80	90	69	40
STL 2222 K	100	255	125	270	240	200	70	70	40	76	40	199	68	94	105	78	53
STL 2224 K	110	275	135	290	260	210	70	70	40	76	40	180	69	85	95	78	53
STL 2226 K	115	295	147,5	310	290	220	70	70	40	76	40	194	78	87	110	82	53
STL 2228 K	125	315	155	330	300	230	70	70	40	76	40	206	78	93	113	88	53
STL 3028 K	125	260	130	300	270	225	90	90	50	150	60	156	68	68	88	70	45
STL 3030 K	135	280	140	320	290	235	90	90	50	150	60	194	82	82	112	85	45
STL 3132 K	140	370	185	370	340	350	160	100	61	132	62	229	108	108	121	116	65
STL 3034 K	150	325	162,5	360	330	260	90	90	50	150	60	201	88	88	113	102	65
STL 3134 K	150	375	187,5	400	370	395	180	100	60	132	62	249	113	113	136	120	65
STL 2236 K	160	420	210	440	410	380	170	140	80	135	65	255	95	120	135	114	60
STL 3036 K	160	350	175	390	360	275	90	90	50	150	60	201	88	88	113	100	65
STL 3136 K	160	400	200	440	410	360	158	140	80	135	65	248	105	113	135	120	60
STL 3236 K	160	420	210	450	410	300	90	140	80	140	70	285	110	135	150	140	93

Drum Take-up Bearings

Series STL

for spherical roller bearings with adapter sleeve

Arrangement AF

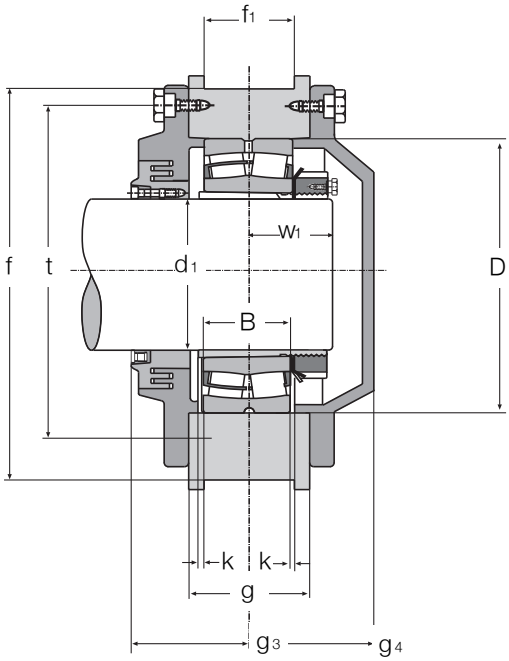

Arrangement BF

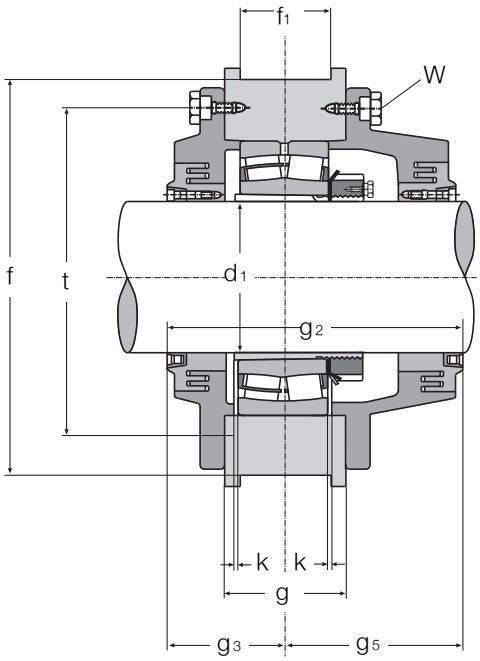

Arrangement AL

Arrangement BL

Matching Bearing Ref	Adapter sleeve Ref	Bearing Dimensions D	B	Mounting Bolts W	t	Qyt.	Overall Dimensions W1	k	R	Weight with Bearing kg
22211 K	H 311	100	25	M8	122	12	27	2	30	10
22212 K	H 312	110	28	M8	135	12	30	2	35	11
22213 K	H 313	120	31	M8	135	16	35	2	40	12
22216 K	H 316	140	33	M8	155	16	40	2	40	20
22218 K	H 318	160	40	M8	180	16	45	2	40	30
22220 K	H 320	180	46	M8	205	12	46	2,5	40	33
22222 K	H 322	200	53	M8	220	16	55	2,5	45	35
22224 K	H 3124	215	58	M8	240	16	58	2,5	45	40
22226 K	H 3126	230	64	M12	260	12	61	3	45	46
22228 K	H 3128	250	68	M12	275	16	65	3	45	60
23028 K	H 3028	210	53	M12	235	16	55	3	70	58
23030 K	H 3030	225	56	M12	250	16	60	2	70	70
23132 K	H 3132 HG	270	86	M12	300	16	78	3	90	150
23034 K	H 3034 HG	260	67	M12	285	16	68	2	70	105
23134 K	H 3134 HG	280	88	M12	330	16	80	3	90	180
22236 K	H 3136 HG	320	86	M16	360	16	80	3	100	230
23036 K	H 3036 HG	280	74	M12	310	16	72	3	70	132
23136 K	H 3136 HG	300	96	M16	350	16	80	3	100	215
23236 K	H 2336 HG	320	112	M16	360	16	90	3	90	265

Drum Take-up Bearings

Series STL

for spherical roller bearings with adapter sleeve

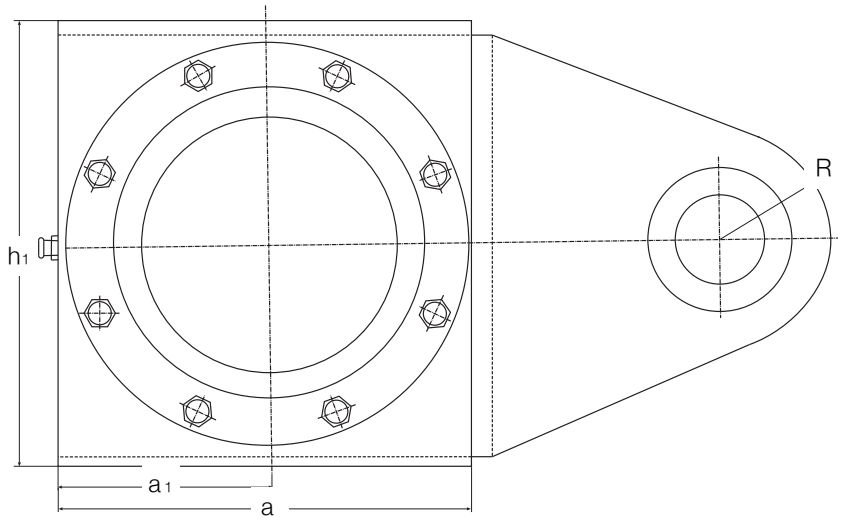

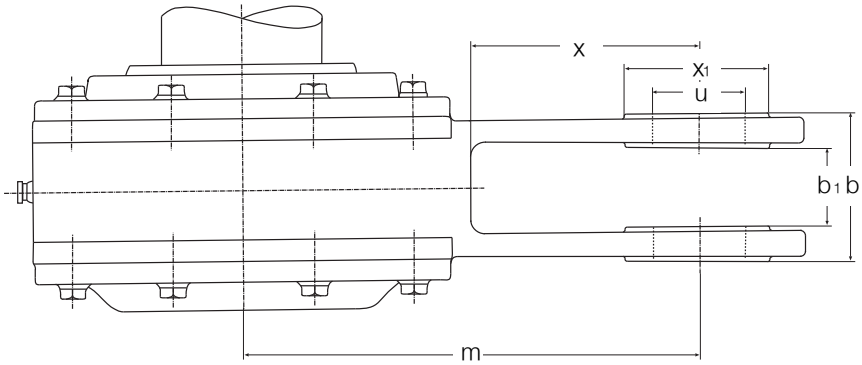

Housing Ref No	d_1	a	a_1	h_1	f	m	x	x_1 mm	u	b	b_1	g_2	g_4	g_3	g_5	g	f_1
STL 3038 K	170	375	180	440	400	290	90	90	50	150	60	211	88,0	93,0	118	105	65
STL 3040 K	180	390	200	430	400	275	85	120	70	125	62	240	108,0	107,0	133	125	83
STL 3140 K	180	420	210	440	410	360	140	100	60	140	70	270	115,0	120,0	150	140	100
STL 3044 K	200	430	210	480	440	325	100	100	60	200	70	241	103,0	103,0	138	120	65
STL 3144 K	200	470	235	510	480	530	260	140	100	144	74	276	128,0	128,0	148	150	65
STL 3148 K	220	520	260	540	500	515	250	250	100	215	123	328	129,0	149,0	179	152	65
STL 3052 K	240	500	245	540	500	515	250	250	100	215	123	261	113,0	113,0	148	135	65
STL 3152 K	240	550	275	570	540	565	270	250	100	225	135	336	140,5	150,5	185,5	175	80
STL 3252 K	240	596	298	610	570	615	300	240	100	240	173	-	157,5	167,5	-	205	103
STL 3156 K	260	600	300	610	570	615	300	200	100	240	173	351	148,0	158,0	193	175	103
STL 3160 K	280	630	315	650	610	650	310	200	100	270	170	385	155,0	170,0	215	190	130
STL 2260 K	280	660	330	680	640	630	280	200	105	220	150	370	160,5	174,5	-	177	80
STL 3260 K	280	680	340	690	650	680	310	260	100	270	190	404	187,0	182,0	-	230	115
STL 3164 K	300	680	340	700	660	680	340	240	110	300	180	395	192,0	180,0	215	210	140
STL 3168 K	320	740	370	740	700	720	310	240	120	300	180	445	200,0	200,0	245	220	150
STL 3268 K	320	735	385	740	700	750	310	240	110	300	213	-	238,0	203,0	-	265	123
STL 3272 K	340	800	400	830	790	765	310	280	130	330	213	509	222,0	227,0	282	275	123
STL 3176 K	360	750	375	790	740	750	320	230	110	300	200	459	202,0	202,0	257	230	120
STL 3276 K	360	810	405	820	780	780	305	240	110	300	213	-	257,0	232,0	-	295	123

Drum Take-up Bearings

Series STL

for spherical roller bearings with adapter sleeve

Arrangement AF

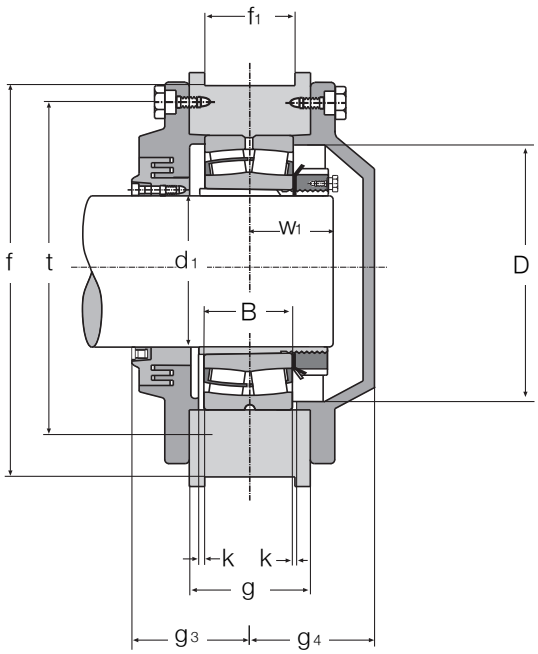

Arrangement AL

Arrangement BF

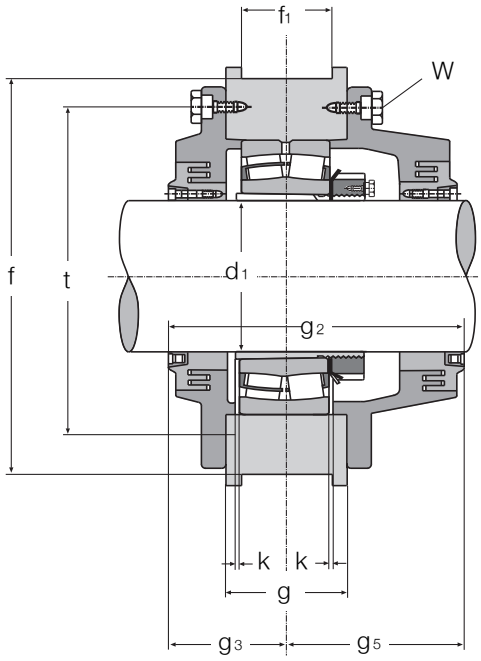

Arrangement BL

Matching Bearing Ref	Adapter sleeve Ref	Bearing Dimensions D	B	Mounting Bolts W	t	Qyt.	Overall Dimensions W_1	k	R	Weight with Bearing kg
23038 K	H 3038 HG	290	75	M16	325	16	72	3	70	156
23040 K	H 3040 HG	310	82	M16	340	16	78	3	80	347
23140 K	H 3140 HG	340	112	M16	380	16	95	2	80	223
23044 K	H 3044 HG	340	90	M16	375	16	80	3	80	223
23144 K	H 3144 HG	370	120	M16	410	16	95	4	120	327
23148 K	H 3148 HG	400	128	M20	455	16	110	4	150	387
23052 K	H 3052 HG	400	104	M16	440	16	94	4	150	298
23152 K	H 3152 HG	440	144	M24	490	16	115	4	150	436
23252 K	H 2352 HG	480	174	M20	535	16	130	3	150	577
23156 K	H 3156 HG	460	146	M24	510	16	120	4	150	472
23160 K	H 3160 HG	500	160	M24	550	16	130	4	150	584
22260 K	H 3160 HG	540	140	M20	600	16	120	4	170	694
23260 K	H 3260 HG	540	192	M24	600	16	145	4	180	838
23164 K	H 3164 HG	540	176	M24	590	16	135	4	180	767
23168 K	H 3168 HG	580	190	M24	630	16	160	4	200	876
23268 K	H 3268 HG	620	224	M24	680	16	210	5	200	977
23272 K	H 3272 HG	650	232	M24	890	16	190	5	225	1258
23176 K	H 3176 HG	620	194	M24	700	16	170	5	200	986
23276 K	H 3276 HG	680	240	M30	730	16	220	5	200	1330

Take-up Bearing Housings

Series SLG

for self aligning ball or roller bearings with adapter sleeve

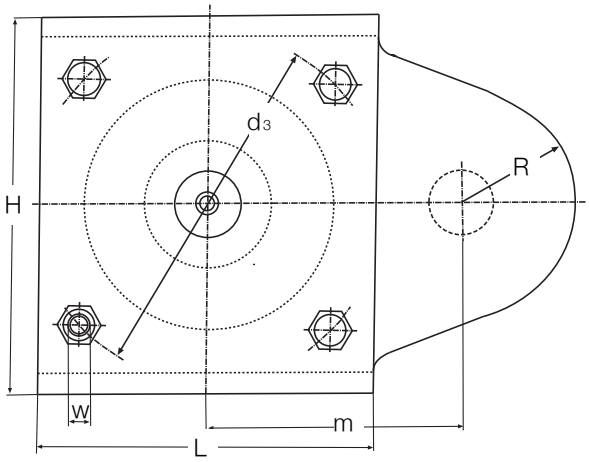

Arrangement AF

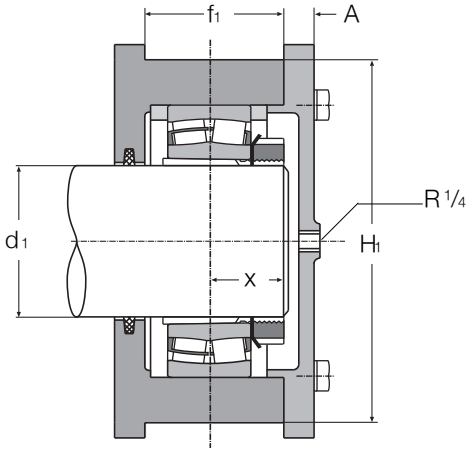

Arrangement AL

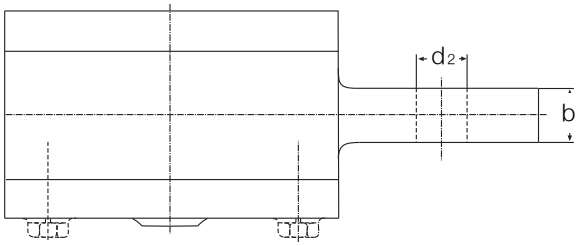

Housing Ref No	d_1	d_2	d_3	L	H	m	H_1 mm	f_1	A	x	w	R	b	Weight kg
SLG 40	40	21	130	120	140	95	120	57	12	22	M 8	38	25	10
SLG 50	50	21	130	120	140	95	120	57	12	25	M 8	38	25	10
SLG 60	60	31	170	160	180	120	160	64	17	30	M10	55	25	18
SLG 70	70	36	185	200	200	145	180	72	17	35	M16	57	30	27
SLG 80	80	36	205	200	200	145	180	72	17	42	M16	58	30	25
SLG 90	90	41	250	240	260	170	240	92	21	45	M16	65	35	35
SLG 100	100	41	250	240	260	170	240	92	20	49	M16	65	35	33

Take-up Bearing Housings

Series SLG

for self aligning ball or roller bearings with adapter sleeve

Housing Ref	Matching Bearing with Adapter Sleeve Ref		Fixing Rings Ref
SLG 40	1209 K	H 209	2 x FR 6/85
	2209 K	H 309	1 x FR 8/85
	22209 K	H 309	1 x FR 8/85
SLG 50	1211 K	H 211	2 x FR 6/100
	2211 K	H 311	1 x FR 8/100
	22211 K	H 311	1 x FR 8/100
SLG 60	1213 K	H 213	2 x FR 10/120
	2213 K	H 313	1 x FR 12/120
	22213 K	H 313	1 x FR 12/120
SLG 70	1216 K	H 216	2 x FR 8,5/140
	2216 K	H 316	1 x FR 10/140
	22216 K	H 316	1 x FR 10/140
SLG 80	1218 K	H 218	2 x FR 16/160
	2218 K	H 318	2 x FR 11/160
	22218 K	H 318	2 x FR 11/160
SLG 90	1220 K	H 220	2 x FR 18/180
	2220 K	H 320	2 x FR 12/180
	22220 K	H 320	2 x FR 12/180
SLG 100	1222 K	H 222	2 x FR 21,5/200
	2222 K	H 322	2 x FR 14/200
	22222 K	H 322	2 x FR 14/200

Flanged Bearing Housing

Series I-1200(00)

for self aligning ball bearing with extended inner ring

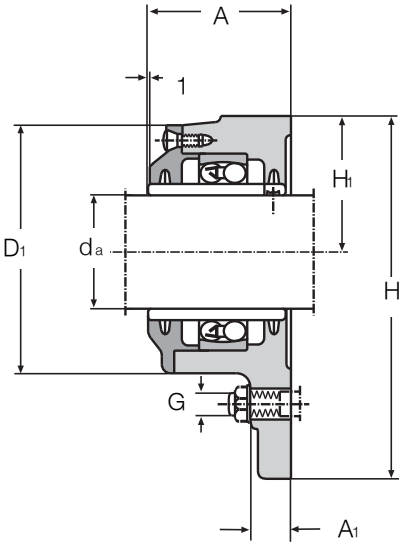

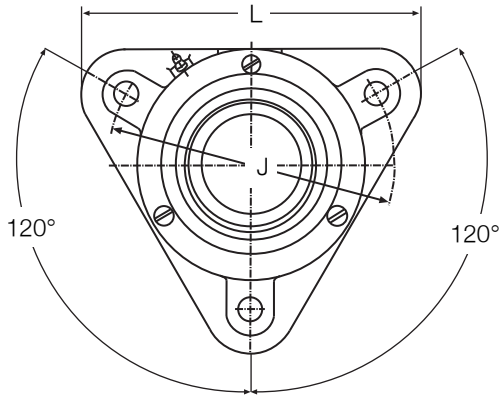

I-1200(00) - Flanged Bearing Housing

This range of flanged bearing housings is fitted with self aligning ball bearings with extended inner ring (series 112).

The outer ring of the bearing is located axially by means of a bolted on cast cover.

Flanged bearing housings series I-1200 are fitted with felt strip seals and are suitable for grease lubrication. A R1/8" grease hole is incorporated for eventual later greasing.

I-1200 flanged bearing housings are manufactured from grey cast iron.

Housing Ref	Matching Bearing	Weight kg	d_a	D_1	H_1	H mm	A	L	A_1	J	G
I-120013	11204	0,80	20	67	35	93	42	105	10	90	M10
I-120014	11205	0,99	25	73	38	100	46	110	10	96	M10
I-120015	11206	1,42	30	84	44	117	50	130	12	116	M10
I-120016	11207	1,78	35	95	48,5	130	54	145	12	130	M12
I-120017	11208	2,27	40	105	54	143	60	160	12	140	M12
I-120018	11209	3,33	45	115	60	160	63	180	15	160	M12
I-120019	11210	3,65	50	115	60	160	63	180	15	160	M12

7225(00) - Flanged Bearing Housings

These flanged bearing housings are designed to use self aligning ball bearings series 12 K and 22 K or spherical roller bearings series 222 K. Fixing of the bearings on the shaft is by means of an adapter sleeve.

HFB supplies these housings for through shaft (Arrangement B) and as an end bearing housing with end cover (Arrangement A).

Flanged bearing housings series 7225.. are sealed with felt strip and designed for grease lubrication. A R1/8" grease hole is incorporated in the housing for eventual later greasing. For shaft diameters 20 - 60 the housing is supplied in a triangular form with 3 mounting bolts, for the shaft range 65 - 100 in square form with 4 mounting holes.

The bearing seat in the housing is designed with a bore tolerance H7 and for a floating bearing. Locating bearing arrangements are obtained by fitting the matching fixing rings between the housing shoulder and bearing outer race.

7225(00) Flanged bearing Housings are manufactured from grey cast. On request housings manufactured from ductile iron can also be delivered.

Housed Bearing Units

Flanged bearing housings
Series 7225...WA/WB
for self aligning ball or roller bearings with adapter sleeve

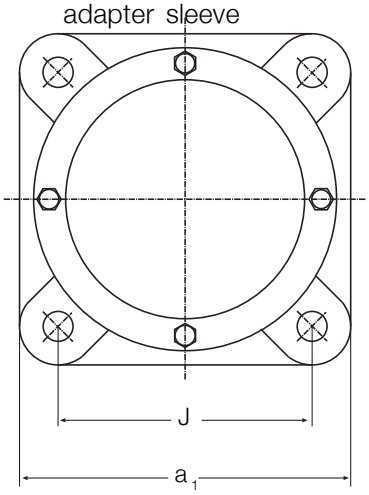

Form for shafts Ø 65 - Ø 100

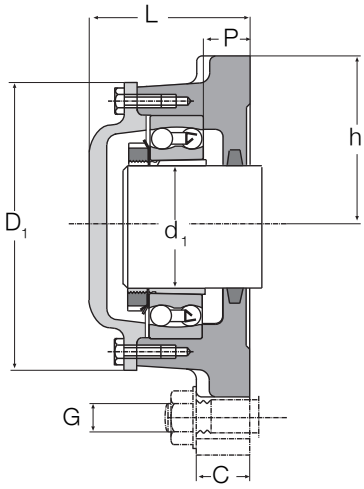

Arrangement A

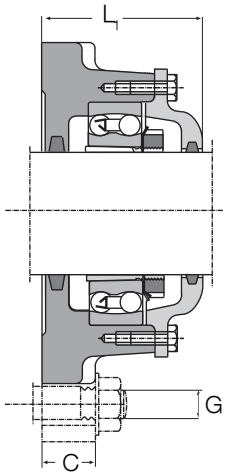

Arrangement B

Housing Ref		Weight kg	Dimensions mm												
			d_1	D_1	L	L_1	h	h_1	a	c	R	G	P	a_1	J
722505 WA	722505 WB	1,2	20	75	54	59	38	100	110	10	48	M 10	15	-	-
722506 WA	722506 WB	1,5	25	86	60	62	44	117	130	12	58	M 10	16	-	-
722507 WA	722507 WB	1,8	30	97	62	65	48,5	130	145	12	65	M 12	16	-	-
722508 WA	722508 WB	2,3	35	108	65	70	54	143	160	12	70	M 12	17	-	-
722509 WA	722509 WB	3,0	40	113	66	72	60	160	180	14	80	M 12	19	-	-
722510 WA	722510 WB	3,2	45	118	66	72	60	160	180	14	80	M 12	22	-	-
722511 WA	722511 WB	4,1	50	128	77	82	65	172	190	15	85	M 12	24	-	-
722512 WA	722512 WB	4,8	55	142	77	82	72	189	206	16	90	M 12	23	-	-
722513 WA	722513 WB	5,9	60	152	80	85	78	203	219	16	95	M 12	22	-	-
722515 A	722515 B	9,5	65	168	104	104	95	-	-	25	-	M 16	30	190	152
722516 A	722516 B	10	70	176	110	110	98	-	-	25	-	M 16	31	196	152
722517 A	722517 B	12	75	188	114	114	105	-	-	25	-	M 16	31	210	170
722518 A	722518 B	13	80	198	118	118	105	-	-	25	-	M 16	30	210	170
722520 A	722520 B	18	90	224	127	127	125	-	-	30	-	M 20	30	250	198
722522 A	722522 B	22	100	246	137	137	135	-	-	30	-	M 20	30	270	219

Housed Bearing Units

Flanged bearing housings
Series 7225...WA/WB
for self aligning ball or roller bearings with adapter sleeve

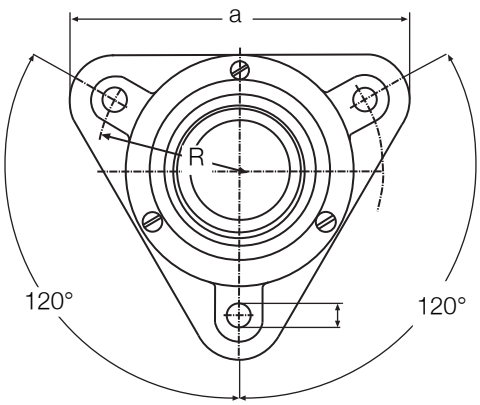

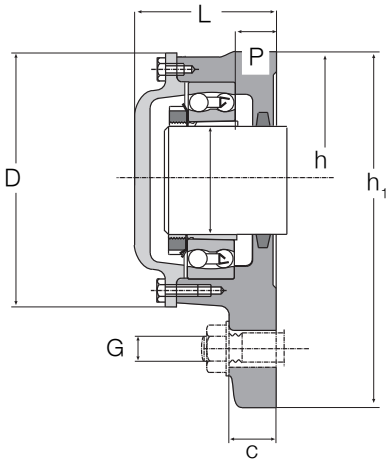

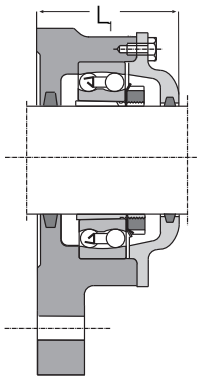

Form for shafts Ø 20 - Ø 60

Arrangement A

Arrangement B

Housing Ref		Bearing + Adapter sleeve				Fixing Rings	Felt Strip	End Cover Bolts
722505 WA	722505 WB	1205 K	H 205			1 x FR 5/52	5 x 4 x 90	M 5 x 16 DIN 964
		2205 K	H 305	22205 K	H 305	1 x FR 2/52		
722506 WA	722506 WB	1206 K	H 206			1 x FR 6/62	6 x 5 x 115	M 5 x 16 DIN 964
		2206 K	H 306	22206 K	H 306	1 x FR 2/62		
722507 WA	722507 WB	1207 K	H 207			1 x FR 8/72	6 x 5 x 130	M 5 x 16 DIN 964
		2207 K	H 307	22207 K	H 307	1 x FR 2/72		
722508 WA	722508 WB	1208 K	H 208			1 x FR 7/80	6 x 5 x 145	M 5 x 16 DIN 964
		2208 K	H 308	22208 K	H 308	1 x FR 2/80		
722509 WA	722509 WB	1209 K	H 209			1 x FR 6/85	6 x 5 x 160	M 6 x 16 DIN 964
		2209 K	H 309	22209 K	H 309	1 x FR 2/85		
722510 WA	722510 WB	1210 K	H 210			1 x FR 5/90	6 x 5 x 175	M 6 x 16 DIN 964
		2210 K	H 310	22210 K	H 310	1 x FR 2/90		
722511 WA	722511 WB	1211 K	H 211			1 x FR 6/100	8 x 6,5 x 200	M 6 x 16 DIN 964
		2211 K	H 311	22211 K	H 311	1 x FR 2/100		
722512 WA	722512 WB	1212 K	H 212			1 x FR 8/110	8 x 6,5 x 215	M 6 x 16 DIN 964
		2212 K	H 312	22212 K	H 312	1 x FR 2/110		
722513 WA	722513 WB	1213 K	H 213			1 x FR 10/120	8 x 6,5 x 230	M 6 x 16 DIN 964
		2213 K	H 313	22213 K	H 313	1 x FR 2/120		
722515 A	722515 B	1215 K	H 215			2 x FR 8/130	8 x 6,5 x 245	M 8 x 25 DIN 933
		2215 K	H 315	22215 K	H 315	1 x FR 10/130		
722516 A	722516 B	1216 K	H 216			2 x FR 8,5/140	8,5 x 7,5 x 270	M 8 x 25 DIN 933
		2216 K	H 316	22216 K	H 316	1 x FR 10/140		
722517 A	722517 B	1217 K	H 217			2 x FR 9/150	9 x 7,5 x 285	M 8 x 25 DIN 933
		2217 K	H 317	22217 K	H 317	1 x FR 10/150		
722518 A	722518 B	1218 K	H 218			2 x FR 10/160	9 x 7,5 x 300	M 8 x 25 DIN 933
		2218 K	H 318	22218 K	H 318	1 x FR 10/160		
722520 A	722520 B	1220 K	H 220	1 x FR 12/180		1 x FR 10/180	10 x 8,5 x 335	M 8 x 25 DIN 933
		2220 K	H 320	22220 K	H 320	1 x FR 10/180		
722522 A	722522 B	1222 K	H 222			2 x FR 12,5/200	12 x 10 x 375	M 8 x 25 DIN 933
		2222 K	H 322	22222 K	H 322	1 x FR 10/200		

TVN Carriage Bearing Housings

TVN Plummer block bearing housings are designed for use with cylindrical bore, self aligning ball bearings.

These housings are unsplit and are supplied as floating bearings. A locating bearing arrangement is achieved by inserting fixing rings or intermediate rings. Sealing is by means of felt strip.

TVN housings are made from GG20. For lubrication of these bearing units it is recommended that a high grade grease is used. A R1/8" grease hole is incorporated in the housing for eventual later greasing.

Breaking Loads for TVN Carriage Bearing Housings

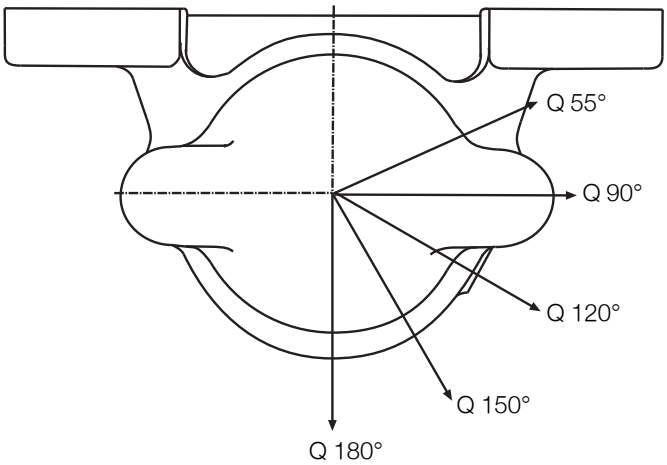

Housing Ref	Breaking Load kN Q 180°	Q 150°	Q 120°	Q 90°	Q 55°
TVN 204	30	25	28	52	125
TVN 205	30	25	28	52	135
TVN 206 / 305	50	42	46	85	205
TVN 207 / 306	58	48	54	95	205
TVN 208 / 307	80	68	78	125	275
TVN 209	95	80	88	150	275
TVN 210 / 308	95	80	90	150	275
TVN 211 / 309	140	115	130	245	350
TVN 212 / 310	140	115	130	250	350
TVN 213 / 311	168	140	160	280	410
TVN 214	168	140	160	280	410
TVN 215 / 312	168	140	160	280	410
TVN 313	190	160	175	290	570
TVN 314	190	160	175	290	570
TVN 315	250	205	235	385	620

TVL...A-G und TVN... A-G - for chalk sandstone ore wagons

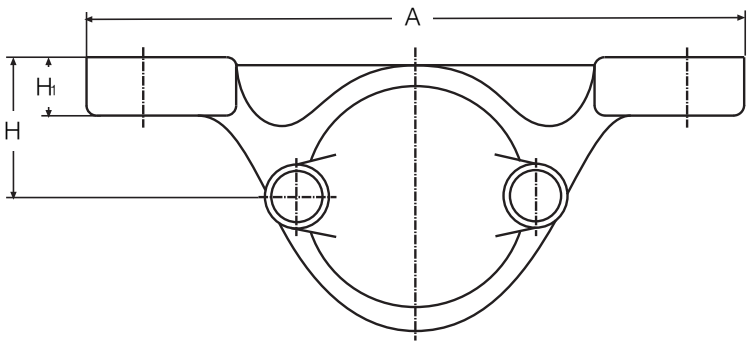

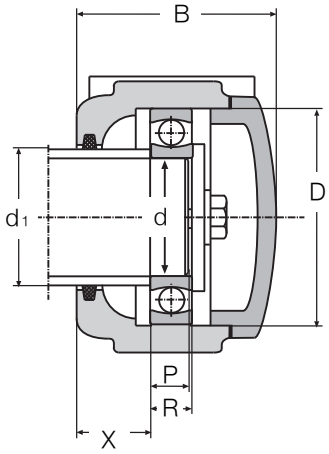

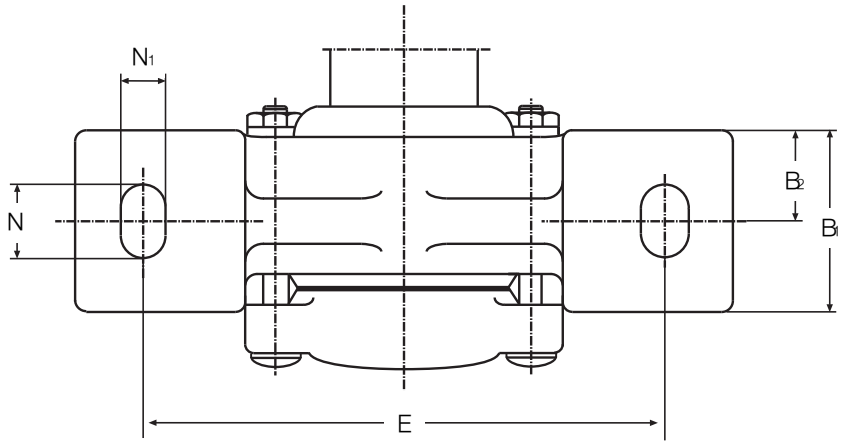

Housing Ref	d	d 1	D	B	B_1	B_2	H mm	H_1	E	A	N_1	N	P	R	X	Weight kg
TVL 306 A	35	40	72	80	55	28	50	18	210	255	19	28	15	17	28,5	3,3
TVL 308 A	40	45	80	80	55	28	55	20	210	255	19	28	16	18	28,5	3,8
TVN 309 A-G	45	55	100	95	70	40	70	23	210	270	21	21	23	25	32,5	6,3
TVN 310 A-G	50	60	110	102	70	40	70	23	210	270	20	32	25	27	36,5	6,9
TVN 211 A-G	55	65	100	95	70	40	70	23	210	270	20	32	19	21	34,5	6,2
TVN 213 A-G	65	75	120	110	80	45	80	25	230	290	20	32	21	23	40,5	9,4

Carriage Bearing Housings

Series TVN 2 WA (outer bearing)

Series TVN 2 WB (inner bearing)

for self aligning ball bearing series 22 and spherical roller bearing 222 with cylindrical bore

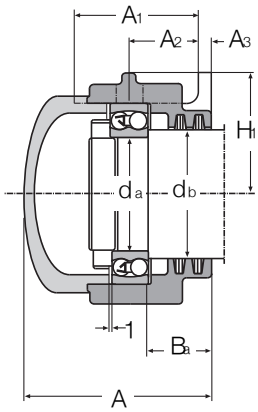

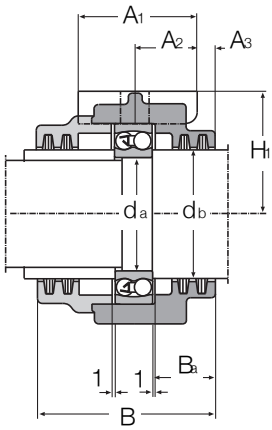

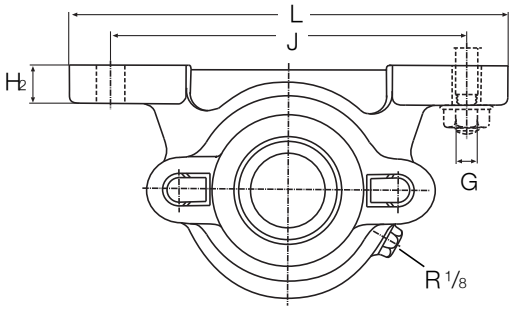

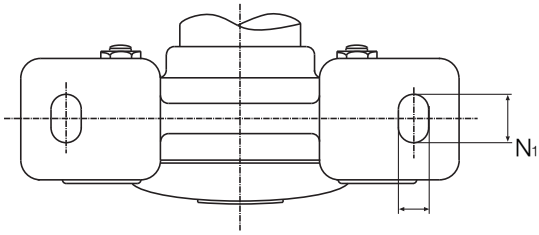

Series TVN 2 A (outer bearing)

Series TVN 2 B (inner bearing)

for self aligning ball bearing series 12

Ref Arrangement WA+WB	d_a	d_b	A	B	A_1	A_2	A_3	N mm	N_1	H_1	H_2	J	L	G	B_a	Weight kg
TVN 204 WA	20	25	61	68	45	25	6	15	22	35	14	110	150	M 12	21,5	1,3
TVN 204 WB	20	25	61	68	45	25	6	15	22	35	14	110	150	M 12	21,5	1,5
TVN 205 WA	25	30	63	70	45	25	7	15	22	40	16	130	170	M 12	22,5	1,8
TVN 205 WB	25	30	63	70	45	25	7	15	22	40	16	130	170	M 12	22,5	1,9
TVN 206 WA	30	35	71	76	52	30	7	15	22	50	16	150	190	M 12	25,0	2,6
TVN 206 WB	30	35	71	76	52	30	7	15	22	50	16	150	190	M 12	25,0	2,7
TVN 207 WA	35	45	77	78	52	30	8	15	22	50	18	150	190	M 12	25,5	3,0
TVN 207 WB	35	45	77	78	52	30	8	15	22	50	18	150	190	M 12	25,5	3,4
TVN 208 WA	40	50	86	92	60	35	8	15	27	60	18	170	210	M 12	30,5	4,5
TVN 208 WB	40	50	86	92	60	35	8	15	27	60	18	170	210	M 12	30,5	4,5
TVN 209 WA	45	55	87	92	60	35	8	15	27	60	20	170	210	M 12	30,0	4,3
TVN 209 WB	45	55	87	92	60	3	8	15	27	60	20	170	210	M 12	30,0	4,6
TVN 210 WA	50	60	90	94	60	35	8	15	27	60	20	170	210	M 12	32,5	4,60
TVN 210 WB	50	60	90	94	60	35	8	15	27	60	20	170	210	M 12	32,5	4,80
TVN 211 WA	55	65	95	100	70	40	8	20	32	70	23	210	270	M 16	32,5	6,50
TVN 211 WB	55	65	95	100	70	40	8	20	32	70	23	210	270	M 16	32,5	6,80
TVN 212 WA	60	70	102	105	70	40	10	20	32	70	23	210	270	M 16	36,0	7,0
TVN 212 WB	60	70	102	105	70	40	10	20	32	70	23	210	270	M 16	36,0	7,5
TVN 213 WA	65	75	110	115	80	45	10	20	32	80	25	230	290	M 16	36,5	9,50
TVN 213 WB	65	75	110	115	80	45	10	20	32	80	25	230	290	M 16	36,5	9,90
TVN 214 WA	70	80	111	115	80	45	10	20	32	80	25	230	290	M 16	37,0	9,40
TVN 214 WB	70	80	111	115	80	45	10	20	32	80	25	230	290	M 16	37,0	10,40
TVN 215 WA	75	85	115	117	80	45	10	20	32	80	25	230	290	M 16	38,5	10,40
TVN 215 WB	75	85	115	117	80	45	10	20	32	80	25	230	290	M 16	38,5	10,00

Carriage Bearing Housings

Series TVN 3 WA (outer bearing)

Series TVN 3 WB (inner bearing)

for self aligning ball bearing series 23 and spherical roller bearing 223 with cylindrical bore

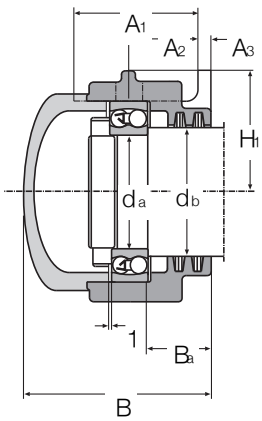

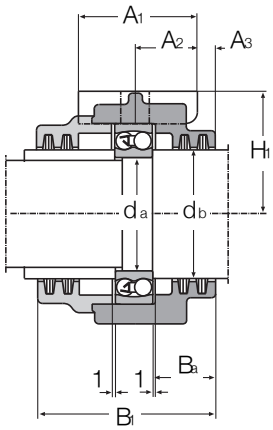

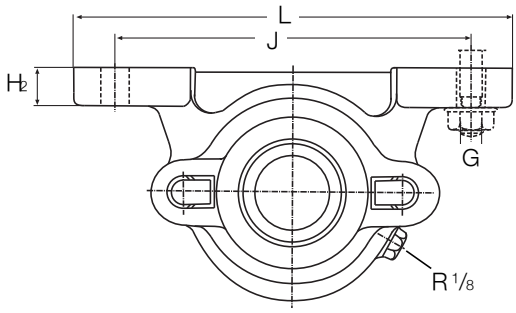

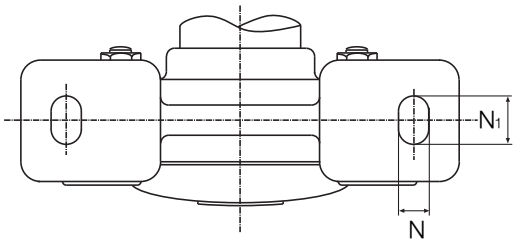

Series TVN 3 A (outer bearing)

Series TVN 3 B (inner bearing)

for self aligning ball bearing series 13

Ref Arrangement WA+WB	d_a	d_b	B	B_1	A_1	A_2	A_3	N mm	N_1	H_1	H_2	J	L	G	B_a	Weight kg
TVN 304 WA	20	25	63	71	45	25	7	15	22	40	16	130	170	M 12	21,0	2,0
TVN 304 WB	20	25	63	71	45	25	7	15	22	40	16	130	170	M 12	21,0	2,1
TVN 305 WA	25	30	71	76	52	30	7	15	22	50	16	150	190	M 12	23,0	2,6
TVN 305 WB	25	30	71	76	52	30	7	15	22	50	16	150	190	M 12	23,0	2,8
TVN 306 WA	30	35	77	78	52	30	8	15	22	50	18	150	190	M 12	23,5	3,0
TVN 306 WB	30	35	77	78	52	30	8	15	22	50	18	150	190	M 12	23,5	3,1
TVN 307 WA	35	45	86	92	60	35	8	15	22	60	18	170	210	M 12	26,5	4,3
TVN 307 WB	35	45	86	92	60	35	8	15	27	60	18	170	210	M 12	26,5	4,4
TVN 308 WA	40	50	90	94	60	35	8	15	27	60	20	170	210	M 12	27,5	4,8
TVN 308 WB	40	50	90	94	60	35	8	15	27	60	20	170	210	M 12	27,5	4,9
TVN 309 WA	45	55	95	100	70	40	8	20	32	70	23	210	270	M 16	27,0	6,4
TVN 309 WB	45	55	95	100	70	40	8	20	32	70	23	210	270	M 16	27,0	6,5
TVN 310 WA	50	60	102	105	70	40	10	20	32	70	23	210	270	M 16	30,0	6,9
TVN 310 WB	50	60	102	105	70	40	10	20	32	70	23	210	270	M 16	30,0	7,1
TVN 311 WA	55	65	110	115	80	45	10	20	32	80	25	230	290	M 16	30,5	9,30
TVN 311 WB	55	65	110	115	80	45	10	20	32	80	25	230	290	M 16	30,5	9,5
TVN 312 WA	60	70	115	117	80	45	10	20	32	80	25	230	290	M 16	31,0	10,5
TVN 312 WB	60	70	115	117	80	45	10	20	32	80	25	230	290	M 16	31,0	11,0
TVN 313 WA	65	75	122	127	90	50	10	25	32	95	28	260	330	M 20	35,0	13,5
TVN 313 WB	65	75	122	127	90	50	10	25	32	95	28	260	330	M 20	35,0	14,5
TVN 314 WA	70	80	126	129	90	50	10	25	32	95	28	260	330	M 20	35,5	14,0
TVN 314 WB	70	80	126	129	90	50	10	25	32	95	28	260	330	M 20	35,5	14,5
TVN 315 WA	75	85	136	139	100	55	10	25	32	100	30	290	360	M 20	38,5	18,5
TVN 315 WB	75	85	136	139	100	55	10	25	32	100	30	290	360	M 20	38,5	19,5

TN Plummer Block Housings

This unsplit plummer block bearing housing is designed for the use with self aligning ball bearings with an extended inner ring. The sealing rings are made from grey cast iron and fitted with a felt strips.

The outer ring of the bearing is located axially by the sealing ring. The inner ring of the bearing extends approximately 1cm over each end. This prevents contact between machine parts and the housing. The movement of the inner ring as well as axial location results from the use of a set screw which is located in a groove on one side of the inner ring. TN housings are made from GG20. A high grade grease is recommended for the lubrication of these housings.

Breaking Loads for TN Plummer Block Housings

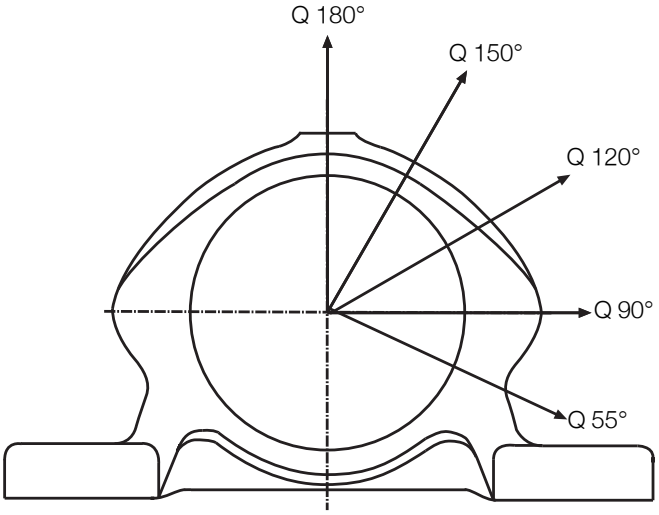

Housing Ref	Breaking Load kN Q 180°	Q 150°	Q 120°	Q 90°	Q 55°
TN 204	25	21	24	41	130
TN 205	29	25	20	49	135
TN 206	41	34	40	65	145
TN 207	41	34	40	68	145
TN 208	60	50	56	95	165
TN 209	68	56	65	105	200
TN 210	76	65	75	125	200
TN 211	95	80	90	150	210
TN 212	106	90	100	175	225

Plummer Block Bearing Housing (unsplit)

Series TN 2

for self aligning ball bearings with extended inner ring

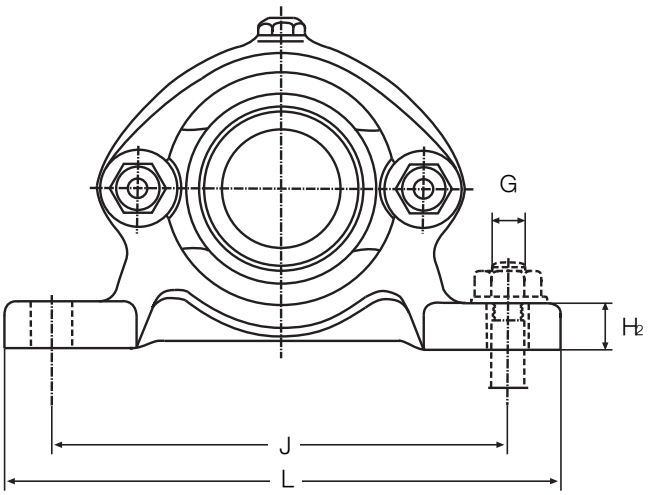

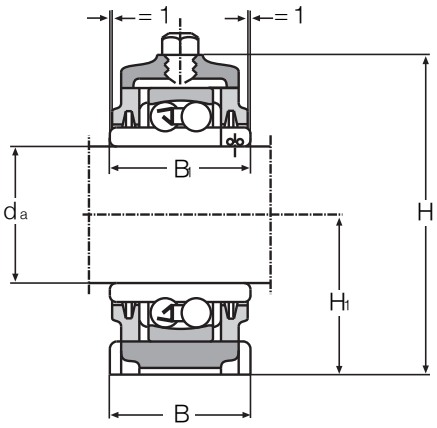

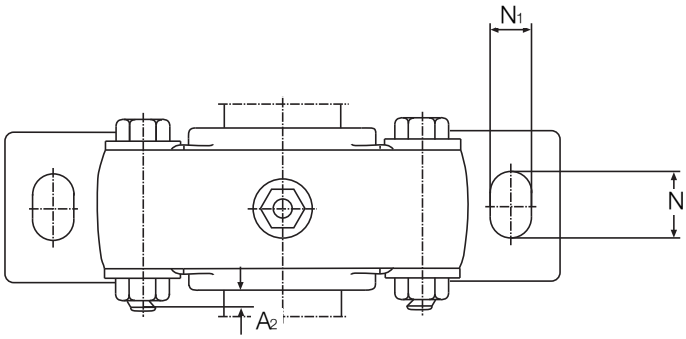

Housing Ref	Bearing Ref	Weight kg	d_a	H_1	H	B_1	L	B mm	H_2	A_2	J	N	N_1	G	Grease quantity First filling/kg
TN 204	11204	1,10	20	40	74	40	145	42	12	6,5	115	14	20	M12	0,005
TN 205	11205	1,14	25	40	77	44	150	42	12	8,5	120	14	20	M12	0,005
TN 206	11206	1,77	30	50	93	48	165	48	14	10,0	130	14	24	M12	0,010
TN 207	11207	1,89	35	50	98	52	180	48	14	8,0	145	14	24	M12	0,015
TN 208	11208	2,40	40	55	108	56	195	52	16	8,5	160	14	24	M12	0,020
TN 209	11209	2,70	45	60	116	58	210	56	16	7,5	175	14	24	M12	0,020
TN 210	11210	3,06	50	60	120	58	210	56	16	6,0	175	14	24	M12	0,025
TN 211	11211	3,91	55	65	129	60	230	62	18	8,0	190	17	27	M16	0,040
TN 212	11212	4,63	60	70	140	62	245	66	18	10,0	205	17	27	M16	0,050

DRUM INNER BEARING

Series FIZ...K
For self-aligning ball bearings or spherical roller bearings
with adapter sleeve

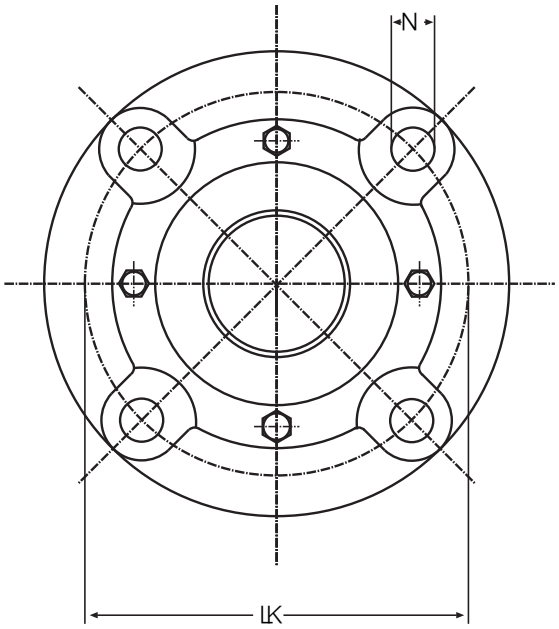

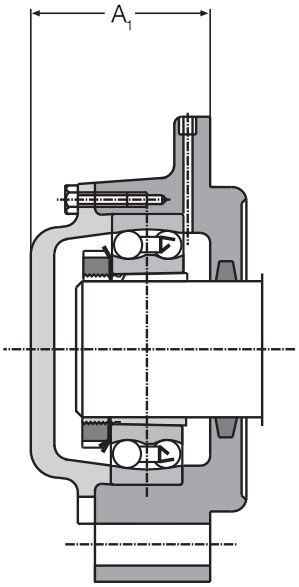

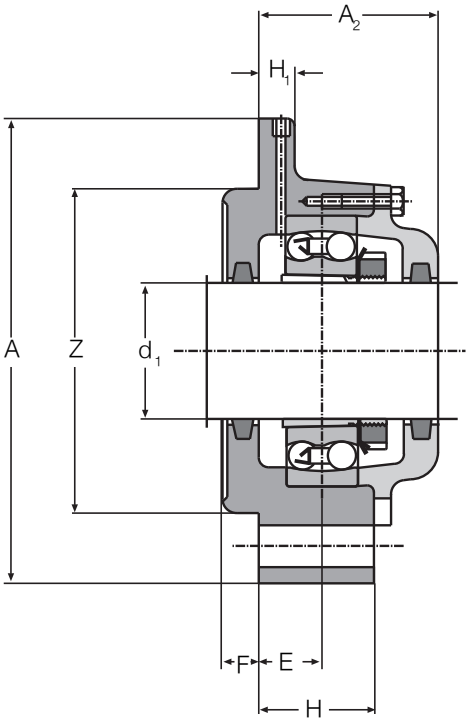

Housing Ref	Dimensions mm										
	d_1	A_1	A_2	H	H_1	F	E	LK	Z_{h9}	N	A
FIZ 2209 K	40	48	51	30	15	12	16,5	132	105	16	160
FIZ 2211 K	50	63	66	40	15	12	24,5	150	125	18	185
FIZ 2212 K	55	63	66	40	15	12	21,0	160	135	18	195
FIZ 2213 K	60	66	68	42	15	14	22,5	170	145	18	205

Grease Lubrication Bushed Bearings

Bushed bearings from DIN 502 to 506 are suitable for many areas of application, for example in the wood or steel industry, in chemical installations and in the food industry.

Depending on the operating conditions they can be used for running speeds of up to approximately 1.5m/s.

The housings are manufactured from grey cast iron GG. The design arrangement guarantees high loading capacities. The bearings DIN 502 to 504 can be used either with or without a bush.

The bushes are made from red cast RG 7. The bearing bore has a tolerance of D7 if flanged bearings or eye bearings are used without bushes.

Flanged Bearing

to DIN 502

Style A with Bush

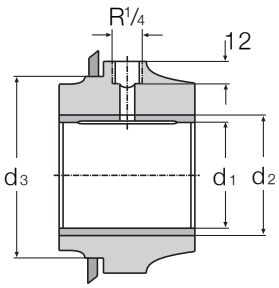

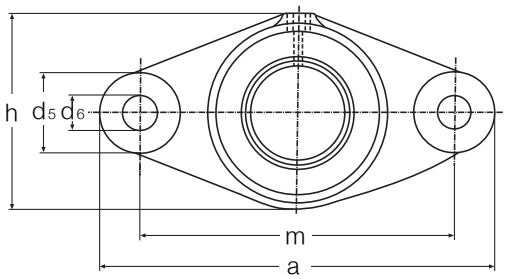

Style B without Bush

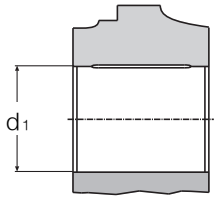

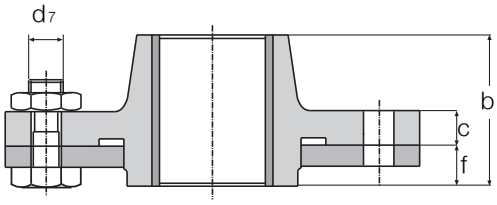

d_1 / D10 A	d_1 B	a	b	c	d_2	d_3 mm	d_5	d_6	d_7	f	h	m +/-1
-	25	135	60	20	-	50	35	14	M12	20	60	100
-	30	135	60	20	-	50	35	14	M12	20	60	100
25	35	155	60	20	35	65	35	14	M12	20	75	120
30	40	155	60	20	40	65	35	14	M12	20	75	120
35	45	180	70	25	45	80	40	18	M16	20	90	140
40	50	180	70	25	50	80	40	18	M16	20	90	140
45	55	210	80	30	55	90	50	22	M20	20	100	160
50	60	210	80	30	60	90	50	22	M20	20	100	160
55	55	240	90	30	65	110	50	22	M20	25	120	190
60	70	240	90	30	70	110	50	22	M20	25	120	190
70	80	275	100	35	80	130	55	26	M24	25	140	220

Flanged Bearing

to DIN 503

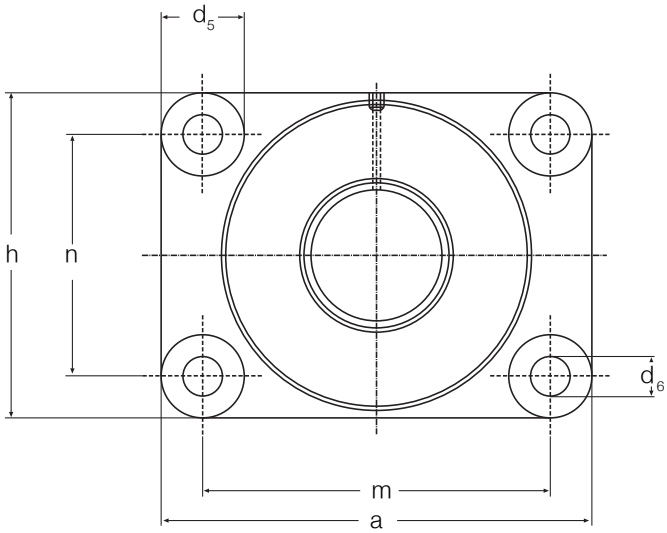

Style A with Bush

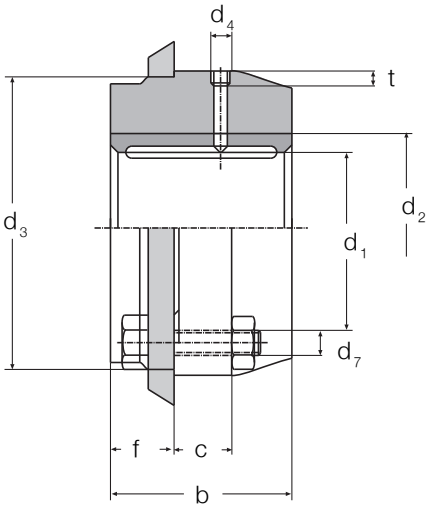

Style B without Bush

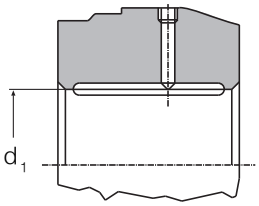

Arrangement A with Bush d_1 / D10	Arrangement B without Bush d_1/ D7	Weight kg	Dimensions mm a	m	h	n	d_5	d_6	d_2	d_3	d_4	t	b	c	f
35	45	2,9	145	110	85	50	35	14	45	80	R 1/4	12	70	20	20
40	50	3,0	145	110	85	50	35	14	50	80	R 1/4	12	70	20	20
45	55	5,5	175	130	105	60	45	18	55	100	R 1/4	12	80	25	20
50	60	5,3	175	130	105	60	45	18	60	100	R 1/4	12	80	25	20
55	-	8,1	195	150	125	80	45	18	-	120	R 1/4	12	90	25	25
60	70	7,8	195	150	125	80	45	18	70	120	R 1/4	12	90	25	25
70	80	12,0	220	170	150	100	50	22	80	140	R 1/4	12	100	30	25
80	90	14,5	240	190	170	120	50	22	90	160	R 1/4	12	100	30	30
90	100	25,0	260	210	190	140	50	22	100	180	R 1/4	12	120	30	30
-	110	24,0	260	210	190	140	50	22	-	180	R 1/4	12	120	30	30
100	125	30,0	285	230	215	160	55	26	125	200	R 3/8	13	120	35	40
110	-	28,0	285	230	215	160	55	26	-	200	R 3/8	13	120	33	40
125	140	48,0	310	250	240	180	60	26	140	230	R 3/8	13	140	40	40
140	160	57,0	330	270	270	210	60	26	155	260	R 3/8	13	160	40	40
-	180	55,0	330	270	270	210	60	26	165	260	R 3/8	13	160	40	40
160	-	82,0	365	300	305	240	65	33	175	290	R 3/8	13	180	45	40
180	-	95,0	365	300	305	240	65	33	195	290	R 3/8	13	180	45	40

Eye Bearing

to DIN 504

Style A with Bush

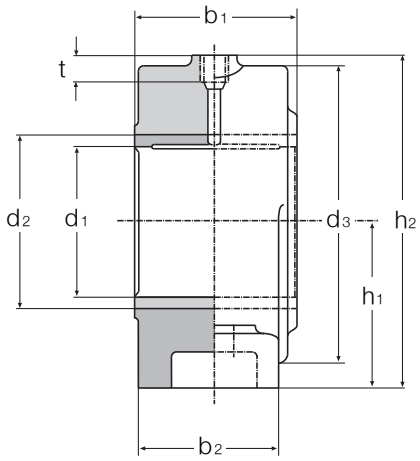

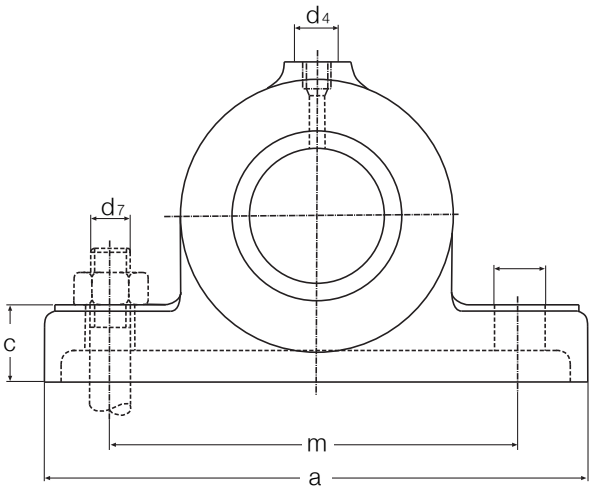

Style B without Bush

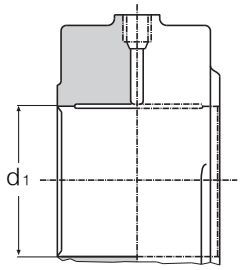

d_1 / D10 A	d_1 B	a	b_1	b_2	c	d_2 mm	d_3	d_4	d_6	d_7	h_1 +/- 0,2	h_2 max	m	t
-	20	110	50	35	18	-	45	R 1/4	12	M10	30	56	75	10
-	25	140	60	40	25	-	60	R 1/4	15	M12	40	75	100	10
-	30	140	60	40	25	-	60	R 1/4	15	M12	40	75	100	10
25	35	160	60	45	25	35	80	R 1/4	15	M12	50	95	120	10
30	40	160	60	45	25	40	80	R 1/4	15	M12	50	95	120	10
35	45	190	70	50	30	45	90	R 1/4	19	M16	60	110	140	10
40	50	190	70	50	30	50	90	R 1/4	19	M16	60	110	140	10
45	55	220	80	55	35	55	100	R 1/4	24	M20	70	125	160	10
50	60	220	80	55	35	60	100	R 1/4	24	M20	70	125	160	10
55	(65)	240	90	60	35	65	120	R 1/4	24	M20	80	145	180	10
60	70	240	90	60	35	70	120	R 1/4	24	M20	80	145	180	10
70	80	270	100	70	45	80	140	R 1/4	28	M24	90	165	210	10
(75)	90	300	100	80	45	85	160	R 1/4	28	M24	100	185	240	10
80	90	300	100	80	45	90	160	R 1/4	28	M24	100	185	240	10
90	100	330	120	90	45	100	180	R 1/4	28	M24	100	195	270	10
90	110	330	120	90	45	100	180	R 1/4	28	M24	100	195	270	10
100	(120)	360	120	100	50	115	200	R 3/8	28	M24	110	215	300	11
110	125	360	120	100	50	125	200	R 3/8	28	M24	110	215	300	11
125	140	410	140	100	55	140	220	R 3/8	35	M30	120	235	330	11
140	160	440	160	100	60	155	240	R 3/8	35	M30	130	255	360	11

Sizes in parentheses if possible avoid

Plummer Block Housing

to DIN 505 L

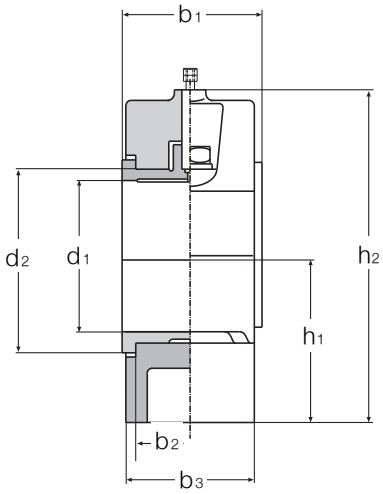

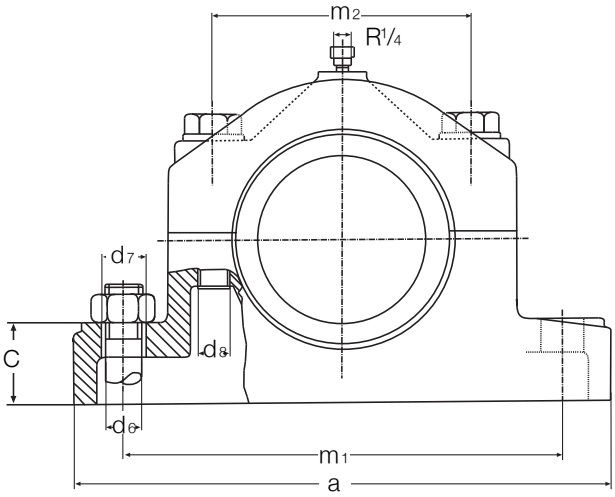

Plummer Block Housing DIN 505 L with 2 bolt holes

d_1 D10	a	b_1 0-0,3	b_2 0-0,1	b_3	c	d_2 mm	d_6	d_7	d_8	h_1 +/- 0,2	h_2 max.	m_1	m_2
25	165	45	35	40	22	35	15	M12	M10	40	85	125	65
30	165	45	35	40	22	40	15	M12	M10	40	85	125	65
35	180	50	40	45	25	45	15	M12	M10	50	100	140	75
40	180	50	40	45	25	50	15	M12	M10	50	100	140	75
45	210	55	45	50	30	55	19	M16	M12	60	120	160	90
50	210	55	45	50	30	60	19	M16	M12	60	120	160	90
55	225	60	50	55	35	65	19	M16	M12	70	140	175	100
60	225	60	50	55	35	70	19	M16	M12	70	140	175	100
70	270	65	53	60	40	85	24	M20	M16	80	160	210	120
80	290	75	63	70	45	95	24	M20	M16	90	180	230	130
90	330	85	73	80	50	105	28	M24	M20	100	200	265	150
100	355	95	81	90	55	115	28	M24	M20	110	220	290	170
110	355	95	81	90	55	125	28	M24	M20	110	220	290	170
125	420	110	94	100	60	145	35	M30	M24	130	260	340	200
140	440	125	105	120	65	160	35	M30	M24	150	300	360	220

Plummer Block Housing

to DIN 506 A

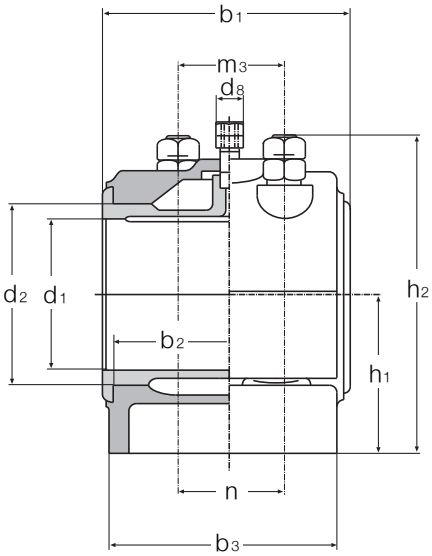

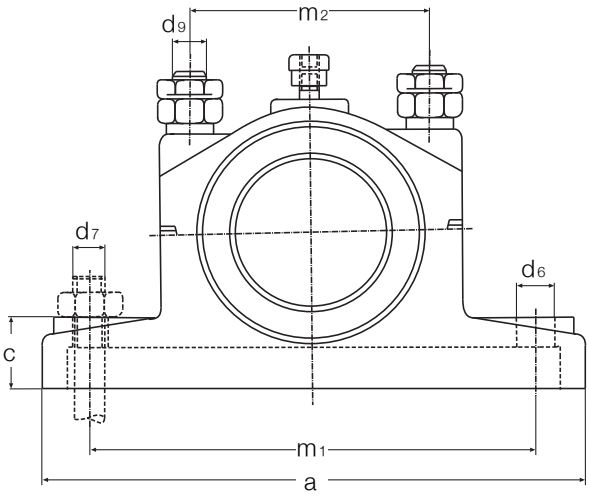

Plummer Block Housing DIN 505 L with 2 bolt holes

d_1 D10	a	b_1 0-0,3	b 0-0,1	b_3	c	d_2 mm	d_6	d_7	d_8	d_9	h_1 +/-0,2	h_2 max.	m_1	m_2	m_3	n
55	230	120	100	105	35	75	19	M16	R¼	M16	80	145	180	105	60	60
60	230	120	100	105	35	75	19	M16	R¼	M16	80	145	180	105	60	60
70	260	130	110	115	45	85	19	M16	R¼	M16	90	165	210	115	60	65
80	300	140	125	130	50	95	24	M20	R¼	M16	100	190	240	130	65	70
90	330	160	135	140	50	110	24	M20	R¼	M20	100	200	270	145	80	80
100	360	180	155	155	55	120	28	M24	R¼	M20	110	210	300	170	80	90
110	360	180	155	155	55	130	28	M24	R¼	M20	110	210	300	170	80	90
125	400	200	175	170	60	155	28	M24	R⅜	M24	120	245	330	200	100	100
140	440	220	195	190	65	165	35	M30	R⅜	M24	130	260	360	215	110	110
160	530	260	240	220	70	190	35	M30	R⅜	M24	170	340	450	270	130	130
180	530	260	240	220	70	210	35	M30	R⅜	M24	170	340	450	270	130	130
200	680	300	260	260	80	235	35	M30	R⅜	M30	240	480	580	330	160	160
220	680	300	260	260	80	255	35	M30	R⅜	M30	240	480	580	330	160	160
240	750	355	315	300	100	280	42	M36	R⅜	M36	265	515	630	380	180	180
260	750	355	315	300	100	300	42	M36	R⅜	M36	265	515	630	380	180	180
280	850	400	360	335	120	325	48	M42	R⅜	M42	315	610	700	420	200	200
300	850	400	360	335	120	345	48	M42	R⅜	M42	315	610	700	420	200	200

EK flexible couplings are claw couplings with rubber elements for the flexible connection of shafts. They are used throughout the mechanical industry.

Due to their flexibility, noise, shock and rotational variations are efficiently damped. Radial, axial and angular movement between the two halves of the coupling are corrected (out of balance).

EK type flexible couplings are manufactured in 2 and 3 part arrangements. Replacement of the elements in the 2 part assembly is only possible after axial displacement of the drive. Replacement of the elements in the 3 part assembly (Arrangement B), is possible without axial displacement of the drive.

The oil resistant rubber elements are suitable for temperatures from -20° C to +80° C.

Flexible Coupling

Style A = 2 part

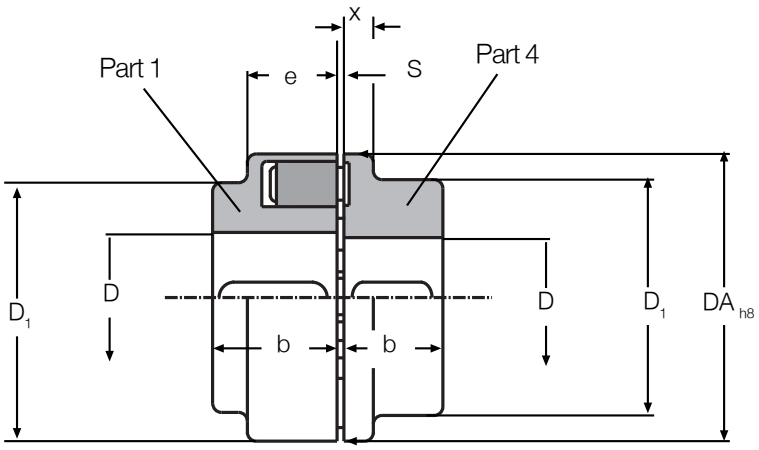

Style A

Flexible Coupling	Speed Rpm	Nominal Torque Nm	Nominal Value $\frac{p_{n(kw)}}{n}$	Bore D Part 1 from	Part 1 to	Part 4 from	Part 4 to	Torque loading kgm²	Qty of Rubbers	Weight Complete kg	Dimensions mm D_A	D_1 Part 1	D_1 Part 4	x	b	e	s
EK 58 A	5000	19	0,002	8	-19	8	-24	0,0002	4	0,45	58	58	40	8	20	20	2-4
EK 68 A	5000	34	0,0036	8	-24	8	-28	0,0003	5	0,63	68	68	46	8	20	20	2-4
EK 80 A	5000	60	0,0063	10	-30	10	-38	0,0012	6	1,50	80	80	68	10	30	30	2-4
EK 95 A	5000	100	0,011	11	-42	11	-42	0,0027	6	2,60	95	76	76	12	35	30	2-4
EK 110 A	5000	160	0,017	14	-48	14	-48	0,0055	6	4,00	110	86	86	14	40	34	2-4
EK 125 A	5000	240	0,025	16	-55	16	-55	0,0107	6	6,10	125	90	90	18	50	32	2-4
EK 140 A	4900	360	0,038	18	-60	18	-60	0,0140	6	7,00	140	100	100	20	55	34	2-4
EK 160 A	4250	560	0,059	22	-65	22	-65	0,0250	7	9,40	160	108	108	20	60	39	2-6
EK 180 A	3800	880	0,092	24	-75	24	-75	0,0450	8	14,00	180	125	125	20	70	42	2-6
EK 200 A	3400	1340	0,14	28	-85	28	-85	0,0800	8	20,00	200	140	140	24	80	47	2-6
EK 225 A	3000	2000	0,21	38	-90	38	-90	0,1350	8	24,00	225	150	150	18	90	52	2-6
EK 250 A	2750	2800	0,29	48	-100	48	-100	0,2300	8	34,00	250	165	165	18	100	60	3-8
EK 280 A	2450	3900	0,41	55	-110	55	-110	0,3700	8	45,00	280	180	180	20	110	65	3-8

Flexible Coupling

Style B = 3 part

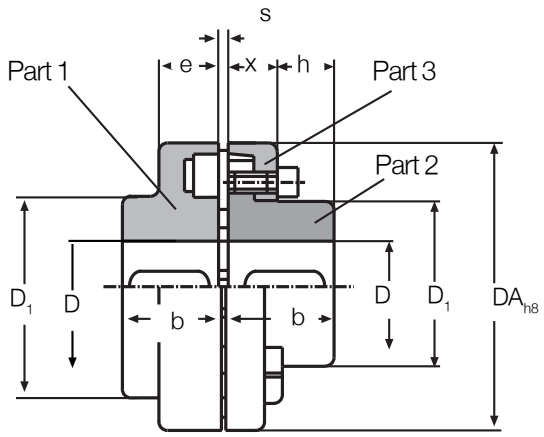

Style B

Flexible Coupling	Speed Rpm	Nominal Torque Nm	Nominal Value $\frac{p_{n(kw)}}{n}$	Bore D Part 1 from to	Bore D Part 2 from to	Torque loading kgm²	Qty of Rubbers	Weight Complete kg	Dimensions mm D_A	D_1 Part 1	D_1 Part 2	x	b	e	h	s
EK 110 B	5000	160	0,017	14 - 48	14 - 38	0,0047	6	3,5	110	86	62	20	40	34	33	2-4
EK 125 B	5000	240	0,025	16 - 55	16 - 45	0,0095	6	5,6	125	90	75	23	50	32	38	2-4
EK 140 B	4900	360	0,038	18 - 60	18 - 50	0,0150	6	7,0	140	100	82	28	55	34	43	2-4
EK 160 B	4250	560	0,059	22 - 65	22 - 58	0,0280	7	9,8	160	108	95	28	60	39	47	2-6
EK 180 B	3800	880	0,092	24 - 75	24 - 65	0,0490	8	14,2	180	125	108	30	70	42	50	2-6
EK 200 B	3400	1340	0,14	28 - 85	28 - 75	0,0850	8	19,8	200	140	122	32	80	47	53	2-6
EK 225 B	3000	2000	0,21	38 - 90	24 - 85	0,1500	8	27,0	225	150	138	38	90	52	61	2-6
EK 250 B	2750	2800	0,29	48 -100	32 - 95	0,2500	8	37,0	250	165	155	42	100	60	69	3-8
EK 280 B	2450	3900	0,41	55 -110	55 -105	0,4000	8	48,0	280	180	172	42	110	65	73	3-8
EK 315 B	2150	5500	0,58	100-120	100-120	0,7100	9	66,0	315	200	195	47	125	70	78	3-8
EK 350 B	1950	7700	0,81	65 -110	65 -110	1,1000	9	86,0	350	230	230	51	140	74	83	3-8
EK 400 B	1700	10300	1,10	70 -120	70 -120	1,9000	10	122,0	400	200	200	56	160	78	88	3-8
EK 440 B	1550	13500	1,40	80 -130	80 -130	3,0000	10	159,0	440	215	215	64	180	86	99	5-10
EK 480 B	1400	16600	1,70	90 -145	90 -145	4,6000	10	200,0	480	240	240	65	190	90	104	5-10

Clamp Couplings to DIN 115

Style A
Style AS

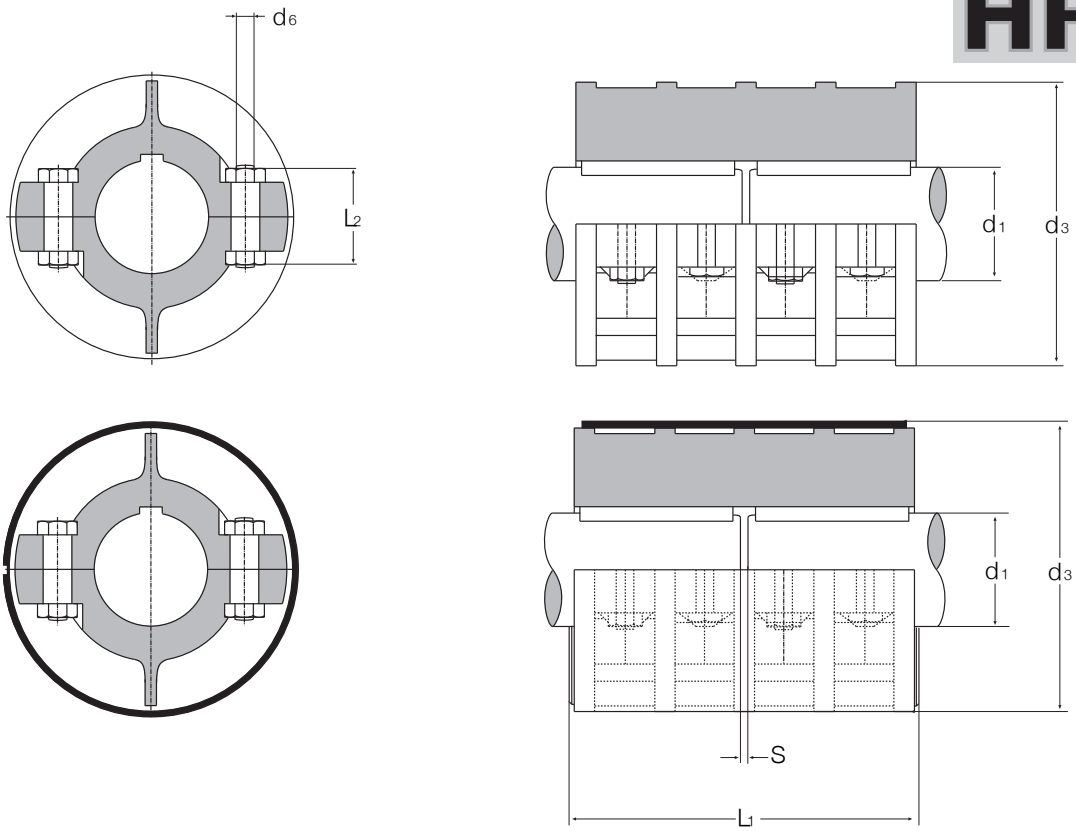

Size = Bore		Material GG Torque	Speed	Torque Loading		Material GS Torque	Speed	Torque Loading			Hexagon Head Bolts DIN-EN24014 (DIN931)		Key Length	Hanger Spring Axial Loading
d1	Tolerance	T_{max} Nm	P_{max} min¹	J kgm²	Weight kg	T_{max} Nm	P_{max} min¹	J kgm²	Weight kg	d³/l	Quantity	d_6 x l_2		max. kN
20	V7	25	1700	0,00093	1,9	63	1700	0,0010	2,1	85/100	4	M 10x30	-	-
25	V 7	40	1500	00034	4,5	100	1500	0,0037	4,9	100/130	4	M 12x40	-	5
30	V 7	60	1500	0,0034	4,2	160	1500	0,0036	4,2	100/130	4	M 12x40	-	5
35	V 7	80	1420	0,0066	6,5	200	1420	0,0071	7,0	110/160	6	M 12x50	-	8
40	V 7	100	1420	0,0065	6,2	250	1420	0,0070	6,7	110/160	6	M 12x50	-	12
45	V 7	125	1350	0,0110	8,5	315	1350	0,0120	9,2	120/190	6	M 12x50	-	16
50	V 7	150	1300	0,0140	9,0	400	1300	0,0160	9,7	130/190	6	M 12x50	-	16
55	U7	500	1200	0,0260	13,0	1600	1200	0,0280	14,0	150/220	6	M 12x55	100	20
60	U7	850	1200	0,0250	12,5	1800	1200	0,0270	13,5	150/220	6	M 16x55	100	24
65	U7	1250	1120	0,0510	18,5	2000	1120	0,0550	20,0	170/250	6	M 16x55	100	24
70	U7	1700	1120	0,0500	17,0	2240	1120	0,0540	18,0	170/250	6	M 16x55	110	30
75	U7	2000	1060	0,1070	28,0	3150	1060	0,1160	30,0	190/280	8	M 16x60	125	37
80	U7	2500	1060	0,1060	27,0	3550	1060	0,1140	29,0	190/280	8	M 16x60	125	37
90	U7	3800	1000	0,2030	41,0	5000	1000	0,2190	44,0	215/310	8	M 20x75	140	42
100	U7	5400	920	0,3990	63,0	8000	920	0,4310	68,0	250/350	8	M 20x90	160	55
110	U7	7500	920	0,4670	70,0	10000	920	0,5050	76,0	250/390	8	M 24x90	160	55
120	U7	11000	870	0,7710	96,0	16000	870	0,8320	104,0	275/430	10	M 24x90	200	70
125	U7	11000	870	0,7590	93,0	16000	870	0,8200	100,0	275/430	10	M 24x90	200	70
140	U7	15000	800	1,6300	160,0	22400	800	1,7600	173,0	325/490	10	M 27x110	200	90
160	U7	23000	750	2,8400	255,0	31500	750	3,0700	275,0	365/560	12	M 27x110	250	110
180	U7	32000	690	5,4200	320,0	40000	690	5,8600	346,0	420/630	12	M 27x130	280	-
200	U7	40000	630	12,0200	550,0	56000	630	12,9800	594,0	500/700	12	M 30x140	320	-
220	U7	50000	580	30,7800	840,0	80000	580	33,2400	907,0	540/770	12	M 36x150	360	-

Clamp Couplings to DIN 115

Style C

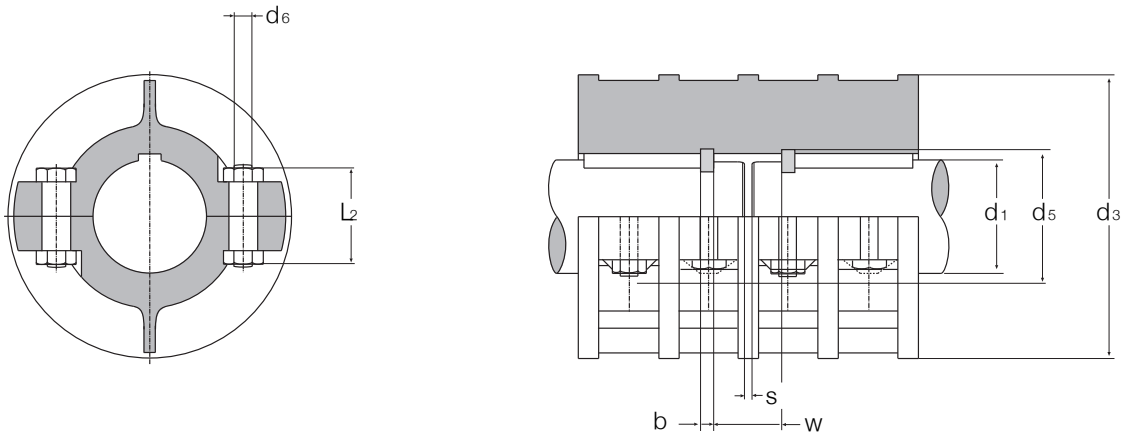

Size = Bore		Material GG Torque	Speed	Torque Loading		Material GS Torque	Speed	Torque Loading		Hexagon Head Bolts DIN-EN24014 (DIN931)			Key Length	Hanger Spring Axial Loading
d1	Tolerance	T_{max} Nm	P_{max} min^{1}	J kgm^2	Weight kg	T_{max} Nm	P_{max} min^{1}	J kgm^2	Weight kg	d^3/l	Quantity	d_6 x l_2		max. kN
25	V 7	40	1420	0,0066	7,0	100	1420	0,0071	7,5	110/160	6	M 12x50	56	12
30	V 7	60	1420	0,0065	6,8	160	1420	0,0070	7,3	110/160	6	M 12x50	56	17
35	V 7	80	1350	0,0110	9,3	200	1350	0,0120	10,0	120/190	6	M 12x50	70	23
40	V 7	100	1300	0,0140	9,9	250	1300	0,0160	10,7	130/190	6	M 12x50	70	30
45	V 7	125	1200	0,0260	14,2	315	1200	0,0280	15,3	150/220	6	M 16x55	80	36
50	V 7	150	1200	0,0250	13,8	400	1200	0,0270	14,8	150/220	6	M 16x55	80	45
55	U7	500	1120	0,0510	20,1	1600	1120	0,0550	21,6	170/250	6	M 16x55	90	53
60	U7	850	1120	0,0500	18,7	1800	1120	0,0540	20,1	170/250	6	M 16x55	90	62
65	U7	1250	1060	0,1070	30,0	2000	1060	0,1160	32,3	190/280	8	M 16x60	100	72
70	U7	1700	1060	0,1060	29,2	2240	1060	0,1140	31,4	190/280	8	M 16x60	100	82
75	U7	2000	1000	0,2030	45,1	3150	1000	0,2190	48,5	215/310	8	M 20x75	110	92
80	U7	2500	1000	0,2030	43,7	3550	1000	0,2190	47,0	215/310	8	M 20x75	110	105
90	U7	3800	920	0,3990	66,4	5000	920	0,4310	71,4	250/350	8	M 20x90	125	135
100	U7	5400	920	0,4670	74,3	8000	920	0,5050	79,9	250/390	8	M 24x90	140	165
110	U7	7500	870	0,7710	101,0	10000	870	0,8320	108,7	275/430	10	M 24x90	160	200
120	U7	11000	800	1,6300	173,5	16000	800	1,7600	186,7	325/490	10	M 27x110	180	250
125	U7	11000	800	1,6300	170,1	16000	800	1,7600	183,0	325/490	10	M 27x110	180	250
140	U7	15000	750	2,8400	272,5	22400	750	3,0700	293,2	365/560	12	M 27x110	200	310
160	U7	23000	690	5,4200	342,4	31500	690	5,8600	386,4	420/630	12	M 27x130	220	400
180	U7	32000	630	12,0200	577,0	40000	630	12,9800	620,8	500/700	12	M 27x140	250	500
200	U7	40000	580	30,7800	871,8	56000	580	33,2400	937,9	540/770	13	M 36x150	280	600

HFB housed bearing units are completely assembled bearing units, ready for installation. The housed bearings consist of grey cast iron or steel plate housings in various arrangements with sealed single row ball bearings. The ball bearings have spherical ground outer rings and can therefore align themselves in the spherical housing bores. Misalignment errors can be compensated by this.

As a result of their special properties they are mainly used in agricultural machinery, construction machinery, textile machines, conveyor systems, machines for the packaging industry as well as in the engineering industry. These bearing units do not allow any axial movement and are therefore not suitable for being used as floating bearings.

There are many ranges of ball bearings available which vary depending on how they are secured on the shaft and on the different types of sealing. Three different fixing possibilities are available:

- **Eccentric Collar Fixing**

  Ball bearings with eccentric collar fixing should be used for bearings rotating in the same direction. They are available with an extended inner ring (series HC) on both sides or, with a single extended inner ring (series SA).

- **Grubscrew fixing**

  These ball bearing types are suitable for bearings with an alternating direction of rotation. These bearings have two grubscrews in the inner ring and are available with either an extended inner ring (series UC) on both sides or a single sided extended inner ring (series SB).

- **Adapter sleeve fixing**

  The adjustable bearings with adapter sleeve are suitable for higher speeds and changing directions of rotation. When assembling the unit it must be ensured that a small play rests for the bearing (Series UK).

Seals

All adjustable bearings are sealed at both sides and filled with an industrial Lithium soap grease No 2.

The permissible temperature range for seals and lubricant is from -30° C to +100° C. Under normal operating conditions these bearings will run maintenance free. For extreme applications they can be regreased at any time. The seals on the HFB adjustable bearings differ partly in their design. Seals in bearing series SB are made from heat resistant synthetic rubber (similar to 2RS). The seals of the series SA consist a pressed steel washer which has a bonded synthetic rubber lip seal on the inside.

In addition to the standard seals, bearing units UC have sliding discs on the outside. These steel plate slider discs rotate with the inner ring and considerably improve the sealing.

For extreme conditions, series HC-R3 bearings, with a triple steel plate rubber and seal secured by the outer ring, are available.

Tolerances

The inner ring bores of HFB bearings have a plus tolerance which allows them to be pushed easily onto drawn unmachined shafts which makes the assembly much easier.

Inner tolerance				Outer tolerance	
Nominal Dimension d (mm)		Limits µm		Limits µm	
over	to	upper	lower	upper	lower
10	18	+ 15	0	-	-
18	30	+ 18	0	-	-
30	50	+ 21	0	0	-11
50	80	+ 24	0	0	-13
80	120	+ 28	0	0	-15
120	150	-	-	0	-18
150	180	-	-	0	-25

Bearing Clearance

The HFB adjustable bearings series SB, SA, UC and HC are mainly supplied with a C3 bearing clearance. Series UK are supplied with a C4 clearance.

Materials

For the housings HFB uses grey cast iron quality GG20. For extreme applications they can also be supplied in GGG40. The various steel housings are produced from pressed steel, quality MR St3 and in zinc plated versions.

The proven bearing steel (100Cr6) is used for ball bearings. The cages are mainly produced from cold formed steel plates. For certain applications, chrome or zinc plated cast housings are also available.

Speeds

The permissible speed for these adjustable bearings depends on the type of fixing and seals. Please refer to the listed speed limits in the following table.

Speeds for adjustable bearings

Shaft Diameter	Speeds Rpm with shaft tolerance				
d	h 6	h 7	h 8	h 9	h 11
12 -17	9500	6000	4300	1500	950
20	8500	5300	3800	1300	850
25	7000	4500	3200	1000	700
30	6300	4000	2800	900	630
35	5300	3400	2200	750	530
40	4800	3000	1900	670	480
45	4300	2600	1700	600	430
50	4000	2400	1600	560	400
55	3600	2000	1400	500	360
60	3400	1900	1300	480	340
65	3000	1700	1100	430	300
70	2800	1600	1000	400	280
75	2600	1500	950	380	260
80	2400	1400	900	360	240
90	2000	1200	800	320	200
100	1900	1100	750	300	190
120	1800	1000	720	280	180

Because of the triple seal these recommended speeds should be substantially reduced for bearing series HC-R3.

Loads

The cast housings (GG20) can withstand the same dynamic and static loads as the fitted bearings.

Housings from pressed steel cannot be loaded to the same level as the bearing. The axial load of the adjustable bearing is approximately 20% of the dynamic load capacity. This loading is, however, strongly dependent on the type of fixing on the shaft and its material.

Lubrication & Maintenance

Under normal operating conditions the grease which is filled in from the supplier will last the lifetime of the bearing. In many situations however, regreasing may be necessary, especially when inclement environmental influences such as moisture, dusty surroundings or increased speeds occur.

For regreasing a Lithium soap grease should be used. The grease should be pumped in slowly whilst running the bearing. Excessive pressure is to be avoided since this could damage the seal.

The greasing intervals are dependent on the operating conditions and are very difficult to determine exactly. It is recommended however, that regreasing is carried out if equipment and machinery are only used periodically (agricultural machines).

The regreasing should be carried out at the end of the operating period.

Tightening torgue of the scrub screws:

Shaft diameter mm do	20	25	30	35	40	45	50	55	60	65	70	75	80	85	90	100	120
Tightening torguet Nm	4	5	6	12	12	12	23	23	23	23	23	23	23	23	23	23	23
Wrench opening mm	3	3	3	4	4	4	5	5	5	5	5	5	5	6	6	6	6
Axial load Fa kN	2	3	4	5	6	8	9	10	12	14	14	15	15	16	16	16	16

High temperatures units

For high temperatures operating conditions we can offer inserts for a operating temperature up to 250°C. The inserts are manufactured with clearance C4.

Ball Bearing

Series SB
with Grubscrew fixing

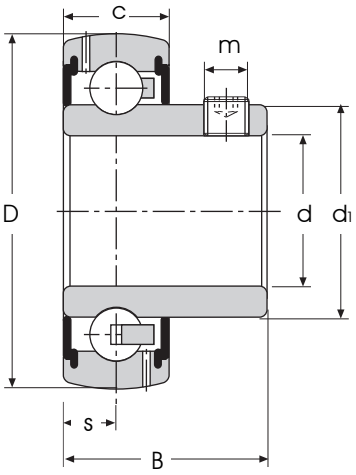

Ref	Dimensions in mm							Load Rating kN		
								dynamic	static	Weight
	d	D	B	C	d_1	s	m	c kN	c_0 kN	kg
SB 202	15	40	22	12	24,2	6,0	M 5 x 0,8	9,55	4,75	0,13
SB 203	17	40	22	12	24,2	6,0	M 5 x 0,8	9,55	4,75	0,12
SB 204	20	47	25	14	28,5	7,0	M 6 x 1	12,8	6,6	0,15
SB 205	25	52	27	15	34,0	7,5	M 6 x 1	14,0	7,8	0,18
SB 206	30	62	30	16	40,5	8,0	M 6 x 1	19,5	11,3	0,27
SB 207	35	72	32	17	47,0	8,5	M 8 x 1	25,5	15,3	0,42
SB 208	40	80	34	18	53,0	9,0	M 8 x 1	32,5	19,8	0,60
SB 209	45	85	41,2	19	56,6	10,2	M 8 x 1	32,5	20,4	0,60
SB 210	50	90	43,5	20	62,5	10,9	M 10 x 1	35,0	23,2	0,80
SB 212	60	110	47,0	24	76,0	13,0	M 10 x 1	52,0	36,0	1,07

Ball Bearing

Series UC
with Grubscrew fixing

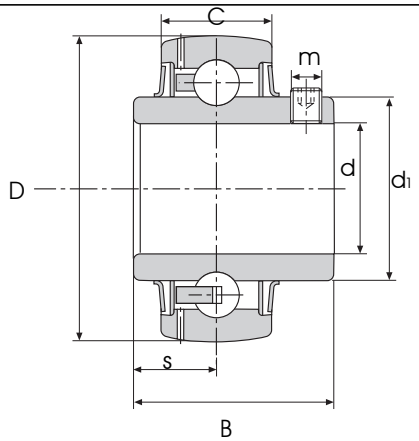

Ref	Dimensions in mm							Load Rating kN dynamic static		Weight
	d	D	B	C	d_1	s	m	c kN	c_0 kN	kg
UC 201	12	40	27,4	14	28,5	11,5	M 5 x 0,8	12,8	6,6	0,21
UC 202	15	40	27,4	14	28,5	11,5	M 5 x 0,8	12,8	6,6	0,20
UC 203	17	40	27,4	14	28,5	11,5	M 5 x 0,8	12,8	6,6	0,19
UC 204	20	47	31,o	17	28,5	12,7	M 6 x 1,0	12,8	6,6	0,18
UC 205	25	52	34,1	17	34,0	14,3	M 6 x 1,0	14,0	7,8	0,20
UC 206	30	62	38,1	19	40,5	15,9	M 6 x 1,0	19,5	11,3	0,32
UC 207	35	72	42,9	20	47,0	17,5	M 8 x 1,0	25,5	15,3	0,48
UC 208	40	80	49,2	21	53,0	19,0	M 8 x 1,0	32,5	19,8	0,64
UC 308	40	90	53,0	28	56,0	19,0	M 10 x 1,25	41,5	23,0	1,00
UC 209	45	85	49,2	22	58,0	19,0	M 8 x 1,0	32,5	20,4	0,68
UC 309	45	100	57,0	30	64,0	22,0	M 10 x 1,25	54,0	31,0	1,28
UC 210	50	90	51,6	24	62,5	19,0	M 10 x 1,25	35,0	23,2	0,80
UC 310	50	110	61,0	32	70,5	22,0	M 12 x 1,5	63,0	36,5	1,65
UC 211	55	100	55,6	25	69,0	22,2	M 10 x 1,25	43,5	29,0	1,12
UC 311	55	120	66,0	34	75,0	25,0	M 12 x 1,5	73,0	43,0	2,07
UC 212	60	110	65,1	27	77,0	25,4	M 10 x 1,25	52,0	36,0	1,54
UC 312	60	130	71,0	36	81,7	26,0	M 12 X 1,5	83,5	50,0	2,59
UC 213	65	120	65,1	28	82,5	25,4	M 12 x 1,25	62,0	44,0	1,86
UC 313	65	140	75,0	38	88,2	30,0	M 12 X 1,5	94,5	57,5	3,15
UC 214	70	125	74,6	30	87,0	30,2	M 12 x 1,25	62,0	44,0	2,05
UC 314	70	150	78,0	40	95,0	33,0	M 12 X 1,5	106,0	65,5	3,83
UC 215	75	130	77,8	32	93,0	33,3	M 12 x 1,25	62,0	44,5	2,21
UC 315	75	160	82,0	42	101,5	32,0	M 14 X 1,5	116,0	74,0	4,59
UC 216	80	140	82,6	33	98,5	33,3	M 12 x 1,25	72,0	54,0	3,00
UC 316	80	170	86,0	44	108,0	34,0	M 14 X 1,5	125,0	83,0	5,40
UC 217	85	150	87,5	35	105,0	34,1	M 12 x 1,25	85,0	65,0	3,37
UC 317	85	180	96,0	46	114,5	40,0	M 16 X 1,5	135,0	92,5	6,58
UC 218	90	160	96,0	38	112,0	39,7	M 12 x 1,25	96,0	72,0	4,36
UC 318	90	190	96,0	40	121,0	48,0	M 16 X 1,5	145,0	102,0	7,34
UC 319	95	200	103,0	50	127,5	41,0	M 16 X 1,5	156,0	113,0	8,7
UC 320	100	215	108,0	54	137,0	42,0	M 18 X 1,5	177,0	135,0	10,8
UC 321	105	225	112,0	56	142,0	44,0	M 18 X 1,5	187,0	147,0	12,2
UC 322	110	240	117,0	60	152,0	46,0	M 18 X 1,5	209,0	172,0	12,2
UC 324	120	260	126,0	64	165,0	51,0	M 18 X 1,5	211,0	174,0	18,5
UC 326	130	280	135,0	68	178,5	54,0	M 20 X 1,5	234,0	202,0	23,0
UC 328	140	300	145,0	73	191,4	59,0	M 20 X 1,5	258,0	232,0	28,5

Ball Bearing

Series SA

with Eccentric Collar fixing

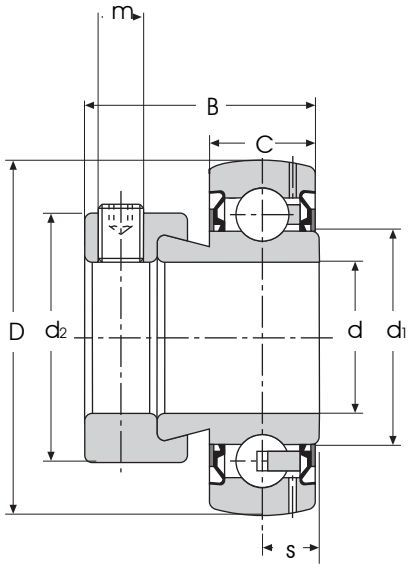

Ref	Dimensions in mm								Load Rating kN		
									dynamic	static	Weight
	d	D	B	C	d_1	d_2	s	m	c kN	c_0 kN	kg
SA 202	15	40	28,6	12	23,0	28,0	6,5	M 6 x 0,75	9,55	4,75	0,12
SA 203	17	40	28,6	12	23,0	28,0	6,5	M 6 x 0,75	9,55	4,75	0,12
SA 204	20	47	31,0	14	26,9	33,0	7,5	M 6 x 0,75	12,8	6,6	0,16
SA 205	25	52	31,0	15	30,5	37,5	7,5	M 6 x 0,75	14,0	7,8	0,19
SA 206	30	62	35,7	18	37,4	44,0	9,0	M 8 x 1	19,5	11,3	0,31
SA 207	35	72	38,9	19	44,6	51,0	9,5	M 10 x 1,25	25,5	15,3	0,48
SA 208	40	80	43,7	21	49,4	58,0	11,0	M 10 x 1,25	32,5	19,8	0,63
SA 209	45	85	43,7	22	54,5	63,0	11,0	M 10 x 1,25	32,5	20,4	0,69
SA 210	50	90	43,7	22	59,4	69,0	11,0	M 10 x 1,25	35,0	23,2	0,77
SA 212	60	110	53,1	24	72,0	84,0	13,5	M 10 x 1,25	52,0	36,0	1,40

Ball Bearing

Series HC

with Eccentric Collar fixing

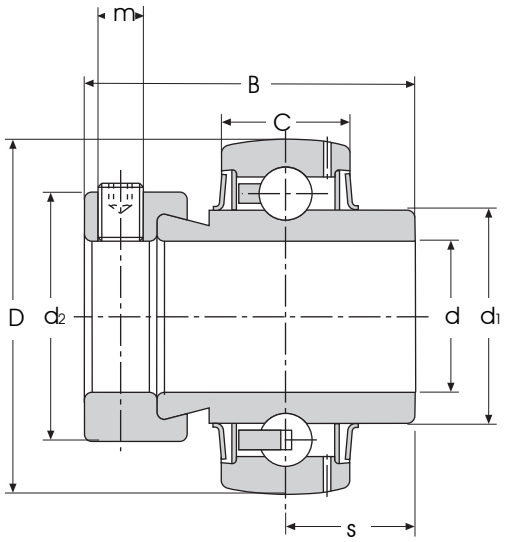

Ref	Dimensions in mm								Load Rating kN		Weight
									dynamic	static	
	d	D	B	C	d_1	d_2	s	m	c kN	c_0 kN	kg
HC 204	20	47	43,5	14	28,2	33,3	17,0	M 6 x 0,75	12,8	6,6	0,21
HC 205	25	52	44,3	15	33,8	38,1	17,4	M 6 x 0,75	14,0	7,8	0,25
HC 206	30	62	48,3	18	39,7	44,5	18,2	M 6 x 0,75	19,5	11,3	0,38
HC 207	35	72	51,1	19	46,1	55,6	18,8	M 8 x 1,00	25,5	15,3	0,61
HC 208	40	80	56,3	21	52,3	60,3	21,4	M 10 x 1,25	32,5	19,8	0,73
HC 209	45	85	56,3	22	56,6	63,5	21,4	M 10 x 1,25	32,5	20,4	0,85
HC 210	50	90	62,7	22	62,5	69,9	24,6	M 10 x 1,25	35,2	23,2	0,93
HC 211	55	100	71,3	25	69,1	76,2	27,8	M 10 x 1,25	43,5	29,0	1,35
HC 212	60	110	77,7	24	75,5	84,2	30,9	M 10 x 1,25	52,0	36,0	1,80
HC 312	60	130	79,4	36	-	88,5	31,0	M 12 X 1,5	83,5	50,0	2,90
HC 213	65	120	85,7	28	82,5	86,0	34,1	M 10 x 1,25	62,0	44,0	2,50
HC 214	70	125	66,1	28	85,2	96,0	21,5	M 12 x 1,25	62,0	44,0	2,65
HC 314	70	150	92,1	40	-	101,5	34,1	M 16 X 1,50	106,0	65,5	4,50
HC 215	75	130	67,1	28	90,0	100,0	21,5	M 12 x 1,25	62,0	44,5	2,90
HC 216	80	140	71,0	30	97,0	108,0	23,4	M 12 x 1,25	72,0	54,0	3,20
HC 316	80	170	106,4	44	-	119,0	40,5	M 18 X 1,50	125,0	83,0	6,70
HC 218	90	160	69,5	32	109,4	118,0	23,0	M 12 x 1,25	96,0	72,0	4,30
HC 318	90	190	115,9	48	-	133,0	43,6	M 20 X 1,50	145,0	102,0	9,10
HC 220	100	180	75,0	36	122,2	132,0	25,5	M 12 x 1,25	122,0	93,0	5,00
HC 320	100	215	128,6	54	-	146,0	50,0	M 20 X 1,50	177,0	135,0	12,6
HC 224	120	215	81,0	40	146,4	152,0	28,5	M 12 x 1,25	155,0	131,0	6,93

Ball Bearing

Series HC - R3

with Eccentric Collar fixing

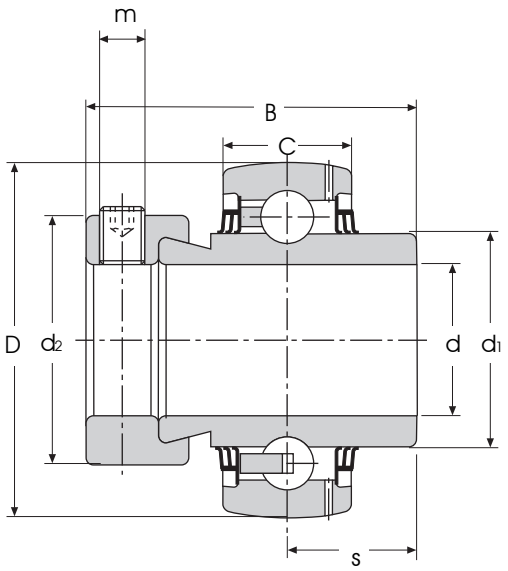

Ref No	Dimensions in mm								Load Rating kN			
									dyn.	stat.	Weight	n max
	d	D	B	C	d_1	d_2	s	m	c kN	c_o kN	kg	min-1
HC 205 R3	25	52	44,3	17	33,6	38,1	17,4	M 6 x 0,75	14,0	7,8	0,25	1000
HC 206 R3	30	62	48,3	19	39,7	44,5	18,2	M 8 x 1	19,5	11,3	0,38	830
HC 207 R3	35	72	51,1	20	46,1	55,6	18,8	M 10 x 1,25	25,5	15,3	0,61	710
HC 208 R3	40	80	56,3	21	52,0	60,3	21,4	M 10 x 1,25	32,5	19,8	0,73	630
HC 209 R3	45	85	56,3	22	56,6	63,5	21,4	M 10 x 1,25	32,5	20,4	0,85	560
HC 210 R3	50	90	62,7	23	62,5	69,9	24,6	M 10 x 1,25	35,0	23,2	0,93	500
HC 211 R3	55	100	71,3	25	69,1	76,2	27,7	M 10 x 1,25	43,5	29,0	1,35	450
HC 212 R3	60	110	77,7	27	75,5	84,2	30,9	M 10 x 1,25	52,0	36,0	1,80	420
HC 213 R3	65	120	85,7	28	82,5	86	34,1	M 10 x 1,25	62,0	44,0	2,50	380
HC 214 R3	70	125	66,1	28	85,2	96	21,5	M 12 x 1,25	62,0	44,0	2,65	360
HC 215 R3	75	130	67,1	28	90,0	100	21,5	M 12 x 1,25	62,0	44,5	2,90	330
HC 216 R3	80	140	71,0	30	97,0	108	23,4	M 12 x 1,25	72,0	54,0	3,20	310

Ball Bearing

Series UK

with Adapter sleeve fixing

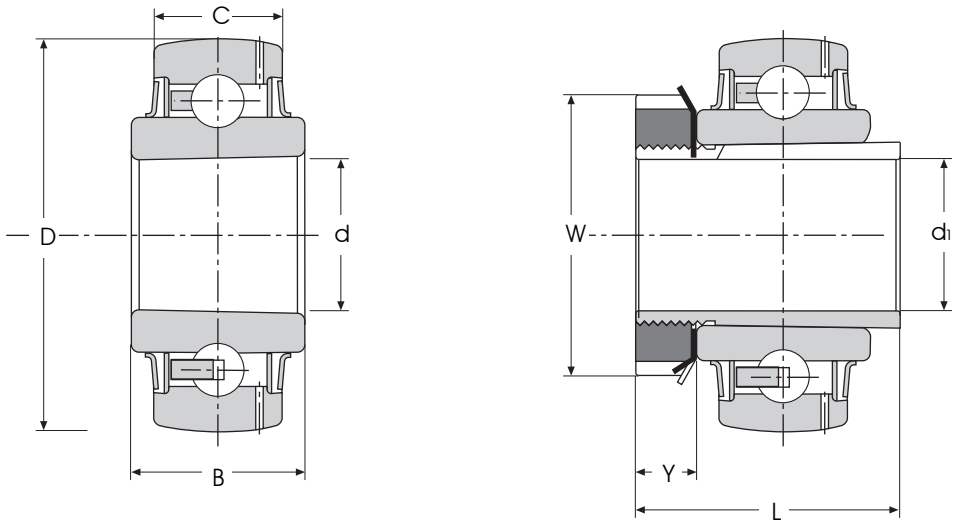

Ref No	Dimensions in mm								Load Rating kN		Weight
									dynamic	static	
	d	D	B	C	d_1	d_2	s	m	c kN	c_0 kN	kg
UK 205 + H 2305	20	52	25	21	17	35	8	38	14,0	7,8	0,24
UK 206 + H 2306	25	62	30	29	19	38	8	45	19,5	11,3	0,34
UK 207 + H 2307	30	72	35	27	20	43	9	52	25,5	15,3	0,53
UK 208 + H 2308	35	80	40	29	21	46	10	58	32,5	19,8	0,69
UK 209 + H 2309	40	85	45	30	22	50	11	65	32,5	20,4	0,77
UK 210 + H 2310	45	90	50	31	23	55	12	70	35,0	23,2	0,93
UK 211 + H 2311	50	100	55	33	27	59	12	75	43,5	29,0	1,16
UK 212 + H 2312	55	110	60	36	27	62	13	80	52,0	36,0	1,47
UK 213 + H 2313	60	120	65	36	28	65	14	85	62,0	44,0	1,82
UK 215 + H 2315	65	130	75	41	30	73	15	98	62,0	44,5	2,59
UK 216 + H 2316	70	140	80	44	33	78	17	105	72,0	54,0	3,27
UK 217 + H 2317	75	150	85	44	35	82	18	110	85,0	65,0	3,92
UK 218 + H 2318	80	160	90	48	38	86	18	120	96,0	72,0	4,68

Housed Bearing Units

Series SIS SIH
SIU SIH-R3
SI SIK

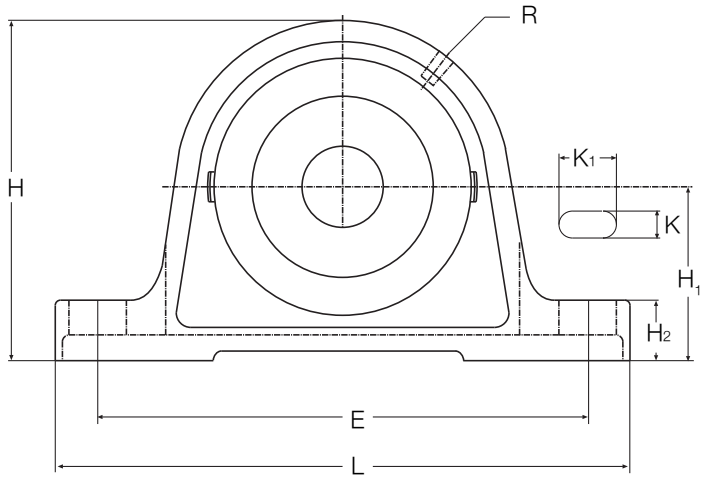

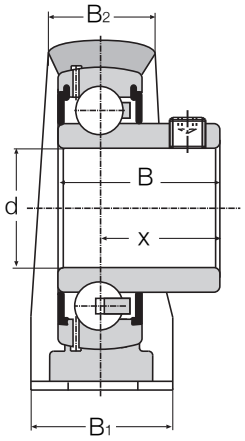

SIS

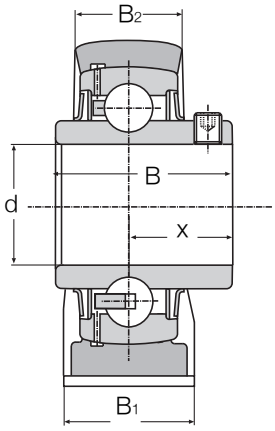

SIU

Unit Ref	Shaft Diameter d	Bearing Ref	Weight kg	Load Rating Dynamic c kN	Static c_0 kN
SI 20	20	SA 204	0,60	12,8	6,6
SIU 20		UC 204	0,55	12,8	6,6
SIS 20		SB 204	0,53	12,8	6,6
SIH 20		HC 204	0,60	12,8	6,6
SIH 20 R3		HC 204 R3	0,53	12,8	6,6
SI 25	25	SA 205	0,65	14,0	7,8
SIU 25		UC 205	0,60	14,0	7,8
SIS 25		SB 205	0,58	14,0	7,8
SIH 25		HC 205	0,65	14,0	7,8
SIH 25 R3		HC 205 R3	0,65	14,0	7,8
SIK 25	20	UK 205	0,58	14,0	7,8
SI 30	30	SA 206	1,0	19,5	11,3
SIU 30		UC 206	0,9	19,5	11,3
SIS 30		SB 206	0,8	19,5	11,3
SIH 30		HC 206	1,1	19,5	11,3
SIH 30 R3		HC 206 R3	1,1	19,5	11,3
SIK 30	25	UK 206	0,8	19,5	11,3
SI 35	35	SA 207	1,5	25,5	15,3
SIU 35		UC 207	1,4	25,5	15,3
SIS 35		SB 207	1,3	25,5	15,3
SIH 35		HC 207	1,6	25,5	15,3
SIH 35 R3		HC 207 R3	1,6	25,5	15,3
SIK 35	30	UK 207	1,3	25,5	15,3

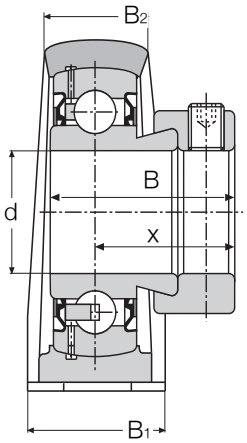

SI

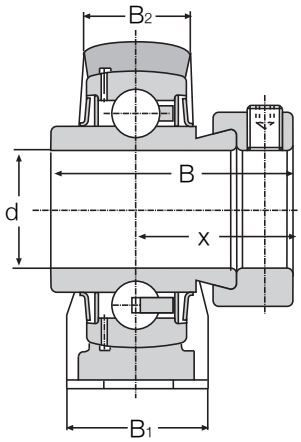

SIH

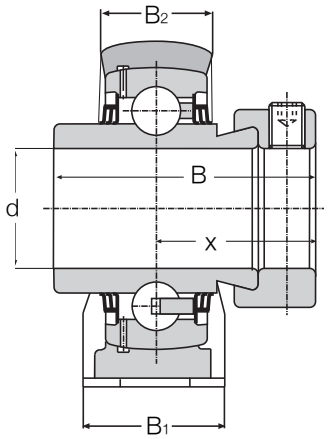

SIH-R3

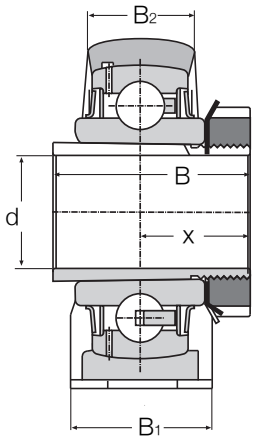

SIK

Shaft Diameter	Dimensions in mm											
d	L	E	H	H_1	H_2	K	K_1	R	B	B_1	B_2	x
20	130	97	64	33,3	14,5	11,5	19	R 1/8	31,0	32	23	23,5
	130	97	64	33,3	14,5	11,5	19	R 1/8	31,0	32	23,0	18,3
	130	97	64	33,3	14,5	11,5	19	R 1/8	25,0	32	23	18,0
	130	97	64	33,3	14,5	11,5	19	R 1/8	43,5	32	23	26,4
	130	97	64	33,3	14,5	11,5	19	R 1/8	43,5	32	23	26,4
25	130	103	70	36,5	14,5	11,5	19	R 1/8	31,0	36	25	23,5
	130	103	70	36,5	14,5	11,5	19	R 1/8	34,1	36	25	19,8
	130	103	70	36,5	14,5	11,5	19	R 1/8	27,0	36	25	19,5
	130	103	70	36,5	14,5	11,5	19	R 1/8	44,3	36	25	26,9
	130	103	70	36,5	14,5	11,5	19	R 1/8	44,3	36	25	26,9
20	130	103	70	36,5	14,5	11,5	19	R 1/8	-	36	25	-
30	155	118	82	42,9	17,0	14,0	22	R 1/8	35,7	40	26	26,7
	155	118	82	42,9	17,0	14,0	22	R 1/8	38,1	40	26	22,2
	155	118	82	42,9	17,0	14,0	22	R 1/8	30,0	40	26	22,0
	155	118	82	42,9	17,0	14,0	22	R 1/8	48,3	40	26	30,1
	155	118	82	42,9	17,0	14,0	22	R 1/8	48,3	40	26	30,1
25	155	118	82	42,9	17,0	14,0	22	R 1/8	-	40	26	-
35	160	126	93	47,6	19,0	14,0	21	R 1/8	38,9	45	28	29,4
	160	126	93	47,6	19,0	14,0	21	R 1/8	42,9	45	28	25,4
	160	126	93	47,6	19,0	14,0	21	R 1/8	32,0	45	28	23,5
	160	126	93	47,6	19,0	14,0	21	R 1/8	51,1	45	28	32,3
	160	126	93	47,6	19,0	14,0	21	R 1/8	51,1	45	28	32,3
30	160	126	93	47,6	19,0	14,0	21	R 1/8	-	45	28	-

Housed Bearing Units

Series SIS SIH
SIU SIH-R3
SI SIK

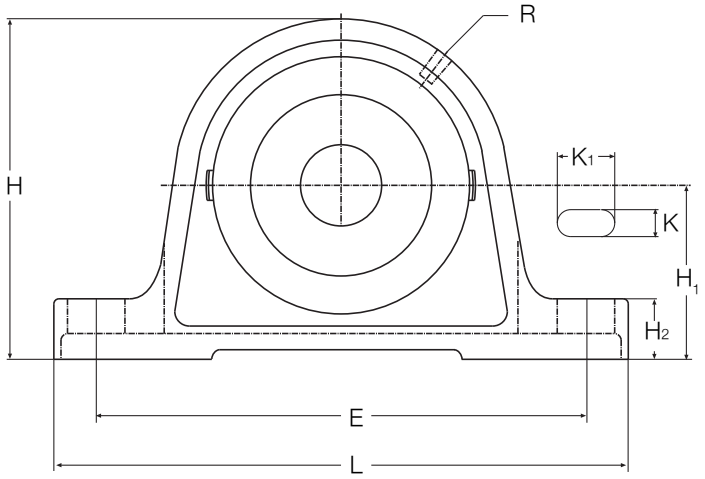

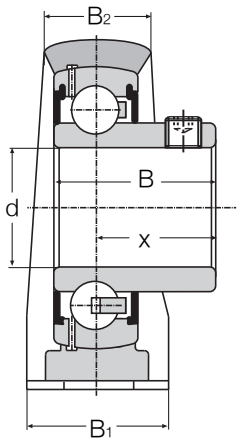

SIS

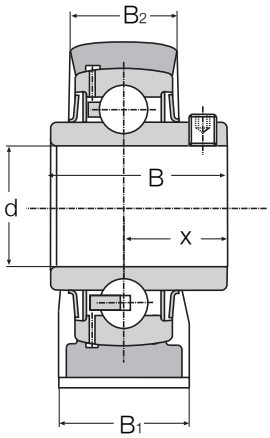

SIU

Unit Ref d	Shaft Diameter	Bearing Ref	Weight kg	Load Rating Dynamic c kN	Static c_0 kN
SI 40	40	SA 208	1,7	32,5	19,8
SIU 40		UC 208	1,7	32,5	19,8
SIS 40		SB 208	1,6	32,5	19,8
SIH 40		HC 208	1,8	32,5	19,8
SIH 40 R3		HC 208 R3	1,8	32,5	19,8
SIK 40	35	UK 208	1,6	32,5	19,8
SI 45	45	SA 209	2,1	32,5	20,4
SIU 45		UC 209	2,1	32,5	20,4
SIS 45		SB 209	1,9	32,5	20,4
SIH 45		HC 209	2,2	32,5	20,4
SIH 45 R3		HC 209 R3	2,2	32,5	20,4
SIK 45	40	UK 209	1,9	32,5	20,4
SI 50	50	SA 210	2,5	35,0	23,2
SIU 50		UC 210	2,5	35,0	23,2
SIS 50		SB 210	2,3	35,0	23,2
SIH 50		HC 210	2,7	35,0	23,2
SIH 50 R3		HC 210 R3	2,7	35,0	23,2
SIK 50	45	UK 210	2,3	35,0	23,2

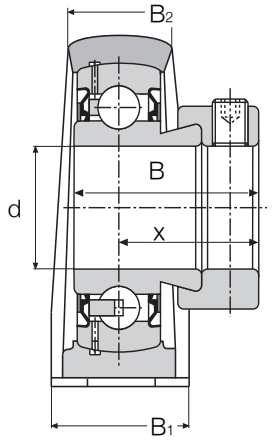

SI

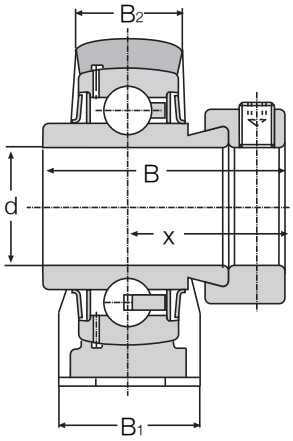

SIH

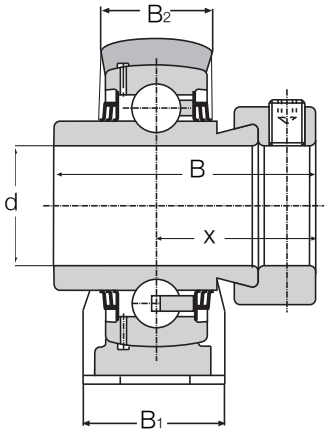

SIH-R3

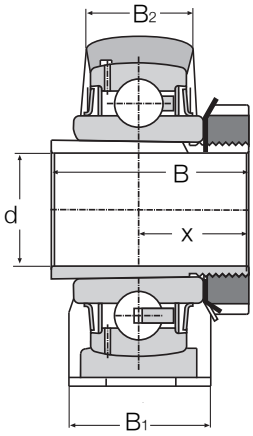

SIK

Shaft Diameter	Dimensions in mm											
d	L	E	H	H_1	H_2	K	K_1	R	B	B_1	B_2	x
40	175	136	99	49,2	19	13,5	24	R 1/8	43,7	48	30	32,7
	175	136	99	49,2	19	13,5	24	R 1/8	49,2	48	30	30,2
	175	136	99	49,2	19	13,5	24	R 1/8	34,0	48	30	25,0
	175	136	99	49,2	19	13,5	24	R 1/8	56,3	48	30	34,9
	175	136	99	49,2	19	13,5	24	R 1/8	56,3	48	30	34,9
35	175	136	99	49,2	19	13,5	24	R 1/8	-	48	30	-
45	190	148	107	54	22	13,5	24	R 1/8	43,7	48	32	32,7
	190	148	107	54	22	13,5	24	R 1/8	49,2	48	32	30,2
	190	148	107	54	22	13,5	24	R 1/8	41,2	48	32	31
	190	148	107	54	22	13,5	24	R 1/8	56,3	48	32	34,9
	190	148	107	54	22	13,5	24	R 1/8	56,3	48	32	34,9
40	190	148	107	54	22	13,5	24	R 1/8	-	48	32	-
50	198	156	115	57,2	22	17,5	27	R 1/8	43,7	54	34	32,7
	198	156	115	57,2	22	17,5	27	R 1/8	51,6	54	34	32,6
	198	156	115	57,2	22	17,5	27	R 1/8	43,5	54	34	32,6
	198	156	115	57,2	22	17,5	27	R 1/8	62,7	54	34	38,1
	198	156	115	57,2	22	17,5	27	R 1/8	62,7	54	34	38,1
45	198	156	115	57,2	22	17,5	27	R 1/8	-	54	34	-

Housed Bearing Units

Series SIS SIH
SIU SIH-R3
SI SIK

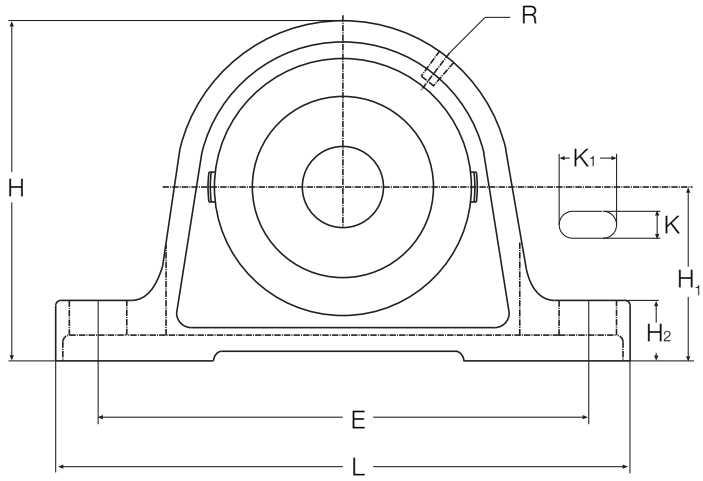

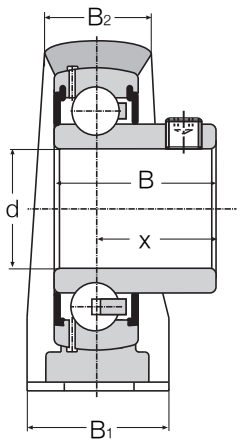

SIS

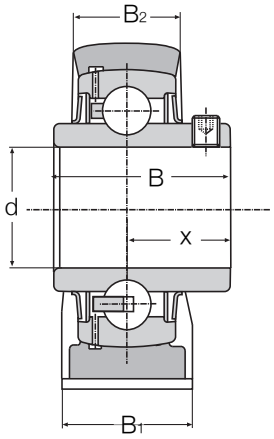

SIU

Unit Ref d	Shaft Diameter	Bearing Ref	Weight kg	Load Rating Dynamic c kN	Static c_0 kN
SIU 55	55	UC 211	2,8	43,5	29,0
SIH 55		HC 211	3,2	43,5	29,0
SIH 55 R3		HC 211 R3	3,2	43,5	29,0
SIK 55	50	UK 211	2,8	43,5	29,0
SI 60	60	SA 212	4,3	52,0	36,0
SIU 60		UC 212	4,2	52,0	36,0
SIH 60		HC 212	4,8	52,0	36,0
SIH 60 R3		HC 212 R3	4,8	52,0	36,0
SIK 60	55	UK 212	4,2	52,0	36,0
SIU 65	65	UC 213	6,0	62,0	44,0
SIH 65		HC 213	6,4	62,0	44,0
SIK 65	60	UK 213	6,0	62,0	44,0
SIU 70	70	UC 214	6,1	62,0	44,0
SIH 70		HC 214	6,4	62,0	44,0
SIH 70 R3		HC 214 R3	6,4	62,0	44,0
SIH 314		HC 314	11,0	123,0	87,0
SIU 75	75	UC 215	7,2	62,0	44,5
SIH 75		HC 215	7,8	62,0	44,5
SIH 75 R3		HC 215 R3	7,8	62,0	44,5
SIK 75	65	UK 215	7,2	62,0	45,5

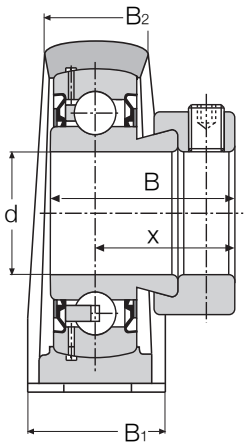

SI

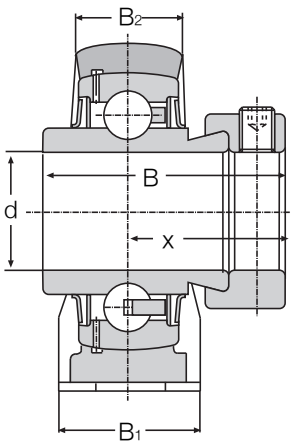

SIH

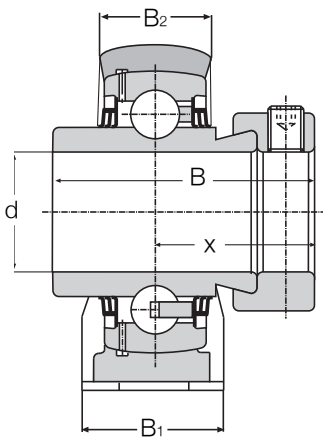

SIH-R3

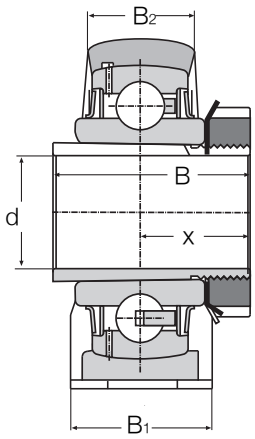

SIK

Shaft Diameter	Dimensions in mm											
d	L	E	H	H_1	H_2	K	K_1	R	B	B_1	B_2	x
55	220	171	126	63,5	23	18	27	R 1/8	55,6	60	42	33,4
	220	171	126	63,5	23	18	27	R 1/8	71,3	60	42	43,5
	220	171	126	63,5	23	18	27	R 1/8	71,3	60	42	43,5
50	220	171	126	63,5	23	18	27	R 1/8	-	60	42	-
60	240	190	140	69,8	25	18	27	R 1/8	53,1	60	42	39,6
	240	190	140	69,8	25	18	27	R 1/8	65,1	60	42	39,7
	240	190	140	69,8	25	18	27	R 1/8	77,7	60	42	46,8
	240	190	140	69,8	25	18	27	R 1/8	77,7	60	42	46,8
55	240	190	140	69,8	25	18	27	R 1/8	-	60	42	-
65	265	203	151	76,2	27	25	28	R 1/8	65,1	70	44	39,7
	265	203	151	76,2	27	25	28	R 1/8	85,7	70	44	51,6
60	265	203	151	76,2	27	25	28	R 1/8	-	70	44	-
70	266	210	157	79,4	27	25	28	R 1/8	74,6	70	44	44,4
	266	210	157	79,4	27	25	28	R 1/8	66,1	70	44	44,6
	266	210	157	79,4	27	25	28	R 1/8	66,1	70	44	44,6
	360	282	187	95,0	35	27	42	R 1/8	75,4	90	54	49,4
75	275	217	163	82,6	28	25	28	R 1/8	77,8	74	48	44,5
	275	217	163	82,6	28	25	28	R 1/8	67,1	74	48	45,6
	275	217	163	82,6	28	25	28	R 1/8	67,1	74	48	45,6
65	275	217	163	82,6	28	25	28	R 1/8	-	74	48	-

Housed Bearing Units

Series SIS SIH
SIU SIH-R3
SI SIK

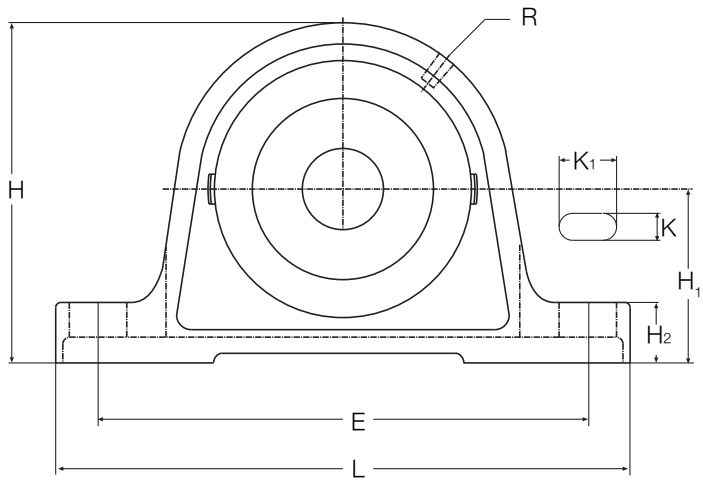

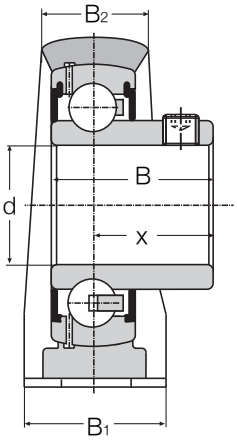

SIS

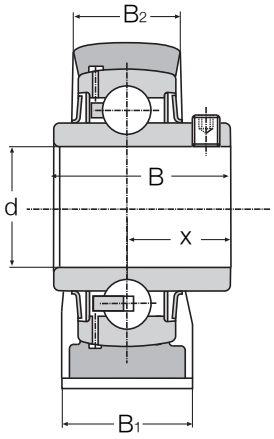

SIU

Unit Ref d	Shaft Diameter	Bearing Ref	Weight kg	Load Rating Dynamic c kN	Static c_0 kN
SIU 80	80	UC 216	8,5	72,0	54,0
SIH 80		HC 216	8,7	72,0	54,0
SIH 80 R3		HC 216 R3	8,7	72,0	54,0
SIH 316		HC 316	16,6	125,0	83,0
SIK 80	70	UK 216	8,5	72,0	54,0
SIU 85	85	UC 217	12,0	85,0	65,0
SIK 85	75	UK 217	13,0	85,0	65,0
SIU 90	90	UC 218	14,0	96,0	72,0
SIH 90		HC 218	13,5	96,0	72,0
SIH 318		HC 318	21,1	145,0	102,0
SIK 90	80	UK 218	15,0	96,0	72,0
SIH 100	100	HC 220	25,0	122,0	93,0
SIH 320		HC 320	34,3	178,0	135,0
SIH 120	120	HC 224	25,0	155,0	131,0

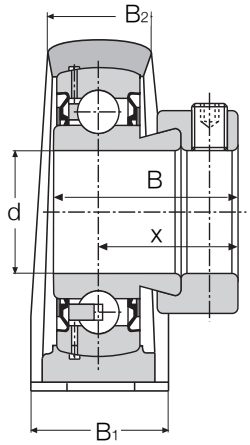

SI

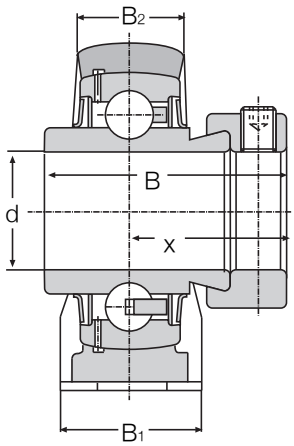

SIH

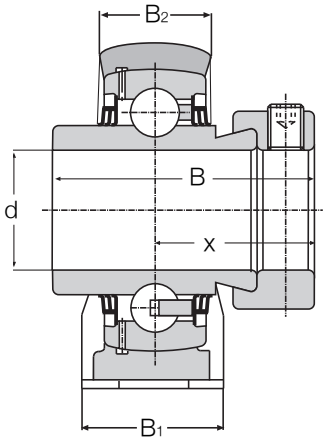

SIH-R3

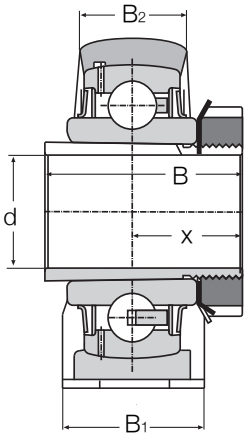

SIK

Shaft Diameter d	L	E	H	H_1	H_2	K	K_1	R	B	B_1	B_2	x
						Dimensions in mm						
80	292	232	175	88,9	30	25,0	34	R 1/8	82,6	78	53	49,3
	292	232	175	88,9	30	25,0	34	R 1/8	71,0	78	53	47,6
	292	232	175	88,9	30	25,0	34	R 1/8	71,0	78	53	47,6
	390	315	226	116,0	50	25,5	44,5	R 1/8	93,7	110	76	59,7
70	292	232	175	88,9	30	25,0	34	R 1/8	-	78	53	44,0
85	310	247	187	95,2	32	25,0	28	R 1/8	85,7	83	53	51,6
75	310	247	187	95,2	32	25,0	28	R 1/8	-	83	53	46,0
90	327	262	200	101,6	33	27,0	35	R 1/8	96,0	88	56	56,3
	327	262	200	101,6	33	27,0	35	R 1/8	69,5	88	56	46,5
	410	340	250	130,0	57	28,0	54	R 1/8	101	120	84	65,6
80	327	262	200	101,6	33	27,0	35	R 1/8	-	88	56	46,5
100	380	308	225	115,0	40	30,0	38	R 1/8	75,0	95	62	49,5
	440	375	280	145,0	65	32,0	47	R 1/8	109,5	130	94	70,0
120	440	358	256	135,0	45	33,0	41	R 1/8	81,0	105	70	52,5

Housed Bearing Units

Series SIGS SIGH
SIGU SIGH-R3
SIG SIGK

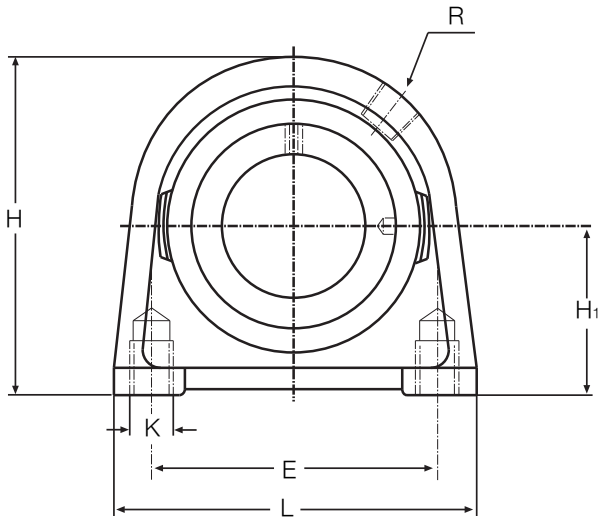

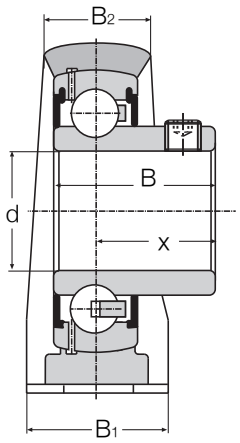

SIGS

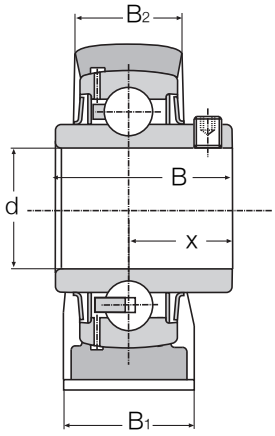

SIGU

Unit Ref	Shaft Diameter d	Bearing Ref	Weight kg	Load Rating Dynamic c kN	Static c_0 kN
SIG 12	12	SA 201	0,5	9,55	4,75
SIGS 12		SB 201	0,4	9,55	4,75
SIG 15	15	SA 202	0,5	9,55	4,75
SIGS 15		SB 202	0,4	9,55	4,75
SIG 17	17	SA 203	0,5	9,55	4,75
SIGS 17		SB 203	0,4	9,55	4,75
SIG 20	20	SA 204	0,6	12,8	6,6
SIGU 20		UC 204	0,6	12,8	6,6
SIGS 20		SB 204	0,5	12,8	6,6
SIGH 20		HC 204	0,6	12,8	6,6
SIGH 20 R3		HC 204 R3	0,6	12,8	6,6
SIG 25	25	SA 205	0,7	14,0	7,8
SIGU 25		UC 205	0,8	14,0	7,8
SIGS 25		SB 205	0,7	14,0	7,8
SIGH 25		HC 205	0,8	14,0	7,8
SIGH 25 R3		HC 205 R3	0,8	14,0	7,8
SIGK 25	20	UK 205	0,7	14,0	7,8
SIG 30	30	SA206	1,1	19,5	11,3
SIGU 30		UC 206	1,1	19,5	11,3
SIGS 30		SB 206	1,0	19,5	11,3
SIGH 30		HC 206	1,2	19,5	11,3
SIGH 30 R3		HC 206 R3	1,2	19,5	11,3
SIGK 30	25	UK 206	1,0	19,5	11,3
SIG 35	35	SA 207	1,5	25,5	15,3
SIGU 35		UC 207	1,5	25,5	15,3
SIGS 35		SB 207	1,4	25,5	15,3
SIGH 35		HC 207	1,6	25,5	15,3
SIGH 35 R3		HC 207 R3	1,6	25,5	15,3

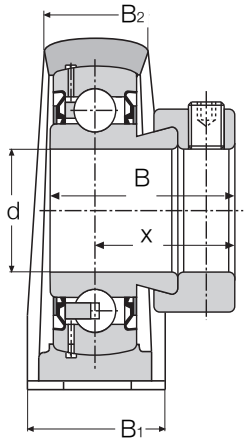

SIG

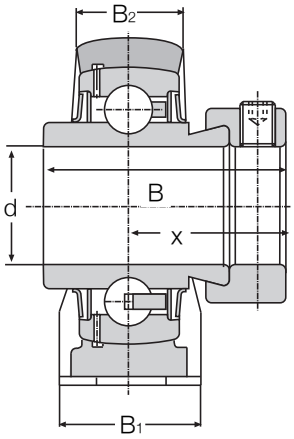

SIGH

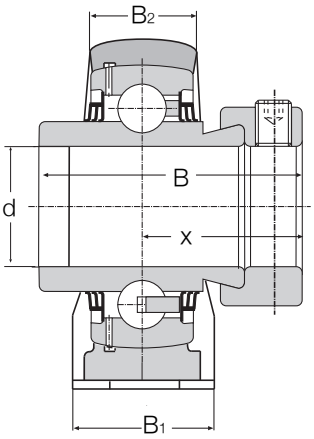

SIGH-R3

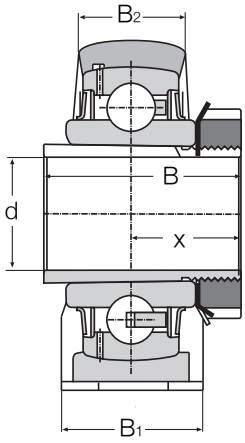

SIGK

Shaft Diameter	Dimensions mm									
d	L	E	H	H_1	K	R	B	B_1	B_2	x
12	63	47	57	30,2	M 8	R1/8"	28,6	30	18,0	22,1
	63	47	57	30,2	M 8	R 1/8	22,1	30	18,0	15,9
15	63	47	57	30,2	M 8	R 1/8	28,6	30	18,0	22,1
	63	47	57	30,2	M 8	R 1/8	22,1	30	18,0	15,9
17	63	47	57	30,2	M 8	R 1/8	28,6	30	18,0	22,1
	63	47	57	30,2	M 8	R 1/8	22,1	30	18,0	15,9
20	65	50,8	64	33,3	M 8	R 1/8	31,0	32	20,0	23,5
	65	50,8	64	33,3	M 8	R 1/8	31,0	32	20,0	18,3
	65	50,8	64	33,3	M 8	R 1/8	25,0	32	20,0	18,0
	65	50,8	64	33,3	M 8	R 1/8	43,5	32	20,0	26,4
	65	50,8	64	33,3	M 8	R 1/8	43,5	32	20,0	26,4
25	71	50,8	68,5	36,5	M 10	R 1/8	31,0	36	20,5	23,5
	71	50,8	68,5	36,5	M 10	R 1/8	34,1	36	20,5	19,8
	71	50,8	68,5	36,5	M 10	R 1/8	27,0	36	20,5	19,5
	71	50,8	68,5	36,5	M 10	R 1/8	44,3	36	20,5	26,9
	71	50,8	68,5	36,5	M 10	R1/8	44,3	36	20,5	26,9
20	71	50,8	68,5	36,5	M 10	R 1/8	-	36	20,5	-
30	98	76,2	82	42,9	M 10	R 1/8	35,7	40	25,0	26,7
	98	76,2	82	42,9	M 10	R 1/8	38,1	40	25,0	22,2
	98	76,2	82	42,9	M 10	R 1/8	30,0	40	25,0	22,0
	98	76,2	82	42,9	M 10	R 1/8	48,3	40	25,0	30,1
	98	76,2	82	42,9	M 10	R 1/8	48,3	40	25,0	30,1
25	98	76,2	82	42,9	M 10	R 1/8	-	40	25,0	-
35	103	82,6	93	47,6	M 10	R 1/8	38,9	45	28,0	29,4
	103	82,6	93	47,6	M 10	R 1/8	42,9	45	28,0	25,4
	103	82,6	93	47,6	M 10	R 1/8	32,0	45	28,0	23,5
	103	82,6	93	47,6	M 10	R 1/8	51,1	45	28,0	32,3
	103	82,6	93	47,6	M 10	R 1/8	51,1	45	28,0	32,3

Housed Bearing Units

Series SIGS SIGH
SIGU SIGH-R3
SIG SIGK

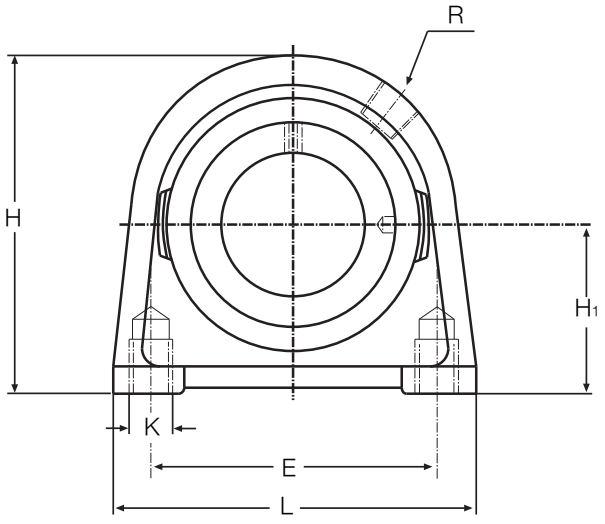

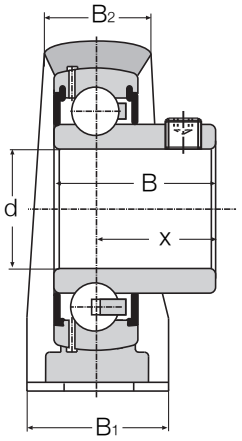

SIGS

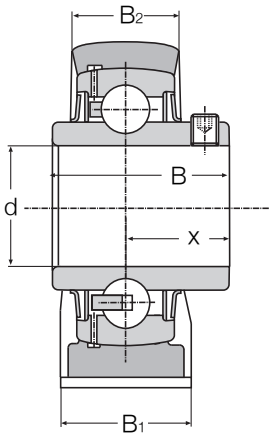

SIGU

Unit Ref	Shaft Diameter d	Bearing Ref	Weight kg	Load Rating Dynamic c kN	Static c_0 kN
SIGK 35	30	UK 207	1,4	25,5	15,3
SIG 40	40	SA 208	1,9	32,5	19,8
SIGU 40		UC 208	1,9	32,5	19,8
SIGS 40		SB 208	1,7	32,5	19,8
SIGH 40		HC 208	2,0	32,5	19,8
SIGH 40 R3		HC 208 R3	2,0	32,5	19,8
SIGK 40	35	UK 208	1,7	32,5	19,8
SIG 45	45	SA 209	2,2	32,5	20,4
SIGU 45		UC 209	2,2	32,5	20,4
SIGS 45		SB 209	2,0	32,5	20,4
SIGH 45		HC 209	2,3	32,5	20,4
SIGH 45 R3		HC 209 R3	2,3	32,5	20,4
SIGK 45	40	UK 209	2,0	32,5	20,4
SIG 50	50	SA 210	2,8	35,0	23,2
SIGU 50		UC 210	2,8	35,0	23,2
SIGS 50		SB 210	2,6	35,0	23,2
SIGH 50		HC 210	3,1	35,0	23,2
SIGH 50 R3		HC 210 R3	3,1	35,0	23,2
SIGK 50	45	UK 210	2,6	35,0	23,2
SIGU 55	55	UC 211	3,2	43,5	29,0
SIGH 55		HC 211	3,5	43,5	29,0
SIGH 55 R3		HC 211 R3	3,5	43,5	29,0
SIGK 55	50	UK 211	3,0	43,5	29,0
SIG 60	60	SA 212	4,1	52,0	36,0
SIGU 60		UC 212	3,9	52,0	36,0
SIGH 60		HC 212	4,5	52,0	36,0
SIGH 60 R3		HC 212 R3	4,5	52,0	36,0
SIGK 60	55	UK 212	3,9	52,0	36,0

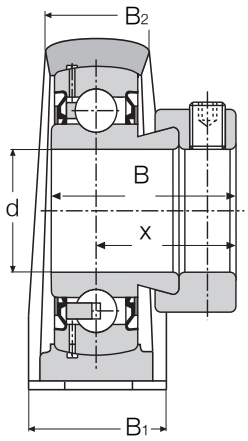

SIG

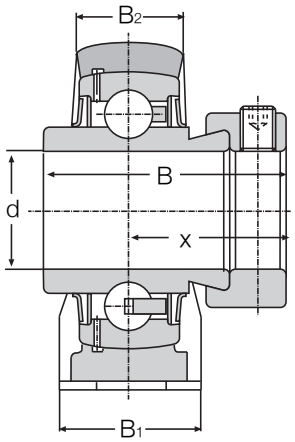

SIGH

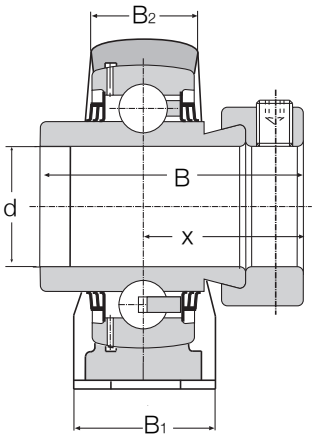

SIGH-R3

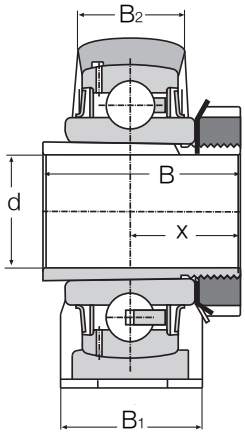

SIGK

Shaft Diameter	Dimensions mm									
d	L	E	H	H_1	K	R	B	B_1	B_2	x
30	103	82,6	93	47,6	M 10	R 1/8	-	45	28	-
40	116	88,9	99	49,2	M 12	R 1/8	43,7	48	30	32,7
	116	88,9	99	49,2	M 12	R 1/8	49,2	48	30	30,2
	116	88,9	99	49,2	M 12	R 1/8	34,0	48	30	25,0
	116	88,9	99	49,2	M 12	R 1/8	56,3	48	30	34,9
	116	88,9	99	49,2	M 12	R 1/8	56,3	48	30	34,9
35	116	88,9	99	49,2	M 12	R 1/8	-	48	30	-
45	120	95,3	107	54,0	M 12	R 1/8	43,7	48	32	32,7
	120	95,3	107	54,0	M 12	R 1/8	49,2	48	32	30,2
	120	95,3	107	54,0	M 12	R 1/8	41,2	48	32	31
	120	95,3	107	54,0	M 12	R 1/8	56,3	48	32	34,9
	120	95,3	107	54,0	M 12	R 1/8	56,3	48	32	34,9
40	120	95,3	107	54,0	M 12	R 1/8	-	48	32	-
50	135	101,6	115	57,2	M 16	R 1/8	43,7	54	34	32,7
	135	101,6	115	57,2	M 16	R 1/8	51,6	54	34	32,6
	135	101,6	115	57,2	M 16	R 1/8	43,5	54	34	32,6
	135	101,6	115	57,2	M 16	R 1/8	62,7	54	34	38,1
	135	101,6	115	57,2	M 16	R 1/8	62,7	54	34	38,1
45	135	101,6	115	57,2	M 16	R 1/8	-	54	34	-
55	150	118,0	126	64,0	M 16	R 1/8	55,6	60	35	33,4
	150	118,0	126	64,0	M 16	R 1/8	71,3	60	35	43,5
	150	118,0	126	64,0	M 16	R 1/8	71,3	60	35	43,5
50	150	118,0	126	64,0	M 16	R 1/8	-	60	35	-
60	150	118,0	140	69,9	M 16	R 1/8	53,1	60	42	39,6
	150	118,0	140	69,9	M 16	R 1/8	65,1	60	42	39,7
	150	118,0	140	69,9	M 16	R 1/8	77,7	60	42	46,8
	150	118,0	140	69,9	M 16	R 1/8	77,7	60	42	46,8
55	150	118,0	140	69,9	M 16	R 1/8	-	60	42	-

Housed Bearing Units

Series SBP HCP
UCP UKP
SAP

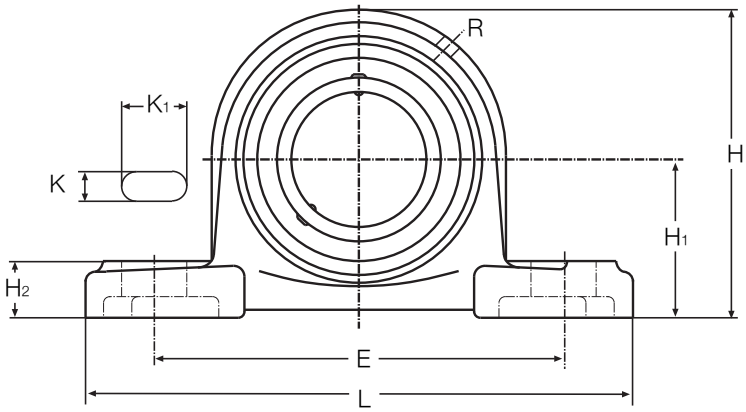

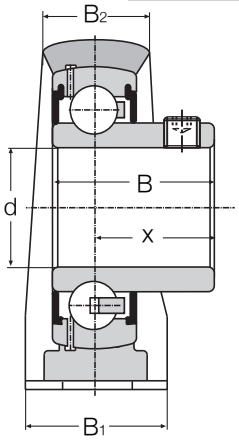

SBP

Unit Ref	Shaft Diameter d	Bearing Ref	Weight kg	Load Rating Dynamic c kN	Static c_0 kN
UCP 201	12	UC 201	0,7	12,8	6,6
UCP 202	15	UC 202	0,7	12,8	6,6
UCP 203	17	UC 203	0,7	12,8	6,6
SAP 204	20	SA 204	0,7	12,8	6,6
UCP 204		UC 204	0,7	12,8	6,6
SBP 204		SB 204	0,6	12,8	6,6
HCP 204		HC 204	0,7	12,8	6,6
SAP 205	25	SA 205	0,8	14,0	7,8
UCP 205		UC 205	0,8	14,0	7,8
SBP 205		SB 205	0,7	14,0	7,8
HCP 205		HC 205	0,8	14,0	7,8
UKP 205	20	UK 205	0,7	14,0	7,8
SAP 206	30	SA 206	1,3	19,5	11,3
UCP 206		UC 206	1,3	19,5	11,3
SBP 206		SB 206	1,2	19,5	11,3
HCP 206		HC 206	1,4	19,5	11,3
UKP 206	25	UK 206	1,2	19,5	11,3
SAP 207	35	SA 207	1,6	25,5	15,3
UCP 207		UC 207	1,6	25,5	15,3
SBP 207		SB 207	1,5	25,5	15,3
HCP 207		HC 207	1,5	25,5	15,3
UKP 207	30	UK 207	1,5	25,5	15,3
SAP 208	40	SA 208	2,1	32,5	19,8
UCP 208		UC 208	2,0	32,5	19,8
SBP 208		SB 208	1,8	32,5	19,8
HCP 208		HC 208	2,2	32,5	19,8
UKP 208	35	UK 208	1,8	32,5	19,8
SAP 209	45	SA 209	2,1	32,5	20,4
UCP 209		UC 209	2,0	32,5	20,4
SBP 209		SB 209	1,8	32,5	20,4
HCP 209		HC 209	2,2	32,5	20,4
UKP 209	40	UK 209	1,8	32,5	20,4

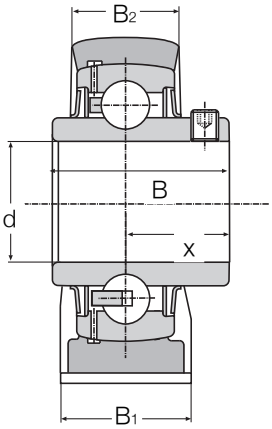

UCP

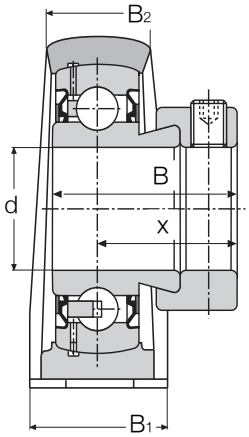

SAP

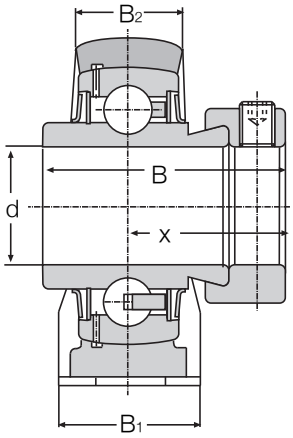

HCP

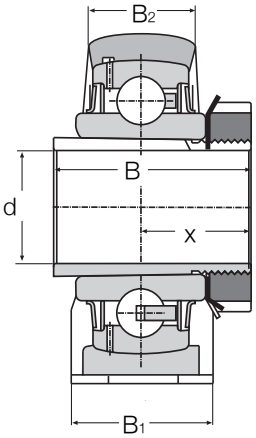

UKP

Shaft Diameter	Dimensions mm											
d	L	E	H	H_1	H_2	K	K_1	R	B	B_1	B_2	x
12	130	97	64	33,3	14,5	11	16	R 1/8	31,0	32	20,0	18,3
15	130	97	64	33,3	14,5	11	16	R 1/8	31,0	32	20,0	18,3
17	130	97	64	33,3	14,5	11	16	R 1/8	31,0	32	20,0	18,3
20	127	95	65	33,3	14	13	19	R 1/8	31,0	33	18,0	23,5
	127	95	65	33,3	14	13	19	R 1/8	31,0	33	18,0	18,3
	127	95	65	33,3	14	13	19	R 1/8	25,0	33	18,0	18,0
	127	95	65	33,3	14	13	19	R 1/8	43,7	33	18,0	26,6
25	140	105	71	36,5	15	13	18	R 1/8	31,0	38	24,5	23,5
	140	105	71	36,5	15	13	18	R 1/8	34,1	38	24,5	19,8
	140	105	71	36,5	15	13	18	R 1/8	27,0	38	24,5	19,5
	140	105	71	36,5	15	13	18	R 1/8	44,4	38	24,5	26,9
20	140	105	71	36,5	15	13	18	R 1/8	-	38	24,5	-
30	165	121	83	42,9	18	17	21	M 6	35,7	48	27,0	26,7
	165	121	83	42,9	18	17	21	M 6	38,1	48	27,0	22,2
	165	121	83	42,9	18	17	21	M 6	30,0	48	27,0	22,0
	165	121	83	42,9	18	17	21	M 6	48,4	48	27,0	30,1
25	165	121	83	42,9	18	17	21	M 6	-	48	27,0	-
35	167	127	94	47,6	19	17	21	M 6	38,9	48	32,0	29,4
	167	127	94	47,6	19	17	21	M 6	42,9	48	32,0	25,4
	167	127	94	47,6	19	17	21	M 6	32,0	48	32,0	23,5
	167	127	94	47,6	19	17	21	M 6	51,1	48	32,0	32,2
30	167	127	94	47,6	19	17	21	M 6	-	48	32,0	-
40	184	137	100	49,2	19	17	23	M 6	43,7	54	34,0	32,7
	184	137	100	49,2	19	17	23	M 6	49,2	54	34,0	33,2
	184	137	100	49,2	19	17	23	M 6	34,0	54	34,0	25,0
	184	137	100	49,2	19	17	23	M 6	56,3	54	34,0	34,9
35	184	137	100	49,2	19	17	23	M 6	-	54	34,0	-
45	190	146	108	54,0	20	17	23	M 6	43,7	54	35,0	32,7
	190	146	108	54,0	20	17	23	M 6	49,2	54	35,0	30,2
	190	146	108	54,0	20	17	23	M 6	40,0	54	35,0	30,5
	190	146	108	54,0	20	17	23	M 6	56,3	54	35,0	34,9
40	190	146	108	54,0	20	17	23	M 6	-	54	35,0	-

Housed Bearing Units

Series SBP HCP
UCP UKP
SAP

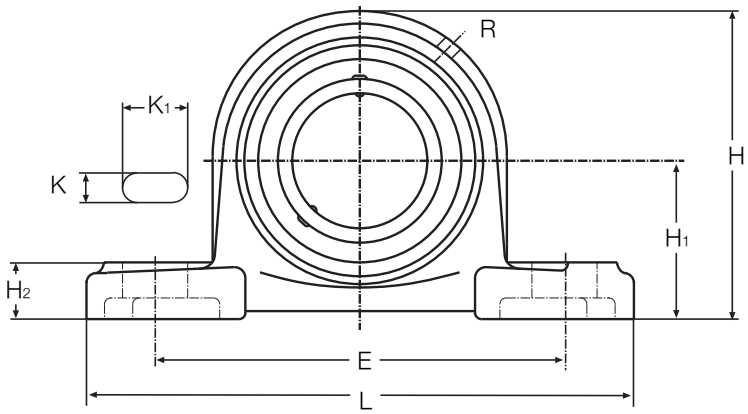

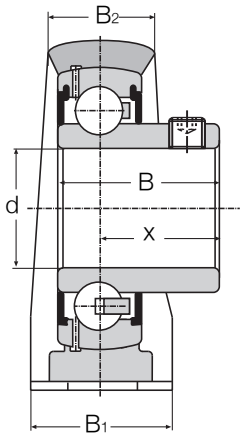

SBP

Unit Ref d	Shaft Diameter	Bearing Ref	Weight kg	Load Rating Dynamic c kN	Static c_0 kN
SAP 210	50	SA 210	2,8	35,0	23,2
UCP 210		UC 210	2,7	35,0	23,2
SBP 210		SB 210	2,5	35,0	23,2
HCP 210		HC 210	2,9	35,0	23,2
UKP 210	45	UK 210	2,5	35,0	23,2
UCP 211	55	UC 211	3,3	43,5	29,0
HCP 211		HC 211	3,6	43,5	29,0
UKP 211	50	UK 211	3,2	43,5	29,0
SAP 212	60	SA 212	4,8	52,0	36,0
UCP 212		UC 212	4,7	52,0	36,0
HCP 212		HC 212	5,3	52,0	36,0
UKP 212	55	UK 212	4,7	52,0	36,0

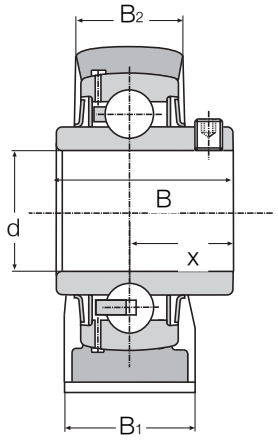

UCP

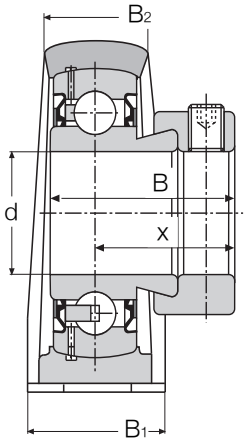

SAP

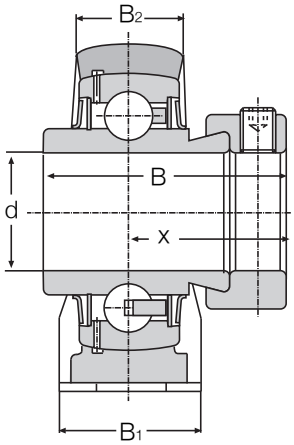

HCP

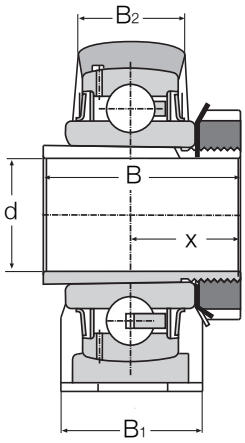

UKP

Shaft Diameter	Dimensions mm											
d	L	E	H	H_1	H_2	K	K_1	R	B	B_1	B_2	x
50	206	159	114	57,2	22	20	25	M 6	43,7	60	38	32,7
	206	159	114	57,2	22	20	25	M 6	51,6	60	38	32,6
	206	159	114	57,2	22	20	25	M 6	42,0	60	38	32,0
	206	159	114	57,2	22	20	25	M 6	62,7	60	38	38,1
45	206	159	114	57,2	22	20	25	M 6	-	60	38	-
55	220	171	126	63,5	23	19	28	R 1/8	55,6	60	42	33,4
	220	171	126	63,5	23	19	28	R 1/8	71,4	60	42	43,6
50	220	171	126	63,5	23	19	28	R 1/8	-	60	42	-
60	241	184	138	69,8	22	20	25	M 6	53,3	70	40	40,3
	241	184	138	69,8	22	20	25	M 6	65,1	70	40	39,7
	241	184	138	69,8	22	20	25	M 6	77,8	70	40	46,8
55	241	184	138	69,8	22	20	25	M 6	-	70	40	-

Housed Bearing Units

Series FIS FUH
FIU FUH-R3
FUU FIK
FI

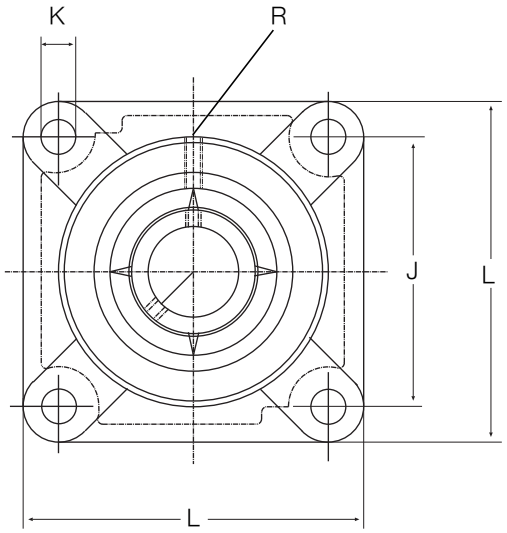

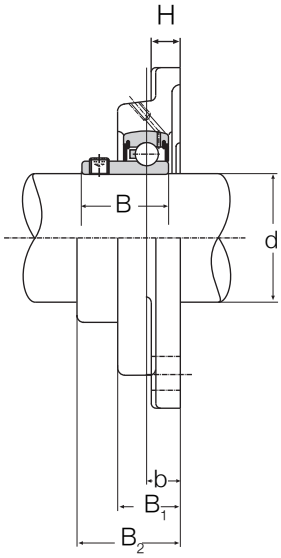

FIS

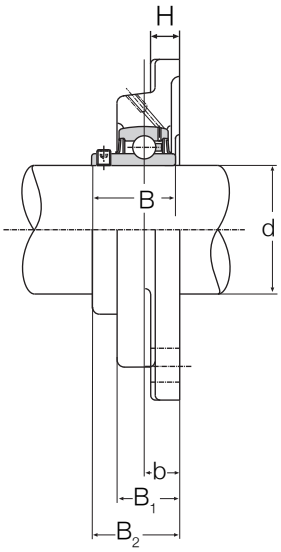

FIU/FUU

Unit Ref	Shaft Diameter d	Bearing Ref	Weight kg	Dimensions mm L	J	H	B_1	B_2	K	B	b	R	Load Rating Dynamic c kN	Static c_0 kN
FI 20	20	SA 204	0,60	86	63,5	13	22,5	34,5	11,5	31,0	11,0	1/8	12,8	6,6
FIS 20		SB 204	0,50	86	63,5	13	22,5	29,0	11,5	25,0	11,0	1/8	12,8	6,6
FUU 20		UC 204	0,60	86	63,5	13	28	36,5	11,5	31,0	18,2	1/8	12,8	6,6
FUH 20		HC 204	0,65	86	63,5	13	28	44,7	11,5	43,5	18,2	1/8	12,8	6,6
FUH 20 R3		HC 204 R3	0,65	86	63,5	13	28	44,7	11,5	43,5	18,2	1/8	12,8	6,6
FI 25	25	SA 205	0,80	95	70	13	27	39	11,5	31,0	15,5	1/8	14,0	7,8
FIS 25		SB 205	0,70	95	70	13	27	35	11,5	27,0	15,5	1/8	14,0	7,8
FIU 25		UC 205	0,80	95	70	13	27	35,3	11,5	34,1	15,5	1/8	14,0	7,8
FUU 25		UC 205	0,80	95	70	15	29	36,3	11,5	34,1	16,5	1/8	14,0	7,8
FUH 25		HC 205	0,85	95	70	15	29	43,4	11,5	44,3	16,5	1/8	14,0	7,8
FUH 25 R3		HC 205 R3	0,85	95	70	15	29	43,4	11,5	44,3	16,5	1/8	14,0	7,8
FIK 25	20	UK 205	0,70	95	70	13	27	-	11,5	23,0	15,5	1/8	14,0	7,8
FI 30	30	SA 206	1,10	108	83	13	31	44,7	11,5	35,7	18,0	1/8	19,5	11,3
FIS 30		SB 206	1,00	108	83	13	31	40,0	11,5	30,0	18,0	1/8	19,5	11,3
FIU 30		UC 206	1,10	108	83	13	31	40,2	11,5	38,1	18,0	1/8	19,5	11,3
FUU 30		UC 206	1,10	108	83	16	32	41,5	11,5	38,1	19,3	1/8	19,5	11,3
FUH 30		HC 206	1,15	108	83	16	32	49,4	11,5	48,3	19,3	1/8	19,5	11,3
FUH 30 R3		HC 206 R3	1,15	108	83	16	32	49,4	11,5	48,3	19,3	1/8	19,5	11,3
FIK 30	25	UK 206	1,00	108	83	13	31	-	11,5	26,0	18,0	1/8	19,5	11,3

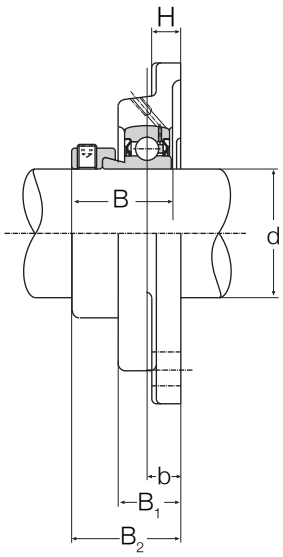

FI

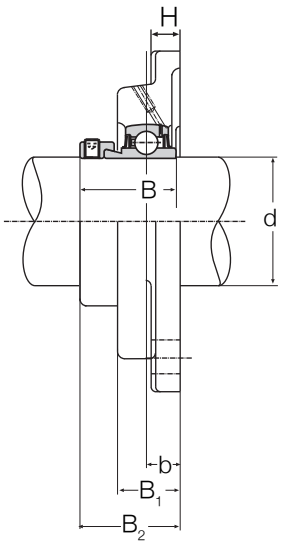

FUH

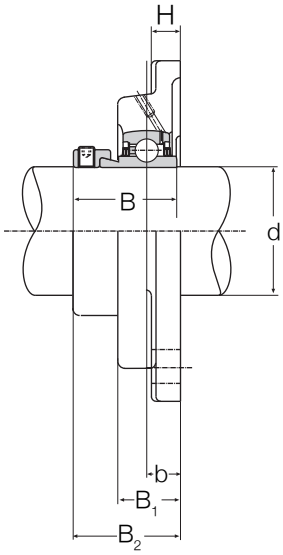

FUH-R3

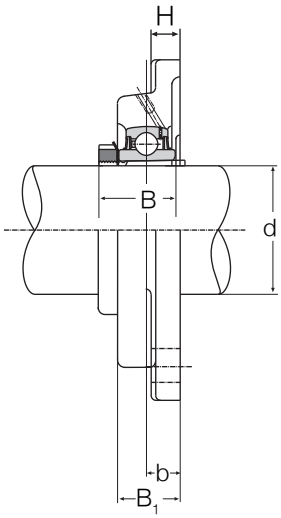

FIK

Unit Ref	Shaft Diameter d	Bearing Ref	Weight kg	Dimensions mm L	J	H	B_1	B_2	K	B	b	R	Load Rating Dynamic c kN	Static c_0 kN
FI 35	35	SA 207	1,50	117	92	15	34	48,4	14,0	38,9	19,0	1/8	25,5	15,3
FIS 35		SB 207	1,40	117	92	15	34	42,5	14,0	32,0	19,0	1/8	25,5	15,3
FIU 35		UC 207	1,50	117	92	15	34	44,4	14,0	42,9	19,0	1/8	25,5	15,3
FUU 35		UC 207	1,50	117	92	16	34	45,0	14,0	42,9	19,6	1/8	25,5	15,3
FUH 35		HC 207	1,60	117	92	16	34	51,9	14,0	51,1	19,6	1/8	25,5	15,3
FUH 35 R3		HC 207 R3	1,60	117	92	16	34	51,9	14,0	51,1	19,6	1/8	25,5	15,3
FIK 35	30	UK 207	1,40	117	92	15	34	-	14,0	27,0	19,0	1/8	25,5	15,3
FI 40	40	SA 208	1,80	130	102	16	36	53,7	14,0	43,7	21,0	1/8	32,5	19,8
FIS 40		SB 208	1,70	130	102	16	36	46,0	14,0	34,0	21,0	1/8	32,5	19,8
FIU 40		UC 208	1,80	130	102	16	36	51,2	14,0	49,2	21,0	1/8	32,5	19,8
FUU 40		UC 208	1,80	130	102	17	37	52,7	14,0	49,2	22,5	1/8	32,5	19,8
FUH 40		HC 208	1,90	130	102	17	37	57,4	14,0	56,3	22,5	1/8	32,5	19,8
FUH 40 R3		HC 208 R3	1,90	130	102	17	37	57,4	14,0	56,3	22,5	1/8	32,5	19,8
FIK 40	35	UK 208	1,70	130	102	16	36	-	14,0	29,0	21,0	1/8	32,5	19,8
FI 45	45	SA 209	2,30	138	105	18	41	56,5	14,0	43,7	23,8	1/8	32,5	20,4
FIS 45		SB 209	2,20	138	105	18	41	54,8	14,0	41,2	23,8	1/8	32,5	20,4
FIU 45		UC 209	2,30	138	105	18	41	54,0	14,0	49,2	23,8	1/8	32,5	20,4
FIH 45		HC 209	2,40	138	105	18	41	58,7	14,0	56,3	23,8	1/8	32,5	20,4
FIH 45 R3		HC 209 R3	2,40	138	105	18	41	58,7	14,0	56,3	23,8	1/8	32,5	20,4
FIK 45	40	UK 209	2,20	138	105	18	41	-	14,0	30,0	23,8	1/8	32,5	20,4

Housed Bearing Units

Series		
	FIS	FUH
	FIU	FUH-R3
	FUU	FIK
	FI	

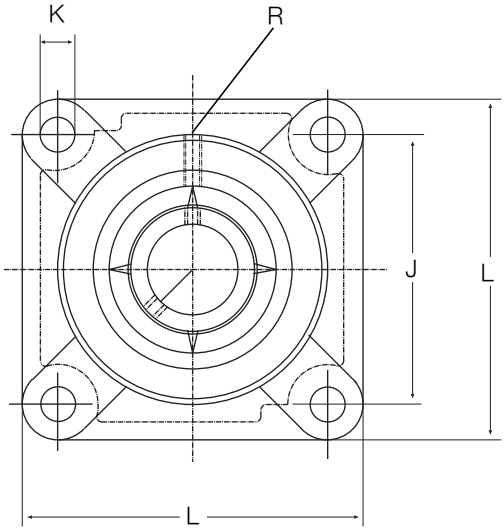

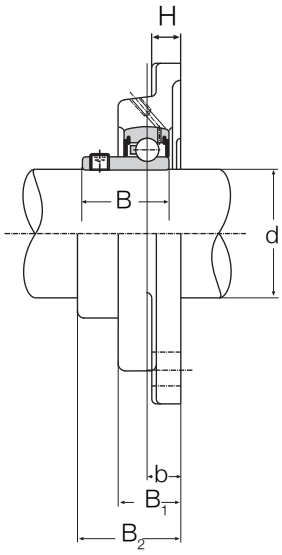

FIS

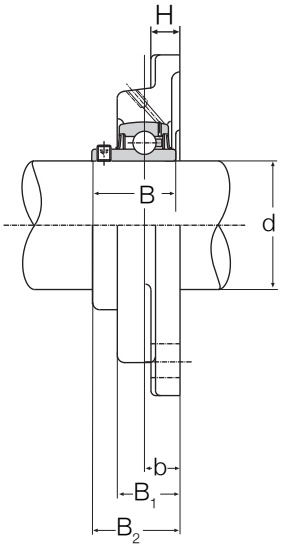

FIU/FUU

Unit Ref	Shaft Diameter d	Bearing Ref	Weight kg	Dimensions mm L	J	H	B_1	B_2	K	B	b	R	Load Rating Dynamic c kN	Static c_0 kN
FI 50	50	SA 210	3,60	143	111	16,0	40	54,7	18,0	43,7	22,0	1/8	35,0	23,2
FIS 50		SB 210	2,40	143	111	16,0	40	54,6	18,0	43,5	22,0	1/8	35,0	23,2
FIU 50		UC 210	2,60	143	111	16,0	40	54,6	18,0	51,6	22,0	1/8	35,0	23,2
FUU 50		UC 210	2,70	143	111	18,0	47,5	61,0	18,0	51,6	28,4	1/8	35,0	23,2
FUH 50		HC 210	2,70	143	111	18,0	47,5	66,5	18,0	62,7	28,4	1/8	35,0	23,2
FUH 50 R3		HC 210 R3	2,70	143	111	18,0	47,5	66,5	18,0	62,7	28,4	1/8	35,0	23,2
FIK 50	45	UK 210	2,40	143	111	18,0	40,0	-	18,0	31,0	22,0	1/8	35,0	23,2
FIU 55	55	UC 211	3,50	162	130	19,0	43,0	58,4	18,0	55,6	25,0	1/8	43,5	29,0
FUU 55		UC 211	3,60	162	130	19,0	52,0	62,0	18,0	55,6	25,0	1/8	43,5	29,0
FIH 55		HC 211	3,60	162	130	19,0	43,0	68,5	18,0	71,3	25,0	1/8	43,5	29,0
FIH 55 R3		HC 211 R3	3,60	162	130	19,0	43,0	68,5	18,0	71,3	25,0	1/8	43,5	29,0
FIK 55	50	UK 211	3,40	162	130	19,0	43,0	-	18,0	33,0	25,0	1/8	43,5	29,0
FI 60	60	SA 212	4,40	175	143	18,0	48,5	68,6	18,0	53,1	29,0	1/8	52,0	36,0
FIU 60		UC 212	4,30	175	143	18,0	48,5	68,7	18,0	65,1	29,0	1/8	52,0	36,0
FUU 60		UC 212	4,50	175	143	19,0	53,0	72,2	18,0	65,1	32,5	1/8	52,0	36,0
FUH 60		HC 212	4,50	175	143	19,0	53,0	79,3	18,0	77,7	32,5	1/8	52,0	36,0
FUH 60 R3		HC 212 R3	4,50	175	143	19,0	53,0	79,3	18,0	77,7	32,5	1/8	52,0	36,0
FIK 60	55	UK 212	4,20	175	143	18,0	48,5	-	18,0	36,0	29,0	1/8	52,0	36,0
FUU 65	65	UC 213	5,60	187	149	19,0	53,0	77,7	20,0	65,1	38,0	1/8	62,0	44,0
FUH 65		HC 213	5,70	187	149	19,0	53,0	89,6	20,0	85,7	38,0	1/8	62,0	44,0
FUH 65 R3		HC 213 R3	5,70	187	149	19,0	53,0	89,6	20,0	85,7	38,0	1/8	62,0	44,0
FUK 65	60	UK 213	5,30	187	149	19,0	53,0	-	20,0	38,0	38,0	1/8	62,0	44,0

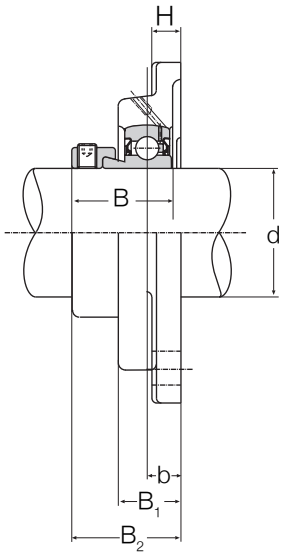

FI

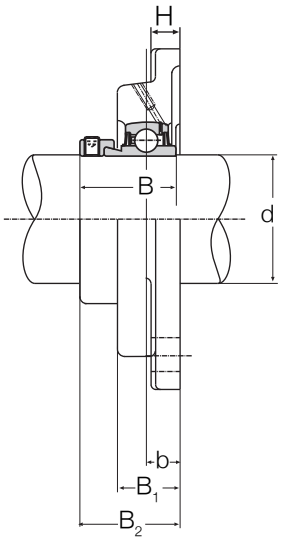

FUH

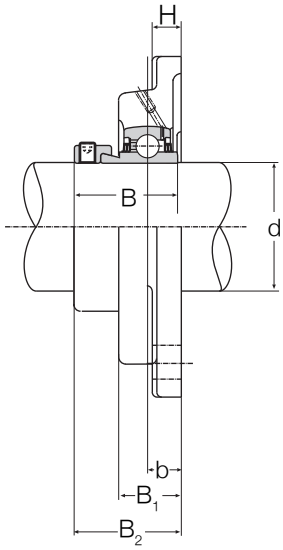

FUH-R3

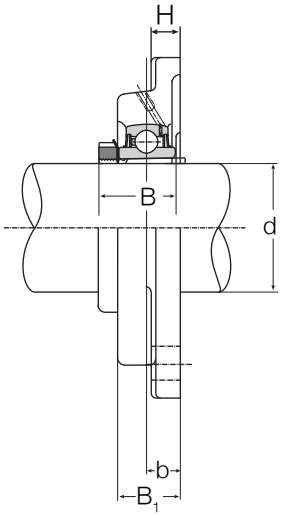

FIK

Unit Ref	Shaft Diameter d	Bearing Ref	Weight kg	Dimensions mm L	J	H	B_1	B_2	K	B	b	R	Load Rating Dynamic c kN	Static c_0 kN
FUU 70	70	UC 214	6,0	188	150	19	63	82,4	20	74,6	38	1/8	62,0	44,0
FUH 70		HC 214	6,2	188	150	19	63	82,6	20	66,1	38	1/8	62,0	44,0
FUH 70 R3		HC 214 R3	6,2	188	150	19	63	82,6	20	66,1	38	1/8	62,0	44,0
FUU 75	75	UC 215	6,8	200	159	22	56	78,5	20	77,8	34	1/8	62,0	44,5
FUH 75		HC 215	7,0	200	159	22	56	79,6	20	67,1	34	1/8	62,0	44,5
FUH 75 R3		HC 215 R3	7,0	200	159	22	56	79,6	20	67,1	34	1/8	62,0	44,5
FUK 75	65	UK 215	6,2	200	159	22	56	-	20	41,0	34	1/8	62,0	44,5
FUU 80	80	UC 216	7,7	208	165	25	58	87,3	23	82,6	38	1/8	72,0	54,0
FUH 80		HC 216	7,9	208	165	25	58	85,6	23	71,0	38	1/8	72,0	54,0
FUH 80 R3		HC 216 R3	7,9	208	165	25	58	85,6	23	71,0	38	1/8	72,0	54,0
FIH 80 I		HC 216	7,2	197	153	20	58	88,9	23	71,0	41,3	1/8	72,0	54,0
FUK 80	70	UK 216	7,2	208	165	25	58	-	23	44,0	38	1/8	72,0	54,0
FUU 90	90	UC 218	10,8	235	187	29	68	96,3	23	96,0	40	1/8	96,0	72,0
FUH 90		HC 218	11,0	235	187	29	68	86,5	23	69,5	40	1/8	96,0	72,0
FUK 90	80	UK 218	10,5	235	187	29	68	-	23	49,0	40	1/8	96,0	72,0
FUH 100	100	HC 220	12,0	265	210	25	46	77,5	27	75,0	28,0	1/8	122,0	93,0
FUH 120	120	HC 224	17,5	305	240	28	51	83,5	30	81,0	31,0	1/8	155,0	131,0

Housed Bearing Units

Series FUU-Special

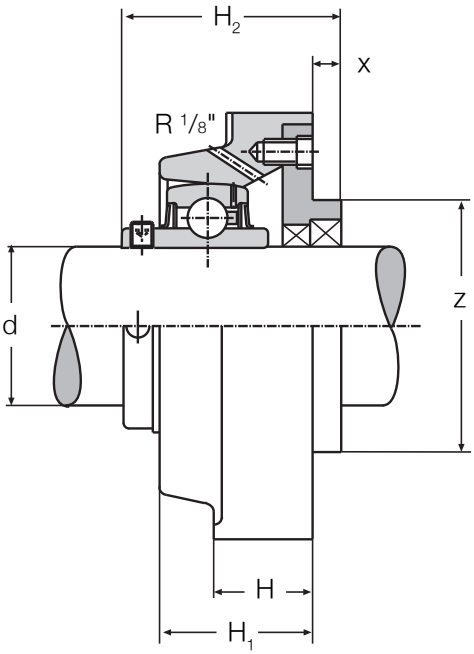

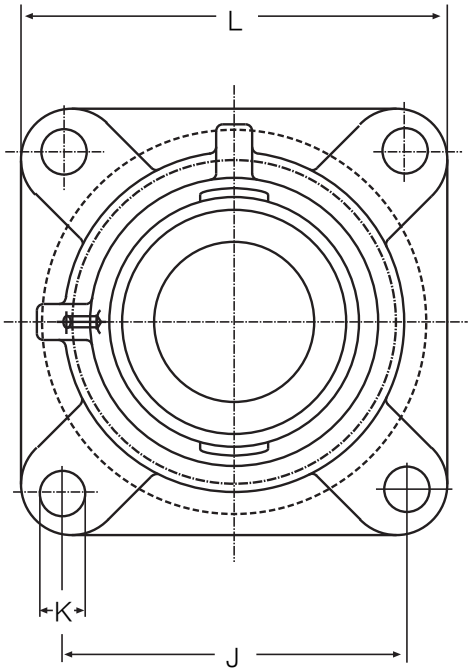

Unit Ref	Shaft Diameter d	Bearing Ref	Weight kg	Dimensions mm L	J	K	H	H_1	H_2	Z_{h9}	x	Load Rating Dynamic c kN	Static c_0 kN
FUU 30 spez.	30	UC 206	1,8	108	82,5	11,5	14	31,0	55,5	95,0	15,0	19,5	11,3
FUU 40 spez.	40	UC 208	3,3	130	101,5	14,0	19	37,0	70,2	115,0	14,0	32,5	19,8
FUU 50 spez.	50	UC 210	3,2	143	111,0	14,0	19	47,0	66,5	81,0	5,5	35,0	23,2
FUU 60 spez.	60	UC 212	6,3	175	143,0	17,0	20	53,0	86,2	145,0	14,5	52,0	36,0
FUU 70 spez.	70	UC 214	8,2	188	150,0	20,0	20	63,5	96,0	159,0	13,5	62,0	44,0
FUU 80 spez.	80	UC 216	10,3	208	165,0	23,0	25	58,0	115,3	190,0	28,0	72,0	54,0
FUU 90 spez.	90	UC 218	14,0	235	187,0	23,0	29	68,0	116,8	150,0	20,5	96,0	72,0

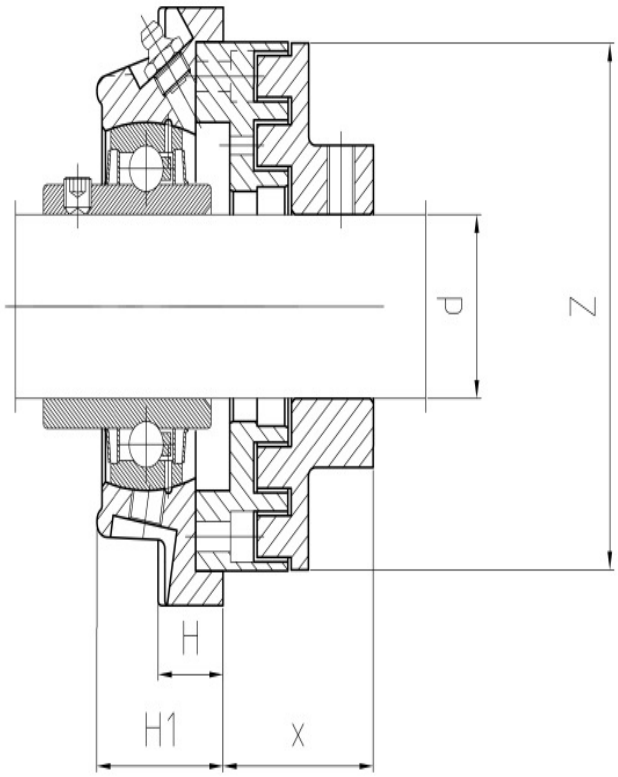

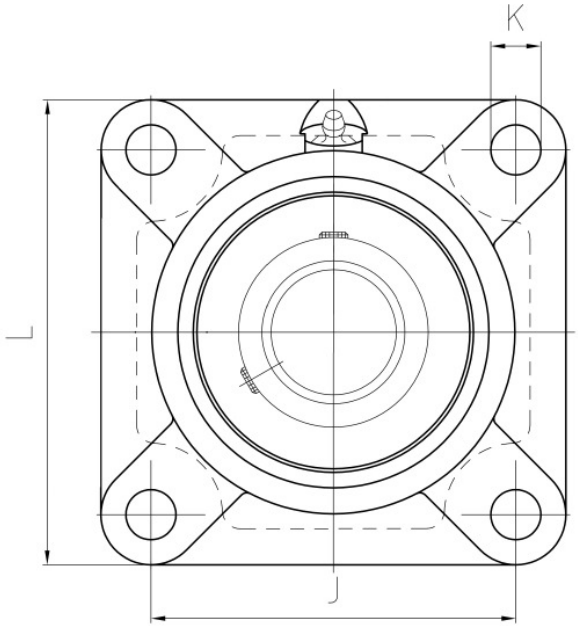

Unit Ref	Shaft Diameter d	Bearing Ref	Weight kg	Dimension mm L	J	K	H	H_1	x	b	H_2	Load Rating Z Dynamic c kN	Static c_0 kN
FUU 40 spez. Laby	40	UC 208	4,28	130	101,5	14	18	36,0	47	21,0	51,2	115	32,5	19,8
FUU 50 spez. Laby	50	UC 210	5,69	143	111,0	14	18	47,5	47	32,1	65,2	118	35,0	23,2
FUU 60 spez. Laby	60	UC 212	7,78	175	143,0	18	19	52,0	52	30,3	70,0	156	52,0	36,0
FUU 70 spez. Laby	70	UC 214	11,83	188	150,0	20	19	63,0	52	35,6	80,0	170	62,0	44,0
FUU 80 spez. Laby	80	UC 216	13,77	208	165,0	23	22	79,0	52	40,8	90,1	190	72,0	54,0
FUU 90 spez. Laby	90	UC 218	16,4	235	187,0	23	29	68	55	40,0	96,3	225	96,0	72,0

Housed Bearing Units

Series DFI
DFIS

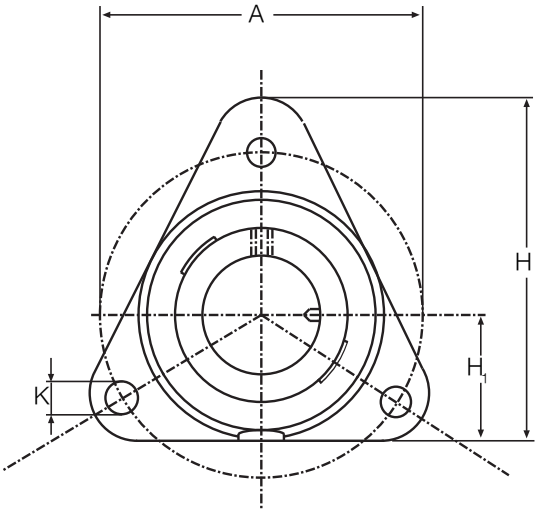

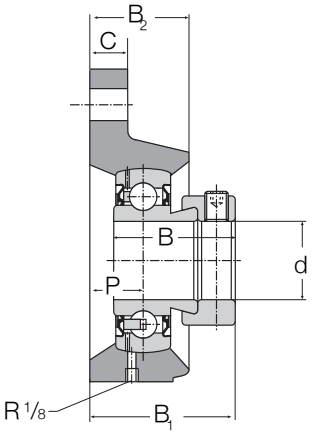

DFI

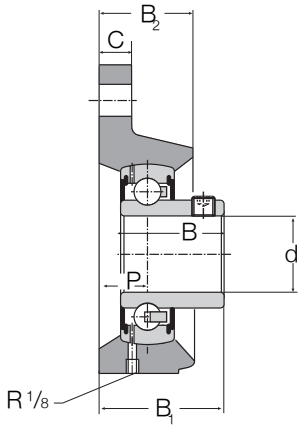

DFIS

Unit Ref	Shaft Diameter d	Bearing Ref	Weight kg	Dimensions mm A	H	H_1	K	B	B_1	B_2	C	P	Load Rating Dynamic c kN	Static c_0 kN
DFI 20	20	SA 204	0,60	89,5	92	35	11,5	31,0	36,0	22	11	12,5	12,8	6,6
DFIS 20		SB 204	0,58	89,5	92	35	11,5	25,0	30,5	22	11	12,5	12,8	6,6
DFI 25	25	SA 205	0,72	96,0	99	38	11,5	31,0	36,0	23	11	12,5	14,0	7,8
DFIS 25		SB 205	0,70	96,0	99	38	11,5	27,0	32,0	23	11	12,5	14,0	7,8
DFI 30	30	SA 206	1,00	116	117	44	11,5	35,7	40,0	24	12	13,3	19,5	11,3
DFIS 30		SB 206	0,97	116	117	44	11,5	30,0	35,3	24	12	13,3	19,5	11,3
DFI 35	35	SA 207	1,35	129,7	130	48	14,0	38,9	45,0	27	12	15,6	25,5	15,3
DFIS 35		SB 207	1,30	129,7	130	48	14,0	32,0	39,1	27	12	15,6	25,5	15,3
DFI 40	40	SA 208	1,80	140	142	54	14,0	43,7	51,0	31	12	18,3	32,5	19,8
DFIS 40		SB 208	1,75	140	142	54	14,0	34,0	43,3	31	12	18,3	32,5	19,8
DFI 45	45	SA 209	2,00	160	160	60	14,0	43,7	51,9	34	14	19,2	32,5	20,4
DFIS 45		SB 209	1,95	160	160	60	14,0	41,2	50,2	34	14	19,2	32,5	20,4
DFI 50	50	SA 210	2,15	160	160	60	14,0	43,7	51,9	34	14	19,2	35,0	23,2
DFIS 50		SB 210	2,10	160	160	60	14,0	43,5	51,8	34	14	19,2	35,0	23,2

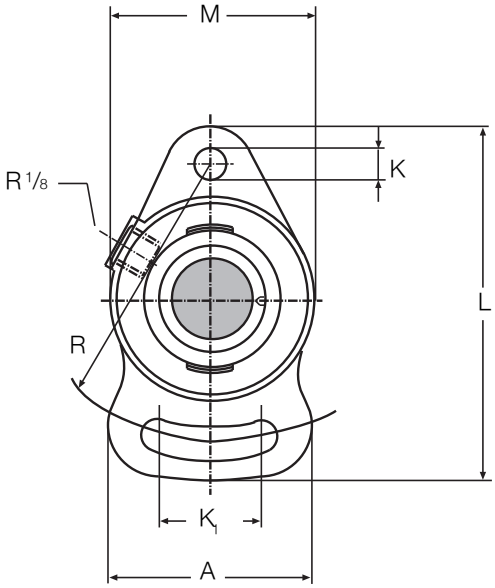

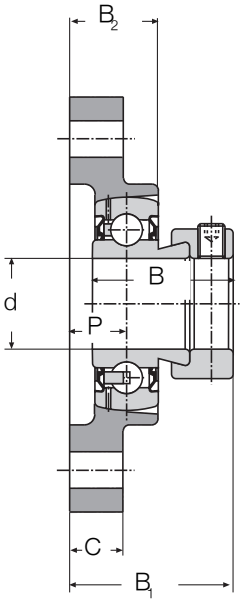

SFI

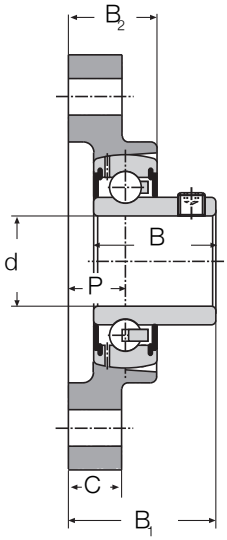

SFIS

Unit Ref	Shaft Diameter d	Bearing Ref	Weight kg	A	L	M	K	R	K_1	B	B_1	B_2	C	P	Load Rating Dynamic c kN	Static c_0 kN
				Dimensions mm												
SFI20	20	SA204	0,45	52	112	61	11,5	90	30	31,0	36,0	26	12	12,5	12,8	6,6
SFIS20		SB204	0,42	52	112	61	11,5	90	30	25,0	30,5	26	12	12,5	12,8	6,6
SFI25	25	SA205	0,60	63	124	70	11,5	99	37,5	31,0	36,0	20	12	12,5	14,0	7,8
SFIS25		SB205	0,55	63	124	70	11,5	99	37,5	27,0	32,0	20	12	12,5	14,0	7,8
SFI30	30	SA206	0,80	65	142	80	11,5	117	40,0	35,7	42,7	31	14	16,0	19,5	11,3
SFIS30		SB206	0,75	65	142	80	11,5	117	40,0	30,0	38,0	31	14	16,0	19,5	11,3
SFI35	35	SA207	1,10	75	155	90	13,5	128	45,0	38,9	46,9	34	15	17,5	25,5	15,3
SFIS35		SB207	1,00	75	155	90	13,5	128	45,0	32,0	41,0	34	15	17,5	25,5	15,3
SFI40	40	SA208	1,20	85	170	100	13,5	142	55,0	43,7	51,7	36	16	19,0	32,5	19,8
SFIS40		SB208	1,10	85	170	100	13,5	142	55,0	34,0	44,0	36	16	19,0	32,5	19,8

Housed Bearing Units

Series OWIK
OWIKS

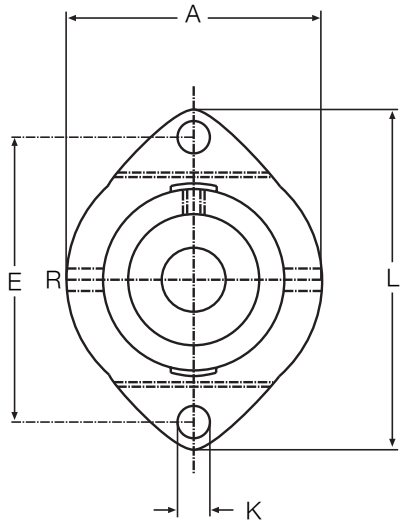

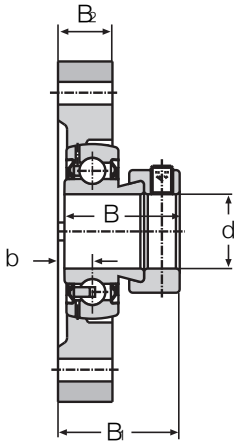

OWIK

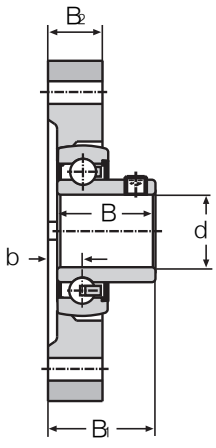

OWIKS

Unit Ref	Shaft Diameter d	Bearing Ref	Weight kg	Dimensions mm L	E	A	R	K	B	B_1	B_2	b	Load Rating Dynamic c kN	Static c_0 kN
OWIK 12	12	SA 201	0,3	81,0	63,5	58,7	M 6	6,5	28,6	30,5	15,0	8,4	9,55	4,75
OWIKS 12		SB 201	0,3	81,0	63,5	58,7	M 6	6,5	22,1	24,4	15,0	8,4	9,55	4,75
OWIK 15	15	SA 202	0,3	81,0	63,5	58,7	M 6	6,5	28,6	30,5	15,0	8,4	9,55	4,75
OWIKS 15		SB 202	0,3	81,0	63,5	58,7	M 6	6,5	22,1	24,4	15,0	8,4	9,55	4,75
OWIK 17	17	SA 203	0,3	81,0	63,5	58,7	M 6	6,5	28,6	30,5	15,0	8,4	9,55	4,75
OWIKS 17		SB 203	0,3	81,0	63,5	58,7	M 6	6,5	22,1	24,4	15,0	8,4	9,55	4,75
OWIK 20	20	SA 204	0,4	91,0	71,4	66,5	M 6	9,0	31,0	33,0	17,0	9,5	9,55	4,75
OWIKS 20		SB 204	0,4	91,0	71,4	66,5	M 6	9,0	25,0	27,5	17,0	9,5	9,55	4,75
OWIK 25	25	SA 205	0,5	97,0	76,2	71,0	M 6	9,0	31,0	34,1	17,5	10,6	14,0	7,80
OWIKS 25		SB 205	0,5	97,0	76,2	71,0	M 6	9,0	27,0	30,1	17,5	10,6	14,0	7,80
OWIK 30	30	SA 206	0,8	112,5	90,5	84,0	R 1/8	11,5	35,7	37,8	20,5	11,1	19,5	11,3
OWIKS 30		SB 206	0,8	112,5	90,5	84,0	R 1/8	11,5	30,0	33,1	20,5	11,1	19,5	11,3
OWIK 35	35	SA 207	1,0	125,0	100	94,0	R 1/8	11,5	38,9	41,7	25,0	12,3	25,5	15,3
OWIKS 35		SB 207	1,0	125,0	100	94,0	R 1/8	11,5	32,0	35,8	25,0	12,3	25,5	15,3
OWIK 40	40	SA 208	1,3	150,0	119	100,0	R 1/8	14,0	43,7	46,2	24,0	13,5	32,5	19,8
OWIKS 40		SB 208	1,3	150,0	119	100,0	R 1/8	14,0	34,0	38,5	24,0	13,5	32,5	19,8

Housed Bearing Units

Series	FIZS	FIZH
	FIZU	FIZH-R3
	FIZ	FIZK

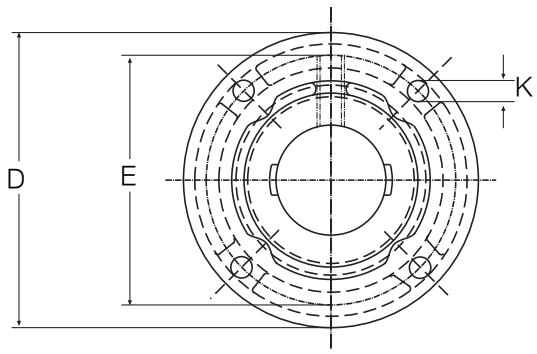

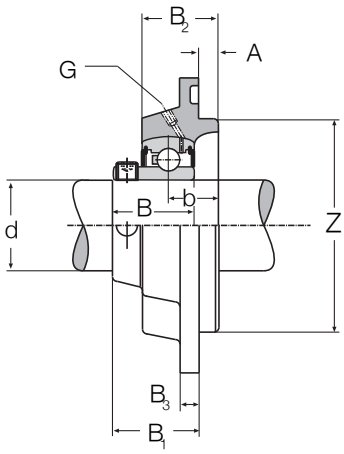

FIZS

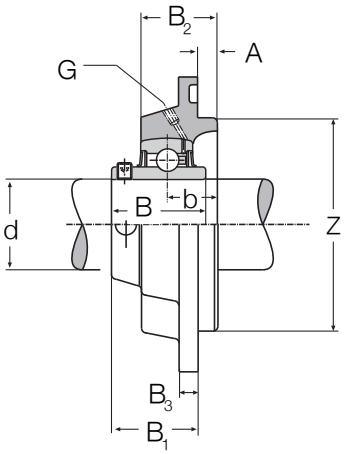

FIZU

Unit Ref	Shaft Diameter d	Bearing Ref	Weight kg	Dimensions mm D	E	K	Z_{h8}	B	B_1	B_2	B_3	A	G	b	Load Rating Dynamic c kN	Static c_0 kN
FIZ 25	25	SA 205	0,7	115	92	9,5	75	31,0	33,0	22,0	9,0	3	R 1/8	9,5	14,0	7,8
FIZU 25		UC 205	0,7	115	92	9,5	75	34,1	29,3	22,0	9,0	3	R 1/8	9,5	14,0	7,8
FIZS 25		SB 205	0,6	115	92	9,5	75	27,0	29,0	22,0	9,0	3	R 1/8	9,5	14,0	7,8
FIZH 25		HC 205	0,8	115	92	9,5	75	44,3	36,4	22,0	9,0	3	R 1/8	9,5	14,0	7,8
FIZH 25 R3		HC 205 R3	0,8	115	92	9,5	75	44,3	36,4	22,0	9,0	3	R 1/8	9,5	14,0	7,8
FIZK 25	20	UK 205	0,6	115	92	9,5	75	35,0	-	22,0	9,0	3	R 1/8	9,5	14,0	7,8
FIZ 30	30	SA 206	0,9	127	105	9,5	85	35,7	37,2	22,5	9,5	3	R 1/8	10,5	19,5	11,3
FIZU 30		UC 206	0,9	127	105	9,5	85	38,1	32,7	22,5	9,5	3	R 1/8	10,5	19,5	11,3
FIZS 30		SB 206	0,8	127	105	9,5	85	30,0	32,5	22,5	9,5	3	R 1/8	10,5	19,5	11,3
FIZH 30		HC 206	1,1	127	105	9,5	85	48,3	40,6	22,5	9,5	3	R 1/8	10,5	19,5	11,3
FIZH 30 R3		HC 206 R3	1,1	127	105	9,5	85	48,3	40,6	22,5	9,5	3	R 1/8	10,5	19,5	11,3
FIZK 30	25	UK 206	0,8	127	105	9,5	85	38,0	-	22,5	9,5	3	R 1/8	10,5	19,5	11,3
FIZ 35	35	SA 207	1,1	135	110	11,5	90	38,9	38,4	22,5	10,0	4	R 1/8	9,0	25,5	15,3
FIZU 35		UC 207	1,1	135	110	11,5	90	42,9	34,4	22,5	10,0	4	R 1/8	9,0	25,5	15,3
FIZS 35		SB 207	0,9	135	110	11,5	90	32,0	32,5	22,5	10,0	4	R 1/8	9,0	25,5	15,3
FIZH 35		HC 207	1,3	135	110	11,5	90	51,1	41,3	22,5	10,0	4	R 1/8	9,0	25,5	15,3
FIZH 35 R3		HC 207 R3	1,3	135	110	11,5	90	51,1	41,3	22,5	10,0	4	R 1/8	9,0	25,5	15,3
FIZK 35	30	UK 207	0,9	135	110	11,5	90	43,0	-	22,5	10,0	4	R 1/8	9,0	25,5	15,3
FIZ 40	40	SA 208	1,5	145	120	11,5	100	43,7	44,2	26,0	11,5	4	R 1/8	11,5	32,5	19,8
FIZU 40		UC 208	1,5	145	120	11,5	100	49,2	41,7	26,0	11,5	4	R 1/8	11,5	32,5	19,8
FIZS 40		SB 208	1,3	145	120	11,5	100	34,0	36,5	26,0	11,5	4	R 1/8	11,5	32,5	19,8
FIZH 40		HC 208	1,7	145	120	11,5	100	56,3	46,4	26,0	11,5	4	R 1/8	11,5	32,5	19,8
FIZH 40 R3		HC 208 R3	1,7	145	120	11,5	100	56,3	46,4	26,0	11,5	4	R 1/8	11,5	32,5	19,8

Housed Bearing Units

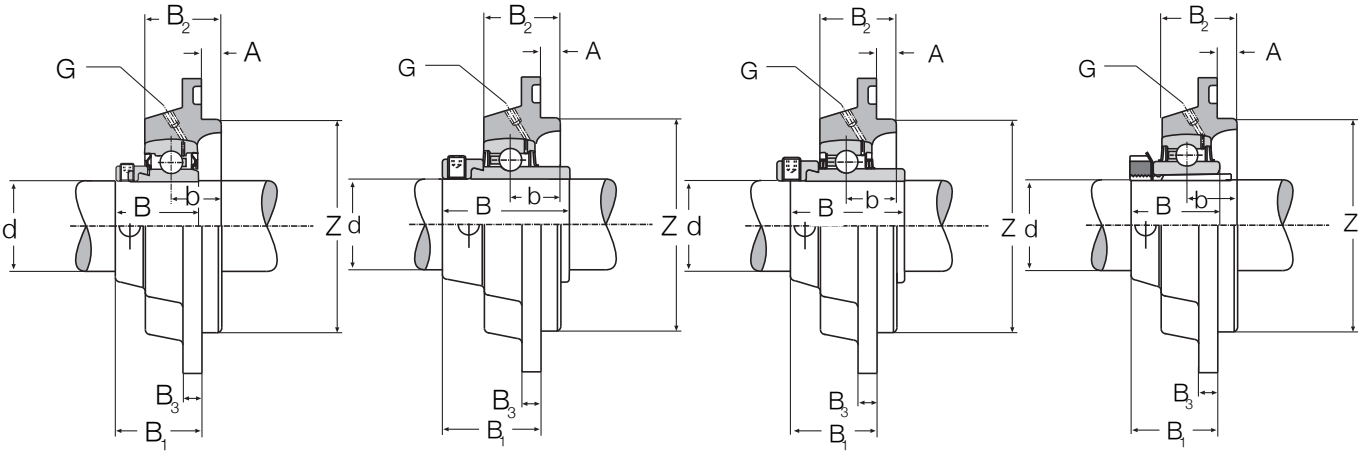

FIZ FIZH FIZH-R3 FIZK

Unit Ref	Shaft Diameter d	Bearing Ref	Weight kg	Dimensions mm D	E	K	Z h8	B	B1	B2	B3	A	G	b	Load Rating Dynamic c kN	Static c0 kN
FIZK 40	35	UK 208	1,3	145	120	11,5	100	46,0	-	26	11,5	4	R 1/8	11,5	32,5	19,8
FIZ 45	45	SA 209	1,8	155	130	14	105	43,7	44,2	26,5	12,0	4	R 1/8	11,5	32,5	20,4
FIZU 45		UC 209	1,8	155	130	14	105	49,2	41,7	26,5	12,0	4	R 1/8	11,5	32,5	20,4
FIZS 45		SB 209	1,6	155	130	14	105	41,2	42,5	26,5	12,0	4	R 1/8	11,5	32,5	20,4
FIZH 45		HC 209	2,0	155	130	14	105	56,3	46,4	26,5	12,0	4	R 1/8	11,5	32,5	20,4
FIZH 45 R3		HC 209 R3	2,0	155	130	14	105	56,3	46,4	26,5	12,0	4	R 1/8	11,5	32,5	20,4
FIZK 45	40	UK 209	1,6	155	130	14	105	50,0	-	26,5	12,0	4	R 1/8	11,5	32,5	20,4
FIZ 50	50	SA 210	2,2	165	136	14	115	43,7	45,2	27,5	13,0	4	R 1/8	12,5	35,0	23,2
FIZU 50		UC 210	2,0	165	136	14	115	51,6	45,1	27,5	13,0	4	R 1/8	12,5	35,0	23,2
FIZS 50		SB 210	1,9	165	136	14	115	43,5	45,1	27,5	13,0	4	R 1/8	12,5	35,0	23,2
FIZH 50		HC 210	2,5	165	136	14	115	62,7	50,6	27,5	13,0	4	R 1/8	12,5	35,0	23,2
FIZH 50 R3		HC 210 R3	2,5	165	136	14	115	62,7	50,6	27,5	13,0	4	R 1/8	12,5	35,0	23,2
FIZK 50	45	UK 210	1,9	165	136	14	115	55,0	-	27,5	13,0	4	R 1/8	12,5	35,0	23,2
FIZ 60	60	SA 212	3,6	195	165	14	140	53,1	56,6	33,0	16,0	4	R 1/8	17,0	52,0	36,0
FIZU 60		UC 212	3,4	195	165	14	140	65,1	56,7	33,0	16,0	4	R 1/8	17,0	52,0	36,0
FIZH 60		HC 212	4,0	195	165	14	140	77,7	63,8	33,0	16,0	4	R 1/8	17,0	52,0	36,0
FIZH 60 R3		HC 212 R3	4,0	195	165	14	140	77,7	63,8	33,0	16,0	4	R 1/8	17,0	52,0	36,0
FIZK 60	55	UK 212	3,2	195	165	14	140	62,0	-	33,0	16,0	4	R 1/8	17,0	52,0	36,0
FIZU 80	80	UC 216	7,8	240	200	23	170	82,6	67,3	58,0	18,0	15	R 1/8	18,0	72,0	54,0

Housed Bearing Units

Series		
	RIZS	RIZH
	RIZU	RIZH-R3
	RIZ	RIZK

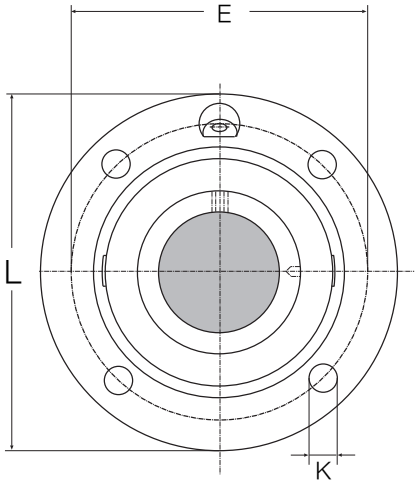

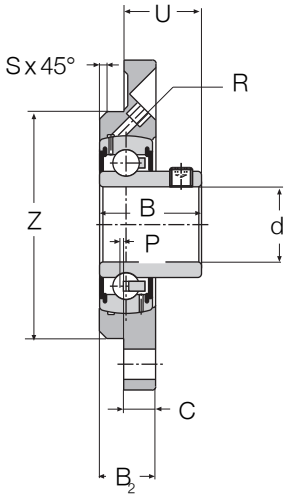

RIZS

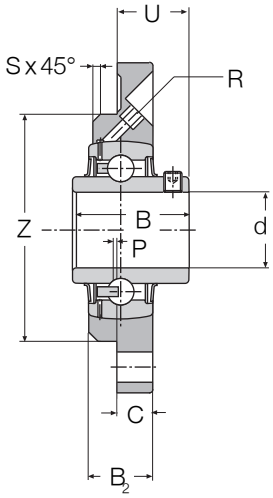

RIZU

Unit Ref	Shaft Diameter d	Bearing Ref	Weight kg	Dimensions mm L	E	K	B_2	C	U	B	Z_{h8}	P	R	s	Load Rating Dynamic c kN	Static c_0 kN
RIZ 20	20	SA 204	0,55	100	78	9,0	20,0	11,5	23	31,0	62	0,5	M6	2	12,8	6,6
RIZS 20		SB 204	0,50	100	78	9,0	20,0	11,5	17,5	25,0	62	0,5	M6	2	12,8	6,6
RIZU 20		UC 204	0,54	100	78	9,0	20,0	11,5	17,8	31,0	62	0,5	M6	2	12,8	6,6
RIZH 20		HC 204	0,57	100	78	9,0	20,0	11,5	25,9	43,5	62	0,5	M6	2	12,8	6,6
RIZH 20 R3		HC 204 R3	0,57	100	78	9,0	20,0	11,5	25,9	43,5	62	0,5	M6	2	12,8	6,6
RIZ 25	25	SA 205	0,75	115	90	9,5	21,0	11	22,0	31,0	70	1,5	M6	2	14,0	7,8
RIZS 25		SB 205	0,70	115	90	9,5	21,0	11	18,0	27,0	70	1,5	M6	2	14,0	7,8
RIZU 25		UC 205	0,75	115	90	9,5	21,0	11	18,3	34,1	70	1,5	M6	2	14,0	7,8
RIZH 25		HC 205	0,80	115	90	9,5	21,0	11	25,4	44,3	70	1,5	M6	2	14,0	7,8
RIZH 25 R3		HC 205 R3	0,80	115	90	9,5	21,0	11	25,4	44,3	70	1,5	M6	2	14,0	7,8
RIZK 25	20	UK 205	0,70	115	90	9,5	21,0	11	-	35,0	70	1,5	M6	2	14,0	7,8
RIZ 30	30	SA 206	0,98	124	100	11,5	20,5	10	25,2	35,7	80	1,5	M6	2	19,5	11,3
RIZS 30		SB 206	0,90	124	100	11,5	20,5	10	20,5	30,0	80	1,5	M6	2	19,5	11,3
RIZU 30		UC 206	1,00	124	100	11,5	20,5	10	20,7	38,1	80	1,5	M6	2	19,5	11,3
RIZH 30		HC 206	1,05	124	100	11,5	20,5	10	28,6	48,3	80	1,5	M6	2	19,5	11,3
RIZH 30 R3		HC 206 R3	1,05	124	100	11,5	20,5	10	28,6	48,3	80	1,5	M6	2	19,5	11,3
RIZK 30	25	UK 206	0,90	124	100	11,5	20,5	10	-	38,0	80	1,5	M6	2	19,5	11,3
RIZ 35	35	SA 207	1,30	134	110	11,5	23,0	10	28,4	38,9	90	1	M6	2	25,5	15,3
RIZS 35		SB 207	1,20	134	110	11,5	23,0	10	22,5	32,0	90	1	M6	2	25,5	15,3
RIZU 35		UC 207	1,30	134	110	11,5	23,0	10	24,4	42,9	90	1	M6	2	25,5	15,3
RIZH 35		HC 207	1,35	134	110	11,5	23,0	10	31,3	51,1	90	1	M6	2	25,5	15,3
RIZH 35 R3		HC 207 R3	1,35	134	110	11,5	23,0	10	31,1	51,1	90	1	M6	2	25,5	15,3
RIZK 35	30	UK 207	1,20	134	110	11,5	23,0	10	-	43,0	90	1	M6	2	25,5	15,3
RIZ 40	40	SA 208	1,60	145	120	11,5	23,0	11,5	31,7	43,7	100	1	M6	2	32,5	19,8
RIZS 40		SB 208	1,50	145	120	11,5	23,0	11,5	24	34,0	100	1	M6	2	32,5	19,8
RIZU 40		UC 208	1,65	145	120	11,5	23,0	11,5	29,2	49,2	100	1	M6	2	32,5	19,8
RIZH 40		HC 208	1,75	145	120	11,5	23,0	11,5	33,9	56,3	100	1	M6	2	32,5	19,8
RIZH 40 R3		HC 208 R3	1,75	145	120	11,5	23,0	11,5	33,9	56,3	100	1	M6	2	32,5	19,8
RIZK 40	35	UK 208	1,50	145	120	11,5	23,0	11,5	-	46,0	100	1	M6	2	32,5	19,8

Housed Bearing Units

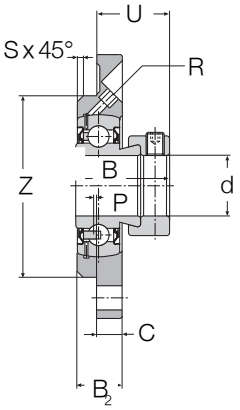

RIZ

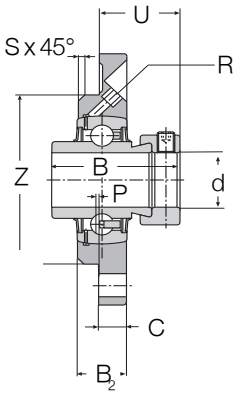

RIZH

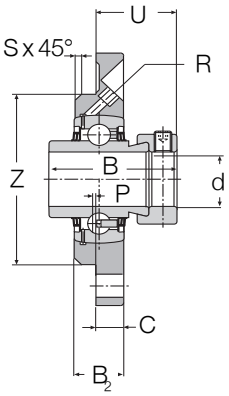

RIZH-R3

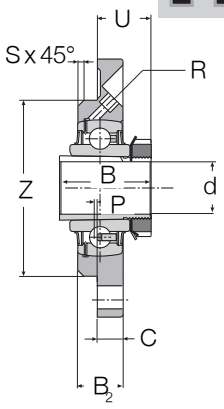

RIZK

Unit Ref	Shaft Diameter d	Bearing Ref	Weight kg	Dimensions mm L	E	K	B_2	C	U	B	Z_{h8}	P	R	s	Load Rating Dynamic c kN	Static c_0 kN
RIZ 45	45	SA 209	1,90	155	130	14	25	12,0	30,7	43,7	105	2	M6	2	32,5	20,4
RIZS 45		SB 209	1,80	155	130	14	25	12,0	29,0	41,2	105	2	M6	2	32,5	20,4
RIZU 45		UC 209	1,95	155	130	14	25	12,0	28,2	49,2	105	2	M6	2	32,5	20,4
RIZH 45		HC 209	2,10	155	130	14	25	12,0	32,9	56,3	105	2	M6	2	32,5	20,4
RIZH 45 R3		HC 209 R3	2,10	155	130	14	25	12,0	32,9	56,3	105	2	M6	2	32,5	20,4
RIZK 45	40	UK 209	1,80	155	130	14	25	12,0	-	50,0	105	2	M6	2	32,5	20,4
RIZ 50	50	SA 210	2,30	165	135	14	25	13,0	32,7	43,7	110	0	M6	3	35,0	23,2
RIZS 50		SB 210	2,15	165	135	14	27,5	15,5	32,7	43,5	110	0	M6	3	35,0	23,2
RIZU 50		UC 210	2,35	165	135	15	27,5	15,5	32,6	51,6	110	0	M6	3	35,0	23,2
RIZH 50		HC 210	2,55	165	135	14	27,5	15,5	38,1	62,7	110	0	M6	3	35,0	23,2
RIZH 50 R3		HC 210 R3	2,55	165	135	14	27,5	15,5	38,1	62,7	110	0	M6	3	35,0	23,2
RIZK 50	45	UK 210	2,15	165	135	14	27,5	15,5	-	55,0	110	0	M6	3	35,0	23,2
RIZU 55		UC 211	2,95	185	150	18	27,5	15,0	33,4	55,6	125	0	M6	3	43,5	29,0
RIZH 55		HC 211	3,2	185	150	18	27,5	15,0	43,5	71,3	125	0	M6	3	43,5	29,0
RIZH 55 R3		HC 211 R3	3,2	185	150	18	27,5	15,0	43,5	71,3	125	0	M6	3	43,5	29,0
RIZ 60	60	SA 212	3,60	195	160	18	33,0	16,0	39,1	53,1	135	0,5	M6	3	52,0	36,0
RIZU 60		UC 212	3,50	195	160	18	33,0	16,0	39,2	65,1	135	0,5	M6	3	52,0	36,0
RIZH 60		HC 212	4,00	195	160	18	33,0	16,0	46,3	77,7	135	0,5	M6	3	52,0	36,0
RIZH 60 R3		HC 212 R3	4,00	195	160	18	33,0	16,0	46,3	77,7	135	0,5	M6	3	52,0	36,0
RIZK 60	55	UK 212	3,50	195	160	18	33,0	16,0	-	62,0	135	0,5	M6	3	52,0	36,0
RIZU 70	70	UC 214	5,10	215	177	18	32,0	18,0	44,4	74,6	150	0	R 1/8	3	62,0	44,0
RIZH 70		HC 214	5,70	215	177	18	32,0	18,0	44,6	66,1	150	0	R 1/8	3	62,0	44,0
RIZH 70 R3		HC 214 R3	5,70	215	177	18	32,0	18,0	44,6	66,1	150	0	R 1/8	3	62,0	44,0
RIZH 314		HC 314	9,00	300	252	25	43,0	25,0	49,9	75,4	185	-0,5	R 1/8	4	104,0	68,0
RIZU 80	80	UC 216	5,75	220	184	18	32,0	18,0	51,3	82,6	160	-2	R 1/8	3	72,0	54,0
RIZH 80		HC 216	5,75	220	184	18	32,0	18,0	49,6	71,0	160	-2	R 1/8	3	72,0	54,0
RIZH 80 R3		HC 216 R3	5,75	220	184	18	32,0	18,0	49,6	71,0	160	-2	R 1/8	3	72,0	54,0
RIZH 316		HC 316	12,7	275	235	22	50,0	22,0	56,7	93,7	200	-3	R 1/8	6	123,0	87,0
RIZU 90	90	UC 218	9,30	265	220	23	32,0	20,0	60,3	96,0	190	-4	R 1/8	3	102,0	79,0
RIZH 90		HC 218	8,80	265	220	23	32,0	20,0	50,5	69,5	190	-4	R 1/8	3	102,0	79,0
RIZH 318		HC 318	16,7	300	260	22	50,0	22,0	62,5	101,0	220	-3	R 1/8	6	143,0	108,0
RIZH 100	100	HC 220	11,50	295	245	23	36,0	22,0	53,5	75,0	210	-4	R 1/8	3	122,0	80,0
RIZH 320		HC 320	22,3	340	295	26	57,0	27,0	68,5	109,5	250	-1,5	R 1/8	8	172,0	140,0

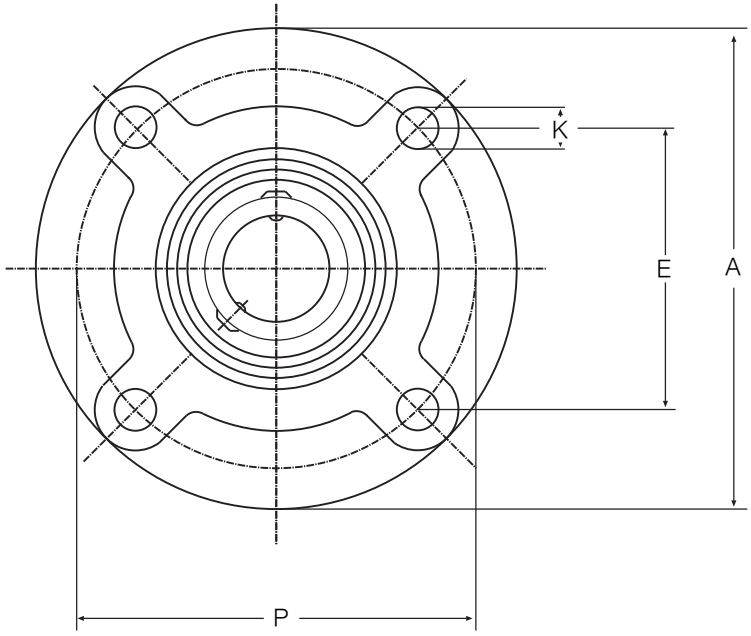

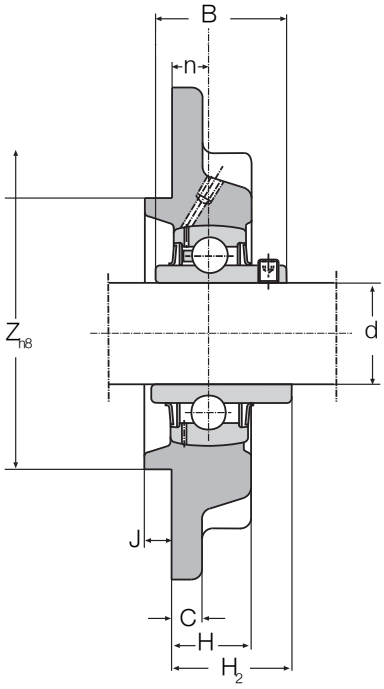

Unit Ref	Shaft Diameter d	Bearing Ref	Weight kg	Dimensions mm A	P	E	K	Zh8	J	C	H	B	H2	n	Load Rating Dynamic c kN	Static c0 kN
UCFC 204	20	UC 204	0,7	100	78	55,1	12	62	5	7	20,5	31,0	28,3	10	12,8	6,6
UCFC 205	25	UC 205	1,0	115	90	63,6	12	70	6	7	21,0	34,1	29,7	10	14,0	7,8
UCFC 206	30	UC 206	1,5	125	100	70,7	12	80	8	8	23,0	38,1	32,2	10	19,5	11,3
UCFC 207	35	UC 207	1,7	135	110	77,8	14	90	8	9	26,0	42,9	36,4	11	25,5	15,3
UCFC 208	40	UC 208	2,1	145	120	84,4	14	100	10	9	26,0	49,2	41,2	11	32,5	19,8
UCFC 209	45	UC 209	3,0	160	132	93,3	16	105	12	14	26,0	49,2	40,2	10	32,5	20,4
UCFC 210	50	UC 210	3,1	165	138	97,6	16	110	12	14	28,0	51,6	42,6	10	35,0	23,2
UCFC 211	55	UC211	4,2	185	150	106,1	19	125	12	15	31,0	55,6	46,4	13	43,5	29,0
UCFC 212	60	UC 212	4,9	195	160	113,1	19	135	12	15	36,0	65,1	56,7	17	52,0	36,0
UCFC 213	65	UC 213	5,8	205	170	120,2	19	145	14	15	36,0	65,1	55,7	16	62,0	44,0
UCFC 214	70	UC 214	6,8	215	177	125,1	19	150	14	18	40,0	74,6	61,4	17	62,0	44,0
UCFC 215	75	UC 215	7,4	220	184	130,1	19	160	16	18	40,0	77,8	62,5	18	62,0	44,5
UCFC 216	80	UC 216	9,2	240	200	141,4	23	170	16	18	42,0	82,6	67,3	18	72,0	54,0
UCFC 218	90	UC 218	13,0	265	220	155,5	23	190	18	20	50,0	96,0	78,3	22	96,0	72,0

Housed Bearing Units

Series UCFL

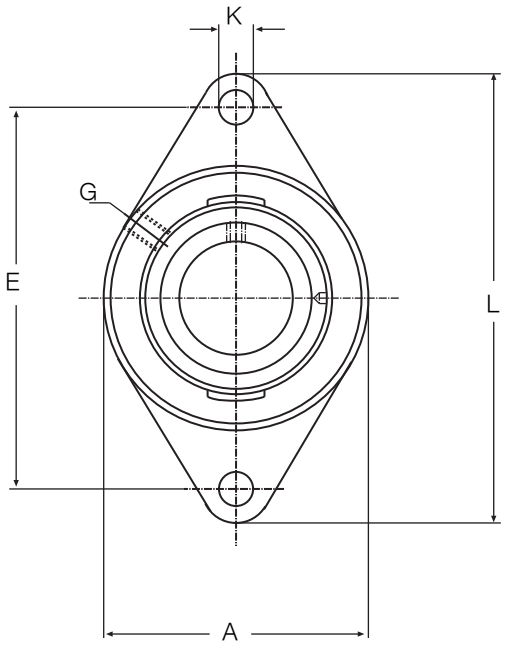

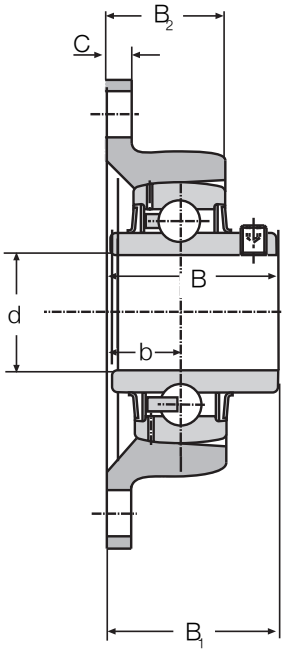

Unit Ref	Shaft Diameter d	Bearing Ref	Weight kg	Dimensions mm L	A	E	K	G	B	B_2	C	b	B_1	Load Rating Dynamic c KN	Static c_0 kN
UCFL 204	20	UC 204	0,5	113	60	90	12	M 6	31	25,5	11	15	33,3	12,8	6,6
UCFL 205	25	UC 205	0,7	130	68	99	16	M 6	34,1	27,0	13	16	35,8	14,0	7,8
UCFL 206	30	UC 206	0,9	148	80	117	16	M 6	38,1	31,0	13	18	40,2	19,5	11,3
UCFL 207	35	UC 207	1,2	161	90	130	16	M 6	42,9	34,0	15	19	44,4	25,5	15,3
UCFL 208	40	UC 208	1,5	175	100	144	16	M 6	49,2	36,0	15	21	51,2	32,5	19,8
UCFL 209	45	UC 209	2,0	188	110	148	19	M 6	49,2	38,0	16	22	52,2	32,5	20,4
UCFL 210	50	UC 210	2,2	196	113	157	19	M 6	51,6	40,0	16	22	54,6	35,0	23,2
UCFL 212	60	UC 212	4,0	250	142	202	22	M 6	65,1	48,0	18	29	68,7	52,0	36,0

Housed Bearing Units

Series OI OIZH
OIU OIH-R3
OIZU OIK
OIH

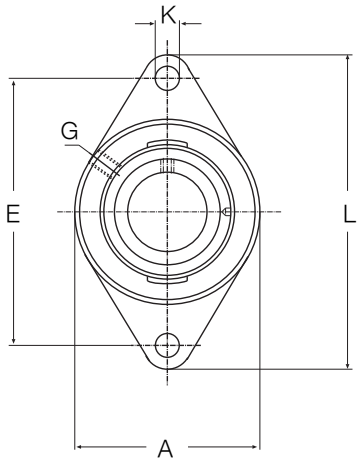

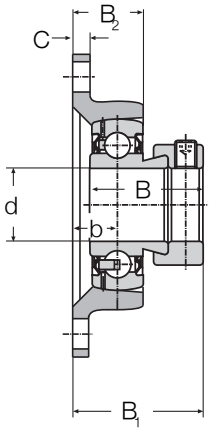

OI

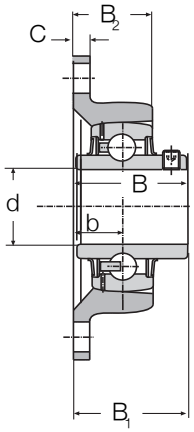

OIU

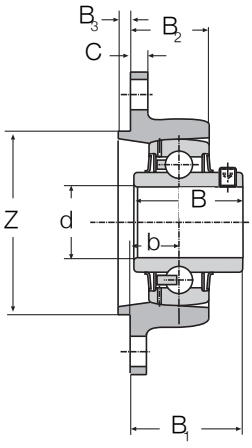

OIZU

Unit Ref	Shaft Diameter d	Bearing Ref	Weight kg	Dimensions mm L	E	A	G	K	B	B_1	B_2	b	c	z_{h8}	B_3	Load Rating Dynamic c kN	Static c_0 kN
OI 20	20	SA 204	0,52	112	90,0	62	R 1/8	11,5	31,0	43,5	31,0	20,0	11	-	-	12,8	6,6
OIU 20		UC 204	0,50	112	90,0	62	R 1/8	11,5	31,0	38,3	31,0	20,0	11	-	-	12,8	6,6
OIH 20		HC 204	0,57	112	90,0	62	R 1/8	11,5	43,5	46,5	31,0	20,0	11	-	-	12,8	6,6
OIH 20 R3		HC 204 R3	0,57	112	90,0	62	R 1/8	11,5	43,5	46,5	31,0	20,0	11	-	-	12,8	6,6
OIZU 20		UC 204	0,50	112	90,0	62	R 1/8	11,5	31,0	37,3	29,0	19,0	9	55	3,5	12,8	6,6
OIZH 20		HC 204	0,57	112	90,0	62	R 1/8	11,5	43,5	45,5	29,0	19,0	9	55	3,5	12,8	6,6
OI 25	25	SA 205	0,72	124	99,0	70	R 1/8	11,5	31,0	43,3	33,5	19,8	14	-	-	14,0	7,8
OIU 25		UC 205	0,70	124	99,0	70	R 1/8	11,5	34,1	39,6	33,5	19,8	14	-	-	14,0	7,8
OIH 25		HC 205	0,75	124	99,0	70	R 1/8	11,5	44,3	46,8	33,5	19,8	14	-	-	14,0	7,8
OIH 25 R3		HC 205 R3	0,75	124	99,0	70	R 1/8	11,5	44,3	46,8	33,5	19,8	14	-	-	14,0	7,8
OIZU 25		UC 205	0,70	124	99,0	70	R 1/8	11,5	34,1	38,8	31,5	19,0	12	60	3,5	14,0	7,8
OIZH 25		HC 205	0,75	124	99,0	70	R 1/8	11,5	44,3	45,9	31,5	19,0	12	60	3,5	14,0	7,8
OIK 25	20	UK 205	0,70	124	99,0	70	R 1/8	11,5	35,0	-	33,5	19,8	14	-	-	14,0	7,8
OI 30	30	SA 206	0,92	142	116,5	80	R 1/8	11,5	35,7	49,7	35,0	23,0	14	-	-	19,5	11,3
OIU 30		UC 206	0,90	142	116,5	80	R 1/8	11,5	38,1	45,2	35,0	23,0	14	-	-	19,5	11,3
OIH 30		HC 206	0,95	142	116,5	80	R 1/8	11,5	48,3	53,1	35,0	23,0	14	-	-	19,5	11,3
OIH 30 R3		HC 206 R3	0,95	142	116,5	80	R 1/8	11,5	48,3	53,1	35,0	23,0	14	-	-	19,5	11,3
OIZU 30		UC 206	0,90	142	116,5	80	R 1/8	11,5	38,1	39,2	33,0	17,0	12	80	3	19,5	11,3
OIZH 30		HC 206	0,95	142	116,5	80	R 1/8	11,5	48,3	47,1	33,0	17,0	12	80	3	19,5	11,3
OIK 30	25	UK 206	0,90	142	116,5	80	R 1/8	11,5	38,0	-	35,0	23,0	14	-	-	19,5	11,3
OI 35	35	SA 207	1,40	155	130,0	92	R 1/8	14	38,9	50,9	37,0	21,5	14	-	-	25,5	15,3
OIU 35		UC 207	1,37	155	130,0	92	R 1/8	14	42,9	46,9	37,0	21,5	14	-	-	25,5	15,3
OIH 35		HC 207	1,50	155	130,0	92	R 1/8	14	51,1	53,8	37,0	21,5	14	-	-	25,5	15,3
OIH 35 R3		HC 207 R3	1,50	155	130,0	92	R 1/8	14	51,1	53,8	37,0	21,5	14	-	-	25,5	15,3
OIZU 35		UC 207	1,37	155	130,0	92	R 1/8	14	42,9	42,4	35,0	17,0	12	90	4	25,5	15,3
OIZH 35		HC 207	1,50	155	130,0	92	R 1/8	14	51,1	49,3	35,0	17,0	12	90	4	25,5	15,3
OIK 35	30	UK 207	1,37	155	130,0	92	R 1/8	14	43,0	-	37,0	21,5	14	-	-	25,5	15,3

Housed Bearing Units

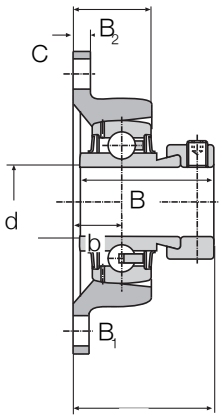

OIH

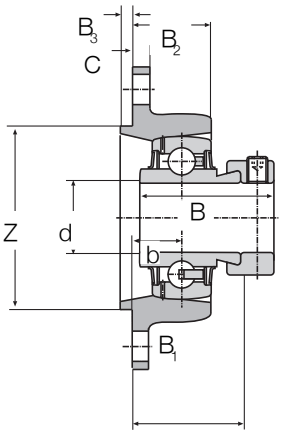

OIZH

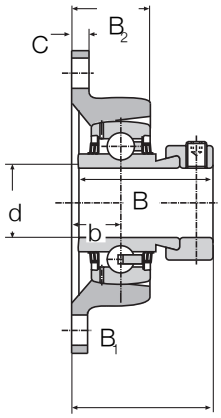

OIH-R3

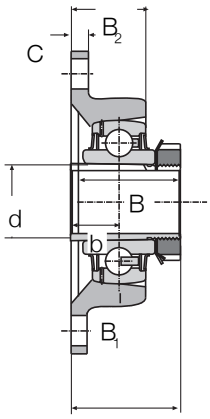

OIK

Unit Ref	Shaft Diameter d	Bearing Ref	Weight kg	Dimensions mm L	E	A	G	K	B	B_1	B_2	b	c	z_{h8}	B_3	Load Rating Dynamic c kN	Static c_0 kN
OI 40	40	SA 208	1,90	172	143,5	105	R 1/8	14	43,7	56,5	43	23,8	14	-	-	32,5	19,8
OIU 40		UC 208	1,86	172	143,5	105	R 1/8	14	49,2	54,0	43	23,8	14	-	-	32,5	19,8
OIH 40		HC 208	1,98	172	143,5	105	R 1/8	14	56,3	58,7	43	23,8	14	-	-	32,5	19,8
OIH 40 R3		HC 208 R3	1,98	172	143,5	105	R 1/8	14	56,3	58,7	43	23,8	14	-	-	32,5	19,8
OIZU 40		UC 208	1,86	172	143,5	105	R 1/8	14	49,2	50,2	41	20,0	13	100	4	32,5	19,8
OIZH 40		HC 208	1,98	172	143,5	105	R 1/8	14	56,3	54,9	41	20,0	13	100	4	32,5	19,8
OIK 40	35	UK 208	1,86	172	143,5	105	R 1/8	14	46,0	-	43	23,8	14	-	-	32,5	19,8
OI 45	45	SA 209	1,85	180	148,5	110	R 1/8	14	43,7	56,5	45	23,8	14	-	-	32,5	20,4
OIU 45		UC 209	1,82	180	148,5	110	R 1/8	14	49,2	54,0	45	23,8	14	-	-	32,5	20,4
OIH 45		HC 209	1,90	180	148,5	110	R 1/8	14	56,3	58,7	45	23,8	14	-	-	32,5	20,4
OIH 45 R3		HC 209 R3	1,90	180	148,5	110	R 1/8	14	56,3	58,7	45	23,8	14	-	-	32,5	20,4
OIZU 45		UC 209	1,82	180	148,5	110	R 1/8	14	49,2	50,2	31	20,0	13	105	4	32,5	20,4
OIZH 45		HC 209	1,90	180	148,5	110	R 1/8	14	56,3	54,9	31	20,0	13	105	4	32,5	20,4
OIK 45	40	UK 209	1,82	180	148,5	110	R 1/8	14	50,0	-	45	23,8	14	-	-	32,5	20,4
OI 50	50	SA 210	2,40	190	157	118	R 1/8	18	43,7	61,3	48	28,6	14	-	-	35,0	23,2
OIU 50		UC 210	2,35	190	157	118	R 1/8	18	51,6	61,2	48	28,6	14	-	-	35,0	23,2
OIH 50		HC 210	2,48	190	157	118	R 1/8	18	62,7	66,7	48	28,6	14	-	-	35,0	23,2
OIH 50 R3		HC 210 R3	2,48	190	157	118	R 1/8	18	62,7	66,7	48	28,6	14	-	-	35,0	23,2
OIZU 50		UC 210	2,35	190	157	118	R 1/8	14	51,6	56,0	35	24,0	13	105	4	35,0	23,2
OIZH 50		HC 210	2,48	190	157	118	R 1/8	14	62,7	60,1	35	24,0	13	105	4	35,0	23,2
OIK 50	45	UK 210	2,35	190	157	118	R 1/8	18	55,0	-	48	28,6	14	-	-	35,0	23,2
OI 60	60	SA 212	3,70	238	202	140	R 1/8	18	53,1	74,2	54	34,6	16	-	-	52,0	36,0
OIU 60		UC 212	3,65	238	202	140	R 1/8	18	65,1	74,3	54	34,6	16	-	-	52,0	36,0
OIH 60		HC 212	3,80	238	202	140	R 1/8	18	77,7	81,4	54	34,6	16	-	-	52,0	36,0
OIH 60 R3		HC 212 R3	3,80	238	202	140	R 1/8	18	77,7	81,4	54	34,6	16	-	-	52,0	36,0
OIZU 60		UC 212	3,65	238	202	140	R 1/8	18	65,1	69,7	42	30,0	16	130	4	52,0	36,0
OIZH 60		HC 212	3,80	238	202	140	R 1/8	18	77,7	76,8	42	30,0	16	130	4	52,0	36,0
OIK 60	55	UK 212	3,65	238	202	140	R 1/8	18	62,0	-	54	34,6	16	-	-	52,0	36,0
OIU 70		UC 214	4,20	258	216	160	R 1/8	21	82,4	74,6	57	38,0	18	-	-	62,0	44,0
OIH 70		HC 214	4,80	258	216	160	R 1/8	21	66,1	82,6	57	38,0	18	-	-	62,0	44,0
OIH 70 R3		HC 214 R3	4,80	258	216	160	R 1/8	21	66,1	82,6	57	38,0	18	-	-	62,0	44,0

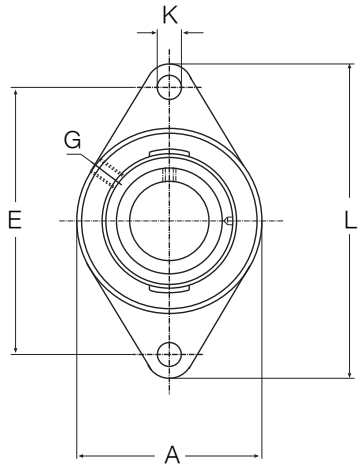

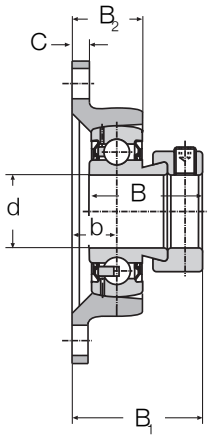

OWI

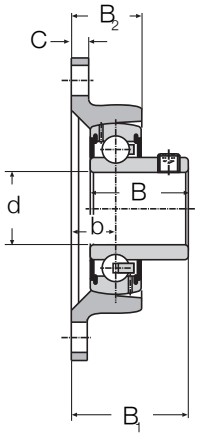

OWIS

Unit Ref	Shaft Diameter d	Bearing Ref	Weight kg	Dimensions mm L	E	A	G	K	B	B_1	B_2	b	C	Load Rating Dynamic c KN	Static c_0 KN
OWI 20	20	SA 204	0,45	112	90,0	62	R 1/8	11,5	31,0	34,0	22	10,5	10	12,8	6,6
OWIS 20		SB 204	0,45	112	90,0	62	R 1/8	11,5	25,0	28,5	22	10,5	10	12,8	6,6
OWI 25	25	SA 205	0,52	124	99,0	70	R 1/8	11,5	31,0	35,0	23	11,5	12	14,0	7,8
OWIS 25		SB 205	0,48	124	99,0	70	R 1/8	11,5	27,0	31,0	23	11,5	12	14,0	7,8
OWI 30	30	SA 206	0,77	142	116,5	80	R 1/8	11,5	35,7	39,2	25	12,5	13	19,5	11,3
OWIS 30		SB 206	0,75	142	116,5	80	R 1/8	11,5	30,0	34,5	25	12,5	13	19,5	11,3
OWI 35	35	SA 207	1,10	155	130,0	92	R 1/8	14	38,9	44,4	28	15,0	13	25,5	15,3
OWIS 35		SB 207	1,05	155	130,0	92	R 1/8	14	32,0	38,5	28	15,0	13	25,5	15,3
OWI 40	40	SA 208	1,40	172	143,5	105	R 1/8	14	43,7	50,2	31	17,5	13	32,5	19,8
OWIS 40		SB 208	1,40	172	143,5	105	R 1/8	14	34,0	42,3	31	17,5	13	32,5	19,8
OWI 45	45	SA 209	1,60	180	148,5	110	R 1/8	14	43,7	51,7	33	19,0	14	32,5	20,4
OWIS 45		SB 209	1,55	180	148,5	110	R 1/8	14	41,2	50,0	33	19,0	14	32,5	20,4
OWI 50	50	SA 210	1,80	190	157,0	118	R 1/8	14	43,7	50,7	33	18,0	15	35,0	23,2
OWIS 50		SB 210	1,80	190	157,0	118	R 1/8	14	43,5	50,6	33	18,0	15	35,0	23,2

Housed Bearing Units

Series SKIS SKIH
SKIU SKIH-R3
SKI SKIK

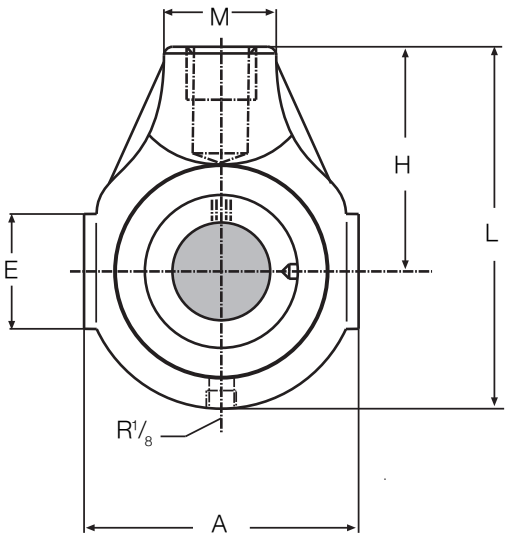

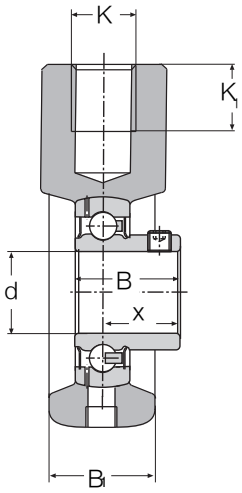

SKIS

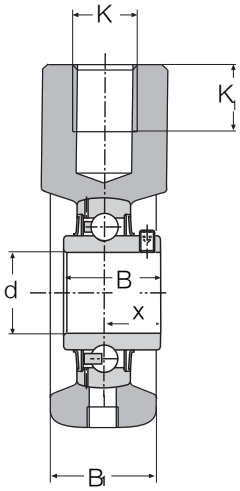

SKIU

Unit Ref	Shaft Diameter d	Bearing Ref	Weight kg	Dimensions mm A	L	H	E	M	B	x	B_1	K	K_1	Load Rating Dynamic c kN	Static c_0 kN
SKI20	20	SA204	0,55	65	91	58	38	30	31,0	23,5	31,0	M 16	20	12,8	6,6
SKIS20		SB204	0,52	65	91	58	38	30	25,0	18,0	31,0	M 16	20	12,8	6,6
SKIU20		UC 204	0,55	65	91	58	38	30	31,0	18,3	31,0	M 16	20	12,8	6,6
SKIH20		HC 204	0,58	65	91	58	38	30	43,7	26,6	31,0	M 16	20	12,8	6,6
SKIH20R3		HC 204 R3	0,58	65	91	58	38	30	43,7	26,6	31,0	M 16	20	12,8	6,6
SKI25	25	SA205	0,72	70	99	64	38	35	31,0	23,5	31,0	M 20	22	14,0	7,8
SKIS25		SB205	0,68	70	99	64	38	35	27,0	19,5	31,0	M 20	22	14,0	7,8
SKIU25		UC 205	0,72	70	99	64	38	35	34,1	19,8	31,0	M 20	22	14,0	7,8
SKIH25		HC 205	0,78	70	99	64	38	35	44,4	26,9	31,0	M 20	22	14,0	7,8
SKIH25R3		HC 205 R3	0,78	70	99	64	38	35	44,4	26,9	31,0	M 20	22	14,0	7,8
SKIK25	20	UK205	0,68	70	99	64	38	35	35,0	-	31,0	M 20	22	14,0	7,8
SKI30	30	SA206	1,10	85	114	72	40	40	35,7	26,7	35,7	M 24	25	19,5	11,3
SKIS30		SB206	1,05	85	114	72	40	40	30,0	22,0	35,7	M 24	25	19,5	11,3
SKIU30		UC 206	1,10	85	114	72	40	40	38,1	22,2	35,7	M 24	25	19,5	11,3
SKIH30		HC 206	1,15	85	114	72	40	40	48,4	30,1	35,7	M 24	25	19,5	11,3
SKIH30R3		HC 206 R3	1,15	85	114	72	40	40	48,4	30,1	35,7	M 24	25	19,5	11,3
SKIK30	25	UK206	1,05	85	114	72	40	40	38,0	-	35,7	M 24	25	19,5	11,3
SKI35	35	SA207	1,30	90	122	76	49	40	38,9	29,4	38,9	M 24	25	25,5	15,3
SKIS35		SB207	1,20	90	122	76	49	40	32,0	23,5	38,9	M 24	25	25,5	15,3
SKIU35		UC 207	1,30	90	122	76	49	40	42,9	25,4	38,9	M 24	25	25,5	15,3
SKIH35		HC 207	1,40	90	122	76	49	40	51,1	32,3	38,9	M 24	25	25,5	15,3
SKIH35R3		HC 207 R3	1,40	90	122	76	49	40	51,1	32,3	38,9	M 24	25	25,5	15,3
SKIK35	30	UK207	1,20	90	122	76	49	40	43,0	-	38,9	M 24	25	25,5	15,3

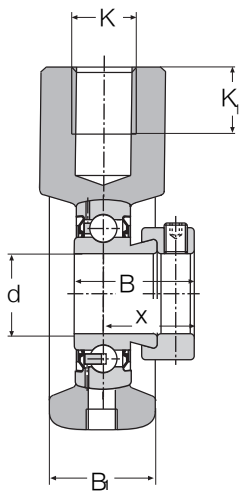

SKI

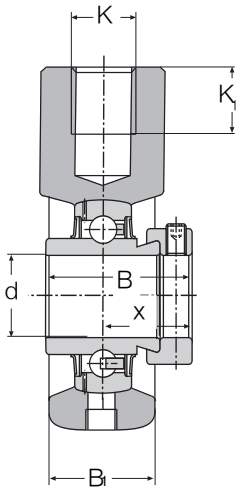

SKIH

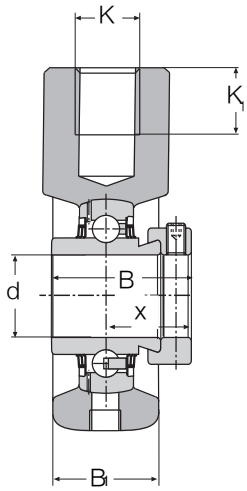

SKIH-R3

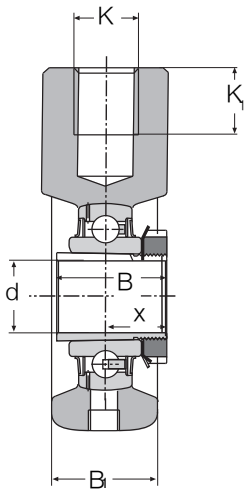

SKIK

Unit Ref	Shaft Diameter d	Bearing Ref	Weight kg	Dimensions mm A	L	H	E	M	B	x	B_1	K	K_1	Load Rating Dynamic c kN	Static c_0 kN
SKI 40	40	SA 208	1,65	100	135	85	45	40	43,7	32,7	43,7	M 24	25	32,5	19,8
SKIS 40		SB 208	1,55	100	135	85	45	40	34,0	25,0	43,7	M 24	25	32,5	19,8
SKIU 40		UC 208	1,65	100	135	85	45	40	49,2	30,2	43,7	M 24	25	32,5	19,8
SKIH 40		HC 208	1,80	100	135	85	45	40	56,3	34,9	43,7	M 24	25	32,5	19,8
SKIH 40 R3		HC 208 R3	1,80	100	135	85	45	40	56,3	34,9	43,7	M 24	25	32,5	19,8
SKIK 40	35	UK 208	1,55	100	135	85	45	40	46,0	-	43,7	M 24	25	32,5	19,8
SKI 50	50	SA 210	1,90	110	145	90	46	40	43,7	32,7	43,7	M 24	25	35,0	23,2
SKIS 50		SB 210	1,75	110	145	90	46	40	43,5	32,6	43,7	M 24	25	35,0	23,2
SKIU 50		UC 210	1,90	110	145	90	46	40	51,6	32,6	43,7	M 24	25	35,0	23,2
SKIH 50		HC 210	2,15	110	145	90	46	40	62,7	38,1	43,7	M 24	25	35,0	23,2
SKIH 50 R3		HC 210 R3	2,15	110	145	90	46	40	62,7	38,1	43,7	M 24	25	35,0	23,2
SKIK 50	45	UK 210	1,75	110	145	90	46	40	55,0	-	43,7	M 24	25	35,0	23,2
SKI 60	60	SA 212	3,65	143	175	104	50	60	53,1	39,6	53,3	M 24	25	52,0	36,0
SKIU 60		UC 212	3,50	143	175	104	50	60	65,1	39,7	53,3	M 24	25	52,0	36,0
SKIH 60		HC 212	3,70	143	175	104	50	60	77,7	46,8	53,3	M 24	25	52,0	36,0
SKIH 60 R3		HC 212 R3	3,70	143	175	104	50	60	77,7	46,8	53,3	M 24	25	52,0	36,0
SKIK 60	55	UK 212	3,40	143	175	104	50	60	65,0	-	53,3	M 24	25	52,0	36,0

Housed Bearing Units

Series TIS TIH
TIU TIH-R3
TI TIK

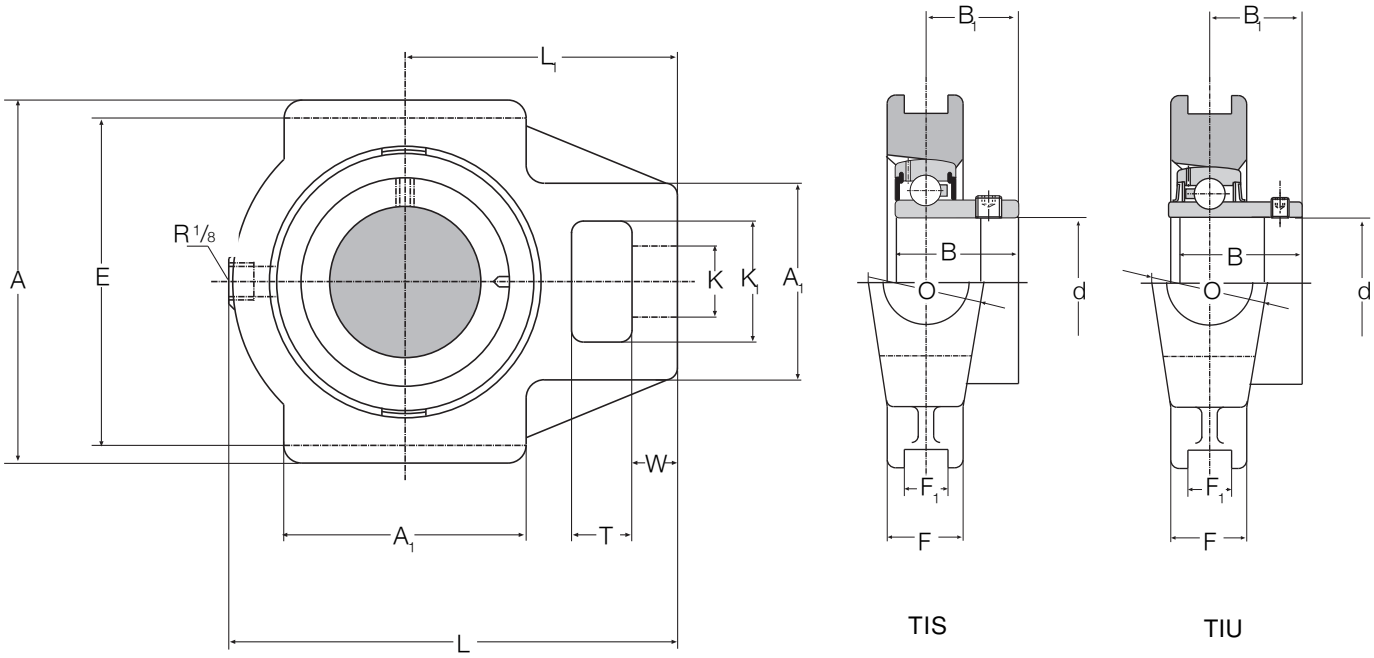

Unit Ref	Shaft Diameter d	Bearing Ref	Weight kg	Load Rating Dynamic c kN	Load Rating Static c_0 kN	B_1	B
TI 20	20	SA 204	0,9	12,8	6,6	23,5	31,0
TIU 20		UC 204	0,8	12,8	6,6	18,3	31,0
TIS 20		SB 204	0,8	12,8	6,6	18,0	25,0
TIH 20		HC 204	0,9	12,8	6,6	26,5	43,5
TIH 20 R3		HC 204 R3	0,9	12,8	6,6	26,5	43,5
TI 25	25	SA 205	1,1	14,0	7,8	23,5	31,0
TIU 25		UC 205	1,0	14,0	7,8	19,8	34,1
TIS 25		SB 205	1,0	14,0	7,8	19,5	27,0
TIH 25		HC 205	1,1	14,0	7,8	26,9	44,3
TIH 25 R3		HC 205 R3	1,1	14,0	7,8	26,9	44,3
TIK 25	20	UK 205	1,0	14,0	7,8	-	-
TI 30	30	SA 206	1,5	19,5	11,3	26,7	35,7
TIU 30		UC 206	1,4	19,5	11,3	22,2	38,1
TIS 30		SB 206	1,3	19,5	11,3	22,0	30,0
TIH 30		HC 206	1,5	19,5	11,3	30,1	48,3
TIH 30 R3		HC 206 R3	1,5	19,5	11,3	30,1	48,3
TIK 30	25	UK 206	1,3	19,5	11,3	-	-
TI 35	35	SA 207	1,9	25,5	15,3	29,4	38,9
TIU 35		UC 207	1,8	25,5	15,3	25,4	42,9
TIS 35		SB 207	1,7	25,5	15,3	23,5	32,0
TIH 35		HC 207	1,9	25,5	15,3	32,3	51,1
TIH 35 R3		HC 207 R3	1,9	25,5	15,3	32,3	51,1
TIK 35	30	UK 207	1,7	25,5	15,3	-	-

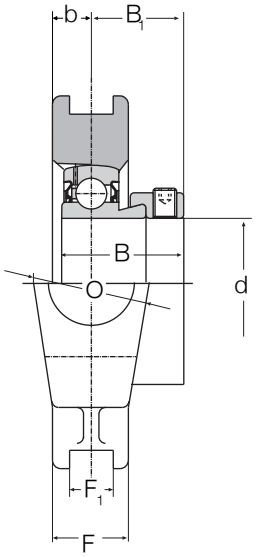

TI

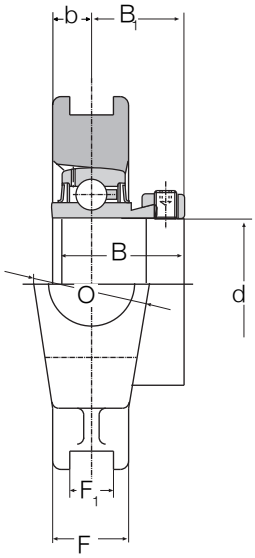

TIH

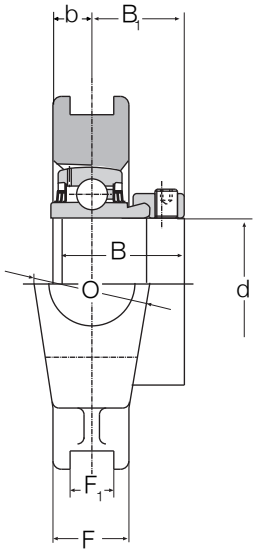

TIH-R3

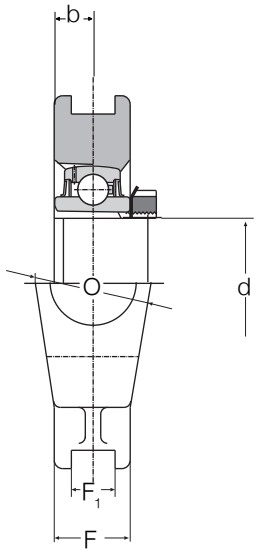

TIK

Shaft Diameter	Dimensions mm												
d	L	L_1	E	A	K	K_1	T	A_1	W	F	F_1	O	b
20	94	61	76	89	19	32	16	51	10	21	12	32	10,5
	94	61	76	89	19	32	16	51	10	21	12	32	10,5
	94	61	76	89	19	32	16	51	10	21	12	32	10,5
	94	61	76	89	19	32	16	51	10	21	12	32	10,5
	94	61	76	89	19	32	16	51	10	21	12	32	10,5
25	97	62	76	89	19	32	16	51	10	24	12	32	12,0
	97	62	76	89	19	32	16	51	10	24	12	32	12,0
	97	62	76	89	19	32	16	51	10	24	12	32	12,0
	97	62	76	89	19	32	16	51	10	24	12	32	12,0
	97	62	76	89	19	32	16	51	10	24	12	32	12,0
20	97	62	76	89	19	32	16	51	10	24	12	32	12,0
30	113	70	89	102	22	37	16	57	10	28	12	37	14,0
	113	70	89	102	22	37	16	57	10	28	12	37	14,0
	113	70	89	102	22	37	16	57	10	28	12	37	14,0
	113	70	89	102	22	37	16	57	10	28	12	37	14,0
	113	70	89	102	22	37	16	57	10	28	12	37	14,0
25	113	70	89	102	22	37	16	57	10	28	12	37	14,0
35	129	78	89	102	22	37	16	64	13	30	12	37	15,0
	129	78	89	102	22	37	16	64	13	30	12	37	15,0
	129	78	89	102	22	37	16	64	13	30	12	37	15,0
	129	78	89	102	22	37	16	64	13	30	12	37	15,0
	129	78	89	102	22	37	16	64	13	30	12	37	15,0
30	129	78	89	102	22	37	16	64	13	30	12	37	15,0

Housed Bearing Units

Series	TIS	TIH
	TIU	TIH-R3
	TI	TIK

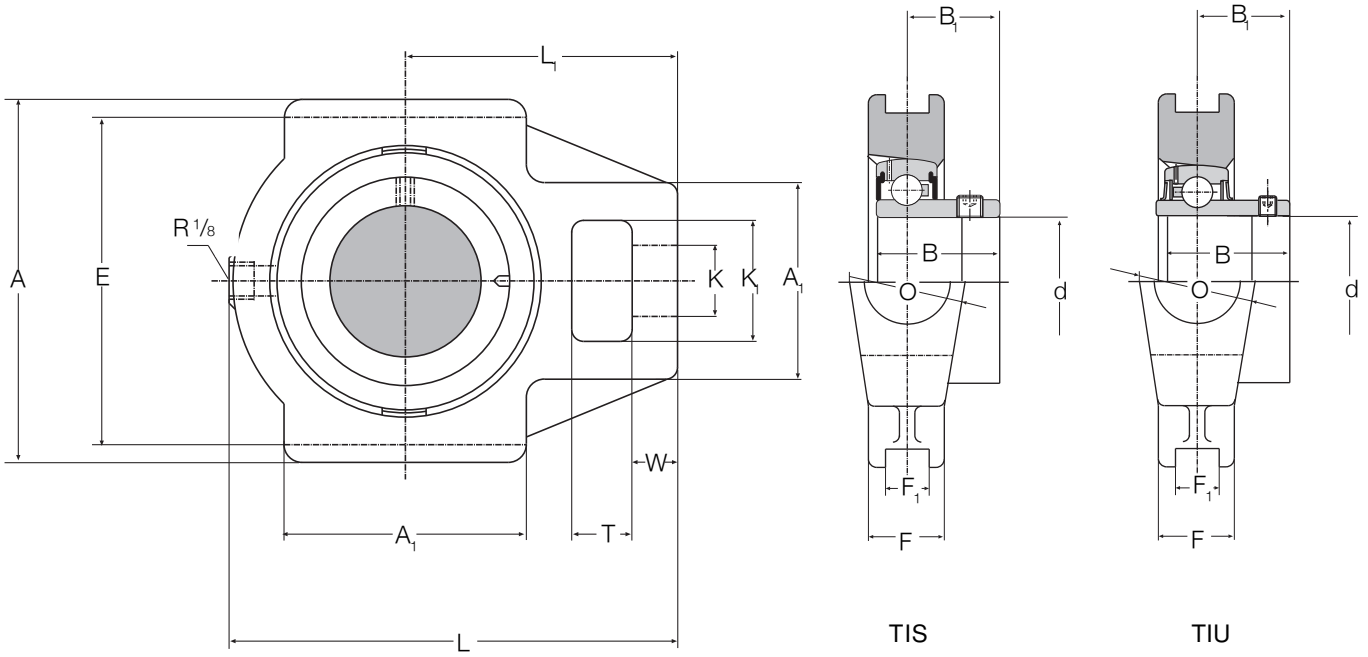

Unit Ref	Shaft Diameter d	Bearing Ref	Weight kg	Load Rating Dynamic c kN	Load Rating Static c_0 kN	B_1	B
TI 40	40	SA 208	2,5	32,5	19,8	32,7	43,7
TIU 40		UC 208	2,4	-	-	30,2	49,2
TIS 40		SB 208	2,3	-	-	25,0	34,0
TIH 40		HC 208	2,6	-	-	34,9	56,3
TIH 40 R3		HC 208 R3	2,6	-	-	34,9	56,3
TIK 40	35	UK 208	2,5	-	-	-	-
TI 45	45	SA 209	2,6	32,5	20,4	32,7	43,7
TIU 45		UC 209	2,5	-	-	30,2	49,2
TIS 45		SB 209	2,4	-	-	31,0	41,2
TIH 45		HC 209	2,6	-	-	34,9	56,3
TIH 45 R3		HC 209 R3	2,6	-	-	34,9	56,3
TIK 45	40	UK 209	2,5	-	-	-	-
TI 50	50	SA 210	3,0	35,0	23,2	32,7	43,7
TIU 50		UC 210	2,9	-	-	32,6	51,6
TIS 50		SB 210	2,8	-	-	32,6	43,5
TIH 50		HC 210	3,1	-	-	38,1	62,7
TIH 50 R3		HC 210 R3	3,1	-	-	38,1	62,7
TIK 50	45	UK 210	2,9	-	-	-	-
TI 60	60	SA 212	5,3	52,0	36,0	39,6	53,1
TIU 60		UC 212	5,1	-	-	39,7	65,1
TIH 60		HC 212	5,3	-	-	46,8	77,7
TIH 60 R3		HC 212 R3	5,3	-	-	46,8	77,7
TIK 60	55	UK 212	5,1	-	-	-	-
TIU 65	65	UC 213	7,1	-	-	39,7	65,1
TIH 65		HC 213	7,3	-	-	51,6	85,7
TIK 65	60	UK 213	7,1	-	-	-	-

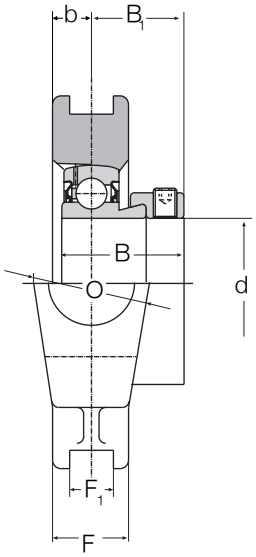

TI

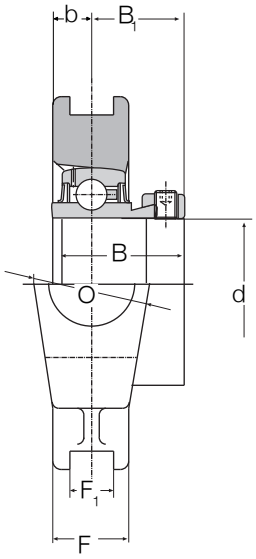

TIH

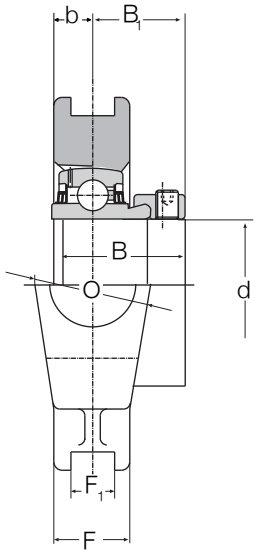

TIH-R3

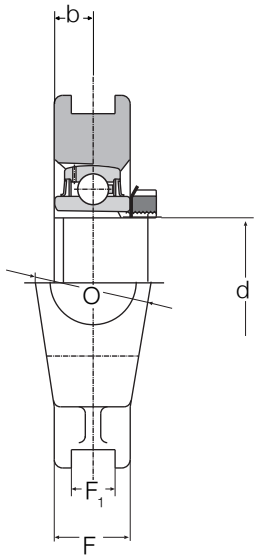

TIK

Shaft Diameter	Dimensions mm												
d	L	L1	E	A	K	K1	T	A1	W	F	F1	O	b
40	144	88	102	114	29	49	19	83	16	33	16	49	16,5
	144	88	102	114	29	49	19	83	16	33	16	49	16,5
	144	88	102	114	29	49	19	83	16	33	16	49	16,5
	144	88	102	114	29	49	19	83	16	33	16	49	16,5
	144	88	102	114	29	49	19	83	16	33	16	49	16,5
35	144	88	102	114	29	49	19	83	16	33	16	49	16,5
45	144	87	102	117	29	49	19	83	16	35	16	49	17,5
	144	87	102	117	29	49	19	83	16	35	16	49	17,5
	144	87	102	117	29	49	19	83	16	35	16	49	17,5
	144	87	102	117	29	49	19	83	16	35	16	49	17,5
	144	87	102	117	29	49	19	83	16	35	16	49	17,5
40	144	87	102	117	29	49	19	83	16	35	16	49	17,5
50	149	90	102	117	29	49	19	86	16	37	16	49	18,5
	149	90	102	117	29	49	19	83	16	37	16	49	18,5
	149	90	102	117	29	49	19	83	16	37	16	49	18,5
	149	90	102	117	29	49	19	83	16	37	16	49	18,5
	149	90	102	117	29	49	19	83	16	37	16	49	18,5
45	149	90	102	117	29	49	19	83	16	37	16	49	18,5
60	194	119	130	146	35	64	32	102	19	42	22	64	21,0
	194	119	130	146	35	64	32	102	19	42	22	64	21,0
	194	119	130	146	35	64	32	102	19	42	22	64	21,0
	194	119	130	146	35	64	32	102	19	42	22	64	21,0
55	194	119	130	146	35	64	32	102	19	42	22	64	21,0
65	224	137	151	167	41	70	32	121	21	44	26	70	22,0
	224	137	151	167	41	70	32	121	21	44	26	70	22,0
60	224	137	151	167	41	70	32	121	21	44	26	70	22,0

Housed Bearing Units

Series TIS TIH
TIU TIH-R3
TI TIK

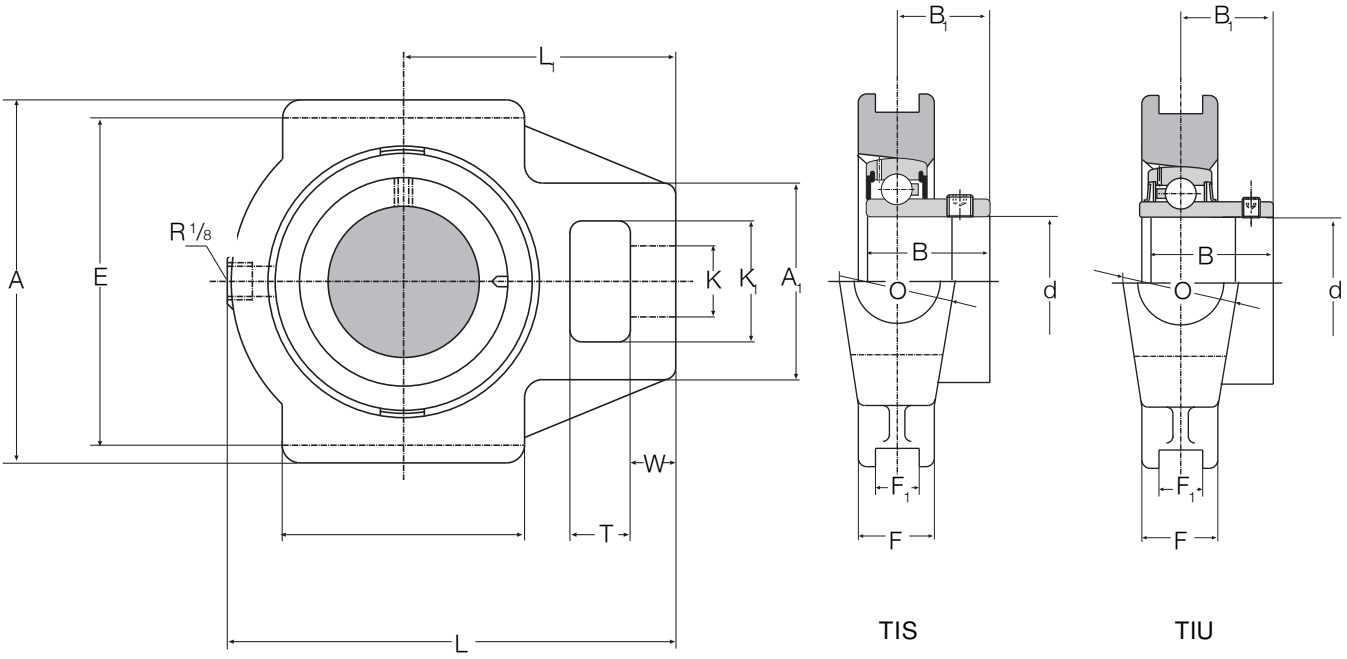

Unit Ref	Shaft Diameter d	Bearing Ref	Weight kg	Load Rating Dynamic c kN	Static c0 kN	B1	B
TIU 70	70	UC 214	7,2	62	44,0	44,4	74,6
TIH 70		HC 214	7,4	62	44,0	44,6	66,1
TIH 70 R3		HC 214 R3	7,4	62	44,0	44,6	66,1
TIU 75	75	UC 215	7,6	62	44,5	44,5	77,8
TIH 75		HC 215	7,8	62	44,5	45,6	67,1
TIH 75 R3		HC 215 R3	7,8	62	44,5	45,6	67,1
TIK 75	65	UK 215	7,6	62	44,5	-	-
TIU 80	80	UC 216	8,6	72	54,0	49,3	82,6
TIH 80		HC 216	8,8	72	54,0	47,6	71,0
TIH 80 R3		HC 216 R3	8,8	72	54,0	47,6	71,0
TIH 316		HC 316	17,25	123	87,0	59,7	93,7
TIK 80	70	UK 216	8,6	72	54,0	-	-
TIH 318		HC 318	22,9	143	107,0	65,5	101,0
TIH 100	100	HC 220	10,5	122	93,0	49,5	75,0
TIH 320		HC 320	31,35	173	141,0	70,0	109,0
TIH 120	120	HC 224	22,0	155	131,0	52,5	81,0

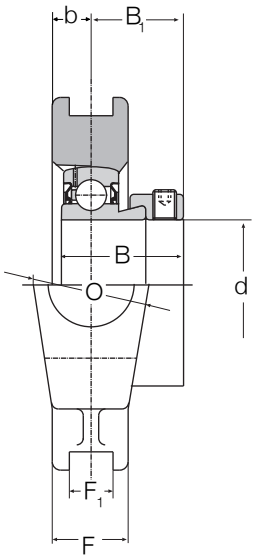

TI

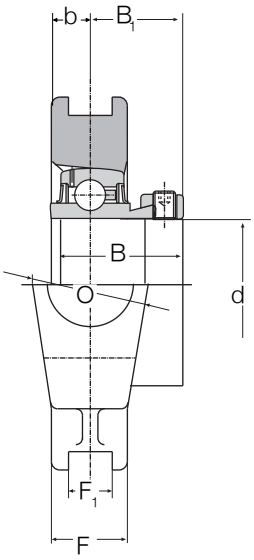

TIH

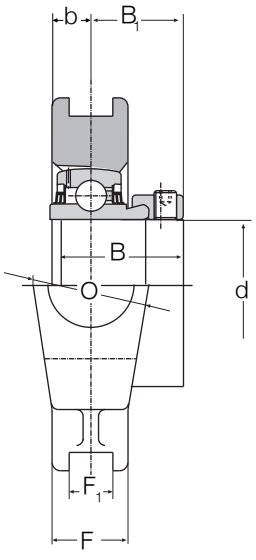

TIH-R3

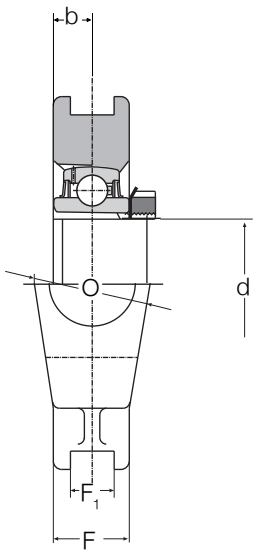

TIK

Shaft Diameter d	L	L1	E	A	K	K1	T	A1	W	F	F1	O	b
	Dimensions mm												
70	224	137	151	167	41	70	32	111	21	46	26	70	23,0
	224	137	151	167	41	70	32	111	21	46	26	70	23,0
	224	137	151	167	41	70	32	111	21	46	26	70	23,0
75	232	140	151	167	41	70	32	111	21	48	26	70	24,0
	232	140	151	167	41	70	32	111	21	48	26	70	24,0
	232	140	151	167	41	70	32	111	21	48	26	70	24,0
65	232	140	151	167	41	70	32	111	21	48	26	70	24,0
80	235	140	165	184	41	70	32	111	21	51	26	70	25,5
	235	140	165	184	41	70	32	111	21	51	26	70	25,5
	235	140	165	184	41	70	32	111	21	51	26	70	25,5
	282	174	204	230	53	98	42	150	28	60	30	101	30,0
70	235	140	165	184	41	70	32	111	21	51	26	70	25,5
	312	192	228	255	57	106	46	160	30	66	32	110	33,0
100	295	180	215	240	47	-	40	130	30	60	28	90	30,0
	345	210	260	290	59	115	48	175	32	75	35	120	37,5
120	345	210	255	285	55	-	45	150	35	70	32	100	35,0

Housed Bearing Units

Series UCF 300
Ball bearing with grubscrew - regreaseable

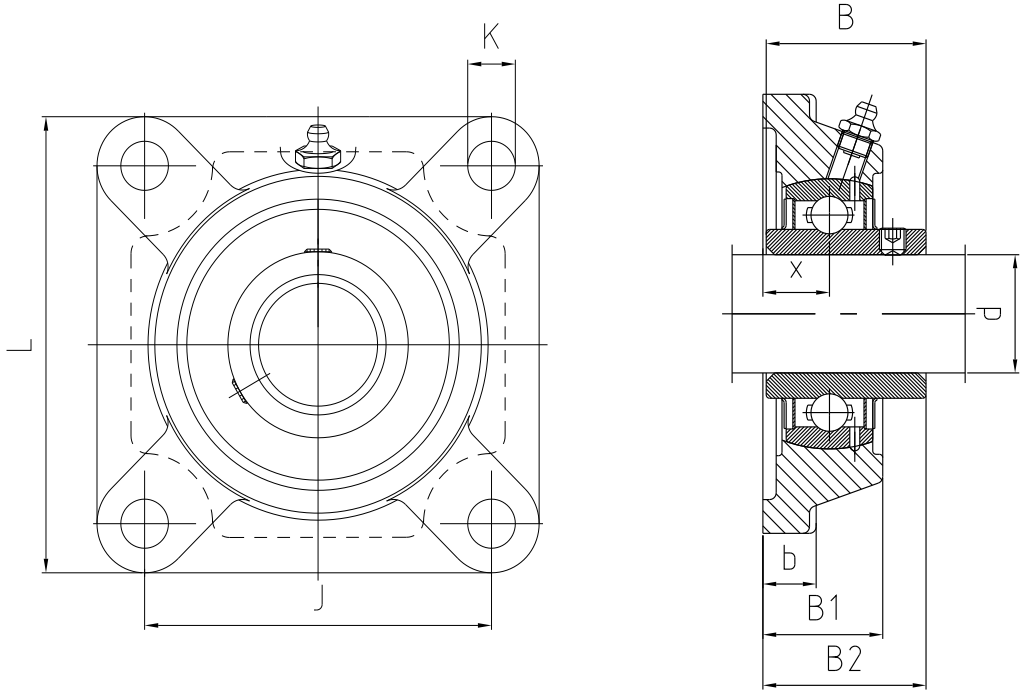

Unit Ref	Shaft Diameter d (mm)	L	J	X	b	B1	K	B2	B
		Dimensions mm							
UCF 308	40	150	112	23	17	40	19	56	52
UCF 309	45	160	125	25	18	44	19	60	57
UCF 310	50	175	132	28	19	48	23	67	61
UCF 311	55	185	140	30	20	52	23	71	66
UCF 312	60	195	150	33	22	56	23	78	71
UCF 313	65	208	166	33	22	58	23	78	75
UCF 314	70	226	178	36	25	61	25	81	78
UCF 315	75	236	184	39	25	66	25	89	82
UCF 316	80	250	196	38	27	68	31	90	86
UCF 317	85	260	204	44	27	74	31	100	96
UCF 318	90	280	216	44	30	76	35	100	96
UCF 319	95	290	228	59	30	94	35	121	103
UCF 320	100	310	242	59	32	94	38	125	108
UCF 321	105	310	242	59	32	94	38	127	112
UCF 322	110	340	266	60	35	96	41	131	117
UCF 324	120	370	290	65	40	110	41	140	126
UCF 326	130	410	320	65	45	115	41	146	135
UCF 328	140	450	350	75	55	125	41	161	145

Unit Ref	Bearing Ref	Load Rating (daN) dyn. C	stat C_0	Weight kg
F 308	UC 308	4150	2300	2,9
F 309	UC 309	5400	3100	3,6
F 310	UC 310	6300	3650	4,7
F 311	UC 311	7300	4300	5,7
F 312	UC 312	8350	5000	6,8
F 313	UC 313	9450	5750	7,8
F 314	UC 314	10600	6550	9,6
F 315	UC 315	11600	7400	11,7
F 316	UC 316	12500	8300	13,7
F 317	UC 317	13500	9250	15,2
F 318	UC 318	14500	10200	18,8
F 319	UC 319	15600	11300	20,7
F 320	UC 320	17700	13500	24,8
F 321	UC 321	18700	14700	25,6
F 322	UC 322	20900	17200	34,7
F 324	UC 324	21100	17400	47,2
F 326	UC 326	23400	20200	62,7
F 328	UC 328	25800	23200	87,0

Housed Bearing Units

Series UCP 300
Ball bearings with grubscrew - regreaseable

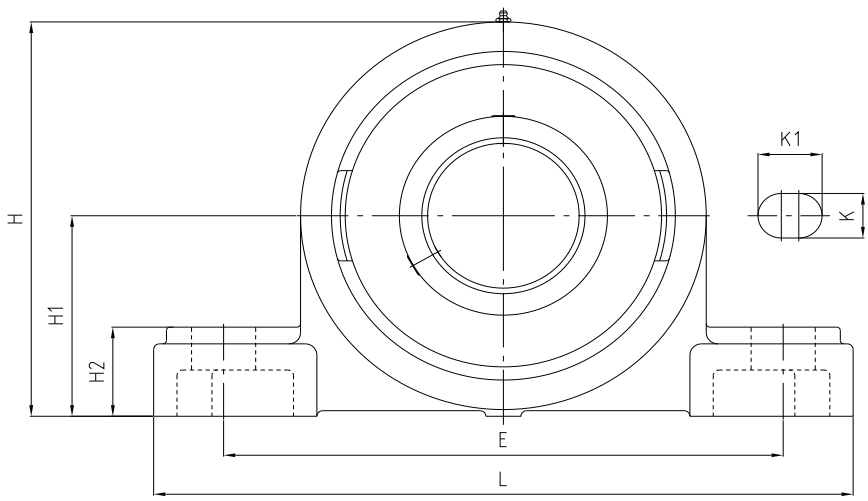

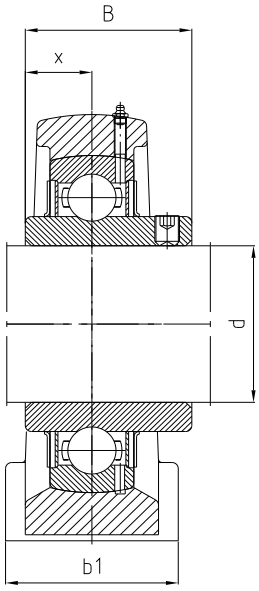

Unit Ref	Shaft Diameter d mm	Dimensions mm H1	L	E	b1	K	K1	H2	H	B	x	Grub Screw
UCP 308	40	60	220	170	60	17	27	23	116	52	19	M14
UCP 309	45	67	245	190	67	20	30	25	128	57	22	M14
UCP 310	50	75	275	212	75	20	35	28	143	61	22	M14
UCP 311	55	80	310	236	80	20	38	31	154	66	25	M16
UCP 312	60	85	330	250	85	25	38	33	165	71	26	M20
UCP 313	65	90	340	260	90	25	38	36	174	75	30	M20
UCP 314	70	95	360	280	90	27	40	40	186	78	33	M22
UCP 315	75	100	380	290	100	27	40	40	197	82	32	M22
UCP 316	80	106	400	300	110	27	40	45	209	86	34	M22
UCP 317	85	112	420	320	110	33	45	45	221	96	40	M27
UCP 318	90	118	430	330	110	33	45	50	233	96	40	M27
UCP 319	95	125	470	360	120	36	50	50	250	103	41	M30
UCP 320	100	140	490	380	120	36	50	55	275	108	42	M30
UCP 321	105	140	490	380	120	36	50	55	278	112	44	M30
UCP 322	110	150	520	400	140	40	55	60	295	117	46	M33
UCP 324	120	160	570	450	140	40	55	70	321	126	51	M33
UCP 326	130	180	600	480	140	40	55	80	354	135	54	M33
UCP 328	140	200	620	500	140	40	55	80	388	145	59	M33

Unit Ref	Bearing Ref	Load Rating (daN) dyn. C	stat C_0	Weight kg
P 308	UC 308	4150	2300	3,3
P 309	UC 309	5400	3100	4,5
P 310	UC 310	6300	3650	6,2
P 311	UC 311	7300	4300	7,7
P 312	UC 312	8350	5000	9,3
P 313	UC 313	9450	5750	9,8
P 314	UC 314	10600	6550	11,4
P 315	UC 315	11600	7400	13,6
P 316	UC 316	12500	8300	16,4
P 317	UC 317	13500	9250	18,6
P 318	UC 318	14500	10200	20,9
P 319	UC 319	15600	11300	26,5
P 320	UC 320	17700	13500	34,3
P 321	UC 321	18700	14700	36,6
P 322	UC 322	20900	17200	42,5
P 324	UC 324	21100	17400	53,5
P 326	UC 326	23400	10200	72,1
P 328	UC 328	25800	23200	89,1

Housed Bearing Units

Series UCT 300
Ball bearings with grubsrew - regreaseable

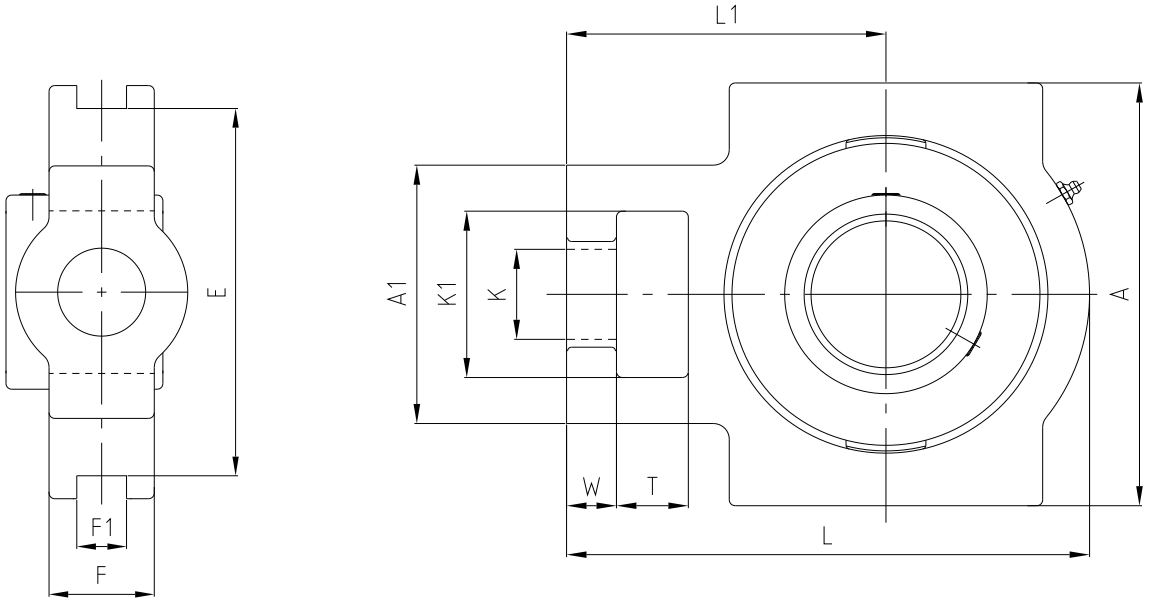

Unit Ref	Shaft Diameter d mm	T	W	A_1	K1	K	F_1	E	A	L	F	L_1	B	N
						Dimensions mm								
UCT 305	25	16	12	62	36	26	12	80	89	122	26	76	38	15
UCT 306	30	18	14	70	41	28	16	90	100	137	28	85	43	17
UCT 307	35	20	15	75	45	30	16	100	111	150	32	94	48	19
UCT 308	40	22	17	83	50	32	18	112	124	162	34	100	52	19
UCT 309	45	24	18	90	55	34	18	125	138	178	38	110	57	22
UCT 310	50	27	20	98	61	37	20	140	151	191	40	117	61	22
UCT 311	55	29	21	105	66	39	22	150	163	207	44	127	66	25
UCT 312	60	31	23	113	72	41	22	160	178	220	46	135	71	26
UCT 313	65	32	25	116	70	43	26	170	190	238	50	146	75	30
UCT 314	70	36	25	130	85	46	26	180	202	252	52	155	78	33
UCT 315	75	36	25	132	85	46	26	192	216	262	55	160	82	32
UCT 316	80	42	28	150	98	53	30	204	230	282	60	174	86	34
UCT 317	85	42	30	152	98	53	32	214	240	298	64	183	96	40
UCT 318	90	46	30	160	106	57	32	228	255	312	66	192	96	40
UCT 319	95	46	31	165	106	57	35	240	270	322	72	197	103	41
UCT 320	100	48	32	175	115	59	35	260	290	345	75	210	108	42
UCT 322	110	52	38	185	125	65	38	285	320	385	80	235	117	46
UCT 324	120	60	42	210	140	70	45	320	355	432	90	267	126	51
UCT 326	130	68	45	220	150	75	50	350	385	465	100	285	135	54
UCT 328	140	70	50	230	160	80	50	380	415	515	100	315	145	59

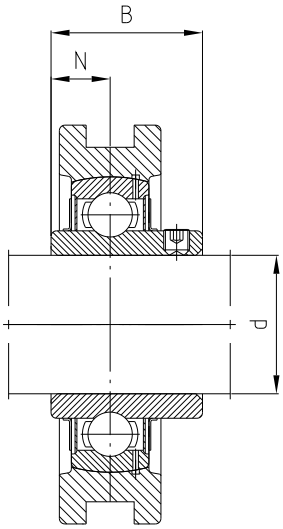

Unif Ref	Bearing Ref	Load Rading (daN) dyn. C	stat C_0	Weight kg
T 305	UC 305	2100	1080	1,4
T 306	UC 306	2750	1440	1,8
T 307	UC 307	3400	1840	2,4
T 308	UC 308	4150	2300	3,0
T 309	UC 309	5400	3100	4,1
T 310	UC 310	6300	3650	5,2
T 311	UC 311	7300	4300	6,4
T 312	UC 312	8350	5000	7,6
T 313	UC 313	9450	5750	9,2
T 314	UC 314	10600	6550	11,2
T 315	UC 315	11600	7400	13,0
T 316	UC 316	12500	8300	15,6
T 317	UC 317	13500	9250	19,3
T 318	UC 318	14500	10200	21,2
T 319	UC 319	15600	11300	24,4
T 320	UC 320	17700	13500	30,6
T 322	UC 322	20900	17200	34,7
T 324	UC 324	21100	17400	54,6
T 326	UC 326	23400	20200	68,4
T 328	UC 328	25800	23200	83,2

Housed Bearing Units

complete with steel angle frame
Series TIRU

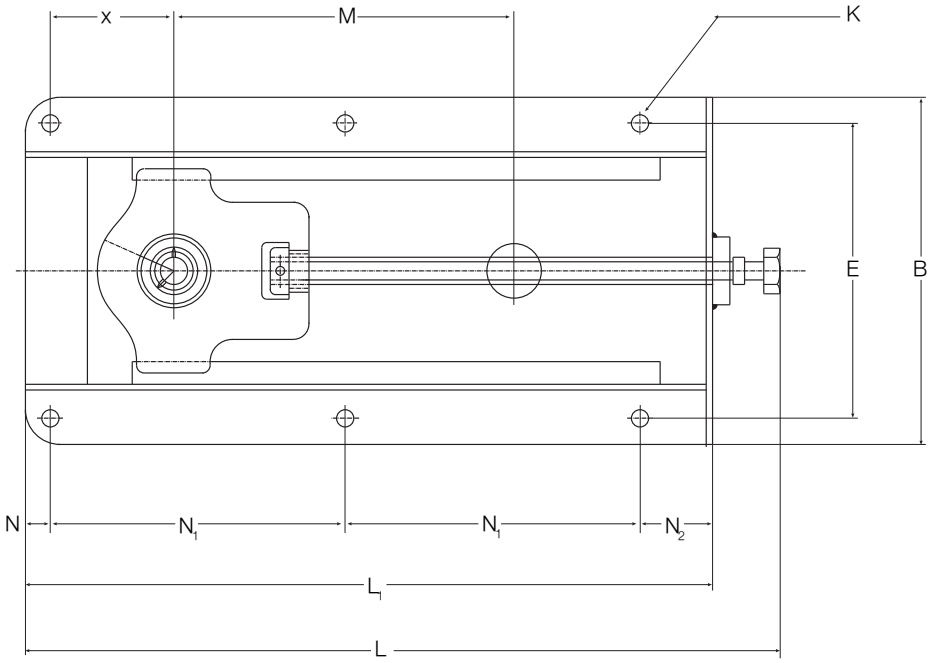

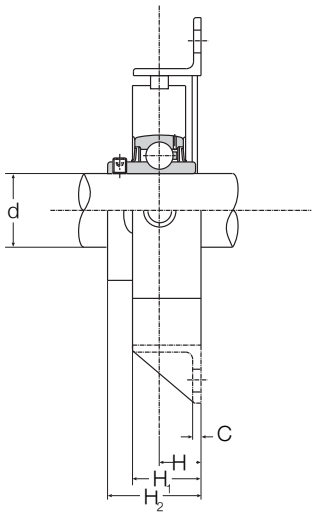

Unit Ref	Shaft Diameter d	Bearing Ref	Weight kg	Dimensions mm L_1	L	B	C	H	H_1	H_2	M	x	N	N_1	N_2	E	K	Load Rating Dyn. c kN	Stat. c_0 kN
TIRU 20	20	UC 204	6,5	317	370	199	6	30	50	48,3	150	64	19	117	64	154	12	12,8	6,6
TIRU 25	25	UC 205	6,5	317	370	199	6	30	50	49,7	150	63	19	117	64	154	12	14,0	7,8
TIRU 30	30	UC 206	7,5	337	393	212	6	32	50	54,2	150	73	19	127	64	166	12	19,5	11,3
TIRU 35	35	UC 207	9,0	429	485	212	6	32	50	57,4	230	80	19	173	64	166	12	25,5	15,3
TIRU 40	40	UC 208	12,5	520	595	233	6	32	50	62,2	300	88	22	217	64	192	12	32,5	19,8
TIRU 45	45	UC 209	16,0	520	595	233	6	32	50	62,2	300	88	22	217	64	192	12	32,5	20,4
TIRU 50	50	UC 210	16,5	524	595	233	6	35	50	67,7	300	92	22	219	64	192	14	35,0	23,2
TIRU 60	60	UC 212	24,0	568	650	285	8	38	65	77,7	300	101	22	243	60	240	14	52,0	36,0
TIRU 65	65	UC 213	32,0	605	700	306	8	43	65	82,4	300	109	22	260	64	260	14	62,0	44,0

Housed Bearing Units

Series STLU
FWSR
FWSRU

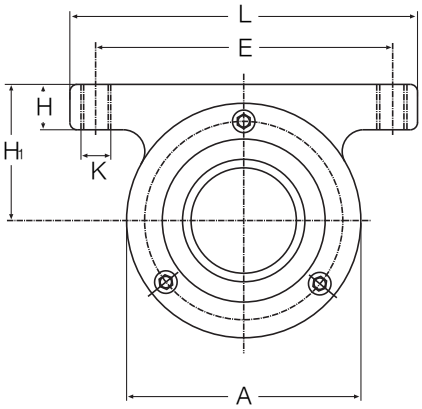

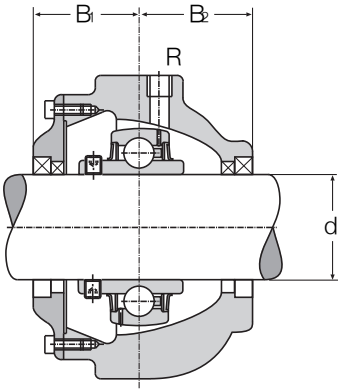

STLU

Unit Ref	Shaft Diameter d	Bearing Ref	Weight kg	Load Rating Dynamic c kN	Load Rating Static c_0 kN	A
FWSR 25	25	SA 205	2,8	14,0	7,8	-
FWSRU 25		UC 205	2,8	14,0	7,8	-
FWSR 35	35	SA 207	2,6	25,5	15,3	-
FWSRU 35		UC 207	2,6	25,5	15,3	-
STLU 40	40	UC 208	2,2	32,5	19,8	105
FWSR 45	45	SA 209	2,5	32,5	20,4	-
FWSRU 45		UC 209	2,5	32,5	20,4	-
STLU 50	50	UC 210	3,2	35,0	23,2	117
STLU 60	60	UC 212	5,2	52,0	36,0	140
STLU 70	70	UC 214	7,5	62,0	44,0	155

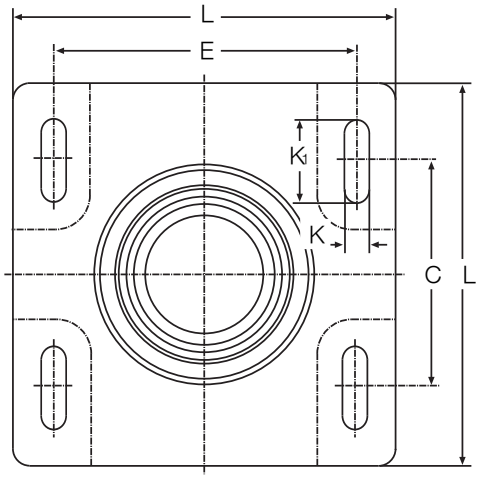

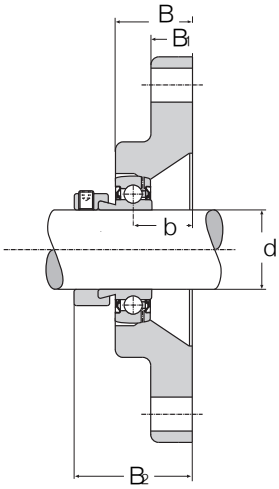

FWSR

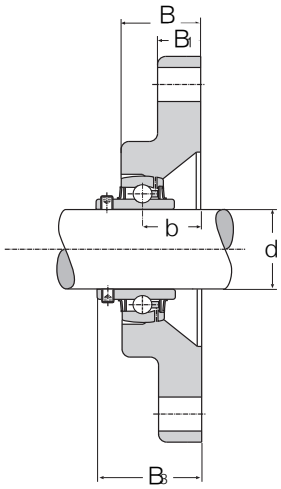

FWSRU

Shaft Diameter	Dimensions mm												
d	L	E	K	K_1	C	B	B_1	B_2	B_3	b	H_1	H	R
25	190	145	14	44	120	35	17	40,5	-	17	-	-	-
	190	145	14	44	120	35	17	-	36,8	17	-	-	-
35	190	145	14	44	120	35	17	46,4	-	17	-	-	-
	190	145	14	44	120	35	17	-	42,4	17	-	-	-
40	170	140	M 16	-	-	-	56	50,0	-	-	60	20	R 1/4"
45	190	145	14	44	120	35	17	49,7	-	17	-	-	-
	190	145	14	44	120	35	17	-	47,2	17	-	-	-
50	180	150	M 16	-	-	-	62	55,0	-	-	70	20	R 1/4"
60	230	190	M 20	-	-	-	77	67,0	-	-	90	25	R 1/4"
70	230	190	M 20	-	-	-	77	75,0	-	-	90	25	R 1/4"

Housed Bearing Units

Series PP
PPS

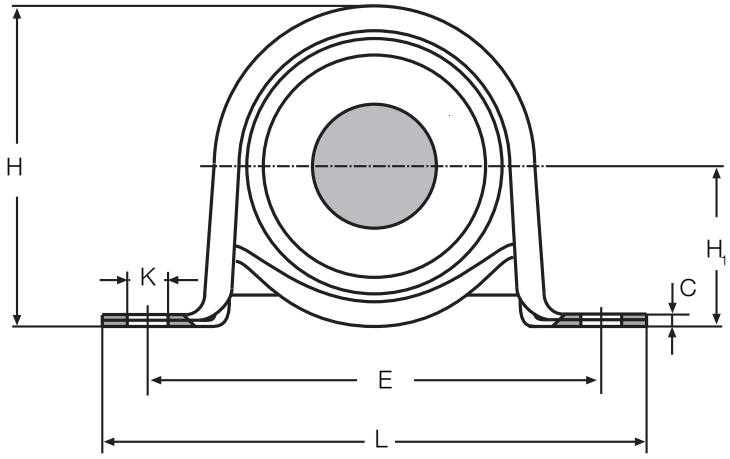

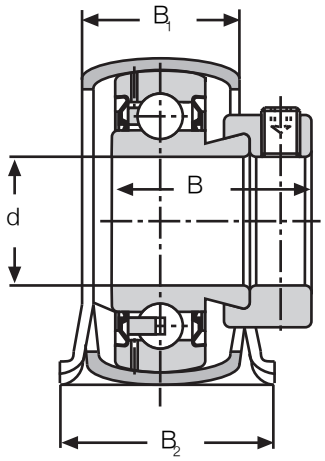

PP

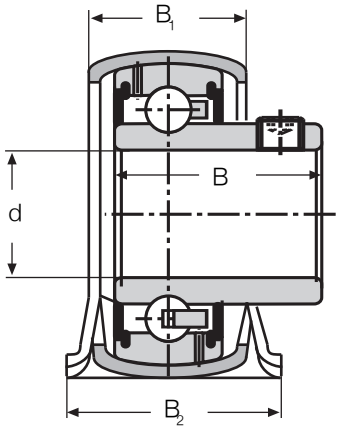

PPS

Unit Ref	Shaft Diameter d	Bearing Ref	Weight kg	Dimensions mm L	E	H_1	H	K	C	B	B_1	B_2	Load Rating Dynamic c kN	Static c_0 kN
PP 12	12	SA 201	0,17	85,7	68	22,2	43,2	9,5	2,6	28,6	18,4	25,4	9,55	4,75
PPS 12		SB 201	0,15	85,7	68	22,2	43,2	9,5	2,6	22,0	18,4	25,4	9,55	4,75
PP 15	15	SA 202	0,17	85,7	68	22,2	43,2	9,5	2,6	28,6	18,4	25,4	9,55	4,75
PPS 15		SB 202	0,15	85,7	68	22,2	43,2	9,5	2,6	22,0	18,4	25,4	9,55	4,75
PP 17	17	SA 203	0,17	85,7	68	22,2	43,2	9,5	2,6	28,6	18,4	25,4	9,55	4,75
PPS 17		SB 203	0,15	85,7	68	22,2	43,2	9,5	2,6	22,0	18,4	25,4	9,55	4,75
PP 20	20	SA 204	0,27	98,4	76	25,4	50,1	9,5	3,3	31,0	22,3	31,8	12,8	6,6
PPS 20		SB 204	0,22	98,4	76	25,4	50,1	9,5	3,3	25,0	22,3	31,8	12,8	6,6
PP 25	25	SA 205	0,30	108,0	86	28,6	56,5	11,5	4,0	31,0	23,5	31,8	14,0	7,8
PPS 25		SB 205	0,26	108,0	86	28,6	56,5	11,5	4,0	27,0	23,5	31,8	14,0	7,8
PP 30	30	SA 206	0,50	117,5	95	33,3	66,1	11,5	4,0	35,7	26,5	38,0	19,5	11,3
PPS 30		SB 206	0,40	117,5	95	33,3	66,1	11,5	4,0	30,0	26,5	38,0	19,5	11,3

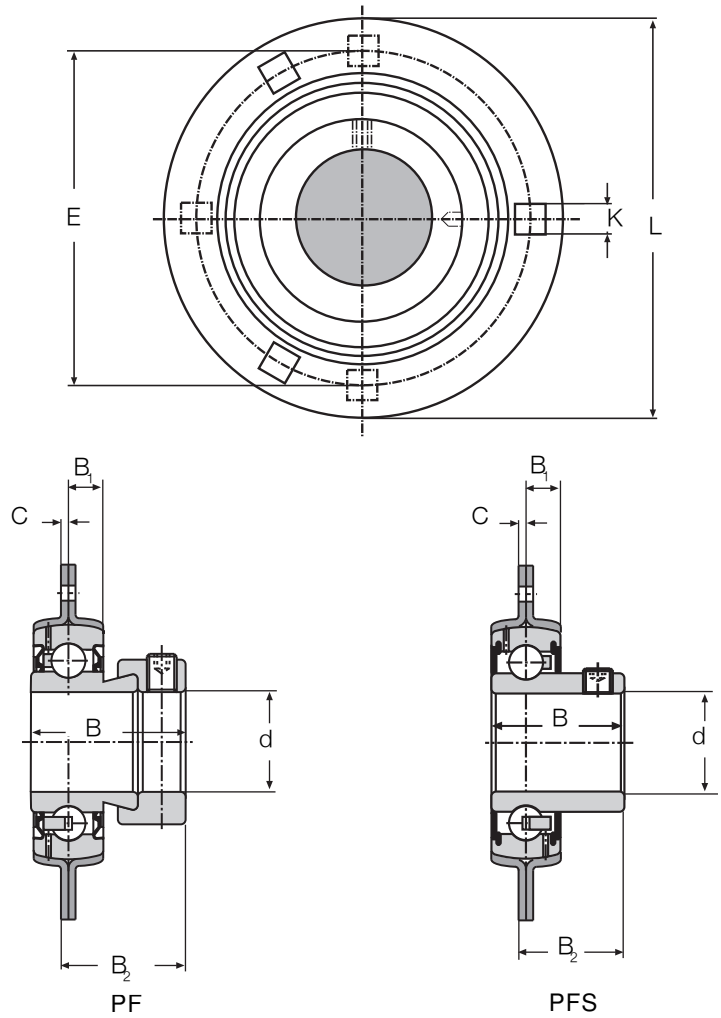

Unit Ref	Shaft Diameter d	Bearing Ref	Weight kg	Dimensions mm L	E	K	C	B	B_1	B_2	No of bolt holes	Load Rating Dynamic c kN	Static c_0 kN
PF 12	12	SA 201	0,24	81,0	63,5	7,1	2,0	28,6	7,0	24,0	3	9,6	4,75
PFS 12		SB 201	0,18	81,0	63,5	7,1	2,0	22,0	7,0	18,0	3	9,6	4,75
PF 15	15	SA 202	0,24	81,0	63,5	7,1	2,0	28,6	7,0	24,0	3	9,6	4,75
PFS 15		SB 202	0,18	81,0	63,5	7,1	2,0	22,0	7,0	18,0	3	9,6	4,75
PF 17	17	SA 203	0,24	81,0	63,5	7,1	2,0	28,6	7,0	24,0	3	9,6	4,75
PFS 17		SB 203	0,16	81,0	63,5	7,1	2,0	22,0	7,0	18,0	3	9,6	4,75
PF 20	20	SA 204	0,32	90,5	71,5	8,7	2,0	31,0	8,0	25,5	3	12,8	6,6
PFS 20		SB 204	0,30	90,5	71,5	8,7	2,0	25,0	8,0	20,0	3	12,8	6,6
PF 25	25	SA 205	0,38	95,0	76,0	8,7	2,0	31,0	8,7	25,5	3	14,0	7,8
PFS 25		SB 205	0,35	95,0	76,0	8,7	2,0	27,0	8,7	21,5	3	14,0	7,8
PF 30	30	SA 206	0,62	112,7	90,5	10,5	2,5	35,7	8,7	29,2	3	19,5	11,3
PFS 30		SB 206	0,45	112,7	90,5	10,5	2,5	30,0	8,7	23,5	3	19,5	11,3
PF 35	35	SA 207	0,80	122,0	100	10,5	2,5	38,9	9,5	31,9	3	25,5	15,3
PFS 35		SB 207	0,76	122,0	100	10,5	2,5	32,0	9,5	25,0	3	25,5	15,3
PF 40	40	SA 208	1,36	147,5	119	13,5	3,5	43,7	10,3	36,2	4	32,5	19,8
PFS 40		SB 208	1,32	147,5	119	13,5	3,5	34,0	10,3	26,5	4	32,5	19,8

Housed Bearing Units

Series PFL
PFLS

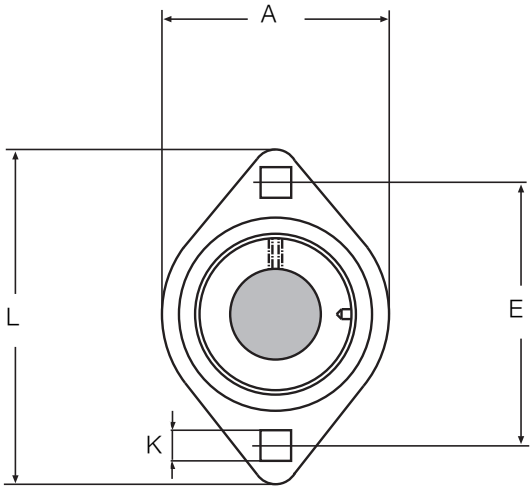

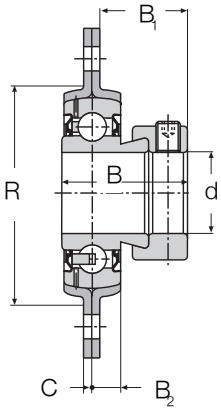

PFL

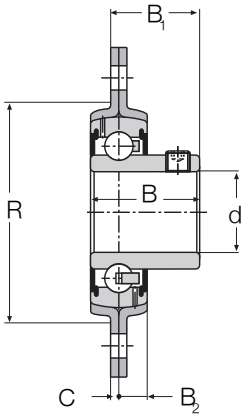

PFLS

Unit Ref	Shaft Diameter d	Bearing Ref	Bearing kg	Dimensions mm A	L	E	K	B	C	B_2	R	B_1	Load Rating Dynamic c kN	Static c_0 kN
PFL 12	12	SA 201	0,20	58,7	81,0	63,5	7,1	28,6	2,0	7,0	48	24,0	9,6	4,75
PFLS 12		SB 201	0,15	58,7	81,0	63,5	7,1	22,0	2,0	7,0	48	18,0	9,6	4,75
PFL 15	15	SA 202	0,20	58,7	81,0	63,5	7,1	28,6	2,0	7,0	48	24,0	9,6	4,75
PFLS 15		SB 202	0,14	58,7	81,0	63,5	7,1	22,0	2,0	7,0	48	18,0	9,6	4,75
PFL 17	17	SA 203	0,20	58,7	81,0	63,5	7,1	28,6	2,0	7,0	48	24,0	9,6	4,75
PFLS 17		SB 203	0,14	58,7	81,0	63,5	7,1	22,0	2,0	7,0	48	18,0	9,6	4,75
PFL 20	20	SA 204	0,26	66,0	90,5	71,5	8,7	31,0	2,0	8,0	55	25,5	12,8	6,6
PFLS 20		SB 204	0,22	66,0	90,5	71,5	8,7	25,0	2,0	8,0	55	20,0	12,8	6,6
PFL 25	25	SA 205	0,35	71,0	95,0	76,0	8,7	31,0	2,0	8,7	60	25,5	14,0	7,8
PFLS 25		SB 205	0,26	71,0	95,0	76,0	8,7	27,0	2,0	8,7	60	21,5	14,0	7,8
PFL 30	30	SA 206	0,50	84,0	112,7	90,5	10,5	35,7	2,5	8,7	71	29,2	19,5	11,3
PFLS 30		SB 206	0,42	84,0	112,7	90,5	10,5	30,0	2,5	8,7	71	23,5	19,5	11,3
PFL 35	35	SA 207	0,73	93,7	123,0	100,0	10,5	38,9	2,5	10,5	81	35,0	25,5	15,3
PFLS 35		SB 207	0,55	93,7	123,0	100,0	10,5	32,0	2,5	10,5	81	25,0	25,5	15,3
PFL 40	40	SA 208	0,95	100,0	148,0	119,0	13,5	43,7	3,5	11,5	90	36,2	32,5	19,8
PFLS 40		SB 208	0,82	100,0	148,0	119,0	13,5	34,0	3,5	11,5	90	31,7	32,5	19,8

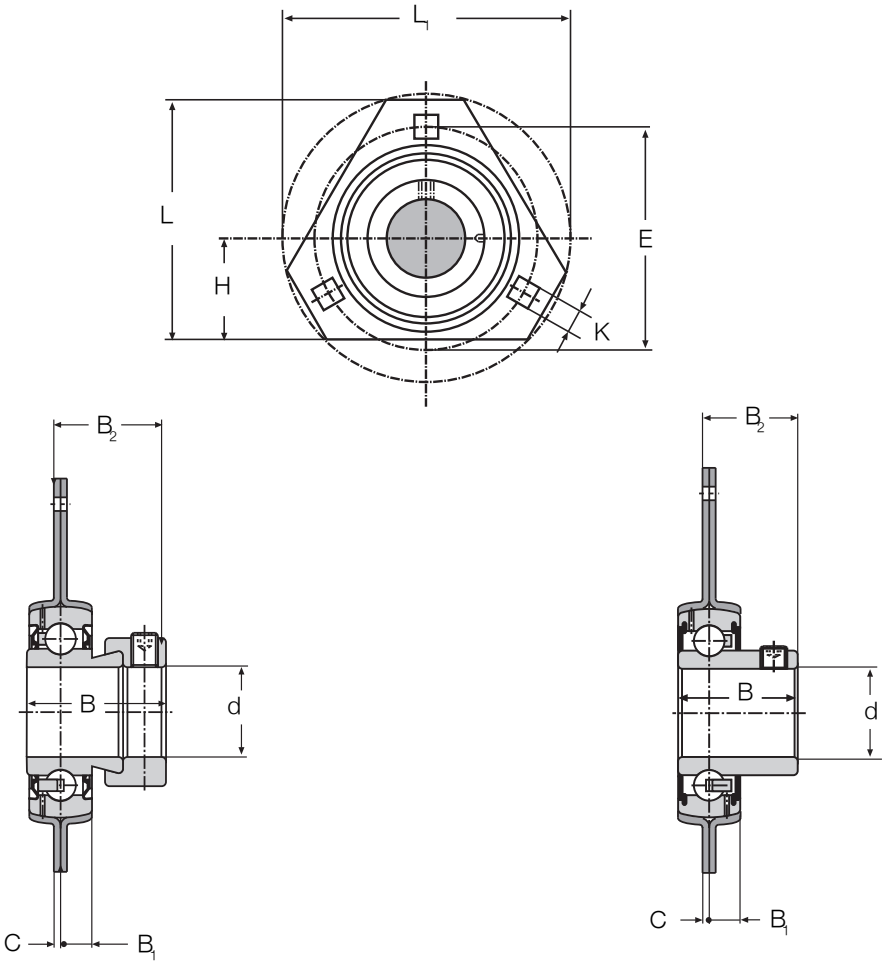

PFD PFDS

Unit Ref	Shaft Diameter d	Bearing Ref	Weight kg	Dimensions mm L	L1	E	H	K	C	B	B1	B2	Load Rating Dynamic c kN	Static c0 kN
PFD 20	20	SA 204	0,28	76,2	90,5	71,5	33,3	8,7	2,0	31,0	8,0	25,5	12,8	6,6
PFDS 20		SB 204	0,26	76,2	90,5	71,5	33,3	8,7	2,0	25,0	8,0	19,5	12,8	6,6
PFD 25	25	SA 205	0,32	80,5	95,3	76,0	34,9	8,7	2,0	31,0	8,7	25,5	14,0	7,8
PFDS 25		SB 205	0,30	80,5	95,3	76,0	34,9	8,7	2,0	27,0	8,7	21,5	14,0	7,8
PFD 30	30	SA 206	0,43	93,0	112,7	90,5	38,1	10,5	2,5	35,7	8,7	29,2	19,5	11,3
PFDS 30		SB 206	0,41	93,0	112,7	90,5	38,1	10,5	2,5	30,0	8,7	23,5	19,5	11,3
PFD 35	35	SA 207	0,56	105,6	127,0	100,0	44,5	10,5	2,5	38,9	9,5	31,9	25,5	15,3
PFDS 35		SB 207	0,48	105,6	127,0	100,0	44,5	10,5	2,5	32,0	9,5	25,0	25,5	15,3

Housed Bearing Unit with Protective Covers

Series CM - SIU
C - SIU

Arrangement C

Arrangement CM

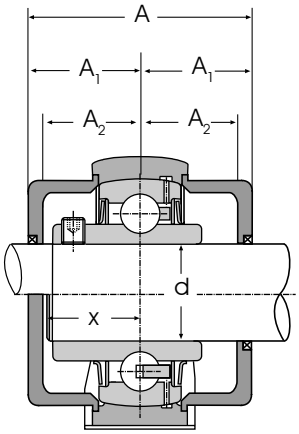

Unit Ref	Shaft Diameter d	Bearing Ref	Dimensions mm A	x	A_1	A_2
CM - SIU 30	30	UC 206	75	23	37,5	26
C - SIU 30		UC 206	75	-	37,5	26
CM - SIU 35	35	UC 207	81	28	40,5	30
C - SIU 35		UC 207	81	-	40,5	30
CM - SIU 40	40	UC 208	92	32	46,0	35
C - SIU 40		UC 208	92	-	46,0	35
CM - SIU 45	45	UC 209	95	32	47,5	36
C - SIU 45		UC 209	95	-	47,5	36
CM - SIU 50	50	UC 210	98	35	49,0	37
C - SIU 50		UC 210	98	-	49,0	37
CM - SIU 55	55	UC 211	100	37	50,0	38
C - SIU 55		UC 211	100	-	50,0	38
CM - SIU 60	60	UC 212	114	43	57,0	45
C - SIU 60		UC 212	114	-	57,0	45
CM - SIU 65	65	UC 213	114	43	57,0	45
C - SIU 65		UC 213	114	-	57,0	45
CM - SIU 70	70	UC 214	125	48	62,5	51
C - SIU 70		UC 214	125	-	62,5	51
CM - SIU 75	75	UC 215	125	48	62,5	51
C - SIU 75		UC 215	125	-	62,5	51
CM - SIU 80	80	UC 216	140	53	70,0	58
C - SIU 80		UC 216	140	-	70,0	58
CM - SIU 90	90	UC 218	155	60	77,5	65
C - SIU 90		UC 218	155	-	77,5	65

Housed Bearing Unit with Protective Covers

Series CM - UCP
C - UCP

Arrangement C

Arrangement CM

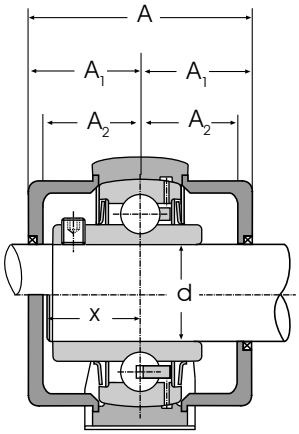

Unit Ref	Shaft Diameter d	Bearing Ref	Dimensions mm A	x	A_1	A_2
CM - UCP 206	30	UC 206	75	23	37,5	26
C - UCP 206		UC 206	75	-	37,5	26
CM - UCP 207	35	UC 207	81	28	40,5	30
C - UCP 207		UC 207	81	-	40,5	30
CM - UCP 208	40	UC 208	92	32	46,0	35
C - UCP 208		UC 208	92	-	46,0	35
CM - UCP 209	45	UC 209	95	32	47,5	36
C - UCP 209		UC 209	95	-	47,5	36
CM - UCP 210	50	UC 210	98	35	49,0	37
C - UCP 210		UC 210	98	-	49,0	37
CM - UCP 211	55	UC 211	100	37	50,0	38
C - UCP 211		UC 211	100	-	50,0	38
CM - UCP 212	60	UC 212	114	43	57,0	45
C - UCP 212		UC 212	114	-	57,0	45

Housed Bearing Unit with Protective Covers

Series CM - FUU
C - FUU

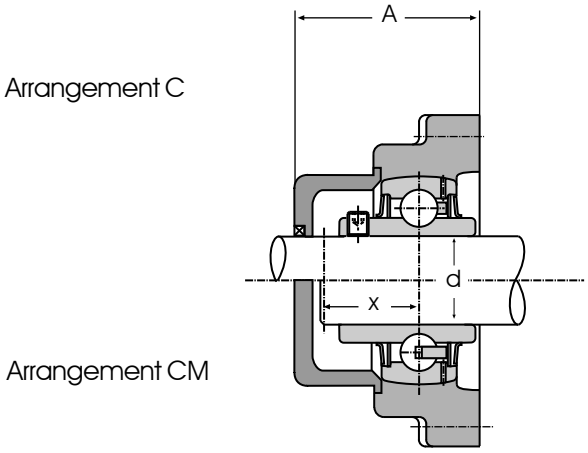

Unit Ref	Shaft Diameter d	Bearing Ref	Dimensions mm A	x
CM - FUU 30	30	UC 206	64	23
C - FUU 30		UC 206	64	-
CM - FUU 35	35	UC 207	66	28
C - FUU 35		UC 207	66	-
CM - FUU 40	40	UC 208	70	32
C - FUU 40		UC 208	70	-
CM - FUU 45	45	UC 209	75	32
C - FUU 45		UC 209	75	-
CM - FUU 50	50	UC 210	82	35
C - FUU 50		UC 210	82	-
CM - FUU 55	55	UC 211	87	37
C - FUU 55		UC 211	87	-
CM - FUU 60	60	UC 212	88	43
C - FUU 60		UC 212	88	-
CM - FUU 65	65	UC 213	88	43
C - FUU 65		UC 213	88	-
CM - FUU 70	70	UC 214	105	48
C - FUU 70		UC 214	105	-
CM - FUU 75	75	UC 215	99	48
C - FUU 75		UC 215	99	-
CM - FUU 80	80	UC 216	99	53
C - FUU 80		UC 216	99	-

Housed Bearing Unit with Protective Covers

Series CM - UCFC
C - UCFC

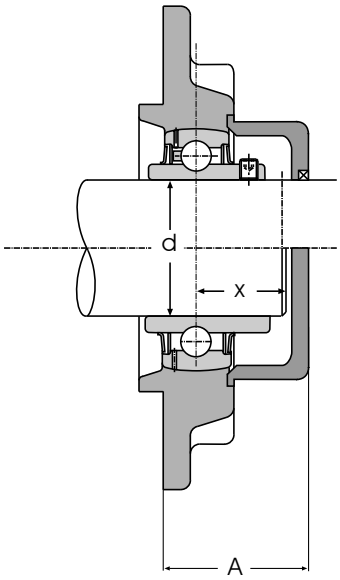

Unit Ref	Shaft Diameter d	Bearing Ref	Dimensions mm A	x
CM - UCFC 206	30	UC 206	55	23
C - UCFC 206		UC 206	55	-
CM - UCFC 207	35	UC 207	58	28
C - UCFC 207		UC 207	58	-
CM - UCFC 208	40	UC 208	59	32
C - UCFC 208		UC 208	59	-
CM - UCFC 209	45	UC 209	59	32
C - UCFC 209		UC 209	59	-
CM - UCFC 210	50	UC 210	62	35
C - UCFC 210		UC 210	62	-
CM - UCFC 211	55	UC 211	65	37
C - UCFC 211		UC 211	65	-
CM - UCFC 212	60	UC 212	77	43
C - UCFC 212		UC 212	77	-
CM - UCFC 213	65	UC 213	77	43
C - UCFC 213		UC 213	77	-
CM - UCFC 214	70	UC 214	90	48
C - UCFC 214		UC 214	90	-
CM - UCFC 215	75	UC 215	90	48
C - UCFC 215		UC 215	90	-
CM - UCFC 216	80	UC 216	92	53
C - UCFC 216		UC 216	92	-

Housed Bearing Unit with Protective Covers

Series CM - OIU
C - OIU

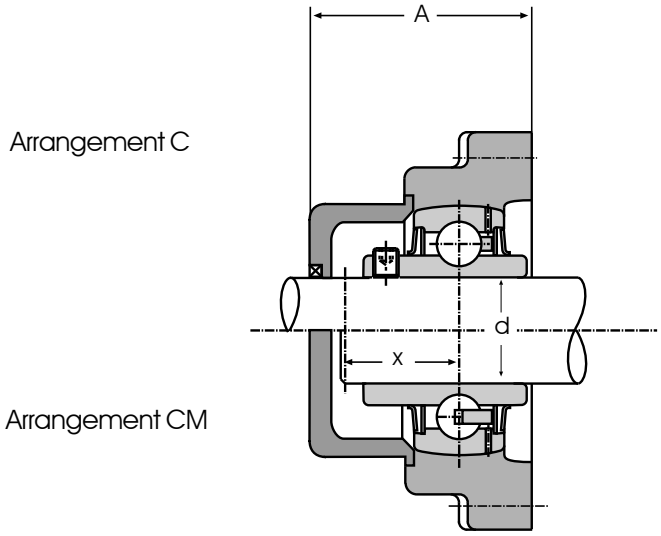

Unit Ref	Shaft Diameter d	Bearing Ref	Dimensions mm A	x
CM - OIU 30	30	UC 206	67	23
C - OIU 30		UC 206	67	-
CM - OIU 35	35	UC 207	70	28
C - OIU 30		UC 207	70	-
CM - OIU 40	40	UC 208	76	32
C - OIU 40		UC 208	76	-
CM - OIU 45	45	UC 209	76	35
C - OIU 45		UC 209	76	-
CM - OIU 50	50	UC 210	82	35
C - OIU 50		UC 210	82	-
CM - OIU 60	60	UC 212	95	43
C - OIU 60		UC 212	95	-

Housed Bearing Unit with Protective Covers

Series CM - TIU
C - TIU

Arrangement C

Arrangement CM

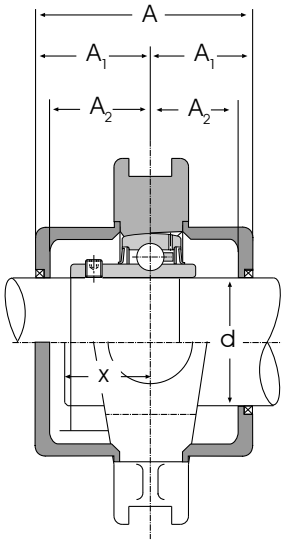

Unit Ref	Shaft Diameter d	Bearing Ref	Dimensions mm A	x	A_1	A_2
CM - TIU 30	30	UC 206	76	23	39	27,5
C - TIU 30		UC 206	76	-	39	27,5
CM - TIU 35	35	UC 207	83	28	42	31,5
C - TIU 35		UC 207	83	-	42	31,5
CM - TIU 40	40	UC 208	93	32	47	36,0
C - TIU 40		UC 208	93	-	47	36,0
CM - TIU 45	45	UC 209	93	32	47	36,0
C - TIU 45		UC 209	93	-	47	36,0
CM - TIU 50	50	UC 210	98	35	49	37,0
C - TIU 50		UC 210	98	-	49	37,0
CM - TIU 60	60	UC 212	112	43	56	44,0
C - TIU 60		UC 212	112	-	56	44,0
CM - TIU 65	65	UC 213	112	43	56	44,0
C - TIU 65		UC 213	112	-	56	44,0
CM - TIU 70	70	UC 214	122	48	62	50,5
C - TIU 70		UC 214	122	-	62	50,5

Housed Bearing Unit with Protective Covers

End Cover SM-DK

HFB series SM-DK Plastic End Covers are used to protect shaft ends.
When ordering housing units with end covers this should be mentioned in the order.
The housed bearing unit will then be delivered with a correspondingly machined groove on the side of the ball bearing fixing.
The end cover will be delivered loosely and after the assembly it can be pushed into the machined groove using a light pressure. For dimensions please refer to the following table.

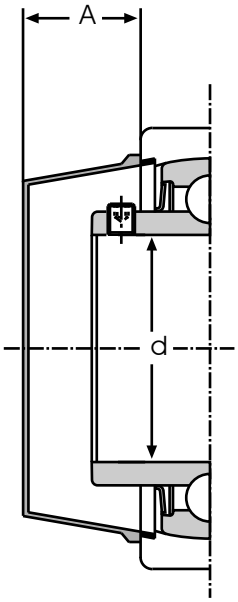

End Cover Ref	Shaft Diameter mm	Extension A
SM - DK 204	20	21
SM - DK 205	25	21
SM - DK 206	30	23
SM - DK 207	35	25
SM - DK 208	40	26
SM - DK 209	45	27
SM - DK 210	50	34
SM - DK 212	60	40

HFB Anti-Rust Protection
For Housings, Bearings and Housed Bearing units.

A) Zinc Plating

In many applications a special surface treatment is necessary to provide an anti-corrosion protection. In these instances, HFB offers zinc plated bearing inserts and cast housings.

These versions guarantee long-term anti-corrosion protection under the most arduous conditions.

As a general rule, bearing series, SA and UC in the size range 204 - 214 are available in zinc plated versions.

B) Stanless Steel Protection (SSP) - Polyurethane

As a further development to the zinc coating and similar surface coating HFB offers a process called SSP-technology (Stainless Steel Protected). This is a coat with very tiny particles of INOX-Steel 316 L, which guarantees a highly efficient surface protection against influence of weather, abrasion and corrosion.

The SSP-coating has a short lead time since available housings can also be treated subsequently. Please, don´t hesitate to contact us for a gratis sample. We would be pleased to supply you with sample housings for your approval!

Amongst others SSP offers protection against:

- Corrosion by dampness / humidity (also at high pressure washing)
- Cutting and hydraulic oil, mineral oil derivative
- Industrial emissions
- Food acids and syrup
- Fermentation and distillation products
- Mild acids and alkalis (< 2 %)
- Mechanical stress like abrasion and thrust (shocks)

Our SSP-products stand the test every day in the most important industries. These components resist the most frequent mechanical and chemical strains which industrial machines and equipments are exposed to (such as liquids originated from production of paper).

The product has been tested and qpproved by the USDA for the use in food industry machines where incidental food contact may occur.

Ball Bearing

Series UC...SS
Stainless Steel version

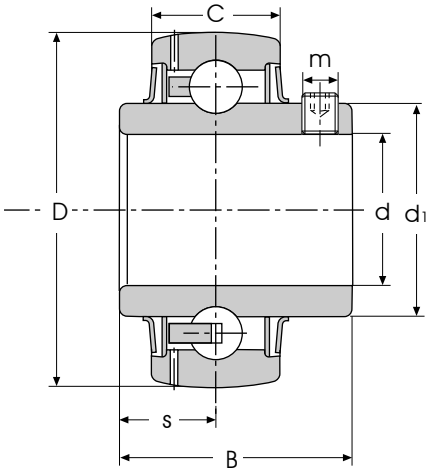

Ref	Dimensions mm d	D	B	C	d_1	s	m	Load Rating Dynamic c kN	Static c_0 kN	Weight kg
UC 204 SS	20	47	31,0	17	29,6	12,7	M5 x 0,8	9,9	6,6	0,18
UC 205 SS	25	52	34,1	17	33,9	14,3	M5 x 0,8	10,8	7,8	0,20
UC 206 SS	30	62	38,1	19	40,8	15,9	M6 x 0,75	15,0	11,3	0,32
UC 207 SS	35	72	42,9	20	46,8	17,5	M6 x 0,75	19,7	15,3	0,48
UC 208 SS	40	80	49,2	21	53,0	19,0	M8 x 1,00	22,4	17,8	0,64
UC 209 SS	45	85	49,2	22	57,5	19,0	M8 x 1,00	25,2	20,4	0,68
UC 210 SS	50	90	51,6	24	62,4	19,0	M8 x 1,00	27,0	23,2	0,80
UC 212 SS	60	110	65,1	27	77,0	25,4	M10 x 1,25	48,0	36,0	1,50

Wälzlager-Gehäusetechnik GmbH

Siemensstrasse 33
74722 Buchen
Pho. ++49 (6281) 52 66 - 0
Fax ++49 (6281) 52 66 - 33

www.hfb-waelzlager.de
info@hfb-waelzlager.de