IBC

Hochpräzisions-Wälzlager

High Precision Bearings

Hochpräzisions-Wälzlager High Precision Bearings

IBC WÄLZLAGER GMBH

INDUSTRIAL BEARINGS AND COMPONENTS

POSTFACH 1825 · 35528 WETZLAR (GERMANY)

Tel: +49/64 41/95 53-02
Fax: +49/64 41/5 30 15

Industriegebiet Oberbiel
D-35606 Solms-Oberbiel

e-mail: ibc@ibc-waelzlager.com

http://www.ibc-waelzlager.com

IBC INDUSTRIAL BEARINGS

AND COMPONENTS AG

Tel: +41/32/6 52 83 53
Fax: +41/32/6 52 83 58

Kapellstrasse 26
CH-2540 Grenchen

e-mail: ibc@ibcag.ch

http://www.ibc-waelzlager.com

High Precision Bearings

TI-I-5050.0 / E

Date of this version: September 2010

Reproducing this catalogue (including reproduction in extracts) is only permitted with our consent. The information contained in this publication has been compiled with the greatest care. We cannot assume liability with regard to possible mistakes or missing information, however; we also cannot assume liability for damage that may occur directly or indirectly due to the use of the information contained herein. We reserve the right to implement changes that are conducive to progress (further development).

© Copyright 2010 IBC

Table of contents

1. Introduction 4

2. IBC High Precision Angular Contact Ball Bearings 7

2.1 Designation system IBC High precision angular contact ball bearings 12

2.2 Manufacturing overview IBC High precision angular contact ball bearings 14

2.3 IBC High precision angular contact ball bearings 16

2.4 Preload and stiffness 70

2.5 Differential measurements for preloads 98

2.6 IBC High precision universal angular contact ball bearings 106

2.7 IBC High precision angular contact ball bearing sets 108

2.8 IBC High precision locknuts 112

3. IBC High Precision Cylindrical Roller Bearings 115

3.1 Designation system IBC High precision cylindrical roller bearings 120

3.2 Manufacturing overview IBC High precision cylindrical roller bearings 121

3.3 IBC High precision cylindrical roller bearings 122

4. Tolerances 137

4.1 Dimensions and measuring principles IBC High precision rolling bearings 139

4.2 Dimensional and running tolerances IBC High precision angular contact ball bearings 140

4.3 Sorting and chamfer dimensions IBC High precision rolling bearings 141

4.4 Dimensional and running tolerances IBC High precision cylindrical roller bearings 142

4.5 Radial clearance IBC High precision cylindrical roller bearings 143

4.6 Tolerances of adjacent parts 144

4.7 Fits for IBC High precision angular contact ball bearings and adjacent parts 145

5. Life Time Calculation 147

5.1 Detailed calculation of bearing forces 152

5.2 Expanded modified life time calculation 155

5.3 IBC-specific factors 159

6. Speed Coefficients 161

7. Lubrication 165

8. Mounting of High Precision Rolling Bearings 175

9. Materials 185

10. IBC High Precision Rolling Bearings with ATCoat Coating 191

11. Vibration Analysis 195

1. Introduction

Ever higher demands are being made on bearing systems, and a variety of techniques and new materials have been developed that are designed to meet the needs of today's demanding and extremely varied technical and commercial applications.
IBC Wälzlager GmbH, Industrial Bearings and Components, rises to the challenge by constantly enhancing its performance, continuously optimising its products and processes and by expanding its product range.

Together with our customers, we define objectives and consistently pursue our common objectives. And by keeping our communication channels with the customer open at all times, even very specific customer requirements are swiftly and purposefully converted into commercial solutions.

We have also been traditionally involved in academic work: We are in close working partnerships with colleges and universities, both in the field of research and development and as our point of reference for vocational training.

Our capability to innovate can be seen in our intense research and development efforts. Basic research, material engineering, tribology and bearing design, and the improvement of manufacturing processes make up our main areas of research and development. The use of different types of materials for bearing components, for instance, is one of the decisive factors in increasing the performance of the products.

Apart from its use in research and development, our modern equipment also forms the foundation which enables us, together with our skilled staff, to produce rolling bearings to the highest quality specifications. It also ensures our quality in the long term. And because we use such sophisticated machinery, we pay special attention to the people who are part of the process.

Although ceramic rolling elements were initially used only in specialised applications, they are now part of the standard programme of high precision bearings. They are used in the machine tool manufacturing sector or in electric motor engineering, for instance. Enhanced cage materials like PEEK are used for fast-running high precision bearings or in a high temperature environment.

High precision bearings that are grease-lubricated in our factory and additionally sealed are maintenance-free, meaning that "for life lubrication" becomes a reality. This fact contributes both to simpler, customer-friendly designs and to simpler assembly.

IBC Wälzlager's product range is further expanded by ATCoat thin dense chromium coated bearings that are designed for specialised applications. The advantages of high precision bearings coated with ATCoat include service-life boosting characteristics as well as outstanding wear and corrosion protection properties.

In this publication you will find a whole variety of products, as well as variations in each product. The products showcased here include high precision angular contact ball bearings and high precision cylindrical roller bearings for machine tool manufacturers, the printing-press and textiles machinery industries and for all applications where extremely high requirements exist with regard to running accuracy, reliability, high rotational speeds, low-friction and quiet running, stiffness, load, heat generation and the given installation conditions, either as single requirement or as combination of above.

The overview of IBC's range of high precision bearings is further supplemented by criteria for choosing a suitable bearing and its appropriate dimensioning; also included are criteria that will help you to design your bearing application and to mount the rolling bearings.

IBC high precision angular contact ball bearings can be supplied with a variety of contact angles, various rolling element diameters and rolling elements made of steel or ceramics and either sealed or open. The bearing you choose will depend on the intended application. You may also choose a variant that offers direct lubrication via the outer ring. This range of options will

help you select the right bearing for a specific application, depending on the requirements you have for speed, load rating, stiffness, feasibility of lubrication and other ambient parameters. The product portfolio of IBC Wälzlager GmbH contains diverse and innovative solutions that ensure that both locating and floating bearings function in a secure way. We offer both high precision angular contact ball bearings with a structural locating bearing function and high precision cylindrical roller bearings with a floating bearing function. As an alternative, you may choose bearing rings coated with ATCoat that prevent fretting corrosion and ensure sliding fit.

Other components of bearing systems, like locknuts or labyrinth seals, have been a fixture of IBC Wälzlager's product range for many years now. They are used for the bearings of ball screws, for example. The many different variations that exist for a certain product help the user to optimise his economic efficiency.

Continuous quality control, which is built into our manufacturing process, and our commitment to, and responsibility towards, compliance with safety and environmental aspects guarantee the consistently high quality of our products. Our efficient quality management system has been implemented and certified pursuant to DIN EN ISO 9001 for the engineering, design, development, manufacture and sale of rolling bearings and linear guides.

In-depth information on the various rolling bearing designs, and on choosing the right bearing and securely integrating it into the individual design, is to be found in our separate product catalogues that each focus on a specific design.

Our comprehensive product range and the ability to support our customers on-site all over the world via our service and technical departments enable us, to develop specific and efficient bearing solutions for our customers, and together with our customers.

2. IBC High Precision Angular Contact Ball Bearings

2. IBC High precision angular contact ball bearings

IBC high precision angular contact ball bearings have been designed for all rolling bearing applications that make great demands on reliability, stiffness, speed capability and running accuracy; either as a single requirement or as a combination of the above. The many different types available allow spindle manufacturers across different sectors of industry as well as special-purpose mechanical engineering firms to optimise their spindles by focusing on the aspects that are most important to them. Technology and economic efficiency thus meet to form a winning combination.

In order to achieve both improved performance and reduced costs for rolling bearings, the many application-specific requirements for running accuracy, load carrying capacity, rotational capacity, stiffness, vibration characteristics and installation space call for a whole variety of bearing series, each providing different solutions and dimensions that have different design characteristics.

Dimensional series

The IBC product range contains many different variations of single-row high precision angular contact ball bearings.

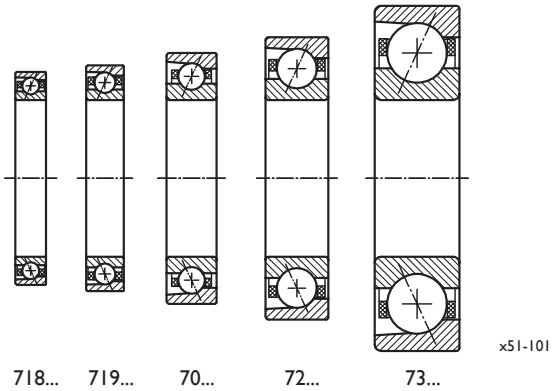

Fig. 2.1: Dimensional series for IBC high precision angular contact ball bearings

According to the German standard DIN 616 each type is assigned a dimensional series that consists of a diameter series and a width series. The dimensional series defines the outside diameter D, the bearing width B and the corner radii ‘r’. The identification number for the dimensional series is prefixed by the code “7”, which stands for “angular contact ball bearing”.

Each dimensional series has special characteristics that make it suited to certain types of rolling bearings.

Dimensional series 18 is the series with the smallest cross-section for high precision angular contact ball bearings; this series is designed for the highest speeds with simultaneously low requirements for load carrying capacity. There is an increase in overall width and outside diameter with dimensional series 19, 10 and so on.

Dimensional series 19 and 10 are used for higher speeds or small radial cross-sections, whereas dimensional series 02 and 03 are used for high loads with relatively low speeds. If great demands are made on the stiffness of rolling bearings, it is usually best to choose high precision angular contact ball bearings from dimensional series 19, as these have the greatest possible number of rolling elements and allow for large shaft diameters with a given outside diameter.

Contact angle

The contact angle is defined as the angle between an imaginary straight line joining the points of contact of the rolling elements with the raceways and a line perpendicular to the rotational axis.

IBC has tailored the internal design of its high precision angular contact ball bearings to the diverse requirements of the machine tool building industry. IBC therefore offers as standard high precision angular contact ball bearings with three different contact angles. Each dimensional series is designed with a contact angle of 15°, 25° or 30°. The high-speed angular contact ball bearings (H and CBH design) have a contact angle of 18°.

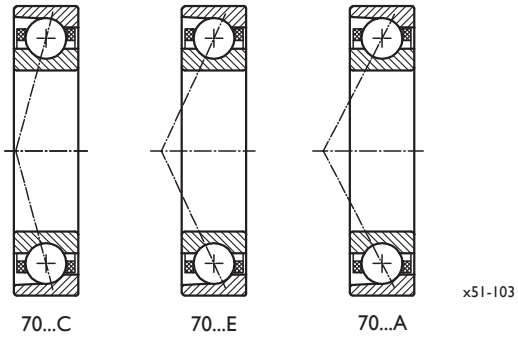

Fig. 2.2: Contact angles for IBC high precision angular contact ball bearings

The different contact angles meet individual requirements for combined loads with regard to stiffness and rotational speed characteristics. IBC also manufactures precision angular contact ball bearings with contact angles of 35°, 40° and 60°. You will find information on these bearings in the publications **Angular Contact Ball Bearings 40° TI-I-4044** and **Ball Screw Support Bearings TI-I-5010.**

Designs

As variants to the standard design, angular contact ball bearings can be supplied with smaller or ceramic rolling elements in order to achieve higher speeds.

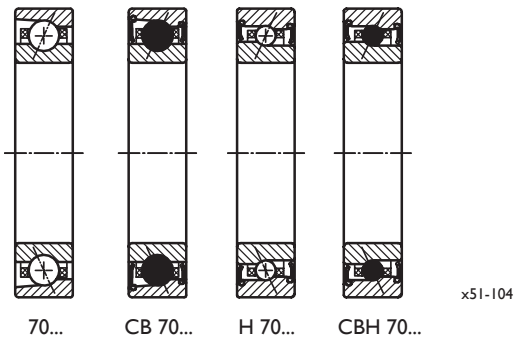

Fig. 2.3: The standard, CB, H and CBH design from the same dimensional series

So-called hybrid bearings retain the original bearing geometry but are equipped with ceramic rolling elements. The high-speed H design utilises smaller rolling elements within an unchanged outer geometry; the CBH design combines both smaller **and** ceramic rolling elements. The CBH design is suitable for the highest speeds, but does not have such a high load carrying capacity.

Hybrid bearings equipped with ceramic rolling elements and rings made of bearing steel are used not only in high-speed applications; their many advantages also include their reliability and their extended grease service life. The combination of harder and lighter ceramic rolling elements reduces the rolling bearing's heat output and the wear of the lubricant. They also improve rolling conditions in an unfavourable lubrication environment and provide insulation to prevent electrical current flowing through the bearing. This leads to greatly reduced system costs.

IBC Wälzlager GmbH has also made wide-ranging additions to dimensional series 19 and 10 supplementing them with an optimised generation of rolling bearings with the suffix X (CX and EX). As can be seen, this variation is identified as an extension to the contact angle designation. The purpose of this design is to close the gap between the standard and high speed series, by providing bearings that are closely matched and controlled. This new design is characterised by low frictional torque, leading to significantly reduced heat emission, as a result of design techniques applied to the inner bearing geometry.

Sealed IBC high precision angular contact ball bearings

As a result of the increasing demand for grease-lubricated high precision angular contact ball bearings, IBC have extended their range of sealed high precision angular contact ball bearings that are greased ready for use. The standard lubrication fill, implemented during the manufacturing process, ensures the optimal grease type and quantity are applied, which has a positive effect on bearing life and machine performance. IBC high precision angular contact ball bearings are filled with suitable high-performance grease as standard that covers a wide range of operating temperatures. The bearings are ready for immediate installation and operation, subject to normal grease running-in procedure. Further information on this topic can be found in Chapter 7 (Lubrication).

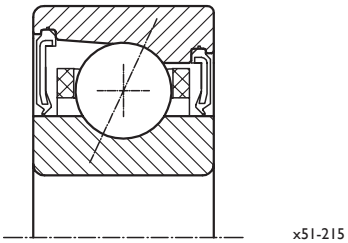

Fig. 2.4: Sealed on both sides with non-contact seals

The high precision angular contact ball bearings are ideally protected against contamination and air currents due to being sealed with non-contact seals (2RSZ) on both sides. These seals do not limit the suitability of the bearings for high rotational speeds, and in the case of vertical or pivoting spindles the seals additionally act as grease retention washers. The rolling bearings from dimensional series 18 and 19 as well as H execution bearings come with a standard lubrication fill of GS36 grease; all other bearings come with a standard lubrication fill of GS75 lubricant. There is no special marking for the standard lubrication.

The permitted operating temperature of these seals, which are made of oil-resistant and wear-resistant acrylonitrile butadiene caoutchouc (NBR) and are supported by a reinforced steel plate to provide rigidity, lies between -40° and 120°C.

Oil/air lubrication

Oil/air-lubricated high precision angular contact ball bearings are axially supplied with an oil/air-mixture via intermediate rings. The reference circle for the required lubrication input is detailed in the dimension tables. No changes need to be made to the design of the rolling bearings themselves.

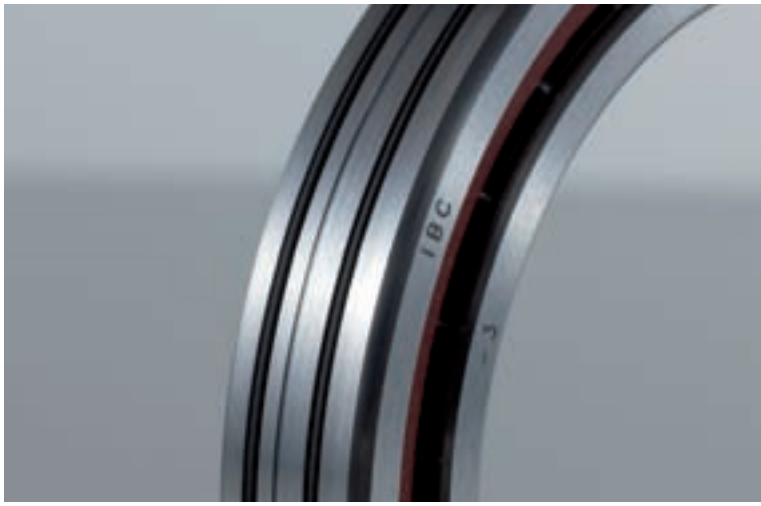

Special designs

Should grease-lubricated high precision angular contact ball bearings be required to run at or above their limits, IBC high precision angular contact ball bearings with outer ring lubrication are an ideal option.

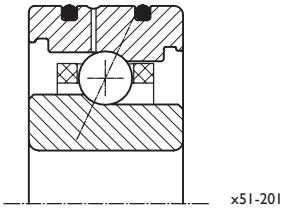

Fig. 2.5: IBC high precision angular contact ball bearing lubricated via the outer ring

A circular groove and a radial supply hole permit direct lubrication. O-rings integrated into the outer ring act as a seal for the housing. The dimensions of the grooves and recesses are contained in Chapter 7 (Lubrication).

High precision angular contact ball bearings with outer-ring lubrication reduce the number of elements that are part of structure around the bearing, leading to savings in installation space and cost reduction.

Apart from the designs mentioned, IBC also produces a number of specially designed high precision rolling bearing variations. Should you be interested in such a design, please contact our technical customer support teams. We will be glad to help you find a solution to meet your specific bearing requirements.

Bearing materials

Rolling bearing rings and rolling elements are generally manufactured from vacuum degassed bearing steel 100Cr6 (1.3505). Ceramic rolling elements are also available in the ceramic material silicon nitride Si_3N_4. A detailed description of materials can be found in Chapter 9 (Materials).

Heat treatment

The bearing rings are, as standard, stabilised up to a service temperature of 150 °C. Higher-quality heat treatment is available upon request for higher temperatures. More detailed explanations on this, e.g. types of treatment, restrictions and suitability, are contained in Chapter 9 (Materials).

Cages

As standard, IBC high precision angular contact ball bearings are equipped with a fabric reinforced phenolic resin cage that already meets the requirements of many types of application.

If the high precision angular contact ball bearing is subject to special operating conditions, like high temperatures or extreme accelerations, we provide suitable cages made of alternative materials. Please contact us if your application needs a special type of cage.

A detailed description of the individual cage materials is included in Chapter 9 (Materials).

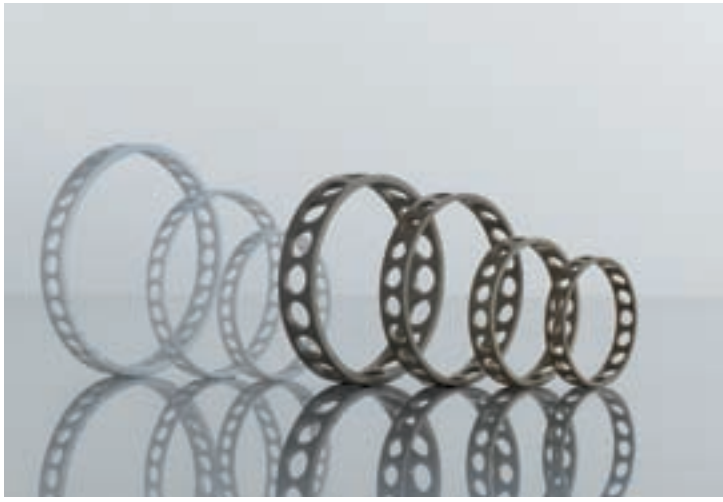

Bearings with ATCoat coating

In addition to the executions already mentioned, IBC also manufactures high precision bearings with an ATCoat thin dense chromium coating.

You will find a more detailed description of the ATCoat coating in Chapter 10 (IBC High precision rolling bearings with ATCoat coating) and particularly in the publication **ATC Technology Coatings.**

Special mention should be made of the ATCoat thin dense chromium coating of the outer ring in the case of a high precision angular contact ball bearing that is used as a floating bearing. In this case the coating prevents fretting corrosion if the outer ring of the high precision bearing requires a fit that is not too tight, to allow for axial displacement.

2.1 Designation system
IBC High precision angular contact ball bearings

Examples:

CB	H	719	14	.E		.T	.2RSZ	.P4A.	X2.	UL		
X-		70	00	.E		.T		.P4A.	X5.	UL		
		70	14	.C	S	.T		.P2A	.	UL		
		70	16	.E		.T		.P4A.	X5.	QBTM		.GS32
CB	H	70	12	.C		.T	.2RSZ	.P2H.	X6.	UL		
AC-		72	13	.E		.M		.P4A.	X2.	U40.	A11	

Material

-	100Cr6 rolling elements and rings
CB	Si_3N_4 rolling elements
AC-	ATCoat rings
ACC-	ATCoat rings + Si_3N_4 rolling elements
X-	ChromoTec rings

Design

-	normal design
H	high-speed design

Dimensional series

718... 719...
70... 72... 73...

Bore code

00	10 mm	02	15 mm
01	12 mm	03	17 mm

from bore code 04: 4 x 5 = 20 mm

Contact angle

C	15° contact angle
E	25° contact angle
A	30° contact angle

Lubrication groove and bore

-	standard lubrication facility
S	re-lubrication facility via outer ring

Cage

pocket cages, guided on outer ring

T	fabric reinforced phenolic resin
M	brass
K	PEEK
S	high-grade steel
PX	polyamide fibre-glass reinforced
G	PTFE

Seal

-	open bearing
2RSZ	non-contact seals on both sides

Lubrication

-	only corrosion protected or, for sealed bearings, standard GS36 or GS75 grease
G...	specified grease

ATCoat coating

-	no coating
A11	coated inner and outer ring
A15	coated inner and outer ring, corrosion resistant rolling elements and cage
A21	coated inner ring
A31	coated outer ring

Preload universally faced bearings

UX	extra light
UL	light
UM	medium
UH	high
U...	special preload in daN
A...	axial clearance actual value specified in µm

Angular contact ball bearing sets

-	single bearing
D...	duplex set
T...	triplex set
Q...	quadruplex set
P...	pentaplex set see Chapter 2.7 (Angular contact ball bearing sets)

Sorting, restricted tolerances

-	no sorting
X1, X3 X5, X6, X8	sorting of restricted tolerances for tolerance zone ≤ 5 µm
X1 to X9	sorting of restricted tolerances for tolerance zone > 5 µm see Chapter 4 (Tolerances)

Accuracy

P4	high accuracy
P4A	higher accuracy
P2H	higher accuracy
P2A	highest accuracy

2.2 Manufacturing overview
IBC High precision angular contact ball bearings

718...
CB 718...
719...
CB 719...
H 719...
CBH 719...
70...
CB 70...
H 70...
CBH 70...
72...
73...

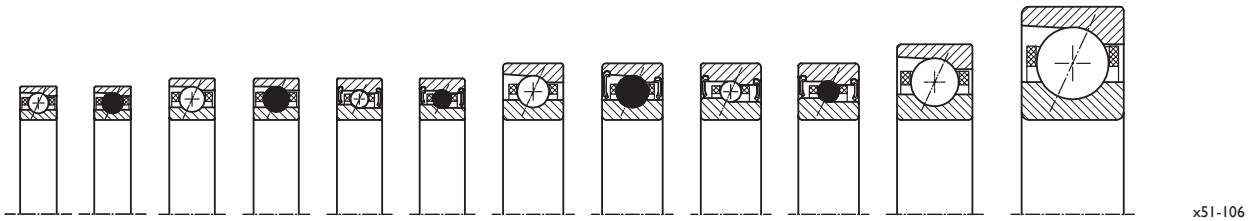

	Production series															
	718...				719...				719...X				H 719...			
d		D	B			D	B			D	B			D	B	
mm		mm		Di*		mm		Di*		mm		Di*		mm		Di*
6					X-719/6	15	5									
7					X-719/7	17	5									
8					X-719/8	19	6									
9					X-719/9	20	6									
10					X-71900	22	6									
12					X-71901	24	6									
15					X-71902	28	7									
17					71903	30	7									
20					71904	37	9									
25					71905	42	9	o								
30					71906	47	9	o	71906.X	47	9	o				
35					71907	55	10	o	71907.X	55	10	o				
40					71908	62	12	o	71908.X	62	12	o	H 71908	62	12	o
45					71909	68	12	o	71909.X	68	12	o	H 71909	68	12	o
50	71810	65	7		71910	72	12	o	71910.X	72	12	o	H 71910	72	12	o
55	71811	72	9		71911	80	13	o	71911.X	80	13	o	H 71911	80	13	o
60	71812	78	10		71912	85	13	o	71912.X	85	13	o	H 71912	85	13	o
65	71813	85	10		71913	90	13	o	71913.X	90	13	o	H 71913	90	13	o
70	71814	90	10		71914	100	16	o	71914.X	100	16	o	H 71914	100	16	o
75	71815	95	10		71915	105	16	o	71915.X	105	16	o				
80	71816	100	10		71916	110	16	o	71916.X	110	16	o				
85	71817	110	13		71917	120	18	o	71917.X	120	18	o				
90	71818	115	13		71918	125	18	o	71918.X	125	18	o				
95	71819	120	13		71919	130	18	o	71919.X	130	18	o				
100	71820	125	13		71920	140	20	o	71920.X	140	20	o				
105	71821	130	13		71921	145	20	o	71921.X	145	20	o				
110	71822	140	16		71922	150	20	o	71922.X	150	20	o				
120	71824	150	16		71924	165	22	o	71924.X	165	22	o				
130	71826	165	18		71926	180	24	o								
140	71828	175	18		71928	190	24	o								
150	71830	190	20		71930	210	28	o								
160	71832	200	20		71932	220	28	o								
170	71834	215	22		71934	230	28	o								
180	71836	225	22		71936	250	33	o								
190	71838	240	24		71938	260	33	o								
200	71840	250	24		71940	280	38									
220	71844	270	24		71944	300	38									
240	71848	300	28		71948	320	38									
260	71852	320	28		71952	360	46									
280	71856	350	33		71956	380	46									
300	71860	380	38		71960	420	56									
320	71864	400	38		71964	440	56									
340					71968	460	56									
360					71972	480	56									

*Di: sealed version

718...
CB 718...
719...
CB 719...
H 719...
CBH 719...
70...
CB 70...
H 70...
CBH 70...
72...
73...

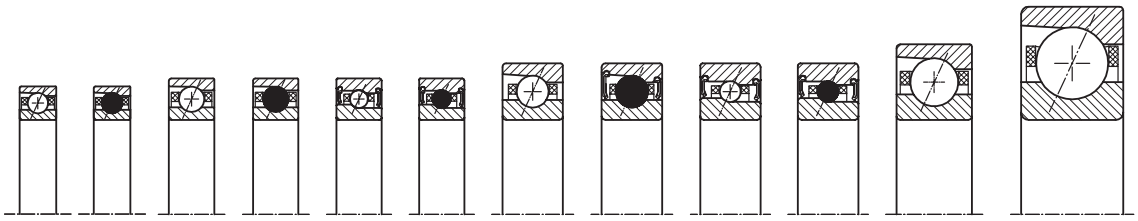

Production series

	70...			70...X				H 70...				72...				73...		
	D	B	Di*		D	B	Di*		D	B	Di*		D	B	Di*		D	B
	mm				mm				mm				mm				mm	
X-706	17	6																
X-707	19	6																
X-708	22	7																
X-709	24	7																
X-7000	26	8										7200	30	9	o			
X-7001	28	8										7201	32	10	o			
7002	32	9		7002.X	32	9						7202	35	11	o			
7003	35	10		7003.X	35	10						7203	40	12	o			
7004	42	12		7004.X	42	12						7204	47	14	o	7304	52	15
7005	47	12	o	7005.X	47	12	o					7205	52	15	o	7305	62	17
7006	55	13	o	7006.X	55	13	o					7206	62	16	o	7306	72	19
7007	62	14	o	7007.X	62	14	o					7207	72	17	o	7307	80	21
7008	68	15	o	7008.X	68	15	o	H 7008	68	15	o	7208	80	18	o			
7009	75	16	o	7009.X	75	16	o	H 7009	75	16	o	7209	85	19	o			
7010	80	16	o	7010.X	80	16	o	H 7010	80	16	o	7210	90	20	o			
7011	90	18	o	7011.X	90	18	o	H 7011	90	18	o	7211	100	21	o			
7012	95	18	o	7012.X	95	18	o	H 7012	95	18	o	7212	110	22	o			
7013	100	18	o	7013.X	100	18	o	H 7013	100	18	o	7213	120	23	o			
7014	110	20	o	7014.X	110	20	o	H 7014	110	20	o	7214	125	24	o			
7015	115	20	o	7015.X	115	20	o	H 7015	115	20	o	7215	130	25	o			
7016	125	22	o	7016.X	125	22	o	H 7016	125	22	o	7216	140	26				
7017	130	22	o	7017.X	130	22	o	H 7017	130	22	o	7217	150	28				
7018	140	24	o	7018.X	140	24	o	H 7018	140	24	o	7218	160	30				
7019	145	24	o	7019.X	145	24	o					7219	170	32				
7020	150	24	o	7020.X	150	24	o	H 7020	150	24	o	7220	180	34				
7021	160	26	o	7021.X	160	26	o					7221	190	36				
7022	170	28	o					H 7022	170	28	o	7222	200	38				
7024	180	28	o					H 7024	180	28	o	7224	215	40				
7026	200	33	o									7226	230	40				
7028	210	33	o									7228	250	42				
7030	225	35	o															
7032	240	38	o															
7034	260	42																
7036	280	46																
7038	290	46																
7040	310	51																
7044	340	56																
7048	360	56																

*Di: sealed version

2.3 IBC High precision angular contact ball bearings

718 C/E
CB 718 C/E

719 C/E
CB 719 C/E
H 719 C/E
CBH 719 C/E

70 C/E
CB 70 C/E
H 70 C/E
CBH 70 C/E

72 C/E
CB 72 C/E

73 C/E

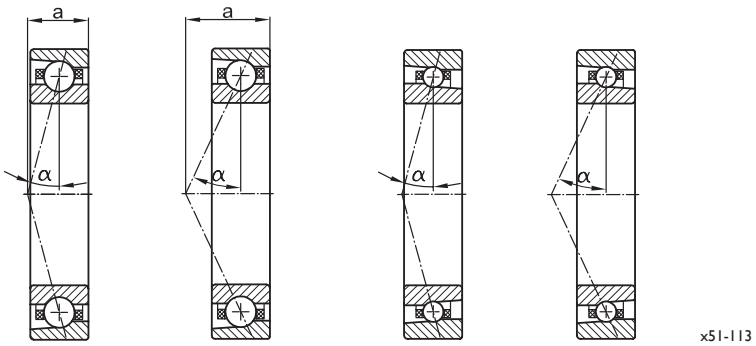

...C ...E H...C H...E

Basic dimensions d	D	B	Basic designation	Load ratings dyn. C_r	stat. C_{0r}	Fatigue limit load C_U (radial)	Speed grease n_G	oil/air n_O	Injection diameter d_{pi}	Direct oil lubrication	Sealing	Effective load centre a	Precision locknut
mm				N		N	min^{-1}		mm			mm	
6	17	6	X-706,C	2,350	1,050	39	96,500	145,000	10.8			2.0	MMR 6
			CBX-706.C	2,350	700	26	125,500	188,500					
			X-706.E	1,700	700	26	86,900	130,500	10.8			3.0	
			CBX-706.E	1,700	400	15	113,000	169,700					
7	19	6	X-707.C	2,690	1,320	49	83,000	125,000	12.6			3.0	MMR 7
			CBX-707.C	2,690	900	33	107,900	162,500					
			X-707.E	2,000	900	33	74,700	112,500	12.6			4.0	
			CBX-707.E	2,000	600	22	97,200	146,300					
8	22	7	X-708.C	3,680	1,750	65	79,500	120,000	13.8			4.0	MMR 8
			CBX-708.C	3,680	1,200	44	103,400	156,000					
			X-708.E	2,700	1,300	48	71,600	108,000	13.8			5.0	
			CBX-708.E	2,700	900	33	93,100	140,400					
9	24	7	X-709.C	5,100	2,450	91	75,600	114,000	15.0			4.0	MMR 9
			CBX-709.C	5,100	1,700	63	98,300	148,200					
			X-709.E	3,800	1,950	72	68,100	102,600	15.0			5.0	
			CBX-709.E	3,800	1,350	50	88,600	133,400					
10	22	6	X-71900.C	2,900	1,550	57	73,000	115,000	16.8			4.0	MMR 10
			CBX-71900.C	2,900	1,000	37	94,900	149,500					
			X-71900.E	2,100	1,100	41	65,700	103,500	16.8			5.0	
			CBX-71900.E	2,100	700	26	85,500	134,600					
	26	8	X-7000.C	5,500	2,850	106	58,000	100,000	17.4			6.0	MMR 10
			CBX-7000.C	5,500	1,900	70	75,400	130,000					
			X-7000.E	4,100	2,100	78	52,200	90,000	17.4			8.0	
			CBX-7000.E	4,100	1,400	52	67,900	117,000					
	30	9	7200.C	5,900	3,000	111	57,000	86,000	20.8		o	7.0	MMR 10
			7200.E	5,700	2,900	107	51,000	76,000			o	8,0	

718 C/E
CB 718 C/E

719 C/E
CB 719 C/E
H 719 C/E
CBH 719 C/E

70 C/E
CB 70 C/E
H 70 C/E
CBH 70 C/E

72 C/E
CB 72 C/E

73 C/E

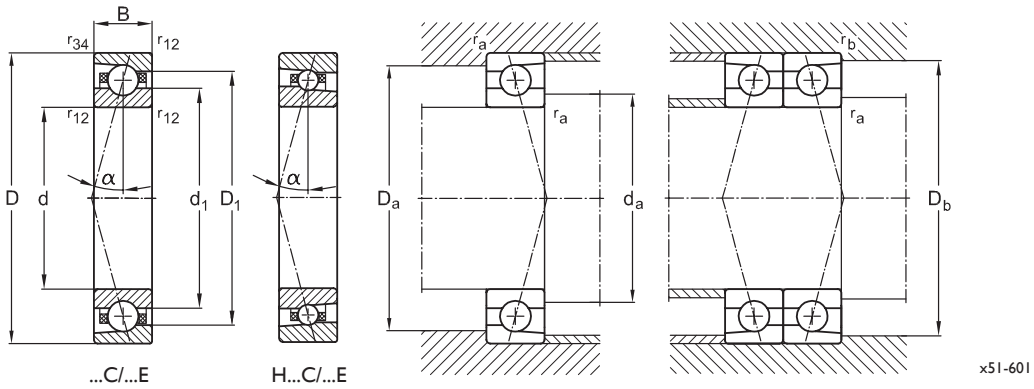

Basic dimensions			Basic designation	Dimensions				Weight	Mounting dimensions				
d	D	B		d_1	D_1	r_{12min}	r_{34min}	m	$d_{a,min}$	$D_{a,max}$	$D_{b,max}$	$r_{a,max}$	$r_{b,max}$
mm				mm				kg	mm				
6	17	6	X-706.C	9.0	14.5	0.3	0.1	0.005	8.5	14.3	14.7	0.3	0.1
			CBX-706.C					0.005					
			X-706.E	9.0	14.5	0.3	0.1	0.005	8.5	14.3	14.7	0.3	0.1
			CBX-706.E					0.005					
7	19	6	X-707.C	10.5	16.3	0.3	0.1	0.008	10.1	15.9	16.3	0.3	0.1
			CBX-707.C					0.007					
			X-707.E	10.5	16.3	0.3	0.1	0.008	10.1	15.9	16.3	0.3	0.1
			CBX-707.E					0.007					
8	22	7	X-708.C	11.5	18.8	0.3	0.1	0.010	11.1	19.8	20.3	0.3	0.1
			CBX-708.C					0.009					
			X-708.E	11.5	18.8	0.3	0.1	0.010	11.1	19.8	20.3	0.3	0.1
			CBX-708.E					0.009					
9	24	7	X-709.C	12.5	20.5	0.3	0.1	0.015	11.9	21.1	21.7	0.3	0.1
			CBX-709.C					0.014					
			X-709.E	12.5	20.5	0.3	0.1	0.015	11.9	21.1	21.7	0.3	0.1
			CBX-709.E					0.014					
10	22	6	X-71900.C	14.0	18.1	0.3	0.1	0.009	13.1	19.4	19.9	0.3	0.1
			CBX-71900.C					0.008					
			X-71900.E	14.0	18.1	0.3	0.1	0.009	13.1	19.4	19.9	0.3	0.1
			CBX-71900.E					0.008					
	26	8	X-7000.C	14.5	21.4	0.3	0.1	0.020	13.8	22.1	23.4	0.3	0.1
			CBX-7000.C					0.018					
			X-7000.E	14.5	21.4	0.3	0.1	0.020	13.8	22.1	23.4	0.3	0.1
			CBX-7000.E					0.018					
	30	9	7200.C	17.3	23.0	0.3	0.1	0.030	14.3	25.6	25.3	0.3	0.1
			7200.E					0.030					

718 C/E
CB 718 C/E

719 C/E
CB 719 C/E
H 719 C/E
CBH 719 C/E

70 C/E
CB 70 C/E
H 70 C/E
CBH 70 C/E

72 C/E
CB 72 C/E

73 C/E

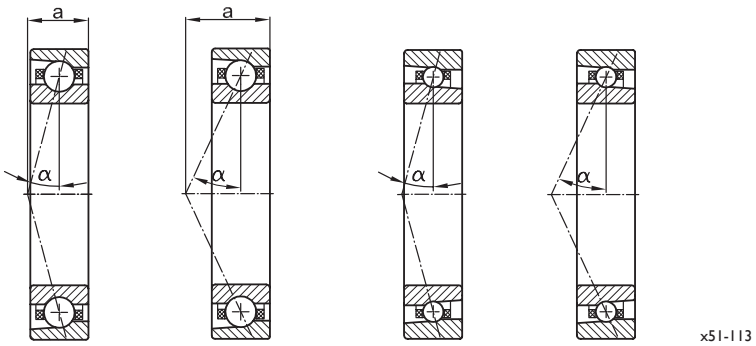

...C ...E H...C H...E

Basic dimensions d	D	B	Basic designation	Load ratings dyn. C_r	stat. C_{0r}	Fatigue limit load C_U (radial)	Speed grease n_G	oil/air n_O	Injection diameter d_{pi}	Direct oil lubrication	Sealing	Effective load centre a	Precision locknut
mm				N		N	min^{-1}		mm			mm	
12	24	6	X-71901.C	3,100	1,750	65	64,500	97,000	17.0			4.0	MMR 12
			CBX-71901.C	3,100	1,200	44	83,900	126,100					
			X-71901.E	2,300	1,300	48	58,100	87,300	17.0			5.0	
			CBX-71901.E	2,300	900	33	75,600	113,500					
	28	8	X-7001.C	4,600	2,700	100	61,000	92,000	18.0			7.0	MMR 12
			CBX-7001.C	4,600	1,800	67	79,300	119,600					
			X-7001.E	3,400	2,000	74	54,900	82,800	18.0			9.0	
			CBX-7001.E	3,400	1,400	52	71,400	107,700					
	32	10	7201.C	7,800	4,000	148	50,000	75,200	19.0		o	8.0	MMR 12
			7201.E	7,500	3,800	141	45,200	67,000			o	10.0	
15	28	7	X-71902.C	4,860	2,950	109	53,000	80,000	21.0			5.0	MMR 15
			CBX-71902.C	4,860	2,000	74	68,900	104,000					
			X-71902.E	3,600	2,200	81	47,700	72,000	21.0			6.0	
			CBX-71902.E	3,600	1,500	56	62,100	93,600					
	32	9	7002.C	6,300	3,500	130	48,300	71,000	20.8			8.0	MMR 15
			CB 7002.C	6,300	2,400	89	62,800	92,300					
			7002.CX	5,000	2,800	104	55,500	81,600	20.8			8.0	
			CB 7002.CX	5,000	1,900	70	72,200	106,100					
			7002.E	4,500	2,500	93	43,500	63,900	20.8			10.0	
			CB 7002.E	4,500	1,700	63	56,600	83,100					
			7002.EX	3,600	2,000	74	50,000	73,500	20.8			10.0	
			CB 7002.EX	3,600	1,400	52	65,000	95,600					
	35	11	7202.C	9,800	5,200	193	46,000	68,000	21.9		o	9.0	MMR 15
			CB 7202.C	9,800	3,600	133	59,800	88,400			o		
			7202.E	9,500	5,000	192	41,400	61,200	21.9		o	12.0	
			CB 7202.E	9,500	3,000	110	53,900	79,600			o		

718 C/E
CB 718 C/E

719 C/E
CB 719 C/E
H 719 C/E
CBH 719 C/E

70 C/E
CB 70 C/E
H 70 C/E
CBH 70 C/E

72 C/E
CB 72 C/E

73 C/E

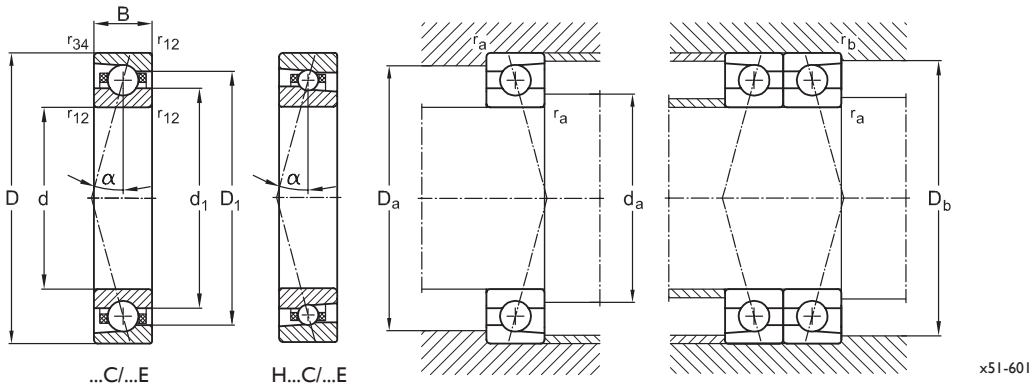

Basic dimensions			Basic designation	Dimensions				Weight	Mounting dimensions				
d	D	B		d_1	D_1	r_{12min}	r_{34min}	m	$d_{a,min}$	$D_{a,max}$	$D_{b,max}$	$r_{a,max}$	$r_{b,max}$
mm				mm				kg	mm				
12	24	6	X-71901.C	15.6	20.5	0.3	0.1	0.010	15.1	21.3	21.9	0.3	0.1
			CBX-71901.C					0.009					
			X-71901.E	15.6	20.5	0.3	0.1	0.010	15.1	21.3	21.9	0.3	0.1
			CBX-71901.E					0.009					
	28	8	X-7001.C	16.7	23.1	0.3	0.1	0.020	16.4	24.3	25.7	0.3	0.1
			CBX-7001.C					0.018					
			X-7001.E	16.7	23.1	0.3	0.1	0.020	16.4	24.3	25.7	0.3	0.1
			CBX-7001.E					0.018					
	32	10	7201.C	18.3	26.1	0.6	0.3	0.040	16.4	27.3	27.1	0.6	0.3
			7201.E					0.040					
15	28	7	X-71902.C	19.2	24.1	0.3	0.1	0.020	17.9	25.4	26.1	0.3	0.1
			CBX-71902.C					0.018					
			X-71902.E	19.2	24.1	0.3	0.1	0.020	17.9	25.4	26.1	0.3	0.1
			CBX-71902.E					0.018					
	32	9	7002.C	20.2	27.1	0.3	0.1	0.030	19.1	29.2	30.9	0.3	0.1
			CB 7002.C					0.028					
			7002.CX	20.2	27.1	0.3	0.1	0.030	19.1	29.2	30.9	0.3	0.1
			CB 7002.CX					0.028					
			7002.E	20.2	27.1	0.3	0.1	0.030	19.1	29.2	30.9	0.3	0.1
			CB 7002.E					0.028					
			7002.EX	20.2	27.1	0.3	0.1	0.030	19.1	29.2	30.9	0.3	0.1
			CB 7002.EX					0.028					
	35	11	7202.C	21.0	29.0	0.6	0.3	0.040	19.3	30.4	30.2	0.6	0.3
			CB 7202.C					0.037					
			7202.E	21.0	29.0	0.6	0.3	0.040	19.3	30.4	30.2	0.6	0.3
			CB 7202.E					0.037					

718 C/E
CB 718 C/E

719 C/E
CB 719 C/E
H 719 C/E
CBH 719 C/E

70 C/E
CB 70 C/E
H 70 C/E
CBH 70 C/E

72 C/E
CB 72 C/E

73 C/E

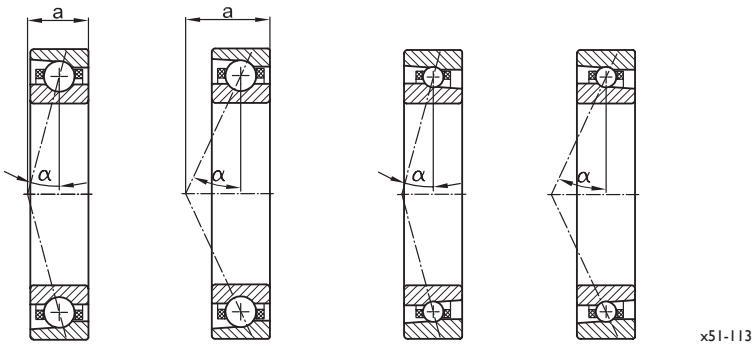

...C ...E H...C H...E

Basic dimensions d	D	B	Basic designation	Load ratings dyn. C_r	stat. C_{0r}	Fatigue limit load C_U (radial)	Speed grease n_G	oil/air n_O	Injection diameter d_{pi}	Direct oil lubrication	Sealing	Effective load centre a	Precision locknut
mm				N		N	min^{-1}		mm			mm	
17	30	7	71903,C	5,500	3,200	119	50,000	75,000	21.8			7.0	MMR 17
			CB 71903.C	5,500	2,200	81	65,000	97,500					
			71903.E	5,250	2,900	107	45,000	67,500	21.8			9.0	
			CB 71903.E	5,250	2,000	74	58,500	87,800					
	35	10	7003.C	8,800	5,000	185	43,000	63,000	23.1			9.0	MMR 17
			CB 7003.C	8,800	3,500	130	55,900	81,900					
			7003.CX	7,000	4,000	148	49,400	72,400	23.5			9.0	
			CB 7003.CX	7,000	2,800	104	64,300	94,200					
			7003.E	8,500	4,800	178	38,700	56,700	23.5			11.0	
			CB 7003.E	8,500	3,300	122	50,400	73,800					
			7003.EX	6,800	3,800	141	44,500	65,200	23.5			11.0	
			CB 7003.EX	6,800	2,600	96	57,900	84,800					
	40	12	7203.C	11,000	6,000	222	39,000	57,000	24.8		o	10.0	MMR 17
			CB 7203.C	11,000	4,200	156	50,700	74,100			o		
			7203.E	10,500	5,800	215	35,100	51,300	24.8		o	13.0	
			CB 7203.E	10,500	4,000	148	45,700	66,700			o		
20	37	9	71904.C	7,200	4,400	163	41,000	62,500	26.1			8.0	MBA 20
			CB 71904.C	7,200	3,000	111	53,300	81,300					
			71904.E	6,800	4,200	156	36,900	56,300	26.1			11.0	
			CB 71904.E	6,800	2,900	107	48,000	73,200					
	42	12	7004.C	10,600	6,200	230	36,500	54,000	27.4			10.0	MBA 20
			CB 7004.C	10,600	4,300	159	47,500	70,200					
			7004.CX	8,400	4,900	181	41,900	62,100	28.2			10.0	
			CB 7004.CX	8,400	3,400	126	54,500	80,800					
			7004.E	10,200	5,900	219	32,900	48,600	28.2			13.0	
			CB 7004.E	10,200	4,100	152	42,800	63,200					
			7004.EX	8,100	4,700	174	37,800	55,900	28.2			13.0	
			CB 7004.EX	8,100	3,200	119	49,200	72,700					
	47	14	7204.C	15,000	8,500	315	31,500	47,300	30.4		o	12.0	MBA 20
			CB 7204.C	15,000	5,900	219	41,000	61,500			o		
			7204.E	14,500	8,000	296	28,400	42,600	30.4		o	15.0	
			CB 7204.E	14,500	5,600	207	37,000	55,400			o		
	52	15	7304.C	17,100	8,800	326	24,700	38,000	30.9			12.0	MBA 20
			7304.E	16,500	8,500	315	22,300	34,300				16.0	

718 C/E
CB 718 C/E

719 C/E
CB 719 C/E
H 719 C/E
CBH 719 C/E

70 C/E
CB 70 C/E
H 70 C/E
CBH 70 C/E

72 C/E
CB 72 C/E

73 C/E

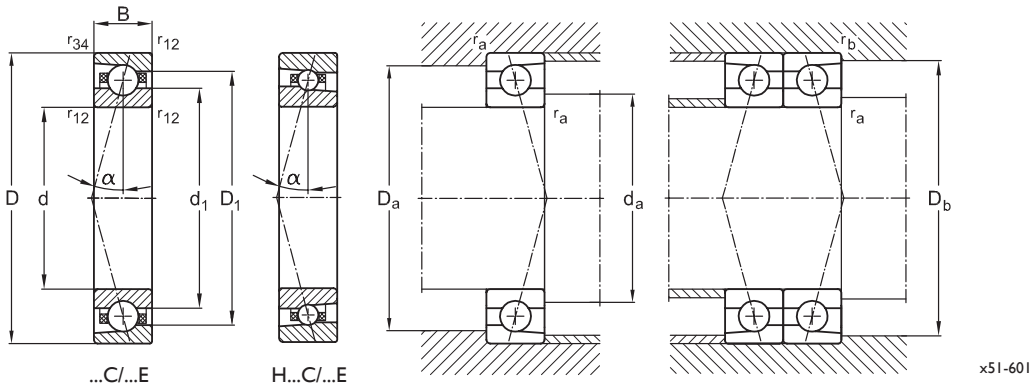

Basic dimensions			Basic designation	Dimensions				Weight	Mounting dimensions				
d	D	B		d_1	D_1	r_{12min}	r_{34min}	m	$d_{a,min}$	$D_{a,max}$	$D_{b,max}$	$r_{a,max}$	$r_{b,max}$
mm				mm				kg	mm				
17	30	7	71903.C	20.4	25.8	0.3	0.1	0.020	19.8	27.3	28.1	0.3	0.1
			CB 71903.C					0.018					
			71903.E	20.4	25.8	0.3	0.1	0.020	19.8	27.3	28.1	0.3	0.1
			CB 71903.E					0.018					
	35	10	7003.C	22.5	30.1	0.3	0.1	0.040	21.0	32.1	34.0	0.3	0.1
			CB 7003.C					0.037					
			7003.CX	22.5	30.1	0.3	0.1	0.040	21.0	32.1	34.0	0.3	0.1
			CB 7003.CX					0.037					
			7003.E	22.5	30.1	0.3	0.1	0.040	21.0	32.1	34.0	0.3	0.1
			CB 7003.E					0.037					
			7003.EX	22.5	30.1	0.3	0.1	0.040	21.0	32.1	34.0	0.3	0.1
			CB 7003.EX					0.037					
	40	12	7203.C	23.8	32.0	0.6	0.3	0.060	22.4	34.3	34.0	0.6	0.3
			CB 7203.C					0.055					
			7203.E	23.8	32.0	0.6	0.3	0.060	22.4	34.3	34.0	0.6	0.3
			CB 7203.E					0.055					
20	37	9	71904.C	25.3	31.8	0.3	0.15	0.036	24.0	34.5	35.7	0.3	0.15
			CB 71904.C					0.033					
			71904.E	25.3	31.8	0.3	0.15	0.036	24.0	34.5	35.7	0.3	0.15
			CB 71904.E					0.033					
	42	12	7004.C	26.6	35.5	0.6	0.3	0.065	25.0	37.0	39.5	0.6	0.3
			CB 7004.C					0.060					
			7004.CX	26.6	35.5	0.6	0.3	0.065	25.0	37.0	39.5	0.6	0.3
			CB 7004.CX					0.060					
			7004.E	26.6	35.5	0.6	0.3	0.065	25.0	37.0	39.5	0.6	0.3
			CB 7004.E					0.060					
			7004.EX	26.6	35.5	0.6	0.3	0.065	25.0	37.0	39.5	0.6	0.3
			CB 7004.EX					0.060					
	47	14	7204.C	29.2	37.9	0.6	0.3	0.106	26.4	40.4	40.2	0.6	0.3
			CB 7204.C					0.098					
			7204.E	29.2	37.9	0.6	0.3	0.106	26.4	40.4	40.2	0.6	0.3
			CB 7204.E					0.098					
	52	15	7304.C	26.7	41.1	1.0	0.6	0.144	25.0	47.0	45.3	1.0	0.6
			7304.E					0.144					

718 C/E
CB 718 C/E

719 C/E
CB 719 C/E
H 719 C/E
CBH 719 C/E

70 C/E
CB 70 C/E
H 70 C/E
CBH 70 C/E

72 C/E
CB 72 C/E

73 C/E

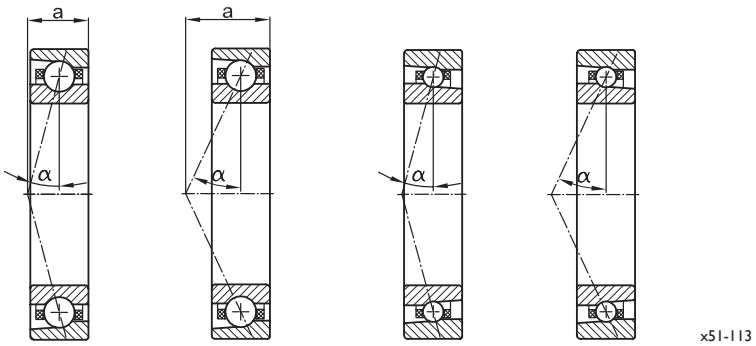

...C ...E H...C H...E

Basic dimensions d	D	B	Basic designation	Load ratings dyn. C_r	stat. C_{0r}	Fatigue limit load C_U (radial)	Speed grease n_G	oil/air n_O	Injection diameter d_{pi}	Direct oil lubrication	Sealing	Effective load centre a	Precision locknut
mm				N		N	min^{-1}		mm			mm	
25	42	9	71905.C	8,000	5,600	207	36,000	53,000	31.1		o	9.0	MBA 25
			CB 71905.C	8,000	3,900	144	46,800	68,900			o		
			71905.E	7,700	5,300	196	32,400	47,700	31.1		o	12.0	
			CB 71905.E	7,700	3,700	137	42,200	62,100			o		
	47	12	7005.C	15,000	9,300	344	31,000	46,000	33.6		o	11.0	MBA 25
			CB 7005.C	15,000	6,500	241	40,300	59,800			o		
			7005.CX	12,000	7,400	274	35,600	52,900	32.9		o	11.0	
			CB 7005.CX	12,000	5,100	189	46,300	68,800			o		
			7005.E	14,000	9,000	333	27,900	41,400	32.9		o	15.0	
			CB 7005.E	14,000	6,300	233	36,300	53,900			o		
			7005.EX	11,200	7,200	267	32,100	47,700	32.9		o	15.0	
			CB 7005.EX	11,200	5,000	185	41,800	62,100			o		
	52	15	7205.C	15,800	9,500	352	28,500	41,000	36.1		o	13.0	MBA 25
			CB 7205.C	15,800	6,600	244	37,100	53,300			o		
			7205.E	15,200	9,200	341	25,700	36,900	36.1		o	17.0	
			CB 7205.E	15,200	6,400	237	33,500	48,000			o		
	62	17	7305.C	23,500	13,700	507	20,500	31,500	41.0			14.0	MBA 25
			7305.E	22,500	13,700	489	18,300	28,200				19.0	

718 C/E
CB 718 C/E

719 C/E
CB 719 C/E
H 719 C/E
CBH 719 C/E

70 C/E
CB 70 C/E
H 70 C/E
CBH 70 C/E

72 C/E
CB 72 C/E

73 C/E

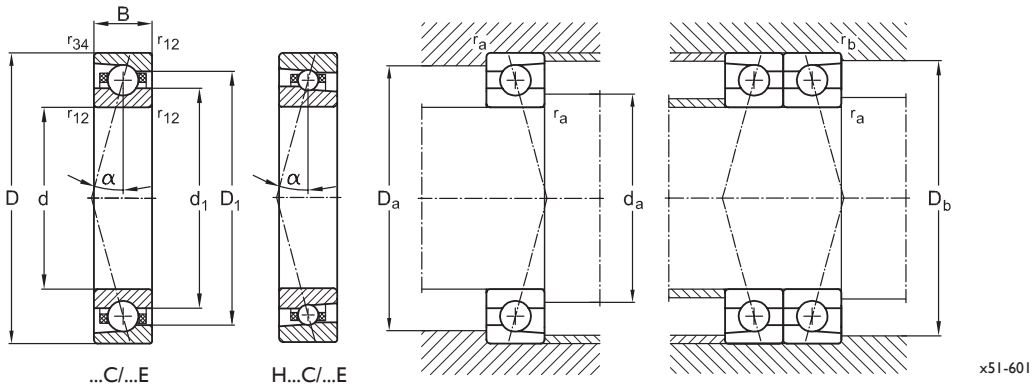

Basic dimensions			Basic designation	Dimensions				Weight	Mounting dimensions				
d	D	B		d_1	D_1	r_{12min}	r_{34min}	m	$d_{a,min}$	$D_{a,max}$	$D_{b,max}$	$r_{a,max}$	$r_{b,max}$
mm				mm				kg	mm				
25	42	9	71905.C	30.3	37.0	0.3	0.15	0.042	29.0	39.5	40.7	0.3	0.15
			CB 71905.C					0.039					
			71905.E	30.3	37.0	0.3	0.15	0.042	29.0	39.5	40.7	0.3	0.15
			CB 71905.E					0.039					
	47	12	7005.C	32.6	41.3	0.6	0.3	0.075	30.0	42.0	44.5	0.6	0.3
			CB 7005.C					0.069					
			7005.CX	32.6	41.3	0.6	0.3	0.075	30.0	42.0	44.5	0.6	0.3
			CB 7005.CX					0.069					
			7005.E	32.6	41.3	0.6	0.3	0.075	30.0	42.0	44.5	0.6	0.3
			CB 7005.E					0.069					
			7005.EX	32.6	41.3	0.6	0.3	0.075	30.0	42.0	44.5	0.6	0.3
			CB 7005.EX					0.069					
	52	15	7205.C	34.7	43.3	1.0	0.6	0.128	31.4	45.4	45.2	1.0	0.6
			CB 7205.C					0.118					
			7205.E	34.7	43.3	1.0	0.6	0.128	31.4	45.4	45.2	1.0	0.6
			CB 7205.E					0.118					
	62	17	7305.C	38.7	49.9	1.0	0.6	0.236	30.0	57.0	55.0	1.0	0.6
			7305.E					0.236					

718 C/E
CB 718 C/E

719 C/E
CB 719 C/E
H 719 C/E
CBH 719 C/E

70 C/E
CB 70 C/E
H 70 C/E
CBH 70 C/E

72 C/E
CB 72 C/E

73 C/E

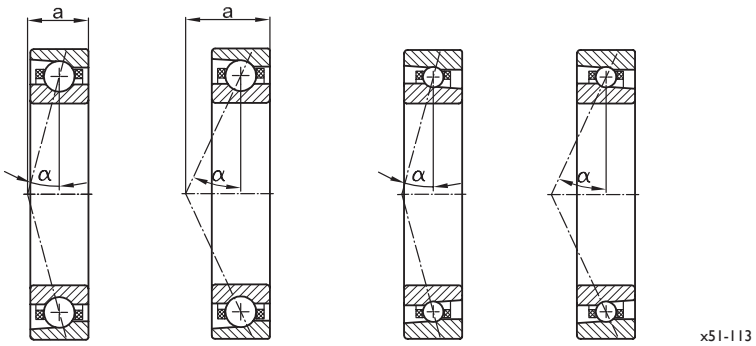

...C ...E H...C H...E

Basic dimensions			Basic designation	Load ratings dyn.	stat.	Fatigue limit load	Speed grease	oil/air	Injection diameter	Direct oil lubrication	Sealing	Effective load centre	Precision locknut
d	D	B		C_r	C_{0r}	C_U (radial)	n_G	n_O	d_{pi}			a	
mm				N		N	min^{-1}		mm			mm	
30	47	9	71906.C	8,500	6,400	237	31,000	47,000	36.1		o	10.0	MBA 30
			CB 71906.C	8,500	4,400	163	40,300	61,100			o		
			71906.CX	6,800	5,100	189	35,600	54,000	36.1		o	10.0	
			CB 71906.CX	6,800	3,500	130	46,300	70,200			o		
			71906.E	8,000	6,100	226	27,900	42,300	36.1		o	14.0	
			CB 71906.E	8,000	4,200	156	36,300	55,000			o		
			71906.EX	6,400	4,800	178	32,100	48,600	36.1		o	14.0	
			CB 71906.EX	6,400	3,300	122	41,800	63,200			o		
	55	13	7006.C	15,000	10,300	381	26,300	40,500	39.6		o	12.0	MBA 30
			CB 7006.C	15,000	7,200	267	34,200	52,700			o		
			7006.CX	12,000	8,200	304	30,200	46,500	39.5		o	12.0	
			CB 7006.CX	12,000	5,700	211	39,300	60,500			o		
			7006.E	14,500	10,000	370	23,700	36,500	39.5		o	17.0	
			CB 7006.E	14,500	7,000	259	30,900	47,500			o		
			7006.EX	11,600	8,000	296	27,200	41,900	39.5		o	17.0	
			CB 7006.EX	11,600	5,600	207	35,400	54,500			o		
	62	16	7206.C	23,500	14,900	552	24,000	38,500	42.9		o	14.0	MBA 30
			CB 7206.C	23,500	10,400	385	31,200	50,100			o		
			7206.E	22,200	14,300	530	21,600	34,700	42.9		o	19.0	
			CB 7206.E	22,200	10,000	370	28,100	45,200			o		
	72	19	7306.C	33,800	20,500	759	17,500	26,500	48.1			16.0	MBA 30
			7306.E	32,500	19,600	726	15,600	23,900				22.0	

718 C/E
CB 718 C/E

719 C/E
CB 719 C/E
H 719 C/E
CBH 719 C/E

70 C/E
CB 70 C/E
H 70 C/E
CBH 70 C/E

72 C/E
CB 72 C/E

73 C/E

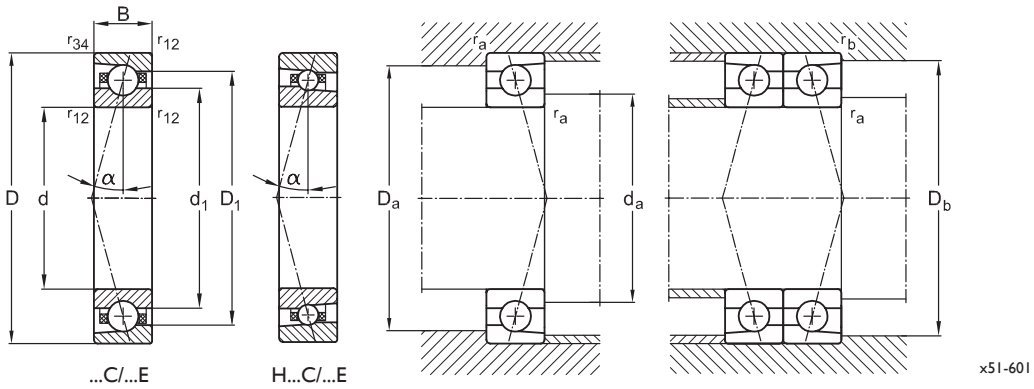

Basic dimensions			Basic designation	Dimensions				Weight	Mounting dimensions				
d	D	B		d_1	D_1	r_{12min}	r_{34min}	m	$d_{a,min}$	$D_{a,max}$	$D_{b,max}$	$r_{a,max}$	$r_{b,max}$
mm				mm				kg	mm				
30	47	9	71906.C	35.30	41.80	0.3	0.15	0.048	34.0	44.5	45.7	0.3	0.15
			CB 71906.C					0.044					
			71906.CX	35.30	41.80	0.3	0.15	0.048	34.0	44.5	45.7	0.3	0.15
			CB 71906.CX					0.044					
			71906.E	35.30	41.80	0.3	0.15	0.048	34.0	44.5	45.7	0.3	0.15
			CB 71906.E					0.044					
			71906.EX	35.30	41.80	0.3	0.15	0.048	34.0	44.5	45.7	0.3	0.15
			CB 71906.EX					0.044					
	55	13	7006.C	38.50	46.40	1.0	0.3	0.118	36.0	49.0	50.0	1.0	0.3
			CB 7006.C					0.109					
			7006.CX	38.50	46.40	1.0	0.3	0.118	36.0	49.0	50.0	1.0	0.3
			CB 7006.CX					0.109					
			7006.E	38.50	46.40	1.0	0.3	0.118	36.0	49.0	50.0	1.0	0.3
			CB 7006.E					0.109					
			7006.EX	38.50	46.40	1.0	0.3	0.118	36.0	49.0	50.0	1.0	0.3
			CB 7006.EX					0.109					
	62	16	7206.C	41.20	51.80	1.0	0.6	0.197	37.6	54.6	54.4	1.0	0.6
			CB 7206.C					0.181					
			7206.E	41.20	51.80	1.0	0.6	0.197	37.6	54.6	54.4	1.0	0.6
			CB 7206.E					0.181					
	72	19	7306.C	45.10	59.00	1.0	0.6	0.348	35.0	67.0	65.0	1.0	0.6
			7306.E					0.348					

718 C/E
CB 718 C/E

719 C/E
CB 719 C/E
H 719 C/E
CBH 719 C/E

70 C/E
CB 70 C/E
H 70 C/E
CBH 70 C/E

72 C/E
CB 72 C/E

73 C/E

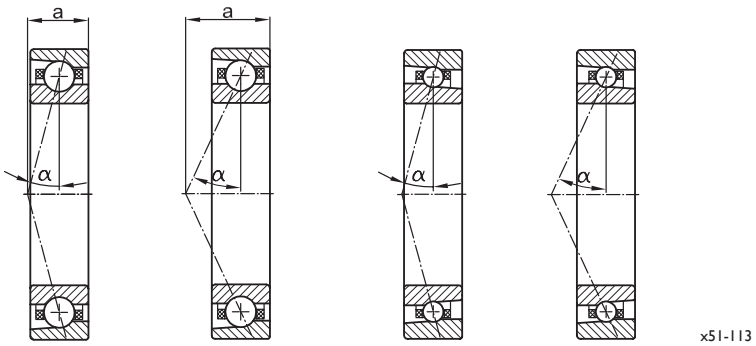

...C ...E H...C H...E

Basic dimensions			Basic designation	Load ratings dyn.	stat.	Fatigue limit load	Speed grease	oil/air	Injection diameter	Direct oil lubrication	Sealing	Effective load centre	Precision locknut
d	D	B		C_r	C_{0r}	C_U (radial)	n_G	n_O	d_{pi}			a	
mm				N		N	min^{-1}		mm			mm	
35	55	10	71907.C	12,500	10,000	370	26,000	39,500	42.6		o	11	MBA 35
			CB 71907.C	12,500	7,000	259	33,800	51,400			o		
			71907.CX	10,000	8,000	296	29,900	45,400	42.6		o	11	
			CB 71907.CX	10,000	5,600	207	38,900	59,100			o		
			71907.E	12,000	9,500	352	23,400	35,600	42.6		o	16	
			CB 71907.E	12,000	6,600	244	30,500	46,300			o		
			71907.EX	9,600	7,600	281	27,000	40,900	42.6		o	16	
			CB 71907.EX	9,600	5,300	196	35,100	53,200			o		
	62	14	7007.C	18,800	13,500	500	22,600	37,200	45.8		o	14	MBA 35
			CB 7007.C	18,800	9,400	348	29,400	48,400			o		
			7007.CX	15,000	10,800	400	25,900	42,700	44.6		o	14	
			CB 7007.CX	15,000	7,500	278	33,700	55,600			o		
			7007.E	18,100	12,700	470	20,400	33,500	44.6		o	19	
			CB 7007.E	18,100	8,800	326	26,600	43,600			o		
			7007.EX	14,400	10,100	374	23,400	38,500	44.6		o	19	
			CB 7007.EX	14,400	7,000	259	30,500	50,100			o		
	72	17	7207.C	25,600	18,100	670	21,000	35,000	49.9		o	16	MBA 35
			CB 7207.C	25,600	12,600	467	27,300	45,500			o		
			7207.E	24,600	17,100	633	18,900	31,500	49.9		o	21	
			CB 7207.E	24,600	11,900	441	24,600	41,000			o		
	80	21	7307.C	40,500	25,700	952	15,100	23,500	53.3			18	MBA 35
			7307.E	38,800	25,000	926	13,700	21,100				24	

718 C/E
CB 718 C/E

719 C/E
CB 719 C/E
H 719 C/E
CBH 719 C/E

70 C/E
CB 70 C/E
H 70 C/E
CBH 70 C/E

72 C/E
CB 72 C/E

73 C/E

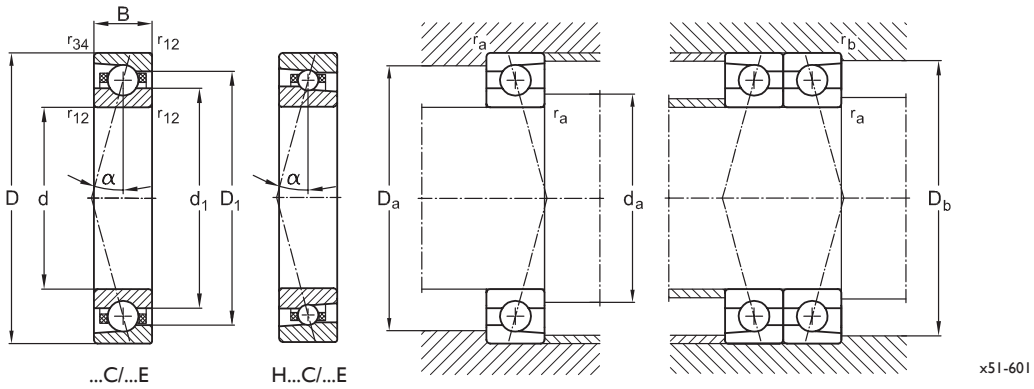

Basic dimensions			Basic designation	Dimensions				Weight	Mounting dimensions				
d	D	B		d_1	D_1	r_{12min}	r_{34min}	m	$d_{a,min}$	$D_{a,max}$	$D_{b,max}$	$r_{a,max}$	$r_{b,max}$
mm				mm				kg	mm				
35	55	10	71907.C	41.5	48.6	0.6	0.15	0.076	40.0	50.0	52.3	0.6	0.15
			CB 71907.C					0.070					
			71907.CX	41.5	48.6	0.6	0.15	0.076	40.0	50.0	52.3	0.6	0.15
			CB 71907.CX					0.070					
			71907.E	41.5	48.6	0.6	0.15	0.076	40.0	50.0	52.3	0.6	0.15
			CB 71907.E					0.070					
			71907.EX	41.5	48.6	0.6	0.15	0.076	40.0	50.0	52.3	0.6	0.15
			CB 71907.EX					0.070					
	62	14	7007.C	44.5	53.0	1.0	0.3	0.154	41.0	54.0	55.8	1.0	0.3
			CB 7007.C					0.142					
			7007.CX	44.5	53.0	1.0	0.3	0.154	41.0	54.0	55.8	1.0	0.3
			CB 7007.CX					0.142					
			7007.E	44.5	53.0	1.0	0.3	0.154	41.0	54.0	55.8	1.0	0.3
			CB 7007.E					0.142					
			7007.EX	44.5	53.0	1.0	0.3	0.154	41.0	54.0	55.8	1.0	0.3
			CB 7007.EX					0.142					
	72	17	7207.C	47.9	59.7	1.1	0.6	0.290	44.2	63.2	63.0	1.1	0.6
			CB 7207.C					0.267					
			7207.E	47.9	59.7	1.1	0.6	0.290	44.2	63.2	63.0	1.1	0.6
			CB 7207.E					0.267					
	80	21	7307.C	50.5	64.7	1.5	0.8	0.473	42.5	72.5	71.3	1.5	0.8
			7307.E					0.473					

718 C/E
CB 718 C/E

719 C/E
CB 719 C/E
H 719 C/E
CBH 719 C/E

70 C/E
CB 70 C/E
H 70 C/E
CBH 70 C/E

72 C/E
CB 72 C/E

73 C/E

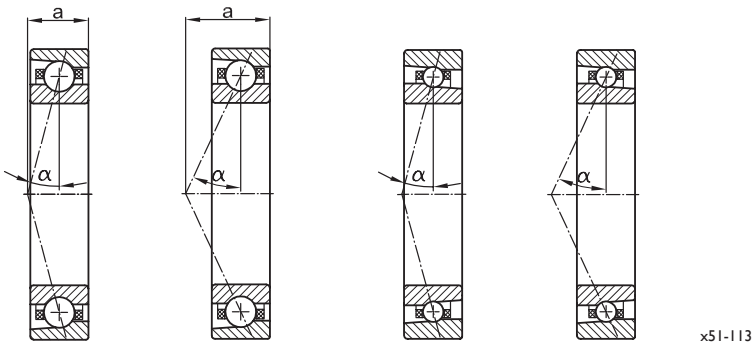

...C ...E H...C H...E

Basic dimensions			Basic designation	Load ratings dyn.	stat.	Fatigue limit load	Speed grease	oil/air	Injection diameter	Direct oil lubrication	Sealing	Effective load centre	Precision locknut
d	D	B		C_r	C_{0r}	C_U (radial)	n_G	n_O	d_{pi}			a	
mm				N		N	min^{-1}		mm			mm	
40	62	12	71908.C	15,800	12,000	444	23,000	35,000	47.9		o	13	MBA 40
			CB 71908.C	15,800	8,400	311	29,900	45,500			o		
			71908.CX	12,600	9,600	356	26,400	40,200	47.9		o	13	
			CB 71908.CX	12,600	6,700	248	34,400	52,300			o		
			71908.E	15,000	11,600	430	20,700	31,500	47.9		o	18	
			CB 71908.E	15,000	8,100	300	27,000	41,000			o		
			71908.EX	11,000	9,000	333	23,800	36,200	47.9		o	18	
			CB 71908.EX	11,000	6,300	233	31,000	47,100			o		
			H 71908.E	7,000	6,500	241	24,500	39,000	49.7		o	18	
			CBH 71908.E	7,000	4,500	167	31,900	50,700			o		
	68	15	7008.C	20,500	16,100	596	20,300	35,000	51.2		o	15	MBA 40
			CB 7008.C	20,500	11,200	415	26,400	45,500			o		
			7008.CX	15,300	12,800	474	23,500	38,000	51.2		o	15	
			CB 7008.CX	15,300	8,900	330	30,600	49,400			o		
			H 7008.C	10,200	9,500	352	26,800	41,000	51.4		o	15	
			CBH 7008.C	10,200	6,600	244	34,900	53,300			o		
			7008.E	20,000	15,300	567	18,300	31,500	51.2		o	20	
			CB 7008.E	20,000	10,700	396	23,800	41,000			o		
			7008.EX	14,700	12,100	448	21,200	34,200	51.2		o	20	
			CB 7008.EX	14,700	8,400	311	27,600	44,500			o		
			H 7008.E	9,500	9,000	333	24,200	36,900	51.4		o	20	
			CBH 7008.E	9,500	6,300	233	31,500	48,000			o		
	80	18	7208.C	32,300	22,500	833	18,500	31,000	55.6		o	17	MBA 40
			CB 7208.C	32,300	15,700	581	24,100	40,300			o		
			7208.E	31,000	21,900	811	16,700	27,900	55.5		o	23	
			CB 7208.E	31,000	15,300	567	21,800	36,300			o		

718 C/E
CB 718 C/E

719 C/E
CB 719 C/E
H 719 C/E
CBH 719 C/E

70 C/E
CB 70 C/E
H 70 C/E
CBH 70 C/E

72 C/E
CB 72 C/E

73 C/E

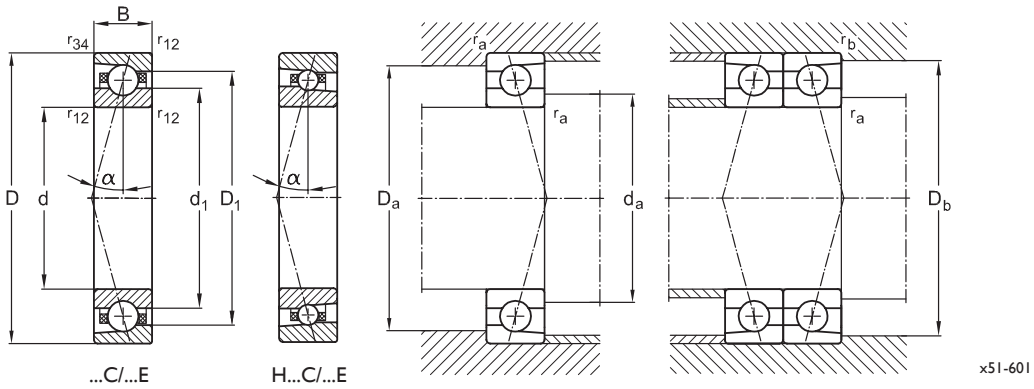

Basic dimensions			Basic designation	Dimensions				Weight	Mounting dimensions				
d	D	B		d_1	D_1	r_{12min}	r_{34min}	m	$d_{a,min}$	$D_{a,max}$	$D_{b,max}$	$r_{a,max}$	$r_{b,max}$
mm				mm				kg	mm				
40	62	12	71908.C	46.7	55.6	0.6	0.15	0.108	45.0	57.0	59.3	0.6	0.15
			CB 71908.C					0.099					
			71908.CX	46.7	55.6	0.6	0.15	0.108	45.0	57.0	59.3	0.6	0.15
			CB 71908.CX					0.099					
			71908.E	46.7	55.6	0.6	0.15	0.108	45.0	57.0	59.3	0.6	0.15
			CB 71908.E					0.099					
			71908.EX	46.7	55.6	0.6	0.15	0.108	45.0	57.0	59.3	0.6	0.15
			CB 71908.EX					0.099					
			H 71908.E	48.5	53.6	0.6	0.6	0.131	45.0	57.0	59.3	0.6	0.6
			CBH 71908.E					0.121					
	68	15	7008.C	49.7	58.5	1.0	0.3	0.194	46.0	61.8	62.8	1.0	0.3
			CB 7008.C					0.178					
			7008.CX	49.7	58.5	1.0	0.3	0.188	46.0	61.8	62.8	1.0	0.3
			CB 7008.CX					0.173					
			H 7008.C	51.0	57.2	1.0	1.0	0.221	46.0	61.8	62.8	1.0	1.0
			CBH 7008.C					0.203					
			7008.E	49.7	58.5	1.0	0.3	0.194	46.0	61.8	62.8	1.0	0.3
			CB 7008.E					0.178					
			7008.EX	49.7	58.5	1.0	0.3	0.188	46.0	61.8	62.8	1.0	0.3
			CB 7008.EX					0.173					
			H 7008.E	51.0	57.2	1.0	1.0	0.221	46.0	61.8	62.8	1.0	1.0
			CBH 7008.E					0.203					
	80	18	7208.C	53.4	66.8	1.1	0.6	0.363	48.2	71.8	71.0	1.1	0.6
			CB 7208.C					0.334					
			7208.E	53.4	66.8	1.1	0.6	0.363	48.2	71.8	71.0	1.1	0.6
			CB 7208.E					0.334					

718 C/E
CB 718 C/E

719 C/E
CB 719 C/E
H 719 C/E
CBH 719 C/E

70 C/E
CB 70 C/E
H 70 C/E
CBH 70 C/E

72 C/E
CB 72 C/E

73 C/E

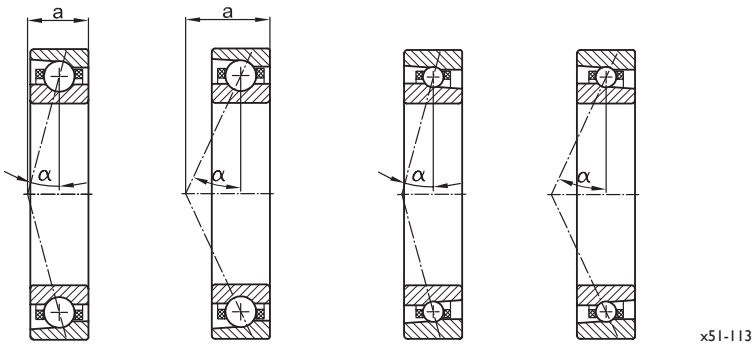

...C ...E H...C H...E

Basic dimensions d	D	B	Basic designation	Load ratings dyn. C_r	stat. C_{0r}	Fatigue limit load C_U (radial)	Speed grease n_G	oil/air n_O	Injection diameter d_{pi}	Direct oil lubrication	Sealing	Effective load centre a	Precision locknut
mm				N		N	min^{-1}		mm			mm	
45	68	12	71909.C	16,200	13,500	500	20,700	31,500	53.4		o	14	MBA 45
			CB 71909.C	16,200	9,400	348	27,000	41,000			o		
			71909.CX	12,900	10,800	400	23,800	36,200	53.4		o	14	
			CB 71909.CX	12,900	7,500	278	31,000	47,100			o		
			71909.E	15,200	12,900	478	18,700	28,400	53.4		o	19	
			CB 71909.E	15,200	9,000	333	24,400	37,000			o		
			71909.EX	12,450	11,000	407	21,500	32,600	53.4		o	19	
			CB 71909.EX	12,450	7,700	285	28,000	42,400			o		
			H 71909.E	9,700	9,200	341	22,500	35,800	54.8		o	19	
			CBH 71909.E	9,700	6,400	237	29,300	46,600			o		
	75	16	7009.C	27,600	21,500	796	17,000	28,000	57.0		o	16	MBA 45
			CB 7009.C	27,600	15,000	556	22,100	36,400			o		
			7009.CX	20,300	72,700	2,693	18,700	31,500	57.0		o	16	
			CB 7009.CX	20,300	50,800	1,881	24,400	41,000			o		
			H 7009.C	13,000	12,400	4,593	20,500	35,000	56.8		o	16	
			CBH 7009.C	13,000	8,680	3,215	26,700	45,500			o		
			7009.E	26,400	20,300	752	15,300	25,200	57.0		o	22	
			CB 7009.E	26,400	14,200	526	19,900	32,800			o		
			7009.EX	17,700	53,600	1,985	16,900	28,400	57.0		o	22	
			CB 7009.EX	17,700	37,500	1,389	22,000	37,000			o		
			H 7009.E	9,000	8,700	3,222	18,500	31,500	56.8		o	22	
			CBH 7009.E	9,000	6,100	2,256	24,100	41,000			o		
	85	19	7209.C	41,000	30,000	1,111	18,000	27,000	59.9		o	18	MBA 45
			CB 7209.C	41,000	21,000	778	23,400	35,100			o		
			7209.E	39,000	27,600	1,022	16,200	24,300	60.2		o	25	
			CB 7209.E	39,000	19,300	715	21,100	31,600			o		

718 C/E
CB 718 C/E

719 C/E
CB 719 C/E
H 719 C/E
CBH 719 C/E

70 C/E
CB 70 C/E
H 70 C/E
CBH 70 C/E

72 C/E
CB 72 C/E

73 C/E

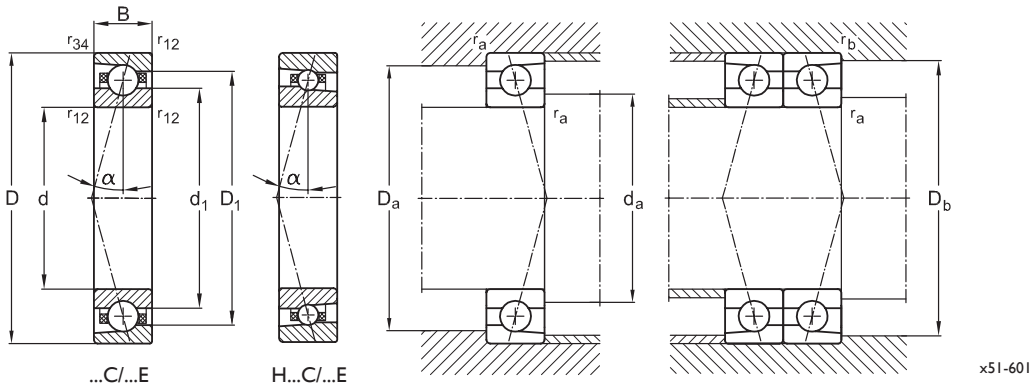

Basic dimensions			Basic designation	Dimensions				Weight	Mounting dimensions				
d	D	B		d_1	D_1	r_{12min}	r_{34min}	m	$d_{a,min}$	$D_{a,max}$	$D_{b,max}$	$r_{a,max}$	$r_{b,max}$
mm				mm				kg	mm				
45	68	12	71909.C	52.2	61.1	0.6	0.15	0.128	50.0	63.0	65.4	0.6	0.15
			CB 71909.C					0.118					
			71909.CX	52.2	61.1	0.6	0.15	0.128	50.0	63.0	65.4	0.6	0.15
			CB 71909.CX					0.118					
			71909.E	52.2	61.1	0.6	0.15	0.128	50.0	63.0	65.4	0.6	0.15
			CB 71909.E					0.118					
			71909.EX	52.2	61.1	0.6	0.15	0.128	50.0	63.0	65.4	0.6	0.15
			CB 71909.EX					0.118					
			H 71909.E	53.5	59.7	0.6	0.6	0.142	50.0	63.0	65.4	0.6	0.6
			CBH 71909.E					0.131					
	75	16	7009.C	55.3	64.7	1.0	0.3	0.245	51.0	68.8	70.0	1.0	0.3
			CB 7009.C					0.225					
			7009.CX	55.3	64.7	1.0	0.3	0.238	51.0	68.8	70.0	1.0	0.3
			CB 7009.CX					0.219					
			H 7009.C	56.4	63.7	1.0	1.0	0.268	51.0	68.8	70.0	1.0	1.0
			CBH 7009.C					0.247					
			7009.E	55.3	64.7	1.0	0.3	0.245	51.0	68.8	70.0	1.0	0.3
			CB 7009.E					0.225					
			7009.EX	55.3	64.7	1.0	0.3	0.238	51.0	68.8	70.0	1.0	0.3
			CB 7009.EX					0.219					
			H 7009.E	56.4	63.7	1.0	1.0	0.268	51.0	68.8	70.0	1.0	1.0
			CBH 7009.E					0.247					
	85	19	7209.C	57.5	72.4	1.1	0.6	0.408	52.7	77.8	77.0	1.1	0.6
			CB 7209.C					0.375					
			7209.E	57.5	72.4	1.1	0.6	0.408	52.7	77.8	77.0	1.1	0.6
			CB 7209.E					0.375					

718 C/E
CB 718 C/E

719 C/E
CB 719 C/E
H 719 C/E
CBH 719 C/E

70 C/E
CB 70 C/E
H 70 C/E
CBH 70 C/E

72 C/E
CB 72 C/E

73 C/E

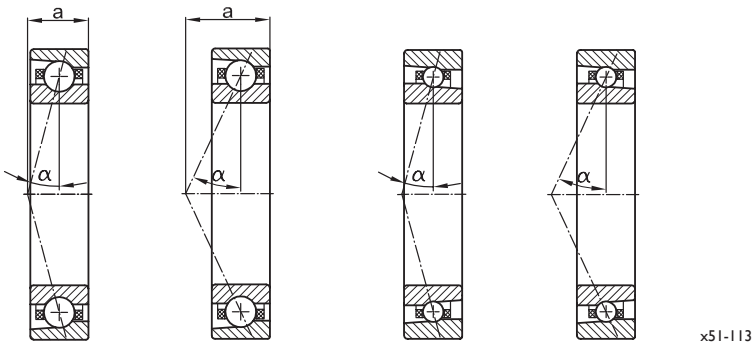

...C ...E H...C H...E

Basic dimensions d	D	B	Basic designation	Load ratings dyn. C_r	stat. C_{0r}	Fatigue limit load C_U (radial)	Speed grease n_G	oil/air n_O	Injection diameter d_{pi}	Direct oil lubrication	Sealing	Effective load centre a	Precision locknut
mm				N		N	min^{-1}		mm			mm	
50	65	7	71810.C	7,600	10,100	374	19,000	29,300	55.7			11	MBA 50
			CB 71810.C	7,600	7,100	263	24,700	38,000					
			71810.E	7,200	9,800	363	17,100	26,300	55.5			17	
			CB 71810.E	7,200	6,900	256	22,200	34,100					
	72	12	71910.C	17,000	15,000	556	19,000	29,000	57.9	o	o	14	MBA 50
			CB 71910.C	17,000	10,500	389	24,700	37,700		o	o		
			71910.CX	13,600	12,000	444	21,800	33,300	57.9	o	o	14	
			CB 71910.CX	13,600	8,400	311	28,400	43,300		o	o		
			71910.E	16,000	14,500	537	17,100	26,100	57.9	o	o	20	
			CB 71910.E	16,000	10,100	374	22,300	34,000		o	o		
			71910.EX	13,000	12,100	448	19,700	30,000	57.9	o	o	20	
			CB 71910.EX	13,000	8,400	311	25,700	39,000		o	o		
			H 71910.E	10,000	9,800	363	20,500	35,000	59.5	o	o	20	
			CBH 71910.E	10,000	6,800	252	26,700	45,500		o	o		
	80	16	7010.C	28,700	23,000	852	16,800	27,600	62.3	o	o	17	MBA 50
			CB 7010.C	28,700	16,100	596	21,900	35,900		o	o		
			7010.CX	21,100	18,200	674	19,600	31,800	62.3	o	o	17	
			CB 7010.CX	21,100	12,700	470	25,500	41,400		o	o		
			H 7010.C	13,500	13,400	496	22,500	36,000	62.0	o	o	17	
			CBH 7010.C	13,500	9,300	344	29,300	46,800		o	o		
			7010.E	27,000	21,800	807	15,200	24,900	62.3	o	o	23	
			CB 7010.E	27,000	15,200	563	19,800	32,400		o	o		
			7010.EX	19,700	17,100	633	17,700	28,700	62.3	o	o	23	
			CB 7010.EX	19,700	11,900	441	23,100	37,400		o	o		
			H 7010.E	12,500	12,400	459	20,300	32,400	62.0	o	o	23	
			CBH 7010.E	12,500	8,600	319	26,400	42,200		o	o		
	90	20	7210.C	43,000	31,500	1,167	16,800	25,500	66.2		o	20	MBA 50
			CB 7210.C	43,000	22,000	815	21,900	33,200			o		
			7210.E	41,000	30,500	1,130	15,200	23,000	65.2		o	27	
			CB 7210.E	41,000	21,300	789	19,800	29,900			o		

718 C/E
CB 718 C/E

719 C/E
CB 719 C/E
H 719 C/E
CBH 719 C/E

70 C/E
CB 70 C/E
H 70 C/E
CBH 70 C/E

72 C/E
CB 72 C/E

73 C/E

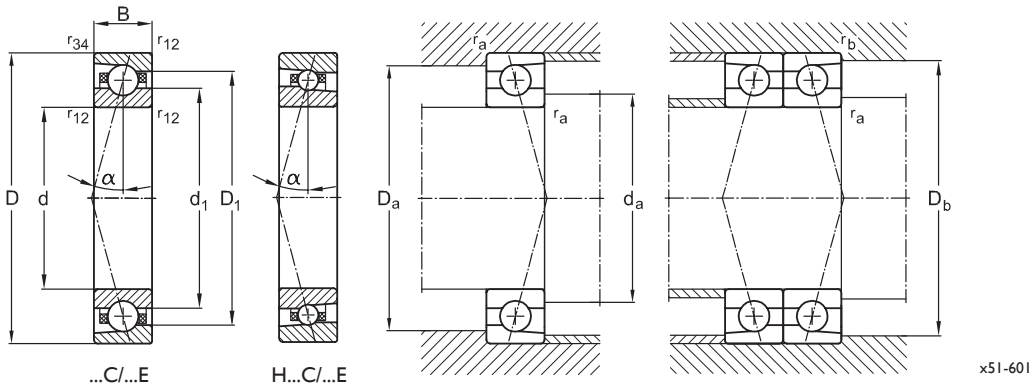

Basic dimensions			Basic designation	Dimensions				Weight	Mounting dimensions				
d	D	B		d_1	D_1	r_{12min}	r_{34min}	m	$d_{a,min}$	$D_{a,max}$	$D_{b,max}$	$r_{a,max}$	$r_{b,max}$
mm				mm				kg	mm				
50	65	7	71810.C	55.1	60.0	0.3	0.1	0.052	53.5	60.4	61.4	0.3	0.1
			CB 71810.C					0.048					
			71810.E	55.1	60.0	0.3	0.1	0.052	53.5	60.4	61.4	0.3	0.1
			CB 71810.E					0.048					
	72	12	71910.C	56.7	65.5	0.6	0.15	0.129	55.0	67.0	69.4	0.6	0.15
			CB 71910.C					0.119					
			71910.CX	56.7	65.5	0.6	0.15	0.129	55.0	67.0	69.4	0.6	0.15
			CB 71910.CX					0.119					
			71910.E	56.7	65.5	0.6	0.15	0.129	55.0	67.0	69.4	0.6	0.15
			CB 71910.E					0.119					
			71910.EX	56.7	65.5	0.6	0.15	0.129	55.0	67.0	69.4	0.6	0.15
			CB 71910.EX					0.119					
			H 71910.E	58.1	64.1	0.6	0.6	0.149	55.0	67.0	69.4	0.6	0.6
			CBH 71910.E					0.137					
	80	16	7010.C	60.5	70.0	1.0	0.3	0.264	56.0	74.0	74.8	1.0	0.3
			CB 7010.C					0.243					
			7010.CX	60.5	70.0	1.0	0.3	0.256	56.0	74.0	74.8	1.0	0.3
			CB 7010.CX					0.236					
			H 7010.C	61.6	68.5	1.0	1.0	0.288	56.0	74.0	74.8	1.0	1.0
			CBH 7010.C					0.265					
			7010.E	60.5	70.0	1.0	0.3	0.264	56.0	74.0	74.8	1.0	0.3
			CB 7010.E					0.243					
			7010.EX	60.5	70.0	1.0	0.3	0.256	56.0	74.0	74.8	1.0	0.3
			CB 7010.EX					0.236					
			H 7010.E	61.6	68.5	1.0	1.0	0.288	56.0	74.0	74.8	1.0	1.0
			CBH 7010.E					0.265					
	90	20	7210.C	63.5	76.8	1.1	0.6	0.476	57.2	82.8	82	1.1	0.6
			CB 7210.C					0.438					
			7210.E	63.5	76.8	1.1	0.6	0.476	57.2	82.8	82	1.1	0.6
			CB 7210.E					0.438					

718 C/E
CB 718 C/E

719 C/E
CB 719 C/E
H 719 C/E
CBH 719 C/E

70 C/E
CB 70 C/E
H 70 C/E
CBH 70 C/E

72 C/E
CB 72 C/E

73 C/E

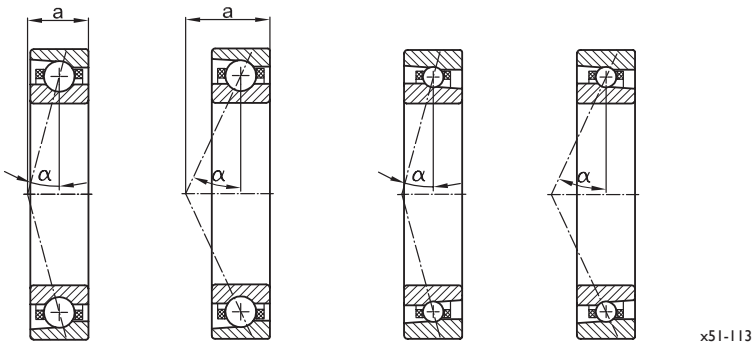

...C ...E H...C H...E

Basic dimensions d	D	B	Basic designation	Load ratings dyn. C_r	stat. C_{0r}	Fatigue limit load C_U (radial)	Speed grease n_G	oil/air n_O	Injection diameter d_{pi}	Direct oil lubrication	Sealing	Effective load centre a	Precision locknut
mm				N		N	min^{-1}		mm			mm	
55	72	9	71811.C	10,500	14,000	519	17,000	26,200	61.4			13	MBA 55
			CB 71811.C	10,500	9,800	363	22,100	34,000					
			71811.E	9,900	13,000	481	15,300	23,500	61.4			19	
			CB 71811.E	9,900	9,100	337	19,800	30,500					
	80	13	71911.C	19,300	18,000	667	17,500	26,300	65.0	o	o	16	MBA 55
			CB 71911.C	19,300	12,600	467	22,800	34,200		o	o		
			71911.CX	15,400	14,400	533	20,100	30,200	65.0	o	o	16	
			CB 71911.CX	15,400	10,000	370	26,200	39,300		o	o		
			71911.E	18,300	17,000	630	15,800	23,700	65.0	o	o	22	
			CB 71911.E	18,300	11,900	441	20,600	30,900		o	o		
			71911.EX	15,650	15,000	556	18,100	27,200	65.0	o	o	22	
			CB 71911.EX	15,650	10,500	389	23,600	35,400		o	o		
			H 71911.E	13,000	13,000	481	18,000	30,500	65.4	o	o	22	
			CBH 71911.E	13,000	9,100	337	23,400	39,700		o	o		
	90	18	7011.C	37,800	31,000	1,148	15,200	25,000	69.4	o	o	19	MBA 55
			CB 7011.C	37,800	21,700	804	19,800	32,500		o	o		
			7011.CX	28,300	25,000	926	17,800	28,500	69.4	o	o	19	
			CB 7011.CX	28,300	17,500	648	23,200	37,100		o	o		
			H 7011.C	18,800	19,100	707	20,500	32,000	68.7	o	o	19	
			CBH 7011.C	18,800	13,300	493	26,700	41,600		o	o		
			7011.E	36,500	29,300	1,085	13,700	22,500	69.4	o	o	26	
			CB 7011.E	36,500	20,500	759	17,900	29,300		o	o		
			7011.EX	27,100	23,500	870	16,100	25,700	69.4	o	o	26	
			CB 7011.EX	27,100	16,400	607	21,000	33,500		o	o		
			H 7011.E	17,800	17,800	659	18,500	28,800	68.7	o	o	26	
			CBH 7011.E	17,800	12,400	459	24,100	37,500		o	o		
	100	21	7211.C	53,000	40,000	148	15,300	22,800	73.1		o	21	MBA 55
			CB 7211.C	53,000	28,000	104	19,900	29,700			o		
			7211.E	51,000	38,500	1,426	13,800	20,600	72.0		o	29	
			CB 7211.E	51,000	26,900	996	18,000	26,800			o		

718 C/E
CB 718 C/E

719 C/E
CB 719 C/E
H 719 C/E
CBH 719 C/E

70 C/E
CB 70 C/E
H 70 C/E
CBH 70 C/E

72 C/E
CB 72 C/E

73 C/E

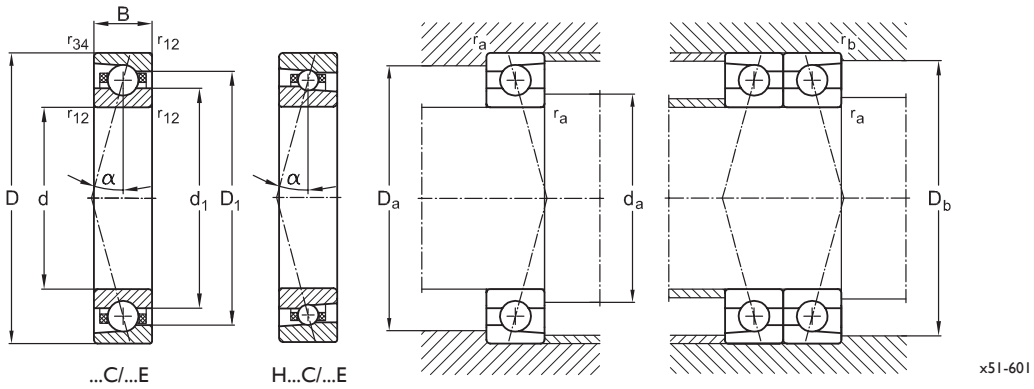

Basic dimensions			Basic designation	Dimensions				Weight	Mounting dimensions				
d	D	B		d_1	D_1	r_{12min}	r_{34min}	m	$d_{a,min}$	$D_{a,max}$	$D_{b,max}$	$r_{a,max}$	$r_{b,max}$
mm				mm				kg	mm				
55	72	9	71811.C	60.7	66.5	0.3	0.1	0.082	58.5	67.3	68.3	0.3	0.1
			CB 71811.C					0.075					
			71811.E	60.7	66.5	0.3	0.1	0.082	58.5	67.3	68.3	0.3	0.1
			CB 71811.E					0.075					
	80	13	71911.C	63.7	71.6	0.6	0.3	0.186	60.0	74.0	75.0	0.6	0.3
			CB 71911.C					0.171					
			71911.CX	63.7	71.6	0.6	0.3	0.186	60.0	74.0	75.0	0.6	0.3
			CB 71911.CX					0.171					
			71911.E	63.7	71.6	0.6	0.3	0.186	60.0	74.0	75.0	0.6	0.3
			CB 71911.E					0.171					
			71911.EX	63.7	71.6	0.6	0.3	0.186	60.0	74.0	75.0	0.6	0.3
			CB 71911.EX					0.171					
			H 71911.E	63.9	71.3	1.0	1.0	0.205	60.0	74.0	75.0	1.0	1.0
			CBH 71911.E					0.189					
	90	18	7011.C	67.4	78.5	1.1	0.6	0.390	61.0	82.8	84.8	1.1	0.6
			CB 7011.C					0.359					
			7011.CX	67.4	78.5	1.1	0.6	0.378	61.0	82.8	84.8	1.1	0.6
			CB 7011.CX					0.348					
			H 7011.C	68.2	77.0	1.1	1.1	0.431	61.0	82.8	84.8	1.1	1.1
			CBH 7011.C					0.397					
			7011.E	67.4	78.5	1.1	0.6	0.390	61.0	82.8	84.8	1.1	0.6
			CB 7011.E					0.359					
			7011.EX	67.4	78.5	1.1	0.6	0.378	61.0	82.8	84.8	1.1	0.6
			CB 7011.EX					0.348					
			H 7011.E	68.2	77.0	1.1	1.1	0.431	61.0	82.8	84.8	1.1	1.1
			CBH 7011.E					0.397					
	100	21	7211.C	70.1	85	1.5	1.0	0.630	63.3	91.7	91.7	1.5	1.0
			CB 7211.C					0.580					
			7211.E	70.1	85	1.5	1.0	0.630	63.3	91.7	91.7	1.5	1.0
			CB 7211.E					0.580					

718 C/E
CB 718 C/E

719 C/E
CB 719 C/E
H 719 C/E
CBH 719 C/E

70 C/E
CB 70 C/E
H 70 C/E
CBH 70 C/E

72 C/E
CB 72 C/E

73 C/E

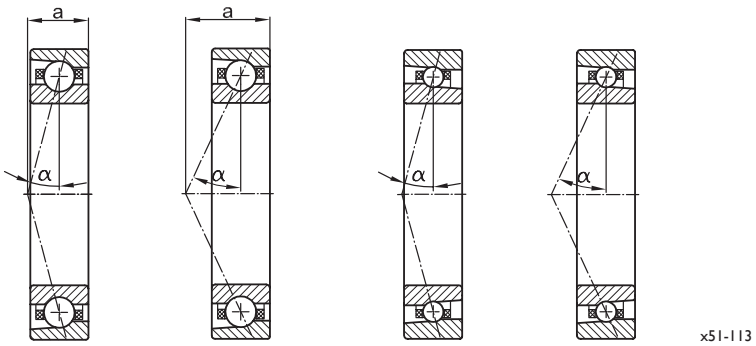

...C ...E H...C H...E

Basic dimensions d	D	B	Basic designation	Load ratings dyn. C_r	stat. C_{0r}	Fatigue limit load C_U (radial)	Speed grease n_G	oil/air n_O	Injection diameter d_{pi}	Direct oil lubrication	Sealing	Effective load centre a	Precision locknut
mm				N		N	min⁻¹		mm			mm	
60	78	10	71812.C	14,000	18,500	685	15,500	24,000	66.4			14	MBA 60
			CB 71812.C	14,000	13,000	481	20,100	31,200					
			71812.E	13,000	17,500	648	13,900	21,600	66.4			21	
			CB 71812.E	13,000	12,300	456	18,000	28,000					
	85	13	71912.C	19,500	18,800	696	16,000	24,500	70.3	o	o	16	MBA 60
			CB 71912.C	19,500	13,100	485	20,800	31,900		o	o		
			71912.CX	15,600	15,000	556	18,400	28,100	70.3	o	o	16	
			CB 71912.CX	15,600	10,500	389	24,000	36,600		o	o		
			71912.E	18,500	17,900	663	14,400	22,100	70.3	o	o	23	
			CB 71912.E	18,500	12,500	463	18,800	28,800		o	o		
			71912.EX	16,000	15,800	585	16,600	25,300	70.3	o	o	23	
			CB 71912.EX	16,000	11,000	407	21,600	32,900		o	o		
			H 71912.E	13,500	13,700	507	17,200	28,500	70.7	o	o	23	
			CBH 71912.E	13,500	9,500	352	22,400	37,100		o	o		
	95	18	7012.C	39,000	33,700	1,248	14,000	23,000	74.3	o	o	20	MBA 60
			CB 7012.C	39,000	23,500	870	18,200	29,900		o	o		
			7012.CX	29,200	27,100	1,004	16,700	26,900	74.3	o	o	20	
			CB 7012.CX	29,200	18,900	700	21,800	35,000		o	o		
			H 7012.C	19,500	20,500	759	19,500	30,800	73.7	o	o	20	
			CBH 7012.C	19,500	14,300	530	25,400	40,100		o	o		
			7012.E	36,500	31,800	1,178	12,600	20,700	74.3	o	o	27	
			CB 7012.E	36,500	22,200	822	16,400	27,000		o	o		
			7012.EX	27,500	25,400	941	15,100	24,300	74.3	o	o	27	
			CB 7012.EX	27,500	17,700	656	19,700	31,600		o	o		
			H 7012.E	18,500	19,000	704	17,600	27,800	73.7	o	o	27	
			CBH 7012.E	18,500	13,300	493	22,900	36,200		o	o		
	110	22	7212.C	64,000	49,000	1,815	13,800	20,600	80.1		o	23	MBA 60
			CB 7212.C	64,000	34,300	1,270	18,000	26,800			o		
			7212.E	61,000	47,000	1,741	12,500	18,600	79.0		o	31	
			CB 7212.E	61,000	32,900	1,219	16,300	24,200			o		

718 C/E
CB 718 C/E

719 C/E
CB 719 C/E
H 719 C/E
CBH 719 C/E

70 C/E
CB 70 C/E
H 70 C/E
CBH 70 C/E

72 C/E
CB 72 C/E

73 C/E

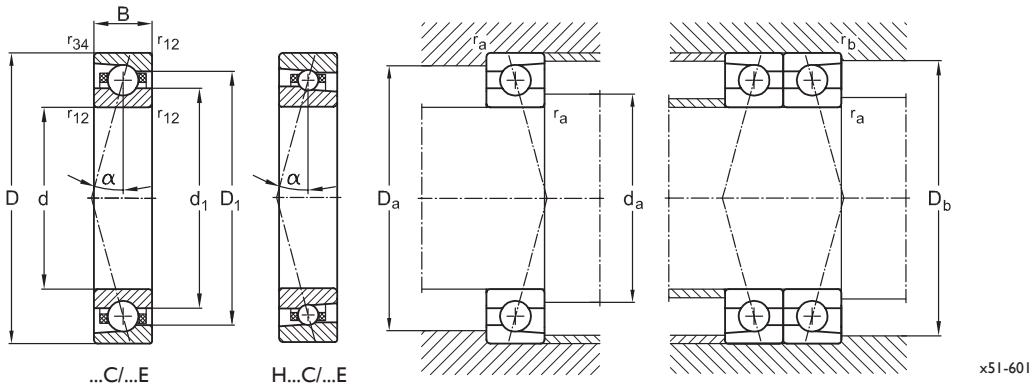

Basic dimensions			Basic designation	Dimensions				Weight	Mounting dimensions				
d	D	B		d_1	D_1	r_{12min}	r_{34min}	m	$d_{a,min}$	$D_{a,max}$	$D_{b,max}$	$r_{a,max}$	$r_{b,max}$
mm				mm				kg	mm				
60	78	10	71812.C	65.7	72.5	0.3	0.1	0.102	63.5	73.3	74.3	0.3	0.1
			CB 71812.C					0.094					
			71812.E	65.7	72.5	0.3	0.1	0.102	63.5	73.3	74.3	0.3	0.1
			CB 71812.E					0.094					
	85	13	71912.C	68.7	76.6	0.6	0.3	0.205	65.0	79.0	80.0	0.6	0.3
			CB 71912.C					0.189					
			71912.CX	68.7	76.6	0.6	0.3	0.205	65.0	79.0	80.0	0.6	0.3
			CB 71912.CX					0.189					
			71912.E	68.7	76.6	0.6	0.3	0.205	65.0	79.0	80.0	0.6	0.3
			CB 71912.E					0.189					
			71912.EX	68.7	76.6	0.6	0.3	0.205	65.0	79.0	80.0	0.6	0.3
			CB 71912.EX					0.189					
			H 71912.E	69.0	76.0	1.0	1.0	0.212	65.0	79.0	80.0	1.0	1.0
			CBH 71912.E					0.195					
	95	18	7012.C	72.1	83.1	1.1	0.6	0.420	67.0	88.0	90.0	1.1	0.6
			CB 7012.C					0.386					
			7012.CX	72.1	83.1	1.1	0.6	0.407	67.0	88.0	90.0	1.1	0.6
			CB 7012.CX					0.375					
			H 7012.C	73.2	82.0	1.1	1.1	0.458	67.0	88.0	90.0	1.1	1.1
			CBH 7012.C					0.421					
			7012.E	72.1	83.1	1.1	0.6	0.420	67.0	88.0	90.0	1.1	0.6
			CB 7012.E					0.386					
			7012.EX	72.1	83.1	1.1	0.6	0.407	67.0	88.0	90.0	1.1	0.6
			CB 7012.EX					0.375					
			H 7012.E	73.2	82.0	1.1	1.1	0.458	67.0	88.0	90.0	1.1	1.1
			CBH 7012.E					0.421					
	110	22	7212.C	76.8	93.4	1.5	1.0	0.800	69.7	101.2	100.2	1.5	1.0
			CB 7212.C					0.736					
			7212.E	76.8	93.4	1.5	1.0	0.800	69.7	101.2	100.2	1.5	1.0
			CB 7212.E					0.736					

718 C/E
CB 718 C/E

719 C/E
CB 719 C/E
H 719 C/E
CBH 719 C/E

70 C/E
CB 70 C/E
H 70 C/E
CBH 70 C/E

72 C/E
CB 72 C/E

73 C/E

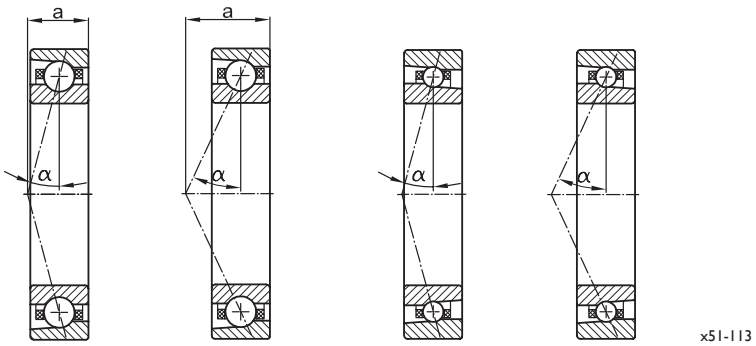

...C ...E H...C H...E

Basic dimensions d	D	B	Basic designation	Load ratings dyn. C_r	stat. C_{0r}	Fatigue limit load C_U (radial)	Speed grease n_G	oil/air n_O	Injection diameter d_{pi}	Direct oil lubrication	Sealing	Effective load centre a	Precision locknut
mm				N		N	min⁻¹		mm			mm	
65	85	10	71813.C	14,000	19,000	704	14,500	22,000	72.5			15	MBA 65
			CB 71813.C	14,000	13,300	493	18,800	28,600					
			71813.E	13,200	18,000	667	13,000	19,800	72.5			22	
			CB 71813.E	13,200	12,600	467	16,900	25,700					
	90	13	71913.C	20,500	20,800	770	15,000	23,000	75.2	o	o	17	MBA 65
			CB 71913.C	20,500	14,500	537	19,500	29,900		o	o		
			71913.CX	16,400	16,600	615	17,200	26,400	75.2	o	o	17	
			CB 71913.CX	16,400	11,600	430	22,400	34,400		o	o		
			71913.E	19,500	19,800	733	13,500	20,700	75.2	o	o	25	
			CB 71913.E	19,500	13,800	511	17,600	27,000		o	o		
			71913.EX	16,500	17,100	633	15,500	23,800	75.2	o	o	25	
			CB 71913.EX	16,500	11,900	441	20,200	31,000		o	o		
			H 71913.E	13,500	14,500	537	15,500	24,300	75.0	o	o	25	
			CBH 71913.E	13,500	10,100	374	20,200	31,600		o	o		
	100	18	7013.C	40,300	35,800	1,326	13,000	20,000	79.5	o	o	20	MBA 65
			CB 7013.C	40,300	25,000	926	16,900	26,000		o	o		
			7013.CX	30,000	28,600	1,059	15,200	24,000	79.5	o	o	20	
			CB 7013.CX	30,000	20,000	741	19,800	31,200		o	o		
			H 7013.C	19,800	21,500	796	17,500	28,000	78.8	o	o	20	
			CBH 7013.C	19,800	15,000	556	22,800	36,400		o	o		
			7013.E	38,000	33,600	1,244	11,700	18,000	79.5	o	o	28	
			CB 7013.E	38,000	23,500	870	15,300	23,400		o	o		
			7013.EX	28,500	26,900	996	13,700	21,600	79.5	o	o	28	
			CB 7013.EX	28,500	18,800	696	17,900	28,100		o	o		
			H 7013.E	19,000	20,200	748	15,800	25,200	78.8	o	o	28	
			CBH 7013.E	19,000	14,100	522	20,600	32,800		o	o		
	120	23	7213.C	73,200	58,800	2,178	12,700	19,500	88.0		o	24	MBA 65
			CB 7213.C	73,200	41,100	1,522	16,600	25,400			o		
			7213.E	70,000	56,500	2,093	11,500	17,600	86.2		o	33	
			CB 7213.E	70,000	39,500	1,463	15,000	22,900			o		

718 C/E
CB 718 C/E

719 C/E
CB 719 C/E
H 719 C/E
CBH 719 C/E

70 C/E
CB 70 C/E
H 70 C/E
CBH 70 C/E

72 C/E
CB 72 C/E

73 C/E

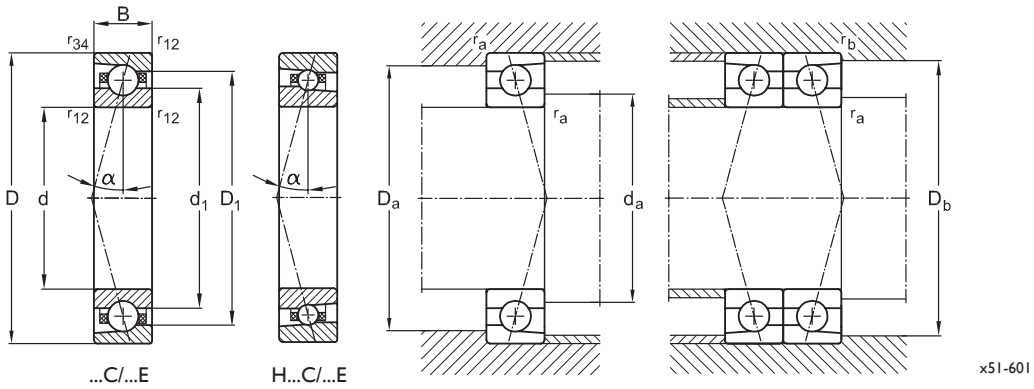

Basic dimensions d	D	B	Basic designation	Dimensions d_1	D_1	r_{12min}	r_{34min}	Weight m	Mounting dimensions $d_{a,min}$	$D_{a,max}$	$D_{b,max}$	$r_{a,max}$	$r_{b,max}$
mm				mm				kg	mm				
65	85	10	71813.C	71.7	78.5	0.6	0.3	0.124	69.5	79.0	80.3	0.6	0.3
			CB 71813.C					0.114					
			71813.E	71.7	78.5	0.6	0.3	0.124	69.5	79.0	80.3	0.6	0.3
			CB 71813.E					0.114					
	90	13	71913.C	73.7	81.5	0.6	0.3	0.215	70.0	84.0	84.8	0.6	0.3
			CB 71913.C					0.198					
			71913.CX	73.7	81.5	0.6	0.3	0.215	70.0	84.0	84.8	0.6	0.3
			CB 71913.CX					0.198					
			71913.E	73.7	81.5	0.6	0.3	0.215	70.0	84.0	84.8	0.6	0.3
			CB 71913.E					0.198					
			71913.EX	73.7	81.5	0.6	0.3	0.215	70.0	84.0	84.8	0.6	0.3
			CB 71913.EX					0.198					
			H 71913.E	73.2	81.0	1.0	1.0	0.230	70.0	84.0	84.8	1.0	1.0
			CBH 71913.E					0.212					
	100	18	7013.C	77.2	88.3	1.1	0.6	0.445	72.0	92.9	95.1	1.1	0.6
			CB 7013.C					0.409					
			7013.CX	77.2	88.3	1.1	0.6	0.432	72.0	92.9	95.1	1.1	0.6
			CB 7013.CX					0.397					
			H 7013.C	78.2	87.0	1.1	1.1	0.481	72.0	92.9	95.1	1.1	1.1
			CBH 7013.C					0.443					
			7013.E	77.2	88.3	1.1	0.6	0.445	72.0	92.9	95.1	1.1	0.6
			CB 7013.E					0.409					
			7013.EX	77.2	88.3	1.1	0.6	0.432	72.0	92.9	95.1	1.1	0.6
			CB 7013.EX					0.397					
			H 7013.E	78.2	87.0	1.1	1.1	0.481	72.0	92.9	95.1	1.1	1.1
			CBH 7013.E					0.443					
	120	23	7213.C	84.4	101.8	1.5	1.0	1.010	75.8	109.2	109	1.5	1.0
			CB 7213.C					0.929					
			7213.E	84.4	101.8	1.5	1.0	1.010	75.8	109.2	109	1.5	1.0
			CB 7213.E					0.929					

718 C/E
CB 718 C/E

719 C/E
CB 719 C/E
H 719 C/E
CBH 719 C/E

70 C/E
CB 70 C/E
H 70 C/E
CBH 70 C/E

72 C/E
CB 72 C/E

73 C/E

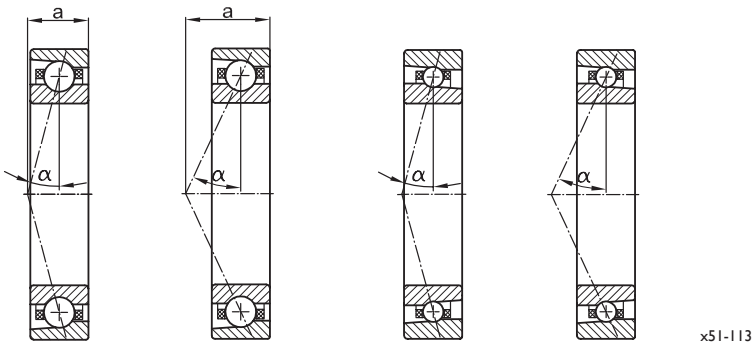

...C ...E H...C H...E

Basic dimensions			Basic designation	Load ratings dyn.	stat.	Fatigue limit load	Speed grease	oil/air	Injection diameter	Direct oil lubrication	Sealing	Effective load centre	Precision locknut
d	D	B		C_r	C_{0r}	C_U (radial)	n_G	n_O	d_{pi}			a	
mm				N		N	min^{-1}		mm			mm	
70	90	10	71814.C	14,500	20,500	759	13,500	20,700	77.5			16	MBA 70
			CB 71814.C	14,500	14,400	533	17,500	26,900					
			71814.E	13,500	20,000	741	12,100	18,600	77.5			24	
			CB 71814.E	13,500	14,000	519	15,700	24,100					
	100	16	71914.C	28,500	28,000	1,037	13,800	21,000	77.5	o	o	19	MBA 70
			CB 71914.C	28,500	19,600	726	18,000	27,300		o	o		
			71914.CX	22,800	22,400	830	15,800	24,100	77.5	o	o	19	
			CB 71914.CX	22,800	15,600	578	20,600	31,400		o	o		
			71914.E	26,800	26,500	981	12,500	18,900	77.5	o	o	28	
			CB 71914.E	26,800	18,500	685	16,300	24,600		o	o		
			71914.EX	22,150	22,700	841	14,300	21,700	80.9	o	o	28	
			CB 71914.EX	22,150	15,800	585	18,600	28,300		o	o		
			H 71914.E	17,500	19,000	704	14,500	22,500	82.9	o	o	28	
			CBH 71914.E	17,500	13,300	493	18,900	29,300		o	o		
	110	20	7014.C	50,500	43,500	1,611	12,500	19,800	86.3	o	o	22	MBA 70
			CB 7014.C	50,500	30,400	1,126	16,300	25,800		o	o		
			7014.CX	38,400	35,900	1,330	14,200	23,400	86.3	o	o	22	
			CB 7014.CX	38,400	25,100	930	18,500	30,500		o	o		
			H 7014.C	26,400	28,300	1,048	16,000	27,000	85.5	o	o	22	
			CBH 7014.C	26,400	19,800	733	20,800	35,100		o	o		
			7014.E	46,500	41,500	1,537	11,300	17,900	86.3	o	o	31	
			CB 7014.E	46,500	29,000	1,074	14,700	23,300		o	o		
			7014.EX	35,600	33,800	1,252	12,800	21,100	86.3	o	o	31	
			CB 7014.EX	35,600	23,600	874	16,700	27,500		o	o		
			H 7014.E	24,700	26,200	970	14,400	24,300	85.5	o	o	31	
			CBH 7014.E	24,700	18,300	678	18,800	31,600		o	o		
	125	24	7214.C	79,300	64,800	2,400	12,200	19,000	92.2		o	25	MBA 70
			CB 7214.C	79,300	45,300	1,678	15,900	24,700			o		
			7214.E	76,300	61,800	2,289	11,000	17,100	90.9		o	35	
			CB 7214.E	76,300	43,200	1,600	14,300	22,300			o		

718 C/E
CB 718 C/E

719 C/E
CB 719 C/E
H 719 C/E
CBH 719 C/E

70 C/E
CB 70 C/E
H 70 C/E
CBH 70 C/E

72 C/E
CB 72 C/E

73 C/E

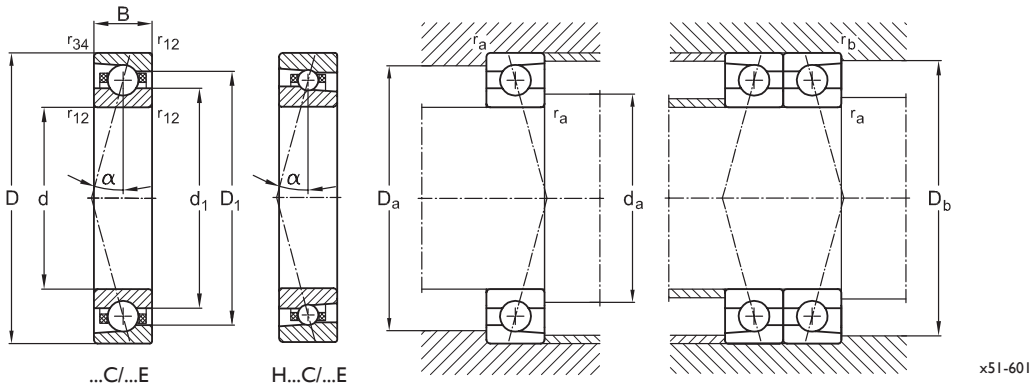

Basic dimensions			Basic designation	Dimensions				Weight	Mounting dimensions				
d	D	B		d_1	D_1	r_{12min}	r_{34min}	m	$d_{a,min}$	$D_{a,max}$	$D_{b,max}$	$r_{a,max}$	$r_{b,max}$
mm				mm				kg	mm				
70	90	10	71814.C	76.7	83.5	0.6	0.3	0.136	74.5	84.0	85.3	0.6	0.3
			CB 71814.C					0.125					
			71814.E	76.7	83.5	0.6	0.3	0.136	74.5	84.0	85.3	0.6	0.3
			CB 71814.E					0.125					
	100	16	71914.C	80.4	89.8	0.6	0.3	0.345	76.0	94.0	94.8	0.6	0.3
			CB 71914.C					0.317					
			71914.CX	80.4	89.8	0.6	0.3	0.345	76.0	94.0	94.8	0.6	0.3
			CB 71914.CX					0.317					
			71914.E	80.4	89.8	0.6	0.3	0.345	76.0	94.0	94.8	0.6	0.3
			CB 71914.E					0.317					
			71914.EX	80.4	89.8	0.6	0.3	0.345	76.0	94.0	94.8	0.6	0.3
			CB 71914.EX					0.317					
			H 71914.E	80.9	89.3	1.0	1.0	0.368	76.0	94.0	94.8	1.0	1.0
			CBH 71914.E					0.339					
	110	20	7014.C	83.8	96.4	1.1	0.6	0.620	77.0	102.7	105.1	1.1	0.6
			CB 7014.C					0.570					
			7014.CX	83.8	96.4	1.1	0.6	0.601	77.0	102.7	105.1	1.1	0.6
			CB 7014.CX					0.553					
			H 7014.C	84.9	95.4	1.1	1.1	0.670	77.0	102.7	105.1	1.1	1.1
			CBH 7014.C					0.616					
			7014.E	83.8	96.4	1.1	0.6	0.620	77.0	102.7	105.1	1.1	0.6
			CB 7014.E					0.570					
			7014.EX	83.8	96.4	1.1	0.6	0.601	77.0	102.7	105.1	1.1	0.6
			CB 7014.EX					0.553					
			H 7014.E	84.9	95.4	1.1	1.1	0.670	77.0	102.7	105.1	1.1	1.1
			CBH 7014.E					0.616					
	125	24	7214.C	88.4	106.6	1.5	1.0	1.110	80.3	114.7	114	1.5	1.0
			CB 7214.C					1.021					
			7214.E	88.4	106.6	1.5	1.0	1.110	80.3	114.7	114	1.5	1.0
			CB 7214.E					1.021					

718 C/E
CB 718 C/E

719 C/E
CB 719 C/E
H 719 C/E
CBH 719 C/E

70 C/E
CB 70 C/E
H 70 C/E
CBH 70 C/E

72 C/E
CB 72 C/E

73 C/E

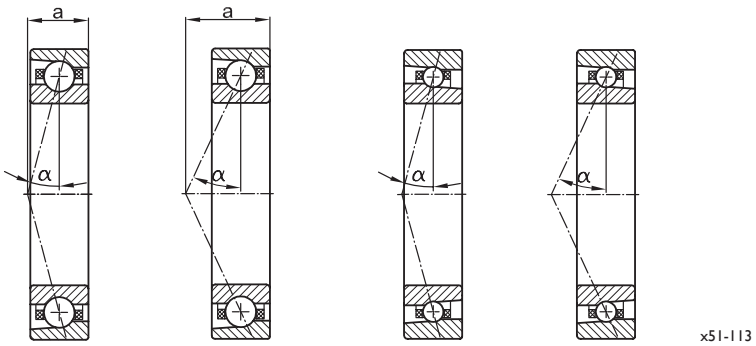

...C ...E H...C H...E

Basic dimensions d	D	B	Basic designation	Load ratings dyn. C_r	stat. C_{0r}	Fatigue limit load C_U (radial)	Speed grease n_G	oil/air n_O	Injection diameter d_{pi}	Direct oil lubrication	Sealing	Effective load centre a	Precision locknut
mm				N		N	min⁻¹		mm			mm	
75	95	10	71815.C	15,000	22,000	815	12,500	19,500	82.5			16	MBA 75
			CB 71815.C	15,000	15,400	570	16,200	25,300					
			71815.E	14,000	21,000	778	11,200	17,500	82.5			25	
			CB 71815.E	14,000	14,700	544	14,500	22,700					
	105	16	71915.C	29,000	29,500	1,093	13,000	19,800	87.2	o	o	20	MBA 75
			CB 71915.C	29,000	20,600	763	16,900	25,800		o	o		
			71915.CX	23,200	23,600	874	14,900	22,700	87.2	o	o	20	
			CB 71915.CX	23,200	16,500	611	19,400	29,600		o	o		
			71915.E	27,000	28,000	1,037	11,700	17,900	87.2	o	o	29	
			CB 71915.E	27,000	19,600	726	15,300	23,300		o	o		
			71915.EX	21,600	22,400	830	13,500	20,500	87.2	o	o	29	
			CB 71915.EX	21,600	15,600	578	17,600	26,700		o	o		
	115	20	7015.C	51,000	46,500	1,722	12,500	19,000	91.8	o	o	23	MBA 75
			CB 7015.C	51,000	32,500	1,204	16,300	24,700		o	o		
			7015.CX	38,700	37,700	1,396	13,600	21,600	91.8	o	o	23	
			CB 7015.CX	38,700	26,300	974	17,700	28,100		o	o		
			H 7015.C	26,500	29,000	1,074	14,800	24,200	90.9	o	o	23	
			CBH 7015.C	26,500	20,300	752	19,300	31,500		o	o		
			7015.E	48,000	44,000	1,630	11,300	17,100	91.8	o	o	32	
			CB 7015.E	48,000	30,800	1,141	14,700	22,300		o	o		
			7015.EX	36,600	35,500	1,315	12,300	19,500	91.8	o	o	32	
			CB 7015.EX	36,600	24,800	919	16,000	25,400		o	o		
			H 7015.E	25,200	27,100	1,004	13,400	21,800	90.9	o	o	32	
			CBH 7015.E	25,200	18,900	700	17,500	28,400		o	o		
	130	25	7215.C	83,000	70,000	2,593	11,600	17,500	97.4		o	26	MBA 75
			CB 7215.C	83,000	49,000	1,815	15,100	22,800			o		
			7215.E	79,000	66,500	2,463	10,500	15,800	95.9		o	37	
			CB 7215.E	79,000	46,500	1,722	13,700	20,600			o		

718 C/E
CB 718 C/E

719 C/E
CB 719 C/E
H 719 C/E
CBH 719 C/E

70 C/E
CB 70 C/E
H 70 C/E
CBH 70 C/E

72 C/E
CB 72 C/E

73 C/E

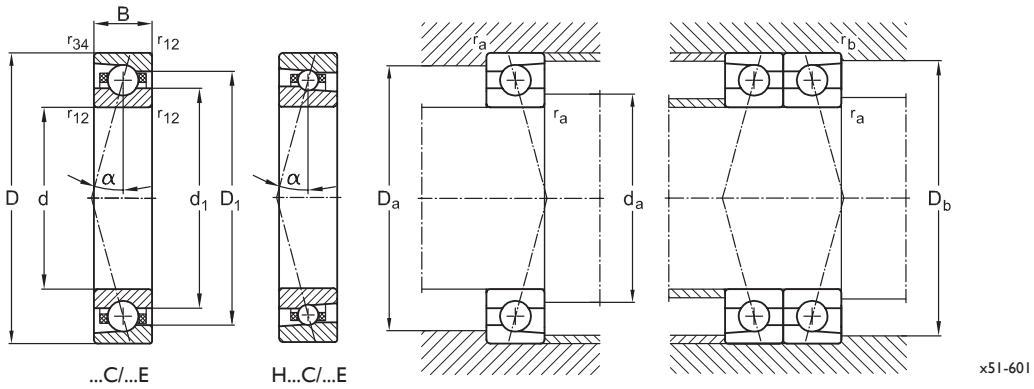

Basic dimensions			Basic designation	Dimensions				Weight	Mounting dimensions				
d	D	B		d_1	D_1	r_{12min}	r_{34min}	m	$d_{a,min}$	$D_{a,max}$	$D_{b,max}$	$r_{a,max}$	$r_{b,max}$
mm				mm				kg	mm				
75	95	10	71815.C	81.7	88.5	0.6	0.3	0.142	79.5	89.0	90.3	0.6	0.3
			CB 71815.C					0.131					
			71815.E	81.7	88.5	0.6	0.3	0.142	79.5	89.0	90.3	0.6	0.3
			CB 71815.E					0.131					
	105	16	71915.C	85.4	94.8	1.0	0.3	0.370	81.0	99.0	99.9	1.0	0.3
			CB 71915.C					0.340					
			71915.CX	85.4	94.8	1.0	0.3	0.370	81.0	99.0	99.9	1.0	0.3
			CB 71915.CX					0.340					
			71915.E	85.4	94.8	1.0	0.3	0.370	81.0	99.0	99.9	1.0	0.3
			CB 71915.E					0.340					
			71915.EX	85.4	94.8	1.0	0.3	0.370	81.0	99.0	99.9	1.0	0.3
			CB 71915.EX					0.340					
	115	20	7015.C	89.1	101.8	1.1	0.6	0.660	82.0	108.1	110.0	1.1	0.6
			CB 7015.C					0.607					
			7015.CX	89.1	101.8	1.1	0.6	0.640	82.0	108.1	110.0	1.1	0.6
			CB 7015.CX					0.589					
			H 7015.C	90.2	100.1	1.1	1.1	0.710	82.0	108.1	110.0	1.1	1.1
			CBH 7015.C					0.653					
			7015.E	89.1	101.8	1.1	0.6	0.660	82.0	108.1	110.0	1.1	0.6
			CB 7015.E					0.607					
			7015.EX	89.1	101.8	1.1	0.6	0.640	82.0	108.1	110.0	1.1	0.6
			CB 7015.EX					0.589					
			H 7015.E	90.2	100.1	1.1	1.1	0.710	82.0	108.1	110.0	1.1	1.1
			CBH 7015.E					0.653					
	130	25	7215.C	93.4	111.6	1.5	1.0	1.220	85.3	119.7	119.0	1.5	1.0
			CB 7215.C					1.122					
			7215.E	93.4	111.6	1.5	1.0	1.220	85.3	119.7	119.0	1.5	1.0
			CB 7215.E					1.122					

718 C/E
CB 718 C/E

719 C/E
CB 719 C/E
H 719 C/E
CBH 719 C/E

70 C/E
CB 70 C/E
H 70 C/E
CBH 70 C/E

72 C/E
CB 72 C/E

73 C/E

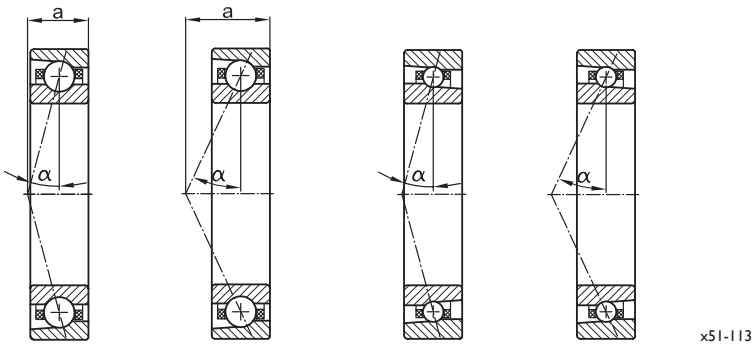

...C ...E H...C H...E

Basic dimensions d	D	B	Basic designation	Load ratings dyn. C_r	stat. C_{0r}	Fatigue limit load C_U (radial)	Speed grease n_G	oil/air n_O	Injection diameter d_{pi}	Direct oil lubrication	Sealing	Effective load centre a	Precision locknut
mm				N		N	min⁻¹		mm			mm	
80	100	10	71816.C	15,000	24,000	889	11,500	18,000	87.6			17	MBA 80
			CB 71816.C	15,000	16,800	622	14,900	23,400					
			71816.E	14,100	22,000	815	10,300	16,200	87.6			26	
			CB 71816.E	14,100	15,400	570	13,300	21,000					
	110	16	71916.C	29,500	31,000	1,148	12,500	18,800	92.3	o	o	21	MBA 80
			CB 71916.C	29,500	21,700	804	16,300	24,500		o	o		
			71916.CX	23,600	24,800	919	14,300	21,600	92.3	o	o	21	
			CB 71916.CX	23,600	17,300	641	18,600	28,100		o	o		
			71916.E	27,500	29,300	1,085	11,300	17,000	92.3	o	o	30	
			CB 71916.E	27,500	20,500	759	14,700	22,100		o	o		
			71916.EX	22,000	23,400	867	12,900	19,500	92.3	o	o	30	
			CB 71916.EX	22,000	16,300	604	16,800	25,400		o	o		
	125	22	7016.C	62,500	58,000	2,148	11,300	18,000	98.4	o	o	25	MBA 80
			CB 7016.C	62,500	40,600	1,504	14,700	23,400		o	o		
			7016.CX	47,100	46,300	1,715	12,600	20,000	98.4	o	o	25	
			CB 7016.CX	47,100	32,400	1,200	16,400	26,000		o	o		
			H 7016.C	31,700	34,700	1,285	14,000	22,000	97.6	o	o	25	
			CBH 7016.C	31,700	24,200	896	18,200	28,600		o	o		
			7016.E	59,500	55,000	2,037	10,200	16,200	98.4	o	o	35	
			CB 7016.E	59,500	38,500	1,426	13,300	21,100		o	o		
			7016.EX	31,200	43,700	1,619	11,400	18,000	98.4	o	o	35	
			CB 7016.EX	31,200	30,500	1,130	14,900	23,400		o	o		
			H 7016.E	30,000	32,500	1,204	12,600	19,800	97.6	o	o	35	
			CBH 7016.E	30,000	22,700	841	16,400	25,800		o	o		
	140	26	7216.C	93,200	77,600	2,874	10,700	16,500	106.0			28	MBA 80
			CB 7216.C	93,200	54,300	2,011	14,000	21,500					
			7216.E	88,700	74,200	2,748	9,700	14,900	102.8			39	
			CB 7216.E	88,700	51,900	1,922	12,700	19,400					

718 C/E
CB 718 C/E

719 C/E
CB 719 C/E
H 719 C/E
CBH 719 C/E

70 C/E
CB 70 C/E
H 70 C/E
CBH 70 C/E

72 C/E
CB 72 C/E

73 C/E

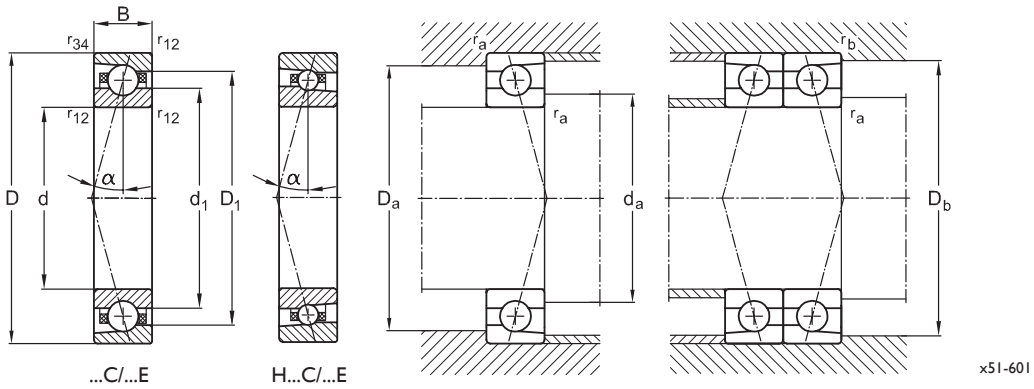

Basic dimensions			Basic designation	Dimensions				Weight	Mounting dimensions				
d	D	B		d_1	D_1	r_{12min}	r_{34min}	m	$d_{a,min}$	$D_{a,max}$	$D_{b,max}$	$r_{a,max}$	$r_{b,max}$
mm				mm				kg	mm				
80	100	10	71816.C	86.7	93.5	0.6	0.3	0.150	84.5	94.0	95.3	0.6	0.3
			CB 71816.C					0.138					
			71816.E	86.7	93.5	0.6	0.3	0.150	84.5	94.0	95.3	0.6	0.3
			CB 71816.E					0.138					
	110	16	71916.C	90.4	99.7	1.0	0.3	0.390	86.0	104.0	104.8	1.0	0.3
			CB 71916.C					0.359					
			71916.CX	90.4	99.7	1.0	0.3	0.390	86.0	104.0	104.8	1.0	0.3
			CB 71916.CX					0.359					
			71916.E	90.4	99.7	1.0	0.3	0.390	86.0	104.0	104.8	1.0	0.3
			CB 71916.E					0.359					
			71916.EX	90.4	99.7	1.0	0.3	0.390	86.0	104.0	104.8	1.0	0.3
			CB 71916.EX					0.359					
	125	22	7016.C	95.5	109.7	1.1	0.6	0.880	88.0	118.0	120.0	1.1	0.6
			CB 7016.C					0.810					
			7016.CX	95.5	109.7	1.1	0.6	0.854	88.0	118.0	120.0	1.1	0.6
			CB 7016.CX					0.785					
			H 7016.C	96.9	108.1	1.1	1.1	0.955	88.0	118.0	120.0	1.1	1.1
			CBH 7016.C					0.879					
			7016.E	95.5	109.7	1.1	0.6	0.880	88.0	118.0	120.0	1.1	0.6
			CB 7016.E					0.810					
			7016.EX	95.5	109.7	1.1	0.6	0.854	88.0	118.0	120.0	1.1	0.6
			CB 7016.EX					0.785					
			H 7016.E	96.9	108.1	1.1	1.1	0.955	88.0	118.0	120.0	1.1	1.1
			CBH 7016.E					0.879					
	140	26	7216.C	101.7	121.5	2.0	1.0	1.450	94.4	125.6	125.0	2.0	1.0
			CB 7216.C					1.334					
			7216.E	101.7	121.5	2.0	1.0	1.450	94.4	125.6	125.0	2.0	1.0
			CB 7216.E					1.334					

718 C/E
CB 718 C/E

719 C/E
CB 719 C/E
H 719 C/E
CBH 719 C/E

70 C/E
CB 70 C/E
H 70 C/E
CBH 70 C/E

72 C/E
CB 72 C/E

73 C/E

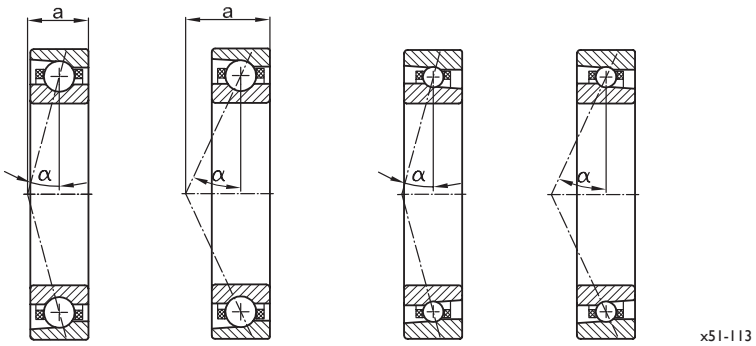

...C ...E H...C H...E

Basic dimensions d	D	B	Basic designation	Load ratings dyn. C_r	stat. C_{0r}	Fatigue limit load C_U (radial)	Speed grease n_G	oil/air n_O	Injection diameter d_{pi}	Direct oil lubrication	Sealing	Effective load centre a	Precision locknut
mm				N		N	min^{-1}		mm			mm	
85	110	13	71817.C	22,100	32,500	1,204	11,000	16,500	94.3			20	MBA 85
			CB 71817.C	22,100	22,800	844	14,300	21,400					
			71817.E	21,000	31,000	1,148	9,900	14,800	94.3			29	
			CB 71817.E	21,000	21,700	804	12,800	19,200					
	120	18	71917.C	39,500	41,000	1,519	11,800	17,500	99.1	o	o	23	MBA 85
			CB 71917.C	39,500	28,700	1,063	15,400	22,800		o	o		
			71917.CX	31,600	32,800	1,215	13,500	20,100	99.1	o	o	23	
			CB 71917.CX	31,600	22,900	848	17,600	26,200		o	o		
			71917.E	37,000	39,000	1,444	10,700	15,800	99.1	o	o	33	
			CB 71917.E	37,000	27,300	1,011	14,000	20,600		o	o		
			71917.EX	29,600	31,200	1,156	12,200	18,100	99.1	o	o	33	
			CB 71917.EX	29,600	21,800	807	15,900	23,600		o	o		
	130	22	7017.C	62,000	60,000	2,222	11,000	16,800	104.1	o	o	26	MBA 85
			CB 7017.C	62,000	42,000	1,556	14,300	21,900		o	o		
			7017.CX	47,100	48,000	1,778	12,100	18,400	104.1	o	o	26	
			CB 7017.CX	47,100	33,600	1,244	15,800	24,000		o	o		
			H 7017.C	32,200	36,000	1,333	13,200	20,100	102.7	o	o	26	
			CBH 7017.C	32,200	25,200	933	17,200	26,200		o	o		
			7017.E	59,000	57,000	2,111	9,900	15,200	104.1	o	o	36	
			CB 7017.E	59,000	39,900	1,478	12,900	19,800		o	o		
			7017.EX	44,500	45,400	1,681	10,900	16,600	104.1	o	o	36	
			CB 7017.EX	44,500	31,700	1,174	14,200	21,600		o	o		
			H 7017.E	30,000	33,800	1,252	11,900	18,100	102.7	o	o	36	
			CBH 7017.E	30,000	23,600	874	15,500	23,600		o	o		
	150	28	7217.C	107,000	90,500	3,352	10,300	15,400	111.9			30	MBA 85
			CB 7217.C	107,000	63,300	2,344	13,400	20,100					
			7217.E	102,000	86,500	3,204	9,300	13,900	109.8			42	
			CB 7217.E	102,000	60,500	2,241	12,100	18,100					

718 C/E
CB 718 C/E

719 C/E
CB 719 C/E
H 719 C/E
CBH 719 C/E

70 C/E
CB 70 C/E
H 70 C/E
CBH 70 C/E

72 C/E
CB 72 C/E

73 C/E

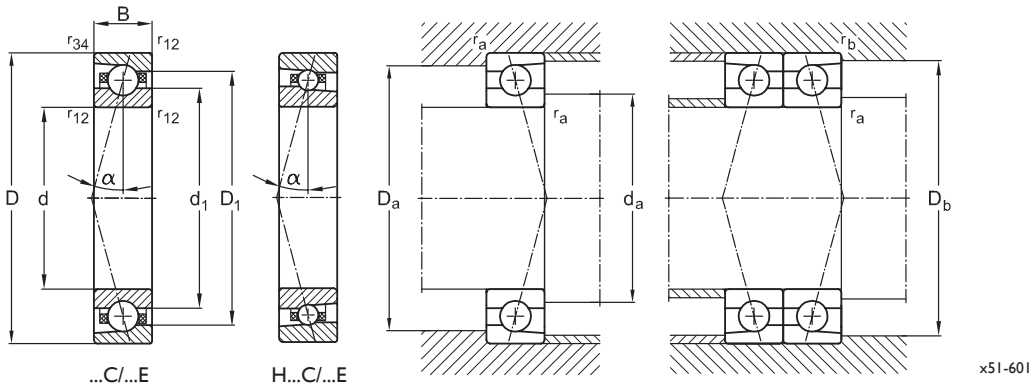

Basic dimensions			Basic designation	Dimensions				Weight	Mounting dimensions				
d	D	B		d_1	D_1	r_{12min}	r_{34min}	m	$d_{a,min}$	$D_{a,max}$	$D_{b,max}$	$r_{a,max}$	$r_{b,max}$
mm				mm				kg	mm				
85	110	13	71817.C	93.2	102.1	1.0	0.3	0.268	90.5	104.0	104.3	1.0	0.3
			CB 71817.C					0.247					
			71817.E	93.2	102.1	1.0	0.3	0.268	90.5	104.0	104.3	1.0	0.3
			CB 71817.E					0.247					
	120	18	71917.C	97.1	108.2	1.1	0.6	0.555	92.0	113.0	114.8	1.1	0.6
			CB 71917.C					0.511					
			71917.CX	97.1	108.2	1.1	0.6	0.555	92.0	113.0	114.8	1.1	0.6
			CB 71917.CX					0.511					
			71917.E	97.1	108.2	1.1	0.6	0.555	92.0	113.0	114.8	1.1	0.6
			CB 71917.E					0.511					
			71917.EX	97.1	108.2	1.1	0.6	0.555	92.0	113.0	114.8	1.1	0.6
			CB 71917.EX					0.511					
	130	22	7017.C	101.0	115.3	1.1	0.6	0.920	93.0	122.8	124.8	1.1	0.6
			CB 7017.C					0.846					
			7017.CX	101.0	115.3	1.1	0.6	0.892	93.0	122.8	124.8	1.1	0.6
			CB 7017.CX					0.821					
			H 7017.C	101.9	113.1	1.1	1.1	0.988	93.0	122.8	124.8	1.1	1.1
			CBH 7017.C					0.909					
			7017.E	101.0	115.3	1.1	0.6	0.920	93.0	122.8	124.8	1.1	0.6
			CB 7017.E					0.846					
			7017.EX	101.0	115.3	1.1	0.6	0.892	93.0	122.8	124.8	1.1	0.6
			CB 7017.EX					0.821					
			H 7017.E	101.9	113.1	1.1	1.1	0.988	93.0	122.8	124.8	1.1	1.1
			CBH 7017.E					0.909					
	150	28	7217.C	107.3	127.9	2.0	1.0	1.880	98.4	137.6	137.0	2.0	1.0
			CB 7217.C					1.730					
			7217.E	107.3	127.9	2.0	1.0	1.880	98.4	137.6	137.0	2.0	1.0
			CB 7217.E					1.730					

718 C/E
CB 718 C/E

719 C/E
CB 719 C/E
H 719 C/E
CBH 719 C/E

70 C/E
CB 70 C/E
H 70 C/E
CBH 70 C/E

72 C/E
CB 72 C/E

73 C/E

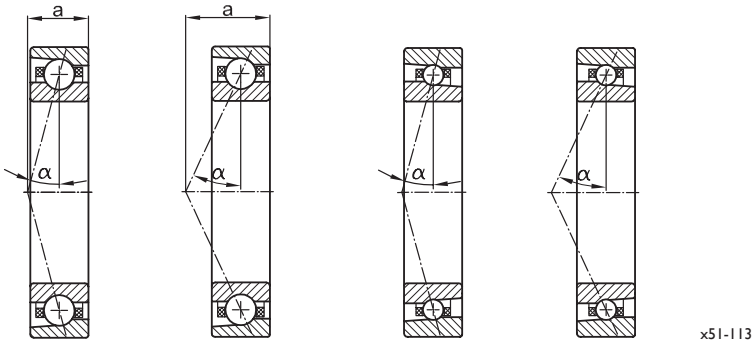

...C ...E H...C H...E

Basic dimensions d	D	B	Basic designation	Load ratings dyn. C_r	stat. C_{0r}	Fatigue limit load C_U (radial)	Speed grease n_G	oil/air n_O	Injection diameter d_{pi}	Direct oil lubrication	Sealing	Effective load centre a	Precision locknut
mm				N		N	min⁻¹		mm			mm	
90	115	13	71818.C	22,500	34,000	1,259	10,000	15,500	99.3			20	MBA 90
			CB 71818.C	22,500	23,800	881	13,000	20,100					
			71818.E	21,000	32,000	1,185	9,000	13,900	99.3			30	
			CB 71818.E	21,000	22,400	830	11,700	18,000					
	125	18	71918.C	42,000	46,500	1,722	11,000	16,500	104.5	o	o	23	MBA 90
			CB 71918.C	42,000	32,500	1,204	14,300	21,500		o	o		
			71918.CX	33,600	37,200	1,378	12,600	18,900	104.5	o	o	23	
			CB 71918.CX	33,600	26,000	963	16,400	24,600		o	o		
			71918.E	40,000	44,000	1,630	9,900	14,900	104.5	o	o	34	
			CB 71918.E	40,000	30,800	1,141	12,900	19,400		o	o		
			71918.EX	32,000	35,200	1,304	11,400	17,100	104.5	o	o	34	
			CB 71918.EX	32,000	24,600	911	14,900	22,300		o	o		
	140	24	7018.C	76,300	71,800	2,659	9,600	16,500	111.4	o	o	28	MBA 90
			CB 7018.C	76,300	50,200	1,859	12,500	21,500		o	o		
			7018.CX	56,800	57,400	2,126	10,800	17,700	111.4	o	o	28	
			CB 7018.CX	56,800	40,100	1,485	14,100	23,100		o	o		
			H 7018.C	37,300	43,000	1,593	12,000	19,000	109.7	o	o	28	
			CBH 7018.C	37,300	30,100	1,115	15,600	24,700		o	o		
			7018.E	72,500	68,000	2,519	8,700	14,900	111.4	o	o	39	
			CB 7018.E	72,500	47,600	1,763	11,400	19,400		o	o		
			7018.EX	54,000	54,000	2,000	9,800	16,000	111.4	o	o	39	
			CB 7018.EX	54,000	37,800	1,400	12,800	20,800		o	o		
			H 7018.E	35,500	40,000	1,481	10,800	17,100	109.7	o	o	39	
			CBH 7018.E	35,500	28,000	1,037	14,100	22,300		o	o		
	160	30	7218.C	124,000	106,000	3,926	10,000	15,000	120.2			32	MBA 90
			CB 7218.C	124,000	74,200	2,748	13,000	19,500					
			7218.E	118,000	101,000	3,741	9,000	13,500	116.7			44	
			CB 7218.E	118,000	70,700	2,619	11,700	17,600					

718 C/E
CB 718 C/E

719 C/E
CB 719 C/E
H 719 C/E
CBH 719 C/E

70 C/E
CB 70 C/E
H 70 C/E
CBH 70 C/E

72 C/E
CB 72 C/E

73 C/E

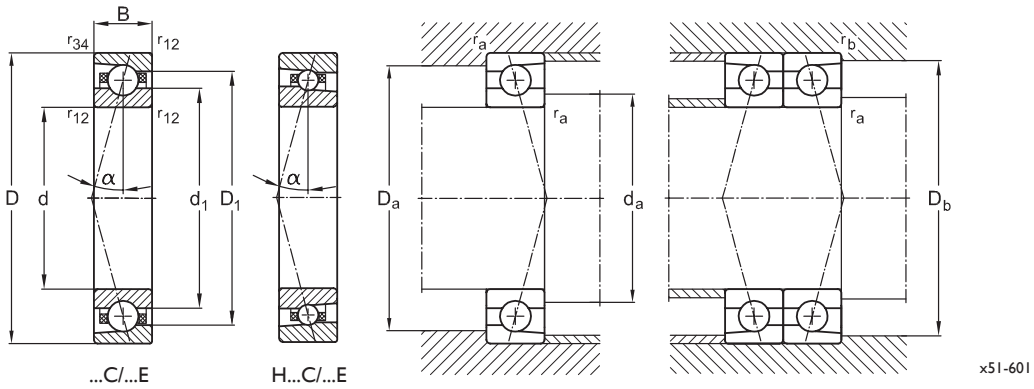

Basic dimensions			Basic designation	Dimensions				Weight	Mounting dimensions				
d	D	B		d_1	D_1	r_{12min}	r_{34min}	m	$d_{a,min}$	$D_{a,max}$	$D_{b,max}$	$r_{a,max}$	$r_{b,max}$
mm				mm				kg	mm				
90	115	13	71818.C	98.2	107.1	1.0	0.3	0.230	95.5	108.0	109.3	1.0	0.3
			CB 71818.C					0.212					
			71818.E	98.2	107.1	1.0	0.3	0.230	95.5	108.0	109.3	1.0	0.3
			CB 71818.E					0.212					
	125	18	71918.C	102.1	113.1	1.1	0.6	0.590	97.0	118.0	119.7	1.1	0.6
			CB 71918.C					0.543					
			71918.CX	102.1	113.1	1.1	0.6	0.590	97.0	118.0	119.7	1.1	0.6
			CB 71918.CX					0.543					
			71918.E	102.1	113.1	1.1	0.6	0.590	97.0	118.0	119.7	1.1	0.6
			CB 71918.E					0.543					
			71918.EX	102.1	113.1	1.1	0.6	0.590	97.0	118.0	119.7	1.1	0.6
			CB 71918.EX					0.543					
	140	24	7018.C	108.1	124.0	1.5	0.6	1.190	100.0	131.1	134.2	1.5	0.6
			CB 7018.C					1.095					
			7018.CX	108.1	124.0	1.5	0.6	1.154	100.0	131.1	134.2	1.5	0.6
			CB 7018.CX					1.062					
			H 7018.C	108.9	121.4	1.5	1.5	1.315	100.0	131.1	134.2	1.5	1.5
			CBH 7018.C					1.210					
			7018.E	108.1	124.0	1.5	0.6	1.190	100.0	131.1	134.2	1.5	0.6
			CB 7018.E					1.095					
			7018.EX	108.1	124.0	1.5	0.6	1.154	100.0	131.1	134.2	1.5	0.6
			CB 7018.EX					1.062					
			H 7018.E	108.9	121.4	1.5	1.5	1.315	100.0	131.1	134.2	1.5	1.5
			CBH 7018.E					1.210					
	160	30	7218.C	115.3	136.7	2.0	1.0	2.340	104.4	146.6	146.0	2.0	1.0
			CB 7218.C					2.153					
			7218.E	115.3	136.7	2.0	1.0	2.340	104.4	146.6	146.0	2.0	1.0
			CB 7218.E					2.153					

718 C/E
CB 718 C/E

719 C/E
CB 719 C/E
H 719 C/E
CBH 719 C/E

70 C/E
CB 70 C/E
H 70 C/E
CBH 70 C/E

72 C/E
CB 72 C/E

73 C/E

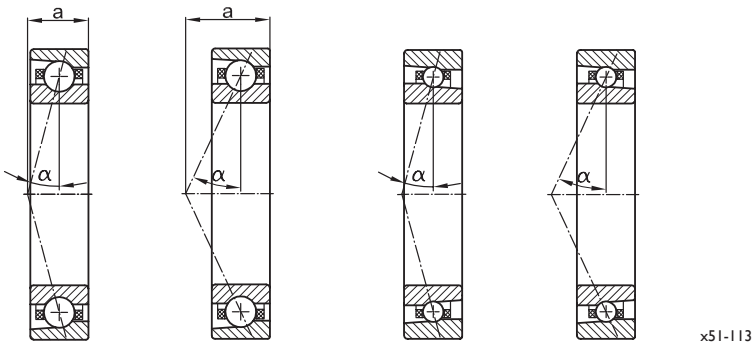

...C ...E H...C H...E

Basic dimensions d	D	B	Basic designation	Load ratings dyn. C_r	stat. C_{0r}	Fatigue limit load C_U (radial)	Speed grease n_G	oil/air n_O	Injection diameter d_{pi}	Direct oil lubrication	Sealing	Effective load centre a	Precision locknut
mm				N		N	min⁻¹		mm			mm	
95	120	13	71819.C	22,500	35,000	1,296	9,800	15,000	104.2			21	MBA 95
			CB 71819.C	22,500	24,500	907	12,700	19,500					
			71819.E	21,500	33,000	1,222	8,800	13,500	104.2			32	
			CB 71819.E	21,500	23,100	856	11,400	17,500					
	130	18	71919.C	43,000	48,500	1,796	10,800	16,000	109.6	o	o	24	MBA 95
			CB 71919.C	43,000	33,900	1,256	14,100	20,800		o	o		
			71919.CX	34,400	38,800	1,437	12,400	18,400	109.6	o	o	24	
			CB 71919.CX	34,400	27,100	1,004	16,200	24,000		o	o		
			71919.E	40,500	46,000	1,704	9,800	14,400	109.6	o	o	35	
			CB 71919.E	40,500	32,200	1,193	12,800	18,800		o	o		
			71919.EX	32,400	36,800	1,363	11,200	16,600	109.6	o	o	35	
			CB 71919.EX	32,400	25,700	952	14,600	21,600		o	o		
	145	24	7019.C	75,000	74,500	2,759	10,000	15,000	116.3	o	o	28	MBA 95
			CB 7019.C	75,000	52,100	1,930	13,000	19,500		o	o		
			7019.CX	56,500	59,200	2,193	11,000	16,500	116.3	o	o	28	
			CB 7019.CX	56,500	41,400	1,533	14,300	21,500		o	o		
			7019.E	71,000	71,000	2,630	9,000	13,500	116.3	o	o	40	
			CB 7019.E	71,000	49,700	1,841	11,700	17,600		o	o		
			7019.EX	53,300	56,400	2,089	9,900	14,900	116.3	o	o	40	
			CB 7019.EX	53,300	39,400	1,459	12,900	19,400		o	o		
	170	32	7219.C	133,000	112,000	4,148	9,200	13,500	126.5			34	MBA 95
			CB 7219.C	133,000	78,400	2,904	12,000	17,600					
			7219.E	127,000	107,000	3,963	8,300	12,200	123.6			47	
			CB 7219.E	127,000	74,900	2,774	10,800	15,900					

718 C/E
CB 718 C/E

719 C/E
CB 719 C/E
H 719 C/E
CBH 719 C/E

70 C/E
CB 70 C/E
H 70 C/E
CBH 70 C/E

72 C/E
CB 72 C/E

73 C/E

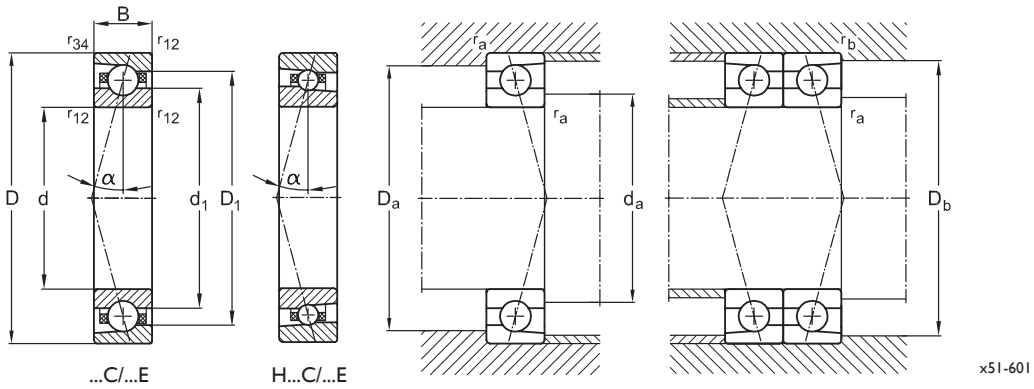

Basic dimensions			Basic designation	Dimensions				Weight	Mounting dimensions				
d	D	B		d_1	D_1	r_{12min}	r_{34min}	m	$d_{a,min}$	$D_{a,max}$	$D_{b,max}$	$r_{a,max}$	$r_{b,max}$
mm				mm				kg	mm				
95	120	13	71819.C	103.2	112.1	1.0	0.3	0.295	100.5	113.0	114.3	1.0	0.3
			CB 71819.C					0.271					
			71819.E	103.2	112.1	1.0	0.3	0.295	100.5	113.0	114.3	1.0	0.3
			CB 71819.E					0.271					
	130	18	71919.C	107.1	118.1	1.1	0.6	0.620	102.0	123.0	124.7	1.1	0.6
			CB 71919.C					0.570					
			71919.CX	107.1	118.1	1.1	0.6	0.620	102.0	123.0	124.7	1.1	0.6
			CB 71919.CX					0.570					
			71919.E	107.1	118.1	1.1	0.6	0.620	102.0	123.0	124.7	1.1	0.6
			CB 71919.E					0.570					
			71919.EX	107.1	118.1	1.1	0.6	0.620	102.0	123.0	124.7	1.1	0.6
			CB 71919.EX					0.570					
	145	24	7019.C	112.9	128.7	1.5	0.6	1.250	105.0	135.8	138.7	1.5	0.6
			CB 7019.C					1.150					
			7019.CX	112.9	128.7	1.5	0.6	1.213	105.0	135.8	138.7	1.5	0.6
			CB 7019.CX					1.116					
			7019.E	112.9	128.7	1.5	0.6	1.250	105.0	135.8	138.7	1.5	0.6
			CB 7019.E					1.150					
			7019.EX	112.9	128.7	1.5	0.6	1.213	105.0	135.8	138.7	1.5	0.6
			CB 7019.EX					1.116					
	170	32	7219.C	121.3	145.2	2.1	1.1	2.800	111.0	153.5	153.0	2.1	1.1
			CB 7219.C					2.576					
			7219.E	121.3	145.2	2.1	1.1	2.800	111.0	153.5	153.0	2.1	1.1
			CB 7219.E					2.576					

718 C/E
CB 718 C/E

719 C/E
CB 719 C/E
H 719 C/E
CBH 719 C/E

70 C/E
CB 70 C/E
H 70 C/E
CBH 70 C/E

72 C/E
CB 72 C/E

73 C/E

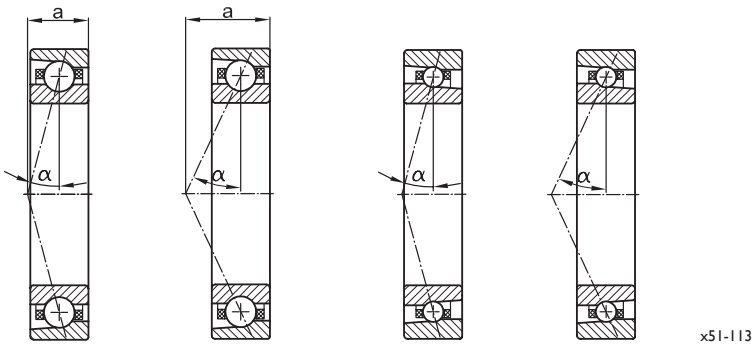

...C ...E H...C H...E

Basic dimensions d	D	B	Basic designation	Load ratings dyn. C_r	stat. C_{0r}	Fatigue limit load C_U (radial)	Speed grease n_G	oil/air n_O	Injection diameter d_{pi}	Direct oil lubrication	Sealing	Effective load centre a	Precision locknut
mm				N		N	min^{-1}		mm			mm	
100	125	13	71820.C	23,500	37,500	1,389	9,500	14,500	109.2			22	MBA 100
			CB 71820.C	23,500	26,300	974	12,300	18,800					
			71820.E	22,000	35,500	1,315	8,500	13,000	109.2			33	
			CB 71820.E	22,000	24,900	922	11,000	16,900					
	140	20	71920.C	51,000	55,000	2,037	10,000	15,000	116.2	o	o	26	MBA 100
			CB 71920.C	51,000	38,500	1,426	13,000	19,500		o	o		
			71920.CX	40,800	44,000	1,630	11,500	17,200	116.2	o	o	26	
			CB 71920.CX	40,800	30,800	1,141	15,000	22,400		o	o		
			71920.E	48,000	52,000	1,926	9,000	13,500	116.2	o	o	38	
			CB 71920.E	48,000	36,400	1,348	11,700	17,600		o	o		
			71920.EX	38,400	41,600	1,541	10,400	15,500	116.2	o	o	38	
			CB 71920.EX	38,400	29,100	1,078	13,600	20,200		o	o		
	150	24	7020.C	77,000	79,000	2,926	9,500	14,500	121.3	o	o	29	MBA 100
			CB 7020.C	77,000	55,300	2,048	12,400	18,900		o	o		
			7020.CX	57,400	62,200	2,304	10,800	16,500	121.3	o	o	29	
			CB 7020.CX	57,400	43,500	1,611	14,100	21,500		o	o		
			H 7020.C	37,800	45,500	1,685	12,200	18,500	119.8	o	o	29	
			CBH 7020.C	37,800	31,800	1,178	15,900	24,100		o	o		
			7020.E	73,000	75,000	2,778	8,600	13,100	121.3	o	o	41	
			CB 7020.E	73,000	52,500	1,944	11,200	17,100		o	o		
			7020.EX	54,400	58,800	2,178	9,800	14,900	121.3	o	o	41	
			CB 7020.EX	54,400	41,100	1,522	12,800	19,400		o	o		
			H 7020.E	35,800	42,600	1,578	11,000	16,700	119.8	o	o	41	
			CBH 7020.E	35,800	29,800	1,104	14,300	21,800		o	o		
	180	34	7220.C	150,000	127,000	4,704	8,800	13,000	132.4			36	MBA 100
			CB 7220.C	150,000	88,900	3,293	11,500	16,900					
			7220.E	143,000	122,000	4,519	8,000	11,700	130.6			50	
			CB 7220.E	143,000	85,400	3,163	10,400	15,300					

718 C/E
CB 718 C/E

719 C/E
CB 719 C/E
H 719 C/E
CBH 719 C/E

70 C/E
CB 70 C/E
H 70 C/E
CBH 70 C/E

72 C/E
CB 72 C/E

73 C/E

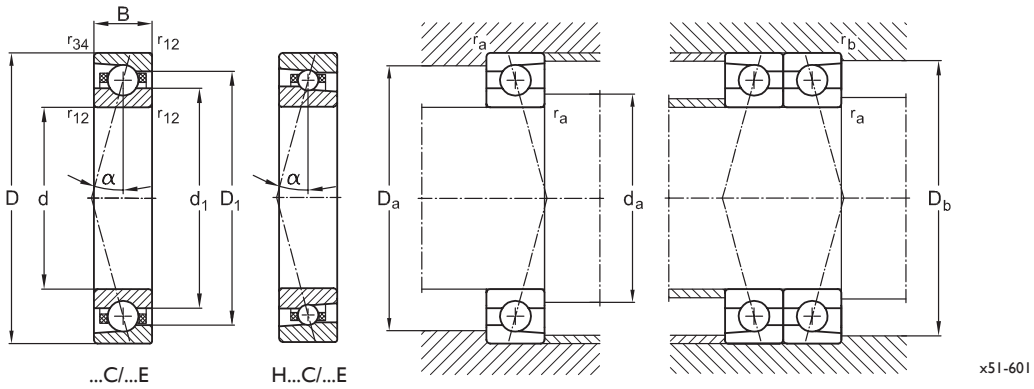

Basic dimensions			Basic designation	Dimensions				Weight	Mounting dimensions				
d	D	B		d_1	D_1	r_{12min}	r_{34min}	m	$d_{a,min}$	$D_{a,max}$	$D_{b,max}$	$r_{a,max}$	$r_{b,max}$
mm				mm				kg	mm				
100	125	13	71820.C	108.2	117.0	1.0	0.3	0.315	105.5	118.0	119.3	1.0	0.3
			CB 71820.C					0.290					
			71820.E	108.2	117.0	1.0	0.3	0.315	105.5	118.0	119.3	1.0	0.3
			CB 71820.E					0.290					
	140	20	71920.C	113.8	126.4	1.1	0.6	0.830	107.0	133.0	134.7	1.1	0.6
			CB 71920.C					0.764					
			71920.CX	113.8	126.4	1.1	0.6	0.830	107.0	133.0	134.7	1.1	0.6
			CB 71920.CX					0.764					
			71920.E	113.8	126.4	1.1	0.6	0.830	107.0	133.0	134.7	1.1	0.6
			CB 71920.E					0.764					
			71920.EX	113.8	126.4	1.1	0.6	0.830	107.0	133.0	134.7	1.1	0.6
			CB 71920.EX					0.764					
	150	24	7020.C	117.7	133.5	1.5	0.6	1.300	110.0	140.9	144.0	1.5	0.6
			CB 7020.C					1.196					
			7020.CX	117.7	133.5	1.5	0.6	1.261	110.0	140.9	144.0	1.5	0.6
			CB 7020.CX					1.160					
			H 7020.C	118.9	131.4	1.5	1.5	1.450	110.0	140.9	144.0	1.5	1.5
			CBH 7020.C					1.334					
			7020.E	117.7	133.5	1.5	0.6	1.300	110.0	140.9	144.0	1.5	0.6
			CB 7020.E					1.196					
			7020.EX	117.7	133.5	1.5	0.6	1.261	110.0	140.9	144.0	1.5	0.6
			CB 7020.EX					1.160					
			H 7020.E	118.9	131.4	1.5	1.5	1.450	110.0	140.9	144.0	1.5	1.5
			CBH 7020.E					1.334					
	180	34	7220.C	127.0	153.2	2.1	1.1	3.320	115.0	165.0	165.0	2.1	1.1
			CB 7220.C					3.054					
			7220.E	127.0	153.2	2.1	1.1	3.320	115.0	165.0	165.0	2.1	1.1
			CB 7220.E					3.054					

718 C/E
CB 718 C/E

719 C/E
CB 719 C/E
H 719 C/E
CBH 719 C/E

70 C/E
CB 70 C/E
H 70 C/E
CBH 70 C/E

72 C/E
CB 72 C/E

73 C/E

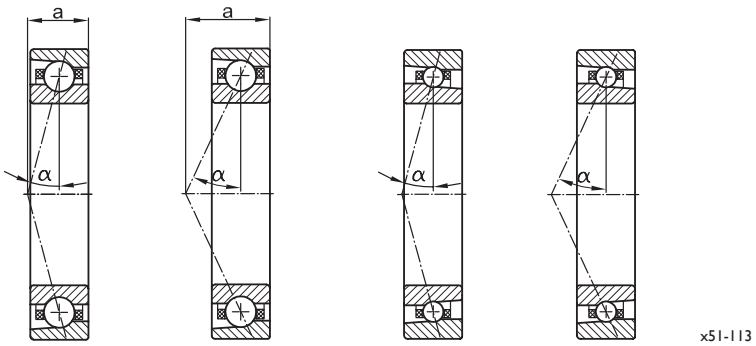

...C ...E H...C H...E

Basic dimensions			Basic designation	Load ratings dyn.	stat.	Fatigue limit load	Speed grease	oil/air	Injection diameter	Direct oil lubrication	Sealing	Effective load centre	Precision locknut
d	D	B		C_r	C_{0r}	C_U (radial)	n_G	n_O	d_{pi}			a	
mm				N		N	min^{-1}		mm			mm	
105	130	13	71821.C	23,600	38,500	1,426	9,000	13,500	114.5			22	MBA 105
			CB 71821.C	23,600	27,000	1,000	11,700	17,500					
			71821.E	22,300	36,500	1,352	8,100	12,100	114.5			34	
			CB 71821.E	22,300	25,600	948	10,500	15,700					
	145	20	71921.C	52,000	58,000	2,148	9,500	14,500	121.3		o	27	MBA 105
			CB 71921.C	52,000	40,600	1,504	12,300	18,800			o		
			71921.CX	41,600	46,400	1,719	10,900	16,600	121.3		o	27	
			CB 71921.CX	41,600	32,500	1,204	14,100	21,500			o		
			71921.E	49,000	55,000	2,037	8,500	13,000	121.3		o	39	
			CB 71921.E	49,000	38,500	1,426	11,000	16,900			o		
			71921.EX	39,200	44,000	1,630	9,800	14,900	121.3		o	39	
			CB 71921.EX	39,200	30,800	1,141	12,700	19,300			o		
	160	26	7021.C	105,000	101,000	3,741	8,200	13,100	127.7		o	31	MBA 105
			CB 7021.C	105,000	70,700	2,619	10,600	17,000			o		
			7021.CX	84,000	80,800	2,993	9,400	15,000	127.7		o	31	
			CB 7021.CX	84,000	56,600	2,096	12,200	19,500			o		
			7021.E	101,000	97,000	3,593	7,300	11,700	127.7		o	44	
			CB 7021.E	101,000	67,900	2,515	9,400	15,200			o		
			7021.EX	80,800	77,600	2,874	8,400	13,500	127.7		o	44	
			CB 7021.EX	80,800	54,400	2,015	10,900	17,500			o		
	190	36	7221.C	162,000	143,000	5,296	8,000	12,000	140.0			38	MBA 105
			7221.E	155,000	137,000	5,074	7,200	10,800				53	

718 C/E
CB 718 C/E

719 C/E
CB 719 C/E
H 719 C/E
CBH 719 C/E

70 C/E
CB 70 C/E
H 70 C/E
CBH 70 C/E

72 C/E
CB 72 C/E

73 C/E

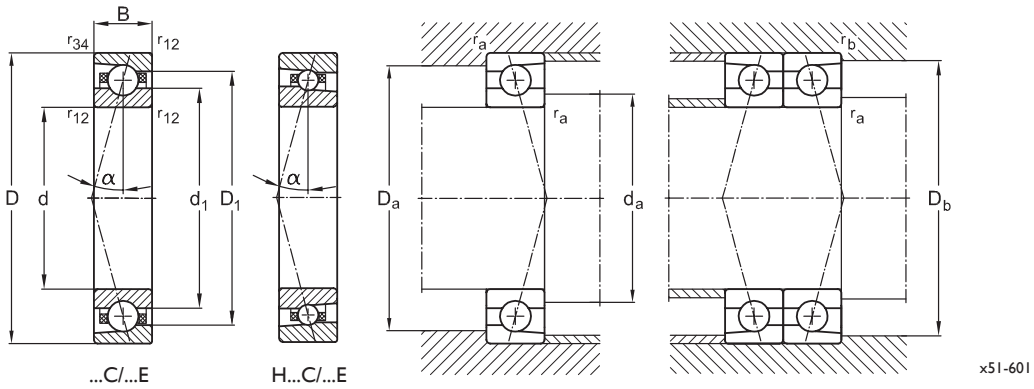

Basic dimensions			Basic designation	Dimensions				Weight	Mounting dimensions				
d	D	B		d_l	D_l	r_{12min}	r_{34min}	m	$d_{a,min}$	$D_{a,max}$	$D_{b,max}$	$r_{a,max}$	$r_{b,max}$
mm				mm				kg	mm				
105	130	13	71821.C	113.2	122.0	1.0	0.3	0.325	110.5	122.5	124.3	1.0	0.3
			CB 71821.C					0.299					
			71821.E	113.2	122.0	1.0	0.3	0.325	110.5	122.5	124.3	1.0	0.3
			CB 71821.E					0.299					
	145	20	71921.C	118.8	131.4	1.1	0.6	0.850	112.0	138.0	139.6	1.1	0.6
			CB 71921.C					0.782					
			71921.CX	118.8	131.4	1.1	0.6	0.850	112.0	138.0	139.6	1.1	0.6
			CB 71921.CX					0.782					
			71921.E	118.8	131.4	1.1	0.6	0.850	112.0	138.0	139.6	1.1	0.6
			CB 71921.E					0.782					
			71921.EX	118.8	131.4	1.1	0.6	0.000	112.0	138.0	139.6	1.1	0.6
			CB 71921.EX					0.000					
	160	26	7021.C	123.9	141.3	2.0	1.0	1.600	116.0	150.0	153.8	2.0	1.0
			CB 7021.C					1.472					
			7021.CX	123.9	141.3	2.0	1.0	1.700	116.0	150.0	153.8	2.0	1.0
			CB 7021.CX					1.564					
			7021.E	123.9	141.3	2.0	1.0	1.600	116.0	150.0	153.8	2.0	1.0
			CB 7021.E					1.472					
			7021.EX	123.9	141.3	2.0	1.0	1.700	116.0	150.0	153.8	2.0	1.0
			CB 7021.EX					1.564					
	190	36	7221.C	134.3	162.9	2.1	1.1	3.850	121.0	174.0	174.0	2.1	1.1
			7221.E					3.850					

718 C/E
CB 718 C/E

719 C/E
CB 719 C/E
H 719 C/E
CBH 719 C/E

70 C/E
CB 70 C/E
H 70 C/E
CBH 70 C/E

72 C/E
CB 72 C/E

73 C/E

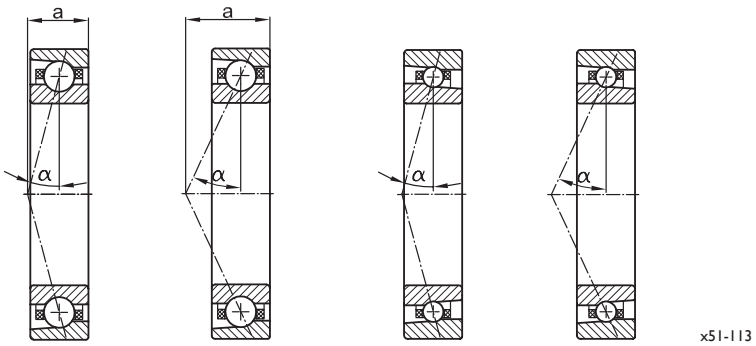

...C ...E H...C H...E

Basic dimensions d	D	B	Basic designation	Load ratings dyn. C_r	stat. C_{0r}	Fatigue limit load C_U (radial)	Speed grease n_G	oil/air n_O	Injection diameter d_{pi}	Direct oil lubrication	Sealing	Effective load centre a	Precision locknut
mm				N		N	min^{-1}		mm			mm	
110	140	16	71822.C	32,500	52,500	1,944	8,500	13,000	121.0			25	MBA 110
			CB 71822.C	32,500	36,800	1,363	11,000	16,900					
			71822.E	31,000	49,000	1,815	7,600	11,700	121.0			37	
			CB 71822.E	31,000	34,300	1,270	9,800	15,200					
	150	20	71922.C	53,000	60,000	2,222	9,300	13,800	126.5		o	30	MBA 110
			CB 71922.C	53,000	42,000	1,556	12,000	17,900			o		
			71922.CX	42,400	48,000	1,778	10,600	15,800	126.5		o	30	
			CB 71922.CX	42,400	33,600	1,244	13,700	20,500			o		
			71922.E	50,000	57,000	2,111	8,300	12,400	126.5		o	40	
			CB 71922.E	50,000	39,900	1,478	10,700	16,100			o		
			71922.EX	40,000	45,600	1,689	9,500	14,200	126.5		o	40	
			CB 71922.EX	40,000	32,000	1,185	12,300	18,400			o		
	170	28	7022.C	110,000	110,000	4,074	7,600	12,200	132.9		o	33	MBA 110
			CB 7022.C	110,000	77,000	2,852	9,800	15,800			o		
			7022.CX	50,300	60,500	2,241	9,400	15,800	133.6		o	33	
			CB 7022.CX	50,300	42,400	1,570	12,200	20,500			o		
			7022.E	105,000	105,000	3,889	6,800	10,900	132.9		o	47	
			CB 7022.E	105,000	73,500	2,722	8,800	14,100			o		
			7022.EX	47,000	56,500	2,093	8,400	14,200	133.6		o	47	
			CB 7022.EX	47,000	39,600	1,467	10,900	18,400			o		
	200	38	7222.C	176,000	160,000	5,926	7,700	11,300	148.2			40	MBA 110
			7222.E	168,000	153,000	5,667	6,900	10,100				55	

718 C/E
CB 718 C/E

719 C/E
CB 719 C/E
H 719 C/E
CBH 719 C/E

70 C/E
CB 70 C/E
H 70 C/E
CBH 70 C/E

72 C/E
CB 72 C/E

73 C/E

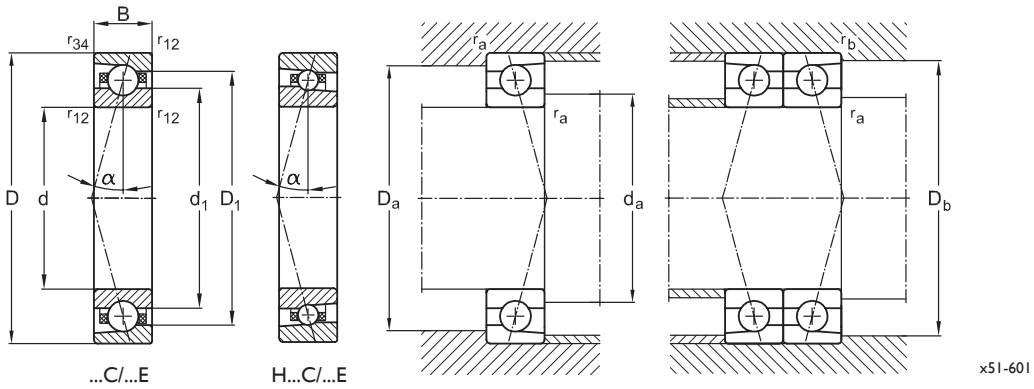

Basic dimensions			Basic designation	Dimensions				Weight	Mounting dimensions				
d	D	B		d_1	D_1	r_{12min}	r_{34min}	m	$d_{a,min}$	$D_{a,max}$	$D_{b,max}$	$r_{a,max}$	$r_{b,max}$
mm				mm				kg	mm				
110	140	16	71822.C	119.8	130.6	1.0	0.3	0.510	116.5	131.5	133.8	1.0	0.3
			CB 71822.C					0.469					
			71822.E	119.8	130.6	1.0	0.3	0.510	116.5	131.5	133.8	1.0	0.3
			CB 71822.E					0.469					
	150	20	71922.C	123.8	136.4	1.1	0.6	0.850	117.0	143.0	144.9	1.1	0.6
			CB 71922.C					0.782					
			71922.CX	123.8	136.4	1.1	0.6	0.850	117.0	143.0	144.9	1.1	0.6
			CB 71922.CX					0.782					
			71922.E	123.8	136.4	1.1	0.6	0.850	117.0	143.0	144.9	1.1	0.6
			CB 71922.E					0.782					
			71922.EX	123.8	136.4	1.1	0.6	0.850	117.0	143.0	144.9	1.1	0.6
			CB 71922.EX					0.782					
	170	28	7022.C	129.0	151.1	2.0	1.0	2.000	121.0	160.0	164.0	2.0	1.0
			CB 7022.C					1.840					
			7022.CX	132.6	147.0	2.0	2.0	2.210	121.0	160.0	164.0	2.0	2.0
			CB 7022.CX					2.033					
			7022.E	129.0	151.1	2.0	1.0	2.000	121.0	160.0	164.0	2.0	1.0
			CB 7022.E					1.840					
			7022.EX	132.6	147.0	2.0	2.0	2.210	121.0	160.0	164.0	2.0	2.0
			CB 7022.EX					2.033					
	200	38	7222.C	142.1	170.0	2.1	1.1	4.700	127.0	183.0	183.0	2.1	1.1
			7222.E					4.700					

718 C/E
CB 718 C/E

719 C/E
CB 719 C/E
H 719 C/E
CBH 719 C/E

70 C/E
CB 70 C/E
H 70 C/E
CBH 70 C/E

72 C/E
CB 72 C/E

73 C/E

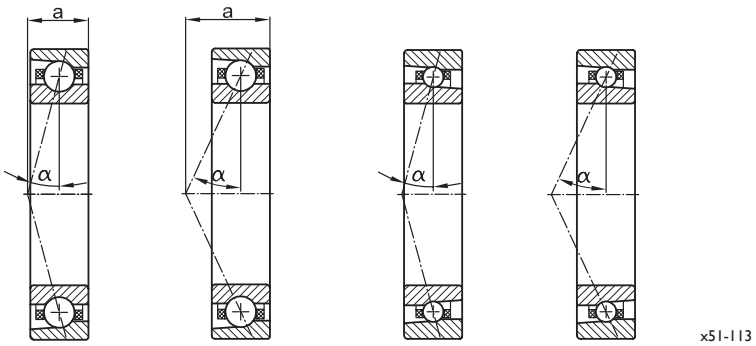

...C ...E H...C H...E

Basic dimensions			Basic designation	Load ratings dyn.	stat.	Fatigue limit load	Speed grease	oil/air	Injection diameter	Direct oil lubrication	Sealing	Effective load centre	Precision locknut
d	D	B		C_r	C_{0r}	C_U (radial)	n_G	n_O	d_{pi}			a	
mm				N		N	min^{-1}		mm			mm	
120	150	16	71824.C	33,800	57,300	2,122	7,500	11,500	131.0			26	MBA 120
			CB 71824.C	33,800	40,200	1,489	9,700	14,900					
			71824.E	32,000	54,500	2,019	6,700	10,300	131.0			39	
			CB 71824.E	32,000	38,200	1,415	8,700	13,300					
	165	22	71924.C	73,000	82,000	3,037	8,500	12,500	138.4		o	33	MBA 120
			CB 71924.C	73,000	57,400	2,126	11,000	16,200			o		
			71924.CX	58,400	65,600	2,430	9,700	14,300	138.4		o	33	
			CB 71924.CX	58,400	46,000	1,704	12,600	18,500			o		
			71924.E	69,000	79,000	2,926	7,600	11,200	138.4		o	44	
			CB 71924.E	69,000	55,300	2,048	9,800	14,500			o		
			71924.EX	55,200	63,200	2,341	8,700	12,800	138.4		o	44	
			CB 71924.EX	55,200	44,300	1,641	11,300	16,600			o		
	180	28	7024.C	113,500	118,500	4,389	8,000	12,000	144.9		o	34	MBA 120
			CB 7024.C	113,500	83,000	3,074	10,400	15,600			o		
			7024.CX	52,000	63,500	2,352	8,700	14,200	143.9		o	34	
			CB 7024.CX	52,000	44,500	1,648	11,300	18,400			o		
			7024.E	108,000	113,000	4,185	7,200	10,800	144.9		o	49	
			CB 7024.E	108,000	79,100	2,930	9,300	14,000			o		
			7024.EX	49,000	59,000	2,185	7,800	12,700	143.9		o	49	
			CB 7024.EX	49,000	41,300	1,530	10,100	16,500			o		
	215	40	7224.C	200,000	195,000	7,222	7,000	10,500	160.5			43	MBA 120
			7224.E	190,000	185,000	6,852	6,300	9,400				60	

718 C/E
CB 718 C/E

719 C/E
CB 719 C/E
H 719 C/E
CBH 719 C/E

70 C/E
CB 70 C/E
H 70 C/E
CBH 70 C/E

72 C/E
CB 72 C/E

73 C/E

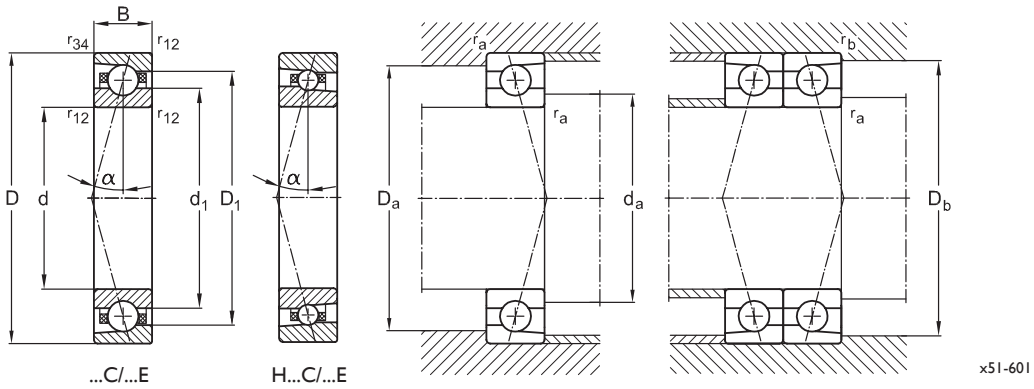

Basic dimensions			Basic designation	Dimensions				Weight	Mounting dimensions				
d	D	B		d_1	D_1	r_{12min}	r_{34min}	m	$d_{a,min}$	$D_{a,max}$	$D_{b,max}$	$r_{a,max}$	$r_{b,max}$
mm				mm				kg	mm				
120	150	16	71824.C	129.8	140.6	1.0	0.3	0.555	126.5	142.0	143.8	1.0	0.3
			CB 71824.C					0.511					
			71824.E	129.8	140.6	1.0	0.3	0.555	126.5	142.0	143.8	1.0	0.3
			CB 71824.E					0.511					
	165	22	71924.C	135.5	149.7	1.1	0.6	1.160	128.0	158.0	159.8	1.1	0.6
			CB 71924.C					1.067					
			71924.CX	135.5	149.7	1.1	0.6	1.160	128.0	158.0	159.8	1.1	0.6
			CB 71924.CX					1.067					
			71924.E	135.5	149.7	1.1	0.6	1.160	128.0	158.0	159.8	1.1	0.6
			CB 71924.E					1.067					
			71924.EX	135.5	149.7	1.1	0.6	1.160	128.0	158.0	159.8	1.1	0.6
			CB 71924.EX					1.067					
	180	28	7024.C	140.6	159.6	2.0	1.0	2.200	131.0	170.4	173.8	2.0	1.0
			CB 7024.C					2.024					
			7024.CX	142.8	155.2	2.0	2.0	2.300	131.0	170.4	173.8	2.0	2.0
			CB 7024.CX					2.116					
			7024.E	140.6	159.6	2.0	1.0	2.200	131.0	170.4	173.8	2.0	1.0
			CB 7024.E					2.024					
			7024.EX	142.8	155.2	2.0	2.0	2.300	131.0	170.4	173.8	2.0	2.0
			CB 7024.EX					2.116					
	215	40	7224.C	153.9	182.8	2.1	1.1	5.700	141.0	194.0	194.0	2.1	1.1
			7224.E					5.700					

718 C/E
CB 718 C/E

719 C/E
CB 719 C/E
H 719 C/E
CBH 719 C/E

70 C/E
CB 70 C/E
H 70 C/E
CBH 70 C/E

72 C/E
CB 72 C/E

73 C/E

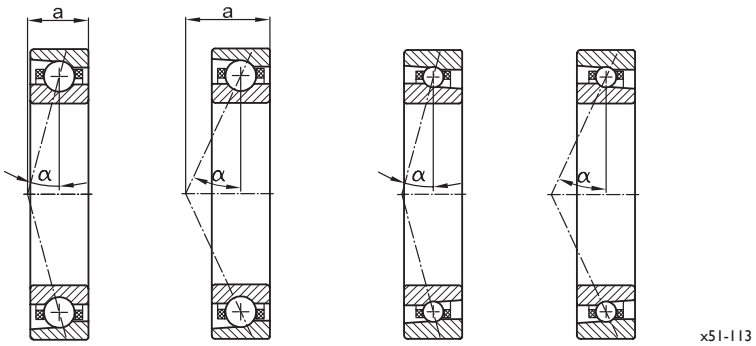

...C ...E H...C H...E

Basic dimensions d	D	B	Basic designation	Load ratings dyn. C_r	stat. C_{0r}	Fatigue limit load C_U (radial)	Speed grease n_G	oil/air n_O	Injection diameter d_{pi}	Direct oil lubrication	Sealing	Effective load centre a	Precision locknut
mm				N		N	min^{-1}		mm			mm	
130	165	18	71826.C	39,500	68,500	2,537	7,000	10,500	143.8			29	MBA 130
			CB 71826.C	39,500	48,000	1,778	9,100	13,600					
			71826.E	37,000	64,500	2,389	6,300	9,400	143.8			43	
			CB 71826.E	37,000	45,200	1,674	8,100	12,200					
	180	24	71926.C	80,000	93,000	3,444	7,700	11,500	150.8		o	34	MBA 130
			CB 71926.C	80,000	65,100	2,411	10,000	14,900			o		
			71926.E	76,000	88,000	3,259	6,900	10,300	150.8		o	48	
			CB 71926.E	76,000	61,600	2,281	8,900	13,300			o		
	200	33	7026.C	145,000	152,000	5,630	6,000	9,000	159.1		o	39	MBA 130
			CB 7026.C	145,000	106,400	3,941	7,800	11,700			o		
			7026.E	140,000	145,000	5,370	5,400	8,100	159.1		o	55	
			CB 7026.E	140,000	101,500	3,759	7,000	10,500			o		
	230	40	7226.C	206,000	209,000	7,741	6,500	9,800	171.8			44	MBA 130
			7226.E	196,000	200,000	7,410	5,800	8,800				62	
140	175	18	71828.C	45,800	79,500	2,944	6,500	10,000	153.0			30	MBA 140
			CB 71828.C	45,800	55,700	2,063	8,400	13,000					
			71828.E	43,000	75,500	2,796	5,800	9,000	153.0			46	
			CB 71828.E	43,000	52,900	1,959	7,500	11,700					
	190	24	71928.C	82,000	97,000	3,593	7,100	10,900	179.1		o	38	MBA 140
			CB 71928.C	82,000	67,900	2,515	9,200	14,100			o		
			71928.E	77,000	92,000	3,407	6,300	9,800	179.1		o	51	
			CB 71928.E	77,000	64,400	2,385	8,100	12,700			o		
	210	33	7028.C	135,000	148,000	5,481	6,800	10,200	169.4		o	40	MBA 140
			CB 7028.C	135,000	103,600	3,837	8,800	13,200			o		
			7028.E	127,000	140,000	5,185	6,100	9,100	169.4		o	58	
			CB 7028.E	127,000	98,000	3,630	7,900	11,800			o		
	250	42	7228.C	238,000	254,000	9,407	6,000	9,000	184.6			47	MBA 140
			7228.E	226,000	242,000	8,963	5,400	8,100				66	

718 C/E
CB 718 C/E

719 C/E
CB 719 C/E
H 719 C/E
CBH 719 C/E

70 C/E
CB 70 C/E
H 70 C/E
CBH 70 C/E

72 C/E
CB 72 C/E

73 C/E

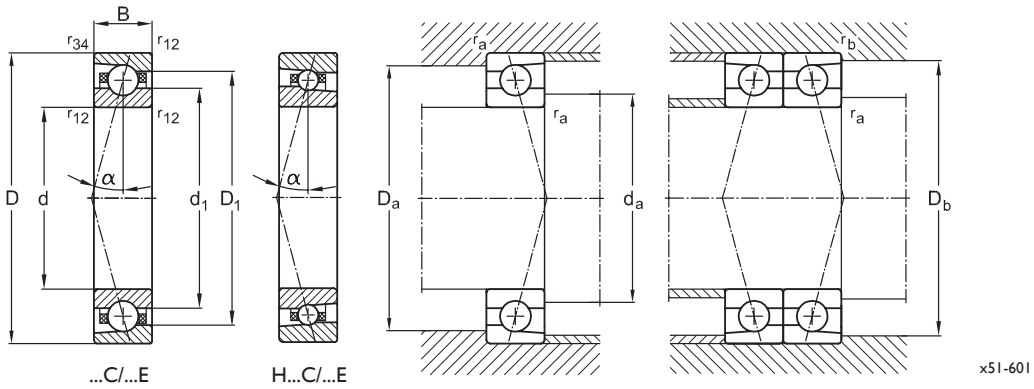

Basic dimensions			Basic designation	Dimensions				Weight	Mounting dimensions				
d	D	B		d_1	D_1	r_{12min}	r_{34min}	m	$d_{a,min}$	$D_{a,max}$	$D_{b,max}$	$r_{a,max}$	$r_{b,max}$
mm				mm				kg	mm				
130	165	18	71826.C	142.0	153.1	1.1	0.6	0.780	138.0	154.5	156.8	1.1	0.6
			CB 71826.C					0.718					
			71826.E	142.0	153.1	1.1	0.6	0.780	138.0	154.5	156.8	1.1	0.6
			CB 71826.E					0.718					
	180	24	71926.C	147.2	163.0	1.1	0.6	1.550	139.0	171.0	173.8	1.1	0.6
			CB 71926.C					1.426					
			71926.E	147.2	163.0	1.1	0.6	1.550	139.0	171.0	173.8	1.1	0.6
			CB 71926.E					1.426					
	200	33	7026.C	154.4	175.8	2.0	1.0	3.350	142.0	190.0	194.0	2.0	1.0
			CB 7026.C					3.082					
			7026.E	154.4	175.8	2.0	1.0	3.350	142.0	190.0	194.0	2.0	1.0
			CB 7026.E					3.082					
	230	40	7226.C	164.8	195.6	3.0	1.1	6.400	149.0	211.0	211.0	3.0	1.1
			7226.E					6.400					
140	175	18	71828.C	151.5	163.9	1.1	0.6	0.800	148.0	165.0	166.8	1.1	0.6
			CB 71828.C					0.736					
			71828.E	151.5	163.9	1.1	0.6	0.800	148.0	165.0	166.8	1.1	0.6
			CB 71828.E					0.736					
	190	24	71928.C	157.2	173.0	1.1	0.6	1.620	149.0	181.0	183.8	1.1	0.6
			CB 71928.C					1.490					
			71928.E	157.2	173.0	1.1	0.6	1.620	149.0	181.0	183.8	1.1	0.6
			CB 71928.E					1.490					
	210	33	7028.C	164.4	185.8	2.0	1.0	3.600	152.0	202.0	204.0	2.0	1.0
			CB 7028.C					3.312					
			7028.E	164.4	185.8	2.0	1.0	3.600	152.0	202.0	204.0	2.0	1.0
			CB 7028.E					3.312					
	250	42	7228.C	177.0	212.7	3.0	1.1	8.000	164.0	226.0	226.0	3.0	1.1
			7228.E					8.000					

718 C/E
CB 718 C/E

719 C/E
CB 719 C/E
H 719 C/E
CBH 719 C/E

70 C/E
CB 70 C/E
H 70 C/E
CBH 70 C/E

72 C/E
CB 72 C/E

73 C/E

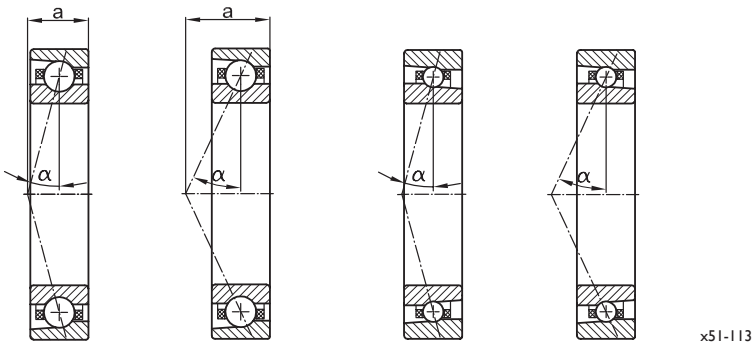

...C ...E H...C H...E

Basic dimensions d	D	B	Basic designation	Load ratings dyn. C_r	stat. C_{0r}	Fatigue limit load C_U (radial)	Speed grease n_G	oil/air n_O	Injection diameter d_{pi}	Direct oil lubrication	Sealing	Effective load centre a	Precision locknut
mm				N		N	min^{-1}		mm			mm	
150	190	20	71830.C	52,500	92,300	3,419	6,000	9,300	165.5			33	MBA 150
			CB 71830.C	52,500	64,700	2,396	7,800	12,000					
			71830.E	49,000	87,500	3,241	5,400	8,300	165.5			50	
			CB 71830.E	49,000	61,300	2,270	7,000	10,700					
	210	28	71930.C	105,000	125,000	4,630	6,500	10,000	174.3		o	40	MBA 150
			CB 71930.C	105,000	87,500	3,241	8,400	13,000			o		
			71930.E	100,000	118,000	4,370	5,800	9,000	174.3		o	56	
			CB 71930.E	100,000	82,600	3,059	7,500	11,700			o		
	225	35	7030.C	153,000	170,000	6,296	6,200	9,400	181.6		o	43	MBA 150
			CB 7030.C	153,000	119,000	4,407	8,000	12,200			o		
			7030.E	145,000	162,000	6,000	5,500	8,400	181.6		o	62	
			CB 7030.E	145,000	113,400	4,200	7,100	10,900			o		
160	200	20	71832.C	56,500	73,000	2,704	5,500	8,300	177.6			34	MBA 160
			CB 71832.C	56,500	51,100	1,893	7,100	10,700					
			71832.E	53,500	67,500	2,500	4,900	7,400	177.6			52	
			CB 71832.E	53,500	47,300	1,752	6,300	9,600					
	220	28	71932.C	110,000	135,000	5,000	6,300	9,500	184.5		o	41	MBA 160
			CB 71932.C	110,000	94,500	3,500	8,100	12,300			o		
			71932.E	102,000	127,000	4,704	5,600	8,500	184.5		o	58	
			CB 71932.E	102,000	88,900	3,293	7,200	11,000			o		
	240	38	7032.C	173,000	195,000	7,222	5,800	8,800	193.6		o	46	MBA 160
			CB 7032.C	173,000	136,500	5,056	7,500	11,400			o		
			7032.E	165,000	185,000	6,852	5,200	7,900	193.6		o	66	
			CB 7032.E	165,000	129,500	4,796	6,700	10,200			o		
170	215	22	71834.C	67,800	87,500	3,241	5,000	7,600	188.7			37	MBA 170
			CB 71834.C	67,800	61,300	2,270	6,500	9,800					
			71834.E	63,500	81,000	3,000	4,500	6,800	188.7			56	
			CB 71834.E	63,500	56,700	2,100	5,800	8,800					
	230	28	71934.C	115,000	150,000	5,556	5,800	8,900	194.7		o	45	MBA 170
			CB 71934.C	115,000	105,000	3,889	7,500	11,500			o		
			71934.E	110,000	145,000	5,370	5,200	8,000	194.7		o	61	
			CB 71934.E	110,000	101,500	3,759	6,700	10,400			o		
	260	42	7034.C	205,000	235,000	8,704	5,500	8,400	207.4			50	MBA 170
			CB 7034.C	205,000	164,500	6,093	7,100	10,900					
			7034.E	195,000	225,000	8,333	4,900	7,500	207.4			71	
			CB 7034.E	195,000	157,500	5,833	6,300	9,700					

718 C/E
CB 718 C/E

719 C/E
CB 719 C/E
H 719 C/E
CBH 719 C/E

70 C/E
CB 70 C/E
H 70 C/E
CBH 70 C/E

72 C/E
CB 72 C/E

73 C/E

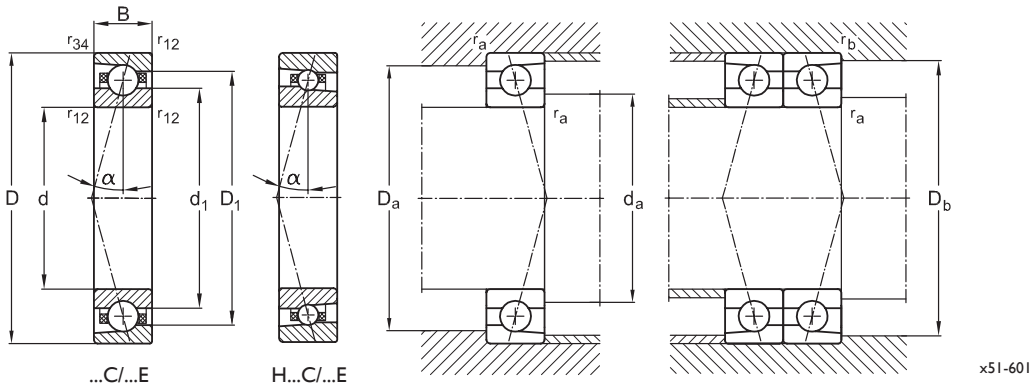

Basic dimensions			Basic designation	Dimensions				Weight	Mounting dimensions				
d	D	B		d_1	D_1	r_{12min}	r_{34min}	m	$d_{a,min}$	$D_{a,max}$	$D_{b,max}$	$r_{a,max}$	$r_{b,max}$
mm				mm				kg	mm				
150	190	20	71830.C	163.5	176.7	1.1	0.6	1.150	159.0	179.0	180.7	1.1	0.6
			CB 71830.C					1.058					
			71830.E	163.5	176.7	1.1	0.6	1.150	159.0	179.0	180.7	1.1	0.6
			CB 71830.E					1.058					
	210	28	71930.C	170.6	189.6	1.1	1.0	2.550	160.0	200.0	203.7	1.1	1.0
			CB 71930.C					2.346					
			71930.E	170.6	189.6	1.1	1.0	2.550	160.0	200.0	203.7	1.1	1.0
			CB 71930.E					2.346					
	225	35	7030.C	176.2	199.1	2.1	1.0	4.320	163.0	214.0	218.0	2.1	1.0
			CB 7030.C					3.974					
			7030.E	176.2	199.1	2.1	1.0	4.320	163.0	214.0	218.0	2.1	1.0
			CB 7030.E					3.974					
160	200	20	71832.C	174.4	186.0	1.1	0.6	1.250	170.0	188.0	190.0	1.1	0.6
			CB 71832.C					1.150					
			71832.E	174.4	186.0	1.1	0.6	1.250	170.0	188.0	190.0	1.1	0.6
			CB 71832.E					1.150					
	220	28	71932.C	180.6	199.6	1.1	1.0	2.750	170.0	210.0	213.6	1.1	1.0
			CB 71932.C					2.530					
			71932.E	180.6	199.6	1.1	1.0	2.750	170.0	210.0	213.6	1.1	1.0
			CB 71932.E					2.530					
	240	38	7032.C	187.8	212.4	2.1	1.0	5.000	174.0	230.0	232.0	2.1	1.0
			CB 7032.C					4.600					
			7032.E	187.8	212.4	2.1	1.0	5.000	174.0	230.0	232.0	2.1	1.0
			CB 7032.E					4.600					
170	215	22	71834.C	185.3	200.0	1.1	0.6	1.650	181.0	202.1	204.0	1.1	0.6
			CB 71834.C					1.518					
			71834.E	185.3	200.0	1.1	0.6	1.650	181.0	202.1	204.0	1.1	0.6
			CB 71834.E					1.518					
	230	28	71934.C	190.6	209.6	1.1	1.0	2.700	180.0	220.0	223.6	1.1	1.0
			CB 71934.C					2.484					
			71934.E	190.6	209.6	1.1	1.0	2.700	180.0	220.0	223.6	1.1	1.0
			CB 71934.E					2.484					
	260	42	7034.C	201.2	229.1	2.1	1.1	6.800	185.0	249.0	252.8	2.1	1.1
			CB 7034.C					6.256					
			7034.E	201.2	229.1	2.1	1.1	6.800	185.0	249.0	252.8	2.1	1.1
			CB 7034.E					6.256					

718 C/E
CB 718 C/E

719 C/E
CB 719 C/E
H 719 C/E
CBH 719 C/E

70 C/E
CB 70 C/E
H 70 C/E
CBH 70 C/E

72 C/E
CB 72 C/E

73 C/E

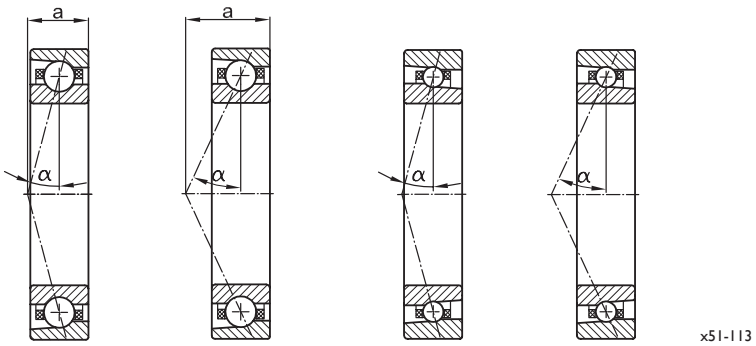

...C ...E H...C H...E

Basic dimensions d	D	B	Basic designation	Load ratings dyn. C_r	stat. C_{0r}	Fatigue limit load C_U (radial)	Speed grease n_G	oil/air n_O	Injection diameter d_{pi}	Direct oil lubrication	Sealing	Effective load centre a	Precision locknut
mm				N		N	min⁻¹		mm			mm	
180	225	22	71836.C	70,800	92,600	3,430	4,900	7,100	199.8			38	MBA 180
			CB 71836.C	70,800	64,900	2,404	6,300	9,200					
			71836.E	66,500	86,000	3,185	4,400	6,300	199.8			58	
			CB 71836.E	66,500	60,200	2,230	5,700	8,100					
	250	33	71936.C	150,000	186,000	6,889	5,500	8,300	208.8		o	47	MBA 180
			CB 71936.C	150,000	130,200	4,822	7,100	10,700			o		
			71936.E	140,000	176,000	6,519	4,900	7,400	208.8		o	65	
			CB 71936.E	140,000	123,200	4,563	6,300	9,600			o		
	280	46	7036.C	230,000	278,000	10,296	5,200	7,800	222.0			54	MBA 180
			CB 7036.C	230,000	194,600	7,207	6,700	10,100					
			7036.E	218,000	265,000	9,815	4,600	7,000	222.0			77	
			CB 7036.E	218,000	185,500	6,870	5,900	9,100					
190	240	24	71838.C	81,000	108,500	4,019	4,600	6,800	210.9			41	MBA 190
			CB 71838.C	81,000	76,000	2,815	5,900	8,800					
			71838.E	76,000	101,000	3,741	4,100	6,100	210.9			62	
			CB 71838.E	76,000	70,700	2,619	5,300	7,900					
	260	33	71938.C	150,000	195,000	7,222	5,300	7,900	219.1		o	51	MBA 190
			CB 71938.C	150,000	136,500	5,056	6,800	10,200			o		
			71938.E	140,000	185,000	6,852	4,700	7,100	219.1		o	69	
			CB 71938.E	140,000	129,500	4,796	6,100	9,200			o		
	290	46	7038.C	250,000	310,000	11,481	5,000	7,500	232.3			55	MBA 190
			CB 7038.C	250,000	217,000	8,037	6,500	9,700					
			7038.E	235,000	295,000	10,926	4,500	6,700	232.3			79	
			CB 7038.E	235,000	206,500	7,648	5,800	8,700					
200	250	24	71840.C	81,000	113,500	4,204	4,400	6,500	222.0			42	MBA 200
			CB 71840.C	81,000	79,500	2,944	5,700	8,400					
			71840.E	76,000	105,500	3,907	3,900	5,800	222.0			64	
			CB 71840.E	76,000	73,900	2,737	5,000	7,500					
	280	38	71940.C	206,000	257,000	9,519	4,200	6,200	232.8			54	MBA 200
			CB 71940.C	206,000	179,900	6,663	5,400	8,000					
			71940.E	195,000	242,000	8,963	3,700	5,500	232.8			75	
			CB 71940.E	195,000	196,400	6,274	4,800	7,100					
	310	51	7040.C	267,000	342,000	12,667	4,600	6,900	246.3			60	MBA 200
			7040.E	255,000	328,000	12,148	4,100	6,200				85	

718 C/E
CB 718 C/E

719 C/E
CB 719 C/E
H 719 C/E
CBH 719 C/E

70 C/E
CB 70 C/E
H 70 C/E
CBH 70 C/E

72 C/E
CB 72 C/E

73 C/E

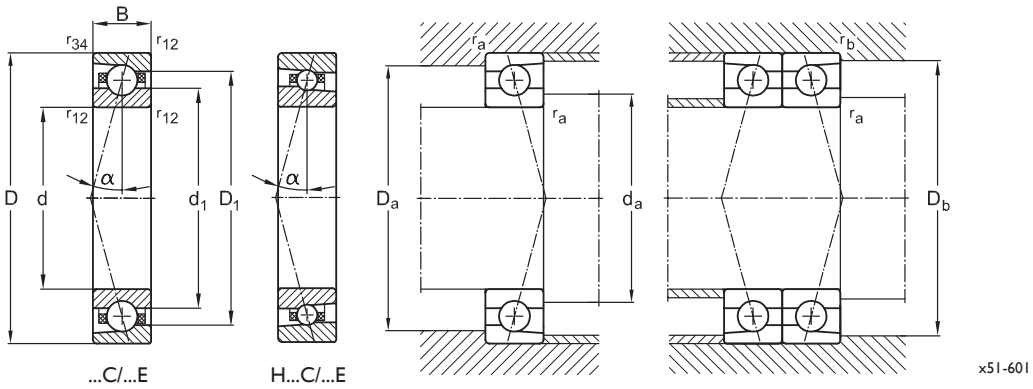

Basic dimensions			Basic designation	Dimensions				Weight	Mounting dimensions				
d	D	B		d_1	D_1	r_{12min}	r_{34min}	m	$d_{a,min}$	$D_{a,max}$	$D_{b,max}$	$r_{a,max}$	$r_{b,max}$
mm				mm				kg	mm				
180	225	22	71836.C	196.2	209.3	1.1	0.6	1.730	191.0	211.5	214.0	1.1	0.6
			CB 71836.C					1.592					
			71836.E	196.2	209.3	1.1	0.6	1.730	191.0	211.5	214.0	1.1	0.6
			CB 71836.E					1.592					
	250	33	71936.C	204.4	225.8	1.1	1.0	4.180	192.0	240.0	243.6	1.1	1.0
			CB 71936.C					3.846					
			71936.E	204.4	225.8	1.1	1.0	4.180	192.0	240.0	243.6	1.1	1.0
			CB 71936.E					3.846					
	280	46	7036.C	215.4	244.8	2.1	1.1	9.000	196.0	268.5	273.0	2.1	1.1
			CB 7036.C					8.280					
			7036.E	215.4	244.8	2.1	1.1	9.000	196.0	268.5	273.0	2.1	1.1
			CB 7036.E					8.280					
190	240	24	71838.C	207.1	223.2	1.1	0.6	2.250	202.0	225.6	228.0	1.1	0.6
			CB 71838.C					2.070					
			71838.E	207.1	223.2	1.1	0.6	2.250	202.0	225.6	228.0	1.1	0.6
			CB 71838.E					2.070					
	260	33	71938.C	214.4	235.8	2.1	1.0	4.450	202.0	250.0	253.6	2.1	1.0
			CB 71938.C					4.094					
			71938.E	214.4	235.8	2.1	1.0	4.450	202.0	250.0	253.6	2.1	1.0
			CB 71938.E					4.094					
	290	46	7038.C	225.4	254.5	2.1	1.1	9.350	207.0	279.0	283.5	2.1	1.1
			CB 7038.C					8.602					
			7038.E	225.4	254.5	2.1	1.1	9.350	207.0	279.0	283.5	2.1	1.1
			CB 7038.E					8.602					
200	250	24	71840.C	218.0	232.5	1.5	0.6	2.330	212.0	235.0	237.0	1.5	0.6
			CB 71840.C					2.144					
			71840.E	218.0	232.5	1.5	0.6	2.330	212.0	235.0	237.0	1.5	0.6
			CB 71840.E					2.144					
	280	38	71940.C	227.8	252.4	2.1	1.1	6.200	214.0	268.0	273.0	2.1	1.1
			CB 71940.C					5.704					
			71940.E	227.8	252.4	2.1	1.1	6.200	214.0	268.0	273.0	2.1	1.1
			CB 71940.E					5.704					
	310	51	7040.C	238.9	271.4	2.1	1.1	12.000	218.0	297.5	303.5	2.1	1.1
			7040.E					12.000					

718 C/E
CB 718 C/E

719 C/E
CB 719 C/E
H 719 C/E
CBH 719 C/E

70 C/E
CB 70 C/E
H 70 C/E
CBH 70 C/E

72 C/E
CB 72 C/E

73 C/E

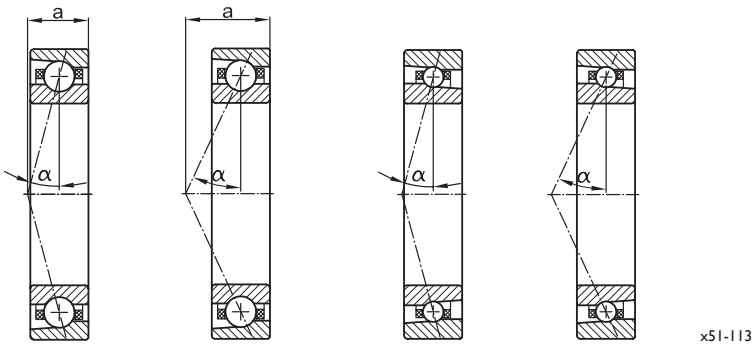

...C ...E H...C H...E

Basic dimensions d	D	B	Basic designation	Load ratings dyn. C_r	stat. C_{0r}	Fatigue limit load C_U (radial)	Speed grease n_G	oil/air n_O	Injection diameter d_{pi}	Direct oil lubrication	Sealing	Effective load centre a	Precision locknut
mm				N		N	min^{-1}		mm			mm	
220	270	24	71844.C	83,000	118,000	4,370	4,000	5,800	244.2			45	MBA 220
			CB 71844.C	83,000	82,600	3,059	5,200	7,500					
			71844.E	78,000	110,000	4,074	3,600	5,200	244.2			69	
			CB 71844.E	78,000	77,000	2,852	4,600	6,700					
	300	38	71944.C	218,000	287,000	10,630	3,800	5,500	253.2			56	MBA 220
			CB 71944.C	218,000	200,900	7,441	4,900	7,100					
			71944.E	206,000	272,000	10,074	3,400	4,900	253.2			80	
			CB 71944.E	206,000	190,400	7,052	4,400	6,300					
	340	56	7044.C	325,000	440,000	16,296	3,300	5,000	272.1			66	MBA 220
			7044.E	310,000	417,000	15,444	2,900	4,500				92	
240	300	28	71848.C	106,500	151,000	5,593	3,500	5,200	266.4			50	MBA 240
			CB 71848.C	106,500	105,700	3,915	4,500	6,700					
			71848.E	99,000	141,000	5,222	3,100	4,600	266.4			77	
			CB 71848.E	99,000	98,700	3,656	4,000	5,900					
	320	38	71948.C	225,000	312,000	11,556	3,300	4,900	273.6			60	MBA 240
			CB 71948.C	225,000	218,400	8,089	4,200	6,300					
			71948.E	214,000	287,000	10,630	2,900	4,400	273.6			84	
			CB 71948.E	214,000	200,900	7,441	3,700	5,700					
	360	56	7048.C	335,000	465,000	17,222	3,200	4,700	296.9			73	MBA 240
			7048.E	315,000	440,000	16,296	2,800	4,200				100	
260	320	28	71852.C	109,200	157,000	5,815	3,300	4,900	288.6			65	MBA 260
			CB 71852.C	109,200	109,900	4,070	4,200	6,300					
			71852.E	100,500	147,600	5,467	2,900	4,400	288.6			95	
			CB 71852.E	100,500	103,400	3,830	3,700	5,700					
	360	46	71952.C	284,500	414,000	15,333	3,100	4,600	275.9			68	MBA 260
			CB 71952.C	284,500	289,800	10,733	4,000	5,900					
			71952.E	275,000	385,000	14,259	2,700	4,100	275.9			95	
			CB 71952.E	275,000	269,500	9,981	3,500	5,300					

718 C/E
CB 718 C/E

719 C/E
CB 719 C/E
H 719 C/E
CBH 719 C/E

70 C/E
CB 70 C/E
H 70 C/E
CBH 70 C/E

72 C/E
CB 72 C/E

73 C/E

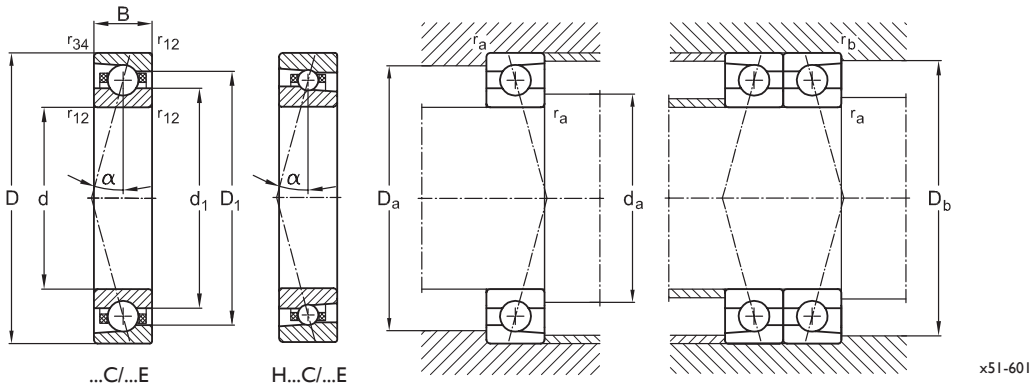

Basic dimensions			Basic designation	Dimensions				Weight	Mounting dimensions				
d	D	B		d_1	D_1	r_{12min}	r_{34min}	m	$d_{a,min}$	$D_{a,max}$	$D_{b,max}$	$r_{a,max}$	$r_{b,max}$
mm				mm				kg	mm				
220	270	24	71844.C	239.8	251.1	1.5	0.6	2.540	234.0	253.8	256.0	1.5	0.6
			CB 71844.C					2.337					
			71844.E	239.8	251.1	1.5	0.6	2.540	234.0	253.8	256.0	1.5	0.6
			CB 71844.E					2.337					
	300	38	71944.C	247.8	272.5	2.1	1.1	6.800	236.0	282.0	286.6	2.1	1.1
			CB 71944.C					6.256					
			71944.E	247.8	272.5	2.1	1.1	6.800	236.0	282.0	286.6	2.1	1.1
			CB 71944.E					6.256					
	340	56	7044.C	264.0	289.0	3.0	1.1	16.000	239.0	321.0	329.0	3.0	1.1
			7044.E					16.000					
240	300	28	71848.C	261.6	279.0	1.5	0.6	4.000	255.0	282.0	285.0	1.5	0.6
			CB 71848.C					3.680					
			71848.E	261.6	279.0	1.5	0.6	4.000	255.0	282.0	285.0	1.5	0.6
			CB 71848.E					3.680					
	320	38	71948.C	267.8	292.4	2.1	1.1	7.200	257.0	301.0	305.6	2.1	1.1
			CB 71948.C					6.624					
			71948.E	267.8	292.4	2.1	1.1	7.200	257.0	301.0	305.6	2.1	1.1
			CB 71948.E					6.624					
	360	56	7048.C	288.0	306.0	3.0	1.1	17.100	260.0	341.0	348.0	3.0	1.1
			7048.E					17.100					
260	320	28	71852.C	283.4	297.6	1.5	0.6	4.400	276.0	300.8	304.0	1.5	0.6
			CB 71852.C					4.048					
			71852.E	283.4	297.6	1.5	0.6	4.400	276.0	300.8	304.0	1.5	0.6
			CB 71852.E					4.048					
	360	46	71952.C	270.0	349.2	2.1	1.1	12.200	283.0	341.0	345.0	2.1	1.1
			CB 71952.C					11.224					
			71952.E	270.0	349.2	2.1	1.1	12.200	283.0	341.0	345.0	2.1	1.1
			CB 71952.E					11.224					

718 C/E
CB 718 C/E

719 C/E
CB 719 C/E
H 719 C/E
CBH 719 C/E

70 C/E
CB 70 C/E
H 70 C/E
CBH 70 C/E

72 C/E
CB 72 C/E

73 C/E

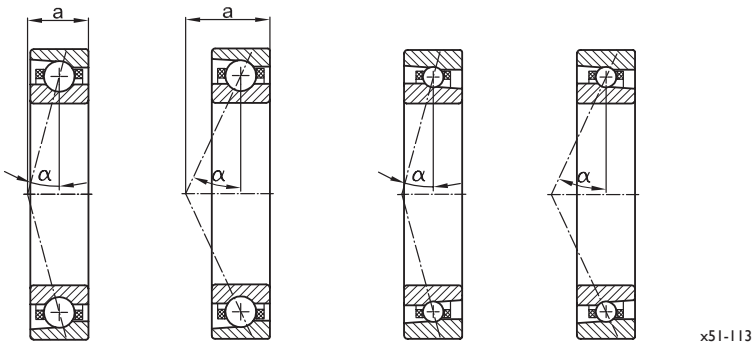

...C ...E H...C H...E

Basic dimensions			Basic designation	Load ratings dyn.	stat.	Fatigue limit load	Speed grease	oil/air	Injection diameter	Direct oil lubrication	Sealing	Effective load centre	Precision locknut
d	D	B		C_r	C_{0r}	C_U (radial)	n_G	n_O	d_{pi}			a	
mm				N		N	min^{-1}		mm			mm	
280	350	33	71856.C	142,000	201,000	7,444	3,000	4,500	310.8			67	MBA 280
			CB 71856.C	142,000	140,700	5,211	3,900	5,800					
			71856.E	128,000	191,000	7,074	2,700	4,000	310.8			100	
			CB 71856.E	128,000	133,700	4,952	3,500	5,200					
	380	46	71956.C	300,000	450,000	16,667	2,700	4,100	296.3			70	MBA 280
			CB 71956.C	300,000	315,000	11,667	3,500	5,300					
			71956.E	280,000	425,000	15,741	2,400	3,600	296.3			104	
			CB 71956.E	280,000	297,500	11,019	3,100	4,600					
300	380	38	71860.C	184,500	245,000	9,074	2,800	4,300	333.0			76	MBA 300
			CB 71860.C	184,500	171,500	6,352	3,600	5,500					
			71860.E	167,000	235,000	8,704	2,500	3,800	333.0			112	
			CB 71860.E	167,000	164,500	6,093	3,200	4,900					
	420	56	71960.C	361,000	572,000	21,185	2,500	3,900	321.9			83	MBA 300
			71960.E	341,000	541,000	20,037	2,200	3,500				119	
320	400	38	71864.C	189,500	252,300	9,344	2,600	4,100	355.2			79	MBA 320
			CB 71864.C	189,500	176,700	6,544	3,300	5,300					
			71864.E	170,500	241,000	8,926	2,300	3,600	355.2			117	
			CB 71864.E	170,500	168,700	6,248	2,900	4,600					
	440	56	71964.C	377,000	622,000	23,037	2,500	3,900	342.3			97	MBA 320
			71964.E	357,000	587,000	21,741	2,200	3,500				134	
340	460	56	71968.C	383,000	645,000	23,889	2,400	3,800	362.8			112	MBA 340
			71968.E	362,000	612,000	22,667	2,100	3,400				150	
360	480	56	71972.C	395,000	698,000	25,852	2,200	3,500	383.2			127	MBA 360
			71972.E	377,000	644,000	23,852	1,900	3,100				155	

718 C/E
CB 718 C/E

719 C/E
CB 719 C/E
H 719 C/E
CBH 719 C/E

70 C/E
CB 70 C/E
H 70 C/E
CBH 70 C/E

72 C/E
CB 72 C/E

73 C/E

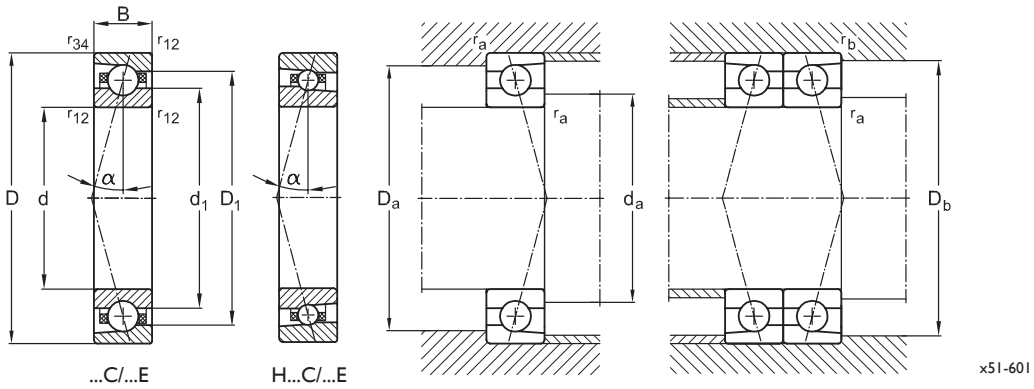

Basic dimensions			Basic designation	Dimensions				Weight	Mounting dimensions				
d	D	B		d_1	D_1	r_{12min}	r_{34min}	m	$d_{a,min}$	$D_{a,max}$	$D_{b,max}$	$r_{a,max}$	$r_{b,max}$
mm				mm				kg	mm				
280	350	33	71856.C	305.2	325.5	1.5	0.6	5.300	297.0	329.0	332.0	1.5	0.6
			CB 71856.C					4.876					
			71856.E	305.2	325.5	1.5	0.6	5.300	297.0	329.0	332.0	1.5	0.6
			CB 71856.E					4.876					
	380	46	71956.C	290.0	368.6	2.1	1.1	13.000	304.0	360.0	364.8	2.1	1.1
			CB 71956.C					11.960					
			71956.E	290.0	368.6	2.1	1.1	13.000	304.0	360.0	364.8	2.1	1.1
			CB 71956.E					11.960					
300	380	38	71860.C	327.0	353.4	2.1	1.0	5.800	318.0	357.2	361.0	2.1	1.0
			CB 71860.C					5.336					
			71860.E	327.0	353.4	2.1	1.0	5.800	318.0	357.2	361.0	2.1	1.0
			CB 71860.E					5.336					
	420	56	71960.C	315.0	407.4	3.0	1.1	20.500	327.0	399.0	403.0	3.0	1.1
			71960.E					20.500					
320	400	38	71864.C	348.8	372.0	2.1	1.0	6.100	340.0	376.0	380.0	2.1	1.0
			CB 71864.C					5.612					
			71864.E	348.8	372.0	2.1	1.0	6.100	340.0	376.0	380.0	2.1	1.0
			CB 71864.E					5.612					
	440	56	71964.C	335.0	426.8	3.0	1.1	21.600	348.0	419.0	423.0	3.0	1.1
			71964.E					21.600					
340	460	56	71968.C	335.0	446.2	3.0	1.1	22.800	371.0	437.0	441.0	3.0	1.1
			71968.E					22.800					
360	480	56	71972.C	375.0	465.6	3.0	1.1	24.000	392.0	457.0	461.0	3.0	1.1
			71972.E					24.000					

2.4 Preload and stiffness

A machine tool is seldom a single purpose machine. Based on this a spindle can not be sized to meet a single set of boundary conditions. Eventually sizing a machine tool spindle is based on the total range of the basic application of the machine. If the machine is a multipurpose machine each critical operational condition needs to be calculated.

If high precision angular contact ball bearings are mounted in sets, the ground-in preload essentially determines the characteristics of speed, heat and stiffness. However, high rotational speed and great stiffness are contradictory characteristics. So the best possible compromise needs to be considered.

There have been examples where extremely sophisticated bearings have been designed with elaborate hydraulic devices to create variable preloads

In order to meet diverse requirements, the high precision angular contact ball bearings have therefore been developed not only with different-sized rolling elements, and thus different load ratings, but also with different preloads.

The default preloads have been designated as X for extra light, L for light, M for medium, and H for high preloads. This grading is suitable for the great majority of applications.

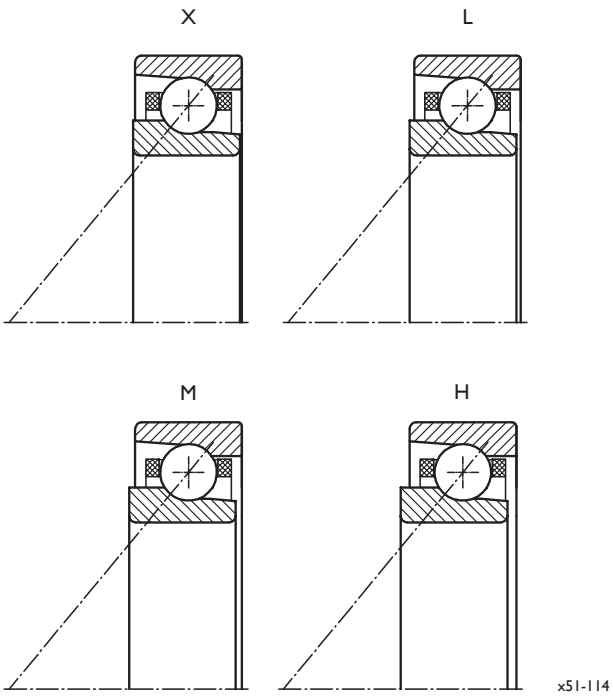

Fig. 2.6: Preload of IBC high precision angular contact ball bearings

The preload of a high precision angular contact ball bearing is defined as the axial force that needs to be applied in order to align the faces of inner and outer rings; the rings are slightly offset against each other when the single bearing is in an unloaded state. The bearing thereby becomes elastically deformed without, however, sustaining damage.

The reciprocal of bearing elasticity is stiffness. Stiffness indicates the resisting force of a preloaded bearing in newtons over its spring deflection in µm. Preload and stiffness are interdependent. As a rule, the stiffness of a bearing does not increase in a linear fashion in relationship to the preload. The axial and radial stiffness of a pair of angular contact ball bearings depends both on the preload and the contact angle.

The following table-values specify the axial stiffness S_a and the radial stiffness S_r for each individual angular contact ball bearing. The same values are true for a pair of angular contact ball bearings of the same type that are set against each other. The relevant factors needed to calculate the preload and stiffness for further sets of high precision angular contact ball bearings are contained in Chapter 2.7 (IBC High precision angular contact ball bearing sets).

The preload stresses the high precision bearings in the same way as outside axial forces do. In dimensioning the rolling bearing, quite often a good balance needs to be struck between preload and stiffness on the one hand and attainable speed and life time on the other.

Due to the lower static load-carrying capacity of the ceramic rolling elements as compared to standard bearings of the same geometry, high precision hybrid rolling bearings have slightly lower preloads. But the stiffness of hybrid bearings is still significantly higher at identical preload, because ceramic rolling elements are harder.

The values for axial and radial stiffness contain parameters that are affected by tolerances that relate to the manufacturing process. The actual stiffness of a rolling bearing may only be determined when it is fitted in its individual mounting situation.
For this reason the values in the tables have been rounded up or down; the values are only meant to be used to compare the different kinds of high precision rolling bearings with each other.

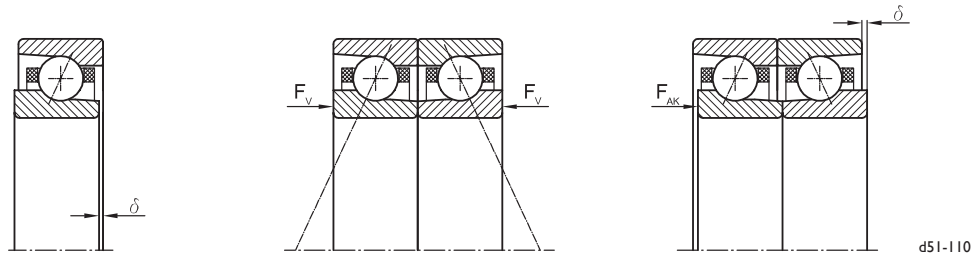

Preload step
δ

Preload force
F_v

Unloading force
F_{AK}

Preloads and stiffness

Basic designation	X					L					M					H				
	F_v	δ	S_a	S_r	F_{AK}	F_v	δ	S_a	S_r	F_{AK}	F_v	δ	S_a	S_r	F_{AK}	F_v	δ	S_a	S_r	F_{AK}
	N	µm	N/µm		N	N	µm	N/µm		N	N	µm	N/µm		N	N	µm	N/µm		N
X-706.C	5	4	6	40	14	10	6	8	50	30	22	10	12	55	65	45	14	16	70	130
CBX-706.C	3	2	5	35	7	5	4	7	45	14	12	7	10	50	30	22	9	14	65	65
X-706.E	7	2	12	25	18	14	3	16	35	35	30	6	22	45	85	60	9	30	60	170
CBX-706.E	4	1	12	22	10	7	2	16	30	20	16	4	22	45	45	30	6	30	65	90
X-707.C	6	4	7	45	16	12	6	9	55	35	25	10	14	65	75	55	14	18	85	150
CBX-707.C	3	3	6	40	8	6	4	8	50	16	14	7	12	60	40	25	10	18	80	75
X-707.E	8	2	14	30	22	16	4	20	40	45	35	6	25	50	100	70	9	35	70	200
CBX-707.E	4	1	12	25	12	8	2	18	35	22	18	4	25	50	50	35	6	35	75	100
X-708.C	9	4	8	50	24	18	6	10	65	50	40	10	14	75	110	75	14	22	95	220
CBX-708.C	5	3	7	45	12	9	4	10	60	25	20	7	14	70	55	40	10	20	90	110
X-708.E	10	2	16	35	30	20	4	22	45	55	45	6	30	60	130	90	9	40	80	250
CBX-708.E	5	2	14	30	14	10	2	20	40	30	22	4	30	60	65	45	6	40	85	130
X-709.C	10	4	9	60	30	20	6	12	70	55	45	10	16	85	130	90	16	24	110	250
CBX-709.C	5	3	8	50	14	10	4	10	65	30	22	7	16	80	65	45	10	22	100	130
X-709.E	12	2	18	40	35	24	4	24	50	65	50	6	35	65	150	100	9	45	90	290
CBX-709.E	6	2	16	35	16	12	2	22	45	35	25	4	35	65	75	55	6	45	95	150
X-71900.C	12	2	9	60	30	22	3	12	70	65	50	6	18	90	150	100	10	25	110	290
CBX-71900.C	6	1	8	50	16	12	2	10	65	30	25	4	16	80	75	50	6	22	100	150
X-71900.E	16	2	22	45	45	30	2	30	60	90	70	4	40	80	200	140	6	55	110	400
CBX-71900.E	8	1	20	40	22	16	2	25	55	45	35	3	35	75	100	70	4	50	100	200
X-7000.C	12	4	10	65	35	25	6	14	80	70	55	10	18	95	160	110	16	25	120	320
CBX-7000.C	9	3	9	55	24	18	4	12	75	50	40	7	18	85	110	80	10	24	110	220
X-7000.E	12	2	22	40	35	24	4	25	55	70	55	6	35	75	160	110	10	50	100	310
CBX-7000.E	6	2	18	35	18	12	2	25	50	35	30	4	35	75	80	55	6	50	100	160
7200.C	14	4	9	60	40	25	7	12	75	75	60	10	18	90	170	120	14	24	110	350
7200.E	22	2	22	45	65	45	4	30	55	130	100	6	40	80	280	200	10	55	110	570

F_v preload force of a rolling bearing
δ preload step of a rolling bearing
S_a axial stiffness for a pair of bearings in X- or O-arrangement
S_r radial stiffness for a pair of bearings in X- or O-arrangement
F_{AK} unloading force that causes loss of preload in the bearings

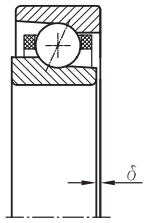

Preload step
δ

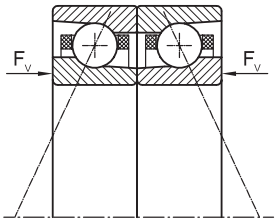

Preload force
F_V

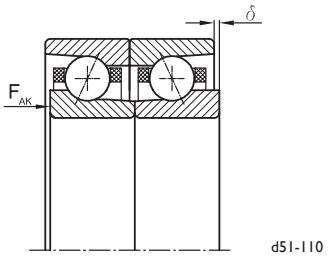

Unloading force
F_{AK}

Preloads and stiffness

Basic designation	X					L					M					H				
	F_V	δ	S_a	S_r	F_{AK}	F_V	δ	S_a	S_r	F_{AK}	F_V	δ	S_a	S_r	F_{AK}	F_V	δ	S_a	S_r	F_{AK}
	N	µm	N/µm		N	N	µm	N/µm		N	N	µm	N/µm		N	N	µm	N/µm		N
X-71901.C	12	2	10	70	35	24	3	14	85	65	50	7	22	110	150	100	10	30	140	300
CBX-71901.C	6	1	9	60	16	12	2	12	80	35	25	4	18	95	75	50	7	25	120	150
X-71901.E	16	2	25	55	45	30	2	35	70	90	70	4	50	95	200	140	7	65	130	410
CBX-71901.E	8	1	24	50	22	16	2	30	65	45	35	3	45	90	100	70	4	60	120	200
X-7001.C	14	4	12	80	35	25	6	16	95	75	60	12	22	110	170	120	16	30	140	340
CBX-7001.C	7	3	10	70	18	14	4	14	85	35	30	7	20	100	85	60	10	30	130	170
X-7001.E	14	2	25	50	40	30	4	35	65	80	65	6	45	90	180	130	10	60	120	350
CBX-7001.E	7	2	22	45	20	14	2	30	60	40	30	4	45	85	90	65	6	65	130	180
7201.C	16	4	12	75	45	30	7	16	90	85	70	10	22	110	190	140	16	30	130	390
7201.E	24	3	25	55	70	50	4	35	70	140	110	7	45	95	310	220	10	65	130	610
X-71902.C	12	2	14	90	35	24	4	18	110	70	55	7	25	130	160	110	10	40	170	310
CBX-71902.C	6	2	12	75	18	12	2	16	95	35	30	5	24	120	80	55	7	35	150	160
X-71902.E	16	2	35	70	45	35	3	45	90	95	75	4	60	120	210	150	7	80	160	430
CBX-71902.E	8	1	30	60	24	16	2	40	80	45	40	3	55	110	110	75	4	75	150	210
7002.C	14	4	16	100	40	30	7	20	120	85	65	12	30	140	190	130	16	40	180	370
CB 7002.C	7	3	14	85	20	14	4	18	110	40	35	8	25	130	95	65	10	35	170	190
7002.CX	9	4	12	80	24	18	6	18	100	50	40	10	22	110	110	80	14	30	140	220
CB 7002.CX	4	2	12	70	12	9	4	16	95	24	20	6	20	100	55	40	9	30	130	110
7002.E	16	3	30	65	50	35	4	40	80	95	75	7	55	110	220	150	10	75	150	430
CB 7002.E	8	2	30	55	24	16	3	40	75	50	40	4	55	110	110	75	7	80	160	220
7002.EX	10	2	25	50	30	20	3	35	65	60	45	6	45	90	130	90	9	60	120	260
CB 7002.EX	5	1	24	45	14	10	2	30	60	30	22	4	40	80	65	45	6	55	110	130
7202.C	18	5	14	90	50	35	7	18	110	100	85	12	25	130	240	170	16	35	170	470
CB 7202.C	12	3	14	90	35	25	5	18	110	75	60	7	25	130	160	120	10	35	170	330
7202.E	30	3	35	65	80	55	4	45	85	160	120	7	60	120	350	250	10	80	160	700
CB 7202.E	20	2	35	220	55	40	3	45	260	110	85	5	60	290	250	170	7	80	360	490

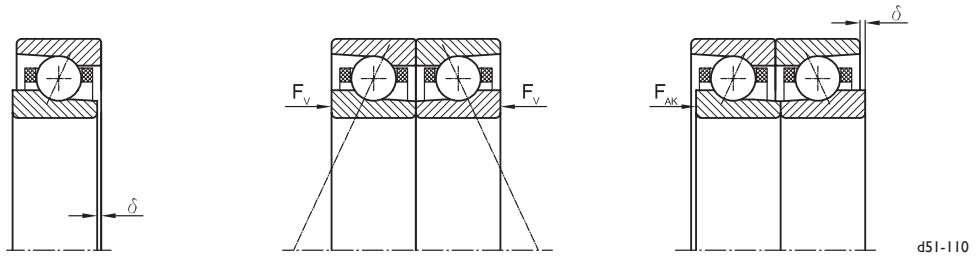

Preload step
δ

Preload force
F_V

Unloading force
F_{AK}

Preloads and stiffness

Basic designation	X					L					M					H				
	F_V	δ	S_a	S_r	F_{AK}	F_V	δ	S_a	S_r	F_{AK}	F_V	δ	S_a	S_r	F_{AK}	F_V	δ	S_a	S_r	F_{AK}
	N	µm	N/µm		N	N	µm	N/µm		N	N	µm	N/µm		N	N	µm	N/µm		N
71903.C	12	2	16	100	35	25	4	20	120	75	60	7	30	150	160	120	12	45	190	330
CB 71903.C	6	2	14	85	18	12	2	18	110	35	30	5	25	130	80	60	7	35	170	160
71903.E	18	2	40	75	50	35	3	50	100	100	80	5	65	130	220	160	7	90	180	440
CB 71903.E	9	1	35	70	24	18	2	45	90	50	40	3	60	120	110	80	5	85	170	220
7003.C	16	5	18	110	45	30	7	22	140	90	70	12	30	160	200	140	18	45	200	400
CB 7003.C	8	3	14	95	22	16	5	20	120	45	35	8	30	150	100	70	12	40	190	200
7003.CX	10	4	14	90	25	20	6	20	120	55	45	10	25	130	120	85	14	35	160	240
CB 7003.CX	5	3	12	80	14	10	4	18	110	25	22	7	24	120	60	45	9	35	150	120
7003.E	20	3	35	70	55	40	4	45	90	110	85	7	65	130	250	170	10	85	170	490
CB 7003.E	10	2	30	65	25	20	3	45	85	55	45	5	60	120	120	85	7	90	180	250
7003.EX	12	2	30	55	35	24	4	35	75	65	50	6	50	100	150	100	9	70	140	300
CB 7003.EX	6	1	25	50	16	12	2	35	70	35	25	4	45	90	75	50	6	65	130	150
7203.C	22	5	16	100	60	40	8	22	130	120	95	12	30	150	270	190	18	40	190	540
CB 7203.C	14	3	14	95	40	30	5	20	120	85	65	8	30	150	190	130	12	40	190	380
7203.E	30	3	40	75	85	60	4	50	100	170	140	7	65	130	390	280	12	90	180	780
CB 7203.E	22	2	35	65	60	45	3	45	90	120	95	5	65	130	270	190	7	95	190	550
71904.C	14	3	18	120	40	30	4	24	140	80	65	8	35	180	180	130	12	50	230	360
CB 71904.C	7	2	16	100	20	14	3	22	130	40	30	5	30	160	90	65	8	45	200	180
71904.E	20	2	45	90	55	40	3	60	120	110	85	5	80	160	240	170	7	110	220	480
CB 71904.E	10	1	40	85	25	20	2	55	110	55	45	3	75	150	120	85	5	100	200	240
7004.C	18	5	20	130	50	35	7	25	160	100	80	12	35	190	230	160	18	55	240	460
CB 7004.C	9	3	18	110	25	18	5	24	150	50	40	8	35	170	120	80	12	50	220	230
7004.CX	10	4	16	100	30	22	6	24	140	60	50	10	30	150	140	100	16	40	190	280
CB 7004.CX	5	3	14	95	16	10	4	22	130	30	24	7	25	140	70	50	10	40	170	140
7004.E	24	3	40	85	65	45	4	55	110	130	110	7	75	150	300	210	12	100	200	600
CB 7004.E	12	2	35	75	35	24	3	50	100	65	55	5	75	150	150	110	7	100	210	300
7004.EX	14	2	35	65	40	30	4	45	85	80	65	6	60	120	180	130	10	80	160	360
CB 7004.EX	7	2	30	60	20	14	2	40	80	40	30	4	55	110	90	65	6	75	150	180
7204.C	25	5	18	120	75	50	8	25	150	150	120	12	35	180	330	230	18	50	220	650
CB 7204.C	18	3	18	110	50	35	5	24	150	100	80	8	35	170	230	160	12	50	220	460
7204.E	35	3	45	90	100	70	5	55	110	200	160	8	80	160	460	330	12	110	210	920
CB 7204.E	25	2	40	80	70	50	3	55	110	140	110	5	75	150	320	230	8	110	220	650
7304.C	40	5	18	120	120	85	9	25	150	240	190	14	35	180	540	380	20	50	220	1080
7304.E	85	3	45	90	230	170	5	55	110	470	370	9	80	160	1050	740	14	110	210	2110

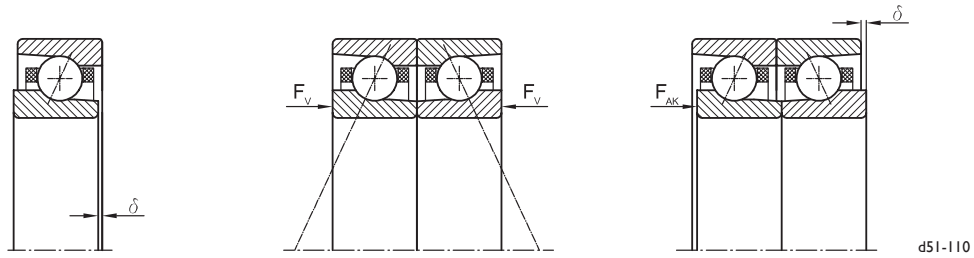

Preload step
δ

Preload force
F_V

Unloading force
F_{AK}

Preloads and stiffness

Basic designation	X					L					M					H				
	F_V	δ	S_a	S_r	F_{AK}	F_V	δ	S_a	S_r	F_{AK}	F_V	δ	S_a	S_r	F_{AK}	F_V	δ	S_a	S_r	F_{AK}
	N	µm	N/µm		N	N	µm	N/µm		N	N	µm	N/µm		N	N	µm	N/µm		N
71905.C	16	3	22	150	50	35	4	30	180	95	75	8	45	220	210	150	12	65	280	430
CB 71905.C	8	2	20	130	24	16	3	25	160	50	40	5	40	190	110	75	8	55	250	210
71905.E	22	2	55	110	65	45	3	75	150	130	100	5	100	200	290	200	8	140	270	580
CB 71905.E	12	1	50	100	30	22	2	70	140	65	50	3	90	180	140	100	5	130	250	290
7005.C	24	5	25	160	65	45	8	35	200	130	100	14	45	230	300	210	18	65	300	590
CB 7005.C	12	3	22	140	35	24	5	30	180	65	50	9	45	220	150	100	12	60	280	300
7005.CX	14	4	20	130	40	30	7	30	170	80	65	12	35	190	180	130	16	55	240	360
CB 7005.CX	7	3	18	120	20	14	4	25	160	40	30	7	35	170	90	65	10	50	220	180
7005.E	30	3	55	110	90	65	5	70	140	180	140	8	95	190	410	290	12	130	250	810
CB 7005.E	16	2	45	95	45	30	3	65	130	90	70	5	90	180	200	140	8	130	260	410
7005.EX	20	3	40	85	55	40	4	55	110	110	85	7	75	150	240	170	10	100	200	490
CB 7005.EX	10	2	40	75	25	20	3	50	100	55	45	4	70	140	120	85	7	90	180	240
7205.C	35	6	24	150	100	70	9	30	190	200	160	14	45	220	450	320	20	60	280	890
CB 7205.C	24	4	22	140	70	50	6	30	180	140	110	9	45	220	310	220	14	60	280	620
7205.E	50	3	55	110	140	95	5	70	140	270	220	8	100	200	610	430	12	130	270	1220
CB 7205.E	35	2	50	100	95	65	3	65	130	190	150	5	95	190	430	300	8	140	280	860
7305.C	60	6	24	150	170	120	10	30	190	350	280	14	45	220	780	550	22	60	280	1570
7305.E	120	3	55	110	350	250	6	70	140	700	560	10	100	200	1580	1110	14	130	270	3150

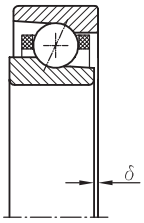

Preload step
δ

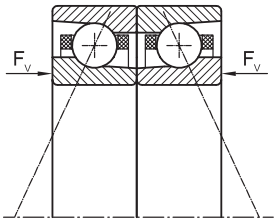

Preload force
F_V

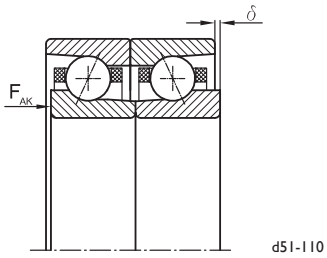

Unloading force
F_{AK}

Preloads and stiffness

Basic designation	X					L					M					H				
	F_V	δ	S_a	S_r	F_{AK}	F_V	δ	S_a	S_r	F_{AK}	F_V	δ	S_a	S_r	F_{AK}	F_V	δ	S_a	S_r	F_{AK}
	N	µm	N/µm		N	N	µm	N/µm		N	N	µm	N/µm		N	N	µm	N/µm		N
71906.C	20	3	25	180	60	40	5	35	220	120	95	9	55	260	260	190	14	75	340	520
CB 71906.C	10	2	24	150	30	20	3	30	190	60	45	6	45	230	130	95	9	65	300	260
71906.CX	12	3	22	140	35	24	4	30	170	70	55	8	40	210	160	110	12	60	270	310
CB 71906.CX	6	2	20	130	18	12	3	25	160	35	30	5	40	190	80	55	7	55	250	160
71906.E	30	2	70	140	80	55	3	90	180	160	120	6	120	240	350	250	9	160	320	710
CB 71906.E	14	1	60	120	40	30	2	80	160	80	60	4	110	220	180	120	6	150	300	350
71906.EX	16	2	55	110	45	35	3	70	140	95	75	5	95	190	210	150	7	130	260	420
CB 71906.EX	8	1	50	100	24	16	2	65	130	45	35	3	90	180	110	75	5	120	240	210
7006.C	30	5	30	200	85	60	8	40	240	170	130	14	55	280	380	270	20	80	360	760
CB 7006.C	14	3	25	170	40	30	5	35	220	85	65	9	50	260	190	130	14	75	330	380
7006.CX	18	5	24	160	50	35	7	35	210	100	80	12	45	220	230	160	18	65	280	460
CB 7006.CX	9	3	22	140	25	18	5	30	190	50	40	8	40	200	110	80	12	60	260	230
7006.E	40	3	65	130	120	85	5	80	160	240	190	8	110	220	540	380	12	150	300	1080
CB 7006.E	22	2	55	110	60	40	3	75	150	120	95	5	110	220	270	190	8	160	310	540
7006.EX	25	3	50	100	70	50	4	65	130	140	110	7	90	180	320	230	10	120	240	650
CB 7006.EX	12	2	45	90	35	25	3	60	120	70	55	5	80	160	160	110	7	110	220	320
7206.C	45	6	30	180	130	95	9	40	230	260	210	14	55	260	590	420	22	75	330	1190
CB 7206.C	35	4	25	170	95	65	6	35	220	190	150	10	50	260	420	290	14	75	330	830
7206.E	65	4	65	130	180	130	5	85	170	360	280	9	120	230	800	570	14	160	320	1600
CB 7206.E	45	2	60	120	120	90	4	80	160	250	200	6	110	230	560	400	9	170	330	1120
7306.C	80	6	30	180	230	160	10	40	230	470	370	16	55	260	1050	740	24	75	330	2100
7306.E	170	4	65	130	470	330	6	85	170	940	750	10	120	230	2120	1500	16	160	320	4250

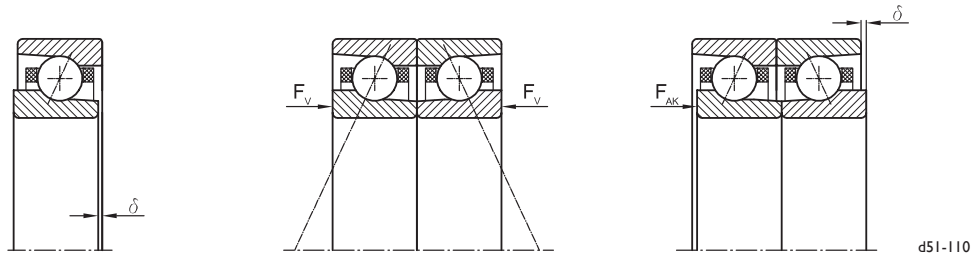

Preload step
δ

Preload force
F_V

Unloading force
F_{AK}

Preloads and stiffness

Basic designation	X					L					M					H				
	F_V	δ	S_a	S_r	F_{AK}	F_V	δ	S_a	S_r	F_{AK}	F_V	δ	S_a	S_r	F_{AK}	F_V	δ	S_a	S_r	F_{AK}
	N	µm	N/µm		N	N	µm	N/µm		N	N	µm	N/µm		N	N	µm	N/µm		N
71907.C	25	3	30	200	70	50	5	40	250	140	110	9	60	310	320	230	14	90	400	640
CB 71907.C	12	2	30	180	35	25	3	40	230	70	55	6	55	270	160	110	9	75	350	320
71907.CX	16	3	25	160	45	30	4	35	200	85	70	8	50	250	190	140	12	70	320	390
CB 71907.CX	8	2	24	150	22	16	3	30	180	45	35	5	45	220	95	70	8	65	290	190
71907.E	35	2	80	160	95	70	3	100	200	190	150	6	140	280	440	310	9	190	380	870
CB 71907.E	18	1	70	140	50	35	2	95	190	95	75	4	130	260	220	150	6	180	350	440
71907.EX	20	2	65	130	60	40	3	80	160	120	90	5	110	220	260	180	8	150	300	520
CB 71907.EX	10	1	60	120	30	20	2	75	150	60	45	3	100	200	130	90	5	140	280	260
7007.C	40	6	35	230	110	75	9	45	280	210	170	14	65	330	480	340	22	90	420	960
CB 7007.C	18	4	30	200	55	40	6	40	250	110	85	10	60	300	240	170	14	85	390	480
7007.CX	22	5	30	180	65	45	7	40	240	130	100	12	50	260	290	200	18	75	330	580
CB 7007.CX	12	3	25	170	30	22	5	35	220	65	50	8	50	240	140	100	12	70	300	290
7007.E	55	3	75	150	150	110	5	95	190	310	240	9	130	260	690	490	14	180	350	1390
CB 7007.E	25	2	65	130	75	55	3	90	180	150	120	6	130	250	350	240	9	180	360	690
7007.EX	35	3	60	120	90	65	4	75	150	180	150	7	100	210	420	290	12	140	280	830
CB 7007.EX	16	2	55	110	45	35	3	70	140	90	75	5	95	190	210	150	7	130	260	420
7207.C	60	7	35	210	170	120	10	45	260	340	270	16	60	310	770	550	24	85	390	1540
CB 7207.C	40	4	30	200	120	85	6	40	250	240	190	10	60	300	540	380	16	85	390	1080
7207.E	80	4	75	150	230	160	6	100	200	460	370	10	140	270	1030	730	16	190	370	2070
CB 7207.E	55	2	70	140	160	110	4	95	190	320	260	6	130	270	720	510	10	190	390	1450
7307.C	100	7	35	210	300	210	12	45	260	590	470	18	60	310	1340	940	25	85	390	2670
7307.E	210	4	75	150	600	420	7	100	200	1200	950	12	140	270	2690	1900	18	190	370	5390

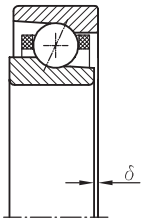

Preload step
δ

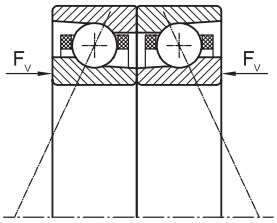

Preload force
F_V

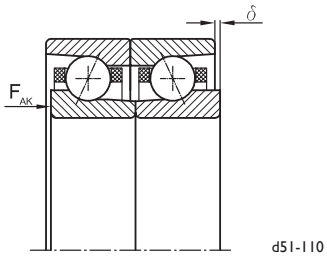

Unloading force
F_{AK}

Preloads and stiffness

Basic designation	X					L					M					H				
	F_V	δ	S_a	S_r	F_{AK}	F_V	δ	S_a	S_r	F_{AK}	F_V	δ	S_a	S_r	F_{AK}	F_V	δ	S_a	S_r	F_{AK}
	N	µm	N/µm		N	N	µm	N/µm		N	N	µm	N/µm		N	N	µm	N/µm		N
71908.C	30	3	35	230	85	60	5	50	290	170	140	10	70	350	390	280	16	100	460	790
CB 71908.C	16	2	30	210	45	30	3	45	260	85	70	7	60	310	200	140	10	90	400	390
71908.CX	18	3	30	190	50	35	4	40	230	100	85	9	55	280	240	170	14	80	360	470
CB 71908.CX	9	2	25	170	25	18	3	35	210	50	40	6	50	260	120	85	9	75	330	240
71908.E	40	2	90	180	120	85	4	120	230	240	190	6	160	320	530	380	10	220	430	1070
CB 71908.E	22	1	85	170	60	40	2	110	220	120	95	4	150	290	270	190	6	200	400	530
71908.EX	25	2	70	140	70	50	3	95	190	140	110	5	130	250	320	230	8	170	350	640
CB 71908.EX	12	1	65	130	35	25	2	85	170	70	55	3	120	230	160	110	5	160	320	320
H 71908.E	16	2	70	140	50	35	3	90	180	95	75	5	120	240	210	150	8	170	330	430
CBH 71908.E	12	1	70	140	35	24	2	95	190	65	55	3	120	250	150	110	5	170	340	300
7008.C	45	6	40	260	130	95	9	55	320	270	210	16	75	370	600	430	22	110	480	1210
CB 7008.C	24	4	35	230	65	45	6	50	290	130	110	10	70	350	300	210	14	100	450	600
7008.CX	30	4	30	210	80	55	6	45	280	160	130	12	60	300	360	260	16	85	380	720
CB 7008.CX	14	3	30	190	40	30	4	45	260	80	65	7	55	270	180	130	10	75	350	360
H 7008.C	14	2	30	190	40	30	8	40	240	80	65	14	55	290	180	130	20	80	370	360
CBH 7008.C	10	2	30	200	30	20	5	40	250	55	45	9	60	300	130	90	12	85	380	250
7008.E	70	4	85	170	190	140	5	110	220	390	310	9	150	300	870	620	14	200	400	1740
CB 7008.E	35	2	75	150	95	70	4	100	200	190	150	6	150	290	440	310	9	210	420	870
7008.EX	40	3	65	130	120	80	4	85	170	230	180	7	120	240	520	370	10	160	320	1050
CB 7008.EX	20	2	60	120	60	40	3	80	160	120	90	4	110	220	260	180	7	150	300	520
H 7008.E	20	1	55	110	60	40	5	75	150	120	90	8	110	220	260	180	12	160	310	520
CBH 7008.E	14	1	60	120	40	30	3	80	160	80	65	5	110	230	180	130	8	160	320	370
7208.C	75	7	40	240	220	150	10	50	300	430	350	16	70	350	980	690	25	100	450	1960
CB 7208.C	55	5	35	230	150	110	7	50	290	300	240	12	70	350	680	480	16	100	440	1370
7208.E	100	4	90	180	290	210	6	110	230	580	460	10	160	310	1310	920	16	210	430	2610
CB 7208.E	70	3	80	160	200	140	4	110	210	410	320	7	150	310	910	650	10	220	440	1830

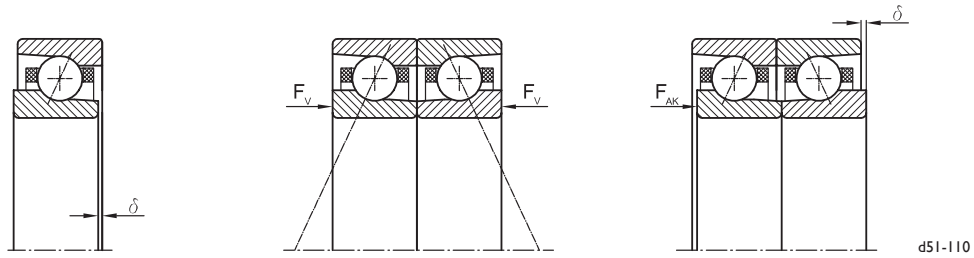

Preload step
δ

Preload force
F_V

Unloading force
F_{AK}

Preloads and stiffness

Basic designation	X					L					M					H				
	F_V	δ	S_a	S_r	F_{AK}	F_V	δ	S_a	S_r	F_{AK}	F_V	δ	S_a	S_r	F_{AK}	F_V	δ	S_a	S_r	F_{AK}
	N	µm	N/µm		N	N	µm	N/µm		N	N	µm	N/µm		N	N	µm	N/µm		N
71909.C	35	4	40	260	110	75	5	55	320	210	170	10	80	390	480	340	16	110	510	950
CB 71909.C	18	2	35	230	55	35	4	50	290	110	85	7	70	350	240	170	10	100	450	480
71909.CX	22	3	30	210	65	45	5	45	260	130	100	9	65	320	290	200	14	90	410	570
CB 71909.CX	12	2	30	190	30	22	3	40	240	65	50	6	60	290	140	100	9	85	380	290
71909.E	50	2	100	200	140	100	4	130	260	290	230	7	180	360	650	460	10	240	490	1300
CB 71909.E	25	2	95	190	70	50	2	120	240	140	120	4	170	330	330	230	7	230	460	650
71909.EX	30	2	80	160	85	60	3	110	210	170	140	6	140	290	390	280	9	190	390	780
CB 71909.EX	16	1	75	150	45	30	2	95	190	85	70	4	130	260	200	140	6	180	360	390
H 71909.E	20	2	80	160	60	40	3	100	200	120	90	6	140	270	260	180	9	190	370	520
CBH 71909.E	14	1	80	160	40	30	2	100	210	80	65	4	140	280	180	130	6	190	380	370
7009.C	60	6	45	290	170	120	10	60	360	330	260	16	85	420	740	530	24	120	530	1490
CB 7009.C	30	4	40	260	85	60	6	55	330	170	130	10	80	390	370	260	16	110	500	740
7009.CX	35	4	35	230	100	70	7	50	310	200	160	12	65	330	450	320	16	95	430	890
CB 7009.CX	18	3	35	210	50	35	4	50	290	100	80	8	60	310	220	160	10	85	390	450
H 7009.C	18	3	35	210	50	35	8	45	260	100	80	14	65	320	220	160	20	90	420	450
CBH 7009.C	12	2	35	230	35	24	5	45	280	70	55	9	65	340	160	110	14	95	430	310
7009.E	85	4	95	190	240	170	6	120	240	480	380	10	170	330	1080	760	16	230	450	2150
CB 7009.E	40	2	85	170	120	85	4	110	230	240	190	6	160	330	540	380	10	230	470	1080
7009.EX	50	3	75	150	140	100	4	100	200	290	230	7	130	270	650	460	10	180	360	1290
CB 7009.EX	25	2	70	140	70	50	3	90	180	140	110	5	120	240	320	230	7	170	330	650
H 7009.E	25	2	60	120	70	50	5	85	170	140	110	8	120	250	320	230	12	170	350	650
CBH 7009.E	18	1	65	130	50	35	3	90	180	100	80	5	130	250	230	160	8	180	360	450
7209.C	95	7	40	270	270	190	12	55	340	540	430	18	80	390	1210	860	25	110	500	2420
CB 7209.C	65	5	40	250	190	130	7	55	330	380	300	12	80	390	850	600	18	110	500	1700
7209.E	130	4	100	200	360	250	7	130	260	720	570	12	180	350	1620	1140	18	240	480	3240
CB 7209.E	90	3	90	180	250	180	4	120	240	500	400	7	170	340	1130	800	12	250	500	2270

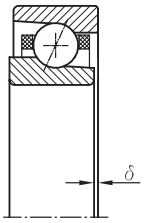

Preload step
δ

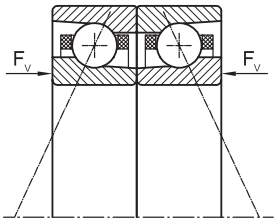

Preload force
F_V

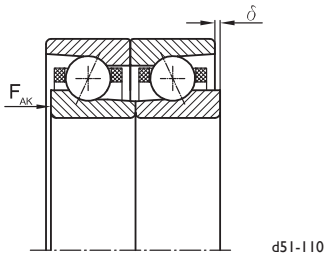

Unloading force
F_{AK}

Preloads and stiffness

Basic designation	X					L					M					H				
	F_V	δ	S_a	S_r	F_{AK}	F_V	δ	S_a	S_r	F_{AK}	F_V	δ	S_a	S_r	F_{AK}	F_V	δ	S_a	S_r	F_{AK}
	N	µm	N/µm		N	N	µm	N/µm		N	N	µm	N/µm		N	N	µm	N/µm		N
71810.C	18	4	30	200	50	35	6	40	240	100	80	12	60	290	220	160	18	80	370	450
CB 71810.C	9	2	24	150	24	18	4	30	190	50	40	7	45	220	110	80	12	60	270	220
71810.E	25	3	60	400	75	50	5	80	490	150	120	10	120	580	330	230	14	160	730	660
CB 71810.E	12	2	45	310	35	25	3	65	380	75	60	6	90	440	160	120	10	120	550	330
71910.C	45	4	45	290	130	90	6	60	360	250	200	12	90	440	570	410	18	130	570	1150
CB 71910.C	22	2	40	260	65	45	4	55	320	130	100	7	80	390	290	200	12	110	500	570
71910.CX	25	3	35	230	75	55	5	50	290	150	120	10	70	350	340	240	14	100	450	690
CB 71910.CX	14	2	35	210	40	25	3	45	260	75	60	6	65	320	170	120	10	95	420	340
71910.E	60	3	110	230	170	120	4	150	290	350	280	7	200	400	790	560	10	270	540	1570
CB 71910.E	30	2	100	210	85	60	3	140	270	170	140	4	180	370	390	280	7	250	510	790
71910.EX	35	2	90	180	100	75	3	120	230	210	170	6	160	320	470	330	9	220	430	940
CB 71910.EX	18	1	85	170	50	35	2	110	210	100	85	4	150	290	240	170	6	200	400	470
H 71910.E	24	2	85	170	70	50	3	110	220	140	110	6	150	310	310	220	9	210	420	630
CBH 71910.E	18	1	90	180	50	35	2	120	230	100	80	4	160	310	220	160	6	210	430	440
7010.C	70	7	50	330	200	140	10	65	400	400	320	18	95	470	900	640	24	130	590	1810
CB 7010.C	35	4	45	290	100	70	7	60	360	200	160	12	85	430	450	320	16	120	560	900
7010.CX	45	5	40	260	120	85	7	60	350	240	190	12	75	370	540	380	18	110	470	1090
CB 7010.CX	22	3	35	240	60	45	5	55	320	120	95	8	70	340	270	190	12	95	440	540
H 7010.C	22	6	35	240	60	45	9	50	290	120	95	14	70	360	270	190	22	100	460	540
CBH 7010.C	14	4	40	250	40	30	6	50	310	85	65	10	75	370	190	130	14	110	470	380
7010.E	100	4	110	210	290	200	6	140	270	580	460	10	190	370	1300	920	16	250	500	2600
CB 7010.E	50	3	95	190	140	100	4	130	250	290	230	7	180	360	650	460	10	260	520	1300
7010.EX	60	3	85	170	170	120	4	110	220	350	280	7	150	300	780	550	12	200	400	1560
CB 7010.EX	30	2	75	150	85	60	3	100	200	170	140	5	140	270	390	280	7	180	370	780
H 7010.E	30	3	70	140	85	60	5	95	190	170	140	9	140	270	390	280	14	190	390	780
CBH 7010.E	22	2	75	150	60	45	3	100	200	120	95	6	140	280	270	190	9	200	400	550
7210.C	120	8	45	310	330	230	12	65	380	660	520	20	90	440	1480	1040	30	120	560	2950
CB 7210.C	80	5	45	280	230	160	8	60	360	460	360	12	85	430	1030	730	18	120	560	2070
7210.E	160	5	110	220	440	310	7	140	290	880	700	12	200	390	1970	1400	18	270	530	3950
CB 7210.E	110	3	100	200	310	220	5	130	270	610	490	8	190	380	1380	980	12	280	550	2760

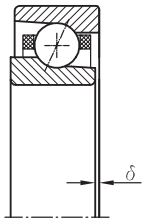

Preload step
δ

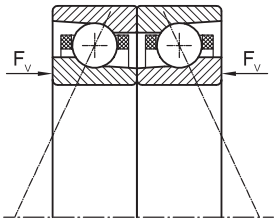

Preload force
F_V

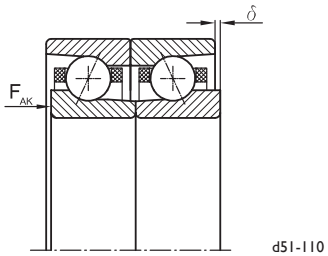

Unloading force
F_{AK}

Preloads and stiffness

Basic designation	X					L					M					H				
	F_V	δ	S_a	S_r	F_{AK}	F_V	δ	S_a	S_r	F_{AK}	F_V	δ	S_a	S_r	F_{AK}	F_V	δ	S_a	S_r	F_{AK}
	N	µm	N/µm		N	N	µm	N/µm		N	N	µm	N/µm		N	N	µm	N/µm		N
71811.C	20	4	35	220	60	40	6	45	260	120	90	12	65	320	260	180	18	90	400	520
CB 71811.C	10	3	25	170	30	20	4	35	210	60	45	8	50	240	130	90	12	65	300	260
71811.E	30	3	70	440	85	60	5	90	530	170	130	10	130	640	380	270	16	180	810	760
CB 71811.E	14	2	50	340	40	30	3	70	420	85	65	7	95	480	190	130	10	130	600	380
71911.C	55	4	50	320	150	110	6	65	400	300	240	12	95	480	680	480	18	140	630	1360
CB 71911.C	25	3	45	280	75	55	4	60	360	150	120	8	85	430	340	240	12	120	540	680
71911.CX	30	3	40	260	90	65	5	55	320	180	140	10	75	390	410	290	16	110	500	820
CB 71911.CX	16	2	35	240	45	30	3	50	290	90	70	7	70	350	200	140	10	100	460	410
71911.E	75	3	120	250	210	150	4	160	320	420	330	7	220	440	940	660	12	300	590	1880
CB 71911.E	35	2	110	230	100	75	3	150	300	210	170	5	200	400	470	330	7	280	560	940
71911.EX	45	2	100	200	130	90	4	130	260	250	200	6	170	350	560	400	10	240	480	1130
CB 71911.EX	22	1	90	180	65	45	2	120	240	130	100	4	160	320	280	200	6	220	440	560
H 71911.E	30	2	95	190	85	60	4	120	250	170	130	6	170	340	380	270	10	230	460	750
CBH 71911.E	20	1	100	200	60	40	2	130	260	120	95	4	170	340	260	190	6	230	470	530
7011.C	85	7	55	360	240	170	10	75	440	480	380	18	100	510	1080	770	25	150	650	2170
CB 7011.C	45	5	50	310	120	85	7	65	400	240	190	12	95	480	540	380	16	140	610	1080
7011.CX	50	5	45	290	140	100	8	65	380	290	230	12	80	410	650	460	18	120	520	1300
CB 7011.CX	25	3	40	260	70	50	5	60	350	140	110	8	75	370	320	230	12	110	480	650
H 7011.C	25	6	40	260	70	50	9	55	320	140	110	16	80	390	320	230	22	110	510	650
CBH 7011.C	18	4	40	280	50	35	6	55	340	100	80	10	80	410	230	160	14	120	520	450
7011.E	120	4	120	230	350	240	6	150	300	690	550	10	200	410	1550	1100	16	280	550	3110
CB 7011.E	60	3	100	200	170	120	4	140	280	350	270	7	200	400	780	550	10	290	570	1550
7011.EX	75	3	90	180	210	150	5	120	240	410	330	8	160	330	930	660	12	220	440	1860
CB 7011.EX	35	2	85	170	100	75	3	110	220	210	160	5	150	300	470	330	8	200	410	930
H 7011.E	35	4	75	150	100	75	5	100	210	210	160	9	150	300	470	330	14	210	430	930
CBH 7011.E	25	2	80	160	70	50	4	110	210	140	120	6	160	310	330	230	9	220	440	650
7211.C	140	8	50	340	390	280	12	70	410	790	620	20	95	480	1770	1250	30	140	610	3530
CB 7211.C	95	5	50	310	270	190	8	65	400	550	440	14	95	480	1240	870	20	140	610	2470
7211.E	190	5	120	240	530	370	7	160	320	1050	840	12	210	430	2370	1670	20	290	590	4740
CB 7211.E	130	3	110	210	370	260	5	150	290	740	590	8	210	420	1660	1170	12	300	610	3320

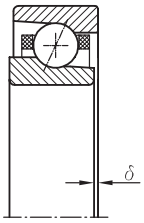

Preload step
δ

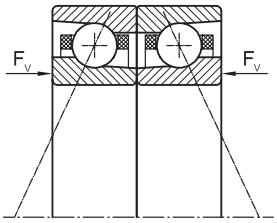

Preload force
F_V

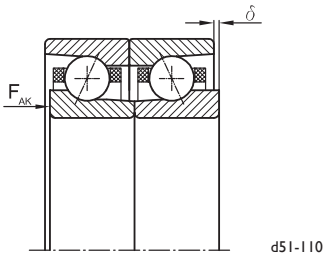

Unloading force
F_{AK}

Preloads and stiffness

Basic designation	X					L					M					H				
	F_V	δ	S_a	S_r	F_{AK}	F_V	δ	S_a	S_r	F_{AK}	F_V	δ	S_a	S_r	F_{AK}	F_V	δ	S_a	S_r	F_{AK}
	N	µm	N/µm		N	N	µm	N/µm		N	N	µm	N/µm		N	N	µm	N/µm		N
71812.C	24	4	35	240	65	45	6	50	290	130	100	12	70	350	300	210	20	100	440	590
CB 71812.C	12	3	30	180	35	24	4	40	230	65	50	8	55	260	150	100	12	75	330	300
71812.E	35	4	75	480	95	70	5	95	580	190	150	10	140	690	440	310	16	200	880	870
CB 71812.E	18	2	55	370	50	35	4	75	460	95	75	7	110	530	220	150	10	150	660	440
71912.C	65	4	55	350	180	130	6	70	430	360	280	12	110	530	800	570	20	150	680	1600
CB 71912.C	30	3	45	310	90	65	4	65	390	180	140	8	95	470	400	280	12	130	590	800
71912.CX	40	4	45	280	110	75	5	60	350	210	170	10	85	420	480	340	16	120	550	960
CB 71912.CX	18	2	40	260	55	40	4	55	320	110	85	7	75	390	240	170	10	110	500	480
71912.E	85	3	140	270	250	170	4	180	350	490	390	8	240	480	1110	780	12	320	650	2220
CB 71912.E	45	2	120	250	120	85	3	160	320	250	200	5	220	440	550	390	8	300	610	1110
71912.EX	50	2	110	220	150	100	4	140	280	300	230	6	190	380	660	470	10	260	520	1330
CB 71912.EX	25	2	100	200	75	50	2	130	260	150	120	4	180	350	330	230	7	240	480	660
H 71912.E	35	2	100	210	100	70	4	130	270	200	160	6	180	370	440	310	10	250	500	890
CBH 71912.E	24	2	110	210	70	50	2	140	280	140	110	4	190	370	310	220	7	260	510	620
7012.C	100	7	60	390	280	200	12	80	480	570	450	18	110	560	1280	910	25	160	710	2560
CB 7012.C	50	5	55	340	140	100	7	75	440	280	230	12	100	520	640	450	18	150	670	1280
7012.CX	60	5	50	310	170	120	8	70	420	340	270	14	90	440	770	540	20	130	570	1540
CB 7012.CX	30	3	45	290	85	60	5	65	380	170	140	9	80	410	380	270	12	120	520	770
H 7012.C	30	6	45	280	85	60	10	60	350	170	140	16	85	430	380	270	24	120	550	770
CBH 7012.C	22	4	45	300	60	40	6	60	370	120	95	10	90	450	270	190	16	130	570	540
7012.E	140	4	130	250	410	290	7	160	330	810	650	12	220	440	1830	1290	18	300	600	3650
CB 7012.E	70	3	110	220	200	140	4	150	300	410	320	7	220	440	910	650	12	310	630	1830
7012.EX	85	3	100	200	240	170	5	130	260	490	390	8	180	360	1100	770	12	240	480	2190
CB 7012.EX	45	2	90	180	120	85	3	120	240	240	190	5	160	330	550	390	8	220	440	1100
H 7012.E	45	4	85	170	120	85	6	110	230	240	190	10	160	330	550	390	14	230	470	1100
CBH 7012.E	30	2	90	180	85	60	4	120	230	170	140	6	170	340	380	270	10	240	480	770
7212.C	160	9	55	370	460	330	14	75	450	930	740	22	110	530	2090	1480	30	150	670	4180
CB 7212.C	110	6	50	340	320	230	9	75	440	650	520	14	100	520	1460	1030	20	150	670	2920
7212.E	220	5	130	270	620	440	8	170	340	1250	990	14	230	470	2800	1980	20	320	640	5610
CB 7212.E	150	3	120	230	440	310	5	160	320	870	690	9	230	460	1960	1390	14	330	660	3930

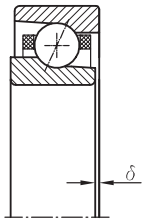

Preload step
δ

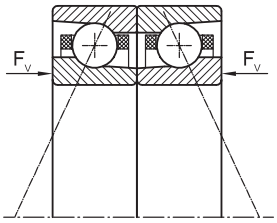

Preload force
F_V

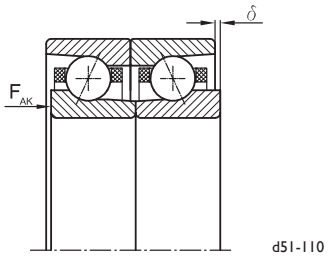

Unloading force
F_{AK}

Preloads and stiffness

Basic designation	X					L					M					H				
	F_V	δ	S_a	S_r	F_{AK}	F_V	δ	S_a	S_r	F_{AK}	F_V	δ	S_a	S_r	F_{AK}	F_V	δ	S_a	S_r	F_{AK}
	N	µm	N/µm		N	N	µm	N/µm		N	N	µm	N/µm		N	N	µm	N/µm		N
71813.C	25	4	40	260	75	55	7	50	310	150	120	14	75	370	340	240	20	110	480	670
CB 71813.C	14	3	30	200	35	25	4	40	250	75	60	9	55	290	170	120	14	80	360	340
71813.E	40	4	80	520	110	80	6	110	630	220	180	12	150	750	500	350	18	210	950	990
CB 71813.E	20	2	60	400	55	40	4	85	500	110	90	7	110	570	250	180	12	160	710	500
71913.C	75	4	60	380	210	150	7	80	470	410	330	14	110	570	930	660	20	160	740	1870
CB 71913.C	35	3	50	330	100	75	4	70	420	210	160	9	100	500	470	330	14	140	640	930
71913.CX	45	4	45	300	120	90	6	60	370	250	200	12	90	460	560	400	18	130	590	1120
CB 71913.CX	22	2	45	280	60	45	4	55	340	120	100	7	85	420	280	200	12	120	540	560
71913.E	100	3	150	290	290	200	5	190	380	580	460	8	260	520	1290	920	12	350	700	2590
CB 71913.E	50	2	130	270	140	100	3	180	350	290	230	5	240	480	650	460	8	330	660	1290
71913.EX	60	2	120	230	170	120	4	150	300	350	270	7	210	410	780	550	10	280	560	1550
CB 71913.EX	30	2	110	210	85	60	2	140	280	170	140	4	190	380	390	270	7	260	520	780
H 71913.E	40	2	110	220	120	80	4	150	290	230	180	7	200	400	520	370	10	270	540	1040
CBH 71913.E	30	2	120	230	80	55	2	150	300	160	130	4	200	400	360	260	7	280	560	730
7013.C	120	8	65	420	330	240	12	85	520	670	530	20	120	610	1500	1060	30	170	770	3000
CB 7013.C	60	5	55	370	170	120	8	80	470	330	260	12	110	560	750	530	18	160	730	1500
7013.CX	70	5	50	340	200	140	8	75	450	400	320	14	95	480	900	640	20	140	620	1800
CB 7013.CX	35	3	50	310	100	70	5	70	420	200	160	9	90	440	450	320	12	130	570	900
H 7013.C	35	6	45	310	100	70	10	65	380	200	160	16	95	460	450	320	24	130	600	900
CBH 7013.C	24	4	50	330	70	50	7	65	400	140	110	10	95	480	310	220	16	140	620	630
7013.E	170	5	140	270	470	330	7	180	350	940	750	12	240	480	2130	1500	18	330	660	4250
CB 7013.E	85	3	120	240	240	170	5	170	330	470	380	8	240	470	1060	750	12	340	680	2130
7013.EX	100	3	110	220	280	200	5	140	280	570	450	8	190	380	1280	900	12	260	520	2550
CB 7013.EX	50	2	100	200	140	100	3	130	260	280	230	5	180	350	640	450	8	240	480	1280
H 7013.E	50	4	90	180	140	100	6	120	250	280	230	10	180	350	640	450	16	250	500	1280
CBH 7013.E	35	2	95	190	100	70	4	130	250	200	160	6	180	370	450	320	10	260	520	890
7213.C	190	9	60	400	540	380	14	80	490	1080	860	22	110	570	2440	1720	35	160	730	4870
CB 7213.C	130	6	55	370	380	270	9	80	470	760	600	14	110	560	1710	1210	22	160	720	3410
7213.E	260	5	140	290	730	520	8	190	370	1460	1160	14	250	510	3280	2320	22	350	690	6560
CB 7213.E	180	3	130	250	510	360	5	170	350	1020	810	9	250	500	2300	1620	14	360	720	4590

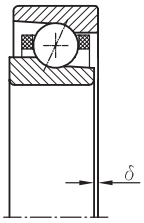

Preload step
δ

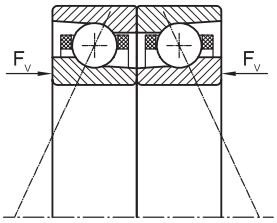

Preload force
F_V

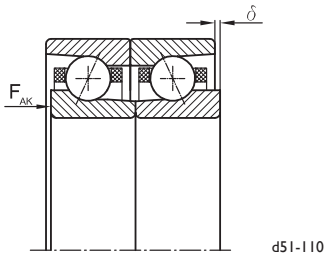

Unloading force
F_{AK}

Preloads and stiffness

Basic designation	X					L					M					H				
	F_V	δ	S_a	S_r	F_{AK}	F_V	δ	S_a	S_r	F_{AK}	F_V	δ	S_a	S_r	F_{AK}	F_V	δ	S_a	S_r	F_{AK}
	N	µm	N/µm		N	N	µm	N/µm		N	N	µm	N/µm		N	N	µm	N/µm		N
71814.C	30	5	45	280	85	60	7	55	340	170	130	14	80	400	380	270	22	110	510	760
CB 71814.C	14	3	35	210	40	30	5	45	260	85	65	9	60	310	190	130	14	85	380	380
71814.E	45	4	85	560	120	90	6	110	680	250	200	12	160	810	560	400	18	230	1030	1120
CB 71814.E	22	3	65	430	60	45	4	90	530	120	100	8	120	620	280	200	12	170	770	560
71914.C	85	5	65	410	240	170	7	85	500	480	380	14	120	610	1080	760	22	180	800	2150
CB 71914.C	40	3	55	360	120	85	5	75	450	240	190	9	110	540	540	380	14	150	690	1080
71914.CX	50	4	50	330	140	100	6	65	400	290	230	12	100	490	650	460	18	140	640	1290
CB 71914.CX	25	3	45	300	70	50	4	60	370	140	110	8	90	450	320	230	12	130	580	650
71914.E	120	3	160	320	330	240	5	200	410	670	530	8	280	560	1500	1060	14	380	760	3000
CB 71914.E	60	2	140	290	170	120	3	190	380	330	260	5	260	510	750	530	9	350	710	1500
71914.EX	70	3	130	250	200	140	4	160	330	400	320	7	220	450	900	640	12	300	600	1800
CB 71914.EX	35	2	120	230	100	70	3	150	300	200	160	5	200	410	450	320	7	280	550	900
H 71914.E	45	3	120	240	130	95	4	160	310	270	210	7	210	430	600	420	12	290	580	1200
CBH 71914.E	35	2	130	250	95	65	3	160	320	190	150	5	220	440	420	300	7	300	600	840
7014.C	140	8	70	460	390	270	12	95	560	770	610	20	130	650	1730	1230	30	180	830	3470
CB 7014.C	70	5	60	400	190	140	8	85	510	390	310	14	120	610	870	610	20	170	780	1730
7014.CX	80	6	55	360	230	160	9	80	490	460	370	14	100	520	1040	740	20	150	660	2080
CB 7014.CX	40	4	50	330	120	80	6	75	450	230	180	9	95	480	520	370	14	140	610	1040
H 7014.C	40	7	50	330	120	80	10	70	410	230	180	18	100	500	520	370	25	140	650	1040
CBH 7014.C	30	4	55	350	80	55	7	70	430	160	130	12	100	520	360	260	16	150	660	730
7014.E	190	5	150	290	540	380	7	190	380	1090	870	12	260	520	2450	1730	18	350	710	4900
CB 7014.E	95	3	130	260	270	190	5	180	360	540	430	8	250	510	1220	870	12	360	730	2450
7014.EX	120	3	120	240	330	230	5	150	310	650	520	9	210	410	1470	1040	14	280	560	2940
CB 7014.EX	60	2	110	220	160	120	3	140	280	330	260	6	190	380	730	520	9	260	520	1470
H 7014.E	60	4	95	190	160	120	6	130	260	330	260	10	190	380	730	520	16	270	540	1470
CBH 7014.E	40	3	100	210	110	80	4	140	270	230	180	7	200	400	510	360	10	280	560	1030
7214.C	220	10	65	430	630	440	14	90	530	1250	990	24	120	610	2810	1990	35	170	780	5630
CB 7214.C	150	6	60	400	440	310	10	85	510	880	700	16	120	610	1970	1390	22	170	780	3940
7214.E	300	6	150	310	840	600	9	200	400	1690	1340	14	270	550	3800	2680	22	370	740	7600
CB 7214.E	210	4	140	270	590	420	6	190	380	1180	940	9	270	540	2660	1880	14	390	770	5320

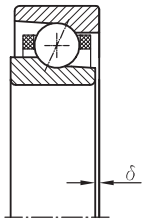

Preload step
δ

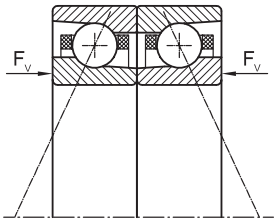

Preload force
F_V

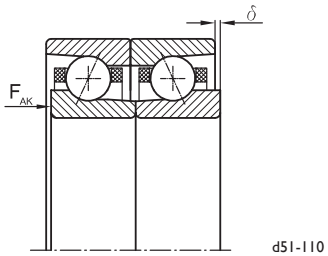

Unloading force
F_{AK}

Preloads and stiffness

Basic designation	X					L					M					H				
	F_V	δ	S_a	S_r	F_{AK}	F_V	δ	S_a	S_r	F_{AK}	F_V	δ	S_a	S_r	F_{AK}	F_V	δ	S_a	S_r	F_{AK}
	N	µm	N/µm		N	N	µm	N/µm		N	N	µm	N/µm		N	N	µm	N/µm		N
71815.C	35	5	45	300	95	65	7	60	360	190	150	14	85	430	430	300	22	120	550	850
CB 71815.C	16	3	35	230	45	35	5	45	280	95	75	9	65	330	210	150	14	90	410	430
71815.E	50	4	95	600	140	100	6	120	730	280	220	12	170	870	630	440	18	240	1100	1250
CB 71815.E	24	3	70	460	70	50	4	95	570	140	110	8	130	660	310	220	12	180	820	630
71915.C	95	5	70	440	270	190	7	90	540	550	440	14	130	660	1230	870	22	190	850	2470
CB 71915.C	50	3	60	390	140	95	5	80	490	270	220	9	120	580	620	440	14	170	740	1230
71915.CX	60	4	55	350	160	120	6	70	430	330	260	12	110	530	740	520	18	150	680	1480
CB 71915.CX	30	3	50	320	80	60	4	65	400	160	130	8	95	480	370	260	12	140	630	740
71915.E	140	3	170	340	380	270	5	220	440	770	610	9	300	600	1720	1220	14	410	810	3440
CB 71915.E	70	2	160	310	190	140	3	200	410	380	300	6	280	550	860	610	9	380	760	1720
71915.EX	80	3	140	270	230	160	4	180	350	460	370	7	240	480	1030	730	12	320	650	2070
CB 71915.EX	40	2	120	250	110	80	3	160	320	230	180	5	220	440	520	370	8	300	590	1030
7015.C	160	8	75	490	440	310	12	100	600	880	700	22	140	700	1990	1410	30	200	890	3980
CB 7015.C	80	5	65	430	220	160	8	90	540	440	350	14	130	650	990	700	20	190	840	1990
7015.CX	95	6	60	390	270	190	9	85	520	530	420	16	110	560	1190	840	22	160	710	2390
CB 7015.CX	45	4	55	360	130	95	6	80	480	270	210	10	100	510	600	420	14	150	650	1190
H 7015.C	45	7	55	360	130	95	10	75	440	270	210	18	110	540	600	420	25	150	690	1190
CBH 7015.C	35	5	60	380	95	65	7	75	460	190	150	12	110	560	420	300	18	160	710	840
7015.E	220	5	160	320	620	440	8	200	410	1240	990	12	280	560	2790	1970	20	380	760	5590
CB 7015.E	110	3	140	280	310	220	5	190	380	620	490	8	270	540	1400	990	12	390	780	2790
7015.EX	130	3	130	250	370	260	5	160	330	750	590	9	220	440	1680	1180	14	300	600	3350
CB 7015.EX	65	2	120	230	190	130	3	150	300	370	300	6	200	410	840	590	9	280	550	1680
H 7015.E	65	4	100	210	190	130	6	140	280	370	300	10	200	410	840	590	16	290	580	1680
CBH 7015.E	45	3	110	220	130	90	4	150	290	260	210	7	210	420	590	410	10	300	600	1170
7215.C	250	10	70	460	720	510	16	95	560	1430	1140	24	130	660	3220	2280	35	190	840	6440
CB 7215.C	180	7	65	420	500	350	10	90	540	1000	800	16	130	650	2250	1590	24	190	830	4510
7215.E	340	6	170	330	970	680	9	220	430	1940	1540	16	290	590	4360	3080	24	400	800	8710
CB 7215.E	240	4	150	290	680	480	6	200	400	1360	1080	10	290	570	3050	2150	16	410	830	6100

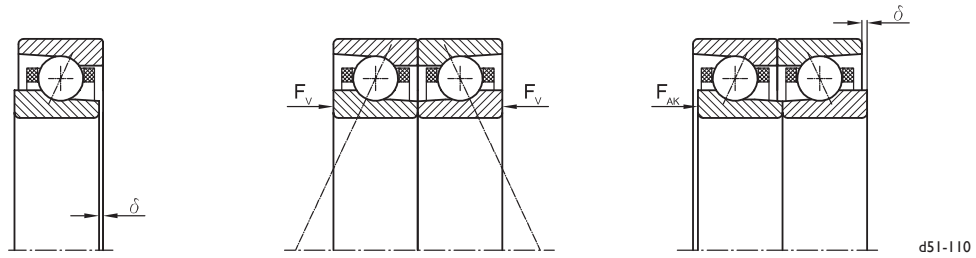

Preload step
δ

Preload force
F_V

Unloading force
F_{AK}

Preloads and stiffness

Basic designation	X					L					M					H				
	F_V	δ	S_a	S_r	F_{AK}	F_V	δ	S_a	S_r	F_{AK}	F_V	δ	S_a	S_r	F_{AK}	F_V	δ	S_a	S_r	F_{AK}
	N	µm	N/µm		N	N	µm	N/µm		N	N	µm	N/µm		N	N	µm	N/µm		N
71816.C	35	5	50	320	110	75	8	65	380	210	170	14	90	460	470	330	22	130	590	950
CB 71816.C	18	3	40	240	55	35	5	50	300	110	85	10	70	350	240	170	14	100	440	470
71816.E	55	4	100	640	150	110	6	130	780	310	250	12	180	920	700	490	20	260	1170	1390
CB 71816.E	25	3	75	490	75	55	4	100	610	150	120	8	140	700	350	250	12	200	880	700
71916.C	110	5	70	470	310	220	8	95	580	620	500	14	140	700	1400	990	22	200	910	2800
CB 71916.C	55	3	65	410	160	110	5	85	520	310	250	10	120	620	700	500	14	180	790	1400
71916.CX	65	4	60	370	190	130	6	75	460	370	300	12	110	560	840	590	20	160	730	1680
CB 71916.CX	35	3	55	340	95	65	4	70	420	190	150	8	100	510	420	300	12	150	670	840
71916.E	150	3	180	360	440	310	5	230	470	870	690	9	320	640	1960	1390	14	430	860	3920
CB 71916.E	75	2	170	330	220	150	3	220	430	440	350	6	290	590	980	690	9	400	810	1960
71916.EX	90	3	140	290	260	180	4	190	370	520	420	8	250	510	1180	830	12	350	690	2350
CB 71916.EX	45	2	130	260	130	90	3	170	340	260	210	5	230	470	590	420	8	320	630	1180
7016.C	180	9	80	520	500	360	14	110	640	1010	800	22	150	750	2260	1600	30	210	950	4530
CB 7016.C	90	6	70	460	250	180	9	95	580	500	400	14	140	690	1130	800	20	200	890	2260
7016.CX	110	6	65	420	300	210	9	95	560	600	480	16	120	590	1360	960	22	170	760	2720
CB 7016.CX	55	4	60	380	150	110	6	85	510	300	240	10	110	540	680	480	14	150	700	1360
H 7016.C	55	7	60	380	150	110	12	80	470	300	240	18	110	570	680	480	25	160	740	1360
CBH 7016.C	35	5	60	400	110	75	7	80	490	210	170	12	120	600	480	340	18	170	760	950
7016.E	250	5	170	340	700	500	8	220	440	1410	1120	14	300	590	3160	2240	20	400	810	6330
CB 7016.E	120	3	150	300	350	250	5	200	410	700	560	9	290	580	1580	1120	14	420	830	3160
7016.EX	150	4	130	270	420	300	6	170	350	840	670	9	240	470	1900	1340	14	320	640	3800
CB 7016.EX	75	2	120	250	210	150	4	160	320	420	340	6	220	430	950	670	9	300	590	1900
H 7016.E	75	4	110	220	210	150	7	150	300	420	340	12	220	440	950	670	18	310	620	1900
CBH 7016.E	50	3	120	240	150	100	4	160	310	300	230	7	230	450	660	470	12	320	640	1330
7216.C	290	10	75	490	810	570	16	100	600	1620	1290	25	140	700	3660	2580	40	200	890	7310
CB 7216.C	200	7	70	450	570	400	10	95	580	1140	900	16	140	690	2560	1810	25	200	890	5120
7216.E	390	6	180	350	1100	780	9	230	460	2200	1750	16	310	620	4950	3500	24	430	850	9910
CB 7216.E	270	4	160	310	770	540	6	210	430	1540	1230	10	310	610	3470	2450	16	440	880	6940

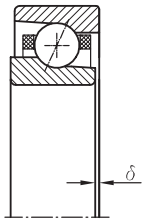

Preload step
δ

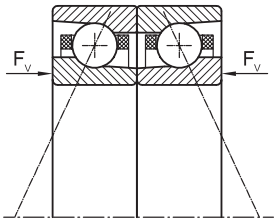

Preload force
F_V

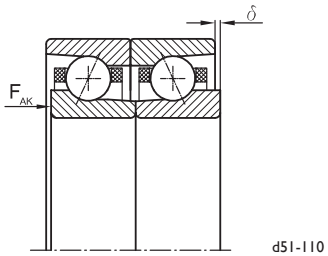

Unloading force
F_{AK}

Preloads and stiffness

Basic designation	X					L					M					H				
	F_V	δ	S_a	S_r	F_{AK}	F_V	δ	S_a	S_r	F_{AK}	F_V	δ	S_a	S_r	F_{AK}	F_V	δ	S_a	S_r	F_{AK}
	N	µm	N/µm		N	N	µm	N/µm		N	N	µm	N/µm		N	N	µm	N/µm		N
71817.C	40	5	55	340	120	80	8	70	410	230	190	16	100	490	520	370	24	140	620	1050
CB 71817.C	20	3	40	260	60	40	5	55	320	120	95	10	75	370	260	190	16	100	470	520
71817.E	60	4	110	690	170	120	7	140	830	340	270	14	200	980	770	550	20	280	1250	1540
CB 71817.E	30	3	80	520	85	60	4	110	650	170	140	9	150	750	390	270	14	210	930	770
71917.C	120	5	75	500	350	250	8	100	610	700	560	16	150	740	1580	1120	24	220	970	3170
CB 71917.C	60	3	65	440	180	120	5	90	550	350	280	10	130	660	790	560	16	190	840	1580
71917.CX	75	4	60	400	210	150	7	80	490	420	340	14	120	600	950	670	20	170	770	1900
CB 71917.CX	35	3	55	360	110	75	4	75	450	210	170	9	110	550	470	340	14	160	710	950
71917.E	170	3	190	380	490	350	5	250	500	990	780	9	340	670	2220	1570	14	460	920	4440
CB 71917.E	85	2	180	350	250	170	3	230	460	490	390	6	310	620	1110	780	10	430	860	2220
71917.EX	100	3	150	310	300	210	5	200	400	590	470	8	270	540	1330	940	12	370	730	2660
CB 71917.EX	50	2	140	280	150	100	3	180	360	300	240	5	250	500	670	470	8	340	670	1330
7017.C	200	9	85	550	570	400	14	110	680	1140	900	24	160	790	2560	1810	35	220	1010	5120
CB 7017.C	100	6	75	490	280	200	9	100	620	570	450	14	150	740	1280	900	22	210	950	2560
7017.CX	120	6	70	440	340	240	10	100	590	680	540	16	130	630	1530	1080	24	180	810	3070
CB 7017.CX	60	4	60	410	170	120	6	90	540	340	270	10	120	580	770	540	16	160	740	1530
H 7017.C	60	8	60	400	170	120	12	85	500	340	270	20	120	610	770	540	30	170	780	1530
CBH 7017.C	40	5	65	430	120	85	8	90	530	240	190	12	130	630	540	380	18	180	810	1070
7017.E	280	5	180	360	790	560	8	230	460	1580	1260	14	310	630	3560	2510	22	430	860	7120
CB 7017.E	140	3	160	310	400	280	5	220	430	790	630	9	310	620	1780	1260	14	440	890	3560
7017.EX	170	4	140	290	470	340	6	190	370	950	750	10	250	500	2140	1510	16	340	690	4270
CB 7017.EX	85	2	130	260	240	170	4	170	340	470	380	6	230	460	1070	750	10	310	630	2140
H 7017.E	85	4	120	230	240	170	7	160	320	470	380	12	230	460	1070	750	18	330	660	2140
CBH 7017.E	60	3	120	250	170	120	4	170	330	330	260	8	240	480	750	530	12	340	680	1490
7217.C	320	12	80	520	920	650	16	110	640	1830	1460	25	150	740	4120	2910	40	210	950	8240
CB 7217.C	230	7	75	480	640	450	10	100	620	1280	1020	18	150	740	2880	2040	25	210	940	5770
7217.E	440	6	190	380	1240	880	10	240	490	2490	1980	16	330	660	5590	3950	25	450	900	11190
CB 7217.E	310	4	170	330	870	610	6	230	460	1740	1380	10	330	650	3920	2770	16	470	940	7830

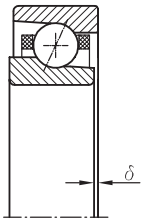

Preload step
δ

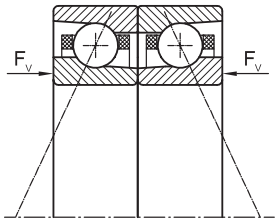

Preload force
F_V

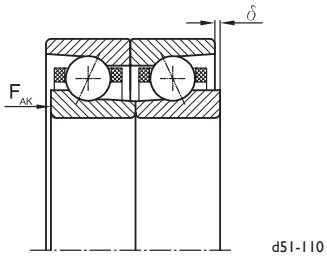

Unloading force
F_{AK}

Preloads and stiffness

Basic designation	X					L					M					H				
	F_V	δ	S_a	S_r	F_{AK}	F_V	δ	S_a	S_r	F_{AK}	F_V	δ	S_a	S_r	F_{AK}	F_V	δ	S_a	S_r	F_{AK}
	N	µm	N/µm		N	N	µm	N/µm		N	N	µm	N/µm		N	N	µm	N/µm		N
71818.C	45	5	55	360	130	90	8	70	430	260	200	16	100	520	580	410	24	150	660	1160
CB 71818.C	22	3	40	270	65	45	5	55	340	130	100	10	80	400	290	200	16	110	490	580
71818.E	65	5	110	730	190	130	7	150	870	380	300	14	210	1040	850	600	22	290	1320	1700
CB 71818.E	35	3	85	550	95	65	5	110	690	190	150	9	160	790	420	300	14	220	990	850
71918.C	140	5	80	530	390	280	8	110	650	790	630	16	160	790	1780	1250	24	230	1020	3550
CB 71918.C	70	3	70	460	200	140	5	95	580	390	310	10	140	700	890	630	16	200	890	1780
71918.CX	85	5	65	420	240	170	7	85	520	470	380	14	130	630	1070	750	22	180	820	2130
CB 71918.CX	40	3	60	390	120	85	5	80	480	240	190	9	120	580	530	380	14	170	750	1070
71918.E	200	4	200	410	550	390	6	260	530	1110	880	10	360	710	2490	1760	16	490	970	4990
CB 71918.E	100	2	190	370	280	200	4	240	490	550	440	6	330	660	1250	880	10	460	910	2490
71918.EX	120	3	160	320	330	230	5	210	420	660	530	8	290	570	1500	1060	14	390	780	2990
CB 71918.EX	60	2	150	300	170	120	3	190	390	330	260	5	260	530	750	530	9	360	710	1500
7018.C	230	9	90	590	640	450	14	120	720	1280	1010	24	170	840	2870	2030	35	240	1070	5740
CB 7018.C	110	6	80	510	320	230	9	110	650	640	510	16	160	780	1440	1010	22	220	1000	2870
7018.CX	140	6	70	470	380	270	10	100	630	770	610	16	130	670	1720	1220	24	190	850	3440
CB 7018.CX	70	4	65	430	190	140	6	95	570	380	300	10	120	610	860	610	16	170	780	1720
H 7018.C	70	8	65	430	190	140	12	90	530	380	300	20	130	640	860	610	30	180	830	1720
CBH 7018.C	45	5	70	450	130	95	8	95	560	270	210	14	130	670	600	430	20	190	850	1210
7018.E	310	5	190	380	880	620	8	240	490	1770	1410	14	330	670	3980	2810	22	450	910	7950
CB 7018.E	160	4	170	330	440	310	5	230	460	880	700	9	330	650	1990	1410	14	470	940	3980
7018.EX	190	4	150	300	530	370	6	200	390	1060	840	10	270	530	2390	1690	16	360	730	4770
CB 7018.EX	95	3	140	280	270	190	4	180	360	530	420	7	240	490	1190	840	10	330	670	2390
H 7018.E	95	5	120	250	270	190	7	170	340	530	420	12	250	490	1190	840	18	350	700	2390
CBH 7018.E	65	3	130	260	190	130	5	180	350	370	300	8	250	510	840	590	12	360	720	1670
7218.C	360	12	85	550	1020	720	18	110	680	2050	1630	30	160	790	4610	3260	40	220	1000	9220
CB 7218.C	250	7	80	510	720	510	12	110	650	1430	1140	18	160	780	3230	2280	25	220	1000	6460
7218.E	490	7	200	400	1390	990	10	260	520	2790	2220	18	350	700	6270	4430	25	480	960	12550
CB 7218.E	340	4	180	350	980	690	7	240	480	1950	1550	12	340	690	4390	3100	18	500	990	8780

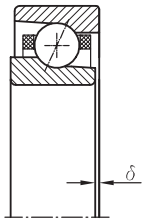

Preload step
δ

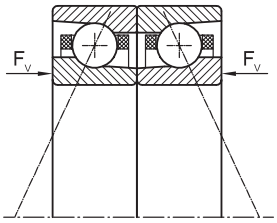

Preload force
F_V

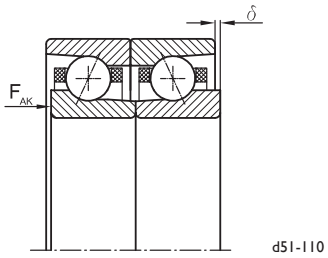

Unloading force
F_{AK}

Preloads and stiffness

Basic designation	X					L					M					H				
	F_V	δ	S_a	S_r	F_{AK}	F_V	δ	S_a	S_r	F_{AK}	F_V	δ	S_a	S_r	F_{AK}	F_V	δ	S_a	S_r	F_{AK}
	N	µm	N/µm		N	N	µm	N/µm		N	N	µm	N/µm		N	N	µm	N/µm		N
71819.C	50	6	60	380	140	100	8	75	460	280	220	16	110	550	630	450	25	150	700	1270
CB 71819.C	24	4	45	290	70	50	6	60	360	140	110	10	85	420	320	220	16	120	520	630
71819.E	75	5	120	770	210	150	7	150	920	410	330	14	220	1100	930	660	22	310	1390	1860
CB 71819.E	35	3	90	580	100	75	5	120	720	210	160	9	170	840	460	330	14	230	1040	930
71919.C	160	6	85	560	440	310	8	110	680	880	700	16	170	830	1980	1400	25	240	1080	3960
CB 71919.C	80	4	75	490	220	160	6	100	620	440	350	10	150	740	990	700	16	210	940	1980
71919.CX	95	5	70	440	260	190	7	90	550	530	420	14	130	670	1190	840	22	190	860	2380
CB 71919.CX	45	3	65	410	130	95	5	85	500	260	210	9	120	610	590	420	14	180	790	1190
71919.E	220	4	210	430	620	440	6	280	550	1240	980	10	380	750	2780	1970	16	510	1030	5570
CB 71919.E	110	2	200	390	310	220	4	260	510	620	490	7	350	700	1390	980	10	480	960	2780
71919.EX	130	3	170	340	370	260	5	220	440	740	590	9	300	600	1670	1180	14	410	820	3340
CB 71919.EX	65	2	160	310	190	130	3	200	410	370	300	6	280	550	840	590	9	380	750	1670
7019.C	250	10	95	620	710	500	14	130	760	1420	1130	24	180	890	3200	2260	35	250	1130	6400
CB 7019.C	130	6	85	540	360	250	10	110	690	710	570	16	160	820	1600	1130	24	240	1060	3200
7019.CX	150	7	75	490	430	300	10	110	660	850	680	18	140	700	1920	1360	24	200	900	3840
CB 7019.CX	75	4	70	450	210	150	7	100	610	430	340	12	130	640	960	680	16	180	830	1920
7019.E	350	6	200	400	980	690	9	260	520	1960	1560	14	350	700	4420	3120	22	480	960	8840
CB 7019.E	170	4	180	350	490	350	6	240	480	980	780	10	340	690	2210	1560	14	490	990	4420
7019.EX	210	4	160	320	590	420	6	210	410	1180	940	10	280	560	2650	1870	16	380	770	5300
CB 7019.EX	100	3	150	290	290	210	4	190	380	590	470	7	260	520	1330	940	10	350	700	2650
7219.C	400	12	90	580	1140	810	18	120	710	2280	1810	30	170	830	5130	3630	45	240	1060	10270
CB 7219.C	280	8	85	540	800	560	12	110	690	1600	1270	20	160	820	3590	2540	30	230	1060	7190
7219.E	550	7	210	420	1550	1100	10	270	550	3110	2470	18	370	740	6990	4940	30	510	1010	13990
CB 7219.E	380	4	190	370	1090	770	7	250	510	2180	1730	12	360	730	4900	3460	18	520	1050	9790

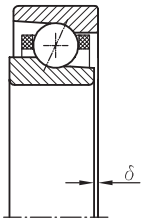

Preload step
δ

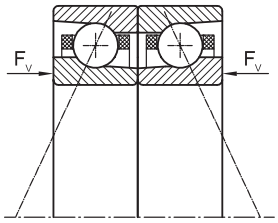

Preload force
F_V

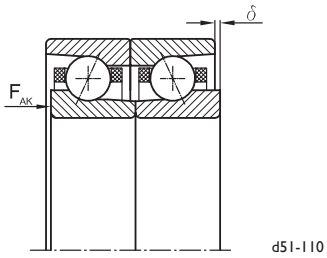

Unloading force
F_{AK}

Preloads and stiffness

Basic designation	X					L					M					H				
	F_V	δ	S_a	S_r	F_{AK}	F_V	δ	S_a	S_r	F_{AK}	F_V	δ	S_a	S_r	F_{AK}	F_V	δ	S_a	S_r	F_{AK}
	N	µm	N/µm		N	N	µm	N/µm		N	N	µm	N/µm		N	N	µm	N/µm		N
71820.C	55	6	60	400	150	110	9	80	480	310	250	18	120	580	690	490	25	160	730	1390
CB 71820.C	25	4	45	310	75	55	6	65	380	150	120	12	90	440	350	250	18	120	550	690
71820.E	80	5	120	810	230	160	7	160	970	450	360	14	230	1160	1010	720	22	330	1470	2030
CB 71820.E	40	3	95	610	110	80	5	130	760	230	180	10	180	880	510	360	14	240	1100	1010
71920.C	170	6	90	590	490	350	9	120	720	980	780	18	180	880	2200	1550	25	250	1140	4390
CB 71920.C	85	4	80	510	240	170	6	110	650	490	390	12	160	780	1100	780	18	220	990	2200
71920.CX	100	5	70	470	290	210	7	95	580	590	470	14	140	700	1320	930	22	200	910	2640
CB 71920.CX	50	3	65	430	150	100	5	90	530	290	230	10	130	640	660	470	14	190	830	1320
71920.E	240	4	230	450	690	490	6	290	580	1380	1090	10	400	790	3090	2190	16	540	1080	6190
CB 71920.E	120	3	210	410	340	240	4	270	540	690	550	7	370	730	1550	1090	10	510	1010	3090
71920.EX	150	3	180	360	410	290	5	230	470	830	660	9	320	640	1860	1310	14	430	860	3710
CB 71920.EX	75	2	170	330	210	150	3	210	430	410	330	6	290	580	930	660	9	400	790	1860
7020.C	280	10	100	650	790	560	16	130	800	1580	1260	25	190	940	3550	2510	35	260	1190	7110
CB 7020.C	140	6	90	570	390	280	10	120	730	790	630	16	170	870	1780	1260	24	250	1120	3550
7020.CX	170	7	80	520	470	330	10	120	700	950	750	18	150	740	2130	1510	25	210	950	4260
CB 7020.CX	85	5	75	480	240	170	7	110	640	470	380	12	140	680	1070	750	16	190	870	2130
H 7020.C	85	8	75	470	240	170	12	100	590	470	380	22	140	720	1070	750	30	210	920	2130
CBH 7020.C	60	5	75	500	170	120	8	100	620	330	260	14	150	750	750	530	20	210	950	1490
7020.E	380	6	210	420	1090	770	9	270	540	2170	1730	16	370	740	4880	3450	24	500	1010	9770
CB 7020.E	190	4	190	370	540	380	6	250	510	1090	860	10	360	730	2440	1730	16	520	1040	4880
7020.EX	230	4	170	340	650	460	6	220	440	1300	1040	10	300	590	2930	2070	16	400	810	5860
CB 7020.EX	120	3	150	310	330	230	4	200	400	650	520	7	270	540	1470	1040	10	370	740	2930
H 7020.E	120	5	140	280	330	230	8	190	380	650	520	12	270	550	1470	1040	20	390	780	2930
CBH 7020.E	80	3	150	290	230	160	5	200	390	460	360	8	280	570	1030	720	14	400	800	2050
7220.C	450	12	95	610	1260	890	18	130	750	2530	2010	30	180	880	5680	4020	45	250	1120	11360
CB 7220.C	310	8	85	570	880	620	12	120	730	1770	1410	20	170	870	3980	2810	30	250	1110	7960
7220.E	610	7	220	440	1720	1220	10	290	570	3450	2740	18	390	780	7760	5480	30	530	1060	15510
CB 7220.E	430	5	200	390	1210	850	7	270	540	2410	1920	12	380	770	5430	3840	18	550	1100	10860

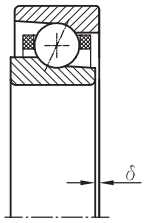

Preload step
δ

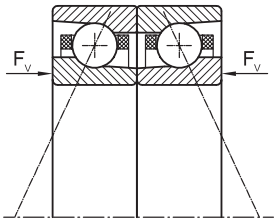

Preload force
F_V

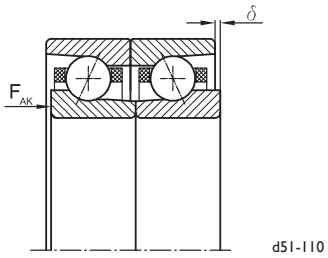

Unloading force
F_{AK}

Preloads and stiffness

Basic designation	X					L					M					H				
	F_V	δ	S_a	S_r	F_{AK}	F_V	δ	S_a	S_r	F_{AK}	F_V	δ	S_a	S_r	F_{AK}	F_V	δ	S_a	S_r	F_{AK}
	N	µm	N/µm		N	N	µm	N/µm		N	N	µm	N/µm		N	N	µm	N/µm		N
71821.C	60	6	65	420	170	120	9	85	500	340	270	18	120	600	760	530	30	170	770	1510
CB 71821.C	30	4	50	320	85	60	6	65	400	170	130	12	90	460	380	270	18	130	580	760
71821.E	85	5	130	850	250	170	8	170	1020	490	390	16	240	1210	1100	780	24	340	1540	2210
CB 71821.E	45	3	100	640	120	85	5	130	800	250	190	10	180	920	550	390	16	260	1150	1100
71921.C	190	6	95	610	540	380	9	130	760	1080	860	18	180	920	2430	1710	30	270	1200	4850
CB 71921.C	95	4	85	540	270	190	6	110	680	540	430	12	160	810	1210	860	18	230	1040	2430
71921.CX	110	5	75	490	320	230	8	100	600	650	510	16	150	740	1460	1030	24	210	950	2910
CB 71921.CX	55	3	70	450	160	110	5	90	550	320	260	10	130	670	730	510	16	190	880	1460
71921.E	270	4	240	470	760	540	6	310	610	1520	1210	10	420	830	3420	2420	18	570	1130	6840
CB 71921.E	130	3	220	430	380	270	4	280	570	760	600	7	390	770	1710	1210	12	530	1060	3420
71921.EX	160	3	190	380	460	320	5	250	490	910	730	9	330	670	2050	1450	14	450	910	4110
CB 71921.EX	80	2	170	350	230	160	3	230	450	460	360	6	310	610	1030	730	9	420	830	2050
7021.C	310	10	110	680	870	620	16	140	840	1740	1390	25	200	980	3920	2770	40	280	1250	7850
CB 7021.C	150	7	90	600	440	310	10	130	760	870	690	18	180	910	1960	1390	24	260	1170	3920
7021.CX	180	9	85	550	520	370	14	120	730	1050	830	22	160	780	2350	1660	30	220	1000	4710
CB 7021.CX	90	6	75	500	260	180	9	110	670	520	420	14	140	710	1180	830	20	200	910	2350
7021.E	420	6	220	440	1190	840	9	290	570	2390	1900	16	390	780	5370	3800	24	530	1060	10750
CB 7021.E	210	4	190	390	600	420	6	270	530	1190	950	10	380	760	2690	1900	16	550	1090	5370
7021.EX	250	5	180	350	720	510	8	230	460	1430	1140	14	310	620	3220	2280	20	420	850	6450
CB 7021.EX	130	3	160	320	360	250	5	210	420	720	570	9	290	570	1610	1140	14	390	780	3220
7221.C	490	12	100	640	1390	980	20	130	790	2780	2210	30	180	920	6260	4420	45	260	1170	12520
7221.E	670	7	230	460	1900	1340	12	300	600	3800	3020	20	410	820	8560	6050	30	560	1120	17120

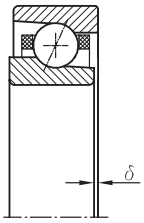

Preload step
δ

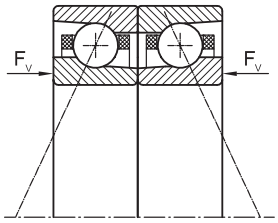

Preload force
F_V

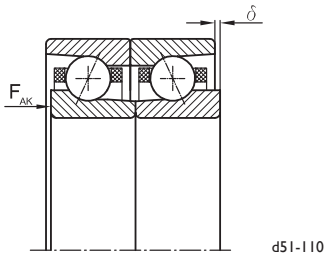

Unloading force
F_{AK}

Preloads and stiffness

Basic designation	X					L					M					H				
	F_V	δ	S_a	S_r	F_{AK}	F_V	δ	S_a	S_r	F_{AK}	F_V	δ	S_a	S_r	F_{AK}	F_V	δ	S_a	S_r	F_{AK}
	N	µm	N/µm		N	N	µm	N/µm		N	N	µm	N/µm		N	N	µm	N/µm		N
71822.C	65	6	70	440	180	130	9	90	530	360	290	18	130	630	820	580	30	180	810	1640
CB 71822.C	30	4	50	340	90	65	6	70	420	180	140	12	95	480	410	290	18	130	600	820
71822.E	95	5	140	890	270	190	8	180	1070	530	420	16	250	1270	1190	840	24	360	1610	2390
CB 71822.E	45	3	100	670	130	95	5	140	840	270	210	10	190	970	600	420	16	270	1210	1190
71922.C	210	6	100	640	590	420	9	130	790	1190	940	18	190	960	2670	1880	30	280	1250	5330
CB 71922.C	100	4	85	560	300	210	6	120	710	590	470	12	170	850	1330	940	18	240	1090	2670
71922.CX	130	5	80	510	360	250	8	110	630	710	570	16	150	770	1600	1130	24	220	1000	3200
CB 71922.CX	65	3	75	470	180	130	5	95	580	360	280	10	140	710	800	570	16	200	920	1600
71922.E	300	4	250	500	840	590	6	320	640	1670	1330	12	440	870	3770	2660	18	590	1190	7530
CB 71922.E	150	3	230	460	420	300	4	300	590	840	670	7	400	810	1880	1330	12	560	1110	3770
71922.EX	180	3	200	400	500	350	5	260	510	1000	800	9	350	700	2260	1600	16	480	950	4520
CB 71922.EX	90	2	180	360	250	180	3	240	470	500	400	6	320	640	1130	800	10	440	870	2260
7022.C	340	10	110	720	960	680	16	150	880	1920	1520	25	210	1030	4310	3050	40	290	1310	8620
CB 7022.C	170	7	95	630	480	340	10	130	800	960	760	18	190	950	2160	1520	25	270	1230	4310
H 7022.C	100	9	80	520	290	200	14	110	650	570	460	24	160	790	1290	910	35	230	1010	2590
CBH 7022.C	70	6	85	550	200	140	9	110	680	400	320	14	160	820	910	640	22	230	1040	1810
7022.E	460	6	230	460	1310	920	10	300	600	2620	2080	16	410	810	5890	4160	25	550	1110	11770
CB 7022.E	230	4	200	410	650	460	6	280	560	1310	1040	10	400	800	2940	2080	16	570	1150	5890
H 7022.E	140	5	150	300	390	280	8	210	420	780	620	14	300	600	1770	1250	22	430	850	3530
CBH 7022.E	95	3	160	320	270	190	5	210	430	550	440	9	310	620	1240	870	14	440	880	2470
7222.C	540	14	100	670	1530	1080	20	140	830	3050	2430	35	190	960	6870	4850	50	270	1230	13740
7222.E	740	8	240	490	2090	1480	12	320	630	4180	3320	20	430	860	9400	6640	30	590	1170	18800

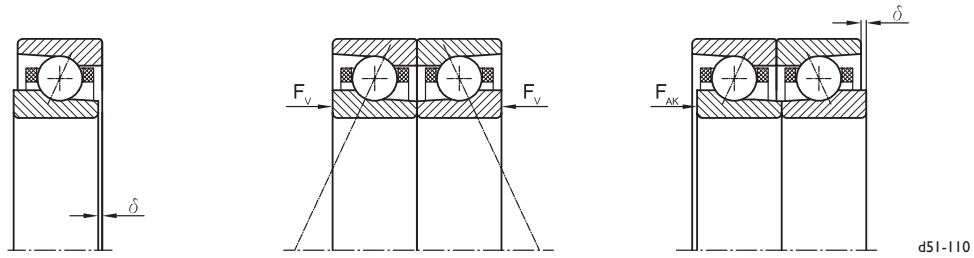

Preload step
δ

Preload force
F_V

Unloading force
F_{AK}

Preloads and stiffness

Basic designation	X					L					M					H				
	F_V	δ	S_a	S_r	F_{AK}	F_V	δ	S_a	S_r	F_{AK}	F_V	δ	S_a	S_r	F_{AK}	F_V	δ	S_a	S_r	F_{AK}
	N	µm	N/µm		N	N	µm	N/µm		N	N	µm	N/µm		N	N	µm	N/µm		N
71824.C	75	6	75	480	210	150	10	95	580	430	340	20	140	690	960	680	30	200	880	1920
CB 71824.C	40	4	55	370	110	75	6	75	450	210	170	12	110	530	480	340	20	150	660	960
71824.E	110	6	150	970	310	220	8	190	1170	620	490	16	280	1390	1390	980	25	390	1760	2780
CB 71824.E	55	4	110	730	150	110	6	150	910	310	250	10	210	1060	690	490	16	290	1320	1390
71924.C	250	6	110	700	710	500	10	140	860	1420	1130	20	210	1050	3190	2250	30	300	1370	6370
CB 71924.C	130	4	95	620	350	250	6	130	780	710	560	12	190	930	1590	1130	20	260	1190	3190
71924.CX	150	6	85	560	420	300	8	120	690	850	680	16	170	840	1910	1350	25	240	1090	3820
CB 71924.CX	75	4	80	520	210	150	6	110	630	420	340	10	150	770	960	680	16	220	1000	1910
71924.E	350	4	270	540	1000	710	7	350	700	2000	1590	12	480	950	4510	3190	18	650	1300	9020
CB 71924.E	180	3	250	500	500	350	4	320	650	1000	800	8	440	880	2250	1590	12	610	1210	4510
71924.EX	210	4	220	430	600	420	6	280	560	1200	960	10	380	760	2700	1910	16	520	1040	5410
CB 71924.EX	110	2	200	400	300	210	4	260	520	600	480	7	350	700	1350	960	10	480	950	2700
7024.C	400	12	120	780	1140	810	18	160	960	2290	1820	30	220	1120	5150	3640	40	320	1430	10290
CB 7024.C	200	7	110	690	570	400	12	150	870	1140	910	18	210	1040	2570	1820	25	300	1340	5150
H 7024.C	120	10	90	570	340	240	14	120	710	690	550	24	170	860	1540	1090	35	250	1110	3090
CBH 7024.C	85	6	90	600	240	170	10	120	740	480	380	16	180	890	1080	760	22	250	1140	2160
7024.E	550	7	250	500	1550	1100	10	330	650	3100	2470	18	440	890	6990	4940	25	600	1210	13970
CB 7024.E	270	4	220	440	780	550	7	300	610	1550	1230	12	440	870	3490	2470	18	630	1250	6990
H 7024.E	160	6	170	330	470	330	9	230	450	930	740	14	330	660	2100	1480	22	470	930	4190
CBH 7024.E	120	4	180	350	330	230	6	230	470	650	520	10	340	680	1470	1040	14	480	960	2930
7224.C	640	14	110	730	1810	1280	22	150	900	3630	2890	35	210	1050	8170	5770	50	300	1340	16330
7224.E	880	8	270	530	2490	1760	12	340	690	4980	3960	22	470	940	11210	7920	35	640	1280	22420

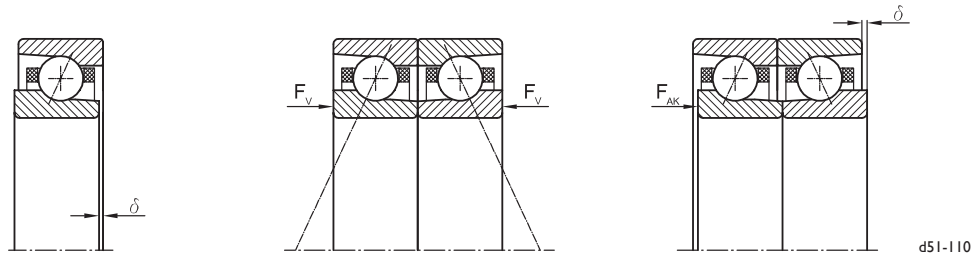

Preload step
δ

Preload force
F_V

Unloading force
F_{AK}

Preloads and stiffness

Basic designation	X					L					M					H				
	F_V	δ	S_a	S_r	F_{AK}	F_V	δ	S_a	S_r	F_{AK}	F_V	δ	S_a	S_r	F_{AK}	F_V	δ	S_a	S_r	F_{AK}
	N	µm	N/µm		N	N	µm	N/µm		N	N	µm	N/µm		N	N	µm	N/µm		N
71826.C	85	7	80	520	250	170	10	100	620	490	390	20	150	750	1110	780	30	210	950	2210
CB 71826.C	45	4	60	400	120	85	7	80	490	250	200	14	110	570	550	390	22	160	710	1110
71826.E	130	6	160	1050	350	250	9	210	1260	710	560	18	300	1500	1600	1130	25	420	1910	3190
CB 71826.E	65	4	120	790	180	130	6	170	990	350	280	12	230	1140	800	560	18	320	1430	1600
71926.C	290	7	120	760	830	590	10	160	940	1670	1330	20	230	1140	3750	2650	30	330	1480	7500
CB 71926.C	150	4	100	670	420	290	7	140	840	830	660	14	200	1010	1880	1330	22	290	1290	3750
71926.E	420	5	290	590	1180	840	7	380	760	2360	1880	12	520	1030	5320	3760	20	700	1400	10640
CB 71926.E	210	3	270	540	590	420	5	350	700	1180	940	8	480	950	2660	1880	12	660	1320	5320
7026.C	480	12	130	850	1350	950	18	170	1040	2690	2140	30	240	1220	6060	4280	45	340	1540	12120
CB 7026.C	240	8	110	740	670	480	12	160	940	1350	1070	20	220	1120	3030	2140	30	320	1450	6060
7026.E	640	7	270	550	1820	1280	10	350	710	3640	2890	18	480	960	8180	5780	30	660	1310	16360
CB 7026.E	320	5	240	480	910	640	7	330	660	1820	1450	12	470	940	4090	2890	18	680	1350	8180
7226.C	750	16	120	790	2130	1500	24	160	980	4260	3390	35	230	1140	9580	6770	55	320	1450	19160
7226.E	1040	9	290	570	2930	2070	14	370	750	5860	4660	22	510	1010	13180	9320	35	690	1380	26360
71828.C	100	7	85	560	280	200	12	110	670	560	450	22	160	810	1260	890	35	230	1030	2530
CB 71828.C	50	5	65	430	140	100	7	90	530	280	220	14	120	620	630	450	22	170	770	1260
71828.E	140	6	170	1130	400	290	9	230	1360	810	640	18	320	1620	1820	1290	30	460	2050	3640
CB 71828.E	70	4	130	860	200	140	6	180	1070	400	320	12	250	1230	910	640	18	340	1540	1820
71928.C	340	7	130	820	970	690	12	170	1010	1940	1540	22	250	1230	4370	3090	35	350	1590	8730
CB 71928.C	170	5	110	720	490	340	7	150	910	970	770	14	220	1090	2180	1540	22	310	1390	4370
71928.E	490	5	320	630	1380	970	8	410	820	2760	2190	14	560	1110	6200	4380	22	760	1510	12400
CB 71928.E	240	3	290	580	690	490	5	380	760	1380	1100	9	510	1030	3100	2190	14	710	1420	6200
7028.C	550	12	140	910	1570	1110	20	190	1120	3130	2490	30	260	1310	7050	4980	45	370	1660	14100
CB 7028.C	280	8	120	800	780	550	12	170	1020	1570	1250	20	240	1210	3520	2490	30	350	1560	7050
7028.E	740	7	290	590	2100	1490	12	380	760	4210	3350	20	520	1040	9470	6690	30	710	1410	18940
CB 7028.E	370	5	260	520	1050	740	7	360	710	2100	1670	12	510	1020	4730	3350	20	730	1460	9470
7228.C	870	16	130	860	2470	1740	24	180	1050	4940	3930	40	250	1230	11110	7850	60	350	1560	22220
7228.E	1200	9	310	620	3400	2410	14	400	800	6810	5410	24	550	1090	15320	10820	35	740	1490	30630

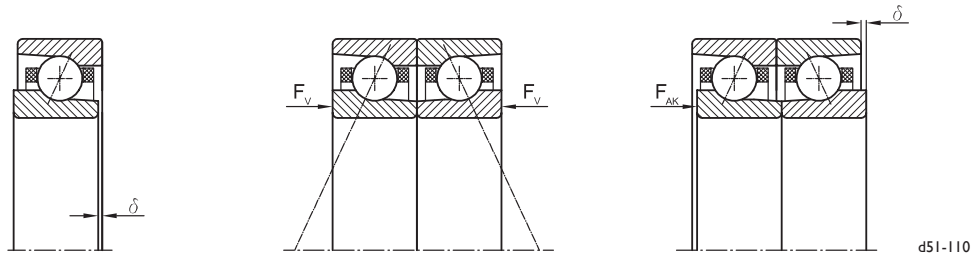

Preload step
δ

Preload force
F_V

Unloading force
F_{AK}

Preloads and stiffness

Basic designation	X					L					M					H				
	F_V	δ	S_a	S_r	F_{AK}	F_V	δ	S_a	S_r	F_{AK}	F_V	δ	S_a	S_r	F_{AK}	F_V	δ	S_a	S_r	F_{AK}
	N	µm	N/µm		N	N	µm	N/µm		N	N	µm	N/µm		N	N	µm	N/µm		N
71830.C	110	8	95	600	320	230	12	120	720	640	510	24	170	860	1430	1010	35	240	1100	2870
CB 71830.C	55	5	70	460	160	110	8	95	570	320	250	16	130	660	720	510	24	180	820	1430
71830.E	160	7	190	1210	460	320	10	240	1460	910	730	20	350	1730	2060	1450	30	490	2200	4110
CB 71830.E	80	4	140	920	230	160	7	190	1140	460	360	12	260	1320	1030	730	20	370	1650	2060
71930.C	400	8	140	880	1120	790	12	180	1080	2240	1780	24	260	1310	5030	3560	35	380	1710	10060
CB 71930.C	200	5	120	770	560	400	8	160	970	1120	890	16	230	1160	2520	1780	24	330	1490	5030
71930.E	560	5	340	680	1590	1120	8	440	880	3180	2530	14	600	1190	7150	5060	22	810	1620	14310
CB 71930.E	280	3	310	620	790	560	5	410	810	1590	1260	9	550	1100	3580	2530	14	760	1520	7150
7030.C	640	14	150	980	1800	1270	20	200	1200	3610	2870	35	280	1400	8110	5730	50	400	1780	16220
CB 7030.C	320	9	130	860	900	640	14	180	1090	1800	1430	22	260	1300	4060	2870	30	370	1670	8110
7030.E	850	8	320	630	2410	1700	12	410	820	4820	3840	20	560	1110	10850	7670	30	760	1510	21710
CB 7030.E	430	5	280	560	1210	850	8	380	760	2410	1920	14	540	1090	5430	3840	20	780	1560	10850
71832.C	130	8	100	640	360	250	12	130	770	720	570	24	180	920	1610	1140	40	260	1170	3230
CB 71832.C	65	5	75	490	180	130	8	100	600	360	290	16	140	700	810	570	24	200	880	1610
71832.E	180	7	200	1290	510	360	10	260	1560	1030	820	20	370	1850	2310	1630	30	520	2350	4620
CB 71832.E	90	4	150	980	260	180	7	200	1220	510	410	14	280	1410	1150	820	20	390	1760	2310
71932.C	450	8	140	940	1280	900	12	190	1150	2550	2030	24	280	1400	5740	4060	40	400	1820	11480
CB 71932.C	230	5	130	820	640	450	8	170	1040	1280	1010	16	250	1240	2870	2030	24	350	1580	5740
71932.E	640	5	360	720	1820	1280	8	470	930	3630	2890	14	640	1270	8180	5780	24	860	1730	16350
CB 71932.E	320	4	330	660	910	640	5	430	860	1820	1440	10	590	1170	4090	2890	16	810	1620	8180
7032.C	730	14	160	1040	2060	1450	22	210	1280	4110	3270	35	300	1500	9250	6540	50	420	1900	18510
CB 7032.C	360	9	140	920	1030	730	14	190	1160	2060	1630	22	280	1380	4630	3270	35	400	1790	9250
7032.E	970	8	340	670	2740	1940	12	440	870	5480	4360	22	590	1180	12330	8720	35	810	1610	24670
CB 7032.E	480	5	300	590	1370	970	8	410	810	2740	2180	14	580	1160	6170	4360	22	830	1670	12330
71834.C	140	8	110	690	400	280	12	140	820	800	640	25	200	980	1810	1280	40	280	1250	3610
CB 71834.C	70	5	80	520	200	140	8	110	640	400	320	16	150	750	900	640	25	210	930	1810
71834.E	200	7	210	1370	570	400	12	280	1650	1140	910	22	390	1960	2570	1820	35	550	2490	5150
CB 71834.E	100	5	160	1040	290	200	7	220	1300	570	450	14	300	1500	1290	910	22	410	1870	2570
71934.C	510	8	150	990	1440	1020	12	200	1220	2890	2300	25	300	1490	6500	4600	40	430	1940	13000
CB 71934.C	260	5	130	870	720	510	8	180	1100	1440	1150	16	260	1320	3250	2300	25	370	1680	6500
71934.E	730	6	380	770	2060	1460	9	500	990	4120	3270	16	670	1350	9270	6550	24	920	1840	18540
CB 71934.E	360	4	350	700	1030	730	6	460	920	2060	1640	10	620	1250	4630	3270	16	860	1720	9270
7034.C	820	14	170	1110	2330	1640	22	230	1360	4650	3700	35	320	1590	10470	7400	55	450	2020	20940
CB 7034.C	410	9	150	970	1160	820	14	210	1230	2330	1850	24	290	1470	5240	3700	35	420	1900	10470
7034.E	1090	8	360	710	3090	2180	14	460	920	6180	4920	22	630	1260	13910	9830	35	860	1710	27820
CB 7034.E	550	6	310	630	1550	1090	9	430	860	3090	2460	14	620	1230	6950	4920	22	890	1770	13910

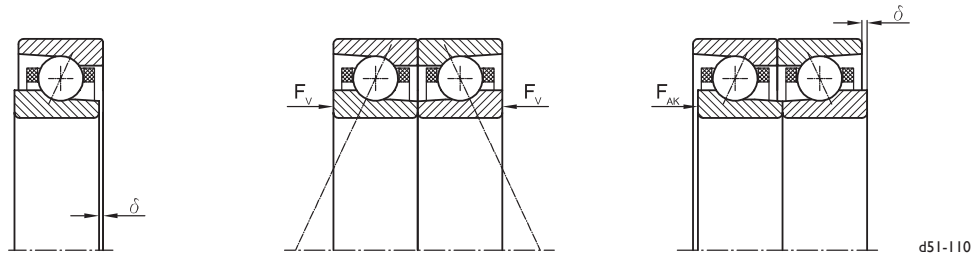

Preload step
δ

Preload force
F_V

Unloading force
F_{AK}

Preloads and stiffness

Basic designation	X					L					M					H				
	F_V	δ	S_a	S_r	F_{AK}	F_V	δ	S_a	S_r	F_{AK}	F_V	δ	S_a	S_r	F_{AK}	F_V	δ	S_a	S_r	F_{AK}
	N	µm	N/µm		N	N	µm	N/µm		N	N	µm	N/µm		N	N	µm	N/µm		N
71836.C	160	9	110	730	450	320	14	140	860	890	710	25	210	1040	2010	1420	40	290	1320	4020
CB 71836.C	80	6	85	550	220	160	9	110	680	450	350	18	160	790	1000	710	25	220	990	2010
71836.E	220	7	220	1450	630	450	12	290	1750	1270	1010	22	420	2080	2850	2020	35	590	2640	5710
CB 71836.E	110	5	170	1100	320	220	7	230	1370	630	500	14	320	1580	1430	1010	24	440	1980	2850
71936.C	570	9	160	1050	1620	1150	14	220	1300	3250	2580	25	320	1580	7310	5170	40	460	2050	14620
CB 71936.C	290	6	140	920	810	570	9	190	1170	1620	1290	18	280	1400	3660	2580	25	400	1780	7310
71936.E	820	6	410	810	2320	1640	9	530	1050	4640	3690	16	710	1430	10430	7370	25	970	1940	20860
CB 71936.E	410	4	370	750	1160	820	6	490	970	2320	1840	10	660	1320	5210	3690	16	910	1820	10430
7036.C	920	16	180	1170	2610	1850	24	240	1440	5230	4160	40	340	1680	11760	8310	55	480	2140	23530
CB 7036.C	460	10	160	1030	1310	920	16	220	1310	2610	2080	25	310	1560	5880	4160	35	450	2010	11760
7036.E	1220	9	380	760	3460	2450	14	490	980	6930	5510	24	670	1330	15580	11010	35	910	1810	31160
CB 7036.E	610	6	330	670	1730	1220	9	460	910	3460	2750	16	650	1310	7790	5510	24	940	1880	15580
71838.C	170	9	120	770	490	350	14	150	910	990	780	30	220	1090	2220	1570	45	310	1390	4440
CB 71838.C	85	6	90	580	250	170	9	120	720	490	390	18	170	840	1110	780	30	230	1040	2220
71838.E	250	8	240	1530	700	490	12	310	1850	1400	1110	24	440	2190	3150	2220	35	620	2790	6290
CB 71838.E	120	5	180	1160	350	250	8	240	1450	700	560	16	330	1670	1570	1110	24	460	2090	3150
71938.C	640	9	170	1110	1820	1280	14	230	1370	3630	2890	30	330	1660	8170	5770	45	480	2160	16340
CB 71938.C	320	6	150	980	910	640	9	210	1230	1820	1440	18	290	1470	4080	2890	30	420	1880	8170
71938.E	920	6	430	860	2590	1830	10	550	1110	5180	4120	16	750	1510	11660	8240	25	1030	2050	23320
CB 71938.E	460	4	390	790	1300	920	6	510	1030	2590	2060	10	700	1390	5830	4120	18	960	1920	11660
7038.C	1030	16	190	1240	2920	2060	24	250	1520	5840	4640	40	360	1780	13130	9280	60	500	2260	26270
CB 7038.C	520	10	170	1090	1460	1030	16	230	1380	2920	2320	25	330	1640	6570	4640	40	470	2120	13130
7038.E	1360	9	400	800	3860	2720	14	520	1030	7710	6130	24	700	1410	17350	12260	40	960	1920	34700
CB 7038.E	680	6	350	700	1930	1360	9	480	970	3860	3070	16	690	1380	8670	6130	24	990	1980	17350
71840.C	190	10	120	810	540	380	14	160	960	1090	860	30	230	1150	2450	1730	45	330	1470	4890
CB 71840.C	95	6	95	610	270	190	10	130	760	540	430	20	180	880	1220	860	30	240	1100	2450
71840.E	270	8	250	1610	770	540	12	320	1940	1540	1220	25	460	2310	3460	2440	40	650	2930	6910
CB 71840.E	140	5	190	1220	380	270	8	250	1520	770	610	16	350	1760	1730	1220	25	490	2200	3460
71940.C	710	10	180	1170	2020	1430	14	240	1440	4030	3210	30	350	1750	9070	6410	45	510	2280	18150
CB 71940.C	360	6	160	1030	1010	710	10	220	1300	2020	1600	20	310	1550	4540	3210	30	440	1980	9070
71940.E	1020	6	450	900	2880	2040	10	580	1170	5760	4580	18	790	1590	12960	9160	30	1080	2160	25930
CB 71940.E	510	4	410	830	1440	1020	6	540	1080	2880	2290	12	730	1470	6480	4580	18	1010	2020	12960
7040.C	1150	16	200	1300	3240	2290	25	270	1600	6480	5150	40	370	1870	14580	10310	60	530	2380	29160
7040.E	1510	10	420	840	4270	3020	14	540	1090	8540	6790	25	740	1480	19210	13580	40	1010	2020	38420

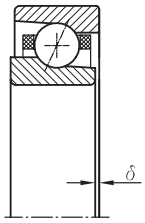

Preload step
δ

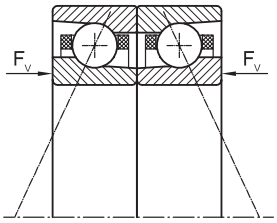

Preload force
F_V

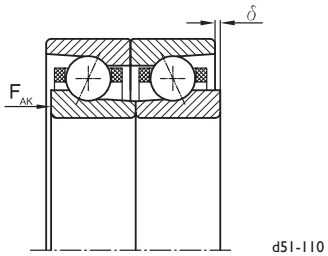

Unloading force
F_{AK}

Preloads and stiffness

Basic designation	X					L					M					H				
	F_V	δ	S_a	S_r	F_{AK}	F_V	δ	S_a	S_r	F_{AK}	F_V	δ	S_a	S_r	F_{AK}	F_V	δ	S_a	S_r	F_{AK}
	N	µm	N/µm		N	N	µm	N/µm		N	N	µm	N/µm		N	N	µm	N/µm		N
71844.C	230	10	140	890	650	460	16	180	1060	1300	1030	30	250	1270	2930	2070	50	360	1610	5850
CB 71844.C	110	7	100	670	330	230	10	140	830	650	520	20	190	970	1460	1030	30	270	1210	2930
71844.E	320	9	270	1770	910	650	14	360	2140	1830	1450	25	510	2540	4110	2910	40	720	3230	8230
CB 71844.E	160	6	210	1340	460	320	9	280	1680	910	730	18	390	1940	2060	1450	25	540	2420	4110
71944.C	870	10	200	1290	2450	1730	16	260	1580	4900	3900	30	390	1930	11030	7790	50	560	2500	22060
CB 71944.C	430	7	170	1130	1230	870	10	240	1430	2450	1950	20	340	1710	5510	3900	30	480	2180	11030
71944.E	1240	7	500	990	3510	2480	10	640	1280	7010	5580	18	870	1750	15780	11150	30	1190	2380	31560
CB 71944.E	620	5	460	910	1750	1240	7	590	1190	3510	2790	12	810	1610	7890	5580	20	1110	2230	15780
7044.C	1390	18	220	1430	3930	2780	25	290	1760	7870	6260	45	410	2060	17700	12510	65	580	2610	35410
7044.E	1820	10	460	920	5160	3650	16	600	1200	10320	8210	25	810	1630	23220	16410	40	1110	2220	46440
71848.C	270	12	150	970	770	540	18	190	1150	1530	1220	35	280	1380	3450	2440	55	390	1760	6900
CB 71848.C	140	7	110	730	380	270	12	150	910	770	610	22	210	1060	1720	1220	35	290	1320	3450
71848.E	380	9	300	1930	1070	760	14	390	2330	2150	1710	30	550	2770	4830	3410	45	780	3520	9660
CB 71848.E	190	6	230	1470	540	380	9	300	1830	1070	850	18	420	2110	2420	1710	30	590	2640	4830
71948.C	1030	12	220	1400	2930	2070	18	290	1730	5860	4660	35	420	2100	13180	9310	55	610	2730	26360
CB 71948.C	520	7	190	1230	1460	1030	12	260	1560	2930	2330	22	370	1860	6590	4660	35	530	2380	13180
71948.E	1480	7	540	1080	4190	2960	12	700	1400	8390	6670	20	950	1910	18870	13340	35	1300	2590	37750
CB 71948.E	740	5	500	990	2100	1480	7	650	1300	4190	3330	14	880	1760	9440	6670	22	1210	2430	18870
7048.C	1660	20	240	1560	4700	3320	30	320	1920	9390	7470	50	450	2240	21130	14930	70	630	2850	42260
7048.E	2170	12	500	1010	6140	4340	18	650	1310	12270	9760	30	890	1780	27620	19520	45	1210	2420	55230
71852.C	320	12	160	1050	890	630	18	210	1250	1780	1420	35	300	1500	4020	2840	55	420	1910	8030
CB 71852.C	160	8	120	790	450	320	12	160	980	890	710	24	230	1140	2010	1420	35	320	1430	4020
71852.E	440	10	320	2100	1250	880	16	420	2530	2490	1980	30	600	3000	5600	3960	50	850	3810	11210
CB 71852.E	220	7	240	1590	620	440	10	330	1980	1250	990	20	460	2290	2800	1980	30	630	2850	5600
71952.C	1220	12	230	1520	3450	2440	18	310	1870	6900	5490	35	460	2280	15520	10970	55	660	2960	31050
CB 71952.C	610	8	210	1340	1720	1220	12	280	1680	3450	2740	24	400	2020	7760	5490	35	570	2570	15520
71952.E	1750	8	590	1170	4940	3490	12	760	1520	9890	7860	22	1030	2060	22250	15720	35	1400	2810	44500
CB 71952.E	870	5	540	1080	2470	1750	8	700	1400	4940	3930	14	950	1910	11120	7860	22	1320	2630	22250

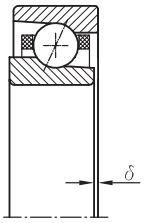

Preload step
δ

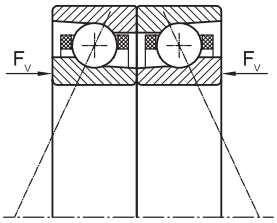

Preload force
F_V

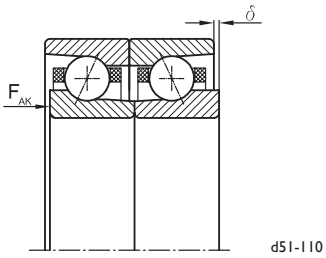

Unloading force
F_{AK}

Preloads and stiffness

Basic designation	X					L					M					H				
	F_V N	δ µm	S_a N/µm	S_r N/µm	F_{AK} N	F_V N	δ µm	S_a N/µm	S_r N/µm	F_{AK} N	F_V N	δ µm	S_a N/µm	S_r N/µm	F_{AK} N	F_V N	δ µm	S_a N/µm	S_r N/µm	F_{AK} N
71856.C	360	12	170	1130	1030	730	20	220	1340	2060	1630	40	320	1610	4630	3270	60	460	2050	9250
CB 71856.C	180	8	130	860	510	360	12	180	1060	1030	820	25	250	1230	2310	1630	40	340	1540	4630
71856.E	510	10	350	2260	1430	1010	16	450	2720	2860	2270	35	650	3230	6430	4550	50	910	4110	12870
CB 71856.E	250	7	260	1710	710	510	10	360	2130	1430	1140	22	490	2460	3220	2270	35	680	3070	6430
71956.C	1420	12	250	1640	4010	2840	20	340	2020	8030	6380	40	490	2450	18060	12760	60	710	3190	36120
CB 71956.C	710	8	220	1440	2010	1420	12	300	1810	4010	3190	25	430	2170	9030	6380	40	620	2770	18060
71956.E	2030	9	630	1260	5760	4070	14	820	1640	11510	9150	24	1110	2220	25900	18310	35	1510	3020	51810
CB 71956.E	1020	6	580	1160	2880	2030	9	760	1510	5760	4580	14	1030	2060	12950	9150	24	1420	2830	25900
71860.C	410	14	190	1210	1170	830	20	240	1440	2350	1870	40	350	1730	5280	3730	65	490	2200	10560
CB 71860.C	210	9	140	920	590	410	14	190	1130	1170	930	25	260	1320	2640	1870	40	370	1650	5280
71860.E	570	12	370	2420	1630	1150	18	490	2920	3250	2590	35	690	3470	7320	5170	55	980	4400	14640
CB 71860.E	290	7	280	1830	810	570	12	380	2290	1630	1290	22	530	2640	3660	2590	35	730	3290	7320
71960.C	1085	10	200	1330	3070	2170	16	270	1630	6140	4890	30	400	1980	13840	9770	48	570	2580	27650
71960.E	1580	7	520	1020	4470	3150	11	670	1320	8910	7090	19	900	1800	20060	14200	30	1230	2450	40190
71864.C	470	14	200	1290	1330	940	22	260	1540	2660	2110	45	370	1840	5980	4220	70	520	2350	11950
CB 71864.C	230	9	150	980	660	470	14	200	1210	1330	1060	30	280	1410	2990	2110	45	390	1760	5980
71864.E	650	12	400	2580	1840	1300	18	520	3110	3670	2920	35	740	3700	8270	5840	60	1040	4690	16530
CB 71864.E	320	8	300	1960	920	650	12	410	2440	1840	1460	24	560	2820	4130	2920	40	780	3510	8270
71964.C	1110	5	200	1300	3140	2220	9	260	1600	6280	5000	15	390	1950	14150	9990	24	560	2540	28270
71964.E	1650	7	510	1020	4670	3290	11	660	1330	9310	7400	19	900	1810	20940	14800	31	1230	2460	41890
71968.C	1050	5	190	1220	2970	2100	8	250	1500	5940	4730	14	370	1830	13390	9450	23	530	2380	26740
71968.E	1480	6	470	930	4190	2950	10	600	1200	8350	6640	18	820	1630	18790	13300	29	1110	2220	37640
71972.C	1080	5	185	1220	3060	2150	8	250	1490	6080	4850	15	360	1810	13730	9680	23	520	2360	27400
71972.E	1550	7	470	930	4390	3100	11	610	1210	8770	6950	18	830	1650	19670	13950	30	1120	2240	39500

2.5 Differential measurements for preloads

In order to attain the required stiffness for a bearing's given rotational speed it may become necessary during spindle adjustment to adjust the built-in preload.

This can be achieved with the aid of spacer rings whose difference in length leads to a change in preload class.

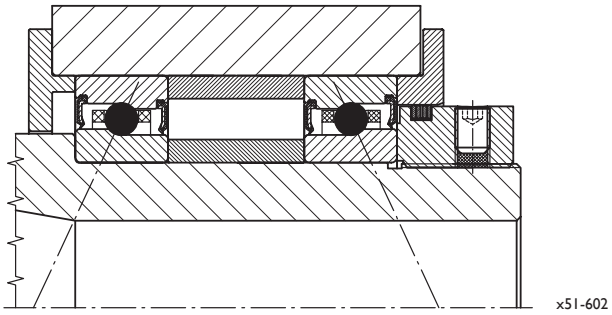

Fig. 2.7: IBC high precision angular contact ball bearings with spacer rings

The differential measurements of the individual preload classes relative to each other are given in the following tables for this purpose. The differential measurement is the distance in µm by which the rings of a single angular contact ball bearing is additionally axially displaced relative to one another in order to achieve the next preload class. For an O-arrangement, for example, shortening the inner spacer ring by the value given in the table makes the preload move up into the next higher class. In an X-arrangement, the same is true for the outer spacer ring. The preload is reduced if the procedure is carried out the other way round.

The measurements of custom-built spacer rings should be carefully documented, and the rings should be kept with the spindle even during repair work. If the spacer rings need to be replaced, the existing differential measurement needs to be determined in order to restore the previous preload with the help of the given differential measurement of the high precision bearings that need to be replaced.

Should the bearing need to carry higher loads, spacer rings that measure the width of the bearing permit subsequent trouble-free insertion of a further rolling bearing.

Dimensional series 718...C and 718...E

Dimensional series 718...C and 718...E																			
Basic designation	O/X	X/L	L/M	M/H	Basic designation	O/X	X/L	L/M	M/H	Basic designation	O/X	X/L	L/M	M/H	Basic designation	O/X	X/L	L/M	M/H
	µm					µm					µm					µm			
71810.C	4	2	6	6	71826.C	7	3	10	10	71810.E	3	2	5	4	71826.E	6	3	9	7
71811.C	4	2	6	6	71828.C	8	4	12	11	71811.E	3	2	5	6	71828.E	6	3	9	12
71812.C	4	2	6	8	71830.C	8	4	12	11	71812.E	3	2	5	6	71830.E	7	3	10	10
71813.C	5	2	7	6	71832.C	8	4	12	16	71813.E	4	2	6	6	71832.E	7	3	10	10
71814.C	5	2	7	8	71834.C	8	4	13	15	71814.E	4	2	6	6	71834.E	7	5	10	13
71815.C	4	3	7	8	71836.C	9	5	11	15	71815.E	4	2	6	6	71836.E	7	5	10	13
71816.C	5	3	6	8	71838.C	9	5	16	15	71816.E	4	2	6	8	71838.E	8	4	12	11
71817.C	5	3	8	8	71840.C	10	4	16	15	71817.E	4	3	7	6	71840.E	8	4	13	15
71818.C	5	3	8	8	71844.C	10	6	14	20	71818.E	5	2	7	8	71844.E	9	5	11	15
71819.C	6	2	8	9	71848.C	12	6	17	20	71819.E	4	3	7	8	71848.E	9	5	16	15
71820.C	6	3	9	7	71852.C	12	6	17	20	71820.E	4	3	7	8	71852.E	10	6	14	20
71821.C	6	3	9	12	71856.C	12	8	20	20	71821.E	5	3	8	8	71856.E	10	6	19	15
71822.C	6	3	9	12	71860.C	14	6	20	25	71822.E	5	3	8	8	71860.E	12	6	17	20
71824.C	7	3	10	10	71864.C	14	8	23	25	71824.E	5	3	8	9	71864.E	12	6	17	25

Dimensional series CB 718...C and CB 718...E																			
Basic designation	O/X	X/L	L/M	M/H	Basic designation	O/X	X/L	L/M	M/H	Basic designation	O/X	X/L	L/M	M/H	Basic designation	O/X	X/L	L/M	M/H
	µm					µm					µm					µm			
CB 71810.C	3	1	4	5	CB 71826.C	5	2	7	8	CB 71810.E	2	1	3	3	CB 71826.E	4	2	6	6
CB 71811.C	3	1	4	4	CB 71828.C	4	3	7	8	CB 71811.E	2	1	3	3	CB 71828.E	4	2	6	6
CB 71812.C	3	1	4	4	CB 71830.C	5	3	8	8	CB 71812.E	3	1	3	3	CB 71830.E	5	2	5	8
CB 71813.C	2	2	4	5	CB 71832.C	5	3	8	8	CB 71813.E	3	1	4	5	CB 71832.E	4	3	7	6
CB 71814.C	3	2	4	5	CB 71834.C	5	3	8	9	CB 71814.E	3	1	4	4	CB 71834.E	4	3	7	8
CB 71815.C	3	2	5	5	CB 71836.C	6	3	9	7	CB 71815.E	3	1	4	4	CB 71836.E	4	3	7	10
CB 71816.C	3	2	5	4	CB 71838.C	6	3	9	12	CB 71816.E	3	1	4	4	CB 71838.E	5	3	8	8
CB 71817.C	3	2	5	6	CB 71840.C	7	3	10	10	CB 71817.E	3	1	5	5	CB 71840.E	5	3	8	9
CB 71818.C	3	2	5	6	CB 71844.C	7	3	10	10	CB 71818.E	3	2	4	5	CB 71844.E	6	3	9	7
CB 71819.C	4	2	4	6	CB 71848.C	7	5	10	13	CB 71819.E	3	2	5	5	CB 71848.E	6	3	9	12
CB 71820.C	4	2	6	6	CB 71852.C	8	4	12	11	CB 71820.E	3	2	5	4	CB 71852.E	7	3	10	10
CB 71821.C	4	2	6	6	CB 71856.C	8	4	13	15	CB 71821.E	3	2	5	6	CB 71856.E	7	3	12	13
CB 71822.C	4	2	6	6	CB 71860.C	9	5	11	15	CB 71822.E	3	2	5	6	CB 71860.E	7	5	10	13
CB 71824.C	4	2	6	8	CB 71864.C	9	5	16	15	CB 71824.E	4	2	4	6	CB 71864.E	8	4	12	16

Dimensional series 719...C

Dimensional series 719...C																				
Basic designation	O/X	X/L	L/M	M/H	**Basic designation**	O/X	X/L	L/M	M/H	**Basic designation**	O/X	X/L	L/M	M/H	**Basic designation**	O/X	X/L	L/M	M/H
	µm					µm					µm					µm			
X-71900.C	2	1	3	3	71910.C	4	2	6	6	71920.C	6	3	9	7	71938.C	9	5	16	15
X-71901.C	2	1	3	3	71911.C	4	2	6	6	71921.C	6	3	9	12	71940.C	10	4	16	15
X-71902.C	3	1	3	3	71912.C	4	2	6	8	71922.C	6	3	9	12	71944.C	10	6	14	20
71903.C	3	1	4	5	71913.C	5	2	7	6	71924.C	7	3	10	10	71948.C	12	6	17	20
71904.C	3	1	4	4	71914.C	5	2	7	8	71926.C	7	3	10	10	71952.C	12	6	17	20
71905.C	3	1	4	4	71915.C	4	3	7	8	71928.C	7	5	10	13	71956.C	12	8	20	20
71906.C	3	2	4	5	71916.C	5	3	6	8	71930.C	8	4	12	11	71960.C	10	6	14	18
71907.C	3	2	5	5	71917.C	5	3	8	8	71932.C	8	4	12	16	71964.C	5	4	6	9
71908.C	3	2	5	6	71918.C	5	3	8	8	71934.C	8	4	13	15	71968.C	5	3	6	9
71909.C	3	2	5	6	71919.C	6	2	8	9	71936.C	9	5	11	15	71972.C	5	3	7	8

Dimensional series CB 719...C																				
Basic designation	O/X	X/L	L/M	M/H	**Basic designation**	O/X	X/L	L/M	M/H	**Basic designation**	O/X	X/L	L/M	M/H	**Basic designation**	O/X	X/L	L/M	M/H
	µm					µm					µm					µm			
CBX-71900.C	1	1	2	2	CB 71910.C	3	1	4	5	CB 71920.C	4	2	6	6	CB 71938.C	6	3	9	12
CBX-71901.C	1	1	2	2	CB 71911.C	3	1	4	4	CB 71921.C	4	2	6	6	CB 71940.C	7	3	10	10
CBX-71902.C	1	1	2	2	CB 71912.C	3	1	4	4	CB 71922.C	4	2	6	6	CB 71944.C	7	3	10	10
CB 71903.C	1	1	2	2	CB 71913.C	2	2	4	5	CB 71924.C	4	2	6	8	CB 71948.C	7	5	10	13
CB 71904.C	2	1	2	3	CB 71914.C	3	2	4	5	CB 71926.C	5	2	7	8	CB 71952.C	8	4	12	11
CB 71905.C	2	1	3	3	CB 71915.C	3	2	5	5	CB 71928.C	4	3	7	8	CB 71956.C	8	4	13	15
CB 71906.C	2	1	3	3	CB 71916.C	3	2	5	4	CB 71930.C	5	3	8	8					
CB 71907.C	2	1	3	3	CB 71917.C	3	2	5	6	CB 71932.C	5	3	8	8					
CB 71908.C	2	1	3	3	CB 71918.C	3	2	5	6	CB 71934.C	5	3	8	9					
CB 71909.C	3	1	3	3	CB 71919.C	4	2	4	6	CB 71936.C	6	3	9	7					

Dimensional series 719...CX										Dimensional series CB 719...CX									
Basic designation	O/X	X/L	L/M	M/H	**Basic designation**	O/X	X/L	L/M	M/H	**Basic designation**	O/X	X/L	L/M	M/H	**Basic designation**	O/X	X/L	L/M	M/H
	µm					µm					µm					µm			
71906.CX	3	1	4	4	71916.CX	4	2	6	8	CB 71906.CX	2	1	2	3	CB 71916.CX	3	1	4	4
71907.CX	3	1	4	4	71917.CX	5	2	7	6	CB 71907.CX	2	1	3	3	CB 71917.CX	2	2	4	5
71908.CX	2	2	4	5	71918.CX	5	2	7	8	CB 71908.CX	2	1	3	3	CB 71918.CX	3	2	4	5
71909.CX	3	2	4	5	71919.CX	4	3	7	8	CB 71909.CX	2	1	3	3	CB 71919.CX	3	2	5	5
71910.CX	3	2	5	4	71920.CX	4	3	7	8	CB 71910.CX	2	1	3	3	CB 71920.CX	3	2	5	4
71911.CX	3	2	5	6	71921.CX	5	3	8	8	CB 71911.CX	2	1	3	3	CB 71921.CX	3	2	5	6
71912.CX	3	2	5	6	71922.CX	5	3	8	8	CB 71912.CX	3	1	3	3	CB 71922.CX	3	2	5	6
71913.CX	4	2	6	6	71924.CX	6	2	8	9	CB 71913.CX	3	1	4	5	CB 71924.CX	4	2	4	6
71914.CX	4	2	6	6						CB71914.CX	3	1	4	4					
71915.CX	4	2	6	6						CB 71915.CX	3	1	4	4					

Dimensional series 719...E

Dimensional series 719...E

Basic designation	O/X	X/L	L/M	M/H	Basic designation	O/X	X/L	L/M	M/H	Basic designation	O/X	X/L	L/M	M/H	Basic designation	O/X	X/L	L/M	M/H
	µm					µm					µm					µm			
X-71900.E	1	1	2	2	71910.E	3	1	3	3	71920.E	4	2	4	6	71938.E	7	3	6	9
X-71901.E	1	1	2	2	71911.E	3	1	3	5	71921.E	4	2	4	8	71940.E	7	3	8	12
X-71902.E	2	1	2	2	71912.E	2	2	3	4	71922.E	4	2	6	6	71944.E	7	3	8	12
71903.E	2	1	2	2	71913.E	3	2	3	4	71924.E	5	2	5	6	71948.E	7	5	8	15
71904.E	2	1	2	2	71914.E	3	2	4	6	71926.E	5	2	5	8	71952.E	8	4	10	13
71905.E	2	1	2	3	71915.E	3	2	4	5	71928.E	5	3	6	8	71956.E	9	5	10	11
71906.E	2	1	2	3	71916.E	3	2	4	5	71930.E	5	3	6	8	71960.E	7	4	8	11
71907.E	2	1	3	3	71917.E	3	2	4	5	71932.E	5	3	6	10	71964.E	7	4	8	12
71908.E	3	1	3	4	71918.E	4	2	4	6	71934.E	6	3	7	8	71968.E	6	4	8	11
71909.E	3	1	3	3	71919.E	4	2	4	6	71936.E	6	3	7	9	71972.E	7	4	7	12

Dimensional series CB 719...E

Basic designation	O/X	X/L	L/M	M/H	Basic designation	O/X	X/L	L/M	M/H	Basic designation	O/X	X/L	L/M	M/H	Basic designation	O/X	X/L	L/M	M/H
	µm					µm					µm					µm			
CBX-71900.E	1	1	1	1	CB 71910.E	2	1	2	3	CB 71920.E	3	1	3	3	CB 71938.E	4	2	4	8
CBX-71901.E	1	1	1	1	CB 71911.E	2	1	2	3	CB 71921.E	3	1	3	5	CB 71940.E	4	2	6	6
CBX-71902.E	1	1	1	1	CB 71912.E	2	1	2	3	CB 71922.E	3	1	3	5	CB 71944.E	5	2	5	8
CB 71903.E	1	1	1	2	CB 71913.E	2	1	2	3	CB 71924.E	2	2	3	4	CB 71948.E	4	3	7	8
CB 71904.E	1	1	1	2	CB 71914.E	2	1	2	3	CB 71926.E	3	2	4	4	CB 71952.E	5	3	6	8
CB 71905.E	1	1	1	2	CB 71915.E	2	1	2	3	CB 71928.E	3	2	4	5	CB 71956.E	6	3	5	10
CB 71906.E	1	1	2	2	CB 71916.E	2	1	3	3	CB 71930.E	3	2	4	5					
CB 71907.E	1	1	2	2	CB 71917.E	2	1	3	4	CB 71932.E	3	2	4	6					
CB 71908.E	1	1	2	2	CB 71918.E	3	1	3	4	CB 71934.E	4	2	4	6					
CB 71909.E	1	1	2	2	CB 71919.E	3	1	3	3	CB 71936.E	4	2	4	6					

Dimensional series 719...EX and H 719...E

Basic designation	O/X	X/L	L/M	M/H	Basic designation	O/X	X/L	L/M	M/H
	µm					µm			
71906.EX	2	1	2	3	71916.EX	2	2	3	4
71907.EX	2	1	2	3	71917.EX	3	2	3	4
71908.EX	2	1	2	3	71918.EX	3	2	4	6
71909.EX	2	1	2	3	71919.EX	3	2	4	5
71910.EX	2	1	3	3	71920.EX	3	2	4	5
71911.EX	3	1	3	4	71921.EX	3	2	4	5
71912.EX	3	1	3	4	71922.EX	3	2	4	7
71913.EX	3	1	3	3	71924.EX	4	2	4	6
71914.EX	3	1	3	5					
71915.EX	3	1	3	5					
H 71908.E	2	1	2	3	H 71912.E	3	1	3	4
H 71909.E	1	1	3	3	H 71913.E	3	1	3	3
H 71910.E	2	1	3	3	H 71914.E	3	1	3	5
H 71911.E	3	1	3	4					

Dimensional series CB 719...EX and CBH 719...E

Basic designation	O/X	X/L	L/M	M/H	Basic designation	O/X	X/L	L/M	M/H
	µm					µm			
CB 71906.EX	1	1	1	2	CB 71916.EX	2	1	2	3
CB 71907.EX	1	1	2	2	CB 71917.EX	2	1	2	3
CB 71908.EX	1	1	1	2	CB 71918.EX	2	1	2	3
CB 71909.EX	1	1	2	2	CB 71919.EX	2	1	2	3
CB 71910.EX	1	1	2	2	CB 71920.EX	2	1	2	3
CB 71911.EX	1	1	2	2	CB 71921.EX	2	1	3	4
CB 71912.EX	1	1	2	2	CB 71922.EX	2	1	3	4
CB 71913.EX	1	1	2	3	CB 71924.EX	3	1	3	3
CB 71914.EX	2	1	2	3					
CB 71915.EX	2	1	2	3					
CBH 71908.E	1	1	2	2	CBH 71912.E	1	1	1	2
CBH 71909.E	1	1	2	2	CBH 71913.E	1	1	2	3
CBH 71910.E	1	1	2	2	CBH 71914.E	2	1	2	3
CBH 71911.E	1	1	2	2					

Dimensional series 70...C

Dimensional series 70...C

Basic designation	O/X	X/L	L/M	M/H	Basic designation	O/X	X/L	L/M	M/H	Basic designation	O/X	X/L	L/M	M/H	Basic designation	O/X	X/L	L/M	M/H
	µm					µm					µm					µm			
X-706.C	4	2	4	4	7006.C	5	3	6	6	7016.C	9	5	8	8	7030.C	14	6	15	15
X-707.C	4	2	4	4	7007.C	6	3	5	8	7017.C	9	5	10	11	7032.C	14	8	13	15
X-708.C	4	2	4	4	7008.C	6	3	7	6	7018.C	9	5	10	11	7034.C	14	8	13	20
X-709.C	4	2	4	6	7009.C	7	3	6	8	7019.C	10	4	10	11	7036.C	16	8	16	15
X-7000.C	4	2	4	6	7010.C	7	3	8	6	7020.C	10	6	9	10	7038.C	16	8	16	20
X-7001.C	4	2	6	4	7011.C	7	3	8	7	7021.C	10	6	9	15	7040.C	16	9	15	20
7002.C	5	2	5	4	7012.C	7	5	6	7	7022.C	10	6	9	15	7044.C	18	7	20	20
7003.C	5	2	5	6	7013.C	8	4	8	10	7024.C	12	6	12	10	7048.C	20	10	20	20
7004.C	4	3	5	6	7014.C	8	4	8	10	7026.C	12	6	12	15					
7005.C	5	3	6	4	7015.C	8	4	10	8	7028.C	12	8	10	15					

Dimensional series CB 70...C

Basic designation	O/X	X/L	L/M	M/H	Basic designation	O/X	X/L	L/M	M/H	Basic designation	O/X	X/L	L/M	M/H	Basic designation	O/X	X/L	L/M	M/H
	µm					µm					µm					µm			
CBX-706.C	3	1	3	3	CB 7006.C	3	2	4	5	CB 7016.C	6	3	5	6	CB 7030.C	9	5	8	8
CBX-707.C	3	1	3	3	CB 7007.C	4	2	4	4	CB 7017.C	6	3	5	8	CB 7032.C	9	5	8	13
CBX-708.C	3	1	3	3	CB 7008.C	4	2	4	4	CB 7018.C	6	3	7	6	CB 7034.C	9	5	10	11
CBX-709.C	3	1	3	3	CB 7009.C	4	2	4	6	CB 7019.C	7	3	6	8	CB 7036.C	10	6	9	10
CBX-7000.C	3	1	3	3	CB 7010.C	5	2	5	4	CB 7020.C	7	3	6	8	CB 7038.C	10	6	9	15
CBX-7001.C	3	1	3	3	CB 7011.C	5	2	5	4	CB 7021.C	7	3	8	6					
CB-7002.C	2	2	3	2	CB 7012.C	4	3	5	6	CB 7022.C	7	3	8	7					
CB 7003.C	3	2	3	4	CB 7013.C	5	3	4	6	CB 7024.C	7	5	6	7					
CB 7004.C	3	2	3	4	CB 7014.C	5	3	6	6	CB 7026.C	8	4	8	10					
CB 7005.C	3	2	4	3	CB 7015.C	5	3	6	6	CB 7028.C	8	4	8	10					

Dimensional series 70...CX and CB 70...CX

Basic designation	O/X	X/L	L/M	M/H	Basic designation	O/X	X/L	L/M	M/H
	µm					µm			
7002.CX	4	2	4	4	CB 7002.CX	3	1	3	3
7003.CX	4	2	4	4	CB 7003.CX	3	1	3	3
7004.CX	4	2	4	6	CB 7004.CX	3	1	3	3
7005.CX	4	3	5	4	CB 7005.CX	2	2	3	3
7006.CX	5	2	5	6	CB 7006.CX	3	2	3	4
7007.CX	4	3	5	6	CB 7007.CX	3	2	3	4
7008.CX	4	2	6	4	CB 7008.CX	3	1	3	3
7009.CX	5	2	5	4	CB 7009.CX	2	2	3	2
7010.CX	4	3	5	6	CB 7010.CX	3	2	3	4
7011.CX	5	3	4	6	CB 7011.CX	3	2	3	4
7012.CX	5	3	6	6	CB 7012.CX	3	2	4	3
7013.CX	5	3	6	6	CB 7013.CX	3	2	4	3
7014.CX	6	3	5	6	CB 7014.CX	4	2	4	5
7015.CX	6	3	7	6	CB 7015.CX	4	2	4	4
7016.CX	6	3	7	6	CB 7016.CX	4	2	4	4
7017.CX	7	3	6	8	CB 7017.CX	4	2	4	6
7018.CX	6	4	6	8	CB 7018.CX	4	2	4	6
7019.CX	7	3	8	6	CB 7019.CX	5	2	5	4
7020.CX	7	3	8	7	CB 7020.CX	5	2	5	4
7021.CX	7	5	6	7	CB 7021.CX	4	3	5	6

Dimensional series H 70...C and CBH 70...C

Basic designation	O/X	X/L	L/M	M/H	Basic designation	O/X	X/L	L/M	M/H
	µm					µm			
H 7008.C	3	5	6	6	CBH 7008.C	1	4	4	3
H 7009.C	2	6	6	6	CBH 7009.C	1	4	4	5
H 7010.C	6	3	5	8	CBH 7010.C	4	2	4	4
H 7011.C	6	3	7	6	CBH 7011.C	4	2	4	4
H 7012.C	7	3	6	8	CBH 7012.C	4	2	4	6
H 7013.C	6	4	6	8	CBH 7013.C	5	2	3	6
H 7014.C	7	3	8	7	CBH 7014.C	5	2	5	4
H 7015.C	7	3	8	7	CBH 7015.C	5	2	5	6
H 7016.C	7	5	6	7	CBH 7016.C	4	3	5	6
H 7017.C	8	4	8	10	CBH 7017.C	5	3	6	6
H 7018.C	8	4	8	10	CBH 7018.C	5	3	6	6
H 7020.C	8	4	8	10	CBH 7020.C	5	3	6	6
H 7022.C	9	5	10	11	CBH 7022.C	6	3	5	8
H 7024.C	10	4	10	11	CBH 7024.C	7	3	6	6

Dimensional series 70...E

Dimensional series 70...E

Basic designation	O/X	X/L	L/M	M/H	Basic designation	O/X	X/L	L/M	M/H	Basic designation	O/X	X/L	L/M	M/H	Basic designation	O/X	X/L	L/M	M/H
	µm					µm					µm					µm			
X-706.E	2	1	2	3	7006.E	3	2	3	4	7016.E	5	3	6	6	7030.E	8	4	8	10
X-707.E	3	1	2	3	7007.E	3	2	4	5	7017.E	5	3	6	8	7032.E	8	4	10	13
X-708.E	3	1	2	3	7008.E	3	2	4	5	7018.E	5	3	6	8	7034.E	8	6	8	13
X-709.E	3	1	3	3	7009.E	4	2	4	6	7019.E	6	3	5	8	7036.E	9	5	10	11
X-7000.E	3	1	3	3	7010.E	4	2	4	6	7020.E	6	3	7	8	7038.E	9	5	10	16
X-7001.E	3	1	3	3	7011.E	4	2	4	6	7021.E	6	3	7	8	7040.E	10	4	11	15
7002.E	3	1	3	3	7012.E	5	2	5	6	7022.E	7	3	6	9	7044.E	10	6	9	15
7003.E	3	1	3	3	7013.E	5	2	5	6	7024.E	7	3	8	7	7048.E	12	6	12	15
7004.E	3	1	3	5	7014.E	4	3	5	6	7026.E	7	3	8	12					
7005.E	3	2	3	4	7015.E	5	3	4	8	7028.E	7	5	8	10					

Dimensional series CB 70...E

Basic designation	O/X	X/L	L/M	M/H	Basic designation	O/X	X/L	L/M	M/H	Basic designation	O/X	X/L	L/M	M/H	Basic designation	O/X	X/L	L/M	M/H
	µm					µm					µm					µm			
CBX-706.E	1	1	2	2	CB 7006.E	2	1	2	3	CB 7016.E	3	2	4	5	CB 7030.E	5	3	6	6
CBX-707.E	1	1	2	2	CB 7007.E	2	1	2	3	CB 7017.E	3	2	4	5	CB 7032.E	5	3	6	8
CBX-708.E	1	1	2	2	CB 7008.E	3	1	2	3	CB 7018.E	3	2	4	5	CB 7034.E	6	3	5	8
CBX-709.E	1	1	2	2	CB 7009.E	3	1	3	3	CB 7019.E	4	2	4	4	CB 7036.E	6	3	7	8
CBX-7000.E	1	1	2	2	CB 7010.E	3	1	3	3	CB 7020.E	4	2	4	6	CB 7038.E	6	3	7	8
CBX-7001.E	1	1	2	2	CB 7011.E	3	1	3	3	CB 7021.E	4	2	4	6					
CB-7002.E	2	1	2	2	CB 7012.E	2	2	3	5	CB 7022.E	4	2	4	6					
CB 7003.E	2	1	2	2	CB 7013.E	3	2	3	4	CB 7024.E	5	2	5	6					
CB 7004.E	2	1	2	2	CB 7014.E	3	2	3	4	CB 7026.E	5	2	5	6					
CB 7005.E	2	1	2	3	CB 7015.E	3	2	3	4	CB 7028.E	4	3	5	8					

Dimensional series 70...EX and CB 70...EX

Basic designation	O/X	X/L	L/M	M/H	Basic designation	O/X	X/L	L/M	M/H
	µm					µm			
7002.EX	2	1	2	3	CB 7002.EX	1	1	2	2
7003.EX	3	1	2	3	CB 7003.EX	1	1	2	2
7004.EX	2	2	2	4	CB 7004.EX	1	1	1	2
7005.EX	3	1	3	3	CB 7005.EX	2	1	2	2
7006.EX	3	1	3	3	CB 7006.EX	2	1	2	2
7007.EX	2	2	3	5	CB 7007.EX	2	1	2	3
7008.EX	3	1	3	3	CB 7008.EX	2	1	2	2
7009.EX	3	1	3	3	CB 7009.EX	2	1	2	2
7010.EX	2	2	3	5	CB 7010.EX	2	1	2	3
7011.EX	3	2	3	4	CB 7011.EX	2	1	2	3
7012.EX	3	2	3	4	CB 7012.EX	2	1	2	3
7013.EX	3	2	3	4	CB 7013.EX	2	1	2	3
7014.EX	3	2	4	5	CB 7014.EX	2	1	2	3
7015.EX	3	2	4	5	CB 7015.EX	2	1	2	3
7016.EX	4	2	4	5	CB 7016.EX	3	1	3	3
7017.EX	4	2	4	6	CB 7017.EX	3	1	3	3
7018.EX	4	2	4	6	CB 7018.EX	3	1	3	3
7019.EX	4	2	4	6	CB 7019.EX	3	1	3	3
7020.EX	4	2	4	6	CB 7020.EX	3	1	3	3
7021.EX	5	2	5	6	CB 7021.EX	3	1	3	5

Dimensional series H 70...E and CBH 70...E

Basic designation	O/X	X/L	L/M	M/H	Basic designation	O/X	X/L	L/M	M/H
	µm					µm			
H 7008.E	2	3	3	4	CBH 7008.E	1	2	2	3
H 7009.E	2	3	3	4	CBH 7009.E	1	2	2	3
H 7010.E	3	2	4	5	CBH 7010.E	2	1	2	3
H 7011.E	3	2	4	5	CBH 7011.E	3	1	2	3
H 7012.E	4	2	4	4	CBH 7012.E	3	1	3	3
H 7013.E	4	2	4	6	CBH 7013.E	3	1	3	4
H 7014.E	4	2	4	6	CBH 7014.E	3	1	3	3
H 7015.E	4	2	4	6	CBH 7015.E	3	1	3	3
H 7016.E	5	2	5	6	CBH 7016.E	2	2	3	5
H 7017.E	5	2	5	6	CBH 7017.E	2	2	3	4
H 7018.E	4	3	5	6	CBH 7018.E	3	2	3	4
H 7020.E	5	3	4	8	CBH 7020.E	3	2	3	6
H 7022.E	5	3	6	8	CBH 7022.E	3	2	4	5
H 7024.E	6	3	5	8	CBH 7024.E	4	2	4	4

Dimensional series 72...C, 72...E and 73...C, 73...E

Dimensional series 72...C										Dimensional series 72...E									
Basic designation	O/X µm	X/L µm	L/M µm	M/H µm	Basic designation	O/X µm	X/L µm	L/M µm	M/H µm	Basic designation	O/X µm	X/L µm	L/M µm	M/H µm	Basic designation	O/X µm	X/L µm	L/M µm	M/H µm
7200.C	5	2	3	4	7213.C	9	5	8	13	7200.E	3	1	3	3	7213.E	5	3	6	8
7201.C	5	2	3	6	7214.C	10	4	10	11	7201.E	3	1	3	3	7214.E	6	3	5	8
7202.C	4	3	5	4	7215.C	10	6	8	11	7202.E	3	1	3	3	7215.E	6	3	7	8
7203.C	5	3	4	6	7216.C	10	6	9	15	7203.E	2	2	3	5	7216.E	6	3	7	8
7204.C	5	3	4	6	7217.C	12	4	9	15	7204.E	3	2	3	4	7217.E	7	3	6	9
7205.C	6	3	5	6	7218.C	12	6	12	10	7205.E	3	2	3	4	7218.E	7	3	8	7
7206.C	6	3	5	8	7219.C	12	6	12	15	7206.E	4	2	4	6	7219.E	7	3	8	12
7207.C	7	3	6	8	7220.C	12	6	12	15	7207.E	4	2	4	6	7220.E	7	3	8	12
7208.C	7	3	6	9	7221.C	12	8	10	15	7208.E	4	2	4	6	7221.E	7	5	8	10
7209.C	7	5	6	7	7222.C	14	6	15	15	7209.E	5	2	5	6	7222.E	8	4	8	10
7210.C	8	4	8	10	7224.C	14	8	13	15	7210.E	5	2	5	6	7224.E	8	4	10	13
7211.C	8	4	8	10	7226.C	16	8	11	20	7211.E	4	3	5	8	7226.E	9	5	8	13
7212.C	9	5	8	8	7228.C	16	8	16	20	7212.E	5	3	6	6	7228.E	9	5	10	11

Dimensional series CB 72...C										Dimensional series CB 72...E									
Basic designation	O/X µm	X/L µm	L/M µm	M/H µm	Basic designation	O/X µm	X/L µm	L/M µm	M/H µm	Basic designation	O/X µm	X/L µm	L/M µm	M/H µm	Basic designation	O/X µm	X/L µm	L/M µm	M/H µm
CB 7202.C	3	2	3	3	CB 7212.C	6	3	5	6	CB 7202.E	2	1	2	2	CB 7212.E	3	2	3	5
CB 7203.C	3	2	3	4	CB 7213.C	6	3	5	8	CB 7203.E	2	1	2	3	CB 7213.E	3	2	4	5
CB 7204.C	3	2	3	4	CB 7214.C	7	3	6	6	CB 7204.E	2	1	2	3	CB 7214.E	4	2	4	5
CB 7205.C	4	2	3	5	CB 7215.C	7	3	6	8	CB 7205.E	2	1	2	3	CB 7215.E	4	2	4	6
CB 7206.C	4	2	4	4	CB 7216.C	7	3	6	9	CB 7206.E	3	1	2	3	CB 7216.E	4	2	4	6
CB 7207.C	4	2	4	6	CB 7217.C	7	3	8	7	CB 7207.E	3	1	3	3	CB 7217.E	4	2	4	6
CB 7208.C	5	2	5	4	CB 7218.C	7	5	6	7	CB 7208.E	3	1	3	3	CB 7218.E	5	2	5	6
CB 7209.C	4	3	5	6	CB 7219.C	8	4	8	10	CB 7209.E	2	2	3	5	CB 7219.E	5	2	5	6
CB 7210.C	5	3	4	6	CB 7220.C	8	4	8	10	CB 7210.E	3	2	3	4	CB 7220.E	4	3	5	6
CB 7211.C	5	3	6	6						CB 7211.E	3	2	3	4					

Dimensional series 73...C										Dimensional series 73...E									
Basic designation	O/X µm	X/L µm	L/M µm	M/H µm	Basic designation	O/X µm	X/L µm	L/M µm	M/H µm	Basic designation	O/X µm	X/L µm	L/M µm	M/H µm	Basic designation	O/X µm	X/L µm	L/M µm	M/H µm
7304.C	6	3	5	6						7304.E	3	2	4	5					
7305.C	6	4	4	8						7305.E	4	2	4	4					
7306.C	6	4	6	8						7306.E	4	2	4	6					
7307.C	7	5	6	7						7307.E	4	3	5	6					

2.6 IBC High precision universal angular contact ball bearings

All IBC high precision angular contact ball bearings are universally ground. They may therefore be used singly and can be combined to a bearing set arrangement defined by the end-user without any loss of performance. Using universal angular contact ball bearings is a great advantage, especially from the point of view of stocks and the availability of components.

Universal angular contact ball bearings are manufactured as single bearings known as U, and as duplex sets known as DU. Single bearings are marked with a V-marking on the outer ring that allows one to recognise the direction of axial force more easily. The V-marking points in the direction in which the axial force is transmitted through the outer ring. The V-marking also indicates the point of maximum ring thickness. The advantage of universal bearing-sets lies in the fact that their bores and outside diameters are sorted as standard in the IBC manufacturing process.

During manufacture, IBC universal angular contact ball bearings are adjusted and matched in such a way that they can be mounted in any type of arrangement (O- or X-arrangement, or tandem mounting) and with any number of bearings positioned next to each other.

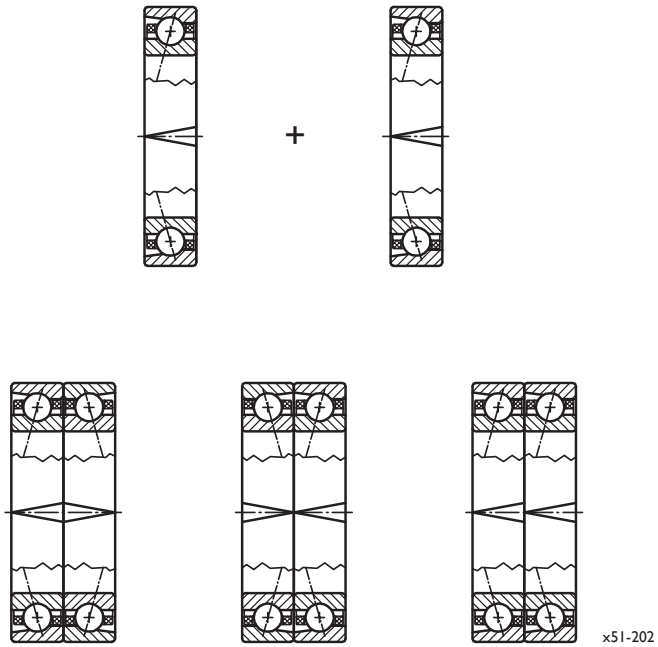

Fig. 2.8: Universally ground IBC high precision angular contact ball bearings in O-arrangement, X-arrangement and in tandem mounting

The bearing arrangement is carried out by the customer with the help of the small arrow marker.

In order to facilitate mounting, we also manufacture sets with an additional V-marking that runs on the outer rings, e.g. DB, TBT, QBC, and other combinations.

This is explained in more detail in the following Chapter 2.7 (IBC High precision angular contact ball bearing sets).

2.7 IBC High precision angular contact ball bearing sets

The minimum mounting for a spindle consists of one high precision angular contact ball bearing on each side. Both bearings are therefore arranged at a suitable distance from each other. In this arrangement, the required preload adjustment is carried out by means of a suitable locknut with a defined tightening torque or with a suitably ground flange cover.

The correct adjustment of the two individual high precision angular contact ball bearings is crucial for the successful operation of this type of bearing arrangement. If the adjustment is not carried out correctly, the life time of the bearing may be reduced through higher friction losses and associated higher operating temperatures.

If the load carrying capacity of a single bearing is insufficient, or should the bearing need to absorb axial forces in both directions, then high precision angular contact ball bearings with universally ground-in preload can be used in sets.

During manufacture, IBC high precision angular contact ball bearing sets are pre-adjusted and matched to each other in such a way as to maintain the predefined preload value of a single bearing within the set and to ensure that the load bearing capacity within the angular contact ball bearing set is spread evenly across the individual bearings.

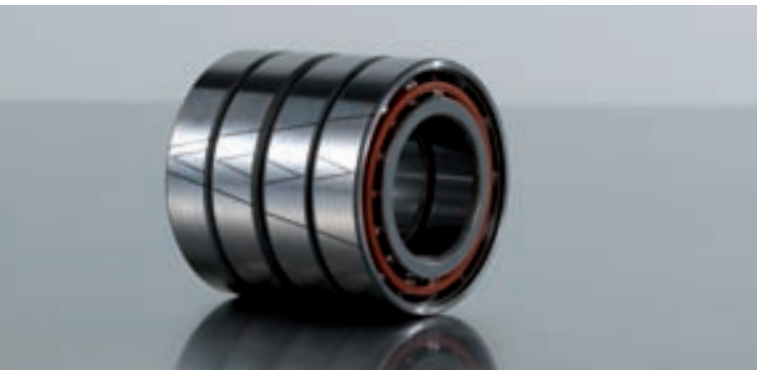

Arrangements

The O- and X-arrangements of two high precision angular contact ball bearings allow for an axial load to be absorbed in both directions, as shown in fig. 2.8. High axial forces in only one direction are supported by tandem mounting. Forces that are even stronger are absorbed by high precision angular contact ball bearing sets with more than two high precision angular contact ball bearings positioned in a single direction. The angular contact ball bearing set is therefore generally set against a further angular contact ball bearing, or a further set, that absorbs the axial load in the opposite load direction.

Because the effective load centre is wide, the O-arrangement is better suited to absorb tilting moments.

That is why angular contact ball bearing sets with this type of arrangement produce a relatively rigid bearing. In contrast to the O-arrangement, the effective load centre in the X-arrangement is narrow and the X-arrangement is therefore less rigid but slightly more tolerant towards tilting.

With tandem mounting, the contact lines run parallel to each other and at the same angle to the separating line of the angular contact ball bearing.

IBC also offers other high precision angular contact ball bearing sets. Should the design used not permit the setting of angular contact ball bearings in tandem mounting against a further contact ball bearing, or against another set of contact ball bearings, then it is possible to combine tandem mounting with an O- or X-arrangement, for instance. If there are special requirements with regard to stiffness and bearing load, then it is advisable to use tandem mountings with three or four angular contact ball bearings.

Number of angular contact ball bearings		
D...		duplex set with 2 angular contact ball bearings
T...		triplex set with 3 angular contact ball bearings
Q...		quadruplex set with 4 angular contact ball bearings
P...		pentaplex set with 5 angular contact ball bearings
Arrangement of angular contact ball bearings		
		with 2 angular contact ball bearings in a set:
...B	< >	O-arrangement
...F	> <	X-arrangement
...T	>> or <<	tandem mounting
		with 3 or more angular contact ball bearings in a set:
...BT	<< >	tandem and O-arrangement
...FT	>> <	tandem and X-arrangement
...BC	<< >>	tandem-tandem in O-arrangement
...FC	>> <<	tandem-tandem in X-arrangement

Table 2.1: Designation system of IBC high precision angular contact ball bearing sets

Bearing sets and marking

Angular contact ball bearing sets with different combinations are used, depending on the requirements that have to be met. In order to meet these requirements, IBC manufactures matched angular contact ball bearing sets in addition to single bearings. These sets are provided with a V-marking that spans the whole set, in addition to the individual V-marking on the single bearing.

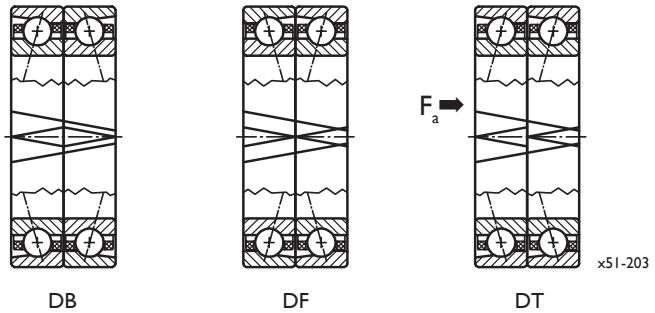

Fig. 2.9: Arrangements with duplex sets

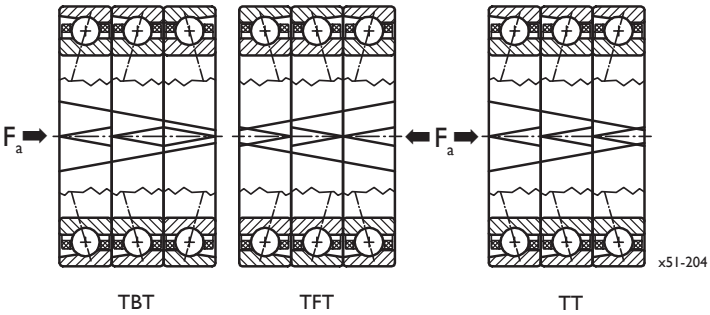

Fig. 2.10: Arrangements with triplex sets

The sequence of the individual bearings is clearly defined by the marking within the set and the marking also indicates the main direction of axial load of the angular contact ball bearing set.

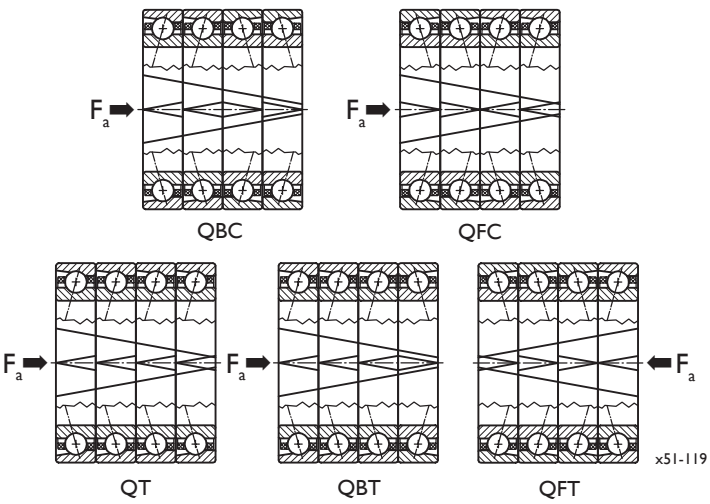

Fig. 2.11: Arrangements with quadruplex sets

The correct mounting direction must be observed so as not to impair the functioning of the angular contact ball bearing set and in order to allow for the adjustment of the built-in preload to be utilised. The marking on the set helps check the exact arrangement of the high precision angular contact ball bearings on the shaft, even after mounting. The marking also helps reduce potential mounting errors.

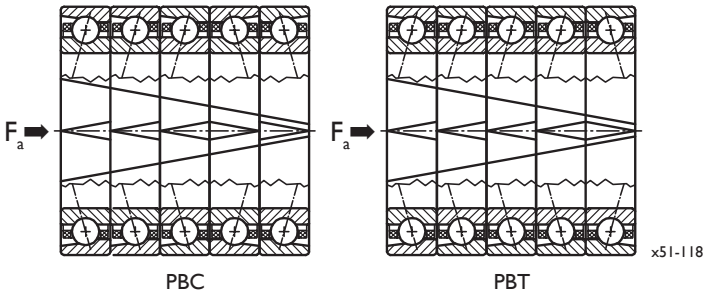

Fig. 2.12: Arrangements with pentaplex sets

The inner ring faces are marked with a small circle 'o' at the point of maximum ring thickness and/or maximum radial runout. When installing high precision angular contact ball bearing sets, care should be taken to ensure that the circles on both the outer and inner rings are aligned. The best possible radial runout is achieved if the outer ring marker is aligned with the point of the largest housing bore and the inner ring marker is aligned with the point of the smallest shaft diameter.

In order to achieve balanced load bearing characteristics for all the angular contact ball bearings within a set, high precision angular contact ball bearings with the same restricted outer and inner ring tolerance are combined. The measurements Δ_{Dmp} and/or Δ_{dmp} of these angular contact ball bearings are specified as average values D_{gm} and/or d_{gm} with regard to their tolerance classes and marked as such on the external packing and foil bag. Chapter 4 (Tolerances) contains detailed information on tolerances and their designation as well as their respective characteristics.

Bearing sets with balanced preload

In addition to arrangements of high precision angular contact ball bearings where each bearing has the same preload, we also supply balanced angular contact ball bearing sets. In this type of arrangement, high precision angular contact ball bearings with single preload are combined with a high precision angular contact ball bearing having double or triple preload value.

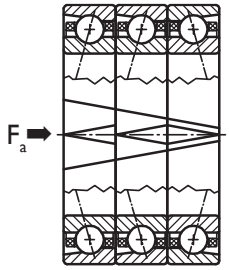

Arrangement	Designation
X X L	BTBTL
L L M	BTBTM
M M H	BTBTH

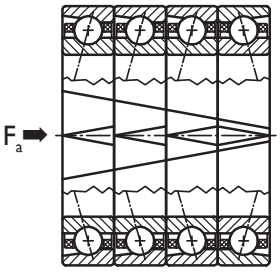

Arrangement	Designation
X X X L	BQBTL
L L L M	BQBTM

Fig. 2.13: Balanced bearing sets

The use of these arrangements is especially advisable if a high precision angular contact ball bearing is combined with more than one bearing and the preload relief of the single bearing is to be safely avoided.

Misalignment

Misalignment generally should be avoided. Skewing leads to a certain amount of compulsory rotation, which in turn leads to higher running noise and a reduction in bearing life time. The X-arrangement is slightly less susceptible to misalignment than the O-arrangement.

Rotational speed factors for angular contact ball bearing sets

The rotational speeds mentioned in the tables above are based on a high precision single angular contact ball bearing that is lightly preloaded. Because they are subject to self heat generation, preloaded high precision angular contact ball bearings that are combined to form sets do not permit permanent operation with the rotational speeds given in the tables. Various reduction factors apply to these sets, depending on the arrangement of the high precision angular contact ball bearings in the set and on their preload.

Detailed information on rotational speed factors is contained in Chapter 6 (Speed coefficients).

Preload and stiffness of bearing sets

The numerical values for preload and stiffness given in the tables are valid for the individual high precision angular contact ball bearing. A significant change in axial stiffness will occur, however, depending on the way the angular contact ball bearings are arranged within the set and also depending on the direction of the force.

The radial stiffness of a set of angular contact ball bearings, calculated as the sum of the radial stiffness of all the individual bearings, is approximately valid only for those angular contact ball bearing sets in a symmetrical arrangement that also have an absolutely uniform load distribution between the angular contact ball bearings within the bearing set. Angular contact ball bearing sets in an asymmetrical arrangement are subject to a reduction in stiffness under radial load due to the effect of the slightly differing contact angles.

Table 2.2 below is valid for the different types of arrangements of angular contact ball bearings in bearing sets, and for both directions of axial force. The table specifies the factors for axial and radial stiffness as well as the factor that shows the axial force of angular contact ball bearings within the set that will cause a relief of load, when compared to the preload.

Load in main load direction	axial stiffness factor K_a	radial stiffness factor K_r	unloading force $X \cdot F_v$	Opposite load direction	axial stiffness factor K_a	radial stiffness factor K_r	unloading force $X \cdot F_v$
	1.00	1.00	2.83		1.00	1.00	2.83
	1.63	1.45	5.66		1.30	1.45	2.83
	2.22	1.90	8.49		1.54	1.90	2.83
	2.80	2.35	11.3	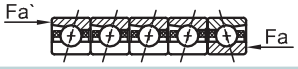	1.76	2.35	2.83
	2.00	2.00	5.66		2.00	2.00	5.66
	2.64	2.40	8.49		2.31	2.40	5.66
	3.26	3.70	11.3		2.59	3.70	5.66

shaded inner ring: bearing loaded

light-coloured inner ring: bearing unloaded

Table 2.2: Stiffness factors and deloading force for angular contact ball bearing sets

2.8 IBC High precision locknuts

IBC High precision locknuts with fine thread are used with high-precision applications because of their high accuracy. The securing systems integrated into the various locknuts permit simple and accurate mounting and provide for lasting stability.

The securing systems do not change the circular cross-section of the shaft, and no additional changes occur, so the securing systems do not cause grooves to form on the shaft. Because of the superfinishing of the thread and the contact surface, IBC high precision locknuts attain an axial face runout that conforms to ISO standard tolerance class IT3.

The different designs of IBC high precision locknuts are suited to a wide range of applications. The high precision locknuts are manufactured in various widths suitable for different axial loads. The securing devices may be axially or radially accessible, depending on the design. A design fitted with an additional labyrinth seal can also be supplied.

Dimensional series

Precision locknuts from the MMR series are designed for applications with limited installation space, or in order to save weight. In the MBA and MBC series, the locking of a precision locknut which cannot be reached radially is secured axially with accessible clamping screws. This production series requires a greater width due to its specific design. The permissible axial load is the same as for the MMR precision locknut. Starting from a thread diameter of 45 mm, the locknuts of the MBC series are also manufactured with four internal hexagon socket screws, to prevent break-out occurring during fast acceleration. The MMRB execution has a radial securing device, and its cross-section is the same as the MBA and MBC precision locknuts; it therefore permits higher loads and higher tightening torques. Under the designation MMRBS and MBAS, the MMRB and MBA production series are also manufactured with an integrated labyrinth seal.

Overview of the series	
MMR	narrow precision locknut with radial locking
MMRB	wide precision locknut with radial locking
MBA	precision locknut with axial locking via slotted segments and grub screws
MBC	precision locknut with axial locking via slotted segments and screws

Information on the recommended precision locknut for the respective high precision bearings can be found in the last column of the angular contact ball bearing data tables.

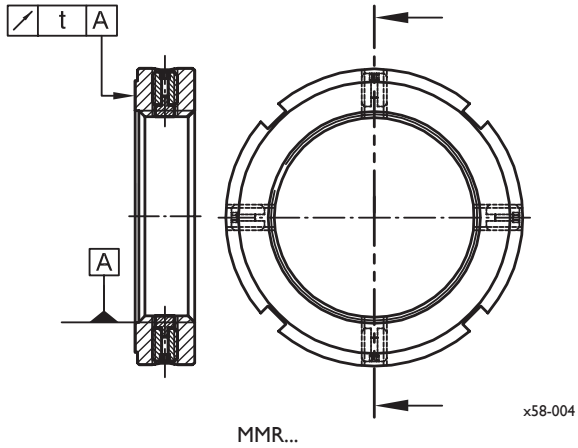

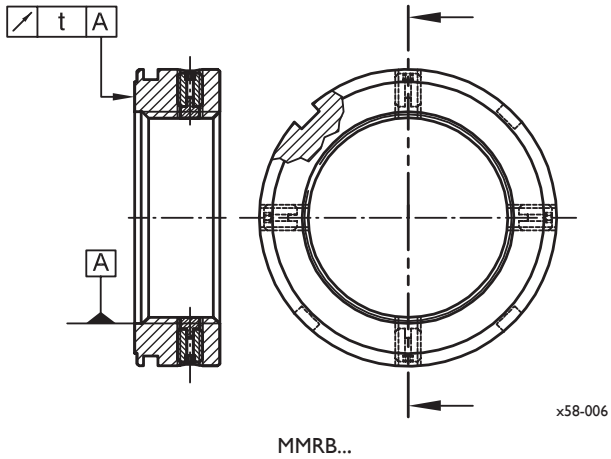

Fig. 2.14: IBC high precision locknuts MMR and MMRB

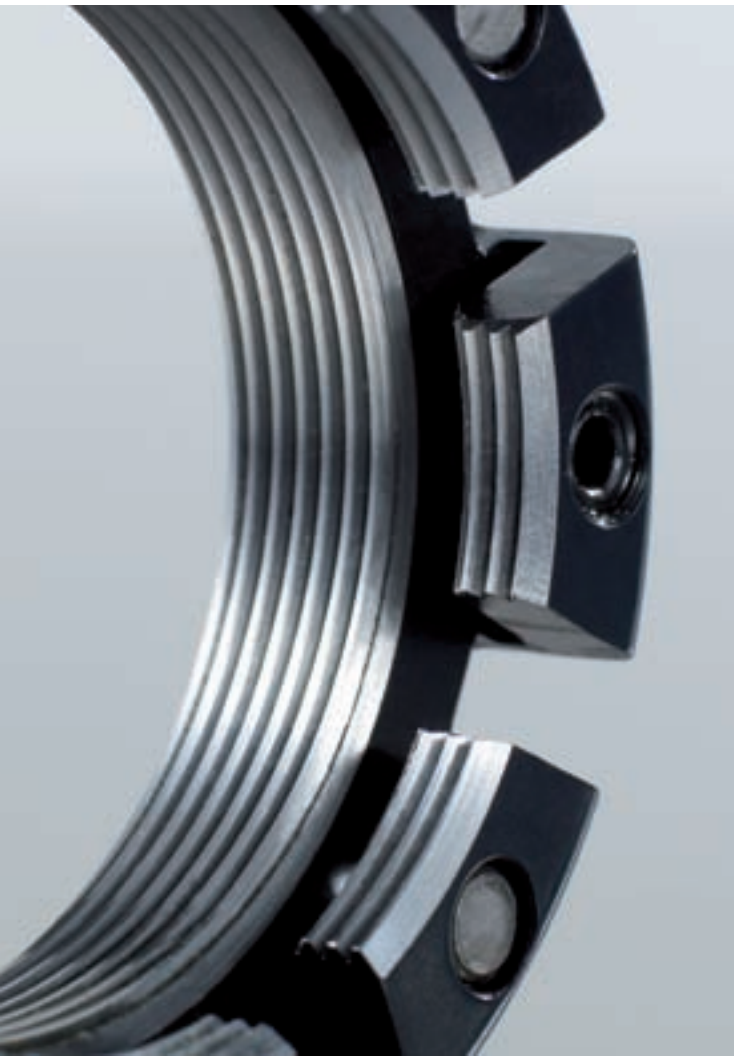

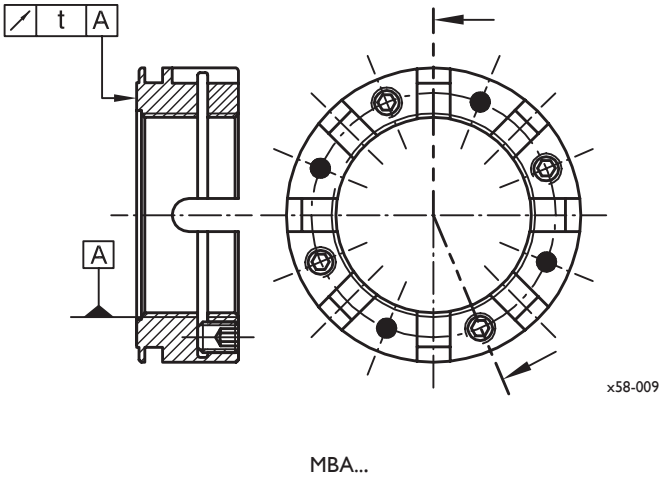

Fig. 2.15: IBC high precision locknut MBA

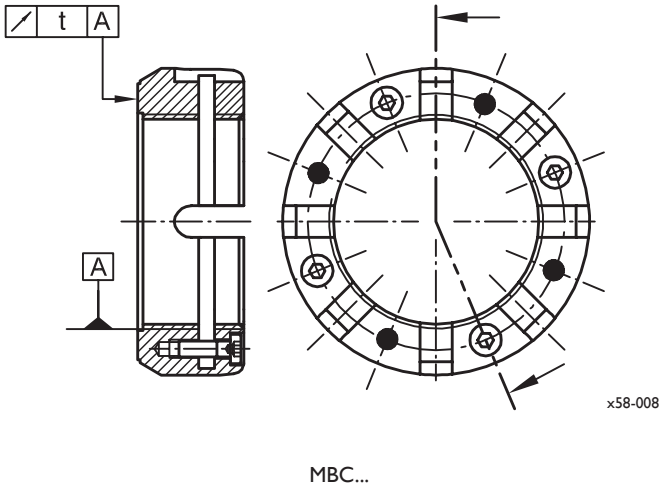

Fig. 2.16: IBC high precision locknut MBC

Chapter 8 (Mounting of High precision rolling bearings) contains more detailed information on the fitting of high precision locknuts as well as on the required tightening torque for each dimensional series of IBC high precision angular contact ball bearings.

If you are using high precision angular contact ball bearings of the 718... dimensional series, the high-precision locknuts may project above the outside diameter of the high precision angular contact ball bearings. In this case you will need to fit a spacer ring.

The publication **Precision Locknuts TI-I-5020** contains more detailed information on the product range and all technical data for the many types of IBC precision locknuts.

3. IBC High Precision Cylindrical Roller Bearings

3. IBC High precision cylindrical roller bearings

The use of high precision rolling bearings in machine tools makes great demands on the running accuracy of these bearings. IBC high precision cylindrical roller bearings combine running accuracy characteristics with great stiffness and load carrying capacity while at the same time providing for a high speed-capacity with a smaller cross section height. This smaller cross section height allows for lower centre distances for multi-spindle arrangements. High precision cylindrical roller bearings make for ideal floating bearings because they are able to compensate for heat-related changes in length that occur in adjacent parts.

IBC high precision cylindrical roller bearings with cages are available in many different variations. They are manufactured as single row bearings in the 19 and 10 dimensional series, and as double row bearings in dimensional series 30 and 49. The bore diameter and outside diameter of both the single and double row cylindrical roller bearings are identical for the particular diameter series.

The high precision cylindrical roller bearings with the HN designation have an enhanced inner geometry that has been adapted to the high precision angular contact ball bearings and their rotational speed capacity. These bearings are the ideal complement to the performance range of the high precision cylindrical roller bearings.

Fig. 3.1: High precision cylindrical roller bearings from the CR HN... design (option Q852)

High precision cylindrical roller bearings with tapered bore are designated by the suffix K and manufactured with a taper angle of 1:12. They are mostly used in machine tool manufacture, because the tapered bore allows for adjustment of the radial clearance and preload by means of axial displacement on the corresponding taper of the shaft.

Designs

The rolling elements of high precision cylindrical roller bearings are guided between two fixed shoulders that are either positioned on the outer ring (NNU) or on the inner ring (N and NN). The other rolling bearing ring of the two does not have any shoulders. Both in the case of the single and the double row precision cylindrical roller bearings, the bearing ring with the fixed shoulders and the roller assembly may be separated from the non shoulder bearing ring, i.e., the bearings are not self-retaining. This greatly contributes towards simpler mounting and dismounting of the rolling bearings.

IBC high precision cylindrical roller bearings are characterised by an ideal combination of load carrying capacity, stiffness and achievable rotational speeds. NNU design rolling bearings achieve great system stiffness in bearing situations that are characterised by very low-profile construction; however, in comparison to the NN design they have a lower load carrying capacity.

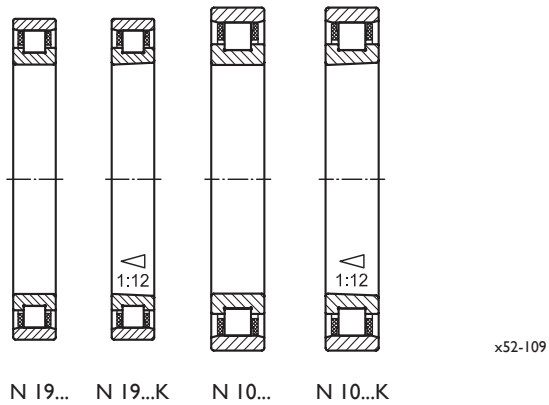

Fig. 3.2: Single row IBC high precision cylindrical roller bearings

The single row high precision cylindrical roller bearings from the dimensional series 19 and 10 are designed as speed-optimised rolling bearings. A further increase in rotational speed may be achieved by cutting the number of rollers in half (option Q852) or by using ceramic rollers (option CR).

Fig. 3.3: High precision cylindrical roller bearings from the N... design with lubrication groove and O-rings (option S)

The cylindrical roller bearings with the suffix S have a circular groove and radial supply holes for direct lubrication. O-rings integrated into the outer rings provide a seal in the housing.

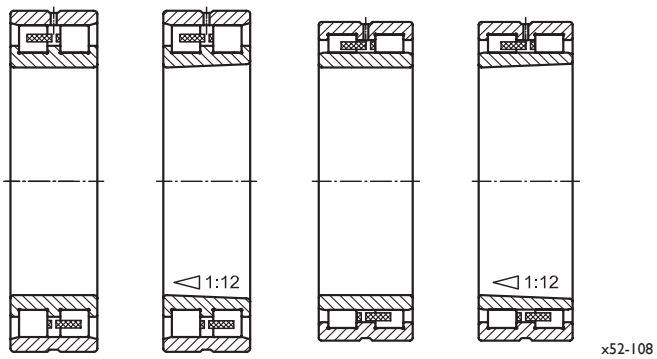

NN 30... NN 30...K NNU 49... NNU 49...K

Fig. 3.4: Double row IBC high precision cylindrical roller bearings

All double row IBC high precision cylindrical roller bearings are fitted with a lubrication groove with three holes on the outer ring (designation W33, 120° arrangement) in order to guarantee effective lubrication.

High precision cylindrical roller bearings with outer-ring lubrication reduce the number of elements that are part of the ambient design of the bearing; this results in more installation space, and it also reduces system costs.

Designs that utilise ceramic rolling elements permit higher speeds and have greater system stiffness. Both factors lead to higher-quality machining results. The stress to the rolling bearing itself is also reduced, which in turn leads to lower heat generation within the bearing. This fact has a positive impact on lubrication service life and leads to longer maintenance intervals. A further advantage of hybrid rolling bearings is that they are much less sensitive to high acceleration or deceleration.

Other production series may also be manufactured with ceramic rollers upon request. The hybrid version of these high precision cylindrical roller bearings is suitable for the highest rotational speeds; this comes at the cost of a reduced static load rating, however.

IBC high precision cylindrical roller bearings from the NN, NNU and N designs only absorb radial forces. They permit unconstrained axial displacement inside the rolling bearing in both directions between the shaft and the housing. The maximum permitted axial displacement is specified by the value s in the tables.

Special designs

IBC manufactures special designs of high precision cylindrical roller bearings for specialised applications. Please contact our applications engineers in this case. They will be glad to help you find a solution to your special applications requirements and bearing designs.

Bearing materials

Rolling bearing rings and rolling elements are manufactured from vacuum degassed bearing steel 100Cr6 (1.3505). Rolling elements are also available in the ceramic material silicon nitride Si_3N_4. A detailed description of materials is included in Chapter 9 (Materials).

Heat treatment

As standard, the bearing rings are stabilised up to a service temperature of 150 °C. For higher temperatures higher-quality heat treatment is available upon request.

Outside the machine tool industry, cylindrical roller bearings with higher heat stabilisation, especially NNU bearings, are used with greater bearing clearance.

Further details like designation, limitations and suitability are contained in Chapter 9 (Materials).

Cages

Various cage options are available depending on the design and the dimension of the high precision rolling bearing. A detailed description of the individual cage materials is included in Chapter 9 (Materials). Please contact our technical service department if your rolling bearing needs cages that have to meet special requirements.

Bearings with ATCoat coating

Besides the executions already mentioned, IBC also manufactures high precision bearings with an ATCoat thin dense chromium coating.

You will find a detailed description of the ATCoat coating in Chapter 10 (IBC High precision rolling bearings with ATCoat coating) and particularly in the publication **ATC Technology Coatings.**

Tolerances

IBC high precision cylindrical roller bearings are manufactured to conform to tolerance class SP as standard, but higher accuracies are possible. You will find the exact values in the tables in Chapter 4 (Tolerances).

The radial clearance of high precision cylindrical roller bearings with tapered bore is greater than that of cylindrical roller bearings with cylindrical bore. On request, we also manufacture tapered bore bearings with the smaller clearance of cylindrical roller bearings with cylindrical bore. This is especially beneficial in the adjustment of the bearings. Detailed information on this can be found in Chapter 8 (Mounting of High precision rolling bearings).

Misalignment

It should be noted that in the case of high precision cylindrical roller bearings misalignment leads to a certain amount of compulsory rotation. This in turn leads to higher running noise and may also result in a reduced life time.

Please contact our technical application teams in cases where misalignment may occur. Misalignment of the inner ring in reference to the outer ring that is permissible and does not reduce the life time, depends on the load ratio c/p (dynamic load rating to dynamically equivalent bearing load) and should be checked in each case.

IBC
GERMANY

3.1 Designation system
IBC High precision cylindrical roller bearings

Examples:

CR	HN	10	15	.K		.KPA	.SP	.Q852	
	NN	30	18	.K	.W33	.PY	.SP	.Q851	
	NNU	49	24	.A*.K	.W33	.M	.P5		
AC-	HN	10	20			.KPA	.SP	.Q852	.A11
CR	N	10	08			.MCB	.P5		

Material

-	100Cr6 rolling elements and rings
CR	Si_3N_4 rolling elements
AC-	ATCoat rings
ACC-	ATCoat rings + Si_3N_4 rolling elements

Design

N...	HN...
NN...	
NNU...	

Dimensional series

19...	49...
10...	30...

Bore code

from bore code 05: 5 x 5 = 25 mm

Design

-	cylindrical bore
K	tapered bore 1:12

Lubrication groove

W33	lubrication groove with three holes in the outer ring NN 30 and NNU 49
S	lubrication groove with holes N 19 and N 10

ATCoat coating

-	no coating
A11	inner and outer ring coated
A15	inner and outer ring coated corrosion resistant rolling elements and cage
A21	inner ring coated
A31	outer ring coated

Special specifications

Q851	smaller bearing clearance
Q852	reduced number of rolling elements, smaller bearing clearance, for explanations see Chapter 4

Combined accuracy and bearing clearance

SPC2X	precision grade SP bearing clearance C2X
SP(C1)	precision grade SP bearing clearance C1 (standard)
P5	precision grade P5

Cage

M	solid brass, roller guided
PYB	polyphenylene, guided on inner ring
M1	solid brass, roller guided, cage riveted
MCB	solid brass, guided on inner ring
KPA	pocket cage, PEEK, guided on outer ring

*only NNU design: reference to internal design

3.2 Manufacturing overview
IBC High precision cylindrical roller bearings

N 19...
N 19...K
N 10...
N 10...K
NN 30...
NN 30...K
NNU 49...
NNU 49...K

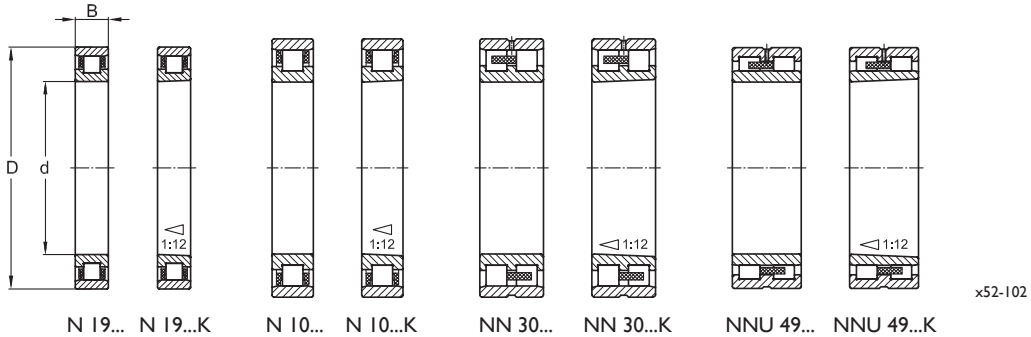

d mm	Dimensional series N 19... / N 19...K D mm	B mm	N 10... / N 10...K D mm	B mm	NN 30... / NN 30...K D mm	B mm	NNU 49... / NNU 49...K D mm	B mm
10								
12								
15								
17								
20								
25					NN 3005	47	16		
30					NN 3006	55	19		
35					NN 3007	62	20		
40			N 1008	68	15	NN 3008	68	21		
45			N 1009	75	16	NN 3009	75	23		
50	N 1910	72	12	N 1010	80	16	NN 3010	80	23		
55	N 1911	80	13	N 1011	90	18	NN 3011	90	26		
60	N 1912	85	13	N 1012	95	18	NN 3012	95	26		
65	N 1913	90	13	N 1013	100	18	NN 3013	100	26		
70	N 1914	100	16	N 1014	110	20	NN 3014	110	30		
75	N 1915	105	16	N 1015	115	20	NN 3015	115	30		
80	N 1916	110	16	N 1016	125	22	NN 3016	125	34		
85	N 1917	120	18	N 1017	130	22	NN 3017	130	34		
90	N 1918	125	18	N 1018	140	24	NN 3018	140	37		
95	N 1919	130	18	N 1019	145	24	NN 3019	145	37		
100	N 1920	140	20	N 1020	150	24	NN 3020	150	37	NNU 4920	140	40
105	N 1921	145	20	N 1021	160	26	NN 3021	160	41	NNU 4921	145	40
110	N 1922	150	20	N 1022	170	28	NN 3022	170	45	NNU 4922	150	40
120	N 1924	165	22	N 1024	180	28	NN 3024	180	46	NNU 4924	165	45
130	N 1926	180	24	N 1026	200	33	NN 3026	200	52	NNU 4926	180	50
140	N 1928	190	24	N 1028	210	33	NN 3028	210	53	NNU 4928	190	50
150	N 1930	210	28	N 1030	225	35	NN 3030	225	56	NNU 4930	210	60
160	N 1932	220	28	N 1032	240	38	NN 3032	240	60	NNU 4932	220	60
170	N 1934	230	28	N 1034	260	42	NN 3034	260	67	NNU 4934	230	60
180	N 1936	250	33	N 1036	280	46	NN 3036	280	74	NNU 4936	250	69
190	N 1938	260	33	N 1038	290	46	NN 3038	290	75	NNU 4938	260	69
200	N 1940	280	38	N 1040	310	51	NN 3040	310	82	NNU 4940	280	80
220	N 1944	300	38	N 1044	340	56	NN 3044	340	90	NNU 4944	300	80
240	N 1948	320	38	N 1048	360	56	NN 3048	360	92	NNU 4948	320	80
260	N 1952	360	46	N 1052	400	65	NN 3052	400	104	NNU 4952	360	100
280	N 1956	380	46	N 1056	420	65	NN 3056	420	106	NNU 4956	380	100
300	N 1960	420	56							NNU 4960	420	118
320	N 1964	440	56							NNU 4964	440	118
340	N 1968	460	56									
360	N 1972	480	56									

3.3 IBC High precision cylindrical roller bearings

N 19...
N 19...K
N 10...
N 10...K

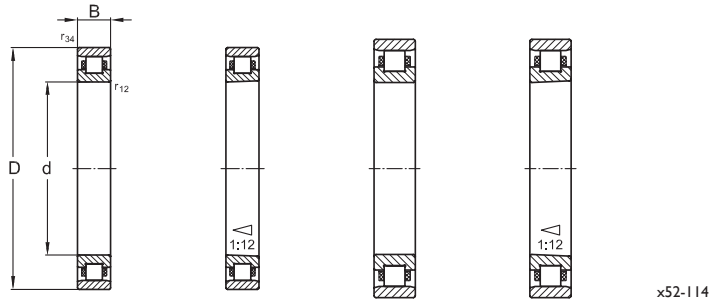

N 19... N 19...K N 10... N 10...K

Basic dimensions			Basic designation	Load ratings dyn.	stat.	Fatigue limit load	Radial spring stiffness	Speed grease	oil/air	Injection diameter	Direct oil lubrication	Weight
d	D	B		C_r	C_{0r}	P_u	S_r	n_G	n_O	d_{pi}		m
mm				N		N	N/µm	min^{-1}		mm		kg
40	68	15	N 1008	28,700	30,800	3,550	510	23,800	28,200	52.3	o	0.210
			HN 1008	23,800	15,400	1,770	200	26,300	30,500	52.3	o	0.210
			CR HN 1008	23,800	10,780	1,230	280	31,600	36,600	52.3	o	0.193
45	75	16	N 1009	33,400	37,600	4,330	550	22,300	26,500	58.8	o	0.260
			HN 1009	25,700	18,800	2,160	220	24,500	28,500	58.8	o	0.260
			CR HN 1009	25,700	13,160	1,510	300	29,400	34,200	58.8	o	0.239
50	72	12	N 1910	22,500	27,500	3,170	500	16,500	18,300	58.5	o	0.150
			CRN 1910	22,500	24,800	2,860	580	19,800	22,000	58.5	o	0.138
	80	16	N 1010	36,200	41,700	4,800	610	19,500	22,500	63.8	o	0.290
			HN 1010	27,300	20,850	2,390	230	22,500	26,500	63.8	o	0.290
			CR HN 1010	27,300	14,600	1,670	320	27,000	31,800	63.8	o	0.267
55	80	13	N 1911	25,000	31,500	3,630	520	16,000	17,800	64.5	o	0.200
			CRN 1911	25,000	28,400	3,270	670	19,200	21,400	64.5	o	0.184
	90	18	N 1011	41,300	49,800	5,730	680	18,500	21,500	68.7	o	0.425
			HN 1011	35,800	24,900	2,860	250	21,500	25,500	68.7	o	0.425
			CR HN 1011	35,800	17,430	2,000	340	25,800	30,600	68.7	o	0.391
60	85	13	N 1912	26,000	34,000	3,910	550	15,500	18,000	69.5	o	0.210
			CRN 1912	26,000	30,600	3,520	730	18,600	21,600	69.5	o	0.193
	95	18	N 1012	44,300	55,200	6,350	740	17,000	19,000	73.8	o	0.460
			HN 1012	38,200	27,600	3,170	280	20,000	21,500	73.8	o	0.460
			CR HN 1012	38,200	19,320	2,220	390	24,000	25,800	73.8	o	0.423
65	90	13	N 1913	29,300	40,500	4,660	590	15,000	16,500	74.1	o	0.230
			CRN 1913	29,300	36,500	4,200	860	18,000	19,800	74.1	o	0.212
	100	18	N 1013	45,500	59,000	6,790	770	16,000	18,000	78.9	o	0.480
			HN 1013	40,000	29,500	3,390	310	19,000	20,800	78.9	o	0.480
			CR HN 1013	40,000	20,650	2,370	420	22,800	25,000	78.9	o	0.442
70	100	16	N 1914	36,700	49,500	5,700	720	14,500	16,000	81.6	o	0.375
			CRN 1914	36,700	44,600	5,130	1,050	17,400	19,200	81.6	o	0.345
	110	20	N 1014	63,500	81,700	9,400	850	14,500	16,800	88.1	o	0.660
			HN 1014	56,700	40,850	4,690	340	18,000	19,500	88.1	o	0.660
			CR HN 1014	56,700	28,600	3,280	450	21,600	23,400	88.1	o	0.607

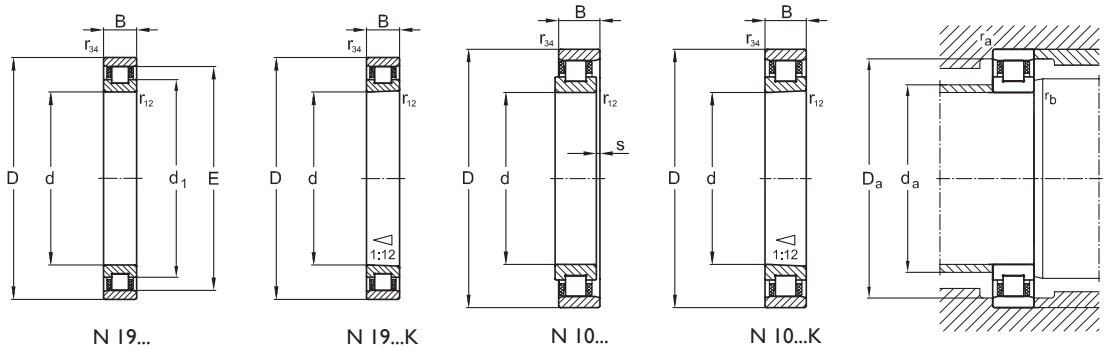

Basic dimensions			Basic designation	Dimensions					Mounting dimensions					
d	D	B		E	s	d_1	$r_{12,min}$	$r_{34,min}$	$d_{a,min}$	$d_{a,max}$	$D_{a,min}$	$D_{a,max}$	$r_{a,max}$	$r_{b,max}$
	mm					mm					mm			
40	68	15	N 1008	61.0	2.0	51.8	0.6	0.3	45.0	48.0	62.0	63.0	0.6	0.3
			HN 1008	61.0	2.2	52.3	0.6	0.3	45.0	48.0	62.0	63.0	0.6	0.3
			CR HN 1008	61.0	2.2	52.3	0.6	0.3	45.0	48.0	62.0	63.0	0.6	0.3
45	75	16	N 1009	67.5	2.3	58.3	0.6	0.3	50.0	53.0	69.0	70.0	0.6	0.3
			HN 1009	67.5	2.5	58.8	0.6	0.3	50.0	53.0	69.0	70.0	0.6	0.3
			CR HN 1009	67.5	2.5	58.8	0.6	0.3	50.0	53.0	69.0	70.0	0.6	0.3
50	72	12	N 1910	66.5	1.7	58.0	0.6	0.3	54.0	57.0	68.0	69.0	0.6	0.3
			CRN 1910	66.5	1.7	58.0	0.6	0.3	54.0	57.0	68.0	69.0	0.6	0.3
	80	16	N 1010	72.5	2.3	63.3	0.6	0.3	55.0	58.0	74.0	75.0	0.6	0.3
			HN 1010	72.5	2.5	63.8	0.6	0.3	55.0	58.0	74.0	75.0	0.6	0.3
			CR HN 1010	72.5	2.5	63.8	0.6	0.3	55.0	58.0	74.0	75.0	0.6	0.3
55	80	13	N 1911	73.5	2.0	64.0	1.0	0.6	61.0	63.0	75.0	76.0	1.0	0.6
			CRN 1911	73.5	2.0	64.0	1.0	0.6	61.0	63.0	75.0	76.0	1.0	0.6
	90	18	N 1011	80.5	2.5	68.2	1.0	0.6	62.0	65.0	82.0	83.0	1.0	0.6
			HN 1011	80.5	2.7	68.7	1.0	0.6	62.0	65.0	82.0	83.0	1.0	0.6
			CR HN 1011	80.5	2.7	68.7	1.0	0.6	62.0	65.0	82.0	83.0	1.0	0.6
60	85	13	N 1912	78.5	2.0	69.0	1.0	0.6	66.0	68.0	80.0	81.0	1.0	0.6
			CRN 1912	78.5	2.0	69.0	1.0	0.6	66.0	68.0	80.0	81.0	1.0	0.6
	95	18	N 1012	85.5	2.5	73.3	1.0	0.6	67.0	70.0	87.0	88.0	1.0	0.6
			HN 1012	85.5	2.7	73.8	1.0	0.6	67.0	70.0	87.0	88.0	1.0	0.6
			CR HN 1012	85.5	2.7	73.8	1.0	0.6	67.0	70.0	87.0	88.0	1.0	0.6
65	90	13	N 1913	83.5	2.0	73.5	1.0	0.6	71.0	73.0	85.0	86.0	1.0	0.6
			CRN 1913	83.5	2.0	73.5	1.0	0.6	71.0	73.0	85.0	86.0	1.0	0.6
	100	18	N 1013	91.0	2.5	78.3	1.0	0.6	72.0	76.0	92.0	93.0	1.0	0.6
			HN 1013	91.0	2.7	78.8	1.0	0.6	72.0	76.0	92.0	93.0	1.0	0.6
			CR HN 1013	91.0	2.7	78.8	1.0	0.6	72.0	76.0	92.0	93.0	1.0	0.6
70	100	16	N 1914	92.0	2.5	81.0	1.0	0.6	76.0	80.0	94.0	95.0	1.0	0.6
			CRN 1914	92.0	2.5	81.0	1.0	0.6	76.0	80.0	94.0	95.0	1.0	0.6
	110	20	N 1014	100.0	2.5	87.5	1.0	0.6	77.0	82.0	101.0	103.0	1.0	0.6
			HN 1014	100.0	2.7	88.0	1.0	0.6	77.0	82.0	101.0	103.0	1.0	0.6
			CR HN 1014	100.0	2.7	88.0	1.0	0.6	77.0	82.0	101.0	103.0	1.0	0.6

N 19...
N 19...K
N 10...
N 10...K

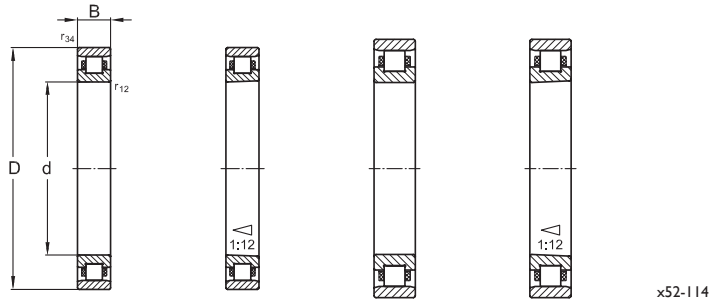

N 19... N 19...K N 10... N 10...K

Basic dimensions			Basic designation	Load ratings dyn.	stat.	Fatigue limit load	Radial spring stiffness	Speed grease	oil/air	Injection diameter	Direct oil lubrication	Weight
d	D	B		C_r	C_{0r}	P_u	S_r	n_G	n_O	d_{pi}		m
mm				N		N	N/µm	min^{-1}		mm		kg
75	105	16	N 1915	38,300	53,500	6,160	780	14,000	15,500	86.1	o	0.400
			CRN 1915	38,300	48,200	5,550	1,140	16,800	18,600	86.1	o	0.368
	115	20	N 1015	65,800	85,200	9,800	890	13,500	15,500	93.1	o	0.700
			HN 1015	59,600	42,600	4,890	370	17,000	18,500	93.1	o	0.700
			CR HN 1015	59,600	29,820	3,420	490	20,400	22,200	93.1	o	0.644
80	110	16	N 1916	40,000	57,000	6,560	830	13,500	15,000	91.1	o	0.450
			CRN 1916	40,000	51,300	5,900	1,210	16,200	18,000	91.1	o	0.414
	125	22	N 1016	76,900	98,500	11,330	940	12,500	14,500	97.6	o	0.960
			HN 1016	70,500	49,250	5,660	400	16,000	17,500	97.6	o	0.960
			CR HN 1016	70,500	34,500	3,960	520	19,200	21,000	97.6	o	0.883
85	120	18	N 1917	50,500	72,000	8,280	1,050	13,000	14,300	98.3	o	0.600
			CRN 1917	50,500	64,800	7,460	1,530	15,600	17,200	98.3	o	0.552
	130	22	N 1017	78,500	105,000	12,080	980	12,000	14,000	102.8	o	1.000
			HN 1017	69,000	52,500	6,030	420	14,800	16,000	102.8	o	1.000
			CR HN 1017	69,000	36,750	4,220	540	17,800	19,200	102.8	o	0.920
90	125	18	N 1918	52,000	76,000	8,740	1,110	12,000	13,200	102.8	o	0.630
			CRN 1918	52,000	68,400	7,870	1,610	14,400	15,900	102.8	o	0.580
	140	24	N 1018	94,000	125,900	14,480	1,090	11,500	13,500	111.8	o	1.300
			HN 1018	83,000	62,950	7,230	440	13,000	15,000	111.8	o	1.300
			CR HN 1018	83,000	44,100	5,060	570	15,600	18,000	111.8	o	1.196
95	130	18	N 1919	53,000	79,000	9,090	1,150	11,000	12,000	107.8	o	0.650
			CRN 1919	53,000	71,100	8,180	1,670	13,200	14,400	107.8	o	0.598
	145	24	N 1019	97,000	130,000	14,950	1,100	10,500	12,500	116.8	o	1.360
			HN 1019	87,600	65,000	7,470	470	12,000	14,000	116.8	o	1.360
			CR HN 1019	87,600	45,500	5,220	610	14,400	16,800	116.8	o	1.251
100	140	20	N 1920	78,000	112,000	12,880	1,630	10,000	11,500	114.8	o	0.890
			CRN 1920	78,000	100,800	11,600	2,370	12,000	13,800	114.8	o	0.819
	150	24	N 1020	99,000	135,000	15,530	1,200	10,000	12,500	120.1	o	1.430
			HN 1020	88,000	67,500	7,750	490	11,500	13,500	120.1	o	1.430
			CR HN 1020	88,000	47,250	5,430	630	13,800	16,200	120.1	o	1.316

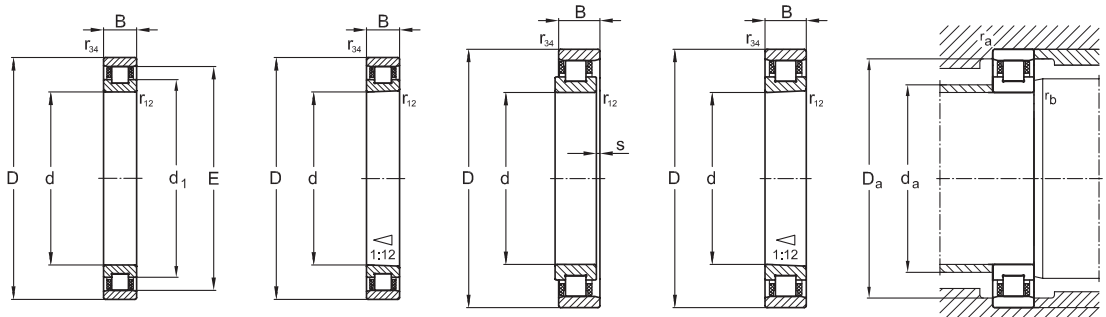

N 19... N 19...K N 10... N 10...K

x52-104

Basic dimensions			Basic designation	Dimensions					Mounting dimensions					
d	D	B		E	s	d_l	$r_{12,min}$	$r_{34,min}$	$d_{a,min}$	$d_{a,max}$	$D_{a,min}$	$D_{a,max}$	$r_{a,max}$	$r_{b,max}$
	mm					mm					mm			
75	105	16	N 1915	97.0	2.5	85.5	1.0	0.6	81.0	85.0	99.0	100.0	1.0	0.6
			CRN 1915	97.0	2.5	85.5	1.0	0.6	81.0	85.0	99.0	100.0	1.0	0.6
	115	20	N 1015	105.0	2.5	92.5	1.0	0.6	82.0	87.0	106.0	108.0	1.0	0.6
			HN 1015	105.0	2.7	93.0	1.0	0.6	82.0	87.0	106.0	108.0	1.0	0.6
			CR HN 1015	105.0	2.7	93.0	1.0	0.6	82.0	87.0	106.0	108.0	1.0	0.6
80	110	16	N 1916	102.0	2.5	90.5	1.0	0.6	86.0	90.0	105.0	106.0	1.0	0.6
			CRN 1916	102.0	2.5	90.5	1.0	0.6	86.0	90.0	105.0	106.0	1.0	0.6
	125	22	N 1016	113.5	3.0	97.0	1.0	0.6	87.0	93.0	114.0	118.0	1.0	0.6
			HN 1016	113.5	3.2	97.5	1.0	0.6	87.0	93.0	114.0	118.0	1.0	0.6
			CR HN 1016	113.5	3.2	97.5	1.0	0.6	87.0	93.0	114.0	118.0	1.0	0.6
85	120	18	N 1917	110.5	2.5	97.5	1.0	0.6	91.0	96.0	115.0	116.0	1.0	0.6
			CRN 1917	110.5	2.5	97.5	1.0	0.6	91.0	96.0	115.0	116.0	1.0	0.6
	130	22	N 1017	118.5	3.0	102.0	1.0	0.6	92.0	99.0	119.0	123.0	1.0	0.6
			HN 1017	118.5	3.2	102.5	1.0	0.6	92.0	99.0	119.0	123.0	1.0	0.6
			CR HN 1017	118.5	3.2	102.5	1.0	0.6	92.0	99.0	119.0	123.0	1.0	0.6
90	125	18	N 1918	115.5	2.5	102.0	1.0	0.6	97.0	102.0	120.0	121.0	1.0	0.6
			CRN 1918	115.5	2.5	102.0	1.0	0.6	97.0	102.0	120.0	121.0	1.0	0.6
	140	24	N 1018	127.0	3.3	111.0	1.1	0.6	98.0	105.0	129.0	132.0	1.1	0.6
			HN 1018	127.0	3.5	111.5	1.1	0.6	98.0	105.0	129.0	132.0	1.1	0.6
			CR HN 1018	127.0	3.5	111.5	1.1	0.6	98.0	105.0	129.0	132.0	1.1	0.6
95	130	18	N 1919	120.5	2.5	107.0	1.0	0.6	102.0	106.0	125.0	126.0	1.0	0.6
			CRN 1919	120.5	2.5	107.0	1.0	0.6	102.0	106.0	125.0	126.0	1.0	0.6
	145	24	N 1019	132.0	3.3	116.0	1.1	0.6	103.0	110.0	134.0	137.0	1.1	0.6
			HN 1019	132.0	3.5	116.5	1.1	0.6	103.0	110.0	134.0	137.0	1.1	0.6
			CR HN 1019	132.0	3.5	116.5	1.1	0.6	103.0	110.0	134.0	137.0	1.1	0.6
100	140	20	N 1920	130.0	2.5	114.0	1.0	0.6	107.0	112.0	135.0	136.0	1.0	0.6
			CRN 1920	130.0	2.5	114.0	1.0	0.6	107.0	112.0	135.0	136.0	1.0	0.6
	150	24	N 1020	137.0	3.3	119.3	1.1	0.6	108.0	117.0	139.0	142.0	1.1	0.6
			HN 1020	137.0	3.5	119.8	1.1	0.6	108.0	117.0	139.0	142.0	1.1	0.6
			CR HN 1020	137.0	3.5	119.8	1.1	0.6	108.0	117.0	139.0	142.0	1.1	0.6

N 19...
N 19...K
N 10...
N 10...K

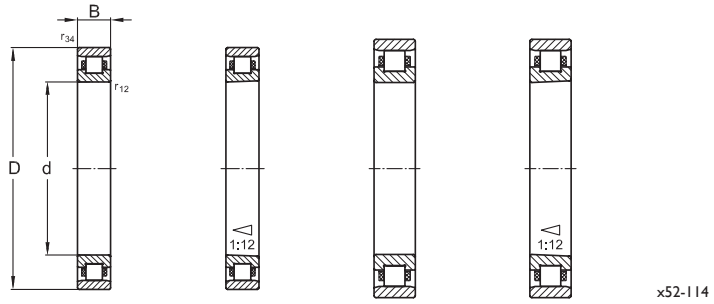

N 19... N 19...K N 10... N 10...K

Basic dimensions			Basic designation	Load ratings dyn.	stat.	Fatigue limit load	Radial spring stiffness	Speed grease	oil/air	Injection diameter	Direct oil lubrication	Weight
d	D	B		C_r	C_{0r}	P_u	S_r	n_G	n_O	d_{pi}		m
mm				N		N	N/µm	min^{-1}		mm		kg
105	145	20	N 1921	79,000	117,000	13,460	1,700	9,000	10,800	119.8	o	0.950
			CRN 1921	79,000	105,300	12,110	2,470	10,800	13,000	119.8	o	0.874
	160	26	N 1021	113,000	154,000	17,710	1,220	9,500	11,000	125.8	o	1.800
			HN 1021	103,500	77,000	8,850	520	10,000	12,000	125.8	o	1.800
			CR HN 1021	103,500	53,900	6,190	660	12,000	14,400	125.8	o	1.656
110	150	20	N 1922	81,000	122,000	14,030	1,770	8,000	10,000	124.3	o	1.000
			CRN 1922	81,000	109,800	12,630	2,570	9,600	12,000	124.3	o	0.920
	170	28	N 1022	164,800	189,800	21,830	1,300	9,000	10,000	132.8	o	2.250
			HN 1022	155,500	94,900	10,900	550	9,500	11,000	132.8	o	2.250
			CR HN 1022	155,500	66,430	7,630	690	11,400	13,200	132.8	o	2.070
120	165	22	N 1924	96,000	144,000	16,560	2,090	7,300	9,500	136.3	o	1.350
			CRN 1924	96,000	129,600	14,910	3,040	8,800	11,400	136.3	o	1.242
	180	28	N 1024	175,000	208,000	23,920	1,420	8,500	9,000	142.8	o	2.450
			HN 1024	164,000	104,000	11,950	610	9,000	10,500	142.8	o	2.450
			CR HN 1024	164,000	72,800	8,360	770	10,800	12,600	142.8	o	2.254
130	180	24	N 1926	111,000	171,000	17,100	1,370	5,400	6,200	164.2		1.820
	200	33	N 1026	181,000	251,000	25,100	1,470	5,100	5,800	178.0		3.700
140	190	24	N 1928	117,000	187,000	18,700	1,500	5,100	5,900	174.2		1.950
	210	33	N 1028	184,000	266,000	26,600	1,560	4,600	5,300	188.0		3.950
150	210	28	N 1930	150,500	237,000	23,700	1,620	4,700	5,300	190.3		2.940
	225	35	N 1030	208,500	311,000	31,100	1,680	4,400	5,100	201.2		4.750
160	220	28	N 1932	154,000	251,000	22,600	1,730	4,400	5,000	200.5		3.120
	240	38	N 1032	245,500	356,000	32,100	1,760	4,200	4,800	215.1		5.800
170	230	28	N 1934	161,000	266,000	24,000	1,830	4,100	4,700	210.3		3.250
	260	42	N 1034	301,000	431,500	38,900	1,910	3,900	4,200	213.2		7.750
180	250	33	N 1936	209,000	336,000	30,300	1,900	3,800	4,400	228.0		4.800
	280	46	N 1036	361,000	521,000	46,900	2,050	3,600	3,900	249.0		10.200

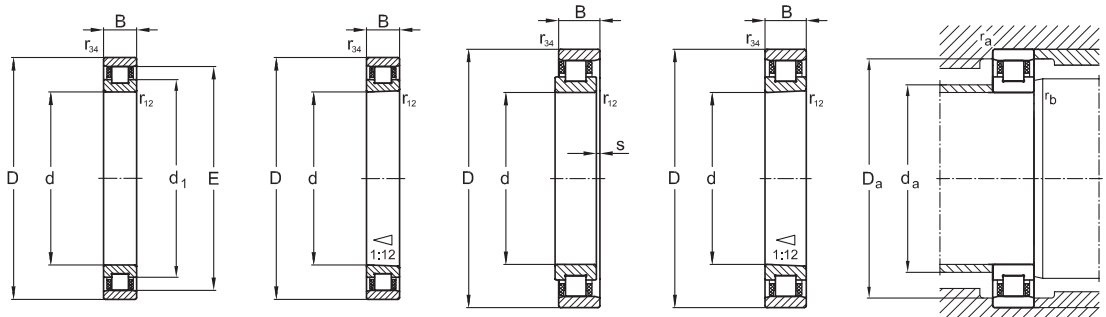

N 19... N 19...K N 10... N 10...K

x52-104

Basic dimensions			Basic designation	Dimensions					Mounting dimensions					
d	D	B		E	s	d_l	$r_{12,min}$	$r_{34,min}$	$d_{a,min}$	$d_{a,max}$	$D_{a,min}$	$D_{a,max}$	$r_{a,max}$	$r_{b,max}$
	mm					mm					mm			
105	145	20	N 1921	135.0	2.5	119.0	1.0	0.6	113.0	117.0	140.0	141.0	1.0	0.6
			CRN 1921	135.0	2.5	119.0	1.0	0.6	113.0	117.0	140.0	141.0	1.0	0.6
	160	26	N 1021	145.5	3.5	125.0	1.1	0.6	114.0	122.0	148.0	151.0	1.1	0.6
			HN 1021	145.5	3.7	125.5	1.1	0.6	114.0	122.0	148.0	151.0	1.1	0.6
			CR HN 1021	145.5	3.7	125.5	1.1	0.6	114.0	122.0	148.0	151.0	1.1	0.6
110	150	20	N 1922	140.0	2.5	123.5	1.0	0.6	117.0	122.0	145.0	146.0	1.0	0.6
			CRN 1922	140.0	2.5	123.5	1.0	0.6	117.0	122.0	145.0	146.0	1.0	0.6
	170	28	N 1022	155.0	3.5	132.0	1.1	0.6	119.0	127.0	156.0	160.0	1.1	0.6
			HN 1022	155.0	3.7	132.5	1.1	0.6	119.0	127.0	156.0	160.0	1.1	0.6
			CR HN 1022	155.0	3.7	132.5	1.1	0.6	119.0	127.0	156.0	160.0	1.1	0.6
120	165	22	N 1924	153.5	3.0	135.5	1.0	0.6	127.0	133.0	160.0	161.0	1.0	0.6
			CRN 1924	153.5	3.0	135.5	1.0	0.6	127.0	133.0	160.0	161.0	1.0	0.6
	180	28	N 1024	165.0	3.5	142.0	1.1	0.6	129.0	137.0	166.0	170.0	1.1	0.6
			HN 1024	165.0	3.7	142.5	1.1	0.6	129.0	137.0	166.0	170.0	1.1	0.6
			CR HN 1024	165.0	3.7	142.5	1.1	0.6	129.0	137.0	166.0	170.0	1.1	0.6
130	180	24	N 1926	167.0	3.3	146.9	1.1	0.6	137.5	144.3	172.8	174.6	1.1	0.6
	200	33	N 1026	182.0	4.3	153.4	1.1	0.6	139.8	148.2	184.0	188.0	1.1	0.6
140	190	24	N 1928	177.0	3.3	158.2	1.1	0.6	148.1	155.4	182.4	184.3	1.1	0.6
	210	33	N 1028	192.0	4.3	165.2	1.1	0.6	150.5	159.6	193.2	197.4	1.1	0.6
150	210	28	N 1930	194.0	3.5	169.5	1.1	0.6	158.7	166.5	201.6	203.7	1.1	0.6
	225	35	N 1030	205.5	4.5	177.0	1.5	1.1	161.3	171.0	207.0	211.5	1.5	1.1
160	220	28	N 1932	204.0	3.5	180.8	1.1	0.6	169.3	177.6	211.2	213.4	1.1	0.6
	240	38	N 1032	220.0	4.5	188.8	1.5	1.1	172.0	182.4	220.8	225.6	1.5	1.1
170	230	28	N 1934	214.0	3.5	192.1	1.1	0.6	179.9	188.7	220.8	223.1	1.1	0.6
	260	42	N 1034	237.0	5.0	200.6	2.1	1.5	182.8	193.8	239.2	244.4	2.1	1.5
180	250	33	N 1936	232.0	4.3	203.4	1.1	0.6	190.4	199.8	240.0	242.5	1.1	0.6
	280	46	N 1036	255.0	5.5	212.4	2.1	1.5	193.5	205.2	257.6	263.2	2.1	1.5

N 19...
N 19...K
N 10...
N 10...K

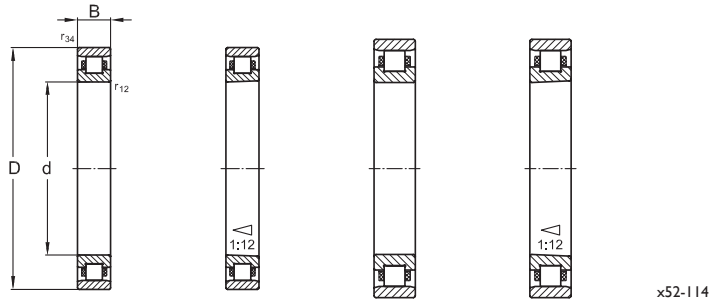

N 19... N 19...K N 10... N 10...K

Basic dimensions			Basic designation	Load ratings dyn.	stat.	Fatigue limit load	Radial spring stiffness	Speed grease	oil/air	Injection diameter	Direct oil lubrication	Weight
d	D	B		C_r	C_{0r}	P_u	S_r	n_G	n_O	d_{pi}		m
mm				N		N	N/µm	min^{-1}		mm		kg
190	260	33	N 1938	220,500	365,000	32,900	2,060	3,500	4,100	237.7		5.10
	290	46	N 1038	365,500	551,000	49,600	2,080	3,300	3,800	258.9		10.50
200	280	38	N 1940	266,000	432,000	38,900	2,170	3,200	3,800	254.5		7.10
	310	51	N 1040	401,000	602,000	54,200	2,200	3,100	3,600	274.3		13.80
220	300	38	N 1944	266,000	451,000	40,600	2,220	3,000	3,500	274.5		7.70
	340	56	N 1044	511,000	766,000	69,000	2,410	2,800	3,300	302.4		18.00
240	320	38	N 1948	286,000	500,500	45,100	2,470	2,800	3,200	294.5		8.25
	360	56	N 1048	541,000	850,800	76,600	2,610	2,600	3,000	322.3		19.30
260	360	46	N 1952	432,000	751,500	67,700	2,860	2,600	2,900	328.2		14.00
	400	65	N 1052	656,000	1,022,000	92,000	2,750	2,400	2,800	355.3		28.50
280	380	46	N 1956	441,500	802,000	72,200	3,020	2,400	2,600	348.2		15.00
	420	65	N 1056	682,000	1,103,000	99,300	2,950	2,200	2,600	375.3		31.00
300	420	56	N 1960	612,000	1,063,000	85,100	3,180	2,200	2,300	382.7		23.50
320	440	56	N 1964	622,000	1,105,000	88,400	3,290	1,900	2,100	402.4		25.00
340	460	56	N 1968	657,000	1,205,000	96,400	3,580	1,800	2,000	422.4		26.50
360	480	56	N 1972	657,000	1,225,000	98,000	3,660	1,700	1,900	442.4		27.50

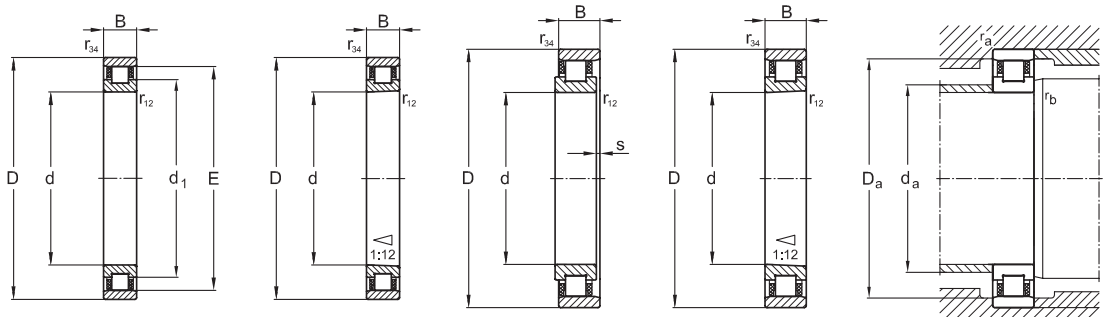

N 19... N 19...K N 10... N 10...K

x52-104

Basic dimensions			Basic designation	Dimensions					Mounting dimensions					
d	D	B		E	s	d_l	$r_{12,min}$	$r_{34,min}$	$d_{a,min}$	$d_{a,max}$	$D_{a,min}$	$D_{a,max}$	$r_{a,max}$	$r_{b,max}$
	mm					mm					mm			
190	260	33	N 1938	242	4.3	214.7	1.1	0.6	201.0	210.9	249.6	252.2	1.1	0.6
	290	46	N 1038	265	5.5	224.2	2.1	1.5	204.3	216.6	266.8	272.6	2.1	1.5
200	280	38	N 1940	259	4.8	228.0	1.5	1.1	211.6	222.0	268.8	271.6	1.5	1.1
	310	51	N 1040	281	6.5	238.0	2.1	1.5	215.0	228.0	285.2	291.4	2.1	1.5
220	300	38	N 1944	279	4.8	250.8	1.5	1.1	232.8	244.2	288.0	291.0	1.5	1.1
	340	56	N 1044	310	6.5	261.8	3.0	2.1	236.5	250.8	312.8	319.6	3.0	2.1
240	320	38	N 1948	299	4.8	273.6	1.5	1.1	253.9	266.4	307.2	310.4	1.5	1.1
	360	56	N 1048	330	6.5	285.6	3.0	2.1	258.0	273.6	331.2	338.4	3.0	2.1
260	360	46	N 1952	334	5.5	296.4	1.5	1.1	275.1	288.6	345.6	349.2	1.5	1.1
	400	65	N 1052	364	8.0	309.4	4.0	2.1	279.5	296.4	368.0	376.0	4.0	2.1
280	380	46	N 1956	354	5.5	319.2	1.5	1.1	296.2	310.8	364.8	368.6	1.5	1.1
	420	65	N 1056	384	8.0	333.2	4.0	2.1	301.0	319.2	386.4	394.8	4.0	2.1
300	420	56	N 1960	390	6.5	342.0	3.0	2.1	317.4	333.0	403.2	407.4	3.0	2.1
320	440	56	N 1964	410	6.5	364.8	3.0	2.1	338.6	355.2	422.4	426.8	3.0	2.1
340	460	56	N 1968	430	6.5	387.6	3.0	2.1	359.7	377.4	441.6	446.2	3.0	2.1
360	480	56	N 1972	450	6.5	410.4	3.0	2.1	380.9	399.6	460.8	465.6	3.0	2.1

NN 30...
NN 30...K
NNU 49...
NNU 49...K

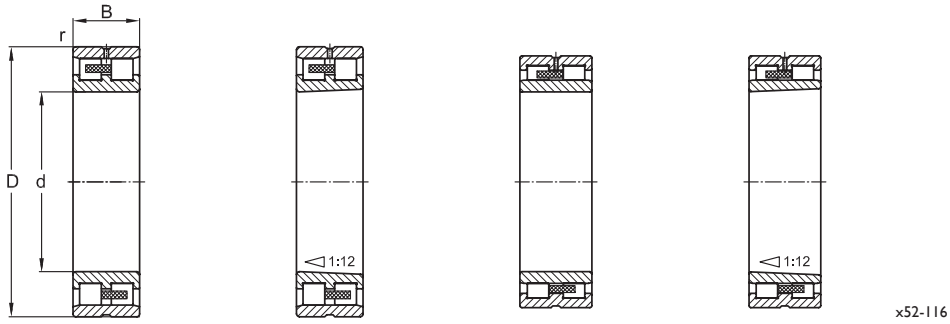

NN 30... NN 30...K NNU 49... NNU 49...K

Basic dimensions			Basic designation	Load ratings dyn.	stat.	Fatigue limit load	Radial spring stiffness	Speed grease	oil/air	Weight
d	D	B		C_r	C_{0r}	P_u	S_r	n_G	n_O	m
mm				N		N	N/µm	min^{-1}		kg
25	47	16	NN 3005	26,100	30,200	3,170	600	15,800	18,600	0.130
30	55	19	NN 3006	29,300	34,100	4,010	682	14,200	17,100	0.180
35	62	20	NN 3007	36,200	44,300	5,210	795	12,300	15,400	0.248
40	68	21	NN 3008	45,300	59,400	6,980	955	11,500	14,300	0.305
45	75	23	NN 3009	54,100	72,200	8,490	1,090	10,500	13,200	0.400
50	80	23	NN 3010	57,200	80,100	9,420	1,200	9,500	11,400	0.420
55	90	26	NN 3011	72,300	100,500	11,820	1,320	9,000	10,500	0.635
60	95	26	NN 3012	75,200	110,600	13,010	1,420	8,500	10,000	0.672
65	100	26	NN 3013	77,400	116,700	13,720	1,500	7,500	9,000	0.750
70	110	30	NN 3014	98,200	150,500	17,700	1,650	7,000	8,500	1.050
75	115	30	NN 3015	100,500	156,300	18,380	1,750	6,700	7,900	1.100
80	125	34	NN 3016	120,500	186,300	21,910	1,870	6,500	7,500	1.500
85	130	34	NN 3017	125,400	200,500	23,580	2,000	6,200	7,000	1.600
90	140	37	NN 3018	140,500	224,600	26,420	2,050	5,900	6,800	2.060
95	145	37	NN 3019	143,200	236,400	27,810	2,150	5,600	6,500	2.150

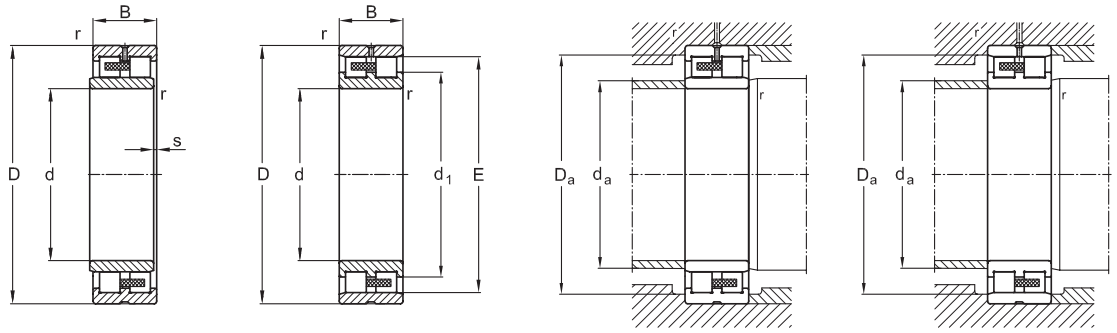

NNU... NN...

Basic dimensions			Basic designation	Dimensions							Mounting dimensions				
d	D	B		E/F	s	b	K	d_l	D_l	r_{min}	$d_{a,min}$	$d_{a,max}$	$D_{a,min}$	$D_{a,max}$	r_{max}
	mm						mm						mm		
25	47	16	NN 3005	41.3	1.5	3.7	2.0	33.2		0.6	29.0		42.0	43.0	0.6
30	55	19	NN 3006	48.5	1.5	3.7	2.0	39.7		1.0	35.0		49.0	50.0	1.0
35	62	20	NN 3007	55.0	1.5	3.7	2.0	45.5		1.0	40.0		56.0	57.0	1.0
40	68	21	NN 3008	61.0	1.8	3.7	2.0	50.5		1.0	45.0		62.0	63.0	1.0
45	75	23	NN 3009	67.5	1.8	3.7	2.0	56.4		1.0	50.0		69.0	70.0	1.0
50	80	23	NN 3010	72.5	1.8	3.7	2.0	61.5		1.0	55.0		74.0	75.0	1.0
55	90	26	NN 3011	81.0	2.0	3.7	2.0	68.3		1.1	61.5		82.0	83.5	1.1
60	95	26	NN 3012	86.1	2.0	3.7	2.0	73.5		1.1	66.5		87.0	88.5	1.1
65	100	26	NN 3013	91.0	2.0	3.7	2.0	78.3		1.1	71.5		92.0	93.5	1.1
70	110	30	NN 3014	100.0	2.3	5.5	3.0	85.5		1.1	76.5		101.0	103.5	1.1
75	115	30	NN 3015	105.0	2.3	5.5	3.0	90.5		1.1	81.5		106.0	108.5	1.1
80	125	34	NN 3016	113.0	2.6	5.5	3.0	96.8		1.1	86.5		115.0	118.5	1.1
85	130	34	NN 3017	118.0	2.6	5.5	3.0	101.8		1.1	91.5		120.0	123.5	1.1
90	140	37	NN 3018	127.0	2.6	5.5	3.0	108.8		1.5	98.0		129.0	132.0	1.5
95	145	37	NN 3019	132.0	2.6	5.5	3.0	113.8		1.5	103.0		134.0	137.0	1.5

NN 30...
NN 30...K
NNU 49...
NNU 49...K

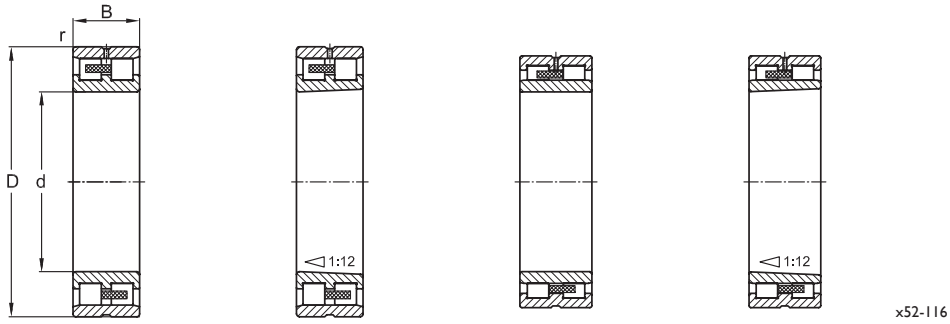

NN 30... NN 30...K NNU 49... NNU 49...K

Basic dimensions			Basic designation	Load ratings dyn.	stat.	Fatigue limit load	Radial spring stiffness	Speed grease	oil/air	Weight
d	D	B		C_r	C_{0r}	P_u	S_r	n_G	n_O	m
mm				N		N	N/µm	min^{-1}		kg
100	140	40	NNU 4920	129,400	256,000	30,110	3,000	5,600	6,600	1.850
	150	37	NN 3020	146,800	245,300	28,850	2,200	5,300	6,300	2.250
105	145	40	NNU 4921	129,400	260,300	30,620	3,100	5,400	6,500	1.900
	160	41	NN 3021	190,300	310,500	36,520	2,350	5,000	6,000	2.850
110	150	40	NNU 4922	132,500	271,000	31,880	3,200	5,000	6,300	2.000
	170	45	NN 3022	220,300	360,400	42,400	2,520	4,800	5,300	3.620
120	165	45	NNU 4924	176,500	340,600	40,070	3,300	4,500	5,300	2.700
	180	46	NN 3024	232,600	390,100	45,890	2,750	4,500	5,000	3.950
130	180	50	NNU 4926	190,800	391,000	46,000	3,600	4,100	5,000	3.800
	200	52	NN 3026	290,600	501,000	58,940	3,000	4,200	4,700	5.800
140	190	50	NNU 4928	191,000	400,900	47,160	3,700	3,900	4,700	4.100
	210	53	NN 3028	301,000	522,000	61,410	3,100	4,000	4,500	6.300
150	210	60	NNU 4930	326,000	655,500	69,000	4,300	3,700	4,400	6.200
	225	56	NN 3030	336,000	586,000	61,680	3,350	3,700	4,200	7.600
160	220	60	NNU 4932	336,000	681,000	71,680	4,400	3,500	4,000	6.500
	240	60	NN 3032	377,000	672,000	70,730	3,530	3,500	4,000	9.250
170	230	60	NNU 4934	342,000	696,000	73,260	4,550	3,300	3,800	6.800
	260	67	NN 3034	453,000	802,000	84,420	3,800	3,200	3,800	12.350
180	250	69	NNU 4936	406,000	851,000	89,570	5,150	3,100	3,600	10.000
	280	74	NN 3036	573,000	1,003,000	105,570	4,050	3,000	3,600	16.500
190	260	69	NNU 4938	406,000	882,000	92,840	5,350	2,900	3,400	10.500
	290	75	NN 3038	587,000	1,042,000	109,680	4,200	2,800	3,400	17.500
200	280	80	NNU 4940	491,000	1,042,000	109,680	5,520	2,700	3,200	14.500
	310	82	NN 3040	657,000	1,204,000	126,730	4,450	2,600	3,200	22.300

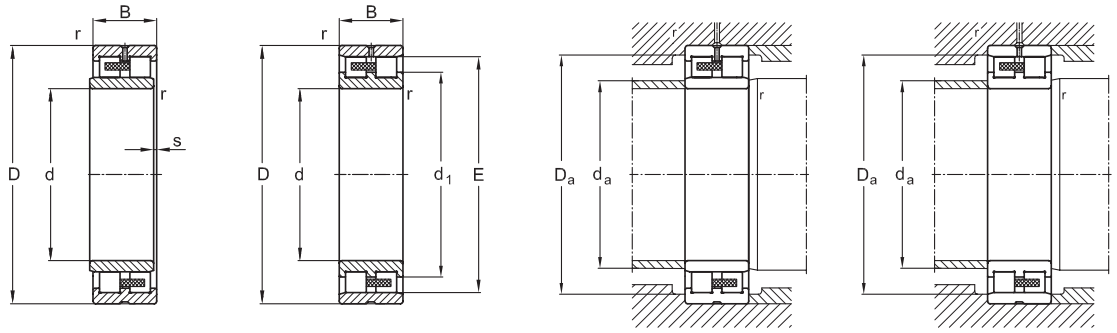

NNU...

NN...

Basic dimensions			Basic designation	Dimensions							Mounting dimensions				
d	D	B		E/F	s	b	K	d_l	D_l	r_{min}	$d_{a,min}$	$d_{a,max}$	$D_{a,min}$	$D_{a,max}$	r_{max}
	mm						mm						mm		
100	140	40	NNU 4920	113.0	2.0	5.5	3.0		125.8	1.1	106.5	111.0		133.5	1.1
	150	37	NN 3020	137.0	2.6	5.5	3.0	119.0		1.5	108.0		138.0	142.0	1.5
105	145	40	NNU 4921	118.0	2.0	5.5	3.0		131.0	1.1	111.5	116.0		138.5	1.1
	160	41	NN 3021	146.0	2.6	5.5	3.0	125.0		2.0	115.0		147.0	150.0	2.0
110	150	40	NNU 4922	123.0	2.0	5.5	3.0		135.8	1.1	116.5	121.0		143.5	1.1
	170	45	NN 3022	155.0	3.0	5.5	3.0	132.0		2.0	120.0		157.0	160.0	2.0
120	165	45	NNU 4924	134.5	2.5	5.5	3.0		151.6	1.1	126.5	132.5		158.5	1.1
	180	46	NN 3024	165.0	3.0	5.5	3.0	141.8		2.0	130.0		167.0	170.0	2.0
130	180	50	NNU 4926	146.0	2.8	8.3	4.5		162.0	1.5	138.0	144.0		172.0	1.5
	200	52	NN 3026	182.0	3.0	8.3	4.5	155.8		2.0	140.0		187.0	190.0	2.0
140	190	50	NNU 4928	156.0	2.8	8.3	4.5		172.0	1.5	148.0	154.0		182.0	1.5
	210	53	NN 3028	192.0	3.5	8.3	4.5	166.0		2.0	150.0		197.0	200.0	2.0
150	210	60	NNU 4930	168.5	2.8	8.3	4.5		190.8	2.0	160.0	166.0		200.0	2.0
	225	56	NN 3030	206.0	4.0	8.3	4.5	177.9		2.1	161.0		210.0	214.0	2.1
160	220	60	NNU 4932	178.5	2.8	8.3	4.5		200.8	2.0	170.0	176.0		210.0	2.0
	240	60	NN 3032	219.0	4.0	8.3	4.5	190.0		2.1	171.0		222.0	229.0	2.1
170	230	60	NNU 4934	188.5	2.8	8.3	4.5		210.8	2.0	180.0	186.0		220.0	2.0
	260	67	NN 3034	236.0	4.5	8.3	4.5	203.7		2.1	181.0		240.0	249.0	2.1
180	250	69	NNU 4936	202.0	3.5	11.1	6.0		225.8	2.0	190.0	199.0		240.0	2.0
	280	74	NN 3036	255.0	4.8	11.1	6.0	217.9		2.1	191.0		260.0	269.0	2.1
190	260	69	NNU 4938	212.0	3.5	11.1	6.0		236.0	2.0	201.0	209.0		251.0	2.0
	290	75	NN 3038	265.0	4.8	11.1	6.0	228.0		2.1	201.0		270.0	279.0	2.1
200	280	69	NNU 4940	225.0	4.5	11.1	6.0		253.0	2.1	211.0	222.0		269.0	2.1
	310	82	NN 3040	282.0	5.5	11.1	6.0	242.0		2.1	211.0		287.0	299.0	2.1

NN 30...
NN 30...K
NNU 49...
NNU 49...K

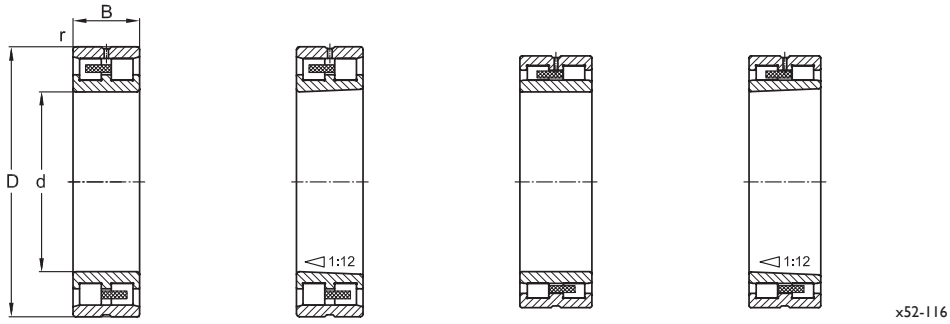

NN 30... NN 30...K NNU 49... NNU 49...K

Basic dimensions			Basic designation	Load ratings dyn.	stat.	Fatigue limit load	Radial spring stiffness	Speed grease	oil/air	Weight
d	D	B		C_r	C_{0r}	P_u	S_r	n_G	n_O	m
mm				N		N	N/µm	min^{-1}		kg
220	300	80	NNU 4944	512,000	1,143,000	120,310	6,050	2,500	3,000	16.000
	340	90	NN 3044	803,000	1,462,000	153,890	4,800	2,400	3,000	29.000
240	320	80	NNU 4948	532,000	1,203,000	126,630	6,350	2,300	2,800	17.000
	360	92	NN 3048	852,000	1,564,000	164,630	5,150	2,200	2,800	31.500
260	360	100	NNU 4952	752,000	1,705,000	179,470	7,100	2,100	2,600	29.500
	400	104	NN 3052	1,062,000	2,005,000	211,050	5,700	2,000	2,600	45.800
280	380	100	NNU 4956	766,000	1,805,000	190,000	7,500	1,900	2,200	31.500
	420	106	NN 3056	1,085,000	2,085,000	219,470	5,900	1,800	2,300	49.550
300	420	118	NNU 4960	1,042,000	2,405,000	253,150	8,300	1,800	2,100	49.000
320	440	118	NNU 4964	1,062,000	2,555,000	268,940	8,800	1,700	2,000	52.000

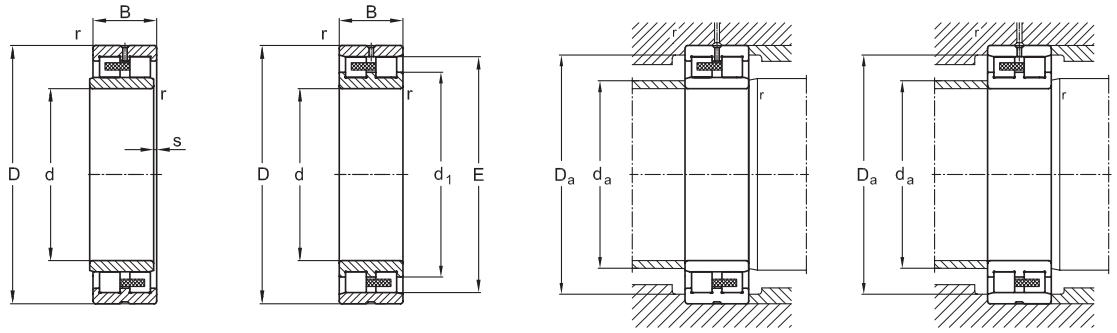

NNU... NN...

Basic dimensions			Basic designation	Dimensions							Mounting dimensions				
d	D	B		E/F	s	b	K	d_l	D_l	r_{min}	$d_{a,min}$	$d_{a,max}$	$D_{a,min}$	$D_{a,max}$	r_{max}
	mm						mm						mm		
220	300	80	NNU 4944	245.0	4.50	13.90	7.50		273.0	2.1	231.0	242.0		289.0	2.1
	340	90	NN 3044	310.0	5.50	13.90	7.50	265.0		3.0	233.0		315.0	327.0	3.0
240	320	80	NNU 4948	265.0	4.50	13.90	7.50		293.0	2.1	251.0	262.0		309.0	2.1
	360	92	NN 3048	330.0	6.00	13.90	7.50	285.0		3.0	253.0		332.0	347.0	3.0
260	360	100	NNU 4952	292.0	5.50	13.90	7.50		325.7	2.1	271.0	289.0		349.0	2.1
	400	104	NN 3052	364.0	6.50	13.90	7.50	312.0		4.0	276.0		369.0	384.0	4.0
280	380	100	NNU 4956	312.0	5.50	13.90	7.50		345.7	2.1	291.0	309.0		369.0	2.1
	420	106	NN 3056	384.0	7.00	13.90	7.50	332.0		4.0	296.0		390.0	404.0	4.0
300	420	118	NNU 4960	339.0	6.50	17.50	9.00		375.0	3.0	313.0			406.0	3.0
320	440	118	NNU 4964	359.0	6.50	17.50	9.00		397.0	3.0	333.0			426.0	3.0

4. Tolerances

4. Tolerances

Tolerance classes

The desire for rolling bearings with ever greater precision has led to the introduction of a range of tolerance classes with an increasing number of subdivisions.

Various tolerance classes have been established and are currently in use, each with its own designations.

Description of tolerance classes

Existing tolerance classes have been described by various organisations. The designation of the classes differs, however, according to the manufacturer.

IBC Designation **Descriptive organisation**	**P5**	**P4**	**P4A**	**P2H**	**P2A**
DIN (German Standards Institute)	P5	P4	P4S		P2
AFBMA STD 20 (Anti-Friction Bearing Manufacturers Association)	ABEC5	ABEC7			ABEC9
ISO 492 (International Standards Organisation)	Class 5	Class 4			Class 2
BS 292 (British Standards Institution)	EP5	EP7			EP9
Comparison between manufacturers					
FAG	P5	P4	P4S	(P4S)	
NSK	P5	P4	P3	(P3)	P2
SKF	P5	P4	P4A	(P4A)	PA9A
SNFA		7	7/9		9

Table 4.1: Tolerance classes and descriptive organisation

Tolerance characteristics					
Abbreviation according to ISO	**Inner ring characteristic**	**P4**	**P4A**	**P2H**	**P2A**
Δ_{dmp}	Deviation of the mean bore diameter from the nominal	P4	P4	P4	P2
K_{ia}	Radial runout of assembled bearing inner ring	P4	P2	P2	P2
S_d	Side face runout with reference to bore of the inner ring	P4	P2	P2	P2
S_{ia}	Side face runout of the assembled bearing inner ring	P4	P2	P2	P2
V_{Bs} / V_{Cs}	Ring width variation	P4	P4	P2	P2
Δ_{Bs} / Δ_{Cs}	Deviation of inner ring width	P4	P4	P4	P2
Abbreviation according to ISO	**Outer ring characteristic**	**P4**	**P4A**	**P2H**	**P2A**
Δ_{Dmp}	Deviation of the mean outside diameter from the nominal	P4	P4	P4	P2
K_{ea}	Radial runout of assembled bearing outer ring	P4	P2	P2	P2
S_D	Variation in inclination of outside cylindrical surface to outer ring side face	P4	P2	P2	P2
S_{ea}	Side face runout with reference to raceway of assembled bearing outer ring	P4	P2	P2	P2

Table 4.2: Allocation to tolerance classes according to DIN 620

4.1 Dimensions and measuring principles IBC High precision rolling bearings

The basic dimensions of a high precision rolling bearing comprise its bore d, its outside diameter D and its width B. The basic dimensions also include the tolerances for the bore Δ_{dmp} as well as for the outside diameter Δ_{Dmp}. The tolerance for the width Δ_{Bs} depends on the bore of the inner ring and is applicable to both bearing rings.

The accuracy for the running of a rolling bearing is also subject to defined tolerances. Apart from the desired rotation around the central axis of the high precision rolling bearing, unwanted displacements and tilting movements occur in both axial and radial directions. There are maximum values and/or limit values for these effects too. In most mounting situations, the maximum radial runout of the inner ring K_{ia} is especially important. IBC high precision angular contact ball bearings are manufactured as standard to conform to tolerance classes P4A, P2H and P2A. The high precision cylindrical roller bearings are manufactured to conform to tolerance class SP as standard.

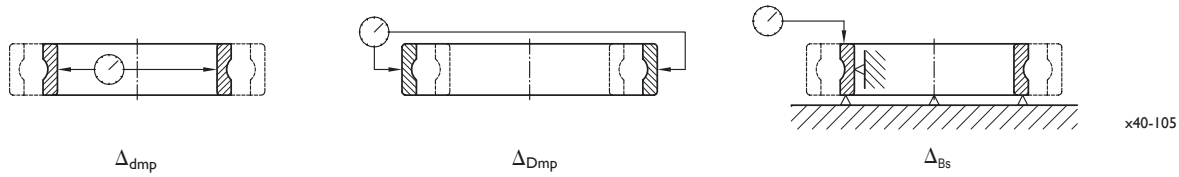

Fig. 4.1: Dimensional tolerances

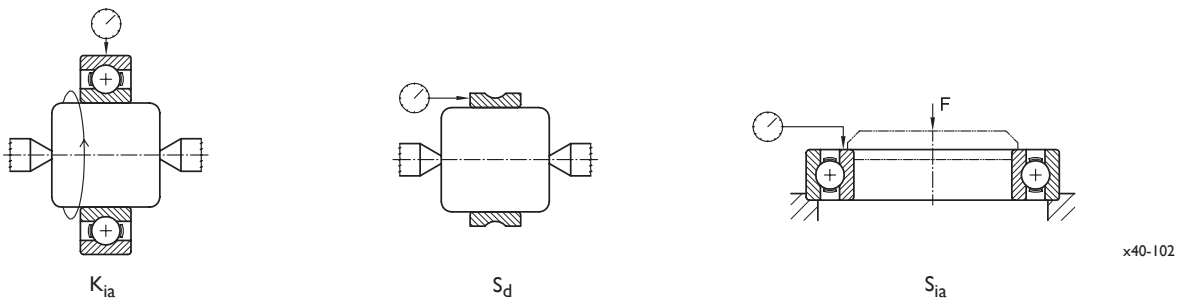

Fig. 4.2: Running tolerances on the inner ring

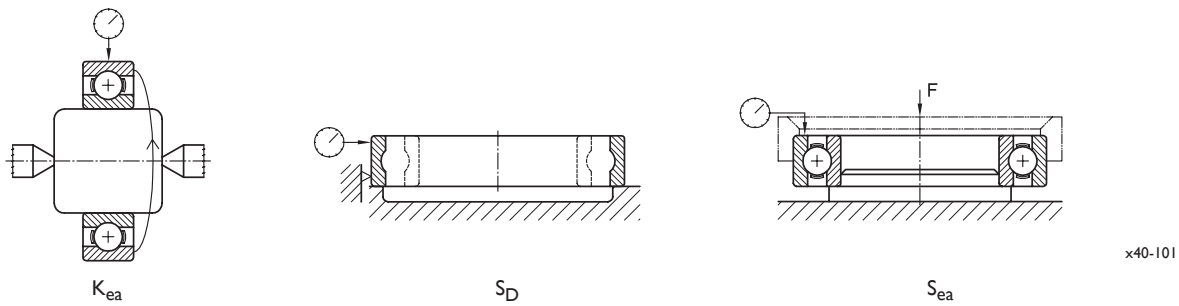

Fig. 4.3: Running tolerances on the outer ring

4.2 Dimensional and running tolerances IBC High precision angular contact ball bearings

	Inner ring													
	Characteristic	**Tolerance class**	**ø 0.6 to 10**	**10 18**	**18 30**	**30 50**	**50 80**	**80 120**	**120 150**	**150 180**	**180 250**	**250 315**	**315 400**	**400 500**
Δ_{dmp}	Deviation of the mean bore diameter from the nominal	P5	-5	-5	-6	-8	-9	-10	-13	-13	-15	-18	-23	-28
		P4, P4A, P2H	-4	-4	-5	-6	-7	-8	-10	-10	-12	-15	-19	-23
		P2A	-2.5	-2.5	-2.5	-2.5	-4	-5	-7	-7	-8	-9	-11	-13
V_{dp}	Variation in the bore diameter in a radial plane	P5 - series 8, 9	5	5	6	8	9	10	13	13	15	18	23	28
		P5 - series 0, 2	4	4	5	6	7	8	10	10	12	14	18	21
		P4 - series 8	2.5	2.5	2.5	3	3.5	4	5	5	6	8	9	12
		P4A, P2H, P2A - series 9, 0, 2	2	2	2	2.5	3	3	4	4	5	6	8	10
V_{Bs}	Inner ring width variation	P5	5	5	5	5	6	7	8	8	10	13	15	18
		P4	2	2	2.5	3	4	4	5	5	6	8	10	12
		P4A, P2H, P2A	1.5	1.5	1.5	1.5	1.5	2.5	2.5	4	5	6	7	8
K_{ia}	Radial runout of assembled bearing inner ring	P5	4	4	4	5	5	6	8	8	10	13	15	18
		P4	2.5	2.5	3	4	4	5	6	6	8	9	10	12
		P4A, P2H, P2A	1.5	1.5	2.5	2.5	2.5	2.5	2.5	3	4	5	7	8
S_d	Side face runout with reference to bore of the inner ring	P5	7	7	8	8	8	9	10	10	11	13	15	18
		P4	2.5	2.5	3	3	4	4	5	5	7	8	10	12
		P4A, P2H, P2A	1.5	1.5	1.5	1.5	1.5	2.5	2.5	4	5	6	7	8
S_{ia}	Side face runout with reference to the raceway of assembled bearing inner ring	P5	7	7	8	8	8	9	10	10	13	15	20	25
		P4	3	3	4	4	5	5	6	6	8	10	12	15
		P4A, P2H, P2A	1.5	1.5	2.5	2.5	2.5	2.5	2.5	5	5	7	9	11
Δ_{Bs}	Deviation of inner ring width	P5, P4, P4A, P2H	-250	-250	-250	-250	-250	-380	-380	-500	-500	-630	-630	-630
		P2A	-80	-80	-120	-120	-150	-200	-250	-250	-300	-350	-400	-450

Table 4.3: Dimensional and running tolerances for the inner ring, specified in µm.

	Outer ring													
	Characteristic	**Tolerance class**	**ø 18 to 30**	**30 50**	**50 80**	**80 120**	**120 150**	**150 180**	**180 250**	**250 315**	**315 400**	**400 500**	**500 630**
Δ_{Dmp}	Deviation of the mean outside diameter from the nominal	P5	-6	-7	-9	-10	-11	-13	-15	-18	-20	-23	-28
		P4, P4A, P2H	-5	-6	-7	-8	-9	-10	-11	-13	-15	-18	-20
		P2A	-4	-4	-4	-5	-5	-7	-8	-8	-10	-12	-15
V_{Dp}	Variation in the outside diameter in a radial plane	P5 - series 8, 9	6	7	9	10	11	13	15	18	20	23	28
		P5 - series 0, 2	5	5	7	8	8	10	11	14	15	17	21
		P4 - series 8	3	3	4	4	5	5	6	7	8	9	11
		P4A, P2H, P2A - series 9, 0, 2	2	2.5	3	3	4	4	5	6	6	7	9
V_{Cs}	Outer ring width variation	P5	5	5	6	8	8	8	10	11	13	15	18
		P4	2.5	2.5	3	4	5	5	7	7	8	9	11
		P4A, P2H, P2A	1.5	1.5	1.5	2.5	2.5	2.5	4	5	7	7	8
K_{ea}	Radial runout of assembled bearing outer ring	P5	6	7	8	10	11	13	15	18	20	23	25
		P4	4	5	5	6	7	8	10	11	13	15	18
		P4A, P2H, P2A	2	2.5	3	3	4	4	5	6	6	7	7
S_D	Variation in inclination of outside cylindrical surface to outer ring side face	P5	8	8	8	9	10	10	11	13	13	15	18
		P4	3	3	3	4	5	5	7	7	10	16	12
		P4A, P2H, P2A	1.5	1.5	1.5	2.5	2.5	2.5	4	5	7	8	9
S_{ea}	Side face runout with reference to raceway of assembled bearing outer ring	P5	8	8	10	11	13	14	15	18	20	23	25
		P4	4	4	5	6	7	8	10	10	13	15	18
		P4A, P2H, P2A	2.5	2.5	4	5	5	5	7	7	8	10	12

Table 4.4: Dimensional and running tolerances for the outer ring, specified in µm.

4.3 Sorting and chamfer dimensions IBC High precision rolling bearings

Sorting

The dimensional tolerances of the bearing, along with the dimensional tolerances of the housing, determine the exact and reproducible locating-bearing or floating-bearing fit of a high precision rolling bearing. In order to simplify the allocation of high precision rolling bearings and bearing sets to shafts and housings, the diameter deviations of IBC high precision rolling bearings are sorted by bore diameters and outside diameters and are specified with a group mean value. Classifying the permissible overall tolerance for the outside diameter Δ_{Dmp} and the bore Δ_{dmp} in 2 or 3 sorting groups respectively is done on the basis of diameter and quality (P4A, P2H, P2A). Up to an overall tolerance of 5 µm there are 2 groups; above that value there are 3 groups. This results in 5 and 9 sorting combinations respectively.

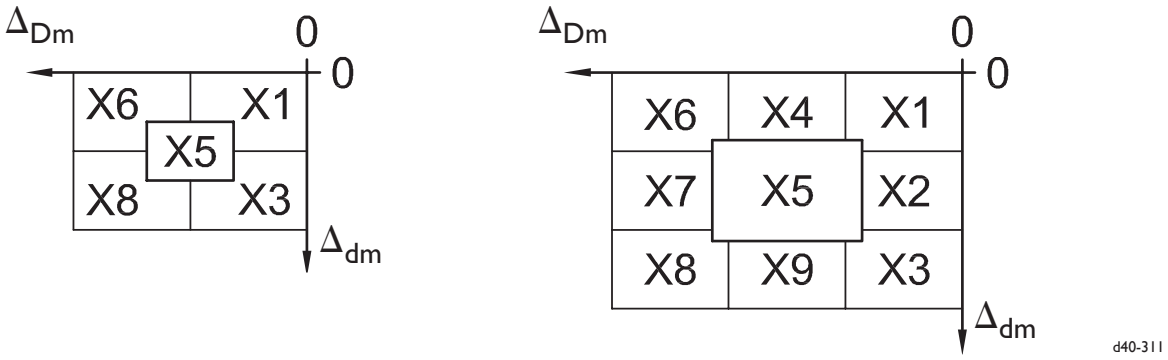

Overall tolerance $\Delta_{dm} \leq 5$ µm

Overall tolerance $\Delta_{dm} > 5$ µm

Fig. 4.4: Sorting classes

Chamfer dimensions

The chamfer dimensions are standardised according to the table on the right for all rolling bearings. The chamfers of the adjacent parts, e.g. housing and/or shaft, have to be manufactured accordingly.

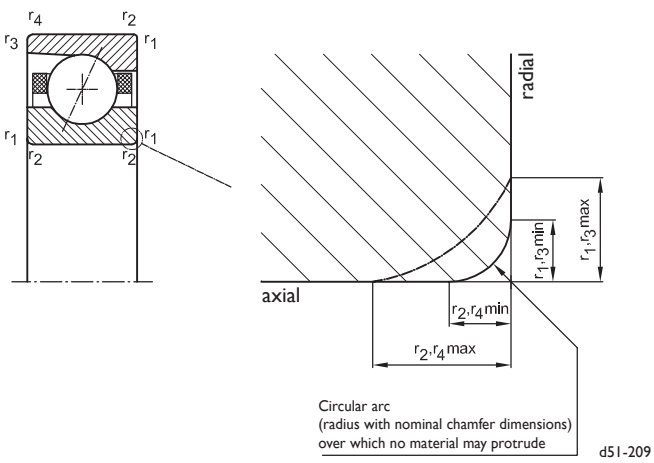

Fig. 4.5: Dimensional drawing of chamfer dimensions according to DIN 620, Part 6

Nominal chamfer dimensions r_{min}, r_{12}, r_{34} mm	Bore diameter d over mm	to mm	Tolerance of chamfer dimensions radial r_1, r_3 min. mm	max. mm	axial r_2, r_4 min. mm	max. mm
0.2	-	-	0.2	0.5	0.2	0.8
0.3	-	40	0.3	0.6	0.3	1.0
	40	-	0.3	0.8	0.3	1.0
0.6	-	40	0.6	1.0	0.6	2.0
	40	-	0.6	1.3	0.6	2.0
1.0	-	50	1.0	1.5	1.0	3.0
	50	-	1.0	1.9	1.0	3.0
1.1	-	120	1.1	2.0	1.1	3.5
	120	-	1.1	2.5	1.1	4.0
1.5	-	120	1.5	2.3	1.5	4.0
	120	-	1.5	3.0	1.5	5.0
2.0	-	80	2.0	3.0	2.0	4.5
	80	220	2.0	3.5	2.0	5.0
2.1	-	280	2.1	4.0	2.1	6.5
2.5	-	100	2.5	3.8	2.5	6.0
	100	280	2.5	4.5	2.5	6.0
3.0	-	280	3.0	5.0	3.0	8.0

Table 4.5: Values for chamfer dimensions according to DIN 620, Part 6

4.4 Dimensional and running tolerances IBC High precision cylindrical roller bearings

			Inner ring										
	Bore diameter	over up to	ø 18 30	30 50	50 80	80 120	120 180	180 250	250 315	315 400	400 500	500 630	630 800
			Tolerances in µm										
Δ_{ds} Δ_{dmp}	Deviation of the cylindrical mean bore from the nominal	min. max.	0 -6	0 -8	0 -9	0 -10	0 -13	0 -15	0 -18	0 -23	0 -27	0 -30	0 -40
V_{dp}	Variation in bore diameter		3	4	5	5	7	8	9	12	14	15	20
V_{dmp}	Variation in mean bore diameter		3	4	5	5	7	8	9	12	14	15	20
Δ_{dmp}	Deviation of the tapered mean bore from the nominal	min. max.	10 0	12 0	15 0	20 0	25 0	30 0	35 0	40 0	45 0	50 0	65 0
$\Delta_{d1mp} - \Delta_{dmp}$	Deviation from taper angle	min. max.	0 4	0 4	0 5	0 6	0 8	0 9	0 11	0 12	0 14	0 15	0 18
Δ_{Bs}	Deviation in individual inner ring width	min. max.	0 -120	0 -120	0 -150	0 -200	0 -250	0 -300	0 -350	0 -400	0 -450	0 -500	0 -750
V_{Bs}	Inner ring width variation		2.5	3	4	4	5	6	8	10	12	14	17
K_{ia}	Radial runout of assembled bearing inner ring		3	4	4	5	6	8	8	10	10	12	15
S_d	Side face runout with reference to bore of inner ring		4	4	5	5	6	7	8	10	12	14	17
S_{ia}	Side face runout with reference to the raceway of the assembled bearing inner ring		4	4	5	5	7	8	10	12	15	18	21

Table 4.6: Dimensional and running tolerances for the inner ring

			Outer ring										
	Outside diameter	over up to	ø 30 50	50 80	80 120	120 150	150 180	180 250	250 315	315 400	400 500	500 630	630 800
			Tolerances in µm										
Δ_{Ds} Δ_{Dmp}	Deviation in mean outside diameter	min. max.	0 -7	0 -9	0 -10	0 -11	0 -13	0 -15	0 -18	0 -20	0 -23	0 -28	0 -35
V_{Dp}	Variation in outside diameter		4	5	5	6	7	8	9	10	12	14	18
V_{Dmp}	Variation in mean outside diameter		4	5	5	6	7	8	9	10	12	14	18
V_{Cs}	Outer ring width variation		2.5	3	4	5	5	7	7	8	9	11	13
K_{ea}	Radial runout of the assembled bearing outer ring		5	5	6	7	8	10	11	13	15	17	20
S_D	Variation in inclination of outside cylindrical surface to outer ring side face		4	4	5	5	5	7	8	10	11	13	15
S_{ea}	Side face runout with reference to raceway of assembled bearing outer ring		5	5	6	7	8	10	10	13	15	18	22

Table 4.7: Dimensional and running tolerances for the outer ring

4.5 Radial clearance
IBC High precision cylindrical roller bearings

As standard, IBC manufactures high precision cylindrical roller bearings to conform to the tolerance class SP with radial clearance C1. The bearing clearance is not explicitly specified. Apart from the class mentioned, further bearing clearance classes are available, e.g. SPC2X or C3.

The bearing rings of high precision cylindrical roller bearings of the same type are not interchangeable.

The values for the bearing clearance of high precision cylindrical roller bearings are different for bearings with cylindrical bore from those with tapered bore, even if they belong to the same tolerance class. When fitting a high precision cylindrical roller bearing on to a tapered shaft it is possible to adjust the bearing clearance specifically via the displacement. This option, and the simple design, make high precision cylindrical roller bearings ideally suited for use in the machine tool industry. Further information on this issue is contained in Chapter 8 (Mounting of High precision rolling bearings).

Radial clearance of single and double row high precision cylindrical roller bearings with cylindrical bore

Ø d mm	over	-	24	30	40	50	65	80	100	120	140	160	180	200	225	250	280	315	355	400	450	500
	up to	24	30	40	50	65	80	100	120	140	160	180	200	225	250	280	315	355	400	450	500	560
C1	min.		5	5	5	5	10	10	10	10	10	10	15	15	15	20	20	20	25	25	25	25
	max.		15	15	18	20	25	30	30	35	35	40	45	50	50	55	60	65	75	85	95	105
SPC2X	min.		8	12	14	17	18	20	25	30	35	35	40	45	45	50	55	60	70	75	90	100
	max.		23	25	30	35	38	40	45	50	65	70	75	85	100	110	120	130	145	165	185	205

Radial clearance of single and double row high precision cylindrical roller bearings with tapered bore

Ø d mm	over	-	24	30	40	50	65	80	100	120	140	160	180	200	225	250	280	315	355	400	450	500
	up to	24	30	40	50	65	80	100	120	140	160	180	200	225	250	280	315	355	400	450	500	560
C1	min.		15	15	17	20	25	35	40	45	50	55	60	60	65	75	80	90	100	110	120	130
	max.		25	25	30	35	40	55	60	70	75	85	90	95	100	110	120	135	150	170	190	210
SPC2X	min.		20	20	25	30	35	40	50	55	60	75	85	95	105	115	130	145	165	185	205	230
	max.		45	45	55	60	70	75	90	100	110	125	140	155	170	185	205	225	255	285	315	350

Table 4.8: Radial clearance for IBC high precision cylindrical roller bearings with cylindrical and tapered bore, specified in µm.

4.6 Tolerances of adjacent parts

Form accuracy for shafts

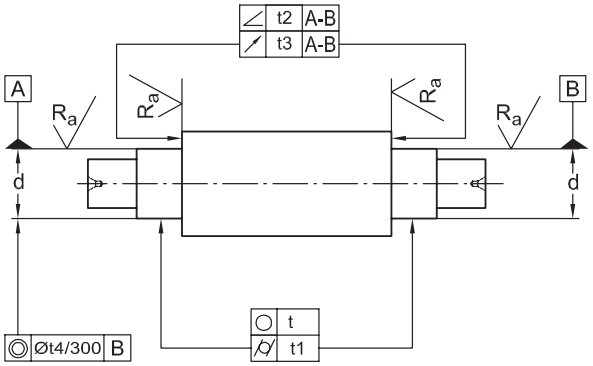

Form accuracy for housings

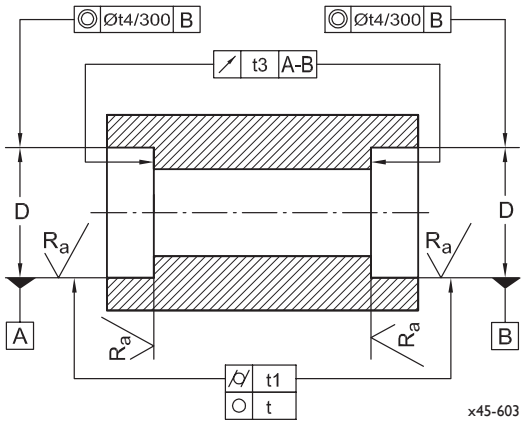

Characteristic	Tolerance symbol	Tolerance value	Permissible form deviations tolerance grade/roughness class bearings from tolerance classes			
			PN	P6	P5	P4/P2
Roundness	○	t	IT5/2	IT4/2	IT3/2	IT2/2
Cylindricity	⌭	t1	IT5/2	IT4/2	IT3/2	IT2/2
Squareness	∠	t2	-	-	-	IT3/2
Runout	↗	t3	IT5	IT4	IT3	IT3
Concentricity	◎	t4	IT6	IT6	IT5	IT4
Roughness R_a d ≤ 80 mm		-	N6	N5	N4	N4
d > 80 mm		-	N7	N6	N5	N5

Table 4.9: Form accuracy for shafts

Characteristic	Tolerance symbol	Tolerance value	Permissible form deviations tolerance grade/roughness class bearings from tolerance classes			
			PN	P6	P5	P4/P2
Roundness	○	t	IT5/2	IT4/2	IT3/2	IT2/2
Cylindricity	⌭	t1	IT5/2	IT4/2	IT3/2	IT2/2
Runout	↗	t3	IT5	IT4	IT3	IT3
Concentricity	◎	t4	IT7	IT6	IT5	IT4
Roughness R_a d ≤ 80 mm		-	N6	N6	N5	N5
80 < D ≤ 250 mm		-	N7	N7	N6	N6
D > 250 mm		-	N7	N7	N7	N7

Table 4.10: Form accuracy for housings

ISO standard tolerances pursuant to DIN 7151									
Nominal dimension diameter		Tolerance grade							
over	up to	IT0	IT1	IT2	IT3	IT4	IT5	IT6	IT7
mm		µm							
6	10	0.6	1	1.5	2.5	4	6	9	15
10	18	0.8	1.2	2	3	5	8	11	18
18	30	1	1.5	2.5	4	6	9	13	21
30	50	1	1.5	3	4	7	11	16	25
50	80	1.2	2	4	5	8	13	19	30
80	120	1.5	2.5	5	6	10	15	22	35
120	180	2	3.5	6	8	12	18	25	40
180	250	3	4.5	7	10	14	20	29	46
250	315	4	6	8	12	16	23	32	52
315	400	5	7	9	13	18	25	36	57
400	500	6	8	10	15	20	27	40	63

Table 4.11: Standard tolerances

Design of adjacent parts

The positional accuracy and form accuracy of the adjacent parts must be adjusted to the accuracy requirements of the high precision rolling bearings. Rolling bearings adapt to form deviations in the shaft and the housing because the bearings have comparatively slender ratios of cross section. The fit selected depends on the rotational conditions of the bearing rings under consideration.

Roughness class	Roughness value R_a µm
N3	0.1
N4	0.2
N5	0.4
N6	0.8
N7	1.6

Table 4.12: Roughness classes

Roughness R_a of the axial shoulder of the spindle, the housing and the spacer rings.

4.7 Fits for IBC High precision angular contact ball bearings and adjacent parts

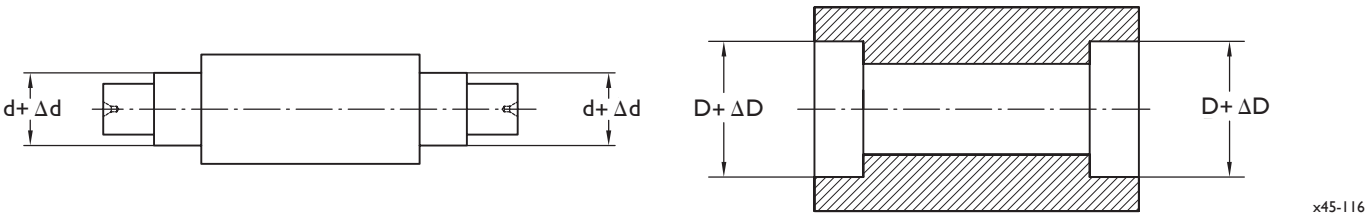

Nominal shaft diameter d in mm	Tolerance class	from incl.	10	10 18	18 30	30 50	50 80	80 120	120 180	180 250
Bore diameter tolerance	P4, P4A, P2H	min.	-4	-4	-5	-6	-7	-8	-10	-12
max. 0	P2A	min.	-2.5	-2.5	-2.5	-2.5	-4	-5	-7	-8
Shaft tolerance Δd	P4, P4A	max.	+2	+2	+2	+2	+3	+3	+4	+4
		min.	-2	-2	-2	-2	-2	-2	-3	-6
	P2H, P2A	max.	+1	+1	+1	+1	+2	+2	+3	+4
		min.	-2	-2	-2	-2	-2	-2	-3	-4
Interference	P4, P4A,	mean	+2	+2	+2	+3	+3	+3	+4	+4
for mean fit sizes	P2H, P2A	mean	+1	+1	+1	+1	+2	+3	+3	+4

Nominal housing diameter D in mm	Tolerance class	from incl.	18 30	30 50	50 80	80 120	120 150	150 180	180 250	250 315	315 400
Bearing outside diameter	P4, P4A, P2H	min.	-5	-6	-7	-8	-9	-10	-11	-13	-15
tolerance max. 0	P2A	min.	-4	-4	-4	-5	-5	-7	-8	-8	-10
Housing tolerance ΔD	P4, P4A	max.	+5	+5	+5	+5	+7	+7	+7	+10	+11
locating bearing		min.	0	0	0	-3	-3	-3	-3	-3	-4
	P2H, P2A	max.	+4	+4	+4	+5	+5	+5	+5	+5	+7
		min.	0	0	0	0	0	-1	-3	-3	-4
Clearance for	P4, P4A	mean	+5	+5	+5	+5	+7	+7	+7	+10	+10
mean fit sizes	P2H, P2A	mean	+4	+4	+4	+5	+5	+5	+5	+5	+7
Housing tolerance ΔD	P4, P4A	max.	+7	+7	+7	+11	+17	+17	+19	+24	+25
floating bearing		min.	+2	+2	+2	+3.5	+7	+7	+9	+10	+11
	P2H, P2A	max.	+7	+8	+9	+11	+13	+13	+15	+17	+21
		min.	+3	+4	+5	+7	+7	+7	+8	+10	+10
Clearance for	P4, P4A	mean	+7	+7	+7	+11	+17	+17	+19	+24	+24
mean fit sizes	P2H, P2A	mean	+7	+8	+9	+11	+13	+13	+15	+17	+20

Table 4.13: Interference and/or clearance measurements that should be aimed for with adjacent parts with regard to IBC high precision angular contact ball bearings. For angular contact ball bearings of P2H accuracy, the tolerances for shaft and housing should be according to P2A, if possible. Specifications in µm.

5. Life Time Calculation

5. Life time calculation

Even under suitable operating conditions, and even if the high precision rolling bearings have been mounted properly, a bearing may still fail. The service life of high precision rolling bearings is limited by various factors.

The length of time during which a high precision rolling bearing works satisfactorily is called its “life time”. Material fatigue, vibrations, contamination or lubrication-failure may occur during this time span. In the following observations we will be ignoring the causes that can lead to the failure of a high precision rolling bearing without noticeable prior indication; these causes include faulty design, inadequate maintenance, faulty mounting, and wrong bearing dimensioning.

Fatigue

Fatigue of the material that high precision rolling bearings are made of is caused by the rising stress to the material that occurs when high precision rolling bearings rotate under load. Towards the end of the life of the bearing, “pittings” appear on the running surfaces or the rolling elements; an initial occurrence may be followed by progressive pitting of the material.

Various factors are responsible for material fatigue; they can really only be covered with reference to statistics. The definition of a theoretical reference value for “fatigue life time” therefore refers to a very large quantity of rolling bearings running under the same conditions. The fatigue life time is reached as soon as 10% of all bearings have failed. The fatigue life time may be specified with reference to the number of revolutions or to the runtime in hours.

In addition to fatigue life time, lubrication life time is another decisive factor in operating a high precision rolling bearing. Particular rules apply for the calculation of this factor. In the case of high precision rolling bearings that are permanently monitored, other parameters may also be crucial in determining their life time, including temperature, bearing noise and vibrations.

Basic rating life

In terms of pure definition, 10% of a great number of high precision rolling bearings of the same type, running under the same conditions, may fail within a basic rating life of L_{10}. If a constant rotational speed is used, the basic rating life may also be specified in terms of a time $L_{10,h}$.

$$L_{10,h} = \left(\frac{C}{P}\right)^p \cdot \frac{10^6}{60 \cdot n} \quad [h] \qquad [5.1]$$

$L_{10,h}$	basic rating life	[h]
n	operating speed	[min^{-1}]
C	dynamic load rating	[N]
P	equivalent dynamic bearing load	[N]
p	life time exponent for ball bearing p = 3 for roller bearing p = 10/3	

Dynamic load rating

The dynamic load rating is the constant load of a high precision rolling bearing with a rotating inner ring for which 1 million revolutions will be achieved with a probability of 90%. It is considered as a central radial load that is constant with regard to magnitude and direction. It is based on numerous experiments and is a performance figure that may be calculated with the aid of empirical rules.

Static load rating

The static load carrying capacity of a high precision rolling bearing is defined by the static load rating C_0. This is the load that a stationary high precision rolling bearing can bear with a maximum permanent plastic deformation of 1/10,000 of the rolling element diameter.

Equivalent dynamic bearing load

Combined loads, comprising both axial and radial components, can often act on high precision rolling bearings. In order to relate the forces that actually act on a high precision rolling bearing to the dynamic load rating, the equivalent dynamic bearing load P is calculated from the effective force components. This load is hypothetical and corresponds to the dynamic load rating with regard to the point of application of the load and its effective direction.

$$\mathbf{P = X \cdot F_r + Y \cdot F_a} \quad [N] \quad [5.2]$$

P	equivalent dynamic bearing load	[N]
F_r	radial force	[N]
F_a	axial force	[N]
X	radial load factor, see table 5.1	
Y	axial load factor, see table 5.1	

Once you have calculated the equivalent dynamic bearing load it may be mathematically related to the dynamic load rating in order to determine the life time.

Equivalent static bearing load

The necessary static load rating C_0 is calculated from the equivalent static bearing load P_0, which is additionally weighted by the static load safety factor s_0.

$$\mathbf{C_0 = P_0 \cdot s_0} \quad [5.3]$$

C_0	static load rating	[N]
P_0	equivalent static bearing load	[N]
s_0	static load safety factor	

Achieving adequate static load safety depends on the operation of the rolling bearings and on their required running smoothness. High precision angular contact ball bearings require a minimum static safety factor of 1; high precision roller bearings require a minimum static safety factor of 1.5.

If high demands are placed on the running smoothness of the rolling bearing, the above mentioned values for static load safety must be at least doubled. If the rolling bearing is subject to shock impact loads, an additional increase of the static load safety by factor 1.5 is required.

Static load carrying capacity of dynamically designed bearings

If the static load is known, the equivalent static bearing load should be calculated for the type of rolling bearing that was chosen on the basis of the computation of the dynamic load carrying capacity; the equivalent static bearing load should then be checked against the static load safety given above.

Comparing the effective static bearing load with the static load rating also means that the equivalent static bearing load P_0 has to be calculated. Calculation is done in analogy to the calculation of the equivalent dynamic bearing load.

$$\mathbf{P_0 = X_0 \cdot F_r + Y_0 \cdot F_a} \quad [N] \quad [5.4]$$

P_0	equivalent static bearing load	[N]
F_r	radial force	[N]
F_a	axial force	[N]
X_0	radial load factor, see table 5.1	
Y_0	axial load factor, see table 5.1	

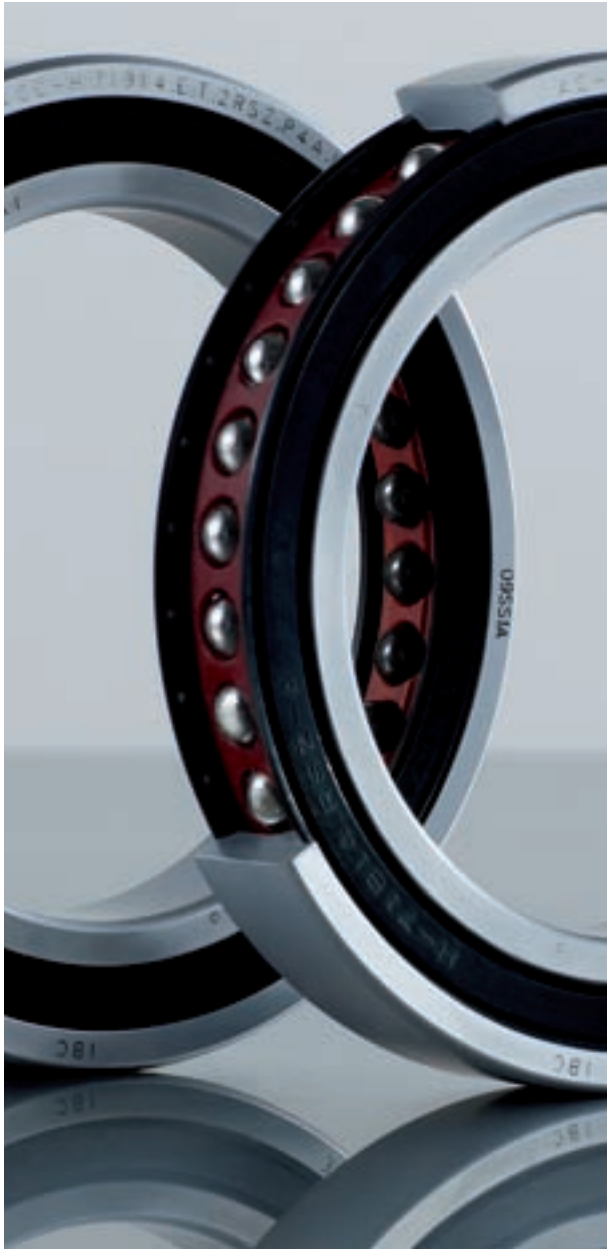

Determining the axial and radial load factors

To begin with, the axial and radial load factors from table 5.1 are determined for angular contact ball bearings that permit a combined load. The first step for angular contact ball bearings with a contact angle of 15° is to calculate the ratio $F_a / i \cdot C_0$.

In so doing, i stands for the number of high precision rolling bearings in a set. The bearing-related factor e for single bearings or bearing sets with the same alignment is given in table 5.1a; for high precision rolling bearings that are set against each other, the factor e is given in table 5.1b next to the value that comes as close as possible to the outcome of the calculation $F_a / i \cdot C_0$. The factor e may also be interpolated in the relevant manner. In the next step, the ratio of the force components F_a / F_r that impact from the outside is calculated and is compared to the value of the bearing-related factor e that is contained in the respective table.

If the ratio is smaller than e, then the axial component is omitted and only the radial load factor X = 1 is retained. If the ratio is greater than e, then the factors X and Y are read off from the same line in the table as their respective factor e. In the case of angular contact ball bearings with a contact angle of 25°, e always has the value of 0.68, and the ratio $F_a / i \cdot C_0$ is not calculated. The static radial load factor X_0 and the static axial load factor Y_0 may be taken straight from tables 5.1a and 5.1b for the different kinds of contact angles and bearing arrangements. There is no need to calculate these factors.

Contact angle	$\frac{F_a}{i \cdot C_0}$	bearing-related factor	single bearing and tandem mountings					
			< ; << ; <<< ; <<<<					
			$F_a / F_r \leq e$		$F_a / F_r > e$			
α		e	X	Y	X	Y	X_0	Y_0
15°	0.011	0.38	1	0	0.44	1.47	0.5	0.46
	0.022	0.40				1.40		
	0.045	0.43				1.30		
	0.067	0.46				1.23		
	0.089	0.47				1.19		
	0.134	0.50				1.12		
	0.223	0.55				1.02		
	0.334	0.56				1.00		
	0.446	0.56				1.00		
25°		0.68	1	0	0.41	0.87	0.5	0.38

Table 5.1a: Factors for calculating the equivalent bearing load for single rolling bearings and tandem mountings

Contact angle	$\frac{F_a}{i \cdot C_0}$	bearing-related factor	angular contact ball bearings in X- or O-arrangement, or double row high precision rolling bearings					
			<> ; ><					
			$F_a / F_r \leq e$		$F_a / F_r > e$			
α		e	X	Y	X	Y	X_0	Y_0
15°	0.011	0.38	1	1.65	0.72	2.39	1	0.92
	0.022	0.40		1.57		2.28		
	0.045	0.43		1.46		2.11		
	0.067	0.46		1.38		2.00		
	0.089	0.47		1.34		1.93		
	0.134	0.50		1.26		1.82		
	0.223	0.55		1.14		1.66		
	0.334	0.56		1.12		1.63		
	0.446	0.56		1.12		1.63		
25°		0.68	1	0.92	0.67	1.41	1	0.76

Table 5.1b: Factors for calculating the equivalent bearing load for bearing arrangements with a load that impacts symmetrically

Two angular contact ball bearings that are arranged at a distance from one another in an X- or O-arrangement are considered to be a system if there is a symmetrical load application; the system factors for the calculation of the equivalent bearing load are contained in table 5.1b. In all other cases it will be necessary to calculate the individual bearing forces, and the factors will be taken from table 5.1a.

After applying the formulas 5.2 and 5.3, the equivalent dynamic bearing load P and the equivalent static bearing load P_0 will be known.

If the equivalent static bearing load does not exceed the static load rating multiplied by the static load safety s_0, then the single bearing possesses an adequate static dimension. The equivalent dynamic bearing load for a single bearing is worked out using the life time calculation according to equation 5.1.

The dynamic load rating that is necessary for this calculation is contained in the tables in Chapter 2 (IBC High precision angular contact ball bearings) and Chapter 3 (IBC High precision cylindrical roller bearings) for high precision rolling bearings.

Bearing combinations

Should multiple single-row precision angular contact ball bearings of the same kind be fitted next to each other in the same arrangement, the static overall load rating of this combination is calculated from the individual static load ratings (see below):

$$C_{0,Satz} = i \cdot C_{0,Einzellager} \quad [N] \quad [5.5]$$

$C_{0,Satz}$	static load rating of bearing set	[N]
i	number of bearings	
$C_{0,Einzellager}$	static load rating of single bearing	[N]

The dynamic load rating of a set is calculated as follows:

$$C_{Satz} = i^{0.7} \cdot C_{Einzellager} \quad [N] \quad [5.6]$$

C_{Satz}	dynamic load rating of bearing set	[N]
i	number of bearings	
$C_{Einzellager}$	dynamic load rating of single bearing	[N]

The general reduction in the dynamic load rating of a set by the value $i^{0.7}$ according to DIN ISO 281 is based on the assumption that, within a set, bearings with standard tolerances have bore and outside diameters that differ from each other and therefore carry unequal portions of the load.

Sorted and marked high precision angular contact ball bearings with narrower tolerances carry loads in a much more equal way and therefore result in better operational safety.

The life time of a set of high precision rolling bearings can be calculated if the effective forces that act on each single bearing are known, as the failure of a single high precision rolling bearing within the system leads to the failure of the entire system.

As each single high precision rolling bearing has a 90% probability of reaching its life time, the failure probability of the overall system is the product of the failure probabilities of the single high precision rolling bearings.

In effect, this means that the life time of the overall system is shorter than the shortest life time of any high precision rolling bearing that is part of the system. Taking into account the life times of the single high precision rolling bearings, a system life time $L_{10h,ges}$ may be calculated using equation 5.7.

$$L_{10h,ges} = \frac{1}{\left(\frac{1}{L_{10h,1}^{1.1}} + \frac{1}{L_{10h,2}^{1.1}} + L + \frac{1}{L_{10h,n}^{1.1}}\right)^{\frac{1}{1.1}}} \quad [h] \quad [5.7]$$

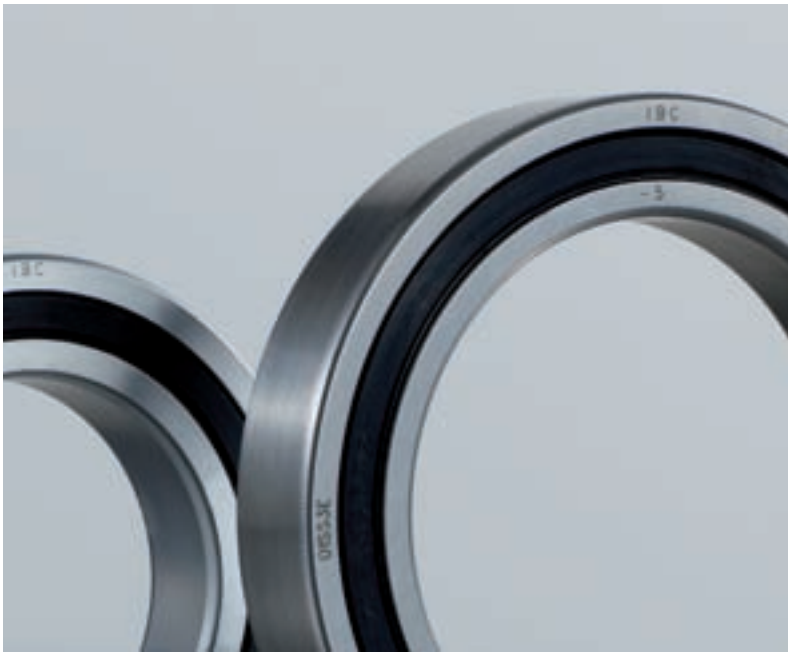

A note on bearing sets with inner preload

The method described above is not valid for preloaded high precision rolling bearings, which are often set against each other in bearing sets, because the preload of these bearings stresses the rolling bearings in addition to the external forces. In order to calculate the life time of a preloaded set of high precision rolling bearings one needs to look at the forces acting on each individual bearing. A method for calculating the life time that takes into account preloading is described on the following pages.

5.1 Detailed calculation of bearing forces

In order to determine the radial and axial load components F_r and F_a of each bearing in an arrangement of preloaded angular contact ball bearings, the external radial loads F_{re}, the external axial loads F_{ae} and the axial preload F_v as well as their load allocation, have to be taken into account. The load allocation may be calculated from the spring compression of the rolling elements that conforms to a power law with the exponent 2/3; the assumption is that the radial force is equally divided between the single rolling bearings.

A bearing set with two high precision angular contact ball bearings

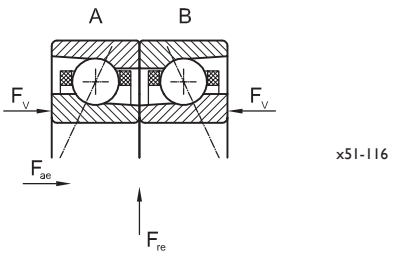

Due to the wedge effect produced by contact angle α, an external radial load F_{re} changes the whole preload F_v in the following way:

$$F_{v,ges} = \frac{F_{re} \cdot 1.2 \cdot \tan\alpha + F_v}{2} \quad [N] \quad [5.8]$$

if $F_{v,ges} < F_v$, than apply as correction $F_{v,ges} = F_v$

The axial loads of the individual bearings A and B can now be calculated with the adjusted preload $F_{v,ges}$:

$$F_{a,A} = \frac{2}{3} \cdot F_{ae} + F_{v,ges} \quad [N] \quad [5.9]$$

$$F_{a,B} = F_{v,ges} - \frac{1}{3} \cdot F_{ae} \quad [N] \quad [5.10]$$

If the result is $F_{a,A}$ or $F_{a,B} < 0$ the respective high precision rolling bearing is in an unloaded state. The axial load then equals zero, and the axial load of the other bearing corresponds to the external axial load F_{ae}.

The external radial load F_{re} is now distributed for the single bearings in accordance with the power law of the spring compression mentioned above, taking into account the allocation of the axial loads.

$$F_{r,A} = \frac{F_{a,A}^{2/3}}{F_{a,A}^{2/3} + F_{a,B}^{2/3}} \cdot F_{re} \quad [N] \quad [5.11]$$

$$F_{r,B} = \frac{F_{a,B}^{2/3}}{F_{a,A}^{2/3} + F_{a,B}^{2/3}} \cdot F_{re} \quad [N] \quad [5.12]$$

From the axial loads $F_{a,A}$ and $F_{a,B}$ and the radial loads $F_{r,A}$ and $F_{r,B}$ which have been obtained by the above method, the equivalent dynamic bearing load for each high precision rolling bearing is now determined in accordance with equation 5.2. Factors X and Y are taken from table 5.1a. The application of equation 5.1 gives an individual life time for each high precision rolling bearing, and these life time values are then combined in accordance with equation 5.7 to obtain the system life time.

A bearing set with three high precision angular contact ball bearings

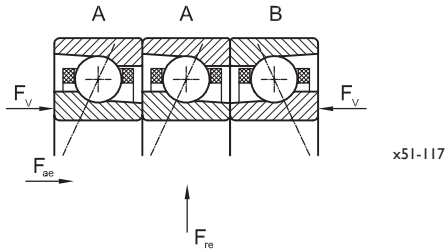

Taking into account an external radial load, the following is true for the preload of the individual high precision rolling bearings:

$$F_{v,A} = \frac{F_{re} \cdot 1.2 \cdot \tan\alpha + F_v}{4} \quad [N] \quad [5.13]$$

$$F_{v,B} = \frac{F_{re} \cdot 1.2 \cdot \tan\alpha + F_v}{2} \quad [N] \quad [5.14]$$

if $F_{v,A} < F_v / 2$, then apply as correction $F_{v,A} = F_v / 2$
and $F_{v,B} < F_v$ then apply as correction $F_{v,B} = F_v$

Therefore the axial loads of the individual high precision rolling bearings are obtained from the following calculation:

$$F_{a,A} = 0.4 \cdot F_{ae} + F_{v,A} \quad [N] \quad [5.15]$$

$$F_{a,B} = F_{v,B} - 0.2 \cdot F_{ae} \quad [N] \quad [5.16]$$

If $F_{a,B} < 0$ then there is no more preload. The axial load of high precision rolling bearing B is zero, and the two high precision rolling bearings A each carry half the external axial load. In the opposite case, both high precision rolling bearings A are unloaded and are no longer subject to axial load. In this case, high precision rolling bearing B carries the full external axial load F_{ae}.

The radial load rate for each high precision rolling bearing with regard to the external radial force is as follows:

$$F_{r,A} = \frac{F_{a,A}^{2/3}}{2 \cdot F_{a,A}^{2/3} + F_{a,B}^{2/3}} \cdot F_{re} \qquad [N] \quad [5.17]$$

$$F_{r,B} = \frac{F_{a,B}^{2/3}}{2 \cdot F_{a,A}^{2/3} + F_{a,B}^{2/3}} \cdot F_{re} \qquad [N] \quad [5.18]$$

As in the case mentioned above, the equivalent dynamic bearing load is obtained by further calculation using equation 5.2 in conjunction with table 5.1a that contains the axial and radial load factors. From there, equation 5.1 leads to the life time of the individual bearings, and equation 5.7 then produces the life time of the overall system.

A bearing set with four high precision angular contact ball bearings

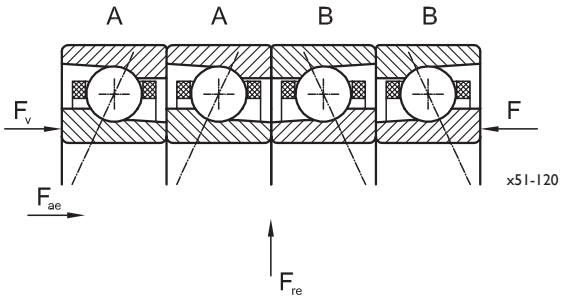

Because of the contact angle of angular contact ball bearings, the radial load influences the preload of the individual high precision rolling bearings as follows:

$$F_{v,ges} = \frac{F_{re} \cdot 1.2 \cdot \tan\alpha + F_v}{4} \qquad [N] \quad [5.19]$$

if $F_{v,ges} < F_v / 2$, than apply as correction $F_{v,ges} = F_v / 2$

The axial loads of the individual high precision rolling bearings are thus obtained by doing the following calculation:

$$F_{a,A} = \frac{1}{3} \cdot F_{ae} + F_{v,ges} \qquad [N] \quad [5.20]$$

$$F_{a,B} = F_{v,ges} - \frac{1}{6} \cdot F_{ae} \qquad [N] \quad [5.21]$$

If $F_{a,B} < 0$ then there is no more preload. The axial load of high precision rolling bearings B is zero, and the two high precision rolling bearings A each carry half the external axial load. In the opposite case, both high precision rolling bearings A are unloaded and are no longer subject to axial load. In this case the high precision rolling bearings B each carry half the axial load F_{ae}.

The radial load rate for each high precision rolling bearing with regard to the external radial force is as follows:

$$F_{r,A} = \frac{F_{a,A}^{2/3}}{F_{a,A}^{2/3} + F_{a,B}^{2/3}} \cdot \frac{F_{re}}{2} \qquad [N] \quad [5.22]$$

$$F_{r,B} = \frac{F_{a,B}^{2/3}}{F_{a,A}^{2/3} + F_{a,B}^{2/3}} \cdot \frac{F_{re}}{2} \qquad [N] \quad [5.23]$$

Further calculation is carried out by applying equation 5.2 in conjunction with table 5.1a, as well as equation 5.1 and 5.7; this gives the life time of the overall bearing system.

Further combinations of angular contact ball bearings

Departing from the above calculation, and taking into account the uneven distribution of the load in accordance with equation 5.24, if axial load predominates, the calculation of the life time may be carried out with defined load parameters according to table 5.2.

In order to determine the resulting axial bearing load, the bearing preload F_v needs to be taken into account along with the external load F_{ae}. In bearing arrangements with an unequal number of bearings per load direction, this results in variable axial stiffness, axial load ratings and life times, depending on the number of bearings for each direction. The proportion of the preload and the external load that needs to be taken into account for each bearing is contained in table 5.2.

For bearing sets made up of universal bearings with more than two bearings and a rigid preload F_v that cannot to be ignored, the life time for each single bearing should be calculated as follows.

The radial load is distributed between all the high precision rolling bearings in a set:

$$F_{r,\,Einzellager} = \frac{F_r}{i_{ges}^{0.7}} \qquad [N] \quad [5.24]$$

Number of bearings in a set

i	1	2	3	4	5	6
$i^{0.7}$	1	1.62	2.12	2.64	3.09	3.51

The axial load $F_{a,Einzellager}$ results from the formulas in accordance with table 5.2. The high precision rolling bearings in load direction experience the greatest stress. The high precision rolling bearings in counter-load direction only carry part of the preload or are completely unloaded.

The equivalent bearing loads P are then determined in each case with the help of the resulting bearing loads $F_{r,\,Einzellager}$ and $F_{a,\,Einzellager}$ according to formula 5.2.

If a variable spring preload is used instead of a rigid preload, the following is true for the high precision rolling bearing (or bearing set) that experiences more stress:

$$F_a = F_{Feder} + F_{ae} \quad [N] \quad [5.25]$$

$$F_{a,Einzellager} = \frac{1}{i^{0.7}} \cdot (F_{Feder} + F_{ae}) \quad [N] \quad [5.26]$$

Load spectrums

For a load spectrum made up of forces that change over time, and possibly including variable speeds, a mean equivalent bearing load is determined in accordance with equation 5.27.

The mean rotational speed itself is also made up of portions of time for the respective speeds that are expressed as a percentage.

$$P_m = \sqrt[3]{\frac{P_1^3 \cdot t_1 \cdot n_1 + \ldots + P_n^3 \cdot t_n \cdot n_n}{n_m \cdot 100}} \quad [N] \quad [5.27]$$

$$n_m = \frac{t_1 \cdot n_1 + \ldots + t_n \cdot n_n}{100} \quad [min^{-1}]$$

P_m	mean bearing load	[N]
$P_1 \ldots P_n$	equivalent load per load case	[N]
$t_1 \ldots t_n$	time portion of bearing load	[%]
$n_1 \ldots n_n$	service speeds	[min^{-1}]
n_m	mean operating speed	[min^{-1}]

Determining the bearing size

After preselecting a possible arrangement of high precision angular contact ball bearings, and after applying the equations mentioned above to the given external bearing loads and to the assumed preload of the bearings, all individual equivalent dynamic bearing loads P are known.

After adjusting equation 5.1 as follows

$$C = P \cdot \sqrt[p]{\frac{L_{10,h} \cdot 60 \cdot n}{10^6}} \quad [N] \quad [5.28]$$

C	dynamic load rating	[N]
P	equivalent dynamic load	[N]
p	life time exponent	
$L_{10,h}$	basic rating life	[h]
n	operating speed	[min^{-1}]

the required dynamic load rating may be determined by assuming a life time for a given speed; the dynamic load rating may then be used for purposes of comparison with the table.

Load direction	Arrangement bearing position		Load direction	Unloading from $F_{ae} > X \cdot F_v$	Load distribution with regard to single bearing ($F_{a,\ Einzellager}$) taking into account preload F_v and external load F_{ae}			
					up to unloading through external load $F_{ae} < X \cdot F_v$		after unloading at $F_{ae} > X \cdot F_v$	
	A	B		X	A	B	A	B
$F_{ae} \rightarrow$	<	>		2.83	$F_v + 0.67\ F_{ae}$	$F_v - 0.33\ F_{ae}$	F_{ae}	
$F_{ae} \rightarrow$	<<	>		5.66	$0.84\ F_v + 0.47\ F_{ae}$	$1.36\ F_v - 0.24\ F_{ae}$	$0.617\ F_{ae}$	0
	<<	>	$\leftarrow F_{ae}$	2.83	$0.84\ F_v - 0.30\ F_{ae}$	$1.36\ F_v + 0.52\ F_{ae}$	0	F_{ae}
$F_{ae} \rightarrow$	<<<	>		8.49	$0.73\ F_v + 0.38\ F_{ae}$	$1.57\ F_v - 0.18\ F_{ae}$	$0.463\ F_{ae}$	
	<<<	>	$\leftarrow F_{ae}$	2.83	$0.73\ F_v - 0.26\ F_{ae}$	$1.57\ F_v + 0.45\ F_{ae}$	0	F_{ae}
$F_{ae} \rightarrow$	<<<<	>		11.3	$0.65\ F_v + 0.32\ F_{ae}$	$1.71\ F_v - 0.15\ F_{ae}$	$0.379\ F_{ae}$	
	<<<<	>	$\leftarrow F_{ae}$	2.83	$0.65\ F_v - 0.23\ F_{ae}$	$1.71\ F_v + 0.45\ F_{ae}$	0	F_{ae}
$F_{ae} \rightarrow$	<<	>>		5.66	$0.84\ F_v + 0.40\ F_{ae}$	$0.84\ F_v - 0.22\ F_{ae}$	$0.617\ F_{ae}$	0
$F_{ae} \rightarrow$	<<<	>>		8.49	$1.12\ F_v + 0.33\ F_{ae}$	$1.49\ F_v - 0.18\ F_{ae}$	$0.463\ F_{ae}$	0
	<<<	>>	$\leftarrow F_{ae}$	5.66	$1.12\ F_v - 0.20\ F_{ae}$	$1.49\ F_v + 0.35\ F_{ae}$	0	$0.617\ F_{ae}$
$F_{ae} \rightarrow$	<<<<	>>		11.3	$1.03\ F_v + 0.29\ F_{ae}$	$1.68\ F_v - 0.15\ F_{ae}$	$0.379\ F_{ae}$	0
	<<<<	>>	$\leftarrow F_{ae}$	8.49	$1.03\ F_v - 0.18\ F_{ae}$	$1.68\ F_v + 0.33\ F_{ae}$	0	$0.617\ F_{ae}$

Table 5.2: Resulting axial load F_a of the single bearing

5.2 Expanded modified life time calculation

Over the years, the method of calculating the life time of a high precision rolling bearing has become more sophisticated by the inclusion of new criteria. The calculating method that was applied used to consist solely of a function of load rating C, of the equivalent dynamic bearing load P and of the mean operating speed n_m. But various other life time coefficients have been added over time.

Expanded modified life time calculation

The so-called modified life time L_{na} with its factors a_1, a_2 and a_3 that was commonly used in the past has been superseded by the expanded modified life time calculation $L_{10,nm}$ according to DIN ISO 281 as of 1993.

$$L_{10,nm} = a_1 \cdot a_{DIN} \cdot L_{10} \quad [h] \quad [5.29]$$

$L_{10,nm}$	expanded modified life time	[h]
a_1	life time expectation	
a_{DIN}	life cycle coefficient as in equation 5.37 to 5.42	
L_{10}	life time as in equation 5.1	[h]

life time expectation a_1		
life time expectation %	**L_{na}**	**a_1**
90	L_{10a}	1.00
95	L_{5a}	0.62
96	L_{4a}	0.53
97	L_{3a}	0.44
98	L_{2a}	0.33
99	L_{1a}	0.21

Table 5.3: Coefficients a_1

The probability factor a_1 remains. This factor permits the conversion of the life time expectation of 90%, or the failure rate of 10%, to other, higher life time expectations. The a_{DIN} factor that has now been introduced covers various parameters that are listed below.

In addition to load, the following parameters are taken into account, which in turn are based on multiple factors:

Parameter	Influenced by
Lubrication	bearing size, speed, viscosity and type of lubricant, additives
Material	surface, purity, hardness, temperature resistance, fatigue limit
Bearing design	friction conditions, internal load distribution
Tension	manufacturing, heat treatment, press fit
Bearing ambience	moisture, contamination of lubricant
Mounting	displacement, damage

Table 5.4: Parameters

The expanded modified life time calculation is based on the basic rating life L_{10} in accordance with equation 5.10, weighted by the life time expectation factor a_1 in accordance with table 5.3 and the life cycle coefficient a_{DIN}.

Determining the life cycle coefficient

The life cycle coefficient a_{DIN} is read off from diagrams 5.3 and 5.4, after the parameters $e_c \cdot P_u / P$ and κ have been determined, or it is calculated in accordance with equations 5.37 to 5.42.

$$a_{DIN} = f\left(\frac{e_c \cdot P_u}{P}, \kappa\right) \quad [5.30]$$

a_{DIN}	life cycle coefficient	
e_c	contamination coefficient (table 5.5)	
P_u	fatigue limit load	[N]
P	equivalent dynamic bearing load	[N]
κ	viscosity ratio	

Fatigue limit load

This takes into account the fatigue limit of the ring material. Without going into detail here, the fatigue limit load is roughly defined with the aid of the following formula for rolling bearings up to a mean bearing diameter d_m of 150 mm:

$P_u \cong C_0 / 27$	ball bearing	[N]	[5.31]
$P_u \cong C_0 / 8.2$	roller bearing	[N]	[5.32]
P_u	fatigue limit load	[N]	

Contamination coefficient

Hard and firm contaminants that are present in the lubricant can lead to lasting impressions being made in the raceways during the rolling-over process. Local stress peaks caused by over rolling the contaminations reduce the life time of the high precision rolling bearings. A reduction in life time due to hard particles will depend on the size of the bearing, the lubricant film thickness (viscosity ratio κ) and on the size, type, hardness and number of particles. Other sorts of contamination, like the inflow of fluids, cannot, however, be considered in connection with this coefficient.

If severe contamination occurs ($e_c \rightarrow 0$), failure due to wear will become a likelihood. The actual life time will then be much shorter than the calculated life time.

Level of contamination	Coefficient e_c	
	D_{pw} < 100 mm	D_{pw} > 100 mm
Extreme cleanness Particle size same as lubricant film thickness, laboratory conditions	1	1
High cleanness Extra-fine filtering of oil feeding, sealed, greased bearings	0.8...0.6	0.9...0.8
Normal cleanness Fine filtering of oil feeding, greased bearings with shields	0.6...0.5	0.8...0.6
Light contamination Light contaminations in oil feeding	0.5...0.3	0.6...0.4
Moderate contamination Bearing is contaminated with abrasion from other machine components	0.3...0.1	0.4...0.2
Severe contamination Heavily polluted bearing ambience, inadequate sealing	0.1...0	0.1...0
Very severe contamination	0	0

Table 5.5: Contamination coefficients e_c

Viscosity ratio

The viscosity ratio κ is used to rate the quality of the lubricant film formation. It defines the ratio of lubricant viscosity ν at operating temperature to the reference viscosity ν_1.

With κ = 1, the separative lubricant film will be exactly achieved.

Procedural method: with the help of diagram 5.1 initially determine the reference viscosity ν_1 subject to the reference diameter D_{pw} and the speed n.

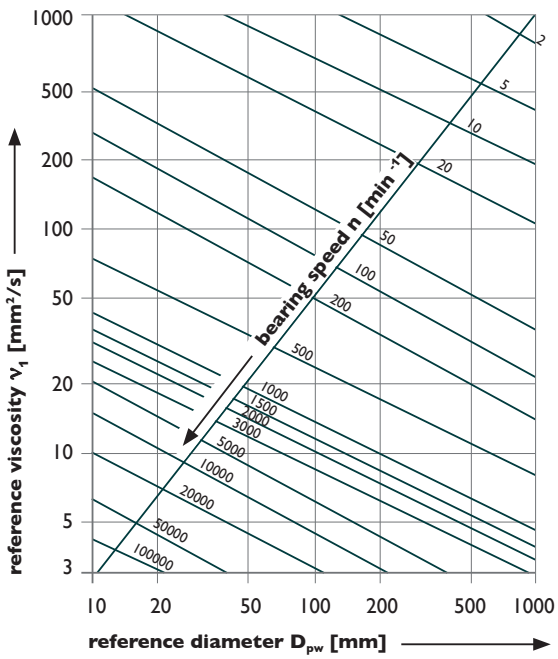

Diagram 5.1: Required kinematic viscosity ν_1

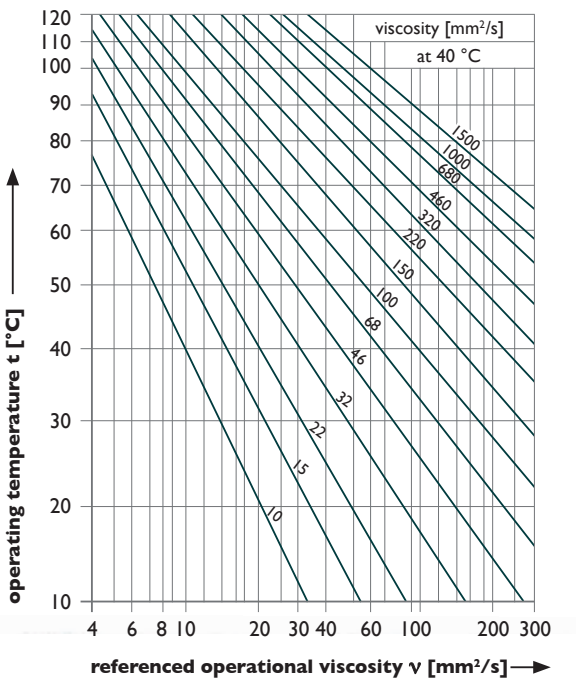

Diagram 5.2: Viscosity at operating temperature for mineral oils

From diagram 5.2, relating to viscosity and temperature, the referenced operational viscosity ν is then read off below the point at which the anticipated operating temperature t intersects with the diagonal graph of the reference viscosities at 40 °C.

From this, the viscosity ratio κ is then established:

$$\kappa = \frac{\nu}{\nu_1} \qquad [5.33]$$

κ	viscosity ratio	
ν	referenced operational viscosity	[mm²/s]
ν_1	reference viscosity	[mm²/s]

In the mixed friction range $\kappa < 1$, higher values may be achieved with the help of suitable additives: Wear can be reduced, corrosion be counteracted, friction reduced and the adhesion of the lubricant in the lubrication gaps improved with the help of special additives like solids,or polar and/or polymer active substances.

Additives should be used if the referenced operational viscosity for ball bearings is < 13 mm²/s, if it is < 20 mm²/s for roller bearings, and if the basic speed rating is relatively low, at $d_m \cdot n < 10{,}000$.

The viscosity ratio κ, in accordance with equation 5.33, is determined by means of diagrams 5.1 and 5.2; but it may also be calculated.

The following is valid for the reference viscosity ν_1:

$$\nu_1 = 45000 \cdot n^{-0.83} \cdot D_{pw}^{-0.5} \quad \text{for } n < 1000\ \text{min}^{-1} \qquad [5.34]$$

$$\nu_1 = 4500 \cdot n^{-0.5} \cdot D_{pw}^{-0.5} \quad \text{for } n > 1000\ \text{min}^{-1} \qquad [5.35]$$

D_{pw} reference diameter of the high precision rolling bearing $= d_m = (d + D)/2$ [mm]

For lubricants with a density that deviates from the reference density of $\rho_1 = 0.89$ g/cm³ at 20 °C the following formula applies:

$$\kappa = \frac{\nu}{\nu_1} \cdot \left(\frac{\rho}{\rho_1}\right)^{0.83} \qquad [5.36]$$

ρ	density of lubricant used	[g/cm³]
ρ_1	reference density	[g/cm³]

For a viscosity ratio $\kappa < 1$ and a contamination coefficient $e_c > 0.2$ the value $\kappa = 1$ in calculations can be used, if a lubricant with active EP additives is used. The life cycle coefficient must then, however, be limited to $a_{DIN} < 3$. In the case of severe contamination ($e_c < 0.2$) the effectiveness of the use of additives must be demonstrated.

The determining of the value a_{DIN} for IBC high precision angular contact ball bearings and IBC high precision cylindrical roller bearings by graph and by calculation is summarised on the following page.

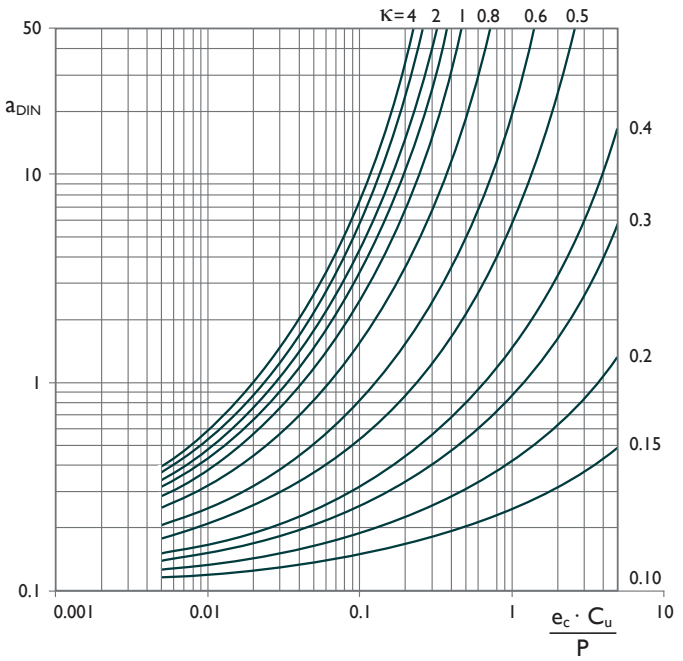

Diagram 5.3: Life cycle coefficient a_{DIN} for IBC high precision angular contact ball bearings

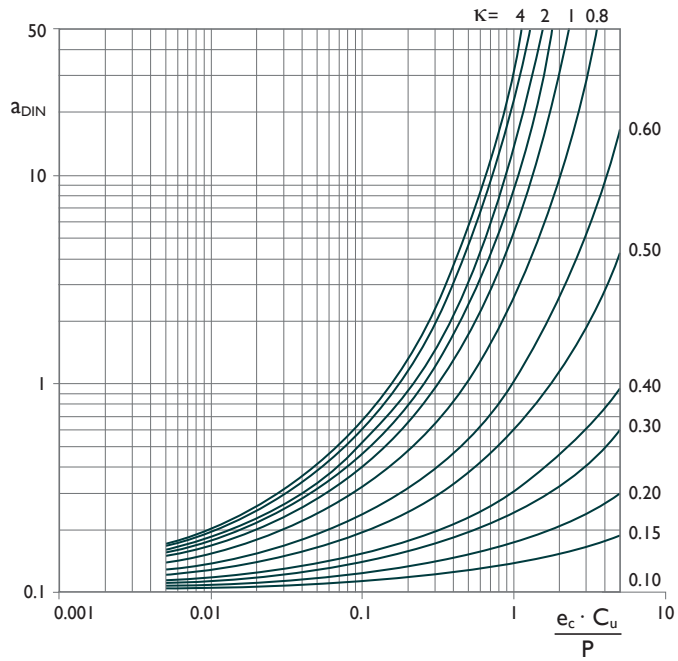

Diagram 5.4: Life cycle coefficient a_{DIN} for IBC high precision cylindrical roller bearings

Calculation rule for a_{DIN} for IBC High precision angular contact ball bearings:

$$a_{DIN} = 0.1 \cdot \left[1 - \left(2.56705 - \frac{2.26492}{\kappa^{0.0543806}}\right)^{0.83} \cdot \left(\frac{e_c \cdot C_u}{P}\right)^{\frac{1}{3}}\right]^{-9.3} \quad \text{for } 0{,}1 \le \kappa < 0.4 \quad [5.37]$$

$$a_{DIN} = 0.1 \cdot \left[1 - \left(2.56705 - \frac{1.99866}{\kappa^{0{,}190870}}\right)^{0.83} \cdot \left(\frac{e_c \cdot C_u}{P}\right)^{\frac{1}{3}}\right]^{-9.3} \quad \text{for } 0.4 \le \kappa < 1 \quad [5.38]$$

$$a_{DIN} = 0.1 \cdot \left[1 - \left(2.56705 - \frac{1.99866}{\kappa^{0.0717391}}\right)^{0.83} \cdot \left(\frac{e_c \cdot C_u}{P}\right)^{\frac{1}{3}}\right]^{-9.3} \quad \text{for } 1 \le \kappa \le 4 \quad [5.39]$$

Calculation rule for a_{DIN} for IBC High precision cylindrical roller bearings:

$$a_{DIN} = 0.1 \cdot \left[1 - \left(1.58592 - \frac{1.39926}{\kappa^{0.0543806}}\right)^{0.83} \cdot \left(\frac{e_c \cdot C_u}{P}\right)^{0.4}\right]^{-9{,}185} \quad \text{for } 0{,}1 \le \kappa < 0.4 \quad [5.40]$$

$$a_{DIN} = 0.1 \cdot \left[1 - \left(1.58592 - \frac{1.23477}{\kappa^{0{,}190870}}\right)^{0.83} \cdot \left(\frac{e_c \cdot C_u}{P}\right)^{0.4}\right]^{-9{,}185} \quad \text{for } 0.4 \le \kappa < 1 \quad [5.41]$$

$$a_{DIN} = 0.1 \cdot \left[1 - \left(1.58592 - \frac{1.23477}{\kappa^{0.0717391}}\right)^{0.83} \cdot \left(\frac{e_c \cdot C_u}{P}\right)^{0.4}\right]^{-9{,}185} \quad \text{for } 1 \le \kappa \le 4 \quad [5.42]$$

5.3 IBC-specific factors

For options that exceed the expanded life time calculation according to DIN ISO 281, IBC has defined further factors that lead to a different life time and that may be taken into account optionally. These factors are assumed under “material-related factors” a_{lb} and a_{wk}.

The factor a_{tr} recognises the positive characteristics of the ATCoat coating if the coating is applied to the raceways. (This type of coating may also be applied solely to the outer diameter in order to eliminate fretting corrosion to the rolling bearing); see Chapter 9 (Materials).

The factor a_{wk} makes reference to the material of the rolling elements and takes into account the considerably longer life time of ceramic rolling elements; there are several reasons for this.

Material-related factors			
Track material	**a_{lb}**	**Rolling element material**	**a_{wk}**
uncoated	1.00	100Cr6	1.0
IR ATCoat	1.15	Si_3N_4	2.0
OR ATCoat	1.05		
IR & OR ATCoat	1.20		

Table 5.6: Coefficients a_{lb} and a_{wk}

When using rolling bearings that have been thermally treated to a higher degree, all components used must be matched to the continuous operation temperature.

The IBC-specific factors enter into the calculation of the expanded life time in multiplicative form:

$$L_{10,erw.,IBC} = a_{lb} \cdot a_{wk} \cdot L_{10,nm} \quad [h] \quad [5.43]$$

$L_{10,erw.,IBC}$	IBC-specific modified life time	[h]
a_{lb}, a_{wk}	material-related factors	
$L_{10,nm}$	modified life time	[h]

In addition, the life time of the grease should be compared to the calculated life time of the high precision rolling bearings in order to ascertain if permanent lubrication is an option, or in order to develop a strategy for continuous or cyclical re-lubrication.

6. Speed Coefficients

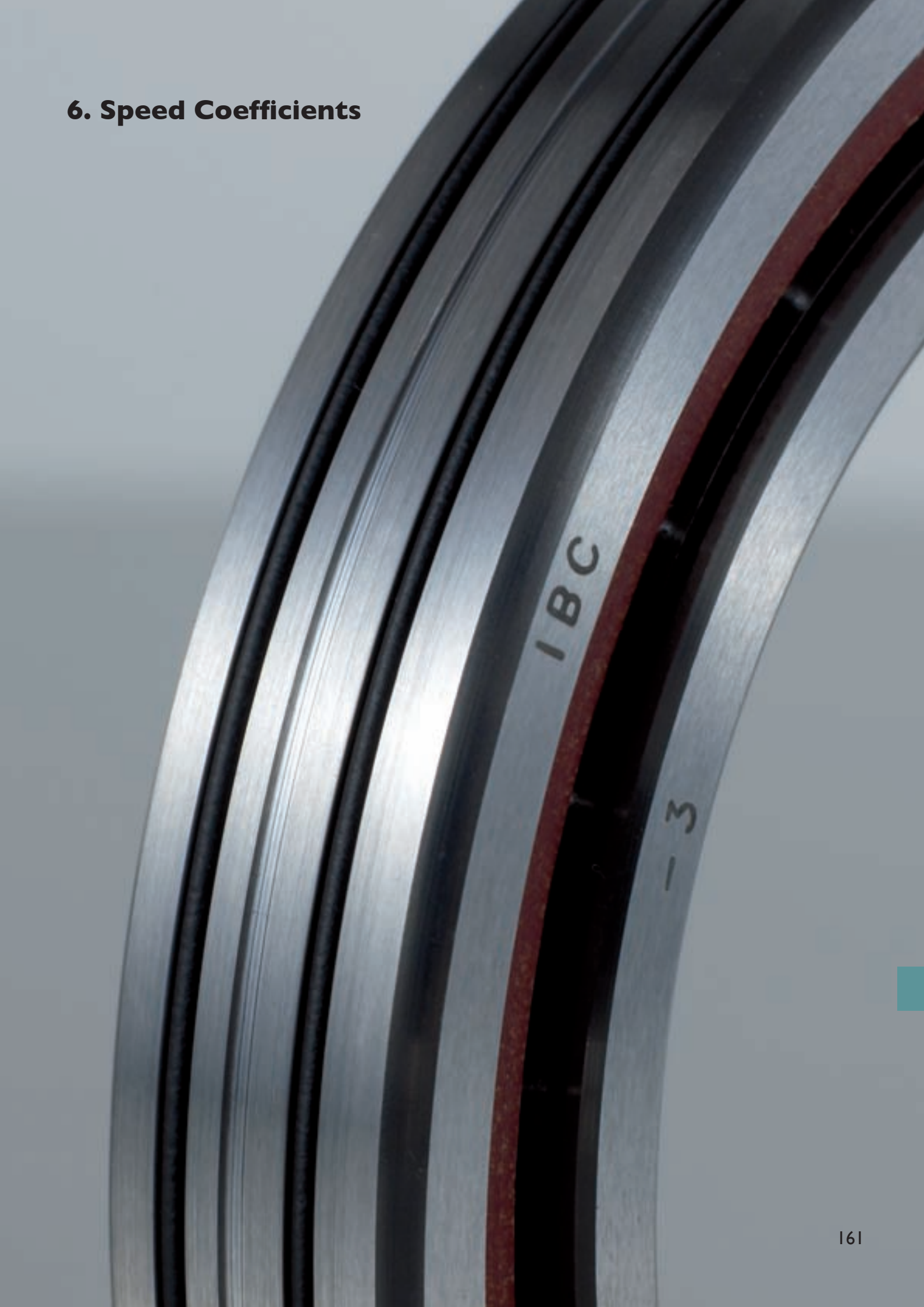

6. Speed coefficients

Under defined conditions, the maximum obtainable operating speed depends on a number of different factors. Most of these factors are numerically known within certain tolerances. For new applications, however, they must be determined and/or optimised with the help of tests.

The maximum attainable operating speed is achieved with a single bearing that is slightly preloaded with springs, has a load of $P \leq 0.06 \cdot C$ and has good heat dissipation.

The operating speed is based on the basic speed rating n for a single high precision rolling bearing that is specified in the respective part of the table. The maximum attainable operating speed is calculated by multiplying the basic speed rating specified in the bearing tables with the speed coefficients mentioned below.

$$N_B = n \cdot n_{av} \cdot n_f \cdot n_k \cdot n_j \cdot n_o \cdot n_r \qquad [\text{min}^{-1}] \qquad [6.1]$$

N_B	operating speed	[min^{-1}]
n	basic speed rating	[min^{-1}]
n_{av}	speed coefficient for preload and/or arrangement	
n_f	load-dependent speed coefficient	
n_k	cage coefficient	
n_j	speed coefficient of lubricant	
n_o	speed coefficient of surface plating	
n_r	kinematic rolling coefficient	

Basic speed rating

This parameter is to be taken from the bearing tables, depending on the type of lubricant (grease or oil).

Speed coefficient for preload and arrangement

Reduced limiting speeds apply to high precision rolling bearings that are set against each other in an arrangement; these limiting speeds may be determined with the aid of the speed coefficients contained in the following table.

Bearing arrangement		Preload			
		X	L	M	H
<	>	1.00	1.00	0.90	0.70
<<	>	0.95	0.90	0.80	0.60
<<	>>	1.00	0.95	0.85	0.65
<>	<>	0.95	0.85	0.75	0.60
<<>	<>	0.80	0.70	0.55	0.50
<<>>	<>	0.70	0.60	0.50	0.40

Table 6.1: Speed coefficients for preloading

The following speed coefficients apply to balanced IBC high precision angular contact ball bearing sets:

Preload combination			Speed coefficient	Preload combination				Speed coefficient
X	X	L	0.90	X	X	X	M	0.65
L	L	M	0.85	L	L	L	H	0.60
M	M	H	0.60					

Table 6.2: Speed coefficient for preload combinations

Vertical shaft arrangement

For vertically arranged shafts, the values mentioned in the table above must be additionally multiplied by factor 0.8, because of the unfavourable lubrication condition and the altered cage guidance.

Load-dependent speed coefficient

The operating speed must be reduced for higher equivalent bearing loads. Diagram 6.1 is used to determine the load-dependent speed coefficient.

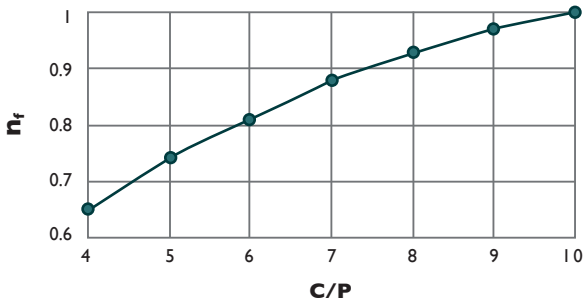

Diagram 6.1: Load-dependent speed coefficient

Cage coefficient

As standard, high precision angular contact ball bearings and high precision cylindrical roller bearings are fitted with cages that allow for the highest rotational speeds. Alternative cage materials may limit the attainable speed. Please consult our technical service teams to find a solution to your special bearing requirements.

Speed coefficient of lubricant

If a grease filling quantity is used that deviates from the standard quantity, and if greases with an especially high or low viscosity are used, this will result in modified factors for the grease lubrication's basic speed rating.

The grease quantities for the standard greasing that is carried out in the factory are specified in table 7.2 in Chapter 7 (Lubrication) with reference to each bearing type.

The speed coefficients for the various greases are also specified in Chapter 7 (Lubrication), in this case in table 7.1.

Speed coefficient of ATCoat coating

Depending on the combination of coated and/or uncoated rings, marked with the designation A11, A15, A21 and A31 (see designation systems), the following coefficients may be taken into account:

A11	A15	A21	A31
1.20	1.20	1.15	1.05

Table 6.3: Speed coefficient depending on the application of the ATCoat coating

An adapted grease distribution run will take account of the significantly altered rolling motion conditions prevalent in ATCoat coated rolling bearing rings.

Kinematic rolling coefficient

The basic speed rating of high precision rolling bearings to be found in the tables applies to the rotating inner ring with a kinematic rolling coefficient of 1; for a rotating outer ring the kinematic rolling coefficient is 0.6.

Optimised spring preload

The centrifugal force acting on the rolling elements influences the contact angle of the inner and the outer ring in different ways. Whereas the centrifugal force tries to pull the rolling elements into the centre of the raceway with reference to the outer ring, and thereby tries to reduce the contact angle, the rolling elements simultaneously rise towards the shoulder of the inner ring and thereby widen the contact angle. The result is a bore-rolling effect that encourages wear. An adapted spring preload may be used to counteract the rising up of the rolling elements at the inner ring.

The dependencies that are used to calculate the ideal spring preload are determined by means of the following formula:

$$F_{Feder} = k \cdot C_0^2 \cdot n_{max}^2 \cdot 10^{-15} \quad [N] \quad [6.2]$$

F_{Feder}	spring preload	[N]
k	contact angle dependant constant	
	k = 6.5 contact angle 15°	
	k = 13 contact angle 25°	
	k = 17 contact angle 30°	
C_0	static load rating	[N]
n_{max}	maximum service speed	[min^{-1}]

Only very seldom can the preload of a mounted spindle be adjusted later on. Therefore a compromise needs to be achieved in determining the preload, with the aim of guaranteeing operational safety for a variety of speed ranges.

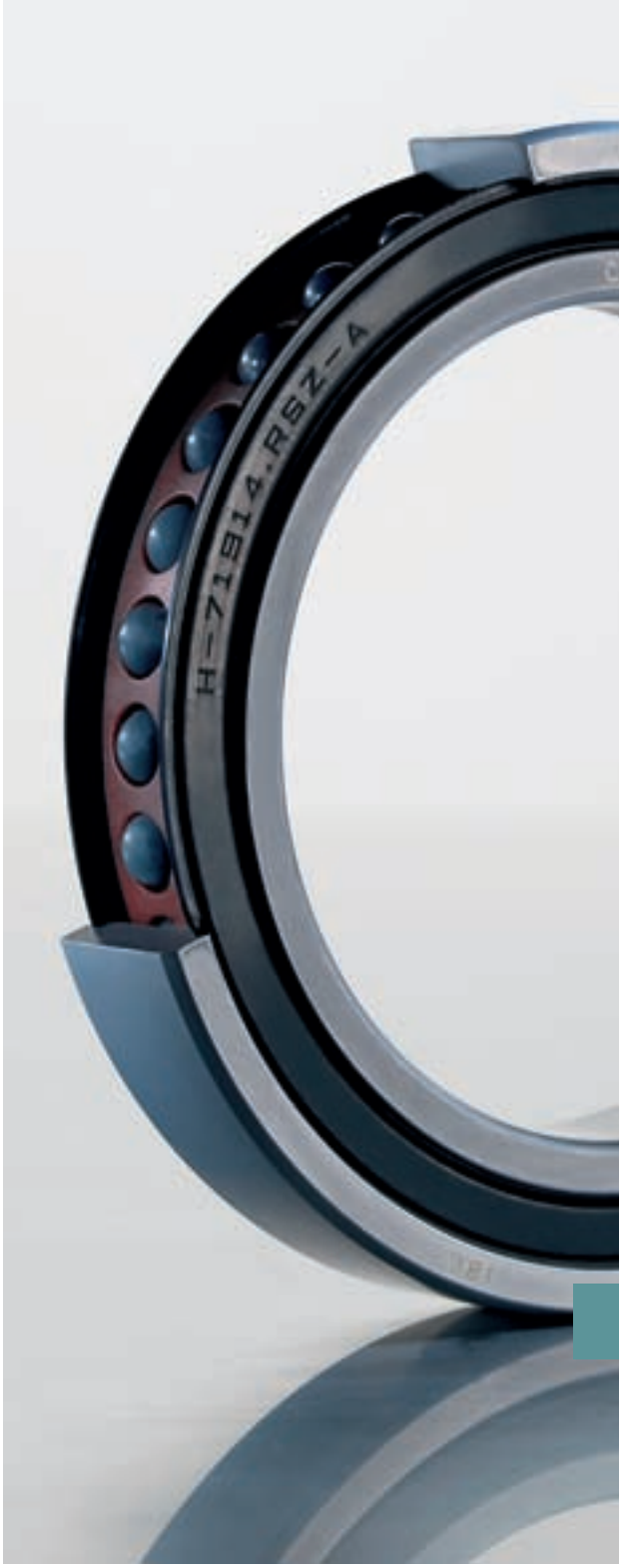

7. Lubrication

7. Lubrication

The choice of the right lubricant has a very great impact on the operational safety of precision bearings, because lubricants reduce friction and wear. The majority of rolling bearings that do not reach their scheduled life time fail because of faulty lubrication.

The following influential factors need to be taken into account:

- rotational speed
- service temperature range
- fatigue
- the load ratio C/P
- the minimum required viscosity ν_1 with reference to the mean bearing diameter
- the lubricant condition κ
- EP additives
- water resistance
- corrosion protection
- noise generation

IBC has a wide range of high-quality greases in stock that are suited to the various kinds of requirements. High precision rolling bearings that are ready-greased during manufacture can be ordered from IBC by specifying the relevant suffix. For such high precision rolling bearings, the only thing the customer needs to do is to carry out the grease distribution run.

Should you require any of these greases for service or pre-assembly, you can order them from IBC in tubes or tins, or in even bigger containers, with the aid of the following order system:

GH76-400	400 g tube of grease GH76
GH62-1000	1 kg tin of grease GH62

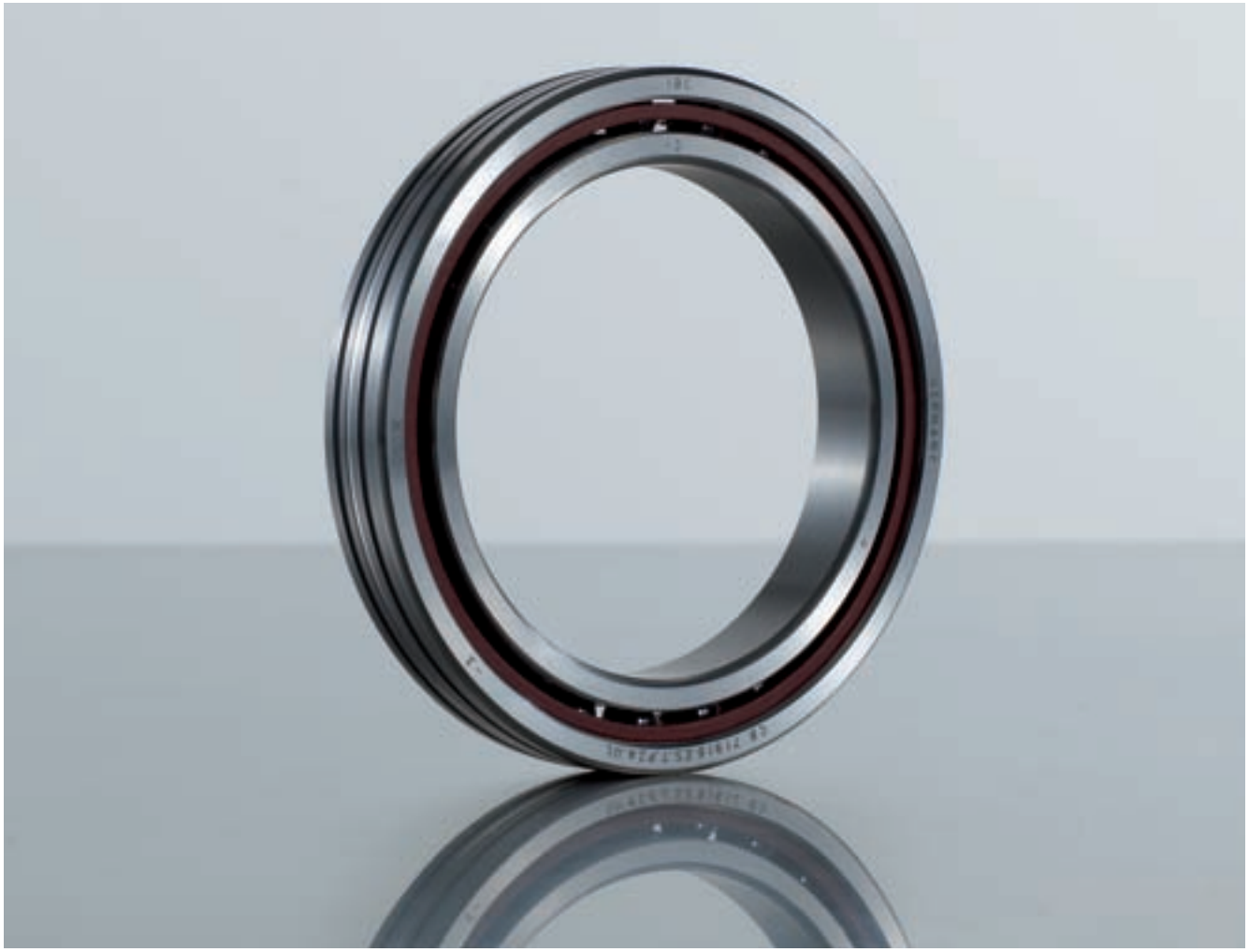

Grease lubrication for rolling bearings

Grease lubrication is the easiest and therefore the most cost-efficient form of lubrication. It is used for the majority of all rolling bearings. Lithium soap greases with mineral basic oil that are of comparatively high viscosity are predominantly used for standard deep groove ball bearings. For high-speed applications, on the other hand, special greases are used, because the synthetic oils and special thickening agents they contain allow for much higher speed coefficients, not least because of their lower viscosity. The greases with the designation GS, or GH for higher temperatures, are especially suitable for high precision rolling bearing applications.

IBC designation	Speed coefficient $d_m \cdot n \cdot 10^{-6}$ mm/min	Temperature range ΔT °C	NLGI Consistency Class	Base oil	Viscosity of base oil ν mm²/s 40 °C	100 °C	Thickener	Density ρ g/cm³	Note
GS 32	1.0	-50 / +120	2	mineral oil + ester oil	15	3.7	lithium soap	0.88	light, noise-tested grease for high rotational speeds and low temperatures
GS 34	1.0	-50 / +120	2	mineral oil + ester oil	21	4.7	barium complex	0.99	high speed and low temperature grease
GS 36	1.8	-40 / +120	2/3	PAO ester	25	6	lithium special soap	0.94	special grease for high-speed spindle bearings in machine tools
GS 41	1.0	-60 / +140	2	SK synthetic oil	18	4	barium complex soap	0.96	high-speed grease, especially suitable for use with tapered roller bearings
GS 75	>2.0	-50 / +120	2	ester oil + SKW	22	5	polyurea	0.92	special grease for high-speed spindle bearings in machine tools
GH 60	0.5	-30 / +175	2	paraffin base	116	12.3	synthetic polyurea	0.98	Used with high-moisture and noise sensitive applications
GH 62	0.5	-30 / +160	2/3	ester oil + SKW	150	18	polyurea	0.88	high-temperature and long-term lubrication grease
GH 68	1.3	-35 / +160	2	ester oil	55	9	lithium soap	0.98	lubrication grease for high temperatures, loads and rotational speeds
GH 70	0.6	-40 / +180	2/3	synthetic oil	70	9.4	polyurea	0.95	very low-noise high temperature grease
GH 72	0.7	-40 / +180	2/3	ester oil	100	12	polyurea	0.97	low-noise, used for for-life lubrication at high temperatures, good corrosion protection
GH 76	1.1	-50 / +150	2	ester oil	18	5	lithium soap	0.96	good noise behaviour, overall low friction, for small and medium bearings
GH 83	0.3	-60 / +250	1	fluorinated polyester oil	300	85	PTFE	1.94	highest service viscosity at very high operation temperatures
GH 88	0.3	-30 / +260	2	perfluorinated polyether	55	9	PU	1.70	high thermal durability, resistant to pressure, vacuum, radiation and media
GH 90	0.6	-50 / +260	2	perfluorinated polyether	190	34	PTFE	1.90	long life time, broad elastomer compatibility; stable with regard to aggressive media
GA 91	0.3	-75 / +260	1/2	silicone oil	55	14	Teflon	1.33	resistant to water, corrosion and oxidation, used in the aviation industry
GF 20	0.3	-40 / +120	1	mineral oil	230	22	aluminium complex soap	0.90	good adhesive power and wear protection, used in the food technology sector

Table 7.1: Overview of IBC standard greases

Bore code	Shaft diameter	IBC High precision angular contact ball bearings							IBC High precision cylindrical roller bearings			
		25% lubrication fill cm³							10% lubrication fill cm³			
	mm	718...	719...	H719...	70...	H70...	72...	73...	N 19.../K	N 10.../K	NN 30.../K	NNU 49.../K
0	10		0.1		0.1		0.2					
1	12		0.1		0.2		0.2					
2	15		0.1		0.2		0.3					
3	17		0.1		0.3		0.5					
4	20		0.3		0.6		0.6	2.0				
5	25		0.3		0.7		0.8	3.0			0.3	
6	30		0.3		0.8		1.1	4.5			0.8	
7	35		0.5		1.2		1.5	5.8			0.9	
8	40		0.8	0.5	1.4	1.0	2.1			0.9	1.0	
9	45		0.9	0.7	1.4	1.1	2.5			1.2	1.3	
10	50	0.3	1.0	0.7	1.9	1.7	2.6		0.4	1.2	1.6	
11	55	0.5	1.2	0.9	2.8	2.3	3.3		0.6	1.8	2.1	
12	60	0.7	1.2	1.1	2.9	2.5	4.3		0.6	1.8	2.3	
13	65	0.8	1.3	1.1	3.1	2.7	5.3		0.6	2.0	2.0	
14	70	0.8	2.2	1.9	4.3	3.7	5.9		1.0	2.9	3.3	
15	75	0.9	2.3		4.4	3.9	6.4		1.0	3.0	3.6	
16	80	1.0	2.4		5.9	5.1	8.2		0.9	3.7	5.1	
17	85	1.6	3.4		6.2	5.5	9.3		1.5	4.0	5.0	
18	90	2.4	3.4		8.1	6.6	11.0		1.6	5.1	6.6	
19	95	1.8	3.5		8.4	7.4	13.7		1.8	5.3	6.8	
20	100	1.8	4.9		8.7	6.8	16.8		2.3	5.3	7.0	6.0
21	105	1.9	5.3		11.7		21.0		2.2	6.8	9.7	6.6
22	110	3.0	6.0		14.3		22.5		2.2	8.2	12.1	6.6
24	120	3.2	8.1		14.4		26.2		3.1	8.3	13.4	10.0
26	130	4.8	10.4		21.4		30.2		3.7	12.6	18.7	11.4
28	140	5.6	11.5		22.0		38.0		3.9	13.0	19.9	11.4
30	150	7.0	16.5		27.8				6.2	16.6	24.6	20.9
32	160	7.0	16.5		39.8				6.4	21.4	30.1	22.6
34	170	9.2	20.2		51.3				7.0	28.7	42.4	24.2
36	180	9.8	27.1		64.4				10.4	35.9	52.2	32.6
38	190	12.3	27.4		67.9				10.3	39.4	54.6	33.8
40	200	13.2	39.0		89.8				14.9	48.5	70.6	20.8
44	220	14.4	41.1		115				16.0	65.7	96.6	53
48	240	21.0	46.0		124				17.7	70.2	109	60
52	260	21.2	75.1						28.1	108	157	102
56	280	48.8	79.8						29.2	104	169	107
60	300	92.7	130						49.7		162	
64	320	98.7	138						50.9		167	
68	340		144						52.1			
72	360		151						57.3			

Table 7.2: IBC grease quantity table for standard lubrication

Grease quantity

The quantity of grease used in a rolling bearing depends on the speed coefficient $d_m \cdot n$, the grease running-in time, the grease service life and possibly also on additional protection being used against external contamination in the case of slow-running rolling bearings.

The speed requirements for machine tool spindles have been on the increase in many areas over the past few years. Thus, the quantity of grease has been adjusted and reduced in order to take account of this development, and the grease distribution run may therefore be shortened, running until a deposit of grease has formed on the sides of the raceways

The improved lubricant quantities also have a positive influence on the flexibility in operation of the bearing. The IBC standard grease quantity is designed to meet these requirements.

Apart from the absolute quantity of grease, the right pre-treatment of the high precision rolling bearing and the insertion of the lubricant in the right place are especially important for the lubricating process. It is essential, therefore, to take the following considerations into account:

It is better to distribute the quantity of grease evenly by means of a syringe, for instance, than to insert the grease with a spatula. In the case of cages guided on the outer ring, important places for greasing are the contact surfaces between the cage and the outer ring of the bearing; other important places are the raceway area and especially the gaps in the rolling element cage.

If requirements for service speed are low, which means limited flexibility is required of the bearing, a significantly higher quantity of grease may be used than the standard quantity. Conversely, the grease quantity should be significantly reduced for very high speed coefficients. In extreme cases this can lead to the free bearing space receiving a 10% lubrication fill.

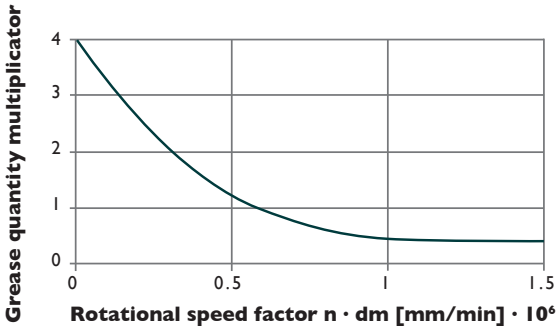

Diagram 7.1: Factor for grease quantity over rotational speed factor

Diagram 7.1 shows the increase factor for the grease quantity compared to the 25% standard grease quantity that is used for IBC high precision angular contact ball bearings. The factor ranges from full lubrication for very low speeds to minimum lubrication for very high speeds. IBC high precision cylindrical roller bearings have a default grease quantity of 10%, which means that the factor given in diagram 7.1 cannot be applied to cylindrical roller bearings.

A further reduction in lubricant quantity may be achieved with the help of dispersion lubrication. This kind of lubrication entails dipping the high precision rolling bearing in an emulsion of solvent with 3–5% grease; the inner ring is turned against the outer ring, and then the bearing is dried. This procedure ensures that all parts of the high precision rolling bearing are coated in lubricant. Dispersion lubrication may also be used as a basis for subsequent normal lubrication.

Grease distribution run

A grease distribution run should be carried out before bringing high precision rolling bearings into service; if possible this running-in should include temperature monitoring.

Different scenarios for the grease distribution run have been proven and tested; they do, however, depend on the test stand used. In high precision rolling bearings that are firmly preloaded against each other, the preload may accidentally and significantly increase during the grease distribution run due to thermal expansion of the inner ring. During the first few minutes of the running-in process, or after restarting with a cold spindle, the inner ring will heat considerably faster and therefore expand more than the outer ring. For a short period of time, the preload will therefore increase, sometimes to an extreme degree, until temperature balance is regained via heat transfer to the outer ring.

This effect is especially critical for bearings in an X-arrangement. It also applies to hybrid bearings, because although their ceramic rolling elements have a smaller coefficient of expansion, they also have reduced thermal conductivity and higher stiffness. Spring preloaded bearing arrangements place slightly fewer demands on the grease distribution run. Due to the axial flexibility of the spring adjustment, they are able to compensate for the deformation of the inner ring.

Provided that a fixed speed is used, the heat generated may be controlled via the ratio of duty cycles to rest periods, whereby the former are extended by degrees and the latter shortened, until steady temperature conditions exist for continuous operation. During this process, cooling phases should always be introduced as soon as the maximum temperature of 60-70 °C is reached. There will come a point at which the temperature steadies, as soon as the excess grease has been displaced from the raceway, but it will then slowly start to fall. The schedule to be found in diagram 7.2 is well established in practice.

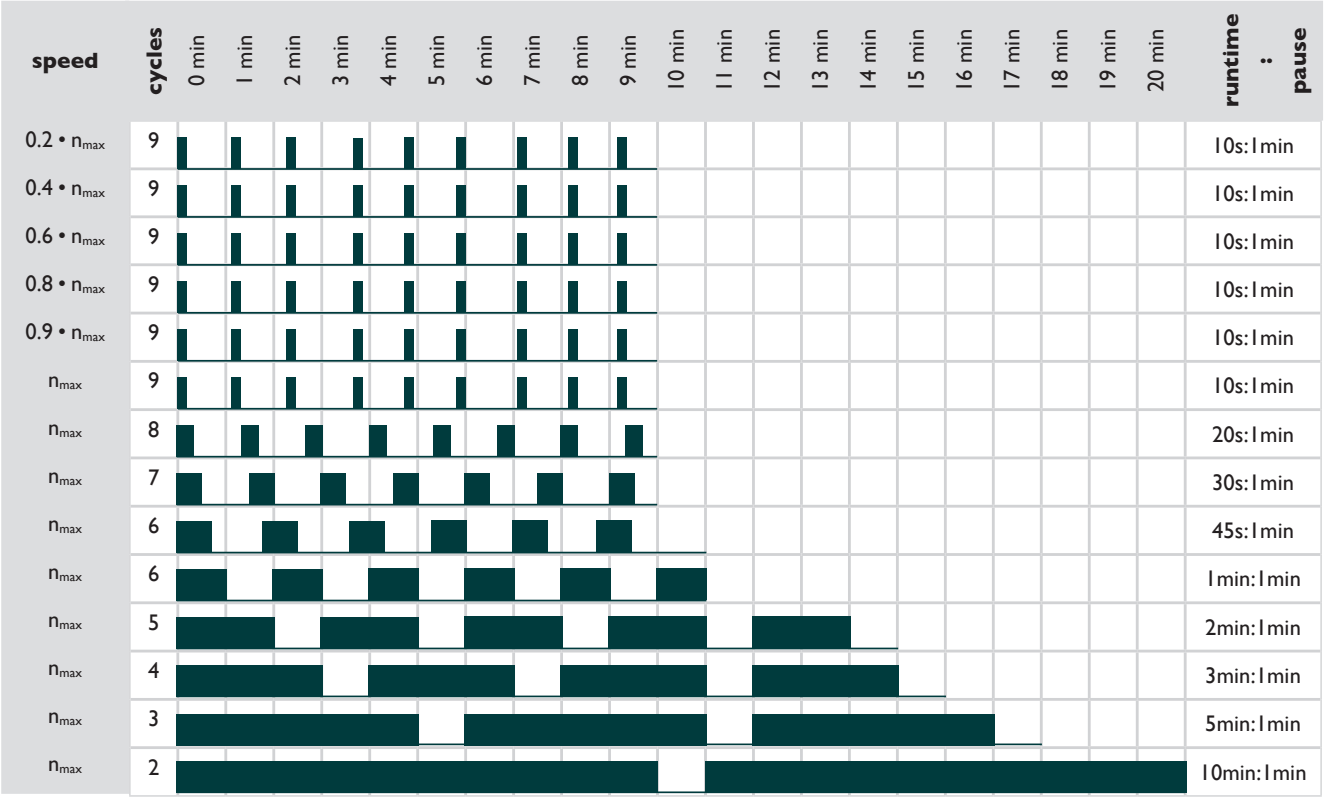

Diagram 7.2: Progressive running-in with repeated short runs, followed by longer periods at maximum speed

Grease life time

Grease life time or grease service life depends on a number of parameters; it may approximately be calculated according to standard DIN 51825 in the following way:

$$t_{fq} = q \cdot t_f \qquad [7.1]$$

t_{fq}	practical grease life time	[h]
q	overall reduction factor	
t_f	unreduced grease life time	[h]

$$q = f_1 \cdot f_2 \cdot f_3 \cdot f_4 \cdot f_5 \cdot f_6 \cdot \ldots \text{ reduction factors} \qquad [7.2]$$

f_1	influence of ambient media	(0.1...0.9)
f_2	influence of dynamics, shocks	(0.1...0.9)
f_3	influence of bearing temperature	(0.1...0.9)
f_4	influence of bearing stress	(0.1...1.0)
f_5	influence of air flow	(0.1...0.7)
f_6	influence of type of mounting	(0.5...0.7)

$$t_f = f\left(k_f \cdot n \cdot d_m\right) \text{ for example from figure 7.3} \qquad [7.3]$$

k_f	rolling bearing design factor 1.6...2.0 for high precision angular contact ball bearings 3.0...3.5 for high precision cylindrical roller bearings	
n	service speed	[min^{-1}]
d_m	mean rolling bearing diameter (d + D) / 2	[mm]

The grease life time may be extracted from the lubricant data sheet that the manufacturer in question supplies.

First of all, the factor $k_f \cdot n \cdot d_m$ is calculated for this process. Above the resulting value, and at the level of the graph for the relevant operating temperature, the grease life time is then read off from the diagram below.

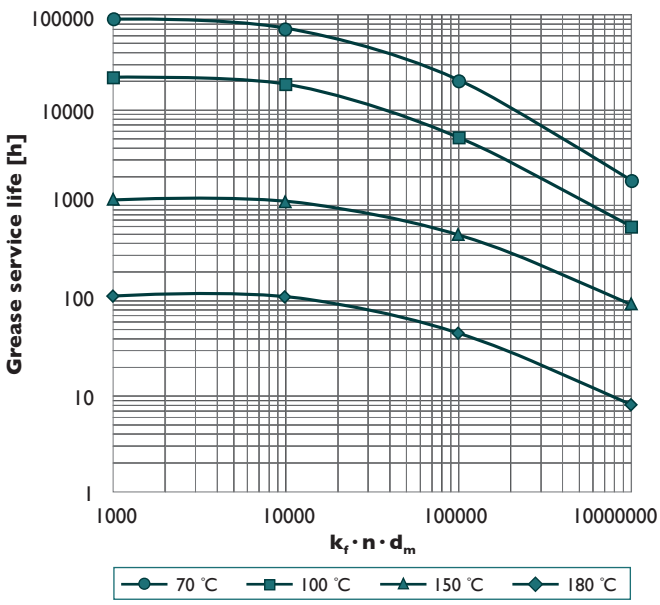

Diagram 7.3: Example of a grease diagram

The grease life time is a theoretical value that is subject to further influencing factors; these factors may further limit the service life of the grease.

Ambient media		
moisture and dust on the raceways		
f_1 (moderate)		0.7...0.9
f_1 (strong)		0.4...0.7
f_1 (excessive)		0.1...0.4
Dynamics		
shocks, vibrations and oscillation		
f_2 (moderate)		0.7...0.9
f_2 (strong)		0.4...0.7
f_2 (very strong)		0.1...0.4
Operating temperature		
f_3 from the relevant grease data sheet		
Bearing stress		
f_4 (moderate)	C/P > 20	1.0
f_4 (medium)	C/P > 10	0.7
f_4 (average)	C/P > 8	0.5
f_4 (strong)	C/P > 5	0.3
f_4 (very strong)	C/P > 2	0.2
f_4 (exceedingly strong)	C/P > 1	0.1
Air flow through bearing		
f_5 (moderate)		0.5...0.7
f_5 (strong)		0.1...0.5
Mounting situation		
f_6 (rotating outer ring)		0.6
f_6 (vertical shaft)		0.5...0.9
Further reduction factors		
f_7 (viscosity ratio κ)		0.5...4
f_8 (single row cylindrical roller bearing)		0.63
f_8 (double row cylindrical roller bearing)		0.3
f_8 (full complement cylindrical roller bearing)		0.04
f_9 (hybrid bearing)		2.5...3.5

Table 7.3: Reduction factors for grease service life

Re-lubrication

In most cases, for-life grease lubrication is the option of choice. If multiple reduction factors limit grease life time, however, provision must be made for the option of re-lubricating the high precision rolling bearing.

A suitably short re-lubricating period must apply in very adverse lubrication conditions. If this is not feasible, the high precision rolling bearings must be replaced in the context of planned maintenance, taking into account the above mentioned factors.

In some cases, automatic re-lubricating systems may be used, that continuously dispense minimal and fixed amounts of grease. High precision angular contact ball bearings with a lubrication facility in the outer ring (S) may also be suitable for this procedure. In certain cases, the lubrication holes must be adjusted to suit the viscosity of the grease.

In the case of fast-running rolling bearings, higher temperatures should be anticipated directly after re-lubricating. Depending on the method of insertion, the newly inserted lubricant first needs to be displaced from the contact area of the rolling elements to the raceways. If necessary, a new grease distribution run may have to be carried out.

Oil/air lubrication

This lubrication system is used to increase speed and operational safety. A minimum quantity of oil is mixed in a fixed ratio with compressed air in an oil/air lubrication unit; this mixture is then finely metered and fed to the bearing as per unit of time.

The oil/air jet lubrication for high precision rolling bearings with cages guided on the outer ring is carried out between the cage and the inner ring at the injection diameter D_{pi} via a small nozzle that is either directed in parallel into the gap or is slightly tilted towards the inner ring. The latter method additionally helps to cool the inner ring – the component that is most exposed to heat.

For each oil jet lubrication ring a nozzle measuring 1 mm to 1.5 mm in diameter and roughly five times the length of the bore diameter is recommended.

High precision rolling bearings that are lubricated via the outer ring present an alternative to this system. In this case, the outer ring of the bearing possesses a radially circumferential supply groove that is surrounded by two O-rings for sealing and at least one supply hole. These high precision rolling bearings are identified by an S after the contact angle designation.

The oil/air mixture, which is fed into the bearing in great quantity, must be able to escape from the rolling bearing, because oil residues can lead to overheating. In order to prevent stagnant oil from forming, discharge channels of an appropriate size must be provided for. If necessary, the oil/air mixture may be extracted by suction (vacuum).

Before bringing into service a spindle lubricated by an oil/air mixture, it is absolutely necessary to ensure that during start-up the rolling bearing is lubricated by a minimum quantity of oil introduced in the course of the mounting process.

Among the lubricating oils that are suitable are alloyed and non-alloyed mineral oils according to standard DIN 51501 and synthetic oils that have a high degree of cleanliness and contain oxidation inhibitors and foam inhibitors.

The reference viscosity according to diagram 5.1 in Chapter 5 (Life time calculation) gives an approximate specification of the required viscosity. But because spindles are often used with a wide range of rotational speeds, many applications will require a compromise. A viscosity of about 7 mm²/s is necessary for spindles used with the maximum speed; spindles used within the medium speed range require a viscosity of about 17 mm²/s.

Oils with a viscosity of < 13 mm²/s should contain EP additives that increase the pressure absorption capacity. If an oil/air lubrication system is used, oil viscosity will have little influence on heating because of the smaller quantity of oil that is involved.

This permits the use of a higher viscosity ratio of $\kappa > 3$ and therefore of viscosities of 32–80 mm²/s at 40 °C, that will help to increase life time.

Oil jet lubrication

Oil jet lubrication is an even safer and an even more complex process. For this type of lubrication, a large amount of oil is supplied, about 100 times the quantity that is used in the oil/air lubrication system. In oil jet lubrication the oil simultaneously serves to dissipate heat. The high churning losses that ensue when this type of lubrication is used must be balanced by a higher driving torque.

For further temperature reduction an interconnected oil recooling system may be used.

For horizontal spindles, the jet velocity of the oil must amount to one quarter of the circumferential velocity of the air vortex that builds up. This velocity is needed so that the oil can break through the vortex. In the case of vertical spindles, however, the application of this type of lubrication is fraught with problems.

With the aid of oil jet lubrication, even higher speed coefficients of over $3 \cdot 10^6$ mm/min can be attained with a minimal rise in temperature. The oils used for this type of lubrication have very low viscosity (about 3 mm²/s at operating temperature).

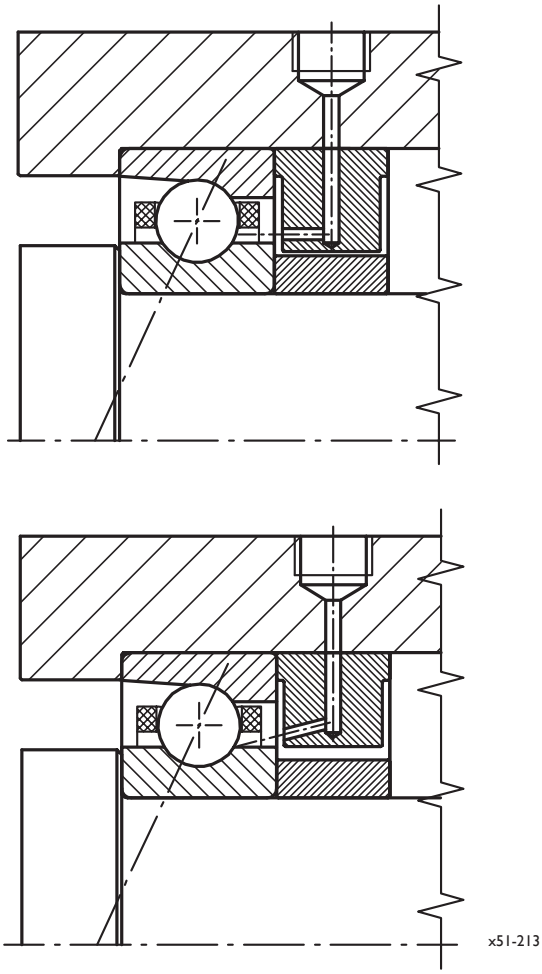

Fig. 7.1: Oil jet lubrication

The complex system of oil/air lubrication is used to achieve very high rotational speeds. If the stress to the rolling bearing is not too high, high precision angular contact ball bearings with smaller diameter rolling elements or rolling elements made of ceramics may also be used. With such rolling elements, even grease lubrication will yield significantly higher speeds when compared to angular contact ball bearings that have larger steel rolling elements.

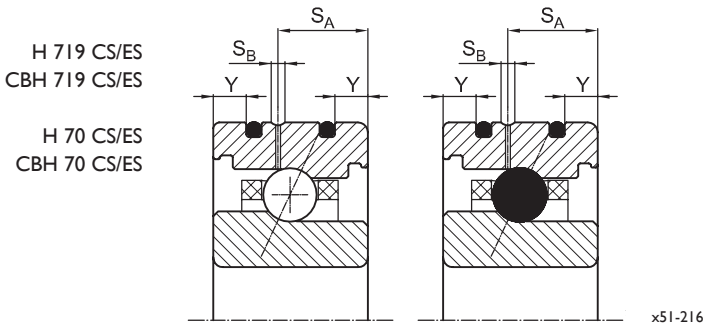

Fig. 7.2: Oil jet lubrication via the outer ring

Basic dimensions			Basic designation	Seal distance	Lubrication groove distance	Lubrication groove width
d	D	B		Y	S_A	S_B
mm					mm	
50	72	12	H 71910 CS/ES	2.2	6.6	1.4
55	80	13	H 71911 CS/ES	2.8	7.2	1.4
60	85	13	H 71912 CS/ES	2.8	7.2	1.4
65	90	13	H 71913 CS/ES	2.8	7.2	1.4
70	100	16	H 71914 CS/ES	3.1	9.3	1.4
75	105	16	H 71915 CS/ES	3.1	9.3	1.4
80	110	16	H 71916 CS/ES	3.1	9.3	1.4
85	120	18	H 71917 CS/ES	4.0	10.4	2.2
90	125	18	H 71918 CS/ES	4.0	10.4	2.2
95	130	18	H 71919 CS/ES	4.0	10.4	2.2
100	140	20	H 71920 CS/ES	4.0	12.0	2.2
50	80	16	H 7010 CS/ES	3.4	9.3	1.4
55	90	18	H 7011 CS/ES	4.3	9.7	1.4
60	95	18	H 7012 CS/ES	4.3	9.7	1.4
65	100	18	H 7013 CS/ES	4.0	10.4	1.4
70	110	20	H 7014 CS/ES	4.0	11.6	1.4
75	115	20	H 7015 CS/ES	4.0	11.6	1.4
80	125	22	H 7016 CS/ES	4.7	12.2	2.2
85	130	22	H 7017 CS/ES	4.7	12.2	2.2
90	140	24	H 7018 CS/ES	5.5	14.5	2.2
95	145	24	H 7019 CS/ES	5.5	14.5	2.2
100	150	24	H 7020 CS/ES	5.5	14.5	2.2

Table 7.4: Dimensions for lubrication via the outer ring. This type of lubrication is also available for the non-high-velocity executions of angular contact ball bearings.

8. Mounting of High Precision Rolling Bearings

8. Mounting of high precision rolling bearings

Preparing the mounting area

IBC High precision rolling bearings for high precision spindles are manufactured with the greatest care under ultra-clean conditions; they are subjected to intensive tests and are then packed in quality packaging in order to prevent transport damage and contamination.

A clean and dust-free working environment should also be ensured during mounting so as to be able to achieve the best possible running performance. Should fine dust or ultra-fine chippings penetrate the bearing, both the precision and the life time of the high precision rolling bearing will be adversely affected. Abrasive dust is especially aggressive and must be kept away by all means. It is advisable to wholly or partially cover the bearing place with protective foil if a break in the mounting process occurs or if mounting is very time-consuming. Under no circumstances should the bearing be touched with a fluffy cloth. The high precision rolling bearings should also be stored in their original packaging and should be kept safe from moisture or aggressive media.

High precision rolling bearings should generally be kept and stored in a horizontal and not in a vertical position and should be fully supported.

Mounting high precision rolling bearings with unsuitable or unclean tools or mounting aids will considerably affect the working of the high precision rolling bearings and will reduce their capability and life time.

We would like to expressly draw your attention to the fact that IBC will assume no liability for damage that is the result of the mounting instructions not being observed and not being complied with. This also applies to the faulty interpretation or dissemination of the instructions as well as to faulty mounting and maintenance.

Because there are so many different possibilities of mounting a rolling bearing we are unable to treat all options here, especially as such options are also very much specific to the design of the adjacent construction. The following remarks therefore make use of the fact that in most applications the high precision rolling bearing is first mounted on the shaft and the outer ring of the bearing fitted afterwards.

Preparing the adjacent parts

Apart from checking for dimension and form accuracy, testing of the adjacent parts (housings and shafts) should also include a check for surface roughness of the bearing seats. In the case of tapered seats, the roundness, the taper angle and the straightness of the tapered surface outline should be checked too.

If spacer rings or precision locknuts have been used, these should be checked to see if they run in parallel and are free of burrs and damage. Only faultless mounting parts guarantee the proper functioning of the high precision rolling bearing. If serial mounting is carried out for applications in the upper speed range, it is sensible to divide the tolerances of the housings and shafts into two or three groups. This will make allocating them to bearing sortings easier, a process that helps to achieve interference and clearance fits that are as identical as possible during mounting.

Detailed information on the sortings of IBC high precision rolling bearings are contained in Chapter 4 (Tolerances).

Preparing the high precision rolling bearings

The high precision rolling bearings must be carefully checked before mounting. During this inspection the drawing details need to be compared to the bearing data on the packaging and/or the shrink-wrap foil.

It is most important to prevent dust particles from entering the bearing. A dust-free mounting environment should therefore be ensured, and the protective foil should only be unsealed just before mounting the high precision rolling bearings. It is advisable to wear protective gloves when removing the high precision rolling bearings from the shrink-wrap foil, as hand perspiration may cause corrosion.

High precision rolling bearings are available in the following three executions:

- open, only preserved
- open, greased and identified by the respective suffix (e.g. GS34)
- sealed, greased and with non-contact sealing

If lubrication of the high precision rolling bearings with grease is carried out by the customer, the customer should ensure the grease is compatible with the preservation oil that has been applied. If this is not the case, the bearing needs to be rinsed and then drained. Under no circumstances should a high precision rolling bearing be dried with compressed air. Suitable detergents may be used for rinsing. When using detergents, please observe the instructions for use supplied by the detergent manufacturer as well as the statutory provisions for occupational health and safety and environmental protection.

It should be noted that the choice of grease is of fundamental importance for the working of a high precision rolling bearing with respect to life time, noise level, operating temperature and rotational speed function. After making your choice, lubricate the bearing with the right quantity of suitable bearing grease, while taking into account the free space available and the intended speed.

Information on the right amount of grease suited to each rolling bearing is contained in the grease quantity table 7.2 in Chapter 7 (Lubrication).

During insertion of the grease, particular attention must be paid to greasing the space between the outer ring shoulder and the cage (friction surface). This can be done with a syringe, for instance.

During lubrication, the high precision rolling bearing must be revolved several times so as to distribute the grease as evenly as possible. This will help to shorten the grease distribution run that is carried out afterwards.

You should preserve the remaining bearing surfaces with the grease base oil or with preserving agents that are compatible to the base oil.

Oil lubrication must be used if the limits of the operating conditions for grease lubrication have been exceeded. In order to prevent a potentially detrimental dry start-up in the case of oil-lubricated high precision rolling bearings, it is essential to apply a quantity of the selected oil directly into the high precision rolling bearing before mounting and operation.

Mounting in the right arrangement

In preparation for mounting, the bearing arrangement must be checked against the drawing, and the bearing sets must be arranged accordingly. Because of their unsymmetrical design, angular contact ball bearings may only be loaded in one axial direction. Strict attention must therefore be paid to their direction while mounting angular contact ball bearings or sets of angular contact ball bearings.

In the case of open high precision rolling bearings (see page 8), one outer shoulder has been ground clear for assembly. External loading is via the shoulder that has not been ground clear. An arrow on the outer diameter of the outer ring additionally identifies the load direction, just as in the case of sealed bearings.

Fig. 8.1: Indication of load direction

IBC high precision rolling bearings are in general universally ground. They may be put together in any arrangement during mounting.

In addition to having individual arrow indicators, those sets of high precision rolling bearings that have been put together in our factory in a particular arrangement are marked with a continuous (large) V-marking that spans all the high precision rolling bearings in the set. These sets must be mounted exactly in the direction of the large V-makring and may not be split up. The point of the V-marking designates the mounting direction and the main load direction.

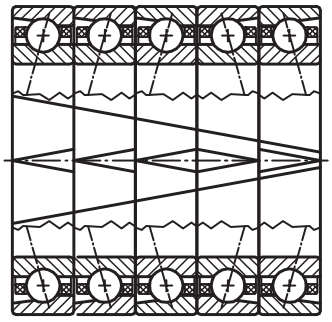

Fig. 8.2: Marked bearing set

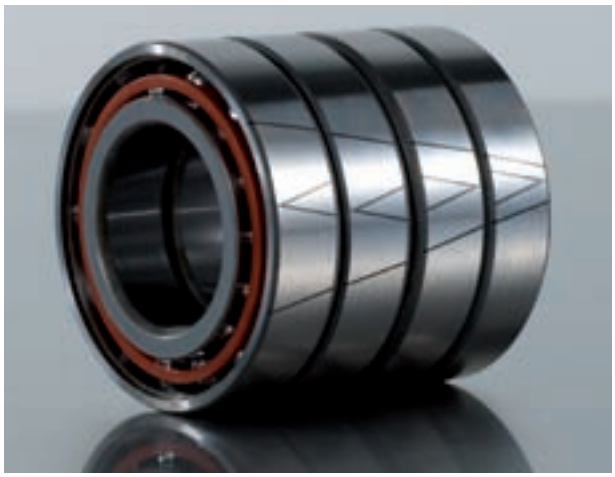

This also applies to high precision rolling bearings that have been put together to form high precision rolling bearing sets that are balanced with regard to their preload. The possible arrangements for high precision rolling bearings are described in Chapter 2.7 (IBC High precision angular contact ball bearing sets).

Sets of high precision rolling bearings that have been put together in our factory with no particular arrangement are identified by the suffixes DU, TU or QU. These sets are packed together, and each bearing carries only an individual arrow indicator on the outer diameter of the outer ring.

All high precision rolling bearings match each other with regard to their tolerances for bore diameter and outer diameter. This means that they feature the same sorting, i.e., they fall in the same tolerance zone for bore and outer diameter. Detailed information on this process is contained in Chapter 4.3 (Sorting and chamfer dimensions IBC high precision rolling bearings).

All high precision angular contact ball bearings with the tolerances P4A, P2H and P2A are identified by the explicit specification of the mean values D_{gm} and d_{gm} on the external packaging and the foil bag. The bearings are sorted into 2 or 3 groups within the allowed tolerance for bore diameter and outer diameter. This makes it easy to put together bearing sets with the same load bearing characteristics.

Specifying the tolerance of high precision rolling bearings, and taking into account the known tolerances of shafts and housings, enables the user to put together combinations within a series of spindles that each have the same overlap of tolerance zones.

Mounting process

Induction heating of the high precision rolling bearing or heating via heated spacer rings is advisable for inner rings that have interference fits. The inner rings are expanded by this process, which makes mounting easier. If you carry out the heating with induction heating appliances, only the metal rolling bearing components will be heated, whereas the cage and the seals will remain thermally unaffected.

It is absolutely essential to make sure the temperature of high precision rolling bearings that are to be mounted in a heated state does not exceed 80 °C.

When mounting high precision angular contact ball bearings, the displacement force should be brought to bear directly on the ring which is currently to be mounted by means of a suitable tool; the displacement force should not be brought to bear indirectly via the counter ring and therefore via the intermediate rolling elements. Loading the rolling elements with mounting forces should generally be avoided. Start with the ring that has the tightest fit.

When fitting the bearing rings you should ensure that these are fitted tightly to the contact surface in order to avoid settling and misalignment. Such occurrences would lead to premature failure, because the bearings would be operating without preload. If high precision rolling bearings have been fitted to the shoulder in a heated state, the bearing rings must be pushed axially against the shoulder once again after they have been allowed to cool.

Preloading the high precision rolling bearings/ tightening torques

Preloading of high precision rolling bearings may be carried out with IBC precision locknuts, with a flange cover that has multiple screws on the pitch circle diameter, or with a central cap screw in the middle of a solid shaft.

Preloading with precision locknuts

If you are preloading high precision rolling bearings with a securable precision locknut with fine thread via the inner rings, the minimum required tightening torque M_D that is needed to overcome the preload may be determined as follows:

$$M_D = 3 \cdot d_{Gewinde} \cdot F_V \cdot K_{FV} \cdot 10^{-4} \quad [Nm] \quad [8.1]$$

M_D	min. required tightening torque	[Nm]
$d_{Gewinde}$	thread diameter of precision locknut	[mm]
F_V	required preload	[N]
K_{FV}	constant of bearing arrangement for F_V of the single bearing = 1 for bearing sets with F_V of preload for the bearing set	

<>	DB	1	<<>>	QBC	2
<<>	TBT	1.36	<<<<>	PBT	1.71
<<<>	QBT	1.57	<<<>>	PBC	2.42

The actual tightening torque is additionally increased by mounting forces due to the effective interference that exists between the bearing rings and the shaft; the quality of the thread and of the affected surfaces have an influence here too. The maximum permissible axial force for high precision rolling bearing rings should be taken into consideration during the process; it may not exceed a lateral contact pressure of about 10 MPa or 10 N/mm² in the area of the raceways, otherwise the raceways may become deformed and the precision locknut may be damaged by excessively high mounting forces. A reduction in mounting forces may be realised if a suitable temperature difference is established between the high precision rolling bearing and the shaft and/or housing.

The following table provides feasible values for the required tightening torque that are meant to serve as a guide:

Bore diameter d mm	Tightening torque M_D Nm			
	718...	719...	70...	72... 73...
6			0.15	
7			0.25	
8			0.32	
9			0.40	
10		0.5	0.80	0.7
12		0.7	1.3	1.0
15		1.0	1.6	1.5
17		1.3	2.2	2.5
20		2	2.9	3.2
25		3	4.0	5.0
30		4	5.6	8
35		6	7.2	11
40		8	9.5	14
45		9	12	17
50	12	11	15	21
55	15	13	20	25
60	18	15	24	31
65	20	18	28	38
70	23	22	33	45
75	25	26	38	53
80	29	31	45	65
85	32	37	55	80
90	35	45	67	100
95	38	52	80	130
100	42	62	95	150
105	46	70	110	190
110	52	80	130	240
120	60	100	160	290
130	68	130	190	350
140	75	160	225	420
150	90	200	275	500
160	115	250	350	590
170	140	310	470	700
180	180	360	600	820
190	240	420	690	950
200	350	520	800	1100

Table 8.1: Tightening torques for high precision angular contact ball bearings

In order to avoid the occurrence of settling, it is advisable first to tighten precision locknuts or cap screws with double the tightening torque, then to unfasten the nuts or screws, and finally to retighten them at the target torque.

Further information on precision locknuts with radial or axial locking and information on how to more precisely calculate the tightening torque is contained in our separate publication **Precision Locknuts TI-I-5020.**

Preloading with flange covers

Clamping the outer rings of the precision rolling bearing to the front side is usually carried out with flange covers that have several screws. With regard to locating bearings, this cover clamps the outer rings of the bearing against a collar in the housing.

Above all in the case of high precision rolling bearings that have a small cross section and belong to production series 718 and 719 (N 19), it may happen that a high, and particularly a one-sided tightening of the screws results in an uneven deformation of the bearing outer ring, as shown in figure 8.3. This may lead to increased radial or axial runout in certain places. Using many small screws is therefore preferable to using only a few large screws. Tightening the screws in an even, controlled and gradual manner will then achieve the desired result.

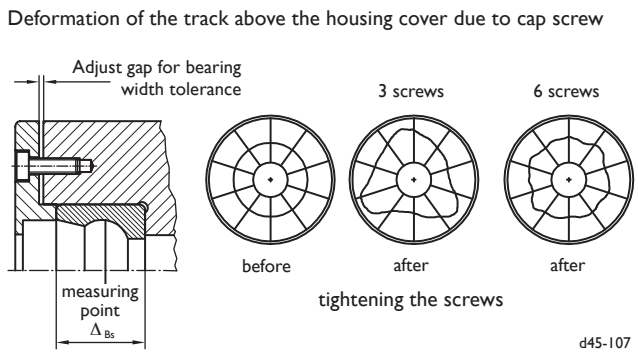

Fig. 8.3: Clamping force distribution at flange covers

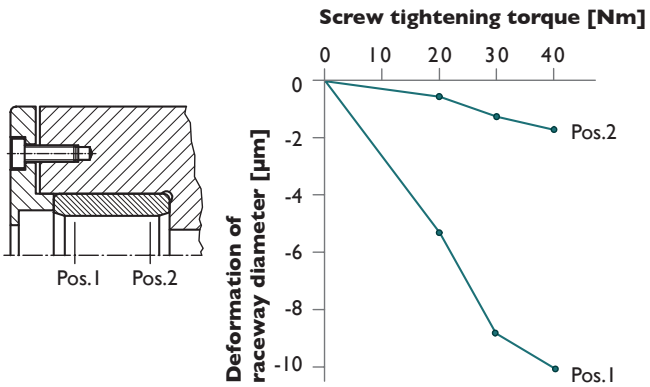

Fig. 8.4: Deformation due to clamping forces

d45-108

The projection of the cover in relation to the housing (preload gap) should be reduced in the following way to avoid individual cap screws exerting an excessively high clamping force in certain places:

- Bearings with d < 100 mm: 0.02 + / - 0.01 mm
- Bearings with d > 100 mm: 0.03 + / - 0.01 mm

When changing rolling bearings, the flange cover or the spacer rings should be readjusted to match the width of the newly inserted rolling bearings. With regard to floating bearings you should make sure that there is no contact with a housing cover, because the cover would restrict the axial expansion of the spindle.

Mounting high precision rolling bearings with tapered bore

IBC high precision cylindrical roller bearings with tapered bore are slid directly on to the tapered part of the shaft. This process expands the inner ring of the high precision cylindrical roller bearing and reduces its bearing clearance δ_r. The endplay is further reduced by the fact that the outer ring is also mounted with a tight fit in the housing.

The bearing clearance is carefully adjusted during the mounting process of the high precision cylindrical roller bearings so as to achieve flawless functioning with the highest possible system accuracy and the longest possible life time.

A lockable precision locknut is used to provide the axial pressure necessary for the adjusting process. The correct axial position of the bearing inner ring is ensured by a sleeve that is ground to measure and is fitted to the shaft between the inner ring of the bearing and the bearing collar.

Determining the sleeve width A requires accurate measuring; the individual steps must also be carried out very meticulously. In principle, there are two different approaches that need to be taken into consideration:

- The inner ring is slid on to the taper. During this process, the enveloping diameter over the roller and/or the raceway diameter is constantly measured until, taking into account the restriction of the outer ring and the way it reduces the bearing clearance, the total remaining bearing clearance corresponds to the required measurement. The remaining axial gap between inner ring and bearing collar then has to be measured with great accuracy, e.g. by feeling one's way with block gauges as shown in figure 8.5. Following this process, the inner ring is released from the tapered seat; a sleeve is ground to the dimension measured and is inserted. Then the assembly of the bearing is completed.

Bild 8.5: Gap measurement

- Carrying out this process in multiple steps is more elaborate and also more conservative. As in the example above, the inner ring is first slid on to the tapered seat on its own, but is not fitted very tightly. The gap between the inner ring of the bearing and the shaft bearing-collar is then measured and the sleeve is made to measure. The enveloping diameter over the roller and/ or the raceway diameter are then measured at the mounted inner ring that is clamped against the sleeve. The sleeve is now ground narrower step by step, and the inner ring is remounted after each step. After each step the measurements are recorded and further procedure is decided upon. This approach allows for a high degree of control and reduces subsequent settling.

The multiple-step procedure is described below. The individual steps are numbered from 1 to n; this is represented in the indexing. Values without index number apply regardless of the relevant step number and do not change during the entire mounting procedure.

Setting the radial clearance or preload δ_r

Cylindrical roller bearings with tapered bore are fitted either with clearance, without clearance or with preload during mounting, depending on the bearing requirements. Different maximum speeds can be attained for each mounting situation; these are listed in table 8.2.

Mounting clearance/preload δ_r	Attainable speed
Single row cylindrical roller bearings	
-5...0 [µm] (preload)	< 0.75 · n* (grease)
0 [µm] (no clearance)	0.75...1.0 · n* (grease)
0...5 [µm] (clearance)	1.00...1.1 · n* (grease)
0...5 [µm] (clearance)	1.00 · n* (oil)
Double row cylindrical roller bearings	
-5...0 [µm]	< 0.50 · n* (grease)
$2 \cdot 10^{-5} \cdot d_m$ [mm] (clearance)	0.50...0.75 · n* (grease)
$4 \cdot 10^{-5} \cdot d_m$ [mm] (clearance)	0.75...1.00 · n* (grease)
$1 \cdot 10^{-5} \cdot d_m$ [mm] (clearance)	1.00 · n* (oil)
*see bearing tables for speed $d_m = (d + D) / 2$	

Table 8.2: Attainable speed for the respective clearance setting

The exact clearance setting is carried out in several steps. First, the interference fit on the outer ring is determined.

$$\Delta_{DAG} = \Delta_D - \Delta_{DG} \quad [\mu m] \quad [8.2]$$

Δ_{DAG}	interference fit outer ring/housing	[µm]
Δ_D	allowance for bearing outside diameter	[µm]
Δ_{DG}	allowance for housing bore	[µm]

With Δ_G, the restriction of the outer ring is calculated with regard to its mounting.

$$\Delta_G = \Delta_{DAG} \cdot \frac{D_0}{D} \cdot \frac{1-(D/D_h)^2}{1-(D_0/D)^2 \cdot (D/D_h)^2} \quad [\mu m] \quad [8.3]$$

Δ_G	restriction of outer ring	[µm]
Δ_{DAG}	interference fit outer ring/housing	[µm]
D_0	raceway diameter of outer ring	[mm]
D	outside diameter of outer ring	[mm]
D_h	outside diameter of housing	[mm]

In the first step of the mounting procedure, the inner ring of the high precision cylindrical roller bearing is slid on to the tapered part of the shaft; the result should be a tight but still easily releasable fit. You should then check if the front side of the ring is parallel to the contact surface and/or at right angles with the shaft axis. The distance A between the bearing ring and the contact surface must be accurately measured.

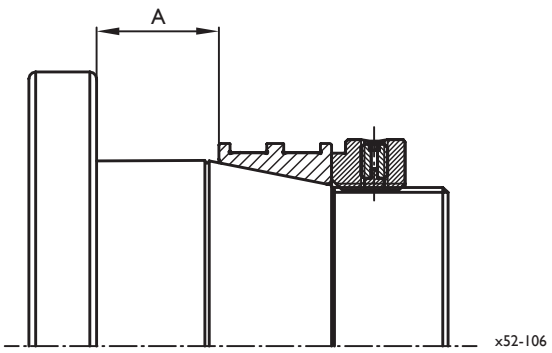

Fig. 8.6: Distance measurement

In the next step, the outer ring of the bearing is mounted by applying very low mounting forces and constantly revolving the ring so as to avoid tilting and the occurrence of scraping marks. In this mounting situation, the existing bearing clearance $\delta_{r,1}$ is then measured. For this measuring process, a dial indicator gauge is affixed to the shaft, and the outer ring of the bearing is moved in the measuring direction of the gauge.

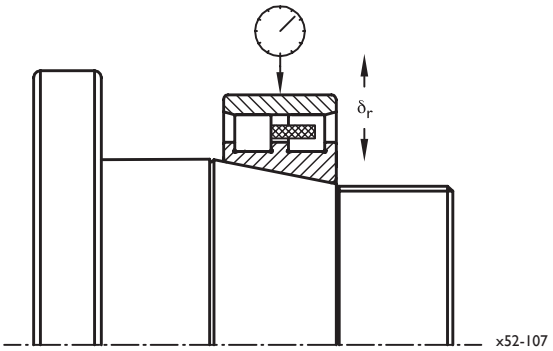

Fig. 8.7: Measuring the bearing clearance

Subtracting the calculated restriction of the outer ring of the bearing Δ_G from the measured radial clearance $\delta_{r,1}$ results in the provisional radial clearance $\delta_{vr,1}$ if the rolling bearing were fully fitted in the housing.

$$\delta_{vr,1} = \delta_{r,1} - \Delta_G \quad [\mu m] \quad [8.4]$$

$\delta_{vr,1}$	provisional radial clearance after complete mounting in step 1	[µm]
$\delta_{r,1}$	measured radial clearance in step 1	[µm]
Δ_G	restriction of bearing outer ring	[µm]

The actual attainable radial clearance $\delta_{r,n}$ is achieved by grinding a spacer sleeve to the nominal dimension A_n in the last process step n; this dimension guarantees the exact distance to the contact surface of the shaft and parallelism between the contact surface and the inner ring of the bearing. In order accurately to achieve the required radial clearance δ_r and/or the required preload, this procedure must be carried out in several steps (1, 2, …, n), because the nominal dimension A_n cannot be determined with adequate accuracy in the first step. The width of the spacer sleeve is recalculated in each subsequent step. The restriction of the shaft is also accounted for during this process, taking into account the hollow shaft ratio.

$$d_d/d_k \quad \textbf{Hollow shaft ratio} \quad [8.5]$$

d_d	bore of hollow shaft	[mm]
d_k	tapered seat diameter in the taper centre	[mm]

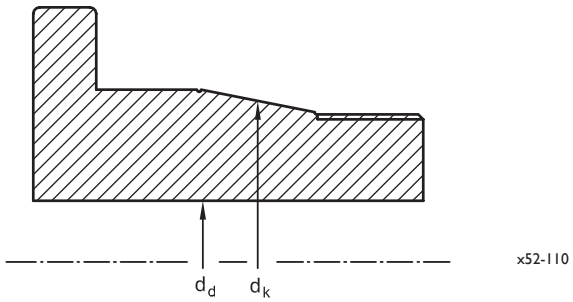

Fig. 8.8: Hollow shaft ratio

While sliding on the inner ring, the radial clearance is reduced by a ratio of 1:12, which also applies to the change in width of the spacer sleeve (F_k = 12). However, if the shaft is hollow it will yield elastically, and the proportionality factor F_k will increase.

d_d/d_k	F_k
0.0...0.1	12
0.1...0.2	13
0.2...0.3	14
0.3...0.4	15
0.4...0.5	16
0.5...0.6	17
0.6...0.7	18
0.7...0.8	19
0.8...0.9	20

Table 8.3: Hollow shaft ratio and proportionality factor

The values mentioned serve as an indicator for a ΔT up to 5 K between inner and outer ring. If fitting is carried out for applications that have high temperature fluctuations, please contact our technical service teams.

The following effectively applies to the new dimension of the spacer sleeve width:

$$A_n = A_{n-1} + F_k \cdot (\delta_{r,n} - \delta_{r,n-1}) \quad [mm] \quad [8.6]$$

n	2, 3, 4, ... process step	
A_n	sleeve width	[mm]
A_1	sleeve width in process step 1	[mm]
F_k	proportionality factor	

The spacer sleeve ground to the dimension A_n is then refitted, and the inner ring of the high precision cylindrical roller bearing is clamped against it so as to force-fit the sleeve. In this condition, the radial clearance $\delta_{r,2}$ is measured.

The measured radial clearance $\delta_{r,2}$ must also be corrected for the restriction of the outer ring of the bearing in accordance with equation 8.4; this results in $\delta_{vr,2}$.

This procedure is conservative, and several steps are needed to attain the required bearing clearance or the required preload. It helps to record each provisional mounting bearing clearance δ_{vr} in relation to the associated spacer sleeve width A in the form of a graph.

This graph will then show the step-by-step approximation to the required bearing clearance; alternatively, it will depict the tendency to achieve the preload if, shortly before reaching the required preload, no more bearing clearance can be measured.

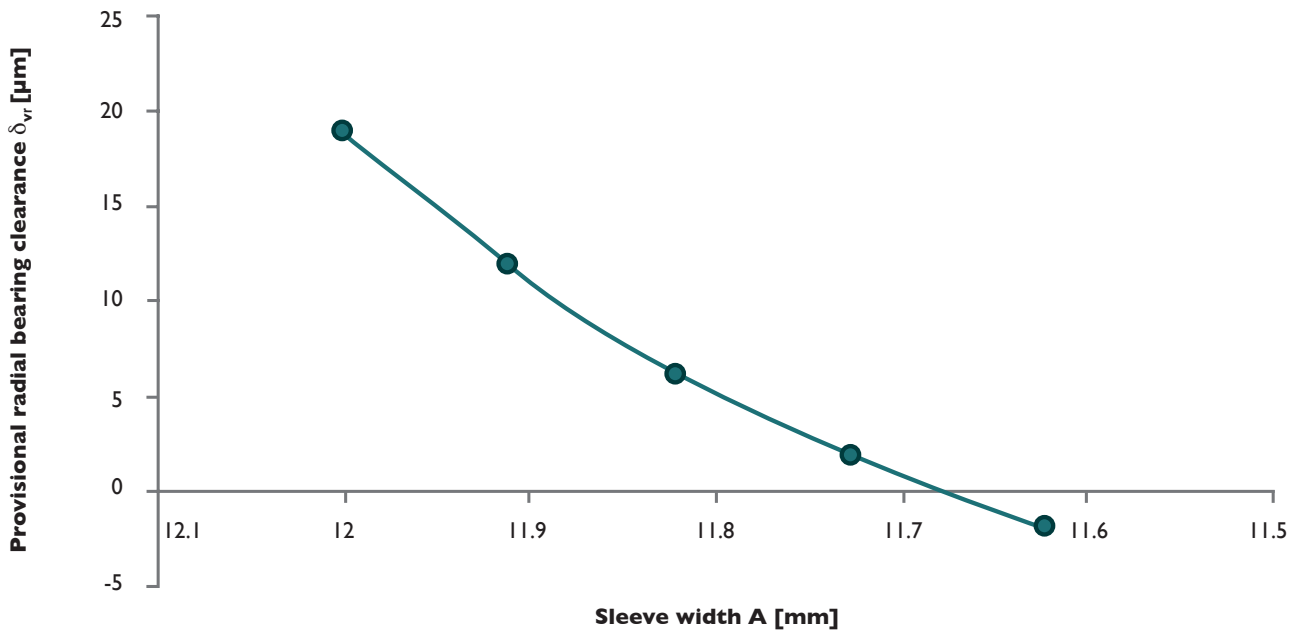

Diagram 8.1: Achieving a preload in 5 steps

9. Materials

9. Materials

Bearing material 100Cr6

Bearing rings and bearing rolling elements are manufactured from vacuum degassed, fine-grained bearing steel 100Cr6 (1.3505). The characteristics of the steel are as follows:

hardness	60...62 HRC
	650...710 HV
density	7.83 g/cm³
specific heat capacity	0.47 kJ/(kg K)
thermal conductivity	46 W/(m K)
electric resistance coefficient	22 µΩ cm
coefficient of thermal expansion	$12 \cdot 10^{-6}$/K
Young's modulus	208000 N/mm²
elastic limit	1370 N/mm²
tensile strength	1570 N/mm²
breaking elongation	max. 0.5%
Poisson's ratio	0.3

Heat treatment

The bearing rings made from 100Cr6 are dimension-stable up to a service temperature of 150 °C as standard. For higher temperatures, higher-quality heat treatment is available upon request, provided all the components are designed for these higher operating temperatures.

ChromoTec

IBC high precision rolling bearings from the ChromoTec series with the prefix X have the full load carrying capacity but a very much higher resistance to corrosion.

hardness	58...60 HRC
	630...690 HV
density	7.67 g/cm³
specific heat capacity	0.50 kJ/(kg K)
thermal conductivity	14 W/(m K)
electric resistance coefficient	60 µΩ cm
coefficient of thermal expansion	$10 \cdot 10^{-6}$/K
Young's modulus	213000 N/mm²
elastic limit	2350 N/mm²
tensile strength	2410 N/mm²
breaking elongation	3%
Poisson's ratio	0.3

Silicon nitride Si_3N_4

The unique combination of extreme hardness, high mechanical strength, resistance to corrosion and abrasion, low thermal and electric conductivity and a low specific weight make silicon nitride the ideal material for use in rolling bearings. In addition, silicon nitride has a lower adhesion compared to steel and therefore puts less strain on the lubricant.

Even if there is initial stage and progressive damage to a rolling element, the ceramic material will in most cases retain its rolling stability.

hardness	1600 HV
density	3.24 g/cm³
thermal conductivity	25 W/(m K)
electric resistance coefficient	10^{13} Ω cm
coefficient of thermal expansion	$3.4 \cdot 10^{-6}$/K
Young's modulus	300000 N/mm²
elastic limit	1050 N/mm²
Poisson's ratio	0.27

Steels for IBC rolling bearing rings

Prefix	Designation	Material No.	USA	Japan	Hardness (HRC)
-	100Cr6	1.3505	SAE52100	SUJ2	60-62
X	X 30 CrMoN 15 1	1.4108	AMS5898		58-60

Table 9.1: Overview of rolling bearing steels

Cage characteristics and features

Bearing cages have a whole range of functions to fulfil in a rolling bearing:

- They keep the rolling elements at a distance, prevent them from touching each other and thereby reduce friction and resulting heat.
- They ensure that the rolling elements are evenly distributed; this guarantees quiet running.
- They guide the rolling elements in the unloaded area of a rolling bearing; this improves the rolling conditions, which in turn prevents detrimental slipping from occurring.

Chemical effects also have to be taken into account. The lubricant and its additives, ageing products that result from lubricant and additives as well as solvents and cooling agents put a strain on the cage materials. That is why widely differing cage materials are available.

Materials for bearing cages

Many cage variations are available, depending on the type of rolling bearing and its size. If bearings are used with high operating temperatures or in problematic operating conditions the use of an alternative type of cage is advisable. Please contact us if you need a special cage for your application.

T	**fabric reinforced phenolic resin cage (standard)**
P	**pocket type nylon cage, PA6.6, fibre-glass reinforced**
M	**brass cage**
PY	**PPS cage**
K	**PEEK cage, fibre-glass reinforced**
S	**high-grade steel cage**
G	**PTFE cage**

The first two cage options mentioned below are the best suited for use in machine tools. Due to their special characteristics, they cover a broad range of applications.

Fabric reinforced phenolic resin (T)

The low specific weight of this material, a low friction coefficient and its high strength make it suitable for the highest speeds with very low heat generation. The maximum operating temperature is limited to a permanent operation temperature of 100 °C.

Polyamide (P)

Polyamide is also used in a fibre-glass reinforced state and combines low weight with good absorption and good sliding properties. This variant is characterised by a shortened running-in time for grease lubrication.

Brass (M)

Solid cages made of brass are very durable and operate reliably under the most difficult conditions. They are suited to rolling bearings with a higher heat stabilisation that are used with high temperatures.

PPS (Polyphenylene sulfide) (PY)

Cages made of PPS are resistant to most acidic, alkaline and organic solutions. They have a higher strength, toughness and fatigue strength than traditional polyamide cage-materials. They are temperature resistant up to 220 °C.

PEEK (Polyether ether ketone) (K)

This material in a fibre-glass reinforced state is suited to operating temperatures of up to 200 °C. If the temperature range is limited to 150 °C, very high rotational speeds are attainable.

High-grade steel (S)

The outstanding characteristic of this material is its chemical resistance. High-grade steel cages are suited to rolling bearings with a higher heat stabilisation too.

PTFE (Polytetrafluoroethylene) (G)

This synthetic material is chemically and thermally highly resistant and has a very small friction coefficient. This cage material is not suitable for the highest speeds, however. Thermal endurance reaches 250 °C.

Synthetic material cages made of fibre-glass reinforced polyamide PA6.6 are suitable for operating temperatures between –20 °C and +120 °C; it should be noted that the lubricant used has a strong impact on service life. If you are planning to use synthetic lubricating greases and oils with EP additives the chemical resistance of the cage material should be checked in advance. In conditions accompanied by higher temperatures, the life time of a synthetic cage may also be reduced if aged oils are used or if the additives in the oil have aged. Oil change periods should therefore be strictly adhered to. Rolling bearings should not be used with a polyamide cage if they operate near ammonia or Freon acting as cooling agents.

Materials for seals

Sealed high precision angular contact ball bearings have the advantage of being both very reliable and safe. The seal protects the rolling bearing from contamination and thereby extends both the life time of the lubricant and the overall system.

Various materials are used, depending on the operating conditions. The standard material acrylonitrile butadiene caoutchouc (NBR) has absolutely proved its worth in practice. This material has a very good resistance to the following media:

- most mineral oils and lubricating greases based on mineral oils;
- regular-grade petrol, diesel fuel and light fuel oil;
- animal and vegetable oils and fats;
- water, as well as emulsions of water and the above mentioned media.

The application temperature range lies between –40 °C and +100 °C. Higher temperatures of up to 120 °C may be realised for short periods.

For applications that have special requirements with regard to the material of the seal, please contact our department for technical applications. We have used seals made from various alternative materials in the past, e.g. fluoroelastomers (FKM), polyacrylates (ACM) and polytetrafluoroethylene (PTFE).

10. IBC High Precision Rolling Bearings with ATCoat Coating

10. IBC High precision rolling bearings with ATCoat coating

Fig. 10.1: Rolling bearing coated with ATCoat

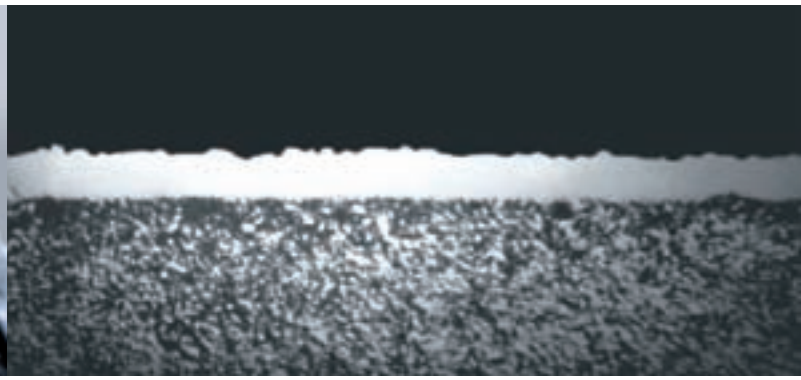

Fig. 10.2: Cross-section of ATCoat coating

Rolling bearings coated with ATCoat

The material surface of a rolling bearing is becoming more and more important to the overall performance of machines, power units and equipment. However, outside influences very often alter the surface quality of materials or corrode the surface material. A whole range of advantages is achieved by coating the material surface of a rolling bearing.

An ATCoat thin dense chromium coating protects the surface from outside environmental conditions and thereby increases the service life of rolling bearings and the life time of machines and equipment. The advantages of this coating also include energy saving and an efficient use of material. The ATCoat process permits the combination of a tough basic material with a firmly adhering, very thin and accurate chromium coat that is free of cracks. This is why, compared to bearings of the same size, those with an ATCoat coating offer very good resistance to wear and corrosion.

Rolling bearings coated with ATCoat are an alternative to rolling bearings made of corrosion resistant steel. A similar corrosion performance is achieved, especially with regard to the functional surfaces. The coating layer of 2–4 µm has a cone-shaped surface texture and gives an especially good performance in extreme conditions. Especially if used in combination with ceramic rolling elements, ATCoat coating permits a significant increase in speed at lower operating temperatures. Fretting corrosion that may form on floating bearings, a phenomenon that occurs due to the micro displacement of the outer rings of the bearing during thermal expansion or vibration, is also avoided. In many cases this leads to a significantly longer and trouble-free operating of units. Because of the special surface topography, the emergency run properties of the bearings are substantially improved. Should the lubrication system fail for instance, the units are still able to run under part load for a certain period of time; they can also be shut down properly. This means that secondary damage can be limited or avoided altogether. IBC high precision rolling bearings with ATCoat coating are therefore often used in unfavourable lubrication conditions.

Such unfavourable conditions exist for example:

- if lubrication is impossible in a certain environment;
- if lubrication may only be effected with low-viscosity media that do not produce a separative lubrication film;
- if very low rotational speeds occur that do not allow an elasto-hydrodynamic lubrication film to develop;
- if oscillating movements without achieving a full revolution, and a separative lubrication film cannot be maintained at the reversal points;
- if sliding occurs in unloaded rolling bearings;
- if, during fast accelerations or decelerations, smearing occurs when bearing rolling elements slide due to the force of continuance that is caused by mass inertia in conjunction with an inadequate preload.

Functions of the ATCoat coating

Friction partner	Static friction (dry) [μ_0]	Sliding friction (dry) [μ]
steel/steel	0.25	0.18
steel/ATCoat	0.17	0.15
ATCoat/ATCoat	0.14	0.12

Table 10.1: Friction coefficients

- reduction of friction
- better adhesive strength of the lubrication film
- separation of materials of the same type
- reduction of cold welding caused by adhesion
- reduction of the formation of fretting corrosion
- the sliding properties of a rolling bearing ring with regard to the shaft or the housing are ensured (important for floating bearings)
- outward corrosion protection and extensive chemical resistance to aggressive materials or tribooxidation
- wear protection due to increased hardness of the coating: 72–78 HRC (1300–1400 HV)

Prefix of ATCoat coated rolling bearings

AC- ATCoat rings
ACC- ATCoat rings + rolling elements Si_3N_4

Suffix of ATCoat coated rolling bearings

A11 coated inner and outer ring
A15 coated inner and outer ring, corrosion resistant rolling elements and cage
A21 coated inner ring
A31 coated outer ring

11. Vibration Analysis

11. Vibration analysis

All rolling bearings produce noise during operation. This signal may be accessible and may be monitored, or it may be recorded by technical measuring systems and can then be analysed, depending on the installation situation.

An increase in noise level may be the sign of a bearing defect in the making. A more detailed evaluation is carried out by analysing the impact excitation frequencies. These can then be assigned to specific parts of the rolling bearing if the speed and the bearing geometry are accurately known.

The frequencies can be calculated according to equations 11.1 to 11.4 if there is a revolving inner ring. The table below contains an example of how this is done.

The frequency spectrum of the rolling bearing sound itself is a continuous sound frequency spectrum, with more or less distinct spectral lines. This sound frequency spectrum is analysed with the aid of an envelope analysis which differentiates between the audible sound frequencies of the bearing and the actual impact excitation frequencies. If the frequency spectrum of the envelope shows prominent intensities of impact excitation frequencies, this indicates that a rolling bearing defect has occurred (see table 11.2).

$$RPFO = \frac{n \cdot Z}{120} \cdot \left(1 - \frac{D_w}{D_{pw}} \cdot \cos\alpha\right) \quad [Hz] \quad [11.1]$$

$$RPFI = \frac{n \cdot Z}{120} \cdot \left(1 + \frac{D_w}{D_{pw}} \cdot \cos\alpha\right) \quad [Hz] \quad [11.2]$$

$$RRF = \frac{n}{120} \cdot \left(\frac{D_{pw}}{D_w} - \frac{D_w}{D_{pw}} \cdot \cos^2\alpha\right) \quad [Hz] \quad [11.3]$$

$$CRF = \frac{n}{120} \cdot \left(1 - \frac{D_w}{D_{pw}} \cdot \cos\alpha\right) \quad [Hz] \quad [11.4]$$

RPFO	rolling element passing frequency, outer ring	[Hz]
RPFI	rolling element passing frequency, inner ring	[Hz]
RRF	rolling element rotational frequency	[Hz]
CRF	cage rotational frequency	[Hz]
n	operating speed of inner ring	[min^{-1}]
Z	number of rolling elements	
D_w	diameter of rolling elements	[mm]
D_{pw}	reference diameter	[mm]
α	contact angle	[°]

	Damage frequency CB 7207.C.T.P4A.UL Input	
contact angle	**15**	α [°]
operating speed	**1000**	n [min^{-1}]
number of rolling elements	**9**	Z [pieces]
diameter of rolling elements	**11.112**	D_W [mm]
reference diameter	**53.5**	D_{pw} [mm]

	Output in Hz	Reference number
rotational frequency (n/60)	**16.667**	**1.0000**
cage (CRF)	**6.6025**	**0.3961**
outer ring (RPFO)	**59.422**	**3.5653**
inner ring (RPFI)	**90.578**	**5.4347**
rolling element (RRF)	**76.782**	**4.6069**

Table 11.1: Example of a worksheet for rolling bearing frequencies

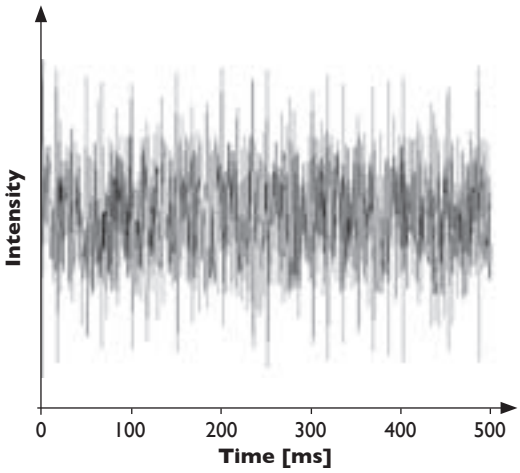

Fig. 11.1: Recurring pulses may indicate that the rolling bearing has been damaged

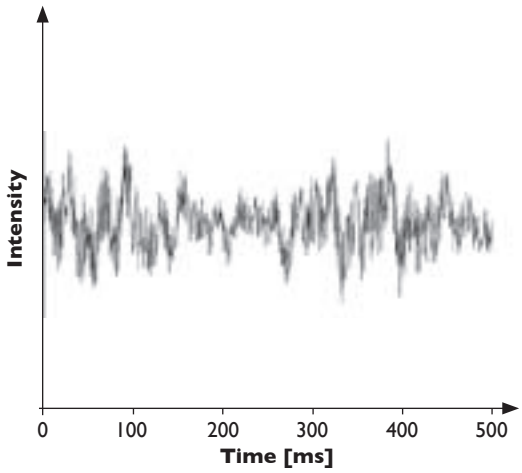

Fig. 11.2: Structureless noise of a faultless rolling bearing

Cause	Dominant frequency	Measuring direction of vibration	Note
damage to rolling element	RRF	radial	Impact excitation from damaged rolling elements occurs together with their rotational frequency. The cage rotational frequency is also noticeable at the edge. Harmonics also occur to a high degree.
damage to cage	RRF, CRF	radial, axial	A damaged cage only seldom leads to an unambiguous signal. Frequencies occurring are often variable. RRF may occur out of alignment.
damage to rings	RPFO, RPFI	radial	Depending on the location and the position of the damage, RPFO or RPFI may be more or less clearly identified. A developing signal intensity is often distinguishable over time. A migrating of the damage to the rolling elements may be observed on the basis of RRF.
lubrication	various	radial, axial	Faulty lubrication can lead to a high-frequency, wide-band and comparatively strong signal. Re-lubricating will reduce the signal. Monitor the signal strength of the bearing for a renewed increase.
unbalance of rotor	n / 60	radial	The rotational frequency of the rotor is clearly distinguishable in the signal. It is a distinctive point of reference in the frequency spectrum.
misalignment	n / 60, n / 120	radial, axial	A signal due to misalignment occurs for full or half passing frequency, this is however not very meaningful for determining the defect. A different kind of inspection is therefore required.
excessive clearance	n / 120	radial, axial	An increased signal occurs for half rotational frequency but also often for full rotational frequency. The signal is not very characteristic, however. An additional inspection of the bearing with regard to clearance is required.

Table 11.2: Cause and associated frequency

Checklist for Bearing Specifications

Operating conditions:

Axial load: _____ N

Radial load: _____ N

Type of load: ❑ static

❑ dynamic

Speed: _____ min^{-1}

Load application: ❑ rotating inner ring

_____ h

❑ rotating outer ring

_____ h

❑ load rotates with IR

❑ load rotates with OR

❑ load direction fixed

Fitting position: ❑ vertical

❑ horizontal

Temperature: _____ °C

Ambient medium: _____

Lubrication: _____

Life time until now: _____

Designated life time: _____

Other (bearing clearance, preload, etc.)

_____

_____

Adjacent parts:

Shaft:

Diameter: _____ mm

Tolerance: _____

Bore:

Diameter: _____ mm

Tolerance: _____

Bearing used until now:

Designation: _____

Manufacturer: _____

Annual requirement: _____ units

Purchased from: ❑ directly from manufacturer _____

❑ through a dealer _____

Company: _____

Contact person: _____

Telephone: _____

Date and name: _____