Koyo®
Torrington® Needle Roller Bearings

Product / Application Handbook

JTEKT Group

CONTENTS

Introduction

Product Breadth & Identification	**2-3**
Bearing Selection	**4**

Product Overviews

Radial Needle Roller and Gage Assemblies	**5**
Drawn Cup Needle Roller Bearings	**6**
Drawn Cup Roller Clutches	**7**
Heavy Duty Needle Roller Bearings	**8**
Track Rollers	**9**
Thrust Bearings, Assemblies, Washers	**10**
Combined Needle Roller Bearings	**11**
Needle Roller Accessories	**12**

Needle Roller Bearing Applications

Automatic Transmissions	**14-15**
Manual Transmissions	**16-17**
Valvetrain Components	**18**
Steering Columns	**19**
Automotive Accessories	**20-21**
Drivetrain Components	**22**
Power Transmission	**23**
Sport Vehicles	**24-25**
Marine Applications	**26-27**
Power Tools	**28**
Consumer Products	**29**
Mechanical Pumps	**30**
Industrial Machinery	**31**

Global Bearing Business Operations **32-33**

PRODUCT BREADTH

A complete line of needle roller bearing designs ranging from 3 to 160 mm bore (1/8 to 6 1/4 in.) is offered.

DRAWN CUP NEEDLE ROLLER BEARINGS, available in 3 mm to 140 mm bore (1/8 to 5 1/2 in.), are designed to support radial loads and reduce friction between rotating components. The low cross section of the drawn cup bearing provides maximum load-carrying capability with minimum space required.

DRAWN CUP ROLLER CLUTCHES AND BEARING ASSEMBLIES, available in 3 to 30 mm bore (1/8 to 1 1/4 in.), are designed to transmit torque between the shaft and housing in one direction and allow free overrun in the opposite direction. When transmitting torque, either the shaft or the housing can be the input member.

ROLLER AND CAGE ASSEMBLIES, available in 3 mm to 165 mm bore (1/8 to 6 1/2 in.), consist of a complement of needle rollers held in place by a cage. With no inner or outer ring, the low cross section provides maximum load-carrying capability within the smallest envelope. The mating shaft and housing are normally used as inner and outer raceways.

THRUST BEARING ASSEMBLIES AND WASHERS, available in 5 mm to 160 mm (3/16 to 6 1/4 in.) bore, consist of a complement of needle rollers held in place by a cage.

Needle roller and cage thrust assemblies are complements of small diameter needle rollers arranged in a spoke-like configuration. Needle rollers are equally spaced by means of a cage whose web section separates the rollers and provides guidance to keep them tracking in an orbital path. The purpose of these assemblies is to transmit a thrust load between two relatively rotating objects while greatly reducing friction.

Needle roller and cage thrust assemblies also can be unitized with lipped washers which service as raceway surfaces for the needle rollers. Washers can be supplied separately or can be mechanically unitized to the needle roller thrust assemblies for ease of handling.

HEAVY-DUTY NEEDLE ROLLER BEARINGS, available in 5 mm to 100 mm bore (3/16 to 4 in.), consist of a machined and ground channel-shaped outer ring with a complement of needle rollers retained and guided by a cage. The thick outer ring provides maximum load capacity and shock resistance with a relatively small radial cross section.

TRACK ROLLERS/CAM FOLLOWERS, available in 10 mm to 110 mm O.D. (3/8 to 4 1/4 in.), are characterized by their thick-walled outer rings that run directly on a track. The thick outer rings permit high load-carrying capability while minimizing distortion and bending stresses.

ENGINE BEARINGS include a full line of advanced bearing assemblies for automotive engine valve trains. These assemblies help reduce friction and optimize performance in both overhead valve and overhead cam engines. They include roller rocker arms for overhead valve (pushrod) engines, roller finger followers for overhead cam engines, valve lifter rollers for overhead valve and overhead cam engines.

PRECISION NEEDLE ROLLERS have multiple uses in a variety of industries including automotive, truck, farm and construction equipment, two-cycle engines, outboard engines and consumer durables. Needle rollers are mainly used as bearing rolling elements to transmit torque and reduce friction. They also can serve as precision shafts or as precision locating pins.

PLANETARY GEAR SHAFTS have multiple uses in a variety of industries including automotive, truck and farm and construction equipment. The shafts are used in planetary gear sets, differentials and engine valve trains.

PRECISION PINS AND SHAFTS are crafted from the highest quality steel within a TS16949/ISO9000/AS9100-certified manufacturing facility. Pins and shafts come in a larger variety of configurations and materials and flexible product volumes. These pins and shafts are found in applications such as gasoline fuel systems components, diesel systems components, aerospace rollers and precision rollers (DFAR-compliant), planet pins, racing applications, rollers for bearing assemblies, gear shafts and steering column pins.

NEEDLE ROLLER BEARINGS

To identify: NEEDLE ROLLER AND CAGE RADIAL ASSEMBLY

As a general rule, there are no identifiable markings on needle roller and cage radial assemblies to indicate the bearing part number. Parts are specified by bore diameter, outside diameter and width (e.g. K24x28x10H).

To identify: STUD-TYPE TRACK ROLLERS

The complete bearing part number is marked on the stud face or stamped on the face of the outer ring (e.g. KRE22.2RS). Yoke-type track rollers (without stud, not shown) have the part stamped on the face of the inner or outer ring.

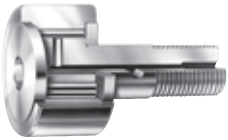

To identify: NEEDLE ROLLER THRUST BEARINGS

As a general rule, there are no identifiable markings on needle roller and cage radial assemblies to indicate the bearing part number. Parts are specified by bore diameter and outside diameter (e.g. AXK1024).

To identify: COMBINATION BEARINGS

As a general rule, there are no identifiable markings on combination bearings to indicate the bearing part number. Parts are specified by the product series and bore diameter (e.g. RAXZ510).

To identify: DRAWN CUP NEEDLE ROLLER BEARINGS AND DRAWN CUP ROLLER CLUTCHES

The complete bearing part number is stamped on the face of the outer ring (e.g. HK1412, FCL-10-K). Also, on clutch assemblies, the mounted clutch assembly engages when the housing is rotated relative to the shaft in the direction of the arrow and the word LOCK stamped on the outer ring.

To identify: NEEDLE/CYLINDRICAL ROLLERS

As a general rule, there are no identifiable markings on loose rollers to indicate the part number. They are packaged in bulk or in strips. Loose rollers are specified by the product series, end geometry, diameter and nominal length (e.g. NRO.B 1.5x11.8 G2).

NEEDLE ROLLER BEARING SELECTION

Because of the possible combinations of roller complement orientation, bearing cross section thickness and raceway construction needle roller bearings should be given extra consideration for roller bearing applications selection. The table below should be used as a general guideline for the application of needle roller bearings.

Table A-1. Needle roller bearing capability comparison based on suitable oil lubrication

Bearing type/ design capability	Radial needle roller and cage assembly	Drawn cup needle roller bearing caged	Drawn cup roller bearing full complement	Needle roller bearing and inner ring	Track roller	Thrust needle roller and cage assembly	Needle rollers	Combination bearing radial/thrust
Radial load	High	Moderate	High	High	Moderate	None	Very high	High
Axial load	None	None	None	None	Low	Very high	None	High
Limiting speed	Very high	High	Moderate	Very high	Moderate	High	Moderate	Moderate
Slope tolerance	Moderate	Moderate	Very low	Moderate	Moderate[1]	Low	Very low	Low
Grease life	High	High	Low	High	Moderate	Low	Low	Low
Friction	Very low	Very low	High	Very low	Low[2]	Moderate	High	Moderate
Precision	Very high	Moderate	Moderate	High	High	High	Very high	High
Cross section	Very low	Low	Low	Moderate	High	Very low	Very low	High
Cost	Low	Low	Low	High	High	Moderate	Very low	Very high

[1] "Low" for full complement track rollers
[2] "Moderate" for full complement track rollers

Radial needle roller and cage assembly

Drawn cup needle roller

Heavy-duty needle roller

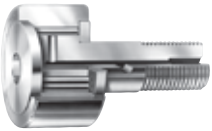

Track roller

Thrust needle roller and cage assembly

Combined radial/thrust

Drawn cup roller clutch

RADIAL NEEDLE ROLLER AND CAGE ASSEMBLIES

Overview: Needle roller and cage assemblies feature a complement of needles held in place by a cage with no inner or outer ring. The minimal cross section provides maximum load-carrying capability within the smallest envelope.

- **Sizes:** 3 mm – 165 mm (0.1181 in. – 6.4961 in.) bore.
- **Markets:** Automotive and truck transmissions, agricultural and construction equipment, two-cycle engines, pumps and compressors.
- **Features and Benefits:**
  - Unitized design simplifies handling and installation while allowing for increased lube flow.
  - Split and segmented designs allow mounting at difficult positions on crankshafts and gear shafts.
  - Controlled contour rollers optimize contact stress distribution.
  - Special manufacturing processes help increase roller fatigue resistance and minimize axial drift effects in critical applications.
  - Optimized cage piloting geometry minimizes pressure velocity effects.
  - Steel or polymer cages are available to suit your application requirements.
  - Coatings are available to help avoid corrosion and improve wear resistance.

DRAWN CUP NEEDLE ROLLER BEARINGS

Overview: Drawn cup needle roller bearings support radial loads and reduce friction between rotating components, with a drawn outer shell serving as a raceway for the rollers. The small cross section of the drawn cup bearing provides high load-carrying capability with minimum required space. Drawn cup bearings are easily installed with a press fit in the housing.

- **Sizes:** 3 mm – 139.7 mm (0.1181 in. – 5.5000 in.) bore.
- **Markets:** Transmissions, transfer cases, engines, valve trains, steering and braking systems, axle supports, outboard engines, power tools, copiers, fax machines, paper-moving equipment and appliances.
- **Features:** Available in two basic designs: full complement and caged.
- **Benefits:** Full complement bearings handle high radial load-carrying capability. Caged bearings provide high speed and maximum lubricant-retention capability.

DRAWN CUP ROLLER CLUTCHES

Overview: Drawn cup needle roller clutches are similar to drawn cup needle roller bearings in design; however, they allow free rotation in only one direction while transmitting torque in the opposite direction. These designs use the same small radial section as drawn cup needle roller bearings and are offered as clutch-only units or as clutch and bearing assemblies.

- **Sizes:** 3.2 mm – 35 mm (0.1250 in. – 1.3780 in.) bore.
- **Markets:** Office equipment, paper-towel dispensers, exercise equipment, appliances and two-speed gearboxes.
- **Features:** Compact, lightweight and operate directly on a hardened shaft.
- **Benefits:** Installation is easily accomplished with a simple press fit.

HEAVY-DUTY NEEDLE ROLLER BEARINGS

Overview: Heavy-duty needle roller bearings consist of a machined and ground channel-shaped outer ring with a complement of needle rollers, and a cage. The high-strength cage retains and guides the rollers. An optional lubrication groove and hole in the outer ring facilitates re-lubrication. These bearings can be used with or without a machined and ground inner ring, depending on the suitability of the shaft as a raceway surface.

- **Sizes:** 5 mm – 335 mm (0.1969 in. – 13.1890 in.) bore.
- **Markets:** Gear pumps, sheaves, automotive transmissions and two-cycle engines.
- **Features:** Thick outer ring provides maximum load capacity and shock resistance with a relatively small radial cross section.
- **Benefits:** Optimum speed and lubrication-retention capability.

TRACK ROLLERS

Overview: Track rollers (also known as cam followers) are characterized by their thick-walled outer rings that run directly on a track. The thick outer rings permit high load-carrying capability while minimizing both distortion and bending stresses. Sealed designs with internal thrust washers help extend service life under conditions of infrequent lubrication.

- **Sizes:** Stud-Type: 10 mm – 130 mm (0.3937 in. – 5.1180 in.) O.D.
  Yoke-Type: 10 mm – 300 mm (0.3937 in. – 11.816 in.) O.D.
- **Markets:** Ram support rollers, material handling and indexing equipment.
- **Features:** Available in two basic designs: with an inner ring for straddle mounting in a yoke or with an integral stud for cantilever mounting.
- **Benefits:** High load-carrying capability with minimized distortion and bending stresses. Extended service life under conditions of infrequent re-lubrication.

THRUST BEARINGS, ASSEMBLIES, WASHERS

Overview: Thrust needle roller and cage assemblies are complements of small diameter needle rollers, arranged in a spoke-like configuration. Needle rollers are equally spaced by means of a cage, its web section separates the rollers and provides guidance to keep them tracking in an orbital path. The purpose of these assemblies is to transmit a thrust load between two relatively rotating objects while greatly reducing friction.

Thrust needle roller and cage assemblies also can be unitized with lipped washers to serve as raceway surfaces for the needle rollers. Washers can be supplied separately or can be mechanically unitized to the thrust needle roller and cage assemblies for ease of handling.

- **Sizes:** 5 mm – 240 mm (0.1969 in. – 9.4488 in.).
- **Markets:** Automotive automatic and manual transmissions, automotive accessories (compressors, steering gears, etc.) agricultural and construction equipment.
- **Features:** One-way fool-proof assembly features, anti-rotation locking features and lubrication flow enhancements.
- **Benefits:** High-speed performance and application flexibility.

COMBINED NEEDLE ROLLER BEARINGS

Overview: Combined bearings incorporate a radial needle roller bearing and a thrust roller bearing into a convenient unitized package.

- **Sizes:** 5.000 mm – 70.000 mm (0.1966 in. – 2.7559 in.) bore.
- **Markets:** Industrial applications, machine tools, and automotive transmissions.
- **Features:** Available with needle roller or cylindrical roller thrust component, machined and drawn outer rings are available, some sizes available with integral dust caps.
- **Benefits:** An effective alternative to separate radial and thrust bearings.

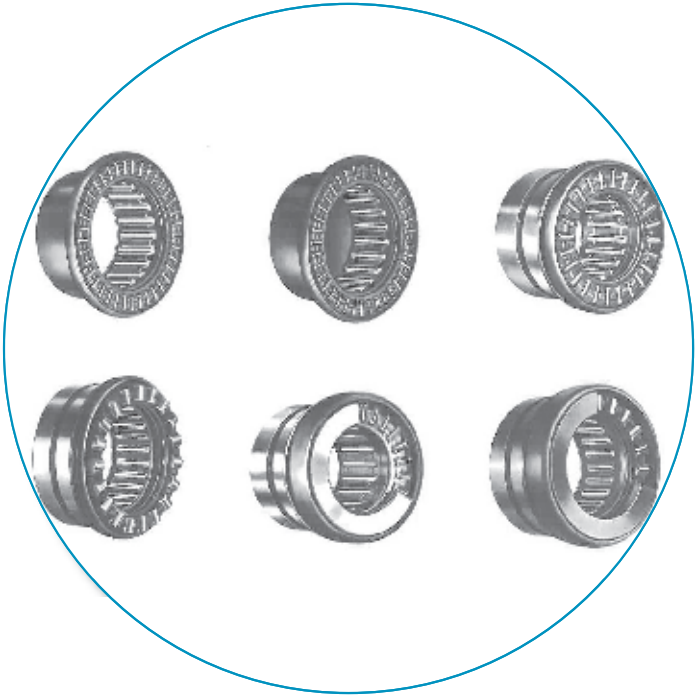

NEEDLE ROLLERS, ACCESSORIES

NEEDLE/CYLINDRICAL ROLLERS

Overview: Loose needle and cylindrical rollers are mainly used as bearing rolling elements to reduce friction and torque in rotating and pivoting applications. However, these precision rollers have many other uses, such as shafts or locating pins.

- **Sizes:** Diameters from 1 mm (0.0394 in.) to 15 mm (0.5906 in.). Lengths from 2.5 mm (0.0984 in.) to 69 mm (2.7165 in.).
- **Markets:** Vehicle and industrial transmissions, universal joints, and two-cycle engines.
- **Features:** Cylindrical and needle sizes are available. Needle rollers are available with flat and rounded-ends; metric series needle rollers available in Grade 2, 3 or 5.
- **Benefits:** Provide the maximum load-carrying capacity, within the smallest envelope, at a low cost.

METRIC INNER RINGS

Overview: Inner rings are made from bearing-quality steel, and their O.D. and bore are precision-ground. They function as the inner raceway for a needle roller bearing by providing a surface that meets all shaft raceway design requirements (hardness, surface finish, roundness, etc.).

- **Sizes:** 5 mm (0.1969 in.) bore to 180 mm (7.0866 in.) outer diameter.
- **Markets:** Automotive, truck, power transmissions, and industrial applications.
- **Features:** Available with and without chamfers, some are available with a profiled outer diameter.
- **Benefits:** When it is not practical to manufacture the shaft to raceway quality, an inner ring allows a customer to obtain acceptable bearing performance.

APPLICATIONS

AUTOMATIC TRANSMISSIONS

As power density and performance demands continue to increase in automatic transmissions, JTEKT has developed a large array of innovative bearing designs. These offerings help reduce mass, increase power ratings, minimize assembly time, and reduce costs. Analytical evaluations, in-house testing, and new material developments allow JTEKT to solve the most demanding automotive design problems.

FRICTION REDUCTION/FUEL ECONOMY

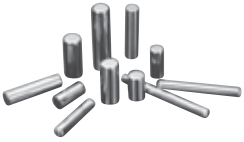

Needle rollers for planet gears

Planet thrust washers

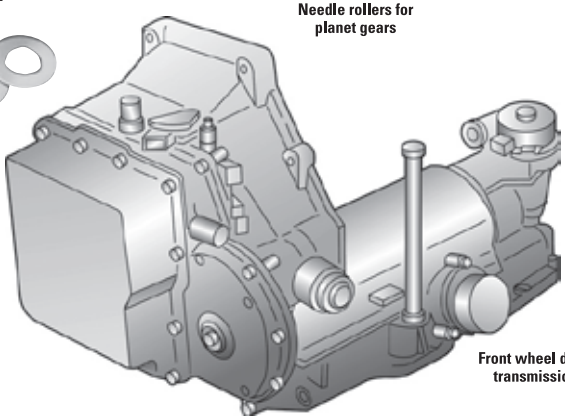

Front wheel drive transmission

Caged drawn cup bearings

Drawn raceway sleeves

Bearing thrust washers

Unitized thrust bearing assemblies

Inverted drawn cup bearings

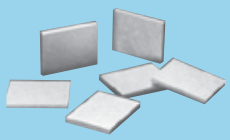

Pump vanes for transmission pumps

Park rods

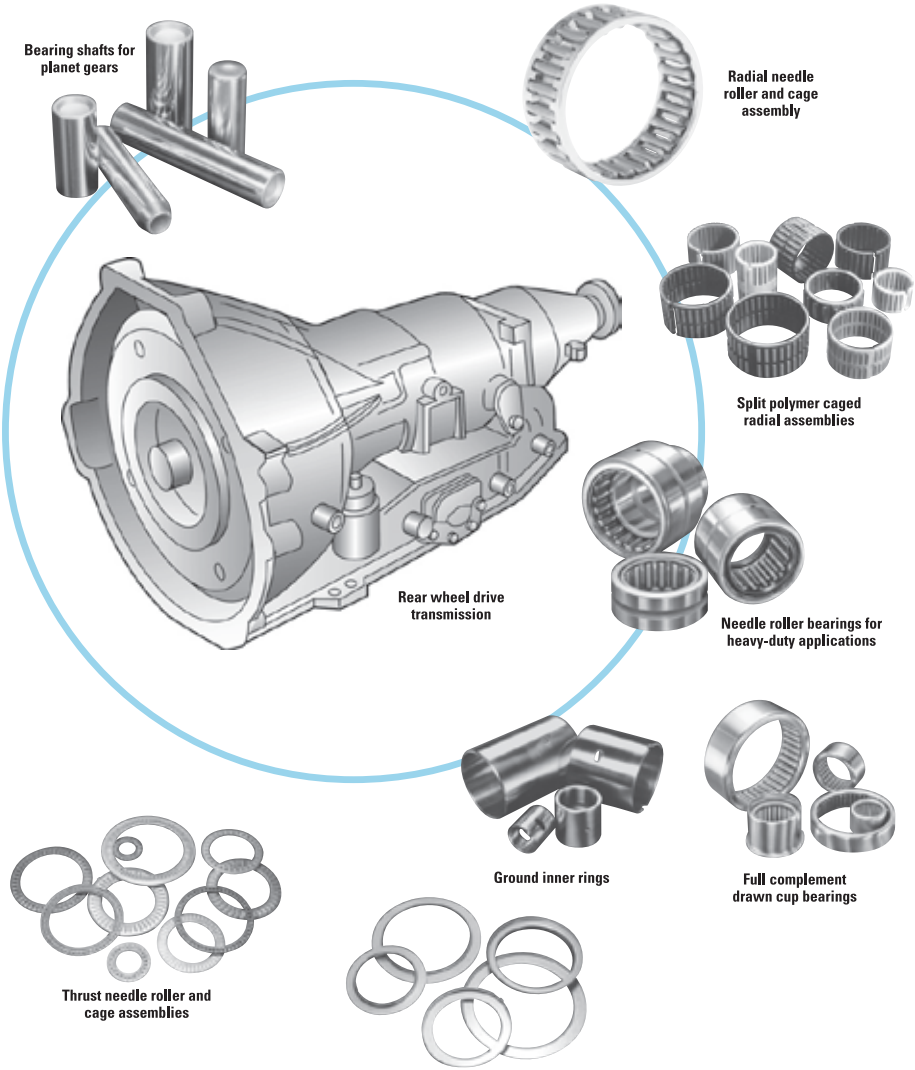
Bearing shafts for planet gears
Radial needle roller and cage assembly
Split polymer caged radial assemblies
Rear wheel drive transmission
Needle roller bearings for heavy-duty applications
Ground inner rings
Full complement drawn cup bearings
Thrust needle roller and cage assemblies

MANUAL TRANSMISSIONS

JTEKT offers a wide range of highly reliable bearings tailored specifically for manual transmissions. These bearings allow designers to minimize cross sections while attaining peak load-carrying capability in a very cost-effective package. JTEKT has considerable experience with providing in-depth engineering analysis and creative design solutions for the most demanding transmission applications.

FUEL ECONOMY

Radial needle roller and cage assemblies (Split polymer type)

Caged drawn cup bearings

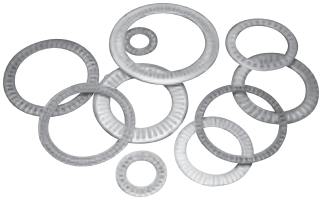

Thrust needle roller and cage assemblies

Radial needle roller and cage assembly

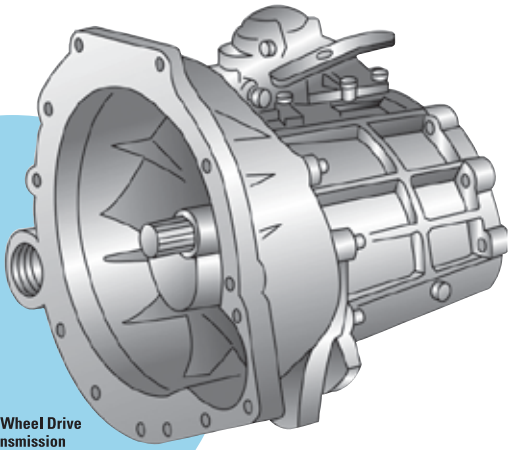

Front Wheel Drive Transmission

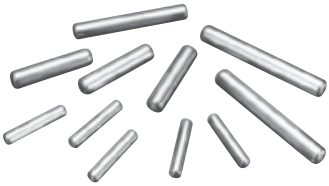

Needle rollers

Unitized thrust bearing assemblies

Heavy wall drawn cup bearing

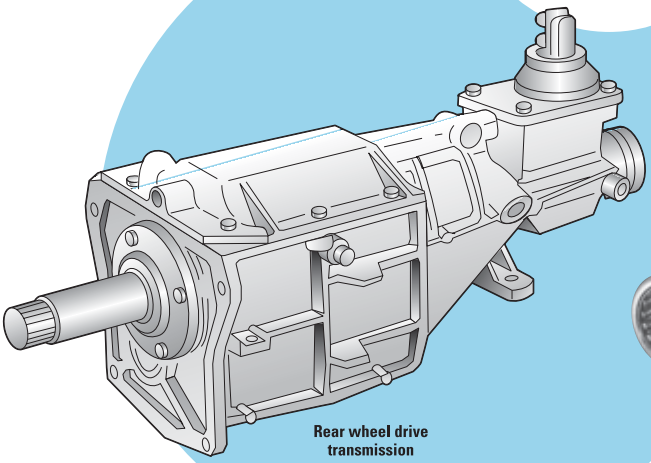

Rear wheel drive transmission

Needle roller bearings for heavy-duty applications

Drawn raceway sleeves

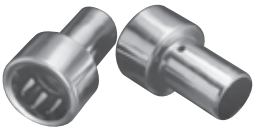

Full complement drawn cup bearings

Full complement drawn cup bearings

VALVETRAIN COMPONENTS

JTEKT's technical and analytical leadership in valvetrain components results in superior products that optimize mass, stiffness, moment of inertia and noise. These design features contribute to the demands of increased engine operating speeds, improved fuel economy and better overall performance.

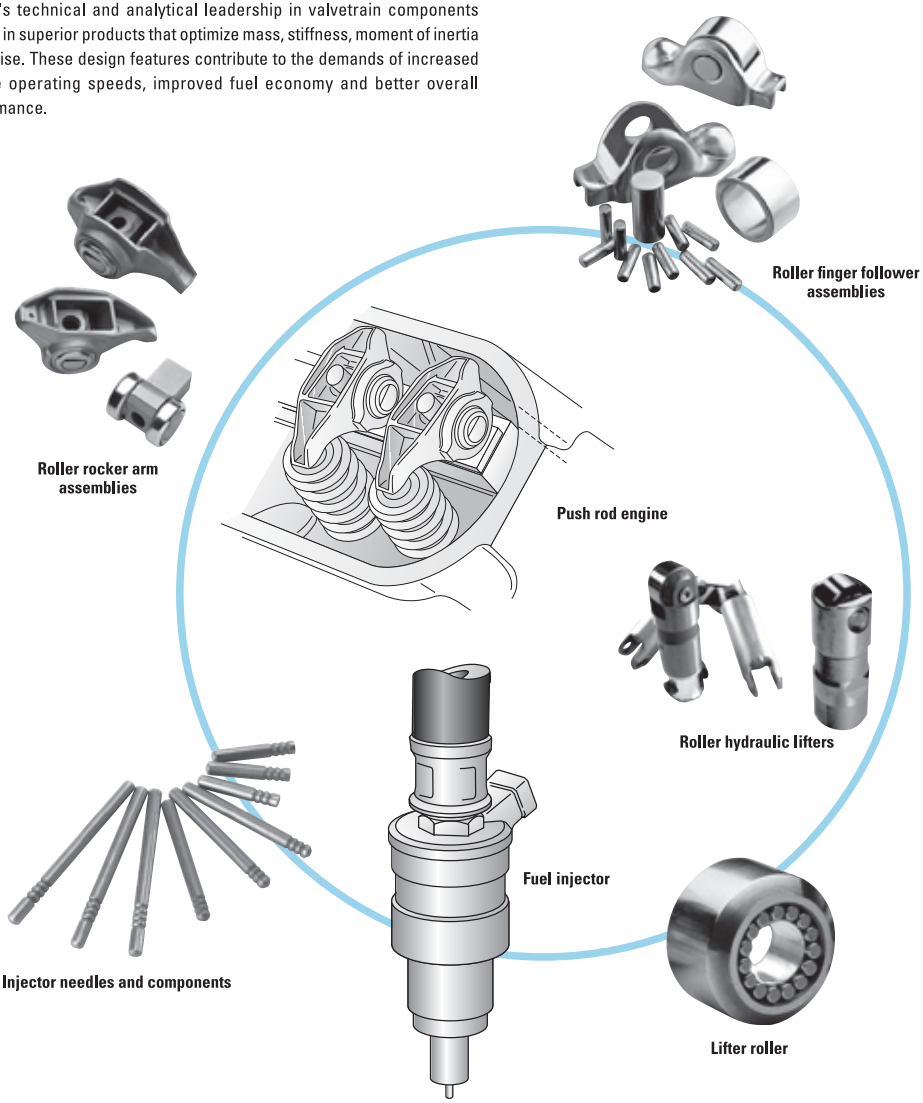

STEERING COLUMNS

JTEKT offers bearings and components dedicated strictly to steering column systems. JTEKT has the technical skills to produce innovative designs for the most demanding applications.

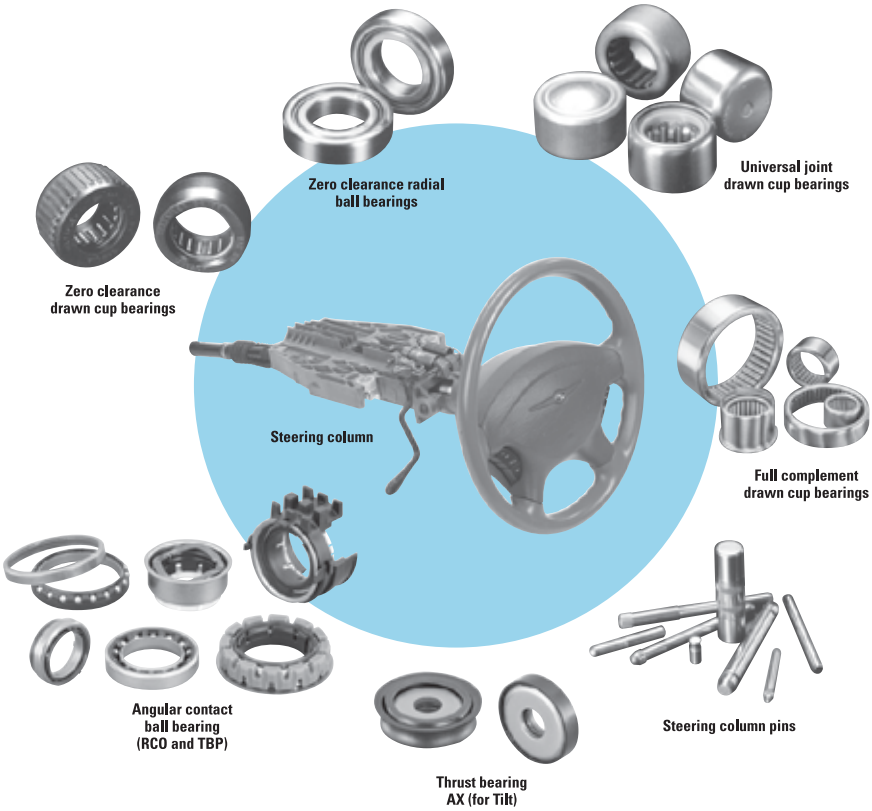

AUTOMOTIVE ACCESSORIES

Tough, compact, lightweight and innovative describe JTEKT's product offering for the automotive accessories market. Advanced analytical optimization techniques, testing and manufacturing technologies allow JTEKT to provide complete packages that result in high reliability while lowering system costs.

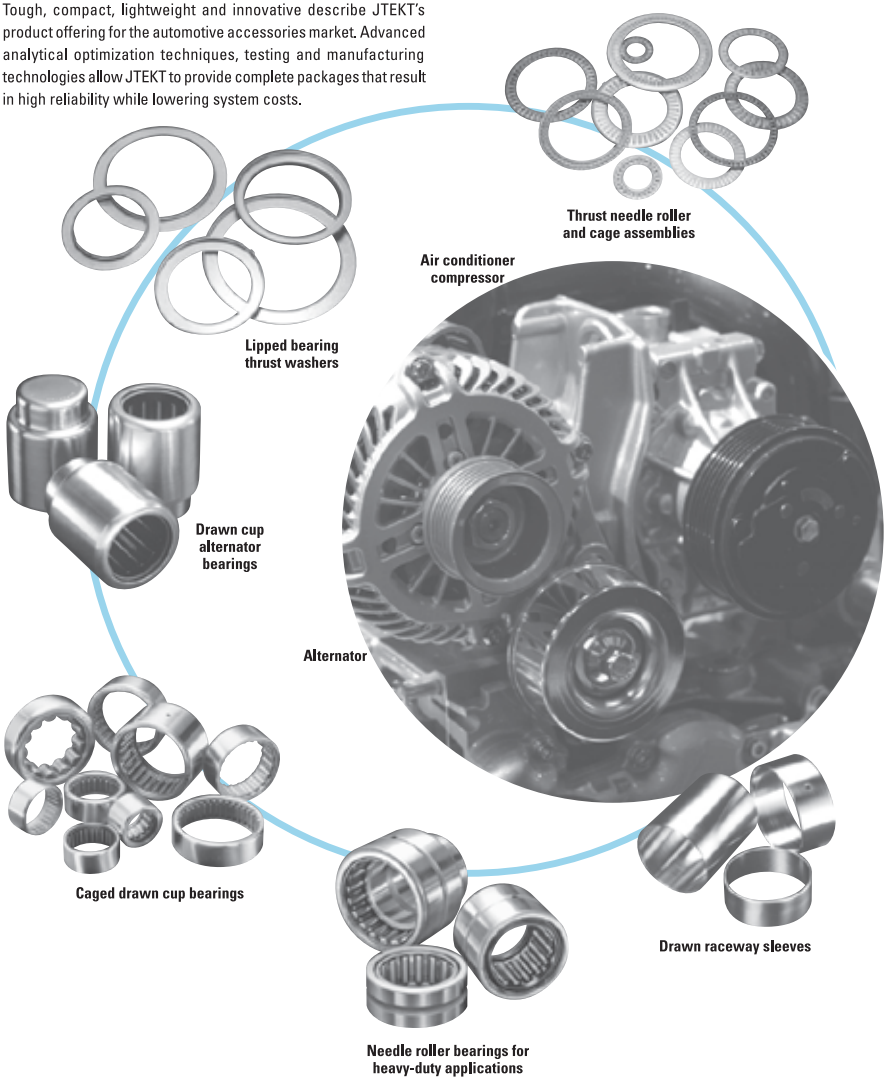

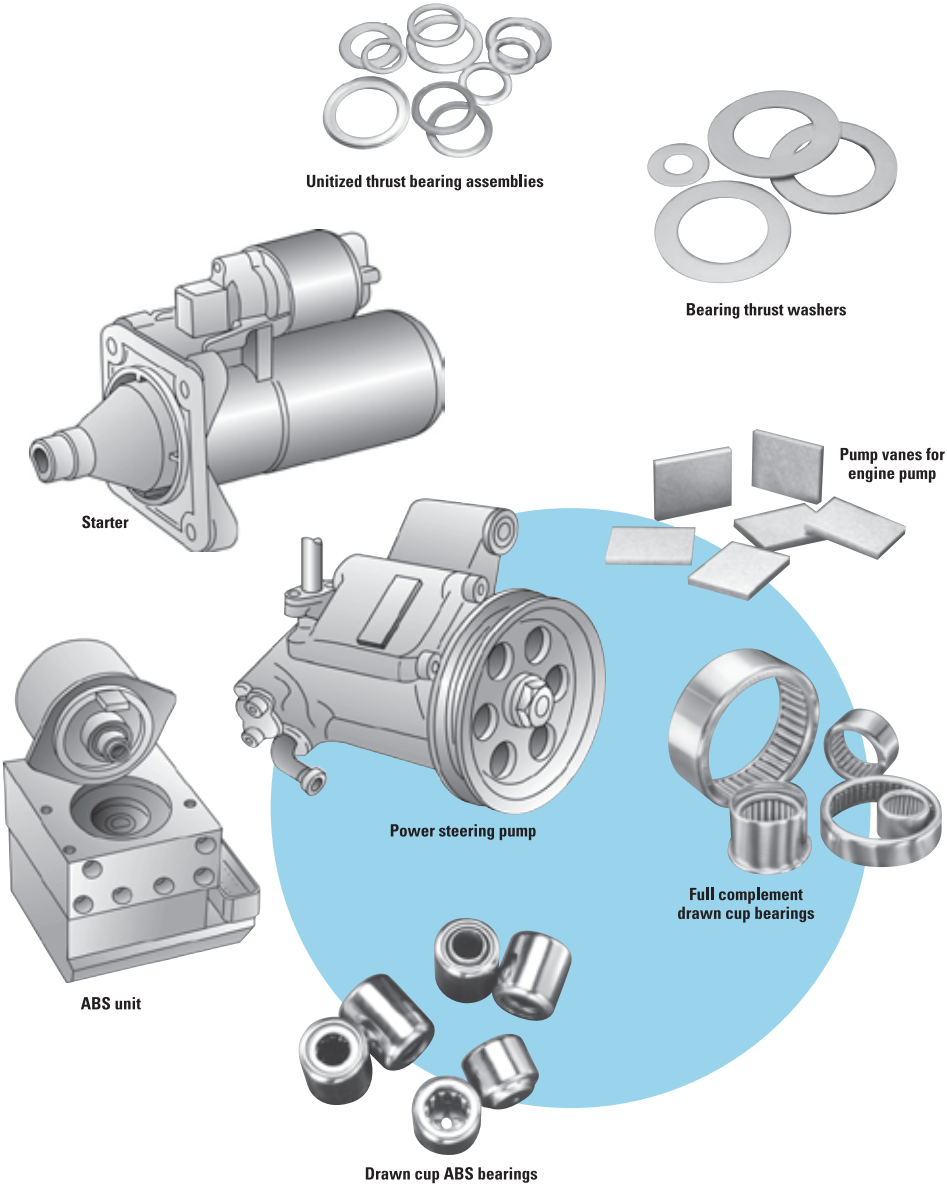
Unitized thrust bearing assemblies
Bearing thrust washers
Starter
Pump vanes for engine pump
Power steering pump
Full complement drawn cup bearings
ABS unit
Drawn cup ABS bearings

DRIVETRAIN COMPONENTS

JTEKT is a leading supplier of bearings for the harsh environment of drivetrain components. Our heavy wall drawn cup bearing is an industry standard for performance and reliability in semi-float axle applications. With a history of JTEKT's innovative engineering, in-house testing and field experience, vehicle drivetrain engineers can confidently specify JTEKT bearings to meet their design demands.

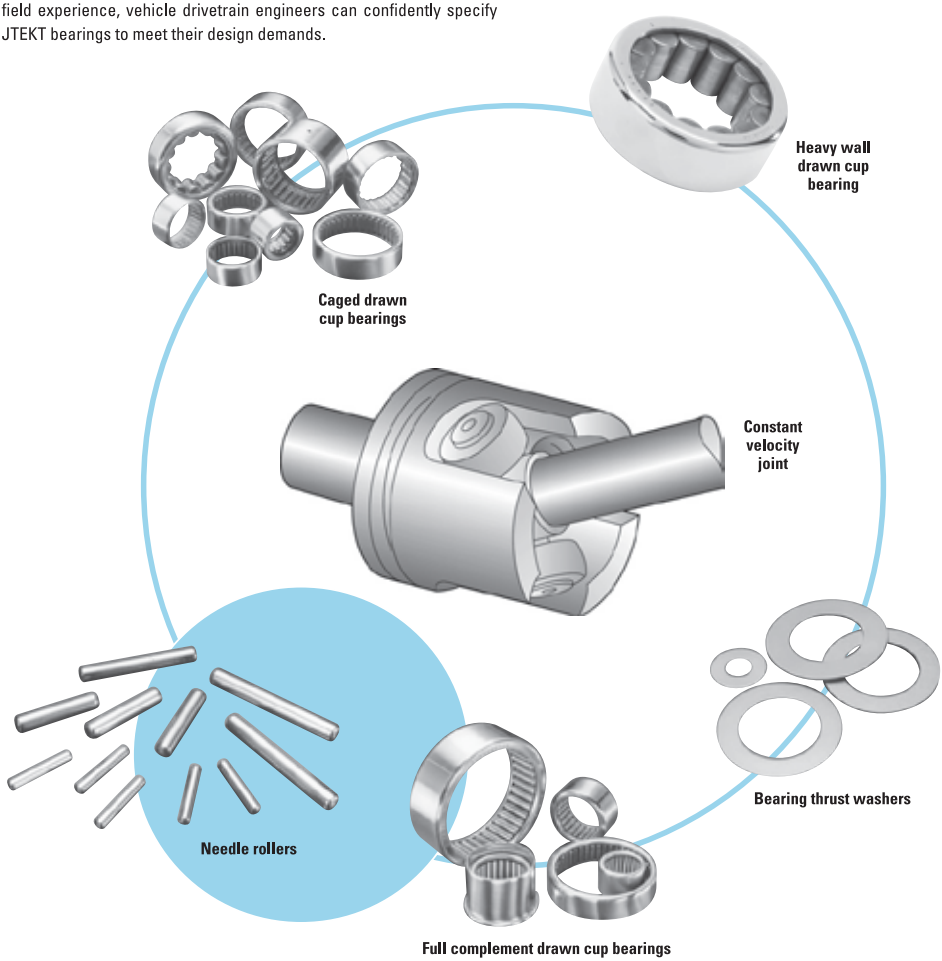

POWER TRANSMISSIONS

Whether supplied as individual components or as unit assemblies, JTEKT offers products that provide maximum load and speed capability within a small envelope. Our compact, efficient and long-life designs allow power transmission builders to increase power density and extend product life while minimizing lubrication demands and reducing overall package size.

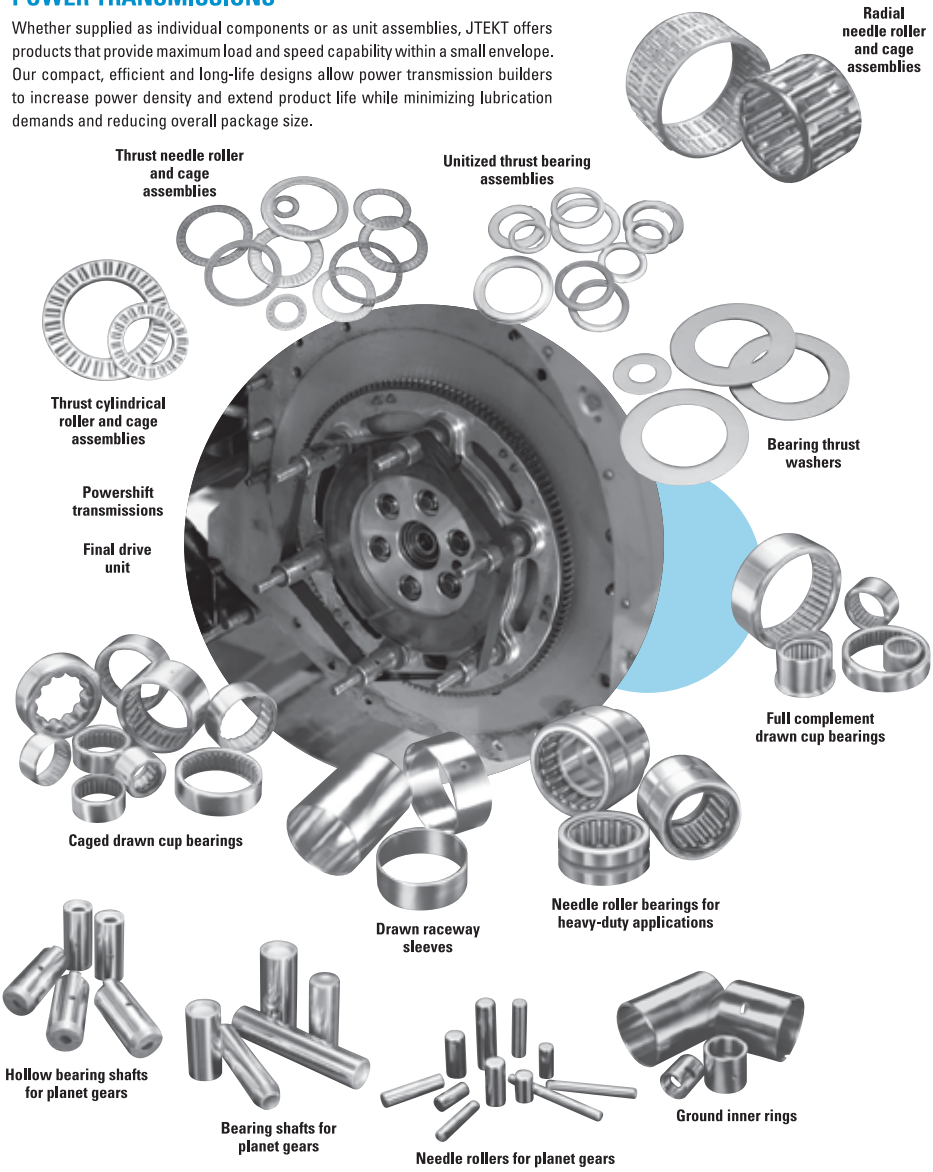

SPORT VEHICLES

In anticipation of the wide range of sport vehicle applications, JTEKT has developed a broad line of reliable, low-profile and low-cost bearing solutions. These designs can be optimized for a wide range of application demands including high speed, high load, temperature extremes or low mass. JTEKT has an engineered solution for your unique and demanding applications.

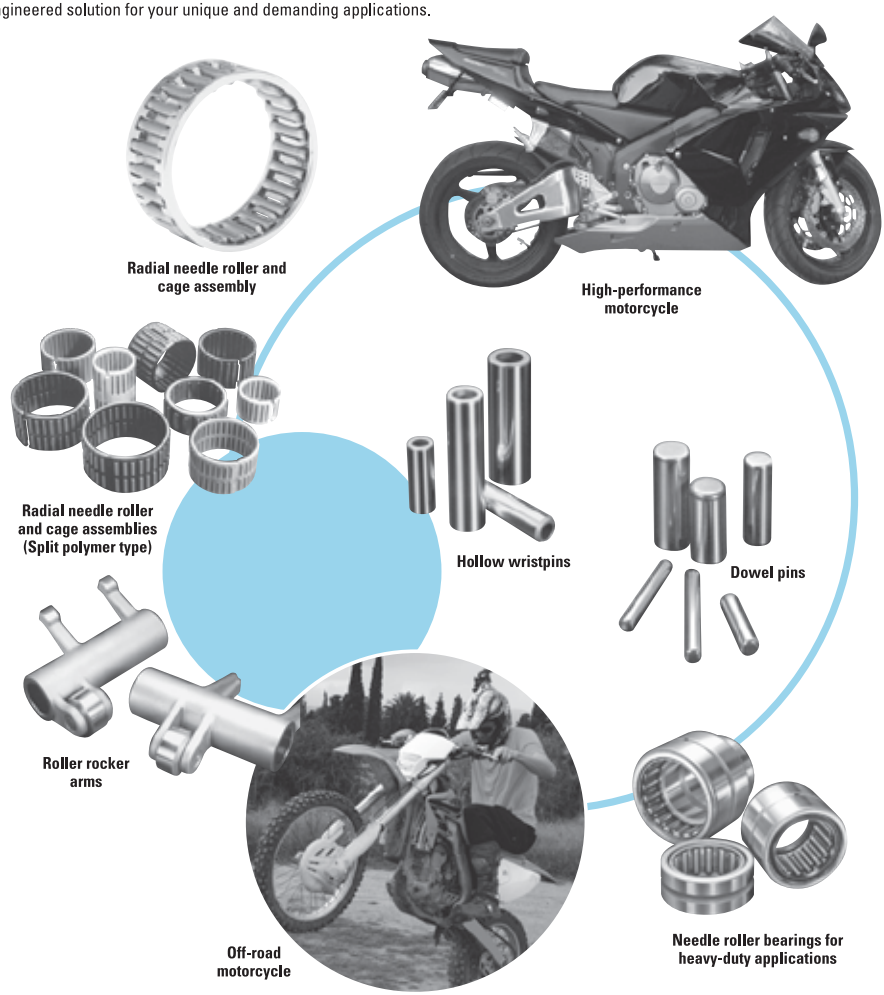

Unitized thrust bearing assemblies

Thrust needle roller and cage assemblies

Bearing thrust washers

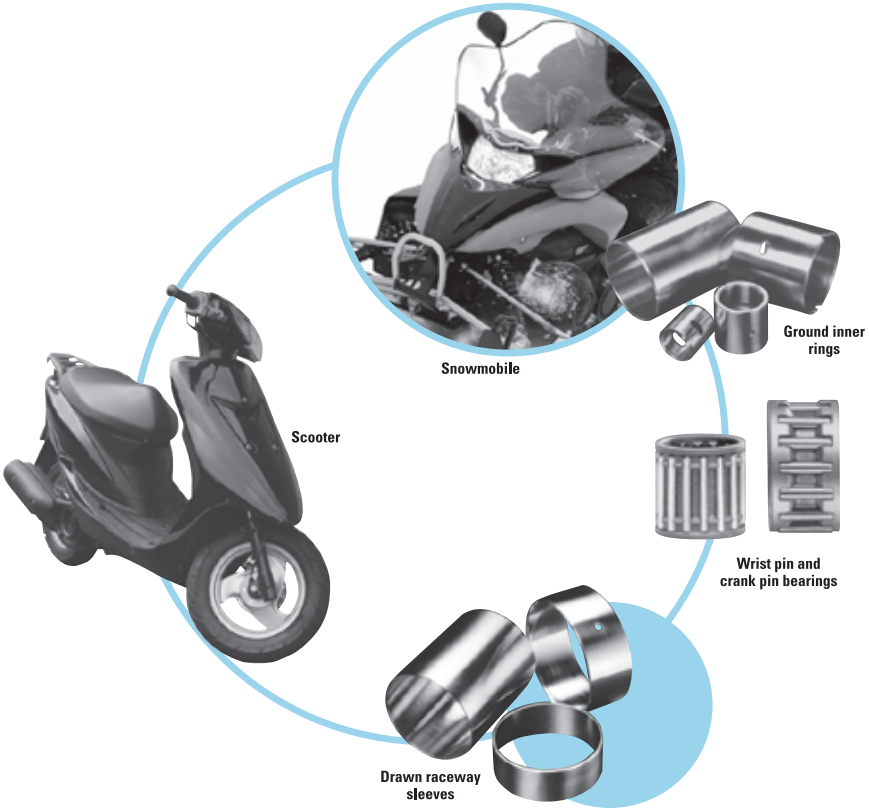

MARINE APPLICATIONS

Split housings, high speeds and limited amounts of lubrication are some of the major design requirements that JTEKT has overcome in successfully designing bearings for marine power head and drivetrain applications. JTEKT's history of supplying this industry proves that tough environmental challenges can be resolved with creative engineering solutions and products at an economical price.

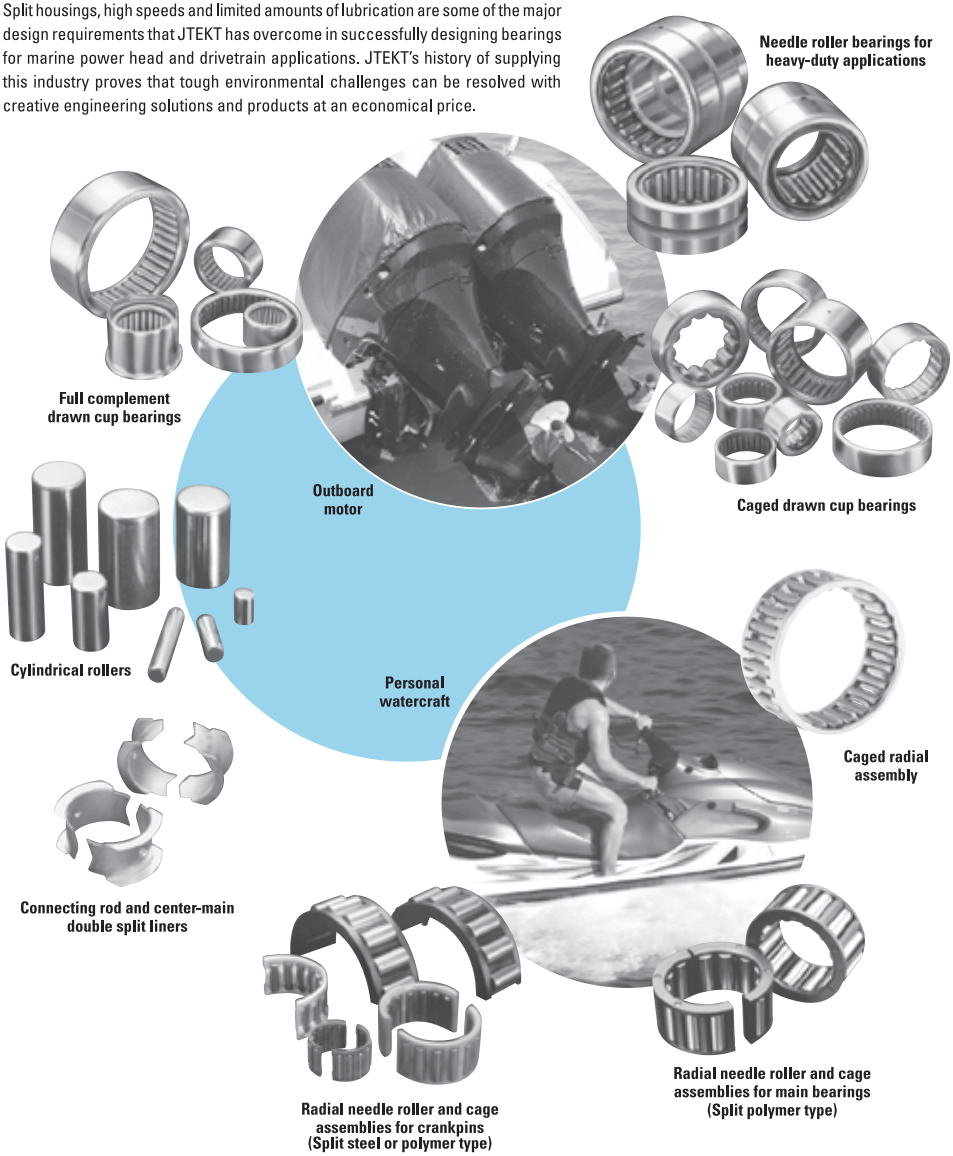

Unitized thrust bearing assemblies

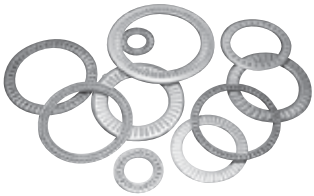

Thrust needle roller and cage assemblies

Bearing thrust washers

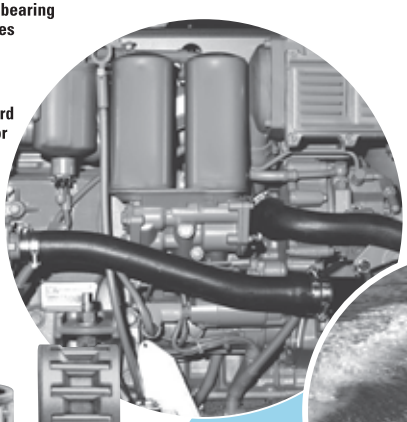

Inboard motor

Outboard motor

Wrist pin and crank pin bearings

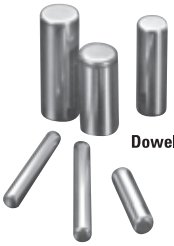

Dowel pins

Double split outer rings

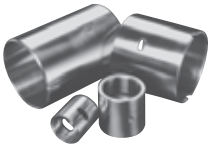

Ground inner rings

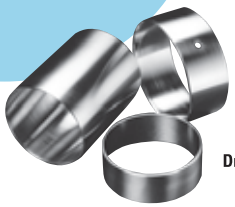

Drawn raceway sleeves

POWER TOOLS

JTEKT continues to bring lightweight, durable, economical and compact products to the power tool market. We have anticipated customer expectations, become increasingly stringent and have responded with many innovative products. Greater performance within the existing package, subassemblies for more efficient manufacturing, and lubrication enhancing designs make JTEKT bearings the ideal solution for the power tool market.

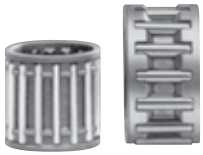

Wrist pin and crank pin bearings

Caged drawn cup bearings

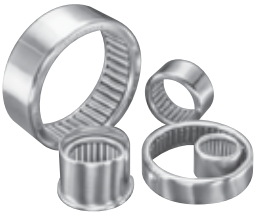

Full complement drawn cup bearings

Drawn cup roller clutches

Radial needle roller and cage assembly

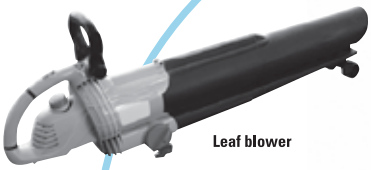

Leaf blower

String trimmer

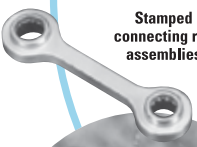

Stamped connecting rod assemblies

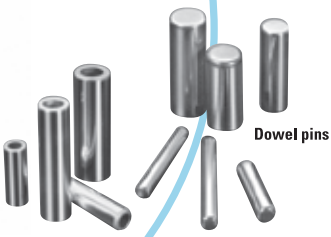

Dowel pins

Hollow wristpins

Chainsaw

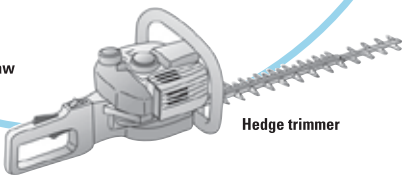

Hedge trimmer

CONSUMER PRODUCTS

Among a vast product offering, JTEKT has design solutions that are ideally matched to the consumer product market. Low friction, light weight, quick assembly and economical designs make JTEKT bearings the product of choice for these diverse applications.

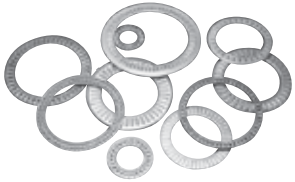

Thrust needle roller and cage assemblies

Bearing thrust washers

Drawn cup roller clutches

Caged drawn cup bearings

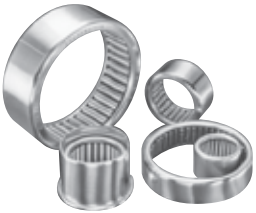

Full complement drawn cup bearings

MECHANICAL PUMPS

Reliable and compact JTEKT bearing designs help pump designers achieve maximum efficiency and reliability in high-pressure industrial applications. Product innovations such as the controlled-stress needle roller bearings provide designers the flexibility they need to tailor their pump packages to meet specific requirements.

Caged drawn cup bearings

Needle roller bearings for heavy-duty applications

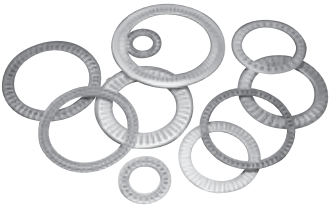

Thrust needle roller and cage assemblies

Bearing thrust washers

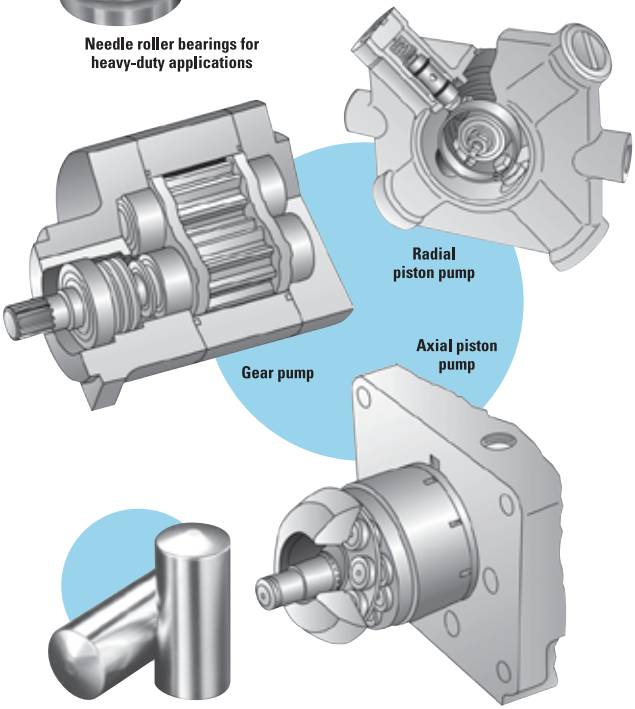

Full complement drawn cup bearings

INDUSTRIAL MACHINERY

Track rollers provide smooth operation of telescopic masts in fork lift trucks and many heavy lift applications. JTEKT's cylindrical roller thrust bearings and heavy-duty needle roller bearings provide ideal solutions for applications that require high load-carrying capability in small cross sectional areas.

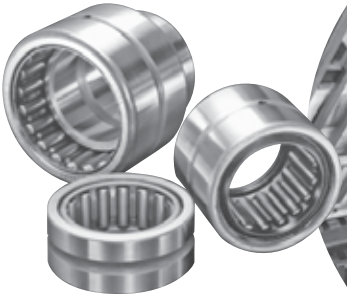

Needle roller bearings for heavy-duty applications

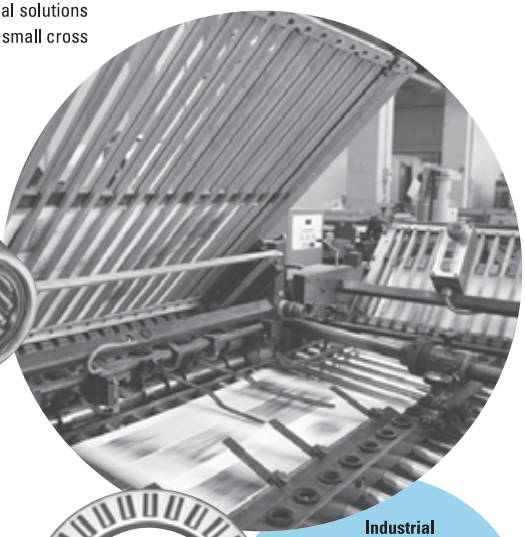

Industrial machines

Fork lift truck

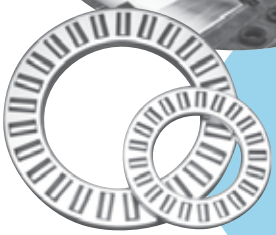

Thrust cylindrical roller and cage assemblies

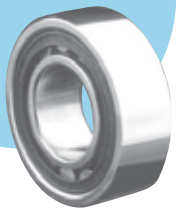

Cylindrical roller bearing

Track rollers

GLOBAL NETWORK
BEARING BUSINESS OPERATIONS

JTEKT CORPORATION NAGOYA HEAD OFFICE
No.7-1, Meieki 4-chome, Nakamura-ku, Nagoya, Aichi 450-8515, JAPAN
TEL : 81-52-527-1900
FAX : 81-52-527-1911

JTEKT CORPORATION OSAKA HEAD OFFICE
No.5-8, Minamisemba 3-chome, Chuo-ku, Osaka 542-8502, JAPAN
TEL : 81-6-6271-8451
FAX : 81-6-6245-3712

Sales & Marketing Headquarters
No.5-8, Minamisemba 3-chome, Chuo-ku, Osaka 542-8502, JAPAN
TEL : 81-6-6245-6087
FAX : 81-6-6244-9007

OFFICES

KOYO CANADA INC.
5324 South Service Road, Burlington, Ontario L7L 5H5, CANADA
TEL : 1-905-681-1121
FAX : 1-905-681-1392

KOYO CORPORATION OF U.S.A.
-Cleveland Office-
29570 Clemens Road, P.O.Box 45028 Westlake,
OH 44145, U.S.A.
TEL : 1-440-835-1000
FAX : 1-440-835-9347
-Detroit Office-
47771 Halyard Drive, Plymouth, MI 48170, U.S.A.
TEL : 1-734-454-1500
FAX : 1-734-454-4076

KOYO BEARINGS USA LLC
-Canton Office-
4895 Dressler Road NW, Suite B, Canton, OH 44718, U.S.A
TEL : 1-330-994-0900
FAX : 1-330-994-0960

KOYO MEXICANA, S.A. DE C.V.
Rio Nazas No.171, 3er piso, Col. Cuauhtemoc, México, D.F. C.P. 06500, MEXICO
TEL : 52-55-5207-3860
FAX : 52-55-5207-3873

KOYO LATIN AMERICA, S.A.
Edificio Banco del Pacifico Planta Baja, Calle Aquilino de la Guardia y Calle 52, Panama, REPUBLICA DE PANAMA
TEL : 507-208-5900
FAX : 507-264-2782/507-269-7578

KOYO ROLAMENTOS DO BRASIL LTDA.
Rua Desembargador Eliseu Ghilherme 304, 7-Andar, Paraiso,
CEP 04004-30, BRASIL
TEL : 55-11-3887-9173
FAX : 55-11-3887-3039

KOYO BEARINGS INDIA PVT. LTD.
C/o Stylus Commercial Services PVT LTD, Ground Floor, The Beech, E-1, Manyata Embassy Business Park, Outer Ring Road, Bengaluru-560045, INDIA
TEL : 91-80-4276-4567 (Reception Desk of Service Office)
FAX : 91-80-4276-4568

JTEKT (THAILAND) CO., LTD.
172/1 Moo 12 Tambol Bangwua, Amphur Bangpakong,
Chachoengsao 24180, THAILAND
TEL : 66-38-533-310-7
FAX : 66-38-532-776

PT. JTEKT INDONESIA
MM2100 Industrial Town Block DD-3, Cikarang Barat, Bekasi 17520, INDONESIA
TEL : 62-21-8998-3273
FAX : 62-21-8998-3274

KOYO SINGAPORE BEARING (PTE.) LTD.
27, Penjuru Lane, #09-01 C&P Logistics Hub 2, SINGAPORE 609195
TEL : 65-6274-2200
FAX : 65-6862-1623
-MIDDLE EAST (BRANCH)-
6EA312, Dubai Airport Free Zone, P.O. Box 54816, Dubai, U.A.E.
TEL : 971-4-2993600
FAX : 971-4-2993700

PHILIPPINE KOYO BEARING CORPORATION
6th Floor One World Square Building, #10 Upper McKinley Road, McKinley Town Center, Fort Bonifacio, 1634 Taguig City, PHILIPPINES
TEL : 63-2-856-5046/5047
FAX : 63-2-856-5045

JTEKT KOREA CO., LTD.
Inwoo Building 6F, 539-11, Shinsa-Dong,
Kangnam-Ku, Seoul, KOREA
TEL : 82-2-549-7922
FAX : 82-2-549-7923

JTEKT (CHINA) CO., LTD.
Room,25A2, V-CAPITAL Building, 333 Xianxia Road, Changning District, Shanghai, CHINA
TEL : 86-21-5178-1000
FAX : 86-21-5178-1008

KOYO (SHANGHAI) CO., LTD.
Room.25A2, V-CAPITAL Building, 333 Xianxia Road, Changning District, Shanghai, CHINA
TEL : 86-21-5178-1000
FAX : 86-21-5178-1008

KOYO AUSTRALIA PTY. LTD.
Unit 2, 8 Hill Road , Homebush Bay, NSW 2127, AUSTRALIA
TEL : 61-2-8719-5300
FAX : 61-2-8719-5333

JTEKT EUROPE BEARINGS B.V.
Markerkant 13-01, 1314 AL Almere, THE NETHERLANDS
TEL : 31-36-5383333
FAX : 31-36-5347212
-Sosnowiec Branch Office-
Warszawska 3 Sosnowiec 41-200 Poland
TEL : 48-32-720-1444
FAX : 48-32-746-7746

KOYO KULLAGER SCANDINAVIA A.B.
Johanneslundsvägen 4, 194 61 Upplands Väsby, SWEDEN
TEL : 46-8-594-212-10
FAX : 46-8-594-212-29

KOYO (U.K.) LTD.
Whitehall Avenue, Kingston, Milton Keynes MK10 OAX,
UNITED KINGDOM
TEL : 44-1908-289300
FAX : 44-1908-289333
-Desford Office-
Suite 3, The Coach House, Desford, Leicester LE9 9JJ UK
TEL : 44-1455-826200
FAX : 44-1544-826201

KOYO ROMANIA REPRESENTATIVE OFFICE
Str. Frederic Jolliot-Curie, Nr.3, Etaj 1, Ap.2, Sector 5
Bucharest, ROMANIA
TEL : 40-21-410-4170/4182/0984
FAX : 40-21-410-1178

KOYO DEUTSCHLAND GMBH.
Bargkoppelweg 4, D-22145 Hamburg, GERMANY
TEL : 49-40-67-9090-0
FAX : 49-40-67-9203-0

KOYO FRANCE S.A.
8 Rue Guy Moquet, B.P.189 Z.I., 95105 Argenteuil Cedex, FRANCE
TEL : 33-1-3998-4202
FAX : 33-1-3998-4244/4249
-Rueil Office-
2 rue Eugene & Armand Peugeot, 92563 Rueil-Malmaison Cedex, France
TEL : 33-1-4129-0955
FAX : 33-1-4129-0091

KOYO BEARINGS VIERZON MAROMME SAS
-Colmar Office-
1 Rue Denis Papin-BP CS60035. Colmar Cedex. 68025 France
TEL : 33-3-8977-9497
FAX : 33-3-8977-9548

KOYO IBERICA, S.L.
Avda.da la Industria, 52-2 izda 28820
Coslada Madrid, SPAIN
TEL :34-91-329-0818
FAX :34-91-747-1194

KOYO ITALIA S.R.L.
Via Bronzino 9, 20133 Milano, ITALY
TEL : 39-02-2951-0844
FAX : 39-02-2951-0954

BEARING PLANTS

KOYO BEARINGS CANADA INC.
4 Victoria Street, Bedford, QC J0J-1A0, CANADA
TEL : 1-450-248-3316
FAX : 1-450-248-4196

KOYO CORPORATION OF U.S.A.
(MANUFACTURING DIVISION)
-Orangeburg Plant-
2850 Magnolia Street, Orangeburg, SC 29115, U.S.A.
TEL : 1-803-536-6200
FAX : 1-803-534-0599
-Richland Plant-
1006 Northpoint Blvd., Blythewood, SC 29016, U.S.A.
TEL : 1-803-691-4624/4633
FAX : 1-803-691-4655
-Washington Plant-
146 Cutting Edge Court Telford, TN 37690, U.S.A.
TEL : 1-423-913-1006
FAX : 1-423-913-1008

KOYO BEARINGS USA LLC
-Dahlonega Plant-
615 Torrington Drive Dahlonega, GA 30533, U.S.A.
TEL : 1-706-864-7691
FAX : 1-706-864-8258
-Cairo Plant-
2525 Torrington Drive, Cairo, GA 39828, U.S.A.
TEL : 1-229-377-6650
FAX : 1-229-377-9760
-Sylvania Plant-
400 Friendship Road, Sylvania, GA 30467, U.S.A.
TEL : 1-912-564-7151
FAX : 1-912-564-2101
-Walhalla Plant-
430 Torrington Road, Po Box 100, Walhalla, SC 29691, U.S.A.
TEL : 1-864-638-3683
FAX : 1-864-638-2434

JTEKT (THAILAND) CO., LTD.
172/1 Moo 12 Tambol Bangwua, Amphur Bangpakong, Chachoengsao 24180, THAILAND
TEL : 66-38-531-988/993
FAX : 66-38-531-996

KOYO MANUFACTURING (PHILIPPINES) CORP.
Lima Technology Center, Municipality of Malvar, Batangas Province, 4233 PHILIPPINES
TEL : 63-43-981-0088
FAX : 63-43-981-0001

KOYO JICO KOREA CO., LTD
28-12, Yulpo-Ri, Koduc-Myun, Pyung Teak-City, Kyungki-Do, KOREA
TEL : 82-31-668-6381
FAX : 82-31-668-6384

KOYO BEARING DALIAN CO., LTD.
No.II A-2 Dalian Export Processing Zone, 116600, CHINA
TEL : 86-411-8731-0972/0974
FAX : 86-411-8731-0973

WUXI KOYO BEARING CO., LTD.
Wuxi Li Yuan Economic Development Zone, Wuxi, 214072, CHINA
TEL : 86-510-85161901
FAX : 86-510-85161143

KOYO NEEDLE BEARINGS (WUXI) CO., LTD.
Di Cui Road, Liyuan Development Zone, Jiangyu Province, 214072, CHINA
TEL : 86-51085160998
FAX : 86-51085163262

DALIAN KOYO WAZHOU AUTOMOBILE BEARING CO., LTD.
No.96, Liaohe East Road, D.D Port, Dalian, 116620, CHINA
TEL : 86-411-8740-7272
FAX : 86-411-8740-7373

KOYO LIOHO (FOSHAN) AUTOMOTIVE PARTS CO., LTD.
No.12, Wusha Section Of Shunpan Road, Daliang Town, Shunde Of Foshan, Guandong, Province, CHINA
(SHUNDE INDUSTRIAL PARK)
TEL : 86-757-22829589
FAX : 86-757-22829586

KOYO AUTOMOTIVE PARTS (WUXI) CO.,LTD.
B6-A New District, Wuxi, 214028, CHINA
TEL : 86-510-8533-0909
FAX : 86-510-8533-0155

KOYO BEARINGS (EUROPE) LTD.
P.O.Box 101, Elmhirst Lane, Dodworth, Barnsley, South Yorkshire, S75 3TA, UNITED KINGDOM
TEL : 44-1226-733200
FAX : 44-1226-204029

KOYO ROMANIA S.A.
Turnu Magurele Street No.1, 140003, ALEXANDRIA Teleorman County, ROMANIA
TEL : 40-247-306-400
FAX : 40-247-306-421

KOYO BEARINGS DEUTSCHLAND GMBH
Werkstrasse 5, D-33790 Halle, Halle Westfalen, 33790, Fed.Rep.of Germany
TEL : 49-5201-7070
FAX : 49-5201-707416

KOYO BEARINGS VIERZON MAROMME SAS
-Maromme Plant-
Zone Industrielle De La, BP 1033 7 Rue Ampere, Maromme, 76151, FRANCE
TEL : 33-23282-3838
FAX : 33-23576-6624
-Vierzon Plant-
61 Route De Foecy, BP 238, Vierzon Cedex, 18102 FRANCE
TEL : 33-24852-6200
FAX : 33-24852-6250

KOYO BEARINGS MOULT SAS
Zone Industrielle De Mou, Moult, 14370, FRANCE
TEL : 33-23127-9600
FAX : 33-23123-4693

KOYO BEARINGS ČESKÁ REPUBLIKA S.R.O.
Pavelkova 253/5, Bystrovany, Olomouc, 77900, CZECH REP
TEL : 42-585-126-501
FAX : 42-585-126-503

KOYO BEARINGS ESPAÑA S.A.
Doctor Diaz Emparanza, 3, Bilbao, 48002, SPAIN
TEL : 34-94-4431400
FAX : 34-94-4440905

TECHNICAL CENTERS

JTEKT CORPORATION NORTH AMERICAN TECHNICAL CENTER
47771 Halyard Drive, Plymouth, MI 48170, U.S.A.
TEL : 1-734-454-1500
FAX : 1-734-454-4076

JTEKT (CHINA) CO., LTD. TECHNICAL CENTER
Room.25A2, V-CAPITAL Building, 333 Xianxia Road, Changning District, Shanghai, CHINA
TEL : 86-21-5178-1000
FAX : 86-21-5178-1008

JTEKT CORPORATION EUROPEAN TECHNICAL CENTRE
Markerkant 13-02, 1314 AL Almere, THE NETHERLANDS
TEL : 31-36-5383350
FAX : 31-36-5302656

KOYO BEARINGS USA LLC
GREENVILLE TECHNOLOGY CENTER
7 Research Drive, Greenville, SC 29607, U.S.A.
TEL : 1-864-770-2100
FAX : 1-864-770-2399

KOYO BEARINGS DEUTSCHLAND GMBH
KUENSEBECK TECHNOLOGY CENTER
Werkstrasse 5, D-33790 Halle, Halle Westfalen, 33790, Fed.Rep.of Germany
TEL : 49-5201-7070
FAX : 49-5201-707416

KOYO BEARINGS ČESKÁ REPUBLIKA S.R.O.
BRNO TECHNOLOGY CENTER
Technologicky Park Brno, Techinicka 15, 61600 Brno, 61600 CZECH REP
TEL : 420-541-191803
FAX : 420-541-191801

Koyo® Torrington® Needle Roller Bearings

Value & Technology

JTEKT Group

NRB-1001E (A5)
Printed in USA 03/2011
Torrington® is a registered
trademark of the Timken Company.