LM Actuator

Equipped with Caged Ball
LM Guides and QZ Lubricator
for Ball Screw

GL-N

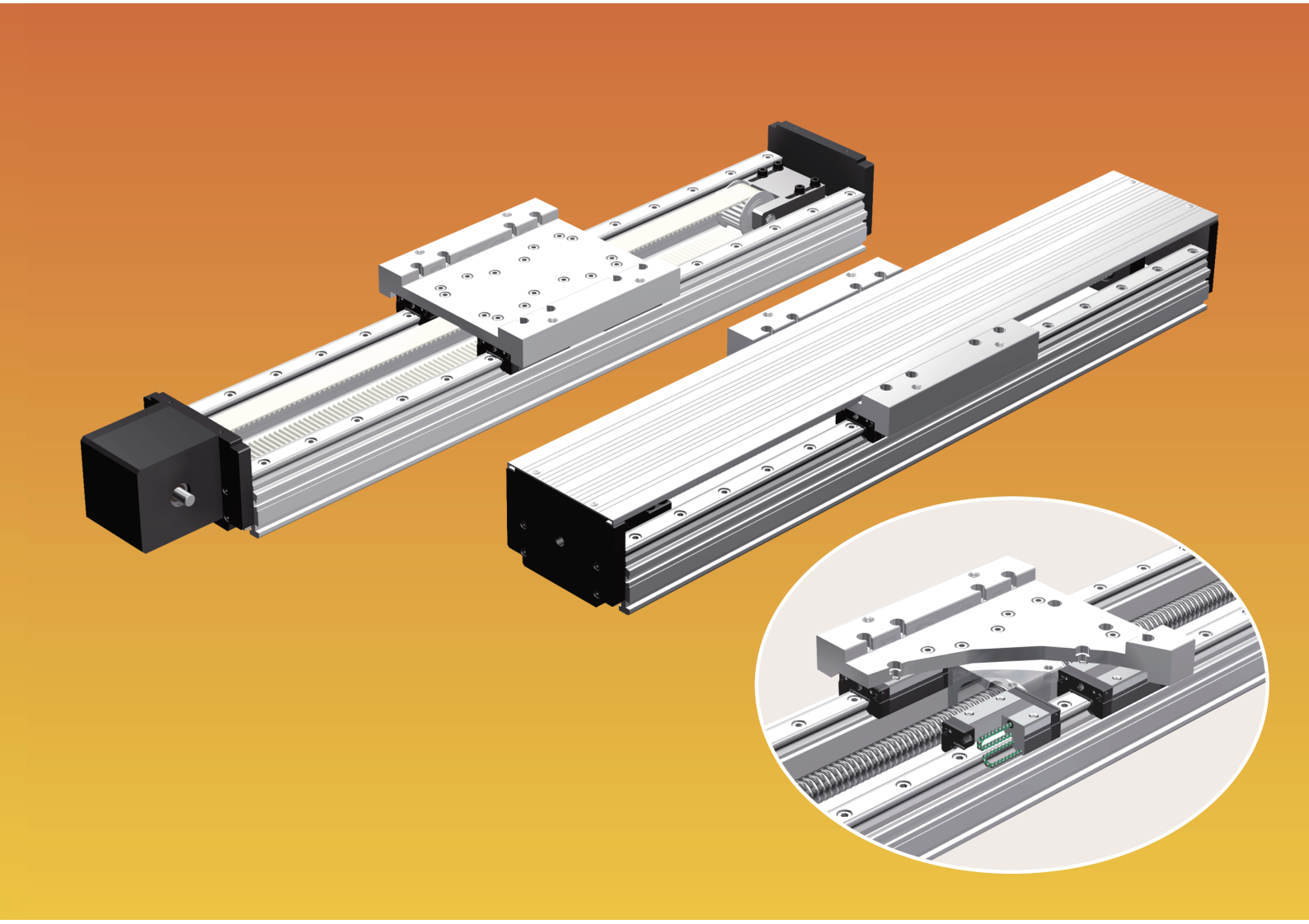

For details, visit THK at **www.thk.com**

*Product information is updated regularly on the THK website.

THK CO., LTD.
TOKYO. JAPAN

CATALOG No. 177-3E

Structures of LM Actuator GL-N Model

Ball Screw

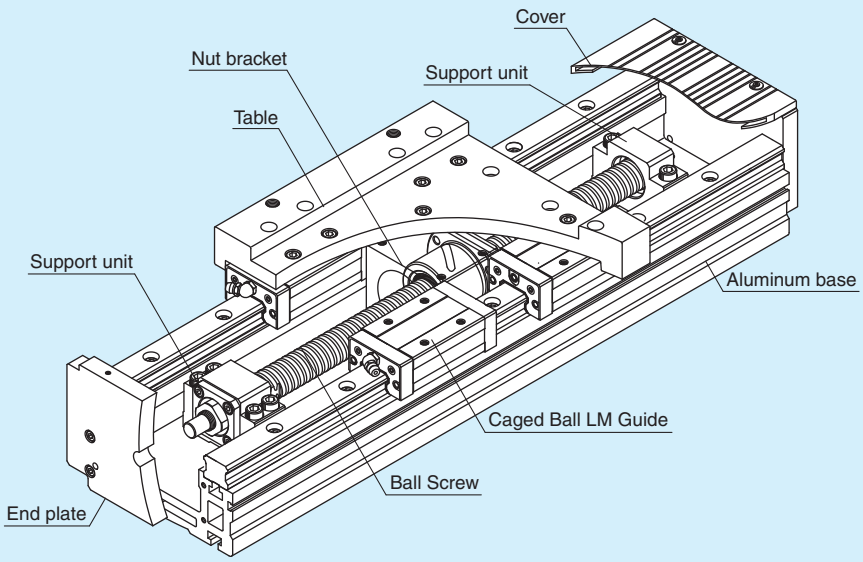

Figure 1 Ball Screw Type Structure

Timing Belt

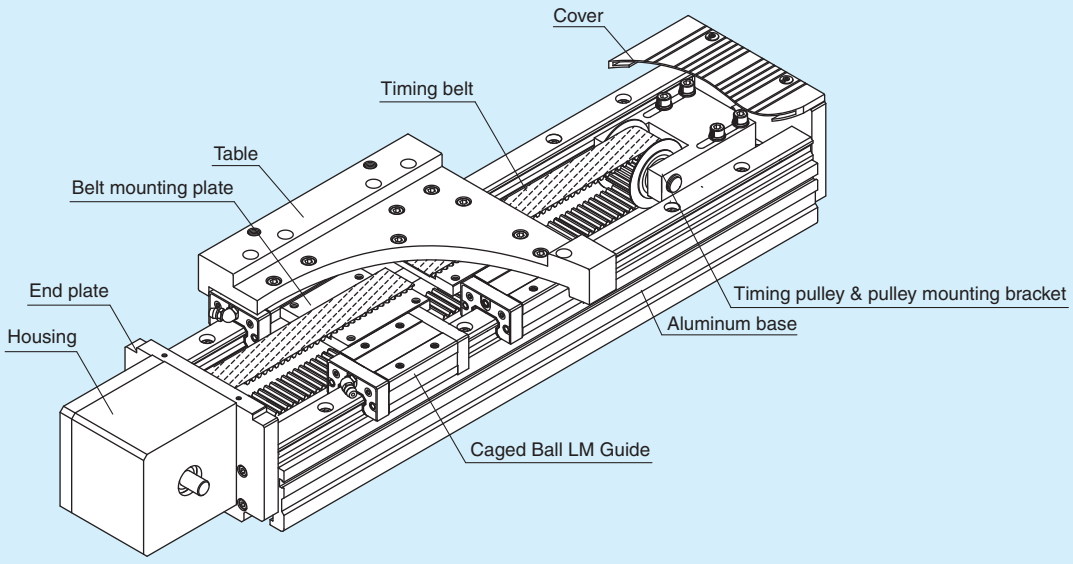

Figure 2 Timing Belt Type Structure

Features of LM Actuator GL-N Model

Lightweight, high rigidity aluminum base with Caged Ball LM Guides has been utilized for the guide portion. A screw or belt options are available for the drive system.
In addition, Caged Ball LM Guides and QZ Lubricator for the Ball Screw has been utilized to provide a long-term maintenance free actuator.

Utilizing Caged Ball LM Guide (SSR, SHS)

SSR model: Due to its 90-degree ball contact structure, is best suited to horizontal applications with relatively low moment loads.
SHS model: It can handle loads from all directions (radial, reverse radial, and horizontal) with its 4-way equal load rating capability.

Drive System

[Ball Screw Type]
Variety of screw leads can be selected.

Table 1 Ball Screw Leads by Model Numbers (Rolled ball screw)

Model number	Ball Screw lead (mm)
GL15N	5, 10, 16, 20, 30
GL20N	5, 10, 20, 40

Note: For wrap-around motor types, three motor directions (left, right and bottom) can be selected. (See page 4 for details.)

[Timing Belt Type]
Highly rigid timing belt ensures that high speed processes are possible for longer stroke (max. 2720 mm) applications than the Ball Screw driven type.

Table 2 Pitch Diameter of the Timing Pulley

Model number	Pitch diameter (mm)	Slider move distance per pulley rotation (mm)
GL15N	35.01	35.01χπ≒110
GL20N	38.20	38.20χπ≒120

Note: Because the timing pulley has a large pitch diameter, the use of a reducer is recommended. For details, see pages 18 and 19.

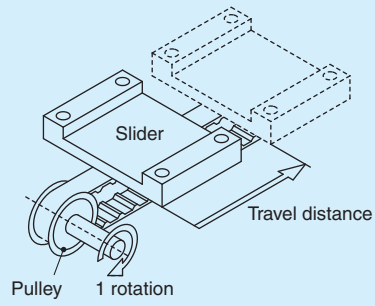

Figure 3 Slider move distance per pulley rotation

Lightweight and High Rigidity

By using a hollow aluminum extrusion, lightweight and high rigidity is achieved.

Table 3 Geometrical Moment of Inertia and Weight in the Base

Model number	Geometrical Moment of Inertia		Weight
	I_X (mm^4)	I_Y (mm^4)	(kg/m)
GL15N	1.61×10^5	2.47×10^6	4.85
GL20N	3.15×10^5	4.28×10^6	6.47*

* The weight of the SSR model is 6.69kg/m.

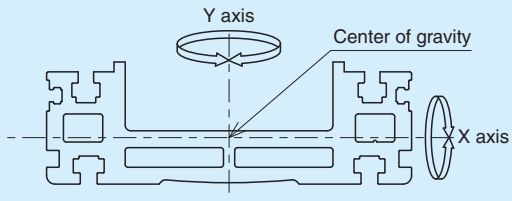

Figure 4 Base Section

GL-N Model also available with optional QZ Lubricator

A Caged Ball LM Guide and QZ Lubricator for the Ball Screw have been utilized to ensure a long-term maintenance-free actuator.

Ensuring Adaptability with Most Advanced Motors

A wide variety of end plates (motor mounting plates, motor brackets, reducers) are available to be attached to motors with the latest control technologies. As well as, motors with features applicable for Model GL-N. (See pages 16 to 19.)

Multiple Options Available

Multiple options such as covers, bellows, sensors and cable carriers are available.

Height Dimensions Standardized with Model GL

With the same height dimensions as Model GL using the conventional full-ball type Model GSR, replacing with the maintenance-free actuator Model GL-N using Caged Ball LM Guide is possible.

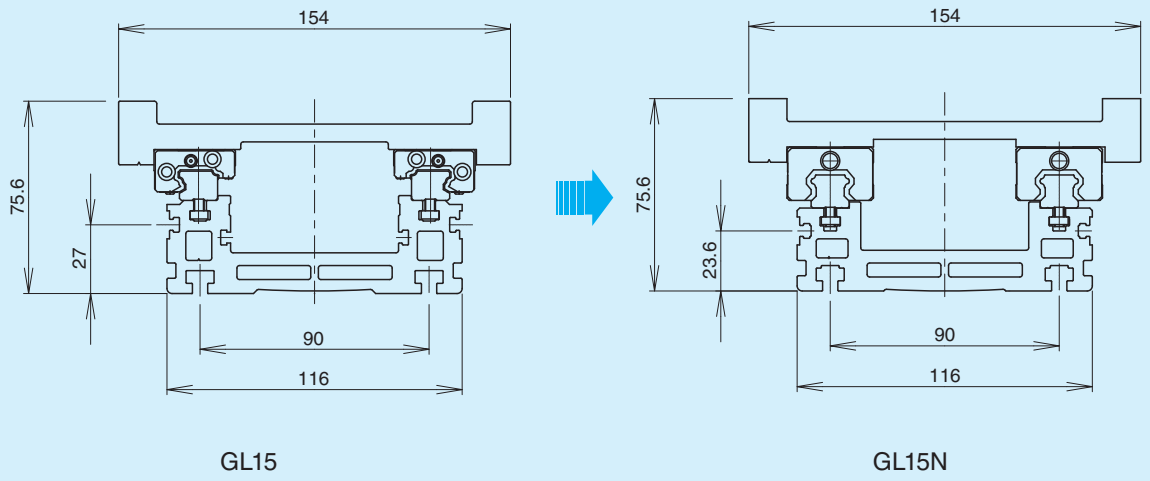

Figure 5 Cross-section comparative views

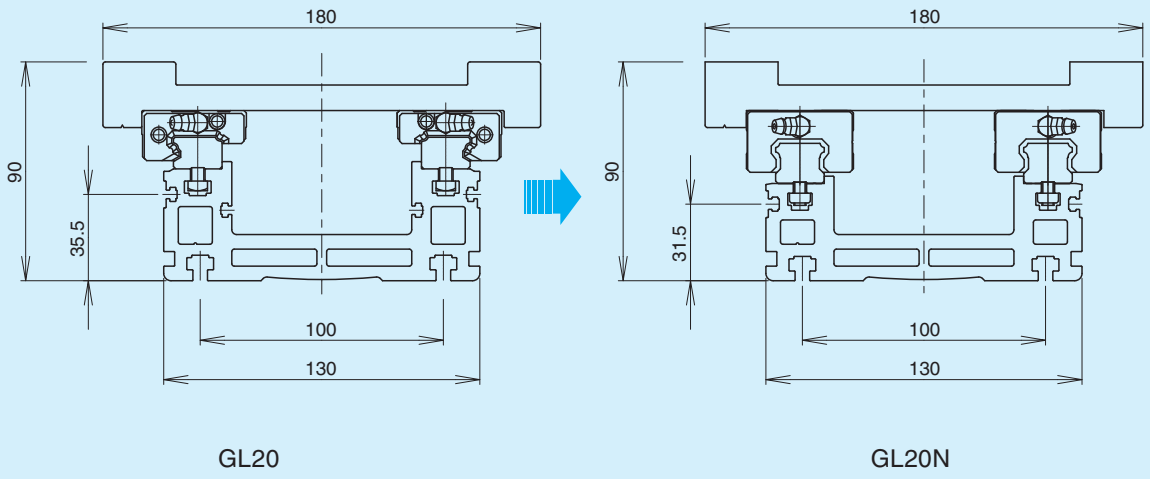

Figure 6 Cross-section comparative views

Types of Drive Systems

[Ball Screw Drive]

Direct Mounting

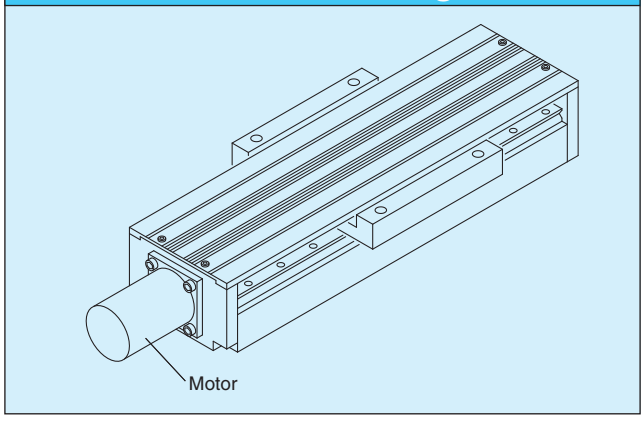

Requires Servo Coupling to connect the ball screw shaft with input motor shaft.

Lateral wrap-around Option

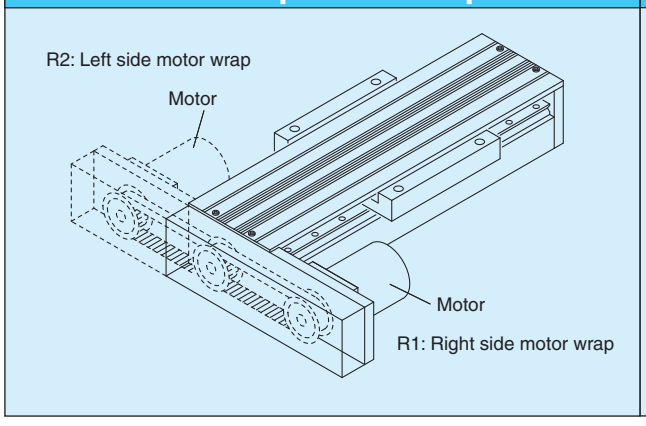

Axial dimensions are kept to minimum by applying the Wrap-Around option.
(Pulley ratio: 1:1)

Bottom wrap-around Option

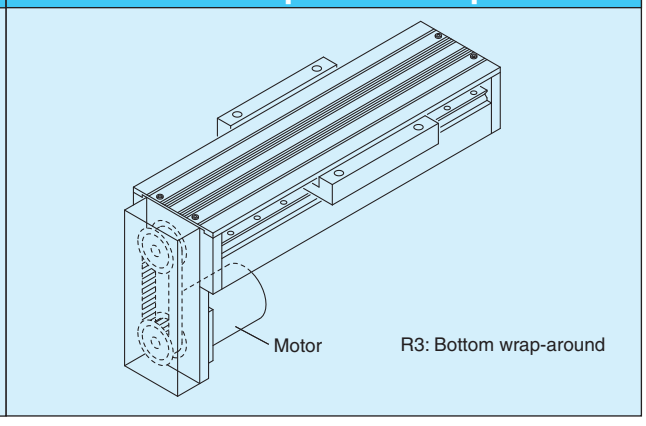

When horizontal space is at a minimum, the bottom side Wrap-Around option is available.
(Pulley ratio: 1:1)

[Timing Belt Type]

Horizontal Mounting

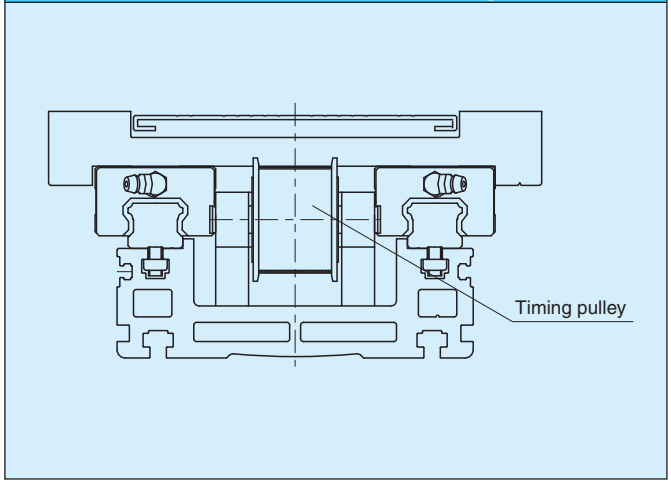

Note 1: Please mount Model GL-N horizontally. Contact THK if Model GL-N will be mounted on a wall.

Note 2: Please note that Model GL-N with timing belts cannot be mounted vertically.

Specification

Model number			GL15N						GL20N				
Drive system			Ball Screw					Belt	Ball Screw				Belt
Screw lead (mm)			5	10	16	20	30	–	5	10	20	40	–
Pulley pitch diameter (mm)			–					35.01	–				38.20
Repeatability Note 1) (mm)			±0.02					±0.08	±0.02				±0.08
Effective stroke Note 2) (mm)			100 to 1200					50 to 1700	200 to 1550				150 to 2700
Maximum load capacity guideline Note 3) Note 4) [kg]	200W	Horizontal	60	60	50	45	20	30	–	–	–	–	–
		Vertical	20	16	10	10	3	–	–	–	–	–	–
	400W	Horizontal	–	–	–	–	–	–	70	70	60	15	50
		Vertical	–	–	–	–	–	–	30	30	13	6	–
Static permissible load Note 5) [N]	Reverse radial direction		9600						14300				
	Horizontal direction		2900						4500				
	Axial direction		2100					–	2200				–
Static permissible moment Note 6) [N-m]	M_A		430						710				
	M_B		240						430				
	M_C		610						1020				

Note 1: This repeatability is ensured at an ambient temperature of 20°C.
Note 2: The effective stroke decreases depending on the table length. See the dimensional drawings (pages 7 to 14) for stroke details.
Note 3: Maximum load capacity guideline is determined based on rated revolution of the motor at the acceleration of 0.3G.
The motor capacity assumes the use of an AC servomotor.
Note 4: Values for the belt drive type are guidelines when using 1/5 reducers.
Note 5: The static permissible load is determined by the bolt joint strength, and the static rated load of the LM guide unit, ball screw unit and the support bearing.
For safety purposes, please take into consideration that the strength of the actuator mounting unit is not included.
Note 6: The static permissible moment is the maximum value of the moment in each direction.
For details on fatigue life, see "Service Life Time and Static Safety Factor" on pages 25 to 26.

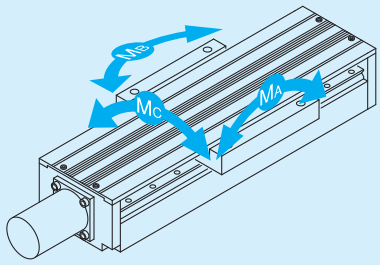

MA : Pitching direction
MB : Yawing direction
MC : Rolling direction

Figure 7 Directions of static permissible moment

Types of Tables

S type: Short table (applicable LM Guide model number: SSR-XV)
A short table length ensures a longer stroke.

L type: Long table (applicable LM Guide model number: SSR-XW, and SHS-V)
This table is suitable for mounting large sized objects or if the load is off center.

L-QZ type: Long table with an LM Guide QZ Lubricator (applicable LM Guide model numbers: SSR-XWQZ and SHS-VQZ)
The LM Guide is provided with a QZ Lubricator. (This table is longer than the L-type table. See dimensional drawings for more details.)

Maximum Travel Speed of the LM Actuator

Ball Screw Type

Ball Screws have an allowable rotational speed based on the DN value and the critical speed.
The table travel speed (mm/s) of the LM Actuator depends on the rotational speed of the Ball Screw and the rated rpm (3000 min^{-1}) of the AC servo motor.

Maximum travel speed

Unit: mm/s

Nominal model number		GL15N					GL20N			
Ball Screw lead		5	10	16	20	30	5	10	20	40
Base length	340	248	500	800	1000	1500	–	–	–	–
	460	248	500	800	1000	1500	202	500	1000	2000
	580	248	500	800	1000	1500	202	500	1000	2000
	700	248	500	800	1000	1500	202	500	1000	2000
	820	248	500	800	1000	1500	202	500	1000	2000
	1060	207	391	685	776	1175	202	396	1000	2000
	1240	144	271	474	540	815	185	275	763	1533
	1420	105	198	349	396	595	136	201	560	1120
	1600	–	–	–	–	–	104	–	426	860
	1780	–	–	–	–	–	82	–	336	673

Note: The LM actuator may not reach the maximum travel speed if the moving distance is short.

Timing Belt Type

The table shown below summarizes the table travel speed (mm/s) of when the LM Actuator is equipped with a reducer and the AC servo motor is operated at a rated rpm (3000min^{-1}).

Maximum travel speed

Unit: mm/s

Nominal model number	GL15N			GL20N		
Reduction ratio	1/3	1/5	1/9	1/3	1/5	1/9
Maximum travel speed	1833	1100	611	2000	1200	667

Nominal Model Numbers

Ball Screw type specification

GL20N	-	070	-	SW	Q	-	B20	Q	R1	-	B14	-	C	-	A	-	J
①		②		③	④		⑤	⑥	⑦		⑧		⑪		⑫		⑬

Belt type specification

GL20N	-	070	-	SW	Q	-	EH	-	B1	-	G1	-	03	-	C	-	A	-	J
①		②		③	④		⑤		⑧		⑨		⑩		⑪		⑫		⑬

① Nominal model number	GL15N/GL20N
② Base length	Example) For 340 mm: 034
③ LM Guide	SV: SSR-XV (S-type table) SW: SSR-XW (L-type table) HV: SHS-V (L-type table) (L-QZ type table for SSR/SHS with QZ)
④ LM Guide QZ Lubricator	No mark: Not provided with QZ Q: Provided with QZ (SSR-XW/SHS only)
⑤ Driving system	◆Ball Screw-driven B05: Ball Screw lead 5mm (GL15/20) B20: Ball Screw lead 20mm (GL15/20) B10: Ball Screw lead 10mm (GL15/20) B30: Ball Screw lead 30mm (GL15 only) B16: Ball Screw lead 16mm (GL15 only) B40: Ball Screw lead 40mm (GL20 only) ◆Belt-driven EH: Horizontal model specification
⑥ Ball Screw QZ Lubricator	No mark: Not provided with QZ Q: Provided with QZ (with wiper rings) * Ball Screw leads (30 mm and 40 mm) are excluded for wiper rings.
⑦ Ball Screw driven motor mount method	No mark: Direct mounting R1: Right side motor wrap R2: Left side motor wrap R3: Bottom
⑧ Ball Screw drive End plate type	◆Ball Screw specification for direct motor connection A: inner diameter ø30H7, M4, PCD46 F: inner diameter ø50H7, M4, PCD70 B: inner diameter ø50H7, M5, PCD70 G: inner diameter ø34H7, M3, PCD48 C: inner diameter ø50H7, M4, PCD60 H: inner diameter ø36H7, M4, mounting aperture pitch 50 D: inner diameter ø70H7, M5, PCD90 (GL20 only) I: inner diameter ø60H7, M6, mounting aperture pitch 70 (GL20 only) E: inner diameter ø30H7, M3, PCD45 J: inner diameter ø70H7, M6, PCD90 (GL20 only) ◆Ball Screw specification for motor wrap-around B14: inner diameter ø50, M5, PCD70, pulley inner diameter ø14 F11: inner diameter ø50, M4, PCD70, pulley inner diameter ø11 D11: inner diameter ø70, M5, PCD90, pulley inner diameter ø11 F14: inner diameter ø50, M4, PCD70, pulley inner diameter ø14 D14: inner diameter ø70, M5, PCD90, pulley inner diameter ø14 J14: inner diameter ø70, M6, PCD90, pulley inner diameter ø14
Timing belt drive Motor bracket type	◆Belt specification for motor bracket N : No motor bracket B1: inner diameter ø50, ø5.5, PCD60 A1: inner diameter ø65, M6, PCD80 B2: inner diameter ø70, ø6.6, PCD90 A2: inner diameter ø85, M8, PCD105 C1: inner diameter ø60, M6, PCD75
⑨ Reducer	◆Reducer specification for belt drive (motor bracket, only available for B1 and B2) Reducer symbols: G1, G2, G3, G4, G5 * See page 19 for details of the reducer symbols and available motors. Note: When ordering a belt drive with reducer inform us of the model number of the motor to which it is to be attached. No mark: Not provided with reducer.
⑩ Reduction ratio	Reduction ratio: 03: 1/3 05: 1/5 09: 1/9 Note: Model number display example: B1-G1-03 (motor bracket B1 + reducer G1 + reduction ratio 1/3) No mark: Not provided with reducer.
⑪ Covers and bellows	N: Not provided C: Cover provided J: Bellow provided
⑫ Sensors	N : None A: Photo sensor EE-SX671 (3 pcs) B: Photo sensor EE-SX674 (3 pcs) C1: Proximity sensor TL-W3MC1 (N.O.×3) C2: Proximity sensor TL-W3MC1 (N.O.×1) TL-W3MC2 (N.C.×2)
⑬ Cable carrier	N: None D: TKP0320-W24-R37 (Tsubakimoto Chain Co.) H: TKP0320-W50-R50 (Tsubakimoto Chain Co.) A: TKP0180-W40-R28 (Tsubakimoto Chain Co.) E: TKP0320-W24-R50 (Tsubakimoto Chain Co.) I : TKP0320-W50-R75 (Tsubakimoto Chain Co.) B: TKP0180-W40-R37 (Tsubakimoto Chain Co.) F: TKP0320-W24-R75 (Tsubakimoto Chain Co.) J: KSH-24L-42 (THK) C: TKP0180-W40-R50 (Tsubakimoto Chain Co.) G: TKP0320-W50-R37 (Tsubakimoto Chain Co.)

Ball Screw Driven Dimensions

GL15N Model, Ball Screw Driven

[Direct Mounting Specification]

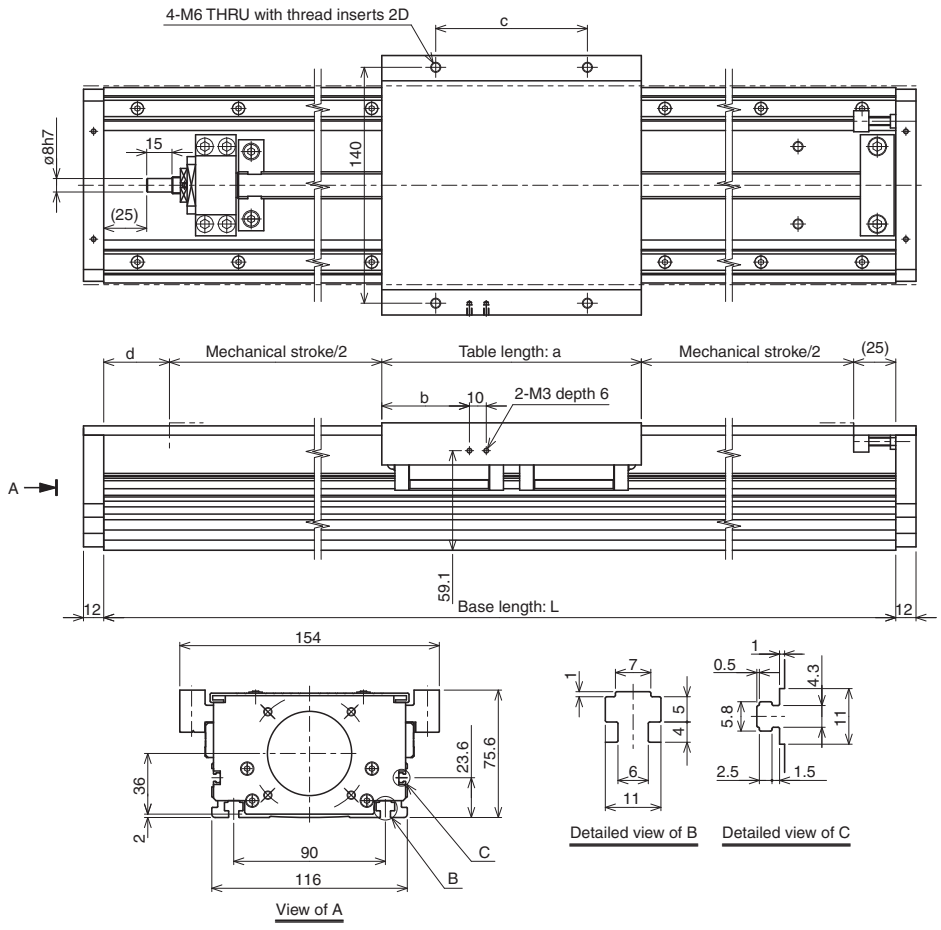

Unit: mm

Table type	Table length: a	b	c	d
S type	126	38	90	53
L type	154	52	90	39
L(QZ) type	154	52	90	48
L-QZ type	180	65	120	21

Base length: L [mm]			340	460	580	700	820	1060	1240	1420
Mechanical stroke [mm]	Table	S type	136	256	376	496	616	856	1036	1216
		L type	122	242	362	482	602	842	1022	1202
		L(QZ) type	113	233	353	473	593	833	1013	1193
		L-QZ type	114	234	354	474	594	834	1014	1194
Main unit weight [kg]	Table	S type	5.8	6.9	8.0	9.2	10.3	12.5	14.2	15.9
		L type (SSR15XW)	6.1	7.2	8.3	9.5	10.6	12.8	14.5	16.2
		L type (SHS15V)	6.5	7.6	8.8	9.9	11.1	13.4	15.1	16.8

Note 1: The main unit weight includes the cover weight.

Note 2: The table L(QZ) type shows a QZ specification only for the Ball Screw.

Note 3: The main unit weight of the QZ type is the main unit weight of the table +0.1kg.

[Lateral Wrap-around Specification]

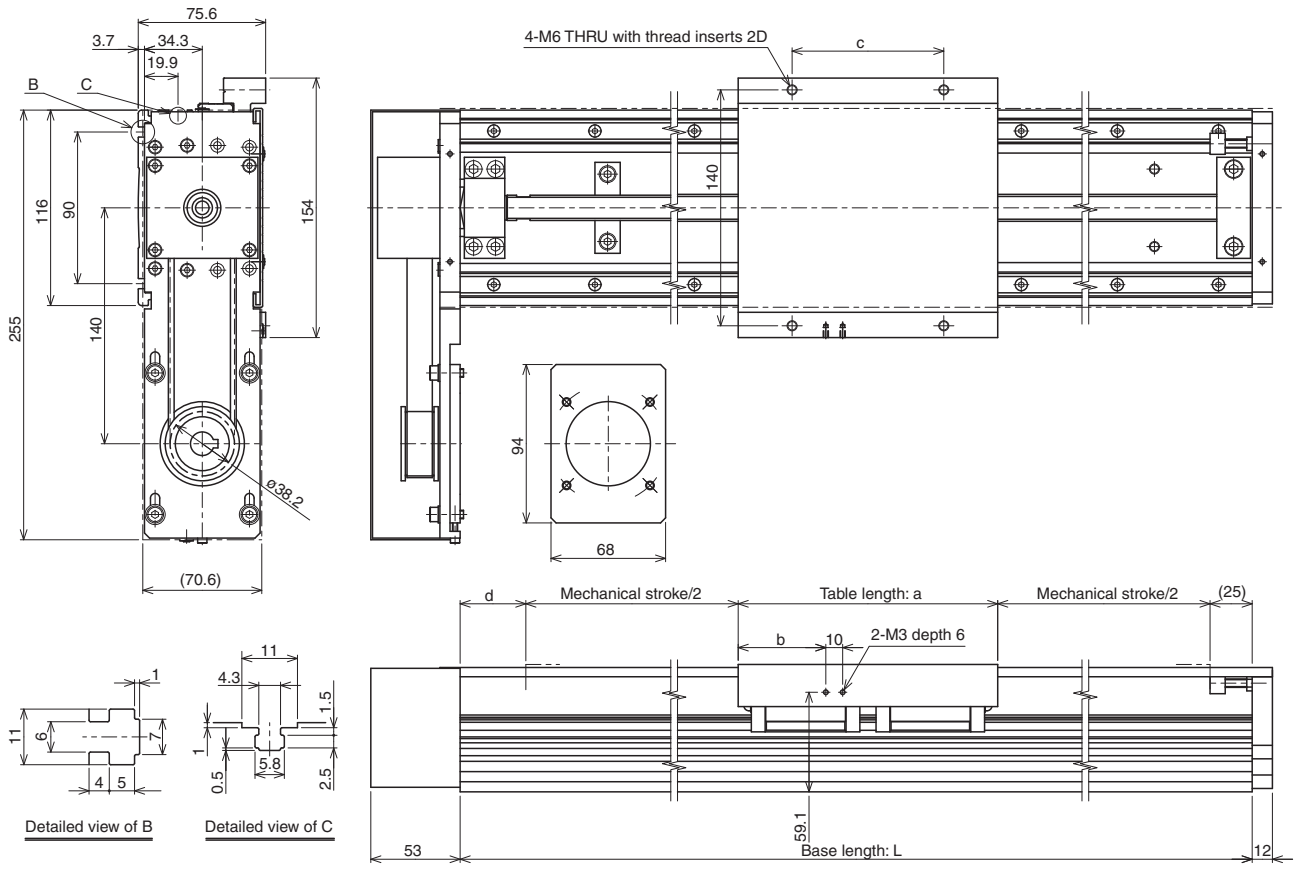

Unit: mm

Table type	Table length: a	b	c	d
S type	126	38	90	53
L type	154	52	90	39
L(QZ) type	154	52	90	48
L-QZ type	180	65	120	21

Base length: L [mm]			340	460	580	700	820	1060	1240	1420
Mechanical stroke [mm]	Table	S type	136	256	376	496	616	856	1036	1216
		L type	122	242	362	482	602	842	1022	1202
		L(QZ) type	113	233	353	473	593	833	1013	1193
		L-QZ type	114	234	354	474	594	834	1014	1194
Main unit weight [kg]	Table	S type	7.4	8.5	9.6	10.8	11.9	14.1	15.8	17.5
		L type (SSR15XW)	7.7	8.8	9.9	11.1	12.2	14.4	16.1	17.8
		L type (SHS15V)	8.1	9.2	10.4	11.5	12.7	15.0	16.7	18.4

Note 1: The main unit weight includes the cover weight.

Note 2: The table L(QZ) type shows a QZ specification only for the Ball Screw.

Note 3: The main unit weight of the QZ type is the main unit weight of the table +0.1kg.

GL15N Model, Ball Screw Driven

[Bottom Wrap-around Specification]

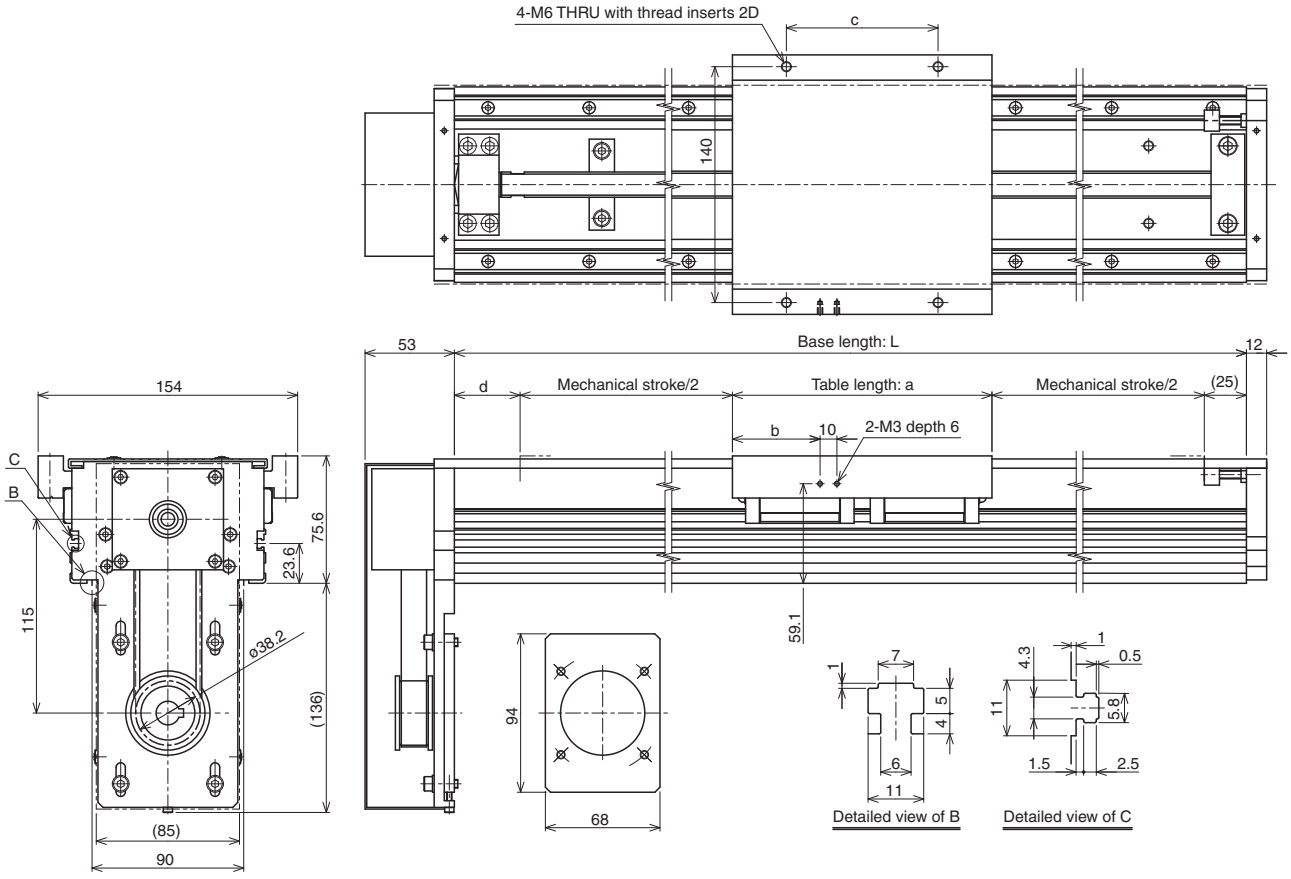

Unit: mm

Table type	Table length: a	b	c	d
S type	126	38	90	53
L type	154	52	90	39
L(QZ) type	154	52	90	48
L-QZ type	180	65	120	21

Base length: L [mm]			340	460	580	700	820	1060	1240	1420
Mechanical stroke [mm]	Table	S type	136	256	376	496	616	856	1036	1216
		L type	122	242	362	482	602	842	1022	1202
		L(QZ) type	113	233	353	473	593	833	1013	1193
		L-QZ type	114	234	354	474	594	834	1014	1194
Main unit weight [kg]	Table	S type	7.4	8.5	9.6	10.8	11.9	14.1	15.8	17.5
		L type (SSR15XW)	7.7	8.8	9.9	11.1	12.2	14.4	16.1	17.8
		L type (SHS15V)	8.1	9.2	10.4	11.5	12.7	15.0	16.7	18.4

Note 1: The main unit weight includes the cover weight.

Note 2: The table L(QZ) type shows a QZ specification only for the Ball Screw.

Note 3: The main unit weight of the QZ type is the main unit weight of the table +0.1kg.

[Direct Mounting Specification]

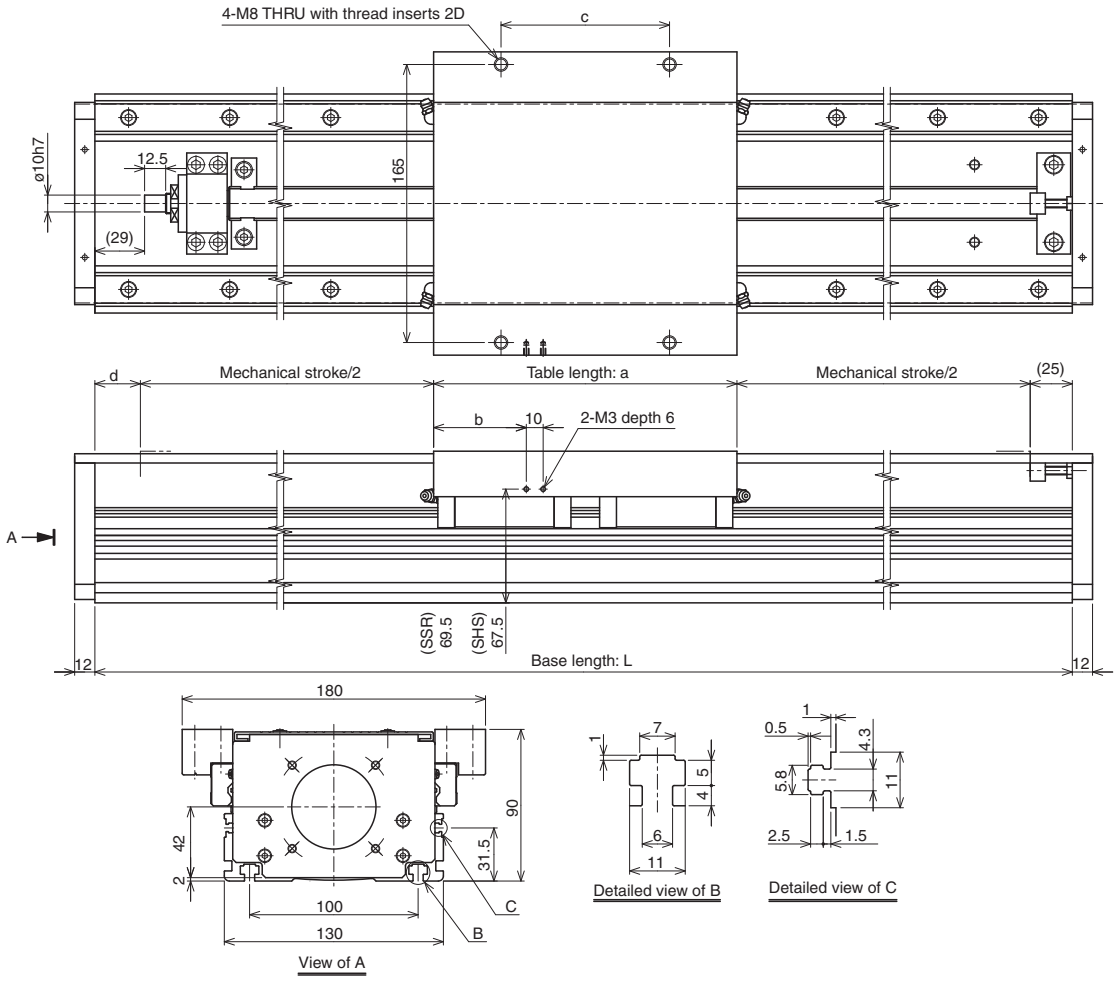

Unit: mm

Table type	Table length: a	b	c	d
S type	160	45	100	37
L type	180	55	100	27
L(QZ) type	180	55	100	34
L-QZ type	210	70	150	5

Base length: L [mm]			460	580	700	820	1060	1240	1420	1600	1780
Mechanical stroke [mm]	Table	S type	238	358	478	598	838	1018	1198	1378	1558
		L type	228	348	468	588	828	1008	1188	1368	1548
		L(QZ) type	221	341	461	581	821	1001	1181	1361	1541
		L-QZ type	220	340	460	580	820	1000	1180	1360	1540
Main unit weight [kg]	Table	S type	9.9	11.5	13.2	14.8	18.1	20.6	23.1	25.5	28.0
		L type (SSR20XW)	10.4	12.0	13.7	15.3	18.6	21.1	23.6	26.0	28.5
		L type (SHS20V)	11.2	12.9	14.6	16.3	19.7	22.2	24.7	27.3	29.8

Note 1: The main unit weight includes the cover weight.

Note 2: The table L(QZ) type shows a QZ specification only for the Ball Screw.

Note 3: The main unit weight of the QZ type is the main unit weight of the table +0.1kg.

Note 4: The maximum base length for the 10mm ball screw lead is 1420mm.

[Lateral Wrap-around Specification]

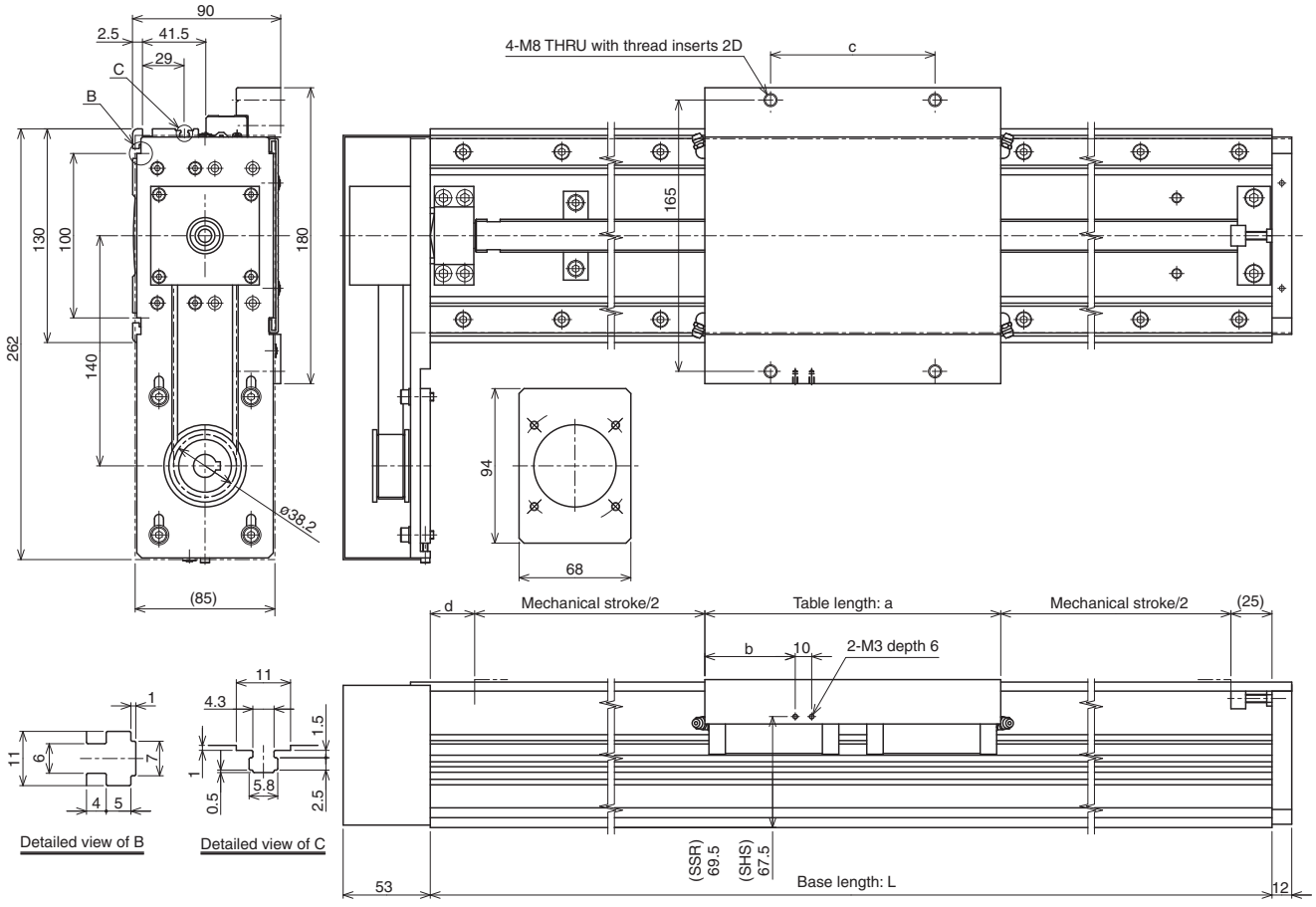

Unit: mm

Table type	Table length: a	b	c	d
S type	160	45	100	37
L type	180	55	100	27
L(QZ) type	180	55	100	34
L-QZ type	210	70	150	5

Base length: L [mm]			460	580	700	820	1060	1240	1420	1600	1780
Mechanical stroke [mm]	Table	S type	238	358	478	598	838	1018	1198	1378	1558
		L type	228	348	468	588	828	1008	1188	1368	1548
		L(QZ) type	221	341	461	581	821	1001	1181	1361	1541
		L-QZ type	220	340	460	580	820	1000	1180	1360	1540
Main unit weight [kg]	Table	S type	11.8	13.4	15.1	16.7	20.0	22.5	25.0	27.4	29.9
		L type (SSR20XW)	12.3	13.9	15.6	17.2	20.5	23.0	25.5	27.9	30.4
		L type (SHS20V)	13.1	14.8	16.5	18.2	21.6	24.1	26.6	29.2	31.7

Note 1: The main unit weight includes the cover weight.

Note 2: The table L(QZ) type shows a QZ specification only for the Ball Screw.

Note 3: The main unit weight of the QZ type is the main unit weight of the table +0.1kg.

Note 4: The maximum base length for the 10mm ball screw lead is 1420mm.

[Bottom Wrap-around Specification]

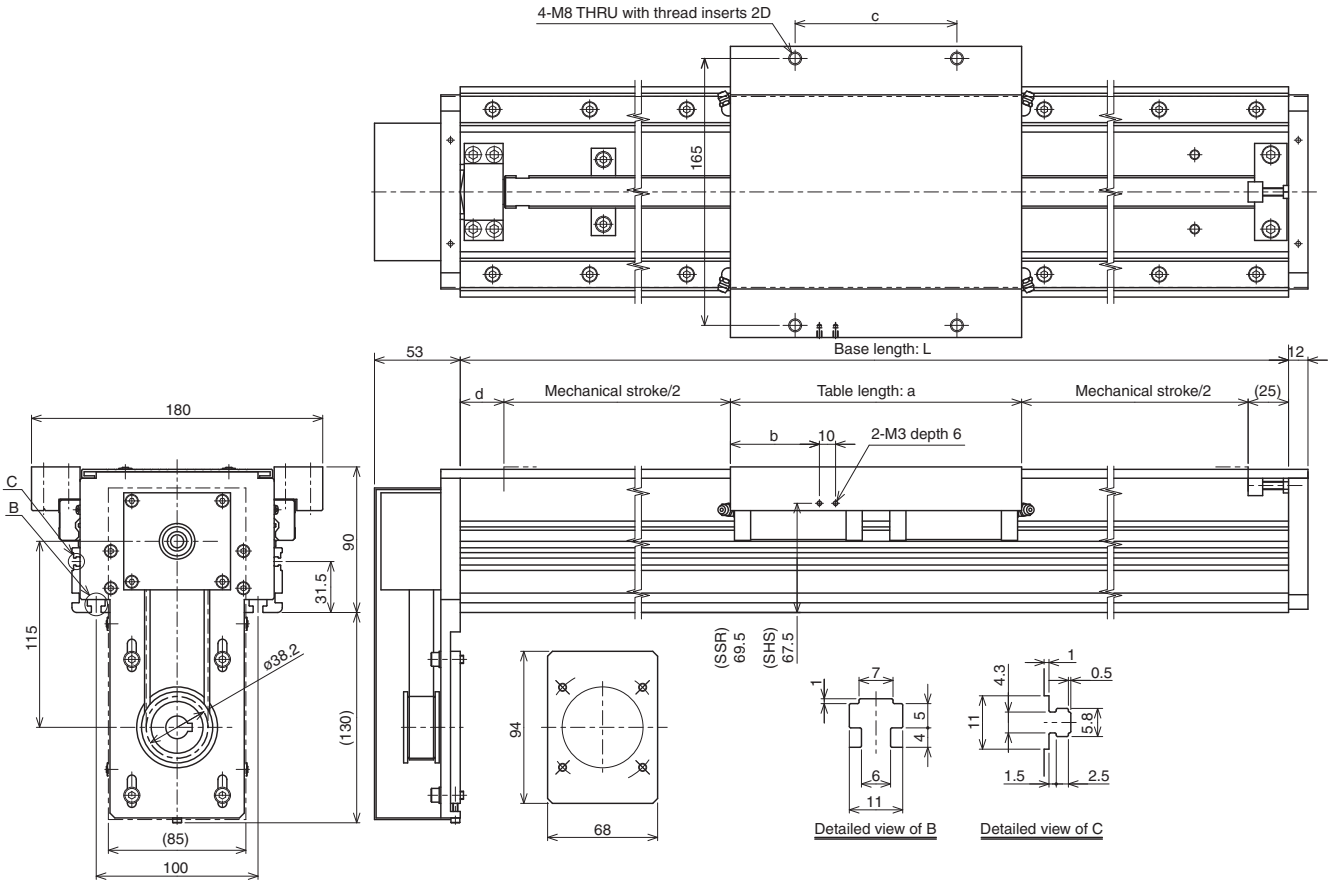

Unit: mm

Table type	Table length: a	b	c	d
S type	160	45	100	37
L type	180	55	100	27
L(QZ) type	180	55	100	34
L-QZ type	210	70	150	5

Base length: L [mm]			460	580	700	820	1060	1240	1420	1600	1780
Mechanical stroke [mm]	Table	S type	238	358	478	598	838	1018	1198	1378	1558
		L type	228	348	468	588	828	1008	1188	1368	1548
		L(QZ) type	221	341	461	581	821	1001	1181	1361	1541
		L-QZ type	220	340	460	580	820	1000	1180	1360	1540
Main unit weight [kg]	Table	S type	11.8	13.4	15.1	16.7	20.0	22.5	25.0	27.4	29.9
		L type (SSR20XW)	12.3	13.9	15.6	17.2	20.5	23.0	25.5	27.9	30.4
		L type (SHS20V)	13.1	14.8	16.5	18.2	21.6	24.1	26.6	29.2	31.7

Note 1: The main unit weight includes the cover weight.

Note 2: The table L(QZ) type shows a QZ specification only for the Ball Screw.

Note 3: The main unit weight of the QZ type is the main unit weight of the table +0.1kg.

Note 4: The maximum base length for the 10mm ball screw lead is 1420mm.

Belt Driven Dimensions

GL15N Model, Belt Driven

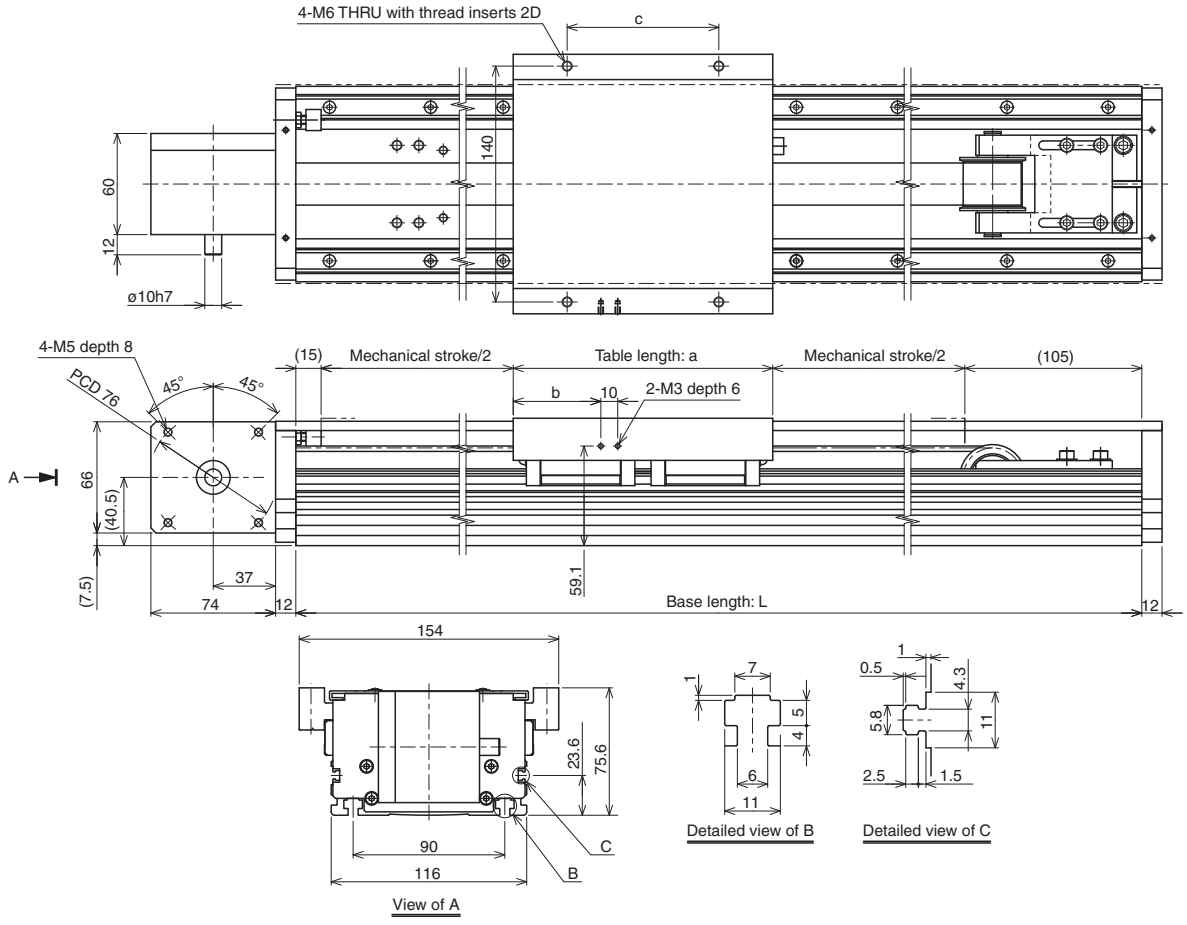

Unit: mm

Table type	Table length: a	b	c
S type	126	38	90
L type	154	52	90
L-QZ type	180	65	120

Base length: L [mm]			340	460	580	700	820	1060	1240	1420	1600	1780	1960
Mechanical stroke [mm]	Table	S type	94	214	334	454	574	814	994	1174	1354	1534	1714
		L type	66	186	306	426	546	786	966	1146	1326	1506	1686
		L-QZ type	40	160	280	400	520	760	940	1120	1300	1480	1660
Main unit weight [kg]	Table	S type	7.1	8.1	9.1	10.1	11.1	13.1	14.5	16.0	17.5	19.0	20.5
		L type (SSR15XW)	7.4	8.4	9.4	10.4	11.4	13.4	14.8	16.3	17.8	19.3	20.8
		L type (SHS15V)	7.8	8.8	9.8	10.9	11.9	13.9	15.4	16.9	18.5	20.0	21.5

Note 1: The main unit weight includes the cover weight.

Note 2: The main unit weight of QZ type is the main unit weight of the table +0.1kg.

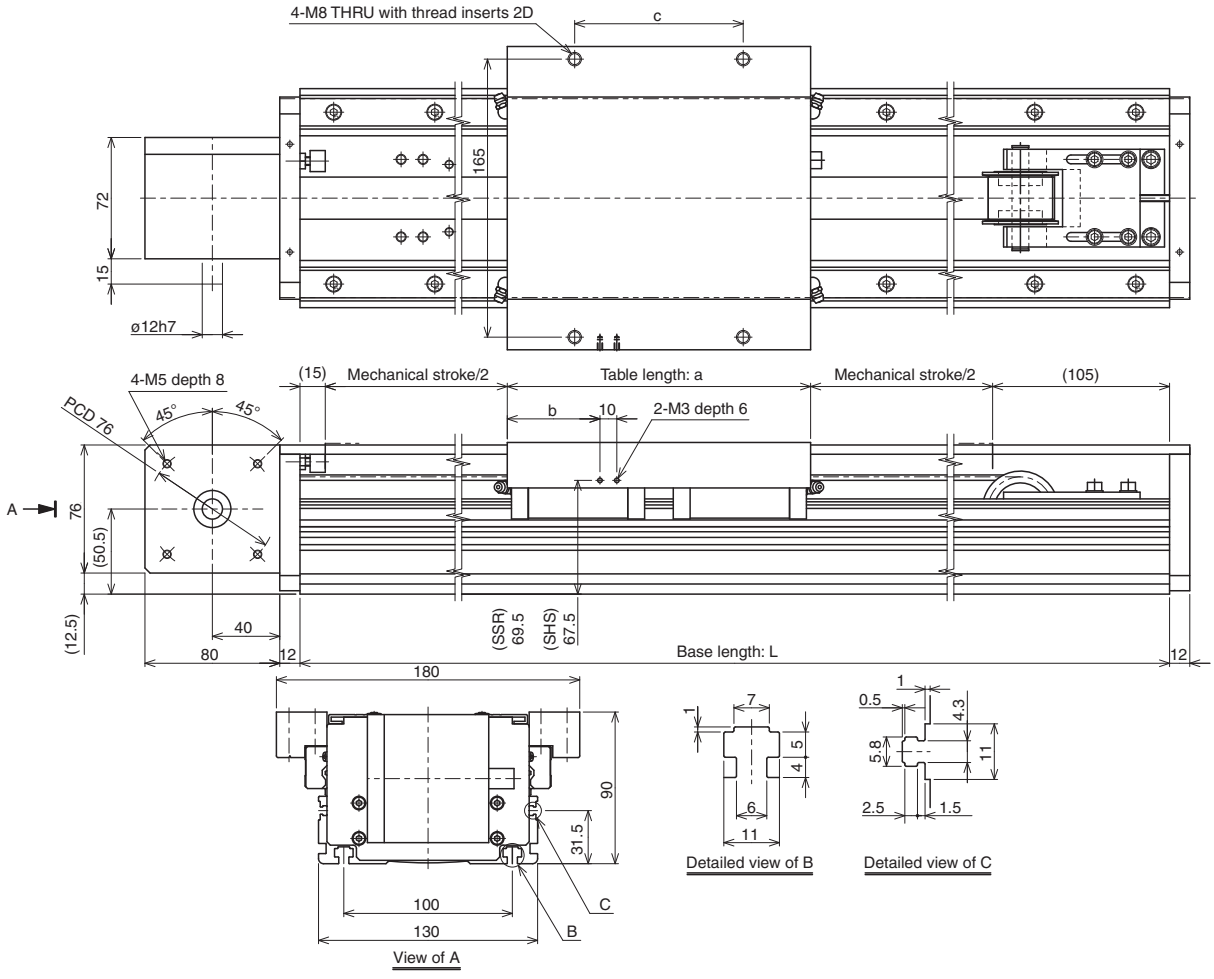

Unit: mm

Table type	Table length: a	b	c
S type	160	45	100
L type	180	55	100
L-QZ type	210	70	150

Base length: L [mm]			460	580	700	820	1060	1240	1420	1600	1780	1960	2200	2320	2500	3000
Mechanical stroke [mm]	Table	S type	180	300	420	540	780	960	1140	1320	1500	1680	1920	2040	2220	2720
		L type	160	280	400	520	760	940	1120	1300	1480	1660	1900	2020	2200	2700
		L-QZ type	130	250	370	490	730	910	1090	1270	1450	1630	1870	1990	2170	2670
Main unit weight [kg]	Table	S type	11.5	12.9	14.3	15.7	18.6	20.7	22.8	24.9	27.0	29.1	31.9	33.3	35.5	41.3
		L type (SSR20XW)	12.0	13.4	14.8	16.2	19.1	21.2	23.3	25.4	27.5	29.6	32.4	33.8	36.0	41.8
		L type (SHS20V)	12.8	14.2	15.7	17.1	20.1	22.2	24.4	26.6	28.8	31.0	33.9	35.4	37.5	43.6

Note 1: The main unit weight includes the cover weight.

Note 2: The main unit weight of QZ type is the main unit weight of the table +0.1kg.

Options

QZ Lubricator

[LM Guide]

QZ Lubricator, composed of high-density fiber net feeds the right amount of lubricant to the raceway of the LM rail. This allows oil film to continuously be formed between balls and raceways and significantly extends the lubrication and maintenance intervals.

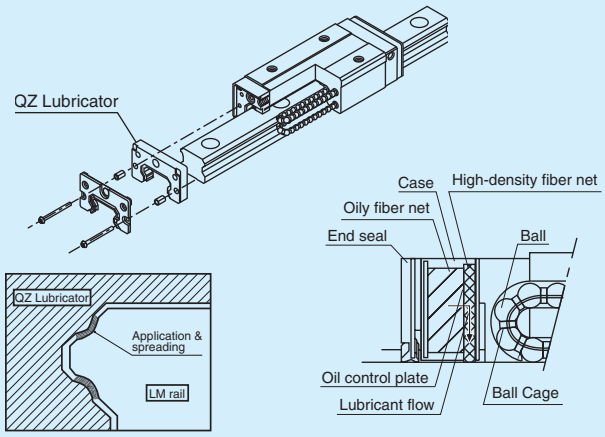

Figure 8 QZ Lubricator Structure Diagram (LM Guide)

[Ball Screw]

An adequate amount of lubricant can be supplied to necessary locations as in the LM Guide portion so that maintenance interval can be greatly extended.

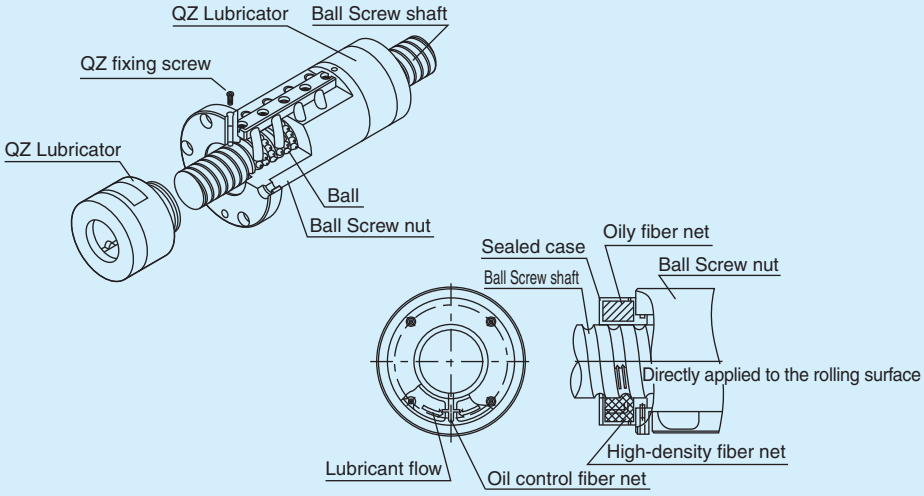

Figure 9 QZ Lubricator Structure Diagram (Ball Screw)

[Control Number]

Motor brackets are available to mount various types of motors. The following table lists by model number the motor brackets available for motors. When purchasing a motor bracket, specify the corresponding model number.

Table 4 Motors and Applicable motor Brackets

Motor							GL15N		GL20N	
	Manufacturer	Series		Model number	Rated output	Flange angle	Direct motor mounting	Wrap-around	Direct motor mounting	Wrap-around
AC Servo motor	YASKAWA Electric Corporation	Σ-V		SGMJV-01	100W	□40	A	–	A	–
				SGMAV-01			A	–	A	–
				SGMJV-02	200W	□60	B	B14	B	B14
				SGMAV-02			B	B14	B	B14
				SGMJV-04	400W		–	–	B	B14
				SGMAV-04			–	–	B	B14
		Σ-III		SGMAS-01	100W	□40	A	–	A	–
				SGMPS-01		□60	B	–	B	–
				SGMAS-02	200W		B	B14	B	B14
				SGMAS-04	400W		–	–	B	B14
				SGMPS-02	200W	□80	–	–	J	J14
				SGMPS-04	400W		–	–	J	J14
		Σ-II		SGMAH-01	100W	□40	A	–	A	–
				SGMPH-01		□60	B	–	B	–
				SGMAH-02	200W		B	B14	B	B14
				SGMAH-04	400W		–	–	B	B14
				SGMPH-02	200W	□80	–	–	J	J14
				SGMPH-04	400W		–	–	J	J14
	Mitsubishi Electric Corporation	MELSERVO	J3	HF-MP13	100W	□40	A	–	A	–
				HF-KP13			A	–	A	–
				HF-MP23	200W	□60	B	B14	B	B14
				HF-KP23			B	B14	B	B14
				HF-MP43	400W		–	–	B	B14
				HF-KP43			–	–	B	B14
			J2-Super	HC-MFS13	100W	□40	A	–	A	–
				HC-KFS13			A	–	A	–
				HC-MFS23	200W	□60	B	B14	B	B14
				HC-KFS23			B	B14	B	B14
				HC-MFS43	400W		–	–	B	B14
				HC-KFS43			–	–	B	B14
	Panasonic Corporation	MINAS A4		MSMD01	100W	□38	E	–	E	–
				MQMA01		□60	F	–	F	–
				MSMD02	200W		F	F11	F	F11
				MSMD04	400W		–	–	F	F14
				MQMA02	200W	□80	–	–	D	D11
				MQMA04	400W		–	–	D	D14
		MINAS A III		MSMA01	100W	□38	E	–	E	–
				MSMA02	200W	□60	F	F11	F	F11
				MSMA04	400W		–	–	F	F14
		MINAS A		MSMA01	100W	□38	E	–	E	–
				MQMA01		□60	F	–	F	–
				MSMA02	200W		F	F11	F	F11
				MSMA04	400W		–	–	F	F14
				MQMA02	200W	□80	–	–	D	D11
				MQMA04	400W		–	–	D	D14
	OMRON Corporation	OMNUC W		R88M-U10030	100W	□40	A	–	A	–
				R88M-W10030			A	–	A	–
				R88M-WP10030		□60	B	–	B	–
				R88M-U20030	200W		B	B14	B	B14
				R88M-W20030			B	B14	B	B14
				R88M-U40030	400W		–	–	B	B14
				R88M-W40030			–	–	B	B14
				R88M-WP20030	200W	□80	–	–	J	–
				R88M-WP40030	400W		–	–	J	–
	FANUC	β is series		β 0.3/5000is	100W	□40	A	–	A	–
				β 0.4/5000is	125W		B	–	B	–
				β 0.5/5000is	200W	□60	B	B9	B	B9
				β 1/5000is	400W		–	–	B	B14
	Sanyo Denki Co.,Ltd.	SANMOTION Q1		Q1AA04010D	100W	□40	A	–	A	–
				Q1AA06020D	200W	□60	B	B14	B	B14
				Q1AA06040D	400W		–	–	B	B14
Stepping motor	ORIENTAL MOTOR Co.,Ltd.	5-phase	RK	RK564	–	□60	H	–	H	–
				RK566			H	–	H	–
				RK569			H	–	H	–
				RK596		□85	–	–	I	–
				RK599			–	–	I	–
		α step		AS66		□60	H	–	H	–
				ASC66			H	–	H	–
				AS98		□85	–	–	I	–

Note: A motor shaft for motor wrap option will need a key.

[Dimensional Drawing]

• Direct motor mounting

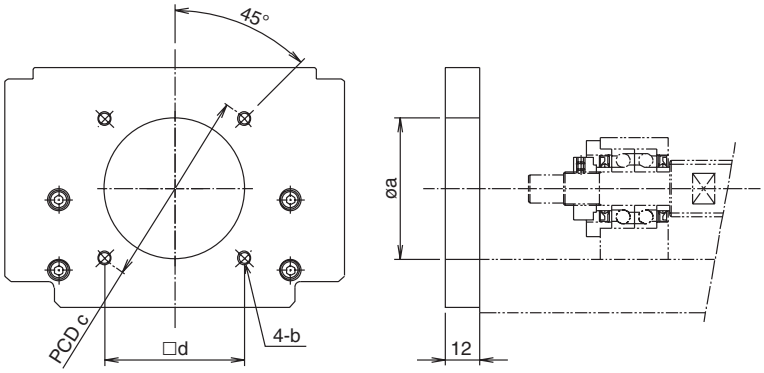

Table 5 Motor Mounting Plate Unit: mm

Bracket Symbol	Motor mount dimensions			
	a	b	c	d
A	30H7	M4	46	–
B	50H7	M5	70	–
C	50H7	M4	60	–
D	70H7	M5	90	–
E	30H7	M3	45	–
F	50H7	M4	70	–
G	34H7	M3	48	–
H	36H7	M4	–	50
I	60H7	M6	–	70
J	70H7	M6	90	–

• Motor wrap-around

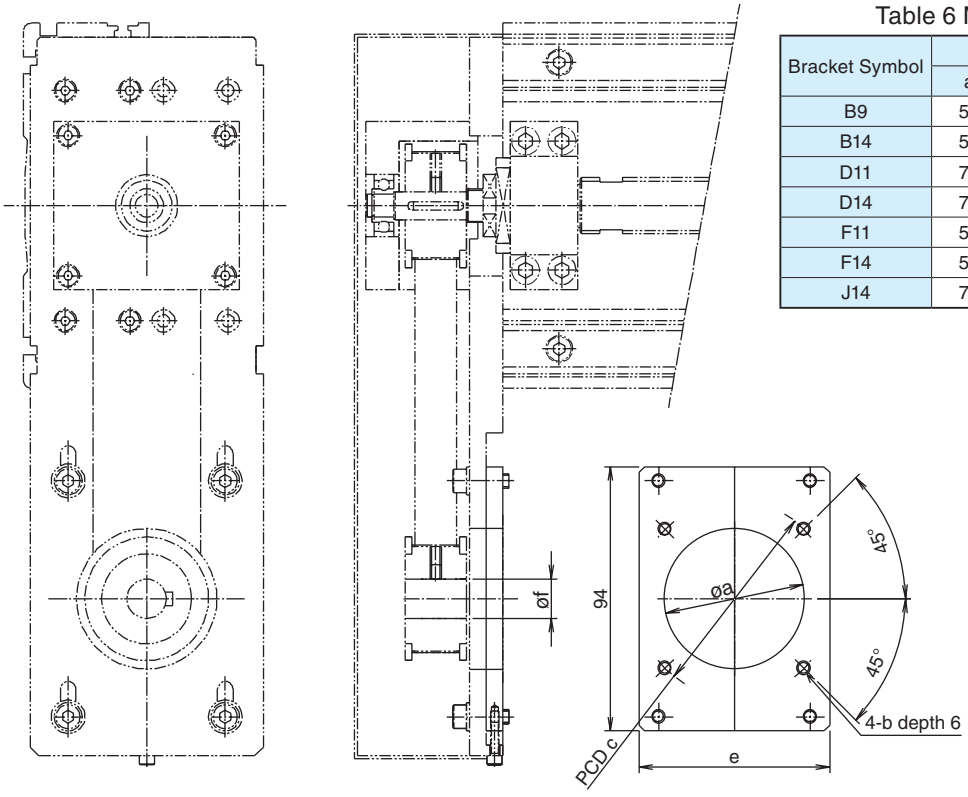

Table 6 Motor Mounting Plate Unit: mm

Bracket Symbol	Motor mount dimensions				f
	a	b	c	e	
B9	50	M5	70	68	9
B14	50	M5	70	68	14
D11	70	M5	90	80	11
D14	70	M5	90	80	14
F11	50	M4	70	68	11
F14	50	M4	70	68	14
J14	70	M6	90	80	14

[Control Number]

Motor brackets are available that allow different motors to be attached. The following table lists control numbers for motors with reducers and motor brackets applicable for reducers by their model numbers. Please specify the corresponding model number.

Table 7 Motors and Applicable Motor Brackets

Motor (Reducer)							Common to both, GL15N and GL20N
	Manufacturer	Series		Model Number	Rated output	Reduction Ratio	
Servomotor with reducer	YASKAWA Electric Corporation	Σ-III		SGMAS-01A∗AJ1	100W	1/5	A1
				SGMAS-02A∗AJ1	200W	1/5	A2
		Σ-II		SGMAH-01∗∗AJ1	100W	1/5	A1
				SGMAH-02∗∗AJ1	200W	1/5	A2
	Mitsubishi Electric Corporation	MELSERVO	J3	HF-KP13G1	100W	1/5	C1
						1/12	C1
				HF-MP13G1	100W	1/5	C1
						1/12	C1
			J2-Super	HC-MFS13G1	100W	1/5	C1
						1/12	C1
				HC-KFS13G1	100W	1/5	C1
						1/12	C1
	Panasonic Corporation	MINAS A4		MSMD01∗∗∗1N	100W	1/5	B1
				MSMD02∗∗∗1N	200W	1/5	B1
				MSMD04∗∗∗1N	400W	1/5	B2
		MINAS A		MSMA01∗∗32	100W	1/5	B1
				MSMA02∗∗32	200W	1/5	B1
				MSMA04∗∗32	400W	1/5	B2
Reducer	SHIMPO DRIVES, INC.	VR		VR∗F-3B-100	100W	1/3	B1
				VR∗F-5B-100		1/5	B1
				VR∗F-3B-200	200W	1/3	B1
				VR∗F-5B-200		1/5	B1
				VR∗F-3B-400	400W	1/3	B1
				VR∗F-5C-400		1/5	B2

[Dimensional Drawing]

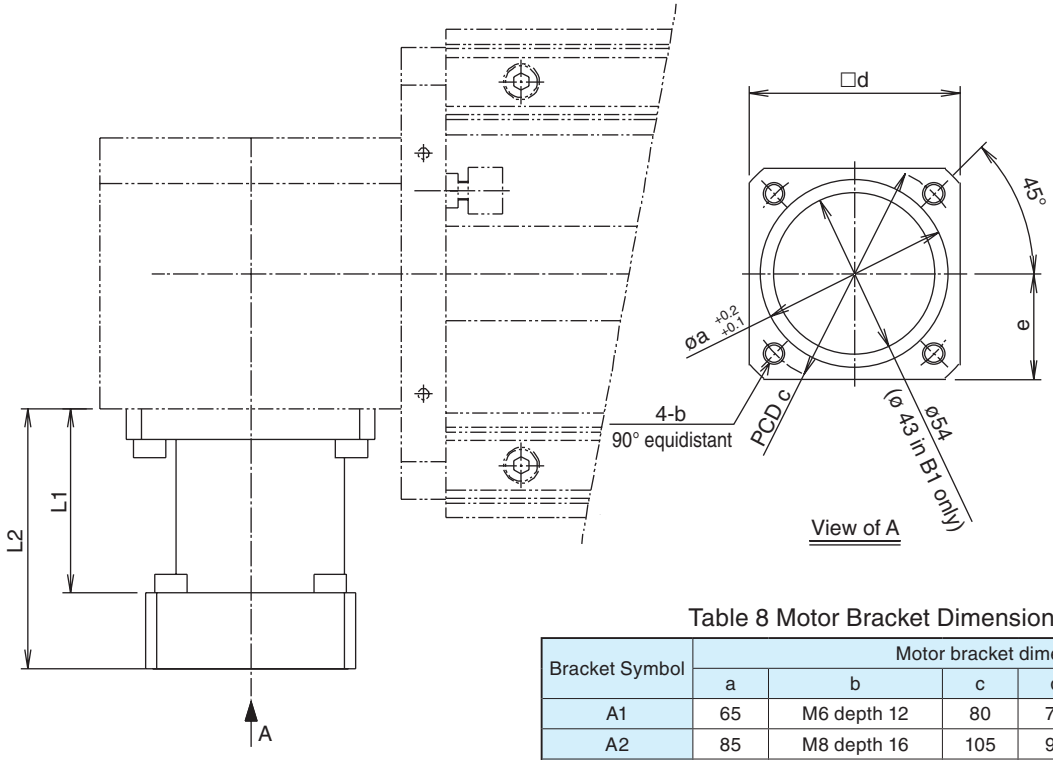

Table 8 Motor Bracket Dimensional Drawing

Unit: mm

Bracket Symbol	Motor bracket dimensions						
	a	b	c	d	e	L1	L2
A1	65	M6 depth 12	80	70	35	59	98
A2	85	M8 depth 16	105	90	45	66	112
B1	50	5.5 THRU	60	56	28	49	69
B2	70	6.6 THRU	90	78	39	60	86
C1	60	M6 depth 12	75	66	33	54	98

[Control Number]

The following table lists reducers and motors available with motor bracket B1 or B2. It also shows the control numbers of reducers available with the motors. When purchasing a reducer, specify the corresponding control number.

Table 9 Motors and Applicable Reducer

Motor						Reduction ratio		
	Manufacture	Series		Model number	Rated output	1/3	1/5	1/9
AC Servo motor	YASKAWA Electric Corporation	Σ-V		SGMAV-01	100W	B1G103	B1G105	B1G109
				SGMAV-02	200W	B1G303	B1G305	B2G309
				SGMAV-04	400W	B1G303	B2G305	B2G309
		Σ-III		SGMAS-01	100W	B1G103	B1G105	B1G109
				SGMAS-02	200W	B1G303	B1G305	B2G309
				SGMAS-04	400W	B1G303	B2G305	B2G309
		Σ-II		SGMAH-01	100W	B1G103	B1G105	B1G109
				SGMAH-02	200W	B1G303	B1G305	B2G309
				SGMAH-04	400W	B1G303	B2G305	B2G309
	Mitsubishi Electric Corporation	MELSERVO	J3	HF-MP13	100W	B1G103	B1G105	B1G109
				HF-KP13		B1G103	B1G105	B1G109
				HF-MP23	200W	B1G303	B1G305	B2G309
				HF-KP23		B1G303	B1G305	B2G309
				HF-MP43	400W	B1G303	B2G305	B2G309
				HF-KP43		B1G303	B2G305	B2G309
			J2-Super	HC-MFS13	100W	B1G103	B1G105	B1G109
				HC-KFS13		B1G103	B1G105	B1G109
				HC-MFS23	200W	B1G303	B1G305	B2G309
				HC-KFS23		B1G303	B1G305	B2G309
				HC-MFS43	400W	B1G303	B2G305	B2G309
				HC-KFS43		B1G303	B2G305	B2G309
	Panasonic Corporation	MINAS A4		MSMD01	100W	B1G203	B1G205	B1G209
				MSMD02	200W	B1G403	B1G405	B2G409
				MSMD04	400W	B1G503	B2G505	B2G509
		MINAS A		MSMA01	100W	B1G203	B1G205	B1G209
				MSMA02	200W	B1G403	B1G405	B2G409
				MUMA02		B1G403	B1G405	B2G409
				MSMA04	400W	B1G503	B2G505	B2G509
				MUMA04		B1G503	B2G505	B2G509
	OMRON Corporation	OMNUC W		R88M-U10030	100W	B1G103	B1G105	B1G109
				R88M-W10030		B1G103	B1G105	B1G109
				R88M-U20030	200W	B1G303	B1G305	B2G309
				R88M-W20030		B1G303	B1G305	B2G309
				R88M-U40030	400W	B1G303	B2G305	B2G309
				R88M-W40030		B1G303	B2G305	B2G309
	Sanyo Denki Co.,Ltd.	SANMOTION Q1		Q1AA04010D	100W	B1G103	B1G105	B1G109
				Q1AA06020D	200W	B1G303	B1G305	B2G309
				Q1AA06040D	400W	B1G303	B2G305	B2G309

Note 1: B1: VR∗F-B (SHIMPO DRIVES, INC.); B2: VR∗F-C (SHIMPO DRIVES, INC.)

Note 2: When ordering a belt drive with reducer inform us of the model number of the motor to which it is to be attached.

[Dimensional Drawing]

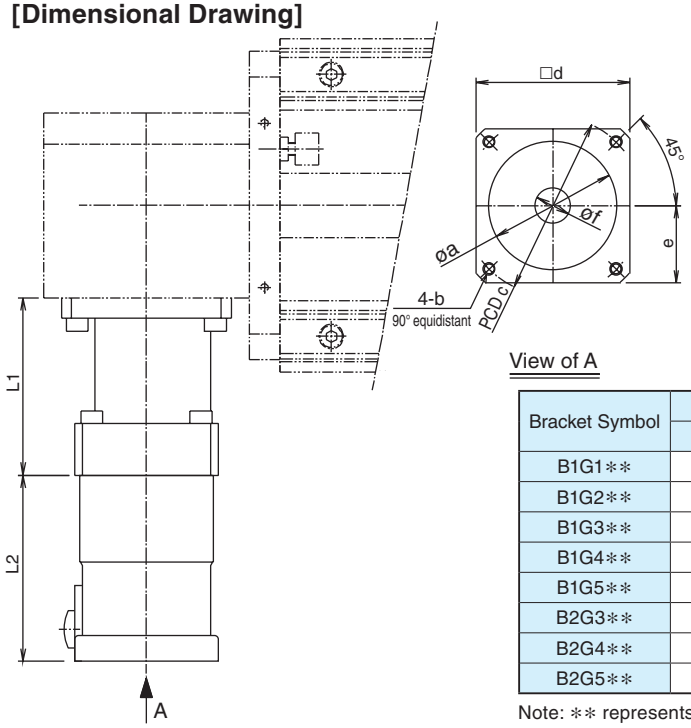

View of A

Table 10 Reducer Dimensional Drawing

Unit: mm

Bracket Symbol	Motor bracket dimensions							
	a	b	c	d	e	f	L1	L2
B1G1∗∗	30	M4 depth 10	46	40	20	8	69	67.5
B1G2∗∗	30	M3 depth 8	45	38	19	8	69	67.5
B1G3∗∗	50	M5 depth 10	70	60	30	14	69	72.5
B1G4∗∗	50	M4 depth 10	70	60	30	11	69	72.5
B1G5∗∗	50	M4 depth 10	70	60	30	14	69	72.5
B2G3∗∗	50	M5 depth 10	70	60	30	14	86	89.5
B2G4∗∗	50	M4 depth 10	70	60	30	11	86	89.5
B2G5∗∗	50	M4 depth 10	70	60	30	14	86	89.5

Note: ∗∗ represents an actual gear ratio

Cover

The GL-N model has an anti-dust cover.
This cover is common to GL15N and GL20N.

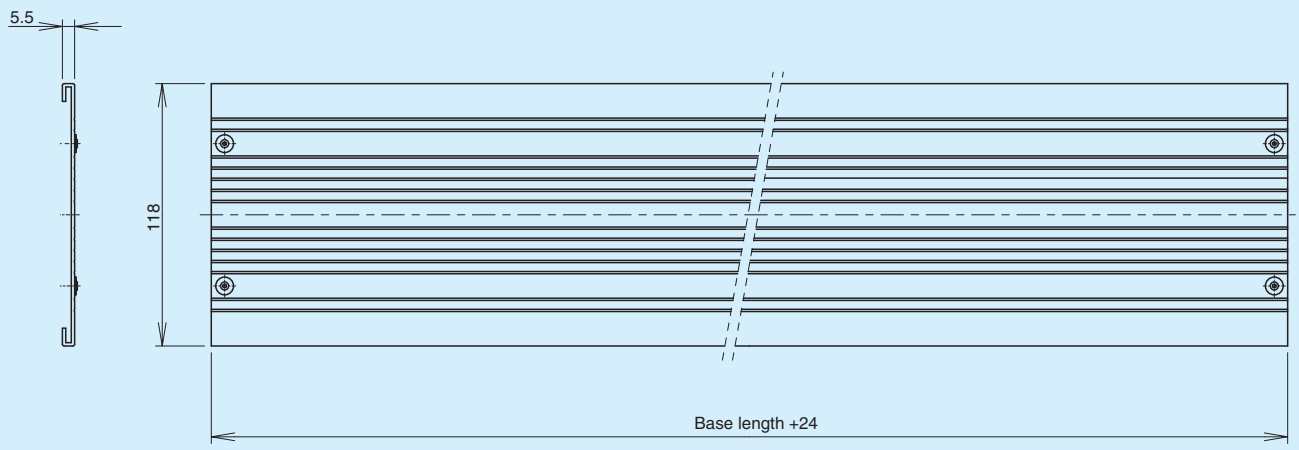

Figure 10 Cover Outline View

Note 1: Deflection of the cover increases as the base length increases. A cover-support is attached to the table to prevent table interference (See the diagram below). This is attached as standard from models with base lengths above 1000 mm. The cover may touch another part such as the rail and belt, because deflection caused by the cover's own weight increases.

Note 2: If the GL-N model is used in any position other than horizontal, a part mounted on the table might touch the cover due to deflection caused by the cover.

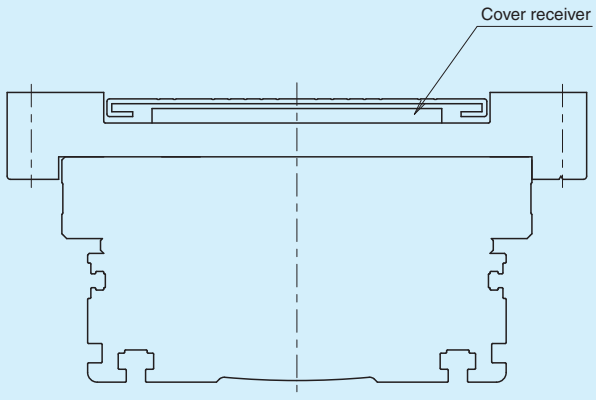

Figure 11 Section View of a Model with a Cover Receiver

Bellows

The GL-N model has an anti-dust bellows as well as an anti-dust cover.

[GL15N Model, Ball Screw Driven]

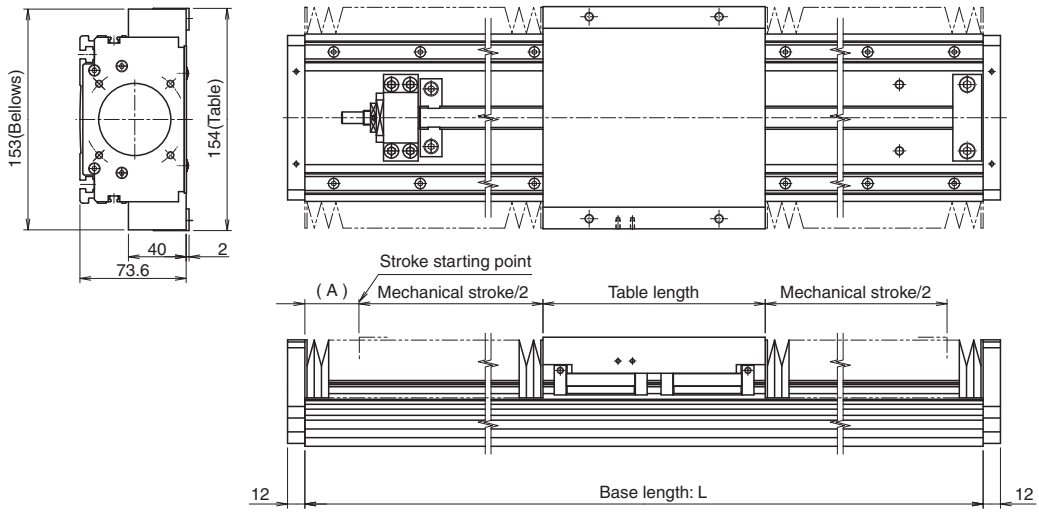

Unit: mm

Base length: L			340	460	580	700	820	1060	1240	1420
Mechanical stroke	Table	S type	133	248	358	468	563	763	913	1058
		L type	119	234	340	440	535	735	885	1030
		L(QZ) type	110	225	335	440	535	735	885	1030
		L-QZ type	104	214	314	414	509	709	859	1004
Stroke starting point: A	Table	S type	53	53	53	53	65.5	85.5	100.5	118
		L type	39	39	43	53	65.5	85.5	100.5	118
		L(QZ) type	48	48	48	53	65.5	85.5	100.5	118
		L-QZ type	28	33	43	53	65.5	85.5	100.5	118

[GL20N Model, Ball Screw Driven]

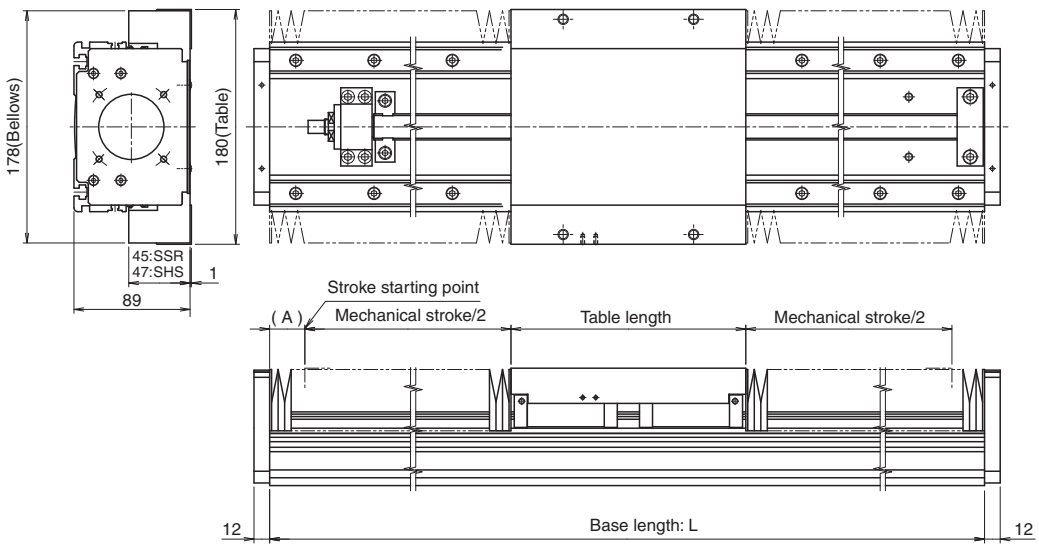

Unit: mm

Base length: L			460	580	700	820	1060	1240	1420	1600	1780
Mechanical stroke	Table	S type	237	352	464	569	779	939	1094	1254	1409
		L type	227	339	444	549	759	919	1074	1234	1389
		L(QZ) type	220	336	444	549	759	919	1074	1234	1389
		L-QZ type	198	309	414	519	729	889	1044	1204	1359
Stroke starting point: A	Table	S type	37	37	38	45.5	60.5	70.5	83	93	105.5
		L type	27	30.5	38	45.5	60.5	70.5	83	93	105.5
		L(QZ) type	34	34	38	45.5	60.5	70.5	83	93	105.5
		L-QZ type	25.5	30.5	38	45.5	60.5	70.5	83	93	105.5

[GL15N Model, Belt Driven]

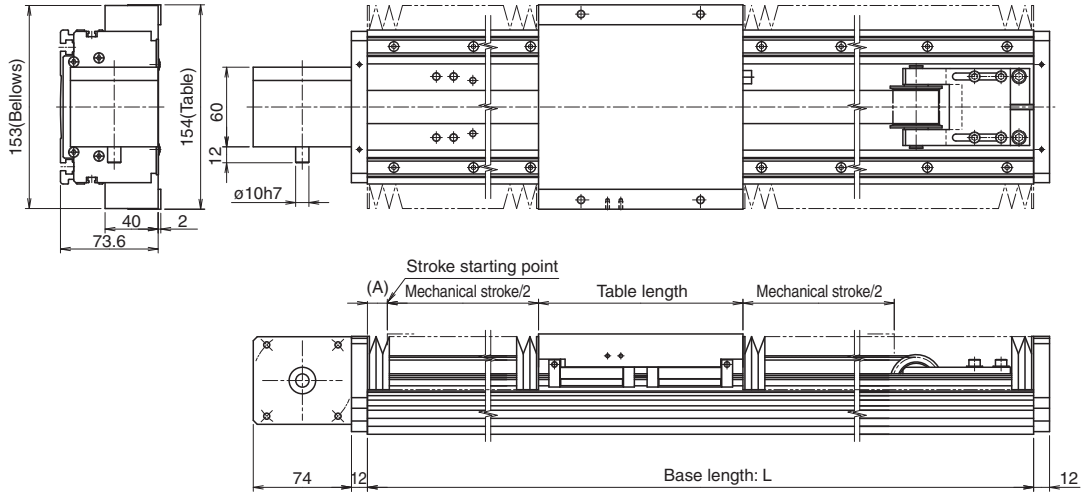

Unit: mm

Base length: L			340	460	580	700	820	1060	1240	1420	1600	1780	1960
Mechanical stroke	Table	S type	78	186	291	396	501	698	833	973	1108	1243	1378
		L type	50	158	263	368	473	670	805	945	1080	1215	1350
		L-QZ type	24	132	237	342	447	644	779	919	1054	1189	1324
Stroke starting point: A			31	43	58	73	88	118	140.5	160.5	183	205.5	228

[GL20N Model, Belt Driven]

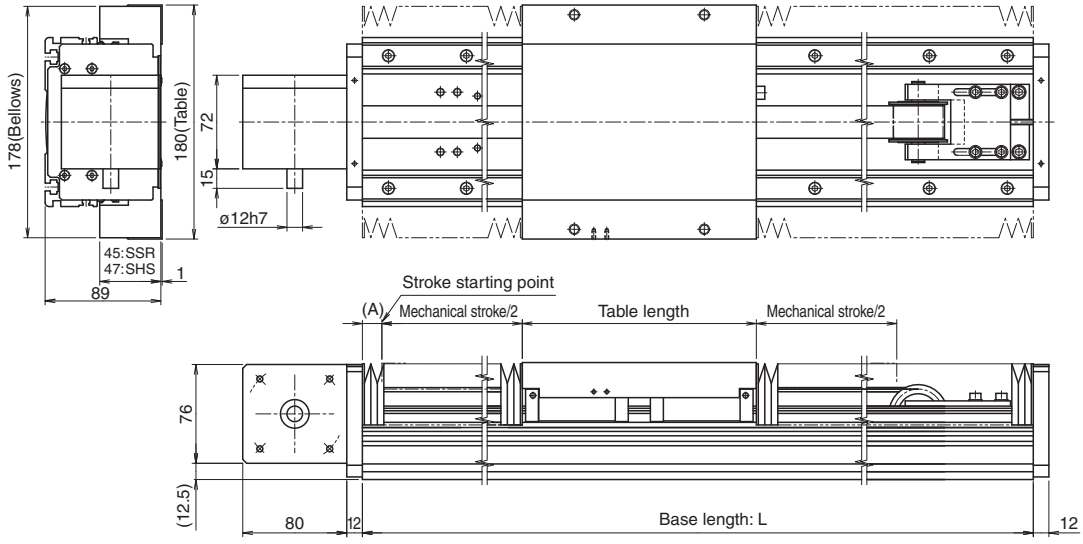

Unit: mm

Base length: L			460	580	700	820	1060	1240	1420	1600	1780	1960	2200	2320	2500	3000
Mechanical stroke	Table	S type	159	267	374	482	697	849	989	1134	1274	1419	1609	1704	1844	2239
		L type	139	247	354	462	677	829	969	1114	1254	1399	1589	1684	1824	2219
		L-QZ type	109	217	324	432	647	799	939	1084	1224	1369	1559	1654	1794	2189
Stroke starting point: A			36	48	61	73	98	115.5	135.5	153	173	190.5	215.5	228	248	300.5

Sensor

The GL-N model allows various sensors to be set to the T groove at the side of the base.

[Control Number]

Type	Logic Mode	Sensor Model Number Type	Quantity	Manufacturer	Accessories	Symbol
Photo sensor	Selectable	EE-SX671	3	OMRON	Mounting bolts and nuts, Sensor target, Mounting plate	A
	Selectable	EE-SX674	3	OMRON	Mounting bolts and nuts, Sensor target, Mounting plate	B
Proximity sensor	N.O. (Normally Open)	TL-W3MC1	3	OMRON	Mounting bolts and nuts, Sensor target	C1
	N.O. (Normally Open)	TL-W3MC1	1	OMRON	Mounting bolts and nuts, Sensor target	C2
	N.C. (Normally Closed)	TL-W3MC2	2			

Note 1: All sensor outputs are NPN outputs.
Note 2: The sensor and accessories are provided with the product.
Note 3: N.O.contact: Normally Open type
N.C.contact: Normally Closed type

[Dimensional Drawing]

GL15N

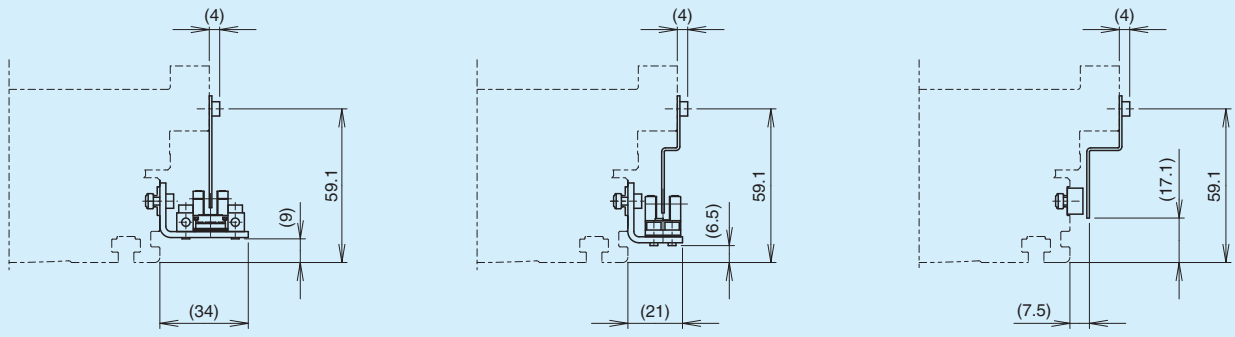

A: EE-SX671 (OMRON)

B: EE-SX674 (OMRON)

C1: TL-W3MC1 (OMRON)
C2: TL-W3MC2 (OMRON)

GL20N

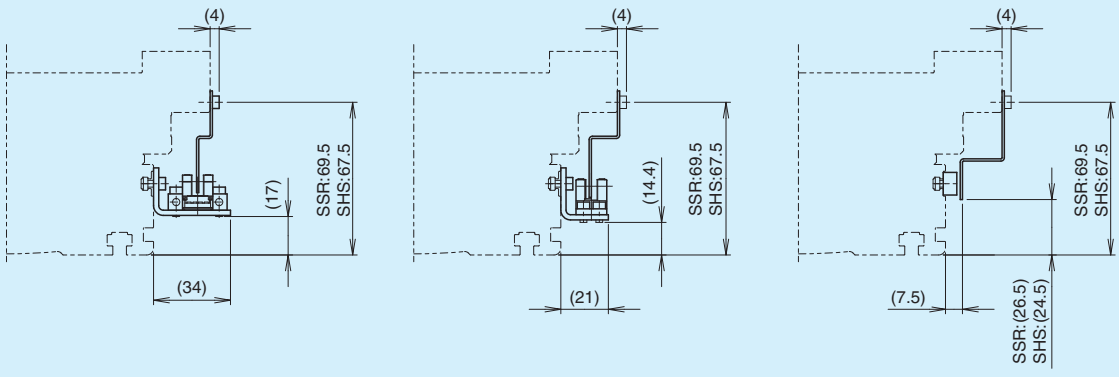

A: EE-SX671 (OMRON)

B: EE-SX674 (OMRON)

C1: TL-W3MC1 (OMRON)
C2: TL-W3MC2 (OMRON)

Cable Carrier

The GL-N model enables various cable carriers to be set to the T groove at the side of the base.

[Control Number]

Cable carrier model number	Manufacturer	Symbol
TKP0180-W40-R28	TSUBAKIMOTO CHAIN CO.	A
TKP0180-W40-R37		B
TKP0180-W40-R50		C
TKP0320-W24-R37		D
TKP0320-W24-R50		E

Cable carrier model number	Manufacturer	Symbol
TKP0320-W24-R75	TSUBAKIMOTO CHAIN CO.	F
TKP0320-W50-R37		G
TKP0320-W50-R50		H
TKP0320-W50-R75		I
KSH-24L-42	THK	J

Note: For the selection of cable carriers, etc., refer to the catalogs of cable carriers.

[Dimensional Drawing]

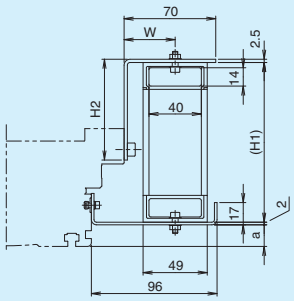

Unit: mm

Symbol	Cable carrier model number	H1	H2	Dimensions			
				W		a	
				GL15N	GL20N	GL15N	GL20N
A	TKP0180-W40-R28	(78)	33	45	39	8.6	16.5
B	TKP0180-W40-R37	(96)	51				
C	TKP0180-W40-R50	(122)	77				

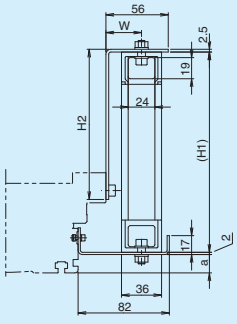

Unit: mm

Symbol	Cable carrier model number	H1	H2	Dimensions			
				W		a	
				GL15N	GL20N	GL15N	GL20N
D	TKP0320-W24-R37	(104)	59	38	32	8.6	16.5
E	TKP0320-W24-R50	(130)	85				
F	TKP0320-W24-R75	(180)	135				

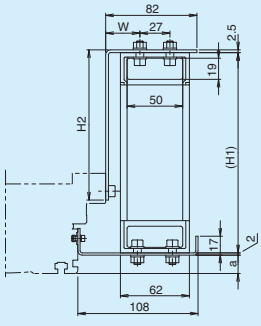

Unit: mm

Symbol	Cable carrier model number	H1	H2	Dimensions			
				W		a	
				GL15N	GL20N	GL15N	GL20N
G	TKP0320-W50-R37	(104)	59	36.75	30.75	8.6	16.5
H	TKP0320-W50-R50	(130)	85				
I	TKP0320-W50-R75	(180)	135				

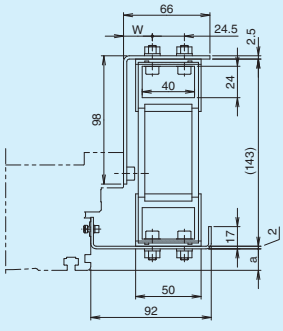

Unit: mm

Symbol	Cable carrier model number	Dimensions			
		W		a	
		GL15N	GL20N	GL15N	GL20N
J	KSH-24L-42	28	22	8.6	16.5

Nut for mounting the base (accessory)

For model GL-N, T-Slot Nuts for mounting the base are available. T-Slot Nuts for mounting the base are included.

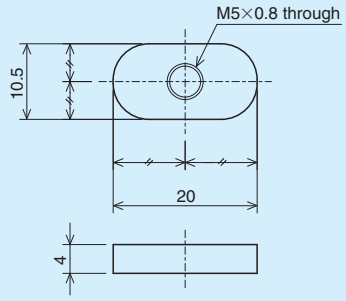

Standard base length (mm)	340	460	580	700	820	1060	1240	1420	1600	1780	1960	2200	2320	2500	3000
Quantity	4	4	6	6	8	10	10	12	14	14	16	16	18	18	20

T-Slot Nuts for base mounting are included.

Appendix

Service Life Time and Static Safety factor

The GL-N model consists of LM Guides, a ball screw, and support units. The life and safety factor of each component can be calculated from the basic dynamic load rating and the basic static load rating. For more information on these, refer to each item (LM Guides, ball screws, and support units) in the general catalog.

The nominal life of the LM Guides and ball screw can be calculated using the technical calculation software available from the THK Technical Support Site (https://tech.thk.com/) or contained in the CD-ROM catalog. In calculating the nominal life, see the data in the following table.

Note: Please note that the calculation of life is theoretical. In actual use, the life varies depending on the service conditions such as the usage environment, the lubricating condition, the accuracy or rigidity of the area where the LM actuator is installed, and so forth.

[LM Guide]

Actuator model number	Table type	LM Guide model number	Thrust position		Rail span	Block span	Movable section				Slider height
							Mass	Gravity center			
			B1 (mm)	B2 (mm)	W (mm)	L1 (mm)	m1 (kg)	G1 (mm)	G2 (mm)	G3 (mm)	H (mm)
GL15N-∗∗∗-SV-B	S	SSR15XVUU-Y	45	-5.4	90	82	1.7	45	41	30	43
GL15N-∗∗∗-SW-B	L	SSR15XWUU-Y		-5.4		74	2.2		37	30	43
GL15N-∗∗∗-SWQ-B	L-QZ	SSR15XWQZUU-Y		-5.4		94	2.4		47	30	43
GL15N-∗∗∗-HV-B	L	SHS15VUU		-5.4		74	2.2		37	30	43
GL15N-∗∗∗-HVQ-B	L-QZ	SHS15VQZUU		-5.4		94	2.4		47	30	43
GL20N-∗∗∗-SV-B	S	SSR20XVUU	51	-2	102	108	2.7	51	54	34.6	48
GL20N-∗∗∗-SW-B	L	SSR20XWUU		-2		108	3.2		54	34.6	48
GL20N-∗∗∗-SWQ-B	L-QZ	SSR20XWQZUU		-2		110	3.4		55	34.6	48
GL20N-∗∗∗-HV-B	L	SHS20VUU		-4		96	3.6		48	36.6	50
GL20N-∗∗∗-HVQ-B	L-QZ	SHS20VQZUU		-4		110	3.8		55	36.6	50
GL15N-∗∗∗-SV-E	S	SSR15XVUU-Y	45	-26	90	82	1.2	45	41	30	43
GL15N-∗∗∗-SW-E	L	SSR15XWUU-Y		-26		74	1.7		37	30	43
GL15N-∗∗∗-SWQ-E	L-QZ	SSR15XWQZUU-Y		-26		94	1.8		47	30	43
GL15N-∗∗∗-HV-E	L	SHS15VUU		-26		74	1.7		37	30	43
GL15N-∗∗∗-HVQ-E	L-QZ	SHS15VQZUU		-26		94	1.8		47	30	43
GL20N-∗∗∗-SV-E	S	SSR20XVUU	51	-27	102	108	2.1	51	54	34.6	48
GL20N-∗∗∗-SW-E	L	SSR20XWUU		-27		108	2.6		54	34.6	48
GL20N-∗∗∗-SWQ-E	L-QZ	SSR20XWQZUU		-27		110	2.8		55	34.6	48
GL20N-∗∗∗-HV-E	L	SHS20VUU		-29		96	3.0		48	36.6	50
GL20N-∗∗∗-HVQ-E	L-QZ	SHS20VQZUU		-29		110	3.2		55	36.6	50

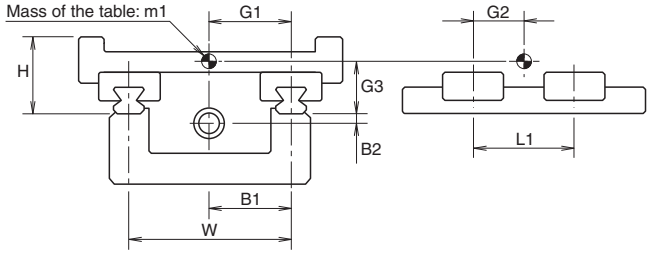

[Ball Screw]

Actuator model number			Mechanical stopper-to-mechanical stopper stroke (mm)			Ball screw			
Nominal model number	Base length* (mm)	Ball screw	S type	L type	L-QZ type	Mounting method	Category	Nut model number	Mounting distance
			SV	SW, HV	SWQ, HVQ				MAX (mm)
GL15N	034	B05	136	122	114	Fixed–support	Rolled–without pre-load	BTK1605-2.6ZZ	186
	142		1216	1202	1194				1266
GL15N	034	B10	136	122	114	Fixed–support	Rolled–without pre-load	BLK1510-5.6ZZ	179
	142		1216	1202	1194				1259
GL15N	034	B16	136	122	114	Fixed–support	Rolled–without pre-load	BLK1616-3.6	176
	142		1216	1202	1194				1256
GL15N	034	B20	136	122	114	Fixed–support	Rolled–without pre-load	WTF1520-3ZZ	179
	142		1216	1202	1194				1259
GL15N	034	B30	136	122	114	Fixed–support	Rolled–without pre-load	WTF1530-2ZZ	179
	142		1216	1202	1194				1259
GL20N	046	B05	238	228	220	Fixed–support	Rolled–without pre-load	BTK2005-2.6ZZ	299
	178		1558	1548	1540				1619
GL20N	046	B10	238	228	220	Fixed–support	Rolled–without pre-load	BLK1510-5.6ZZ	299
	142		1198	1188	1180				1259
GL20N	046	B20	238	228	220	Fixed–support	Rolled–without pre-load	BLK2020-3.6ZZ	297
	178		1558	1548	1540				1617
GL20N	046	B40	238	228	220	Fixed–support	Rolled–without pre-load	WTF2040-2ZZ	297
	178		1558	1548	1540				1617

LM Guide model number symbol	Movable section mass (kg)	Sliding resistance (N)
GL15N-∗∗∗-SV	1.7	16.2
GL15N-∗∗∗-SW	2.2	16.6
GL15N-∗∗∗-SWQ	2.4	26.6
GL15N-∗∗∗-HV	2.2	17.2
GL15N-∗∗∗-HVQ	2.4	33.2
GL20N-∗∗∗-SV	2.7	21.0
GL20N-∗∗∗-SW	3.2	21.4
GL20N-∗∗∗-SWQ	3.4	33.4
GL20N-∗∗∗-HV	3.6	20.6
GL20N-∗∗∗-HVQ	3.8	36.6

* The base length shows the minimum and maximum lengths.
Example: 034 for a base length of 340mm and 142 for a base length of 1420mm

[Support Unit]

Nominal model number	Support unit fixed side		Support unit support side	
	Angular ball bearing		Deep-groove ball bearing	
	Model number	Bearing model number	Model number	Bearing model number
GL15N	GK10S	7000HTDFGMP5 (Direct-mounting specification)	GF10	608ZZ
		7000HTDBGMP5 (Wrap-around specification)		
GL20N	GK12S	7001HTDFGMP5 (Direct-mounting specification)	GF12	6000ZZ
		7001HTDBGMP5 (Wrap-around specification)		

Motor Selection

When selecting a motor that is installed on the GL-N model, refer to the following data. For details of the motor selection method and motor specifications, contact the motor manufacturer.

[Ball Screw Specifications]

Actuator model number			Ball screw shaft				
Nominal model number	Base length*1 (mm)	Ball screw	Model number	Outer diameter (mm)	Lead (mm)	Length*2 (mm)	Shaft-end outer diameter (mm)
GL15N	034	B05	BTK1605-2.6ZZ	16	5	311	ø 8h7
	142					1391	
GL15N	034	B10	BLK1510-5.6ZZ	15	10	311	ø 8h7
	142					1391	
GL15N	034	B16	BLK1616-3.6	16	16	311	ø 8h7
	142					1391	
GL15N	034	B20	WTF1520-3ZZ	15	20	311	ø 8h7
	142					1391	
GL15N	034	B30	WTF1530-2ZZ	15	30	311	ø 8h7
	142					1391	
GL20N	046	B05	BTK2005-2.6ZZ	20	5	427	ø 10h7
	178					1747	
GL20N	046	B10	BLK1510-5.6ZZ	15	10	427	ø 10h7
	142					1387	
GL20N	046	B20	BLK2020-3.6ZZ	20	20	427	ø 10h7
	178					1747	
GL20N	046	B40	WTF2040-2ZZ	20	40	427	ø 10h7
	178					1747	

LM Guide model number symbol	Movable section mass (kg)	Sliding resistance (N)
GL15N-∗∗∗-SV	1.7	16.2
GL15N-∗∗∗-SW	2.2	16.6
GL15N-∗∗∗-SWQ	2.4	26.6
GL15N-∗∗∗-HV	2.2	17.2
GL15N-∗∗∗-HVQ	2.4	33.2
GL20N-∗∗∗-SV	2.7	21.0
GL20N-∗∗∗-SW	3.2	21.4
GL20N-∗∗∗-SWQ	3.4	33.4
GL20N-∗∗∗-HV	3.6	20.6
GL20N-∗∗∗-HVQ	3.8	36.6

Timing pulley	
Nominal model number	Moment of inertia (kg-cm^2)
GL15N	0.12
GL20N	0.12

Allowable input torque*3	
Nominal model number	(N-m)
GL15N	2.8
GL20N	5.3

*1 The base length shows the minimum and maximum lengths.
Example: 034 for a base length of 340mm and 142 for a base length of 1420mm
*2 The length of a ball screw shaft is the length available for the direct-mounting specification. For the wrap-around specification, the length of the ball screw shaft is 74mm longer for the GL15N model and 78mm longer for the GL20N model.
*3 The allowable input torque is the value for the direct-mounting specification. For the wrap-around specification, contact THK.

[Belt Specifications]

Actuator model number		Belt		Timing pulley			
Nominal model number	Timing belt	Model number	Mass* (kg)	Model number	Diameter (PCD) (mm)	Table moving distance/one turn of pulley	Moment of inertia (total of two pulleys) (kg-cm^2)
GL15N	EH	025-MA5	0.38	22-MA5-025	35.01	110 mm	0.289
GL20N	EH	025-MA5	0.58	24-MA5-025	38.20	120 mm	0.447

Reducer		
Reduction ratio	Rated output (W)	Moment of inertia (kg-cm^2)
1/3	100	0.058
1/3	200	0.135
1/5	100	0.04
1/5	200	0.118
1/9	100	0.035

Allowable input torque	
Nominal model number	(N-m)
GL15N	4.8
GL20N	8.1

LM Guide model number symbol	Movable section mass (kg)	Sliding resistance (N)
GL15N-∗∗∗-SV	1.2	16.2
GL15N-∗∗∗-SW	1.7	16.6
GL15N-∗∗∗-SWQ	1.8	26.6
GL15N-∗∗∗-HV	1.7	17.2
GL15N-∗∗∗-HVQ	1.8	33.2
GL20N-∗∗∗-SV	2.1	21.0
GL20N-∗∗∗-SW	2.6	21.4
GL20N-∗∗∗-SWQ	2.8	33.4
GL20N-∗∗∗-HV	3.0	20.6
GL20N-∗∗∗-HVQ	3.2	36.6

* The belt mass is the mass for the maximum belt length.

THK LM Actuator GL-N

Precautions on Use

Handling

- Disassembling parts may cause foreign material to enter the system or deteriorate the accuracy. Do not disassemble the product.
- Do not drop or strike this product. Doing so may damage the product. If this product is a shocked, its functions may be damaged even though it looks normal in appearance.
- Entrance of foreign material may cause damage to the ball circulating component or functional loss. Prevent foreign material, such as dust or cutting chips, from entering the system.
- When planning to use the LM system in an environment where the coolant penetrates the LM Actuator model GL-N, it may cause trouble to product functions depending on the type of the coolant. Contact THK for details.
- Exceeding the permissible rotational speed may lead the components to be damaged or cause an accident. Be sure to use the product within the specification range designated by THK.
- The service temperature range of this product is 0 to 40°C (no freezing or condensation). If you consider using this product outside the service temperature range, contact THK.
- When using the LM system in locations exposed to constant vibrations or in special environments such as clean rooms, vacuum and low/high temperature, contact THK in advance.
- If the product is operating or in the ready state, never touch a moving part. In addition, do not enter the operating area of the actuator.
- If two or more people are involved in the operation, confirm the procedures such as a sequence, signs and anomalies in advance, and appoint another person for monitoring the operation.

Lubrication

- Thoroughly remove anti-rust oil and feed lubricant before using the product.
- To maximize the performance of the LM Actuator model GL-N, lubrication is required. Using the product without lubrication may increase wear of the rolling elements or shorten the service life. This product contains THK AFB-LF grease as standard.
- The ball screw does not have a grease nipple, apply grease directly onto the rolling surface.
- Do not mix lubricants of different physical properties.
- When planning to use a special lubricant, contact THK before using it.
- When planning to use an oil lubricant, contact THK before using it.
- In normal use, the lubricant must be replenished every 100 km as a guide. However, the greasing interval varies according to the conditions. We recommend determining the greasing interval based on the result of the initial inspection.
- In locations exposed to constant vibrations or in special environments such as clean rooms, vacuum and low/high temperature, normal lubricants may not be used. Contact THK for details. For clean room applications, low dust-generative grease is available. Contact THK for details.

Storage

When storing the LM Actuator model GL-N, enclose it in a package designated by THK and store it in a horizontal orientation while avoiding high temperature, low temperature and high humidity.

- **"LM GUIDE," and " " are registered trademarks of THK CO., LTD.**
- The actual products may differ from the pictures and photographs in this catalog.
- Outward appearances and specifications is subject to change without notification for purposes of improvement, please inquire before using them.
- Although great care has been taken in the production of this catalog, THK will not take any responsibility for damage resulting from typographical errors or omissions.
- In exporting our products and technology, or selling them for the purpose of export, THK has a basic policy of observing laws relating to foreign exchange, trade and other laws. For export of THK products as single items, contact THK in advance.

All rights reserved

THK CO., LTD.

HEAD OFFICE 3-11-6, NISHI-GOTANDA, SHINAGAWA-KU, TOKYO 141-8503 JAPAN
INTERNATIONAL SALES DEPARTMENT PHONE:+81-3-5434-0351 FAX:+81-3-5434-0353
Global site : http://www.thk.com/

NORTH AMERICA
THK America,Inc.
●HEADQUARTERS
Phone:+1-847-310-1111 Fax:+1-847-310-1271
●CHICAGO OFFICE
Phone:+1-847-310-1111 Fax:+1-847-310-1182
●NORTH EAST OFFICE
Phone:+1-845-369-4035 Fax:+1-845-369-4909
●ATLANTA OFFICE
Phone:+1-770-840-7990 Fax:+1-770-840-7897
●LOS ANGELES OFFICE
Phone:+1-949-955-3145 Fax:+1-949-955-3149
●SAN FRANCISCO OFFICE
Phone:+1-925-455-8948 Fax:+1-925-455-8965
●DETROIT OFFICE
Phone:+1-248-858-9330 Fax:+1-248-858-9455
●TORONTO OFFICE
Phone:+1-905-820-7800 Fax:+1-905-820-7811

SOUTH AMERICA
THK Brasil LTDA
Phone:+55-11-3767-0100 Fax:+55-11-3767-0101

EUROPE
THK GmbH
●EUROPEAN HEADQUARTERS
Phone:+49-2102-7425-555 Fax:+49-2102-7425-556
●DÜSSELDORF OFFICE
Phone:+49-2102-7425-0 Fax:+49-2102-7425-299
●FRANKFURT OFFICE
Phone:+49-2102-7425-650 Fax:+49-2102-7425-699
●STUTTGART OFFICE
Phone:+49-7150-9199-0 Fax:+49-7150-9199-888
●MÜNCHEN OFFICE
Phone:+49-8937-0616-0 Fax:+49-8937-0616-26
●U.K. OFFICE
Phone:+44-1908-30-3050 Fax:+44-1908-30-3070
●ITALY MILANO OFFICE
Phone:+39-039-284-2079 Fax:+39-039-284-2527
●ITALY BOLOGNA OFFICE
Phone:+39-051-641-2211 Fax:+39-051-641-2230
●SWEDEN OFFICE
Phone:+46-8-445-7630 Fax:+46-8-445-7639
●AUSTRIA OFFICE
Phone:+43-7229-51400 Fax:+43-7229-51400-79
●SPAIN OFFICE
Phone:+34-93-652-5740 Fax:+34-93-652-5746
●TURKEY OFFICE
Phone:+90-216-362-4050 Fax:+90-216-569-7150
●PRAGUE OFFICE
Phone:+420-2-41025-100 Fax:+420-2-41025-199
●MOSCOW OFFICE
Phone:+7-495-649-80-47 Fax:+7-495-649-80-44
THK Europe B.V.
●EINDHOVEN OFFICE
Phone:+31-040-290-9500 Fax:+31-040-290-9599
THK France S.A.S.
Phone:+33-4-3749-1400 Fax:+33-4-3749-1401

CHINA
THK (CHINA) CO.,LTD.
●HEADQUARTERS
Phone:+86-411-8733-7111 Fax:+86-411-8733-7000
●SHANGHAI OFFICE
Phone:+86-21-6219-3000 Fax:+86-21-6219-9890
●BEIJING OFFICE
Phone:+86-10-8441-7277 Fax:+86-10-6590-3557
●CHENGDU OFFICE
Phone:+86-28-8526-8025 Fax:+86-28-8525-6357
●GUANGZHOU OFFICE
Phone:+86-20-8523-8418 Fax:+86-20-3801-0456
THK (SHANGHAI) CO.,LTD.
Phone:+86-21-6275-5280 Fax:+86-21-6219-9890

TAIWAN
THK TAIWAN CO.,LTD.
●TAIPEI HEAD OFFICE
Phone:+886-2-2888-3818 Fax:+886-2-2888-3819
●TAICHUNG OFFICE
Phone:+886-4-2359-1505 Fax:+886-4-2359-1506
●TAINAN OFFICE
Phone:+886-6-289-7668 Fax:+886-6-289-7669

KOREA
SEOUL REPRESENTATIVE OFFICE
Phone:+82-2-3468-4351 Fax:+82-2-3468-4353

SINGAPORE
THK LM SYSTEM Pte. Ltd.
Phone:+65-6884-5500 Fax:+65-6884-5550

INDIA
BANGALORE REPRESENTATIVE OFFICE
Phone:+91-80-2330-1524 Fax:+91-80-2314-8226

PRINTED WITH SOY INK

©THK CO., LTD.

200907020 E10 Printed in Japan