Radial and Axial Needle Roller and Cage Assemblies Made From Profiled Strip

Axial Bearing Washers

SCHAEFFLER GROUP
INDUSTRIAL

Foreword

Space-saving, precise, high load capacity

The radial and axial needle roller and cage assemblies in this Technical Product Information are produced by bending of flat cages BF and after forming are fitted with needle rollers. As a result, it is possible to achieve simple designs of clearance-free bearing arrangements with high running accuracy and load carrying capacity as well as high speed suitability in combination with very small radial and axial section height.

Since the needle roller and cage assemblies are not tied to defined dimension series but can be precisely produced to a wide range of diameter values in accordance with the specific application, they are an economical alternative to catalogue standard bearings.

The raceways and contact running surfaces for the needle roller and cage assemblies require a rolling bearing raceway. If the adjacent construction is not suitable as a raceway for axial bearing arrangements, axial bearing washers ASS can be used.

Replacement for ...

Technical Product Information TPI 203 brings together the following publications:

- Publication FST, Radial and axial needle roller and cage assemblies made from flat cages of series BF, axial bearing washers
- Market Information MAI 56, High precision bearings with very small radial section height
- Publication GKL, High precision bearings for combined loads, section Axial needle roller and cage assemblies and axial bearing washers.

The data in the catalogue represent the current level of technology and manufacture as of May 2010. They reflect not only progress in rolling bearing technology but also the experience gathered in practical applications. Any information in previous publications that does not concur with the data in this TPI is therefore invalid.

Radial and axial needle roller and cage assemblies, axial bearing washers

		Page
Product overview	Radial and axial needle roller and cage assemblies, axial bearing washers	4
Features	Flat cages	5
	Radial needle roller and cage assemblies	5
	Axial needle roller and cage assemblies	6
	Axial bearing washers	6
	Lubrication	7
Design and safety guidelines	Static load carrying capacity	8
	Static load safety factor	8
	Friction	8
	Minimum axial load	8
	Design of raceways	9
	Lower hardness of raceways	9
	Sealing	9
	Design of radial bearing arrangements	10
	Design of axial bearing arrangements	10
	Forming as radial needle roller and cage assemblies	11
Accuracy	Grade of needle rollers	11
	Dimensional and geometrical tolerances of axial bearing washers	11
Ordering example, ordering designation	Radial needle roller and cage assembly	12
	Needle roller and cage assembly formed by bending by customer	12
	Axial needle roller and cage assembly	13
	Axial bearing washer	13
Dimension tables	Axial needle roller and cage assemblies, axial bearing washers	14
	Radial needle roller and cage assemblies	16
Application example	Universal milling centre – rotary table bearing arrangement	17

Product overview

Radial and axial needle roller and cage assemblies, axial bearing washers

Flat cage

BF

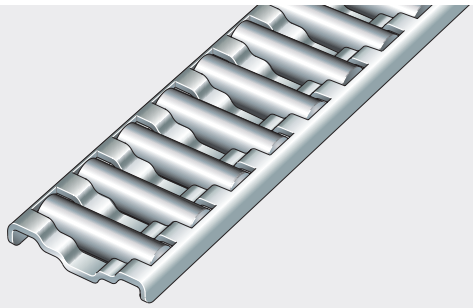

Radial needle roller and cage assembly

Made from flat cage BF

Open joint

K

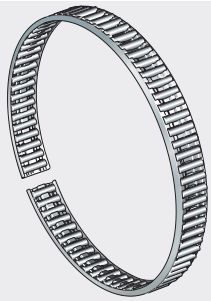

Axial needle roller and cage assembly

Made from flat cage BF

AXK

Axial bearing washer

Slotted design

ASS

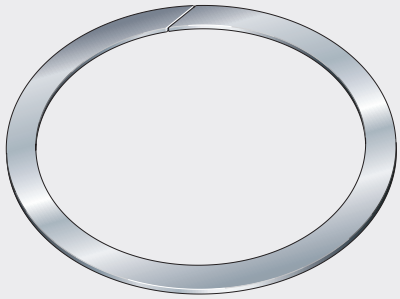

Radial and axial needle roller and cage assemblies, axial bearing washers

Features

This TPI describes radial and axial needle roller and cage assemblies produced by forming of flat cages BF. The radial or axial section height respectively of the cages corresponds to the diameter of the needle rollers. As a result, needle roller and cage assemblies make it possible to achieve bearing arrangements with a very small radial or axial design envelope. The raceways in the adjacent construction must be hardened and ground.

The self-retaining needle rollers are guided individually and precisely in the cage pockets and are thus held at a distance from each other. As a result, needle roller and cage assemblies are capable of higher speeds than full complement bearings.

Due to the manufacturing method, the needle roller and cage assemblies are an economical alternative to catalogue standard bearings, especially in small quantities. Eight different cage cross-sections are available.

Flat cages

Flat cages BF have low section height and high rigidity while maintaining a low mass.

The cage is made from profiled or machined steel strip and has stamped cage pockets accommodating the needle rollers.

Needle rollers

The needle rollers are made from hardened rolling bearing steel according to DIN 17230 with a core hardness of 670 + 170 HV (58 + 7 HRC).

The outside surfaces of the needle rollers have a curved transition to the end faces. This prevents harmful edge stresses.

Radial needle roller and cage assemblies

Radial needle roller and cage assemblies K are available for all shaft diameters from 105 mm to 1000 mm. They are normally supplied bent into their final shape but can also be formed by the customer from the flat cages BF, see also page 11. This gives advantages in stockholding.

Low radial section height

The low radial section height corresponds to the diameter of the needle rollers. This is between 3 mm and 12 mm.

Radial needle roller and cage assemblies K are suitable for pitch circle rotational speeds of $n \cdot d_m \leqq 100\,000$ m/min. Special versions suitable for higher speeds may be available by agreement.

Despite their low section height, radial needle roller and cage assemblies have very high load carrying capacity and also run very smoothly. They are highly rigid and their high runout accuracy makes them suitable for high precision applications.

The precondition is always that the raceways must be hardened and produced to high geometrical accuracy (ground).

Open joint

After forming, there is an open joint. As a result, radial needle roller and cage assemblies can be easily mounted in recessed raceways. The function of the cages is not impaired by the opening.

Operating temperature

Radial needle roller and cage assemblies are suitable for temperatures from –40 °C to +150 °C.

Radial and axial needle roller and cage assemblies, axial bearing washers

Axial needle roller and cage assemblies

For shaft diameters greater than or equal to 170 mm, axial needle roller and cage assemblies of series AXK made from formed flat cages BF are available. Forming of the flat cages is always carried out in the manufacturing plant. The free ends of the cage are welded together.

The axial needle roller and cage assemblies listed in the dimension table should be used in preference. Other shaft diameters may be available by agreement on condition that the quantities required are economically viable.

Low axial section height

The bearing arrangement is particularly effective at saving space if the adjacent surfaces are suitable as raceways. Their axial section height corresponds to the diameter of the needle rollers and is between 5 mm and 7 mm.

The axial needle roller and cage assemblies have high axial load carrying capacity, can support axial forces in one direction and have high rigidity. When fitted in pairs, they can also support tilting moments (acting in both directions).

The precondition is always that the raceways must be hardened and produced to high geometrical accuracy (ground). If this is not possible, appropriate axial bearing washers ASS are available.

Operating temperature

Axial needle roller and cage assemblies are suitable for temperatures from –40 °C to +150 °C.

Axial bearing washers

Axial bearing washers ASS can be used as shaft or housing locating washers and are ideally suitable for the axial support of rotary tables. They are used where the adjacent surfaces cannot be hardened but are sufficiently rigid and geometrically accurate.

The diameter is matched to that of the axial needle roller and cage assemblies and the axial section height is between 2 mm and 2,37 mm. The washers are made from spring steel and have a hardness between 56 HRC and 60 HRC. Their surface is ground and has a roughness of Ra 0,8.

The slot is oblique for production reasons and thus ensures shock-free rolling of the rolling elements.

Through the use of regrinding after mounting, axial bearing washers allow accuracies of tolerance class P5 to P4.

They are ideally suitable for the axial support of rotary tables.

The basic load ratings C_a and C_{0a} of axial needle roller and cage assemblies are reduced through the use of axial bearing washers, see dimension table. This is due to the lower surface hardness of the axial bearing washers in comparison with appropriately hardened mating raceways.

Operating temperature

Axial bearing washers are suitable for temperatures from –40 °C to +150 °C.

Lubrication

The needle roller and cage assemblies can be lubricated with grease or oil. Oil lubrication should be used in preference if other machine elements are also lubricated using oil.

Doped lubricants have proved effective. These are indicated in accordance with DIN 51502 by the symbol P.

Needle roller and cage assemblies are supplied coated with a preservative and are not greased. They must therefore be located together with the adjacent construction before initial operation.

The information on lubrication in Catalogue HR 1, Rolling Bearings must be observed.

Lubrication of axial bearings

If grease lubrication is used, the lubricant should be fed from the inside to the outside. This also applies for low speeds. In addition, sufficiently large areas should be provided for the grease.

Grease lubrication

For grease lubrication, lithium soap greases to KP2K–30 to DIN 51825 are recommended.

The mixing of different greases is only possible if they have the same base oil and the thickener type and consistency (NLGI class) also match. In addition, the base oil viscosities should differ by no more than one ISO VG class.

If there is any doubt, consultation with the grease manufacturer is recommended.

Relubrication interval

The defined lubrication intervals must be observed. Axial bearings must in general be relubricated more frequently than radial bearings. The precise lubrication interval must be determined for the specific application by means of tests. The observation period selected must be sufficiently large and the condition of the grease must be checked regularly. Relubrication must always be carried out after no more than one year, after an extended period of stoppage or if high levels of moisture are present.

If bearings are stationary or are subjected to vibrations or small oscillating movements, please consult Schaeffler.

Oil lubrication

For oil lubrication, oils CLP to DIN 51517 and HLP to DIN 51524 are recommended. Suitable viscosities are between ISO VG 15 and ISO VG 100.

Suitable lubrication methods are drip feed oil lubrication, oil bath lubrication, recirculating oil lubrication and pneumatic oil lubrication.

The compatibility and miscibility of oils must be ensured. Oils with a mineral oil base and the same classification (such as HLP) are generally miscible with each other. The viscosities should differ by no more than one class. Synthetic oils must always be checked for their miscibility and compatibility.

In the absence of appropriate experience or information from the manufacturer, material compatibility must be checked under dynamic load at operating temperature.

Design and safety guidelines

Static load carrying capacity

If high, static or shock loads occur, the raceways and rolling elements may undergo plastic deformation. This deformation limits the static load carrying capacity of the needle roller and cage assembly with respect to the permissible noise level during bearing operation.

Where needle roller and cage assemblies run without rotary motion or with only infrequent rotary motion, the size is determined in accordance with the basic static load rating C_0.

According to DIN ISO 76, this is:

- a constant radial load C_{0r} in the case of radial needle roller and cage assemblies
- a concentrically acting constant axial load C_{0a} in the case of axial needle roller and cage assemblies.

Static load safety factor

Where the size of the needle roller and cage assembly is determined in accordance with its static load carrying capacity, the static load safety factor S_0 must be taken into consideration. This is the ratio between the basic static load rating C_0 and the highest occurring load F_0.

$$S_0 = \frac{C_0}{F_0}$$

S_0 –
Static load safety factor
C_0 N
Basic static load rating
(C_{0a} for axial needle roller and cage assemblies,
C_{0r} for radial needle roller and cage assemblies)
F_0 N
Maximum load on the radial or axial needle roller and cage assembly.

Depending on the operating conditions, the static load safety factor S_0 must not exceed certain values. Please contact Schaeffler. In addition, account must be taken of any shock loads occurring during operation.

Friction

The frictional power and frictional torque can be calculated in approximate terms according to the information in Catalogue HR 1, Rolling Bearings. Further information is available on request.

Minimum axial load

In order that axial needle roller and cage assemblies can operate reliably, they require a minimum axial load $F_{a\,min}$:

$$F_{a\,min} = 0{,}0005 \cdot C_{0a} + k_a \left(\frac{C_{0a} \cdot n}{10^8} \right)^2$$

$F_{a\,min}$ N
Minimum axial load
C_{0a} N
Basic static load rating of the axial needle roller and cage assembly
k_a –
Factor for determining the minimum load; $k_a = 3$
n min^{-1}
Speed.

Design of raceways

The raceways on the shaft and in the housing must be produced as rolling bearing raceways.

The surface must be wear-resistant and high precision machined:

- raceway hardness 58 HRC to 64 HRC
- hardening depth in accordance with Catalogue HR 1, Rolling Bearings
- roughness Rz 1 (Ra 0,2).

Lower hardness of raceways

If the raceways have a hardness lower than 650 HV (58 HRC), the basic load ratings of the needle roller and cage assemblies will be reduced. Furthermore, wear of the raceways may increase and the operating life of the bearings may therefore decrease.

Correction of the basic load ratings

The reduced basic load ratings can be calculated using the correction factor formulae, *Figure 1*.

Effective dynamic load rating at reduced hardness:

$$C_H = f_H \cdot C$$

Effective static load rating at reduced hardness:

$$C_{0H} = f_{0H} \cdot C_0$$

C_H, C_{0H} N
Effective dynamic or static load rating at reduced hardness

f_H, f_{0H} –
Dynamic or static hardness factor, *Figure 1*

C, C_0 –
Basic dynamic or static load rating of the needle roller and cage assembly (C_a or C_{0a} for axial needle roller and cage assemblies, C_r or C_{0r} for radial needle roller and cage assemblies).

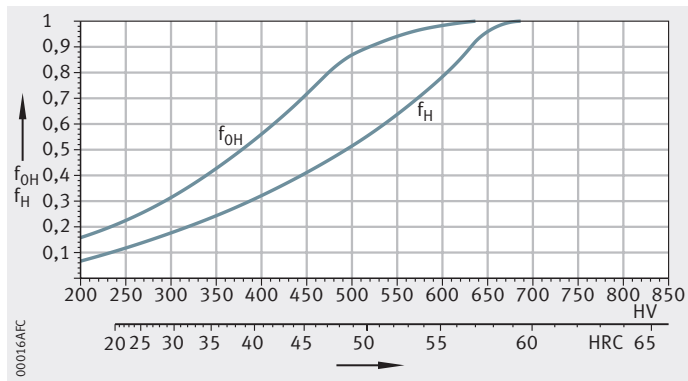

f_{0H} = static hardness factor
f_H = dynamic hardness factor
HRC, HV = surface hardness

Figure 1
Calculation of the hardness factor

The hardness factors are only valid for rolling bearing steels or comparable alloy steels with a corresponding purity and structure in accordance with Catalogue HR 1, Rolling Bearings. The correction factors must not be used for unalloyed steels, cast metal or non-metallic metals.

Sealing

Needle roller and cage assemblies must be protected against solid and liquid contaminants. For this purpose, conventional seals can be provided between the bearing and adjacent construction, *Figure 2*, page 10.

Radial and axial needle roller and cage assemblies, axial bearing washers

Design of radial bearing arrangements

For a bearing arrangement with high accuracy, a shaft tolerance zone of f6 and a housing tolerance zone of H7 is recommended.

Radial and axial guidance

For axial guidance, the contact running surface must be closed, wear-resistant and high precision machined (Ra 0,8), *Figure 2*. The cages are guided radially by the rolling elements or the outside surface of the cage.

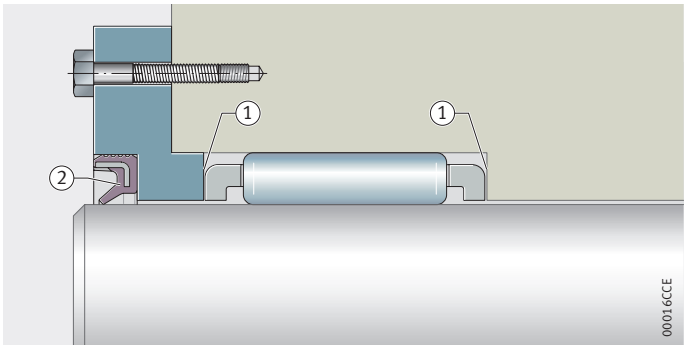

① Axial guidance
② Seal

Figure 2
Guidance and sealing

Design of axial bearing arrangements

The raceway dimensions E_a and E_b must be observed, see *Figure 3* and dimension table. These represent the minimum dimensions of the raceway for the needle roller and cage assembly. Axial bearing washers must also be supported in this area. The guide value for the flatness of
the adjacent surfaces is 0,01 mm.

Inner centring

Axial needle roller and cage assemblies and axial bearing washers are centred on the inside diameter d_1. For the shaft, the tolerance zone h10 is recommended. The radial guidance surfaces must be high precision machined and wear-resistant (Ra 0,8, Rz 4), *Figure 3*.

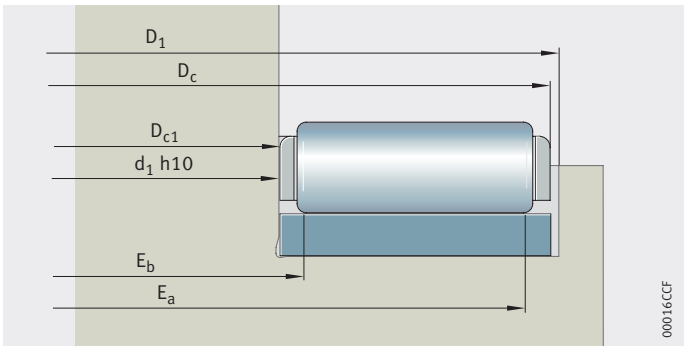

Figure 3
Design of adjacent construction

Axial runout accuracy

The running surfaces must fulfil an axial runout accuracy of IT 5, for special requirements this must be IT 4. The basic tolerance grades relate to the nominal dimension for the inside diameter D_{c1} of the needle roller and cage assemblies.

Abutment shoulders

The abutment shoulders must be rigid, flat and perpendicular to the axis of rotation.

A collar with a maximum diameter D_1 must be provided to ensure that the axial bearing washers do not expand on the outside diameter, *Figure 3*.

Forming as radial needle roller and cage assemblies

Flat cages BF can be formed by the customer as radial needle roller and cage assemblies, ensuring that:

- the flat cages are cut to the correct length before bending
- the flat cages are bent before needle rollers are fitted
- the cage ribs face radially inwards, *Figure 4*.

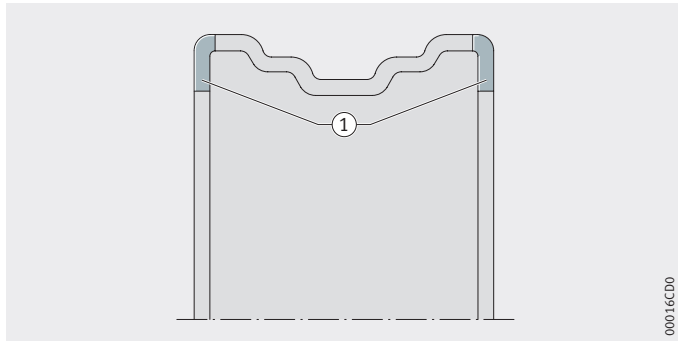

① Cage ribs facing inwards

Figure 4
Simplified representation of cage profile

Calculation of straightened cage length

The straightened length is calculated according to the following formula:

$$l_K = (d + D_w) \cdot \pi$$

l_K mm
Straightened cage length

d mm
Shaft diameter

D_w mm
Rolling element diameter.

The gap in the flat cage BF can only be present within a cage pocket. When determining the ordering length, it must therefore be noted that the stated length may be smaller by the value of the pitch distance j_k.

Accuracy

The needle roller and cage assemblies are precision bearings that have proved sucessful in many precise applications.

Grade of needle rollers

The cages are fitted with needle rollers of grade G2 in accordance with DIN 5402-3.

The needle rollers are classified into sorts in accordance with the deviation from the nominal diameter. Each cage may contain needle rollers of one sort only and the diameter tolerance within a sort is a maximum of 2 µm.

Dimensional and geometrical tolerances of axial bearing washers

The dimensional and geometrical tolerances of axial bearing washers ASS are in accordance with P0 (PN) to DIN 620.

Axial bearing washers adapt to the accuracy of the abutment surface. During fitting under a concentric minimum load of 1 000 N, they achieve the necessary flatness.

The uniformity of thickness is 10 µm. In order to increase the accuracy, the washers can be reground once fitted.

Ordering example, ordering designation

Radial needle roller and cage assembly

The requirement is for a radial needle roller and cage assembly K of the following design, produced in the plant:

Shaft diameter	400 mm
Housing bore	410 mm
Width of needle roller and cage assembly	32 mm

Ordering designation

K400×410×32, *Figure 5*

The radial needle roller and cage assembly is produced by bending a flat cage BF5032.

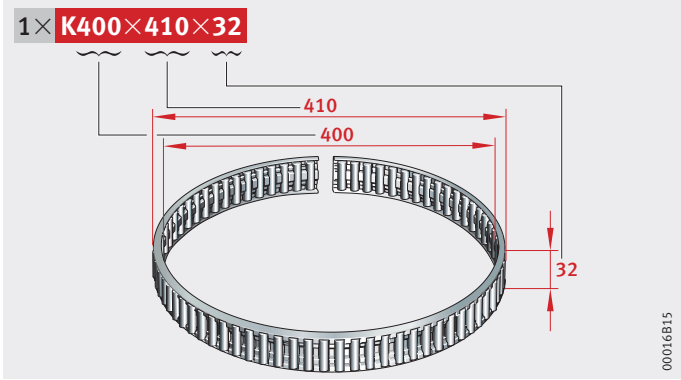

Figure 5
Radial needle roller and cage assembly K

Needle roller and cage assembly formed by bending by customer

If the customer produces a radial needle roller and cage assembly K himself, an appropriate flat cage BF must be ordered:

Width of needle roller and cage assembly	20 mm
Rolling element diameter	3 mm
Straightened length	500 mm

Ordering designation

BF3020×500, *Figure 6*

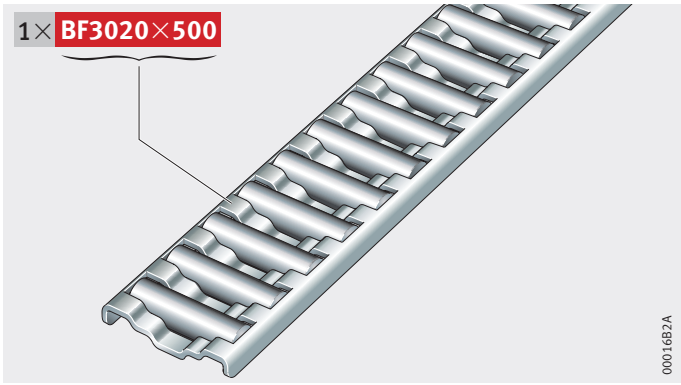

Figure 6
Flat cage BF

Axial needle roller and cage assembly

The requirement is for an axial needle roller and cage assembly AXK of the following design:

Bore diameter	260 mm
Outside diameter	290 mm
Rolling element diameter	5 mm

Ordering designation

AXK260×290×5, *Figure 7*

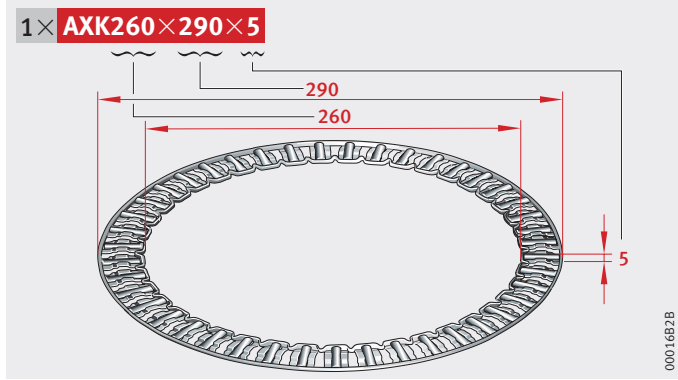

Figure 7
Axial needle roller bearing and cage assembly AXK

Axial bearing washer

The requirement is for an axial bearing washer ASS of the following design:

Bore diameter	260 mm
Outside diameter	290 mm
Width	2,3 mm

Ordering designation

ASS260×290×2,3, *Figure 8*

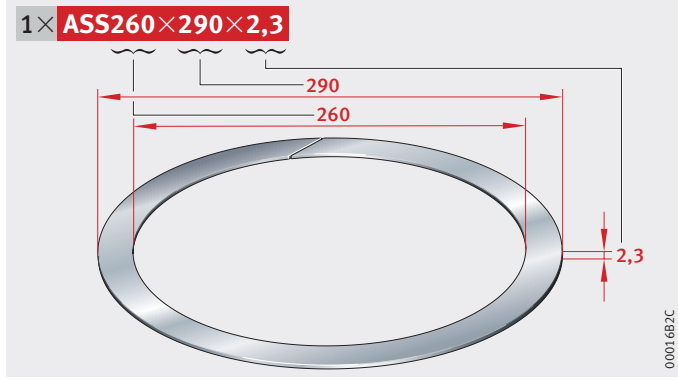

Figure 8
Axial bearing washer ASS

Axial needle roller and cage assemblies
Axial bearing washers

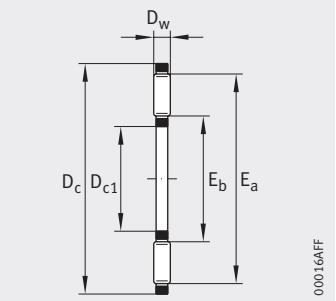

AXK

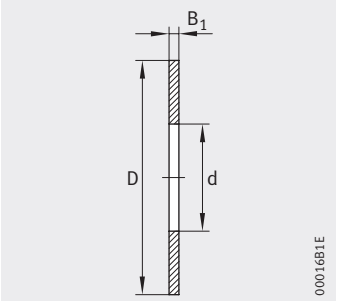

ASS

Dimension table · Dimensions in mm

Axial needle roller and cage assembly

Designation[1]	Mass	Dimensions			Raceway dimensions		Basic load ratings[2]		Fatigue limit load	Limiting speed
	m	D_{c1} E12	D_c	D_w	E_b	E_a	dyn. C_a	stat. C_{0a}	C_{ua}	n_G
	≈g						N	N	N	min^{-1}
AXK170X200X5	170	**170**	200	5	172	198	83 000	480 000	40 500	540
AXK200X246X5	390	**200**	246	5	202	244	140 000	990 000	89 000	405
AXK240X286X5	460	**240**	286	5	242	284	152 000	1 160 000	99 000	350
AXK260X290X5	240	**260**	290	5	262	288	100 000	690 000	52 000	365
AXK260X306X5	490	**260**	306	5	262	304	157 000	1 250 000	84 000	325
AXK300X330X5	270	**300**	330	5	302	328	107 000	790 000	57 000	320
AXK320X350X5	290	**320**	350	5	322	348	111 000	840 000	60 000	300
AXK340X396X7	850	**340**	396	7	343	393	255 000	2 000 000	138 000	250
AXK360X390X5	320	**360**	390	5	362	388	118 000	940 000	65 000	265
AXK360X416X7	900	**360**	416	7	363	413	265 000	2 110 000	143 000	240
AXK400X430X5	360	**400**	430	5	402	428	124 000	1 030 000	69 000	240
AXK400X456X7	990	**400**	456	7	403	453	275 000	2 310 000	151 000	220
AXK460X490X5	400	**460**	490	5	462	488	133 000	1 180 000	76 000	210
AXK500X546X5	590	**500**	546	5	502	544	215 000	2 260 000	159 000	190
AXK560X606X5	650	**560**	606	5	562	604	227 000	2 500 000	171 000	170
AXK630X676X5	730	**630**	676	5	632	674	239 000	2 800 000	184 000	155

1) Other sizes may be available by agreement.

2) The basic load ratings and C_{ua} values are only valid for rolling bearing raceways in accordance with Catalogue HR 1, Rolling Bearings and section Design of raceways, page 9.

3) The reduced load ratings stated are related to the lower hardness of the lower hardness of the axial bearing washers ASS, see section Axial bearing washers, page 6.

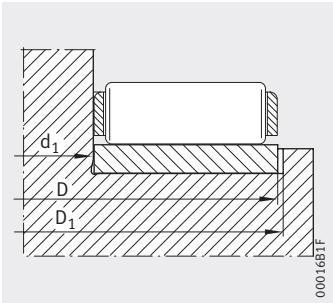

Mounting dimensions

Suitable axial bearing washer

Designation[1)]	Mass	Dimensions			Mounting dimensions		Basic load ratings[3)]	
	m ≈g	d h10	D	B_1 −0,3	d_1 h10	D_1 max.	dyn. C_a N	stat. C_{0a} N
–	–	–	–	–	–	–	–	–
–	–	–	–	–	–	–	–	–
–	–	–	–	–	–	–	–	–
ASS260X290X2,3	250	260	290	2,3	260	291	79 000	680 000
–	–	–	–	–	–	–	–	–
ASS300X330X2,3	290	300	330	2,3	300	331	84 000	770 000
–	–	–	–	–	–	–	–	–
–	–	–	–	–	–	–	–	–
ASS360X390X2,3	340	360	390	2,3	360	391	92 000	920 000
–	–	–	–	–	–	–	–	–
ASS400X430X2,3	380	400	430	2,3	400	431	97 000	1 010 000
–	–	–	–	–	–	–	–	–
ASS460X490X2,3	430	460	490	2,3	460	491	104 000	1 160 000
ASS500X544X2,3	650	500	544	2,3	500	546	163 000	2 120 000
ASS560X604X2,3	730	560	604	2,3	560	606	172 000	2 360 000
ASS630X674X2,3	810	630	674	2,3	630	676	182 000	2 600 000

Radial needle roller and cage assemblies

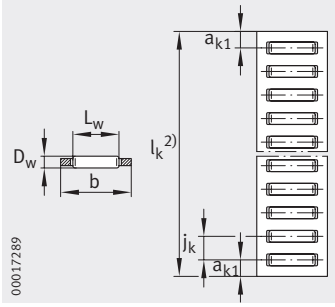

BF

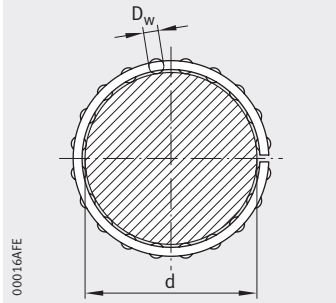

K
(made by bending of flat cage BF)

Dimension table · Dimensions in mm

Designation	Mass l_k = 1 000 mm	Dimensions							Mounting dimensions			Basic load ratings	
		b	Possible shaft diameter		D_w	L_w	j_k	a_{k1}	E_B	E_{B1}	E_H	dyn. C_r	stat. C_{0r}
			d_{min}	d_{max}									
	≈g			~						min.		N	N
BF3020[1]	342	**20**	120	1 000	3	15,8	6	4,5	$20,4^{+0,2}$	16	2,7	$3\,950 \cdot \sqrt{d}$	$1\,060 \cdot d$
BF5015	375	**15**	105	1 000	5	11,8	8	5,5	$15,3^{+0,2}$	12	4,6	$5\,100 \cdot \sqrt{d}$	$1\,050 \cdot d$
BF5023	530	**23**	105	1 000	5	19,8	8	5,5	$23,4^{+0,2}$	20	4,6	$7\,300 \cdot \sqrt{d}$	$1\,660 \cdot d$
BF5032	722	**32**	180	1 000	5	27,8	8	5,5	$32,5^{+0,3}$	28	4,6	$9\,600 \cdot \sqrt{d}$	$2\,350 \cdot d$
BF7028	875	**28**	175	1 000	7	24	11	7,5	$28,4^{+0,2}$	24	6,5	$10\,400 \cdot \sqrt{d}$	$2\,050 \cdot d$
BF7035	1 080	**35**	250	1 000	7	30	11	7,5	$35,6^{+0,3}$	30	6,5	$12\,400 \cdot \sqrt{d}$	$2\,600 \cdot d$
BF12022[1]	1 220	**22**	160	1 000	12	18	16	10	$22,4^{+0,2}$	18	11	$12\,500 \cdot \sqrt{d}$	$1\,800 \cdot d$
BF12040[1]	1 970	**40**	160	1 000	12	36	16	10	$40,5^{+0,3}$	36	11	$21\,800 \cdot \sqrt{d}$	$3\,650 \cdot d$

1) BF3020, BF12022, BF12040 only available as finished radial needle roller and cage assemblies after bending.

2) l_k = straightened length before forming, see section Calculation of straightened cage length, page 11.

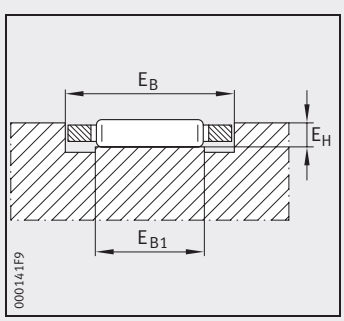

Mounting dimensions

Universal milling centre – rotary table bearing arrangement

The bearing arrangement of the rotary table for a universal milling centre is considered, *Bild 1*. The outside diameter of the table is 960 mm.

The requirements include a low section height and high running accuracy. The bearing arrangement must be smooth-running, clearance-free and rigid as well as being capable of securely supporting the workpiece mass and the machining forces.

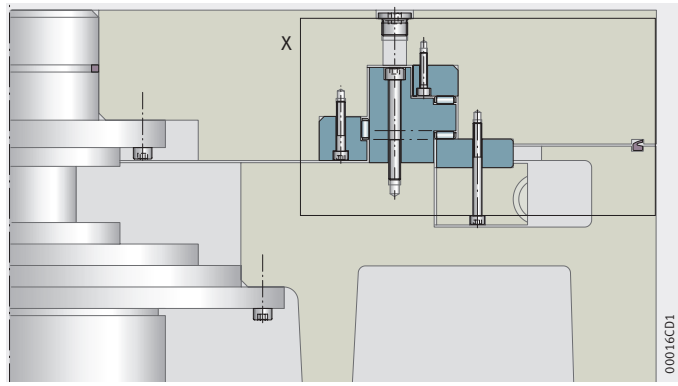

Figure 1
Rotary table bearing arrangement

Design solution

The rotary table is supported axially and radially, *Bild 2*. The axial bearing arrangement comprises two axial needle roller and cage assemblies AXK preloaded against each other. Due to the preload and the large diameter of the needle roller and cage assemblies, the bearing arrangement has high tilting rigidity.

The running accuracy of P4 is achieved by the machining quality of the hardened and ground washers, which are screw mounted on the worm wheel and the rotary table.

The radial guidance is achieved by means of a clearance-free radial needle roller and cage assembly K. The mating raceway for the needle roller and cage assembly is produced as a rolling bearing raceway.

The axial and radial needle roller and cage assemblies are greased and protected against contamination by a seal profile.

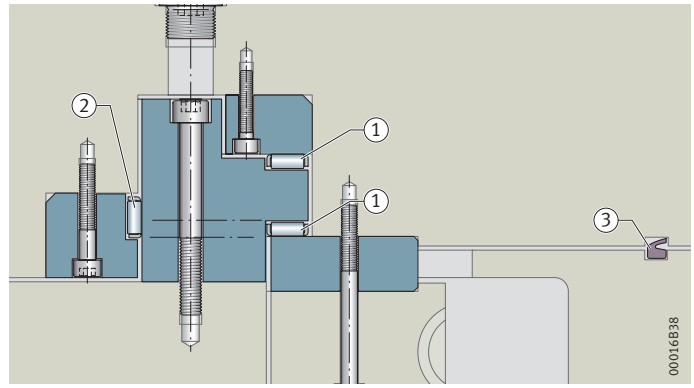

① Axial needle roller and cage assembly AXK
② Radial needle roller and cage assembly K
③ Seal profile

Figure 2
Cross-section X
of rotary table bearing arrangement

MATNR 036897027-0000 / TPI 203 / GB-D / 201012 / pdf only

Schaeffler Technologies GmbH & Co. KG

Industriestraße 1–3
91074 Herzogenaurach (Germany)
Internet www.ina.com
E-Mail info@schaeffler.com

In Germany:
Phone 0180 5003872
Fax 0180 5003873

From other countries:
Phone +49 9132 82-0
Fax +49 9132 82-4950

Schaeffler Technologies GmbH & Co. KG

Georg-Schäfer-Straße 30
97421 Schweinfurt (Germany)
Internet www.fag.com
E-Mail FAGinfo@schaeffler.com

In Germany:
Phone 0180 5003872
Fax 0180 5003873

From other countries:
Phone +49 9721 91-0
Fax +49 9721 91-3435

Every care has been taken to ensure the correctness of the information contained in this publication but no liability can be accepted for any errors or omissions.
We reserve the right to make technical changes.

© Schaeffler Technologies GmbH & Co. KG
Issued: 2010, December

This publication or parts thereof may not be reproduced without our permission.
TPI 203 GB-D