MOTION & CONTROL™
NSK

Large-Size Rolling Bearings

	Page No.	
Technical Information	A7	Tech. Info.
Deep Groove Ball Brgs.	B4	
Angular Contact Ball Brgs.	B20	
Cylindrical Roller Brgs.	B44	
Full-Complement Cylindrical Roller Brgs.	B78	
Tapered Roller Brgs.	B96	
Spherical Roller Brgs.	B286	
Thrust Brgs.	B308	
Rolling Bearings For Steel Mills	B334	Steel Mills
Triple-Ring Brgs.	B436	Triple
Crossed Roller Brgs.	B440	Crossed
Special NSK Bearings And Related Equipment	C2	Special
Application Drawings	C16	Appl.
Appendices	C34	Appendices
Index of Inch Design Tapered Roller Brgs.	C52	Index

MOTION & CONTROL™
NSK

Large-Size Rolling Bearings

CAT. No. E125f

Introduction to NSK Large-Size Rolling Bearing Catalog (CAT. No. E125f)

We want to thank you for your interest in this edition of our Large-Size Rolling Bearing Catalog.

Recently, operating requirements for machines and other equipment that use rolling bearings have become increasingly severe and diversified. Accordingly, rolling bearings, which are highly important machine elements, must be designed to satisfy more and more stringent requirements for higher speeds, greater precision, higher reliability, and other challenging demands.

We edited this Large-Size Rolling Bearing Catalog to reflect the growing number of NSK products, new developments, and technical progress. In it, you will find a wide range of bearings that will satisfy almost any requirement; however, special bearings not listed here are available by contacting NSK.

The first patr (A pages) contains general information about rolling bearings to facilitate selection of the most appropriate type. Next, supplementary technical information is provided peculiar to each bearing type at the beginning of the section devoted to each type (B pages). Also, there is an explanation about special-purpose bearings, mostly for steel mill roll necks.

In the dimensional tables, bearings are listed in the order of increasing bore size. The data shown for each bearing includes the boundary dimensions, bearing load ratings, abutment and fillet dimensions, and mass.

At the end, NSK products and certain applications specially designed to meet particular conditions are shown. These may be helpful regarding bearing selection and the design of surrounding parts.

Data in this catalog are given in both the International Unit System (SI) and Engineering Unit System (Gravitational System of Units).

We hope this catalog will allow you to select the optimum bearing for your application. However, if assistance is required, please contact NSK, and the company's engineers and computer programs can quickly supply the information you need.

CONTENTS

TECHNICAL INFORMATION

Page No.

1 SELECTION OF BEARING SIZE ..... A 7
1.1 Bearing Life ..... A 7
1.2 Basic Dynamic Load Rating and Fatigue Life ..... A 7
1.3 Calculation of Bearing Loads A10
1.4 Dynamic Equivalent Load A11
1.5 Basic Static Load Ratings and Static Equivalent Loads A12
2 BEARING TOLERANCES A13
2.1 Bearing Tolerance Standards A13
3 FITS AND INTERNAL CLEARANCES A33
3.1 Fits A33
3.2 Bearing Internal Clearances A39
4 LUBRICATION A46
4.1 Purposes of Lubrication A46
4.2 Lubricating Methods A46
4.3 Lubricants A50
5 BEARING MATERIALS A54
5.1 Materials for Bearing Rings and Rolling Elements A54
5.2 Cage Materials A55

BEARING TABLES

Page No.

SINGLE-ROW DEEP GROOVE BALL BEARINGS ..... B 4
ANGULAR CONTACT BALL BEARINGS ..... B 20
CYLINDRICAL ROLLER BEARINGS ..... B 44
FULL-COMPLEMENT CYLINDRICAL ROLLER BEARINGS ..... B 78
TAPERED ROLLER BEARINGS ..... B 96
SPHERICAL ROLLER BEARINGS B286
THRUST BEARINGS B308
ROLLING BEARINGS FOR STEEL MILLS B334
TRIPLE-RING BEARINGS FOR PAPER MAKING MACHINES B436
CROSSED-ROLLER BEARINGS FOR INDUSTRIAL ROBOTS B440

SPECIAL NSK BEARINGS AND RELATED EQUIPMENT ..... C 2
APPLICATION DRAWINGS ..... C 16
APPENDICES ..... C 34
INDEX OF INCH DESIGN TAPERED ROLLER BEARINGS ..... C 52

1. SELECTION OF BEARING SIZE

1.1 Bearing Life

The various functions required of rolling bearings vary according to the bearing application. These functions must be performed for a prolonged period. Even if bearings are properly mounted and correctly operated, they will eventually fail to perform satisfactorily due to an increase in noise and vibration, loss of running accuracy, deterioration of grease, or fatigue flaking of the rolling surfaces.
Bearing life, in the broad sense of the term, is the period during which bearings continue to operate and to satisfy their required functions. This bearing life may be defined as noise life, abrasion life, grease life, or rolling fatigue life, depending on which one causes loss of bearing service.

Aside from the failure of bearings to function due to natural deterioration, bearings may fail when conditions such as heat-seizure, fracture, scoring of the rings, wear of the seals, or other damage occurs.
Conditions such as these should not be interpreted as normal bearing failure since they often occur as a result of errors in bearing selection, improper design or manufacture of the bearing surroundings, incorrect mounting, or insufficient maintenance.

1.1.1 Rolling Fatigue Life and Rating Fatigue Life

When rolling bearings are operated under load, the raceways of their inner and outer rings and rolling elements are subjected to repeated cyclic stress. Because of metal fatigue of the rolling contact surfaces of the raceways and rolling elements, scaly particles may separate from the bearing material. This phenomenon is called "flaking". Rolling fatigue life is represented by the total number of revolutions at which time the bearing surface will start flaking due to stress. This is called fatigue life.
Even for seemingly identical bearings, which are of the same type, size, and material and receive the same heat treatment and other processing, the rolling fatigue life varies greatly even under identical operating conditions. This is because the flaking of materials due to fatigue is subject to many other variables. Consequently, "rating fatigue life", in which rolling fatigue life is treated as a statistical phenomenon, is used in preference to actual rolling fatigue life.

Suppose a number of bearings of the same type are operated individually under the same conditions. After a certain period of time, 10% of them fail as a result of flaking caused by rolling fatigue. In this case, the total number of revolutions is defined as the rating fatigue life or, if the speed is constant, the rating fatigue life is often expressed by the total number of operating hours completed when 10% of the bearings become inoperable due to flaking.

1.2 Basic Dynamic Load Rating and Fatigue Life

1.2.1 Basic Dynamic Load Rating

The basic dynamic load rating is defined as the constant load applied on bearings with stationary outer rings that the inner rings can endure for a rating life of one million revolutions (10^6 rev). The basic dynamic load rating of radial bearings is defined as a central radial load of constant direction and magnitude, while the basic dynamic load rating of thrust bearings is defined as an axial load of constant magnitude in the same direction as the central axis. The load ratings are listed under C_r for radial bearings and C_a for thrust bearings in the dimension tables.

1.2.2 Selection of Bearing Size Based on Basic Dynamic Load Rating

The following relation exists between bearing load and rating fatigue life:

For ball bearings $$L=\left(\frac{C}{P}\right)^3 \quad \text{..... (1.1)}$$

For roller bearings $$L=\left(\frac{C}{P}\right)^{\frac{10}{3}} \quad \text{..... (1.2)}$$

where L : Rating fatigue life (10^6 rev)
P : Bearing load (equivalent load) (N), {kgf}
..... (Refer to Page A11)
C : Basic dynamic load rating (N), {kgf}
For radial bearings, C is written C_r
For thrust bearings, C is written C_a

In the case of bearings that run at a constant speed, it is convenient to express the fatigue life in terms of hours. In general, the fatigue life of bearings used in automobiles and other vehicles is given in terms of mileage.
By designating the rating fatigue life as L_h (h), bearing speed as n (rpm), fatigue life factor as f_h, and speed factor as f_n, the relations shown in Table 1.1 are obtained:

Table 1.1 Rating Fatigue Life, Fatigue Life Factor and Speed Factor

Life Parameters	Ball Bearings	Roller Bearings
Rating Fatigue Life	$L_h=\frac{10^6}{60n}\left(\frac{C}{P}\right)^3=500f_h^3$	$L_h=\frac{10^6}{60n}\left(\frac{C}{P}\right)^{\frac{10}{3}}=500f_h^{\frac{10}{3}}$
Fatigue Life Factor	$f_h=f_n\frac{C}{P}$	$f_h=f_n\frac{C}{P}$
Speed Factor	$f_n=\left(\frac{10^6}{500\times60n}\right)^{\frac{1}{3}}$ $=(0.03n)^{-\frac{1}{3}}$	$f_n=\left(\frac{10^6}{500\times60n}\right)^{\frac{3}{10}}$ $=(0.03n)^{-\frac{3}{10}}$

n, f_n ..... Fig. 1.1, Appendix Table 12 (See Page C50)
L_h, f_h ..... Fig. 1.2, Appendix Table 13 (See Page C51)

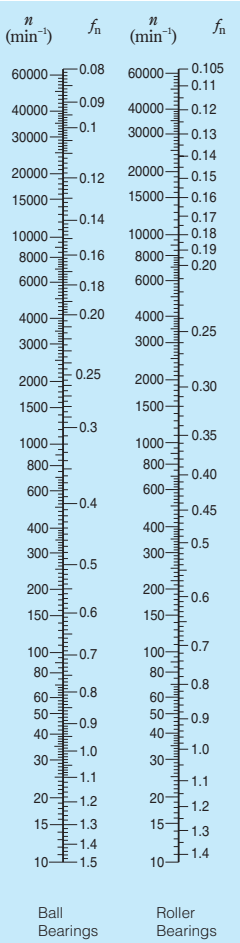

Fig. 1.1 Bearing Speed and Speed Factor

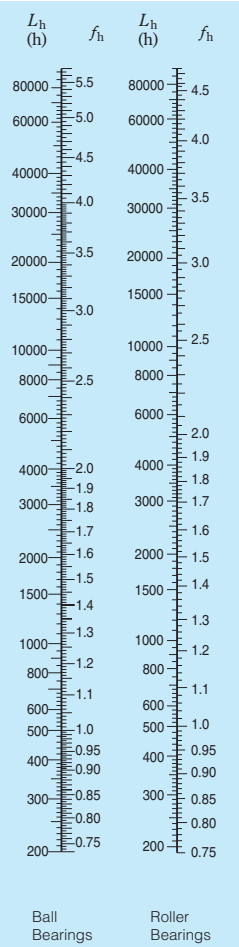

Fig. 1.2 Fatigue Life Factor and Fatigue Life

If the bearing load P and speed n are known, determine a fatigue life factor f_h appropriate for the projected life of the machine and then calculate the basic dynamic load rating C by means of the following equation.

$$C = \frac{f_h \cdot P}{f_n} \quad \text{..... (1.3)}$$

A bearing which satisfies this value of C should then be selected from the bearing tables.

1.2.3 Temperature Adjustment for Basic Dynamic Load Rating

If rolling bearings are used at high temperature, the hardness of the bearing steel decreases. Consequently, the basic dynamic load rating, which depends on the physical properties of the material, also decreases. Therefore, the basic dynamic load rating should be adjusted for the higher temperature using the following equation:

$$C_t = f_t \cdot C \quad \text{..... (1.4)}$$

where
- C_t : Basic dynamic load rating after temperature adjustment (N), {kgf}
- f_t : Temperature factor (See Table 1.2.)
- C : Basic dynamic load rating before temperature adjustment (N), {kgf}

If large bearings are used at high temperatures, they must be given special dimensional stability heat treatment to prevent excessive dimensional changes. The basic dynamic load rating of bearings given such special dimensional stability heat treatment may become lower than the basic dynamic load rating listed in the bearing tables.

Table 1.2 Temperature Factor f_t

Bearing Temperature °C	125	150	175	200	250
Temperature Factor f_t	1.00	1.00	0.95	0.90	0.75

1.2.4 Adjustment of Rating Fatigue Life

As described previously, the basic equations for calculating the rating fatigue life are as follows:

For ball bearings $$L_{10} = \left(\frac{C}{P}\right)^3 \quad \text{..... (1.5)}$$

For roller bearings $$L_{10} = \left(\frac{C}{P}\right)^{\frac{10}{3}} \quad \text{..... (1.6)}$$

The L_{10} life is defined as the rating fatigue life with a statistical reliability of 90%. Depending on the machines in which the bearings are used, sometimes a reliability higher than 90% may be required.
However, recent improvements in bearing material have greatly extended the fatigue life. In addition, the developent of the Elasto-Hydrodynamic Theory of Lubrication proves that the thickness of the lubricating film in the contact zone between rings and rolling elements greatly influences bearing life. To reflect such improvements in the calculation of fatigue life, the rating fatigue life is adjusted using the following adjustment factors:

$$L_{na} = a_1\, a_2\, a_3\, L_{10} \quad \text{..... (1.7)}$$

where
- L_{na} : Adjusted rating life in which reliability, material improvements, lubricating condition, etc. are considered
- L_{10} : Rating fatigue life with a reliability of 90%
- a_1 : Life adjustment factor for reliability
- a_2 : Life adjustment factor for special bearing property
- a_3 : Life adjustment factor for operating conditions

The life adjustment factor for reliability a_1 is listed in Table 1.3 for reliabilities higher than 90%.
The life adjustment factor for special bearing property a_2 is greater than one because of improvements in bearing steel. NSK now uses vacuum degassed bearing steel, and the results of tests by NSK show that life is greatly improved when compared with earlier materials. The basic dynamic load ratings C_r and C_a listed in the bearing tables were calculated considering the extended life achieved by improvements in materials and maunfacturing techniques. Consequently, when estimating life using Equation (1.7), it is sufficient to assume a_2=1.

Teble 1.3 Reliability Factor a_1

Reliability (%)	90	95	96	97	98	99
a_1	1.00	0.62	0.53	0.44	0.33	0.21

The life adjustment factor for operating conditions a_3 is used to adjust for various factors, particularly lubrication. If there is no misalignment between the inner and outer rings and the thickness of the lubricating film in the contact zones of the bearing is sufficient, it is possible for a_3 to be greater than one; however, a_3 is less than one in the following cases:

- When the viscosity of the lubricant in the contact zones between the raceways and rolling elements is low.
- When the circumferential speed of the rolling elements is very slow.
- When the bearing temperature is high.
- When the lubricant is contaminated by water or foreign particles.
- When misalignment of the inner and outer rings is excessive.

It is difficult to determine the proper value for a_3 for specific operating conditions because there are still many unknowns. Since the special bearing property factor a_2 is also influenced by the operating conditions, there is a proposal to combine a_2 and a_3 into one quantity ($a_2 \times a_3$), and not consider them independently. In this case, under normal lubricating and operating conditions, the product ($a_2 \times a_3$) should be assumed equal to one. However, if the visocisty of the lubricant is too low, the value drops to as low as 0.2.
If there is no misalignment and a lubricant with high viscosity is used so sufficient fluid-film thickness is secured, the product of ($a_2 \times a_3$) may be about two.

When selecting a bearing based on the basic dynamic load rating, it is best to choose a reliability factor a_1 appropriate for the projected use and an empirically determined C/P or f_h value derived from past results for lubrication, temperature, mounting conditions, etc. in similar machines.

The rating fatigue life equations (1.1), (1.2), (1.5), and (1.6) give satisfactory results for a broad range of bearing loads. However, extra heavy loads may cause detrimental plastic deformation at ball/raceway contact points. When P_r exceeds C_{0r} (Basic static load rating) or 0.5 C_r, whichever is smaller, for radial bearings or P_a exceeds 0.5 C_a for thrust bearings, please consult NSK to establish the applicablity of the rating fatigue life equations.

1.3 Calculation of Bearing Loads

The loads applied on bearings generally include the weight of the body to be supported by the bearings, the weight of the revolving elements themselves, the transmission power of gears and belting, the load produced by the operation of the machine in which the bearings are used, etc. These loads can be theoretically calculated, but some of them are difficult to estimate. Therefore, it become necessary to correct the estimates using empirically derived data.

1.3.1 Load Factor

When a radial or axial load has been mathematically calculated, the actual load on tne bearing may be greater than the calculated load because of vibration and shock present during operation of the machine. The actual load may be calculated using the following equation:

$$\left.\begin{aligned} F_r &= f_w \cdot F_{rc} \\ F_a &= f_w \cdot F_{ac} \end{aligned}\right\} \quad \text{.....} (\mathbf{1.8})$$

where F_r , F_a : Loads applied on bearing (N), {kgf}

F_{rc} , F_{ac} : Theoretically calculated load (N), {kgf}

f_w : Load factor

The values given in Table 1.4 are usually used for the load factor f_w.

1.3.2 Average of Fluctuating Load

When the load applied on bearings fluctuates, an average load which will yield the same bearing life as the fluctuating load should be calculated.

(1) When the relation between load and rotating speed is divided into the following steps (Fig. 1.3).

Load F_1 : Speed n_1 ; Operating time t_1
Load F_2 : Speed n_2 ; Operating time t_2
⋮ ⋮ ⋮
Load F_n : Speed n_n ; Operating time t_n

Then, the average load F_m may be calculated using the following equation:

$$F_m = \sqrt[p]{\frac{F_1^p n_1 t_1 + F_2^p n_2 t_2 + \cdots + F_n^p n_n t_n}{n_1 t_1 + n_2 t_2 + \cdots\cdots + n_n t_n}} \quad \text{.....} (\mathbf{1.9})$$

where F_m : Average fluctuating load (N), {kgf}
p=3 for ball bearings
p=10/3 for roller bearings

The average speed n_m may be calculated as follows:

$$n_m = \frac{n_1 t_1 + n_2 t_2 + \cdots + n_n t_n}{t_1 + t_2 + \cdots + t_n} \quad \text{.....} (\mathbf{1.10})$$

Teble 1.4 Values of Load Factor f_w

Operating Conditions	Typical Applications	f_w
Smooth operation free from shock	Electric motors, Machine tools, Air conditioners	1 to 1.2
Normal operation	Air blowers, Compressors, Elevators, Cranes, Paper making machines	1.2 to 1.5
Operation accompanied by shock and vibration	Construction equipment, Crushers, Vibrating screens, Rolling mills	1.5 to 3

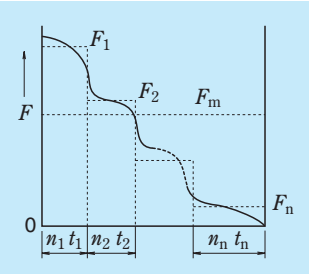

Fig. 1.3 Incremental Load Variation

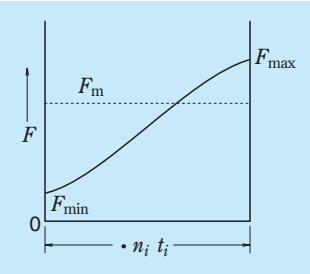

Fig. 1.4 Simple Load Fluctuation

(2) When the load fluctuates almost linearly (Fig. 1.4), the average load may be calculated as follows:

$$F_m = \frac{1}{3}(F_{min} + 2F_{max}) \quad \text{.....} (\mathbf{1.11})$$

where F_{min} : Minimum value of fluctuating load (N), {kgf}

F_{max} : Maximum value of fluctuating load (N), {kgf}

(3) When the load fluctuation is similar to a sine wave (Fig. 1.5), an approximate value for the average load F_m may be calculated from the following equation:

In the case of Fig. 1.5(a)

$$F_m \fallingdotseq 0.65\, F_{max} \quad \text{.....} (\mathbf{1.12})$$

In the case of Fig. 1.5(b)

$$F_m \fallingdotseq 0.75\, F_{max} \quad \text{.....} (\mathbf{1.13})$$

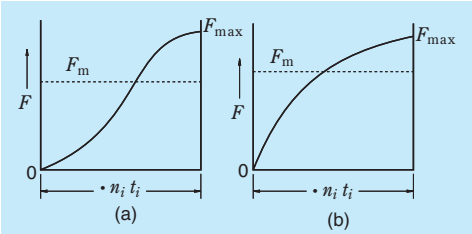

Fig. 1.5 Sinusoidal Load Variation

1.4 Dynamic Equivalent Load

In some cases, the loads applied on bearings are purely radial or axial loads; however, in most cases, the loads are a combination of both. In addition, such loads usually fluctuate in both magnitude and direction. In such cases, the loads actually applied on bearings cannot be used for bearing life calculations; therefore, a hypothetical load that has a constant magnitude and passes through the center of the bearing, and will give the same bearing life that the bearing would attain under actual conditions of load and rotation should be estimated. Such a hypothetical load is called the dynamic equivalent load.

1.4.1 Calculation of Dynamic Equivalent Loads

The dynamic equivalent load on radial bearings may be calculated using the following equation:

$$P = XF_r + YF_a \quad \text{.....} (\mathbf{1.14})$$

where P : Dynamic equivalent load (N), {kgf}

F_r : Radial load (N), {kgf}

F_a : Axial load (N), {kgf}

X : Radial load factor

Y : Axial load factor

The values of X and Y are listed in the bearing tables.
The equivalent radial load for radial roller bearings with α=0° is

$$P = F_r$$

In general, thrust ball bearings cannot take radial loads, but spherical thrust roller bearings can take some radial loads. In this case, the dynamic equivalent load may be calculated using the following equation:

$$P = F_a + 1.2F_r \quad \text{.....} (\mathbf{1.15})$$

where $\frac{F_r}{F_a} \leqq 0.55$

1.5 Basic Static Load Ratings and Static Equivalent Loads

1.5.1 Basic Static Load Ratings

When subjected to an excessive load or a strong shock load, rolling bearings may incur a local permanent deformation of the rolling elements and raceway surface if the elastic limit is exceeded. The nonelastic deformation increases in area and depth as the load increases, and when the load exceeds a certain limit, the smooth running of the bearing is impeded.
The basic static load rating is defined as that static load which produces the following calculated contact stress at the center of the contact area between the rolling element subjected to the maximum stress and the raceway surface.

For ball bearings	4 200MPa {428kgf/mm^2}
For roller bearings	4 000MPa {408kgf/mm^2}

In this most heavily stressed contact area, the sum of the permanent deformation of the rolling element and that of the raceway is nearly 0.0001 times the rolling element's diameter. The basic static load rating C_0 is written C_{0r} for radial bearings and C_{0a} for thrust bearings in the bearing tables.
In addition, following the modification of the criteria for basic static load rating by ISO, the new C_0 values for NSK's ball bearings became about 0.8 to 1.3 times the past values and those for roller bearings about 1.5 to 1.9 times. Consequently, the values of permissible static load factor f_s have also changed, so please pay attention to this.

1.5.2 Static Equivalent Loads

The static equivalent load is a hypothetical load that produces a contact stress equal to the above maximum stress under actual conditions, while the bearing is stationary (including very slow rotation or oscillation), in the area of contact between the most heavily stressed rolling element and bearing raceway. The static radial load passing through the bearing center is taken as the static equivalent load for radial bearings, while the static axial load in the direction coinciding with the central axis is taken as the static equivalent load for thrust bearings.

(a) Static equivalent load on radial bearings

The greater of the two values calculated from the following equations should be adopted as the static equivalent load on radial bearings.

$$P_0=X_0F_r+Y_0F_a \quad \text{(1.16)}$$

$$P_0=F_r \quad \text{(1.17)}$$

where P_0 : Static equivalent load (N), {kgf}
F_r : Radial load (N), {kgf}
F_a : Axial load (N), {kgf}
X_0 : Static radial load factor
Y_0 : Static axial load factor

(b) Static equivalent load on thrust bearings

$$P_0=X_0F_r+F_a \quad \alpha\neq 90° \quad \text{(1.18)}$$

where P_0 : Static equivalent load (N), {kgf}
α : Contact angle

When $F_a<X_0F_r$, this equation becomes less accurate.
The values of X_0 and Y_0 for Equations (1.16) and (1.18) are listed in the bearing tables.
The static equivalent load for thrust roller bearings with α=90° is

$$P_0=F_a$$

1.5.3 Permissible Static Load Factor

The permissible static equivalent load on bearings varies depending on the basic static load rating and also their application and operating conditions.
The permissible static load factor f_s is a safety factor that is applied to the basic static load rating, and it is defined by the ratio in Equation (1.19). The generally recommended values of f_s are listed in Table 1.5. Conforming to the modification of the static load rating, the values of f_s were revised, especially for bearings for which the values of C_0 were increased, please keep this in mind when selecting bearings.

$$f_s=\frac{C_0}{P_0} \quad \text{(1.19)}$$

where C_0 : Basic static load rating (N), {kgf}
P_0 : Static equivalent load (N), {kgf}

For spherical thrust roller bearings, the value of f_s should be greater than 4.

Table 1.5 Values of Permissible Static Load Factor f_s

Operating Conditions	Lower Limit of f_s	
	Ball Bearings	Roller Bearings
Low-noise applications	2	3
Bearings subjected to vibration and shock loads	1.5	2
Standard operating conditions	1	1.5

2. BEARING TOLERANCES

2.1 Bearing Tolerance Standards

The tolerances for the boundary dimensions and running accuracy of rolling bearings are specified by ISO 492/199/582 (Accuracies of Rolling Bearings). Tolerances are specified for the following items:

Regarding bearing accuracy classes, besides ISO normal accuracy, as the accuracy improves there are Class 6X (for tapered roller bearings), Class 6, Class 5, and Class 4. The applicable accuracy classes for each bearing type and the correspondence of these classes are shown in Table 2.1.

Accuracy of Rolling Bearings
- Dimensional Tolerances (Items necessary to mount bearings on shafts or in housings)
  - Tolerances for bore and outside diameters, ring width and bearing width
  - Tolerances for inscribed and circumscribed circle diameters of rollers
  - Tolerances for chamfer dimensions
  - Tolerances for width variation
  - Tolerances for tapered bore diameters
- Running Accuracy (Items necessary to specify the runout of rotating machine parts)
  - Permissible radial runout of inner and outer rings
  - Permissible face runout with raceway inner and outer rings
  - Permissible inner ring face runout with bore
  - Permissible outer ring variation of outside surface generatrix inclination with face
  - Permissible raceway to back face thickness variation of thrust bearings

Table 2.1 Bearing Types and Tolerance Classes

Bearing Types			Applicable Tolerance Classes				Applicable Tables	Reference Pages
Deep Groove Ball Bearings			Normal	Class 6	Class 5	Class 4	Table 2.2	A16 to A19
Angular Contact Ball Bearings			Normal	Class 6	Class 5	Class 4		
Cylindrical Roller Bearings			Normal	Class 6	Class 5	Class 4		
Spherical Roller Bearings			Normal	Class 6 equivalent	Class 5 equivalent	—		
Tapered Roller Bearings	Metric Design		Normal Class 6X	—	Class 5	Class 4	Table 2.3	A20 to A23
	Inch Design		ABMA CLASS 4	ABMA CLASS 2	ABMA CLASS 3	ABMA CLASS 0	Table 2.4	A24 to A25
Thrust Ball Bearings			Normal	Class 6	Class 5	Class 4	Table 2.5	A26 to A27
Tapered Roller Thrust Bearings			Normal	—	—	—	Table 2.6	A28
Spherical Thrust Roller Bearings			Normal	—	—	—	Table 2.7	A29
Equivalent standards (Reference)	JIS (1)		Class 0	Class 6	Class 5	Class 4	—	—
	DIN (2)		P 0	P 6	P 5	P 4	—	—
	ANSI/ ABMA (3)	Ball Bearings	ABEC 1	ABEC 3	ABEC 5	ABEC 7	Table 2.2	A16 to A19
		Roller Bearings	RBEC 1	RBEC 3	RBEC 5	—		
		Tapered Roller Bearings	CLASS 4	CLASS 2	CLASS 3	CLASS 0	(Table 2.4)	(A24 to A25)

Notes (1) JIS : Japanese Industrial Standards (2) DIN : Deutsch Industrie Norm
(3) ANSI/ABMA : The American Bearing Manufactures Association

Remarks The permissible limit of chamfer dimensions shall conform to Table 2.7 (Page A29), and the tolerances and permissible tapered bore diameters shall conform to Table 2.9 (Page A32).

(Reference) Rough definitions of the items listed for Running Accuracy and their measuring methods are shown in Fig. 2.1, and they are described in detail in ISO 5593 (Rolling Bearings-Vocabulary) and JIS B 1515 (Rolling Bearings-Tolerances) and elsewhere.

Supplementary Table

Running Accuracy	Inner Ring	Outer Ring	Dial Gauge
K_{ia}	Rotating	Stationary	A
K_{ea}	Stationary	Rotating	A
S_{ia}	Rotating	Stationary	B_1
S_{ea}	Stationary	Rotating	B_2
S_d	Rotating	Stationary	C
S_D	–	Rotating	D
S_i , S_e	Only the shaft or housing or central washer is to be rotated.		E

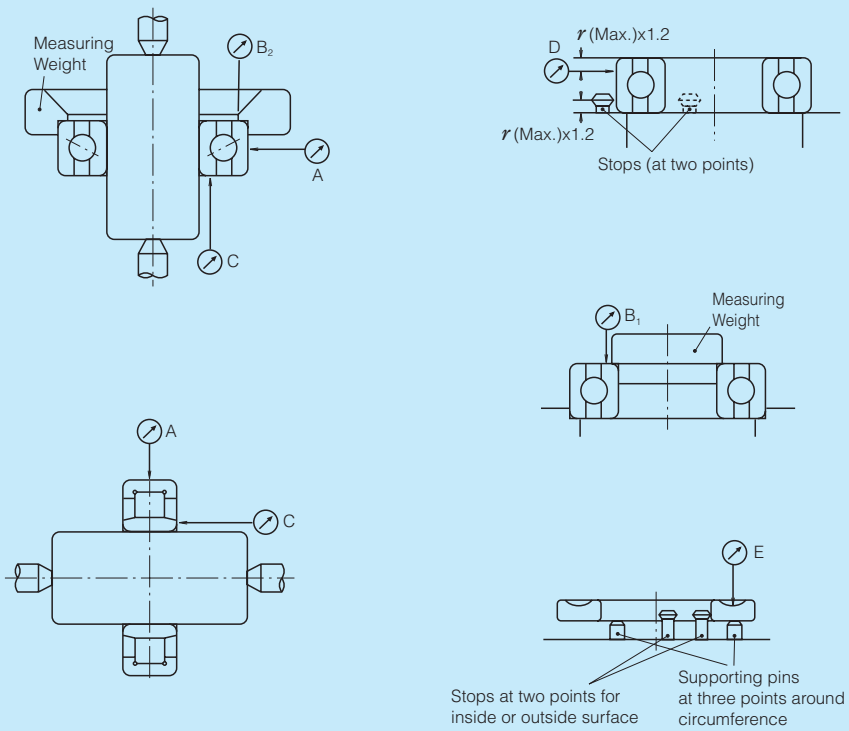

Fig. 2.1 Measuring Methods for Running Accuracy (summarized)

Symbols for Boundary Dimensions and Running Accuracy

d	Nominal bore diameter
Δ_{ds}	Deviation of a single bore diameter
Δ_{dmp}	Single plane mean bore diameter deviation
V_{dp}	Bore diameter variation in a single radial plane
V_{dmp}	Mean bore diameter variation
B	Nominal inner ring width
Δ_{Bs}	Deviation of a single inner ring width
V_{Bs}	Inner ring width variation
K_{ia}	Radial runout of assembled bearing inner ring
S_d	Inner ring reference face (back face, where applicable) runout with bore
S_{ia}	Assembled bearing inner ring face (back face) runout with raceway
S_i, S_e	Raceway to back face thickness variation of thrust bearing
T	Nominal bearing width
Δ_{Ts}	Deviation of the actual bearing width
D	Nominal outside diameter
Δ_{Ds}	Deviation of a single outside diameter
Δ_{Dmp}	Single plane mean outside diameter deviation
V_{Dp}	Outside diameter variation in a single radial plane
V_{Dmp}	Mean outside diameter variation
C	Nominal outer ring width
Δ_{Cs}	Deviation of a single outer ring width
V_{Cs}	Outer ring width variation
K_{ea}	Radial runout of assembled bearing outer ring
S_D	Variation of bearing outside surface generatrix inclination with outer ring reference face (back face)
S_{ea}	Assembled bearing outer ring face (back face) runout with raceway

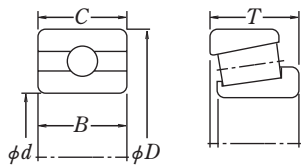

Table 2. 2 Tolerances for Radial Bearings

Table 2. 2. 1 Tolerances for Inner Rings and

(Excluding Tapered Roller Bearings)

Widths of Outer Rings

Nominal Bore Diameter d (mm)		Δ_{dmp} (1)								Δ_{ds} (1)		V_{dp} (1)										V_{dmp} (1)			
		Normal		Class 6		Class 5		Class 4		Class 4 Diameter Series		Normal			Class 6			Class 5		Class 4		Normal	Class 6	Class 5	Class 4
										0, 1, 2, 3, 4		Diameter Series			Diameter Series			Diameter Series		Diameter Series					
												9	0, 1	2, 3, 4	9	0, 1	2, 3, 4	9	0,1,2,3,4	9	0,1,2,3,4				
over	incl	high	low	high	low	high	low	high	low	high	low	max.			max.			max.		max.		max.	max.	max.	max.
80	**120**	0	– 20	0	– 15	0	– 10	0	– 8	0	– 8	25	25	15	19	19	11	10	8	8	6	15	11	5	4
120	**150**	0	– 25	0	– 18	0	– 13	0	– 10	0	– 10	31	31	19	23	23	14	13	10	10	8	19	14	7	5
150	**180**	0	– 25	0	– 18	0	– 13	0	– 10	0	– 10	31	31	19	23	23	14	13	10	10	8	19	14	7	5
180	**250**	0	– 30	0	– 22	0	– 15	0	– 12	0	– 12	38	38	23	28	28	17	15	12	12	9	23	17	8	6
250	**315**	0	– 35	0	– 25	0	– 18	—	—	—	—	44	44	26	31	31	19	18	14	—	—	26	19	9	—
315	**400**	0	– 40	0	– 30	0	– 23	—	—	—	—	50	50	30	38	38	23	23	18	—	—	30	23	12	—
400	**500**	0	– 45	0	– 35	—	—	—	—	—	—	56	56	34	44	44	26	—	—	—	—	34	26	—	—
500	**630**	0	– 50	0	– 40	—	—	—	—	—	—	63	63	38	50	50	30	—	—	—	—	38	30	—	—
630	**800**	0	– 75	—	—	—	—	—	—	—	—	—	—	—	—	—	—	—	—	—	—	—	—	—	—
800	**1 000**	0	– 100	—	—	—	—	—	—	—	—	—	—	—	—	—	—	—	—	—	—	—	—	—	—
1 000	**1 250**	0	– 125	—	—	—	—	—	—	—	—	—	—	—	—	—	—	—	—	—	—	—	—	—	—
1 250	**1 600**	0	– 160	—	—	—	—	—	—	—	—	—	—	—	—	—	—	—	—	—	—	—	—	—	—
1 600	**2 000**	0	– 200	—	—	—	—	—	—	—	—	—	—	—	—	—	—	—	—	—	—	—	—	—	—

Units:μm

Δ_{Bs} (or Δ_{Cs}) (2)								V_{Bs} (or V_{Cs})				K_{ia}				S_d		S_{ia} (4)		Nominal Bore Diameter d (mm)	
Single Bearing				Combined Bearings (3)				Inner Ring (or Outer Ring) (2)		Inner Ring		Normal	Class 6	Class 5	Class 4	Class 5	Class 4	Class 5	Class 4		
Normal Class 6		Class 5 Class 4		Normal Class 6		Class 5 Class 4		Normal	Class 6	Class 5	Class 4										
high	low	high	low	high	low	high	low	max.	max.	max.	max.	max.	max.	max.	max.	max.	max.	max.	max.	over	incl
0	– 200	0	– 200	0	– 380	0	– 380	25	25	7	4	25	13	6	5	9	5	9	5	**80**	**120**
0	– 250	0	– 250	0	– 500	0	– 380	30	30	8	5	30	18	8	6	10	6	10	7	**120**	**150**
0	– 250	0	– 250	0	– 500	0	– 380	30	30	8	5	30	18	8	6	10	6	10	7	**150**	**180**
0	– 300	0	– 300	0	– 500	0	– 500	30	30	10	6	40	20	10	8	11	7	13	8	**180**	**250**
0	– 350	0	– 350	0	– 500	0	– 500	35	35	13	—	50	25	13	—	13	—	15	—	**250**	**315**
0	– 400	0	– 400	0	– 630	0	– 630	40	40	15	—	60	30	15	—	15	—	20	—	**315**	**400**
0	– 450	—	—	—	—	—	—	50	45	—	—	65	35	—	—	—	—	—	—	**400**	**500**
0	– 500	—	—	—	—	—	—	60	50	—	—	70	40	—	—	—	—	—	—	**500**	**630**
0	– 750	—	—	—	—	—	—	70	—	—	—	80	—	—	—	—	—	—	—	**630**	**800**
0	– 1 000	—	—	—	—	—	—	80	—	—	—	90	—	—	—	—	—	—	—	**800**	**1 000**
0	– 1 250	—	—	—	—	—	—	100	—	—	—	100	—	—	—	—	—	—	—	**1 000**	**1 250**
0	– 1 600	—	—	—	—	—	—	120	—	—	—	120	—	—	—	—	—	—	—	**1 250**	**1 600**
0	– 2 000	—	—	—	—	—	—	140	—	—	—	140	—	—	—	—	—	—	—	**1 600**	**2 000**

Notes (1) Applicable to bearings with cylindrical bores.
(2) Tolerance for width deviation and tolerance limits for the width variation of the outer ring should be the same bearing. Tolerances for the width variation of the outer ring of Classes 5 and 4, are shown in Table 2.2.2.
(3) Applicable to individual rings manufactured for combined bearings.
(4) Applicable to ball bearings such as deep groove ball bearings, angular contact ball bearings, etc.

Remarks 1. The cylindrical bore diameter "no-go side" tolerance limit (high) specified in this table does not necessarily apply within a distance of 1.2 times the chamfer dimension r (max.) from the ring face.
2. ANSI/ABMA Std 20-1996 : ABEC1 • RBEC1, ABEC3 • RBEC3, ABEC5 • RBEC5, and ABEC7 • RBEC7 are equivalent to Classes Normal, 6, 5, and 4 respectively.

Table 2. 2 Tolerances for Radial Bearings

Table 2. 2. 2 Tolerances

Nominal Outside Diameter D (mm)		Δ_{Dmp}								Δ_{Ds}	
		Normal		Class 6		Class 5		Class 4		Class 4 Diameter Series 0, 1, 2, 3, 4	
over	incl	high	low	high	low	high	low	high	low	high	low
80	**120**	0	– 15	0	– 13	0	– 10	0	– 8	0	– 8
120	**150**	0	– 18	0	– 15	0	– 11	0	– 9	0	– 9
150	**180**	0	– 25	0	– 18	0	– 13	0	– 10	0	– 10
180	**250**	0	– 30	0	– 20	0	– 15	0	– 11	0	– 11
250	**315**	0	– 35	0	– 25	0	– 18	0	– 13	0	– 13
315	**400**	0	– 40	0	– 28	0	– 20	0	– 15	0	– 15
400	**500**	0	– 45	0	– 33	0	– 23	—	—	—	—
500	**630**	0	– 50	0	– 38	0	– 28	—	—	—	—
630	**800**	0	– 75	0	– 45	0	– 35	—	—	—	—
800	**1 000**	0	– 100	0	– 60	—	—	—	—	—	—
1 000	**1 250**	0	– 125	—	—	—	—	—	—	—	—
1 250	**1 600**	0	– 160	—	—	—	—	—	—	—	—
1 600	**2 000**	0	– 200	—	—	—	—	—	—	—	—
2 000	**2 500**	0	– 250	—	—	—	—	—	—	—	—

Notes (1) Applicable only when a locating snap ring is not used.
(2) Applicable to ball bearings such as deep groove ball bearings and angular contact ball bearings.
(3) The tolerances for outer ring width variation of bearings of Classes Normal and 6 are shown in Table 2.2.1.

Remarks 1. The outside diameter "no-go side" tolerances (low) specified in this table do not necessarily apply within a distance of 1.2 times the chamfer dimension r (max.) from the ring face.
2. ANSI/ABMA Std 20-1996 : ABEC1 • RBEC1, ABEC3 • RBEC3, ABEC5 • RBEC5, and ABEC7 • RBEC7 are equivalent to Classes Normal, 6, 5, and 4 respectively.

(Excluding Tapered Roller Bearings)

for Outer Rings

V_{Dp} (1)												V_{Dmp} (1)			
Normal				Class 6				Class 5		Class 4		Normal	Class 6	Class 5	Class 4
Open Type			Shielded Sealed	Open Type			Shielded Sealed	Open Type		Open Type					
Diameter Series				Diameter Series				Diameter Series		Diameter Series					
9	0, 1	2, 3, 4	2, 3, 4	9	0,1	2, 3, 4	0,1,2,3,4	9	0,1,2,3,4	9	0,1,2,3,4				
max.				max.				max.		max.		max.	max.	max.	max.
19	19	11	26	16	16	10	20	10	8	8	6	11	10	5	4
23	23	14	30	19	19	11	25	11	8	9	7	14	11	6	5
31	31	19	38	23	23	14	30	13	10	10	8	19	14	7	5
38	38	23	—	25	25	15	—	15	11	11	8	23	15	8	6
44	44	26	—	31	31	19	—	18	14	13	10	26	19	9	7
50	50	30	—	35	35	21	—	20	15	15	11	30	21	10	8
56	56	34	—	41	41	25	—	23	17	—	—	34	25	12	—
63	63	38	—	48	48	29	—	28	21	—	—	38	29	14	—
94	94	55	—	56	56	34	—	35	26	—	—	55	34	18	—
125	125	75	—	75	75	45	—	—	—	—	—	75	45	—	—
—	—	—	—	—	—	—	—	—	—	—	—	—	—	—	—
—	—	—	—	—	—	—	—	—	—	—	—	—	—	—	—
—	—	—	—	—	—	—	—	—	—	—	—	—	—	—	—
—	—	—	—	—	—	—	—	—	—	—	—	—	—	—	—

Units:μm

K_{ea}				S_D		S_{ea} (2)		V_{Cs} (3)		Nominal Outside Diameter D (mm)	
Normal	Class 6	Class 5	Class 4	Class 5	Class 4	Class 5	Class 4	Class 5	Class 4		
max.	max.	max.	max.	max.	max.	max.	max.	max.	max.	over	incl
35	18	10	6	9	5	11	6	8	4	**80**	**120**
40	20	11	7	10	5	13	7	8	5	**120**	**150**
45	23	13	8	10	5	14	8	8	5	**150**	**180**
50	25	15	10	11	7	15	10	10	7	**180**	**250**
60	30	18	11	13	8	18	10	11	7	**250**	**315**
70	35	20	13	13	10	20	13	13	8	**315**	**400**
80	40	23	—	15	—	23	—	15	—	**400**	**500**
100	50	25	—	18	—	25	—	18	—	**500**	**630**
120	60	30	—	20	—	30	—	20	—	**630**	**800**
140	75	—	—	—	—	—	—	—	—	**800**	**1 000**
160	—	—	—	—	—	—	—	—	—	**1 000**	**1 250**
190	—	—	—	—	—	—	—	—	—	**1 250**	**1 600**
220	—	—	—	—	—	—	—	—	—	**1 600**	**2 000**
250	—	—	—	—	—	—	—	—	—	**2 000**	**2 500**

Table 2. 3 Tolerances for Metric Design

Table 2. 3. 1 Tolerances for Inner Ring Bore Diameter

Nominal Bore Diameter d (mm)		Δ_{dmp}						Δ_{ds}		V_{dp}				V_{dmp}			
		Normal Class 6X		Class 6 Class 5		Class 4		Class 4		Normal Class 6X	Class 6	Class 5	Class 4	Normal Class 6X	Class 6	Class 5	Class 4
over	incl	high	low	high	low	high	low	high	low	max.	max.	max.	max.	max.	max.	max.	max.
80	**120**	0	– 20	0	– 15	0	– 10	0	– 10	20	15	11	8	15	11	8	5
120	**180**	0	– 25	0	– 18	0	– 13	0	– 13	25	18	14	10	19	14	9	7
180	**250**	0	– 30	0	– 22	0	– 15	0	– 15	30	22	17	11	23	16	11	8
250	**315**	0	– 35	0	– 25	0	– 18	0	– 18	35	—	—	—	26	—	—	—
315	**400**	0	– 40	0	– 30	0	– 23	0	– 23	40	—	—	—	30	—	—	—
400	**500**	0	– 45	0	– 35	0	– 27	0	– 27	—	—	—	—	—	—	—	—
500	**630**	0	– 50	0	– 40	—	—	—	—	—	—	—	—	—	—	—	—
630	**800**	0	– 75	0	– 60	—	—	—	—	—	—	—	—	—	—	—	—
800	**1 000**	0	– 100	0	– 75	—	—	—	—	—	—	—	—	—	—	—	—
1 000	**1 250**	0	– 125	0	– 95	—	—	—	—	—	—	—	—	—	—	—	—
1 250	**1 600**	0	– 160	0	– 120	—	—	—	—	—	—	—	—	—	—	—	—
1 600	**2 000**	0	– 200	0	– 150	—	—	—	—	—	—	—	—	—	—	—	—

Remarks 1. The bore diameter "no-go side" tolerances (high) specified in this table do not necessarily apply within a distance of 1.2 times the chamfer dimension r (max.) from the ring face.
2. Some of these tolerances conform to the NSK Standard.

Table 2. 3. 2 Tolerances for Outer Ring Outside Diameter

Nominal Outside Diameter D (mm)		Δ_{Dmp}						Δ_{Ds}		V_{Dp}				V_{Dmp}			
		Normal Class 6X		Class 6 Class 5		Class 4		Class 4		Normal Class 6X	Class 6	Class 5	Class 4	Normal Class 6X	Class 6	Class 5	Class 4
over	incl	high	low	high	low	high	low	high	low	max.	max.	max.	max.	max.	max.	max.	max.
80	**120**	0	– 15	0	– 13	0	– 10	0	– 10	15	13	10	8	11	10	7	5
120	**150**	0	– 18	0	– 15	0	– 11	0	– 11	18	15	11	8	14	11	8	6
150	**180**	0	– 25	0	– 18	0	– 13	0	– 13	25	18	14	10	19	14	9	7
180	**250**	0	– 30	0	– 20	0	– 15	0	– 15	30	20	15	11	23	15	10	8
250	**315**	0	– 35	0	– 25	0	– 18	0	– 18	35	25	19	14	26	19	13	9
315	**400**	0	– 40	0	– 28	0	– 20	0	– 20	40	28	22	15	30	21	14	10
400	**500**	0	– 45	0	– 33	0	– 23	0	– 23	45	—	—	—	34	—	—	—
500	**630**	0	– 50	0	– 38	0	– 28	0	– 28	50	—	—	—	38	—	—	—
630	**800**	0	– 75	0	– 45	—	—	—	—	—	—	—	—	—	—	—	—
800	**1 000**	0	– 100	0	– 60	—	—	—	—	—	—	—	—	—	—	—	—
1 000	**1 250**	0	– 125	0	– 75	—	—	—	—	—	—	—	—	—	—	—	—
1 250	**1 600**	0	– 160	0	– 95	—	—	—	—	—	—	—	—	—	—	—	—
1 600	**2 000**	0	– 200	0	– 120	—	—	—	—	—	—	—	—	—	—	—	—
2 000	**2 500**	0	– 250	0	– 150	—	—	—	—	—	—	—	—	—	—	—	—

Remarks 1. The outside diameter "no-go side" tolerances (low) specified in this table do not necessarily apply within a distance of 1.2 times the chamfer dimension r (max.) from the ring face.
2. Some of these tolerances conform to the NSK Standard.

Tapered Roller Bearings

and Running Accuracy

Units:μm

K_{ia}				S_d		S_{ia}
Normal Class 6X	Class 6	Class 5	Class 4	Class 5	Class 4	Class 4
max.	max.	max.	max.	max.	max.	max.
30	13	6	5	9	5	5
35	18	8	6	10	6	7
50	20	10	8	11	7	8
60	25	13	10	13	8	10
70	30	15	12	15	10	14
70	35	18	14	19	13	17
85	40	20	—	22	—	—
100	45	22	—	27	—	—
120	50	25	—	35	—	—
140	55	—	—	—	—	—
170	60	—	—	—	—	—
210	70	—	—	—	—	—

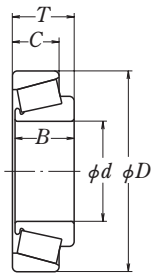

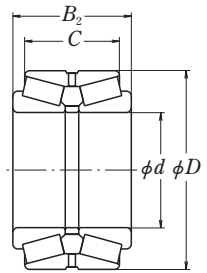

and Running Accuracy

Units:μm

K_{ea}				S_D		S_{ea}
Normal Class 6X	Class 6	Class 5	Class 4	Class 5	Class 4	Class 4
max.	max.	max.	max.	max.	max.	max.
35	18	10	6	9	5	6
40	20	11	7	10	5	7
45	23	13	8	10	5	8
50	25	15	10	11	7	10
60	30	18	11	13	8	10
70	35	20	13	13	10	13
80	40	23	15	15	11	15
100	50	25	18	18	13	18
120	60	30	—	20	—	—
120	75	35	—	23	—	—
120	85	40	—	27	—	—
120	95	—	—	—	—	—
120	115	—	—	—	—	—
160	130	—	—	—	—	—

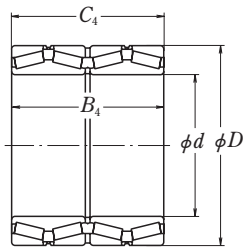

Table 2. 3 Tolerances for Metric Design

Table 2. 3. 3 Tolerances for Width, Overall Bearing Width, Tapered Roller Bearings and Combined Bearing Width

Units: μm

Nominal Bore Diameter d (mm)		Δ_{Bs}						Δ_{Cs}						Δ_{Ts}					
		Normal Class 6		Class 6X		Class 5 Class 4		Normal Class 6		Class 6X		Class 5 Class 4		Normal Class 6		Class 6X		Class 5 Class 4	
over	incl	high	low	high	low	high	low	high	low	high	low	high	low	high	low	high	low	high	low
80	**120**	0	− 200	0	− 50	0	− 400	0	− 200	0	− 100	0	− 400	+ 200	− 200	+ 100	0	+ 200	− 200
120	**180**	0	− 250	0	− 50	0	− 500	0	− 250	0	− 100	0	− 500	+ 350	− 250	+ 150	0	+ 350	− 250
180	**250**	0	− 300	0	− 50	0	− 600	0	− 300	0	− 100	0	− 600	+ 350	− 250	+ 150	0	+ 350	− 250
250	**315**	0	− 350	0	− 50	0	− 700	0	− 350	0	− 100	0	− 700	+ 350	− 250	+ 200	0	+ 350	− 250
315	**400**	0	− 400	0	− 50	0	− 800	0	− 400	0	− 100	0	− 800	+ 400	− 400	+ 200	0	+ 400	− 400
400	**500**	0	− 450	—	—	0	− 800	0	− 450	—	—	0	− 800	+ 400	− 400	—	—	+ 400	− 400
500	**630**	0	− 500	—	—	0	− 800	0	− 500	—	—	0	− 800	+ 500	− 500	—	—	+ 500	− 500
630	**800**	0	− 750	—	—	0	− 800	0	− 750	—	—	0	− 800	+ 600	− 600	—	—	+ 600	− 600
800	**1 000**	0	− 1 000	—	—	0	− 1 000	0	− 1 000	—	—	0	− 1 000	+ 750	− 750	—	—	+ 750	− 750
1 000	**1 250**	0	− 1 250	—	—	0	− 1 250	0	− 1 250	—	—	0	− 1 250	+ 1 000	− 1 000	—	—	+ 1 000	− 1 000
1 250	**1 600**	0	− 1 600	—	—	0	− 1 600	0	− 1 600	—	—	0	− 1 600	+ 1 250	− 1 250	—	—	+ 1 250	− 1 250
1 600	**2 000**	0	− 2 000	—	—	0	− 2 000	0	− 2 000	—	—	0	− 2 000	+ 1 500	− 1 500	—	—	+ 1 500	− 1 500

Ring Width with Rollers Deviation Δ_{T1s}				Outer Ring Effective Width Deviation Δ_{T2s}				Overall Combined Bearing Width Deviation Δ_{B2s}		$\Delta_{B4s}, \Delta_{C4s}$		Nominal Bore Diameter d (mm)	
Normal		Class 6X		Normal		Class 6X		All classes of double-row bearings		All classes of four-row bearings			
high	low	high	low	high	low	high	low	high	low	high	low	over	incl
+ 100	− 100	+ 50	0	+ 100	− 100	+ 50	0	+ 300	− 300	+ 400	− 400	**80**	**120**
+ 150	− 150	+ 50	0	+ 200	− 100	+ 100	0	+ 400	− 400	+ 500	− 500	**120**	**180**
+ 150	− 150	+ 50	0	+ 200	− 100	+ 100	0	+ 450	− 450	+ 600	− 600	**180**	**250**
+ 150	− 150	+ 100	0	+ 200	− 100	+ 100	0	+ 550	− 550	+ 700	− 700	**250**	**315**
+ 200	− 200	+ 100	0	+ 200	− 200	+ 100	0	+ 600	− 600	+ 800	− 800	**315**	**400**
—	—	—	—	—	—	—	—	+ 700	− 700	+ 900	− 900	**400**	**500**
—	—	—	—	—	—	—	—	+ 800	− 800	+ 1 000	− 1 000	**500**	**630**
—	—	—	—	—	—	—	—	+ 1 200	− 1 200	+ 1 500	− 1 500	**630**	**800**
—	—	—	—	—	—	—	—	+ 1 500	− 1 500	+ 1 500	− 1 500	**800**	**1 000**
—	—	—	—	—	—	—	—	—	—	+ 1 500	− 1 500	**1 000**	**1 250**
—	—	—	—	—	—	—	—	—	—	+ 1 500	− 1 500	**1 250**	**1 600**
—	—	—	—	—	—	—	—	—	—	—	—	**1 600**	**2 000**

Remarks The effective width of an inner ring with rollers T_1 is defined as the overall bearing width of an inner ring with rollers combined with a master outer ring.
The effective width of an outer ring T_2 is defined as the overall bearing width of an outer ring combined with a master inner ring with rollers.

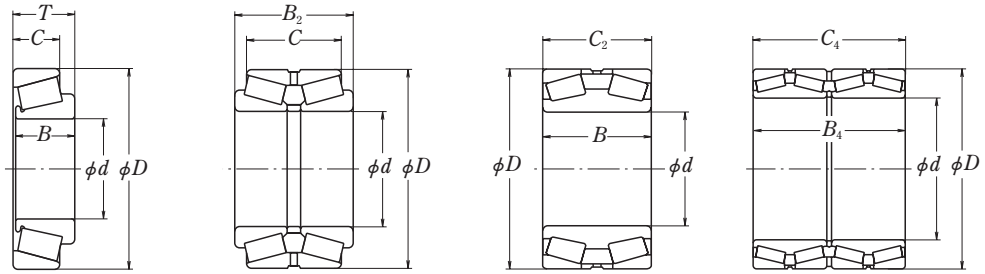

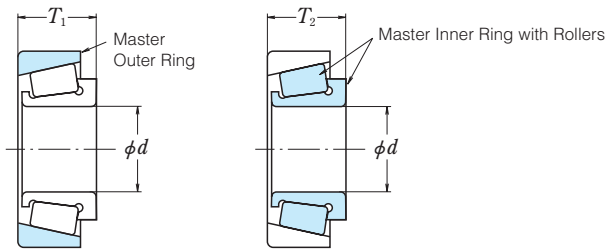

Table 2. 4 Tolerances for Inch Design Tapered Roller Bearings

Table 2. 4. 1 Tolerances for Inner Ring Bore Diameter

Units:μm

Nominal Bore Diameter d				Δ_{ds}			
over		incl		CLASS 4, 2		CLASS 3, 0	
(mm)	(inch)	(mm)	(inch)	high	low	high	low
76.200	3.0000	**266.700**	10.5000	+ 25	0	+ 13	0
266.700	10.5000	**304.800**	12.0000	+ 25	0	+ 13	0
304.800	12.0000	**609.600**	24.0000	+ 51	0	+ 25	0
609.600	24.0000	**914.400**	36.0000	+ 76	0	+ 38	0
914.400	36.0000	**1 219.200**	48.0000	+ 102	0	+ 51	0
1 219.200	48.0000	—	—	+ 127	0	+ 76	0

Remarks Some of these tolerances conform to the NSK Standard.

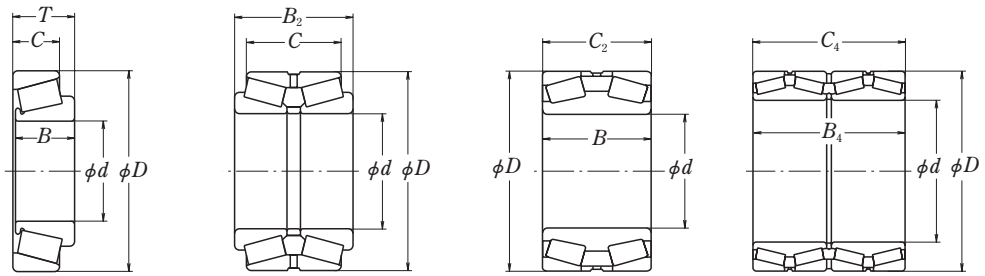

Table 2. 4. 2 Tolerances for Outer Ring Outside Diameter and Radial Runout of Inner and Outer Rings

Units:μm

Nominal Outside Diameter D				Δ_{Ds}				K_{ia} , K_{ea}			
over		incl		CLASS 4, 2		CLASS 3, 0		CLASS 4	CLASS 2	CLASS 3	CLASS 0
(mm)	(inch)	(mm)	(inch)	high	low	high	low	max.	max.	max.	max.
—	—	**266.700**	10.5000	+ 25	0	+ 13	0	51	38	8	4
266.700	10.5000	**304.800**	12.0000	+ 25	0	+ 13	0	51	38	8	4
304.800	12.0000	**609.600**	24.0000	+ 51	0	+ 25	0	51	38	18	—
609.600	24.0000	**914.400**	36.0000	+ 76	0	+ 38	0	76	51	51	—
914.400	36.0000	**1 219.200**	48.0000	+ 102	0	+ 51	0	76	—	76	—
1 219.200	48.0000	—	—	+ 127	0	+ 76	0	76	—	76	—

Remarks Some of these tolerances conform to the NSK Standard.

Table 2. 4. 3 Tolerances for Overall Width and Combined Width

Units:μm

Nominal Bore Diameter d				Nominal Outside Diameter (1) D				Δ_{Ts} Single Row						Δ_{B2s} , Δ_{C2s} Double-Row KBE , KDE , KH , KDH						Δ_{B2s} , Δ_{C2s} Double-Row KF		Δ_{B4s} , Δ_{C4s} Four-Row KV	
over		incl		over		incl		CLASS 4		CLASS 3 (1)		CLASS 0		CLASS 4		CLASS 3 (1)		CLASS 0		CLASS 4, 3		CLASS 4, 3	
(mm)	(inch)	(mm)	(inch)	(mm)	(inch)	(mm)	(inch)	high	low	high	low	high	low	high	low	high	low	high	low	high	low	high	low
—	—	**101.600**	4.0000	—	—	—	—	+ 203	0	+ 203	− 203	+ 203	− 203	+ 406	0	+ 406	− 406	+ 406	− 406	+ 254	0	+ 1 524	− 1 524
101.600	4.0000	**127.000**	5.0000	—	—	—	—	+ 356	− 254	+ 203	− 203	+ 203	− 203	+ 711	− 508	+ 406	− 406	+ 406	− 406	+ 254	0	+ 1 524	− 1 524
127.000	5.0000	**304.800**	12.0000	—	—	—	—	+ 356	− 254	+ 203	− 203	+ 203	− 203	+ 711	− 508	+ 406	− 406	+ 406	− 406	+ 762	0	+ 1 524	− 1 524
304.800	12.0000	**609.600**	24.0000	—	—	**508.000**	20.0000	+ 381	− 381	+ 203	− 203	—	—	+ 762	− 762	+ 406	− 406	—	—	+ 762	0	+ 1 524	− 1 524
304.800	12.0000	**609.600**	24.0000	**508.000**	20.0000	—	—	—	—	+ 381	− 381	—	—	—	—	+ 762	− 762	—	—	—	—	—	—
609.600	24.0000	—	—	—	—	—	—	+ 381	− 381	+ 381	− 381	—	—	+ 762	− 762	+ 762	− 762	—	—	+ 762	0	+ 1 524	− 1 524

Notes (1) The division of the nominal outside diameter D is applied for Class 3 of single and double row bearings (except KF type).

Remarks Some of these tolerances conform to the NSK Standard.

Table 2. 5 Tolerances for Thrust Ball Bearings

Table 2. 5. 1 Tolerances for Shaft Washer Bore Diameter and Running Accuracy

Units:μm

Nominal Bore Diameter d (mm)		Δ_{dmp}				V_{dp}		S_i or S_e			
		Normal CLASS 6 CLASS 5		CLASS 4		Normal CLASS 6 CLASS 5	CLASS 4	Normal	CLASS 6	CLASS 5	CLASS 4
over	incl	high	low	high	low	max.	max.	max.	max.	max.	max.
80	**120**	0	– 20	0	– 15	15	11	15	8	4	3
120	**180**	0	– 25	0	– 18	19	14	15	9	5	4
180	**250**	0	– 30	0	– 22	23	17	20	10	5	4
250	**315**	0	– 35	0	– 25	26	19	25	13	7	5
315	**400**	0	– 40	0	– 30	30	23	30	15	7	5
400	**500**	0	– 45	0	– 35	34	26	30	18	9	6
500	**630**	0	– 50	0	– 40	38	30	35	21	11	7
630	**800**	0	– 75	0	– 50	—	—	40	25	13	8
800	**1 000**	0	– 100	—	—	—	—	45	30	15	—
1 000	**1 250**	0	– 125	—	—	—	—	50	35	18	—

Table 2. 5. 2 Tolerances for Outside Diameter of Housing Washers

Units:μm

Nominal Outside Diameter D (mm)		Δ_{Dmp} Flat Seat Type				V_{Dp}	
		Normal CLASS 6 CLASS 5		CLASS 4		Normal CLASS 6 CLASS 5	CLASS 4
over	incl	high	low	high	low	max.	max.
80	**120**	0	– 22	0	– 13	17	10
120	**180**	0	– 25	0	– 15	19	11
180	**250**	0	– 30	0	– 20	23	15
250	**315**	0	– 35	0	– 25	26	19
315	**400**	0	– 40	0	– 28	30	21
400	**500**	0	– 45	0	– 33	34	25
500	**630**	0	– 50	0	– 38	38	29
630	**800**	0	– 75	0	– 45	55	34
800	**1 000**	0	– 100	—	—	75	—
1 000	**1 250**	0	– 125	—	—	—	—
1 250	**1 600**	0	– 160	—	—	—	—

Table 2. 5. 3 Tolerances for Thrust Ball Bearing Height

Units:μm

Nominal Bore Diameter d (mm)		Δ_{Ts} Normal, CLASS 6 CLASS 5, CLASS 4	
over	incl	high	low
80	**120**	0	– 150
120	**180**	0	– 175
180	**250**	0	– 200
250	**315**	0	– 225
315	**400**	0	– 300
400	**500**	0	– 350
500	**630**	0	– 450
630	**800**	0	– 550
800	**1 000**	0	– 700
1 000	**1 250**	0	– 900

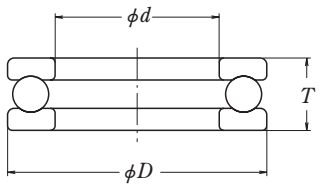

Table 2. 6 Tolerances for Tapered Roller Thrust Bearings

Table 2. 6. 1 Tolerances for Bore Diameters of Shaft Washers and Height (Metric, Class Normal)

Units:μm

Nominal Bore Diameter d (mm)		Δ_{dmp}		Δ_{Ts}	
over	incl	high	low	high	low
80	**120**	0	– 20	0	– 150
120	**180**	0	– 25	0	– 175
180	**250**	0	– 30	0	– 200
250	**315**	0	– 35	0	– 225
315	**400**	0	– 40	0	– 300
400	**500**	0	– 45	0	– 350
500	**630**	0	– 50	0	– 450
630	**800**	0	– 75	0	– 550
800	**1 000**	0	– 100	0	– 700
1 000	**1 250**	0	– 125	0	– 900
1 250	**1 600**	0	– 160	0	– 1 200

Table 2. 6. 2 Tolerances for Housing washer Outside Diameters (Metric, Class Normal)

Units:μm

Nominal Outside Diameter D (mm)		Δ_{Dmp}	
over	incl	high	low
180	**250**	0	– 30
250	**315**	0	– 35
315	**400**	0	– 40
400	**500**	0	– 45
500	**630**	0	– 50
630	**800**	0	– 75
800	**1 000**	0	– 100
1 000	**1 250**	0	– 125
1 250	**1 600**	0	– 160
1 600	**2 000**	0	– 200

Table 2. 6. 3 Tolerances for Bore Diameters of Shaft Washers and Height (Inch)

Units:μm

Nominal Bore Diameter d				Δ_{dmp}		Δ_{Ts}	
over		incl					
(mm)	(inch)	(mm)	(inch)	high	low	high	low
—	—	**304.800**	12.0000	+ 25	0	+ 381	– 381
304.800	12.0000	**609.600**	24.0000	+ 51	0	+ 381	– 381
609.600	24.0000	**914.400**	36.0000	+ 76	0	+ 381	– 381
914.400	36.0000	**1 219.200**	48.0000	+ 102	0	+ 381	– 381

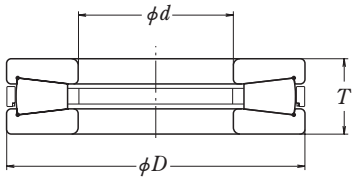

Table 2. 6. 4 Tolerances for Housing Washer Outside Diameters (Inch)

Units:μm

Nominal Outside Diameter D				Δ_{Dmp}	
over		incl			
(mm)	(inch)	(mm)	(inch)	high	low
—	—	**304.800**	12.0000	+ 25	0
304.800	12.0000	**609.600**	24.0000	+ 51	0
609.600	24.0000	**914.400**	36.0000	+ 76	0
914.400	36.0000	**1 219.200**	48.0000	+ 102	0
1 219.200	48.0000	—	—	+ 127	0

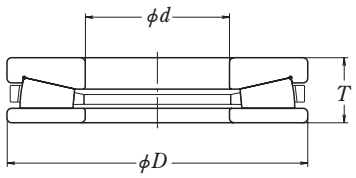

Table 2. 7 Tolerances for Spherical Thrust Roller Bearings

Table 2. 7. 1 Tolerances for Bore Diameters of Shaft Washer and Height (Class Normal)

Units:μm

Nominal Bore Diameter d (mm)		Δ_{dmp}		V_{dp}	Reference		
					S_d	Δ_{Ts}	
over	incl	high	low	max.	max.	high	low
80	**120**	0	– 20	15	25	+ 200	– 200
120	**180**	0	– 25	19	30	+ 250	– 250
180	**250**	0	– 30	23	30	+ 300	– 300
250	**315**	0	– 35	26	35	+ 350	– 350
315	**400**	0	– 40	30	40	+ 400	– 400
400	**500**	0	– 45	34	45	+ 450	– 450

Remarks 1. The bore diameter "no-go side" tolerances (high) specified in this table do not necessarily apply within a distance of 1.2 times the chamfer dimension r (max.) from the washer face.
2. Some of these tolerances conform to the NSK Standard.
3. Please consult with NSK for tolerances of bore diameter over 500mm.

Table 2. 7. 2 Tolerances for Housing Washer Outside Diameter (Class Normal)

Units:μm

Nominal Outside Diameter D (mm)		Δ_{Dmp}	
over	incl	high	low
120	**180**	0	– 25
180	**250**	0	– 30
250	**315**	0	– 35
315	**400**	0	– 40
400	**500**	0	– 45
500	**630**	0	– 50
630	**800**	0	– 75
800	**1 000**	0	– 100

Remarks 1. The outside diameter "no-go side" tolerances (low) specified in this table do not necessarily apply within a distance of 1.2 times the chamfer dimension r (max.) from the washer face.
2. Some of these tolerances conform to the NSK Standard.
3. Please consult with NSK for tolerances of outside diameter over 1000mm.

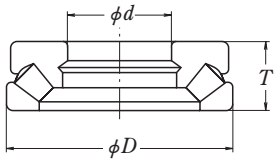

Table 2. 8 Chamfer Dimension Limits (for Metric Design Bearings)

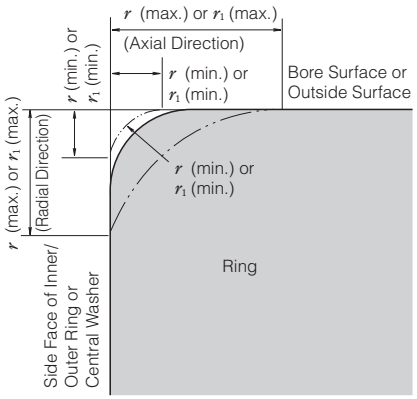

r : Chamfer Dimension of Inner/Outer Ring
r_1 : Chamfer Dimension of Inner/Outer Ring (Front Side) or of Central Washer of Thrust Ball Bearings

Remarks The precise shape of chamfer surfaces has not been specified but its profile in the axial plane shall not intersect an arc of radius r (min.) or r_1 (min.) touching the side face of an inner ring or central washer and bore surface, on the side face of an outer ring and outside surface.

Table 2. 8. 1 Chamfer Dimension Limits for Radial Bearings (Excluding Tapered Roller Bearings)

Units : mm

Permissible Chamfer Dimension for Inner/Outer Rings r (min.) or r_1(min.)	Nominal Bore Diameter d		Permissible Chamfer Dimension for Inner/Outer Rings r (max.) or r_1(max.)		Reference Comer Radius of Shaft or Housing r_a
	over	incl	Radial Direction	Axial Direction	max.
0.6	—	40	1	2	0.6
	40	—	1.3	2	
1	—	50	1.5	3	1
	50	—	1.9	3	
1.1	—	120	2	3.5	1
	120	—	2.5	4	
1.5	—	120	2.3	4	1.5
	120	—	3	5	
2	—	80	3	4.5	2
	80	220	3.5	5	
	220	—	3.8	6	
2.1	—	280	4	6.5	2
	280	—	4.5	7	
2.5	—	100	3.8	6	2
	100	280	4.5	6	
	280	—	5	7	
3	—	280	5	8	2.5
	280	—	5.5	8	
4	—	—	6.5	9	3
5	—	—	8	10	4
6	—	—	10	13	5
7.5	—	—	12.5	17	6
9.5	—	—	15	19	8
12	—	—	18	24	10
15	—	—	21	30	12
19	—	—	25	38	15

Table 2. 8. 2 Chamfer Dimension Limits for Tapered Roller Bearings

Units : mm

Permissible Chamfer Dimension for Inner/ Outer Rings r (min.)	Nominal Bore or Nominal Outside Diameter (1) d or D		Permissible Chamfer Dimension for Inner /Outer Rings r (max.)		Reference Comer Radius of Shaft or Housing r_a
	over	incl	Radial Direction	Axial Direction	max.
0.6	—	40	1.1	1.7	0.6
	40	—	1.3	2	
1	—	50	1.6	2.5	1
	50	—	1.9	3	
1.5	—	120	2.3	3	1.5
	120	250	2.8	3.5	
	250	—	3.5	4	
2	—	120	2.8	4	2
	120	250	3.5	4.5	
	250	—	4	5	
2.5	—	120	3.5	5	2
	120	250	4	5.5	
	250	—	4.5	6	
3	—	120	4	5.5	2.5
	120	250	4.5	6.5	
	250	400	5	7	
	400	—	5.5	7.5	
4	—	120	5	7	3
	120	250	5.5	7.5	
	250	400	6	8	
	400	—	6.5	8.5	
5	—	180	6.5	8	4
	180	—	7.5	9	
6	—	180	7.5	10	5
	180	—	9	11	

Notes (1) Inner rings are classified by d and outer rings by D.

Table 2. 8. 3 Chamfer Dimension Limits for Thrust Bearings

Units : mm

Permissible Chamfer Dimension for Shaft (or Central)/Housing Washers r (min.) or r_1(min.)	Permissible Chamfer Dimension for Shaft (or Central)/Housing Washers r (max.) or r_1(max.)	Reference Comer Radius of Shaft or Housing r_a
	Radial or Axial Direction	max.
0.6	1.5	0.6
1	2.2	1
1.1	2.7	1
1.5	3.5	1.5
2	4	2
2.1	4.5	2
3	5.5	2.5
4	6.5	3
5	8	4
6	10	5
7.5	12.5	6
9.5	15	8
12	18	10
15	21	12
19	25	15

Table 2. 9 Tolerances for Tapered Bores (Class Normal)

There are two different taper angles: one is K indicating 1:12 and the other is K30 indicating 1:30.

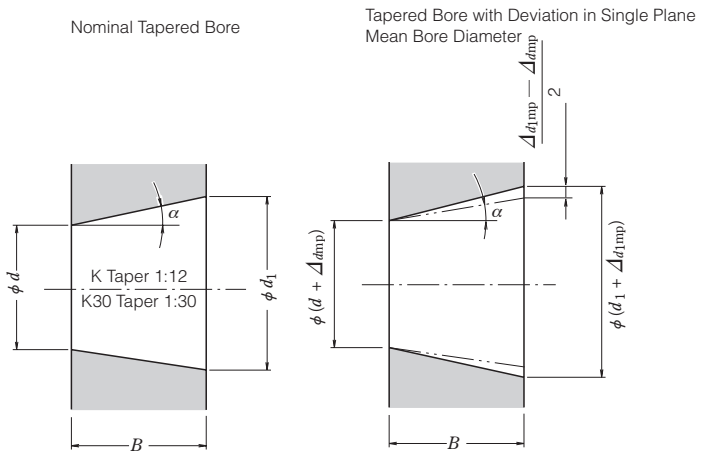

d : Nominal Bore Diameter
d_1 : Theoretical Diameter of Larger End of Tapered Bore
(K) $d_1 = d + 1/12\,B$ (K30) $d_1 = d + 1/30\,B$
$\Delta_{d\mathrm{mp}}$: Single Plane Mean Bore Diameter Deviation in Theoretical Diameter of Smaller End of Bore
$\Delta_{d1\mathrm{mp}}$: Single Plane Mean Bore Diameter Deviation in Theoretical Diameter of Larger End of Bore
B : Nominal Inner Ring Width
α : Half of Taper Angle of Tapered Bore
(K) $\alpha = 2°23'9.4''$ = 2.38594° = 0.041643 rad
(K30) $\alpha = 0°57'17.4''$ = 0.954841° = 0.016665 rad

Units:μm

Nominal Bore Diameter d (mm)		Single Plane Mean Bore Diameter Deviation of Smaller End $\Delta_{d\mathrm{mp}}$				$\Delta_{d1\mathrm{mp}}-\Delta_{d\mathrm{mp}}$		$V_{d\mathrm{p}}$(1)
		(K) 1:12		(K30) 1:30		(K)1:12 and (K) 1:30		
over	incl	high	low	high	low	high	low	max.
80	**120**	+ 54	0	+ 20	0	+ 35	0	22
120	**180**	+ 63	0	+ 25	0	+ 40	0	40
180	**250**	+ 72	0	+ 30	0	+ 46	0	46
250	**315**	+ 81	0	+ 35	0	+ 52	0	52
315	**400**	+ 89	0	+ 40	0	+ 57	0	57
400	**500**	+ 97	0	+ 45	0	+ 63	0	63
500	**630**	+ 110	0	+ 50	0	+ 70	0	70
630	**800**	+ 125	0	—		+ 80(2)	0	—
800	**1 000**	+ 140	0	—		+ 90(2)	0	—
1 000	**1 250**	+ 165	0	—		+ 105	0	—
1 250	**1 600**	+ 195	0	—		+ 125	0	—

Notes (1) $V_{d\mathrm{p}}$; Bore diameter variation in a single radial plane.
(2) Not apply to (K30) 1:30.
Remarks Please consult with NSK for tolerances of bore diameters over 500mm.

3. FITS AND INTERNAL CLEARANCES

3.1 Fits

3.1.1 Importance of Proper Fits

In the case of a rolling bearing with the inner ring fitted to the shaft with only slight interference, a harmful circumferential slipping may occur between the inner ring and shaft. This slipping of the inner ring, which is called "creep", results in a circumferential displacement of the ring relative to the shaft if the interference fit is not sufficiently tight.

When creep occurs, the fitted surfaces become adraded, causing wear and considerable damage to the shaft. Abnormal heating and vibration may also occur due to abrasive metallic particles entering the interior of the bearing.

It is important to prevent creep by having sufficient interference to firmly secure that ring which rotates to either the shaft or housing. Creep cannot always be eliminated using only axial tightening through the bearing ring faces. Generally, it is not necessary, however, to provide interference for rings subjected only to stationary loads. Fits are sometimes made without any interference for either the inner or outer ring, to accommodate certain operating conditions, or to tacilitate mounting and dismounting. In this case, to prevent damage to the fitting surfaces due to creep, lubrication or other applicable methods should be considered.

3.1.2 Selection of Fit

(1) Load Conditions and Fit

The proper fit may be selected from Table 3.1 based on the load and operating conditions.

(2) Magnitude of Load and Interference

The interference of the inner ring is slightly reduced by the bearing load; therefore, the loss of interference should be estimated using the following equations:

$$\left.\begin{aligned}\Delta d_{\mathrm{F}} &= 0.08\sqrt{\frac{d}{B}}\,F_{\mathrm{r}}\times10^{-3}\ \text{.....(N)}\\ \Delta d_{\mathrm{F}} &= 0.25\sqrt{\frac{d}{B}}\,F_{\mathrm{r}}\times10^{-3}\ \text{.....\{kgf\}}\end{aligned}\right\}\text{.....}(\mathbf{3.1})$$

where Δd_{F} : Interference decrease of inner ring (mm)
d : Bearing bore diameter (mm)
B : Nominal inner ring width (mm)
F_{r} : Radial load applied on bearing (N), {kgf}

Table 3. 1 Loading Conditions and Fits

Load Application	Bearing Operation		Load Conditions	Fitting	
	Inner Ring	Outer Ring		Inner Ring	Outer Ring
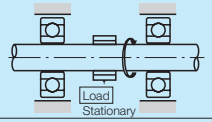	Rotating	Stationary	Rotating Inner Ring Load Stationary Outer Ring Load	Tight Fit	Loose Fit
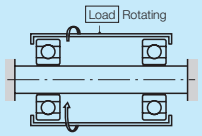	Stationary	Rotating			
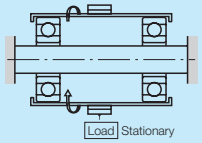	Stationary	Rotating	Rotating Outer Ring Load Stationary Inner Ring Load	Loose Fit	Tight Fit
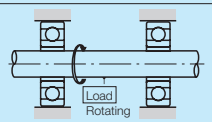	Rotating	Stationary			
Direction of load indeterminate due to variation of direction or unbalanced load	Rotating or Stationary	Rotating or Stationary	Direction of Load Indeterminate	Tight Fit	Tight Fit

Under operating conditions with light or nomal loads, the interference decrease should be obtained using Equation (3.1).
However, in the case of heavy loads where the radial load exceeds 20% of the basic static load rating C_{or}, the loss of interference should be calculated using Equation (3.2):

$$\left.\begin{aligned} \Delta d_F \geqq 0.02\frac{F_r}{B}\times10^{-3} \text{ .....(N)} \\ \Delta d_F \geqq 0.2\frac{F_r}{B}\times10^{-3} \text{ .....\{kgf\}} \end{aligned}\right\} \text{.....(3.2)}$$

where Δd_F : Effective interference (mm)
F_r : Radial load applied on bearing (N), {kgf}
B : Nominal inner ring width (mm)

(3) Interference Variation Caused by Temperature Difference between Bearing and Shaft of Housing

The effective interference decreases due to the increasing bearing temperature during operation. If the temperature difference between the bearing and housing is ΔT (°C), then the temperrature difference between the fitted surfaces of the shaft and inner ring is estimated to be about (0.1 to 0.15) ΔT. The decrease in the interference of the inner ring due to this temperature difference Δd_T may be calculated using Equation (3.3):

$$\begin{aligned} \Delta d_T &= (0.10 \text{ to } 0.15)\Delta T\cdot\alpha\cdot d \\ &\fallingdotseq 0.0015\Delta T\cdot d\times10^{-3} \text{ .....(3.3)} \end{aligned}$$

where Δd_T : Decrease in interference of inner ring due to temperature difference (mm)
ΔT : Temperature difference between bearing interior and surrounding parts (°C)
α : Coefficient of linear expansion of bearing steel=12.5×10^{-6} (1/°C)
d : Bearing nominal bore diameter (mm)

In addition, depending on the temperature difference between the outer ring and housing, or difference in their coefficients of linear expansion, the interference may increase.

(4) Effective Interference and Finish of Shaft and Housing

Since the roughness of fitted surfaces is reduced during fitting, the effective interference becomes less than the apparent interference. The amount of this interference decrease varies depending on the roughness of the surfaces and may be estimated using the following equations:

For ground shafts $\Delta d = \frac{d}{d+2}\Delta d_a$ .....(**3.4**)

For machined shafts $\Delta d = \frac{d}{d+3}\Delta d_a$ .....(**3.5**)

where Δd : Effective interference (mm)
Δd : Apparent interference (mm)
d : Bearing nominal bore diameter (mm)

According to Equations (3.4) and (3.5), the effective interference of bearings with a bore diameter of less than 150mm is about 95% of the apparent interference.

(5) Fitting Stress and Ring Expansion and Contraction

When bearings are mounted with interference on a shaft or in a housing, the rings either expand or contract and stress is produced. Excessive interference may damage the bearings; therefore, as a general guide, the maximum interference should be kept under approximately 7/10 000 of the shaft diameter.

3.1.3 Recommended Fits

As descrided previously, many factors, such as the characteristics and magnitude of bearing load, temperature differences, means of bearing mounting and dismounting, must be considered when selecting the proper fit.
If the housing is thin or the bearing is mounted on a hollow shaft, a tighter than usual fit is necessary. A split housing often deforms the bearing info an oval shape; therefore, a split housing should be avoided when a tight fit with the outer ring is required.
The fits of both the inner and outer rings should be tight in application where the shaft is subjected to considerable vidration.
The recommended fits for some common applications are shown in Tables 3.2 to 3.7. In the case of unusual operating conditions, it is advisable to consult NSK.

Teble 3. 2 Fits of Radial Bearings with Shafts

Load Conditions		Examples	Shaft Diameter (mm)			Tolerance of Shaft	Remarks
			Ball Brgs	Cylindrical Roller Brgs, Tapered Roller Brgs	Spherical Roller Brgs		
Radial Bearings with Cylindrical Bores							
Rotating Outer Ring Load	Easy axial displacement of inner ring on shaft desirable.	Wheels on Stationary Axles	All Shaft Diameters			g6	Use g5 and h5 where accuracy is requiired. In case of large bearings, f6 can be used to allow easy axial movement.
	Easy axial displacement of inner ring on shaft unnecessary	Tension Pulley Rope Sheaves				h6	
Rotating Inner Ring Load of Direction of Lord Indeterminate	Light Load (<0.06C_r (1)) or variable Load	Pumps, Blowers, Transport Vehicles, Precision Machinery, Machine Tools	80 to 100	—	—	js6 (j6)	Use fitting tolerance grade 5 where high accuracy is required and high precision brgs. are used.
			100 to 200	40 to 140	—	k6	
			—	140 to 200	—	m6	
	Normal Loads (0.06 to 0.13 C_r (1))	General Bearing Applications, Medium and Large Motors, Turbines, Pumps, Engine Main Bearings, Gears, Woodworking Machines	80 to 100	—	—	k5 to 6	k6 and m6 can be used for single-row tapered roller bearings and single-row angular contact ball bearings instead of k5 and m5.
			100 to 140	80 to 100	—	m5 to 6	
			140 to 200	100 to 140	80 to 100	m6	
			200 to 280	140 to 200	100 to 140	n6	
			—	200 to 400	140 to 280	p6	
			—	—	280 to 500	r6	
			—	—	over 500	r7	
	Heavy Loads (>0.13C_r (1)) or Shock Loads	Industrial Vehicles, Traction Motors, Construction Equipment, Crushers	—	80 to 140	50 to 100	n6	More than normal bearing internal clearance is necessary.
			—	140 to 200	100 to 140	p6	
			—	over 200	140 to 200	r6	
			—	—	200 to 500	r7	
Axial Loads Only			All Shaft Diameters			js6 (j6)	—
Radial Bearings with Tapered Bores and Sleeves							
All Types of Loading		General bearing Applications	All Shaft Diameters			h9/IT5	IT5 and IT7 mean that the deviation of the shaft from its true geometric form, e. g. roundness and taper should be within the tolerances of IT5 and IT7 respectively.
		Transmission Shafts, Woodworking Spindles				h10/IT7	

Notes (1) C_r represents the basic radial load rating of the bearing.
Remarks This table is applicable only to solid steel shafts.

Table 3. 3 Fits of Thrust Bearings with Shafts

Load Conditions		Examples	Shaft Diameter (mm)	Tolerance of Shaft	Remarks
Central Axial Load Only		Main Shafts of Lathes	All Shaft Diameters	h6 or js6 (j6)	—
Combined Radial and Axial Loads (Spherical Thrust Roller Bearings)	Stationary Inner Ring Load	Cone Crushers	All Shaft Diameters	js6 (j6)	
	Rotating Inner Ring Load of Direction of Load Indeterminate	Paper Pulp Refiners, Plastic Extruders	< 200	k6	
			200 to 400	m6	
			over 400	n6	

Table 3. 4 Fits of Radial Bearings with Housings

Load Conditions			Examples	Tolerances for Housing Bores	Axial Displacement of Outer Ring	Remarks
Solid Housings	Rotating Outer Ring Loads	Heavy Loads on Bearing in Thin-Walled Housing Heavy Shock Loads	Crane Travelling Wheels	P7	Impssible	—
		Normal or Heavy Loads	Vibrating Screens	N7		
		Light or Variable Loads	Conveyor Rollers Rope Sheaves Tension Pulleys	M7		
	Direction of Load Indeter-minate	Heavy Shock Loads	Traction Motors			
		Normal or Heavy Loads	Pumps Crankshaft Main Bearings Medium and Large Motors	K7	Generally Impossible	If axial displacement of the outer ring is not required.
Solid of Split Housings		Normal or Light Loads		JS7 (J7)	Possible	Axial displacement of outer ring is necessary.
	Rotating Inner Ring Loads	Loads of All kinds	General Bearing Applications, Railway Axleboxes	H7	Easy Displacement	—
		Normal or Light Loads	Plummer Blocks	H8		
		High Temperature Rise of Inner Ring Through Shaft	Paper Dryers	G7		
Solid Housings		Accurate Running Desirable under Normal and Light Loads	High Speed Centrifugal Compessor Free Bearings	JS6 (J6)	Possible	—
	Direction of Load Indeter-minate		High Speed Centrifugal Compessor Fixed Bearings	K6	Generally Impossible	For heavy loads, interference fit tighter than K is used. When high accuracy is required, very strict tolerances should be used for fitting.
	Rotating Inner Ring Loads	Accurate Running and High Rigidity Desirable under Variable Loads	Cylindrical Roller Bearings for Machine Tool Main Spindle	M6 or N6	Impossible	

Remarks This table is applicable to cast iron and steel housings. For housings made of light alloy, the interference should be tighter than those in this table.

Table 3. 5 Fits of Thrust Bearings with Housings

Load Conditions		Bearing Types	Tolerances for Housing Bores	Remarks
Axial Loads Only		Thrust Ball Bearings Cylindrical Roller Thrust Bearings	Clearance over 0.25mm	For General Applications
			H8	When precision is required
		Spherical Thrust Roller Bearings Steep Angle Tapered Roller Bearings	Outer ring has radial cleaeance.	When radial loads are sustained by other bearings.
Combined Radial and Axial Loads	Stationary Outer Ring Loads	Spherical Thrust Roller Bearings	H7 or JS7 (J7)	—
	Rotating Outer Ring Loads of Direction of Load Indeterminate		K7	Nomal Loads
			M7	Relatively Heavy Radial Loads

Teble 3. 6 Fits of Inch Design Tapered Roller Bearings with Shafts

(1) Bearings of Precision Classes 4 and 2

Units:μm

Operating Conditions		Nominal Bore Diameters d over (mm)	over (inch)	incl (mm)	incl (inch)	Bore Diameter Tolerances Δ_{ds} high	Bore Diameter Tolerances Δ_{ds} low	Shaft Diameter Tolerances high	Shaft Diameter Tolerances low	Remarks
Rotating Inner Ring Loads	Nomal Loads	**76.200**	3.0000	**304.800**	12.0000	+ 25	0	+ 64	+ 38	For bearings with $d \leqq 152.4$mm, those having a bigger than normal clearance are usually used.
		304.800	12.0000	**609.600**	24.0000	+ 51	0	+ 127	+ 76	
		609.600	24.0000	**914.400**	36.0000	+ 76	0	+ 190	+ 114	
	Heavy Loads Shock Loads High Speeds	**76.200**	3.0000	**304.800**	12.0000	+ 25	0	※		In general, bearings having a bigger than normal clearance are used. ※ means that the average clearance is about 0.0005 d.
		304.800	12.0000	**609.600**	24.0000	+ 51	0	※		
		609.600	24.0000	**914.400**	36.0000	+ 76	0	+ 381	+ 305	
Rotating Outer Ring Loads	Normal Loads without Shocks	**76.200**	3.0000	**304.800**	12.0000	+ 25	0	+ 25	0	When heavy or shock loads exist, the figures in the above (Rotating innr ring loads, heavy or shock loads) apply.
		304.800	12.0000	**609.600**	24.0000	+ 51	0	+ 51	0	
		609.600	24.0000	**914.400**	36.0000	+ 76	0	+ 76	0	
	Normal Loads without Shocks	**76.200**	3.0000	**304.800**	12.0000	+ 25	0	0	− 25	The inner ring can be displaced axially.
		304.800	12.0000	**609.600**	24.0000	+ 51	0	0	− 51	
		609.600	24.0000	**914.400**	36.0000	+ 76	0	0	− 76	

Remarks If four-row tapered roller bearings are mounted on roll necks with a clearance, refer to Table 4 on page B 339.

(2) Bearings of Precision Classes 3 and 0 (1)

Units:μm

Operating Conditions		Nominal Bore Diameters d over (mm)	over (inch)	incl (mm)	incl (inch)	Bore Diameter Tolerances Δ_{ds} high	Bore Diameter Tolerances Δ_{ds} low	Shaft Diameter Tolerances high	Shaft Diameter Tolerances low	Remarks
Rotating Inner Ring Loads	Precision Machine-Tool Main Spindles	**76.200**	3.0000	**304.800**	12.0000	+ 13	0	+ 30	+ 18	—
		304.800	12.0000	**609.600**	24.0000	+ 25	0	+ 64	+ 38	
		609.600	24.0000	**914.400**	36.0000	+ 38	0	+ 102	+ 64	
	Heavy Loads Shock Loads High Speeds	**76.200**	3.0000	**304.800**	12.0000	+ 13	0	—		A minimum clearance of about 0.00025 d is used.
		304.800	12.0000	**609.600**	24.0000	+ 25	0	—		
		609.600	24.0000	**914.400**	36.0000	+ 38	0	—		
Rotating Outer Ring Loads	Precision Machine-Tool Main Spindles	**76.200**	3.0000	**304.800**	12.0000	+ 13	0	+ 30	+ 18	—
		304.800	12.0000	**609.600**	24.0000	+ 25	0	+ 64	+ 38	
		609.600	24.0000	**914.400**	36.0000	+ 38	0	+ 102	+ 64	

Notes (1) For bearings with d greater than 304.8mm, Class 0 does not exist.

Table 3. 7 Fits of Inch Design Tapered Roller Bearings with Housings

(1) Bearings of Precision Classes 4 and 2

Units: μm

Operating Conditions		Nominal Outside Diameters D over (mm)	over (inch)	incl (mm)	incl (inch)	Outside Diameter Tolerances Δ_{Ds} high	low	Housing Bore Diameter Tolerances high	low	Remarks
Rotating Inner Ring Loads	Used either on free-end or fixed-end	**76.200**	3.0000	**127.000**	5.0000	+ 25	0	+ 76	+ 51	The outer ring can be easily displaced axially.
		127.000	5.0000	**304.800**	12.0000	+ 25	0	+ 76	+ 51	
		304.800	12.0000	**609.600**	24.0000	+ 51	0	+ 152	+ 102	
		609.600	24.0000	**914.400**	36.0000	+ 76	0	+ 229	+ 152	
	The outer ring position can be adjusted axially.	**76.200**	3.0000	**127.000**	5.0000	+ 25	0	+ 25	0	The outer ring can be displaced axially.
		127.000	5.0000	**304.800**	12.0000	+ 25	0	+ 51	0	
		304.800	12.0000	**609.600**	24.0000	+ 51	0	+ 76	+ 25	
		609.600	24.0000	**914.400**	36.0000	+ 76	0	+ 127	+ 51	
	The outer ring position cannot be adjusted axially.	**76.200**	3.0000	**127.000**	5.0000	+ 25	0	– 25	– 51	Generally, the outer ring is fixed axially.
		127.000	5.0000	**304.800**	12.0000	+ 25	0	– 25	– 51	
		304.800	12.0000	**609.600**	24.0000	+ 51	0	– 25	– 76	
		609.600	24.0000	**914.400**	36.0000	+ 76	0	– 25	– 102	
Rotating Outer Ring Loads	Nomal Loads The outer ring position cannot be adjusted axially.	**76.200**	3.0000	**127.000**	5.0000	+ 25	0	– 25	– 51	The outer ring is fixed axially.
		127.000	5.0000	**304.800**	12.0000	+ 25	0	– 25	– 51	
		304.800	12.0000	**609.600**	24.0000	+ 51	0	– 25	– 76	
		609.600	24.0000	**914.400**	36.0000	+ 76	0	– 25	– 102	

Remarks If four-row tapered roller bearings are mounted on roll necks with a clearance, refer to Table 5 on page B 339.

(2) Bearings of Precision Classes 3 and 0 (1)

Units: μm

Operating Conditions		Nominal Outside Diameters D over (mm)	over (inch)	incl (mm)	incl (inch)	Outside Diameter Tolerances Δ_{Ds} high	low	Housing Bore Diameter Tolerances high	low	Remarks
Rotating Inner Ring Loads	Used on free-end	—		**152.400**	6.0000	+ 13	0	+ 38	+ 25	The outer ring can be easily displaced axially.
		152.400	6.0000	**304.800**	12.0000	+ 13	0	+ 38	+ 25	
		304.800	12.0000	**609.600**	24.0000	+ 25	0	+ 64	+ 38	
		609.600	24.0000	**914.400**	36.0000	+ 38	0	+ 89	+ 51	
	Used on fixed-end	—		**152.400**	6.0000	+ 13	0	+ 25	+ 13	The outer ring can be displaced axially.
		152.400	6.0000	**304.800**	12.0000	+ 13	0	+ 25	+ 13	
		304.800	12.0000	**609.600**	24.0000	+ 25	0	+ 51	+ 25	
		609.600	24.0000	**914.400**	36.0000	+ 38	0	+ 76	+ 38	
	The outer ring position can be adjusted axially.	—		**152.400**	6.0000	+ 13	0	+ 13	0	Generally, the outer ring is fixed axially.
		152.400	6.0000	**304.800**	12.0000	+ 13	0	+ 25	0	
		304.800	12.0000	**609.600**	24.0000	+ 25	0	+ 25	0	
		609.600	24.0000	**914.400**	36.0000	+ 38	0	+ 38	0	
	The outer ring position cannot be adjusted axially.	—		**152.400**	6.0000	+ 13	0	0	– 13	The outer ring is fixed axially.
		152.400	6.0000	**304.800**	12.0000	+ 13	0	0	– 25	
		304.800	12.0000	**609.600**	24.0000	+ 25	0	0	– 25	
		609.600	24.0000	**914.400**	36.0000	+ 38	0	0	– 38	
Rotating Outer Ring Loads	Normal Loads The outer ring position cannot be adjusted axially.	**76.200**	3.0000	**152.400**	6.0000	+ 13	0	– 13	– 25	The outer ring is fixed axially.
		152.400	6.0000	**304.800**	12.0000	+ 13	0	– 13	– 38	
		304.800	12.0000	**609.600**	24.0000	+ 25	0	– 13	– 38	
		609.600	24.0000	**914.400**	36.0000	+ 38	0	– 13	– 51	

Notes (1) For bearing with D greater than 304.8 mm, Class 0 does not exist.

3.2 Bearing Internal Clearances

3.2.1 Internal Clearances and Their Standards

The internal clearance in rolling bearings in operation greatly influences bearing performance including fatique life, vibration, noise, heat-generation, etc.

Consequently, the selection of the proper internal clearance is one of the most important tasks when choosing a bearing after the type and size have been determined.

This bearing internal clearance is the combined clearances between the inner/outer rings and rolling elements. The radial and axial clearances are defined as the total amount that one ring can be displaced relative to the other in the radial and axial directions respectively (Fig. 3.1).

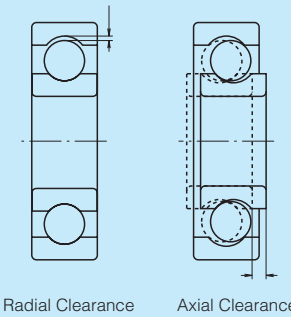

Fig. 3.1 Bearing Internal Clearance

To obtain accurate measurements, the clearance is generally measured by applying a specified measuring load on the bearing; therefore, the measured clearance (sometimes called "measured clearance" to make a distinction) is always slightly larger than the theoretical internal clearance (called "geometrical clearance" for radial bearings) by the amount of elastic deformation caused by the measuring load.

Therefore, the theoretical internal clearance may be obtained by correcting the measured clearance by the amount of elastic deformation. However, in the case of roller bearings this elastic deformation is negligibly small.

Usually the clearance before mounting is the one specified as the theoretical internal clearance.

In Table 3.8, reference table and page numbers are listed by bearing types.

Table 3. 8 Index for Radial Internal Clearances by Bearing Types

Bearing Types		Table Number	Page Number
Deep Groove Ball Bearings		3.9	A40
Deep Groove Ball Bearings	For Motors	3.10.1	A40
Cylindrical Roller Bearings	For Motors	3.10.2	A40
Cylindrical Roller Bearings	With Cylindrical Bores (Interchangeable) With Cylindrical Bores (Matched) With Tapered Bores (Matched)	3.11	A41
Spherical Roller Bearings	With Cylindrical Bores With Tapered Bores	3.12	A42
Double-Row and Combined Tapered Roller Bearings		3.13	A43
Combined Angular Contact Ball Bearings (1)		3.14	A44

Notes (1) Values given are axial clearances.

Table 3. 9 Radial Intemal Clearances in Deep Groove Ball Bearings

Units:μm

Nominal Bore Diameter d (mm)		Clearances									
		C2		CN		C3		C4		C5	
over	incl	min.	max.	min.	max.	min.	max.	min.	max.	min.	max.
80	**100**	1	18	12	36	30	58	53	84	75	120
100	**120**	2	20	15	41	36	66	61	97	90	140
120	**140**	2	23	18	48	41	81	71	114	105	160
140	**160**	2	23	18	53	46	91	81	130	120	180
160	**180**	2	25	20	61	53	102	91	147	135	200
180	**200**	2	30	25	71	63	117	107	163	150	230
200	**225**	2	35	25	85	75	140	125	195	175	265
225	**250**	2	40	30	95	85	160	145	225	205	300
250	**280**	2	45	35	105	90	170	155	245	225	340
280	**315**	2	55	40	115	100	190	175	270	245	370
315	**355**	3	60	45	125	110	210	195	300	275	410
355	**400**	3	70	55	145	130	240	225	340	315	460
400	**450**	3	80	60	170	150	270	250	380	350	510
450	**500**	3	90	70	190	170	300	280	420	390	570
500	**560**	10	100	80	210	190	330	310	470	440	630
560	**630**	10	110	90	230	210	360	340	520	490	690
630	**710**	20	130	110	260	240	400	380	570	540	760
710	**800**	20	140	120	290	270	450	430	630	600	840
800	**900**	20	160	140	320	300	500	480	700	670	940
900	**1 000**	20	170	150	350	330	550	530	770	740	1 040
1 000	**1 120**	20	180	160	380	360	600	580	850	820	1 150
1 120	**1 250**	20	190	170	410	390	650	630	920	890	1 260

Table 3. 10 Radial Internal Clearances in Bearings for Electric Motors

Table 3. 10. 1 Deep Groove Ball Bearings for Electric Motors

Units:μm

Nominal Bore Dia. d (mm)		Clearance		Remarks	
		CM		Recommended Fit	
over	incl	min.	max.	Shaft	Housing Bore
80	**100**	18	30	k5	H6 to 7 or JS6 to 7 (J6 to 7)
100	**120**	18	30	m5	
120	**160**	24	38		

Table 3. 10. 2 Cylindrical Roller Bearing for Electric Motors

Units:μm

Nominal Bore Dia. d (mm)		Clearance				Remarks	
		interchangeable CT		Matched CM		Recommended Fit	
over	incl	min.	max.	min.	max.	Shaft	Housing Bore
80	**100**	35	60	35	55	m5	JS6 to 7 (J6 to 7) or K6 to 7
100	**120**	35	65	35	60		
120	**140**	40	70	40	65		
140	**160**	50	85	50	80		
160	**180**	60	95	60	90	n6	
180	**200**	65	105	65	100		

Table 3. 11 Radial Internal Clearances in Cylindrical Roller Bearings

Units:μm

Nominal Bore Dia. d (mm)		Interchangeable Clearances in Bearings with Cylindrical Bores										Matched Clearances in Bearings with Cylindrical Bores											
		C2		CN		C3		C4		C5		CC1		CC2		CC (1)		CC3		CC4		CC5	
over	incl	min.	max.	min.	max.	min.	max.	min.	max.	min.	max.	min.	max.	min.	max.	min.	max.	min.	max.	min.	max.	min.	max.
80	**100**	15	50	50	85	75	110	105	140	155	190	10	30	25	45	45	70	80	105	105	125	155	180
100	**120**	15	55	50	90	85	125	125	165	180	220	10	30	25	50	50	80	95	120	120	145	180	205
120	**140**	15	60	60	105	100	145	145	190	200	245	10	35	30	60	60	90	105	135	135	160	200	230
140	**160**	20	70	70	120	115	165	165	215	225	275	10	35	35	65	65	100	115	150	150	180	225	260
160	**180**	25	75	75	125	120	170	170	220	250	300	10	40	35	75	75	110	125	165	165	200	250	285
180	**200**	35	90	90	145	140	195	195	250	275	330	15	45	40	80	80	120	140	180	180	220	275	315
200	**225**	45	105	105	165	160	220	220	280	305	365	15	50	45	90	90	135	155	200	200	240	305	350
225	**250**	45	110	110	175	170	235	235	300	330	395	15	50	50	100	100	150	170	215	215	265	330	380
250	**280**	55	125	125	195	190	260	260	330	370	440	20	55	55	110	110	165	185	240	240	295	370	420
280	**315**	55	130	130	205	200	275	275	350	410	485	20	60	60	120	120	180	205	265	265	325	410	470
315	**355**	65	145	145	225	225	305	305	385	455	535	20	65	65	135	135	200	225	295	295	360	455	520
355	**400**	100	190	190	280	280	370	370	460	510	600	25	75	75	150	150	225	255	330	330	405	510	585
400	**450**	110	210	210	310	310	410	410	510	565	665	25	85	85	170	170	255	285	370	370	455	565	650
450	**500**	110	220	220	330	330	440	440	550	625	735	25	95	95	190	190	285	315	410	410	505	625	720
500	**560**	—	—	—	—	—	—	—	—	—	—	30	105	105	210	210	315	350	455	455	560	695	800
560	**630**	—	—	—	—	—	—	—	—	—	—	30	115	115	230	230	345	390	505	505	620	780	895
630	**710**	—	—	—	—	—	—	—	—	—	—	30	130	130	260	260	390	435	565	565	695	870	1 000
710	**800**	—	—	—	—	—	—	—	—	—	—	35	145	145	290	290	435	485	630	630	775	980	1 125
800	**900**	—	—	—	—	—	—	—	—	—	—	35	160	160	320	320	480	540	700	700	860	1 100	1 260
900	**1 000**	—	—	—	—	—	—	—	—	—	—	35	180	180	360	360	540	600	780	780	960	1 200	1 380

Notes (1) CC is the symbol for matched normal clearance for cylindrical roller bearings.

Units:μm

Nominal Bore Dia. d (mm)		Matched Clearances in Bearings with Tapered Bores													
		CC9 (1)		CC1		CC2		CC (2)		CC3		CC4		CC5	
over	incl	min.	max.	min.	max.	min.	max.	min.	max.	min.	max.	min.	max.	min.	max.
80	**100**	10	25	25	45	45	70	80	105	105	125	125	150	180	205
100	**120**	10	25	25	50	50	80	95	120	120	145	145	170	205	230
120	**140**	15	30	30	60	60	90	105	135	135	160	160	190	230	260
140	**160**	15	35	35	65	65	100	115	150	150	180	180	215	260	295
160	**180**	15	35	35	75	75	110	125	165	165	200	200	240	285	320
180	**200**	20	40	40	80	80	120	140	180	180	220	220	260	315	355
200	**225**	20	45	45	90	90	135	155	200	200	240	240	285	350	395
225	**250**	25	50	50	100	100	150	170	215	215	265	265	315	380	430
250	**280**	25	55	55	110	110	165	185	240	240	295	295	350	420	475
280	**315**	30	60	60	120	120	180	205	265	265	325	325	385	470	530
315	**355**	30	65	65	135	135	200	225	295	295	360	360	430	520	585
355	**400**	35	75	75	150	150	225	255	330	330	405	405	480	585	660
400	**450**	40	85	85	170	170	255	285	370	370	455	455	540	650	735
450	**500**	45	95	95	190	190	285	315	410	410	505	505	600	720	815
500	**560**	—	—	105	210	210	315	350	455	455	560	560	665	800	905
560	**630**	—	—	115	230	230	345	390	505	505	620	620	735	895	1 010
630	**710**	—	—	130	260	260	390	435	565	565	695	695	825	1 000	1 130
710	**800**	—	—	145	290	290	435	485	630	630	775	775	920	1 125	1 270
800	**900**	—	—	160	320	320	480	540	700	700	860	860	1 020	1 260	1 420
900	**1 000**	—	—	180	360	360	540	600	780	780	960	960	1 120	1 380	1 540

Notes (1) Clearance CC9 is applicable to cylindrical roller bearings with tapered bores in ISO Tolerance Classes 5 and 4.
(2) CC is the symbol for matched normal clearance for cylindrical roller bearings.

Table 3. 12 Radial Internal Clearances in Spherical Roller Bearings

Units:μm

Nominal Bore Dia. d (mm)		Clearances in Bearings with Cylindrical Bores										Clearances in Bearings with Tapered Bores									
		C2		CN		C3		C4		C5		C2		CN		C3		C4		C5	
over	incl	min.	max.	min.	max.	min.	max.	min.	max.	min.	max.	min.	max.	min.	max.	min.	max.	min.	max.	min.	max.
80	**100**	35	60	60	100	100	135	135	180	180	225	55	80	80	110	110	140	140	180	180	230
100	**120**	40	75	75	120	120	160	160	210	210	260	65	100	100	135	135	170	170	220	220	280
120	**140**	50	95	95	145	145	190	190	240	240	300	80	120	120	160	160	200	200	260	260	330
140	**160**	60	110	110	170	170	220	220	280	280	350	90	130	130	180	180	230	230	300	300	380
160	**180**	65	120	120	180	180	240	240	310	310	390	100	140	140	200	200	260	260	340	340	430
180	**200**	70	130	130	200	200	260	260	340	340	430	110	160	160	220	220	290	290	370	370	470
200	**225**	80	140	140	220	220	290	290	380	380	470	120	180	180	250	250	320	320	410	410	520
225	**250**	90	150	150	240	240	320	320	420	420	520	140	200	200	270	270	350	350	450	450	570
250	**280**	100	170	170	260	260	350	350	460	460	570	150	220	220	300	300	390	390	490	490	620
280	**315**	110	190	190	280	280	370	370	500	500	630	170	240	240	330	330	430	430	540	540	680
315	**355**	120	200	200	310	310	410	410	550	550	690	190	270	270	360	360	470	470	590	590	740
355	**400**	130	220	220	340	340	450	450	600	600	750	210	300	300	400	400	520	520	650	650	820
400	**450**	140	240	240	370	370	500	500	660	660	820	230	330	330	440	440	570	570	720	720	910
450	**500**	140	260	260	410	410	550	550	720	720	900	260	370	370	490	490	630	630	790	790	1 000
500	**560**	150	280	280	440	440	600	600	780	780	1 000	290	410	410	540	540	680	680	870	870	1 100
560	**630**	170	310	310	480	480	650	650	850	850	1 100	320	460	460	600	600	760	760	980	980	1 230
630	**710**	190	350	350	530	530	700	700	920	920	1 190	350	510	510	670	670	850	850	1 090	1 090	1 360
710	**800**	210	390	390	580	580	770	770	1 010	1 010	1 300	390	570	570	750	750	960	960	1 220	1 220	1 500
800	**900**	230	430	430	650	650	860	860	1 120	1 120	1 440	440	640	640	840	840	1 070	1 070	1 370	1 370	1 690
900	**1 000**	260	480	480	710	710	930	930	1 220	1 220	1 570	490	710	710	930	930	1 190	1 190	1 520	1 520	1 860
1 000	**1 120**	290	530	530	780	780	1 020	1 020	1 330	—	—	530	770	770	1 030	1 030	1 300	1 300	1 670	—	—
1 120	**1 250**	320	580	580	860	860	1 120	1 120	1 460	—	—	570	830	830	1 120	1 120	1 420	1 420	1 830	—	—
1 250	**1 400**	350	640	640	950	950	1 240	1 240	1 620	—	—	620	910	910	1 230	1 230	1 560	1 560	2 000	—	—

Table 3. 13 Radial Internal Clearances in Double-Row and Combined Tapered Roller Bearings

Units:μm

Cylindrical Bore / Taperred Bore / Nominal Bore Dia. d (mm)		Clearances											
		C1		C2		CN		C3		C4		C5	
		—		C1		C2		CN		C3		C4	
over	incl	min.	max.	min.	max.	min.	max.	min.	max.	min.	max.	min.	max.
80	**100**	0	25	25	50	50	75	80	105	105	130	155	180
100	**120**	5	30	30	55	55	80	90	115	120	145	180	210
120	**140**	5	35	35	65	65	95	100	130	135	165	200	230
140	**160**	10	40	40	70	70	100	110	140	150	180	220	260
160	**180**	10	45	45	80	80	115	125	160	165	200	250	290
180	**200**	10	50	50	90	90	130	140	180	180	220	280	320
200	**225**	20	60	60	100	100	140	150	190	200	240	300	340
225	**250**	20	65	65	110	110	155	165	210	220	270	330	380
250	**280**	20	70	70	120	120	170	180	230	240	290	370	420
280	**315**	30	80	80	130	130	180	190	240	260	310	410	460
315	**355**	30	80	80	130	140	190	210	260	290	350	450	510
355	**400**	40	90	90	140	150	200	220	280	330	390	510	570
400	**450**	45	95	95	145	170	220	250	310	370	430	560	620
450	**500**	50	100	100	150	190	240	280	340	410	470	620	680
500	**560**	60	110	110	160	210	260	310	380	450	520	700	770
560	**630**	70	120	120	170	230	290	350	420	500	570	780	850
630	**710**	80	130	130	180	260	310	390	470	560	640	870	950
710	**800**	90	140	150	200	290	340	430	510	630	710	980	1 060
800	**900**	100	150	160	210	320	370	480	570	700	790	1 100	1 200
900	**1 000**	120	170	180	230	360	410	540	630	780	870	1 200	1 300
1 000	**1 120**	130	190	200	260	400	460	600	700	—	—	—	—
1 120	**1 250**	150	210	220	280	450	510	670	770	—	—	—	—
1 250	**1 400**	170	240	250	320	500	570	750	870	—	—	—	—

Remarks Axial internal clearance $\Delta_a = \Delta_r \cot\alpha \fallingdotseq \frac{1.5}{e}\Delta_r$

where Δ_r : Radial internal clearance

α : Contact angle

e : Constant (Listed in bearing tables)

Table 3. 14 Axial Internal Clearances in Combined Angular Contact Ball Bearings (Measured Clearance)

Units: μm

Nominal Bore Diameter d (mm)		Axial Internal Clearances											
		Contact Angle 30°						Contact Angle 40°					
		CN		C3		C4		CN		C3		C4	
over	incl	min.	max.	min.	max.	min.	max.	min.	max.	min.	max.	min.	max.
80	**100**	49	74	74	99	99	125	35	60	60	85	85	110
100	**120**	72	97	97	120	120	145	52	77	77	100	100	125
120	**140**	85	115	115	145	145	175	63	93	93	125	125	155
140	**160**	90	120	120	150	150	180	66	96	96	125	125	155
160	**180**	95	125	125	155	155	185	68	98	98	130	130	160
180	**200**	110	140	140	170	170	200	80	110	110	140	140	170

Remarks This table is applicable to bearings in Tolerance Classes N and 6. For internal axial clearances in bearings in tolerance classes better than 5 and contact angles of 15° and 25°, it is advisable to consult NSK.

3.2.2 Selection of Bearing Internal Clearances

Among the bearing internal clearances listed in the tables, the CN Clearance is adequate for standard operating conditions. The clearance becomes progressively smaller from C2 to C1 and larger from C3 to C5 in that order.
Standard operating conditions are defined as those where the inner ring speed is less than normal the load is less than normal ($P \fallingdotseq 0.1C_r$), and the bearing is tight-fitted on the shaft.
Since the internal clearance varies with the fit and temperature differences in operation, the change in radial clearance in a roller bearing is shown in Fig. 3.2 as an example.

(1) Decrease in Radial Clearance Caused by Fitting and Residual Clearance

When the inner ring or the outer ring is tight-fitted on a shaft or in a housing, a decrease in the radial internal clearance is caused by the expansion or contraction of the bearing rings. The decrease varies according to the bearing type and size and design of the shaft and housing. The amount of this decrease is approximately 70 to 90% of the interference. The internal clearance after substracting this decrease from the theoretical internal clearance Δ_0 is called the residual clearance, Δ_f.

(2) Decrease in Radial Internal Clearance Caused by Temperature Difference between Inner and Outer Rings and Effective Clearance

The frictional heat generated during operation is conducted away through the shaft and housing. Since housings generally conduct heat better than shafts, the temperature of the inner ring and the rolling elements is usually higher than that of the outer ring by 5 to 10°C. If the shaft is heated or the housing is cooled, the difference in temperature between the inner and outer rings is greater. The radial clearance decreases due to the thermal expansion caused by the temperature difference between the inner and outer rings. The amount of this decrease can be calculated using the following equations:

$$\delta_t \fallingdotseq \alpha \Delta_t D_e \quad \text{(3.6)}$$

where δ_t : Decrease in radial clearance due to temperature difference between inner and outer rings (mm)
α : Coefficient of linear expansion of bearing steel $\fallingdotseq 12.5\times10^{-6}$ (1/°C)
Δ_t : Temperrature difference between inner and outer rings (°C)
D_e : Outer ring raceway diameter (mm)

For ball bearings

$$D_e \fallingdotseq \frac{1}{5}(4D+d) \quad \text{(3.7)}$$

For roller bearings

$$D_e \fallingdotseq \frac{1}{4}(3D+d) \quad \text{(3.8)}$$

The clearance after substracting this δ_t from the residual clearance, Δ_f is called the effective clearance, Δ. Theoretically, the longest life of a bearing can be expected when the effective clearance is slightly negative. However, it is difficult to achieve such an ideal condition, and an excessive negative clearance will greatly shorten the bearing life.
Therefore, a clearance of zero or a slightly positive amount, instead of a negative one, should be selected.
When single-row angular contact ball bearings or tapered roller bearings are used facing each other, there should be a small effective clearance, unless a preload is required.
When two cylindrical roller bearings with a rib on one side are used facing each other, it is necessary to provide adequate axial clearance to allow for shaft elongation during operation.
The radial clearances used in some specific applications are given in Table 3.15.
Under special operating conditions, it is advisable to consult NSK.

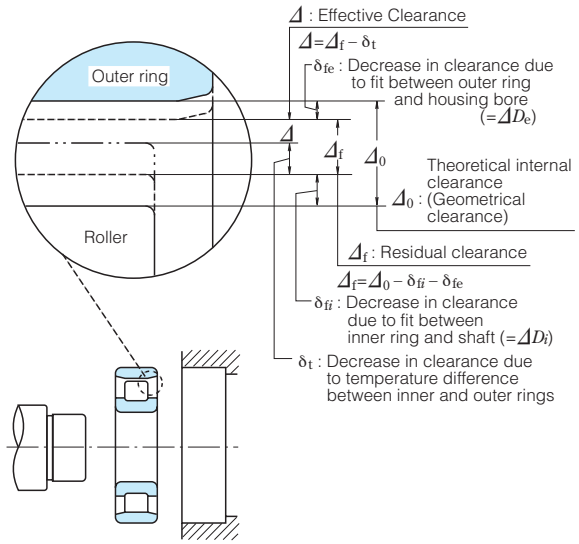

Fig. 3.2 Change in Radial Internal Clearance of Bearings

Table 3. 15 Examples of Clearances for Specific Applications

Operating Conditions	Examples	Internal Clearance
When steam passes through hollow shafts or roller shafts are heated.	Dryers in paper making machines	C3, C4
	Table rollers for rolling mills	C3
When impact loads and vibration are severe or when both the inner and outer rings are tight-fitted.	Traction motors for railways	C4
	Vibrating screens	C3, C4
	Fluid couplings	C4
	Final reduction gears for tractors	C4
When clearance is adjusted after mounting to prevent shaft deflection, etc.	Main shafts of lathes	CC9, CC1

4. LUBRICATION

4.1 Purposes of Lubrication

The main purposes of lubrication are to reduce friction and wear inside the bearings that may cause premature failure. The effects of lubrication may be briefly explained as follows:

(1) Reduction of Friction and Wear
Direct metallic contact between the bearing rings, rolling elements and cage, which are the basic components of a bearing, is prevented by an oil film which reduces the friction and wear in the contact areas.
(2) Extension of Fatigue Life
The rolling fatigue life of bearings depends greatly upon the viscosity and film thickness between the rolling contact surfaces. A heavy film thickness prolongs the fatigue life, but it is shortened if the viscosity of the oil is too low so the film thickness is insufficient.
(3) Dissipation of Frictional Heat and Cooling
Circulation lubrication may be used to carry away frictional heat or heat transferred from the outside to prevent the bearing from overheating and the oil from deteriorating.
(4) Others
Adequate lubricaton also helps to prevent foreign material from entering the bearings and guards against corrosion or rusting.

4.2 Lubricating Methods

The various lubricating methods are first divided into either grease or oil lubrication. Satisfactory bearing performance can be achieved by adopting the lubricating method which is most suitable for the particular application and operating condition.
In general, oil offers superior lubrication; however grease lubrication allows a simpler structure around the bearings. A comparison of grease and oil lubrication is given in Table 4.1.

Table 4. 1 Comparison of Grease and Oil Lubrication

Item	Grease Lubrication	Oil Lubrication
Housing Structure and Sealing Method	Simple	May be complex. Careful maintenance required.
Speed	Limiting speed is 65% to 80% of that with oil lubrication.	High limiting speed.
Cooling Effect	Poor	Heat transfer is possible using forced oil circulation.
Fluidity	Poor	Good
Full Lubricant Replacement	Sometimes difficult	Easy
Removal of Foreign Matter	Removal of particles from grease is impossible.	Easy
External Contamination due to Leakage	Surroundings seldom contaminated by leakage.	Often leaks without proper countermeasures. Not suitable if external contamination must be avoided.

4.2.1 Grease Lubrication

(1) Grease Quantity

The quantity of grease to be packed in a housing depends on the housing design and free space, grease characteristics, and ambient temperature.
Sufficient grease must be packed inside the bearing including the cage guide face. The available space inside the housing to be packed with grease depends on the speed as follows:

Table 4. 2 Packced Grease Amount

Speed	Grease volume / Internal space	Remarks
Low	2/3 to 1	To prevent particles and water from entering
Normal	1/2 to 2/3	
High	1/3 to 1/2	The higher the speed, the less the grease.

(2) Replacement of Grease

Grease, once packed, usually need not be replenished for a long time; however, for severe operating conditions, grease should be frequently replenished or replaced. In such cases, the bearing housing should be designed to facilitate grease replenishment and replacement.
When replenishment intervals are short, provide replenishment and discharge ports at appropriate positions so deteriorated grease is replaced by fresh grease. For example, the housing space on the grease supply side can be divided into several sections with partitions. The grease on the partitioned side gradually passes through the bearings and old grease forced from the bearing is discharged through a grease valve (Fig. 4.1). If a grease valve is not used, the space on the discharge side is made larger than the partitioned side so it can retain the old grease, which is removed periodically by removing the cover.

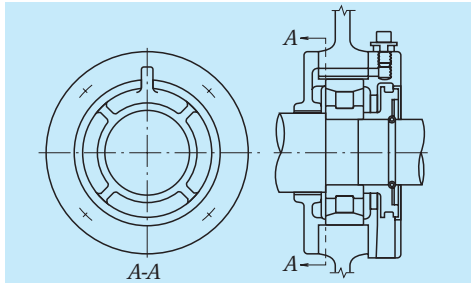

Fig. 4.1 Combination of Partitioned Grease Reservoir and Grease Valve

(3) Replenishing Interval

Even if high-quality grease is used, there is deterioration of its properties with time; therefore, periodic replenishment is required. Figs 4.2 (1) and (2) show the replenishment time intervals for various bearing types running at different speeds. These figures apply only if the temperature of the bearings is less than 70°C; the replenishment time interval must be reduced by half for every 15°C temperature rise of the bearings.

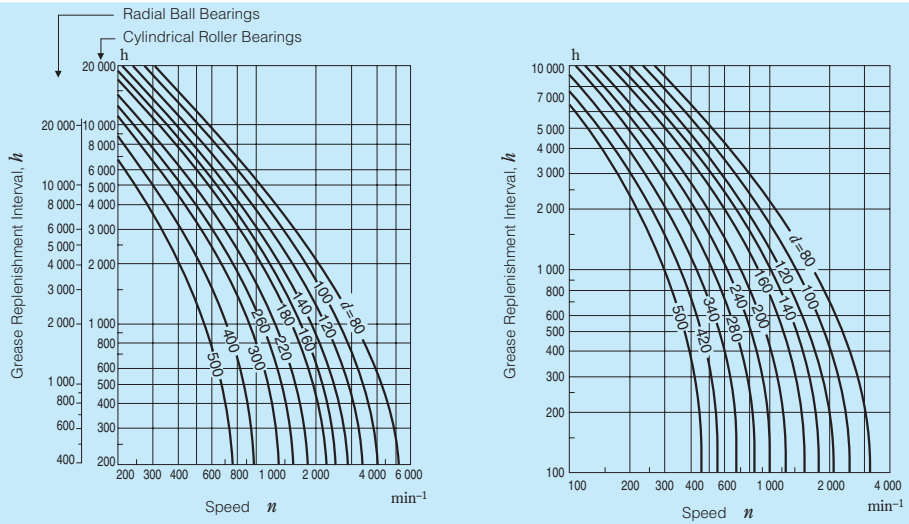

(1) Radial Ball Bearings, Cylindrical Roller Bearings

(2) Tapered Roller Bearings, Spherical Roller Bearings

Fig. 4.2 Grease Replenishment Intervals

4.2.2 Oil Lubrication

(1) Oil Bath Lubrication

Oil bath lubrication is a widely used method in the case of low or medium speeds. The oil level should be at the center of the lowest rolling element. It is desirable to provide a sight gauge so the proper oil level may be maintained (Fig. 4.3).

(2) Drip Feed Lubrication

Drip feed lubrication is widely used for small ball bearings operated at relatively high speeds. As shown in Fig. 4.4, oil is stored in a visible oiler. The oil drip rate is controlled with the screw in the top.

(3) Splash Lubrication

With this lubricating method, oil is splashed onto the bearings by gears or a simple rotating disc installed near bearings without submerging the bearings in oil. It is commonly used in various gear boxes. Fig. 4.5 shows this lubricating method used on a reduction gear.

(4) Circulating Lubrication

Circulating lubrication is commonly used for high speed operation requiring bearing cooling and for bearings used at high temperatures. As shown in Fig. 4.6 (a), oil is supplied by the pipe on the right side, it travels through the bearing, and drains out through the pipe on the left. After being cooled in a reservoir, it returns to the bearing through a pump and filter. The oil discharge pipe should be larger than the supply pipe so an excessive amount of oil will not back up in the housing.

(5) Jet Lubrication

Jet lubrication is often used for ultra high speed bearings, such as the bearings in jet engines with a $d_m n$ value (d_m: pitch diameter of rolling element set in mm; n: rotational speed in min^{-1}) exceeding one million. Lubricating oil is sprayed under pressure from one or more nozzles directly into the bearing.

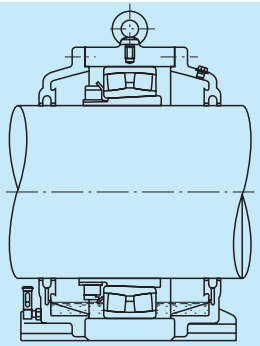

Fig. 4.3 Oil Bath Lubrication

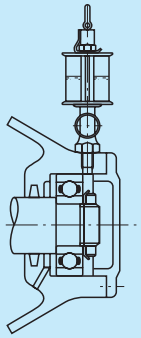

Fig. 4.4 Drip Feed Lubrication

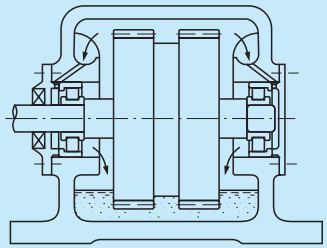

Fig. 4.5 Splash Lubrication

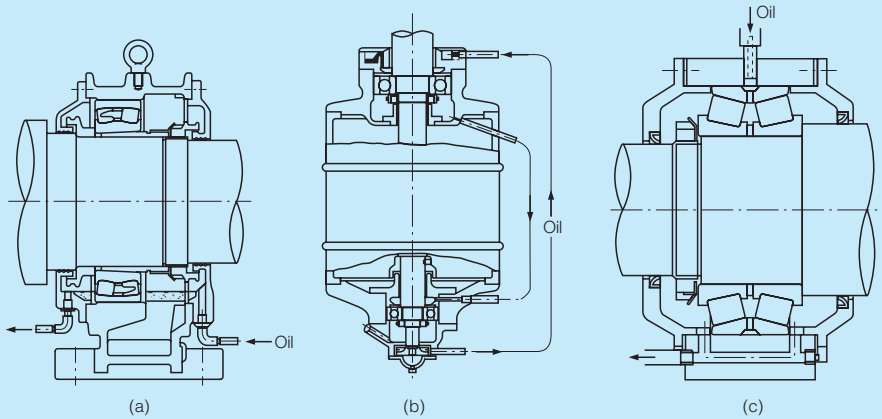

Fig. 4.6 Circulating Lubrication

Fig. 4.7 shows an example of ordinary jet lubrication. In the case of high speed operation, the air surrounding the bearing rotates with it causing the oil jet to be deflected. The jetting speed of the oil from the nozzle should be more than 20% of the circumferential speed of the inner ring outer surface. More uniform cooling and a better temperature distribution is achieved using more nozzles for a given amount of oil. Therefore, it is desirable for the oil to be forcibly discharged so the agitating resistance of the lubricant can be reduced and the oil can effectively carry away the heat.

(6) Oil Mist Lubrication

Oil mist lubrication, also called oil fog lubrication, utilizes an oil mist sprayed into a bearing. This method has the following advantages:

(a) Because of the small quantity of oil required, the oil agitation resistance is small, and higher speeds are possible.

(b) Contamination of the vicinity around the bearing is slight because the oil leakage is small.

(c) It is relatively easy to continuously supply fresh oil; therefore, the bearing life is extended.

This lubricating method is used in bearings for high speed pumps, roll necks of rolling mills, etc (Fig. 4.8).

For oil mist lubrication of large bearings, it is advisable to consult NSK.

(7) Oil-Air Lubricating Method

Using the oil-air lubricating method, a very small amount of oil is discharged intermittently by a constant-quantity piston into a pipe carrying a constant flow of compressed air. The oil flows along the wall of the pipe and approaches a constant flow rate.

The major advantages of oil-air lubrication are:

(a) Since the minimum necessary amount of oil is supplied, this method is suitable for high speeds because less heat is generated.

(b) Since the minimum amount of oil is fed continuously, bearing temperature remains stable. Also, because of the small amount of oil, there is almost no atmospheric pollution.

(c) Since only fresh oil is fed to the bearings, oil deterioration need not be considered.

(d) Since compressed air is always fed to the bearings, the internal pressure is high, so dust, cutting fluid, etc. cannot enter.

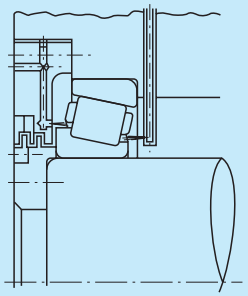

Fig. 4.7 Jet Lubrication

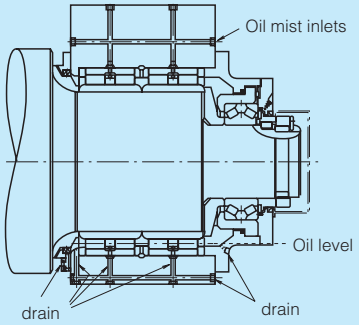

Fig. 4.8 Oil Mist Lubrication

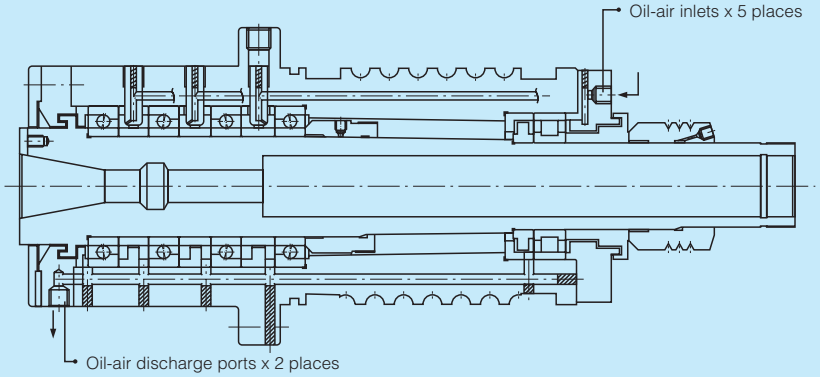

Fig. 4.9 Oil-Air Lubrication

4.3 Lubricants

4.3.1. Lubricating Grease

Grease is a semi-solid lubricant consisting of a base oil and a thickener. The main types and general properties of grease are shown in Table 4.3. It should be remembered that different brands of same type of grease may have different properties.

(1) Base Oil

Mineral oils or synthetic oils such as silicone or diester oil are mainly used as the base oil for grease. The lubricating properties of grease depend mainly on the characteristics of its base oil. Therefore, the viscosity of the base oil is just as important when selecting grease as when selecting an oil. Usually, grease made with low viscosity base oils are more suitable for high speeds and low temperatures, while greases made with high viscosity base oil are more suited for high temperatures and heavy loads. However, the thickener also influences the lubricating properties of grease; therefore, the selection criteria for grease is not the same as for lubricating oil.

(2) Thickener

As thickeners for lubricating grease, there are several types of metallic soaps, inorganic thickeners such as silica gel and bentonite, and heat resisting organic thickeners such as polyurea and fluoric compounds. The type of thickener is closely related to the grease dropping point ([1]); generally, grease with high dropping point also has a high temperature capability during operation. However, this type of grease does not have a high working temperature unless the base oil is heat resistant. The highest possible working temperature for grease should be determined considering the heat resistance of the base oil, etc. The water resistance of grease depends upon the type of thickener. Sodium soap grease or compound grease containing sodium soap emulsifies when exposed to water or high humidity, and therefore, cannot be used where moisture is prevalent.

(3) Additives

Grease often contains various additives such as antioxidants, corrosion inhibitors, and extreme pressure additives to give it special properties. It is recommended that extreme pressure additives be used in heavy load applications. For long use without replenishment, an antioxidant should be added.

Note ([1]) The grease dropping point is that temperature at which a grease heated in a specified small container becomes sufficiently fluid to drip.

Table 4. 3

Name (Popular name)	Lithium Grease		
Thickener	Li Soap		
Base Oil / Properties	Mineral Oil	Diester Oil, Polyatomic Ester Oil	Silicone Oil
Dropping Point, °C	170 to 195	170 to 195	200 to 210
Working Temperatures, °C	–20 to +110	–50 to +130	–50 to +160
Speed capability	Good	Excellent	Good
Mechanical Stability	Good	Good	Good
Pressure Resistance	Fair	Fair	Poor
Water Resistance	Good	Good	Good
Rust Prevention	Good	Good	Poor
Remarks	General purpose grease used for numerous applications	Good low temperature and torque characteristics	Mainly for high temperature applications. Unsuitable for bearings for high speeds or heavy loads or those having numerous sliding-contact areas (roller bearings, etc.)

(4) Consistency

Consistency indicates the "softness" of grease. Table 4.4 shows the relation between consistency and working conditions.

(5) Mixing Different Types of Grease

In general, different brands of grease must not be mixed. Mixing grease with different types of thickneners may destroy its composition and physical properties. Even if the thickeners are of the same type, possible differences in the additive may cause detrimental effects.

Grease Properties

Sodium Grease (Fiber Grease)	Calcium Grease (Cup Grease)	Mixed Base Grease	Complex Base Grease (Complex Grease)	Non-Soap Base Grease (Non-Soap Grease)	
Na Soap	Ca Soap	Na+Ca Soap, Li+Ca Soap, etc.	Ca Complex Soap, Al Complex Soap, Li Complex Soap, etc.	Urea, Bentonite, Carbon Black, Flouric Compounds, Heat Resistant Organic Compound, etc.	
Mineral Oil	Mineral Oil	Mineral Oil	Mineral Oil	Mineral Oil	Synthetic Ester Oil (Diester Oil, Polyatomic Ester Oil, Synthetic Hydrocarbon Oil, Silicone Oil, Fluoric Based Oil)
170 to 210	70 to 90	160 to 190	180 to 300	> 230	> 230
–20 to +130	–20 to +60	–20 to +80	–20 to +130	–10 to +130	< +220
Good	Fair	Good	Good	Good	Fair to Excellent
Good	Poor	Good	Good	Good	Good
Fair	Poor	Fair to Good	Fair to Good	Fair	Fair
Poor	Good	Poor for *Na* Soap Grease	Good	Good	Good
Poor to Good	Good	Fair to Good	Fair to Good	Fair to Good	Fair to Good
Long and short fiber types are available. Long fiber grease is unsuitable for high speeds. Attention to water and high temperature is required.	Extreme pressure grease containing high viscosity mineral oil and extreme pressure additive (Pb soap, etc.) has high pressure resistance.	Often used for roller bearings and large ball bearings.	Suitable for extreme pressures mechanically stable	Mineral oil base grease is general purpose lubricant. Synthetic oil base grease is recommended for special environments with very high temperatures, acids, alkalis, radioactivity, and exposure to flames.	

Remarks The grease properties shown here can vary between brands.

Table 4. 4 Consistency and Working Conditions

Consistency Number	0	1	2	3	4
Consistency ([1]) 1/10 mm	355 to 385	310 to 340	265 to 295	220 to 250	175 to 205
Working Conditions (Application)	• For centralized oiling • When fretting is likely to occur	• For centralized oiling • When fretting is likely to occur • For low temperatures	• For general use • For sealed ball bearings	• For general use • For sealed ball bearings • For high temperatures	• For high temperatures • For grease seals

Notes ([1]) Consistency: Depth into grease attained by a cone when pressed with a specified weight, indicated in units of 1/10mm. The larger the value, the softer the grease.

4.3.2 Lubricating Oil

The lubricating oils used for rolling bearings are usually highly refined mineral oil or synthetic oil that have a high oil film strength and superior oxidation and corrosion resistance. When selecting a lubricating oil, the viscosity at the operating conditions is important. If the viscosity is too low, a proper oil film is not formed and abnormal wear and seizure may occur. On the other hand, if the viscosity is too high, excessive viscous resistance may cause heating or large power loss. In general, low viscosity oils should be used at high speed; however, the viscosity should increase with increasing bearing load and size. Table 4.5 gives generally recommended viscosities for bearings under normal operating conditions.

For use when selecting the proper lubricating oil, Fig. 4.10 shows the relationship between oil temperature and viscosity, and examples of selection are shown in Table 4.6.

Table 4. 5 Bearing Types and Proper Viscosity of Lubricating Oils

Bearing Type	Proper Viscosity at Operating Temperature
Ball Bearings and Cylindrical Roller Bearings	Higher than 13 mm^2/s
Tapered Roller Bearings and Spherical Roller Bearings	Higher than 20 mm^2/s
Spherical Thrust Roller Bearings	Higher than 32 mm^2/s

Remarks $1mm^2/s$=1cSt (centistoke)

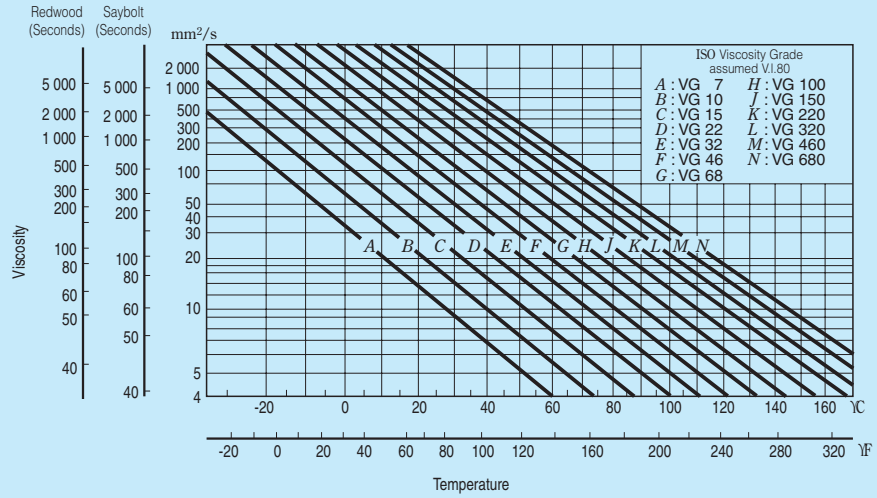

Fig. 4.10 Temperature-Viscosity Chart

Oil Replacement Intervals

Oil replacement intervals depend on the operating conditions and oil quantity.
In those cases where the operating temperature is less than 50°C, and the environmental conditions are good with little dust, the oil should be replaced approximately once a year. However, in cases where the oil temperature is about 100°C, the oil must be changed at least once every three months.

If moisture may enter or if foreign matter may be mixed in the oil, then the oil replacement interval must be shortened. Mixing different brands of oil must be prevented for the same reason given previously for grease.

Table 4. 6 Examples of Selection of Lubricating Oils

Operating Temperature	Speed	Light or Average Load	Heavy or Shock Load
–30 to 0°C	Low, Normal	ISO VG 15, 22, 32 (refrigerating machine oil)	—
0 to 50°C	Low	ISO VG 32, 46, 68 (bearing oil, turbine oil)	ISO VG 46, 68, 100 (bearing oil, turbine oil)
	Normal to High	ISO VG 15, 22, 32 (bearing oil, turbine oil)	ISO VG 22, 32, 46 (bearing oil, turbine oil)
	High	ISO VG 10, 15, 22 (bearing oil)	—
50 to 80°C	Low	ISO VG 100, 150, 220 (bearing oil)	ISO VG 150, 220, 320 (bearing oil)
	Normal to High	ISO VG 46, 68, 100 (bearing oil, turbine oil)	ISO VG 68, 100, 150 (bearing oil, turbine oil)
	High	ISO VG 32, 46, 68 (bearing oil, turbine oil)	—
80 to 110°C	Low	ISO VG 320, 460 (bearing oil)	ISO VG 460, 680 (bearing oil, gear oil)
	Normal to High	ISO VG 150, 220 (bearing oil)	ISO VG 220, 320 (bearing oil)
	High	ISO VG 68, 100 (bearing oil, turbine oil)	—

Remarks
1. Refer to Refrigerating Machine Oils (JIS K 2211), Bearing Oils (JIS K 2239), Turbine Oils (JIS K 2213), Gear Oils (JIS K 2219).
2. If the operating temperature is near the high end of the temperature range listed in the left column, select a high viscosity oil.
3. If the operating temperature is lower than –30°C or higher than 110°C, it is advisable to consult NSK.

5. BEARING MATERIALS

The bearing rings and rolling elements of rolling bearings are subjected to repetitive high pressure with a small amount of sliding. The cages are subjected to tension and compression and sliding contact with the rolling elements and either or both of the bearing rings.
Therefore, the materials used for the rings, rolling elements, and cages require the following characteristics:

Material characteristics required for bearing rings and rolling elements:
- High rolling contact fatigue strength
- High hardness
- High wear resistance
- High dimensional stability
- High mechanical strength

(High wear resistance, High dimensional stability, High mechanical strength: Characteristics required for cage material)

Other necessary characteristics, such as easy production, shock and heat resistance, and corrosion resistance, are required depending on individual applications.

5.1 Materials for Bearing Rings and Rolling Elements

Primarily, high carbon chromium bearing steel (Table 5.1) is used for the bearing rings and rolling elements. Most NSK bearings are made of SUJ2 among the JIS steel types listed in Table 5.1, while the larger bearings generally use SUJ3. The chemical composition of SUJ2 is approximately the same as AISI 52100 specified in the USA, DIN 100 Cr6 in West Germany, and BS 535A99 in England.
For bearings that are subjected to very severe shock loads, carburized low-carbon alloy steels such as chrome steel, chrome molybdenum steel, nickel chrome molybdenum steel, etc. are often used. Such steels, when they are carburized to the proper depth and have sufficient surface hardness, are more shock resistant than normal, through-hardened bearing steels because of the softer energy-absorbing core. The chemical composition of common carburized bearing steels is listed in Table 5.2.

NSK uses highly pure vacuum-degassed bearing steel containing a minimum of oxygen, nitrogen, and hydrogen compound impurities. The rolling fatigue life of bearings has been remarkably improved using these materials combined with the appropriate heat treatment.
For special purpose bearings, high temperature bearing steel, which has superior heat resistance, and stainless steel having good corrosion resistance may be used. The chemical composition of these special materials are given in Tables 5.3 and 5.4.

5.2 Cage Materials

The low carbon steel shown in Table 5.5 are the main ones for the pressed cages for bearings. Depending on the purpose, brass or stainless steel may be used. For machined cages, high strength brass (Table 5.6) or carbon steel (Table 5.5) is used. Sometimes synthetic resin is also used.

Table 5. 1 Chemical Composition of High-Carbon Chromium Bearing Steel (Major Elements)

Standard	Symbols	Chemical Composition (%)						
		C	Si	Mn	P	S	Cr	Mo
JIS G 4805	SUJ 2	0.95 to 1.10	0.15 to 0.35	Less than 0.50	Less than 0.025	Less than 0.025	1.30 to 1.60	—
	SUJ 3	0.95 to 1.10	0.40 to 0.70	0.90 to 1.15	Less than 0.025	Less than 0.025	0.90 to 1.20	—
	SUJ 4	0.95 to 1.10	0.15 to 0.35	Less than 0.50	Less than 0.025	Less than 0.025	1.30 to 1.60	0.10 to 0.25
ASTM A 295	52100	0.93 to 1.05	0.15 to 0.35	0.25 to 0.45	Less than 0.025	Less than 0.015	1.35 to 1.60	Less than 0.10

Table 5. 2 Chemical Composition of Carburizing Bearing Steels (Major Elements)

Standard	Symbols	Chemical Composition (%)							
		C	Si	Mn	P	S	Ni	Cr	Mo
JIS G 4052	SCr 420 H	0.17 to 0.23	0.15 to 0.35	0.55 to 0.95	Less than 0.030	Less than 0.030	Less than 0.25	0.85 to 1.25	—
	SCM 420 H	0.17 to 0.23	0.15 to 0.35	0.55 to 0.95	Less than 0.030	Less than 0.030	Less than 0.25	0.85 to 1.25	0.15 to 0.35
	SNCM 220 H	0.17 to 0.23	0.15 to 0.35	0.60 to 0.95	Less than 0.030	Less than 0.030	0.35 to 0.75	0.35 to 0.65	0.15 to 0.30
	SNCM 420 H	0.17 to 0.23	0.15 to 0.35	0.40 to 0.70	Less than 0.030	Less than 0.030	1.55 to 2.00	0.35 to 0.65	0.15 to 0.30
JIS G 4053	SNCM 815	0.12 to 0.18	0.15 to 0.35	0.30 to 0.60	Less than 0.030	Less than 0.030	4.00 to 4.50	0.70 to 1.00	0.15 to 0.30
ASTM A 534	8620 H	0.18 to 0.23	0.15 to 0.35	0.60 to 0.95	Less than 0.025	Less than 0.015	0.35 to 0.75	0.35 to 0.65	0.15 to 0.25
	4320 H	0.17 to 0.23	0.15 to 0.35	0.40 to 0.70	Less than 0.025	Less than 0.015	1.55 to 2.00	0.35 to 0.65	0.20 to 0.30
	9310 H	0.07 to 0.13	0.15 to 0.35	0.40 to 0.70	Less than 0.025	Less than 0.015	2.95 to 3.55	1.00 to 1.40	0.08 to 0.15

Table 5. 3 Chemical Composition of High Speed Steel for Bearings Used at High Temperatures

Standard	Symbols	Chemical Composition (%)											
		C	Si	Mn	P	S	Cr	Mo	V	Ni	Cu	Co	W
AISI	M50	0.77 to 0.85	Less than 0.25	Less than 0.35	Less than 0.015	Less than 0.015	3.75 to 4.25	4.00 to 4.50	0.90 to 1.10	Less than 0.10	Less than 0.10	Less than 0.25	Less than 0.25

Table 5. 4 Chemical Composition of Stainless Steel for Rolling Bearings (Major Elements)

Standard	Symbols	Chemical Composition (%)						
		C	Si	Mn	P	S	Cr	Mo
JIS G 4303	SUS 440 C	0.95 to 1.20	Less than 1.00	Less than 1.00	Less than 0.040	Less than 0.030	16.00 to 18.00	Less than 0.75
SAE J 405	51440 C	0.95 to 1.20	Less than 1.00	Less than 1.00	Less than 0.040	Less than 0.030	16.00 to 18.00	Less than 0.75

Table 5. 5 Chemical Composition of Steel Sheet and Carbon Steel for Cages (Major Elements)

Classification	Standard	Symbols	Chemical Composition (%)				
			C	Si	Mn	P	S
Steel sheet and strip for pressed cages	JIS G 3141	SPCC	Less than 0.12	—	Less than 0.05	Less than 0.04	Less than 0.045
	BAS 361	SPB 2	0.13 to 0.20	Less than 0.04	0.25 to 0.60	Less than 0.03	Less than 0.030
	JIS G 3311	S 50 CM	0.47 to 0.53	0.15 to 0.35	0.60 to 0.90	Less than 0.03	Less than 0.035
Carbon steel for machined cages	JIS G 4051	S 25 C	0.22 to 0.28	0.15 to 0.35	0.30 to 0.60	Less than 0.03	Less than 0.035

Remarks BAS is Japanese Bearing Association Standard.

Table 5. 6 Chemical Composition of High Strength Brass for Machined Cages

Standard	Symbols	Chemical Composition (%)								
		Cu	Zn	Mn	Fe	Al	Sn	Ni	Impurities	
									Pb	Si
JIS H 5120	CAC301 (HBsC 1)	55.0 to 60.0	33.0 to 42.0	0.1 to 1.5	0.5 to 1.5	0.5 to 1.5	Less than 1.0	Less than 1.0	Less than 0.4	Less than 0.1
JIS H 3250	C 6782	56.0 to 60.5	Residual	0.5 to 2.5	0.1 to 1.0	0.2 to 2.0	—	—	Less than 0.5	—

Remarks Improved HBsC 1 is also used.

NSK

BEARING TABLES

BEARING TABLE CONTENTS

		Bore Dia.	Page No.
SINGLE-ROW DEEP GROOVE BALL BEARINGS			B 4
		90 – 1100mm	B 6
ANGULAR CONTACT BALL BEARINGS			B 20
Single/Matched		90 – 775mm	B 24
Double-Row		100 – 280mm	B 42
CYLINDRICAL ROLLER BEARINGS			B 44
Single-Row		100 – 1320mm	B 48
Double-Row		100 – 850mm	B 66
FULL-COMPLEMENT CYLINDRICAL ROLLER BEARINGS			B 78
Single-Row	NCF	100 – 670mm	B 82
Double-Row	NNCF	100 – 500mm	B 86
Double-Row	RS-48, RS-49	100 – 560mm	B 90
Double-Row (Prelubricated)	RS-50	100 – 400mm	B 94
TAPERED ROLLER BEARINGS			B 96
Single-Row (Metric Design)		100 – 1900mm	B102
Single-Row (Inch Design)		100 – 1270mm	B114
Double-Cup, Single Cones	KBE (TDO)	100 – 2000mm	B182
Double-Cup, Single Cones Steep Angle	KDE (TDO)	100 – 1450mm	B246
Double-Cup, Single Cones	KF (TNA)	101.6 – 406.4mm	B252
Double-Cone, Single Cups	KH (TDI)	100 – 1290mm	B262
Double-Cone, Single Cups Steep Angle	KDH (TDI)	100 – 540mm	B282
SPHERICAL ROLLER BEARINGS			B286
		100 – 1590mm	B290
THRUST BEARINGS			B308
Thrust Ball Bearings		90 – 630mm	B312
Cylindrical Roller Thrust Bearings		100 – 360mm	B318
Tapered Roller Thrust Bearings	TT, TTF	101.6 – 600mm	B322
Spherical Thrust Roller Bearings		100 – 900mm	B328

		Bore Dia.	Page No.
ROLLING BEARINGS FOR STEEL MILLS			B 334
ROLL NECK BEARINGS			
Four-Row Tapered Roller Bearings	KV (TQO)	100 – 1500mm	B344
Sealed-Clean Four-Row Tapered Roller Bearings	KVE	100.6 – 825.5mm	B380
Four-Row Cylindrical Roller Bearings	RV	100 – 1120mm	B388
	RVK	110.417 – 633.333mm	B400
Double-Row Tapered Roller Bearings	KDH (TDI)	110 – 1200mm	B402
Double-Direction Tapered Roller Thrust Bearings	TFD	120 – 900mm	B408
Single-Row Deep Groove Ball Bearings		145 – 850mm	B412
Matched Angular Contact Ball Bearings		120 – 580mm	B418
ADJUSTING SCREW BEARINGS			
Tapered Roller Thrust Bearings	TFX	149.225 – 900mm	B424
	TFV	149.225 – 880mm	B428
SENDZIMIR MILL BEARINGS			
Back-Up Roll Bearings		31.75 – 180mm	B434
TRIPLE-RING BEARINGS FOR PAPER MAKING MACHINES		180 – 380mm	B436
CROSSED-ROLLER BEARINGS FOR INDUSTRIAL ROBOTS		100 – 600mm	B440

SINGLE-ROW DEEP GROOVE BALL BEARINGS

Single-Row Deep Groove Ball Bearings

Bore Diameter 90 – 1100mm ····· B6

Design, Types, and Features

Single-row deep groove ball bearings are the most common type of rolling bearings. Their range of application is very wide. The raceway grooves in both the inner and outer rings have circular arcs of slightly larger radius than that of the balls. In addition to radial loads, axial loads can be imposed in either direction. Because of their low torque, they are highly suitable for applications where high speeds and low power loss are required.

For deep groove ball bearings, pressed cages are usually used. For large bearings and high speed applications, machined brass cages are used.

Standard types of deep groove ball bearings are as follows:

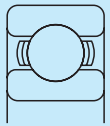

Figure 1
Pressed cage

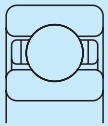

Figure 2
Machined cage

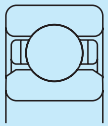

Figure 3
Beveled inner ring

Regarding the deep groove ball bearings used with four-row cylindrical roller bearings for roll necks, refer to Page B412.

Tolerances and Running Accuracy ····· Table 2.2 (Pages A16 to A19)

Recommended Fits ····· Table 3.2 (Page A35)
Table 3.4 (Page A36)

Internal Clearances ····· Table 3.9 (Page A40)

Permissible Misalignment

The permissible misalignment of single-row deep groove ball bearings varies depending on their size, internal clearance during operation, bearing loads, etc. In general, it is approximately 0.0006 to 0.003 radian (2' to 10').

Precautions for Use of Deep Groove Ball Bearings

For deep groove ball bearings, if the bearing load is too small during operation, slippage occurs between the balls and raceways, which may result in smearing. The higher the weight of balls and cage, the higher this tendency becomes, especially for large bearings. If very small bearing loads are expected, please contact NSK for selection of an appropriate bearing.

Bore Diameter 90 – 115 mm

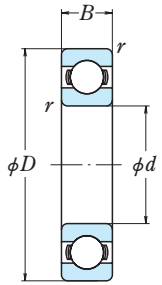

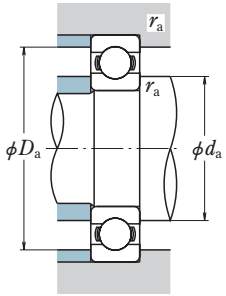

Dynamic Equivalent Load

$P = XF_r + YF_a$

$\frac{f_0 F_r}{C_{0r}}$	e	$\frac{F_a}{F_r} \leqq e$		$\frac{F_a}{F_r} > e$	
		X	Y	X	Y
0.172	0.19	1	0	0.56	2.30
0.345	0.22	1	0	0.56	1.99
0.689	0.26	1	0	0.56	1.71
1.03	0.28	1	0	0.56	1.55
1.38	0.30	1	0	0.56	1.45
2.07	0.34	1	0	0.56	1.31
3.45	0.38	1	0	0.56	1.15
5.17	0.42	1	0	0.56	1.04
6.89	0.44	1	0	0.56	1.00

Static Equivalent Load

$\frac{F_a}{F_r} > 0.8,\ P_0 = 0.6F_r + 0.5F_a$

$\frac{F_a}{F_r} \leqq 0.8,\ P_0 = F_r$

Boundary Dimensions (mm)				Basic Load Ratings (kN)		{kgf}		Factor	Bearing Numbers	Figure(1)	Abutment and Fillet Dimensions (mm)			Mass (kg)
d	D	B	r min.	C_r	C_{0r}	C_r	C_{0r}	f_0			d_a	D_a	r_a max.	approx.
90	115	13	1	19.0	21.0	1 940	2 140	17.2	**6818**	1	96	109	1	0.27
	125	18	1.1	33.0	31.5	3 350	3 200	16.5	**6918**	1	101	116	1	0.58
	140	16	1	41.5	39.5	4 250	4 000	16.3	**16018**	1	99	132	1	0.87
	140	24	1.5	58.0	50.0	5 950	5 050	15.6	**6018**	1	102	129	1.5	1.19
	160	30	2	96.0	71.5	9 800	7 300	14.5	**6218**	1	103	147	2	2.18
	190	43	3	143	107	14 500	11 000	13.3	**6318**	1	108	173	2.5	4.98
95	120	13	1	19.3	22.0	1 970	2 240	17.2	**6819**	1	101	114	1	0.29
	130	18	1.1	33.5	33.5	3 450	3 400	16.6	**6919**	1	106	121	1	0.60
	145	16	1	43.0	42.0	4 350	4 250	16.4	**16019**	1	104	137	1	0.90
	145	24	1.5	60.5	54.0	6 150	5 500	15.8	**6019**	1	108	134	1.5	1.23
	170	32	2.1	109	82.0	11 100	8 350	14.4	**6219**	1	111	155	2	2.64
	200	45	3	153	119	15 600	12 100	13.3	**6319**	1	113	183	2.5	5.76
100	125	13	1	19.6	23.0	2 000	2 340	17.3	**6820**	1	106	119	1	0.31
	140	18	1.1	38.5	39.0	3 950	3 950	16.6	**B100-3**	2	111	130	1	0.89
	140	20	1.1	43.0	42.0	4 350	4 250	16.4	**6920**	1	111	130	1	0.82
	150	16	1	42.5	42.0	4 300	4 300	16.5	**16020**	1	110	142	1	0.94
	150	24	1.5	60.0	54.0	6 150	5 550	15.9	**6020**	1	113	139	1.5	1.29
	180	34	2.1	122	93.0	12 500	9 500	14.4	**6220**	1	116	165	2	3.17
	215	47	3	173	141	17 700	14 400	13.2	**6320**	1	118	197	2.5	7.04
105	130	13	1	19.8	23.9	2 020	2 440	17.4	**6821**	1	111	124	1	0.32
	145	20	1.1	42.5	42.0	4 300	4 300	16.5	**6921**	1	116	135	1	0.85
	160	18	1	52.0	50.5	5 300	5 150	16.3	**16021**	1	115	151	1	1.24
	160	26	2	72.5	66.0	7 400	6 700	15.8	**6021**	1	119	147	2	1.58
	180	30	2	93.5	78.0	9 550	7 950	15.3	**B105-9**	2	119	167	2	3.32
	190	36	2.1	133	105	13 600	10 700	14.4	**6221**	1	121	175	2	3.79
	225	49	3	184	154	18 700	15 700	13.2	**6321**	1	123	207	2.5	8.09
110	140	16	1	28.1	32.5	2 860	3 350	17.1	**6822**	1	117	132	1	0.49
	150	20	1.1	43.5	44.5	4 450	4 550	16.6	**6922**	1	122	140	1	0.89
	170	19	1	57.5	56.5	5 850	5 800	16.3	**16022**	1	120	161	1	1.51
	170	28	2	85.0	73.0	8 650	7 450	15.5	**6022**	1	124	157	2	1.94
	200	38	2.1	144	117	14 700	11 900	14.3	**6222**	1	126	185	2	4.45
	240	50	3	205	179	20 900	18 300	13.2	**6322**	1	128	222	2.5	9.51
115	195	32	2	130	105	13 200	10 700	14.8	**B115-1**	2	129	182	2	3.93

Notes (1) Refer to page **B 5**

Bore Diameter 120 – 160 mm

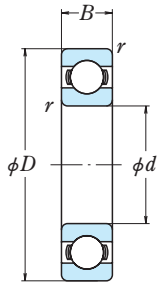

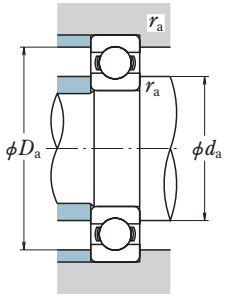

Dynamic Equivalent Load

$P = XF_r + YF_a$

$\frac{f_0 F_r}{C_{0r}}$	e	$\frac{F_a}{F_r} \leqq e$		$\frac{F_a}{F_r} > e$	
		X	Y	X	Y
0.172	0.19	1	0	0.56	2.30
0.345	0.22	1	0	0.56	1.99
0.689	0.26	1	0	0.56	1.71
1.03	0.28	1	0	0.56	1.55
1.38	0.30	1	0	0.56	1.45
2.07	0.34	1	0	0.56	1.31
3.45	0.38	1	0	0.56	1.15
5.17	0.42	1	0	0.56	1.04
6.89	0.44	1	0	0.56	1.00

Static Equivalent Load

$\frac{F_a}{F_r} > 0.8,\ P_0 = 0.6F_r + 0.5F_a$

$\frac{F_a}{F_r} \leqq 0.8,\ P_0 = F_r$

Boundary Dimensions (mm)				Basic Load Ratings (kN)		{kgf}		Factor	Bearing Numbers	Figure(1)	Abutment and Fillet Dimensions (mm)			Mass (kg)
d	D	B	r min.	C_r	C_{0r}	C_r	C_{0r}	f_0			d_a	D_a	r_a max.	approx.
120	150	16	1	28.9	35.5	2 950	3 650	17.3	**6824**	1	127	142	1	0.53
	165	22	1.1	53.0	54.0	5 400	5 500	16.5	**6924**	1	132	155	1	1.21
	180	19	1	56.5	57.5	5 800	5 850	16.5	**16024**	1	130	171	1	1.6
	180	28	2	88.0	80.0	9 000	8 150	15.7	**6024**	1	135	167	2	2.08
	215	40	2.1	155	131	15 800	13 400	14.4	**6224**	1	137	199	2	5.29
	260	55	3	207	185	21 100	18 800	13.5	**6324**	1	139	242	2.5	12.5
125	205	32	2	129	107	13 200	10 900	15.1	**B125-2**	2	140	192	2	4.16
130	165	18	1.1	37.0	44.0	3 750	4 450	17.1	**6826**	1	138	155	1	0.75
	180	24	1.5	65.0	67.5	6 650	6 850	16.5	**6926**	1	144	168	1.5	1.57
	200	22	1.1	75.5	77.5	7 700	7 900	16.4	**16026**	1	142	189	1	2.4
	200	33	2	106	101	10 800	10 300	15.8	**6026**	1	145	187	2	3.26
	230	40	3	167	146	17 000	14 900	14.5	**6226**	1	149	212	2.5	5.96
	280	58	4	229	214	23 400	21 800	13.6	**6326**	1	152	258	3	15.2
140	175	18	1.1	38.5	48.0	3 900	4 850	17.3	**6828**	1	148	165	1	0.83
	190	24	1.5	66.5	72.0	6 800	7 300	16.6	**6928**	1	154	178	1.5	1.67
	210	22	1.1	77.5	82.5	7 900	8 400	16.5	**16028**	2	153	199	1	2.84
	210	33	2	110	109	11 200	11 100	16.0	**6028**	1	155	196	2	3.48
	220	32	3	135	119	13 800	12 100	15.4	**B140-2**	2	160	202	2.5	4.51
	250	42	3	166	150	17 000	15 300	14.9	**6228**	1	160	232	2.5	7.68
	300	62	4	253	246	25 800	25 100	13.6	**6328**	1	163	278	3	18.5
150	190	20	1.1	47.5	58.5	4 850	5 950	17.1	**6830**	1	159	179	1	1.15
	200	24	1.5	73.0	79.5	7 450	8 100	16.6	**B150-3**	2	165	188	1.5	2.08
	210	28	2	85.0	90.5	8 650	9 200	16.5	**6930**	1	166	196	2	2.59
	225	24	1.1	84.0	91.0	8 550	9 250	16.6	**16030**	2	163	214	1	3.62
	225	35	2.1	126	126	12 800	12 800	15.9	**6030**	1	168	209	2	4.24
	270	45	3	176	168	18 000	17 100	15.1	**6230**	1	170	251	2.5	10
	320	65	4	274	284	28 000	28 900	13.9	**6330**	1	173	297	3	22.7
160	200	20	1.1	48.5	61.0	4 950	6 250	17.2	**6832**	1	169	189	1	1.23
	220	28	2	87.0	96.0	8 850	9 800	16.6	**6932**	1	176	206	2	2.71
	240	25	1.5	99.0	108	10 100	11 000	16.5	**16032**	2	175	227	1.5	4.2
	240	38	2.1	137	135	13 900	13 800	15.9	**6032**	1	178	224	2	5.15
	290	48	3	185	186	18 900	19 000	15.4	**6232**	1	180	271	2.5	12.8
	340	68	4	278	287	28 300	29 200	13.9	**6332**	1	184	317	3	26.2

Notes (1) Refer to page **B 5**

Bore Diameter 170 – 205 mm

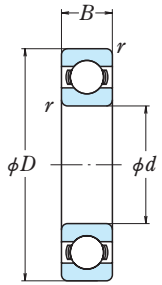

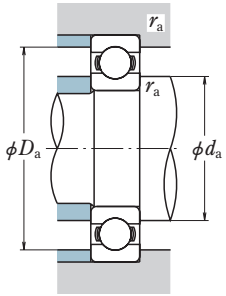

Dynamic Equivalent Load

$P = XF_r + YF_a$

$\frac{f_0 F_r}{C_{0r}}$	e	$\frac{F_a}{F_r} \leqq e$		$\frac{F_a}{F_r} > e$	
		X	Y	X	Y
0.172	0.19	1	0	0.56	2.30
0.345	0.22	1	0	0.56	1.99
0.689	0.26	1	0	0.56	1.71
1.03	0.28	1	0	0.56	1.55
1.38	0.30	1	0	0.56	1.45
2.07	0.34	1	0	0.56	1.31
3.45	0.38	1	0	0.56	1.15
5.17	0.42	1	0	0.56	1.04
6.89	0.44	1	0	0.56	1.00

Static Equivalent Load

$\frac{F_a}{F_r} > 0.8,\ P_0 = 0.6F_r + 0.5F_a$

$\frac{F_a}{F_r} \leqq 0.8,\ P_0 = F_r$

Boundary Dimensions (mm)				Basic Load Ratings (kN)		{kgf}		Factor	Bearing Numbers	Figure(1)	Abutment and Fillet Dimensions (mm)			Mass (kg)
d	D	B	r min.	C_r	C_{0r}	C_r	C_{0r}	f_0			d_a	D_a	r_a max.	approx.
170	230	28	2	86.0	97.0	8 750	9 850	16.7	**6934**	1	187	216	2	2.85
	240	28	2	86.0	97.0	8 750	9 850	16.7	**B170-12**	2	187	226	2	4.11
	260	28	1.5	114	126	11 700	12 900	16.5	**16034**	2	186	246	1.5	5.71
	260	42	2.1	161	161	16 400	16 400	15.8	**6034**	1	189	244	2	6.89
	310	52	4	212	224	21 700	22 800	15.3	**6234**	1	194	288	3	15.8
	360	72	4	325	355	33 500	36 000	13.6	**6334**	2	194	337	3	36.6
175	245	32	2	101	115	10 300	11 700	16.6	**B175-3**	2	192	231	2	4.72
	290	42	4	195	203	19 800	20 700	15.5	**B175-1**	2	199	268	3	11.3
180	225	22	1.1	60.5	78.5	6 200	8 000	17.2	**6836**	1	194	214	1	1.72
	250	33	2	119	128	12 100	13 100	16.4	**6936**	1	197	236	2	4.16
	260	34	2	140	147	14 300	15 000	16.2	**B180-2**	2	197	245	2	6.1
	280	31	2	145	157	14 700	16 000	16.3	**16036**	2	197	265	2	7.5
	280	46	2.1	180	185	18 400	18 800	15.6	**6036**	1	199	263	2	8.88
	290	42	4	198	205	20 200	20 900	15.4	**B180-1**	2	204	268	3	10.7
	320	52	4	227	241	23 200	24 600	15.1	**6236**	1	204	297	3	15.9
	380	75	4	355	405	36 000	41 500	13.9	**6336**	2	204	356	3	43.1
190	240	24	1.5	73.0	93.5	7 450	9 550	17.1	**6838**	1	202	227	1.5	2.53
	260	33	2	113	127	11 500	13 000	16.6	**6938**	2	207	245	2	5.18
	290	31	2	149	168	15 200	17 100	16.4	**16038**	2	207	275	2	7.78
	290	46	2.1	188	201	19 200	20 500	15.8	**6038**	1	210	273	2	9.39
	300	42	4	208	224	21 200	22 800	15.5	**B190-2**	2	215	278	3	11.2
	340	55	4	255	282	26 000	28 700	15.0	**6238**	2	215	317	3	22.3
	400	78	5	355	415	36 000	42 500	14.1	**6338**	2	219	372	4	49.7
195	265	33	2	113	128	11 500	13 000	16.7	**B195-1**	2	213	250	2	5.33
	270	35	2	130	147	13 300	15 000	16.5	**B195-2**	2	213	255	2	6.11
200	250	20	1	52.5	77.0	5 350	7 900	17.6	**B200-3**	2	214	240	1	2.34
	250	24	1.5	74.0	98.0	7 550	10 000	17.2	**6840**	2	212	237	1.5	2.67
	280	38	2.1	143	158	14 600	16 100	16.4	**6940**	2	220	263	2	7.28
	290	38	2.1	143	158	14 600	16 100	16.4	**B200-5**	2	220	273	2	8.54
	310	34	2	161	180	16 400	18 300	16.4	**16040**	2	218	294	2	10
	310	51	2.1	207	226	21 100	23 000	15.6	**6040**	1	220	293	2	12
	360	58	4	269	310	27 400	31 500	15.2	**6240**	2	225	337	3	26.7
	420	80	5	380	445	38 500	45 500	13.8	**6340**	2	229	392	4	55.3
205	285	38	1.1	143	159	14 600	16 200	16.5	**B205-1**	2	220	272	1	7.49

Notes (1) Refer to page **B 5**

Bore Diameter 210 – 277 mm

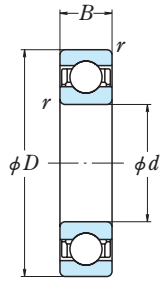

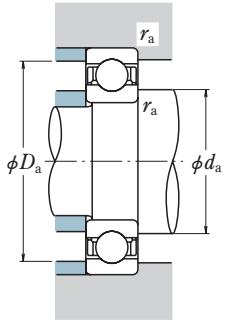

Dynamic Equivalent Load

$P = XF_r + YF_a$

$\frac{f_0 F_r}{C_{0r}}$	e	$\frac{F_a}{F_r} \leqq e$		$\frac{F_a}{F_r} > e$	
		X	Y	X	Y
0.172	0.19	1	0	0.56	2.30
0.345	0.22	1	0	0.56	1.99
0.689	0.26	1	0	0.56	1.71
1.03	0.28	1	0	0.56	1.55
1.38	0.30	1	0	0.56	1.45
2.07	0.34	1	0	0.56	1.31
3.45	0.38	1	0	0.56	1.15
5.17	0.42	1	0	0.56	1.04
6.89	0.44	1	0	0.56	1.00

Static Equivalent Load

$\frac{F_a}{F_r} > 0.8,\ P_0 = 0.6F_r + 0.5F_a$

$\frac{F_a}{F_r} \leqq 0.8,\ P_0 = F_r$

Boundary Dimensions (mm)				Basic Load Ratings (kN)		{kgf}		Factor	Bearing Numbers	Figure(1)	Abutment and Fillet Dimensions (mm)			Mass (kg)
d	D	B	r min.	C_r	C_{0r}	C_r	C_{0r}	f_0			d_a	D_a	r_a max.	approx.
210	290	38	2.1	148	169	15 100	17 200	16.5	**B210-6**	2	230	273	2	7.53
	350	58	3	269	310	27 400	31 500	15.2	B210-3	2	232	330	2.5	22.5
220	270	24	1.5	76.5	107	7 800	10 900	17.4	**6844**	2	232	256	1.5	2.9
	300	38	2.1	146	169	14 900	17 300	16.6	**6944**	2	241	283	2	7.88
	340	37	2.1	180	217	18 400	22 100	16.5	**16044**	2	241	322	2	13.1
	340	56	3	235	271	24 000	27 600	15.6	**6044**	2	243	320	2.5	18.6
	400	65	4	310	375	31 500	38 500	15.1	**6244**	2	246	376	3	37.4
	460	88	5	410	520	42 000	53 000	14.3	**6344**	2	250	431	4	73.9
230	310	38	2.1	150	180	15 300	18 300	16.7	**B230-8**	2	251	293	2	8.08
240	300	28	2	98.5	137	10 000	14 000	17.3	**6848**	2	259	285	2	4.48
	320	38	2.1	154	190	15 700	19 400	16.8	**6948**	2	262	302	2	8.49
	360	37	2.1	196	243	19 900	24 700	16.5	**16048**	2	262	342	2	13.9
	360	56	3	244	296	24 900	30 000	15.9	**6048**	2	264	340	2.5	19.9
	390	55	4	279	345	28 500	35 500	15.6	**B240-6**	2	267	366	3	27.2
	440	72	4	340	430	34 500	44 000	15.2	**6248**	2	267	415	3	50.5
	500	95	5	470	625	48 000	63 500	14.2	**6348**	2	271	470	4	94.4
245	365	45	4	238	293	24 300	29 900	16.0	**B245-1**	2	272	342	3	16.6
250	305	20	1	62.5	103	6 400	10 500	17.8	**B250-8**	2	266	294	1	3.18
	330	30	1.5	142	185	14 500	18 800	17.0	**B250-4**	2	269	315	1.5	7.33
	340	35	2.1	158	201	16 100	20 500	16.9	**B250-1**	2	272	322	2	9.58
	340	42	2.1	179	218	18 200	22 200	16.6	**B250-7**	2	272	322	2	11.1
260	320	28	2	101	148	10 300	15 100	17.4	**6852**	2	274	304	2	4.84
	360	46	2.1	204	255	20 800	26 000	16.5	**6952**	2	282	342	2	14
	400	44	3	237	310	24 100	31 500	16.4	**16052**	2	284	379	2.5	21.1
	400	65	4	291	375	29 700	38 500	15.8	**6052**	2	288	376	3	29.4
	480	80	5	400	540	41 000	55 000	15.1	**6252**	2	292	450	4	67
	540	102	6	505	710	51 500	72 500	14.6	**6352**	2	298	503	5	118
277	420	65	4	300	410	31 000	41 500	16.0	**B277-1**	2	305	395	3	31.8

Notes (1) Refer to page **B 5**

Bore Diameter 280 – 365 mm

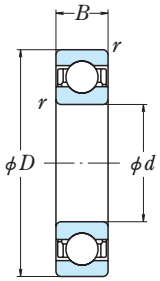

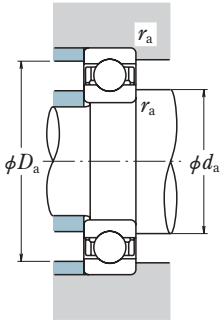

Dynamic Equivalent Load

$P = XF_r + YF_a$

$\frac{f_0 F_r}{C_{0r}}$	e	$\frac{F_a}{F_r} \leqq e$		$\frac{F_a}{F_r} > e$	
		X	Y	X	Y
0.172	0.19	1	0	0.56	2.30
0.345	0.22	1	0	0.56	1.99
0.689	0.26	1	0	0.56	1.71
1.03	0.28	1	0	0.56	1.55
1.38	0.30	1	0	0.56	1.45
2.07	0.34	1	0	0.56	1.31
3.45	0.38	1	0	0.56	1.15
5.17	0.42	1	0	0.56	1.04
6.89	0.44	1	0	0.56	1.00

Static Equivalent Load

$\frac{F_a}{F_r} > 0.8,\ P_0 = 0.6F_r + 0.5F_a$

$\frac{F_a}{F_r} \leqq 0.8,\ P_0 = F_r$

Boundary Dimensions (mm)				Basic Load Ratings (kN)		Basic Load Ratings {kgf}		Factor	Bearing Numbers	Figure(1)	Abutment and Fillet Dimensions (mm)			Mass (kg)
d	D	B	r min.	C_r	C_{0r}	C_r	C_{0r}	f_0			d_a	D_a	r_a max.	approx.
280	350	33	2	133	191	13 600	19 500	17.3	**6856**	2	301	334	2	7.2
	380	46	2.1	209	272	21 300	27 700	16.6	**6956**	2	303	361	2	15.1
	420	44	3	243	330	24 700	33 500	16.5	**16056**	2	305	398	2.5	22.7
	420	65	4	300	410	31 000	41 500	16.0	**6056**	2	308	395	3	31.2
	460	63	4	340	460	34 500	47 000	15.7	**B280-6**	2	308	435	3	44.5
	500	80	5	400	550	41 000	56 000	15.2	**6256**	2	312	470	4	70.4
	580	108	6	570	840	58 000	86 000	14.5	**6356**	2	319	542	5	144
300	360	25	2	105	166	10 700	16 900	17.6	**B300-7**	2	314	343	2	5.05
	380	38	2.1	166	233	17 000	23 800	17.1	**6860**	2	324	361	2	10.3
	395	35	2.1	183	253	18 700	25 800	17.1	**B300-6**	2	324	376	2	12.1
	420	56	3	269	370	27 400	38 000	16.4	**6960**	2	326	398	2.5	23.9
	460	50	4	285	405	29 000	41 000	16.4	**16060**	2	329	435	3	31.5
	460	74	4	355	500	36 500	51 000	15.8	**6060**	2	329	435	3	44.2
	540	85	5	465	670	47 500	68 500	15.1	**6260**	2	333	509	4	87.8
310	430	56	3	258	365	26 400	37 000	16.5	**B310-4**	2	336	408	2.5	25
	450	50	4	266	385	27 200	39 000	16.6	**B310-5**	2	340	425	3	27.5
320	400	38	2.1	168	244	17 200	24 900	17.2	**6864**	2	345	381	2	10.8
	440	56	3	266	375	27 100	38 000	16.5	**6964**	2	347	418	2.5	25.3
	480	50	4	293	430	29 800	44 000	16.5	**16064**	2	350	454	3	33.2
	480	74	4	390	570	40 000	58 000	15.7	**6064**	2	350	454	3	46.5
	580	92	5	530	805	54 500	82 500	15.0	**6264**	2	354	548	4	111
340	420	38	2.1	175	265	17 800	27 100	17.3	**6868**	2	358	400	2	11.5
	460	56	3	273	400	27 800	40 500	16.6	**6968**	2	368	438	2.5	26.6
	520	82	5	440	660	45 000	67 500	15.6	**6068**	2	375	490	4	62.3
	620	92	6	530	820	54 000	83 500	15.3	**6268**	2	381	582	5	129
360	440	38	2.1	192	290	19 600	29 600	17.3	**6872**	2	377	420	2	11.8
	480	56	3	280	425	28 500	43 000	16.7	**6972**	2	388	457	2.5	27.9
	540	82	5	460	720	47 000	73 500	15.7	**6072**	2	396	509	4	65.3
	550	85	5	460	720	47 000	73 500	15.8	**B360-2**	2	396	519	4	72.6
	650	95	6	555	905	57 000	92 000	15.4	**6272**	2	402	611	5	145
365	430	20	1.1	70.5	146	7 150	14 900	18.1	**B365-1**	2	387	415	1	5.52

Notes (1) Refer to page **B 5**

Bore Diameter 380 – 610 mm

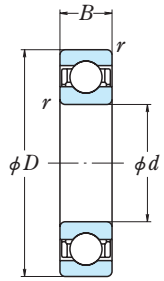

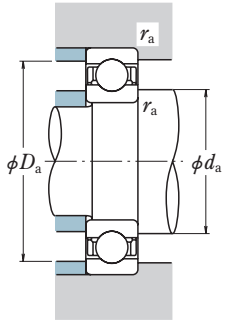

Dynamic Equivalent Load

$P = XF_r + YF_a$

$\frac{f_0 F_r}{C_{0r}}$	e	$\frac{F_a}{F_r} \leqq e$		$\frac{F_a}{F_r} > e$	
		X	Y	X	Y
0.172	0.19	1	0	0.56	2.30
0.345	0.22	1	0	0.56	1.99
0.689	0.26	1	0	0.56	1.71
1.03	0.28	1	0	0.56	1.55
1.38	0.30	1	0	0.56	1.45
2.07	0.34	1	0	0.56	1.31
3.45	0.38	1	0	0.56	1.15
5.17	0.42	1	0	0.56	1.04
6.89	0.44	1	0	0.56	1.00

Static Equivalent Load

$\frac{F_a}{F_r} > 0.8,\ P_0 = 0.6F_r + 0.5F_a$

$\frac{F_a}{F_r} \leqq 0.8,\ P_0 = F_r$

Boundary Dimensions (mm)				Basic Load Ratings (kN)		{kgf}		Factor	Bearing Numbers	Figure(1)	Abutment and Fillet Dimensions (mm)			Mass (kg)
d	D	B	r min.	C_r	C_{0r}	C_r	C_{0r}	f_0			d_a	D_a	r_a max.	approx.
380	480	46	2.1	238	375	24 200	38 000	17.1	**6876**	2	407	459	2	19.5
	520	65	4	325	510	33 000	52 000	16.6	**6976**	2	412	493	3	40
	560	82	5	455	725	46 500	74 000	15.9	**6076**	2	416	529	4	68
390	490	46	2.1	236	375	24 100	38 500	17.2	**B390-2**	3	418	469	2	20
400	500	46	2.1	241	390	24 600	40 000	17.2	**6880**	2	428	479	2	20.5
	540	65	4	335	540	34 000	55 000	16.7	**6980**	2	433	513	3	42
	600	90	5	510	825	52 000	84 000	15.7	**6080**	2	437	568	4	88.4
420	520	46	2.1	245	410	25 000	41 500	17.3	**6884**	2	449	498	2	21.4
	560	65	4	340	570	35 000	58 500	16.8	**6984**	2	454	533	3	43.6
	620	90	5	530	895	54 000	91 000	15.8	**6084**	2	458	588	4	92.2
440	540	46	2.1	248	425	25 300	43 500	17.4	**6888**	2	470	518	2	22.3
	600	74	4	395	680	40 500	69 000	16.6	**6988**	2	475	572	3	60.2
	650	94	6	550	965	56 000	98 500	16.0	**6088**	2	485	611	5	106
460	580	56	3	310	550	31 500	56 000	17.1	**6892**	2	492	555	2.5	34.3
	620	74	4	405	720	41 500	73 500	16.7	**6992**	2	496	591	3	62.6
	680	100	6	605	1 080	62 000	110 000	15.8	**6092**	2	506	640	5	123
480	600	56	3	315	575	32 000	58 500	17.2	**6896**	2	513	575	2.5	35.4
	650	78	5	450	815	45 500	83 000	16.6	**6996**	2	520	617	4	73.5
	700	100	6	605	1 090	61 500	111 000	15.9	**6096**	2	527	660	5	127
484	660	80	5	480	855	49 000	87 500	16.4	**B484-1**	2	525	627	4	78.1
500	620	56	3	320	600	33 000	61 000	17.3	**68/500**	2	534	594	2.5	37.2
	670	78	5	460	865	47 000	88 000	16.7	**69/500**	2	541	637	4	82
	720	100	6	630	1 170	64 000	120 000	16.0	**60/500**	2	548	680	5	131
530	650	56	3	325	625	33 000	63 500	17.4	**68/530**	3	565	624	2.5	39.8
	710	82	5	455	870	46 500	88 500	16.8	**69/530**	3	572	676	4	89.8
	780	112	6	680	1 300	69 500	133 000	16.0	60/530	2	579	738	5	184
560	680	56	3	330	650	33 500	66 500	17.4	**68/560**	2	596	653	2.5	41.5
	750	85	5	525	1 040	53 500	106 000	16.7	**69/560**	2	604	715	4	105
600	730	60	3	355	735	36 000	75 000	17.5	**68/600**	2	638	702	2.5	50.9
	800	90	5	550	1 160	56 500	118 000	16.9	**69/600**	2	645	764	4	120
	870	118	6	790	1 640	80 500	168 000	16.1	**60/600**	2	652	827	5	236
610	730	54	3	335	700	34 500	71 500	17.5	**B610-2**	3	635	702	2.5	43

Notes (1) Refer to page **B 5**

Bore Diameter 630 – 1 100 mm

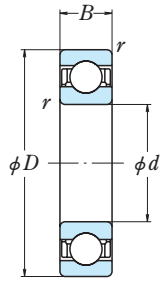

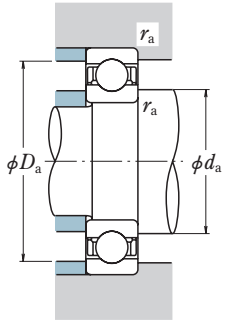

Dynamic Equivalent Load

$P = XF_r + YF_a$

$\frac{f_0 F_r}{C_{0r}}$	e	$\frac{F_a}{F_r} \leqq e$		$\frac{F_a}{F_r} > e$	
		X	Y	X	Y
0.172	0.19	1	0	0.56	2.30
0.345	0.22	1	0	0.56	1.99
0.689	0.26	1	0	0.56	1.71
1.03	0.28	1	0	0.56	1.55
1.38	0.30	1	0	0.56	1.45
2.07	0.34	1	0	0.56	1.31
3.45	0.38	1	0	0.56	1.15
5.17	0.42	1	0	0.56	1.04
6.89	0.44	1	0	0.56	1.00

Static Equivalent Load

$\frac{F_a}{F_r} > 0.8,\ P_0 = 0.6F_r + 0.5F_a$

$\frac{F_a}{F_r} \leqq 0.8,\ P_0 = F_r$

Boundary Dimensions (mm)				Basic Load Ratings (kN)		{kgf}		Factor	Bearing Numbers	Figure(1)	Abutment and Fillet Dimensions (mm)			Mass (kg)
d	D	B	r min.	C_r	C_{0r}	C_r	C_{0r}	f_0			d_a	D_a	r_a max.	approx.
630	780	69	4	420	890	43 000	90 500	17.3	**68/630**	2	672	748	3	71.3
	850	100	6	625	1 350	64 000	138 000	16.7	**69/630**	2	683	807	5	163
	920	128	7.5	750	1 620	76 500	165 000	16.4	**60/630**	2	689	870	6	285
640	740	38	2.1	248	535	25 200	54 500	17.9	**B640-2**	2	662	714	2	26.8
670	820	69	4	435	965	44 500	98 000	17.4	**68/670**	2	714	787	3	75.4
	900	103	6	675	1 460	68 500	149 000	16.7	**69/670**	2	724	856	5	181
	980	136	7.5	765	1 730	78 000	177 000	16.6	**60/670**	2	731	929	6	351
680	790	50	3	288	650	29 400	66 500	17.9	**B680-3**	2	704	761	2.5	40.8
710	870	74	4	480	1 100	49 000	113 000	17.4	**68/710**	2	756	836	3	92.6
	950	106	6	715	1 640	72 500	167 000	16.8	**69/710**	2	766	905	5	208
	1 030	140	7.5	1 020	2 310	104 000	235 000	16.0	**60/710**	2	772	978	6	386
730	900	78	5	505	1 160	51 500	119 000	17.3	**B730-1**	3	780	862	4	107
750	920	78	5	525	1 260	53 500	128 000	17.4	**68/750**	2	801	882	4	110
	1 000	112	6	785	1 840	80 000	188 000	16.7	**69/750MA**	2	808	954	5	245
770	940	78	5	525	1 260	53 500	128 000	17.4	**B770-2**	3	822	901	4	112
800	980	82	5	530	1 310	54 000	133 000	17.5	**68/800**	3	853	940	4	132
	1 060	115	6	825	2 050	84 500	209 000	16.8	**69/800**	2	860	1 013	5	275
880	1 130	115	5	810	2 070	82 500	211 000	17.0	**B880-3**	3	936	1 087	4	290
930	1 010	40	2.1	174	540	17 800	55 000	18.4	**B930-1**	2	949	991	2	30.6
	1 250	95	6	795	2 190	81 000	224 000	17.3	**B930-51**	2	995	1 199	5	350
940	1 140	100	5	685	1 820	70 000	186 000	17.4	**B940-1**	2	999	1 097	4	209
945	1 150	90	5	615	1 660	63 000	169 000	17.5	**B945-3**	3	1 004	1 107	4	194
1 100	1 200	50	2.1	253	795	25 800	81 000	18.4	**B1100-3**	2	1 123	1 165	2	57.4

Notes (1) Refer to page **B 5**

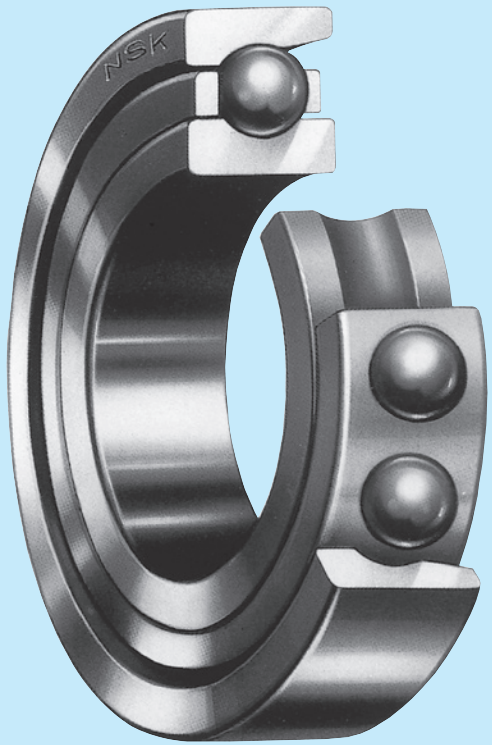

ANGULAR CONTACT BALL BEARINGS

Single-Row and Matched Angular Contact Ball Bearings Bore Diameter 90 – 775mm ····· B24

Double-Row Angular Contact Ball Bearings Bore Diameter 100 – 280mm ····· B42

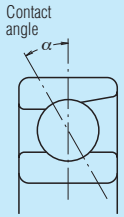

Design, Types, and Features

Single-Row Angular Contact Ball Bearings

Since these bearings have a contact angle, they can sustain significant axial loads in one direction together with radial loads. Because of their design, when a radial load is applied, an axial force component is produced; therefore, two opposed bearings or a combination of more than two must be used.

Usually, the cages for large-size angular contact ball bearings are machined brass and guided by the inner ring (Figures 1 and 2) or the balls (Figures 3 and 4).

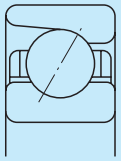

Figure 1

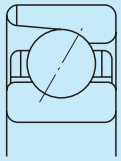

Figure 2

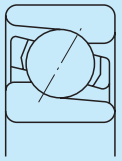

Figure 3

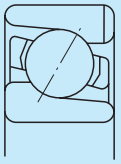

Figure 4

Table 1 Types and Features of Matched Angular Contact Ball Bearings

Figure	Arrangement	Features
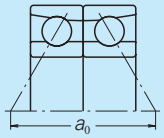	Back-to-back (DB) (Example) 7220 A DB	Radial loads and axial loads in both directions can be sustained. Since the distance between the effective load centers a_0 is big, this type is suitable if moments are applied.
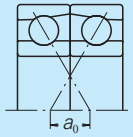	Face-to-face (DF) (Example) 7220 B DF	Radial loads and axial loads in both directions can be sustained. Compared with the DB Type, the distance between the effective load centers is small, so the capacity to sustain moments is inferior to the DB Type.

Remarks Regarding the tandem arrangement (DT), please contact **NSK**.

Regarding the angular contact ball bearings used with four-row cylindrical roller bearings for roll necks, refer to page B418.

Double-Row Angular Contact Ball Bearings

This is basically a back-to-back or face-to-face arrangement of two single-row angular contact ball bearings, but their inner or outer rings are integrated into one. Axial loads in both directions can be sustained, so these bearings are used as fixed-end bearings.

Cross-sections of double-row angular contact ball bearings are shown below. The bearings in Figures 5 and 7 have good capacity to sustain moments.

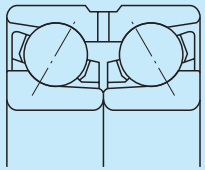

Figure 5

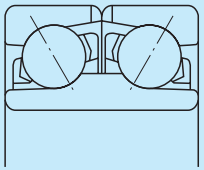

Figure 6

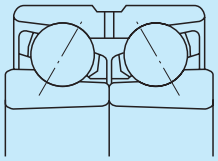

Figure 7

Tolerances and Running Accuracy ····· Table 2.2 (Pages A16 to A19)

Single-Row Angular Contact Ball Bearings

Matched Angular Contact Ball Bearings

Double-Row Angular Contact Ball Bearings

Recommended Fits ····· Table 3.2 (Page A35)
Table 3.4 (Page A36)

Single-Row Angular Contact Ball Bearings

Matched Angular Contact Ball Bearings

Double-Row Angular Contact Ball Bearings

Internal Clearances

Matched Angular Contact Ball Bearings ····· Table 3.14 (Page A44)

Double-Row Angular Contact Ball Bearings ····· Please contact NSK.

Precautions for Use of Angular Contact Ball Bearings

If the load on angular contact ball bearings becomes too small, or if the ratio of the axial and radial loads for matched bearings exceeds 'e' (e is listed in the bearings tables) during operation, slippage between the balls and raceways occurs, which may result in smearing. Especially with large bearings since the weight of the balls and cage is high. If such load conditions are expected, please consult with NSK for selection of the bearings.

SINGLE/MATCHED

Bore Diameter 90 – 105 mm

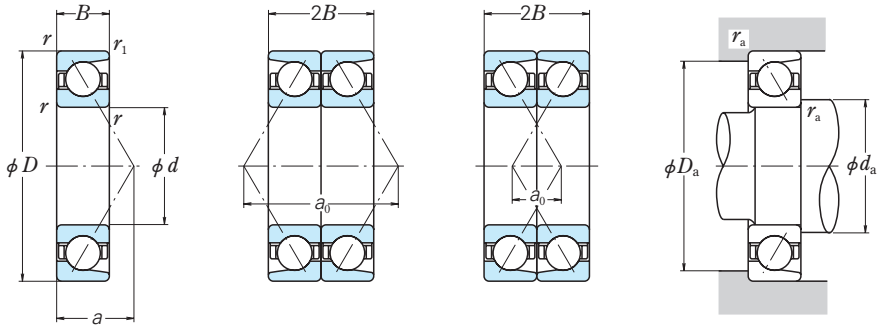

Single | Back-to-Back DB | Front-to-Front DF

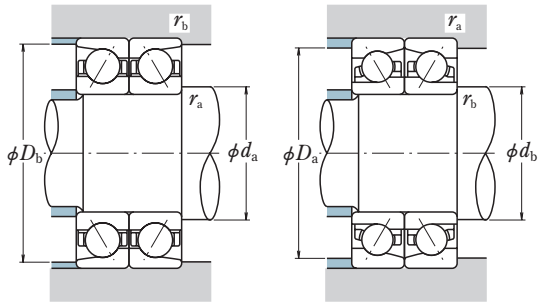

Dynamic Equivalent Load $P = XF_r + YF_a$

Contact Angle	e	Single				DB or DF			
		$F_a/F_r \leq e$		$F_a/F_r > e$		$F_a/F_r \leq e$		$F_a/F_r > e$	
		X	Y	X	Y	X	Y	X	Y
30°	0.80	1	0	0.39	0.76	1	0.78	0.63	1.24
40°	1.14	1	0	0.35	0.57	1	0.55	0.57	0.93

Static Equivalent Load $P_0 = X_0 F_r + Y_0 F_a$

Contact Angle	Single		DB or DF	
	X_0	Y_0	X_0	Y_0
30°	0.5	0.33	1	0.66
40°	0.5	0.26	1	0.52

Single mounting
When $F_r > 0.5F_r + Y_0F_a$ use $P_0 = F_r$

Boundary Dimensions (mm)					Basic Load Ratings (Single) (kN)		{kgf}		Eff. Load Centers (mm)	Abutment and Fillet Dimensions (mm)			Bearing Numbers (1)	
d	D	B	r min.	r_1 min.	C_r	C_{0r}	C_r	C_{0r}	a	d_a	D_a	r_a max.	Single	Matched
90	140	24	1.5	1	65.0	63.5	6 650	6 450	45.2	103	128	1.5	**7018A**	**DB DF**
	140	24	1.5	1	58.5	57.0	5 950	5 800	60.2	103	128	1.5	**7018B**	**DB DF**
	160	30	2	1	113	96.5	11 500	9 850	51.1	104	147	2	**7218A**	**DB DF**
	160	30	2	1	113	96.5	11 500	9 850	51.1	104	147	2	**7218AA**	**DB DF**
	160	30	2	1	102	88.0	10 400	8 950	67.4	104	147	2	**7218B**	**DB DF**
	160	30	2	1	102	88.0	10 400	8 950	67.4	104	147	2	**7218BA**	**DB DF**
	190	43	3	1.1	161	135	16 400	13 700	61.9	109	172	2.5	**7318A**	**DB DF**
	190	43	3	1.1	148	124	15 000	12 600	80.2	109	172	2.5	**7318B**	**DB DF**
95	145	24	1.5	1	67.0	67.0	6 800	6 800	46.6	109	133	1.5	**7019A**	**DB DF**
	145	24	1.5	1	60.0	60.5	6 100	6 150	62.3	109	133	1.5	7019B	DB DF
	170	32	2.1	1.1	122	103	12 500	10 500	54.2	112	154	2	**7219A**	**DB DF**
	170	32	2.1	1.1	111	94.0	11 300	9 600	71.6	112	154	2	**7219B**	**DB DF**
	200	45	3	1.1	172	149	17 600	15 200	65.1	114	182	2.5	**7319A**	**DB DF**
	200	45	3	1.1	158	137	16 100	13 900	84.3	114	182	2.5	**7319B**	**DB DF**
	200	45	3	1.1	158	137	16 100	13 900	84.3	114	182	2.5	**7319BA**	**DB DF**
100	150	24	1.5	1	68.5	70.5	6 950	7 200	48.1	114	138	1.5	**7020A**	**DB DF**
	150	24	1.5	1	61.0	63.5	6 250	6 500	64.4	114	138	1.5	**7020B**	**DB DF**
	180	34	2.1	1.1	137	117	14 000	12 000	57.4	117	164	2	**7220A**	**DB DF**
	180	34	2.1	1.1	137	117	14 000	12 000	57.4	117	164	2	**7220AA**	**DB DF**
	180	34	2.1	1.1	124	107	12 700	10 900	75.7	117	164	2	**7220B**	**DB DF**
	215	47	3	1.1	207	193	21 100	19 700	69.0	119	196	2.5	**7320A**	**DB DF**
	215	47	3	1.1	207	193	21 100	19 700	69.0	119	196	2.5	**7320AA**	**DB DF**
	215	47	3	1.1	190	178	19 400	18 100	89.6	119	196	2.5	**7320B**	**DB DF**
105	160	26	2	1	80.0	81.5	8 150	8 350	51.2	120	147	2	**7021A**	**DB DF**
	160	26	2	1	71.5	73.5	7 300	7 500	68.6	120	147	2	**7021B**	**DB DF**
	190	36	2.1	1.1	150	132	15 200	13 500	60.6	122	174	2	**7221A**	**DB DF**
	190	36	2.1	1.1	136	120	13 800	12 300	79.9	122	174	2	**7221B**	**DB DF**
	225	49	3	1.1	208	193	21 200	19 700	72.1	124	206	2.5	**7321A**	**DB DF**
	225	49	3	1.1	191	177	19 400	18 100	93.7	124	206	2.5	**7321B**	**DB DF**

Figure(2)	Basic Load Ratings (Matched) (kN)		{kgf}		Load Center Spacings (mm) a_0		Abutment and Fillet Dimensions (mm)			Mass (kg)
	C_r	C_{0r}	C_r	C_{0r}	DB	DF	d_b(3)	D_b	r_b(3) max.	approx.
1	106	127	10 800	12 900	90.4	42.4	—	131	1	1.35
1	95.0	114	9 700	11 600	120.5	72.5	—	131	1	1.37
1	183	193	18 700	19 700	102.2	42.2	—	150	1	2.54
3	183	193	18 700	19 700	102.2	42.2	100	150	1	2.42
1	166	176	16 900	17 900	134.9	74.9	—	150	1	2.56
3	166	176	16 900	17 900	134.9	74.9	100	150	1	2.56
1	261	270	26 700	27 500	123.8	37.8	—	179	1	5.79
1	240	248	24 400	25 300	160.5	74.5	—	179	1	5.86
1	109	134	11 100	13 600	93.3	45.3	—	136	1	1.43
1	97.0	121	9 900	12 300	124.7	76.7	—	136	1	1.42
1	198	207	20 200	21 100	108.5	44.5	—	159	1	3.08
1	180	188	18 300	19 200	143.2	79.2	—	159	1	3.09
1	280	298	28 500	30 500	130.2	40.2	—	189	1	6.6
1	257	273	26 200	27 900	168.7	78.7	—	189	1	6.68
3	257	273	26 200	27 900	168.7	78.7	107	189	1	6.56
1	111	141	11 300	14 400	96.2	48.2	—	141	1	1.48
1	99.5	127	10 100	13 000	128.9	80.9	—	141	1	1.49
1	223	234	22 700	23 900	114.8	46.8	—	169	1	3.68
3	223	234	22 700	23 900	114.8	46.8	112	169	1	3.5
1	202	214	20 600	21 800	151.5	83.5	—	169	1	3.7
1	335	385	34 500	39 500	137.9	43.9	—	203	1	8.27
3	335	385	34 500	39 500	137.9	43.9	112	203	1	7.87
1	310	355	31 500	36 000	179.2	85.2	—	203	1	8.32
1	130	163	13 300	16 700	102.5	50.5	—	150	1	1.84
1	116	147	11 900	15 000	137.2	85.2	—	150	1	1.87
1	243	264	24 800	26 900	121.2	49.2	—	179	1	4.38
1	220	241	22 500	24 500	159.8	87.8	—	179	1	4.4
1	335	385	34 500	39 500	144.3	46.3	—	213	1	9.34
1	310	355	31 500	36 000	187.4	89.4	—	213	1	9.44

Note (1) The suffixes A, AA and B, BA represent contact angles of 30° and 40° respectively.

Notes (2) Refer to page **B 21**
(3) For bearings marked — in the column for d_b, d_b and r_b for shafts are d_a and r_a(max.) respectively.

SINGLE/MATCHED

Bore Diameter 110 – 130 mm

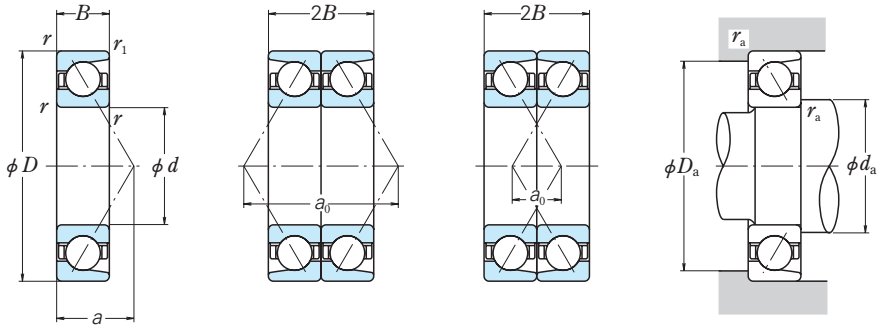

Single

Back-to-Back DB

Front-to-Front DF

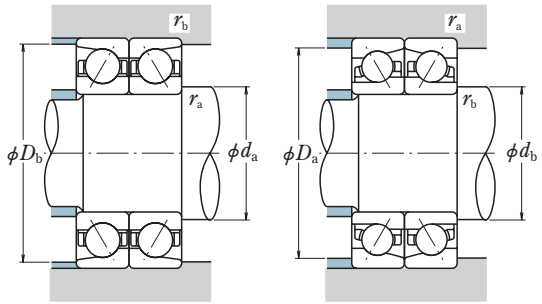

Dynamic Equivalent Load $P = XF_r + YF_a$

Contact Angle	e	Single				DB or DF			
		$F_a/F_r \leq e$		$F_a/F_r > e$		$F_a/F_r \leq e$		$F_a/F_r > e$	
		X	Y	X	Y	X	Y	X	Y
30°	0.80	1	0	0.39	0.76	1	0.78	0.63	1.24
40°	1.14	1	0	0.35	0.57	1	0.55	0.57	0.93

Static Equivalent Load $P_0 = X_0F_r + Y_0F_a$

Contact Angle	Single		DB or DF	
	X_0	Y_0	X_0	Y_0
30°	0.5	0.33	1	0.66
40°	0.5	0.26	1	0.52

Single mounting
When $F_r > 0.5F_r + Y_0F_a$ use $P_0 = F_r$

Boundary Dimensions (mm)					Basic Load Ratings (Single) (kN)		{kgf}		Eff. Load Centers (mm)	Abutment and Fillet Dimensions (mm)			Bearing Numbers (1)	
d	D	B	r min.	r_1 min.	C_r	C_{0r}	C_r	C_{0r}	a	d_a	D_a	r_a max.	Single	Matched
110	170	28	2	1	96.5	95.5	9 850	9 700	54.4	125	156	2	**7022A**	**DB DF**
	170	28	2	1	86.5	86.0	8 850	8 750	72.7	125	156	2	**7022B**	**DB DF**
	200	38	2.1	1.1	162	148	16 500	15 100	63.7	127	184	2	**7222A**	**DB DF**
	200	38	2.1	1.1	162	148	16 500	15 100	63.7	127	184	2	**7222AA**	**DB DF**
	200	38	2.1	1.1	147	135	15 000	13 700	84.0	127	184	2	**7222B**	**DB DF**
	240	50	3	1.1	220	215	22 500	21 900	75.5	129	221	2.5	**7322A**	**DB DF**
	240	50	3	1.1	220	215	22 500	21 900	75.5	129	221	2.5	**7322AA**	**DB DF**
	240	50	3	1.1	201	197	20 500	20 100	98.4	129	221	2.5	**7322B**	**DB DF**
	240	50	3	1.1	201	197	20 500	20 100	98.4	129	221	2.5	**7322BA**	**DB DF**
120	180	28	2	1	102	107	10 400	10 900	57.3	136	166	2	**7024A**	**DB DF**
	180	28	2	1	102	107	10 400	10 900	57.3	136	166	2	**7024AA**	**DB DF**
	180	28	2	1	91.5	96.0	9 300	9 800	76.9	136	166	2	**7024B**	**DB DF**
	215	38	2.1	1.1	169	161	17 200	16 500	67.4	138	198	2	**BA120-3**	**DB —**
	215	40	2.1	1.1	183	177	18 600	18 100	68.3	138	198	2	**7224A**	**DB DF**
	215	40	2.1	1.1	165	162	16 900	16 500	90.3	138	198	2	**7224B**	**DB DF**
	220	40	2	1.1	152	147	15 500	15 000	91.3	136	205	2	**BT120-1**	**DB —**
	260	55	3	1.1	246	252	25 100	25 700	82.3	140	241	2.5	**7324A**	**DB DF**
	260	55	3	1.1	225	231	23 000	23 600	107.2	140	241	2.5	**7324B**	**DB DF**
	260	55	3	1.1	225	231	23 000	23 600	107.2	140	241	2.5	**7324BA**	**DB DF**
130	200	33	2	1	117	125	12 000	12 800	64.1	146	186	2	**7026A**	**DB DF**
	200	33	2	1	117	125	12 000	12 800	64.1	146	186	2	**7026AA**	**DB DF**
	200	33	2	1	105	113	10 700	11 500	85.7	146	186	2	**7026B**	**DB DF**
	230	40	3	1.1	189	193	19 300	19 600	72.0	150	211	2.5	**7226A**	**DB DF**
	230	40	3	1.1	171	175	17 400	17 800	95.5	150	211	2.5	**7226B**	**DB DF**
	230	40	3	1.1	171	175	17 400	17 800	95.5	150	211	2.5	**7226BA**	**DB DF**
	250	45	3	2	208	218	21 200	22 200	102.2	150	231	2.5	**BT130-1**	**DB —**
	280	58	4	1.5	273	293	27 900	29 800	88.2	154	256	3	**7326A**	**DB DF**
	280	58	4	1.5	273	293	27 900	29 800	88.2	154	256	3	**7326AA**	**DB DF**
	280	58	4	1.5	250	268	25 500	27 400	115.0	154	256	3	**7326B**	**DB DF**
	280	58	4	1.5	250	268	25 500	27 400	115.0	154	256	3	**7326BA**	**DB DF**

Notes (1) The suffixes A, AA and B, BA represent contact angles of 30° and 40° respectively.

Figure(2)	Basic Load Ratings (Matched) (kN)		{kgf}		Load Center Spacings (mm) a_0		Abutment and Fillet Dimensions (mm)			Mass (kg)
	C_r	C_{0r}	C_r	C_{0r}	DB	DF	d_b(3)	D_b	r_b(3) max.	approx.
1	157	191	16 000	19 400	108.8	52.8	—	160	1	2.28
1	141	172	14 300	17 500	145.5	89.5	—	160	1	2.3
1	263	296	26 800	30 000	127.5	51.5	—	189	1	5.15
3	263	296	26 800	30 000	127.5	51.5	122	189	1	4.89
1	239	269	24 300	27 500	168.1	92.1	—	189	1	5.18
1	360	430	36 500	44 000	151.0	51.0	—	228	1	11.1
3	360	430	36 500	44 000	151.0	51.0	122	228	1	11.2
1	325	395	33 500	40 000	196.8	96.8	—	228	1	11.2
3	325	395	33 500	40 000	196.8	96.8	122	228	1	11
1	166	213	16 900	21 700	114.6	58.6	—	170	1	2.45
3	166	213	16 900	21 700	114.6	58.6	132	170	1	2.33
1	148	192	15 100	19 600	153.9	97.9	—	170	1	2.47
1	274	325	27 900	33 000	134.7	—	—	203	1	12
1	297	355	30 500	36 000	136.7	56.7	—	203	1	6.22
1	269	325	27 400	33 000	180.5	100.5	—	203	1	6.26
1	247	294	25 200	30 000	182.6	—	—	208	1	6.77
1	400	505	41 000	51 500	164.7	54.7	—	247	1	14.5
1	365	460	37 500	47 000	214.4	104.4	—	247	1	14.4
3	365	460	37 500	47 000	214.4	104.4	133	247	1	14.1
1	191	251	19 400	25 600	128.3	62.3	—	190	1	3.68
3	191	251	19 400	25 600	128.3	62.3	142	190	1	3.61
1	171	226	17 400	23 100	171.5	105.5	—	190	1	3.83
1	310	385	31 500	39 500	143.9	63.9	—	218	1	7.06
1	278	350	28 300	35 500	191.0	111.0	—	218	1	7.1
3	278	350	28 300	35 500	191.0	111.0	143	218	1	6.9
1	340	435	34 500	44 500	204.4	—	—	235	2	9.98
1	445	585	45 500	59 500	176.3	60.3	—	265	1.5	17.5
3	445	585	45 500	59 500	176.3	60.3	145	265	1.5	17.2
1	405	535	41 500	54 500	230.0	114.0	—	265	1.5	17.6
3	405	535	41 500	54 500	230.0	114.0	145	265	1.5	17.2

Notes (2) Refer to page **B 21**
(3) For bearings marked — in the column for d_b, d_b and r_b for shafts are d_a and r_a(max.) respectively.

SINGLE/MATCHED

Bore Diameter 140 – 150 mm

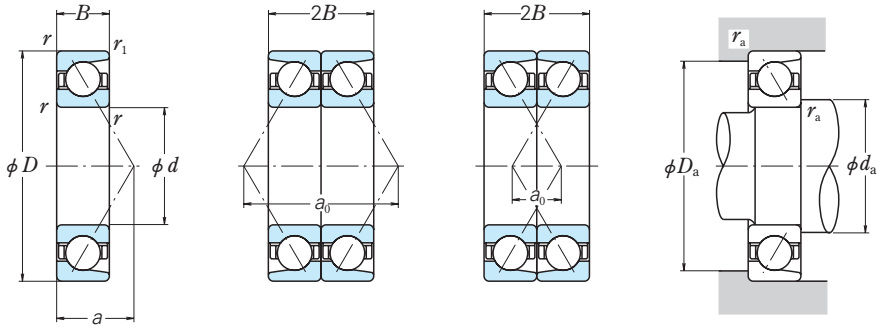

Single | Back-to-Back DB | Front-to-Front DF

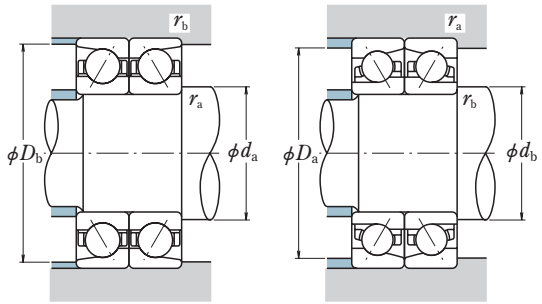

Dynamic Equivalent Load $P = XF_r + YF_a$

Contact Angle	e	Single				DB or DF			
		$F_a/F_r \leq e$		$F_a/F_r > e$		$F_a/F_r \leq e$		$F_a/F_r > e$	
		X	Y	X	Y	X	Y	X	Y
30°	0.80	1	0	0.39	0.76	1	0.78	0.63	1.24
40°	1.14	1	0	0.35	0.57	1	0.55	0.57	0.93

Static Equivalent Load $P_0 = X_0F_r + Y_0F_a$

Contact Angle	Single		DB or DF	
	X_0	Y_0	X_0	Y_0
30°	0.5	0.33	1	0.66
40°	0.5	0.26	1	0.52

Single mounting
When $F_r > 0.5F_r + Y_0F_a$ use $P_0 = F_r$

Boundary Dimensions (mm)					Basic Load Ratings (Single) (kN)		{kgf}		Eff. Load Centers (mm)	Abutment and Fillet Dimensions (mm)			Bearing Numbers (1)	
d	D	B	r min.	r_1 min.	C_r	C_{0r}	C_r	C_{0r}	a	d_a	D_a	r_a max.	Single	Matched
140	175	18	1.1	0.6	47.5	65.0	4 800	6 650	54.5	153	164	1	7828A	DB DF
	175	18	1.1	0.6	42.0	58.0	4 300	5 900	75.1	153	164	1	7828B	DB DF
	190	24	1.5	1	72.0	86.5	7 350	8 850	59.6	155	177	1.5	**7928A**	**DB DF**
	190	24	1.5	1	64.0	77.5	6 500	7 900	81.2	155	177	1.5	**7928B**	**DB DF**
	210	33	2	1	120	133	12 200	13 500	67.0	156	196	2	**7028A**	**DB DF**
	210	33	2	1	107	119	10 900	12 200	89.9	156	196	2	**7028B**	**DB DF**
	250	42	3	1.1	218	234	22 300	23 900	77.3	161	231	2.5	**7228A**	**DB DF**
	250	42	3	1.1	197	213	20 100	21 700	102.8	161	231	2.5	**7228B**	**DB DF**
	300	62	4	1.5	300	335	30 500	34 500	94.5	165	276	3	**7328A**	**DB DF**
	300	62	4	1.5	300	335	30 500	34 500	94.5	165	276	3	**7328AA**	**DB DF**
	300	62	4	1.5	275	310	28 100	31 500	123.3	165	276	3	**7328B**	**DB DF**
	300	62	4	1.5	275	310	28 100	31 500	123.3	165	276	3	**7328BA**	**DB DF**
150	190	20	1.1	0.6	53.5	74.5	5 450	7 600	59.1	164	179	1	**7830A**	**DB DF**
	190	20	1.1	0.6	47.5	66.5	4 850	6 800	81.3	164	179	1	7830B	DB DF
	210	28	2	1	82.0	104	8 350	10 600	64.5	167	196	2	**BA150-6**	**DB —**
	210	28	2	1	92.5	111	9 400	11 300	66.0	167	196	2	**7930A**	**DB DF**
	210	28	2	1	82.5	99.5	8 400	10 100	89.5	167	196	2	**7930B**	**DB DF**
	225	35	2.1	1.1	137	154	14 000	15 700	71.6	169	208	2	**7030A**	**DB DF**
	225	35	2.1	1.1	137	154	14 000	15 700	71.6	169	208	2	**7030AA**	**DB DF**
	225	35	2.1	1.1	122	138	12 500	14 100	96.2	169	208	2	**7030B**	**DB DF**
	225	35	2.1	1.1	122	138	12 500	14 100	96.2	169	208	2	**7030BA**	**DB DF**
	270	45	3	1.1	248	280	25 300	28 500	83.1	171	250	2.5	**7230A**	**DB DF**
	270	45	3	1.1	225	254	22 900	25 900	110.6	171	250	2.5	**7230B**	**DB DF**
	320	65	4	1.5	315	370	32 500	38 000	100.3	175	295	3	**7330A**	**DB DF**
	320	65	4	1.5	289	340	29 400	34 500	131.1	175	295	3	**7330B**	**DB DF**
	320	65	4	1.5	289	340	29 400	34 500	131.1	175	295	3	**7330BA**	**DB DF**

Notes (1) The suffixes A, AA and B, BA represent contact angles of 30° and 40° respectively.

Figure(2)	Basic Load Ratings (Matched) (kN)		{kgf}		Load Center Spacings (mm) a_0		Abutment and Fillet Dimensions (mm)			Mass (kg)
	C_r	C_{0r}	C_r	C_{0r}	DB	DF	d_b(3)	D_b	r_b(3) max.	approx.
1	77.0	130	7 850	13 300	108.9	72.9	—	166	0.6	0.95
1	68.0	116	6 950	11 800	150.2	114.2	—	166	0.6	0.95
1	117	173	11 900	17 700	119.3	71.3	—	180	1	1.92
1	104	155	10 600	15 800	162.5	114.5	—	180	1	1.95
1	194	265	19 800	27 000	134.0	68.0	—	199	1	3.9
1	174	239	17 700	24 400	179.8	113.8	—	199	1	3.96
1	355	470	36 000	48 000	154.6	70.6	—	238	1	8.92
1	320	425	32 500	43 500	205.6	121.6	—	238	1	8.94
1	490	670	50 000	68 500	189.0	65.0	—	285	1.5	21.4
3	490	670	50 000	68 500	189.0	65.0	155	285	1.5	21
1	445	615	45 500	63 000	246.6	122.6	—	285	1.5	21.6
3	445	615	45 500	63 000	246.6	122.6	155	285	1.5	20.3
1	87.0	149	8 850	15 200	118.1	78.1	—	181	0.6	1.32
1	77.0	133	7 850	13 600	162.6	122.6	—	181	0.6	1.3
4	133	208	13 600	21 200	128.9	—	—	199	1	5.38
1	150	222	15 300	22 600	131.9	75.9	—	199	1	2.99
1	134	199	13 600	20 300	179.0	123.0	—	199	1	2.95
1	222	305	22 700	31 500	143.3	73.3	—	213	1	4.75
3	222	305	22 700	31 500	143.3	73.3	164	213	1	4.59
1	199	277	20 300	28 200	192.3	122.3	—	213	1	4.76
3	199	277	20 300	28 200	192.3	122.3	164	213	1	4.58
1	405	560	41 000	57 000	166.3	76.3	—	257	1	11.2
1	365	510	57 000	52 000	221.2	131.2	—	257	1	11.2
1	515	745	52 500	75 500	200.7	70.7	—	304	1.5	26
1	470	680	48 000	69 500	262.2	132.2	—	304	1.5	25.9
3	470	680	48 000	69 500	262.2	132.2	166	304	1.5	25.4

Notes (2) Refer to page **B 21**
(3) For bearings marked — in the column for d_b, d_b and r_b for shafts are d_a and r_a(max.) respectively.

SINGLE/MATCHED

Bore Diameter 160 – 170 mm

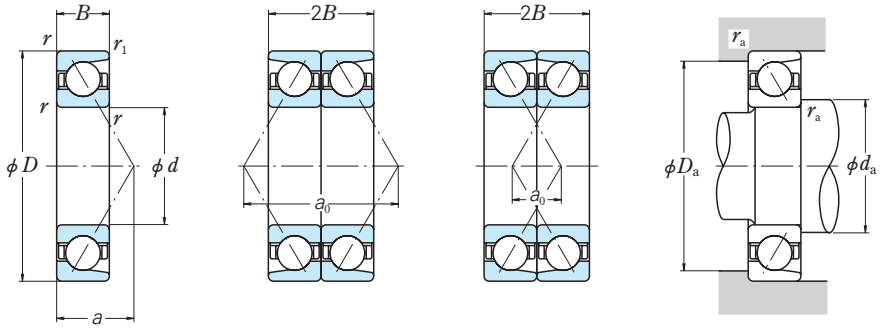

Single | Back-to-Back DB | Front-to-Front DF

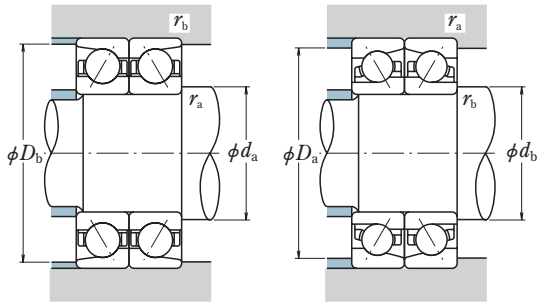

Dynamic Equivalent Load $P = XF_r + YF_a$

Contact Angle	e	Single				DB or DF			
		$F_a/F_r \leq e$		$F_a/F_r > e$		$F_a/F_r \leq e$		$F_a/F_r > e$	
		X	Y	X	Y	X	Y	X	Y
30°	0.80	1	0	0.39	0.76	1	0.78	0.63	1.24
40°	1.14	1	0	0.35	0.57	1	0.55	0.57	0.93

Static Equivalent Load $P_0 = X_0 F_r + Y_0 F_a$

Contact Angle	Single		DB or DF	
	X_0	Y_0	X_0	Y_0
30°	0.5	0.33	1	0.66
40°	0.5	0.26	1	0.52

Single mounting
When $F_r > 0.5F_r + Y_0F_a$ use $P_0 = F_r$

Boundary Dimensions (mm)					Basic Load Ratings (Single) (kN)		{kgf}		Eff. Load Centers (mm)	Abutment and Fillet Dimensions (mm)			Bearing Numbers (1)	
d	D	B	r min.	r_1 min.	C_r	C_{0r}	C_r	C_{0r}	a	d_a	D_a	r_a max.	Single	Matched
160	200	20	1.1	0.6	54.5	79.5	5 550	8 100	62.0	174	189	1	**7832A**	**DB DF**
	200	20	1.1	0.6	48.5	71.0	4 950	7 200	85.5	174	189	1	7832B	DB DF
	220	28	2	1	96.0	121	9 800	12 300	68.8	177	205	2	**7932A**	**DB DF**
	220	28	2	1	96.0	121	9 800	12 300	68.8	177	205	2	7932AA	DB DF
	220	28	2	1	85.5	108	8 700	11 000	93.7	177	205	2	7932B	DB DF
	240	38	2.1	1.1	155	176	15 800	18 000	76.7	179	223	2	**7032A**	**DB DF**
	240	38	2.1	1.1	139	159	14 100	16 200	102.9	179	223	2	**7032B**	**DB DF**
	250	40	2.1	1.1	155	176	15 800	18 000	77.7	179	233	2	**BA160-4**	**DB —**
	290	48	3	1.1	263	305	26 800	31 500	89.0	181	270	2.5	**7232A**	**DB DF**
	290	48	3	1.1	238	279	24 200	28 400	118.4	181	270	2.5	**7232B**	**DB DF**
	340	68	4	1.5	345	420	35 500	43 000	106.2	186	315	3	**7332A**	**DB DF**
	340	68	4	1.5	315	385	32 000	39 500	138.9	186	315	3	**7332B**	**DB DF**
	340	68	4	1.5	315	385	32 000	39 500	138.9	186	315	3	**7332BA**	**DB DF**
170	215	22	1.1	0.6	67.0	96.0	6 850	9 800	66.6	185	203	1	**7834A**	**DB DF**
	215	22	1.1	0.6	59.5	85.5	6 050	8 750	91.8	185	203	1	7834B	DB DF
	230	28	2	1	102	135	10 400	13 700	71.7	188	215	2	**7934A**	**DB DF**
	230	28	2	1	90.5	121	9 250	12 300	97.9	188	215	2	**7934B**	**DB DF**
	260	42	2.1	1.1	186	214	19 000	21 900	83.1	190	243	2	**7034A**	**DB DF**
	260	42	2.1	1.1	166	193	17 000	19 700	111.2	190	243	2	**7034B**	**DB DF**
	310	52	4	1.5	295	360	30 000	36 500	95.3	196	286	3	**7234A**	**DB DF**
	310	52	4	1.5	266	325	27 200	33 000	126.7	196	286	3	**7234B**	**DB DF**
	360	72	4	1.5	390	485	39 500	49 500	112.5	196	335	3	**7334A**	**DB DF**
	360	72	4	1.5	355	445	36 000	45 500	147.2	196	335	3	**7334B**	**DB DF**
	360	72	4	1.5	355	445	36 000	45 500	147.2	196	335	3	**7334BA**	**DB DF**

Figure(2)	Basic Load Ratings (Matched) (kN)		{kgf}		Load Center Spacings (mm) a_0		Abutment and Fillet Dimensions (mm)			Mass (kg)
	C_r	C_{0r}	C_r	C_{0r}	DB	DF	d_b(3)	D_b	r_b(3) max.	approx.
1	89.0	159	9 050	16 200	123.9	83.9	—	191	0.6	1.39
1	79.0	142	8 050	14 400	171.0	131.0	—	191	0.6	1.38
1	156	241	15 900	24 600	137.7	81.7	—	209	1	3.11
3	156	241	15 900	24 600	137.7	81.7	173	209	1	3.11
1	139	216	14 200	22 000	187.4	131.4	—	209	1	3.11
1	252	355	25 700	36 000	153.5	77.5	—	228	1	5.77
1	225	320	23 000	32 500	205.8	129.8	—	228	1	5.93
1	252	355	25 700	36 000	155.5	—	—	238	1	7.14
1	425	615	43 500	62 500	177.9	81.9	—	277	1	14.1
1	385	555	39 500	57 000	236.8	140.8	—	277	1	14.2
1	565	845	57 500	86 000	212.3	76.3	—	324	1.5	30.7
1	515	770	52 500	78 500	277.8	141.8	—	324	1.5	30.8
3	515	770	52 500	78 500	277.8	141.8	176	324	1.5	29.9
1	109	192	11 100	19 600	133.1	89.1	—	205	0.6	1.85
1	96.5	171	9 850	17 500	183.5	139.5	—	205	0.6	1.83
1	165	269	16 900	27 500	143.5	87.5	—	219	1	3.39
1	147	241	15 000	24 600	195.8	139.8	—	219	1	3.36
1	300	430	31 000	43 500	166.1	82.1	—	247	1	7.9
1	270	385	27 600	39 500	222.4	138.4	—	247	1	7.93
1	480	715	49 000	73 000	190.6	86.6	—	294	1.5	17.3
1	435	650	44 000	66 500	253.4	149.4	—	294	1.5	17.6
1	630	970	64 500	99 000	225.0	81.0	—	343	1.5	35.8
1	575	890	59 000	90 500	294.3	150.3	—	343	1.5	35.6
3	575	890	59 000	90 500	294.3	150.3	187	343	1.5	34.8

Notes (1) The suffixes A, AA and B, BA represent contact angles of 30° and 40° respectively.

Notes (2) Refer to page **B 21**
(3) For bearings marked — in the column for d_b, d_b and r_b for shafts are d_a and r_a(max.) respectively.

SINGLE/MATCHED

Bore Diameter 180 – 190 mm

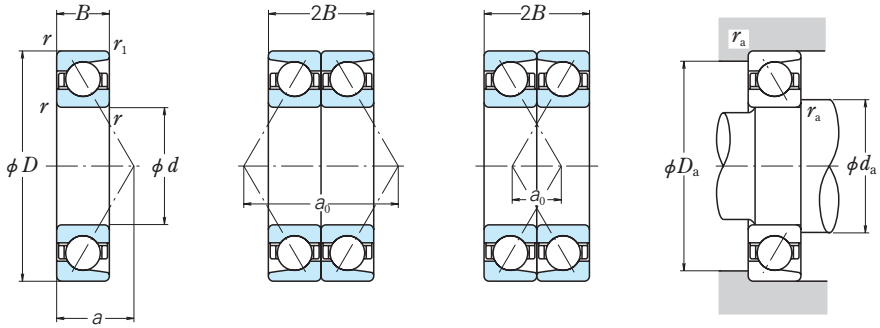

Single

Back-to-Back DB

Front-to-Front DF

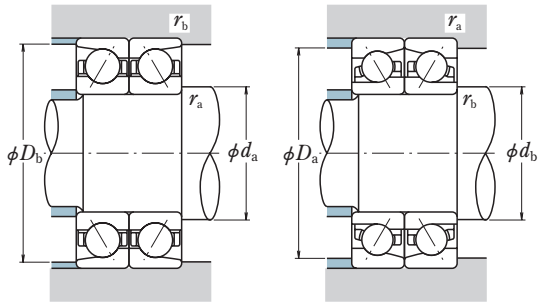

Dynamic Equivalent Load $P = XF_r + YF_a$

Contact Angle	e	Single				DB or DF			
		$F_a/F_r \leq e$		$F_a/F_r > e$		$F_a/F_r \leq e$		$F_a/F_r > e$	
		X	Y	X	Y	X	Y	X	Y
30°	0.80	1	0	0.39	0.76	1	0.78	0.63	1.24
40°	1.14	1	0	0.35	0.57	1	0.55	0.57	0.93

Static Equivalent Load $P_0 = X_0 F_r + Y_0 F_a$

Contact Angle	Single		DB or DF	
	X_0	Y_0	X_0	Y_0
30°	0.5	0.33	1	0.66
40°	0.5	0.26	1	0.52

Single mounting
When $F_r > 0.5F_r + Y_0F_a$ use $P_0 = F_r$

Boundary Dimensions (mm)					Basic Load Ratings (Single) (kN)		{kgf}		Eff. Load Centers (mm)	Abutment and Fillet Dimensions (mm)			Bearing Numbers (1)	
d	D	B	r min.	r_1 min.	C_r	C_{0r}	C_r	C_{0r}	a	d_a	D_a	r_a max.	Single	Matched
180	225	22	1.1	0.6	68.5	102	7 000	10 400	69.5	195	213	1	**7836A**	**DB DF**
	225	22	1.1	0.6	61.0	91.0	6 200	9 300	96.0	195	213	1	7836B	DB DF
	250	33	2	1	131	167	13 400	17 100	78.6	198	235	2	**7936A**	**DB DF**
	250	33	2	1	131	167	13 400	17 100	78.6	198	235	2	7936AA	DB DF
	250	33	2	1	117	150	11 900	15 300	106.7	198	235	2	7936B	DB DF
	250	33	2	1	117	150	11 900	15 300	106.7	198	235	2	**7936BA**	**DB DF**
	280	46	2.1	1.1	207	252	21 100	25 700	89.4	200	262	2	**7036A**	**DB DF**
	280	46	2.1	1.1	185	227	18 900	23 200	119.5	200	262	2	**7036B**	**DB DF**
	320	52	4	1.5	305	385	31 000	39 000	98.2	206	295	3	**7236A**	**DB DF**
	320	52	4	1.5	305	385	31 000	39 000	98.2	206	295	3	**7236AA**	**DB DF**
	320	52	4	1.5	276	350	28 100	35 500	130.9	206	295	3	**7236B**	**DB DF**
	380	75	4	1.5	410	535	41 500	54 500	118.3	206	354	3	**7336A**	**DB DF**
	380	75	4	1.5	375	490	38 000	50 000	155.0	206	354	3	**7336B**	**DB DF**
	380	75	4	1.5	375	490	38 000	50 000	155.0	206	354	3	**7336BA**	**DB DF**
190	240	24	1.5	1	82.0	120	8 350	12 200	74.1	207	226	1.5	7838A	DB DF
	240	24	1.5	1	72.5	107	7 400	10 900	102.2	207	226	1.5	7838B	DB DF
	260	33	2	1	133	175	13 500	17 800	81.5	208	245	2	**7938A**	**DB DF**
	260	33	2	1	118	157	12 100	16 000	110.9	208	245	2	**7938B**	**DB DF**
	290	46	2.1	1.1	224	280	22 800	28 600	92.3	211	272	2	**7038A**	**DB DF**
	290	46	2.1	1.1	201	253	20 400	25 800	123.7	211	272	2	**7038B**	**DB DF**
	340	55	4	1.5	315	410	32 000	42 000	104.0	217	315	3	**7238A**	**DB DF**
	340	55	4	1.5	284	375	28 900	38 000	138.7	217	315	3	**7238B**	**DB DF**
	400	78	5	2	450	600	46 000	61 000	124.2	221	370	4	**7338A**	**DB DF**
	400	78	5	2	450	600	46 000	61 000	124.2	221	370	4	**7338AA**	**DB DF**
	400	78	5	2	410	550	42 000	56 000	162.8	221	370	4	**7338B**	**DB DF**

Figure(2)	Basic Load Ratings (Matched) (kN)		{kgf}		Load Center Spacings (mm) a_0		Abutment and Fillet Dimensions (mm)			Mass (kg)
	C_r	C_{0r}	C_r	C_{0r}	DB	DF	d_b(3)	D_b	r_b(3) max.	approx.
1	111	204	11 400	20 800	138.9	94.9	—	215	0.6	1.93
1	99.0	182	10 100	18 600	191.9	147.9	—	215	0.6	1.92
1	213	335	21 700	34 000	157.1	91.1	—	239	1	4.97
3	213	335	21 700	34 000	157.1	91.1	194	239	1	4.84
1	190	300	19 300	30 500	213.4	147.4	—	239	1	4.84
3	190	300	19 300	30 500	213.4	147.4	194	239	1	4.67
1	335	505	34 500	51 500	178.8	86.8	—	267	1	10.5
1	300	455	30 500	46 500	239.0	147.0	—	267	1	10.8
1	495	770	50 500	78 500	196.3	92.3	—	304	1.5	18.1
3	495	770	50 500	78 500	196.3	92.3	197	304	1.5	17.7
1	450	700	45 500	71 000	261.8	157.8	—	304	1.5	18.4
1	665	1070	68 000	109 000	236.6	86.6	—	363	1.5	42.1
1	605	975	62 000	99 500	309.9	159.9	—	363	1.5	42.6
3	605	975	62 000	99 500	309.9	159.9	197	363	1.5	41.3
1	133	240	13 600	24 400	148.1	100.1	—	229	1	2.47
1	118	214	12 000	21 800	204.4	156.4	—	229	1	2.47
1	216	350	22 000	35 500	162.9	96.9	—	248	1	5.02
1	192	315	19 600	32 000	221.8	155.8	—	248	1	5.07
1	365	560	37 000	57 000	184.6	92.6	—	277	1	11.3
1	325	505	33 000	51 500	247.4	155.4	—	277	1	11.1
1	510	825	52 000	84 000	208.0	98.0	—	324	1.5	22.4
1	460	750	47 000	76 000	277.3	167.3	—	324	1.5	22.4
1	730	1200	74 500	122 000	248.3	92.3	—	382	2	47.5
3	730	1 200	74 500	122 000	248.3	92.3	208	382	2	46.1
1	670	1 100	68 000	112 000	325.5	169.5	—	382	2	47.2

Notes (1) The suffixes A, AA and B, BA represent contact angles of 30° and 40° respectively.

Notes (2) Refer to page **B 21**
(3) For bearings marked — in the column for d_b, d_b and r_b for shafts are d_a and r_a(max.) respectively.

SINGLE/MATCHED

Bore Diameter 200 – 240 mm

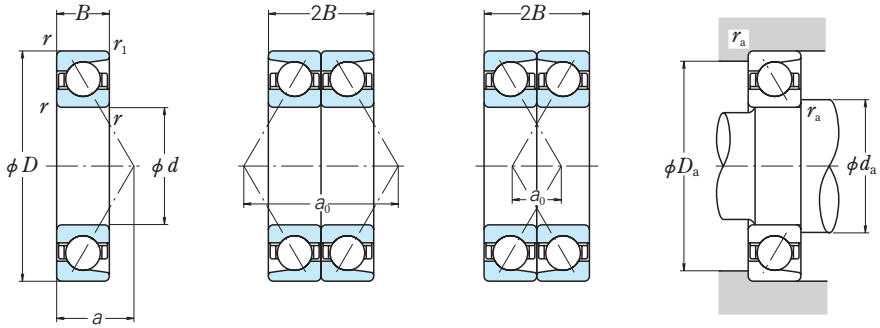

Single

Back-to-Back DB

Front-to-Front DF

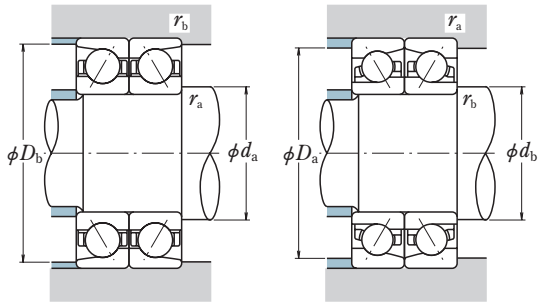

Dynamic Equivalent Load $P = XF_r + YF_a$

Contact Angle	e	Single				DB or DF			
		$F_a/F_r \leq e$		$F_a/F_r > e$		$F_a/F_r \leq e$		$F_a/F_r > e$	
		X	Y	X	Y	X	Y	X	Y
30°	0.80	1	0	0.39	0.76	1	0.78	0.63	1.24
40°	1.14	1	0	0.35	0.57	1	0.55	0.57	0.93

Static Equivalent Load $P_0 = X_0F_r + Y_0F_a$

Contact Angle	Single		DB or DF	
	X_0	Y_0	X_0	Y_0
30°	0.5	0.33	1	0.66
40°	0.5	0.26	1	0.52

Single mounting
When $F_r > 0.5F_r + Y_0F_a$ use $P_0 = F_r$

Boundary Dimensions (mm)					Basic Load Ratings (Single) (kN)		{kgf}		Eff. Load Centers (mm)	Abutment and Fillet Dimensions (mm)			Bearing Numbers (1)	
d	D	B	r min.	r_1 min.	C_r	C_{0r}	C_r	C_{0r}	a	d_a	D_a	r_a max.	Single	Matched
200	250	24	1.5	1	82.5	124	8 400	12 600	77.0	218	236	1.5	**7840A**	**DB DF**
	250	24	1.5	1	73.0	110	7 450	11 300	106.4	218	236	1.5	**7840B**	DB DF
	280	38	2.1	1.1	171	222	17 400	22 600	88.3	221	262	2	**7940A**	**DB DF**
	280	38	2.1	1.1	171	222	17 400	22 600	88.3	221	262	2	7940AA	DB DF
	280	38	2.1	1.1	152	199	15 500	20 300	119.7	221	262	2	**7940B**	**DB DF**
	280	38	2.1	1.1	152	199	15 500	20 300	119.7	221	262	2	**7940BA**	**DB DF**
	310	51	2.1	1.1	240	310	24 500	31 500	99.1	221	292	2	**7040A**	**DB DF**
	310	51	2.1	1.1	215	280	21 900	28 600	132.5	221	292	2	**7040B**	**DB DF**
	360	58	4	1.5	335	450	34 500	46 000	109.8	227	335	3	**7240A**	**DB DF**
	360	58	4	1.5	305	410	31 000	41 500	146.5	227	335	3	**7240B**	**DB DF**
	420	80	5	2	475	660	48 500	67 000	129.5	231	390	4	**7340A**	**DB DF**
	420	80	5	2	475	660	48 500	67 000	128.8	231	390	4	**7340AA**	**DB DF**
	420	80	5	2	430	600	44 000	61 500	170.1	231	390	4	**7340B**	**DB DF**
	420	80	5	2	430	600	44 000	61 500	170.1	231	390	4	**7340BA**	**DB DF**
220	270	24	1.5	1	85.0	135	8 650	13 800	82.7	239	255	1.5	**7844A**	**DB DF**
	270	24	1.5	1	75.5	120	7 700	12 300	114.8	239	255	1.5	7844B	DB DF
	300	38	2.1	1.1	172	233	17 500	23 700	94.1	242	282	2	**7944A**	**DB DF**
	300	38	2.1	1.1	153	208	15 600	21 300	128.1	242	282	2	**7944B**	**DB DF**
	340	56	3	1.1	283	395	28 900	40 000	108.8	244	319	2.5	**7044A**	**DB DF**
	340	56	3	1.1	253	355	25 800	36 000	145.5	244	319	2.5	**7044B**	**DB DF**
	400	65	4	1.5	410	585	41 500	59 500	122.0	248	374	3	**7244A**	**DB DF**
	400	65	4	1.5	370	530	37 500	54 000	162.6	248	374	3	**7244B**	**DB DF**
	460	88	5	2	495	725	50 500	74 000	142.1	252	429	4	**7344A**	**DB DF**
	460	88	5	2	450	665	46 000	67 500	186.6	252	429	4	**7344B**	**DB DF**
240	300	28	2	1	110	176	11 200	17 900	91.9	260	284	2	7848A	DB DF
	300	28	2	1	97.5	157	9 950	16 000	127.3	260	284	2	7848B	DB DF
	320	38	2.1	1.1	181	260	18 400	26 500	99.8	263	301	2	**7948A**	**DB DF**
	320	38	2.1	1.1	161	233	16 400	23 700	136.5	263	301	2	**7948B**	**DB DF**
	360	56	3	1.1	300	430	30 500	44 000	114.6	265	339	2.5	**7048A**	**DB DF**
	360	56	3	1.1	268	390	27 300	39 500	153.9	265	339	2.5	**7048B**	**DB DF**
	440	72	4	1.5	435	665	44 500	68 000	134.1	269	413	3	**7248A**	**DB DF**
	440	72	4	1.5	390	600	40 000	61 500	178.6	269	413	3	**7248B**	**DB DF**
	500	95	5	2	565	880	58 000	89 500	154.3	273	468	4	**7348A**	**DB DF**
	500	95	5	2	515	800	52 500	81 500	202.7	273	468	4	**7348B**	**DB DF**

Notes (1) The suffixes A, AA and B, BA represent contact angles of 30° and 40° respectively.

Figure(2)	Basic Load Ratings (Matched) (kN)		{kgf}		Load Center Spacings (mm) a_0		Abutment and Fillet Dimensions (mm)			Mass (kg)
	C_r	C_{0r}	C_r	C_{0r}	DB	DF	d_b(3)	D_b	r_b(3) max.	approx.
1	134	247	13 600	25 200	153.9	105.9	—	239	1	2.61
1	119	221	12 100	22 500	212.8	164.8	—	239	1	2.59
1	278	445	28 300	45 500	176.6	100.6	—	267	1	7.0
3	278	445	28 300	45 500	176.6	100.6	216	267	1	6.99
1	247	400	25 200	40 500	239.4	163.4	—	267	1	6.99
3	247	400	25 200	40 500	239.4	163.4	216	267	1	6.88
1	390	620	40 000	63 500	198.2	96.2	—	296	1	13.7
1	350	560	35 500	57 000	264.9	162.9	—	296	1	14.1
1	550	900	56 000	92 000	219.6	103.6	—	343	1.5	26.5
1	495	815	50 500	83 000	292.9	176.9	—	343	1.5	26.6
1	770	1 320	78 500	134 000	259.0	99.0	—	401	2	54.4
3	770	1 320	78 500	134 000	257.6	97.6	219	401	2	51.5
1	700	1 200	71 500	123 000	340.1	180.1	—	401	2	55.3
3	700	1 200	71 500	123 000	340.1	180.1	219	401	2	52.4
1	138	270	14 100	27 500	165.5	117.5	—	258	1	2.84
1	122	241	12 500	24 600	229.6	181.6	—	258	1	2.82
1	279	465	28 500	47 500	188.1	112.1	—	287	1	7.6
1	248	415	25 300	42 500	256.2	180.2	—	287	1	7.59
1	460	785	47 000	80 000	217.6	105.6	—	326	1	18.5
1	410	710	42 000	72 500	290.9	178.9	—	326	1	18.4
1	665	1 170	67 500	119 000	244.0	114.0	—	383	1.5	36.5
1	600	1 060	61 000	108 000	325.1	195.1	—	383	1.5	36.1
1	805	1 450	82 000	148 000	284.3	108.3	—	441	2	73.2
1	730	1 330	74 500	135 000	373.3	197.3	—	441	2	72.9
1	179	350	18 200	36 000	183.9	127.9	—	288	1	4.35
1	159	315	16 200	32 000	254.6	198.6	—	288	1	4.35
1	293	520	29 900	53 000	199.7	123.7	—	306	1	8.37
1	261	465	26 600	47 500	272.9	196.9	—	306	1	8.43
1	485	865	49 500	88 000	229.2	117.2	—	345	1	19.3
1	435	780	44 500	79 500	307.7	195.7	—	345	1	19.9
1	705	1 330	72 000	136 000	268.3	124.3	—	422	1.5	50.9
1	635	1 200	64 500	123 000	357.3	213.3	—	422	1.5	50.3
1	920	1 760	94 000	179 000	308.6	118.6	—	480	2	92.5
1	835	1 600	85 500	163 000	405.5	215.5	—	480	2	91.9

Notes (2) Refer to page **B 21**
(3) For bearings marked — in the column for d_b, d_b and r_b for shafts are d_a and r_a(max.) respectively.

SINGLE/MATCHED

Bore Diameter 260 – 320 mm

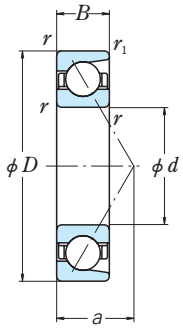

Single

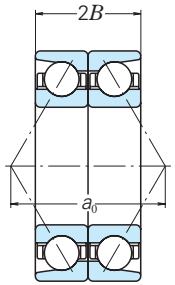

Back-to-Back
DB

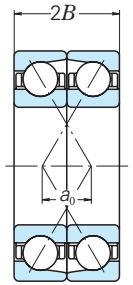

Front-to-Front
DF

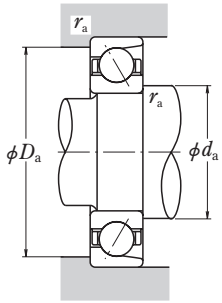

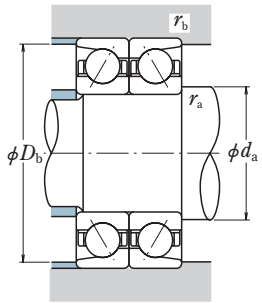

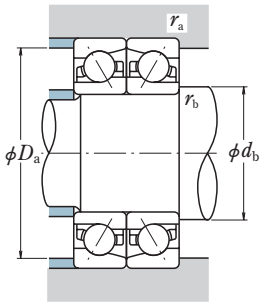

Dynamic Equivalent Load $P = XF_r + YF_a$

Contact Angle	e	Single				DB or DF			
		$F_a/F_r \leq e$		$F_a/F_r > e$		$F_a/F_r \leq e$		$F_a/F_r > e$	
		X	Y	X	Y	X	Y	X	Y
30°	0.80	1	0	0.39	0.76	1	0.78	0.63	1.24
40°	1.14	1	0	0.35	0.57	1	0.55	0.57	0.93

Static Equivalent Load $P_0 = X_0 F_r + Y_0 F_a$

Contact Angle	Single		DB or DF	
	X_0	Y_0	X_0	Y_0
30°	0.5	0.33	1	0.66
40°	0.5	0.26	1	0.52

Single mounting
When $F_r > 0.5F_r + Y_0F_a$ use $P_0 = F_r$

Boundary Dimensions (mm)					Basic Load Ratings (Single) (kN)		{kgf}		Eff. Load Centers (mm)	Abutment and Fillet Dimensions (mm)			Bearing Numbers (1)	
d	D	B	r min.	r_1 min.	C_r	C_{0r}	C_r	C_{0r}	a	d_a	D_a	r_a max.	Single	Matched
260	320	28	2	1	114	191	11 600	19 400	97.7	281	303	2	**7852A**	**DB DF**
	320	28	2	1	101	170	10 300	17 300	135.7	281	303	2	7852B	DB DF
	360	46	2.1	1.1	231	330	23 600	33 500	112.5	283	341	2	**7952A**	**DB DF**
	360	46	2.1	1.1	206	297	21 000	30 500	153.1	283	341	2	7952B	DB DF
	400	65	4	1.5	345	525	35 500	53 500	127.8	290	374	3	**7052A**	**DB DF**
	400	65	4	1.5	310	475	31 500	48 500	171.0	290	374	3	**7052B**	**DB DF**
	480	80	5	2	480	750	48 500	76 500	146.8	294	448	4	**7252A**	**DB DF**
	480	80	5	2	430	680	44 000	69 000	195.2	294	448	4	7252B	DB DF
270	320	24	1.5	0.6	85.0	158	8 650	16 100	97.2	291	304	1.5	**BA270-1**	**DB —**
	370	46	2.1	1.1	241	360	24 600	36 500	115.4	294	350	2	**BA270-2**	**— DF**
280	350	33	2	1	144	232	14 700	23 700	107.4	302	333	2	**7856A**	**DB DF**
	350	33	2	1	128	207	13 000	21 100	148.7	302	333	2	7856B	DB DF
	380	46	2.1	1.1	245	375	25 000	38 000	118.3	304	360	2	**7956A**	**DB DF**
	380	46	2.1	1.1	218	335	22 300	34 000	161.5	304	360	2	7956B	DB DF
	420	65	4	1.5	345	530	35 000	54 000	133.5	310	393	3	**7056A**	**DB DF**
	420	65	4	1.5	325	520	33 000	53 000	179.3	310	393	3	**7056B**	**DB DF**
	500	80	5	2	510	845	52 000	86 000	152.6	315	468	4	7256A	DB DF
	500	80	5	2	460	765	47 000	78 000	203.6	315	468	4	**7256B**	**DB DF**
300	380	38	2.1	1.1	183	290	18 600	29 600	117.1	325	360	2	**7860A**	**DB DF**
	380	38	2.1	1.1	182	285	18 500	29 100	161.6	325	360	2	**7860B**	**DB DF**
	420	56	3	1.1	315	500	32 000	51 000	131.9	327	397	2.5	**7960A**	**DB DF**
	420	56	3	1.1	279	450	28 400	46 000	179.0	327	397	2.5	**7960B**	**DB DF**
	420	56	3	1.1	279	450	28 400	46 000	179.0	327	397	2.5	7960BA	DB DF
	460	74	4	1.5	385	605	39 000	61 500	146.7	331	433	3	**7060A**	**DB DF**
	460	74	4	1.5	345	545	35 000	55 000	196.4	331	433	3	7060B	DB DF
320	400	38	2.1	1.1	190	315	19 400	32 500	122.9	346	380	2	**7864A**	**DB DF**
	400	38	2.1	1.1	169	283	17 200	28 900	170.0	346	380	2	7864B	DB DF
	440	56	3	1.5	315	525	32 500	53 500	137.7	348	417	2.5	**7964A**	**DB DF**
	440	56	3	1.1	282	470	28 800	48 000	187.4	348	417	2.5	**7964B**	**DB DF**
	480	74	4	1.5	465	795	47 500	81 000	152.5	352	452	3	**7064A**	**DB DF**
	480	74	4	1.5	415	715	42 500	73 000	204.8	352	452	3	7064B	DB DF
	580	92	5	2	635	1 120	64 500	114 000	175.9	356	546	4	**7264A**	**DB DF**
	580	92	5	2	590	1 070	60 500	109 000	234.8	356	546	4	**7264B**	**DB DF**

Notes (1) The suffixes A, AA and B, BA represent contact angles of 30° and 40° respectively.

Fig-ure(2)	Basic Load Ratings (Matched) (kN)		{kgf}		Load Center Spacings (mm) a_0		Abutment and Fillet Dimensions (mm)			Mass (kg)
	C_r	C_{0r}	C_r	C_{0r}	DB	DF	d_b(3)	D_b	r_b(3) max.	approx.
1	185	380	18 800	39 000	195.4	139.4	—	307	1	4.69
1	164	340	16 700	34 500	271.3	215.3	—	307	1	4.67
1	375	660	38500	67 500	225.0	133.0	—	345	1	14.3
1	335	595	34 000	60 500	306.1	214.1	—	345	1	14.2
1	565	1 050	57 500	107 000	255.5	125.2	—	383	1.5	28.7
1	505	945	51 500	96 500	341.9	211.9	—	383	1.5	29
1	775	1 500	79 000	153 000	293.6	133.6	—	460	2	65.3
1	700	1 360	71 000	138 000	390.5	230.5	—	460	2	65.5
1	138	315	14 100	32 000	194.3	—	—	308	0.6	3.45
2	390	715	40000	73 000	—	138.8	—	—	—	14.7
1	234	465	23 900	47 500	214.9	148.9	—	337	1	7.08
1	208	415	21 200	42 500	297.3	231.3	—	337	1	7.03
1	400	745	40 500	76 000	236.5	144.6	—	365	1	15
1	355	670	36 000	68 000	322.9	230.9	—	365	1	15
1	560	1 060	57 000	108 000	267.1	137.1	—	402	1.5	31.2
1	530	1 040	54 000	106 000	358.7	228.7	—	402	1.5	31
1	830	1 690	84 500	172 000	305.2	145.2	—	480	2	69
1	745	1 530	76 000	156 000	407.2	247.2	—	480	2	70.1
1	297	580	30 500	59 000	234.3	158.3	—	365	1	10.1
1	295	570	30 000	58 000	323.3	247.3	—	365	1	9.91
1	510	1 000	52 000	102 000	263.8	151.8	—	404	1	24.4
1	455	900	46 000	92 000	358.1	246.1	—	404	1	23.7
3	455	900	46 000	92 000	358.1	246.1	320	404	1	23.6
1	625	1 210	64 000	123 000	293.4	145.4	—	441	1.5	44.9
1	560	1 090	57 000	111 000	392.9	244.9	—	441	1.5	44.5
1	310	635	31 500	64 500	245.8	169.8	—	385	1	10.5
1	274	565	28 000	58 000	340.1	264.1	—	385	1	10.5
1	515	1 050	52 500	107 000	275.4	163.4	—	422	1.5	25.9
1	460	940	46 500	96 000	374.9	262.9	—	424	1	25.3
1	755	1 590	77 000	162 000	304.9	156.9	—	461	1.5	47.2
1	675	1 430	69 000	146 000	409.6	261.6	—	461	1.5	46.9
1	1030	2 230	105 000	228 000	351.8	167.8	—	558	2	110
1	960	2 140	98 000	219 000	469.6	285.6	—	558	2	109

Notes (2) Refer to page **B 21**
(3) For bearings marked — in the column for d_b, d_b and r_b for shafts are d_a and r_a(max.) respectively.

SINGLE/MATCHED

Bore Diameter 340 – 470 mm

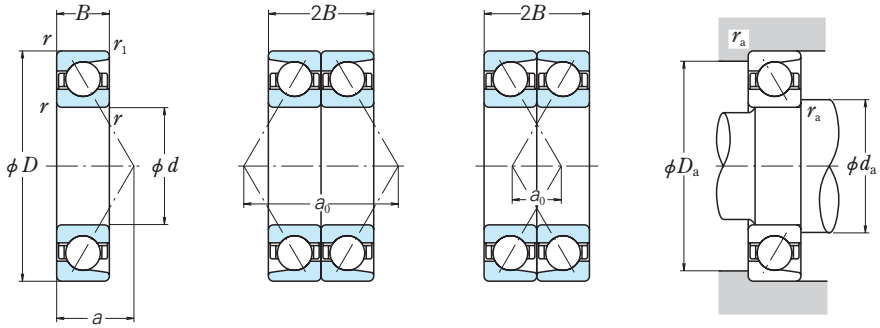

Single

Back-to-Back
DB

Front-to-Front
DF

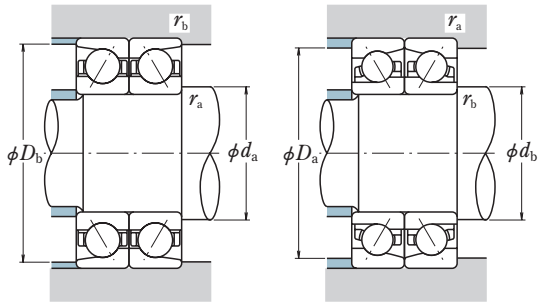

Dynamic Equivalent Load $P = XF_r + YF_a$

Contact Angle	e	Single				DB or DF			
		$F_a/F_r \leq e$		$F_a/F_r > e$		$F_a/F_r \leq e$		$F_a/F_r > e$	
		X	Y	X	Y	X	Y	X	Y
30°	0.80	1	0	0.39	0.76	1	0.78	0.63	1.24
40°	1.14	1	0	0.35	0.57	1	0.55	0.57	0.93

Static Equivalent Load $P_0 = X_0 F_r + Y_0 F_a$

Contact Angle	Single		DB or DF	
	X_0	Y_0	X_0	Y_0
30°	0.5	0.33	1	0.66
40°	0.5	0.26	1	0.52

Single mounting
When $F_r > 0.5F_r + Y_0F_a$ use $P_0 = F_r$

Boundary Dimensions (mm)					Basic Load Ratings (Single) (kN)		{kgf}		Eff. Load Centers (mm)	Abutment and Fillet Dimensions (mm)			Bearing Numbers (1)	
d	D	B	r min.	r_1 min.	C_r	C_{0r}	C_r	C_{0r}	a	d_a	D_a	r_a max.	Single	Matched
340	420	38	2.1	1.1	191	325	19 500	33 500	128.7	367	399	2	7868A	DB DF
	420	38	2.1	1.1	169	292	17 300	29 800	178.4	367	399	2	**7868B**	**DB DF**
	460	56	3	1.1	330	565	33 500	58 000	143.5	369	437	2.5	**7968A**	**DB DF**
	460	56	3	1.1	292	510	29 800	52 000	195.8	369	437	2.5	**7968B**	**DB DF**
	520	82	5	2	520	905	53 000	92 500	165.1	377	488	4	**7068A**	**DB DF**
	520	82	5	2	465	820	47 500	83 500	221.4	377	488	4	7068B	DB DF
360	440	38	2.1	1.1	219	380	22 300	39 000	134.5	387	419	2	7872A	DB DF
	440	38	2.1	1.1	194	340	19 800	35 000	186.8	387	419	2	**7872B**	**DB DF**
	480	56	3	1.1	330	590	34 000	60 000	149.2	389	456	2.5	7972A	DB DF
	480	56	3	1.1	295	530	30 000	54 000	204.2	389	456	2.5	**7972B**	**DB DF**
	540	82	5	2	530	960	54 500	98 000	171.0	398	507	4	**7072A**	**DB DF**
	540	82	5	2	475	865	48 500	88 000	229.9	398	507	4	7072B	DB DF
	650	95	6	3	670	1 280	68 500	130 000	193.3	404	609	5	**7272A**	**DB DF**
	650	95	6	3	600	1 150	61 500	118 000	259.4	404	609	5	7272B	DB DF
380	520	65	4	1.5	390	725	40 000	74 000	162.4	414	491	3	**7976A**	**DB DF**
	520	65	4	1.5	345	650	35 500	66 000	221.3	414	491	3	**7976B**	**DB DF**
	560	82	5	2	495	875	50 500	89 000	176.7	419	527	4	**7076A**	**DB DF**
	560	82	5	2	440	790	45 000	80 500	238.2	419	527	4	**7076B**	**DB DF**
381	540	82	5	2	420	750	43 000	76 500	173.8	420	507	4	**BA381-1**	**DB —**
400	540	65	4	1.5	395	750	40 500	76 500	168.2	435	511	3	**7980A**	**DB DF**
	540	65	4	1.5	350	675	36 000	68 500	229.7	435	511	3	7980B	DB DF
	600	90	5	2	555	1 010	57 000	103 000	189.3	439	566	4	**7080A**	**DB DF**
	600	90	5	2	500	915	51 000	93 500	254.8	439	566	4	7080B	DB DF
420	560	53	3	1.5	370	735	38 000	75 000	168.0	452	535	2.5	**BA420-1**	**DB —**
	560	65	4	1.5	410	805	41 500	82 000	174.0	456	531	3	**7984A**	**DB DF**
	560	65	4	1.5	365	720	37 000	73 500	238.1	456	531	3	**7984B**	**DB DF**
	620	90	5	2	610	1 190	62 500	122 000	195.1	460	586	4	**7084A**	**DB DF**
	620	90	5	2	550	1 070	56 000	110 000	263.2	460	586	4	**7084B**	**DB DF**
	760	109	7.5	4	775	1 620	79 000	165 000	224.8	475	709	6	**7284A**	**DB DF**
	760	109	7.5	4	695	1 460	70 500	149 000	302.0	475	709	6	**7284B**	**DB DF**
460	540	40	2.1	1.1	198	430	20 200	44 000	164.3	491	517	2	**BA460-1**	**DB —**
470	570	50	2.1	1.1	310	645	31 500	65 500	175.1	502	546	2	**BA470-1**	**DB —**

Notes (1) The suffixes A, AA and B, BA represent contact angles of 30° and 40° respectively.

Figure(2)	Basic Load Ratings (Matched) (kN)		{kgf}		Load Center Spacings (mm) a_0		Abutment and Fillet Dimensions (mm)			Mass (kg)
	C_r	C_{0r}	C_r	C_{0r}	DB	DF	d_b(3)	D_b	r_b(3) max.	approx.
1	310	655	31 500	67 000	257.4	181.4	—	404	1	11.1
1	275	585	28 000	59 500	356.9	280.9	—	404	1	11.2
1	535	1 130	54 500	116 000	286.9	174.9	—	443	1	27.2
1	475	1 020	48 500	104 000	391.6	279.6	—	443	1	27.2
1	845	1 810	86 000	185 000	330.3	166.3	—	499	2	60.5
1	755	1 640	77 000	167 000	442.8	278.8	—	499	2	61.8
1	355	765	36 500	78 000	268.9	192.9	—	424	1	11.7
1	315	680	32 000	69 500	373.6	297.6	—	424	1	11.7
1	540	1 180	55 000	120 000	298.5	186.5	—	463	1	27.9
1	480	1 060	49 000	108 000	408.4	296.4	—	463	1	27.9
1	865	1 920	88 000	196 000	342.0	178.0	—	519	2	62.4
1	775	1 730	79 000	176 000	459.8	295.8	—	519	2	63.6
1	1 090	2 550	111 000	260 000	386.6	196.6	—	623	2.5	144
1	975	2 310	99 500	235 000	518.7	328.7	—	623	2.5	140
1	635	1 450	64 500	148 000	324.8	194.8	—	500	1.5	39.8
1	565	1 300	57 500	132 000	442.6	312.6	—	500	1.5	40.7
1	800	1 750	82 000	178 000	353.4	189.4	—	539	2	67.9
1	720	1 580	73 000	161 000	476.4	312.4	—	539	2	66.7
1	680	1 500	69 500	153 000	347.6	—	—	519	2	114
1	640	1 500	65 500	153 000	336.4	206.4	—	520	1.5	42.1
1	570	1 350	58 000	137 000	459.4	329.4	—	520	1.5	42.3
1	905	2 030	92 000	207 000	378.7	198.7	—	578	2	85.9
1	810	1 830	82 500	187 000	509.5	329.5	—	578	2	86.2
2	605	1 470	61 500	150 000	335.9	—	—	539	1.5	36.2
1	665	1 610	67 500	164 000	347.9	217.9	—	539	1.5	44
1	590	1 440	60 000	147 000	476.2	346.2	—	539	1.5	44.4
1	995	2 380	101 000	243 000	390.2	210.2	—	597	2	90.3
1	890	2 150	91 000	219 000	526.3	346.3	—	597	2	90.6
1	1 260	3 250	128 000	330 000	449.6	231.6	—	727	3	228
1	1 130	2 920	115 000	298 000	604.1	386.1	—	727	3	220
1	320	860	33 000	87 500	328.7	—	—	522	1	15.8
1	505	1 290	51 500	131 000	350.2	—	—	551	1	25.3

Notes (2) Refer to page **B 21**
(3) For bearings marked — in the column for d_b, d_b and r_b for shafts are d_a and r_a(max.) respectively.

SINGLE/MATCHED

Bore Diameter 500 – 775 mm

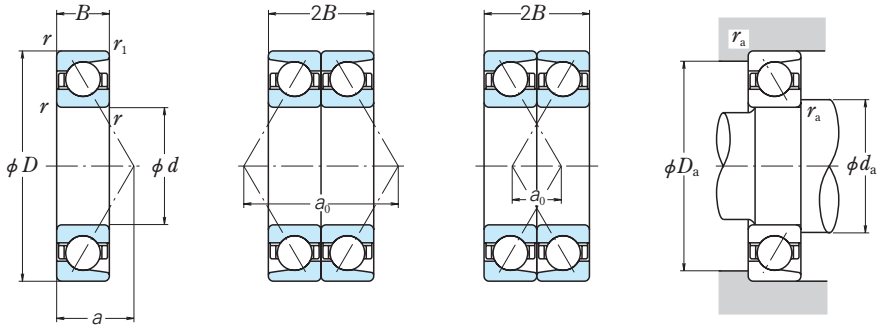

Single | Back-to-Back DB | Front-to-Front DF

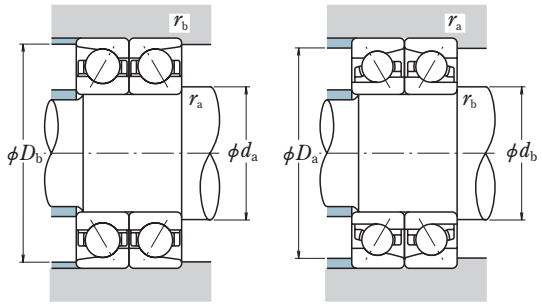

Dynamic Equivalent Load $P = XF_r + YF_a$

Contact Angle	e	Single				DB or DF			
		$F_a/F_r \leqq e$		$F_a/F_r > e$		$F_a/F_r \leqq e$		$F_a/F_r > e$	
		X	Y	X	Y	X	Y	X	Y
30°	0.80	1	0	0.39	0.76	1	0.78	0.63	1.24
40°	1.14	1	0	0.35	0.57	1	0.55	0.57	0.93

Static Equivalent Load $P_0 = X_0F_r + Y_0F_a$

Contact Angle	Single		DB or DF	
	X_0	Y_0	X_0	Y_0
30°	0.5	0.33	1	0.66
40°	0.5	0.26	1	0.52

Single mounting When $F_r > 0.5F_r + Y_0F_a$ use $P_0 = F_r$

Boundary Dimensions (mm)					Basic Load Ratings (Single) (kN)		{kgf}		Eff. Load Centers (mm)	Abutment and Fillet Dimensions (mm)			Bearing Numbers (1)	
d	D	B	r min.	r_1 min.	C_r	C_{0r}	C_r	C_{0r}	a	d_a	D_a	r_a max.	Single	Matched
500	620	42	2.1	1.1	232	490	23 600	50 000	182.7	533	595	2	**BA500-1**	**DB** —
	620	52	2.1	1.1	310	665	31 500	67 500	187.7	533	595	2	**BA500-3**	**DB** —
540	660	56	3	1.1	390	895	39 500	91 000	201.2	577	633	2.5	**BA540-2**	**DB** —
760	860	50	4	1.5	256	735	26 100	75 000	258.8	810	825	3	**BA760-1**	**DB** —
775	1 080	90	6	3	590	1 700	60 500	174 000	312.7	836	1030	5	**BA775-1**	**DB** —

Note (1) The suffixes A, AA and B, BA represent contact angles of 30° and 40° respectively.

Fig-ure(2)	Basic Load Ratings (Matched) (kN)		{kgf}		Load Center Spacings (mm) a_0		Abutment and Fillet Dimensions (mm)			Mass (kg)
	C_r	C_{0r}	C_r	C_{0r}	DB	DF	d_b(3)	D_b	r_b(3) max.	approx.
1	375	980	38 500	100 000	365.3	—	—	600	1	29.2
1	505	1 330	51 500	135 000	375.3	—	—	600	1	35.1
1	635	1 790	64 500	182 000	402.4	—	—	639	1	78.2
1	415	1 470	42 500	150 000	517.7	—	—	833	1.5	40.1
1	960	3 400	98 000	345 000	625.5	—	—	1044	2.5	274

Notes (2) Refer to page **B 21**
(3) For bearings marked — in the column for d_b, d_b and r_b for shafts are d_a and r_a(max.) respectively.

Bore Diameter 100 – 280 mm

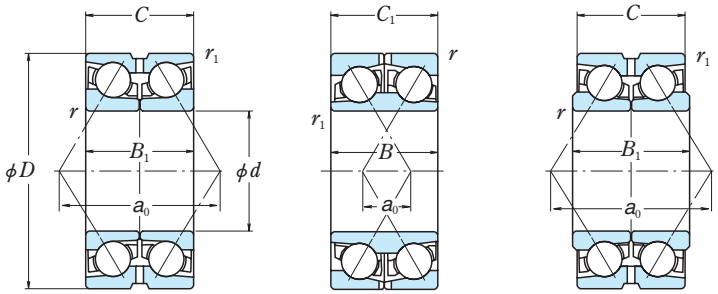

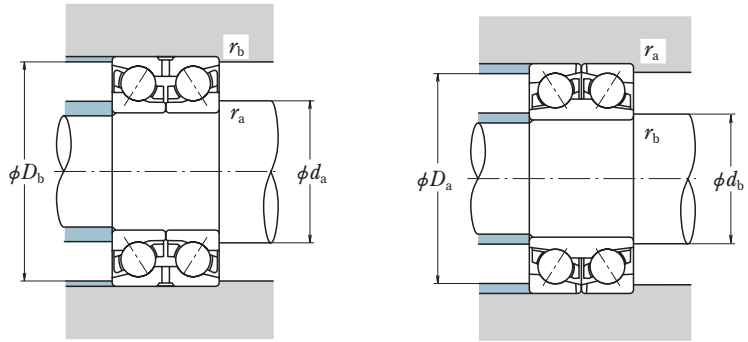

Boundary Dimensions (mm)						Basic Load Ratings (kN)		{kgf}	
d	D	B,B_1	C,C_1	r min.	r_1 min.	C_r	C_{0r}	C_r	C_{0r}
100	170	60.3	60.3	2	2	136	162	13 900	16 500
120	180	56	56	2	1	148	192	15 100	19 600
	190	66	66	2	2	187	236	19 000	24 100
140	209.5	66	66	2	2	174	239	17 700	24 400
	210	66	66	2	2	174	239	17 700	24 400
150	225	73	73	2.1	2.1	199	277	20 300	28 200
	230	70	70	2.1	2.1	221	300	22 500	30 500
	240	84	84	1.5	1	258	345	26 300	35 000
160	215	56	50	1.1	1.1	128	213	13 100	21 800
	239.5	76	76	2	2	225	320	23 000	32 500
	240	76	76	2	2	225	320	23 000	32 500
170	259.5	84	84	2.1	2.1	270	385	27 600	39 500
	260	84	84	2.1	2.1	270	385	27 600	39 500
175	280	92	92	2.1	2.1	293	435	29 900	44 000
180	250	66	66	2	2	190	300	19 300	30 500
	250	70	70	2	2	190	300	19 300	30 500
	259.5	66	66	2	2	262	390	26 700	40 000
	280	92	92	2.1	1.1	300	455	30 500	46 500
190	255	66	58	1.1	1.1	179	305	18 200	31 500
	269.5	66	66	2	2	267	405	27 200	41 500
	280	96	90	2.1	1.1	282	430	28 700	43 500
	290	92	92	2.1	1.1	325	505	33 000	51 500
200	279.5	76	76	2.1	1.1	247	400	25 200	40 500
	280	76	76	2	1.1	247	400	25 200	40 500
	280	80	80	2.1	1.1	247	400	25 200	40 500
	289.5	76	76	2.1	2.1	299	465	30 500	47 500
	309.5	96	96	2.1	2.1	355	560	36 000	57 000
	310	96	96	2.1	2.1	355	560	36 000	57 000
220	300	76	70	1	1.5	231	405	23 500	41 500
	309.5	76	76	2	2	335	545	34 000	56 000
230	329.5	80	80	2.1	2.1	360	615	37 000	62 500
250	340	76	70	1.5	1.5	274	515	27 900	52 500
260	369.5	92	92	2.1	2.1	415	770	42 000	78 500
	400	130	130	4	1.5	505	945	51 500	96 500
280	389.5	92	92	2.1	2.1	380	740	38 500	75 500

Bearing Numbers (1)	Figure(2)	Load Center Spacings (mm) a_0	Abutment and Fillet Dimensions (mm) d_a,d_b(3)	D_a,D_b(4)	r_a max.	r_b max.	Mass (kg) approx.
100BDZ1701E4	5	144.3	115	156	2	2	5.64
120BDZ10E4	5	153.9	136	170	2	1	4.99
∗**120BDZ1901E4**	5	122.5	136	176	2	2	7.09
140BDZ10XE4	5	179.8	156	195	2	2	7.93
140BDZ10E4	5	179.8	156	196	2	2	8.0
150BDZ2201E4	5	193.8	169	208	2	2	10.2
150BDZ2301E4	5	194.4	169	213	2	2	10.5
150BDY2401E	6	121.6	166	229	1.5	1	14.6
160BDZ2101E4	7	182.3	174	203	1	1	5.41
160BDZ10XE4	5	205.8	177	224	2	2	11.9
160BDY10E	6	129.8	177	225	2	2	12
170BDZ10XE4	5	222.4	190	242	2	2	16
170BDY10E	6	138.4	190	243	2	2	16.1
175BDY2801E	6	144.9	195	262	2	2	21.7
180BDY09E	6	147.4	198	235	2	2	9.83
180BDY2501E	6	145.4	198	235	2	2	10.4
∗**180BDZ2501E4**	5	160.0	198	244	2	2	11.4
180BDY10E	6	147.0	200	267	2	1	20.9
190BDZ2501E4	7	215.2	205	243	1	1	8.69
∗**190BDZ2601E4**	5	165.8	208	254	2	2	11.9
190BDZ2801E4	7	242.2	211	267	2	1	19.5
190BDY10E	6	155.4	211	277	2	1	21.9
200BDZ09XE4	5	239.4	221	267	2	1	14.3
200BDY09E	6	163.4	219	267	2	1	14.4
200BDY2801E	6	161.4	221	267	2	1	15.2
∗**200BDZ2801E4**	5	179.5	221	271	2	2	16.5
200BDZ3001E4	5	262.0	221	291	2	2	26.5
200BDY3101E	6	166.0	221	292	2	2	26.6
220BDZ09E4	7	252.5	236	285	1	1.5	14.6
∗220BDZ3001E4	5	191.0	240	293	2	2	17.8
∗230BDZ3201E4	5	201.7	252	311	2	2	22
250BDZ3401E4	7	282.5	270	324	1.5	1.5	19.2
∗260BDZ3601E4	5	227.6	283	350	2	2	31.4
260BDY10E	6	211.9	290	383	3	1.5	59.4
280BDZ3801E4	5	327.1	304	369	2	2	33.4

Note (1) ∗ Bearings marked ∗ represent contact angle 30°, and other bearings are 40°.
(2) Refer to page **B 22**.
(3) d_a for Figures 5 and 7. d_b for Figure 6.
(4) D_b for Figures 5 and 7. D_a for Figure 6.

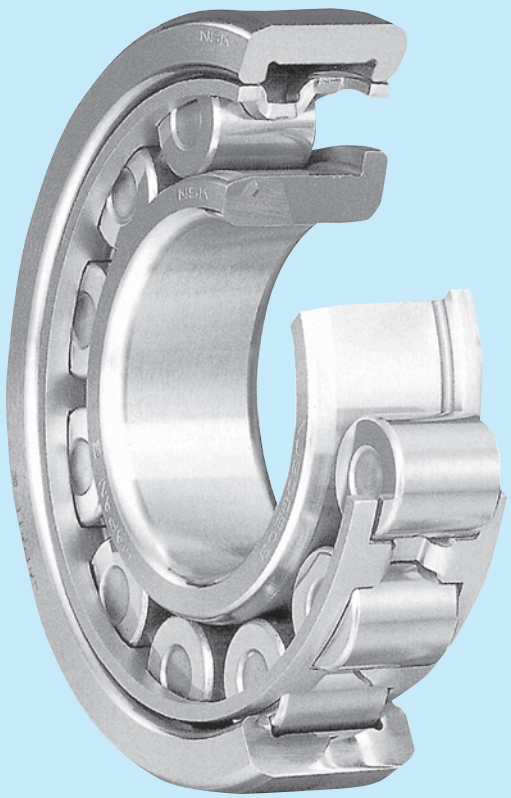

CYLINDRICAL ROLLER BEARINGS

Single-Row Cylindrical Roller Bearings Bore Diameter 100 – 1 320mm ····· B48

Double-Row Cylindrical Roller Bearings Bore Diameter 100 – 850mm ····· B66

Design, Types, and Features

Depending on the existence of ribs on their rings, cylindrical roller bearings are classified into the following types.

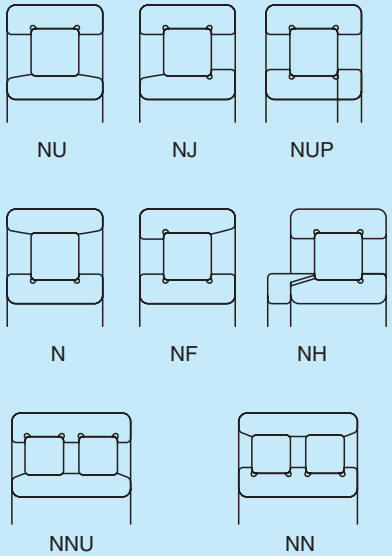

Types NU, N, NNU, and NN are suitable as free-end bearings. Types NJ and NF can sustain limited axial loads in one direction. Types NH and NUP can be used as fixed-end bearings. Loose rib for NUP inner ring should be mounted so that its marked side faces outward.

If high load capacity is required, Series E cylindrical roller bearings, which have larger rollers and more rollers than usual, are also available.

For standard cylindrical roller bearings, either pressed, machined or pintype cages are used.

Regarding four-row cylindrical roller bearings, refer to page B388.

Tolerances and Running Accuracy ····· Table 2.2 (Pages A16 to A19)

Single-Row
Cylindrical Roller Bearings

Double-Row
Cylindrical Roller Bearings

Table 1 Tolerances for Roller Inscribed Circle Diameter F_w and Roller Circumscribed Circle Diameter E_w of Cylindrical Roller Bearings Having Interchangeable Rings

Units : μm

Nominal Bore Diameter d (mm)		Tolerances for F_w of types NU, NJ, NUP, NH, and NNU ΔF_w		Tolerances for E_w of types N, NF, and NN ΔE_w	
over	incl	high	low	high	low
50	**120**	+20	0	0	−20
120	**200**	+25	0	0	−25
200	**250**	+30	0	0	−30
250	**315**	+35	0	0	−35
315	**400**	+40	0	0	−40
400	**500**	+45	0	0	−45
500	**630**	+45	0	0	−45
630	**800**	+50	0	0	−50
800	**1 000**	+60	0	0	−60
1 000	**1 250**	+70	0	0	−70
1 250	**1 600**	+80	0	0	−80

Remarks The deviation surrounded with a frame in table is **NSK** specification.

Recommended Fits ····· Table 3.2 (Page A35)
Table 3.4 (Page A36)

Single-Row
Cylindrical Roller Bearings

Double-Row
Cylindrical Roller Bearings

Internal Clearances ····· Table 3.11 (Page A41)

Single-Row
Cylindrical Roller Bearings

Double-Row
Cylindrical Roller Bearings

Permissible Misaligument

The permissible misalignment of cylindrical roller bearings varies depending on the type and internal specifications, but under normal loads, the angles are approximately as follows:

Width series 0 or 1 ····· 0.0012 radian (4')
Width series 2 ····· 0.0006 radian (2')

For double-row cylindrical roller bearings, nearly no misalignment is allowed.

Precautions for Use of Cylindrical Roller Bearings

If the load on cylindrical roller bearings becomes too small during operation, slippage between the rollers and raceways occurs, which may result in smearing. Especially with large bearings since the weight of the rollers and cage is high.

If very small bearing loads are expected, please consult with NSK for selection of the bearings.

Bore Diameter 100 – 110 mm

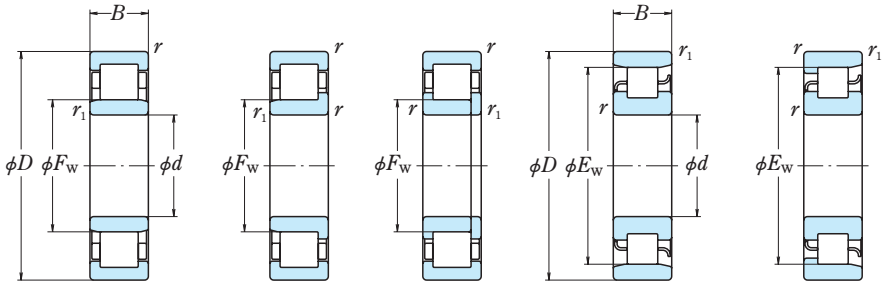

NU NJ NUP N NF

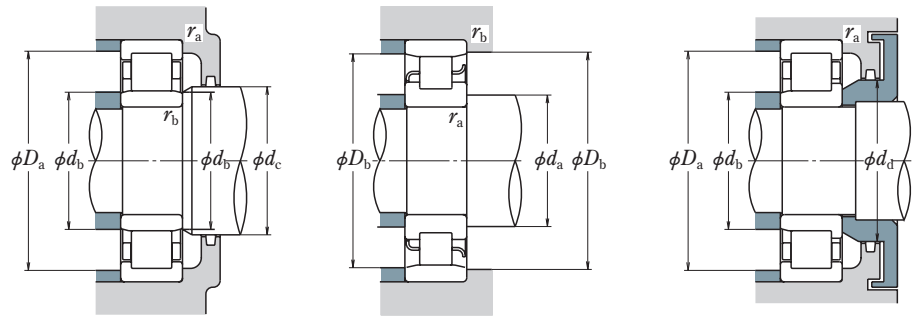

Bearing Numbers	Boundary Dimensions (mm) d	D	B	r min.	r_1 min.	F_W	E_W	Basic Load Ratings (kN) C_r	C_{0r}	Abutment and Fillet Dimensions (mm) d_a	d_b (1)	d_c min.	d_d min.	D_a	D_b	r_a max.	r_b max.	Mass (kg) approx.
	100	125	19	1	0.6	106.5	118.5	58.5	111									
NU3820		150	24	1.5	1.1	113	137	93	126	108	105	—	—	117	119	1	0.6	0.54
NU1020		180	34	2.1	2.1	—	160	183	217	108	111	116	—	142	139	1.5	1	1.47
N 220										111	—	—	—	—	163	2	2	3.36
		180	34	2.1	2.1	119	—	249	305									
NU 220 EM		180	46	2.1	2.1	119	—	335	445	111	116	122	130	169	—	2	2	3.81
NU2220 EM		180	60.3	2.1	2.1	120	—	325	460	111	116	122	130	169	—	2	2	4.69
NU3220										—	114	—	—	165	—	2	2	6.83
		215	47	3	3	—	185.5	299	335									
N 320		215	47	3	3	129.5	—	299	335	113	—	—	—	—	190	2.5	2.5	7.59
NU 320		215	47	3	3	127.5	—	380	425	113	126	132	143	202	—	2.5	2.5	7.69
NU 320 EM										113	124	132	143	202	—	2.5	2.5	8.63
		215	73	3	3	127.5	—	570	715									
NU2320 EM		215	82.6	3	3	129.5	—	560	760	113	124	132	143	202	—	2.5	2.5	11.8
NU3320		250	58	4	4	139	211	450	500	—	116	—	—	197	—	2.5	2.5	15.5
NU 420										116	135	141	156	234	215	3	3	15.5
	105	160	26	2	1.1	119.5	145.5	109	149									
NU1021		190	36	2.1	2.1	—	168.8	201	241	114	118	122	—	151	147	2	1	1.83
N 221		190	36	2.1	2.1	125	—	262	310	116	—	—	—	—	172	2	2	4.0
NU 221 EM										116	121	129	137	179	—	2	2	4.58
		190	65.1	2.1	2.1	126.8	—	360	505									
NU3221		225	49	3	3	—	195	320	360	—	119	—	—	175	—	2	2	8.32
N 321		225	49	3	3	133	—	425	480	118	—	—	—	—	199	2.5	2.5	8.69
NU 321 EM		260	60	4	4	144.5	220.5	495	555	118	131	137	149	212	—	2.5	2.5	9.84
NU 421										121	141	147	162	244	225	3	3	17.3
	110	150	20	1.1	1	120	140	70.5	102									
NU1922		170	28	2	1.1	125	155	131	174	119	118	—	—	140	142	1	1	1.03
NU1022		200	38	2.1	2.1	—	178.5	229	272	119	123	128	—	161	157	2	1	2.27
N 222										121	—	—	—	—	182	2	2	4.64
		200	38	2.1	2.1	132.5	—	293	365									
NU 222 EM		200	53	2.1	2.1	132.5	—	385	515	121	129	135	144	189	—	2	2	5.37
NU2222 EM		200	69.8	2.1	2.1	132.5	178.5	425	605	121	129	135	144	189	—	2	2	7.65
NU3222										124	124	—	—	185	185	2	2	9.85
		240	50	3	3	—	207	360	400									
N 322		240	50	3	3	143	—	450	525	123	—	—	—	—	211	2.5	2.5	10.3
NU 322 EM		240	80	3	3	143	—	675	880	123	139	145	158	227	—	2.5	2.5	11.8
NU2322 EM										123	139	145	158	227	—	2.5	2.5	18.9
		240	92.1	3	3	143	207	675	910									
NU3322		280	65	4	4	155	—	550	620	126	126	—	—	222	222	2.5	2.5	21.5
NU 422										126	151	157	173	264	—	3	3	22.1

Notes (1) d_b are values for adjusting ring for NU, NJ types.

Bore Diameter 120 – 130 mm

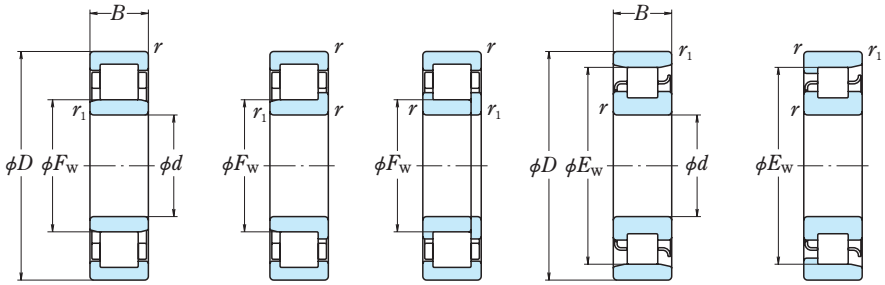

NU NJ NUP N NF

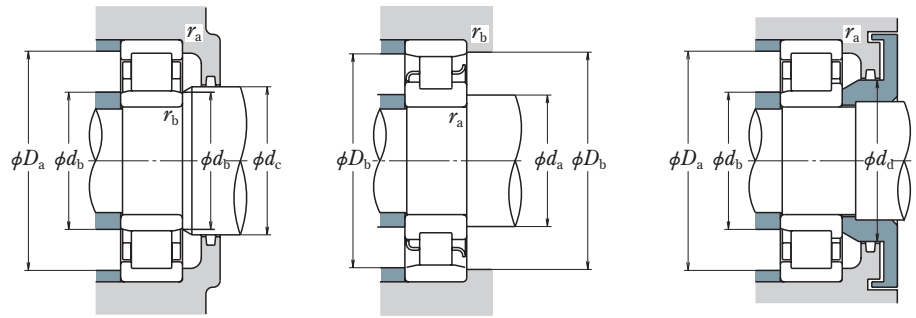

d	D	B	r min.	r1 min.	Fw	Ew	Cr	C0r
120	165	22	1.1	1	131.5	153.5	98.0	150
	165	27	1.1	1.1	131.5	153.5	111	175
	180	28	2	1.1	135	165	139	191
	215	40	2.1	2.1	—	191.5	248	299
	215	40	2.1	2.1	143.5	—	335	420
	215	58	2.1	2.1	143.5	—	450	620
	215	76	2.1	2.1	143.5	191.5	460	665
	260	55	3	3	—	226	450	510
	260	55	3	3	154	—	530	610
	260	86	3	3	154	—	795	1 030
	260	106	3	3	154	—	845	1 150
	310	72	5	5	170	260	675	770
130	165	26	1.1	1	139.5	155.5	103	205
	180	30	1.5	1.1	143	167	145	240
	200	33	2	1.1	148	182	172	238
	230	40	3	3	—	204	258	320
	230	40	3	3	153.5	—	365	455
	230	64	3	3	153.5	—	530	735
	230	80	3	3	156	—	480	715
	280	58	4	4	—	243	500	570
	280	58	4	4	167	—	615	735
	280	93	4	4	167	—	920	1 230
	280	112	4	4	167	243	935	1 290
	340	78	5	5	185	285	825	955

Boundary Dimensions (mm); Basic Load Ratings (kN)

Bearing Numbers	da	db(1)	dc min.	dd min.	Da	Db	ra max.	rb max.	Mass (kg) approx.
NU1924	130	128	—	—	155	156	1	1	1.42
NU2924	130	130	—	—	155	155	1	1	1.69
NU1024	129	133	138	—	171	167	2	1	2.43
N 224	131	—	—	—	—	196	2	2	5.63
NU 224 EM	131	140	146	156	204	—	2	2	6.43
NU2224 EM	131	140	146	156	204	—	2	2	9.51
NU3224	134	134	—	—	199	199	2	2	12.2
N 324	133	—	—	—	—	230	2.5	2.5	12.9
NU 324 EM	133	150	156	171	247	—	2.5	2.5	15
NU2324 EM	133	150	156	171	247	—	2.5	2.5	25
NU3324	—	136	—	—	242	—	2.5	2.5	29
NU 424	140	166	172	190	290	266	4	4	30.2
NU3826	140	138	—	—	155	156	1	1	1.36
NU2926	141	140	—	—	168	170	1.5	1	2.32
NU1026	139	146	151	—	191	184	2	1	3.66
N 226	143	—	—	—	—	208	2.5	2.5	6.48
NU 226 EM	143	150	158	168	217	—	2.5	2.5	8.03
NU2226 EM	143	150	158	168	217	—	2.5	2.5	9.44
NU3226	—	146	—	—	212	—	2.5	2.5	14.4
N 326	146	—	—	—	—	247.5	3	3	17.7
NU 326 EM	146	163	169	184	264	—	3	3	18.7
NU2326 EM	146	163	169	184	264	—	3	3	30
NU3326	149	149	—	—	258	258	3	3	35.2
NU 426	150	180	187	208	320	291	4	4	39.6

Abutment and Fillet Dimensions (mm)

Notes (1) d_b are values for adjusting ring for NU, NJ types.

Bore Diameter 140 – 160 mm

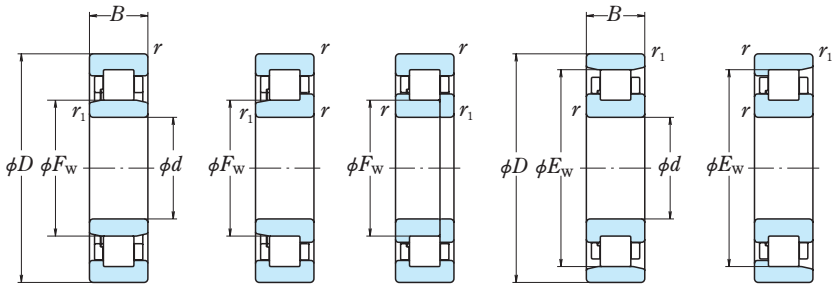

NU NJ NUP N NF

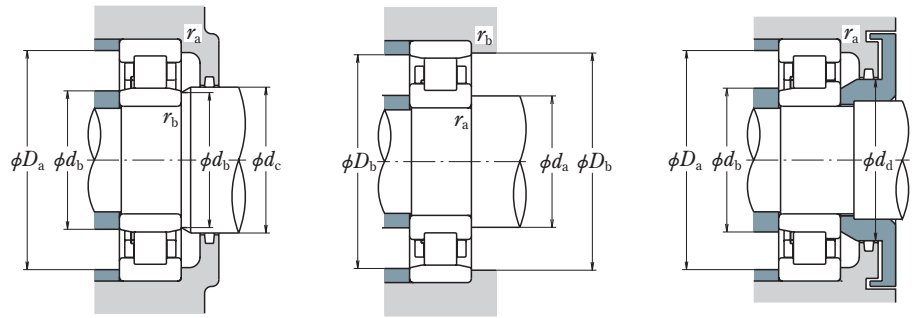

d	Boundary Dimensions (mm) D	B	r min.	r1 min.	Fw	Ew	Basic Load Ratings (kN) Cr	C0r
140	190	30	1.5	1.1	153	177	151	258
	210	33	2	1.1	158	192	176	250
	210	53	2	2	160.1	—	300	525
	225	68	2.1	2.1	162.5	—	390	625
	250	42	3	3	—	221	297	375
	250	42	3	3	169	—	395	515
	250	68	3	3	169	—	550	790
	250	88	3	3	169	—	635	990
	300	62	4	4	—	260	550	640
	300	62	4	4	180	—	665	795
	300	102	4	4	180	—	1 020	1 380
	300	118	4	4	180	260	1 090	1 550
	360	82	5	5	198	302	875	1 020
150	210	28	2	1.1	165	195	164	252
	210	36	2	1.1	165	—	204	335
	225	35	2.1	1.5	169.5	205.5	202	294
	270	45	3	3	—	238	345	435
	270	45	3	3	182	—	450	595
	270	73	3	3	182	—	635	930
	270	96	3	3	182	—	725	1 150
	320	65	4	4	—	277	590	690
	320	65	4	4	193	—	760	920
	320	108	4	4	193	—	1 160	1 600
	320	128	4	4	193	—	1 180	1 700
	380	85	5	5	213	—	930	1 120
160	220	36	2	1.1	175	205	208	345
	240	38	2.1	1.5	180	220	238	340
	290	48	3	3	—	255	430	570
	290	48	3	3	195	—	500	665
	290	80	3	3	193	—	810	1 190
	340	68	4	4	—	292	700	875
	340	68	4	4	204	—	860	1 050
	340	114	4	4	204	—	1 310	1 820
	340	136	4	4	208	292	1 240	1 850

Bearing Numbers	Abutment and Fillet Dimensions (mm) da	db(1)	dc min.	dd min.	Da	Db	ra max.	rb max.	Mass (kg) approx.
NU2928	151	150	—	—	178	179	1.5	1	2.46
NU1028	149	156	161	—	201	194	2	1	3.87
NU3028	—	152	—	—	196	—	2	2	6.56
NU3128	—	155	—	—	209	—	2	2	10.6
N 228	153	—	—	—	—	225	2.5	2.5	8.08
NU 228 EM	153	165	171	182	237	—	2.5	2.5	9.38
NU2228 EM	153	165	171	182	237	—	2.5	2.5	15.2
NU3228	—	157	—	—	232	—	2.5	2.5	19.5
N 328	156	—	—	—	—	266	3	3	21.7
NU 328 EM	156	176	182	198	284	—	3	3	22.8
NU2328 EM	156	176	182	198	284	—	3	3	37.7
NU3328	160	160	—	—	278	278	3	3	42.2
NU 428	160	193	200	222	340	308	4	4	46.4
NU1930	163	160	—	—	196	199	2	1	2.98
NU2930	—	160	—	—	196	—	2	1	3.83
NU1030	161	167	173	—	214	208	2	1.5	4.77
N 230	163	—	—	—	—	242	2.5	2.5	10.4
NU 230 EM	163	177	184	196	257	—	2.5	2.5	11.9
NU2230 EM	163	177	184	196	257	—	2.5	2.5	19.3
NU3230	—	167	—	—	251	—	2.5	2.5	25.1
N 330	166	—	—	—	—	283	3	3	25.8
NU 330 EM	166	188	195	213	304	—	3	3	27.1
NU2330 EM	166	188	195	213	304	—	3	3	45.1
NU3330	—	170	—	—	297	—	3	3	53
NU 430	170	208	216	237	360	—	4	4	55.8
NU2932	173	170	—	—	206	209	2	1	4.08
NU1032	171	178	184	—	229	222	2	1.5	5.81
N 232	173	—	—	—	—	261	2.5	2.5	14.1
NU 232 EM	173	190	197	210	277	—	2.5	2.5	14.7
NU2232 EM	173	188	197	210	277	—	2.5	2.5	24.5
N 332	176	—	—	—	—	298	3	3	30.8
NU 332 EM	176	199	211	228	324	—	3	3	32.1
NU2332 EM	176	199	211	228	324	—	3	3	53.9
NU3332	180	180	—	—	317	317	3	3	63

Notes (1) d_b are values for adjusting ring for NU, NJ types.

Bore Diameter 170 – 180 mm

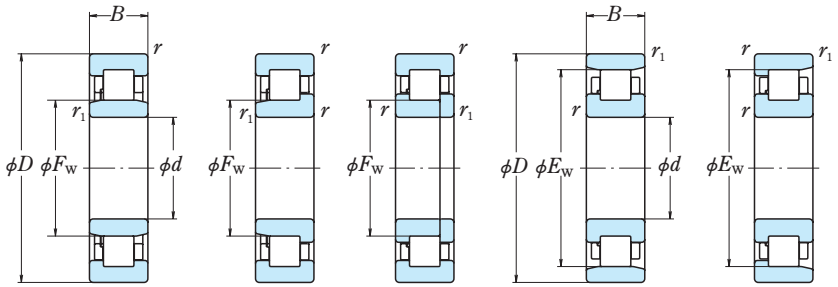

NU NJ NUP N NF

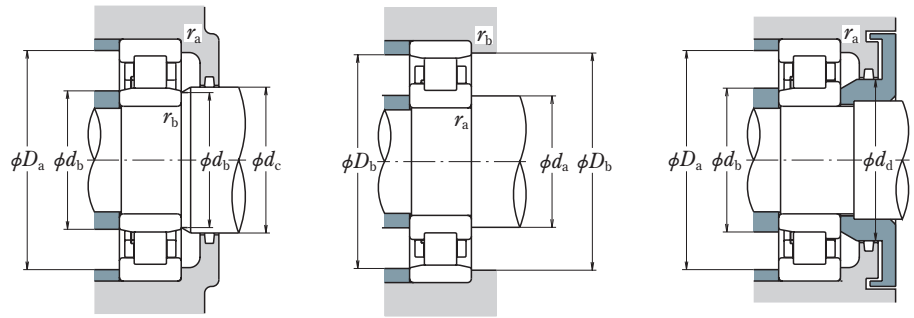

Bearing Numbers	Boundary Dimensions (mm) d	D	B	r min.	r_1 min.	F_W	E_W	Basic Load Ratings (kN) C_r	C_{0r}	Abutment and Fillet Dimensions (mm) d_a	d_b (1)	d_c min.	d_d min.	D_a	D_b	r_a max.	r_b max.	Mass (kg) approx.
170	215	34	1.1	1	181.5	203.5	187	385	**NU3834**	181	179	—	—	204	205	1	1	2.99
	230	36	2	1.1	185	215	211	360	**NU2934**	183	181	—	—	216	219	2	1	4.24
	260	42	2.1	2.1	193	237	287	415	**NU1034**	181	190	197	—	249	239	2	2	7.91
	260	67	2.1	2.1	193	—	510	875	**NU3034**	—	185	—	—	244	—	2	2	13.4
	280	88	2.1	2.1	200	—	665	1 080	**NU3134**	—	185	—	—	263	—	2	2	22
	310	52	4	4	—	272	475	635	**N 234**	186	—	—	—	—	278	3	3	17.4
	310	52	4	4	207	—	605	800	**NU 234 EM**	186	202	211	223	294	—	3	3	18.3
	310	86	4	4	205	—	925	1 330	**NU2234 EM**	186	200	211	223	294	—	3	3	29.9
	310	110	4	4	208	—	915	1 470	**NU3234**	—	190	—	—	288	—	3	3	37.9
	360	72	4	4	—	310	795	1 010	**N 334**	186	—	—	—	—	316	3	3	36.6
	360	72	4	4	218	—	930	1 150	**NU 334 EM**	186	213	223	241	344	—	3	3	37.9
	360	120	4	4	216	—	1 490	2 070	**NU2334 EM**	186	210	223	241	344	—	3	3	63.4
	360	140	4	4	220	310	1 350	1 980	**NU3334**	190	190	—	—	337	337	3	3	72.1
180	225	34	1.1	1	191.5	213.5	192	405	**NU3836**	191	189	—	—	214	215	1	1	3.15
	250	33	2	1.1	198	—	219	355	**NU1936**	—	191	—	—	236	—	2	1	4.92
	250	42	2	1.1	198	232	255	430	**NU2936**	193	191	—	—	236	238	2	1	6.18
	280	46	2.1	2.1	205	255	355	510	**NU1036**	191	202	209	—	269	258	2	2	10.2
	280	74	2.1	2.1	206	—	565	955	**NU3036**	—	195	—	—	263	—	2	2	17.4
	320	52	4	4	—	282	495	675	**N 236**	196	—	—	—	—	288	3	3	18.1
	320	52	4	4	217	—	625	850	**NU 236 EM**	196	212	221	233	304	—	3	3	19
	320	86	4	4	215	—	1 010	1 510	**NU2236 EM**	196	210	221	233	304	—	3	3	31.4
	320	112	4	4	218	—	950	1 560	**NU3236**	—	200	—	—	297	—	3	3	39.6
	380	75	4	4	—	328	905	1 150	**N 336**	196	—	—	—	—	335	3	3	42.6
	380	75	4	4	231	—	985	1 230	**NU 336 EM**	196	226	235	255	364	—	3	3	44
	380	126	4	4	227	—	1 560	2 220	**NU2336 EM**	196	222	235	255	364	—	3	3	74.6
	380	150	4	4	232	328	1 600	2 410	**NU3336**	200	200	—	—	356	356	3	3	86.4

Notes (1) d_b are values for adjusting ring for NU, NJ types.

Bore Diameter 190 – 220 mm

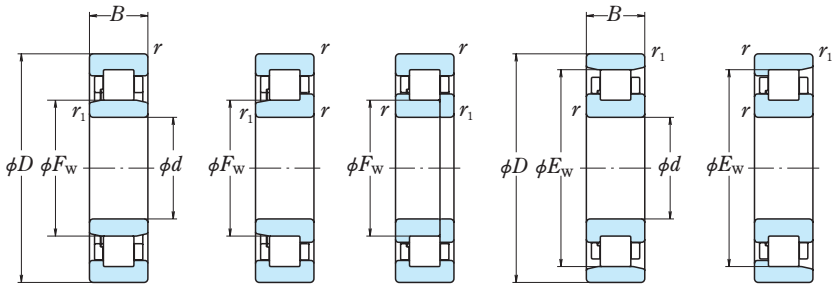

NU NJ NUP N NF

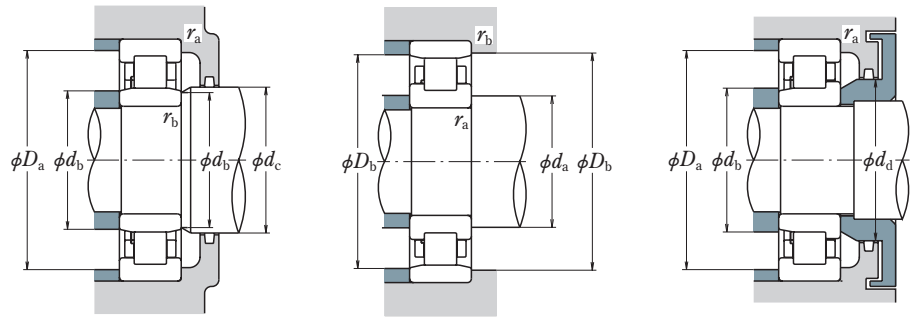

d	D	B	r min.	r1 min.	Fw	Ew	Cr	C0r
	Boundary Dimensions (mm)						Basic Load Ratings (kN)	
190	240	30	1.5	1.5	203	—	180	355
	260	42	2	1.1	208	242	260	450
	290	46	2.1	2.1	215	265	365	535
	290	75	2.1	2.1	219	—	565	1 010
	340	55	4	4	—	299	555	770
	340	55	4	4	230	—	695	955
	340	92	4	4	228	—	1 100	1 670
	340	120	4	4	231	299	1 070	1 780
	400	78	5	5	—	345	975	1 260
	400	78	5	5	245	—	1 060	1 340
	400	132	5	5	240	—	1 770	2 520
	400	155	5	5	245	345	1 730	2 630
200	280	38	2.1	2.1	220	—	268	425
	280	48	2.1	1.5	220	260	365	630
	310	51	2.1	2.1	229	281	390	580
	340	112	3	3	233	313	1 190	1 850
	360	58	4	4	—	316	620	865
	360	58	4	4	243	—	765	1 060
	360	98	4	4	241	—	1 220	1 870
	360	128	4	4	244	—	1 100	1 810
	420	80	5	5	—	360	975	1 270
	420	80	5	5	258	—	1 140	1 450
	420	138	5	5	253	—	1 910	2 760
	420	165	5	5	260	—	1 730	2 660
220	300	38	2.1	1.5	240	280	295	495
	300	48	2.1	1.5	240	280	370	660
	340	56	3	3	250	310	500	750
	340	90	3	3	254	—	795	1 430
	400	65	4	4	—	350	760	1 080
	400	65	4	4	270	—	760	1 080
	400	108	4	4	270	—	1 140	1 810
	400	144	4	4	270	350	1 480	2 530
	460	88	5	5	—	396	1 190	1 570
	460	88	5	5	284	—	1 190	1 570
	460	180	5	5	284	—	2 120	3 300

Bearing Numbers	da	db(1)	dc min.	dd min.	Da	Db	ra max.	rb max.	Mass (kg) approx.
	Abutment and Fillet Dimensions (mm)								
NU2838	—	202	—	—	227	—	1.5	1.5	3.22
NU2938	203	201	—	—	245	248	2	1	6.42
NU1038	201	212	219	—	279	268	2	2	10.7
NU3038	—	206	—	—	273	—	2	2	18.3
N 238	206	—	—	—	—	305	3	3	22
NU 238 EM	206	225	234	247	324	—	3	3	23
NU2238 EM	206	223	234	247	324	—	3	3	38.3
NU3238	211	211	—	—	317	317	3	3	49.3
N 338	210	—	—	—	—	352	4	4	48.7
NU 338 EM	210	240	248	268	380	—	4	4	50.6
NU2338 EM	210	235	248	268	380	—	4	4	86.2
NU3338	215	215	—	—	372	372	4	4	99.2
NU1940	—	216	—	—	263	—	2	2	7.22
NU2940	216	213	—	—	263	266	2	1.5	9.24
NU1040	211	226	233	—	299	284	2	2	14
NU3140	218	218	—	—	320	320	2.5	2.5	41.4
N 240	216	—	—	—	—	323	3	3	26.2
NU 240 EM	216	238	247	261	344	—	3	3	27.4
NU2240 EM	216	235	247	261	344	—	3	3	46.1
NU3240	—	221	—	—	337	—	3	3	58
N 340	220	—	—	—	—	367	4	4	55.3
NU 340 EM	220	252	263	283	400	—	4	4	57.1
NU2340 EM	220	247	263	283	400	—	4	4	99.3
NU3340	—	225	—	—	392	—	4	4	115
NU1944	236	233	—	—	283	286	2	1.5	7.88
NU2944	236	233	—	—	283	286	2	1.5	9.93
NU1044	233	247	254	—	327	313	2.5	2.5	18.2
NU3044	—	238	—	—	320	—	2.5	2.5	30.6
N 244	236	—	—	—	—	357	3	3	37
NU 244	236	264	273	289	384	—	3	3	37.3
NU2244	—	264	273	289	384	—	3	3	61.8
NU3244	241	241	—	—	376	376	3	3	83.6
N 344	240	—	—	—	—	403	4	4	72.8
NU 344	240	278	287	307	440	—	4	4	74.6
NU3344	—	245	—	—	431	—	4	4	151

Notes (1) d_b are values for adjusting ring for NU, NJ types.

Bore Diameter 240 – 280 mm

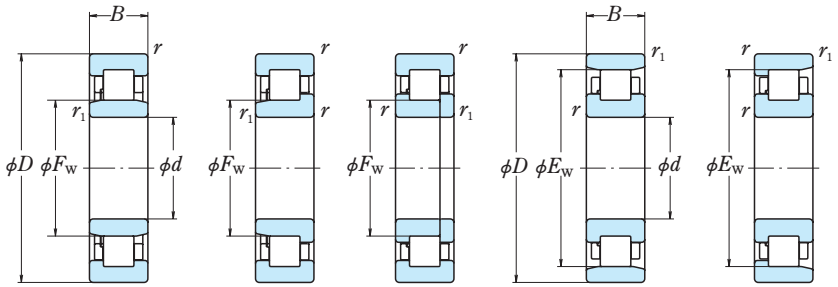

NU NJ NUP N NF

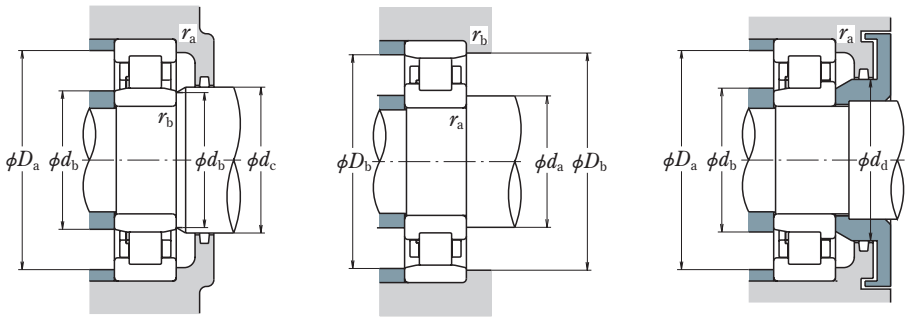

d	D	B	r min.	r1 min.	Fw	Ew	Cr	C0r	Bearing Numbers	da	db(1)	dc min.	dd min.	Da	Db	ra max.	rb max.	Mass (kg) approx.
	Boundary Dimensions (mm)						Basic Load Ratings (kN)			Abutment and Fillet Dimensions (mm)								
240	300	45	2	1.1	256	284	310	695	**NU3848**	254	252	—	—	285	287	2	1	7.43
	320	38	2.1	1.5	260	—	315	550	**NU1948**	—	253	—	—	302	—	2	1.5	8.68
	320	48	2.1	1.5	260	300	385	710	**NU2948**	257	253	—	—	302	305	2	1.5	10.7
	360	56	3	3	270	330	530	820	**NU1048**	253	266	275	—	347	333	2.5	2.5	19.5
	360	92	3	3	274	—	880	1 670	**NU3048**	—	259	—	—	340	—	2.5	2.5	34.5
	440	72	4	4	—	385	935	1 340	**N 248**	256	—	—	—	—	392	3	3	49.6
	440	72	4	4	295	—	935	1 340	**NU 248**	256	289	298	316	424	—	3	3	50.4
	440	120	4	4	295	—	1 440	2 320	**NU2248**	—	289	298	316	424	—	3	3	84.9
	440	160	4	4	295	385	1 810	3 150	**NU3248**	262	262	—	—	415	415	3	3	110
	500	95	5	5	—	430	1 360	1 820	**N 348**	260	—	—	—	—	438	4	4	92.3
	500	95	5	5	310	—	1 360	1 820	**NU 348**	260	304	313	333	480	—	4	4	94.6
260	360	46	2.1	2.1	286	334	435	760	**NU1952**	277	277	—	—	342	342	2	2	14.4
	360	60	2.1	2.1	286	334	535	995	**NU2952**	277	277	—	—	342	342	2	2	18.6
	400	65	4	4	296	364	645	1 000	**NU1052**	276	292	300	—	384	367	3	3	29.1
	480	80	5	5	—	420	1 100	1 580	**N 252**	280	—	—	—	—	428	4	4	66.2
	480	80	5	5	320	—	1 100	1 580	**NU 252**	280	314	323	343	460	—	4	4	67.1
	480	130	5	5	320	—	1 710	2 770	**NU2252**	280	314	323	343	460	—	4	4	111
	480	174	5	5	320	—	2 110	3 650	**NU3252**	—	286	—	—	450	—	4	4	147
	540	102	6	6	336	—	1 540	2 090	**NU 352**	286	330	339	359	514	—	5	5	118
	540	206	6	6	336	—	2 730	4 350	**NU3352**	—	292	—	—	503	—	5	5	240
280	350	42	2	2	299	—	325	705	**NU2856**	—	295	—	—	334	—	2	2	9.16
	350	52	2	1.1	298	—	435	985	**NU3856**	—	293	—	—	334	—	2	1	11.6
	380	46	2.1	2.1	306	—	450	815	**NU1956**	—	297	—	—	361	—	2	2	15.2
	380	60	2.1	2.1	307	—	575	1 150	**NU2956**	—	297	—	—	361	—	2	2	20.2
	420	65	4	4	316	384	660	1 050	**NU1056**	296	312	320	—	404	387	3	3	30.8
	420	106	4	4	320	384	1 090	2 110	**NU3056**	302	302	—	—	395	395	3	3	52
	500	80	5	5	—	440	1 140	1 680	**N 256**	300	—	—	—	—	448	4	4	69.6
	500	80	5	5	340	—	1 140	1 680	**NU 256**	300	334	344	364	480	—	4	4	70.7
	580	224	6	6	360	500	3 200	5 200	**NU3356**	313	313	—	—	542	542	5	5	300

Notes (1) d_b are values for adjusting ring for NU, NJ types.

Bore Diameter 300 – 400 mm

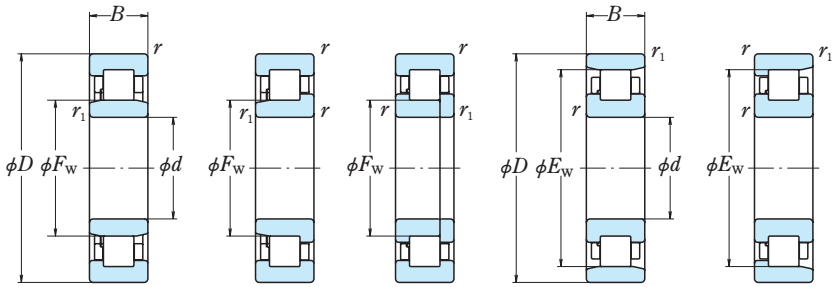

NU NJ NUP N NF

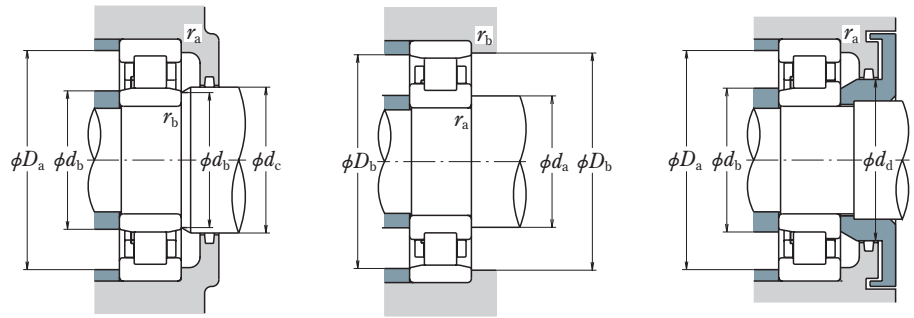

d	D	B	r min.	r1 min.	Fw	Ew	Cr	C0r
		Boundary Dimensions (mm)					Basic Load Ratings (kN)	
300	380	60	2.1	2.1	322	—	485	1 110
	420	56	3	3	332	—	555	975
	420	72	3	3	332	388	725	1 370
	460	74	4	4	340	420	885	1 400
	540	85	5	5	364	—	1 400	2 070
	540	192	5	5	365	—	2 490	4 350
320	440	56	3	3	352	408	580	1 050
	440	72	3	3	352	408	755	1 470
	480	74	4	4	360	440	905	1 470
	480	121	4	4	364	436	1 360	2 690
	540	176	5	5	374	—	2 740	4 700
	580	92	5	5	—	510	1 540	2 270
	580	92	5	5	390	—	1 540	2 270
	580	208	5	5	388	512	2 790	4 750
340	420	48	2.1	1.5	362	—	435	1 010
	420	60	2.1	2.1	362	—	515	1 250
	460	56	3	3	372	—	600	1 120
	460	72	3	3	372	428	780	1 570
	520	82	5	5	385	475	1 080	1 740
	580	190	5	5	399	—	3 500	6 250
360	440	60	2.1	2.1	382	—	525	1 300
	480	56	3	3	392	—	605	1 160
	480	72	3	3	392	448	790	1 630
	540	82	5	5	405	495	1 110	1 830
	650	232	6	6	435	—	3 650	6 400
380	520	65	4	4	418	482	775	1 470
	560	82	5	5	425	—	1 140	1 910
	560	135	5	5	433	—	1 740	3 600
	620	194	5	5	440	—	3 350	6 400
400	500	75	2.1	2.1	427	—	785	1 900
	540	65	4	4	438	502	785	1 520
	540	82	4	4	438	502	1 060	2 250
	600	90	5	5	450	550	1 360	2 280
	600	148	5	5	458	548	2 150	4 450

Bearing Numbers	da	db(1)	dc min.	dd min.	Da	Db	ra max.	rb max.	Mass (kg) approx.
		Abutment and Fillet Dimensions (mm)							
NU3860	—	318	—	—	361	—	2	2	16.6
NU1960	—	320	—	—	398	—	2.5	2.5	24.4
NU2960	320	320	—	—	398	398	2.5	2.5	31.4
NU1060	316	336	344	—	444	424	3	3	43.7
NU 260	320	358	368	391	520	—	4	4	89.2
NU3260	—	327	—	—	509	—	4	4	198
NU1964	340	340	—	—	418	418	2.5	2.5	25.7
NU2964	340	340	—	—	418	418	2.5	2.5	33.5
NU1064	336	356	365	—	464	444	3	3	46.1
NU3064	343	343	—	—	454	454	3	3	78.6
NU3164	—	347	—	—	509	—	4	4	170
N 264	340	—	—	—	—	519	4	4	110
NU 264	340	384	394	420	560	—	4	4	112
NU3264	347	347	—	—	548	548	4	4	240
NU2868	—	355	—	—	400	—	2	1.5	14.9
NU3868	—	359	—	—	400	—	2	2	18.6
NU1968	—	361	—	—	438	—	2.5	2.5	27.1
NU2968	361	361	—	—	438	438	2.5	2.5	35
NU1068	360	381	390	—	500	479	4	4	61.8
NU3168	—	368	—	—	548	—	4	4	214
NU3872	—	379	—	—	420	—	2	2	19.8
NU1972	—	381	—	—	457	—	2.5	2.5	28.8
NU2972	381	381	—	—	457	457	2.5	2.5	36.7
NU1072	380	400	410	—	520	499	4	4	64.6
NU3272	—	394	—	—	611	—	5	5	344
NU1976	404	404	—	—	493	493	3	3	41.2
NU1076	—	420	430	—	540	—	4	4	67.5
NU3076	—	408	—	—	529	—	4	4	117
NU3176	—	408	—	—	588	—	4	4	238
NU3880	—	420	—	—	479	—	2	2	34.3
NU1980	425	425	—	—	513	513	3	3	43
NU2980	425	425	—	—	513	513	3	3	54.9
NU1080	420	445	455	—	580	554.5	4	4	88.2
NU3080	429	429	—	—	568	568	4	4	150

Notes (1) d_b are values for adjusting ring for NU, NJ types.

Bore Diameter 420 – 670 mm

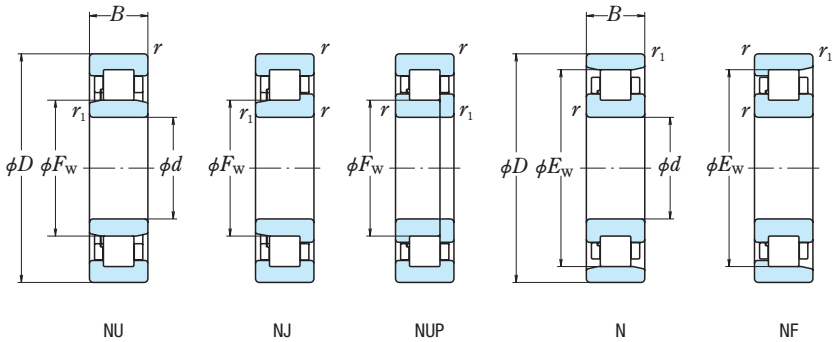

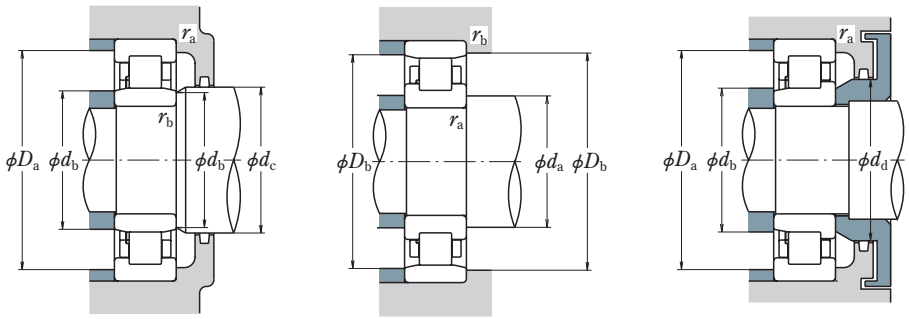

Bearing Numbers	Boundary Dimensions (mm) d	D	B	r min.	r_1 min.	F_W	E_W	Basic Load Ratings (kN) C_r	C_{0r}	Abutment and Fillet Dimensions (mm) d_a	d_b (1)	d_c min.	d_d min.	D_a	D_b	r_a max.	r_b max.	Mass (kg) approx.
NU3884	**420**	520	75	2.1	2.1	447	—	800	1 990	—	440	—	—	498	—	2	2	35.8
NU1984		560	65	4	4	458	522	830	1 660	445	445	—	—	533	533	3	3	45
NU2984		560	82	4	4	458	522	1 080	2 320	445	445	—	—	533	533	3	3	58.2
NU1084		620	90	5	5	470	570	1 390	2 380	440	465	475	—	600	574.5	4	4	91.7
NU3084		620	150	5	5	478	568	2 190	4 600	449	449	—	—	588	588	4	4	158
NU2988	**440**	600	95	4	4	484	—	1 300	2 760	—	466	—	—	572	—	3	3	79.9
NU1088		650	94	6	6	493	—	1 470	2 530	—	488	498	—	624	—	5	5	105
NU1992	**460**	620	74	4	4	500	580	1 170	2 260	486	486	—	—	591	591	3	3	63.2
NU2992		620	95	4	4	504	—	1 340	2 930	—	486	—	—	591	—	3	3	83.1
NU1092		680	100	6	6	516	624	1 580	2 740	486	511	521	—	654	628.5	5	5	123
NU3092		680	163	6	6	523	—	2 570	5 400	—	496	—	—	640	—	5	5	207
NU1996	**480**	650	78	5	5	525	—	1 200	2 390	—	510	—	—	617	—	4	4	75
NU2996		650	100	5	5	525	605	1 600	3 450	510	510	—	—	617	617	4	4	98.5
NU1096		700	100	6	6	536	644	1 620	2 860	506	531	541	—	674	654	5	5	127
NU3096		700	165	6	6	543	—	2 620	5 600	—	517	—	—	660	—	5	5	217
NU10/500	**500**	720	100	6	6	556	664	1 660	2 970	526	551	558	—	694	674	5	5	131
NU30/500		720	167	6	6	554	666	3 500	7 650	537	537	—	—	680	680	5	5	232
NU32/500		920	336	7.5	7.5	610	810	7 950	15 200	543	543	—	—	870	870	6	6	1 020
NU19/530	**530**	710	82	5	5	575	—	1 460	2 910	—	561	—	—	676	—	4	4	92
NU29/530		710	106	5	5	578	662	1 770	3 900	561	561	—	—	676	676	4	4	119
NU32/530		980	355	9.5	9.5	645	865	9 150	17 400	582	582	—	—	921	921	8	8	1 230
NU28/560	**560**	680	72	3	3	594	646	985	2 610	585	585	—	—	653	653	2.5	2.5	55.6
NU19/560		750	85	5	5	610	—	1 510	3 100	—	592	—	—	715	—	4	4	106
NU31/560		920	280	7.5	7.5	650	—	7 150	14 500	—	604	—	—	870	—	6	6	750
NU28/600	**600**	730	78	3	3	635	695	1 180	3 050	626	626	—	—	702	702	2.5	2.5	68
NU19/600		800	90	5	5	655	—	1 590	3 400	—	633	—	—	764	—	4	4	127
NU29/600		800	118	5	5	655	745	2 160	5 000	633	633	—	—	764	764	4	4	170
NU28/630	**630**	780	88	4	4	671	—	1 450	3 700	—	659	—	—	748	—	3	3	95.2
NU19/630		850	100	6	6	690	—	1 850	3 900	—	670	—	—	807	—	5	5	163
NU28/670	**670**	820	88	4	4	711	779	1 500	3 950	700	700	—	—	787	787	3	3	103
NU38/670		820	112	4	4	711	—	1 920	5 200	—	700	—	—	787	—	3	3	128
NU19/670		900	103	6	6	731	—	1 870	3 800	—	710	—	—	856	—	5	5	181

Notes (1) d_b are values for adjusting ring for NU, NJ types.

Bore Diameter 710 – 1 320 mm

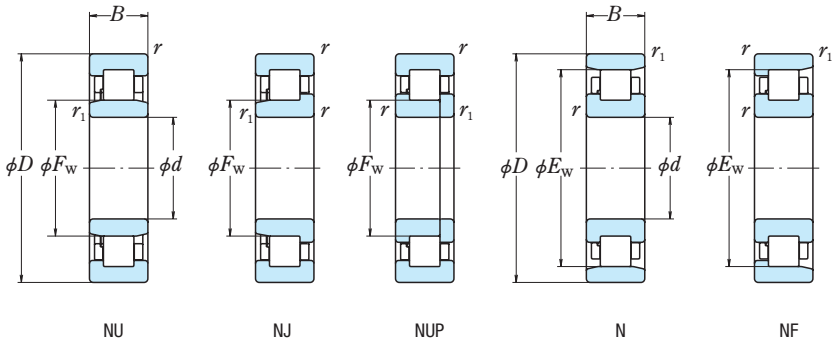

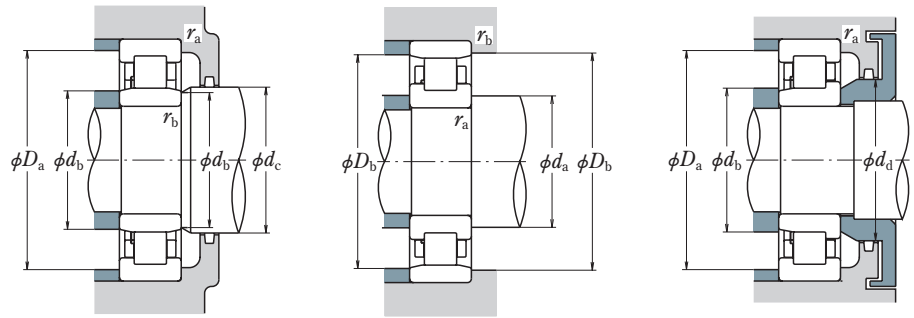

Bearing Numbers	Boundary Dimensions (mm) d	D	B	r min.	r_1 min.	F_W	E_W	Basic Load Ratings (kN) C_r	C_{0r}	Abutment and Fillet Dimensions (mm) d_a	d_b (1)	d_c min.	d_d min.	D_a	D_b	r_a max.	r_b max.	Mass (kg) approx.
710	950	106	6	6	775	—	2 300	5 000	**NU19/710**	—	751	—	—	905	—	5	5	213
	950	140	6	6	776	—	3 450	8 400	**NU29/710**	—	751	—	—	905	—	5	5	285
750	920	100	5	5	797	—	1 860	5 000	**NU28/750**	—	786	—	—	882	—	4	4	145
800	980	136	5	5	848	—	2 530	7 050	**NU38/800**	—	837	—	—	940	—	4	4	219
	1 060	115	6	6	870	—	2 760	6 150	**NU19/800**	—	843	—	—	1 013	—	5	5	282
850	1 030	106	5	5	900	—	2 130	5 950	**NU28/850**	—	888	—	—	989	—	4	4	183
	1 120	118	6	6	925	1 045	2 780	6 350	**NU19/850**	894	894	—	—	1 072	1 072	5	5	320
	1 120	155	6	6	917	—	4 450	10 500	**NU29/850**	—	894	—	—	1 072	—	5	5	426
900	1 090	112	5	5	950	—	2 580	7 100	**NU28/900**	—	939	—	—	1 048	—	4	4	217
	1 090	140	5	5	950	—	2 990	8 600	**NU38/900**	—	939	—	—	1 048	—	4	4	269
1 000	1 220	128	6	6	1 058	—	3 200	8 850	**NU28/1000**	—	1 047	—	—	1 170	—	5	5	319
1 060	1 280	165	6	6	1 120	—	3 750	11 300	**NU38/1060**	—	1 108	—	—	1 228	—	5	5	427
1 120	1 360	180	6	6	1 180	—	5 700	17 300	**NU38/1120**	—	1 169	—	—	1 307	—	5	5	547
1 250	1 630	170	7.5	7.5	1 350	—	6 300	15 400	**NU19/1250**	—	1 308	—	—	1 566	—	6	6	952
1 320	1 720	175	7.5	7.5	1 424	—	7 000	17 100	**NU19/1320**	—	1 380	—	—	1 654	—	6	6	1 100

Notes (1) d_b are values for adjusting ring for NU, NJ types.

Bore Diameter 100 – 140 mm

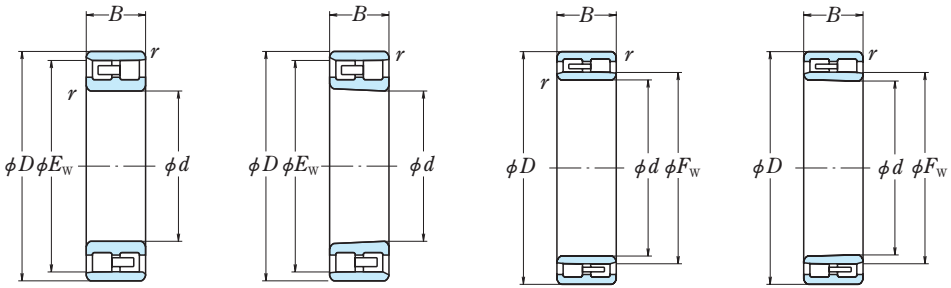

NN
Cylindrical Bore

NN
Tapered Bore

NNU
Cylindrical Bore

NNU
Tapered Bore

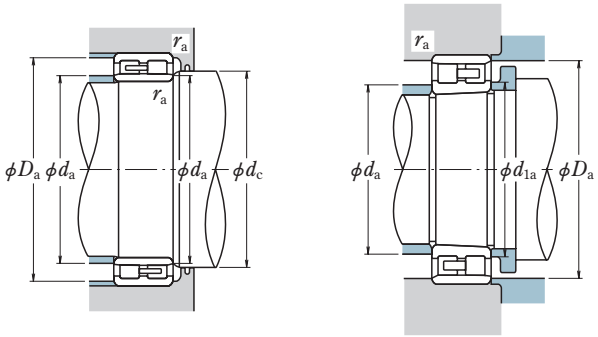

Boundary Dimensions (mm)						Basic Load Ratings (kN)		Basic Load Ratings {kgf}		Bearing Numbers		Abutment and Fillet Dimensions (mm)					Mass (kg)
d	D	B	r min.	F_W	E_W	C_r	C_{0r}	C_r	C_{0r}	Cylindrical Bore	Tapered Bore (1)	d_a(2)	d_{1a}	d_c min.	D_a	r_a max.	approx.
100	140	30	1.1	—	130	106	182	10 800	18 500	**NN3920**	**NN3920K**	109	111	—	131	1	1.32
	140	40	1.1	—	130	155	295	15 800	30 000	**NN4920**	**NN4920K**	109	111	—	131	1	1.76
	140	40	1.1	112	—	155	295	15 800	30 000	**NNU4920**	**NNU4920K**	109	111	115	131	1	1.9
	150	37	1.5	—	137	157	265	16 000	27 000	**NN3020**	**NN3020K**	111	114	—	139	1.5	2.28
	165	52	1.1	—	148	234	360	23 900	37 000	**NN3120**	**—**	109	—	—	155	1	4.38
	165	52	2	118	—	234	360	23 900	37 000	**NNU3120**	**—**	112	—	122	152	2	4.39
105	145	40	1.1	—	135	161	315	16 400	32 000	**NN4921**	**—**	114	—	—	136	1	2.0
	145	40	1.1	117	—	161	315	16 400	32 000	**NNU4921**	**NNU4921K**	114	116	120	136	1	1.99
	160	41	2	—	146	198	320	20 200	33 000	**NN3021**	**NN3021K**	117	119	—	147	2	2.88
	160	41	2	120	—	198	320	20 200	33 000	**NNU3021**	**NNU3021K**	117	119	123	147	2	2.9
110	150	30	1.1	—	140	114	207	11 700	21 100	**NN3922**	**NN3922K**	119	121	—	141	1	1.41
	150	40	1.1	—	140	167	335	17 000	34 000	**NN4922**	**NN4922K**	119	121	—	141	1	2.1
	150	40	1.1	122	—	167	335	17 000	34 000	**NNU4922**	**NNU4922K**	119	121	125	141	1	2.07
	170	45	2	—	155	229	375	23 300	38 000	**NN3022**	**NN3022K**	122	126	—	157	2	3.71
	170	45	2	127	—	229	375	23 300	38 000	**NNU3022**	**—**	122	—	130	157	2	3.74
	180	56	1.1	—	163	290	450	29 600	45 500	**NN3122**	**—**	119	—	—	170	1	5.4
120	165	34	1.1	—	153	138	251	14 000	25 500	**NN3924**	**NN3924K**	130	132	—	155	1	2.02
	165	45	1.1	—	153	183	360	18 700	37 000	**NN4924**	**NN4924K**	130	133	—	155	1	2.87
	165	45	1.1	133	—	183	360	18 700	37 000	**NNU4924**	**NNU4924K**	130	133	137	155	1	2.85
	180	46	2	—	165	239	405	24 400	41 500	**NN3024**	**NN3024K**	132	136	—	167	2	4.04
	180	46	2	137	—	239	405	24 400	41 500	**NNU3024**	**—**	132	—	140	167	2	4.07
	200	62	2	—	180	355	550	36 000	56 000	**NN3124**	**NN3124K**	132	137	—	187	2	7.72
130	165	35	1	—	154	107	238	10 900	24 200	**NN4826**	**—**	138	—	—	156	1	1.82
	180	37	1.5	—	167	173	325	17 700	33 000	**NN3926**	**NN3926K**	141	144	—	168	1.5	2.59
	180	50	1.5	—	168	274	545	27 900	56 000	**NN4926**	**NN4926K**	141	143	—	169	1.5	3.84
	180	50	1.5	144	—	274	545	27 900	56 000	**NNU4926**	**NNU4926K**	141	143	148	169	1.5	3.85
	200	52	2	—	182	284	475	29 000	48 500	**NN3026**	**NN3026K**	142	147	—	187	2	5.88
	200	52	2	150	—	284	475	29 000	48 500	**NNU3026**	**NNU3026K**	142	147	154	187	2	5.92
	210	64	2	152	—	360	580	37 000	59 500	**NNU3126**	**—**	142	—	157	196	2	8.49
140	190	37	1.5	—	178	201	375	20 500	38 500	**NN3928**	**NN3928K**	151	153	—	179	1.5	2.78
	190	50	1.5	—	178	283	585	28 800	59 500	**NN4928**	**NN4928K**	151	153	—	179	1.5	4.07
	190	50	1.5	154	—	283	585	28 800	59 500	**NNU4928**	**NNU4928K**	151	153	158	179	1.5	4.08
	210	53	2	—	192	298	515	30 500	52 500	**NN3028**	**NN3028K**	152	157	—	196	2	6.34
	210	53	2	160	—	298	515	30 500	52 500	**NNU3028**	**—**	152	—	164	196	2	6.38
	225	68	2.1	—	203	400	650	40 500	66 000	**NN3128**	**—**	155	—	—	209	2	10.1
	225	68	2.1	163	—	400	650	40 500	66 000	**NNU3128**	**—**	155	—	168	209	2	10.3

Note (1) The suffix K represents with tapered bores (taper 1:12).
Remarks Production of double-row cylindrical roller bearings is generally in the high precision classes (Class 5 or better).

Note (2) d_a are values for adjusting ring for the NNU type.

Bore Diameter 150 – 190 mm

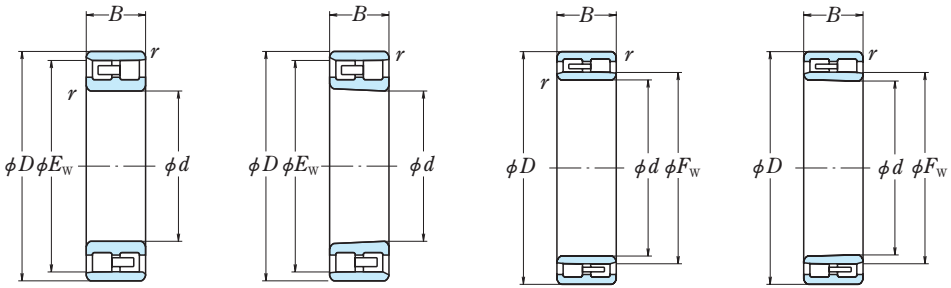

NN Cylindrical Bore | NN Tapered Bore | NNU Cylindrical Bore | NNU Tapered Bore

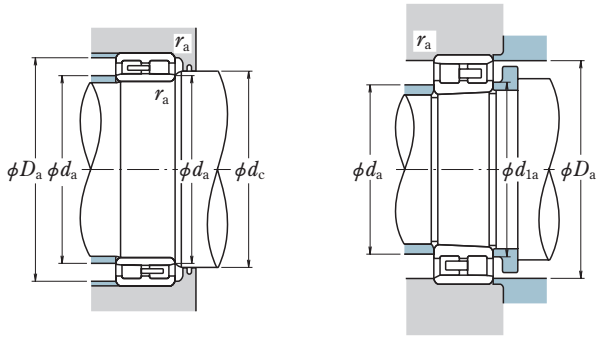

Boundary Dimensions (mm)						Basic Load Ratings (kN)		Basic Load Ratings {kgf}		Bearing Numbers		Abutment and Fillet Dimensions (mm)					Mass (kg)
d	D	B	r min.	F_W	E_W	C_r	C_{0r}	C_r	C_{0r}	Cylindrical Bore	Tapered Bore (1)	d_a(2)	d_{1a}	d_c min.	D_a	r_a max.	approx.
150	210	45	2	—	195	262	490	26 700	49 500	**NN3930**	**NN3930K**	163	166	—	196	2	4.47
	210	60	2	—	195	350	715	36 000	72 500	**NN4930**	**NN4930K**	163	166	—	196	2	6.36
	210	60	2	167	—	350	715	36 000	72 500	**NNU4930**	**NNU4930K**	163	166	171	196	2	6.39
	225	56	2.1	—	206	335	585	34 000	60 000	**NN3030**	**NN3030K**	165	169	—	209	2	7.77
	225	56	2.1	172	—	335	585	34 000	60 000	**NNU3030**	**—**	165	—	176	209	2	7.81
	250	80	2.1	—	226	535	860	54 500	87 500	**NN3130**	**—**	165	—	—	234	2	15.4
160	200	40	1	—	188	150	355	15 300	36 000	**NN4832**	**—**	169	—	—	191	1	2.95
	220	45	2	—	205	271	520	27 700	53 000	**NN3932**	**NN3932K**	173	176	—	206	2	5.02
	220	60	2	—	205	365	760	37 000	77 500	**NN4932**	**NN4932K**	173	176	—	206	2	6.77
	220	60	2	177	—	365	760	37 000	77 500	**NNU4932**	**NNU4932K**	173	176	182	206	2	6.76
	240	60	2.1	—	219	375	660	38 000	67 500	**NN3032**	**NN3032K**	175	180	—	224	2	9.41
	240	60	2.1	183	—	375	660	38 000	67 500	**NNU3032**	**—**	175	—	188	224	2	9.48
	240	80	2.1	—	219	510	985	52 000	100 000	**NN4032**	**NN4032K**	175	182	—	224	2	12.7
	240	80	2.1	183	—	510	985	52 000	100 000	**NNU4032**	**—**	175	—	188	224	2	12.7
	270	86	2.1	—	243	620	1 000	63 000	102 000	**NN3132**	**—**	175	—	—	253	2	19.8
170	230	45	2	—	215	280	550	28 600	56 000	**NN3934**	**NN3934K**	183	186	—	216	2	5.01
	230	60	2	—	215	375	805	38 500	82 000	**NN4934**	**NN4934K**	183	186	—	216	2	7.13
	230	60	2	187	—	375	805	38 500	82 000	**NNU4934**	**NNU4934K**	183	186	192	216	2	7.12
	260	67	2.1	—	236	450	805	46 000	82 000	**NN3034**	**NN3034K**	185	191	—	244	2	12.8
	260	67	2.1	196	—	450	805	46 000	82 000	**NNU3034**	**NNU3034K**	185	191	201	244	2	12.9
	280	88	2.1	—	253	635	1 050	65 000	107 000	**NN3134**	**—**	185	—	—	263	2	21.1
	280	88	2.1	201	—	635	1 050	65 000	107 000	**NNU3134**	**—**	185	—	206	263	2	21.4
180	225	45	1	—	213	225	535	22 900	54 500	**NN4836**	**—**	189	—	—	215	1	4.15
	250	52	2	—	232	340	655	34 500	67 000	**NN3936**	**NN3936K**	193	198	—	236	2	7.2
	250	69	2	—	232	480	1 020	49 000	104 000	**NN4936**	**NN4936K**	193	199	—	236	2	10.4
	250	69	2	200	—	480	1 020	49 000	104 000	**NNU4936**	**NNU4936K**	193	199	205	236	2	10.4
	280	74	2.1	—	255	565	995	57 500	102 000	**NN3036**	**NN3036K**	195	202	—	263	2	16.8
	280	74	2.1	209	—	565	995	57 500	102 000	**NNU3036**	**—**	195	—	214	263	2	16.9
190	260	52	2	—	243	345	680	35 000	69 000	**NN3938**	**NN3938K**	203	208	—	245	2	7.46
	260	69	2	—	243	485	1 060	49 500	108 000	**NN4938**	**NN4938K**	203	209	—	245	2	10.9
	260	69	2	211	—	485	1 060	49 500	108 000	**NNU4938**	**NNU4938K**	203	209	217	245	2	10.9
	290	75	2.1	—	265	595	1 080	60 500	110 000	**NN3038**	**NN3038K**	206	212	—	273	2	17.8
	290	75	2.1	219	—	595	1 080	60 500	110 000	**NNU3038**	**—**	206	—	224	273	2	17.9
	290	100	2.1	—	265	825	1 640	84 000	167 000	**NN4038**	**—**	206	—	—	273	2	24
	320	104	3	—	287	840	1 420	85 500	144 000	**NN3138**	**—**	208	—	—	300	2.5	33.8

Note (1) The suffix K represents with tapered bores (taper 1:12).
Remarks Production of double-row cylindrical roller bearings is generally in the high precision classes (Class 5 or better).

Note (2) d_a are values for adjusting ring for the NNU type.

Bore Diameter 200 – 260 mm

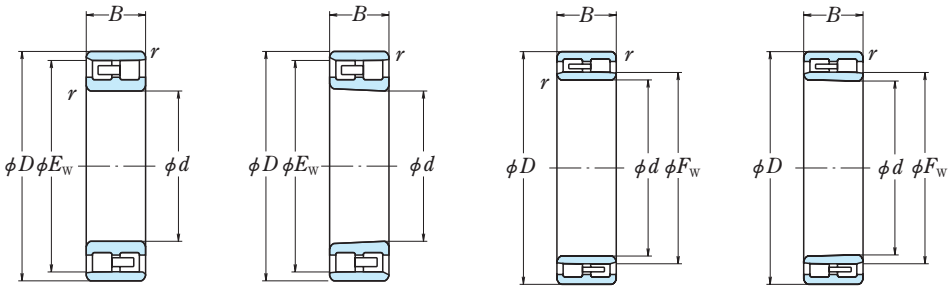

NN
Cylindrical Bore

NN
Tapered Bore

NNU
Cylindrical Bore

NNU
Tapered Bore

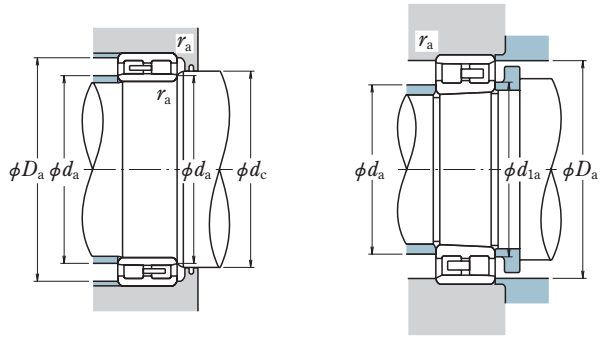

Boundary Dimensions (mm)						Basic Load Ratings (kN)		Basic Load Ratings {kgf}		Bearing Numbers		Abutment and Fillet Dimensions (mm)					Mass (kg)
d	D	B	r min.	F_W	E_W	C_r	C_{0r}	C_r	C_{0r}	Cylindrical Bore	Tapered Bore (1)	d_a(2)	d_{1a}	d_c min.	D_a	r_a max.	approx.
200	280	60	2.1	—	259	420	815	42 500	83 500	**NN3940**	**NN3940K**	216	221	—	263	2	10.6
	280	80	2.1	—	259	570	1 220	58 000	124 000	**NN4940**	**NN4940K**	216	222	—	263	2	15.3
	280	80	2.1	223	—	570	1 220	58 000	124 000	**NNU4940**	**NNU4940K**	216	222	228	263	2	15.3
	310	82	2.1	—	282	655	1 170	66 500	119 000	**NN3040**	**NN3040K**	216	223	—	293	2	22.7
	310	82	2.1	232	—	655	1 170	66 500	119 000	**NNU3040**	**NNU3040K**	216	223	237	293	2	22.9
	310	109	2.1	—	282	890	1 730	90 500	177 000	**NN4040**	**NN4040K**	216	225	—	293	2	30.4
220	300	60	2.1	—	279	440	895	45 000	91 500	**NN3944**	**NN3944K**	236	241	—	283	2	11.4
	300	80	2.1	—	279	600	1 330	61 000	136 000	**NN4944**	**NN4944K**	236	242	—	283	2	16.6
	300	80	2.1	243	—	600	1 330	61 000	136 000	**NNU4944**	**NNU4944K**	236	242	248	283	2	16.6
	340	90	3	—	310	815	1 480	83 000	151 000	**NN3044**	**NN3044K**	238	246	—	320	2.5	29.6
	340	90	3	254	—	815	1 480	83 000	151 000	**NNU3044**	**—**	238	—	259	320	2.5	30
	340	118	3	—	310	1 190	2 400	121 000	245 000	**NN4044**	**NN4044K**	238	248	—	320	2.5	39.8
	370	120	4	—	331	1 050	1 810	107 000	184 000	**NN3144**	**—**	241	—	—	346	3	51.9
	370	120	4	263	—	1 050	1 810	107 000	184 000	**NNU3144**	**—**	241	—	268	346	3	52.3
240	300	60	1.1	—	283	405	1 030	41 500	105 000	**NN4848**	**—**	252	—	—	287	1	9.77
	320	60	2.1	—	300	460	975	47 000	99 000	**NN3948**	**NN3948K**	257	262	—	302	2	12.2
	320	80	2.1	—	300	625	1 450	63 500	148 000	**NN4948**	**NN4948K**	257	263	—	302	2	17.9
	320	80	2.1	263	—	625	1 450	63 500	148 000	**NNU4948**	**NNU4948K**	257	262	269	302	2	18
	360	92	3	—	330	855	1 600	87 000	163 000	**NN3048**	**NN3048K**	259	266	—	340	2.5	32.7
	360	92	3	274	—	855	1 600	87 000	163 000	**NNU3048**	**NNU3048K**	259	266	280	340	2.5	30.8
	360	118	3	—	330	1 240	2 600	127 000	266 000	**NN4048**	**NN4048K**	259	269	—	340	2.5	39.3
	360	118	3	274	—	1 240	2 600	127 000	266 000	**NNU4048**	**—**	259	—	281	340	2.5	42.7
	400	128	4	—	358	1 170	2 040	119 000	208 000	**NN3148**	**NN3148K**	262	272	—	376	3	64.2
260	360	75	2.1	—	335	670	1 380	68 500	141 000	**NN3952**	**NN3952K**	277	283	—	342	2	21.4
	360	100	2.1	—	335	935	2 100	95 000	214 000	**NN4952**	**NN4952K**	277	285	—	342	2	28.3
	360	100	2.1	289	—	935	2 100	95 000	214 000	**NNU4952**	**NNU4952K**	277	285	295	342	2	31.1
	400	104	4	—	364	1 030	1 920	105 000	196 000	**NN3052**	**NN3052K**	282	291	—	376	3	47.7
	400	104	4	300	—	1 030	1 920	105 000	196 000	**NNU3052**	**—**	282	—	306	376	3	48.1
	400	140	4	—	364	1 550	3 250	158 000	330 000	**NN4052**	**NN4052K**	282	294	—	376	3	59.7
	400	140	4	300	—	1 550	3 250	158 000	330 000	**NNU4052**	**—**	282	—	306	376	3	65
	440	144	4	—	393	1 480	2 660	151 000	271 000	**NN3152**	**NN3152K**	282	294	—	415	3	89.1

Note (1) The suffix K represents with tapered bores (taper 1:12).
Remarks Production of double-row cylindrical roller bearings is generally in the high precision classes (Class 5 or better).

Note (2) d_a are values for adjusting ring for the NNU type.

Bore Diameter 280 – 360 mm

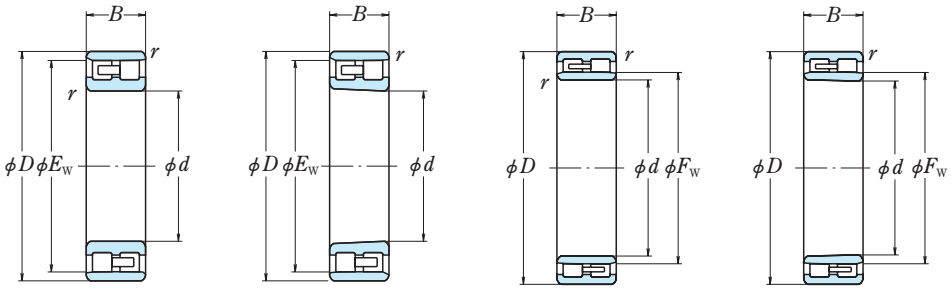

NN
Cylindrical Bore

NN
Tapered Bore

NNU
Cylindrical Bore

NNU
Tapered Bore

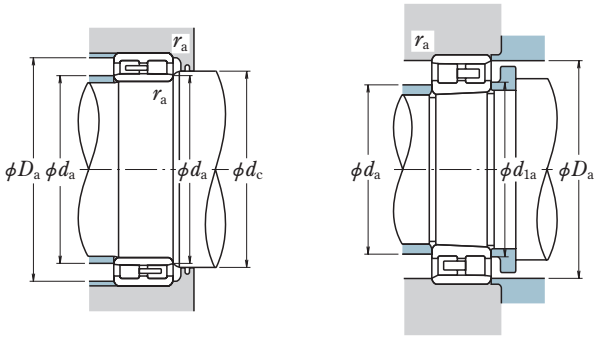

Boundary Dimensions (mm)						Basic Load Ratings (kN)		Basic Load Ratings {kgf}		Bearing Numbers		Abutment and Fillet Dimensions (mm)					Mass (kg)
d	D	B	r min.	F_W	E_W	C_r	C_{0r}	C_r	C_{0r}	Cylindrical Bore	Tapered Bore (1)	d_a(2)	d_{1a}	d_c min.	D_a	r_a max.	approx.
280	350	69	1.1	—	329	445	1 160	45 500	119 000	**NN4856**	**—**	293	—	—	336	1	15.3
	380	75	2.1	—	355	695	1 460	70 500	149 000	**NN3956**	**NN3956K**	297	304	—	361	2	22.7
	380	100	2.1	—	355	960	2 230	98 000	227 000	**NN4956**	**NN4956K**	297	306	—	361	2	32.9
	380	100	2.1	309	—	960	2 230	98 000	227 000	**NNU4956**	**NNU4956K**	297	306	315	361	2	33
	420	106	4	—	384	1 080	2 080	110 000	212 000	**NN3056**	**NN3056K**	302	311	—	395	3	51.1
	420	106	4	320	—	1 080	2 080	110 000	212 000	**NNU3056**	**—**	302	—	326	395	3	51.4
	460	146	5	—	413	1 520	2 790	155 000	285 000	**NN3156**	**NN3156K**	306	319	—	431	4	95.7
300	380	80	2.1	324	—	690	1 760	70 500	179 000	**NNU4860**	**—**	318	—	331	361	2	21.7
	420	118	3	—	388	1 230	2 870	125 000	293 000	**NN4960**	**NN4960K**	320	330	—	398	2.5	51.6
	420	118	3	336	—	1 230	2 870	125 000	293 000	**NNU4960**	**NNU4960K**	320	330	343	398	2.5	51.9
	460	118	4	—	418	1 290	2 460	132 000	251 000	**NN3060**	**NN3060K**	323	333	—	435	3	70.7
	460	160	4	—	418	1 920	4 100	196 000	420 000	**NN4060**	**NN4060K**	323	336	—	435	3	97.6
	500	160	5	—	448	1 760	3 150	179 000	325 000	**NN3160**	**NN3160K**	327	340	—	470	4	125
	500	160	5	358	—	1 760	3 150	179 000	325 000	**NNU3160**	**—**	327	—	365	470	4	126
320	400	80	2.1	344	—	700	1 840	71 500	187 000	**NNU4864**	**—**	338	—	351	381	2	22.8
	440	118	3	—	408	1 260	3 050	129 000	310 000	**NN4964**	**NN4964K**	340	350	—	418	2.5	50.2
	440	118	3	356	—	1 260	3 050	129 000	310 000	**NNU4964**	**NNU4964K**	340	350	363	418	2.5	54.9
	480	121	4	—	438	1 350	2 670	138 000	272 000	**NN3064**	**NN3064K**	343	354	—	454	3	76.6
	480	121	4	366	—	1 350	2 670	138 000	272 000	**NNU3064**	**NNU3064K**	343	354	373	454	3	76.9
	480	160	4	367	—	1 960	4 300	200 000	435 000	**NNU4064**	**—**	343	—	374	454	3	103
	540	176	5	384	—	2 090	3 750	213 000	385 000	**NNU3164**	**NNU3164K**	347	362	391	509	4	154
340	460	90	3	—	428	905	2 020	92 500	206 000	**NN3968**	**NN3968K**	361	368	—	438	2.5	42.9
	460	118	3	—	428	1 350	3 400	138 000	345 000	**NN4968**	**NN4968K**	361	371	—	438	2.5	52.1
	460	118	3	376	—	1 350	3 400	138 000	345 000	**NNU4968**	**—**	361	—	383	438	2.5	57.8
	520	133	5	—	473	1 670	3 300	170 000	340 000	**NN3068**	**NN3068K**	368	379	—	490	4	102
	520	133	5	393	—	1 670	3 300	170 000	340 000	**NNU3068**	**—**	368	—	400	490	4	103
	520	180	5	393	—	2 420	5 350	247 000	545 000	**NNU4068**	**—**	368	—	400	490	4	141
360	480	90	3	—	448	930	2 130	95 000	217 000	**NN3972**	**—**	381	—	—	457	2.5	44.9
	480	118	3	396	—	1 390	3 550	142 000	365 000	**NNU4972**	**—**	381	—	403	457	2.5	60.6
	540	134	5	—	493	1 700	3 450	173 000	350 000	**NN3072**	**NN3072K**	388	399	—	509	4	106
	540	134	5	413	—	1 700	3 450	173 000	350 000	**NNU3072**	**—**	388	—	420	509	4	108
	540	180	5	—	496	2 530	5 450	258 000	555 000	**NN4072**	**NN4072K**	388	403	—	509	4	132

Note (1) The suffix K represents with tapered bores (taper 1:12).
Remarks Production of double-row cylindrical roller bearings is generally in the high precision classes (Class 5 or better).

Note (2) d_a are values for adjusting ring for the NNU type.

Bore Diameter 380 – 480 mm

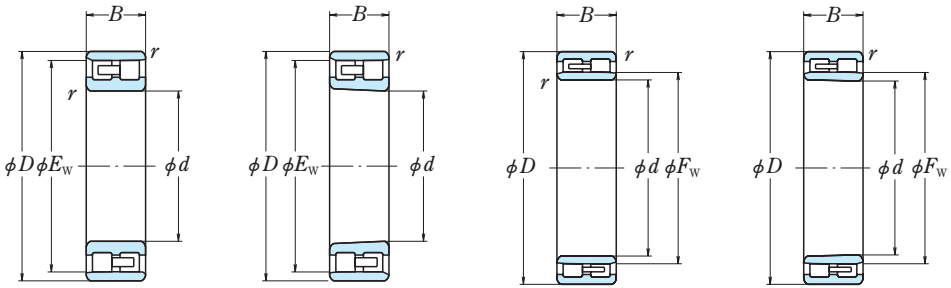

NN Cylindrical Bore | NN Tapered Bore | NNU Cylindrical Bore | NNU Tapered Bore

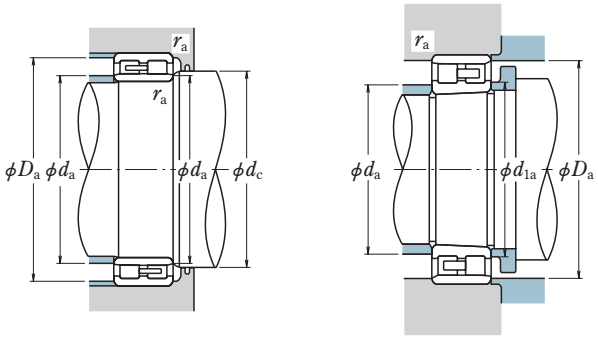

Boundary Dimensions (mm)						Basic Load Ratings (kN)		Basic Load Ratings {kgf}		Bearing Numbers		Abutment and Fillet Dimensions (mm)					Mass (kg)
d	D	B	r min.	F_W	E_W	C_r	C_{0r}	C_r	C_{0r}	Cylindrical Bore	Tapered Bore (1)	d_a(2)	d_{1a}	d_c min.	D_a	r_a max.	approx.
380	520	140	4	—	485	1 880	4 600	191 000	470 000	**NN4976**	**NN4976K**	404	416	—	493	3	81.3
	520	140	4	421	—	1 880	4 600	191 000	470 000	**NNU4976**	**—**	404	—	428	493	3	88.8
	560	135	5	—	513	1 770	3 700	181 000	375 000	**NN3076**	**NN3076K**	408	420	—	529	4	113
	560	180	5	—	513	2 650	6 200	270 000	630 000	**NN4076**	**NN4076K**	408	424	—	529	4	142
	560	180	5	433	—	2 650	6 200	270 000	630 000	NNU4076	—	408	—	440	529	4	153
	620	194	5	—	559	2 620	4 950	267 000	505 000	**NN3176**	**NN3176K**	408	425	—	588	4	224
	620	194	5	449	—	2 620	4 950	267 000	505 000	**NNU3176**	**—**	408	—	456	588	4	228
400	500	100	2.1	430	—	905	2 540	92 500	259 000	**NNU4880**	**—**	420	—	437	479	2	45.7
	540	106	4	—	504	1 290	2 890	132 000	295 000	**NN3980**	**—**	425	—	—	513	3	68.7
	540	140	4	—	505	1 940	4 900	198 000	500 000	**NN4980**	**NN4980K**	425	437	—	513	3	84.1
	540	140	4	446	—	1 790	4 600	182 000	470 000	**NNU4980**	**NNU4980K**	425	437	453	513	3	93.6
	600	148	5	—	548	2 090	4 300	213 000	435 000	**NN3080**	**NN3080K**	429	441	—	568	4	147
	600	200	5	456	—	2 840	6 050	290 000	615 000	**NNU4080**	**—**	429	—	463	568	4	201
	650	200	6	474	—	2 770	5 400	283 000	555 000	**NNU3180**	**—**	435	—	481	611	5	262
420	560	106	4	—	522	1 280	2 900	131 000	296 000	**NN3984**	**—**	445	—	—	533	3	71.2
	560	140	4	—	525	2 000	5 150	204 000	525 000	**NN4984**	**NN4984K**	445	457	—	533	3	87.9
	560	140	4	461	—	2 000	5 150	204 000	525 000	**NNU4984**	**—**	445	—	468	533	3	97.2
	620	150	5	—	568	2 130	4 450	217 000	455 000	**NN3084**	**NN3084K**	449	462	—	588	4	154
	620	150	5	478	—	2 130	4 450	217 000	455 000	**NNU3084**	**NNU3084K**	449	462	485	588	4	155
	620	200	5	—	571	3 150	7 100	325 000	725 000	**NN4084**	**NN4084K**	449	466	—	588	4	189
	620	200	5	475	—	3 400	7 850	350 000	800 000	**NNU4084**	**—**	449	—	482	588	4	209
	700	224	6	501	—	3 550	6 800	360 000	690 000	**NNU3184**	**—**	455	—	508	660	5	347
440	540	100	2.1	470	—	950	2 790	97 000	284 000	**NNU4888**	**—**	461	—	477	518	2	49.5
	650	157	6	—	596	2 360	4 900	240 000	500 000	**NN3088**	**NN3088K**	476	489	—	611	5	177
	650	157	6	500	—	2 360	4 900	240 000	500 000	**NNU3088**	**—**	476	—	507	611	5	178
	720	226	6	—	649	3 500	6 800	360 000	695 000	**NN3188**	**NN3188K**	476	495	—	680	5	357
460	620	118	4	—	578	1 610	3 700	164 000	380 000	**NN3992**	**NN3992K**	486	496	—	591	3	94.5
	620	160	4	507	—	2 400	6 200	245 000	630 000	**NNU4992**	**NNU4992K**	486	500	514	591	3	140
	680	163	6	—	623	2 550	5 350	260 000	545 000	**NN3092**	**NN3092K**	496	510	—	640	5	202
480	650	170	5	—	607	2 690	7 000	274 000	715 000	**NN4996**	**NN4996K**	510	525	—	617	4	164
	700	165	6	—	643	2 600	5 550	265 000	565 000	**NN3096**	**—**	517	—	—	660	5	211
	790	248	7.5	—	708	4 050	8 100	415 000	825 000	**NN3196**	**NN3196K**	523	544	—	742	6	447

Note (1) The suffix K represents with tapered bores (taper 1:12).
Remarks Production of double-row cylindrical roller bearings is generally in the high precision classes (Class 5 or better).

Note (2) d_a are values for adjusting ring for the NNU type.

Bore Diameter 500 – 850 mm

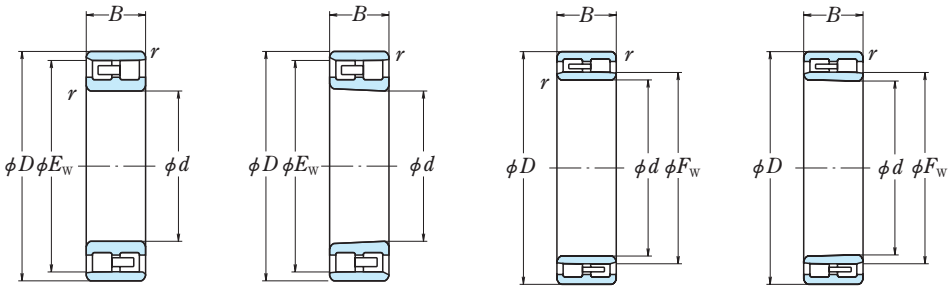

NN Cylindrical Bore | NN Tapered Bore | NNU Cylindrical Bore | NNU Tapered Bore

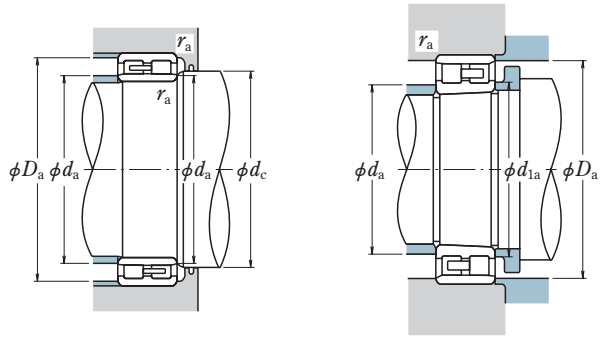

Boundary Dimensions (mm)						Basic Load Ratings (kN)		{kgf}		Bearing Numbers	
d	D	B	r min.	F_W	E_W	C_r	C_{0r}	C_r	C_{0r}	Cylindrical Bore	Tapered Bore (1)
500	670	170	5	551	—	2 720	7 200	278 000	735 000	**NNU49/500**	**—**
	720	167	6	—	663	2 580	5 600	264 000	570 000	**NN30/500**	**NN30/500K**
	720	167	6	563	—	2 580	5 600	264 000	570 000	**NNU30/500**	**—**
530	710	136	5	—	663	2 040	4 900	208 000	495 000	**NN39/530**	**—**
	710	180	5	575	—	2 900	7 050	296 000	720 000	**NNU49/530**	**NNU49/530K**
	780	185	6	—	715	3 200	6 900	325 000	705 000	**NN30/530**	**NN30/530K**
560	750	190	5	617	—	3 250	8 700	330 000	890 000	**NNU49/560**	**—**
	820	258	6	—	745	4 100	10 600	420 000	1 080 000	**NN40/560**	**—**
	920	280	7.5	650	—	6 850	13 700	700 000	1 400 000	**NNU31/560**	**—**
600	800	200	5	659	—	3 850	10 500	390 000	1 070 000	**NNU49/600**	**—**
630	780	150	4	676	—	2 290	7 000	234 000	710 000	**NNU48/630**	**—**
	850	218	6	—	793	4 200	11 400	425 000	1 160 000	**NN49/630**	**NN49/630K**
	850	218	6	704	—	4 000	10 800	410 000	1 100 000	**NNU49/630**	**NNU49/630K**
670	900	230	6	—	838	4 150	11 500	420 000	1 170 000	**NN49/670**	**—**
710	870	160	4	759	—	2 640	8 350	270 000	850 000	**NNU48/710**	**—**
800	1 060	258	6	879	—	5 700	16 500	585 000	1 690 000	**NNU49/800**	**NNU49/800K**
850	1 030	180	5	905	—	3 400	11 400	350 000	1 160 000	**NNU48/850**	**—**

Note (1) The suffix K represents with tapered bores (taper 1:12).
Remarks Production of double-row cylindrical roller bearings is generally in the high precision classes (Class 5 or better).

Abutment and Fillet Dimensions (mm)					Mass (kg)
d_a(2)	d_{1a}	d_c min.	D_a	r_a max.	approx.
531	—	558	637	4	171
537	551	—	680	5	205
537	—	570	680	5	220
561	—	—	676	4	149
561	574	582	676	4	202
568	583	—	738	5	296
592	—	624	715	4	239
598	—	—	778	5	472
604	—	657	870	6	738
633	—	666	764	4	284
659	—	683	748	3	160
670	688	—	807	5	328
670	688	711	807	5	356
710	—	—	856	5	419
741	—	766	836	3	203
843	865	886	1 013	5	573
888	—	912	989	4	310

Note (2) d_a are values for adjusting ring for the NNU type.

FULL-COMPLEMENT CYLINDRICAL ROLLER BEARINGS

Single-Row	NCF	Bore Diameter 100 – 670mm	B82
Double-Row	NNCF	Bore Diameter 100 – 500mm	B86
	RS-48E4, RS-49E4	Bore Diameter 100 – 560mm	B90
	RSF-48E4, RSF-49E4	Bore Diameter 100 – 560mm	B90
	RS-50, RS-50NR	Bore Diameter 100 – 400mm	B94

Design, Types, and Features

Cageless, full-complement cylindrical roller bearings have the maximum possible number of rollers and can sustain much heavier loads than cylindrical roller bearings of the same size with cages. On the other hand, high-speed capability is inferior to the bearings with cages.

The open-type single- and double-row bearings are mostly used in general industrial applications at low speed and under heavy load, and the shielded-type double-row bearings are often used in crane sheaves.

Table 1 Features of Various Types

Figure	Type	Design and Features
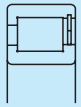	NCF	The outer and inner rings and rollers are non-separable since a retaining snap ring is installed at the side opposite the outer ring rib. They can sustain axial loads in only one direction.
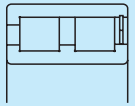	NNCF	NNCF is a double-row version of NCF. They can sustain heavy radial loads.
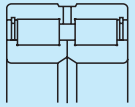	RS-48E4 RS-49E4	Double-row outer ring with center rib, two single-row inner rings with ribs. The outer and inner rings and rollers are non-separable since there are two retaining snap rings at the sides of the outer ring. They can suntain an axial load in either direction so they can be used as fixed-end bearings. An oil groove and holes are provided at the center of the outer ring.
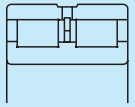	RSF-48E4 RSF-49E4	Double-row outer ring without ribs, double-row inner ring with three ribs. The outer and inner rings and rollers are non-separable since there is a retaining snap ring at the middle of the outer ring. They can be used as free-end bearings. The permissible axial movement is listed in the dimensional tables. An oil groove and holes are provided at the center of the outer ring.
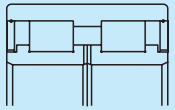 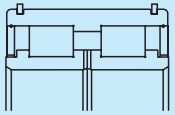	RS-50 RS-50NR	Both sides shielded, double-row outer ring with center rib, two inner rings with ribs. They can sustain an axial load in either direction. They are prelubricated, but it is possible to replenish the grease through an oil groove and holes in parts mating with the inner rings. If there are snap rings at the outside of the outer ring, this type becomes RS-50NR. They are surface-treated for rust prevention.

Tolerances and Running Accuracy ····· Table 2.2 (Pages A16 to A19)

Single-Row
Double-Row

Recommended Fits

Single-Row
Double-Row

Inner Ring Rotation ····· Table 3.2 (Page A35)
Table 3.4 (Page A36)
Outer Ring Rotation ····· Table 2 below

Table 2 Fits and Internal Clearances for Full-Complement Cylindrical Roller Bearings

Operating Conditions		Fitting between Inner Ring and Shaft	Fitting between Outer Ring and Housing Bore	Recommended Internal Clearance
Outer Ring Rotation	Thin walled housings and heavy loads	g6 or h6	P7	C 3
	Normal to heavy loads	g6 or h6	N7	C 3
	Light or fluctuating loads	g6 or h6	M7	CN

Internal clearance of RS and RSF type bearings is shown in Table 3.

Single-Row
Double-Row

Table 3 Internal Clearances

Units:μm

Nominal Bore Diameter d (mm)		Internal Clearance			
		CN		C3	
over	incl	min	max	min	max
80	**100**	30	80	65	115
100	**120**	35	90	80	135
120	**140**	40	105	90	155
140	**160**	50	115	100	165
160	**180**	60	125	110	175
180	**200**	65	135	125	195
200	**225**	75	150	140	215
225	**250**	90	165	155	230
250	**280**	100	180	175	255
280	**315**	110	195	195	280
315	**355**	125	215	215	305
355	**400**	140	235	245	340
400	**450**	155	275	270	390
450	**500**	180	300	300	420

Internal clearance of NCF and NNCF type bearings is shown in Table 3.11 on page A41.

Permissible Misalignment

The permissible misalignment of full-complement single-row cylindrical roller bearings is generally 0.0006 radian (2') under normal load.
For double-row bearings, nearly on misalignment is allowed.

NCF Type, Single-Row

Bore Diameter 100 – 280 mm

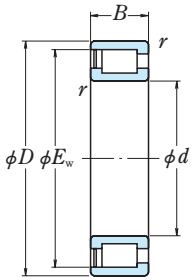

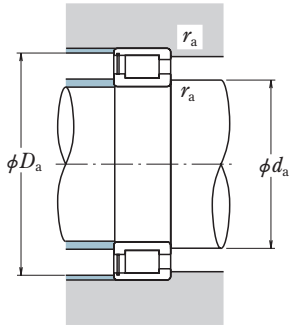

Boundary Dimensions (mm)					Basic Load Ratings (kN)		Bearing Numbers	Abutment and Fillet Dimensions (mm)			Mass (kg)
d	D	B	r min.	E_W	C_r	C_{0r}		d_a	D_a	r_a max.	approx.
100	140	24	1.1	130.5	132	209	**NCF2920V**	109	131	1	1.0
	150	37	1.5	139.7	209	310	**NCF3020V**	111	140	1.5	2.1
110	150	24	1.1	141	138	229	**NCF2922V**	119	142	1	1.1
	170	45	2	156.3	278	405	**NCF3022V**	122	157	2	3.3
120	165	27	1.1	154	177	305	**NCF2924V**	130	155	1	1.7
	180	46	2	167.58	293	440	**NCF3024V**	132	168	2	3.6
130	180	30	1.5	166.5	210	370	**NCF2926V**	141	168	1.5	2.2
	200	52	2	183.81	415	615	NCF3026V	142	187	2	5.6
140	190	30	1.5	179.4	227	395	**NCF2928V**	151	180	1.5	2.3
	210	53	2	197.82	435	680	**NCF3028V**	152	198	2	5.9
150	210	36	2	195	289	505	**NCF2930V**	163	196	2	3.7
	225	56	2.1	206.82	460	710	**NCF3030V**	165	209	2	7.1
160	220	36	2	207	310	535	**NCF2932V**	173	208	2	3.8
	240	60	2.1	224.8	520	810	**NCF3032V**	175	225	2	8.6
170	215	22	1.5	203.5	149	272	**NCF1834V**	182	204	1.5	1.8
	230	36	2	218	320	570	**NCF2934V**	183	219	2	4.1
	260	67	2.1	242.87	675	1 070	**NCF3034V**	185	244	2	11.9
180	225	22	1.5	215	154	290	**NCF1836V**	192	216	1.5	1.8
	250	42	2	231.5	390	695	**NCF2936V**	193	236	2	6.0
	280	74	2.1	260.3	785	1 260	**NCF3036V**	195	263	2	15.8
190	240	24	1.5	228.7	178	335	NCF1838V	202	229	1.5	2.4
	260	42	2	243.6	435	785	**NCF2938V**	203	245	2	6.5
	290	75	2.1	269.9	805	1 320	**NCF3038V**	206	273	2	16.7
200	250	24	1.5	237	182	350	**NCF1840V**	213	238	1.5	2.5
	280	48	2.1	261	530	955	**NCF2940V**	216	263	2	8.9
	310	82	2.1	287.8	910	1 510	**NCF3040V**	216	293	2	21.4
220	270	24	2	257.7	191	385	**NCF1844V**	234	258	2	2.7
	300	48	2.1	282	555	1 050	**NCF2944V**	236	283	2	9.6
	340	90	3	312.3	1 100	1 820	**NCF3044V**	238	320	2.5	28.2
240	300	28	2	283	236	470	**NCF1848V**	254	285	2	4.2
	320	48	2.1	303	580	1 140	**NCF2948V**	257	304	2	10.4
	360	92	3	335.25	1 160	1 990	**NCF3048V**	259	340	2.5	31.2
260	320	28	2	307	247	510	**NCF1852V**	275	308	2	4.5
	360	60	2.1	333.2	750	1 460	**NCF2952V**	277	342	2	18.1
	400	104	4	376.1	1 570	2 600	**NCF3052V**	282	377	3	45.3
280	350	33	2.5	333.9	330	675	**NCF1856V**	298	334	2	6.8
	380	60	2.1	358.8	880	1 740	**NCF2956V**	297	361	2	19.5
	420	106	4	390.5	1 610	2 730	**NCF3056V**	302	395	3	49

Remarks Full-complement cylindrical roller bearings are designed for specific applications, when using them, please contact NSK.

NCF Type, Single-Row

Bore Diameter 300 – 800 mm

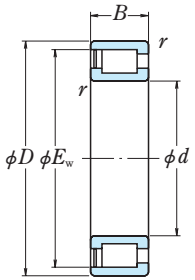

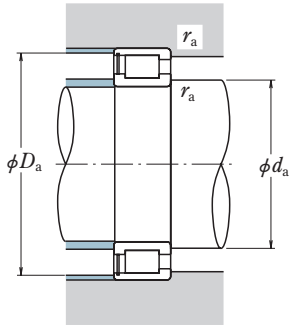

Boundary Dimensions (mm)					Basic Load Ratings (kN)		Bearing Numbers	Abutment and Fillet Dimensions (mm)			Mass (kg)
d	D	B	r min.	E_W	C_r	C_{0r}		d_a	D_a	r_a max.	approx.
300	380	38	2.5	359	445	870	**NCF1860V**	319	360	2	9.7
	420	72	3	389.6	1 120	2 200	**NCF2960V**	320	398	2.5	30.7
	460	118	4	431.7	1 980	3 500	**NCF3060V**	323	435	3	67.6
320	400	38	2.1	380	460	925	**NCF1864V**	338	381	2	10.3
	440	72	3	410	1 150	2 340	**NCF2964V**	340	418	2.5	33
	480	121	4	449.6	2 170	3 900	NCF3064V	343	454	3	73
340	420	38	2.1	401	475	985	**NCF1868V**	359	402	2	10.7
	460	72	3	430.3	1 190	2 470	**NCF2968V**	361	438	2.5	34.1
	520	133	5	485.8	2 480	4 350	NCF3068V	368	490	4	97
360	440	38	2.5	422	490	1 040	**NCF1872V**	380	423	2	11.5
	480	72	3	450.7	1 220	2 610	**NCF2972V**	381	457	2.5	36
	540	134	5	503.6	2 550	4 600	NCF3072V	388	509	4	102
380	480	46	2.5	452.8	575	1 230	**NCF1876V**	400	458	2	18.6
	520	82	4	486.7	1 600	3 350	**NCF2976V**	404	493	3	52
	560	135	5	521.4	2 610	4 800	NCF3076V	408	529	4	108
400	500	46	2.5	475.7	590	1 300	**NCF1880V**	421	478	2	19.5
	540	82	4	511	1 650	3 550	**NCF2980V**	425	513	3	53.4
	600	148	5	558.7	3 050	5 750	**NCF3080AV**	429	568	4	139
420	520	46	2.1	491	600	1 340	**NCF1884V**	440	498	2	20.5
	560	82	4	523.2	1 680	3 650	**NCF2984V**	445	533	3	55.7
	620	150	5	577.7	3 000	5 650	NCF3084V	449	588	4	147
440	540	46	2.1	514	615	1 410	**NCF1888V**	461	518	2	21.3
	600	95	4	562	2 070	4 300	**NCF2988V**	466	572	3	78.2
460	580	56	3	552.7	920	1 950	**NCF1892V**	483	555	2.5	32.5
	620	95	4	576.5	2 100	4 450	NCF2992V	486	591	3	81.2
480	600	56	3	573	940	2 040	**NCF1896V**	503	575	2.5	33.8
	650	100	5	615	2 380	5 100	**NCF2996V**	510	617	4	95.1
500	620	56	3	593.5	960	2 120	**NCF18/500V**	524	594	2.5	35
	670	100	5	630.2	2 420	5 250	NCF29/500V	531	637	4	98.4
530	650	56	3	624	990	2 240	**NCF18/530V**	554	625	2.5	36.9
560	680	56	3	654.7	1 020	2 360	**NCF18/560V**	585	655	2.5	39.3
	820	195	6	770	5 600	11 300	**NCF30/560V**	598	778	5	332.5
600	730	60	3	695.5	1 140	2 680	NCF18/600V	626	702	2.5	48.9
	800	118	5	752	3 050	7 300	**NCF29/600V**	633	764	4	164.9
630	780	69	4	742	1 470	3 400	**NCF18/630V**	659	748	3	68.8
670	820	69	4	780	1 520	3 550	NCF18/670V	700	787	3	72.7
710	870	74	4	832.5	1 650	3 900	**NCF18/710V**	741	836	3	87.6
750	920	78	5	882.3	1 930	4 600	**NCF18/750V**	786	883	4	103.3
800	980	82	5	936	2 110	5 100	**NCF18/800V**	837	940	4	123.1

Remarks Full-complement cylindrical roller bearings are designed for specific applications, when using them, please contact NSK.

NNCF Type, Double-Row

Bore Diameter 100 – 260 mm

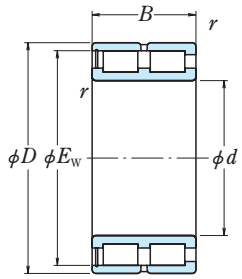

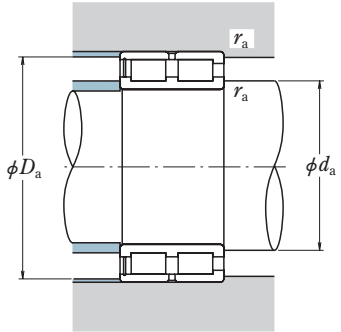

Boundary Dimensions (mm)					Basic Load Ratings (kN)		Bearing Numbers	Abutment and Fillet Dimensions (mm)			Mass (kg)
d	D	B	r min.	E_W	C_r	C_{0r}		d_a	D_a	r_a max.	approx.
100	140	40	1.1	129.8	194	400	NNCF4920V	109	130	1	2.0
	150	67	1.5	139.7	360	615	**NNCF5020V**	111	140	1.5	3.8
110	150	40	1.1	138.4	202	430	NNCF4922V	119	140	1	2.1
	170	80	2	156.3	490	840	**NNCF5022V**	122	157	2	6.1
120	165	45	1.1	153.8	226	480	NNCF4924V	130	155	1	2.9
	180	80	2	167.58	500	885	**NNCF5024V**	132	168	2	6.5
130	180	50	1.5	165.7	262	555	NNCF4926V	141	168	1.5	3.9
	200	95	2	183.81	710	1 230	NNCF5026V	142	187	2	10.3
140	190	50	1.5	176.2	272	595	NNCF4928V	151	178	1.5	4.2
	210	95	2	197.82	750	1 360	**NNCF5028V**	152	198	2	10.8
150	210	60	2	191.6	390	865	NNCF4930V	163	196	2	6.6
	225	100	2.1	206.82	785	1 420	**NNCF5030V**	165	209	2	13
160	220	60	2	204.1	410	930	NNCF4932V	173	206	2	7.0
	240	109	2.1	224.8	895	1 620	**NNCF5032V**	175	225	2	15.8
170	230	60	2	212.4	415	975	**NNCF4934V**	183	216	2	7.3
	260	122	2.1	242.87	1 160	2 140	**NNCF5034V**	185	244	2	22.1
180	250	69	2	230.5	550	1 230	**NNCF4936V**	193	236	2	10.7
	280	136	2.1	260.3	1 340	2 510	**NNCF5036V**	195	263	2	29.4
190	260	69	2	240.7	565	1 290	**NNCF4938V**	203	245	2	11.1
	290	136	2.1	269.9	1 380	2 630	NNCF5038V	206	273	2	30.8
200	250	50	1.5	235.9	320	825	NNCF4840V	213	237	1.5	5.9
	280	80	2.1	259.5	665	1 500	NNCF4940V	216	263	2	15.7
	310	150	2.1	287.75	1 560	3 000	NNCF5040V	216	293	2	39.7
220	270	50	1.5	256.9	340	905	NNCF4844V	233	257	1.5	6.4
	300	80	2.1	277	695	1 620	NNCF4944V	236	283	2	17
	340	160	3	312.3	1 890	3 650	**NNCF5044V**	238	320	2.5	50.7
240	300	60	2	282.6	495	1 340	NNCF4848V	254	285	2	10.3
	320	80	2.1	300	725	1 770	NNCF4948V	257	302	2	18.4
	360	160	3	335.25	1 990	4 000	**NNCF5048V**	259	340	2.5	54.3
260	320	60	2	303.6	515	1 450	NNCF4852V	275	304	2	11
	360	100	2.1	331.5	1 050	2 530	NNCF4952V	277	342	2	32
	400	190	4	376.1	2 690	5 200	NNCF5052V	282	377	3	82.7

Remarks Full-complement cylindrical roller bearings are designed for specific applications, when using them, please contact NSK.

NNCF Type, Double-Row

Bore Diameter 280 – 500 mm

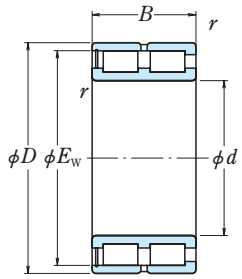

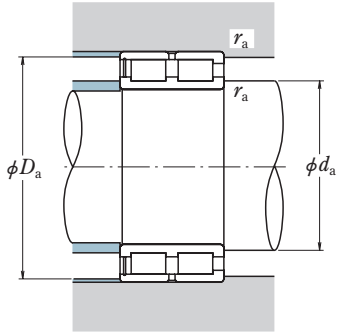

Boundary Dimensions (mm)					Basic Load Ratings (kN)		Bearing Numbers	Abutment and Fillet Dimensions (mm)			Mass (kg)
d	D	B	r min.	E_W	C_r	C_{0r}		d_a	D_a	r_a max.	approx.
280	350	69	2	332.5	685	1 860	NNCF4856V	295	334	2	16
	380	100	2.1	352.5	1 090	2 720	NNCF4956V	297	361	2	34
	420	190	4	390.5	2 770	5 450	NNCF5056V	302	395	3	87.7
300	380	80	2.1	357.2	805	2 160	NNCF4860V	318	361	2	23
	420	118	3	386.5	1 580	3 800	NNCF4960V	320	398	2.5	52
	460	218	4	431.7	3 400	7 000	NNCF5060V	323	435	3	125
320	400	80	2.1	380.2	835	2 310	NNCF4864V	338	381	2	24.3
	440	118	3	404.5	1 620	4 000	NNCF4964V	340	418	2.5	55
	480	218	4	446.9	3 500	7 350	NNCF5064V	343	454	3	131
340	420	80	2.1	397.4	855	2 430	NNCF4868V	359	400	2	25.6
	460	118	3	431	1 690	4 300	NNCF4968V	361	438	2.5	58
	520	243	5	485.8	4 250	8 750	NNCF5068V	368	490	4	177
360	440	80	2.1	420.4	885	2 580	NNCF4872V	379	421	2	27
	480	118	3	449	1 730	4 500	NNCF4972V	381	457	2.5	61
	540	243	5	503.6	4 350	9 150	NNCF5072V	388	509	4	186
380	480	100	2.1	450.6	1 260	3 600	NNCF4876V	399	459	2	45.5
	520	140	4	482.5	2 180	5 650	NNCF4976V	404	493	3	90.5
	560	243	5	521.4	4 500	9 600	NNCF5076V	408	529	4	194
400	500	100	2.1	471.7	1 290	3 750	NNCF4880V	420	479	2	47.5
	540	140	4	503	2 240	5 900	NNCF4980V	425	513	3	94.5
	600	272	5	558.7	5 050	10 900	NNCF5080V	429	568	4	256
420	520	100	2.1	492	1 320	3 950	NNCF4884V	440	498	2	49.5
	560	140	4	523	2 290	6 200	NNCF4984V	445	533	3	98.5
	620	272	5	577.7	5 150	11 300	**NNCF5084V**	449	588	4	267
440	540	100	2.1	513	1 350	4 150	NNCF4888V	461	518	2	51.5
	600	160	4	560.5	3 000	7 850	NNCF4988V	466	572	3	136
460	580	118	3	549.2	1 730	5 150	NNCF4892V	483	555	2.5	77.5
	620	160	4	573	3 050	8 050	NNCF4992V	486	591	3	142
480	600	118	3	565.8	1 760	5 300	NNCF4896V	503	575	2.5	80.5
	650	170	5	603	3 350	8 900	NNCF4996V	510	617	4	167
500	620	118	3	590.7	1 810	5 600	NNCF48/500V	524	594	2.5	83.5
	670	170	5	629	3 400	9 350	NNCF49/500V	531	637	4	173

Remarks Full-complement cylindrical roller bearings are designed for specific applications, when using them, please contact NSK.

RS-48 · RS-49 Types, Double-Row
RSF-48 · RSF-49 Types, Double-Row
Bore Diameter 100 – 280 mm

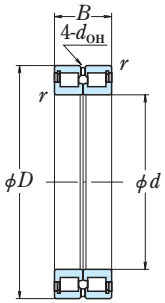

Fixed-End Bearing
RS

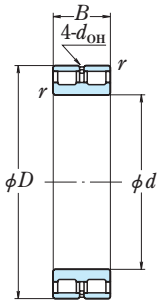

Free-End Bearing
RSF

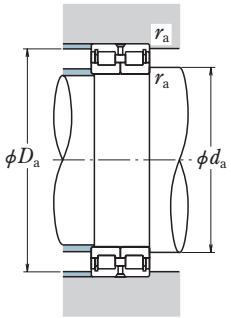

Boundary Dimensions (mm)				Basic Load Ratings (kN)		Bearing Numbers(1)		Dimensions (mm)		Abutment and Fillet Dimensions (mm)			Mass (kg)
d	D	B	r min.	C_r	C_{0r}	Fixed-End Bearing	Free-End Bearing	d_{OH}(2)	Axial Disp. (3)	d_a min.	D_a max.	r_a max.	approx.
100	125	25	1	87.5	189	RS-4820E4	RSF-4820E4	3	1.5	105	120	1	0.7
	140	40	1.1	194	400	**RS-4920E4**	**RSF-4920E4**	3	2	106.5	133.5	1	1.9
105	130	25	1	89.0	196	**RS-4821E4**	**RSF-4821E4**	3	1.5	110	125	1	0.7
	145	40	1.1	199	420	**RS-4921E4**	**RSF-4921E4**	3	2	111.5	138.5	1	2.0
110	140	30	1	114	260	**RS-4822E4**	**RSF-4822E4**	3	2	115	135	1	1.0
	150	40	1.1	202	430	**RS-4922E4**	**RSF-4922E4**	3	2	116.5	143.5	1	2.1
120	150	30	1	119	283	RS-4824E4	RSF-4824E4	3	2	125	145	1	1.2
	165	45	1.1	226	480	**RS-4924E4**	**RSF-4924E4**	4	3	126.5	158.5	1	2.9
130	165	35	1.1	162	390	**RS-4826E4**	**RSF-4826E4**	3	2	136.5	158.5	1	1.9
	180	50	1.5	262	555	**RS-4926E4**	**RSF-4926E4**	5	3.5	138	172	1.5	3.9
140	175	35	1.1	167	415	RS-4828E4	RSF-4828E4	3	2	146.5	168.5	1	2.0
	190	50	1.5	272	595	**RS-4928E4**	**RSF-4928E4**	5	3.5	148	182	1.5	4.2
150	190	40	1.1	235	575	**RS-4830E4**	**RSF-4830E4**	3	2	156.5	183.5	1	2.8
	210	60	2	390	865	**RS-4930E4**	**RSF-4930E4**	5	3.5	159	201	2	6.6
160	200	40	1.1	243	615	**RS-4832E4**	**RSF-4832E4**	3	2	166.5	193.5	1	3.0
	220	60	2	410	930	**RS-4932E4**	**RSF-4932E4**	5	3.5	169	211	2	7.0
170	215	45	1.1	265	650	**RS-4834E4**	**RSF-4834E4**	4	3	176.5	208.5	1	4.1
	230	60	2	415	975	**RS-4934E4**	**RSF-4934E4**	4	3.5	179	221	2	7.3
180	225	45	1.1	272	685	**RS-4836E4**	**RSF-4836E4**	4	3	186.5	218.5	1	4.3
	250	69	2	495	1 130	**RS-4936E4**	**RSF-4936E4**	6	4.5	189	241	2	10.7
190	240	50	1.5	315	785	**RS-4838E4**	**RSF-4838E4**	5	3.5	198	232	1.5	5.6
	260	69	2	510	1 180	**RS-4938E4**	**RSF-4938E4**	6	4.5	199	251	2	11.1
200	250	50	1.5	320	825	**RS-4840E4**	**RSF-4840E4**	5	3.5	208	242	1.5	5.9
	280	80	2.1	665	1 500	**RS-4940E4**	**RSF-4940E4**	7	5	211	269	2	15.7
220	270	50	1.5	340	905	**RS-4844E4**	**RSF-4844E4**	5	3.5	228	262	1.5	6.4
	300	80	2.1	695	1 620	**RS-4944E4**	**RSF-4944E4**	7	5	231	289	2	17
240	300	60	2	495	1 340	**RS-4848E4**	**RSF-4848E4**	5	3.5	249	291	2	10.3
	320	80	2.1	725	1 770	RS-4948E4	RSF-4948E4	7	5	251	309	2	18.4
260	320	60	2	515	1 450	**RS-4852E4**	**RSF-4852E4**	5	3.5	269	311	2	11
	360	100	2.1	1 050	2 530	**RS-4952E4**	**RSF-4952E4**	8	6	271	349	2	32
280	350	69	2	610	1 690	**RS-4856E4**	**RSF-4856E4**	6	4.5	289	341	2	16
	380	100	2.1	1 090	2 720	**RS-4956E4**	**RSF-4956E4**	8	6	291	369	2	34

Remarks Full-complement cylindrical roller bearings are designed for specific applications, when using them, please contact NSK.

Notes (1) The suffix E4 indicates that the outer ring is provided with oil holes and oil groove.
(2) d_{OH} represents the oil hole diameter in the outer ring.
(3) Permissible axial displacement for free-end bearings.

RS-48 · RS-49 Types, Double-Row
RSF-48 · RSF-49 Types, Double-Row
Bore Diameter 300 – 560 mm

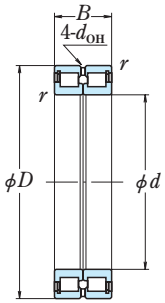

Fixed-End Bearing
RS

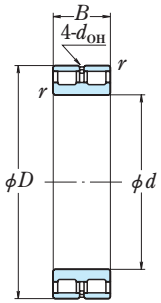

Free-End Bearing
RSF

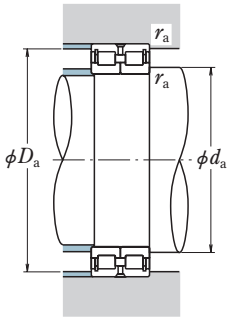

Boundary Dimensions (mm)				Basic Load Ratings (kN)		Bearing Numbers(1)		Dimensions (mm)		Abutment and Fillet Dimensions (mm)			Mass (kg)
d	D	B	r min.	C_r	C_{0r}	Fixed-End Bearing	Free-End Bearing	d_{OH}(2)	Axial Disp. (3)	d_a min.	D_a max.	r_a max.	approx.
300	380	80	2.1	805	2 160	**RS-4860E4**	**RSF-4860E4**	6	5	311	369	2	23
	420	118	3	1 460	3 400	**RS-4960E4**	**RSF-4960E4**	9	7	313	407	2.5	52
320	400	80	2.1	835	2 310	**RS-4864E4**	**RSF-4864E4**	6	5	331	389	2	24.3
	440	118	3	1 500	3 600	**RS-4964E4**	**RSF-4964E4**	9	7	333	427	2.5	55
340	420	80	2.1	855	2 430	**RS-4868E4**	**RSF-4868E4**	6	5	351	409	2	25.6
	460	118	3	1 560	3 900	**RS-4968E4**	**RSF-4968E4**	9	7	353	447	2.5	58
360	440	80	2.1	885	2 580	**RS-4872E4**	**RSF-4872E4**	6	5	371	429	2	27
	480	118	3	1 600	4 050	RS-4972E4	RSF-4972E4	9	7	373	467	2.5	61
380	480	100	2.1	1 260	3 600	**RS-4876E4**	**RSF-4876E4**	8	6	391	469	2	45.5
	520	140	4	2 040	5 200	RS-4976E4	RSF-4976E4	11	8	396	504	3	90.5
400	500	100	2.1	1 290	3 750	**RS-4880E4**	**RSF-4880E4**	8	6	411	489	2	47.5
	540	140	4	2 100	5 450	**RS-4980E4**	**RSF-4980E4**	11	8	416	524	3	94.5
420	520	100	2.1	1 320	3 950	**RS-4884E4**	**RSF-4884E4**	8	6	431	509	2	49.5
	560	140	4	2 150	5 700	**RS-4984E4**	**RSF-4984E4**	11	8	436	544	3	98.5
440	540	100	2.1	1 350	4 150	**RS-4888E4**	**RSF-4888E4**	8	6	451	529	2	51.5
	600	160	4	2 840	7 350	RS-4988E4	RSF-4988E4	11	8	456	584	3	136
460	580	118	3	1 730	5 150	**RS-4892E4**	**RSF-4892E4**	9	7	473	567	2.5	77.5
	620	160	4	2 870	7 500	RS-4992E4	RSF-4992E4	11	8	476	604	3	142
480	600	118	3	1 760	5 300	**RS-4896E4**	**RSF-4896E4**	9	7	493	587	2.5	80.5
	650	170	5	3 200	8 500	**RS-4996E4**	**RSF-4996E4**	12	9	500	630	4	167
500	620	118	3	1 810	5 600	RS-48/500E4	RSF-48/500E4	9	7	513	607	2.5	83.5
	670	170	5	3 300	8 900	**RS-49/500E4**	**RSF-49/500E4**	12	9	520	650	4	173
530	710	180	5	3 400	9 200	**RS-49/530E4**	**RSF-49/530E4**	12	11	550	690	4	206
560	750	190	5	3 800	10 100	**RS-49/560E4**	**RSF-49/560E4**	12	11	580	730	4	231

Remarks Full-complement cylindrical roller bearings are designed for specific applications, when using them, please contact NSK.

Notes (1) The suffix E4 indicates that the outer ring is provided with oil holes and oil groove.
(2) d_{OH} represents the oil hole diameter in the outer ring.
(3) Permissible axial displacement for free-end bearings.

RS-50 Type (Prelubricated), Double-Row

Bore Diameter 100 – 400 mm

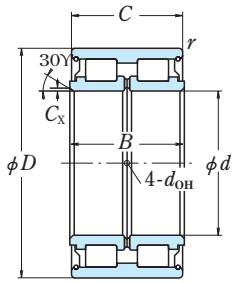

Without Locating Ring

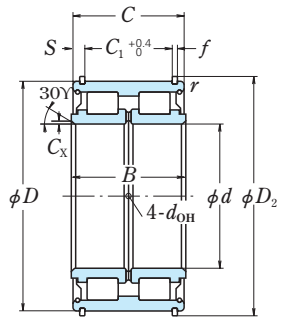

With Locating Ring

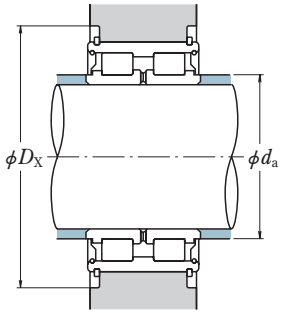

Boundary Dimensions (mm)						Basic Load Ratings (kN)		Bearing Numbers	
d	D	B	C	C_X(1) min.	r min.	C_r	C_{0r}	Without Locating Ring	With Locating Ring
100	150	67	66	1	0.6	320	585	**RS-5020**	**RS-5020NR**
110	170	80	79	1.1	1	385	695	**RS-5022**	**RS-5022NR**
120	180	80	79	1.1	1	400	750	**RS-5024**	**RS-5024NR**
130	200	95	94	1.1	1	535	1 000	**RS-5026**	**RS-5026NR**
140	210	95	94	1.1	1	550	1 040	**RS-5028**	**RS-5028NR**
150	225	100	99	1.3	1	620	1 210	**RS-5030**	**RS-5030NR**
160	240	109	108	1.3	1.1	695	1 370	**RS-5032**	**RS-5032NR**
170	260	122	121	1.3	1.1	860	1 680	**RS-5034**	**RS-5034NR**
180	280	136	135	1.3	1.1	980	1 910	**RS-5036**	**RS-5036NR**
190	290	136	135	1.3	1.1	1 120	2 230	**RS-5038**	**RS-5038NR**
200	310	150	149	1.3	1.1	1 310	2 650	**RS-5040**	**RS-5040NR**
220	340	160	159	1.5	1.1	1 510	3 100	**RS-5044**	**RS-5044NR**
240	360	160	159	1.5	1.1	1 570	3 350	**RS-5048**	**RS-5048NR**
260	400	190	189	2	1.5	2 130	4 500	**RS-5052**	**RS-5052NR**
280	420	190	189	2	1.5	2 170	4 700	**RS-5056**	**RS-5056NR**
300	460	218	216	2	1.5	2 670	5 850	**RS-5060**	**RS-5060NR**
320	480	218	216	2	1.5	2 720	6 100	**RS-5064**	**RS-5064NR**
340	520	243	241	2.1	2	3 350	7 550	**RS-5068**	—
360	540	243	241	2.1	2	3 450	7 850	RS-5072	—
380	560	243	241	2.1	2	3 550	8 400	RS-5076	—
400	600	272	270	2.1	2	4 250	9 950	**RS-5080**	—

Note (1) Chamfer dimension of inner ring in radial direction.

Locating Ring Dimensions (mm)				Oil Holes (mm)	Abutment and Fillet Dimensions (mm)		Mass (kg)
C_1	S	D_2	f	d_{OH}	d_a min.	D_X min.	approx.
54	6	155.4	2.5	4	106	163.5	4.05
65	7	175.4	2.5	5	116.5	183.5	6.1
65	7	188	3	5	126.5	197	7.0
77	8.5	207	3	5	136.5	217	10.6
77	8.5	217	3	5	146.5	227	11.3
81	9	232	3	6	157	242	13.7
89	9.5	247	3	6	167	257	16.8
99	11	270	4	6	177	285	22.2
110	12.5	294	5	6	187	318	30
110	12.5	304	5	6	197	328	32
120	14.5	324	5	6	207	352	41
130	14.5	356	6	7	228.5	382	53
130	14.5	376	6	7	248.5	402	57
154	17.5	416	7	8	270	444	86
154	17.5	436	7	8	290	472	92
178	19	476	7	8	310	512	130
176	20	500	8	8	330	536	135
—	—	—	—	10	352	—	185
—	—	—	—	10	372	—	192
—	—	—	—	10	392	—	196
—	—	—	—	10	412	—	280

Remarks
1. Good quality grease is prepacked in bearings.
2. Grease can be supplied through oil holes in the inner rings.
3. Full-complement cylindrical roller bearings are designed for specific applications, when using them, please contact NSK.

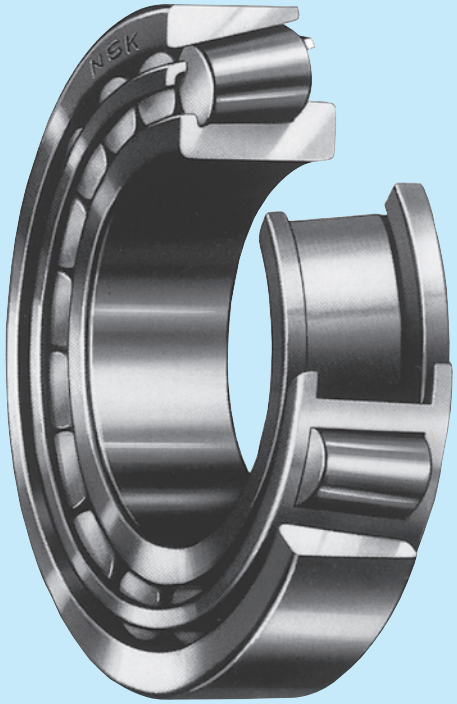

TAPERED ROLLER BEARINGS

Metric Design Single-Row Tapered Roller Bearings

Bore Diameter 100 – 1 900mm ····· B102

Inch Design Single-Row Tapered Roller Bearings

Bore Diameter 100.000 – 1 270.000mm ····· B114

The index for inch design tapered roller bearings is in an appendix (Page C52～C61).

Double-Cup Type Tapered Roller Bearings

KBE (TDO) Bore Diameter 100 – 2 000mm ····· B182
KDE (TDO) Bore Diameter 100 – 1 450mm ····· B246
KF (TNA) Bore Diameter 101.600 – 406.400mm ····· B252

Double-Cone Type Tapered Roller Bearings

KH (TDI) Bore Diameter 100 – 1 290mm ····· B262
KDH (TDI) Bore Diameter 100 – 540mm ····· B282

Design, Types, and Features

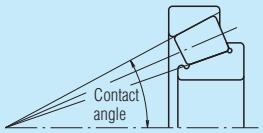

Tapered roller bearings are designed so the apices of the cones formed by the raceways of the cone and cup and the conical rollers all coincide at one point on the axis of the bearing. When a radial load is imposed, an axial force component occurs; therefore, it is necessary to use two bearings in opposition or some other multiple arrangement.

Among the metric design tapered roller bearings with high load capacity (HR series), some bearings have the basic number suffixed by J to conform to the specifications of ISO for the cup back face raceway diameter, cup width, and contact angle. Therefore, the cone assembly and cup of bearings with the same basic number suffixed by J are internationally interchangeable.

For the cone assemblies and cups of inch design tapered roller bearings, except four-row bearings, the bearing numbers are approximately formulated as follws:

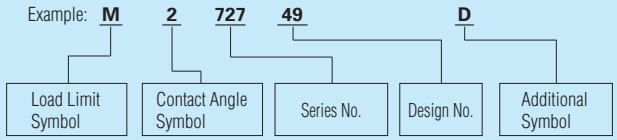

For tapered roller bearings, besides single-row bearings, there are also various combinations of bearings as listed in Table 1.

The cages of tapered roller bearings are either pressed steel or pin type.

Regarding four-row tapered roller bearings for roll necks, refer to page B344.

Table 1 Design and Features of Combinations of Tapered Roller Bearings

Figure	Arrangement	Examples of Bearing No.	Features
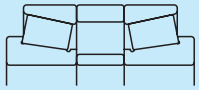	Back-to-back DB	HR32220JDB+KLR20	Two standard bearings are combined. The bearing internal clearances are adjusted by cone spacers or cup spacers. The cones and cups and spacers are marked with serial numbers and matching symbols. Components with the same serial number can be assembled referring to the matching symbols.
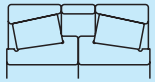	Face-to-face DF	HR32220JDF+KR	
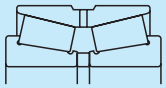	KBE(TDO)	100KBE31+L	This type of bearing consists of a double cup and two cone assemblies and a cone spacer. The bearing internal clearance has already been set using the cone spacer, and parts must be combined according to the serial number and matching symbol. The double cup has an oil groove and holes. The KBE type can carry both radial and axial loads, so it can be used as a fixed-end bearing. This is also used frequently on the free end by relieving the shaft elongation/contraction between the cup and housing. This type is basically the same as the back-to-back combination (DB combination) with two single-row tapered roller bearings coupled using cone and cup spacers, but is easier to handle because of fewer parts. This type of bearing is recommended where rigidity is required and strong moments exist.
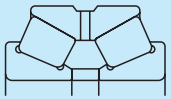	KDE(TDO)	100KDE1801+L	This type of bearing is equivalent to the KBE type but with a steeper contact angle. This is used when the axial load is larger than the radial load. The bearing internal clearance has already been set using a cone spacer. The bearing must be assembled according to the serial number and matching symbols.
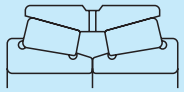	KF(TNA)	100KF1701	This type of bearing has one double cup and two cone assemblies. The two cones are in contact face-to-face and there is no cone spacer. Since the bearing internal clearance has already been set, the various parts must be assembled by observing the serial number and matching symbols.
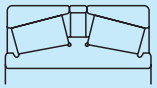	KH(TDI)	110KH31+K	This type of bearing consists of a double cone assembly and two cups and a cup spacer. Since the bearing internal clearance has already been set using the cup spacer, the parts must be combined according to the serial number and matching symbols. The cup spacer has an oil groove and holes. Since the depth of the oil groove is limited, it is desirable to also provide an oil groove inside the housing.
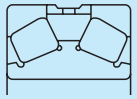	KDH(TDI)	100KDH2101+K	This type of bearing is a double-row tapered roller bearing with the rows facing inward but the contact angle is steeper than in the KH type. This consists of a double cone assembly, two cups, and a cup spacer. This is recommended when the axial load is larger than the radial load or an axial load only exists. In certain cases, a spring is provided between the housing shoulder and cup end face for preloading (without using a cup spacer).

Tolerances and Running Accuracy

Metric Design Tapered Roller Bearings ..... Table 2.3 (Pages A20 to A23)
Inch Design Tapered Roller Bearings ..... Table 2.4 (Pages A24 to A25)

Inch design tapered roller bearings of J-line (in the bearing tables, bearings preceeded by ▲) conform to the following tables. Symbols in the tables are described on page A15. Please contact NSK for details.

Table 2 Tolerances for Cones (Class K)

Units : μm

Nominal Bore Diameter d (mm)		$\Delta_{d\mathrm{mp}}$		$V_{d\mathrm{p}}$	$V_{d\mathrm{mp}}$	K_{ia}
over	incl	high	low	max.	max.	max.
80	**120**	0	– 20	20	15	30
120	**180**	0	– 25	25	19	35
180	**250**	0	– 30	30	23	50
250	**315**	0	– 35	35	26	60
315	**400**	0	– 40	40	30	70

Table 3 Tolerances for Cups (Class K)

Units : μm

Nominal Outside Diameter D (mm)		$\Delta_{D\mathrm{mp}}$		$V_{D\mathrm{p}}$	$V_{D\mathrm{mp}}$	K_{ea}
over	incl	high	low	max.	max.	max.
80	**120**	0	– 18	18	14	35
120	**150**	0	– 20	20	15	40
150	**180**	0	– 25	25	19	45
180	**250**	0	– 30	30	23	50
250	**315**	0	– 35	35	26	60
315	**400**	0	– 40	40	30	70
400	**500**	0	– 45	45	34	80

Table 4 Tolerances for Effective Width of Cone Assemblies and Cups and Bearing Width (Class K)

Units : μm

Nominal Bore Diameter d (mm)		Cone Assembly Effective Width Deviation Δ_{T1s}		Cup Effective Width Deviation Δ_{T2s}		Bearing Width Deviation Δ_{Ts}	
over	incl	high	low	high	low	high	low
80	**120**	+ 100	– 100	+ 100	– 100	+ 200	– 200
120	**315**	+ 150	– 150	+ 200	– 100	+ 350	– 250
315	**400**	+ 200	– 200	+ 200	– 200	+ 400	– 400

NSK

Recommended Fits

Metric Design Tapered Roller Bearings ·····Table 3.2 (Page A35)
Table 3.4 (Page A36)

Inch Design Tapered Roller Bearings ·····Table 3.6 (Page A37)
Table 3.7 (Page A38)

Internal Clearances ·····Table 3.13 (Page A43)

Metric Design Tapered Roller Bearings
(Matched and Double-Row)
Inch Design Tapered Roller Bearings
(Matched and Double-Row)

Dimensions Related to Mounting

The abutment and fillet dimensions for tapered roller bearings and listed in the bearing tables. Since the cages protrude frow the ring face of tapered roller bearings, please use care when designing shafts and housings.

When heavy axial loads are imposed, the shaft shoulder dimensions and strength must be sufficient to suport the cone rib.

Permissible Misalignment

The permissible misalignment angle for single-row tapered roller bearings is approximately 0.0009 radian (3').

Precautions for Use of Tapered Roller Bearings

1. If the load of tapered roller bearings becomes too small, or if the ratio of the axial and radial loads for matched bearings exceeds 'e' (e is listed in the bearing tables) during operation, slippage between the rollers and raceways occurs, which may result in smearing. Especially with large bearings since the weight of the rollers and cage is high. If such load conditions are expected, please consult with NSK for selection of the bearings.
2. Confirm Abutment and Fillet Dimensions D_a and D_b at the time of the HR series adoption.

Bore Diameter 100 – 130 mm

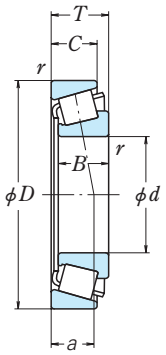

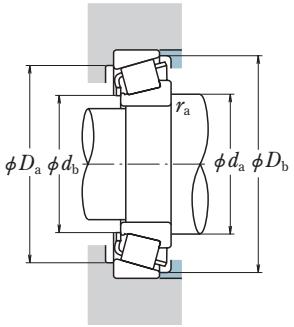

Dynamic Equivalent Load

$P = XF_r + YF_a$

$F_a/F_r \leqq e$		$F_a/F_r > e$	
X	Y	X	Y
1	0	0.4	Y_1

Static Equivalent Load

$P_0 = 0.5F_r + Y_0F_a$

When $F_r > 0.5F_r + Y_0F_a$, use $P_0 = F_r$

The values of e, Y_1, and Y_0 are given in the table below.

Boundary Dimensions (mm)							Basic Load Ratings (kN)		{kgf}		Bearing Numbers	Abutment and Fillet Dimensions (mm)						Eff. Load Centers (mm)	Constant	Axial Load Factors		Mass (kg)
d	D	T	B	C	CONE r min.	CUP r min.	C_r	C_{0r}	C_r	C_{0r}		d_a	d_b	D_a	D_b	CONE r_a max.	CUP r_a max.	a	e	Y_1	Y_0	approx.
100	140	25	25	20	1.5	1.5	117	205	12 000	20 900	**HR32920J**	112	106	131	136	1.5	1.5	24.2	0.33	1.8	1.0	1.18
	145	24	22.5	17.5	3	3	113	163	11 500	16 600	**T4CB100**	114	106	133	141	2.5	2.5	30.1	0.47	1.3	0.70	1.18
	150	32	32	24	2	1.5	176	294	17 900	30 000	**HR32020XJ**	115	106	138	146	2	1.5	32.5	0.46	1.3	0.72	1.95
	180	37	34	29	3	2.5	255	330	26 000	34 000	**HR30220J**	121	110	163	172	2.5	2	36.1	0.42	1.4	0.79	3.78
	180	49	46	39	3	2.5	325	450	33 000	46 000	**HR32220J**	122	110	161	174	2.5	2	41.5	0.42	1.4	0.79	5.05
	215	51.5	47	39	4	3	425	525	43 000	53 500	**HR30320J**	129	119	193	202	3	2.5	41.4	0.35	1.7	0.96	8.41
	215	77.5	73	60	4	3	565	755	57 500	77 000	**HR32320J**	130	114	190	206	3	2.5	53.2	0.35	1.7	0.96	12.7
105	145	25	25	20	1.5	1.5	119	212	12 100	21 600	**HR32921J**	117	111	136	141	1.5	1.5	25.3	0.34	1.8	0.96	1.23
	160	35	35	26	2.5	2	204	340	20 800	34 500	**HR32021XJ**	122	112	146	155	2	2	34.3	0.44	1.4	0.74	2.48
	190	39	36	30	3	2.5	280	365	28 500	37 500	**HR30221J**	127	116	172	182	2.5	2	38.1	0.42	1.4	0.79	4.52
	190	53	50	43	3	2.5	360	510	37 000	52 000	**HR32221J**	128	115	170	183	2.5	2	44.8	0.42	1.4	0.79	6.26
	225	53.5	49	41	4	3	455	565	46 500	57 500	**HR30321J**	136	124	202	212	3	2.5	43.2	0.35	1.7	0.96	9.52
	225	81.5	77	63	4	3	670	925	68 000	94 500	**HR32321J**	136	122	199	213	3	2.5	55.2	0.35	1.7	0.96	14.9
110	150	25	25	20	1.5	1.5	123	224	12 500	22 800	**HR32922J**	122	116	141	146	1.5	1.5	26.5	0.36	1.7	0.93	1.29
	170	38	38	29	2.5	2	236	390	24 000	40 000	**HR32022XJ**	128	117	156	165	2	2	35.9	0.43	1.4	0.77	3.09
	200	41	38	32	3	2.5	315	420	32 000	43 000	**HR30222J**	134	121	181	192	2.5	2	40.1	0.42	1.4	0.79	5.28
	200	56	53	46	3	2.5	400	565	40 500	57 500	**HR32222J**	135	121	179	193	2.5	2	47.2	0.42	1.4	0.79	7.35
	240	54.5	50	42	4	3	485	595	49 500	60 500	**HR30322J**	143	129	216	228	3	2.5	45.1	0.35	1.7	0.96	11
	240	84.5	80	65	4	3	675	910	68 500	93 000	**HR32322J**	144	127	213	229	3	2.5	58.5	0.35	1.7	0.96	17.1
120	165	29	29	23	1.5	1.5	161	291	16 400	29 700	HR32924J	133	126	155	161	1.5	1.5	29.2	0.35	1.7	0.95	1.8
	170	27	25	19.5	3	3	153	243	15 600	24 800	**T4CB120**	136	126	157	166	2.5	2.5	35.0	0.47	1.3	0.70	1.78
	180	38	38	29	2.5	2	242	405	24 600	41 000	**HR32024XJ**	138	127	165	175	2	2	39.7	0.46	1.3	0.72	3.27
	215	43.5	40	34	3	2.5	335	450	34 000	46 000	**HR30224J**	145	132	195	206	2.5	2	44.4	0.44	1.4	0.76	6.28
	215	61.5	58	50	3	2.5	440	635	44 500	65 000	**HR32224J**	146	131	192	208	2.5	2	52.0	0.44	1.4	0.76	9.0
	260	59.5	55	46	4	3	535	655	54 500	67 000	**HR30324J**	155	139	234	247	3	2.5	50.0	0.35	1.7	0.96	13.9
	260	90.5	86	69	4	3	770	1 060	78 500	108 000	**HR32324J**	155	137	230	248	3	2.5	62.4	0.35	1.7	0.96	21.8
130	180	32	32	25	2	1.5	200	365	20 400	37 500	**HR32926J**	145	138	168	174	2	1.5	31.4	0.34	1.8	0.97	2.46
	200	45	45	34	2.5	2	320	535	32 500	54 500	**HR32026XJ**	151	139	184	195	2	2	43.9	0.43	1.4	0.76	5.06
	230	43.75	40	34	4	3	375	505	38 000	51 500	**HR30226J**	157	146	210	220	3	2.5	45.8	0.44	1.4	0.76	7.25
	230	67.75	64	54	4	3	530	790	54 000	80 500	**HR32226J**	158	143	205	221	3	2.5	56.9	0.44	1.4	0.76	11.3
	280	63.75	58	49	5	4	650	820	66 000	83 500	**HR30326J**	167	149	252	265	4	3	52.7	0.35	1.7	0.96	16.6
	280	98.75	93	78	5	4	830	1 150	84 500	117 000	**32326**	172	150	248	269	4	3	69.2	0.36	1.7	0.92	26.6

Bore Diameter 140 – 190 mm

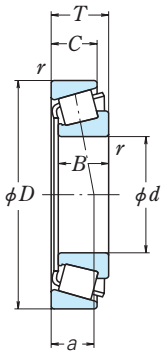

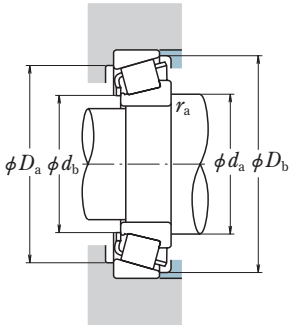

Dynamic Equivalent Load

$P = XF_r + YF_a$

$F_a/F_r \leqq e$		$F_a/F_r > e$	
X	Y	X	Y
1	0	0.4	Y_1

Static Equivalent Load

$P_0 = 0.5F_r + Y_0F_a$

When $F_r > 0.5F_r + Y_0F_a$, use $P_0 = F_r$

The values of e, Y_1, and Y_0 are given in the table below.

Boundary Dimensions (mm)							Basic Load Ratings (kN)		{kgf}		Bearing Numbers	Abutment and Fillet Dimensions (mm)						Eff. Load Centers (mm)	Constant	Axial Load Factors		Mass (kg)
d	D	T	B	C	CONE r min.	CUP r min.	C_r	C_{0r}	C_r	C_{0r}		d_a	d_b	D_a	D_b	CONE r_a max.	CUP r_a max.	a	e	Y_1	Y_0	approx.
140	190	32	32	25	2	1.5	206	390	21 000	39 500	**HR32928J**	155	148	178	184	2	1.5	33.6	0.36	1.7	0.92	2.64
	210	45	45	34	2.5	2	325	555	33 000	57 000	**HR32028XJ**	161	148	193	205	2	2	46.6	0.46	1.3	0.72	5.32
	250	45.75	42	36	4	3	390	515	40 000	52 500	**HR30228J**	169	154	228	240	3	2.5	48.9	0.44	1.4	0.76	8.74
	250	71.75	68	58	4	3	610	915	62 000	93 500	**HR32228J**	171	152	224	242	3	2.5	60.5	0.44	1.4	0.76	14.3
	300	67.75	62	53	5	4	740	945	75 500	96 500	**HR30328J**	178	150	269	284	4	3	55.7	0.35	1.7	0.96	21.1
	300	107.75	102	85	5	4	985	1 440	101 000	147 000	**32328**	185	161	265	288	4	3	76.4	0.37	1.6	0.88	33.9
150	210	38	38	30	2.5	2	281	520	28 600	53 000	**HR32930J**	168	160	196	203	2	2	36.5	0.33	1.8	1.0	4.05
	225	48	48	36	3	2.5	375	650	38 000	66 500	**HR32030XJ**	173	159	206	219	2.5	2	49.8	0.46	1.3	0.72	6.6
	270	49	45	38	4	3	485	665	49 000	67 500	**HR30230J**	180	164	245	258	3	2.5	51.3	0.44	1.4	0.76	11.2
	270	77	73	60	4	3	705	1 080	71 500	110 000	**HR32230J**	183	166	241	259	3	2.5	64.7	0.44	1.4	0.76	17.8
	320	72	65	55	5	4	825	1 060	84 500	108 000	**HR30330J**	192	178	288	301	4	3	60.0	0.35	1.7	0.96	25
	320	114	108	90	5	4	1 120	1 700	114 000	174 000	**32330**	198	173	282	306	4	3	81.5	0.37	1.6	0.88	41.4
160	220	38	38	30	2.5	2	296	570	30 000	58 000	**HR32932J**	178	170	206	213	2	2	38.7	0.35	1.7	0.95	4.32
	240	51	51	38	3	2.5	425	750	43 500	76 500	**HR32032XJ**	184	169	221	234	2.5	2	53.0	0.46	1.3	0.72	7.93
	290	52	48	40	4	3	470	610	47 500	62 000	**30232**	195	178	266	279	3	2.5	55.0	0.43	1.4	0.77	13.1
	290	84	80	67	4	3	795	1 120	81 000	125 000	**HR32232J**	195	177	259	278	3	2.5	70.5	0.44	1.4	0.76	22.7
	340	75	68	58	5	4	915	1 180	93 000	120 000	HR30332J	203	182	307	323	4	3	62.9	0.35	1.7	0.96	29.2
	340	121	114	95	5	4	1 210	1 770	123 000	181 000	**32332**	210	183	301	327	4	3	87.1	0.37	1.6	0.88	48.3
170	230	38	38	30	2.5	2	294	560	30 000	57 000	**HR32934J**	187	179	215	223	2	2	41.7	0.38	1.6	0.86	4.44
	260	57	57	43	3	2.5	505	890	51 500	90 500	**HR32034XJ**	196	180	239	253	2.5	2	56.6	0.44	1.4	0.74	10.6
	310	57	52	43	5	4	525	690	53 500	70 500	**30234**	207	189	282	297	4	3	59.8	0.43	1.4	0.77	16.1
	310	91	86	71	5	4	930	1 450	94 500	148 000	**HR32234J**	209	185	276	300	4	3	76.4	0.44	1.4	0.76	28
	360	80	72	62	5	4	1 010	1 310	103 000	134 000	**HR30334J**	214	194	325	342	4	3	67.3	0.35	1.7	0.96	36.4
	360	127	120	100	5	4	1 370	2 050	140 000	209 000	**32334**	222	194	319	346	4	3	91.3	0.37	1.6	0.88	57
180	250	45	45	34	2.5	2	350	685	36 000	69 500	**HR32936J**	201	189	231	242	2	2	53.9	0.48	1.3	0.69	6.56
	280	64	64	48	3	2.5	640	1 130	65 000	115 000	**HR32036XJ**	208	192	257	272	2.5	2	60.4	0.42	1.4	0.78	14.3
	320	57	52	43	5	4	520	695	53 000	70 500	**30236**	215	199	291	306	4	3	62.1	0.44	1.4	0.74	16.6
	320	91	86	71	5	4	960	1 540	98 000	157 000	**HR32236J**	219	199	285	307	4	3	78.8	0.45	1.3	0.73	29.8
	380	83	75	64	5	4	935	1 230	95 500	126 000	**30336**	230	209	343	360	4	3	72.4	0.36	1.7	0.92	39.3
	380	134	126	106	5	4	1 520	2 290	155 000	234 000	**32336**	232	205	336	364	4	3	96.6	0.37	1.6	0.88	66.8
190	260	45	45	34	2.5	2	365	715	37 000	73 000	**HR32938J**	210	199	241	252	2	2	55.3	0.48	1.3	0.69	6.83
	290	64	64	48	3	2.5	650	1 170	66 000	119 000	**HR32038XJ**	219	202	267	283	2.5	2	63.3	0.44	1.4	0.75	14.9
	340	60	55	46	5	4	580	790	59 000	80 500	**30238**	230	212	311	326	4	3	62.7	0.40	1.5	0.82	20.1
	340	97	92	75	5	4	1 110	1 770	113 000	181 000	**HR32238J**	231	209	305	327	4	3	80.5	0.44	1.4	0.76	35.2
	400	86	78	65	6	5	1 010	1 340	103 000	136 000	**30338**	243	222	362	380	5	4	76.1	0.36	1.7	0.92	46
	400	140	132	109	6	5	1 660	2 580	169 000	263 000	**32338**	249	220	355	385	5	4	102.7	0.37	1.6	0.88	78.9

Bore Diameter 200 – 380 mm

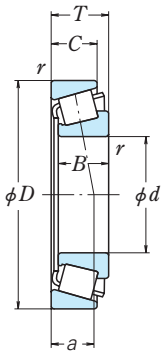

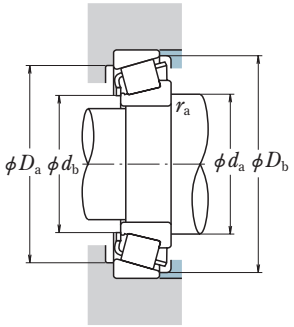

Dynamic Equivalent Load

$P = XF_r + YF_a$

$F_a/F_r \leqq e$		$F_a/F_r > e$	
X	Y	X	Y
1	0	0.4	Y_1

Static Equivalent Load

$P_0 = 0.5F_r + Y_0F_a$

When $F_r > 0.5F_r + Y_0F_a$, use $P_0 = F_r$

The values of e, Y_1, and Y_0 are given in the table below.

Boundary Dimensions (mm)							Basic Load Ratings (kN)		{kgf}		Bearing Numbers	Abutment and Fillet Dimensions (mm)						Eff. Load Centers (mm)	Constant	Axial Load Factors		Mass (kg)
d	D	T	B	C	CONE r min.	CUP r min.	C_r	C_{0r}	C_r	C_{0r}		d_a	d_b	D_a	D_b	CONE r_a max.	CUP r_a max.	a	e	Y_1	Y_0	approx.
200	280	51	51	39	3	2.5	480	935	48 500	95 000	**HR32940J**	224	212	262	272	2.5	2	54.2	0.39	1.5	0.84	9.65
	310	70	70	53	3	2.5	760	1 370	77 500	139 000	**HR32040XJ**	231	213	285	302	2.5	2	67.4	0.43	1.4	0.77	18.9
	360	64	58	48	5	4	645	890	65 500	90 500	**30240**	242	224	329	345	4	3	65.5	0.40	1.5	0.82	23.8
	360	104	98	82	5	4	1 210	1 920	123 000	196 000	**HR32240J**	243	221	323	345	4	3	85.1	0.41	1.5	0.81	42.6
	420	89	80	67	6	5	1 030	1 390	105 000	142 000	**30340**	251	229	372	391	5	4	81.4	0.37	1.6	0.88	52.3
	420	146	138	115	6	5	1 820	2 870	185 000	292 000	**32340**	260	229	372	403	5	4	106.7	0.37	1.6	0.88	90.9
220	300	51	51	39	3	2.5	490	990	50 000	101 000	**HR32944J**	243	232	281	292	2.5	2	59.2	0.43	1.4	0.78	10.3
	340	76	76	57	4	3	885	1 610	90 500	164 000	**HR32044XJ**	254	234	313	331	3	2.5	73.6	0.43	1.4	0.77	24.4
	400	72	65	54	5	4	810	1 150	82 500	117 000	**30244**	266	246	365	381	4	3	74.6	0.40	1.5	0.82	33.6
	400	114	108	90	5	4	1 450	2 340	148 000	239 000	**HR32244J**	268	240	359	387	4	3	96.3	0.44	1.4	0.76	59.4
	460	97	88	73	6	5	1 430	1 990	146 000	203 000	**30344**	277	254	414	434	5	4	85.3	0.36	1.7	0.92	72.4
	460	154	145	122	6	5	2 020	3 200	206 000	325 000	**32344**	281	250	405	438	5	4	114.9	0.37	1.6	0.88	114
240	320	51	51	39	3	2.5	500	1 040	51 000	107 000	**HR32948J**	264	252	300	312	2.5	2	65.1	0.46	1.3	0.72	11.1
	360	76	76	57	4	3	920	1 730	94 000	177 000	**HR32048XJ**	274	253	332	351	3	2.5	79.1	0.46	1.3	0.72	26.2
	440	79	72	60	5	4	990	1 400	101 000	142 000	**30248**	290	267	401	422	4	3	85.1	0.44	1.4	0.74	45.2
	440	127	120	100	5	4	1 630	2 730	166 000	278 000	**32248**	296	265	397	426	4	3	102.5	0.40	1.5	0.82	78
	500	105	95	80	6	5	1 660	2 340	169 000	238 000	**30348**	300	277	449	471	5	4	92.8	0.36	1.7	0.92	92.6
	500	165	155	132	6	5	2 520	4 100	257 000	415 000	**32348**	307	273	444	479	5	4	123.2	0.37	1.6	0.88	145
260	360	63.5	63.5	48	3	2.5	730	1 450	74 500	148 000	**HR32952J**	287	273	337	350	2.5	2	69.8	0.41	1.5	0.81	18.6
	400	87	87	65	5	4	1 160	2 160	118 000	220 000	**HR32052XJ**	300	276	368	389	4	3	86.3	0.43	1.4	0.76	38.5
	480	89	80	67	6	5	1 190	1 700	121 000	174 000	**30252**	318	291	438	461	5	4	94.5	0.44	1.4	0.74	60.7
	480	137	130	106	6	5	1 900	3 300	194 000	335 000	**32252**	319	286	426	460	5	4	116.0	0.45	1.3	0.73	103
280	380	63.5	63.5	48	3	2.5	765	1 580	78 000	162 000	**HR32956J**	308	293	357	371	2.5	2	75.3	0.43	1.4	0.76	20
	420	87	87	65	5	4	1 180	2 240	120 000	228 000	**HR32056XJ**	320	295	386	409	4	3	91.6	0.46	1.3	0.72	40.6
	500	89	80	67	6	5	1 240	1 900	127 000	194 000	**30256**	336	313	456	478	5	4	98.5	0.44	1.4	0.74	66.3
	500	137	130	106	6	5	1 950	3 450	199 000	355 000	**32256**	339	306	445	481	5	4	123.0	0.47	1.3	0.70	109
300	420	76	76	57	4	3	1 010	2 100	103 000	214 000	**HR32960J**	335	317	394	409	3	2.5	79.9	0.39	1.5	0.84	31.4
	460	100	100	74	5	4	1 440	2 700	147 000	275 000	**HR32060XJ**	344	317	423	447	4	3	98.4	0.43	1.4	0.76	56.6
	540	96	85	71	6	5	1 440	2 100	147 000	214 000	**30260**	357	331	493	517	5	4	105.1	0.44	1.4	0.74	80.6
	540	149	140	115	6	5	2 220	3 700	226 000	380 000	**32260**	364	329	486	524	5	4	131.6	0.46	1.3	0.72	132
320	440	76	72	63	4	3	900	1 880	92 000	192 000	**32964**	354	335	412	431	3	2.5	84.3	0.39	1.5	0.84	32
	480	100	100	74	5	4	1 510	2 910	153 000	297 000	**HR32064XJ**	365	338	443	468	4	3	104.5	0.46	1.3	0.72	60
	580	104	92	75	6	5	1 640	2 420	168 000	247 000	**30264**	382	354	529	554	5	4	113.7	0.44	1.4	0.74	99.3
340	460	76	76	57	4	3	1 050	2 220	107 000	226 000	**HR32968J**	374	356	433	449	3	2.5	91.0	0.44	1.4	0.75	34.3
360	480	76	76	57	4	3	1 080	2 340	110 000	239 000	**HR32972J**	394	376	452	469	3	2.5	96.8	0.46	1.3	0.72	36.1
380	520	87	82	71	5	4	1 210	2 550	124 000	260 000	**32976**	418	396	487	508	4	3	95.2	0.39	1.6	0.86	49.5

Bore Diameter 400 – 520 mm

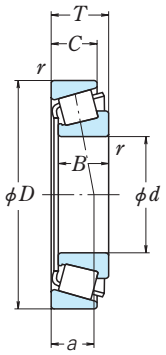

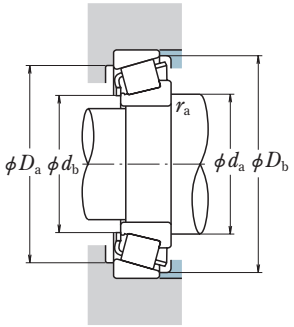

Dynamic Equivalent Load

$P = XF_r + YF_a$

$F_a/F_r \leqq e$		$F_a/F_r > e$	
X	Y	X	Y
1	0	0.4	Y_1

Static Equivalent Load

$P_0 = 0.5F_r + Y_0F_a$

When $F_r > 0.5F_r + Y_0F_a$, use $P_0 = F_r$

The values of e, Y_1, and Y_0 are given in the table below.

Boundary Dimensions (mm)							Basic Load Ratings (kN)		{kgf}		Bearing Numbers	Abutment and Fillet Dimensions (mm)						Eff. Load Centers (mm)	Constant	Axial Load Factors		Mass (kg)
d	D	T	B	C	CONE r min.	CUP r min.	C_r	C_{0r}	C_r	C_{0r}		d_a	d_b	D_a	D_b	CONE r_a max.	CUP r_a max.	a	e	Y_1	Y_0	approx.
400	540	87	82	71	5	4	1 250	2 700	128 000	276 000	**32980**	439	417	508	530	4	3	100.8	0.40	1.5	0.82	52.7
	600	100	82	80	6	6	1 420	2 730	145 000	279 000	**R400-1**	454	429	556	579	5	5	121.5	0.43	1.4	0.77	84.9
	600	110	102.5	72.5	6	5	1 790	3 550	183 000	360 000	**R400-5**	460	425	550	586	5	4	164.8	0.70	0.9	0.47	102
	600	115	114.3	89.6	6	6	2 000	4 300	204 000	435 000	**R400-4**	457	429	556	580	5	5	106.9	0.33	1.8	0.99	112
	600	125	118	100	6	5	1 960	4 050	200 000	415 000	**32080**	453	424	553	580	5	4	115.3	0.36	1.7	0.92	116
	620	130	130	97	6	5	2 360	4 600	241 000	470 000	**R400-8**	457	427	573	599	5	4	117.7	0.37	1.6	0.90	135
	620	140	140	106	6	5	2 480	4 900	253 000	500 000	**R400-6A**	457	426	571	600	5	4	121.6	0.37	1.6	0.90	146
	750	130	115	77	6	6	2 650	4 150	270 000	425 000	**R400-3**	485	449	674	713	5	5	188.8	0.70	0.9	0.47	220
420	540	76	72	62	5	4	965	2 260	98 500	230 000	**R420-2**	456	434	509	529	4	3	108.2	0.46	1.3	0.72	40.4
	560	87	87	67	5	4	1 300	2 810	132 000	287 000	**R420-5**	458	436	528	549	4	3	106.1	0.41	1.5	0.81	54.9
	560	87	82	72	5	4	1 300	2 810	132 000	287 000	**32984**	458	436	528	550	4	3	106.1	0.41	1.5	0.81	54.8
	580	95	90	56	6	5	1 310	2 700	133 000	275 000	**R420-4**	469	438	539	569	4	4	159.7	0.74	0.8	0.45	69.4
	620	125	118	100	6	5	2 000	4 200	204 000	430 000	**32084**	473	444	572	600	5	4	120.0	0.37	1.6	0.88	121
	800	190	190	135	7.5	7.5	4 050	7 250	415 000	740 000	**R420-6**	518	476	716	762	6	6	189.6	0.52	1.2	0.64	408
425	700	150	140	95	6	6	2 720	5 250	278 000	540 000	**R425-1**	507	455	625	683	5	5	226.8	0.87	0.7	0.38	216
430	720	130	120	78	6	6	2 520	4 400	257 000	450 000	**R430-1**	506	469	655	693	5	5	189.1	0.70	0.9	0.47	194
440	540	63.5	60	52	5	4	825	2 150	84 000	220 000	**R440-3**	470	452	514	531	4	3	95.4	0.41	1.5	0.80	29.9
	650	130	122	104	6	6	2 230	4 600	227 000	470 000	**32088**	496	467	602	630	5	5	126.3	0.36	1.7	0.92	136
460	600	87	82	71	5	4	1 310	3 150	134 000	320 000	**R460-1**	500	477	567	588	4	3	110.8	0.40	1.5	0.82	60.9
	860	210	210	156	7.5	7.5	5 150	9 550	525 000	975 000	**R460-4**	560	521	772	818	6	6	187.1	0.41	1.5	0.80	524
	910	210	210	150	7.5	7.5	5 150	8 950	525 000	910 000	**R460-6**	572	526	815	868	6	6	211.9	0.52	1.2	0.64	593
470	580	35	35	26	3	2.5	435	1 000	44 000	102 000	**R470-51**	498	489	557	565	2.5	2	75.9	0.35	1.7	0.95	19.1
	610	82	77	63	5	4	1 220	2 840	124 000	289 000	**R470-1**	510	488	579	598	4	3	109.2	0.40	1.5	0.82	56.9
480	730	150	140	120	7.5	7.5	3 300	6 950	335 000	710 000	**R480-1A**	546	516	673	705	6	6	143.2	0.36	1.7	0.91	217
	950	220	220	155	7.5	7.5	5 700	10 000	580 000	1 020 000	**R480-4**	595	548	851	903	6	6	215.3	0.49	1.2	0.67	676
490	600	35	35	28	3	2.5	460	1 200	47 000	122 000	**R490-1**	518	509	575	583	2	2	75.7	0.33	1.8	0.99	20.7
500	670	84.5	78	60	6	5	1 530	3 150	156 000	325 000	**R500-9**	545	522	635	655	5	4	120.2	0.43	1.4	0.77	75.5
	750	150	140	120	7.5	7.5	3 350	7 200	340 000	730 000	**R500-5**	567	536	692	724	6	6	148.1	0.37	1.6	0.88	225
	870	170	155	100	9.5	9.5	3 700	7 150	380 000	730 000	**R500-4**	612	552	772	839	8	8	287.1	0.94	0.6	0.35	391
510	640	85	80	65	4	3	1 210	2 980	123 000	305 000	**R510-1**	547	526	611	629	2.5	2.5	116.0	0.40	1.5	0.82	58
520	670	65	55	45	5	4	955	2 050	97 500	209 000	**R520-1**	560	541	636	654	4	3	138.4	0.55	1.1	0.60	50.1

Bore Diameter 530 – 950 mm

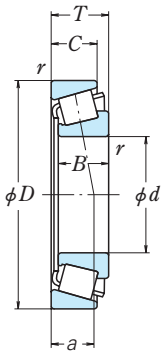

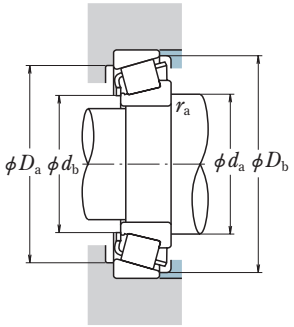

Dynamic Equivalent Load

$P = XF_r + YF_a$

$F_a/F_r \leqq e$		$F_a/F_r > e$	
X	Y	X	Y
1	0	0.4	Y_1

Static Equivalent Load

$P_0 = 0.5F_r + Y_0F_a$

When $F_r > 0.5F_r + Y_0F_a$, use $P_0 = F_r$

The values of e, Y_1, and Y_0 are given in the table below.

Boundary Dimensions (mm)							Basic Load Ratings (kN)		{kgf}		Bearing Numbers	Abutment and Fillet Dimensions (mm)						Eff. Load Centers (mm)	Constant	Axial Load Factors		Mass (kg)
d	D	T	B	C	CONE r min.	CUP r min.	C_r	C_{0r}	C_r	C_{0r}		d_a	d_b	D_a	D_b	CONE r_a max.	CUP r_a max.	a	e	Y_1	Y_0	approx.
530	670	100	95	82	5	4	1 600	4 150	163 000	425 000	**R530-1**	571	547	637	659	4	3	119.7	0.37	1.6	0.88	78.9
	680	65	55	45	5	4	970	2 080	99 000	212 000	**R530-2**	570	551	646	665	4	3	140.3	0.55	1.1	0.60	49.4
550	800	95	90	70	6	6	2 290	4 400	234 000	450 000	**R550-1**	610	589	751	772	5	5	135.7	0.42	1.4	0.79	149
560	680	60	60	46	4	3	940	2 480	96 000	252 000	**R560-1**	594	577	654	667	3	2.5	105.7	0.39	1.5	0.85	42.2
	750	95	90	71	6	5	1 720	4 150	176 000	420 000	**R560-4**	611	587	706	728	5	4	129.7	0.40	1.5	0.82	110
	820	150	140	115	7.5	7.5	3 500	7 850	355 000	805 000	**R560-5**	630	597	758	792	6	6	164.0	0.41	1.5	0.80	256
	1 080	235	235	170	7.5	7.5	7 700	13 400	785 000	1 370 000	**R560-6**	682	628	975	1 032	6	6	236.2	0.49	1.2	0.68	928
600	780	131	120	100	6	5	2 320	5 700	236 000	580 000	**R600-5**	649	622	738	764	5	4	139.8	0.34	1.7	0.96	146
	820	105	95	65	6	5	1 700	4 000	173 000	410 000	**R600-4**	671	632	766	803	5	4	272.8	0.94	0.6	0.35	148
	860	150	140	115	7.5	7.5	3 600	8 350	365 000	850 000	**R600-3**	670	636	797	833	6	6	174.6	0.43	1.4	0.76	272
	1 000	190	170	115	9.5	9.5	4 600	9 250	470 000	940 000	**R600-1**	718	655	897	968	8	8	309.7	0.87	0.7	0.38	527
620	820	90	80	55	6	5	1 700	4 000	173 000	410 000	**R620-1**	681	642	766	803	5	4	262.8	0.94	0.6	0.35	117
630	780	100	95	80	7.5	4	1 780	5 050	181 000	515 000	**R630-3**	677	647	741	767	6	3	147.8	0.44	1.4	0.75	101
	1 090	190	170	110	12	12	4 800	9 400	490 000	955 000	**R630-1**	766	701	974	1 047	10	10	352.5	0.94	0.6	0.35	657
	1 180	250	225	150	12	12	7 050	13 800	720 000	1 410 000	**R630-2**	795	712	1 033	1 128	10	10	395.6	0.94	0.6	0.35	1 110
635	850	105	105	75	5	5	2 360	5 100	240 000	525 000	**R635-1**	689	661	807	830	4	4	145.3	0.40	1.5	0.82	150
650	1 050	190	170	110	9.5	9.5	4 700	9 800	480 000	1 000 000	**R650-1**	770	699	943	1 017	8	8	340.8	0.93	0.6	0.36	579
710	920	110	110	83	6	5	2 390	5 600	244 000	570 000	**R710-1**	764	735	874	901	5	4	168.2	0.44	1.4	0.74	169
	950	113	106	80	6	6	2 690	5 700	274 000	580 000	**R710-2**	766	739	898	925	5	5	176.2	0.46	1.3	0.72	200
750	1 000	110	107	80	6	6	2 760	6 300	281 000	640 000	**R750-2**	811	786	949	972	5	5	162.3	0.40	1.5	0.82	216
780	925	95	92	75	6	5	1 960	5 800	200 000	590 000	**R780-2**	822	799	893	913	5	4	140.6	0.34	1.7	0.96	110
785	925	95	92	75	6	5	1 960	5 800	200 000	590 000	**R785-1**	825	802	893	913	5	4	140.6	0.34	1.7	0.96	106
790	930	95	92	75	6	5	2 240	6 900	228 000	705 000	**R790-1**	830	808	898	918	4	4	140.9	0.35	1.7	0.95	113
800	1 020	110	110	85	6	6	3 050	7 700	310 000	785 000	**R800-1**	853	828	972	995	5	5	158.8	0.37	1.6	0.90	215
830	1 050	90	90	64	6	5	2 200	5 750	224 000	585 000	**R830-2A**	892	867	1 007	1 028	4	4	178.8	0.44	1.4	0.75	183
	1 080	156	156	118	6	6	4 550	12 400	460 000	1 260 000	**R830-1**	898	859	1 022	1 060	5	5	206.8	0.44	1.4	0.75	367
850	1 050	90	90	64	6	5	2 200	5 750	224 000	585 000	**R850-1A**	902	877	1 007	1 028	4	4	178.8	0.44	1.4	0.75	165
900	1 120	110	110	85	6	6	3 150	8 500	325 000	865 000	**R900-1**	956	928	1 072	1 099	5	5	184.7	0.41	1.5	0.81	239
908	1 060	92	90	76	6	5	2 080	6 350	212 000	650 000	**R908-1**	951	928	1 027	1 047	5	4	153.8	0.35	1.7	0.95	129
910	1 062	92	90	76	6	5	2 080	6 350	212 000	650 000	**R910-1**	952	929	1 028	1 048	5	4	153.8	0.35	1.7	0.95	129
940	1 140	93	90	65	6	5	2 420	6 950	247 000	710 000	**R940-1**	995	967	1 094	1 118	5	4	217.0	0.51	1.2	0.65	187
	1 210	126	115	80	6	6	3 500	9 100	355 000	925 000	**R940-2A**	1 016	974	1 146	1 186	5	5	316.2	0.73	0.8	0.45	341
950	1 170	110	110	85	6	6	3 250	8 950	330 000	910 000	**R950-1**	1 007	978	1 122	1 150	5	5	199.0	0.43	1.4	0.77	252

Bore Diameter 1 010 – 1 900 mm

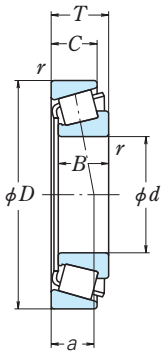

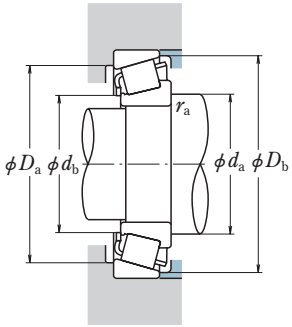

Dynamic Equivalent Load

$P = XF_r + YF_a$

$F_a/F_r \leqq e$		$F_a/F_r > e$	
X	Y	X	Y
1	0	0.4	Y_1

Static Equivalent Load

$P_0 = 0.5F_r + Y_0F_a$

When $F_r > 0.5F_r + Y_0F_a$, use $P_0 = F_r$

The values of e, Y_1, and Y_0 are given in the table below.

Boundary Dimensions (mm)							Basic Load Ratings (kN)		Basic Load Ratings {kgf}		Bearing Numbers	Abutment and Fillet Dimensions (mm)						Eff. Load Centers (mm)	Constant	Axial Load Factors		Mass (kg)
d	D	T	B	C	r min. CONE	r min. CUP	C_r	C_{0r}	C_r	C_{0r}		d_a	d_b	D_a	D_b	r_a max. CONE	r_a max. CUP	a	e	Y_1	Y_0	approx.
1 010	1 210	95	75	65	4	3	1 650	4 800	169 000	485 000	**R1010-1**	1 064	1 039	1 162	1 188	2.5	2.5	303.8	0.70	0.9	0.47	182
1 050	1 600	270	245	180	9.5	9.5	9 350	23 700	955 000	2 420 000	**R1050-1**	1 215	1 120	1 454	1 554	8	8	500.6	0.87	0.7	0.38	1 840
1 060	1 600	270	245	180	9.5	9.5	9 350	23 700	955 000	2 420 000	**R1060-1**	1 220	1 125	1 454	1 554	8	8	500.6	0.87	0.7	0.38	1 810
1 200	1 400	100	92	64	6	6	2 570	8 400	262 000	855 000	**R1200-1**	1 259	1 225	1 346	1 380	5	5	354.6	0.72	0.8	0.46	243
1 320	1 720	236.5	230	175	7.5	7.5	9 600	28 800	980 000	2 930 000	**R1320-1**	1 427	1 366	1 620	1 683	6	6	363.2	0.52	1.2	0.64	1 390
1 580	1 820	120	110	80	6	6	3 900	13 200	395 000	1 350 000	**R1580-1**	1 647	1 615	1 767	1 797	5	5	380.1	0.58	1.0	0.57	453
1 900	2 140	120	110	78	6	6	4 000	14 700	410 000	1 500 000	**R1900-1**	1 968	1 930	2 082	2 118	5	5	523.2	0.70	0.9	0.47	535

Bore Diameter 100.000 – 101.600 mm

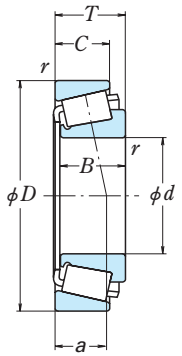

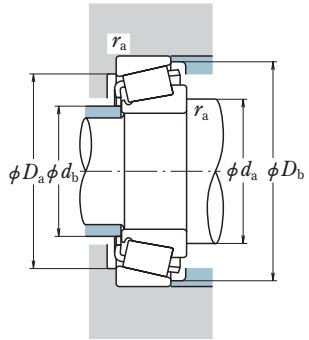

Dynamic Equivalent Load

$P = XF_r + YF_a$

$F_a/F_r \leqq e$		$F_a/F_r > e$	
X	Y	X	Y
1	0	0.4	Y_1

Static Equivalent Load

$P_0 = 0.5F_r + Y_0F_a$

When $F_r > 0.5F_r + Y_0F_a$, use $P_0 = F_r$

The values of e, Y_1, and Y_0 are given in the table below.

Boundary Dimensions (mm/inch)							Basic Load Ratings (kN)		{kgf}		Bearing Numbers	Abutment and Fillet Dimensions (mm)						Eff. Load Centers (mm)	Constant	Axial Load Factors		Mass (kg)
d	D	T	B	C	CONE r min.	CUP r min.	C_r	C_{0r}	C_r	C_{0r}		d_a	d_b	D_a	D_b	CONE r_a max.	CUP r_a max.	a	e	Y_1	Y_0	approx.
100.000 3.9370	150.000 5.9055	32.000 1.2598	30.000 1.1811	26.000 1.0236	2.3	2.3	146	235	14 900	24 000	▲JLM820048 / JLM820012	116	106	136	147	2.3	2.3	36.8	0.50	1.2	0.66	1.89
	155.000 6.1024	36.000 1.4173	35.000 1.3780	28.000 1.1024	3.0	2.5	191	325	19 500	33 000	**▲JM720249 / JM720210**	118	108	140	150	3.0	2.5	36.8	0.47	1.3	0.70	2.45
	160.000 6.2992	41.000 1.6142	40.000 1.5748	32.000 1.2598	3.0	2.5	239	380	24 400	38 500	**▲JHM720249 / JHM720210**	119	107	144	155	3.0	2.5	38.2	0.47	1.3	0.70	3.07
	180.975 7.1250	47.625 1.8750	48.006 1.8900	38.100 1.5000	3.5	3.3	258	375	26 300	38 500	**783 / 772**	123	111	160	172	3.5	3.3	39.1	0.39	1.6	0.86	4.96
	190.500 7.5000	57.150 2.2500	57.531 2.2650	44.450 1.7500	6.0	3.3	355	500	36 000	51 000	**863X / 854**	127	111	168	181	6.0	3.3	41.8	0.33	1.8	0.99	6.81
	212.725 8.3750	66.675 2.6250	66.675 2.6250	53.975 2.1250	3.5	3.3	570	810	58 000	82 500	**#HH224334 / HH224310**	133	118	191	206	3.5	3.3	47.3	0.33	1.8	1.0	11.4
100.012 3.9375	157.162 6.1875	36.512 1.4375	36.116 1.4219	26.195 1.0313	3.5	3.3	191	310	19 500	31 500	**52393 / 52618**	119	108	142	153	3.5	3.3	36.1	0.47	1.3	0.69	2.51
	161.925 6.3750	39.688 1.5625	36.116 1.4219	29.370 1.1563	3.5	3.3	191	310	19 500	31 500	52393 / 52638	119	108	143	155	3.5	3.3	39.2	0.47	1.3	0.69	2.92
101.600 4.0000	146.050 5.7500	21.433 0.8438	21.433 0.8438	16.670 0.6563	1.5	1.5	85.5	165	8 750	16 800	**L521945 / L521910**	117	111	136	141	1.5	1.5	25.9	0.39	1.5	0.84	1.19
	157.162 6.1875	36.512 1.4375	36.116 1.4219	26.195 1.0313	3.5	3.3	191	310	19 500	31 500	52400 / 52618	120	109	142	153	3.5	3.3	36.1	0.47	1.3	0.69	2.45
	157.162 6.1875	36.512 1.4375	36.116 1.4219	26.195 1.0313	8.0	3.3	191	310	19 500	31 500	52401 / 52618	125	109	142	153	8.0	3.3	36.1	0.47	1.3	0.69	2.42
	161.925 6.3750	36.512 1.4375	36.116 1.4219	26.195 1.0313	3.5	3.3	191	310	19 500	31 500	52400 / 52637	120	109	144	155	3.5	3.3	36.1	0.47	1.3	0.69	2.69
	168.275 6.6250	41.275 1.6250	41.275 1.6250	34.925 1.3750	3.5	3.3	223	345	22 700	35 000	**687 / 672A**	121	109	149	162	3.5	3.3	38.3	0.47	1.3	0.70	3.49
	168.275 6.6250	41.275 1.6250	41.275 1.6250	30.162 1.1875	3.5	3.3	223	345	22 700	35 000	**687 / 672**	121	109	149	161	3.5	3.3	38.3	0.47	1.3	0.70	3.39
	180.975 7.1250	47.625 1.8750	48.006 1.8900	38.100 1.5000	3.5	3.3	258	375	26 300	38 500	**780 / 772**	124	111	160	172	3.5	3.3	39.1	0.39	1.6	0.86	4.86

Note ▲ The tolerances are listed in tables **2** to **4** on page **B 99**.
Bore torerances are listed in table **2.4** on page **A24**, but their tolerances are negative.

Bore Diameter 101.600 – 106.362 mm

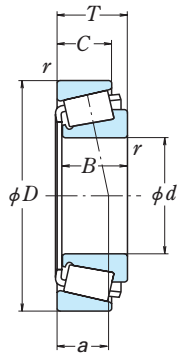

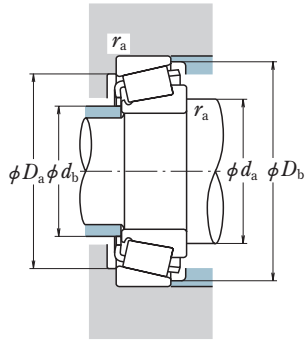

Dynamic Equivalent Load

$P = XF_r + YF_a$

$F_a/F_r \leqq e$		$F_a/F_r > e$	
X	Y	X	Y
1	0	0.4	Y_1

Static Equivalent Load

$P_0 = 0.5F_r + Y_0F_a$

When $F_r > 0.5F_r + Y_0F_a$, use $P_0 = F_r$

The values of e, Y_1, and Y_0 are given in the table below.

Boundary Dimensions (mm/inch)							Basic Load Ratings (kN)		{kgf}		Bearing Numbers	Abutment and Fillet Dimensions (mm)						Eff. Load Centers (mm)	Constant	Axial Load Factors		Mass (kg)
d	D	T	B	C	CONE r min.	CUP r min.	C_r	C_{0r}	C_r	C_{0r}		d_a	d_b	D_a	D_b	CONE r_a max.	CUP r_a max.	a	e	Y_1	Y_0	approx.
101.600 4.0000	190.500 7.5000	57.150 2.2500	57.531 2.2650	46.038 1.8125	8.0	3.3	390	520	39 500	53 500	**HH221449 / HH221410**	131	113	170	183	8.0	3.3	42.3	0.33	1.8	0.99	6.79
	190.500 7.5000	57.150 2.2500	57.531 2.2650	44.450 1.7500	8.0	3.3	355	500	36 000	51 000	**861 / 854**	130	112	168	181	8.0	3.3	41.8	0.33	1.8	0.99	6.68
	200.000 7.8740	52.761 2.0772	49.212 1.9375	34.925 1.3750	3.5	3.3	315	425	32 000	43 500	**98400 / 98788**	132	114	174	191	3.5	3.3	54.4	0.63	0.95	0.52	6.81
	200.025 7.8750	61.912 2.4375	57.531 2.2650	50.800 2.0000	8.0	3.3	390	520	39 500	53 500	**HH221449 / HH221416**	131	113	174	188	8.0	3.3	47.0	0.33	1.8	0.99	8.29
	212.725 8.3750	66.675 2.6250	66.675 2.6250	53.975 2.1250	7.0	3.3	570	810	58 000	82 500	**HH224335 / HH224310**	137	119	191	206	7.0	3.3	47.3	0.33	1.8	1.0	11.2
	212.725 8.3750	66.675 2.6250	66.675 2.6250	53.975 2.1250	7.0	3.3	475	700	48 500	71 500	**941 / 932**	136	118	187	201	7.0	3.3	46.9	0.33	1.8	1.0	11.2
	250.825 9.8750	76.200 3.0000	73.025 2.8750	50.800 2.0000	6.4	6.4	485	635	49 500	65 000	**EE215040 / 215098**	146	122	207	236	6.4	6.4	72.8	0.70	0.86	0.47	17
	250.825 9.8750	76.200 3.0000	73.025 2.8750	50.800 2.0000	6.4	6.4	530	645	54 000	65 500	**HH923649 / HH923610**	145	118	210	238	6.4	6.4	73.3	0.70	0.86	0.47	16.8
	250.825 9.8750	76.200 3.0000	73.025 2.8750	50.800 2.0000	6.4	3.3	530	645	54 000	65 500	**HH923649 / HH923611**	145	118	213	238	6.4	3.3	73.3	0.70	0.86	0.47	16.8
104.775 4.1250	180.975 7.1250	47.625 1.8750	48.006 1.8900	38.100 1.5000	3.5	3.3	258	375	26 300	38 500	**782 / 772**	125	113	160	172	3.5	3.3	39.1	0.39	1.6	0.86	4.67
	180.975 7.1250	47.625 1.8750	48.006 1.8900	38.100 1.5000	6.4	3.3	258	375	26 300	38 500	**786 / 772**	128	113	160	172	6.4	3.3	39.1	0.39	1.6	0.86	4.65
	180.975 7.1250	47.625 1.8750	48.006 1.8900	38.100 1.5000	7.0	3.3	258	375	26 300	38 500	**787 / 772**	129	113	160	172	7.0	3.3	39.1	0.39	1.6	0.86	4.65
	190.500 7.5000	47.625 1.8750	49.212 1.9375	34.925 1.3750	3.5	3.3	296	465	30 000	47 000	**71412 / 71750**	131	119	171	183	3.5	3.3	40.1	0.42	1.4	0.79	5.71
106.362 4.1875	165.100 6.5000	36.512 1.4375	36.512 1.4375	26.988 1.0625	3.5	3.3	195	320	19 800	33 000	**56418 / 56650**	126	114	148	160	3.5	3.3	38.6	0.50	1.2	0.66	2.73
	168.275 6.6250	36.513 1.4375	36.512 1.4375	26.988 1.0625	3.5	3.3	195	320	19 800	33 000	**56418 / 56662**	126	114	150	161	3.5	3.3	38.6	0.50	1.2	0.66	2.91

Bore Diameter 107.950 – 110.000 mm

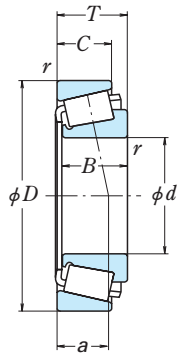

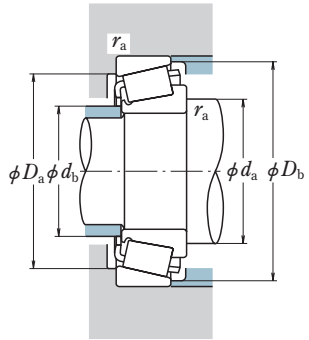

Dynamic Equivalent Load

$P = XF_r + YF_a$

$F_a/F_r \leqq e$		$F_a/F_r > e$	
X	Y	X	Y
1	0	0.4	Y_1

Static Equivalent Load

$P_0 = 0.5F_r + Y_0F_a$

When $F_r > 0.5F_r + Y_0F_a$, use $P_0 = F_r$

The values of e, Y_1, and Y_0 are given in the table below.

Boundary Dimensions (mm/inch)							Basic Load Ratings (kN)		{kgf}		Bearing Numbers	Abutment and Fillet Dimensions (mm)						Eff. Load Centers (mm)	Constant	Axial Load Factors		Mass (kg)
d	D	T	B	C	CONE r min.	CUP r min.	C_r	C_{0r}	C_r	C_{0r}		d_a	d_b	D_a	D_b	CONE r_a max.	CUP r_a max.	a	e	Y_1	Y_0	approx.
107.950 4.2500	158.750 6.2500	23.020 0.9063	21.438 0.8440	15.875 0.6250	3.5	3.3	102	165	10 400	16 800	**37425 / 37625**	124	115	143	152	3.5	3.3	37.0	0.61	0.99	0.54	1.37
	159.987 6.2987	34.925 1.3750	34.925 1.3750	26.988 1.0625	3.5	3.3	164	315	16 700	32 000	LM522546 / LM522510	126	117	145	154	3.5	3.3	33.7	0.40	1.5	0.82	2.43
	161.925 6.3750	34.925 1.3750	34.925 1.3750	26.988 1.0625	3.5	3.3	164	280	16 800	28 600	**48190 / 48120**	126	115	145	157	3.5	3.3	38.7	0.51	1.2	0.65	2.42
	165.100 6.5000	36.512 1.4375	36.512 1.4375	26.988 1.0625	3.5	3.3	195	320	19 800	33 000	**56425 / 56650**	127	115	148	160	3.5	3.3	38.6	0.50	1.2	0.66	2.66
	168.275 6.6250	36.512 1.4375	36.512 1.4375	26.988 1.0625	3.5	3.3	195	320	19 800	33 000	**56425 / 56662**	127	115	150	161	3.5	3.3	38.6	0.50	1.2	0.66	2.83
	190.500 7.5000	47.625 1.8750	49.212 1.9375	34.925 1.3750	3.5	3.3	296	465	30 000	47 000	**71425 / 71750**	133	121	171	183	3.5	3.3	40.1	0.42	1.4	0.79	5.5
	212.725 8.3750	66.675 2.6250	66.675 2.6250	53.975 2.1250	8.0	3.3	570	810	58 000	82 500	**HH224340 / HH224310**	142	122	191	206	8.0	3.3	47.3	0.33	1.8	1.0	10.6
	212.725 8.3750	66.675 2.6250	66.675 2.6250	53.975 2.1250	8.0	3.3	475	700	48 500	71 500	**936 / 932**	140	121	187	201	8.0	3.3	46.9	0.33	1.8	1.0	10.7
109.952 4.3288	190.500 7.5000	47.625 1.8750	49.212 1.9375	34.925 1.3750	3.5	3.3	296	465	30 000	47 000	**71432 / 71750**	134	122	171	183	3.5	3.3	40.1	0.42	1.4	0.79	5.37
109.987 4.3302	159.987 6.2987	34.925 1.3750	34.925 1.3750	26.988 1.0625	8.0	3.3	164	315	16 700	32 000	**LM522548 / LM522510**	132	118	145	154	8.0	3.3	33.7	0.40	1.5	0.82	2.31
	159.987 6.2987	34.925 1.3750	34.925 1.3750	26.988 1.0625	3.5	3.3	164	315	16 700	32 000	**LM522549 / LM522510**	127	118	145	154	3.5	3.3	33.7	0.40	1.5	0.82	2.33
109.992 4.3304	177.800 7.0000	41.275 1.6250	41.275 1.6250	30.162 1.1875	3.5	3.3	232	375	23 700	38 000	**64433 / 64700**	132	119	160	173	3.5	3.3	42.4	0.52	1.2	0.64	3.75
110.000 4.3307	165.000 6.4961	35.000 1.3780	35.000 1.3780	26.500 1.0433	3.0	2.5	195	320	19 800	33 000	**▲JM822049 / JM822010**	127	116	149	160	3.0	2.5	38.1	0.50	1.2	0.66	2.48
	180.000 7.0866	47.000 1.8504	46.000 1.8110	38.000 1.4961	3.0	2.5	310	490	31 500	50 000	**▲JHM522649 / JHM522610**	131	118	162	174	3.0	2.5	40.9	0.41	1.5	0.81	4.62

Note ▲ The tolerances are listed in tables **2** to **4** on page **B 99**.

Bore Diameter 111.125 – 115.000 mm

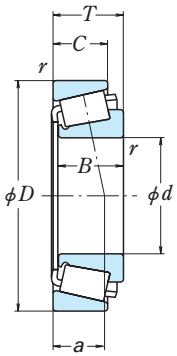

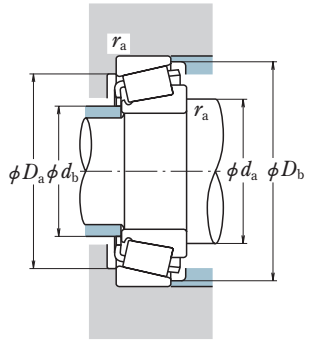

Dynamic Equivalent Load

$P = XF_r + YF_a$

$F_a/F_r \leqq e$		$F_a/F_r > e$	
X	Y	X	Y
1	0	0.4	Y_1

Static Equivalent Load

$P_0 = 0.5F_r + Y_0F_a$

When $F_r > 0.5F_r + Y_0F_a$, use $P_0 = F_r$

The values of e, Y_1, and Y_0 are given in the table below.

Boundary Dimensions (mm/inch)							Basic Load Ratings (kN)		{kgf}	
d	D	T	B	C	CONE r min.	CUP r min.	C_r	C_{0r}	C_r	C_{0r}
111.125 4.3750	190.500 7.5000	47.625 1.8750	49.212 1.9375	34.925 1.3750	3.5	3.3	296	465	30 000	47 000
	214.312 8.4375	55.562 2.1875	52.388 2.0625	39.688 1.5625	3.5	3.3	355	490	36 500	50 000
114.300 4.5000	152.400 6.0000	21.433 0.8438	21.433 0.8438	16.670 0.6563	1.5	1.5	89.5	178	9 100	18 100
	177.800 7.0000	41.275 1.6250	41.275 1.6250	30.162 1.1875	3.5	3.3	232	375	23 700	38 000
	180.000 7.0866	34.925 1.3750	31.750 1.2500	25.400 1.0000	3.5	0.8	174	254	17 800	25 900
	180.975 7.1250	34.925 1.3750	31.750 1.2500	25.400 1.0000	3.5	3.3	174	254	17 800	25 900
	190.500 7.5000	47.625 1.8750	49.212 1.9375	34.925 1.3750	3.5	3.3	296	465	30 000	47 000
	212.725 8.3750	66.675 2.6250	66.675 2.6250	53.975 2.1250	7.0	3.3	570	810	58 000	82 500
	212.725 8.3750	66.675 2.6250	66.675 2.6250	53.975 2.1250	7.0	3.3	475	700	48 500	71 500
	228.600 9.0000	53.975 2.1250	49.428 1.9460	38.100 1.5000	3.5	3.3	375	530	38 000	54 000
	228.600 9.0000	53.975 2.1250	49.428 1.9460	38.100 1.5000	3.5	3.3	330	475	33 500	48 500
	273.050 10.7500	82.550 3.2500	82.550 3.2500	53.975 2.1250	6.4	6.4	685	870	70 000	88 500
	279.400 11.0000	82.550 3.2500	82.550 3.2500	53.975 2.1250	6.4	6.4	685	870	70 000	88 500
114.976 4.5266	212.725 8.3750	66.675 2.6250	66.675 2.6250	53.975 2.1250	7.0	3.3	570	810	58 000	82 500
115.000 4.5276	177.800 7.0000	41.275 1.6250	41.275 1.6250	30.162 1.1875	3.5	3.3	232	375	23 700	38 000

Bearing Numbers	Abutment and Fillet Dimensions (mm)						Eff. Load Centers (mm)	Constant	Axial Load Factors		Mass (kg)
	d_a	d_b	D_a	D_b	CONE r_a max.	CUP r_a max.	a	e	Y_1	Y_0	approx.
71437 / 71750	135	122	171	183	3.5	3.3	40.1	0.42	1.4	0.79	5.29
H924045 / H924010	143	124	187	206	3.5	3.3	62.4	0.67	0.89	0.49	8.32
L623149 / L623110	127	121	142	148	1.5	1.5	27.4	0.41	1.5	0.80	1.07
64450 / 64700	135	122	160	173	3.5	3.3	42.4	0.52	1.2	0.64	3.5
**68450 / 68709	134	124	165	173	3.5	0.8	40.0	0.50	1.2	0.66	2.95
68450 / 68712	134	124	163	174	3.5	3.3	40.0	0.50	1.2	0.66	2.93
71450 / 71750	136	124	171	183	3.5	3.3	40.1	0.42	1.4	0.79	5.07
HH224346 / HH224310	144	125	191	206	7.0	3.3	47.3	0.33	1.8	1.0	10.1
938 / 932	142	124	187	201	7.0	3.3	46.9	0.33	1.8	1.0	10.1
HM926740 / HM926710	152	133	201	223	3.5	3.3	67.7	0.74	0.81	0.45	9.52
97450 / 97900	151	131	198	219	3.5	3.3	67.5	0.74	0.82	0.45	9.52
HH926744 / HH926710	162	134	234	261	6.4	6.4	77.0	0.63	0.95	0.52	21.8
HH926744 / HH926716	162	134	237	264	6.4	6.4	77.0	0.63	0.95	0.52	23
HH224349 / HH224310	144	125	191	206	7.0	3.3	47.3	0.33	1.8	1.0	10
#64452 / 64700	135	122	160	173	3.5	3.3	42.4	0.52	1.2	0.64	3.46

Note ** The maximum outside diameter is listed and its tolerance is negative (See table **2.4** on page **A 24**)
Bore torerances are listed in table **2.4** on page **A24**, but their tolerances are negative.

Bore Diameter 115.087 – 123.825 mm

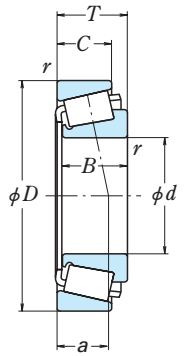

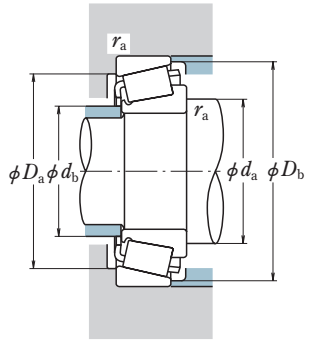

Dynamic Equivalent Load

$P = XF_r + YF_a$

$F_a/F_r \leqq e$		$F_a/F_r > e$	
X	Y	X	Y
1	0	0.4	Y_1

Static Equivalent Load

$P_0 = 0.5F_r + Y_0F_a$

When $F_r > 0.5F_r + Y_0F_a$, use $P_0 = F_r$

The values of e, Y_1, and Y_0 are given in the table below.

Boundary Dimensions (mm/inch)							Basic Load Ratings (kN)		{kgf}		Bearing Numbers	Abutment and Fillet Dimensions (mm)						Eff. Load Centers (mm)	Constant	Axial Load Factors		Mass (kg)
d	D	T	B	C	CONE r min.	CUP r min.	C_r	C_{0r}	C_r	C_{0r}		d_a	d_b	D_a	D_b	CONE r_a max.	CUP r_a max.	a	e	Y_1	Y_0	approx.
115.087 4.5310	190.500 7.5000	47.625 1.8750	49.212 1.9375	34.925 1.3750	3.5	3.3	296	465	30 000	47 000	**71453 / 71750**	137	124	171	183	3.5	3.3	40.1	0.42	1.4	0.79	5.02
117.475 4.6250	180.975 7.1250	34.925 1.3750	31.750 1.2500	25.400 1.0000	3.5	3.3	174	254	17 800	25 900	**68462 / 68712**	135	125	163	174	3.5	3.3	40.0	0.50	1.2	0.66	2.78
119.964 4.7230	215.000 8.4646	47.625 1.8750	47.625 1.8750	34.925 1.3750	3.5	3.3	287	495	29 300	50 000	**74472 / 74846X**	153	140	195	208	3.5	3.3	48.4	0.49	1.2	0.68	7.33
	215.900 8.5000	47.625 1.8750	47.625 1.8750	34.925 1.3750	3.5	3.3	287	495	29 300	50 000	**74472 / 74850**	153	140	195	209	3.5	3.3	48.4	0.49	1.2	0.68	7.42
120.000 4.7244	170.000 6.6929	25.400 1.0000	25.400 1.0000	19.050 0.7500	3.3	3.3	130	219	13 200	22 300	**▲JL724348 / JL724314**	135	127	155	164	3.3	3.3	32.9	0.46	1.3	0.72	1.67
	174.625 6.8750	35.720 1.4063	36.512 1.4375	27.783 1.0938	3.5	1.5	212	385	21 600	39 000	**#M224748 / M224710**	137	128	162	169	3.5	1.5	32.2	0.33	1.8	0.99	2.76
	230.000 9.0551	53.975 2.1250	49.428 1.9460	38.100 1.5000	3.5	3.3	330	475	33 500	48 500	**97472X / 97905X**	154	134	199	220	3.5	3.3	67.6	0.74	0.82	0.45	9.27
120.650 4.7500	160.338 6.3125	21.433 0.8438	21.433 0.8438	16.670 0.6563	1.5	1.5	92.5	190	9 450	19 400	**L624549 / L624510**	133	127	150	155	1.5	1.5	29.3	0.44	1.4	0.76	1.18
	182.562 7.1875	39.688 1.5625	38.100 1.5000	33.338 1.3125	3.5	3.3	228	445	23 200	45 000	**48282 / 48220**	142	132	167	177	3.5	3.3	34.2	0.31	2.0	1.1	3.69
	206.375 8.1250	47.625 1.8750	47.625 1.8750	34.925 1.3750	3.3	3.3	320	530	32 500	54 000	**795 / 792**	149	134	186	199	3.3	3.3	45.7	0.46	1.3	0.72	6.35
	234.950 9.2500	63.500 2.5000	63.500 2.5000	49.212 1.9375	6.4	3.3	510	790	52 000	80 500	**95475 / 95925**	159	140	212	226	6.4	3.3	50.5	0.37	1.6	0.89	12.3
	254.000 10.0000	77.788 3.0625	82.550 3.2500	61.913 2.4375	9.7	6.4	675	975	69 000	99 500	**HH228340 / HH228310**	163	140	223	242	9.7	6.4	55.0	0.34	1.8	0.97	18.4
	273.050 10.7500	82.550 3.2500	82.550 3.2500	53.975 2.1250	6.4	6.4	685	870	70 000	88 500	**HH926749 / HH926710**	165	137	234	261	6.4	6.4	77.0	0.63	0.95	0.52	21
	279.400 11.0000	82.550 3.2500	82.550 3.2500	53.975 2.1250	6.4	6.4	685	870	70 000	88 500	**HH926749 / HH926716**	165	137	237	264	6.4	6.4	77.0	0.63	0.95	0.52	22.2
123.825 4.8750	182.562 7.1875	39.688 1.5625	38.100 1.5000	33.338 1.3125	3.5	3.3	228	445	23 200	45 000	**48286 / 48220**	143	134	167	177	3.5	3.3	34.2	0.31	2.0	1.1	3.51

Notes ▲ The tolerances are listed in tables **2** to **4** on page **B 99**.
Bore torerances are listed in table **2.4** on page **A24**, but their tolerances are negative.

Bore Diameter 124.943 – 127.000 mm

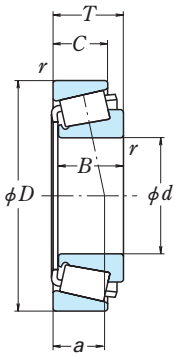

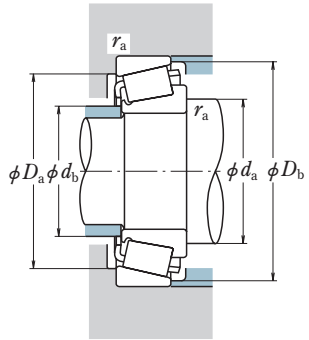

Dynamic Equivalent Load

$P = XF_r + YF_a$

$F_a/F_r \leqq e$		$F_a/F_r > e$	
X	Y	X	Y
1	0	0.4	Y_1

Static Equivalent Load

$P_0 = 0.5F_r + Y_0F_a$

When $F_r > 0.5F_r + Y_0F_a$, use $P_0 = F_r$

The values of e, Y_1, and Y_0 are given in the table below.

Boundary Dimensions (mm/inch)							Basic Load Ratings (kN)		{kgf}		Bearing Numbers	Abutment and Fillet Dimensions (mm)						Eff. Load Centers (mm)	Constant	Axial Load Factors		Mass (kg)
d	D	T	B	C	CONE r min.	CUP r min.	C_r	C_{0r}	C_r	C_{0r}		d_a	d_b	D_a	D_b	CONE r_a max.	CUP r_a max.	a	e	Y_1	Y_0	approx.
124.943 4.9190	234.950 9.2500	63.500 2.5000	63.500 2.5000	49.212 1.9375	6.4	3.3	510	790	52 000	80 500	**95491 / 95925**	162	142	212	226	6.4	3.3	50.5	0.37	1.6	0.89	11.9
125.000 4.9213	175.000 6.8898	25.400 1.0000	25.400 1.0000	18.288 0.7200	3.3	3.3	134	232	13 700	23 600	▲JL725346 / JL725316	141	131	160	170	3.3	3.3	34.3	0.48	1.3	0.69	1.76
125.298 4.9330	228.600 9.0000	53.975 2.1250	49.428 1.9460	38.100 1.5000	3.5	3.3	375	530	38 000	54 000	**HM926745 / HM926710**	157	138	201	223	3.5	3.3	67.7	0.74	0.81	0.45	8.72
127.000 5.0000	165.895 6.5313	18.258 0.7188	17.462 0.6875	13.495 0.5313	1.5	1.5	84.5	149	8 650	15 200	**LL225749 / LL225710**	138	133	157	161	1.5	1.5	24.2	0.33	1.8	0.99	0.93
	169.862 6.6875	25.400 1.0000	26.195 1.0313	20.638 0.8125	1.5	1.5	123	251	12 600	25 600	**L225849 / L225810**	140	134	159	165	1.5	1.5	28.1	0.33	1.8	0.99	1.65
	180.975 7.1250	25.400 1.0000	26.195 1.0313	20.638 0.8125	1.5	1.5	123	251	12 600	25 600	**L225849 / L225818**	140	134	165	170	1.5	1.5	28.1	0.33	1.8	0.99	2.14
	182.562 7.1875	39.688 1.5625	38.100 1.5000	33.338 1.3125	3.5	3.3	228	445	23 200	45 000	**48290 / 48220**	145	135	167	177	3.5	3.3	34.2	0.31	2.0	1.1	3.33
	196.850 7.7500	46.038 1.8125	46.038 1.8125	38.100 1.5000	3.5	3.3	315	560	32 000	57 500	**67388 / 67322**	150	139	180	192	3.5	3.3	39.7	0.34	1.7	0.96	5.2
	203.200 8.0000	46.038 1.8125	46.038 1.8125	38.100 1.5000	3.5	3.3	315	560	32 000	57 500	**67388 / 67320**	150	139	183	195	3.5	3.3	39.7	0.34	1.7	0.96	5.8
	215.900 8.5000	47.625 1.8750	47.625 1.8750	34.925 1.3750	3.5	3.3	287	495	29 300	50 000	**74500 / 74850**	157	143	195	209	3.5	3.3	48.4	0.49	1.2	0.68	6.91
	217.488 8.5625	47.625 1.8750	47.625 1.8750	34.925 1.3750	3.5	3.3	287	495	29 300	50 000	**74500 / 74856**	157	143	196	210	3.5	3.3	48.4	0.49	1.2	0.68	7.06
	228.600 9.0000	53.975 2.1250	49.428 1.9460	38.100 1.5000	3.5	3.3	375	530	38 000	54 000	**HM926747 / HM926710**	158	139	201	223	3.5	3.3	67.7	0.74	0.81	0.45	8.59
	228.600 9.0000	53.975 2.1250	49.428 1.9460	38.100 1.5000	3.5	3.3	330	475	33 500	48 500	**97500 / 97900**	157	137	198	219	3.5	3.3	67.5	0.74	0.82	0.45	8.59
	234.950 9.2500	63.500 2.5000	63.500 2.5000	49.212 1.9375	6.4	3.3	505	790	51 500	80 500	**95500 / 95925**	160	142	210	224	6.4	3.3	49.4	0.37	1.6	0.89	11.8
	234.950 9.2500	63.500 2.5000	68.715 2.7053	49.212 1.9375	9.7	3.3	505	790	51 500	80 500	95502 / 95925	166	143	210	224	9.7	3.3	49.5	0.37	1.6	0.89	12

Note ▲ The tolerances are listed in tables **2** to **4** on page **B 99**.

Bore Diameter 127.000 – 130.175 mm

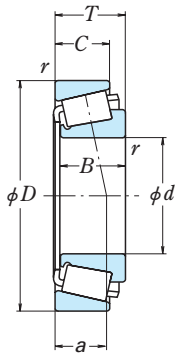

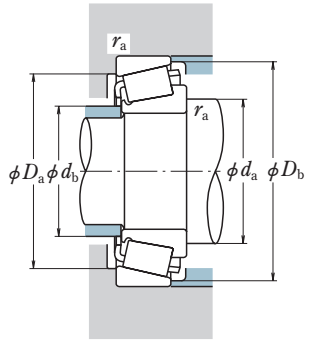

Dynamic Equivalent Load

$P = XF_r + YF_a$

$F_a/F_r \leqq e$		$F_a/F_r > e$	
X	Y	X	Y
1	0	0.4	Y_1

Static Equivalent Load

$P_0 = 0.5F_r + Y_0F_a$

When $F_r > 0.5F_r + Y_0F_a$, use $P_0 = F_r$

The values of e, Y_1, and Y_0 are given in the table below.

Boundary Dimensions (mm/inch)							Basic Load Ratings (kN)		{kgf}		Bearing Numbers	Abutment and Fillet Dimensions (mm)						Eff. Load Centers (mm)	Constant	Axial Load Factors		Mass (kg)
d	D	T	B	C	CONE r min.	CUP r min.	C_r	C_{0r}	C_r	C_{0r}		d_a	d_b	D_a	D_b	CONE r_a max.	CUP r_a max.	a	e	Y_1	Y_0	approx.
127.000 5.0000	247.650 9.7500	63.500 2.5000	63.500 2.5000	47.625 1.8750	3.3	4.8	465	640	47 500	65 000	**EE116050 / 116097**	158	143	219	234	3.3	4.8	50.1	0.37	1.6	0.90	12.6
	247.650 9.7500	63.500 2.5000	63.500 2.5000	49.212 1.9375	6.4	3.3	510	790	52 000	80 500	**95500 / 95975**	163	143	218	233	6.4	3.3	50.5	0.37	1.6	0.89	13.5
	254.000 10.0000	77.788 3.0625	82.550 3.2500	57.150 2.2500	9.7	6.4	570	800	58 000	82 000	**EE153050 / 153100**	167	144	223	240	9.7	6.4	53.7	0.32	1.9	1.0	16.6
	254.000 10.0000	77.788 3.0625	82.550 3.2500	61.913 2.4375	9.7	6.4	675	975	69 000	99 500	**HH228349 / HH228310**	166	143	223	242	9.7	6.4	55.0	0.34	1.8	0.97	17.6
	288.925 11.3750	82.550 3.2500	87.312 3.4375	57.150 2.2500	13.5	6.4	770	1 010	78 500	103 000	**HH231637 / HH231610**	179	151	258	275	13.5	6.4	56.3	0.32	1.9	1.0	24.3
	295.275 11.6250	82.550 3.2500	87.312 3.4375	57.150 2.2500	13.5	6.4	770	1 010	78 500	103 000	**HH231637 / HH231615**	179	151	261	278	13.5	6.4	56.3	0.32	1.9	1.0	25.6
	304.800 12.0000	60.325 2.3750	61.912 2.4375	41.275 1.6250	6.4	6.4	635	780	64 500	79 500	**EE750502 / 751200**	174	158	271	285	6.4	6.4	49.2	0.33	1.8	0.99	21.4
	304.800 12.0000	88.900 3.5000	82.550 3.2500	57.150 2.2500	6.4	6.4	745	1 010	76 000	103 000	**HH932132 / HH932110**	185	154	262	295	6.4	6.4	92.3	0.73	0.82	0.45	29.6
127.792 5.0312	228.600 9.0000	53.975 2.1250	49.428 1.9460	38.100 1.5000	3.5	3.3	375	530	38 000	54 000	**HM926749 / HM926710**	158	139	201	223	3.5	3.3	67.7	0.74	0.81	0.45	8.53
128.588 5.0625	190.500 7.5000	34.925 1.3750	31.750 1.2500	25.400 1.0000	3.5	3.3	176	325	17 900	33 000	**48506 / 48750**	150	137	171	184	3.5	3.3	50.3	0.65	0.92	0.51	3.24
	206.375 8.1250	47.625 1.8750	47.625 1.8750	34.925 1.3750	3.3	3.3	320	530	32 500	54 000	**799 / 792**	153	138	186	199	3.3	3.3	45.7	0.46	1.3	0.72	5.77
130.000 5.1181	206.375 8.1250	47.625 1.8750	47.625 1.8750	34.925 1.3750	3.5	3.3	320	530	32 500	54 000	**797 / 792**	153	139	186	199	3.5	3.3	45.7	0.46	1.3	0.72	5.66
130.175 5.1250	196.850 7.7500	46.038 1.8125	46.038 1.8125	38.100 1.5000	3.5	3.3	315	560	32 000	57 500	**67389 / 67322**	152	140	180	192	3.5	3.3	39.7	0.34	1.7	0.96	4.97
	203.200 8.0000	46.038 1.8125	46.038 1.8125	38.100 1.5000	3.5	3.3	315	560	32 000	57 500	**67389 / 67320**	152	140	183	195	3.5	3.3	39.7	0.34	1.7	0.96	5.57
	206.375 8.1250	47.625 1.8750	47.625 1.8750	34.925 1.3750	3.5	3.3	320	530	32 500	54 000	**799A / 792**	154	139	186	199	3.5	3.3	45.7	0.46	1.3	0.72	5.65

Bore Diameter 133.350 mm

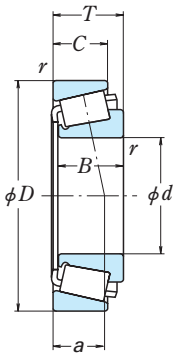

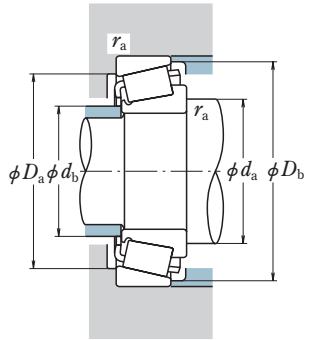

Dynamic Equivalent Load

$P = XF_r + YF_a$

$F_a/F_r \leqq e$		$F_a/F_r > e$	
X	Y	X	Y
1	0	0.4	Y_1

Static Equivalent Load

$P_0 = 0.5F_r + Y_0F_a$

When $F_r > 0.5F_r + Y_0F_a$, use $P_0 = F_r$

The values of e, Y_1, and Y_0 are given in the table below.

Boundary Dimensions (mm/inch)							Basic Load Ratings (kN)		{kgf}		Bearing Numbers	Abutment and Fillet Dimensions (mm)						Eff. Load Centers (mm)	Constant	Axial Load Factors		Mass (kg)
d	D	T	B	C	CONE r min.	CUP r min.	C_r	C_{0r}	C_r	C_{0r}		d_a	d_b	D_a	D_b	CONE r_a max.	CUP r_a max.	a	e	Y_1	Y_0	approx.
133.350 5.2500	177.008 6.9688	25.400 1.0000	26.195 1.0313	20.638 0.8125	1.5	1.5	124	258	12 700	26 300	**L327249 / L327210**	147	141	166	172	1.5	1.5	29.5	0.35	1.7	0.95	1.73
	190.500 7.5000	39.688 1.5625	39.688 1.5625	33.338 1.3125	3.5	3.3	240	485	24 500	49 500	**48385 / 48320**	153	142	175	185	3.5	3.3	35.9	0.32	1.9	1.0	3.74
	196.850 7.7500	46.038 1.8125	46.038 1.8125	38.100 1.5000	3.5	3.3	315	560	32 000	57 500	**67390 / 67322**	153	142	180	192	3.5	3.3	39.7	0.34	1.7	0.96	4.74
	196.850 7.7500	46.038 1.8125	46.038 1.8125	38.100 1.5000	8.0	3.3	315	560	32 000	57 500	**67391 / 67322**	158	142	180	192	8.0	3.3	39.7	0.34	1.7	0.96	4.7
	203.200 8.0000	39.688 1.5625	39.688 1.5625	33.338 1.3125	3.5	3.3	240	485	24 500	49 500	48385 / 48328	153	142	182	191	3.5	3.3	35.9	0.32	1.9	1.0	4.76
	203.200 8.0000	46.038 1.8125	46.038 1.8125	38.100 1.5000	3.5	3.3	315	560	32 000	57 500	**67390 / 67320**	153	142	183	195	3.5	3.3	39.7	0.34	1.7	0.96	5.33
	203.200 8.0000	46.038 1.8125	46.038 1.8125	38.100 1.5000	8.0	3.3	315	560	32 000	57 500	**67391 / 67320**	158	142	183	195	8.0	3.3	39.7	0.34	1.7	0.96	5.29
	215.000 8.4646	47.625 1.8750	47.625 1.8750	34.925 1.3750	3.5	3.3	287	495	29 300	50 000	**74525 / 74846X**	160	147	195	208	3.5	3.3	48.4	0.49	1.2	0.68	6.34
	215.900 8.5000	47.625 1.8750	47.625 1.8750	34.925 1.3750	3.5	3.3	287	495	29 300	50 000	**74525 / 74850**	160	147	195	209	3.5	3.3	48.4	0.49	1.2	0.68	6.42
	217.488 8.5625	47.625 1.8750	47.625 1.8750	34.925 1.3750	3.5	3.3	287	495	29 300	50 000	**74525 / 74856**	160	147	196	210	3.5	3.3	48.4	0.49	1.2	0.68	6.57
	234.950 9.2500	63.500 2.5000	63.500 2.5000	49.212 1.9375	9.7	3.3	510	790	52 000	80 500	**95525 / 95925**	169	146	212	226	9.7	3.3	50.5	0.37	1.6	0.89	11
	234.950 9.2500	63.500 2.5000	63.500 2.5000	49.212 1.9375	4.8	3.3	510	790	52 000	80 500	**95528 / 95925**	164	146	212	226	4.8	3.3	50.5	0.37	1.6	0.89	11
	234.975 9.2510	63.500 2.5000	63.500 2.5000	49.212 1.9375	9.7	3.3	510	790	52 000	80 500	**95525 / 95928**	169	146	212	227	9.7	3.3	50.5	0.37	1.6	0.89	11
	234.975 9.2510	63.500 2.5000	63.500 2.5000	49.212 1.9375	4.8	3.3	510	790	52 000	80 500	**95528 / 95928**	164	146	212	227	4.8	3.3	50.5	0.37	1.6	0.89	11
	247.650 9.7500	63.500 2.5000	63.500 2.5000	49.212 1.9375	9.7	3.3	510	790	52 000	80 500	**95525 / 95975**	169	146	218	233	9.7	3.3	50.5	0.37	1.6	0.89	12.8
	247.650 9.7500	63.500 2.5000	63.500 2.5000	49.212 1.9375	4.8	3.3	510	790	52 000	80 500	**95528 / 95975**	164	146	218	233	4.8	3.3	50.5	0.37	1.6	0.89	12.9

Bore Diameter 136.525 – 139.700 mm

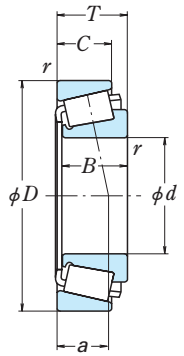

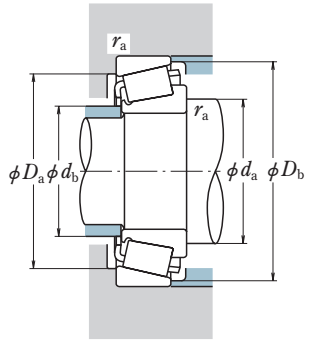

Dynamic Equivalent Load

$P = XF_r + YF_a$

$F_a/F_r \leqq e$		$F_a/F_r > e$	
X	Y	X	Y
1	0	0.4	Y_1

Static Equivalent Load

$P_0 = 0.5F_r + Y_0F_a$

When $F_r > 0.5F_r + Y_0F_a$, use $P_0 = F_r$

The values of e, Y_1, and Y_0 are given in the table below.

Boundary Dimensions (mm/inch)							Basic Load Ratings (kN)		{kgf}		Bearing Numbers	Abutment and Fillet Dimensions (mm)						Eff. Load Centers (mm)	Constant	Axial Load Factors		Mass (kg)
d	D	T	B	C	CONE r min.	CUP r min.	C_r	C_{0r}	C_r	C_{0r}		d_a	d_b	D_a	D_b	CONE r_a max.	CUP r_a max.	a	e	Y_1	Y_0	approx.
136.525 5.3750	190.500 7.5000	39.688 1.5625	39.688 1.5625	33.338 1.3125	3.5	3.3	240	485	24 500	49 500	48393 / 48320	154	144	175	185	3.5	3.3	35.9	0.32	1.9	1.0	3.53
	215.000 8.4646	47.625 1.8750	47.625 1.8750	34.925 1.3750	3.5	3.3	287	495	29 300	50 000	**74537 / 74846X**	162	148	195	208	3.5	3.3	48.4	0.49	1.2	0.68	6.09
	215.900 8.5000	47.625 1.8750	47.625 1.8750	34.925 1.3750	3.5	3.3	287	495	29 300	50 000	**74537 / 74850**	162	148	195	209	3.5	3.3	48.4	0.49	1.2	0.68	6.17
	217.488 8.5625	47.625 1.8750	47.625 1.8750	34.925 1.3750	3.5	3.3	287	495	29 300	50 000	**74537 / 74856**	162	148	196	210	3.5	3.3	48.4	0.49	1.2	0.68	6.32
	228.600 9.0000	57.150 2.2500	57.150 2.2500	44.450 1.7500	3.5	3.3	380	620	38 500	63 500	**896 / 892**	163	149	204	219	3.5	3.3	51.5	0.42	1.4	0.78	8.86
	254.000 10.0000	66.675 2.6250	66.675 2.6250	47.625 1.8750	7.0	3.3	515	830	52 500	84 500	**99537 / 99100**	178	157	230	245	7.0	3.3	55.3	0.41	1.5	0.81	14.2
139.700 5.5000	180.975 7.1250	21.433 0.8438	20.638 0.8125	16.670 0.6563	1.5	1.5	104	194	10 600	19 700	**LL428349 / LL428310**	152	147	171	176	1.5	1.5	29.8	0.37	1.6	0.90	1.36
	187.325 7.3750	28.575 1.1250	29.370 1.1563	23.020 0.9063	1.5	1.5	153	305	15 600	31 500	**LM328448 / LM328410**	155	148	176	182	1.5	1.5	31.7	0.36	1.7	0.93	2.26
	215.000 8.4646	47.625 1.8750	47.625 1.8750	34.925 1.3750	3.5	3.3	287	495	29 300	50 000	**74550 / 74846X**	163	150	195	208	3.5	3.3	48.4	0.49	1.2	0.68	5.83
	215.000 8.4646	47.625 1.8750	47.625 1.8750	34.925 1.3750	6.4	3.3	287	495	29 300	50 000	**74550A / 74846X**	166	150	195	208	6.4	3.3	48.4	0.49	1.2	0.68	5.81
	215.900 8.5000	47.625 1.8750	47.625 1.8750	34.925 1.3750	3.5	3.3	287	495	29 300	50 000	**74550 / 74850**	163	150	195	209	3.5	3.3	48.4	0.49	1.2	0.68	5.92
	222.250 8.7500	34.925 1.3750	31.623 1.2450	23.812 0.9375	3.5	3.3	191	267	19 500	27 200	**73551 / 73875**	162	152	203	211	3.5	3.3	41.6	0.44	1.4	0.75	4.25
	228.600 9.0000	57.150 2.2500	57.150 2.2500	44.450 1.7500	3.5	3.3	380	620	38 500	63 500	**898 / 892**	165	151	204	219	3.5	3.3	51.5	0.42	1.4	0.78	8.55
	228.600 9.0000	57.150 2.2500	57.150 2.2500	44.450 1.7500	6.4	3.3	380	620	38 500	63 500	**898A / 892**	168	151	204	219	6.4	3.3	51.5	0.42	1.4	0.78	8.53
	236.538 9.3125	57.150 2.2500	56.642 2.2300	44.450 1.7500	3.5	3.3	455	720	46 000	73 500	**HM231132 / HM231110**	168	154	216	228	3.5	3.3	45.9	0.32	1.9	1.0	9.63
	236.538 9.3125	57.150 2.2500	56.642 2.2300	44.450 1.7500	3.5	3.3	400	680	41 000	69 500	**82550 / 82931**	170	155	213	228	3.5	3.3	53.7	0.44	1.4	0.75	9.81

Bore Diameter 139.700 – 142.875 mm

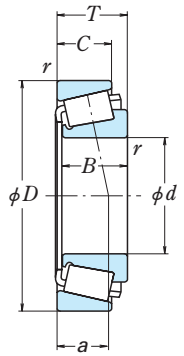

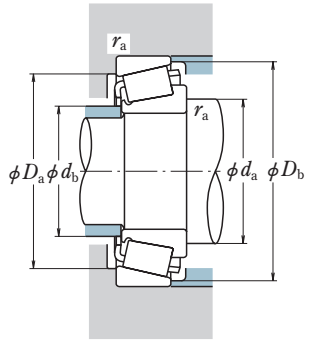

Dynamic Equivalent Load

$P = XF_r + YF_a$

$F_a/F_r \leqq e$		$F_a/F_r > e$	
X	Y	X	Y
1	0	0.4	Y_1

Static Equivalent Load

$P_0 = 0.5F_r + Y_0F_a$

When $F_r > 0.5F_r + Y_0F_a$, use $P_0 = F_r$

The values of e, Y_1, and Y_0 are given in the table below.

Boundary Dimensions (mm/inch)							Basic Load Ratings (kN)		{kgf}	
d	D	T	B	C	CONE r min.	CUP r min.	C_r	C_{0r}	C_r	C_{0r}
139.700 5.5000	241.300 9.5000	57.150 2.2500	56.642 2.2300	44.450 1.7500	3.5	3.3	455	720	46 000	73 500
	241.300 9.5000	57.150 2.2500	56.642 2.2300	44.450 1.7500	3.5	3.3	400	680	41 000	69 500
	250.000 9.8425	66.675 2.6250	66.675 2.6250	47.625 1.8750	7.0	3.3	515	830	52 500	84 500
	254.000 10.0000	66.675 2.6250	66.675 2.6250	47.625 1.8750	7.0	3.3	515	830	52 500	84 500
	288.925 11.3750	82.550 3.2500	87.312 3.4375	57.150 2.2500	9.7	6.4	770	1 010	78 500	103 000
	295.275 11.6250	82.550 3.2500	87.312 3.4375	57.150 2.2500	9.7	6.4	770	1 010	78 500	103 000
	307.975 12.1250	88.900 3.5000	93.662 3.6875	66.675 2.6250	9.7	6.8	885	1 190	90 000	121 000
	317.500 12.5000	88.900 3.5000	93.662 3.6875	66.675 2.6250	9.7	6.8	885	1 190	90 000	121 000
140.000 5.5118	215.000 8.4646	47.625 1.8750	47.625 1.8750	34.925 1.3750	3.5	3.3	287	495	29 300	50 000
	215.900 8.5000	47.625 1.8750	47.625 1.8750	34.925 1.3750	3.5	3.3	287	495	29 300	50 000
	217.488 8.5625	47.625 1.8750	47.625 1.8750	34.925 1.3750	3.5	3.3	287	495	29 300	50 000
142.875 5.6250	200.025 7.8750	41.275 1.6250	39.688 1.5625	34.130 1.3437	8.0	3.3	227	460	23 100	46 500
	200.025 7.8750	41.275 1.6250	39.688 1.5625	34.130 1.3437	3.5	3.3	227	460	23 100	46 500
	236.538 9.3125	57.150 2.2500	56.642 2.2300	44.450 1.7500	3.5	3.3	455	720	46 000	73 500
	236.538 9.3125	57.150 2.2500	56.642 2.2300	44.450 1.7500	3.5	3.3	400	680	41 000	69 500
	241.300 9.5000	57.150 2.2500	56.642 2.2300	44.450 1.7500	3.5	3.3	455	720	46 000	73 500

Bearing Numbers	Abutment and Fillet Dimensions (mm)						Eff. Load Centers (mm)	Constant	Axial Load Factors		Mass (kg)
	d_a	d_b	D_a	D_b	CONE r_a max.	CUP r_a max.	a	e	Y_1	Y_0	approx.
HM231132 / HM231115	168	154	218	230	3.5	3.3	45.9	0.32	1.9	1.0	10.3
82550 / 82950	170	155	215	230	3.5	3.3	53.7	0.44	1.4	0.75	10.4
99550 / 99098X	179	158	228	243	7.0	3.3	55.3	0.41	1.5	0.81	13.2
99550 / 99100	179	158	230	245	7.0	3.3	55.3	0.41	1.5	0.81	13.8
HH231649 / HH231610	182	158	258	275	9.7	6.4	56.3	0.32	1.9	1.0	22.6
HH231649 / HH231615	182	158	261	278	9.7	6.4	56.3	0.32	1.9	1.0	23.9
HH234031 / HH234010	191	165	275	294	9.7	6.8	63.2	0.33	1.8	1.0	29.8
HH234031 / HH234018	191	165	279	298	9.7	6.8	63.2	0.33	1.8	1.0	32.2
74551X / 74846X	163	150	195	208	3.5	3.3	48.4	0.49	1.2	0.68	5.81
74551X / 74850	163	150	195	209	3.5	3.3	48.4	0.49	1.2	0.68	5.89
74551X / 74856	163	150	196	210	3.5	3.3	48.4	0.49	1.2	0.68	6.04
48684 / 48620	167	153	185	195	8.0	3.3	37.6	0.34	1.8	0.98	3.77
48685 / 48620	162	153	185	195	3.5	3.3	37.6	0.34	1.8	0.98	3.81
HM231136 / HM231110	170	156	216	228	3.5	3.3	45.9	0.32	1.9	1.0	9.32
82562 / 82931	171	156	213	228	3.5	3.3	53.7	0.44	1.4	0.75	9.5
HM231136 / HM231115	170	156	218	230	3.5	3.3	45.9	0.32	1.9	1.0	9.94

Bore Diameter 142.875 – 146.050 mm

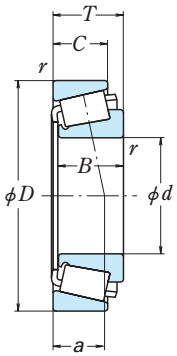

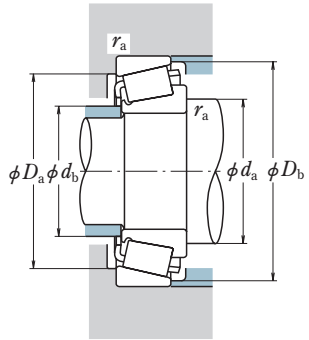

Dynamic Equivalent Load

$P = XF_r + YF_a$

$F_a/F_r \leqq e$		$F_a/F_r > e$	
X	Y	X	Y
1	0	0.4	Y_1

Static Equivalent Load

$P_0 = 0.5F_r + Y_0F_a$

When $F_r > 0.5F_r + Y_0F_a$, use $P_0 = F_r$

The values of e, Y_1, and Y_0 are given in the table below.

Boundary Dimensions (mm/inch)							Basic Load Ratings (kN)		{kgf}	
d	D	T	B	C	CONE r min.	CUP r min.	C_r	C_{0r}	C_r	C_{0r}
142.875 5.6250	241.300 9.5000	57.150 2.2500	56.642 2.2300	44.450 1.7500	3.5	3.3	400	680	41 000	69 500
146.050 5.7500	188.120 7.4063	22.225 0.8750	20.638 0.8125	16.670 0.6563	1.5	1.5	107	200	10 900	20 400
	193.675 7.6250	28.575 1.1250	28.575 1.1250	23.020 0.9063	1.5	1.5	170	355	17 300	36 500
	193.675 7.6250	28.575 1.1250	28.575 1.1250	23.020 0.9063	4.8	1.5	170	355	17 300	36 500
	236.538 9.3125	57.150 2.2500	56.642 2.2300	44.450 1.7500	3.5	3.3	455	720	46 000	73 500
	236.538 9.3125	57.150 2.2500	56.642 2.2300	44.450 1.7500	3.5	3.3	400	680	41 000	69 500
	241.300 9.5000	57.150 2.2500	56.642 2.2300	44.450 1.7500	3.5	3.3	455	720	46 000	73 500
	241.300 9.5000	57.150 2.2500	56.642 2.2300	44.450 1.7500	3.5	3.3	400	680	41 000	69 500
	244.475 9.6250	47.625 1.8750	50.005 1.9687	33.338 1.3125	3.5	3.3	330	510	34 000	52 000
	254.000 10.0000	66.675 2.6250	66.675 2.6250	47.625 1.8750	7.0	3.3	515	830	52 500	84 500
	268.288 10.5625	74.612 2.9375	74.612 2.9375	57.150 2.2500	6.4	6.4	610	980	62 000	100 000
	304.800 12.0000	88.900 3.5000	82.550 3.2500	57.150 2.2500	6.4	6.4	745	1 010	76 000	103 000
	307.975 12.1250	88.900 3.5000	93.662 3.6875	61.912 2.4375	9.7	6.8	745	1 070	76 000	109 000
	307.975 12.1250	88.900 3.5000	93.662 3.6875	66.675 2.6250	9.7	6.8	885	1 190	90 000	121 000
	311.150 12.2500	88.900 3.5000	82.550 3.2500	57.150 2.2500	6.4	6.4	745	1 010	76 000	103 000
	317.500 12.5000	88.900 3.5000	93.662 3.6875	66.675 2.6250	9.7	6.8	885	1 190	90 000	121 000

Bearing Numbers	Abutment and Fillet Dimensions (mm)						Eff. Load Centers (mm)	Constant	Axial Load Factors		Mass (kg)
	d_a	d_b	D_a	D_b	CONE r_a max.	CUP r_a max.	a	e	Y_1	Y_0	approx.
82562 / 82950	171	156	215	230	3.5	3.3	53.7	0.44	1.4	0.75	10.1
LL529749 / LL529710	159	153	178	183	1.5	1.5	33.5	0.42	1.4	0.79	1.44
36690 / 36620	161	154	182	188	1.5	1.5	33.5	0.37	1.6	0.90	2.36
36691 / 36620	164	154	182	188	4.8	1.5	33.5	0.37	1.6	0.90	2.35
HM231140 / HM231110	171	158	216	228	3.5	3.3	45.9	0.32	1.9	1.0	9.0
82576 / 82931	173	158	213	228	3.5	3.3	53.7	0.44	1.4	0.75	9.18
HM231140 / HM231115	171	158	218	230	3.5	3.3	45.9	0.32	1.9	1.0	9.62
82576 / 82950	173	158	215	230	3.5	3.3	53.7	0.44	1.4	0.75	9.8
81575 / 81962	175	164	225	235	3.5	3.3	42.9	0.35	1.7	0.94	8.28
99575 / 99100	182	162	230	245	7.0	3.3	55.3	0.41	1.5	0.81	13.1
EE107057 / 107105	184	163	236	256	6.4	6.4	59.5	0.39	1.5	0.85	17.6
HH932145 / HH932110	195	164	262	295	6.4	6.4	92.3	0.73	0.82	0.45	27
EE450577 / 451212	196	171	271	289	9.7	6.8	61.5	0.33	1.8	1.0	28.8
HH234040 / HH234010	194	168	275	294	9.7	6.8	63.2	0.33	1.8	1.0	28.7
HH932145 / HH932115	195	164	265	298	6.4	6.4	92.3	0.73	0.82	0.45	28.3
HH234040 / HH234018	194	168	279	298	9.7	6.8	63.2	0.33	1.8	1.0	31.2

Bore Diameter 149.225 – 153.988 mm

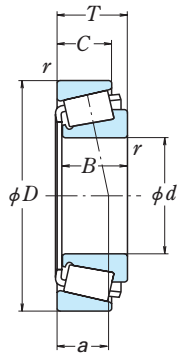

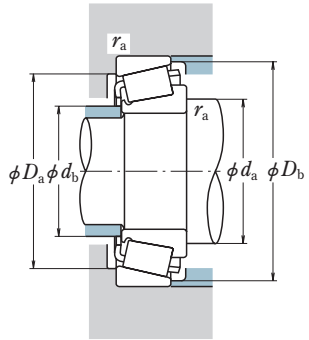

Dynamic Equivalent Load

$P = XF_r + YF_a$

$F_a/F_r \leqq e$		$F_a/F_r > e$	
X	Y	X	Y
1	0	0.4	Y_1

Static Equivalent Load

$P_0 = 0.5F_r + Y_0F_a$

When $F_r > 0.5F_r + Y_0F_a$, use $P_0 = F_r$

The values of e, Y_1, and Y_0 are given in the table below.

Boundary Dimensions (mm/inch)							Basic Load Ratings (kN)		{kgf}	
d	D	T	B	C	CONE r min.	CUP r min.	C_r	C_{0r}	C_r	C_{0r}
149.225 5.8750	236.538 9.3125	57.150 2.2500	56.642 2.2300	44.450 1.7500	6.4	3.3	455	720	46 000	73 500
	236.538 9.3125	57.150 2.2500	56.642 2.2300	44.450 1.7500	3.5	3.3	455	720	46 000	73 500
	236.538 9.3125	57.150 2.2500	56.642 2.2300	44.450 1.7500	3.5	3.3	400	680	41 000	69 500
	241.300 9.5000	57.150 2.2500	56.642 2.2300	44.450 1.7500	6.4	3.3	455	720	46 000	73 500
	241.300 9.5000	57.150 2.2500	56.642 2.2300	44.450 1.7500	3.5	3.3	455	720	46 000	73 500
	241.300 9.5000	57.150 2.2500	56.642 2.2300	44.450 1.7500	3.5	3.3	400	680	41 000	69 500
150.000 5.9055	244.475 9.6250	47.625 1.8750	50.005 1.9687	33.338 1.3125	3.5	3.3	330	510	34 000	52 000
152.400 6.0000	222.250 8.7500	46.830 1.8437	46.830 1.8437	34.925 1.3750	3.5	1.5	287	530	29 200	54 000
	244.475 9.6250	47.625 1.8750	50.005 1.9687	33.338 1.3125	3.5	3.3	330	510	34 000	52 000
	254.000 10.0000	66.675 2.6250	66.675 2.6250	47.625 1.8750	7.0	3.3	515	830	52 500	84 500
	268.288 10.5625	74.612 2.9375	74.612 2.9375	57.150 2.2500	6.4	6.4	610	980	62 000	100 000
	307.975 12.1250	88.900 3.5000	93.662 3.6875	61.912 2.4375	9.7	6.8	745	1 070	76 000	109 000
	307.975 12.1250	88.900 3.5000	93.662 3.6875	66.675 2.6250	9.7	6.8	885	1 190	90 000	121 000
	317.500 12.5000	88.900 3.5000	93.662 3.6875	66.675 2.6250	9.7	6.8	885	1 190	90 000	121 000
153.988 6.0625	244.475 9.6250	47.625 1.8750	50.005 1.9687	33.338 1.3125	3.5	3.3	330	510	34 000	52 000

Bearing Numbers	Abutment and Fillet Dimensions (mm)						Eff. Load Centers (mm)	Constant	Axial Load Factors		Mass (kg)
	d_a	d_b	D_a	D_b	CONE r_a max.	CUP r_a max.	a	e	Y_1	Y_0	approx.
HM231148 / HM231110	176	159	216	228	6.4	3.3	45.9	0.32	1.9	1.0	8.65
HM231149 / HM231110	173	159	216	228	3.5	3.3	45.9	0.32	1.9	1.0	8.68
82587 / 82931	175	160	213	228	3.5	3.3	53.7	0.44	1.4	0.75	8.85
HM231148 / HM231115	176	159	218	230	6.4	3.3	45.9	0.32	1.9	1.0	9.27
HM231149 / HM231115	173	159	218	230	3.5	3.3	45.9	0.32	1.9	1.0	9.3
82587 / 82950	175	160	215	230	3.5	3.3	53.7	0.44	1.4	0.75	9.47
81590 / 81962	177	166	225	235	3.5	3.3	42.9	0.35	1.7	0.94	7.92
M231649 / M231610	175	163	207	215	3.5	1.5	41.6	0.33	1.8	0.99	5.76
81600 / 81962	178	167	225	235	3.5	3.3	42.9	0.35	1.7	0.94	7.7
99600 / 99100	185	165	230	245	7.0	3.3	55.3	0.41	1.5	0.81	12.3
EE107060 / 107105	187	166	236	256	6.4	6.4	59.5	0.39	1.5	0.85	16.7
EE450601 / 451212	199	174	271	289	9.7	6.8	61.5	0.33	1.8	1.0	27.7
HH234048 / HH234010	197	171	275	294	9.7	6.8	63.2	0.33	1.8	1.0	27.6
HH234048 / HH234018	197	171	279	298	9.7	6.8	63.2	0.33	1.8	1.0	30.1
81606 / 81962	179	168	225	235	3.5	3.3	42.9	0.35	1.7	0.94	7.55

Bore Diameter 155.575 – 165.100 mm

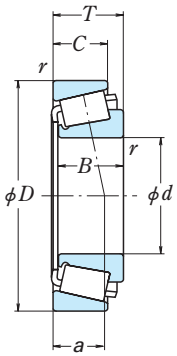

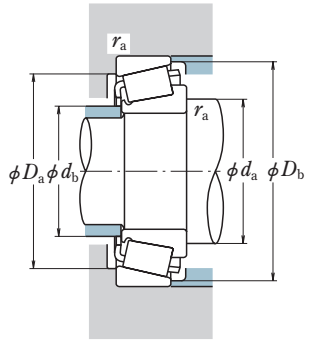

Dynamic Equivalent Load

$P = XF_r + YF_a$

$F_a/F_r \leqq e$		$F_a/F_r > e$	
X	Y	X	Y
1	0	0.4	Y_1

Static Equivalent Load

$P_0 = 0.5F_r + Y_0F_a$

When $F_r > 0.5F_r + Y_0F_a$, use $P_0 = F_r$

The values of e, Y_1, and Y_0 are given in the table below.

Boundary Dimensions (mm/inch)							Basic Load Ratings (kN)		{kgf}		Bearing Numbers	Abutment and Fillet Dimensions (mm)						Eff. Load Centers (mm)	Constant	Axial Load Factors		Mass (kg)
d	D	T	B	C	CONE r min.	CUP r min.	C_r	C_{0r}	C_r	C_{0r}		d_a	d_b	D_a	D_b	CONE r_a max.	CUP r_a max.	a	e	Y_1	Y_0	approx.
155.575 6.1250	330.200 13.0000	85.725 3.3750	79.375 3.1250	53.975 2.1250	6.4	6.4	760	1 060	77 500	108 000	**H936340 / H936310**	209	178	283	317	6.4	6.4	103.3	0.81	0.74	0.41	32.5
	342.900 13.5000	85.725 3.3750	79.375 3.1250	53.975 2.1250	6.4	6.4	760	1 060	77 500	108 000	**H936340 / H936316**	209	178	289	323	6.4	6.4	103.3	0.81	0.74	0.41	35.3
158.750 6.2500	205.583 8.0938	23.812 0.9375	23.812 0.9375	18.258 0.7188	1.5	1.5	127	249	12 900	25 400	**L432349 / L432310**	173	167	195	200	1.5	1.5	33.9	0.39	1.5	0.84	1.99
	225.425 8.8750	41.275 1.6250	39.688 1.5625	33.338 1.3125	3.5	3.3	240	540	24 400	55 000	**46780 / 46720**	183	172	208	219	3.5	3.3	44.3	0.38	1.6	0.86	5.34
159.951 6.2973	244.475 9.6250	47.625 1.8750	50.005 1.9687	33.338 1.3125	3.5	3.3	330	510	34 000	52 000	**81629 / 81962**	182	171	225	235	3.5	3.3	42.9	0.35	1.7	0.94	6.97
160.325 6.3120	288.925 11.3750	63.500 2.5000	63.500 2.5000	47.625 1.8750	7.0	3.3	615	935	62 500	95 500	**HM237532 / HM237510**	202	183	266	278	7.0	3.3	52.7	0.32	1.9	1.0	17
161.925 6.3750	244.475 9.6250	47.625 1.8750	46.830 1.8437	33.338 1.3125	3.5	3.3	330	510	34 000	52 000	**81637 / 81962**	183	172	225	235	3.5	3.3	42.9	0.35	1.7	0.94	6.67
	374.650 14.7500	87.312 3.4375	79.375 3.1250	60.325 2.3750	6.4	3.3	855	1 090	87 000	111 000	**EE117063 / 117148**	217	188	325	355	6.4	3.3	98.6	0.71	0.85	0.47	42.2
165.100 6.5000	215.900 8.5000	26.195 1.0313	26.195 1.0313	20.638 0.8125	1.5	1.5	154	295	15 700	30 000	**L433749 / L433710**	180	173	204	210	1.5	1.5	34.5	0.36	1.7	0.91	2.45
	225.425 8.8750	41.275 1.6250	39.688 1.5625	33.338 1.3125	3.5	3.3	240	540	24 400	55 000	**46790 / 46720**	186	175	208	219	3.5	3.3	44.3	0.38	1.6	0.86	4.84
	247.650 9.7500	47.625 1.8750	47.625 1.8750	38.100 1.5000	3.5	3.3	345	705	35 500	71 500	**67780 / 67720**	194	180	228	241	3.5	3.3	52.4	0.44	1.4	0.75	8.16
	254.000 10.0000	46.038 1.8125	46.038 1.8125	33.338 1.3125	4.8	3.3	370	595	37 500	61 000	**M235145 / M235113**	191	178	235	245	4.8	3.3	41.9	0.32	1.9	1.0	7.72
	254.000 10.0000	46.038 1.8125	46.038 1.8125	33.338 1.3125	4.8	3.3	340	535	34 500	54 500	**86650 / 86100**	191	178	235	246	4.8	3.3	44.9	0.37	1.6	0.89	7.56
	288.925 11.3750	63.500 2.5000	63.500 2.5000	47.625 1.8750	7.0	3.3	615	935	62 500	95 500	**HM237535 / HM237510**	204	185	266	278	7.0	3.3	52.7	0.32	1.9	1.0	16.4
	288.925 11.3750	63.500 2.5000	63.500 2.5000	47.625 1.8750	7.0	3.3	545	940	55 500	96 000	**94649 / 94113**	206	185	261	277	7.0	3.3	62.6	0.47	1.3	0.70	17.2
	298.450 11.7500	63.500 2.5000	63.500 2.5000	47.625 1.8750	7.0	3.3	545	940	55 500	96 000	**94649 / 94118**	206	185	265	282	7.0	3.3	62.6	0.47	1.3	0.70	18.8

Bore Diameter 165.100 – 171.450 mm

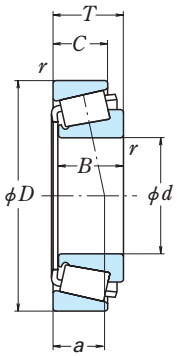

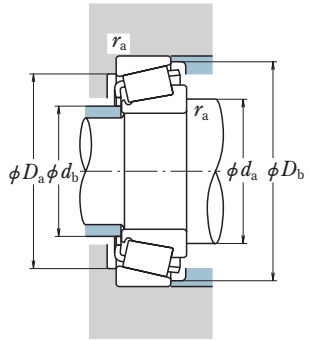

Dynamic Equivalent Load

$P = XF_r + YF_a$

$F_a/F_r \leqq e$		$F_a/F_r > e$	
X	Y	X	Y
1	0	0.4	Y_1

Static Equivalent Load

$P_0 = 0.5F_r + Y_0F_a$

When $F_r > 0.5F_r + Y_0F_a$, use $P_0 = F_r$

The values of e, Y_1, and Y_0 are given in the table below.

Boundary Dimensions (mm/inch)							Basic Load Ratings (kN)		{kgf}	
d	D	T	B	C	CONE r min.	CUP r min.	C_r	C_{0r}	C_r	C_{0r}
165.100 6.5000	311.150 12.2500	82.550 3.2500	82.550 3.2500	63.500 2.5000	6.4	6.4	770	1 230	78 500	126 000
	311.150 12.2500	82.550 3.2500	82.550 3.2500	65.088 2.5625	6.4	6.4	835	1 280	85 000	131 000
	336.550 13.2500	92.075 3.6250	95.250 3.7500	69.850 2.7500	3.3	6.4	990	1 380	101 000	141 000
	360.000 14.1732	92.075 3.6250	88.897 3.4999	63.500 2.5000	9.7	3.3	875	1 340	89 000	137 000
	361.950 14.2500	106.362 4.1875	104.775 4.1250	76.200 3.0000	13.5	3.3	1 240	1 690	127 000	172 000
166.688 6.5625	225.425 8.8750	41.275 1.6250	39.688 1.5625	33.338 1.3125	3.5	3.3	240	540	24 400	55 000
168.275 6.6250	247.650 9.7500	47.625 1.8750	47.625 1.8750	38.100 1.5000	3.5	3.3	345	705	35 500	71 500
	330.200 13.0000	85.725 3.3750	79.375 3.1250	53.975 2.1250	6.4	6.4	760	1 060	77 500	108 000
	342.900 13.5000	85.725 3.3750	79.375 3.1250	53.975 2.1250	6.4	6.4	760	1 060	77 500	108 000
170.000 6.6929	230.000 9.0551	39.000 1.5354	38.000 1.4961	31.000 1.2205	3.0	2.5	278	520	28 300	53 000
	240.000 9.4488	46.000 1.8110	44.500 1.7520	37.000 1.4567	3.0	2.5	380	720	39 000	73 000
	254.000 10.0000	46.038 1.8125	46.038 1.8125	33.338 1.3125	4.8	3.3	370	595	37 500	61 000
	254.000 10.0000	46.038 1.8125	46.038 1.8125	33.338 1.3125	4.8	3.3	340	535	34 500	54 500
171.450 6.7500	260.350 10.2500	66.675 2.6250	66.675 2.6250	52.388 2.0625	3.5	3.3	540	1 030	55 000	105 000
	288.925 11.3750	63.500 2.5000	63.500 2.5000	47.625 1.8750	7.0	3.3	545	940	55 500	96 000
	298.450 11.7500	63.500 2.5000	63.500 2.5000	47.625 1.8750	7.0	3.3	545	940	55 500	96 000

Bearing Numbers	Abutment and Fillet Dimensions (mm)						Eff. Load Centers (mm)	Constant	Axial Load Factors		Mass (kg)
	d_a	d_b	D_a	D_b	CONE r_a max.	CUP r_a max.	a	e	Y_1	Y_0	approx.
EE219065 / 219122	206	185	274	295	6.4	6.4	65.8	0.38	1.6	0.88	26.3
H238140 / H238110	208	187	279	298	6.4	6.4	63.9	0.33	1.8	1.0	26.5
HH437549 / HH437510	206	185	297	320	3.3	6.4	70.8	0.37	1.6	0.89	35
EE420651 / 421417	234	208	329	349	9.7	3.3	78.9	0.42	1.4	0.79	42.1
EE108065 / 108142	220	188	323	342	13.5	3.3	73.4	0.33	1.8	0.99	48.5
46792 / 46720	187	176	208	219	3.5	3.3	44.3	0.38	1.6	0.86	4.71
67782 / 67720	195	182	228	241	3.5	3.3	52.4	0.44	1.4	0.75	7.85
H936349 / H936310	216	184	283	317	6.4	6.4	103.3	0.81	0.74	0.41	30.5
H936349 / H936316	216	184	289	323	6.4	6.4	103.3	0.81	0.74	0.41	33.3
▲JHM534149 / JHM534110	188	177	215	225	3.0	2.5	43.2	0.38	1.6	0.86	4.41
▲JM734449 / JM734410	191	178	222	234	3.0	2.5	50.5	0.44	1.4	0.75	6.44
M235149 / M235113	194	180	235	245	4.8	3.3	41.9	0.32	1.9	1.0	7.26
86669 / 86100	194	181	235	246	4.8	3.3	44.9	0.37	1.6	0.89	7.09
HM535349 / HM535310	198	182	236	252	3.5	3.3	57.6	0.40	1.5	0.82	12.5
94675 / 94113	209	189	261	277	7.0	3.3	62.6	0.47	1.3	0.70	16.3
94675 / 94118	209	189	265	282	7.0	3.3	62.6	0.47	1.3	0.70	18

Note ▲ The tolerances are listed in tables **2** to **4** on page **B 99**.

Bore Diameter 174.625 – 177.800 mm

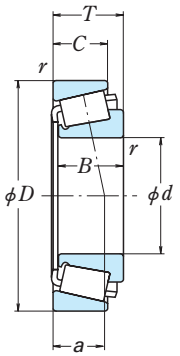

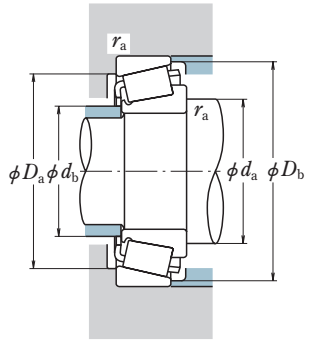

Dynamic Equivalent Load

$P = XF_r + YF_a$

$F_a/F_r \leqq e$		$F_a/F_r > e$	
X	Y	X	Y
1	0	0.4	Y_1

Static Equivalent Load

$P_0 = 0.5F_r + Y_0F_a$

When $F_r > 0.5F_r + Y_0F_a$, use $P_0 = F_r$

The values of e, Y_1, and Y_0 are given in the table below.

Boundary Dimensions (mm/inch)							Basic Load Ratings (kN)		{kgf}	
d	D	T	B	C	CONE r min.	CUP r min.	C_r	C_{0r}	C_r	C_{0r}
174.625 6.8750	247.650 9.7500	47.625 1.8750	47.625 1.8750	38.100 1.5000	3.5	3.3	345	705	35 500	71 500
	288.925 11.3750	63.500 2.5000	63.500 2.5000	47.625 1.8750	7.0	3.3	615	935	62 500	95 500
	288.925 11.3750	63.500 2.5000	63.500 2.5000	47.625 1.8750	7.0	3.3	545	940	55 500	96 000
	298.450 11.7500	63.500 2.5000	63.500 2.5000	47.625 1.8750	7.0	3.3	545	940	55 500	96 000
	298.450 11.7500	82.550 3.2500	82.550 3.2500	63.500 2.5000	6.4	6.4	795	1 290	81 000	131 000
	311.150 12.2500	82.550 3.2500	82.550 3.2500	65.088 2.5625	6.4	6.4	835	1 280	85 000	131 000
177.800 7.0000	215.900 8.5000	20.638 0.8125	20.638 0.8125	15.083 0.5938	1.5	1.5	109	241	11 100	24 600
	227.012 8.9375	30.162 1.1875	30.162 1.1875	23.020 0.9063	1.5	1.5	181	415	18 500	42 000
	247.650 9.7500	47.625 1.8750	47.625 1.8750	38.100 1.5000	3.5	3.3	345	705	35 500	71 500
	247.650 9.7500	47.625 1.8750	47.625 1.8750	38.100 1.5000	10.4	3.3	345	705	35 500	71 500
	260.350 10.2500	53.975 2.1250	53.975 2.1250	41.275 1.6250	3.5	3.3	455	835	46 500	85 000
	269.875 10.6250	55.562 2.1875	55.562 2.1875	42.862 1.6875	3.5	3.3	465	875	47 000	89 500
	285.750 11.2500	63.500 2.5000	63.500 2.5000	41.275 1.6250	6.4	3.3	450	725	46 000	74 000
	288.925 11.3750	63.500 2.5000	63.500 2.5000	47.625 1.8750	7.0	3.3	615	935	62 500	95 500
	288.925 11.3750	63.500 2.5000	63.500 2.5000	47.625 1.8750	7.0	3.3	545	940	55 500	96 000
	304.800 12.0000	66.675 2.6250	69.106 2.7207	42.862 1.6875	6.4	3.3	555	810	56 500	82 500

Bearing Numbers	Abutment and Fillet Dimensions (mm)						Eff. Load Centers (mm)	Constant	Axial Load Factors		Mass (kg)
	d_a	d_b	D_a	D_b	CONE r_a max.	CUP r_a max.	a	e	Y_1	Y_0	approx.
67787 / 67720	199	185	228	241	3.5	3.3	52.4	0.44	1.4	0.75	7.21
HM237542 / HM237510	209	190	266	278	7.0	3.3	52.7	0.32	1.9	1.0	15.2
94687 / 94113	211	190	261	277	7.0	3.3	62.6	0.47	1.3	0.70	15.9
94687 / 94118	211	190	265	282	7.0	3.3	62.6	0.47	1.3	0.70	17.5
EE219068 / 219117	211	190	267	288	6.4	6.4	66.4	0.38	1.6	0.88	22.1
H238148 / H238110	212	191	279	298	6.4	6.4	63.9	0.33	1.8	1.0	24.9
LL735449 / LL735410	190	184	206	211	1.5	1.5	38.5	0.45	1.3	0.73	1.51
36990 / 36920	193	185	214	222	1.5	1.5	42.9	0.44	1.4	0.75	3.01
67790 / 67720	200	186	228	241	3.5	3.3	52.4	0.44	1.4	0.75	6.88
67791 / 67720	207	186	228	241	10.4	3.3	52.4	0.44	1.4	0.75	6.79
M236849 / M236810	201	189	241	252	3.5	3.3	47.5	0.33	1.8	0.99	9.35
M238840 / M238810	208	194	250	262	3.5	3.3	51.1	0.35	1.7	0.95	11.1
EE91702 / 91112	210	193	260	274	6.4	3.3	58.9	0.43	1.4	0.77	13.7
HM237545 / HM237510	210	191	266	278	7.0	3.3	52.7	0.32	1.9	1.0	14.7
94700 / 94113	213	192	261	277	7.0	3.3	62.6	0.47	1.3	0.70	15.5
EE280702 / 281200	214	196	280	292	6.4	3.3	54.3	0.36	1.7	0.92	17.4

Bore Diameter 177.800 – 187.325 mm

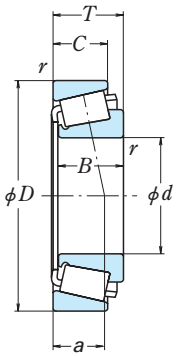

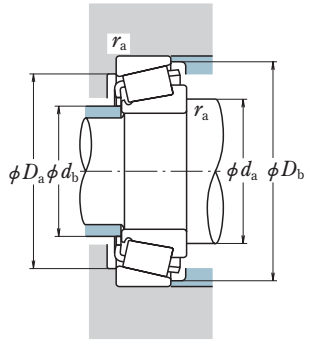

Dynamic Equivalent Load

$P = XF_r + YF_a$

$F_a/F_r \leqq e$		$F_a/F_r > e$	
X	Y	X	Y
1	0	0.4	Y_1

Static Equivalent Load

$P_0 = 0.5F_r + Y_0F_a$

When $F_r > 0.5F_r + Y_0F_a$, use $P_0 = F_r$

The values of e, Y_1, and Y_0 are given in the table below.

Boundary Dimensions (mm/inch)							Basic Load Ratings (kN)		{kgf}		Bearing Numbers	Abutment and Fillet Dimensions (mm)						Eff. Load Centers (mm)	Constant	Axial Load Factors		Mass (kg)
d	D	T	B	C	CONE r min.	CUP r min.	C_r	C_{0r}	C_r	C_{0r}		d_a	d_b	D_a	D_b	CONE r_a max.	CUP r_a max.	a	e	Y_1	Y_0	approx.
177.800 7.0000	319.964 12.5970	88.900 3.5000	85.725 3.3750	65.088 2.5625	3.5	4.8	790	1 300	80 500	133 000	**EE222070 / 222126**	218	199	287	307	3.5	4.8	72.6	0.40	1.5	0.83	28.4
	319.964 12.5970	88.900 3.5000	85.725 3.3750	65.088 2.5625	3.5	4.8	855	1 270	87 500	129 000	**H239640 / H239610**	215	197	292	309	3.5	4.8	66.3	0.32	1.9	1.0	26.9
	320.675 12.6250	88.900 3.5000	85.725 3.3750	65.088 2.5625	3.5	4.8	790	1 300	80 500	133 000	**EE222070 / 222128**	218	199	287	308	3.5	4.8	72.6	0.40	1.5	0.83	28.6
	320.675 12.6250	88.900 3.5000	85.725 3.3750	65.088 2.5625	3.5	4.8	855	1 270	87 500	129 000	**H239640 / H239612**	215	197	292	309	3.5	4.8	66.3	0.32	1.9	1.0	27
	327.025 12.8750	90.488 3.5625	92.075 3.6250	63.500 2.5000	6.4	6.4	930	1 500	95 000	153 000	**EE470078 / 470128**	223	200	294	315	6.4	6.4	68.6	0.37	1.6	0.90	31
	365.049 14.3720	92.075 3.6250	88.897 3.4999	63.500 2.5000	12.7	3.3	875	1 340	89 000	137 000	**EE420701 / 421437**	243	214	332	351	12.7	3.3	78.9	0.42	1.4	0.79	41.1
	368.300 14.5000	92.075 3.6250	88.897 3.4999	63.500 2.5000	12.7	3.3	875	1 340	89 000	137 000	**EE420701 / 421450**	243	214	333	353	12.7	3.3	78.9	0.42	1.4	0.79	42
179.972 7.0855	317.500 12.5000	63.500 2.5000	63.500 2.5000	46.038 1.8125	3.5	3.3	575	1 060	59 000	108 000	**93708 / 93125**	224	206	288	306	3.5	3.3	71.0	0.52	1.1	0.63	21.2
	317.500 12.5000	68.262 2.6875	63.500 2.5000	50.800 2.0000	3.5	3.3	575	1 060	59 000	108 000	**93708 / 93126**	224	206	286	306	3.5	3.3	75.8	0.52	1.1	0.63	22.1
184.150 7.2500	236.538 9.3125	26.192 1.0312	25.400 1.0000	19.050 0.7500	1.5	1.5	155	291	15 800	29 700	**LL537649 / LL537610**	199	193	225	230	1.5	1.5	38.0	0.37	1.6	0.89	2.66
	266.700 10.5000	47.625 1.8750	46.833 1.8438	38.100 1.5000	3.5	3.3	345	720	35 000	73 000	**67883 / 67820**	212	198	246	260	3.5	3.3	57.9	0.48	1.3	0.69	8.73
187.325 7.3750	266.700 10.5000	47.625 1.8750	46.833 1.8438	38.100 1.5000	3.5	3.3	345	720	35 000	73 000	**67884 / 67820**	214	200	246	260	3.5	3.3	57.9	0.48	1.3	0.69	8.39
	269.875 10.6250	55.562 2.1875	55.562 2.1875	42.862 1.6875	3.5	3.3	490	920	50 000	93 500	**M238849 / M238810**	211	198	250	261	3.5	3.3	49.6	0.33	1.8	0.99	10.1
	282.575 11.1250	50.800 2.0000	47.625 1.8750	36.512 1.4375	3.5	3.3	360	600	36 500	61 500	**87737 / 87111**	215	202	262	274	3.5	3.3	54.8	0.42	1.4	0.79	9.94
	319.964 12.5970	88.900 3.5000	85.725 3.3750	65.088 2.5625	5.5	4.8	855	1 270	87 500	129 000	**H239649 / H239610**	222	202	292	309	5.5	4.8	66.3	0.32	1.9	1.0	25
	320.675 12.6250	88.900 3.5000	85.725 3.3750	65.088 2.5625	5.5	4.8	855	1 270	87 500	129 000	**H239649 / H239612**	222	202	292	309	5.5	4.8	66.3	0.32	1.9	1.0	25.2

Bore Diameter 190.000 – 200.000 mm

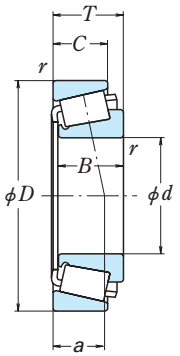

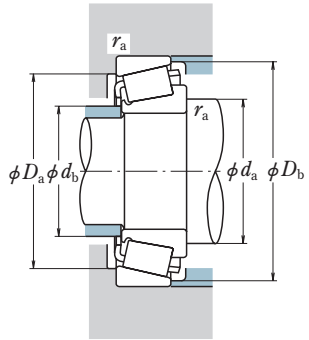

Dynamic Equivalent Load

$P = XF_r + YF_a$

$F_a/F_r \leqq e$		$F_a/F_r > e$	
X	Y	X	Y
1	0	0.4	Y_1

Static Equivalent Load

$P_0 = 0.5F_r + Y_0F_a$

When $F_r > 0.5F_r + Y_0F_a$, use $P_0 = F_r$

The values of e, Y_1, and Y_0 are given in the table below.

Boundary Dimensions (mm/inch)							Basic Load Ratings (kN)		{kgf}		Bearing Numbers	Abutment and Fillet Dimensions (mm)						Eff. Load Centers (mm)	Constant	Axial Load Factors		Mass (kg)
d	D	T	B	C	CONE r min.	CUP r min.	C_r	C_{0r}	C_r	C_{0r}		d_a	d_b	D_a	D_b	CONE r_a max.	CUP r_a max.	a	e	Y_1	Y_0	approx.
190.000 7.4803	260.000 10.2362	46.000 1.8110	44.000 1.7323	36.500 1.4370	3.0	2.5	370	730	38 000	74 500	▲**JM738249 / JM738210**	212	198	241	255	3.0	2.5	56.4	0.48	1.3	0.69	6.94
190.500 7.5000	266.700 10.5000	47.625 1.8750	46.833 1.8438	38.100 1.5000	3.5	3.3	345	720	35 000	73 000	**67885 / 67820**	215	202	246	260	3.5	3.3	57.9	0.48	1.3	0.69	8.04
	282.575 11.1250	50.800 2.0000	47.625 1.8750	36.512 1.4375	3.5	3.3	360	600	36 500	61 500	**87750 / 87111**	217	204	262	274	3.5	3.3	54.8	0.42	1.4	0.79	9.59
	317.500 12.5000	63.500 2.5000	63.500 2.5000	46.038 1.8125	4.3	3.3	575	1 060	59 000	108 000	**93750 / 93125**	231	211	288	306	4.3	3.3	71.0	0.52	1.1	0.63	19.7
	317.500 12.5000	68.262 2.6875	63.500 2.5000	50.800 2.0000	4.3	3.3	575	1 060	59 000	108 000	**93750 / 93126**	231	211	286	306	4.3	3.3	75.8	0.52	1.1	0.63	20.6
	327.025 12.8750	90.488 3.5625	92.075 3.6250	63.500 2.5000	6.4	6.4	930	1 500	95 000	153 000	**EE470075 / 470128**	229	206	294	315	6.4	6.4	68.6	0.37	1.6	0.90	28.3
	336.550 13.2500	98.425 3.8750	95.250 3.7500	73.025 2.8750	6.4	6.4	940	1 600	95 500	163 000	**HH840249 / HH840210**	237	205	292	325	6.4	6.4	93.7	0.58	1.0	0.57	35.7
	368.300 14.5000	92.075 3.6250	88.897 3.4999	63.500 2.5000	6.4	3.3	875	1 340	89 000	137 000	**EE420751 / 421450**	243	220	333	353	6.4	3.3	78.9	0.42	1.4	0.79	39.6
	428.625 16.8750	106.362 4.1875	95.250 3.7500	61.912 2.4375	6.4	6.4	1 140	1 400	116 000	143 000	**EE350750-N1 / 351687**	246	213	369	405	6.4	6.4	119.0	0.76	0.79	0.44	57.9
193.675 7.6250	282.575 11.1250	50.800 2.0000	47.625 1.8750	36.512 1.4375	3.5	3.3	360	600	36 500	61 500	**87762 / 87111**	218	205	262	274	3.5	3.3	54.8	0.42	1.4	0.79	9.23
196.850 7.7500	241.300 9.5000	23.812 0.9375	23.017 0.9062	17.462 0.6875	1.5	1.5	131	293	13 400	29 900	**LL639249 / LL639210**	210	204	230	236	1.5	1.5	41.4	0.42	1.4	0.79	2.23
	254.000 10.0000	28.575 1.1250	27.783 1.0938	21.433 0.8438	1.5	1.5	177	355	18 100	36 500	**L540049 / L540010**	213	206	241	247	1.5	1.5	42.9	0.40	1.5	0.83	3.48
	257.175 10.1250	39.688 1.5625	39.688 1.5625	30.162 1.1875	3.5	3.3	271	620	27 600	63 500	**LM739749 / LM739710**	218	206	240	251	3.5	3.3	51.3	0.45	1.3	0.73	5.33
	317.500 12.5000	63.500 2.5000	63.500 2.5000	46.038 1.8125	4.3	3.3	575	1 060	59 000	108 000	**93775 / 93125**	234	214	288	306	4.3	3.3	71.0	0.52	1.1	0.63	18.7
	317.500 12.5000	68.262 2.6875	63.500 2.5000	50.800 2.0000	4.3	3.3	575	1 060	59 000	108 000	**93775 / 93126**	234	214	286	306	4.3	3.3	75.8	0.52	1.1	0.63	19.7
200.000 7.8740	300.000 11.8110	65.000 2.5591	62.000 2.4409	51.000 2.0079	3.5	2.5	615	1 130	62 500	116 000	▲**JHM840449 / JHM840410**	230	211	274	292	3.5	2.5	73.1	0.52	1.2	0.63	15.5

Note ▲ The tolerances are listed in tables **2** to **4** on page **B 99**.

Bore Diameter 200.025 – 203.200 mm

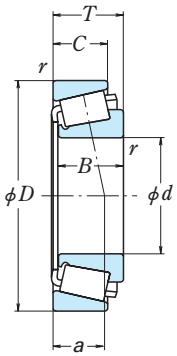

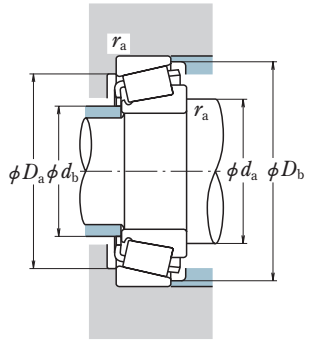

Dynamic Equivalent Load

$P = XF_r + YF_a$

$F_a/F_r \leqq e$		$F_a/F_r > e$	
X	Y	X	Y
1	0	0.4	Y_1

Static Equivalent Load

$P_0 = 0.5F_r + Y_0F_a$

When $F_r > 0.5F_r + Y_0F_a$, use $P_0 = F_r$

The values of e, Y_1, and Y_0 are given in the table below.

Boundary Dimensions (mm/inch)							Basic Load Ratings (kN)		{kgf}		Bearing Numbers	Abutment and Fillet Dimensions (mm)						Eff. Load Centers (mm)	Constant	Axial Load Factors		Mass (kg)
d	D	T	B	C	CONE r min.	CUP r min.	C_r	C_{0r}	C_r	C_{0r}		d_a	d_b	D_a	D_b	CONE r_a max.	CUP r_a max.	a	e	Y_1	Y_0	approx.
200.025 7.8750	317.500 12.5000	63.500 2.5000	63.500 2.5000	46.038 1.8125	4.3	3.3	575	1 060	59 000	108 000	**93787 / 93125**	235	216	288	306	4.3	3.3	71.0	0.52	1.1	0.63	18.3
	317.500 12.5000	68.262 2.6875	63.500 2.5000	50.800 2.0000	4.3	3.3	575	1 060	59 000	108 000	**93787 / 93126**	235	216	286	306	4.3	3.3	75.8	0.52	1.1	0.63	19.2
	333.375 13.1250	69.850 2.7500	69.850 2.7500	52.388 2.0625	6.4	6.4	690	1 190	70 000	121 000	**HM743337 / HM743310**	242	222	302	322	6.4	6.4	71.3	0.44	1.4	0.75	23.3
	355.600 14.0000	69.850 2.7500	69.850 2.7500	49.212 1.9375	6.8	1.5	695	1 230	71 000	126 000	**EE130787 / 131400**	250	232	329	340	6.8	1.5	59.8	0.33	1.8	0.99	28.3
	384.175 15.1250	112.712 4.4375	112.712 4.4375	90.488 3.5625	6.4	6.4	1 220	2 220	124 000	227 000	**H247535 / H247510**	258	234	344	369	6.4	6.4	84.2	0.33	1.8	0.99	58.8
	393.700 15.5000	111.125 4.3750	111.125 4.3750	84.138 3.3125	6.4	6.4	1 300	2 030	133 000	207 000	**HH144642 / HH144614**	251	227	352	374	6.4	6.4	78.1	0.30	2.0	1.1	57.4
201.612 7.9375	360.000 14.1732	92.075 3.6250	88.897 3.4999	63.500 2.5000	3.3	3.3	875	1 340	89 000	137 000	**EE420793 / 421417**	246	226	329	349	3.3	3.3	78.9	0.42	1.4	0.79	34.9
203.200 8.0000	261.142 10.2812	28.575 1.1250	27.783 1.0938	21.433 0.8438	1.5	1.5	176	355	18 000	36 500	**LL641149 / LL641110**	219	212	247	254	1.5	1.5	43.7	0.41	1.5	0.81	3.54
	276.225 10.8750	42.862 1.6875	42.862 1.6875	34.133 1.3438	3.5	3.3	335	620	34 500	63 500	**LM241149 / LM241110**	224	213	259	269	3.5	3.3	44.0	0.32	1.9	1.0	6.84
	282.575 11.1250	46.038 1.8125	46.038 1.8125	36.512 1.4375	3.5	3.3	365	800	37 500	81 500	**67983 / 67920**	230	215	261	276	3.5	3.3	61.9	0.51	1.2	0.65	8.85
	317.500 12.5000	53.975 2.1250	53.975 2.1250	34.925 1.3750	4.0	3.3	460	725	47 000	74 000	**EE132083 / 132125**	232	219	293	302	4.0	3.3	48.0	0.31	1.9	1.1	13.5
	317.500 12.5000	63.500 2.5000	63.500 2.5000	46.038 1.8125	4.3	3.3	575	1 060	59 000	108 000	**93800 / 93125**	237	217	288	306	4.3	3.3	71.0	0.52	1.1	0.63	17.8
	317.500 12.5000	63.500 2.5000	63.500 2.5000	46.038 1.8125	7.9	3.3	575	1 060	59 000	108 000	**93800A / 93125**	240	217	288	306	7.9	3.3	71.0	0.52	1.1	0.63	17.7
	317.500 12.5000	66.675 2.6250	66.675 2.6250	50.800 2.0000	4.3	3.3	615	995	62 500	102 000	**EE122080 / 122125**	234	218	293	305	4.3	3.3	55.9	0.30	2.0	1.1	17.4
	317.500 12.5000	68.262 2.6875	63.500 2.5000	50.800 2.0000	4.3	3.3	575	1 060	59 000	108 000	**93800 / 93126**	237	217	286	306	4.3	3.3	75.8	0.52	1.1	0.63	18.7
	317.500 12.5000	68.262 2.6875	63.500 2.5000	50.800 2.0000	7.9	3.3	575	1 060	59 000	108 000	**93800A / 93126**	240	217	286	306	7.9	3.3	75.8	0.52	1.1	0.63	18.6

Bore Diameter 203.200 – 209.550 mm

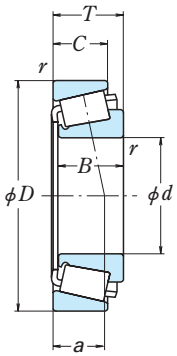

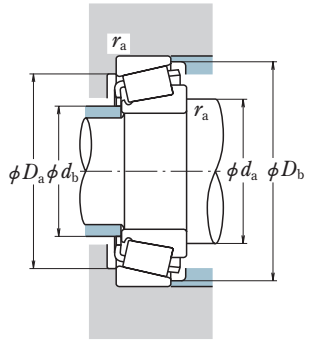

Dynamic Equivalent Load

$P = XF_r + YF_a$

$F_a/F_r \leqq e$		$F_a/F_r > e$	
X	Y	X	Y
1	0	0.4	Y_1

Static Equivalent Load

$P_0 = 0.5F_r + Y_0F_a$

When $F_r > 0.5F_r + Y_0F_a$, use $P_0 = F_r$

The values of e, Y_1, and Y_0 are given in the table below.

Boundary Dimensions (mm/inch)							Basic Load Ratings (kN)		{kgf}		Bearing Numbers	Abutment and Fillet Dimensions (mm)						Eff. Load Centers (mm)	Constant	Axial Load Factors		Mass (kg)
d	D	T	B	C	CONE r min.	CUP r min.	C_r	C_{0r}	C_r	C_{0r}		d_a	d_b	D_a	D_b	CONE r_a max.	CUP r_a max.	a	e	Y_1	Y_0	approx.
203.200 8.0000	360.000 14.1732	92.075 3.6250	88.897 3.4999	63.500 2.5000	3.3	3.3	875	1 340	89 000	137 000	**EE420801 / 421417**	246	227	329	349	3.3	3.3	78.9	0.42	1.4	0.79	34.5
	365.049 14.3720	92.075 3.6250	88.897 3.4999	63.500 2.5000	3.3	3.3	875	1 340	89 000	137 000	**EE420801 / 421437**	246	227	332	351	3.3	3.3	78.9	0.42	1.4	0.79	36
	368.300 14.5000	92.075 3.6250	88.897 3.4999	63.500 2.5000	3.3	3.3	875	1 340	89 000	137 000	**EE420801 / 421450**	246	227	333	353	3.3	3.3	78.9	0.42	1.4	0.79	36.9
	406.400 16.0000	92.075 3.6250	85.725 3.3750	57.150 2.2500	6.4	6.4	935	1 310	95 000	133 000	**EE114080 / 114160**	260	226	352	387	6.4	6.4	119.9	0.79	0.75	0.42	48.1
	482.600 19.0000	117.475 4.6250	95.250 3.7500	73.025 2.8750	6.4	6.4	1 190	1 590	121 000	163 000	**EE380080 / 380190**	274	236	408	451	6.4	6.4	148.6	0.87	0.69	0.38	88.7
204.788 8.0625	292.100 11.5000	57.945 2.2813	57.945 2.2813	46.038 1.8125	3.5	3.3	540	1 050	55 000	107 000	**M241549 / M241510**	229	216	271	283	3.5	3.3	52.8	0.33	1.8	0.99	12.1
206.375 8.1250	282.575 11.1250	46.038 1.8125	46.038 1.8125	36.512 1.4375	3.5	3.3	365	800	37 500	81 500	**67985 / 67920**	231	216	261	276	3.5	3.3	61.9	0.51	1.2	0.65	8.48
	317.500 12.5000	53.975 2.1250	53.975 2.1250	34.925 1.3750	4.0	3.3	460	725	47 000	74 000	**EE132084 / 132125**	234	220	293	302	4.0	3.3	48.0	0.31	1.9	1.1	13
	336.550 13.2500	98.425 3.8750	100.012 3.9375	77.788 3.0625	3.3	3.3	1 040	1 900	106 000	194 000	**H242649 / H242610**	242	222	306	325	3.3	3.3	73.4	0.33	1.8	0.99	32.8
209.550 8.2500	282.575 11.1250	46.038 1.8125	46.038 1.8125	36.512 1.4375	3.5	3.3	365	800	37 500	81 500	67989 / 67920	233	218	261	276	3.5	3.3	61.9	0.51	1.2	0.65	8.11
	317.500 12.5000	63.500 2.5000	63.500 2.5000	46.038 1.8125	4.3	3.3	575	1 060	59 000	108 000	**93825 / 93125**	240	221	288	306	4.3	3.3	71.0	0.52	1.1	0.63	16.7
	317.500 12.5000	63.500 2.5000	63.500 2.5000	46.038 1.8125	12.7	3.3	575	1 060	59 000	108 000	**93825A / 93125**	248	221	288	306	12.7	3.3	71.0	0.52	1.1	0.63	16.6
	317.500 12.5000	68.262 2.6875	63.500 2.5000	50.800 2.0000	4.3	3.3	575	1 060	59 000	108 000	**93825 / 93126**	240	221	286	306	4.3	3.3	75.8	0.52	1.1	0.63	17.6
	317.500 12.5000	68.262 2.6875	63.500 2.5000	50.800 2.0000	12.7	3.3	575	1 060	59 000	108 000	**93825A / 93126**	248	221	286	306	12.7	3.3	75.8	0.52	1.1	0.63	17.5
	333.375 13.1250	69.850 2.7500	69.850 2.7500	52.388 2.0625	6.4	6.4	690	1 190	70 000	121 000	**HM743345 / HM743310**	247	227	302	322	6.4	6.4	71.3	0.44	1.4	0.75	21.7
	355.600 14.0000	68.262 2.6875	66.675 2.6250	47.625 1.8750	7.0	3.3	605	1 170	61 500	120 000	**96825 / 96140**	260	236	321	343	7.0	3.3	85.9	0.59	1.0	0.56	26.7

Bore Diameter 212.725 – 228.600 mm

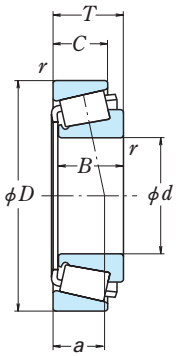

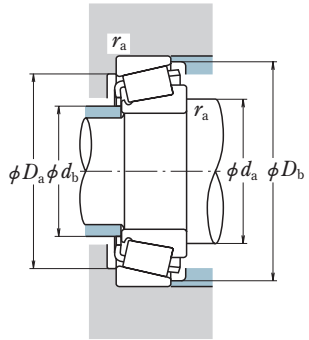

Dynamic Equivalent Load

$P = XF_r + YF_a$

$F_a/F_r \leqq e$		$F_a/F_r > e$	
X	Y	X	Y
1	0	0.4	Y_1

Static Equivalent Load

$P_0 = 0.5F_r + Y_0F_a$

When $F_r > 0.5F_r + Y_0F_a$, use $P_0 = F_r$

The values of e, Y_1, and Y_0 are given in the table below.

Boundary Dimensions (mm/inch)							Basic Load Ratings (kN)		{kgf}		Bearing Numbers	Abutment and Fillet Dimensions (mm)						Eff. Load Centers (mm)	Constant	Axial Load Factors		Mass (kg)
d	D	T	B	C	CONE r min.	CUP r min.	C_r	C_{0r}	C_r	C_{0r}		d_a	d_b	D_a	D_b	CONE r_a max.	CUP r_a max.	a	e	Y_1	Y_0	approx.
212.725 8.3750	285.750 11.2500	46.038 1.8125	46.038 1.8125	34.925 1.3750	3.5	3.3	350	755	35 500	77 000	**LM742745 / LM742710**	237	224	267	280	3.5	3.3	60.4	0.48	1.2	0.69	8.15
215.900 8.5000	285.750 11.2500	46.038 1.8125	46.038 1.8125	34.925 1.3750	3.5	3.3	350	755	35 500	77 000	**LM742749 / LM742710**	239	225	267	280	3.5	3.3	60.4	0.48	1.2	0.69	7.77
	290.010 11.4177	31.750 1.2500	31.750 1.2500	22.225 0.8750	3.5	3.3	225	455	22 900	46 500	**543085 / 543114**	237	228	271	279	3.5	3.3	45.3	0.39	1.5	0.85	5.49
	355.600 14.0000	69.850 2.7500	69.850 2.7500	49.212 1.9375	6.8	1.5	695	1 230	71 000	126 000	**EE130851 / 131400**	258	240	329	340	6.8	1.5	59.8	0.33	1.8	0.99	25.4
219.969 8.6602	290.010 11.4177	31.750 1.2500	31.750 1.2500	22.225 0.8750	3.5	3.3	225	455	22 900	46 500	**543086 / 543114**	239	231	271	279	3.5	3.3	45.3	0.39	1.5	0.85	5.14
220.662 8.6875	314.325 12.3750	61.912 2.4375	61.912 2.4375	49.212 1.9375	6.4	3.3	595	1 190	61 000	122 000	**M244249 / M244210**	250	233	292	305	6.4	3.3	57.0	0.33	1.8	0.99	14.9
225.425 8.8750	355.600 14.0000	69.850 2.7500	69.850 2.7500	49.212 1.9375	6.8	1.5	695	1 230	71 000	126 000	**EE130889 / 131400**	263	245	329	340	6.8	1.5	59.8	0.33	1.8	0.99	23.6
	400.050 15.7500	88.900 3.5000	87.312 3.4375	63.500 2.5000	1.5	3.3	945	1 510	96 500	154 000	**EE430888 / 431575**	266	246	359	379	1.5	3.3	82.0	0.44	1.4	0.75	42.6
228.397 8.9920	431.800 17.0000	92.075 3.6250	85.725 3.3750	49.212 1.9375	6.4	6.4	885	1 320	90 000	134 000	**EE113089 / 113170**	287	256	378	410	6.4	6.4	132.5	0.88	0.68	0.38	49
228.460 8.9945	431.800 17.0000	92.075 3.6250	85.725 3.3750	49.212 1.9375	6.4	6.4	885	1 320	90 000	134 000	**EE113091 / 113170**	287	256	378	410	6.4	6.4	132.5	0.88	0.68	0.38	49
228.600 9.0000	295.275 11.6250	33.338 1.3125	31.750 1.2500	23.812 0.9375	3.5	3.3	224	460	22 900	47 000	**544090 / 544116**	250	240	279	288	3.5	3.3	49.6	0.40	1.5	0.82	5.25
	300.038 11.8125	33.338 1.3125	31.750 1.2500	23.812 0.9375	3.5	3.3	224	460	22 900	47 000	**544090 / 544118**	250	240	282	291	3.5	3.3	49.6	0.40	1.5	0.82	5.66
	320.675 12.6250	50.800 2.0000	49.212 1.9375	33.338 1.3125	6.4	3.3	445	840	45 500	85 500	**88900 / 88126**	260	242	300	312	6.4	3.3	65.4	0.48	1.2	0.68	11.6
	327.025 12.8750	52.388 2.0625	49.212 1.9375	34.925 1.3750	6.4	3.3	445	840	45 500	85 500	**88900 / 88128**	260	242	302	315	6.4	3.3	67.0	0.48	1.2	0.68	12.7
	327.025 12.8750	52.388 2.0625	52.388 2.0625	36.512 1.4375	6.4	3.3	470	940	48 000	96 000	**8573 / 8520**	261	244	304	317	6.4	3.3	59.6	0.41	1.5	0.81	13.3
	355.600 14.0000	68.262 2.6875	66.675 2.6250	47.625 1.8750	7.0	3.3	605	1 170	61 500	120 000	**96900 / 96140**	270	246	321	343	7.0	3.3	85.9	0.59	1.0	0.56	23.3

Bore Diameter 228.600 – 234.950 mm

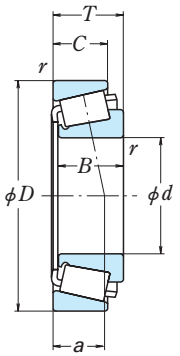

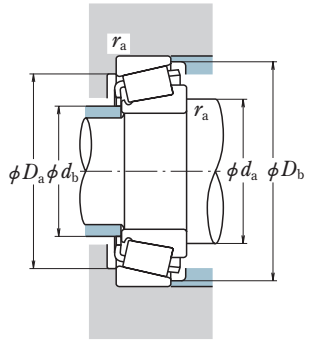

Dynamic Equivalent Load

$P = XF_r + YF_a$

$F_a/F_r \leqq e$		$F_a/F_r > e$	
X	Y	X	Y
1	0	0.4	Y_1

Static Equivalent Load

$P_0 = 0.5F_r + Y_0F_a$

When $F_r > 0.5F_r + Y_0F_a$, use $P_0 = F_r$

The values of e, Y_1, and Y_0 are given in the table below.

Boundary Dimensions (mm/inch)							Basic Load Ratings (kN)		{kgf}		Bearing Numbers	Abutment and Fillet Dimensions (mm)						Eff. Load Centers (mm)	Constant	Axial Load Factors		Mass (kg)
d	D	T	B	C	CONE r min.	CUP r min.	C_r	C_{0r}	C_r	C_{0r}		d_a	d_b	D_a	D_b	CONE r_a max.	CUP r_a max.	a	e	Y_1	Y_0	approx.
228.600 9.0000	355.600 14.0000	69.850 2.7500	69.850 2.7500	49.212 1.9375	6.8	1.5	695	1 230	71 000	126 000	**EE130902 / 131400**	265	246	329	340	6.8	1.5	59.8	0.33	1.8	0.99	23
	355.600 14.0000	69.850 2.7500	69.850 2.7500	50.800 2.0000	6.4	6.4	765	1 300	78 000	132 000	**HM746646 / HM746610**	266	244	324	345	6.4	6.4	75.6	0.47	1.3	0.70	23.1
	400.050 15.7500	88.900 3.5000	87.312 3.4375	63.500 2.5000	10.4	3.3	945	1 510	96 500	154 000	**EE430900 / 431575**	277	248	359	379	10.4	3.3	82.0	0.44	1.4	0.75	41.7
	400.050 15.7500	88.900 3.5000	87.312 3.4375	63.500 2.5000	19.8	3.3	945	1 510	96 500	154 000	**EE430902 / 431575**	286	248	359	379	19.8	3.3	82.0	0.44	1.4	0.75	41.3
	425.450 16.7500	101.600 4.0000	95.250 3.7500	76.200 3.0000	7.0	6.4	1 280	2 000	131 000	204 000	**EE700091 / 700167**	281	257	384	406	7.0	6.4	80.8	0.33	1.8	0.99	57
	488.950 19.2500	123.825 4.8750	111.125 4.3750	73.025 2.8750	6.4	6.4	1 600	2 500	163 000	254 000	**HH949549 / HH949510**	307	264	420	470	6.4	6.4	166.5	0.94	0.64	0.35	103
	508.000 20.0000	117.475 4.6250	95.250 3.7500	73.025 2.8750	6.4	6.4	1 240	1 780	127 000	181 000	**EE390090 / 390200**	305	266	429	479	6.4	6.4	168.3	0.94	0.64	0.35	96.5
231.775 9.1250	295.275 11.6250	33.338 1.3125	31.750 1.2500	23.812 0.9375	3.5	3.3	224	460	22 900	47 000	**544091 / 544116**	251	241	279	288	3.5	3.3	49.6	0.40	1.5	0.82	4.96
	300.038 11.8125	33.338 1.3125	31.750 1.2500	23.812 0.9375	3.5	3.3	224	460	22 900	47 000	**544091 / 544118**	251	241	282	291	3.5	3.3	49.6	0.40	1.5	0.82	5.38
	336.550 13.2500	65.088 2.5625	65.088 2.5625	50.800 2.0000	6.4	3.3	640	1 270	65 000	129 000	**M246942 / M246910**	265	247	313	326	6.4	3.3	60.1	0.33	1.8	0.99	18.4
	358.775 14.1250	71.438 2.8125	71.438 2.8125	53.975 2.1250	6.4	3.3	760	1 540	77 500	157 000	**M249734 / M249710**	276	256	335	348	6.4	3.3	64.6	0.33	1.8	0.99	26.2
234.950 9.2500	314.325 12.3750	49.212 1.9375	49.212 1.9375	36.512 1.4375	3.5	3.3	455	955	46 500	97 000	**LM545849 / LM545810**	260	247	296	309	3.5	3.3	57.4	0.40	1.5	0.83	10.4
	320.675 12.6250	50.800 2.0000	49.212 1.9375	33.338 1.3125	6.4	3.3	445	840	45 500	85 500	**88925 / 88126**	263	246	300	312	6.4	3.3	65.4	0.48	1.2	0.68	10.7
	327.025 12.8750	52.388 2.0625	49.212 1.9375	34.925 1.3750	6.4	3.3	445	840	45 500	85 500	**88925 / 88128**	263	246	302	315	6.4	3.3	67.0	0.48	1.2	0.68	11.8
	327.025 12.8750	52.388 2.0625	52.388 2.0625	36.512 1.4375	6.4	3.3	470	940	48 000	96 000	**8575 / 8520**	264	248	304	317	6.4	3.3	59.6	0.41	1.5	0.81	12.4
	355.600 14.0000	68.262 2.6875	66.675 2.6250	47.625 1.8750	7.0	3.3	605	1 170	61 500	120 000	**96925 / 96140**	273	249	321	343	7.0	3.3	85.9	0.59	1.0	0.56	22.1

Bore Diameter 234.950 – 244.475 mm

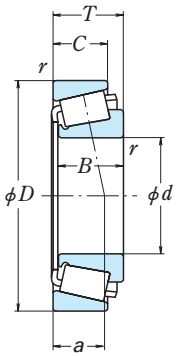

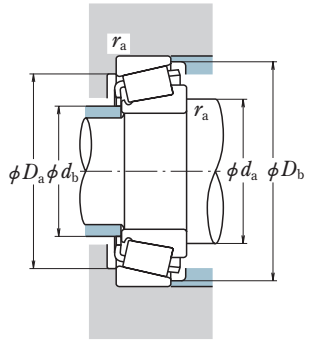

Dynamic Equivalent Load

$P = XF_r + YF_a$

$F_a/F_r \leqq e$		$F_a/F_r > e$	
X	Y	X	Y
1	0	0.4	Y_1

Static Equivalent Load

$P_0 = 0.5F_r + Y_0F_a$

When $F_r > 0.5F_r + Y_0F_a$, use $P_0 = F_r$

The values of e, Y_1, and Y_0 are given in the table below.

Boundary Dimensions (mm/inch)							Basic Load Ratings (kN)		{kgf}		Bearing Numbers	Abutment and Fillet Dimensions (mm)						Eff. Load Centers (mm)	Constant	Axial Load Factors		Mass (kg)
d	D	T	B	C	CONE r min.	CUP r min.	C_r	C_{0r}	C_r	C_{0r}		d_a	d_b	D_a	D_b	CONE r_a max.	CUP r_a max.	a	e	Y_1	Y_0	approx.
234.950 9.2500	384.175 15.1250	112.712 4.4375	112.712 4.4375	90.488 3.5625	6.4	6.4	1 220	2 220	124 000	227 000	**H247549 / H247510**	276	251	344	369	6.4	6.4	84.2	0.33	1.8	0.99	48.2
237.330 9.3437	336.550 13.2500	65.088 2.5625	65.088 2.5625	50.800 2.0000	6.4	3.3	640	1 270	65 000	129 000	**M246949 / M246910**	268	250	313	326	6.4	3.3	60.1	0.33	1.8	0.99	17.3
	358.775 14.1250	71.438 2.8125	71.438 2.8125	53.975 2.1250	6.4	3.3	760	1 540	77 500	157 000	**M249736 / M249710**	279	259	335	348	6.4	3.3	64.6	0.33	1.8	0.99	25
241.122 9.4930	368.300 14.5000	68.262 2.6875	68.262 2.6875	53.975 2.1250	6.4	3.3	685	1 210	69 500	124 000	**EE125094 / 125145**	277	258	339	354	6.4	3.3	65.3	0.34	1.7	0.96	24.1
241.300 9.5000	327.025 12.8750	52.388 2.0625	52.388 2.0625	36.512 1.4375	6.4	3.3	470	940	48 000	96 000	**8578 / 8520**	267	250	304	317	6.4	3.3	59.6	0.41	1.5	0.81	11.4
	349.148 13.7460	57.150 2.2500	57.150 2.2500	44.450 1.7500	6.4	3.3	570	1 060	58 500	108 000	**EE127095 / 127135**	274	257	325	338	6.4	3.3	59.5	0.35	1.7	0.93	16.8
	355.600 14.0000	50.800 2.0000	50.800 2.0000	33.338 1.3125	6.4	3.3	460	815	47 000	83 500	**EE170950 / 171400**	275	260	331	341	6.4	3.3	56.0	0.36	1.7	0.91	15.2
	355.600 14.0000	57.150 2.2500	57.150 2.2500	44.450 1.7500	6.4	3.3	570	1 060	58 500	108 000	**EE127095 / 127140**	274	257	328	341	6.4	3.3	59.5	0.35	1.7	0.93	18
	368.300 14.5000	50.800 2.0000	50.800 2.0000	33.338 1.3125	6.4	3.3	460	815	47 000	83 500	**EE170950 / 171450**	275	260	338	348	6.4	3.3	56.0	0.36	1.7	0.91	17.1
	368.300 14.5000	68.262 2.6875	68.262 2.6875	53.975 2.1250	6.4	3.3	685	1 210	69 500	124 000	**EE125095 / 125145**	278	258	339	354	6.4	3.3	65.3	0.34	1.7	0.96	24.1
	393.700 15.5000	73.817 2.9062	69.850 2.7500	50.005 1.9687	6.4	6.4	700	1 280	71 500	131 000	**EE275095 / 275155**	293	274	364	382	6.4	6.4	76.1	0.40	1.5	0.82	32.3
	406.400 16.0000	69.850 2.7500	69.850 2.7500	46.038 1.8125	6.4	6.4	700	1 280	71 500	131 000	**EE275095 / 275160**	293	274	371	389	6.4	6.4	72.1	0.40	1.5	0.82	34.3
	444.500 17.5000	101.600 4.0000	100.012 3.9375	76.200 3.0000	6.4	4.8	1 410	2 240	143 000	228 000	**EE923095 / 923175**	295	273	403	423	6.4	4.8	84.4	0.34	1.8	0.98	65.4
	488.950 19.2500	120.650 4.7500	120.650 4.7500	92.075 3.6250	6.4	6.4	1 720	2 860	175 000	291 000	**EE295950 / 295193**	315	288	445	469	6.4	6.4	92.8	0.31	1.9	1.1	101
	508.000 20.0000	117.475 4.6250	95.250 3.7500	73.025 2.8750	6.4	6.4	1 240	1 780	127 000	181 000	**EE390095 / 390200**	312	272	429	479	6.4	6.4	168.3	0.94	0.64	0.35	93
244.475 9.6250	381.000 15.0000	79.375 3.1250	76.200 3.0000	57.150 2.2500	6.4	4.8	820	1 540	84 000	157 000	**EE126097 / 126150**	286	261	344	367	6.4	4.8	87.5	0.52	1.2	0.64	30.7

Bore Diameter 247.650 – 254.000 mm

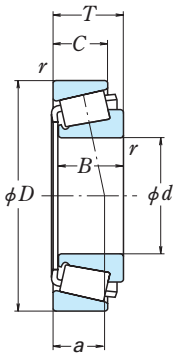

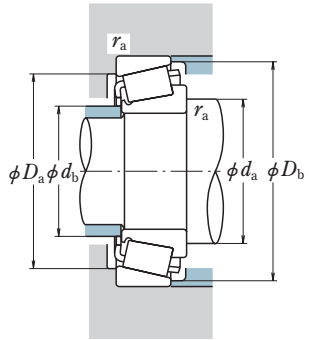

Dynamic Equivalent Load

$P = XF_r + YF_a$

$F_a/F_r \leqq e$		$F_a/F_r > e$	
X	Y	X	Y
1	0	0.4	Y_1

Static Equivalent Load

$P_0 = 0.5F_r + Y_0F_a$

When $F_r > 0.5F_r + Y_0F_a$, use $P_0 = F_r$

The values of e, Y_1, and Y_0 are given in the table below.

Boundary Dimensions (mm/inch)							Basic Load Ratings (kN)		{kgf}	
d	D	T	B	C	CONE r min.	CUP r min.	C_r	C_{0r}	C_r	C_{0r}
247.650 9.7500	355.600 14.0000	50.800 2.0000	50.800 2.0000	33.338 1.3125	6.4	3.3	460	815	47 000	83 500
	368.300 14.5000	50.800 2.0000	50.800 2.0000	33.338 1.3125	6.4	3.3	460	815	47 000	83 500
	406.400 16.0000	115.888 4.5625	117.475 4.6250	93.662 3.6875	6.4	6.4	1 610	3 100	164 000	320 000
254.000 10.0000	317.500 12.5000	22.225 0.8750	22.225 0.8750	15.875 0.6250	1.5	1.5	153	380	15 600	38 500
	323.850 12.7500	22.225 0.8750	22.225 0.8750	15.875 0.6250	1.5	1.5	153	380	15 600	38 500
	358.775 14.1250	71.438 2.8125	71.438 2.8125	53.975 2.1250	3.5	3.3	760	1 540	77 500	157 000
	365.125 14.3750	58.738 2.3125	58.738 2.3125	42.862 1.6875	6.4	6.4	580	1 100	59 000	112 000
	368.300 14.5000	58.738 2.3125	58.738 2.3125	42.862 1.6875	6.4	6.4	580	1 100	59 000	112 000
	393.700 15.5000	73.817 2.9062	69.850 2.7500	50.005 1.9687	6.4	6.4	700	1 280	71 500	131 000
	400.050 15.7500	57.150 2.2500	55.562 2.1875	41.275 1.6250	3.3	1.5	635	1 050	65 000	107 000
	406.400 16.0000	69.850 2.7500	69.850 2.7500	46.038 1.8125	6.4	6.4	700	1 280	71 500	131 000
	422.275 16.6250	86.121 3.3906	79.771 3.1406	66.675 2.6250	6.8	3.3	1 140	1 850	116 000	188 000
	431.724 16.9970	82.550 3.2500	79.771 3.1406	60.325 2.3750	6.8	3.5	1 140	1 850	116 000	188 000
	444.500 17.5000	76.200 3.0000	73.025 2.8750	50.800 2.0000	6.4	6.4	995	1 500	101 000	153 000
	495.300 19.5000	76.200 3.0000	74.612 2.9375	53.975 2.1250	6.4	3.3	1 080	1 790	110 000	182 000
	533.400 21.0000	133.350 5.2500	120.650 4.7500	77.788 3.0625	6.4	6.4	1 840	2 770	188 000	283 000

Bearing Numbers	Abutment and Fillet Dimensions (mm)						Eff. Load Centers (mm)	Constant	Axial Load Factors		Mass (kg)
	d_a	d_b	D_a	D_b	CONE r_a max.	CUP r_a max.	a	e	Y_1	Y_0	approx.
EE170975 / 171400	278	263	331	341	6.4	3.3	56.0	0.36	1.7	0.91	14.2
EE170975 / 171450	278	263	338	348	6.4	3.3	56.0	0.36	1.7	0.91	16.1
HH249949-N2 / HH249910	293	266	366	392	6.4	6.4	87.4	0.33	1.8	0.99	58.2
29875 / 29819	276	271	307	311	1.5	1.5	43.4	0.35	1.7	0.95	4.18
29875 / 29820	276	271	310	315	1.5	1.5	43.4	0.35	1.7	0.95	4.57
M249749 / M249710	284	267	335	348	3.5	3.3	64.6	0.33	1.8	0.99	21.5
EE134100 / 134143	289	272	339	354	6.4	6.4	64.2	0.37	1.6	0.88	18.4
EE134100 / 134145	289	272	340	356	6.4	6.4	64.2	0.37	1.6	0.88	19.1
EE275100 / 275155	299	280	364	382	6.4	6.4	76.1	0.40	1.5	0.82	29.6
EE251001 / 251575	291	276	372	381	3.3	1.5	61.2	0.33	1.8	1.0	24.3
EE275100 / 275160	299	280	371	389	6.4	6.4	72.1	0.40	1.5	0.82	31.6
HM252343 / HM252310	301	278	392	408	6.8	3.3	77.6	0.33	1.8	0.99	43.2
HM252343 / HM252315	301	278	397	413	6.8	3.5	74.1	0.33	1.8	0.99	44.9
EE822100 / 822175	302	281	405	421	6.4	6.4	71.1	0.34	1.8	0.97	42.7
EE941002 / 941950	327	304	455	471	6.4	3.3	85.1	0.40	1.5	0.83	64
HH953749 / HH953710	332	285	457	511	6.4	6.4	177.9	0.94	0.64	0.35	127

Bore Diameter 257.175 – 266.700 mm

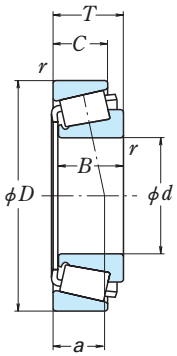

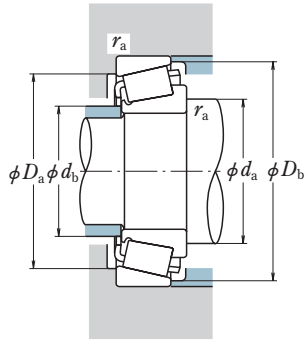

Dynamic Equivalent Load

$P = XF_r + YF_a$

$F_a/F_r \leqq e$		$F_a/F_r > e$	
X	Y	X	Y
1	0	0.4	Y_1

Static Equivalent Load

$P_0 = 0.5F_r + Y_0F_a$

When $F_r > 0.5F_r + Y_0F_a$, use $P_0 = F_r$

The values of e, Y_1, and Y_0 are given in the table below.

Boundary Dimensions (mm/inch)							Basic Load Ratings (kN)		{kgf}		Bearing Numbers	Abutment and Fillet Dimensions (mm)						Eff. Load Centers (mm)	Constant	Axial Load Factors		Mass (kg)
d	D	T	B	C	CONE r min.	CUP r min.	C_r	C_{0r}	C_r	C_{0r}		d_a	d_b	D_a	D_b	CONE r_a max.	CUP r_a max.	a	e	Y_1	Y_0	approx.
257.175 10.1250	342.900 13.5000	57.150 2.2500	57.150 2.2500	44.450 1.7500	6.4	3.3	560	1 190	57 500	121 000	**M349549 / M349510**	285	269	323	336	6.4	3.3	59.6	0.35	1.7	0.94	14.1
260.350 10.2500	365.125 14.3750	58.738 2.3125	58.738 2.3125	42.862 1.6875	6.4	6.4	580	1 100	59 000	112 000	**EE134102 / 134143**	293	275	339	354	6.4	6.4	64.2	0.37	1.6	0.88	17.3
	368.300 14.5000	58.738 2.3125	58.738 2.3125	42.862 1.6875	6.4	6.4	580	1 100	59 000	112 000	**EE134102 / 134145**	293	275	340	356	6.4	6.4	64.2	0.37	1.6	0.88	17.9
	400.050 15.7500	69.850 2.7500	67.470 2.6563	46.038 1.8125	9.7	6.4	735	1 220	75 000	124 000	**EE221026 / 221575**	300	278	366	383	9.7	6.4	71.4	0.39	1.5	0.84	26.7
	406.400 16.0000	69.850 2.7500	67.673 2.6643	53.975 2.1250	3.3	3.3	750	1 430	76 500	146 000	**EE128102 / 128160**	302	285	376	391	3.3	3.3	73.5	0.39	1.6	0.86	31.8
	419.100 16.5000	85.725 3.3750	84.138 3.3125	61.912 2.4375	6.4	3.3	960	1 820	98 000	186 000	**EE435102 / 435165**	310	281	378	405	6.4	3.3	106.0	0.61	0.99	0.54	42.9
	422.275 16.6250	86.121 3.3906	79.771 3.1406	66.675 2.6250	6.8	3.3	1 140	1 850	116 000	188 000	**HM252349 / HM252310**	304	282	392	408	6.8	3.3	77.6	0.33	1.8	0.99	41.6
	422.275 16.6250	86.124 3.3907	79.711 3.1382	66.675 2.6250	6.8	3.3	975	1 590	99 000	162 000	**EE551026 / 551662**	302	281	387	404	6.8	3.3	77.3	0.33	1.8	0.99	41
	431.724 16.9970	82.550 3.2500	79.771 3.1406	60.325 2.3750	6.8	3.5	1 140	1 850	116 000	188 000	**HM252349 / HM252315**	304	282	397	413	6.8	3.5	74.1	0.33	1.8	0.99	43.3
	488.950 19.2500	120.650 4.7500	120.650 4.7500	92.075 3.6250	6.4	6.4	1 720	2 860	175 000	291 000	**EE295102 / 295193**	325	297	445	469	6.4	6.4	92.8	0.31	1.9	1.1	93.8
263.525 10.3750	325.438 12.8125	28.575 1.1250	28.575 1.1250	25.400 1.0000	1.5	1.5	228	555	23 300	56 500	**38880 / 38820**	281	274	312	318	1.5	1.5	46.6	0.35	1.7	0.95	5.3
	355.600 14.0000	57.150 2.2500	57.150 2.2500	44.450 1.7500	3.5	3.3	615	1 260	63 000	128 000	**LM451345 / LM451310**	290	276	335	348	3.5	3.3	62.4	0.36	1.6	0.90	15.3
266.700 10.5000	323.850 12.7500	22.225 0.8750	22.225 0.8750	15.875 0.6250	1.5	1.5	153	380	15 600	38 500	**29880 / 29820**	282	277	310	315	1.5	1.5	43.4	0.35	1.7	0.95	3.67
	325.438 12.8125	28.575 1.1250	28.575 1.1250	25.400 1.0000	1.5	1.5	228	555	23 300	56 500	**38885 / 38820**	283	276	312	318	1.5	1.5	46.6	0.35	1.7	0.95	5.0
	355.600 14.0000	57.150 2.2500	57.150 2.2500	44.450 1.7500	3.5	3.3	615	1 260	63 000	128 000	**LM451349 / LM451310**	292	277	335	348	3.5	3.3	62.4	0.36	1.6	0.90	14.7
	393.700 15.5000	73.817 2.9062	69.850 2.7500	50.005 1.9687	6.4	6.4	700	1 280	71 500	131 000	**EE275105 / 275155**	306	286	364	382	6.4	6.4	76.1	0.40	1.5	0.82	26.7

Bore Diameter 266.700 – 288.925 mm

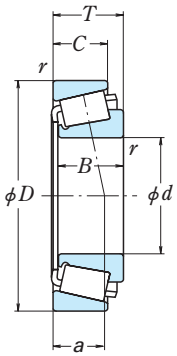

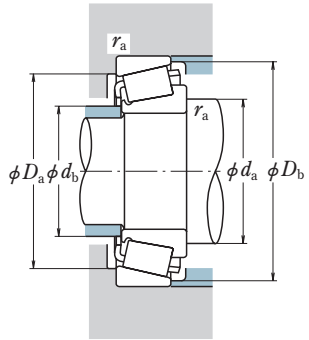

Dynamic Equivalent Load

$P = XF_r + YF_a$

$F_a/F_r \leqq e$		$F_a/F_r > e$	
X	Y	X	Y
1	0	0.4	Y_1

Static Equivalent Load

$P_0 = 0.5F_r + Y_0F_a$

When $F_r > 0.5F_r + Y_0F_a$, use $P_0 = F_r$

The values of e, Y_1, and Y_0 are given in the table below.

Boundary Dimensions (mm/inch)							Basic Load Ratings (kN)		{kgf}		Bearing Numbers	Abutment and Fillet Dimensions (mm)						Eff. Load Centers (mm)	Constant	Axial Load Factors		Mass (kg)
d	D	T	B	C	CONE r min.	CUP r min.	C_r	C_{0r}	C_r	C_{0r}		d_a	d_b	D_a	D_b	CONE r_a max.	CUP r_a max.	a	e	Y_1	Y_0	approx.
266.700 10.5000	406.400 16.0000	69.850 2.7500	69.850 2.7500	46.038 1.8125	6.4	6.4	700	1 280	71 500	131 000	**EE275105 / 275160**	306	286	371	389	6.4	6.4	72.1	0.40	1.5	0.82	28.8
	422.275 16.6250	86.124 3.3907	79.771 3.1406	66.675 2.6250	6.8	3.3	975	1 590	99 000	162 000	**EE551050 / 551662**	306	284	387	404	6.8	3.3	77.3	0.33	1.8	0.99	39.4
	444.500 17.5000	120.650 4.7500	117.475 4.6250	88.900 3.5000	6.4	6.4	1 610	3 050	164 000	310 000	**H852849 / H852810**	320	282	392	431	6.4	6.4	119.9	0.58	1.0	0.57	72
269.875 10.6250	381.000 15.0000	74.612 2.9375	74.612 2.9375	57.150 2.2500	6.4	3.3	790	1 590	80 500	162 000	**M252349 / M252310**	304	285	356	370	6.4	3.3	68.8	0.33	1.8	0.99	24.8
273.050 10.7500	393.700 15.5000	73.817 2.9062	69.850 2.7500	50.005 1.9687	6.4	6.4	700	1 280	71 500	131 000	**EE275108 / 275155**	309	290	364	382	6.4	6.4	76.1	0.40	1.5	0.82	25.2
	406.400 16.0000	69.850 2.7500	69.850 2.7500	46.038 1.8125	6.4	6.4	700	1 280	71 500	131 000	**EE275108 / 275160**	309	290	371	389	6.4	6.4	72.1	0.40	1.5	0.82	27.3
276.225 10.8750	352.425 13.8750	36.512 1.4375	34.925 1.3750	23.812 0.9375	3.5	3.3	320	665	32 500	68 000	**L853049 / L853010**	300	288	333	344	3.5	3.3	72.0	0.54	1.1	0.62	7.85
279.400 11.0000	469.900 18.5000	95.250 3.7500	93.662 3.6875	69.850 2.7500	9.7	3.3	1 180	2 060	120 000	210 000	**EE722110 / 722185**	336	308	431	451	9.7	3.3	87.2	0.38	1.6	0.87	60.9
	488.950 19.2500	120.650 4.7500	120.650 4.7500	92.075 3.6250	1.3	6.4	1 720	2 860	175 000	291 000	**EE295110 / 295193**	329	307	445	469	1.3	6.4	92.8	0.31	1.9	1.1	86.2
280.192 11.0312	406.400 16.0000	52.388 2.0625	50.211 1.9768	34.925 1.3750	6.8	3.3	520	870	53 000	89 000	**EE101103 / 101600**	315	299	380	391	6.8	3.3	68.1	0.41	1.5	0.81	18.9
	406.400 16.0000	69.850 2.7500	67.673 2.6643	53.975 2.1250	6.8	3.3	750	1 430	76 500	146 000	**EE128111 / 128160**	316	295	376	391	6.8	3.3	73.5	0.39	1.6	0.86	27.2
	409.981 16.1410	69.850 2.7500	67.673 2.6643	53.975 2.1250	6.8	3.3	750	1 430	76 500	146 000	**EE128111 / 128161**	316	295	377	393	6.8	3.3	73.5	0.39	1.6	0.86	28.2
285.750 11.2500	358.775 14.1250	33.338 1.3125	31.750 1.2500	22.225 0.8750	3.5	3.3	252	575	25 700	58 500	**545112 / 545141**	307	298	339	348	3.5	3.3	66.3	0.49	1.2	0.67	7.09
	380.898 14.9960	65.088 2.5625	65.088 2.5625	49.212 1.9375	3.5	3.3	615	1 490	63 000	152 000	**LM654649 / LM654610**	316	300	355	371	3.5	3.3	76.1	0.43	1.4	0.77	20
	469.900 18.5000	81.770 3.2193	80.569 3.1720	57.150 2.2500	9.7	3.3	1 100	1 810	112 000	184 000	**EE921124 / 921850**	338	315	438	451	9.7	3.3	69.4	0.29	2.1	1.1	49.4
288.925 11.3750	406.400 16.0000	77.788 3.0625	77.788 3.0625	60.325 2.3750	6.4	3.3	895	1 830	91 000	187 000	**M255449 / M255410**	324	304	380	395	6.4	3.3	72.8	0.34	1.8	0.98	29.8

Bore Diameter 292.100 – 304.800 mm

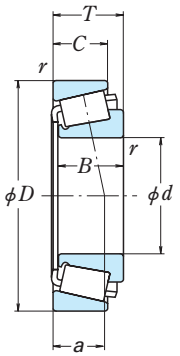

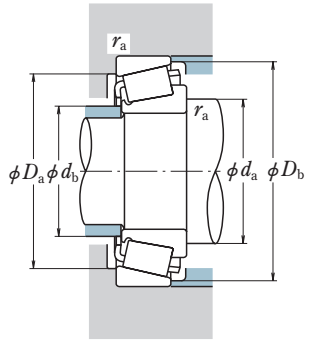

Dynamic Equivalent Load

$P = XF_r + YF_a$

$F_a/F_r \leqq e$		$F_a/F_r > e$	
X	Y	X	Y
1	0	0.4	Y_1

Static Equivalent Load

$P_0 = 0.5F_r + Y_0F_a$

When $F_r > 0.5F_r + Y_0F_a$, use $P_0 = F_r$

The values of e, Y_1, and Y_0 are given in the table below.

Boundary Dimensions (mm/inch)							Basic Load Ratings (kN)		{kgf}		Bearing Numbers	Abutment and Fillet Dimensions (mm)						Eff. Load Centers (mm)	Constant	Axial Load Factors		Mass (kg)
d	D	T	B	C	CONE r min.	CUP r min.	C_r	C_{0r}	C_r	C_{0r}		d_a	d_b	D_a	D_b	CONE r_a max.	CUP r_a max.	a	e	Y_1	Y_0	approx.
292.100 11.5000	374.650 14.7500	47.625 1.8750	47.625 1.8750	34.925 1.3750	3.5	3.3	490	1 060	50 000	108 000	**L555249 / L555210**	316	303	355	366	3.5	3.3	64.5	0.40	1.5	0.82	12.5
	393.700 15.5000	63.500 2.5000	50.800 2.0000	44.450 1.7500	3.5	6.4	545	1 120	55 500	115 000	**84115 / 84155**	323	305	364	383	3.5	6.4	99.8	0.61	0.99	0.54	18.6
	469.900 18.5000	95.250 3.7500	93.662 3.6875	69.850 2.7500	9.7	3.3	1 180	2 060	120 000	210 000	**EE722115 / 722185**	342	315	431	451	9.7	3.3	87.2	0.38	1.6	0.87	56.7
	558.800 22.0000	136.525 5.3750	136.525 5.3750	98.425 3.8750	6.4	6.4	2 480	4 100	253 000	420 000	**EE790114 / 790221**	362	332	506	537	6.4	6.4	113.5	0.39	1.5	0.84	147
298.450 11.7500	431.800 17.0000	69.850 2.7500	58.738 2.3125	53.975 2.1250	6.4	3.3	755	1 400	77 000	142 000	**EE111175 / 111700**	336	316	400	417	6.4	3.3	88.1	0.44	1.4	0.75	29.2
	444.500 17.5000	63.500 2.5000	61.912 2.4375	39.688 1.5625	8.0	3.3	685	1 140	69 500	116 000	**EE291175 / 291749**	339	319	415	427	8.0	3.3	71.8	0.38	1.6	0.87	28.7
	444.500 17.5000	63.500 2.5000	61.912 2.4375	39.688 1.5625	8.0	1.5	685	1 140	69 500	116 000	**EE291175 / 291750**	339	319	417	427	8.0	1.5	71.8	0.38	1.6	0.87	28.7
300.038 11.8125	422.275 16.6250	82.550 3.2500	82.550 3.2500	63.500 2.5000	6.4	3.3	990	2 050	101 000	209 000	**HM256849 / HM256810**	337	317	395	411	6.4	3.3	76.7	0.34	1.8	0.98	34.2
304.800 12.0000	393.700 15.5000	50.800 2.0000	50.800 2.0000	38.100 1.5000	6.4	3.3	530	1 140	54 000	116 000	**L357049 / L357010**	334	318	374	385	6.4	3.3	63.7	0.36	1.7	0.92	14.5
	406.400 16.0000	63.500 2.5000	63.500 2.5000	47.625 1.8750	6.4	3.3	690	1 490	70 500	152 000	**LM757049 / LM757010**	337	317	380	396	6.4	3.3	79.4	0.44	1.4	0.75	21.4
	444.500 17.5000	63.500 2.5000	61.912 2.4375	39.688 1.5625	8.0	3.3	685	1 140	69 500	116 000	**EE291201 / 291749**	342	323	415	427	8.0	3.3	71.8	0.38	1.6	0.87	27.3
	444.500 17.5000	63.500 2.5000	61.912 2.4375	39.688 1.5625	8.0	1.5	685	1 140	69 500	116 000	**EE291201 / 291750**	342	323	417	427	8.0	1.5	71.8	0.38	1.6	0.87	27.3
	495.300 19.5000	76.200 3.0000	74.612 2.9375	53.975 2.1250	6.4	3.3	1 080	1 790	110 000	182 000	**EE941205 / 941950**	352	329	455	471	6.4	3.3	85.1	0.40	1.5	0.83	51
	495.300 19.5000	95.250 3.7500	92.075 3.6250	69.850 2.7500	16.0	6.4	1 240	2 150	127 000	220 000	**EE724120 / 724195**	364	329	451	474	16.0	6.4	93.9	0.40	1.5	0.82	63.3
	499.948 19.6830	101.600 4.0000	79.375 3.1250	53.975 2.1250	6.4	6.4	1 190	2 030	121 000	207 000	**M959442 / M959410**	367	327	444	487	6.4	6.4	203.0	1.2	0.51	0.28	67.6
	558.800 22.0000	136.525 5.3750	136.525 5.3750	98.425 3.8750	1.3	6.4	2 480	4 100	253 000	420 000	**EE790120 / 790221**	364	338	506	537	1.3	6.4	113.5	0.39	1.5	0.84	141

Bore Diameter 314.325 – 342.900 mm

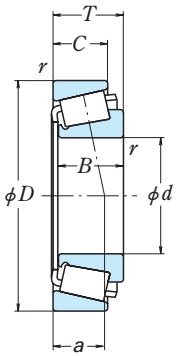

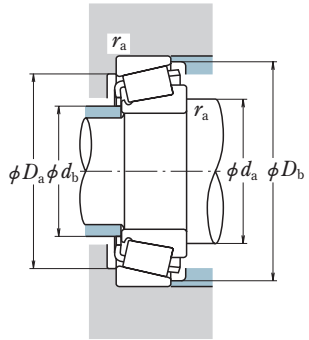

Dynamic Equivalent Load

$P = XF_r + YF_a$

$F_a/F_r \leqq e$		$F_a/F_r > e$	
X	Y	X	Y
1	0	0.4	Y_1

Static Equivalent Load

$P_0 = 0.5F_r + Y_0F_a$

When $F_r > 0.5F_r + Y_0F_a$, use $P_0 = F_r$

The values of e, Y_1, and Y_0 are given in the table below.

Boundary Dimensions (mm/inch)							Basic Load Ratings (kN)		{kgf}	
d	D	T	B	C	CONE r min.	CUP r min.	C_r	C_{0r}	C_r	C_{0r}
314.325 12.3750	495.300 19.5000	120.650 4.7500	119.062 4.6875	88.900 3.5000	6.4	6.4	1 710	3 300	174 000	340 000
317.500 12.5000	444.500 17.5000	63.500 2.5000	61.912 2.4375	39.688 1.5625	8.0	1.5	685	1 140	69 500	116 000
	444.500 17.5000	63.500 2.5000	61.912 2.4375	39.688 1.5625	8.0	3.3	685	1 140	69 500	116 000
	447.675 17.6250	85.725 3.3750	85.725 3.3750	68.262 2.6875	3.5	3.3	1 120	2 350	114 000	239 000
	622.300 24.5000	147.638 5.8125	131.762 5.1875	82.550 3.2500	14.3	12.7	2 270	3 800	231 000	385 000
329.870 12.9870	533.400 21.0000	76.200 3.0000	76.200 3.0000	50.800 2.0000	4.7	3.3	1 060	1 800	108 000	184 000
330.200 13.0000	415.925 16.3750	47.625 1.8750	47.625 1.8750	34.925 1.3750	12.7	3.3	505	1 150	51 500	117 000
	415.925 16.3750	47.625 1.8750	47.625 1.8750	34.925 1.3750	3.5	3.3	505	1 150	51 500	117 000
	469.900 18.5000	60.325 2.3750	55.562 2.1875	38.100 1.5000	7.0	6.4	710	1 420	72 000	145 000
	482.600 19.0000	60.325 2.3750	55.562 2.1875	38.100 1.5000	7.0	6.4	710	1 420	72 000	145 000
	482.600 19.0000	66.675 2.6250	63.500 2.5000	44.450 1.7500	6.8	6.8	810	1 560	82 500	159 000
	482.600 19.0000	85.725 3.3750	80.167 3.1562	60.325 2.3750	6.4	3.3	995	1 830	101 000	187 000
	482.600 19.0000	85.725 3.3750	80.167 3.1562	60.325 2.3750	3.3	3.3	995	1 830	101 000	187 000
	488.950 19.2500	60.325 2.3750	55.562 2.1875	38.100 1.5000	7.0	6.4	710	1 420	72 000	145 000
342.900 13.5000	450.850 17.7500	66.675 2.6250	66.675 2.6250	52.388 2.0625	8.5	3.5	805	1 840	82 500	188 000
	533.400 21.0000	76.200 3.0000	76.200 3.0000	50.800 2.0000	4.8	3.3	1 060	1 800	108 000	184 000

Bearing Numbers	Abutment and Fillet Dimensions (mm)						Eff. Load Centers (mm)	Constant	Axial Load Factors		Mass (kg)
	d_a	d_b	D_a	D_b	CONE r_a max.	CUP r_a max.	a	e	Y_1	Y_0	approx.
H859049 / H859010	368	335	446	484	6.4	6.4	125.3	0.55	1.1	0.60	83.8
EE291250 / 291750	349	329	417	427	8.0	1.5	71.8	0.38	1.6	0.87	24.3
EE291250 / 291749	349	329	415	427	8.0	3.3	71.8	0.38	1.6	0.87	24.2
HM259049 / HM259010	353	333	418	435	3.5	3.3	80.1	0.33	1.8	0.99	40.4
H961649 / H961610	414	358	535	597	14.3	12.7	206.4	0.94	0.64	0.35	184
EE971298 / 972100	383	364	497	510	4.7	3.3	78.4	0.33	1.8	0.99	58.5
L860048 / L860010	365	342	394	408	12.7	3.3	83.0	0.50	1.2	0.66	14.3
L860049 / L860010	356	342	394	408	3.5	3.3	83.0	0.50	1.2	0.66	14.6
EE161300 / 161850	377	358	441	459	7.0	6.4	92.7	0.50	1.2	0.66	30.1
EE161300 / 161900	377	358	447	464	7.0	6.4	92.7	0.50	1.2	0.66	32.9
EE203130 / 203190	377	358	450	467	6.8	6.8	84.9	0.42	1.4	0.79	36.4
EE526130 / 526190	370	348	447	465	6.4	3.3	88.9	0.39	1.5	0.85	44.9
EE526132 / 526190	367	348	447	465	3.3	3.3	88.9	0.39	1.5	0.85	45
EE161300 / 161925	377	358	451	468	7.0	6.4	92.7	0.50	1.2	0.66	34.3
LM361649 / LM361610	379	359	426	441	8.5	3.5	75.8	0.35	1.7	0.94	27.2
EE971354 / 972100	390	371	497	510	4.8	3.3	78.4	0.33	1.8	0.99	54.4

Bore Diameter 346.075 – 355.600 mm

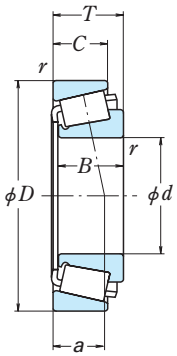

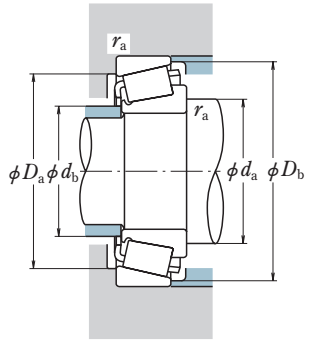

Dynamic Equivalent Load

$P = XF_r + YF_a$

$F_a/F_r \leqq e$		$F_a/F_r > e$	
X	Y	X	Y
1	0	0.4	Y_1

Static Equivalent Load

$P_0 = 0.5F_r + Y_0F_a$

When $F_r > 0.5F_r + Y_0F_a$, use $P_0 = F_r$

The values of e, Y_1, and Y_0 are given in the table below.

Boundary Dimensions (mm/inch)							Basic Load Ratings (kN)		{kgf}		Bearing Numbers	Abutment and Fillet Dimensions (mm)						Eff. Load Centers (mm)	Constant	Axial Load Factors		Mass (kg)
d	D	T	B	C	CONE r min.	CUP r min.	C_r	C_{0r}	C_r	C_{0r}		d_a	d_b	D_a	D_b	CONE r_a max.	CUP r_a max.	a	e	Y_1	Y_0	approx.
346.075 13.6250	469.900 18.5000	60.325 2.3750	55.562 2.1875	38.100 1.5000	7.0	6.4	710	1 420	72 000	145 000	**EE161363 / 161850**	385	366	441	459	7.0	6.4	92.7	0.50	1.2	0.66	26.4
	482.600 19.0000	60.325 2.3750	55.562 2.1875	38.100 1.5000	7.0	6.4	710	1 420	72 000	145 000	**EE161363 / 161900**	385	366	447	464	7.0	6.4	92.7	0.50	1.2	0.66	29.2
	482.600 19.0000	66.675 2.6250	63.500 2.5000	44.450 1.7500	6.8	6.8	810	1 560	82 500	159 000	**EE203136 / 203190**	385	366	450	467	6.8	6.8	84.9	0.42	1.4	0.79	32.2
	482.600 19.0000	66.675 2.6250	63.500 2.5000	44.450 1.7500	12.7	6.8	810	1 560	82 500	159 000	**EE203137 / 203190**	391	366	450	467	12.7	6.8	84.9	0.42	1.4	0.79	32
	488.950 19.2500	60.325 2.3750	55.562 2.1875	38.100 1.5000	7.0	6.4	710	1 420	72 000	145 000	**EE161363 / 161925**	385	366	451	468	7.0	6.4	92.7	0.50	1.2	0.66	30.7
	488.950 19.2500	95.250 3.7500	95.250 3.7500	74.612 2.9375	6.4	3.3	1 250	2 600	127 000	265 000	**HM262749 / HM262710**	386	364	457	475	6.4	3.3	87.8	0.33	1.8	0.99	52.9
349.250 13.7500	501.650 19.7500	90.488 3.5625	84.138 3.3125	69.850 2.7500	6.4	3.3	1 320	2 720	135 000	277 000	**EE333137 / 333197**	394	371	470	488	6.4	3.3	95.0	0.37	1.6	0.90	55.8
354.012 13.9375	469.900 18.5000	60.325 2.3750	55.562 2.1875	38.100 1.5000	7.0	6.4	710	1 420	72 000	145 000	**EE161394 / 161850**	389	370	441	459	7.0	6.4	92.7	0.50	1.2	0.66	24.5
	482.600 19.0000	60.325 2.3750	55.562 2.1875	38.100 1.5000	7.0	6.4	710	1 420	72 000	145 000	**EE161394 / 161900**	389	370	447	464	7.0	6.4	92.7	0.50	1.2	0.66	27.3
	488.950 19.2500	60.325 2.3750	55.562 2.1875	38.100 1.5000	7.0	6.4	710	1 420	72 000	145 000	**EE161394 / 161925**	389	370	451	468	7.0	6.4	92.7	0.50	1.2	0.66	28.8
355.600 14.0000	444.500 17.5000	60.325 2.3750	60.325 2.3750	47.625 1.8750	3.5	3.3	660	1 660	67 500	169 000	**L163149 / L163110**	381	369	423	435	3.5	3.3	67.9	0.31	2.0	1.1	20.6
	469.900 18.5000	60.325 2.3750	55.562 2.1875	38.100 1.5000	7.0	6.4	710	1 420	72 000	145 000	**EE161400 / 161850**	390	370	441	459	7.0	6.4	92.7	0.50	1.2	0.66	24.1
	482.600 19.0000	60.325 2.3750	55.562 2.1875	38.100 1.5000	7.0	6.4	710	1 420	72 000	145 000	**EE161400 / 161900**	390	370	447	464	7.0	6.4	92.7	0.50	1.2	0.66	26.9
	488.950 19.2500	60.325 2.3750	55.562 2.1875	38.100 1.5000	7.0	6.4	710	1 420	72 000	145 000	**EE161400 / 161925**	390	370	451	468	7.0	6.4	92.7	0.50	1.2	0.66	28.4
	501.650 19.7500	74.612 2.9375	66.675 2.6250	50.800 2.0000	6.4	3.3	795	1 640	81 000	167 000	**EE231400 / 231975**	403	382	472	489	6.4	3.3	97.0	0.44	1.4	0.75	40.5
	501.650 19.7500	90.488 3.5625	84.138 3.3125	69.850 2.7500	6.4	3.3	1 320	2 720	135 000	277 000	**EE333140 / 333197**	397	374	470	488	6.4	3.3	95.0	0.37	1.6	0.90	53.5

Bore Diameter 355.600 – 385.762 mm

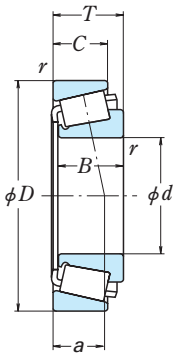

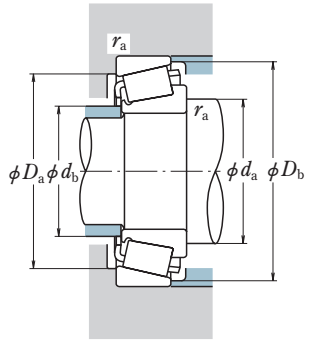

Dynamic Equivalent Load

$P = XF_r + YF_a$

$F_a/F_r \leqq e$		$F_a/F_r > e$	
X	Y	X	Y
1	0	0.4	Y_1

Static Equivalent Load

$P_0 = 0.5F_r + Y_0F_a$

When $F_r > 0.5F_r + Y_0F_a$, use $P_0 = F_r$

The values of e, Y_1, and Y_0 are given in the table below.

Boundary Dimensions (mm/inch)							Basic Load Ratings (kN)		{kgf}		Bearing Numbers	Abutment and Fillet Dimensions (mm)						Eff. Load Centers (mm)	Constant	Axial Load Factors		Mass (kg)
d	D	T	B	C	CONE r min.	CUP r min.	C_r	C_{0r}	C_r	C_{0r}		d_a	d_b	D_a	D_b	CONE r_a max.	CUP r_a max.	a	e	Y_1	Y_0	approx.
355.600 14.0000	514.350 20.2500	74.612 2.9375	66.675 2.6250	50.800 2.0000	6.4	3.3	795	1 640	81 000	167 000	**EE231400 / 232025**	403	382	478	495	6.4	3.3	97.0	0.44	1.4	0.75	44.6
368.300 14.5000	596.900 23.5000	95.250 3.7500	92.075 3.6250	60.325 2.3750	9.7	6.4	1 670	2 870	170 000	293 000	**EE181453 / 182350**	428	403	549	570	9.7	6.4	102.6	0.41	1.5	0.80	92.7
	609.600 24.0000	142.875 5.6250	139.700 5.5000	111.125 4.3750	8.0	6.4	2 710	4 950	276 000	505 000	**EE321145-N1 / 321240**	431	401	556	587	8.0	6.4	118.9	0.36	1.7	0.93	154
371.475 14.6250	501.650 19.7500	74.612 2.9375	66.675 2.6250	50.800 2.0000	6.4	3.3	795	1 640	81 000	167 000	**EE231462 / 231975**	411	390	472	489	6.4	3.3	97.0	0.44	1.4	0.75	35.8
	514.350 20.2500	74.612 2.9375	66.675 2.6250	50.800 2.0000	6.4	3.3	795	1 640	81 000	167 000	**EE231462 / 232025**	411	390	478	495	6.4	3.3	97.0	0.44	1.4	0.75	39.8
374.650 14.7500	522.288 20.5625	85.725 3.3750	84.138 3.3125	61.912 2.4375	6.4	3.3	1 210	2 550	124 000	260 000	**LM565943 / LM565910**	417	393	490	508	6.4	3.3	92.9	0.39	1.6	0.86	51.3
377.825 14.8750	508.000 20.0000	63.500 2.5000	58.738 2.3125	38.100 1.5000	6.4	3.3	725	1 490	74 000	152 000	**EE192148 / 192200**	418	397	480	495	6.4	3.3	103.9	0.53	1.1	0.62	31.1
	522.288 20.5625	85.725 3.3750	84.138 3.3125	61.912 2.4375	6.4	3.3	1 210	2 550	124 000	260 000	**LM565946 / LM565910**	418	395	490	508	6.4	3.3	92.9	0.39	1.6	0.86	50
381.000 15.0000	479.425 18.8750	49.212 1.9375	47.625 1.8750	34.925 1.3750	6.4	3.3	585	1 310	60 000	134 000	**L865547 / L865512**	412	394	456	469	6.4	3.3	92.0	0.49	1.2	0.67	18.9
	508.000 20.0000	63.500 2.5000	58.738 2.3125	38.100 1.5000	6.4	3.3	725	1 490	74 000	152 000	**EE192150 / 192200**	420	399	480	495	6.4	3.3	103.9	0.53	1.1	0.62	30.3
	522.288 20.5625	85.725 3.3750	84.138 3.3125	61.912 2.4375	6.4	3.3	1 210	2 550	124 000	260 000	**LM565949 / LM565910**	420	396	490	508	6.4	3.3	92.9	0.39	1.6	0.86	48.8
	546.100 21.5000	104.775 4.1250	104.775 4.1250	82.550 3.2500	6.4	6.4	1 840	4 000	187 000	405 000	**HM266447 / HM266410**	428	405	508	531	6.4	6.4	97.5	0.33	1.8	0.99	78.3
384.175 15.1250	441.325 17.3750	28.575 1.1250	28.575 1.1250	20.638 0.8125	3.5	3.3	247	655	25 200	66 500	**LL365348 / LL365310**	402	394	427	435	3.5	3.3	59.2	0.34	1.8	0.97	6.33
	546.100 21.5000	104.775 4.1250	104.775 4.1250	82.550 3.2500	6.4	6.4	1 840	4 000	187 000	405 000	**HM266449 / HM266410**	429	407	508	531	6.4	6.4	97.5	0.33	1.8	0.99	76.7
385.762 15.1875	514.350 20.2500	82.550 3.2500	82.550 3.2500	63.500 2.5000	6.4	3.3	1 180	2 610	121 000	266 000	**LM665949 / LM665910**	424	401	485	504	6.4	3.3	99.0	0.42	1.4	0.79	45.2

Bore Diameter 393.700 – 425.450 mm

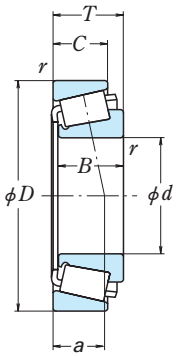

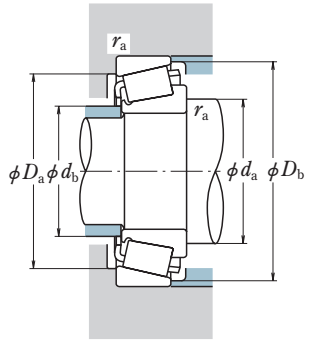

Dynamic Equivalent Load

$P = XF_r + YF_a$

$F_a/F_r \leqq e$		$F_a/F_r > e$	
X	Y	X	Y
1	0	0.4	Y_1

Static Equivalent Load

$P_0 = 0.5F_r + Y_0F_a$

When $F_r > 0.5F_r + Y_0F_a$, use $P_0 = F_r$

The values of e, Y_1, and Y_0 are given in the table below.

Boundary Dimensions (mm/inch)							Basic Load Ratings (kN)		{kgf}		Bearing Numbers	Abutment and Fillet Dimensions (mm)						Eff. Load Centers (mm)	Constant	Axial Load Factors		Mass (kg)
d	D	T	B	C	CONE r min.	CUP r min.	C_r	C_{0r}	C_r	C_{0r}		d_a	d_b	D_a	D_b	CONE r_a max.	CUP r_a max.	a	e	Y_1	Y_0	approx.
393.700 15.5000	546.100 21.5000	76.200 3.0000	61.120 2.4063	55.562 2.1875	6.4	6.4	815	1 650	83 000	168 000	**EE234154 / 234215**	438	417	507	529	6.4	6.4	112.9	0.48	1.3	0.69	44.8
	558.800 22.0000	65.088 2.5625	61.119 2.4063	44.450 1.7500	6.4	6.4	815	1 650	83 000	168 000	**EE234154 / 234220**	438	417	516	536	6.4	6.4	101.8	0.48	1.3	0.69	44.3
396.875 15.6250	546.100 21.5000	76.200 3.0000	61.120 2.4063	55.562 2.1875	6.4	6.4	815	1 650	83 000	168 000	**EE234156 / 234215**	439	419	507	529	6.4	6.4	112.9	0.48	1.3	0.69	43.9
	549.275 21.6250	85.725 3.3750	84.138 3.3125	61.912 2.4375	6.4	3.3	1 260	2 720	128 000	278 000	**LM567943 / LM567910**	442	420	517	535	6.4	3.3	101.1	0.41	1.5	0.81	57.1
	558.800 22.0000	65.088 2.5625	61.120 2.4063	44.450 1.7500	6.4	6.4	815	1 650	83 000	168 000	**EE234156 / 234220**	439	419	516	536	6.4	6.4	101.8	0.48	1.3	0.69	43.4
406.400 16.0000	508.000 20.0000	61.912 2.4375	61.912 2.4375	47.625 1.8750	3.3	3.3	800	1 960	81 500	200 000	**L467549 / L467510**	435	420	484	498	3.3	3.3	83.3	0.37	1.6	0.90	27.6
	546.100 21.5000	76.200 3.0000	61.120 2.4063	55.562 2.1875	6.4	6.4	815	1 650	83 000	168 000	**EE234160 / 234215**	444	424	507	529	6.4	6.4	112.9	0.48	1.3	0.69	44.3
	549.275 21.6250	85.725 3.3750	84.138 3.3125	61.912 2.4375	6.4	3.3	1 260	2 720	128 000	278 000	**LM567949 / LM567910**	447	425	517	535	6.4	3.3	101.1	0.41	1.5	0.81	53.2
	558.800 22.0000	65.088 2.5625	61.120 2.4063	44.450 1.7500	6.4	6.4	815	1 650	83 000	168 000	**EE234160 / 234220**	444	424	516	536	6.4	6.4	101.8	0.48	1.3	0.69	43.8
	574.675 22.6250	76.200 3.0000	67.866 2.6719	50.800 2.0000	6.8	3.3	920	1 850	93 500	189 000	**EE285160 / 285226**	453	429	534	552	6.8	3.3	114.0	0.50	1.2	0.66	53.2
	673.100 26.5000	88.900 3.5000	87.833 3.4580	60.325 2.3750	6.4	3.3	1 750	3 100	179 000	315 000	**EE571602 / 572650**	479	457	629	647	6.4	3.3	110.0	0.40	1.5	0.83	119
409.575 16.1250	574.675 22.6250	76.200 3.0000	67.866 2.6719	50.800 2.0000	6.8	3.3	920	1 850	93 500	189 000	**EE285162 / 285226**	455	431	534	552	6.8	3.3	114.0	0.50	1.2	0.66	52.1
411.162 16.1875	609.600 24.0000	92.075 3.6250	84.138 3.3125	60.325 2.3750	6.8	6.4	1 470	2 750	150 000	280 000	**EE911618 / 912400**	461	440	566	586	6.8	6.4	103.9	0.38	1.6	0.86	80.7
425.450 16.7500	685.698 26.9960	142.875 5.6250	142.800 5.6220	104.775 4.1250	12.7	6.4	3 050	5 700	310 000	580 000	**EE328167 / 328269**	497	462	630	661	12.7	6.4	135.1	0.40	1.5	0.83	193

Bore Diameter 430.212 – 476.250 mm

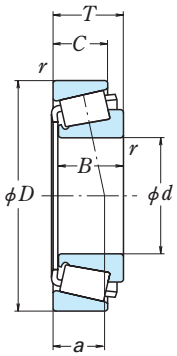

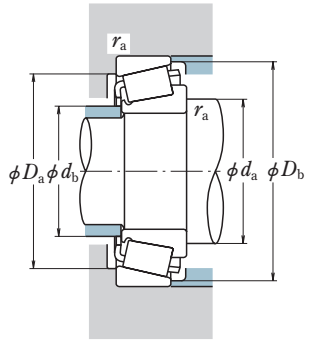

Dynamic Equivalent Load

$P = XF_r + YF_a$

$F_a/F_r \leqq e$		$F_a/F_r > e$	
X	Y	X	Y
1	0	0.4	Y_1

Static Equivalent Load

$P_0 = 0.5F_r + Y_0F_a$

When $F_r > 0.5F_r + Y_0F_a$, use $P_0 = F_r$

The values of e, Y_1, and Y_0 are given in the table below.

Boundary Dimensions (mm/inch)							Basic Load Ratings (kN)		{kgf}		Bearing Numbers	Abutment and Fillet Dimensions (mm)						Eff. Load Centers (mm)	Constant	Axial Load Factors		Mass (kg)
d	D	T	B	C	CONE r min.	CUP r min.	C_r	C_{0r}	C_r	C_{0r}		d_a	d_b	D_a	D_b	CONE r_a max.	CUP r_a max.	a	e	Y_1	Y_0	approx.
430.212 16.9375	603.250 23.7500	76.200 3.0000	73.025 2.8750	50.800 2.0000	6.4	6.4	1 240	2 500	126 000	255 000	**EE241693 / 242375**	479	457	564	585	6.4	6.4	122.1	0.52	1.1	0.63	62
431.800 17.0000	533.400 21.0000	46.038 1.8125	46.038 1.8125	34.925 1.3750	3.3	3.3	580	1 380	59 500	141 000	**80385 / 80325**	458	447	511	521	3.3	3.3	69.3	0.31	2.0	1.1	20.8
	552.450 21.7500	44.450 1.7500	44.450 1.7500	31.750 1.2500	3.3	3.3	610	1 480	62 000	151 000	**80170 / 80217**	467	456	530	538	3.3	3.3	71.0	0.32	1.9	1.0	25.8
	565.150 22.2500	44.450 1.7500	44.450 1.7500	31.750 1.2500	3.3	3.3	610	1 480	62 000	151 000	**80170 / 80222**	467	456	536	545	3.3	3.3	71.0	0.32	1.9	1.0	28.6
	571.500 22.5000	74.612 2.9375	74.612 2.9375	52.388 2.0625	3.3	3.3	1 080	2 350	110 000	240 000	**LM869448 / LM869410**	471	448	539	560	3.3	3.3	122.6	0.55	1.1	0.60	47.9
	603.250 23.7500	76.200 3.0000	73.025 2.8750	50.800 2.0000	6.4	6.4	1 240	2 500	126 000	255 000	**EE241701 / 242375**	480	458	564	585	6.4	6.4	122.1	0.52	1.1	0.63	61.4
	673.100 26.5000	88.900 3.5000	87.833 3.4580	60.325 2.3750	6.4	3.3	1 750	3 100	179 000	315 000	**EE571703 / 572650**	491	469	629	647	6.4	3.3	110.0	0.40	1.5	0.83	108
447.675 17.6250	552.450 21.7500	44.450 1.7500	44.450 1.7500	31.750 1.2500	3.3	3.3	610	1 480	62 000	151 000	**80176 / 80217**	475	464	530	538	3.3	3.3	71.0	0.32	1.9	1.0	22
	565.150 22.2500	44.450 1.7500	44.450 1.7500	31.750 1.2500	3.3	3.3	610	1 480	62 000	151 000	**80176 / 80222**	475	464	536	545	3.3	3.3	71.0	0.32	1.9	1.0	24.8
	635.000 25.0000	120.650 4.7500	120.650 4.7500	95.250 3.7500	6.4	6.4	1 900	4 350	194 000	440 000	**M270749 / M270710**	502	474	591	617	6.4	6.4	114.6	0.33	1.8	0.99	117
450.850 17.7500	603.250 23.7500	85.725 3.3750	84.138 3.3125	60.325 2.3750	6.4	3.3	1 310	2 900	134 000	296 000	**LM770945 / LM770910**	496	471	570	590	6.4	3.3	115.9	0.45	1.3	0.73	62.5
457.200 18.0000	573.088 22.5625	74.612 2.9375	74.612 2.9375	57.150 2.2500	6.4	6.4	1 020	2 610	104 000	267 000	**L570649 / L570610**	493	472	542	562	6.4	6.4	101.2	0.40	1.5	0.83	42
	596.900 23.5000	76.200 3.0000	73.025 2.8750	53.975 2.1250	9.5	3.3	1 040	2 360	106 000	241 000	**EE244180 / 244235**	500	475	565	580	9.5	3.3	102.0	0.40	1.5	0.82	49.9
	603.250 23.7500	85.725 3.3750	84.138 3.3125	60.325 2.3750	6.4	3.3	1 310	2 900	134 000	296 000	**LM770949 / LM770910**	499	474	570	590	6.4	3.3	115.9	0.45	1.3	0.73	59.5
	660.400 26.0000	91.280 3.5937	85.725 3.3750	62.705 2.4687	10.4	6.4	1 550	2 780	158 000	284 000	**EE737181 / 737260**	507	479	615	636	10.4	6.4	106.9	0.37	1.6	0.88	86.2
476.250 18.7500	565.150 22.2500	41.275 1.6250	41.275 1.6250	31.750 1.2500	3.3	3.3	535	1 340	54 500	136 000	**LL771948 / LL771911**	502	489	545	557	3.3	3.3	100.2	0.47	1.3	0.70	18.2

Bore Diameter 479.425 – 539.750 mm

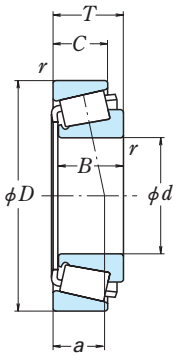

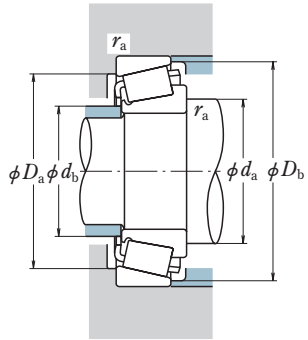

Dynamic Equivalent Load

$P = XF_r + YF_a$

$F_a/F_r \leqq e$		$F_a/F_r > e$	
X	Y	X	Y
1	0	0.4	Y_1

Static Equivalent Load

$P_0 = 0.5F_r + Y_0F_a$

When $F_r > 0.5F_r + Y_0F_a$, use $P_0 = F_r$

The values of e, Y_1, and Y_0 are given in the table below.

Boundary Dimensions (mm/inch)							Basic Load Ratings (kN)		{kgf}		Bearing Numbers	Abutment and Fillet Dimensions (mm)						Eff. Load Centers (mm)	Constant	Axial Load Factors		Mass (kg)
d	D	T	B	C	CONE r min.	CUP r min.	C_r	C_{0r}	C_r	C_{0r}		d_a	d_b	D_a	D_b	CONE r_a max.	CUP r_a max.	a	e	Y_1	Y_0	approx.
479.425 18.8750	679.450 26.7500	128.588 5.0625	128.588 5.0625	101.600 4.0000	6.4	6.4	2 800	6 400	285 000	650 000	**M272749 / M272710**	535	504	635	663	6.4	6.4	121.1	0.34	1.8	0.97	148
482.600 19.0000	615.950 24.2500	53.975 2.1250	46.038 1.8125	41.275 1.6250	3.3	3.3	780	1 700	79 500	173 000	**80480 / 80425**	516	503	588	600	3.3	3.3	90.0	0.35	1.7	0.95	35.2
	615.950 24.2500	85.725 3.3750	85.725 3.3750	66.675 2.6250	6.4	6.4	1 390	3 450	142 000	350 000	**LM272249 / LM272210**	522	501	582	604	6.4	6.4	106.1	0.37	1.6	0.88	59.8
	634.873 24.9950	80.962 3.1875	80.962 3.1875	63.500 2.5000	6.4	3.3	1 340	3 300	136 000	335 000	**EE243190 / 243250**	530	508	606	622	6.4	3.3	99.1	0.34	1.8	0.97	67.6
488.671 19.2390	660.400 26.0000	93.662 3.6875	94.458 3.7188	69.850 2.7500	6.4	6.4	1 700	3 800	174 000	385 000	**EE640191 / 640260**	535	511	624	643	6.4	6.4	98.2	0.31	2.0	1.1	87.7
488.950 19.2500	634.873 24.9950	84.138 3.3125	84.138 3.3125	61.912 2.4375	6.4	3.3	1 370	3 200	140 000	325 000	**LM772748 / LM772710**	532	508	602	623	6.4	3.3	124.7	0.47	1.3	0.70	63.9
	660.400 26.0000	93.662 3.6875	94.458 3.7188	69.850 2.7500	6.4	6.4	1 700	3 800	174 000	385 000	**EE640192 / 640260**	535	511	624	643	6.4	6.4	98.2	0.31	2.0	1.1	87.6
489.026 19.2530	634.873 24.9950	80.962 3.1875	80.962 3.1875	63.500 2.5000	6.4	3.3	1 340	3 300	136 000	335 000	**EE243192 / 243250**	533	512	606	622	6.4	3.3	99.1	0.34	1.8	0.97	64.5
498.475 19.6250	634.873 24.9950	80.962 3.1875	80.962 3.1875	63.500 2.5000	6.4	3.3	1 340	3 300	136 000	335 000	**EE243196 / 243250**	538	516	606	622	6.4	3.3	99.1	0.34	1.8	0.97	59.9
505.968 19.9200	736.600 29.0000	88.900 3.5000	81.758 3.2188	53.975 2.1250	6.4	3.3	1 620	3 400	165 000	345 000	**EE981992 / 982900**	571	547	693	712	6.4	3.3	134.9	0.48	1.3	0.69	114
508.000 20.0000	736.600 29.0000	88.900 3.5000	81.758 3.2188	53.975 2.1250	6.4	3.3	1 620	3 400	165 000	345 000	**EE982003 / 982900**	572	548	693	712	6.4	3.3	134.9	0.48	1.3	0.69	113
514.350 20.2500	736.600 29.0000	88.900 3.5000	81.758 3.2188	53.975 2.1250	6.4	3.3	1 620	3 400	165 000	345 000	**EE982028 / 982900**	576	551	693	712	6.4	3.3	134.9	0.48	1.3	0.69	109
520.700 20.5000	736.600 29.0000	88.900 3.5000	81.758 3.2188	53.975 2.1250	6.4	3.3	1 620	3 400	165 000	345 000	**EE982051 / 982900**	579	554	693	712	6.4	3.3	134.9	0.48	1.3	0.69	106
533.400 21.0000	635.000 25.0000	50.800 2.0000	50.800 2.0000	38.100 1.5000	6.4	6.4	705	1 800	72 000	183 000	**LL575343 / LL575310**	566	549	610	626	6.4	6.4	101.4	0.40	1.5	0.82	28.2
	784.225 30.8750	88.900 3.5000	82.550 3.2500	53.975 2.1250	6.4	6.4	1 750	3 500	179 000	355 000	**EE522102 / 523087**	596	573	730	752	6.4	6.4	139.5	0.48	1.3	0.69	129
539.750 21.2500	635.000 25.0000	50.800 2.0000	50.800 2.0000	38.100 1.5000	6.4	6.4	705	1 800	72 000	183 000	**LL575349 / LL575310**	569	552	610	626	6.4	6.4	101.4	0.40	1.5	0.82	26.1

Bore Diameter 546.100 – 660.400 mm

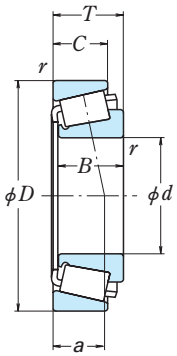

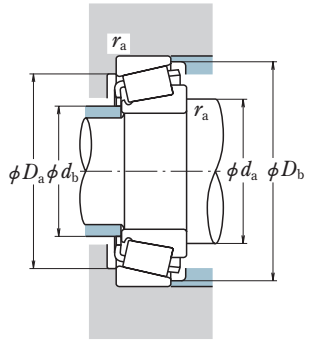

Dynamic Equivalent Load

$P = XF_r + YF_a$

$F_a/F_r \leqq e$		$F_a/F_r > e$	
X	Y	X	Y
1	0	0.4	Y_1

Static Equivalent Load

$P_0 = 0.5F_r + Y_0F_a$

When $F_r > 0.5F_r + Y_0F_a$, use $P_0 = F_r$

The values of e, Y_1, and Y_0 are given in the table below.

Boundary Dimensions (mm/inch)							Basic Load Ratings (kN)		{kgf}		Bearing Numbers	Abutment and Fillet Dimensions (mm)						Eff. Load Centers (mm)	Constant	Axial Load Factors		Mass (kg)
d	D	T	B	C	CONE r min.	CUP r min.	C_r	C_{0r}	C_r	C_{0r}		d_a	d_b	D_a	D_b	CONE r_a max.	CUP r_a max.	a	e	Y_1	Y_0	approx.
546.100 21.5000	736.600 29.0000	76.200 3.0000	76.200 3.0000	50.800 2.0000	6.4	6.4	1 280	2 590	130 000	264 000	**EE542215 / 542290**	598	574	695	715	6.4	6.4	142.2	0.51	1.2	0.65	79.7
549.275 21.6250	692.150 27.2500	80.962 3.1875	80.962 3.1875	61.912 2.4375	6.4	6.4	1 430	3 550	146 000	365 000	**L476549 / L476510**	591	568	658	679	6.4	6.4	113.1	0.38	1.6	0.88	67.4
558.800 22.0000	736.600 29.0000	76.200 3.0000	76.200 3.0000	50.800 2.0000	6.4	6.4	1 280	2 590	130 000	264 000	**EE542220 / 542290**	604	581	695	715	6.4	6.4	142.2	0.51	1.2	0.65	73.2
	736.600 29.0000	88.108 3.4688	88.108 3.4688	63.500 2.5000	6.4	6.4	1 750	3 900	178 000	395 000	**EE843220 / 843290**	606	585	699	718	6.4	6.4	111.3	0.34	1.8	0.97	93.7
	736.600 29.0000	104.775 4.1250	104.775 4.1250	80.962 3.1875	6.4	6.4	2 300	5 600	235 000	575 000	**LM377449 / LM377410**	607	581	696	720	6.4	6.4	120.7	0.35	1.7	0.95	118
571.500 22.5000	812.800 32.0000	155.575 6.1250	155.575 6.1250	120.650 4.7500	6.4	6.4	4 000	9 300	410 000	950 000	**M278749 / M278710**	634	601	759	790	6.4	6.4	143.6	0.33	1.8	0.99	256
584.200 23.0000	685.800 27.0000	49.212 1.9375	49.212 1.9375	34.925 1.3750	3.5	3.3	735	1 970	75 000	200 000	**LL778149 / LL778110**	613	599	663	675	3.5	3.3	114.3	0.44	1.4	0.75	29.6
596.900 23.5000	685.800 27.0000	31.750 1.2500	31.750 1.2500	25.400 1.0000	3.5	3.3	380	995	38 500	101 000	**680235 / 680270**	621	610	664	675	3.5	3.3	124.9	0.52	1.1	0.63	17.4
602.945 23.7380	787.400 31.0000	93.662 3.6875	93.662 3.6875	69.850 2.7500	6.4	6.4	2 000	4 800	204 000	490 000	**EE649237 / 649310**	655	629	749	771	6.4	6.4	129.2	0.37	1.6	0.89	115
607.720 23.9260	787.400 31.0000	93.662 3.6875	93.662 3.6875	69.850 2.7500	6.4	6.4	2 000	4 800	204 000	490 000	**EE649239 / 649310**	658	631	749	771	6.4	6.4	129.2	0.37	1.6	0.89	111
609.600 24.0000	762.000 30.0000	95.250 3.7500	92.075 3.6250	71.438 2.8125	6.4	6.4	1 780	4 700	181 000	480 000	**L879947 / L879910**	656	627	722	750	6.4	6.4	152.9	0.49	1.2	0.68	93.3
	774.700 30.5000	85.725 3.3750	79.375 3.1250	60.320 2.3748	6.4	6.4	1 780	4 250	182 000	430 000	**L580049 / L580010**	654	634	737	755	6.4	6.4	130.5	0.40	1.5	0.82	90.1
	787.400 31.0000	93.662 3.6875	93.662 3.6875	69.850 2.7500	6.4	6.4	2 000	4 800	204 000	490 000	**EE649240 / 649310**	659	632	749	771	6.4	6.4	129.2	0.37	1.6	0.89	110
635.000 25.0000	736.600 29.0000	57.150 2.2500	53.975 2.1250	41.275 1.6250	3.3	3.3	870	2 500	89 000	255 000	**80780 / 80720**	664	648	712	726	3.3	3.3	125.0	0.44	1.4	0.75	36.6
660.400 26.0000	812.800 32.0000	95.250 3.7500	95.250 3.7500	73.025 2.8750	6.4	6.4	2 200	5 900	224 000	600 000	**L281148 / L281110**	701	678	778	799	6.4	6.4	123.1	0.33	1.8	0.99	105
	854.075 33.6250	85.725 3.3750	85.468 3.3649	60.325 2.3750	9.7	6.4	2 000	4 650	204 000	475 000	**EE749260 / 749336**	712	690	813	831	9.7	6.4	124.5	0.35	1.7	0.94	119

Bore Diameter 673.100 – 1 270.000 mm

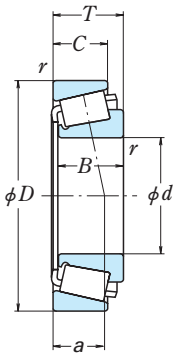

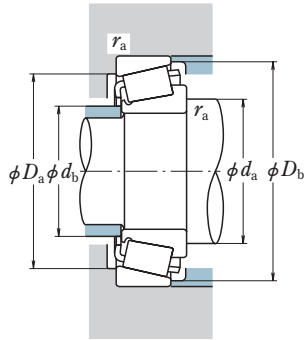

Dynamic Equivalent Load

$P = XF_r + YF_a$

$F_a/F_r \leqq e$		$F_a/F_r > e$	
X	Y	X	Y
1	0	0.4	Y_1

Static Equivalent Load

$P_0 = 0.5F_r + Y_0F_a$

When $F_r > 0.5F_r + Y_0F_a$, use $P_0 = F_r$

The values of e, Y_1, and Y_0 are given in the table below.

Boundary Dimensions (mm/inch)							Basic Load Ratings (kN)		{kgf}		Bearing Numbers	Abutment and Fillet Dimensions (mm)						Eff. Load Centers (mm)	Constant	Axial Load Factors		Mass (kg)
d	D	T	B	C	CONE r min.	CUP r min.	C_r	C_{0r}	C_r	C_{0r}		d_a	d_b	D_a	D_b	CONE r_a max.	CUP r_a max.	a	e	Y_1	Y_0	approx.
673.100 26.5000	793.750 31.2500	66.675 2.6250	61.912 2.4375	49.212 1.9375	6.4	6.4	995	2 660	102 000	271 000	**LL481448 / LL481411**	708	691	764	781	6.4	6.4	119.7	0.36	1.7	0.92	52
685.800 27.0000	876.300 34.5000	93.662 3.6875	92.075 3.6250	69.850 2.7500	6.4	6.4	2 160	5 550	220 000	565 000	**EE655270 / 655345**	737	712	832	857	6.4	6.4	149.9	0.42	1.4	0.79	134
711.200 28.0000	914.400 36.0000	85.725 3.3750	82.550 3.2500	60.325 2.3750	6.4	6.4	1 870	4 800	191 000	490 000	**EE755280 / 755360**	767	746	870	891	6.4	6.4	140.5	0.38	1.6	0.87	136
723.900 28.5000	914.400 36.0000	84.138 3.3125	80.962 3.1875	60.325 2.3750	3.3	6.4	1 870	4 800	191 000	490 000	**EE755285 / 755360**	770	752	870	891	3.3	6.4	140.5	0.38	1.6	0.87	126
749.300 29.5000	990.600 39.0000	159.500 6.2795	160.338 6.3125	123.000 4.8425	6.4	6.4	4 400	11 700	450 000	1 200 000	**LM283649 / LM283610**	815	782	938	969	6.4	6.4	165.2	0.33	1.8	0.99	329
762.000 30.0000	889.000 35.0000	63.500 2.5000	63.500 2.5000	50.800 2.0000	3.3	3.3	1 160	3 450	119 000	350 000	**EE175301 / 175350**	797	780	861	876	3.3	3.3	131.4	0.38	1.6	0.87	64.4
	889.000 35.0000	69.850 2.7500	69.850 2.7500	50.800 2.0000	3.3	3.3	1 160	3 450	119 000	350 000	**LL483449 / LL483418**	797	780	861	875	3.3	3.3	133.8	0.38	1.6	0.87	68.1
	965.200 38.0000	93.662 3.6875	80.962 3.1875	66.675 2.6250	6.4	3.3	2 100	5 200	214 000	530 000	**EE752300 / 752380**	815	793	926	943	6.4	3.3	158.8	0.40	1.5	0.83	147
774.700 30.5000	965.200 38.0000	93.662 3.6875	80.962 3.1875	66.675 2.6250	6.4	3.3	2 100	5 200	214 000	530 000	**EE752305 / 752380**	822	800	926	943	6.4	3.3	158.8	0.40	1.5	0.83	137
838.200 33.0000	1 041.400 41.0000	93.662 3.6875	88.900 3.5000	66.675 2.6250	6.4	6.4	2 380	6 350	243 000	650 000	**EE763330 / 763410**	892	866	995	1 018	6.4	6.4	178.1	0.44	1.4	0.75	171
977.900 38.5000	1 130.300 44.5000	66.675 2.6250	63.500 2.5000	47.625 1.8750	6.4	6.4	1 460	4 350	149 000	445 000	**LL687949 / LL687910**	1 019	1 002	1 095	1 112	6.4	6.4	182.9	0.43	1.4	0.76	101
1 066.800 42.0000	1 219.200 48.0000	65.088 2.5625	65.088 2.5625	42.862 1.6875	3.3	3.3	1 520	4 750	155 000	485 000	**LL788349 / LL788310**	1 106	1 090	1 187	1 202	3.3	3.3	209.0	0.47	1.3	0.70	108
1 092.200 43.0000	1 320.800 52.0000	95.250 3.7500	88.900 3.5000	69.850 2.7500	6.4	6.4	2 730	7 650	278 000	780 000	**EE776430 / 776520**	1 153	1 128	1 269	1 301	6.4	6.4	270.7	0.57	1.1	0.58	249
1 155.700 45.5000	1 435.100 56.5000	120.650 4.7500	120.650 4.7500	95.250 3.7500	6.4	6.4	4 150	12 000	420 000	1 220 000	**EE277455 / 277565**	1 227	1 199	1 377	1 403	6.4	6.4	207.3	0.36	1.7	0.92	431
1 270.000 50.0000	1 435.100 56.5000	69.850 2.7500	65.088 2.5625	47.625 1.8750	6.4	6.4	1 630	5 550	167 000	565 000	**LL889049 / LL889010**	1 315	1 294	1 392	1 413	6.4	6.4	285.4	0.57	1.1	0.58	144

KBE (TDO) Type, Double Cup, Single Cones

Bore Diameter 100 – 101.600 mm

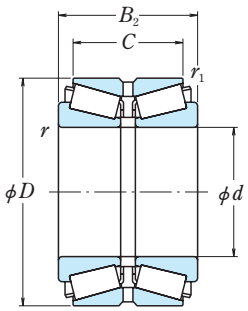

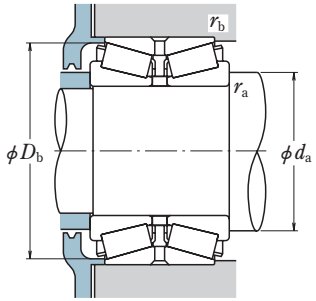

Dynamic Equivalent Load

$P = XF_r + YF_a$

$F_a/F_r \leqq e$		$F_a/F_r > e$	
X	Y	X	Y
1	Y_3	0.67	Y_2

Static Equivalent Load

$P_0 = F_r + Y_0 F_a$

The values of e, Y_2, Y_3, and Y_0 are given in the table below.

Boundary Dimensions (mm/inch)						Basic Load Ratings (kN)		{kgf}		Bearing Numbers	Abutment and Fillet Dimensions (mm)				Constant	Axial Load Factors			Mass (kg)
d	D	B_2	C	r min.	r_1 min.	C_r	C_{0r}	C_r	C_{0r}		d_a	D_b	r_a max.	r_b max.	e	Y_2	Y_3	Y_0	approx.
100	140	60	50	0.6	0.3	201	410	20 500	42 000	**100KBE1401+L**	111	136	0.6	0.3	0.33	3.1	2.0	2.0	2.6
	165	52	46	2.5	0.6	222	340	22 700	35 000	**100KBE31+L**	117	158	2	0.6	0.33	3.0	2.0	2.0	4.0
	165	65	52	2.5	0.6	295	480	30 000	49 000	**100KBE031+L**	118	158	2	0.6	0.39	2.6	1.7	1.7	5.0
	180	81	64	3	1	435	665	44 500	68 000	**HR100KBE1805+L**	120	172	2.5	1	0.42	2.4	1.6	1.6	8.2
	180	81	65	3	1	435	665	44 500	68 000	**HR100KBE042+L**	120	172	2.5	1	0.42	2.4	1.6	1.6	8.1
	180	82	65	3	1	395	570	40 000	58 500	**100KBE1806+L**	121	172	2.5	1	0.42	2.4	1.6	1.6	7.8
	180	82	66	3	1	435	665	44 500	68 000	**HR100KBE1801+L**	120	172	2.5	1	0.42	2.4	1.6	1.6	8.2
	180	83	67	3	1	435	665	44 500	68 000	**HR100KBE42+L**	120	172	2.5	1	0.42	2.4	1.6	1.6	8.7
	180	105	85	3	1	555	905	56 500	92 000	**HR100KBE1802+L**	121	174	2.5	1	0.42	2.4	1.6	1.6	10.6
	180	107	87	3	1	555	905	56 500	92 000	**HR100KBE52X+L**	121	174	2.5	1	0.42	2.4	1.6	1.6	10.7
	180	110	90	3	1	555	905	56 500	92 000	**HR100KBE1804+L**	121	174	2.5	1	0.42	2.4	1.6	1.6	11.0
	215	112	87	4	1	725	1 050	74 000	107 000	**HR100KBE043+L**	130	204	3	1	0.35	2.9	2.0	1.9	18.1
	215	143	118	3	1.5	975	1 620	99 500	165 000	**100KBE2101+L**	132	206	2.5	1.5	0.33	3.1	2.1	2.0	24.6
100.000 3.9370	180.975 7.1250	104.775 4.1250	85.725 3.3750	3.5	1.5	440	750	45 000	76 500	**∗ 783 / 774D+L**	123	171	3.5	1.5	0.39	2.6	1.8	1.7	10.6
101.600 4.0000	161.925 6.3750	82.548 3.2499	61.912 2.4375	3.5	0.8	310	570	31 500	58 500	**∗ 52400 / 52637D+L**	120	155	3.5	0.8	0.47	2.1	1.4	1.4	5.7
	168.275 6.6250	92.075 3.6250	69.850 2.7500	3.5	0.8	380	685	39 000	70 000	**∗ 687 / 672D+L**	121	161	3.5	0.8	0.47	2.1	1.4	1.4	7.3
	180.000 7.0866	104.775 4.1250	85.725 3.3750	3.5	0.8	440	750	45 000	76 500	**∗ 780 / 773D+L**	124	171	3.5	0.8	0.39	2.6	1.8	1.7	10.2
	180.975 7.1250	104.775 4.1250	85.725 3.3750	3.5	1.5	440	750	45 000	76 500	**∗ 780 / 774D+L**	124	171	3.5	1.5	0.39	2.6	1.8	1.7	10.4
	190.500 7.5000	127.000 5.0000	101.600 4.0000	8.0	1.5	605	1 000	61 500	102 000	**∗ 861 / 854D+L**	130	180	8.0	1.5	0.33	3.0	2.0	2.0	14.4
	190.500 7.5000	127.000 5.0000	104.775 4.1250	8.0	1.5	665	1 040	68 000	107 000	**∗ HH221449 / HH221410D+L**	131	183	8.0	1.5	0.33	3.0	2.0	2.0	14.3
	200.025 7.8750	115.888 4.5625	80.216 3.1581	3.5	2.3	540	850	55 000	86 500	**∗ 98400 / 98789D+L**	132	190	3.5	2.3	0.63	1.6	1.1	1.0	14.8
	212.725 8.3750	142.875 5.6250	117.475 4.6250	7.0	1.5	975	1 620	99 500	165 000	**∗ HH224335 / HH224310D+L**	137	205	7.0	1.5	0.33	3.1	2.1	2.0	23.3
	212.725 8.3750	142.875 5.6250	117.475 4.6250	7.0	1.5	820	1 400	83 500	143 000	**∗ 941 / 932D+L**	136	201	7.0	1.5	0.33	3.1	2.1	2.0	23.3

Note ∗ Bearings marked ∗ are inch design.

KBE (TDO) Type, Double Cup, Single Cones

Bore Diameter 104.775 – 110 mm

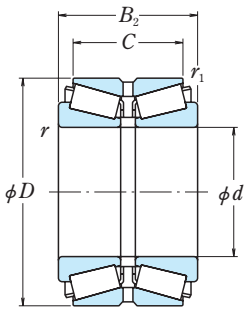

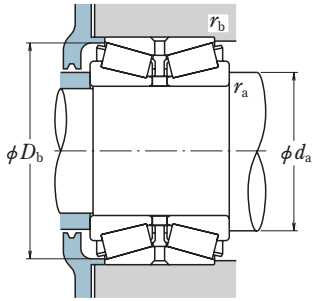

Dynamic Equivalent Load

$P = XF_r + YF_a$

$F_a/F_r \leqq e$		$F_a/F_r > e$	
X	Y	X	Y
1	Y_3	0.67	Y_2

Static Equivalent Load

$P_0 = F_r + Y_0 F_a$

The values of e, Y_2, Y_3, and Y_0 are given in the table below.

Boundary Dimensions (mm/inch)						Basic Load Ratings (kN)		{kgf}		Bearing Numbers	Abutment and Fillet Dimensions (mm)				Constant	Axial Load Factors			Mass (kg)
d	D	B_2	C	r min.	r_1 min.	C_r	C_{0r}	C_r	C_{0r}		d_a	D_b	r_a max.	r_b max.	e	Y_2	Y_3	Y_0	approx.
104.775 4.1250	180.000 7.0866	104.775 4.1250	85.725 3.3750	3.5	0.8	440	750	45 000	76 500	**∗ 782 / 773D+L**	125	171	3.5	0.8	0.39	2.6	1.8	1.7	9.7
	180.975 7.1250	104.775 4.1250	85.725 3.3750	3.5	1.5	440	750	45 000	76 500	**∗ 782 / 774D+L**	125	171	3.5	1.5	0.39	2.6	1.8	1.7	9.9
	180.975 7.1250	104.775 4.1250	85.725 3.3750	6.4	1.5	440	750	45 000	76 500	**∗ 786 / 774D+L**	128	171	6.4	1.5	0.39	2.6	1.8	1.7	9.9
	190.500 7.5000	106.362 4.1875	80.962 3.1875	3.5	1.5	510	925	52 000	94 500	**∗ 71412 / 71751D+L**	131	182	3.5	1.5	0.42	2.4	1.6	1.6	12.2
105	190	88	70	3	1	480	735	49 000	65 000	**HR105KBE42X+L**	127	182	2.5	1	0.42	2.4	1.6	1.6	9.8
	190	115	95	3	1	630	1 020	63 500	104 000	**HR105KBE52+L**	128	183	2.5	1	0.42	2.4	1.6	1.6	13.1
	190	117	96	3	1	580	1 020	63 500	104 000	**HR105KBE1902+L**	128	183	2.5	1	0.42	2.4	1.6	1.6	13.4
	225	116	91	4	1	780	1 130	79 500	115 000	HR105KBE043+L	135	214	3	1	0.35	2.9	2.0	1.9	20.4
106.362 4.1875	165.100 6.5000	82.550 3.2500	63.500 2.5000	3.5	0.8	335	645	34 000	65 500	**∗ 56418 / 56650D+L**	126	160	3.5	0.8	0.50	2.0	1.4	1.3	5.9
107.950 4.2500	146.050 5.7500	49.212 1.9375	39.688 1.5625	1.5	0.8	147	330	15 000	33 500	**∗ L521949 / L521910D+L**	120	141	1.5	0.8	0.39	2.6	1.7	1.7	2.2
	165.100 6.5000	82.550 3.2500	63.500 2.5000	3.5	0.8	335	645	34 000	65 500	**∗ 56425 / 56650D+L**	127	160	3.5	0.8	0.50	2.0	1.4	1.3	5.7
	190.500 7.5000	106.362 4.1875	80.962 3.1875	3.5	1.5	510	925	52 000	94 500	**∗ 71425 / 71751D+L**	133	182	3.5	1.5	0.42	2.4	1.6	1.6	11.8
	212.725 8.3750	142.875 5.6250	117.475 4.6250	8.0	1.5	975	1 620	99 500	165 000	**∗ HH224340 / HH224310D+L**	142	205	8.0	1.5	0.33	3.1	2.1	2.0	22.1
	212.725 8.3750	142.875 5.6250	117.475 4.6250	8.0	1.5	820	1 400	83 500	143 000	**∗ 936 / 932D+L**	140	201	8.0	1.5	0.33	3.1	2.1	2.0	22.1
	234.950 9.2500	111.125 4.3750	82.550 3.2500	6.4	1.5	610	840	62 500	85 500	**∗ EE342043 / 342091D+L**	144	222	6.4	1.5	0.43	2.3	1.6	1.5	20
109.952 4.3288	190.500 7.5000	106.362 4.1875	80.962 3.1875	3.5	1.5	510	925	52 000	94 500	**∗ 71432 / 71751D+L**	134	182	3.5	1.5	0.42	2.4	1.6	1.6	11.5
109.992 4.3304	177.800 7.0000	92.075 3.6250	69.850 2.7500	3.5	0.8	400	750	40 500	76 500	**∗ 64433 / 64700D+L**	132	173	3.5	0.8	0.52	1.9	1.3	1.3	8.0
110	150	80	63	0.6	0.3	210	450	21 500	45 500	**110KBE1501+L**	121	147	0.6	0.3	0.36	2.8	1.9	1.9	3.6
	180	56	50	2.5	0.6	264	400	26 900	41 000	**110KBE31+L**	129	174	2	0.6	0.39	2.6	1.7	1.7	5.1
	180	70	56	2.5	0.6	340	555	34 500	56 500	**110KBE031+L**	129	174	2	0.6	0.39	2.6	1.7	1.7	6.3

Note ∗ Bearings marked ∗ are inch design.

KBE (TDO) Type, Double Cup, Single Cones

Bore Diameter 110 – 120 mm

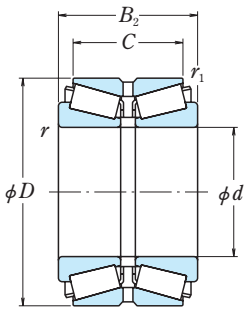

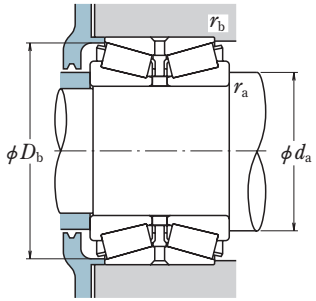

Dynamic Equivalent Load

$P = XF_r + YF_a$

$F_a/F_r \leqq e$		$F_a/F_r > e$	
X	Y	X	Y
1	Y_3	0.67	Y_2

Static Equivalent Load

$P_0 = F_r + Y_0 F_a$

The values of e, Y_2, Y_3, and Y_0 are given in the table below.

Boundary Dimensions (mm/inch)						Basic Load Ratings (kN)		{kgf}	
d	D	B_2	C	r min.	r_1 min.	C_r	C_{0r}	C_r	C_{0r}
110	200	90	72	3	1	590	840	55 000	85 500
	200	92	74	3	1	590	840	55 000	85 500
	200	120	100	3	1	685	1 130	69 500	115 000
	200	121	101	3	1	685	1 130	69 500	115 000
	200	125	105	3	1	610	965	62 000	98 500
	220	145	115	4	1	820	1 350	83 500	138 000
	240	118	93	4	1	830	1 190	84 500	121 000
111.125	190.500	106.362	80.962	3.5	1.5	510	925	52 000	94 500
4.3750	7.5000	4.1875	3.1875						
114.300	177.800	92.075	69.850	3.5	0.8	400	750	40 500	76 500
4.5000	7.0000	3.6250	2.7500						
	212.725	142.875	117.475	7.0	1.5	975	1 620	99 500	165 000
	8.3750	5.6250	4.6250						
	212.725	142.875	117.475	7.0	1.5	820	1 400	83 500	143 000
	8.3750	5.6250	4.6250						
114.976	212.725	142.875	117.475	7.0	1.5	975	1 620	99 500	165 000
4.5266	8.3750	5.6250	4.6250						
115.000	177.800	92.075	69.850	3.5	0.8	400	750	40 500	76 500
4.5276	7.0000	3.6250	2.7500						
120	165	68	56	1.5	0.6	236	495	24 100	50 500
	180	46	41	2.5	0.6	184	296	18 800	30 000
	180	58	46	2.5	0.6	260	450	26 500	46 000
	200	62	55	2.5	0.6	310	500	32 000	51 000
	200	78	62	2.5	0.6	415	690	42 000	70 000
	200	100	84	2.5	0.6	515	885	52 500	90 500
	215	94	75	3	1	540	800	55 000	81 500
	215	97	78	3	1	575	900	58 500	92 000
	215	132	109	3	1	750	1 270	76 500	130 000
	260	128	101	4	1	915	1 310	93 500	134 000
	260	188	145	4	1	1 320	2 110	135 000	215 000
	280	185	155	5	1.5	1 180	1 770	120 000	180 000

Bearing Numbers	Abutment and Fillet Dimensions (mm)				Constant	Axial Load Factors			Mass (kg)
	d_a	D_b	r_a max.	r_b max.	e	Y_2	Y_3	Y_0	approx.
HR110KBE42+L	133	192	2.5	1	0.42	2.4	1.6	1.6	11.2
HR110KBE42X+L	133	192	2.5	1	0.42	2.4	1.6	1.6	11.5
HR110KBE2001+L	134	193	2.5	1	0.42	2.4	1.6	1.6	15.4
HR110KBE52X+L	134	193	2.5	1	0.42	2.4	1.6	1.6	15.2
110KBE2002+L	134	194	2.5	1	0.42	2.4	1.6	1.6	14.8
110KBE2201+L	142	211	3	1	0.37	2.7	1.8	1.8	23.6
HR110KBE043+L	143	228	3	1	0.35	2.9	2.0	1.9	23.6
∗ **71437 / 71751D+L**	135	182	3.5	1.5	0.42	2.4	1.6	1.6	11.3
∗ **64450 / 64700D+L**	135	173	3.5	0.8	0.52	1.9	1.3	1.3	7.5
∗ **HH224346 / HH224310D+L**	144	205	7.0	1.5	0.33	3.1	2.1	2.0	20.9
∗ **938 / 932D+L**	142	201	7.0	1.5	0.33	3.1	2.1	2.0	20.9
∗ **HH224349 / HH224310D+L**	144	205	7.0	1.5	0.33	3.1	2.1	2.0	20.8
# **64452 / 64700D+L**	135	173	3.5	0.8	0.52	1.9	1.3	1.3	7.4
120KBE1601+L	134	161	1	0.5	0.40	2.5	1.7	1.6	3.9
120KBE30+L	137	174	2	0.6	0.40	2.5	1.7	1.6	3.7
120KBE030+L	137	174	2	0.6	0.39	2.6	1.7	1.7	4.6
120KBE31+L	142	192	2	0.6	0.39	2.6	1.7	1.7	7.3
120KBE031+L	141	192	2	0.6	0.39	2.6	1.7	1.7	8.9
120KBE2001+L	142	194	2	0.6	0.37	2.7	1.8	1.8	11.3
120KBE2101+L	145	208	2.5	1	0.42	2.4	1.6	1.6	12.6
HR120KBE42X+L	144	206	2.5	1	0.44	2.3	1.6	1.5	13.7
HR120KBE52X+L	145	208	2.5	1	0.44	2.3	1.6	1.5	18.8
HR120KBE43+L	134	247	3	1	0.35	2.9	2.0	1.9	29.4
HR120KBE2601+L	155	248	3	1	0.35	2.9	2.0	1.9	44.6
120KBE2801+L	162	266	3	1.5	0.39	2.6	1.7	1.7	51.6

Notes ∗ Bearings marked ∗ are inch design.
Bearings marked # are inch design. Bore torerances are listed in table **2.4** on page **A24**, but their tolerances are negative.

KBE (TDO) Type, Double Cup, Single Cones

Bore Diameter 120.000 – 128.588 mm

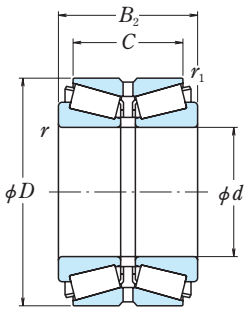

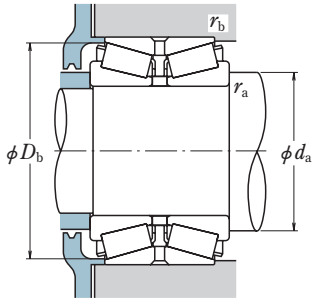

Dynamic Equivalent Load

$P = XF_r + YF_a$

$F_a/F_r \leqq e$		$F_a/F_r > e$	
X	Y	X	Y
1	Y_3	0.67	Y_2

Static Equivalent Load

$P_0 = F_r + Y_0 F_a$

The values of e, Y_2, Y_3, and Y_0 are given in the table below.

Boundary Dimensions (mm/inch)						Basic Load Ratings (kN)		{kgf}		Bearing Numbers	Abutment and Fillet Dimensions (mm)				Constant	Axial Load Factors			Mass (kg)
d	D	B_2	C	r min.	r_1 min.	C_r	C_{0r}	C_r	C_{0r}		d_a	D_b	r_a max.	r_b max.	e	Y_2	Y_3	Y_0	approx.
120.000 4.7244	174.625 6.8750	77.788 3.0625	61.913 2.4375	3.5	0.8	365	765	37 000	78 000	**# M224748 / M224710D+L**	137	169	3.5	0.8	0.33	3.0	2.0	2.0	5.8
120.650 4.7500	174.625 6.8750	77.788 3.0625	61.913 2.4375	3.5	0.8	365	765	37 000	78 000	**∗ M224749 / M224710D+L**	138	169	3.5	0.8	0.33	3.0	2.0	2.0	5.7
	206.375 8.1250	107.950 4.2500	82.550 3.2500	3.3	0.8	545	1 060	56 000	108 000	**∗ 795 / 792D+L**	149	199	3.3	0.8	0.46	2.2	1.5	1.4	14
123.825 4.8750	182.562 7.1875	85.725 3.3750	73.025 2.8750	3.5	0.8	390	885	40 000	90 500	**∗ 48286 / 48220D+L**	143	177	3.5	0.8	0.31	3.3	2.2	2.2	7.4
124.943 4.9190	234.950 9.2500	142.875 5.6250	114.300 4.5000	6.4	1.5	875	1 580	89 000	161 000	**∗ 95491 / 95927D+L**	162	226	6.4	1.5	0.37	2.7	1.8	1.8	25.7
125	210	110	88	4	1	560	1 030	57 000	105 000	**125KBE2101+L**	151	202	3	1	0.43	2.3	1.6	1.5	14.5
127.000 5.0000	182.562 7.1875	85.725 3.3750	73.025 2.8750	3.5	0.8	390	885	40 000	90 500	**∗ 48290 / 48220D+L**	145	177	3.5	0.8	0.31	3.3	2.2	2.2	7.0
	196.850 7.7500	101.600 4.0000	85.725 3.3750	3.5	0.8	535	1 120	54 500	115 000	**∗ 67388 / 67322D+L**	150	192	3.5	0.8	0.34	2.9	2.0	1.9	11.1
	200.025 7.8750	101.600 4.0000	85.725 3.3750	3.5	0.8	535	1 120	54 500	115 000	**∗ 67388 / 67325D+L**	150	193	3.5	0.8	0.34	2.9	2.0	1.9	11.7
	215.900 8.5000	106.362 4.1875	80.962 3.1875	3.5	1.5	495	985	50 500	100 000	**∗ 74500 / 74851D+L**	157	208	3.5	1.5	0.49	2.1	1.4	1.4	15
	234.950 9.2500	142.875 5.6250	114.300 4.5000	6.4	1.5	875	1 580	89 000	161 000	**∗ 95500 / 95927D+L**	163	226	6.4	1.5	0.37	2.7	1.8	1.8	25.2
	258.762 10.1875	177.800 7.0000	136.525 5.3750	9.7	1.5	975	1 600	99 000	164 000	**∗ EE153050 / 153103D+L**	167	243	9.7	1.5	0.32	3.1	2.1	2.1	38
128.588 5.0625	206.375 8.1250	107.950 4.2500	82.550 3.2500	3.3	0.8	545	1 060	56 000	108 000	**∗ 799 / 792D+L**	153	199	3.3	0.8	0.46	2.2	1.5	1.4	12.7

Notes ∗ Bearings marked ∗ are inch design.
Bearings marked # are inch design. Bore torerances are listed in table **2.4** on page **A24**, but their tolerances are negative.

KBE (TDO) Type, Double Cup, Single Cones

Bore Diameter 130 – 133.350 mm

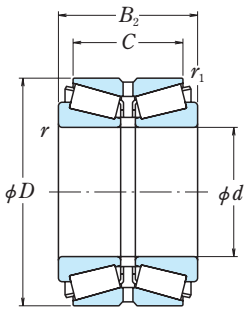

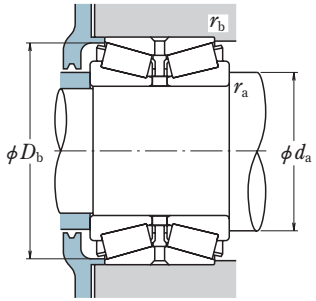

Dynamic Equivalent Load

$P = XF_r + YF_a$

$F_a/F_r \leqq e$		$F_a/F_r > e$	
X	Y	X	Y
1	Y_3	0.67	Y_2

Static Equivalent Load

$P_0 = F_r + Y_0 F_a$

The values of e, Y_2, Y_3, and Y_0 are given in the table below.

Boundary Dimensions (mm/inch)						Basic Load Ratings (kN)		{kgf}		Bearing Numbers	Abutment and Fillet Dimensions (mm)				Constant	Axial Load Factors			Mass (kg)
d	D	B_2	C	r min.	r_1 min.	C_r	C_{0r}	C_r	C_{0r}		d_a	D_b	r_a max.	r_b max.	e	Y_2	Y_3	Y_0	approx.
130	200	52	46	2.5	0.6	266	445	27 100	45 500	**130KBE30+L**	148	192	2	0.6	0.39	2.6	1.7	1.7	5.4
	200	65	52	2.5	0.6	320	540	32 500	55 000	**130KBE030+L**	149	193	2	0.6	0.39	2.6	1.7	1.7	6.4
	210	64	57	2.5	0.6	340	530	34 500	54 000	**130KBE31+L**	151	203	2	0.6	0.37	2.7	1.8	1.8	7.7
	210	80	64	2.5	0.6	455	765	46 500	78 000	**130KBE031+L**	151	203	2	0.6	0.39	2.6	1.7	1.7	9.6
	210	109	90	2.5	0.6	550	980	56 000	100 000	**130KBE2104+L**	152	204	2	0.6	0.39	2.6	1.7	1.7	13
	214	115	98	3	1	625	1 140	63 500	117 000	**130KBE2101+L**	154	207	2.5	1	0.35	2.9	1.9	1.9	15
	230	98	78.5	4	1	640	1 010	65 500	103 000	**HR130KBE42+L**	157	222	3	1	0.44	2.3	1.6	1.5	15.8
	230	100	80.5	4	1	640	1 010	65 500	103 000	**HR130KBE2301+L**	157	222	3	1	0.44	2.3	1.6	1.5	15.9
	230	142	114.5	4	1	850	1 480	87 000	151 000	**130KBE52X+L**	158	222	3	1	0.39	2.6	1.7	1.7	22.7
	230	145	115	4	1	905	1 580	92 500	161 000	**HR130KBE2302+L**	158	222	3	1	0.44	2.3	1.6	1.5	24.1
	230	145	117.5	4	1	905	1 580	92 500	161 000	**HR130KBE52+L**	158	222	3	1	0.44	2.3	1.6	1.5	23.8
	230	150	120	4	1	905	1 580	92 500	161 000	**HR130KBE2303+L**	158	222	3	1	0.44	2.3	1.6	1.5	24.2
	235	145	115	4	1	850	1 480	87 000	151 000	**130KBE2304+L**	158	224	3	1	0.39	2.6	1.7	1.7	24.5
	280	137	107.5	5	1.5	940	1 350	95 500	137 000	**130KBE43+L**	169	265	4	1.5	0.36	2.8	1.9	1.8	35
130.000 5.1181	206.375 8.1250	107.950 4.2500	82.550 3.2500	3.5	0.8	545	1 060	56 000	108 000	**∗ 797 / 792D+L**	153	199	3.5	0.8	0.46	2.2	1.5	1.4	12.4
130.175 5.1250	196.850 7.7500	101.600 4.0000	85.725 3.3750	3.5	0.8	535	1 120	54 500	115 000	**∗ 67389 / 67322D+L**	152	192	3.5	0.8	0.34	2.9	2.0	1.9	10.6
	200.025 7.8750	101.600 4.0000	85.725 3.3750	3.5	0.8	535	1 120	54 500	115 000	**∗ 67389 / 67325D+L**	152	193	3.5	0.8	0.34	2.9	2.0	1.9	11.2
	206.375 8.1250	107.950 4.2500	82.550 3.2500	3.5	0.8	545	1 060	56 000	108 000	**∗ 799A / 792D+L**	154	199	3.5	0.8	0.46	2.2	1.5	1.4	12.4
133	216	106	81	3.5	1.5	495	985	50 500	100 000	**133KBE2101+L**	160	208	3.5	1.5	0.49	2.1	1.4	1.4	14
133.350 5.2500	177.008 6.9688	57.150 2.2500	47.625 1.8750	1.5	0.8	213	515	21 700	52 500	**∗ L327249 / L327210D+L**	147	172	1.5	0.8	0.35	2.9	1.9	1.9	3.7
	190.500 7.5000	85.725 3.3750	73.025 2.8750	3.5	0.8	370	880	37 500	90 000	**∗ 48385 / 48320D+L**	153	185	3.5	0.8	0.32	3.1	2.1	2.1	7.7
	196.850 7.7500	101.600 4.0000	85.725 3.3750	3.5	0.8	535	1 120	54 500	115 000	**∗ 67390 / 67322D+L**	153	192	3.5	0.8	0.34	2.9	2.0	1.9	10
	196.850 7.7500	101.600 4.0000	85.725 3.3750	8.0	0.8	535	1 120	54 500	115 000	**∗ 67391 / 67322D+L**	158	192	8.0	0.8	0.34	2.9	2.0	1.9	9.9
	200.025 7.8750	101.600 4.0000	85.725 3.3750	3.5	0.8	535	1 120	54 500	115 000	**∗ 67390 / 67325D+L**	153	193	3.5	0.8	0.34	2.9	2.0	1.9	10.6

Note ∗ Bearings marked ∗ are inch design.

KBE (TDO) Type, Double Cup, Single Cones

Bore Diameter 133.350 – 139.700 mm

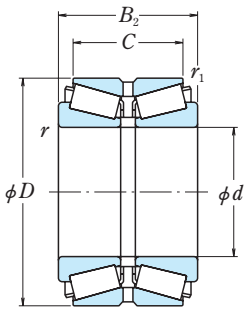

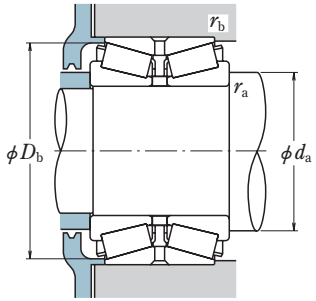

Dynamic Equivalent Load

$P = XF_r + YF_a$

$F_a/F_r \leqq e$		$F_a/F_r > e$	
X	Y	X	Y
1	Y_3	0.67	Y_2

Static Equivalent Load

$P_0 = F_r + Y_0 F_a$

The values of e, Y_2, Y_3, and Y_0 are given in the table below.

Boundary Dimensions (mm/inch)						Basic Load Ratings (kN)		{kgf}		Bearing Numbers	Abutment and Fillet Dimensions (mm)				Constant	Axial Load Factors			Mass (kg)
d	D	B_2	C	r min.	r_1 min.	C_r	C_{0r}	C_r	C_{0r}		d_a	D_b	r_a max.	r_b max.	e	Y_2	Y_3	Y_0	approx.
133.350 5.2500	215.900 8.5000	106.362 4.1875	80.962 3.1875	3.5	1.5	495	985	50 500	100 000	**∗ 74525 / 74851D+L**	160	208	3.5	1.5	0.49	2.1	1.4	1.4	14
	234.950 9.2500	142.875 5.6250	114.300 4.5000	9.7	1.5	875	1 580	89 000	161 000	**∗ 95525 / 95927D+L**	169	226	9.7	1.5	0.37	2.7	1.8	1.8	23.8
	234.950 9.2500	142.875 5.6250	114.300 4.5000	4.8	1.5	875	1 580	89 000	161 000	**∗ 95528 / 95927D+L**	164	226	4.8	1.5	0.37	2.7	1.8	1.8	23.9
135	200	100	85	3	1	495	1 010	50 500	103 000	**135KBE2001+L**	153	193	2	1	0.34	2.9	2.0	1.9	9.8
	210	66	53	2.5	1	305	530	31 000	54 000	**135KBE2101+L**	157	203	2	1	0.40	2.5	1.7	1.6	7.5
	225	85	68	3	1	490	850	50 000	87 000	**135KBE2202+L**	161	217	2.5	1	0.39	2.6	1.7	1.7	12.4
136.525 5.3750	190.500 7.5000	85.725 3.3750	73.025 2.8750	3.5	0.8	370	880	37 500	90 000	**∗ 48393 / 48320D+L**	155	185	3.5	0.8	0.32	3.1	2.1	2.1	7.3
	215.900 8.5000	106.362 4.1875	80.962 3.1875	3.5	1.5	495	985	50 500	100 000	**∗ 74537 / 74851D+L**	162	208	3.5	1.5	0.49	2.1	1.4	1.4	13.4
	228.600 9.0000	123.825 4.8750	98.425 3.8750	3.5	1.5	650	1 240	66 500	127 000	**∗ 896 / 892D+L**	163	219	3.5	1.5	0.42	2.4	1.6	1.6	18.7
	254.000 10.0000	152.400 6.0000	114.300 4.5000	7.0	1.5	885	1 660	90 000	169 000	**∗ 99537 / 99101D+L**	178	245	7.0	1.5	0.41	2.5	1.7	1.6	31.2
139.700 5.5000	215.900 8.5000	106.362 4.1875	80.962 3.1875	3.5	1.5	495	985	50 500	100 000	**∗ 74550 / 74851D+L**	163	208	3.5	1.5	0.49	2.1	1.4	1.4	12.8
	222.250 8.7500	75.692 2.9800	53.975 2.1250	3.5	2.3	325	535	33 500	54 500	**∗ 73551 / 73876D+L**	162	211	3.5	2.3	0.44	2.3	1.5	1.5	9.3
	236.538 9.3125	131.762 5.1875	106.362 4.1875	3.5	1.5	775	1 440	79 000	147 000	**∗ HM231132 / HM231111D+L**	168	227	3.5	1.5	0.32	3.2	2.1	2.1	21
	236.538 9.3125	131.762 5.1875	106.362 4.1875	3.5	1.5	685	1 360	70 000	139 000	**∗ 82550 / 82932D+L**	170	228	3.5	1.5	0.44	2.3	1.5	1.5	21.9
	241.300 9.5000	131.762 5.1875	106.362 4.1875	3.5	1.5	775	1 440	79 000	147 000	**∗ HM231132 / HM231116D+L**	168	230	3.5	1.5	0.32	3.2	2.1	2.1	22.6
	241.300 9.5000	131.762 5.1875	106.362 4.1875	3.5	1.5	685	1 360	70 000	139 000	**∗ 82550 / 82951D+L**	170	230	3.5	1.5	0.44	2.3	1.5	1.5	23.2
	254.000 10.0000	149.225 5.8750	111.125 4.3750	7.0	1.5	885	1 660	90 000	169 000	**∗ 99550 / 99102D+L**	179	245	7.0	1.5	0.41	2.5	1.7	1.6	29.7
	254.000 10.0000	152.400 6.0000	114.300 4.5000	7.0	1.5	885	1 660	90 000	169 000	**∗ 99550 / 99101D+L**	179	245	7.0	1.5	0.41	2.5	1.7	1.6	30.4

Note ∗ Bearings marked ∗ are inch design.

KBE (TDO) Type, Double Cup, Single Cones

Bore Diameter 140 – 146.050 mm

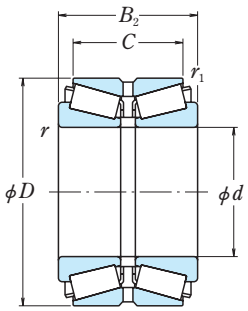

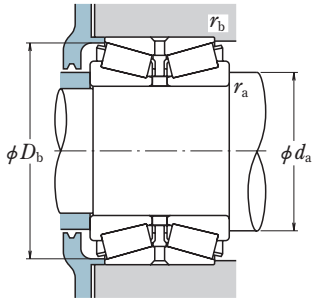

Dynamic Equivalent Load

$P = XF_r + YF_a$

$F_a/F_r \leqq e$		$F_a/F_r > e$	
X	Y	X	Y
1	Y_3	0.67	Y_2

Static Equivalent Load

$P_0 = F_r + Y_0 F_a$

The values of e, Y_2, Y_3, and Y_0 are given in the table below.

Boundary Dimensions (mm/inch)						Basic Load Ratings (kN)		{kgf}		Bearing Numbers	Abutment and Fillet Dimensions (mm)				Constant	Axial Load Factors			Mass (kg)
d	D	B_2	C	r min.	r_1 min.	C_r	C_{0r}	C_r	C_{0r}		d_a	D_b	r_a max.	r_b max.	e	Y_2	Y_3	Y_0	approx.
140	190	74	60	1	0.6	296	600	30 000	61 000	**140KBE1901+L**	153	185	1	0.5	0.38	2.7	1.8	1.7	5.3
	200	94.02	73.08	6	1	390	915	39 500	93 500	**140KBE2001+L**	163	195	5	1	0.34	3.0	2.0	2.0	8.8
	210	53	47	2.5	0.6	282	495	28 800	50 500	**140KBE30+L**	159	203	2	0.6	0.39	2.6	1.7	1.7	6.0
	210	66	53	2.5	1	305	530	31 000	54 000	**140KBE030+L**	159	203	2	1	0.40	2.5	1.7	1.6	7.0
	210	69	69	2.5	0.6	380	675	39 000	69 000	**140KBE2103+L**	157	202	2	0.6	0.20	5.1	3.4	3.3	8.1
	210	106	94	2.5	0.6	555	1 200	57 000	122 000	**140KBE2101+L**	160	203	2	0.6	0.33	3.0	2.0	2.0	12.3
	210	110	88	1	0.6	555	1 200	57 000	122 000	**140KBE2102+L**	159	203	1	0.6	0.33	3.0	2.0	2.0	12.4
	225	68	61	3	1	400	630	41 000	64 000	**140KBE31+L**	162	217	2.5	1	0.39	2.6	1.7	1.7	9.3
	225	84	68	3	1	490	850	50 000	87 000	**140KBE031+L**	163	217	2.5	1	0.39	2.6	1.7	1.7	11.6
	225	85	68	3	1	490	850	50 000	87 000	**140KBE2201+L**	163	217	2.5	1	0.39	2.6	1.7	1.7	11.7
	230	120	94	3	1	685	1 270	70 000	130 000	**140KBE2301+L**	166	222	2.5	1	0.33	3.0	2.0	2.0	17.6
	230	124	105	3	1	650	1 240	66 500	127 000	**140KBE2305+L**	164	221	2.5	1	0.42	2.4	1.6	1.6	18.6
	230	140	110	3	1	820	1 550	84 000	158 000	**140KBE2302+L**	165	222	2.5	1	0.35	2.9	1.9	1.9	20.7
	240	132	106	4	1.5	685	1 360	70 000	139 000	**140KBE2401+L**	170	230	3	1.5	0.44	2.3	1.5	1.5	22.7
	250	100	80.5	4	1	630	970	64 500	99 000	**140KBE042+L**	169	240	3	1	0.39	2.6	1.7	1.7	18.1
	250	102	82.5	4	1	670	1 030	68 000	105 000	**HR140KBE42+L**	168	240	3	1	0.44	2.3	1.6	1.5	18.9
	250	153	110	4	1	910	1 700	92 500	173 000	**140KBE2501+L**	174	242	3	1	0.55	1.8	1.2	1.2	29.8
	250	153	125.5	4	1	1 040	1 830	106 000	187 000	**HR140KBE52X+L**	170	242	3	1	0.44	2.3	1.6	1.5	29.6
	270	120	95	4	3	870	1 440	88 500	147 000	**140KBE2701+L**	174	253	2.5	2.5	0.33	3.0	2.0	2.0	29.3
	300	145	115.5	5	1.5	1 030	1 480	105 000	151 000	**140KBE43+L**	180	284	4	1.5	0.36	2.8	1.9	1.8	42.6
142.875 5.6250	200.025 7.8750	87.315 3.4376	73.025 2.8750	8.0	0.8	390	915	39 500	93 500	**∗ 48684 / 48620D+L**	167	195	8.0	0.8	0.34	3.0	2.0	2.0	7.9
	236.538 9.3125	131.762 5.1875	106.362 4.1875	3.5	1.5	685	1 360	70 000	139 000	**∗ 82562 / 82932D+L**	171	228	3.5	1.5	0.44	2.3	1.5	1.5	21.2
	241.300 9.5000	131.762 5.1875	106.362 4.1875	3.5	1.5	685	1 360	70 000	139 000	**∗ 82562 / 82951D+L**	171	230	3.5	1.5	0.44	2.3	1.5	1.5	22.4
145	225	70	56	3	1	395	685	40 000	69 500	**145KBE2201+L**	168	217	2	1	0.35	2.9	1.9	1.9	9.4
146.050 5.7500	193.675 7.6250	65.085 2.5624	53.975 2.1250	1.5	0.8	285	695	29 100	70 500	**∗ 36690 / 36620D+L**	161	188	1.5	0.8	0.37	2.7	1.8	1.8	5.0
	236.538 9.3125	131.762 5.1875	106.362 4.1875	3.5	1.5	775	1 440	79 000	147 000	**∗ HM231140 / HM231111D+L**	171	227	3.5	1.5	0.32	3.2	2.1	2.1	19.6
	236.538 9.3125	131.762 5.1875	106.362 4.1875	3.5	1.5	685	1 360	70 000	139 000	**∗ 82576 / 82932D+L**	173	228	3.5	1.5	0.44	2.3	1.5	1.5	20.4

Note ∗ Bearings marked ∗ are inch design.

KBE (TDO) Type, Double Cup, Single Cones

Bore Diameter 146.050 – 150 mm

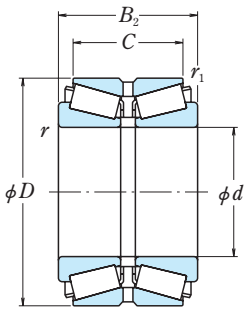

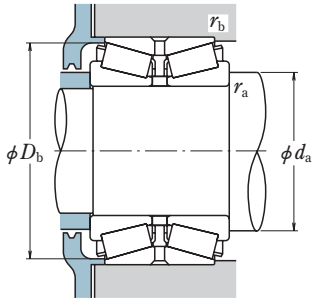

Dynamic Equivalent Load

$P = XF_r + YF_a$

$F_a/F_r \leqq e$		$F_a/F_r > e$	
X	Y	X	Y
1	Y_3	0.67	Y_2

Static Equivalent Load

$P_0 = F_r + Y_0 F_a$

The values of e, Y_2, Y_3, and Y_0 are given in the table below.

Boundary Dimensions (mm/inch)						Basic Load Ratings (kN)		{kgf}		Bearing Numbers	Abutment and Fillet Dimensions (mm)				Constant	Axial Load Factors			Mass (kg)
d	D	B_2	C	r min.	r_1 min.	C_r	C_{0r}	C_r	C_{0r}		d_a	D_b	r_a max.	r_b max.	e	Y_2	Y_3	Y_0	approx.
146.050 5.7500	241.300 9.5000	131.762 5.1875	106.362 4.1875	3.5	1.5	775	1 440	79 000	147 000	**∗ HM231140 / HM231116D+L**	171	230	3.5	1.5	0.32	3.2	2.1	2.1	21.2
	244.475 9.6250	107.950 4.2500	79.375 3.1250	3.5	1.5	570	1 020	58 000	104 000	**∗ 81575 / 81963D+L**	175	235	3.5	1.5	0.35	2.9	1.9	1.9	17.9
	254.000 10.0000	149.225 5.8750	111.125 4.3750	7.0	1.5	885	1 660	90 000	169 000	**∗ 99575 / 99102D+L**	182	245	7.0	1.5	0.41	2.5	1.7	1.6	28
	268.288 10.5625	160.338 6.3125	125.412 4.9375	6.4	1.5	1 040	1 960	106 000	200 000	**∗ EE107057 / 107105D+L**	184	256	6.4	1.5	0.39	2.6	1.7	1.7	36.5
	304.800 12.0000	135.733 5.3438	97.633 3.8438	3.3	1.5	1 090	1 560	111 000	159 000	**∗ EE750576 / 751204D+L**	180	285	3.3	1.5	0.33	3.0	2.0	2.0	42.1
	307.975 12.1250	200.025 7.8750	155.575 6.1250	9.7	2.3	1 510	2 380	154 000	243 000	**∗ HH234040 / HH234011D+L**	194	294	9.7	2.3	0.33	3.1	2.1	2.0	61.6
149.225 5.8750	236.538 9.3125	131.762 5.1875	106.362 4.1875	6.4	1.5	775	1 440	79 000	147 000	**∗ HM231148 / HM231111D+L**	176	227	6.4	1.5	0.32	3.2	2.1	2.1	18.8
	236.538 9.3125	131.762 5.1875	106.362 4.1875	3.5	1.5	775	1 440	79 000	147 000	**∗ HM231149 / HM231111D+L**	173	227	3.5	1.5	0.32	3.2	2.1	2.1	18.8
	236.538 9.3125	131.762 5.1875	106.362 4.1875	3.5	1.5	685	1 360	70 000	139 000	**∗ 82587 / 82932D+L**	175	228	3.5	1.5	0.44	2.3	1.5	1.5	19.7
	241.300 9.5000	131.762 5.1875	106.362 4.1875	3.5	1.5	775	1 440	79 000	147 000	**∗ HM231149 / HM231116D+L**	173	230	3.5	1.5	0.32	3.2	2.1	2.1	20.4
	241.300 9.5000	131.762 5.1875	106.362 4.1875	3.5	1.5	685	1 360	70 000	139 000	**∗ 82587 / 82951D+L**	175	230	3.5	1.5	0.44	2.3	1.5	1.5	21
	254.000 10.0000	149.225 5.8750	111.125 4.3750	7.0	1.5	885	1 660	90 000	169 000	**∗ 99587 / 99102D+L**	184	245	7.0	1.5	0.41	2.5	1.7	1.6	27.4
150	225	56	50	3	1	300	545	30 500	55 500	**150KBE30+L**	170	216	2.5	1	0.35	2.9	1.9	1.9	7.4
	225	70	56	3	1	395	685	40 000	69 500	**150KBE030+L**	170	217	2.5	1	0.35	2.9	1.9	1.9	8.7
	245	108	80	4	1	570	1 020	58 000	104 000	**150KBE2401+L**	177	235	3	1	0.35	2.9	1.9	1.9	17.1
	250	80	71	3	1	510	810	52 000	82 500	**150KBE31+L**	176	242	2.5	1	0.40	2.5	1.7	1.6	14.2
	250	100	80	3	1	630	1 090	64 500	111 000	**150KBE031+L**	177	241	2.5	1	0.39	2.6	1.7	1.7	17.8
	250	115	95	3	1	745	1 320	76 000	134 000	**150KBE2502+L**	177	241	2.5	1	0.37	2.7	1.8	1.8	20.9
	250	138	112	4	0.6	865	1 630	88 500	167 000	**150KBE2503+L**	181	244	3	0.6	0.41	2.4	1.6	1.6	25.1
	250	140	115	4	0.6	865	1 630	88 500	167 000	**150KBE2504+L**	181	244	3	0.6	0.41	2.4	1.6	1.6	25.4
	250	142	112	4	1.5	885	1 660	90 000	169 000	**150KBE2505+L**	181	243	3	1.5	0.41	2.5	1.7	1.6	25

Note ∗ Bearings marked ∗ are inch design.

KBE (TDO) Type, Double Cup, Single Cones

Bore Diameter 150 – 159 mm

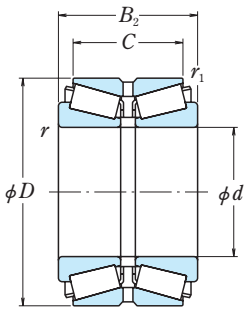

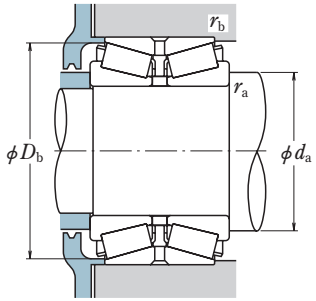

Dynamic Equivalent Load

$P = XF_r + YF_a$

$F_a/F_r \leqq e$		$F_a/F_r > e$	
X	Y	X	Y
1	Y_3	0.67	Y_2

Static Equivalent Load

$P_0 = F_r + Y_0 F_a$

The values of e, Y_2, Y_3, and Y_0 are given in the table below.

Boundary Dimensions (mm/inch)						Basic Load Ratings (kN)		{kgf}		Bearing Numbers	Abutment and Fillet Dimensions (mm)				Constant	Axial Load Factors			Mass (kg)
d	D	B_2	C	r min.	r_1 min.	C_r	C_{0r}	C_r	C_{0r}		d_a	D_b	r_a max.	r_b max.	e	Y_2	Y_3	Y_0	approx.
150	260	150	115	4	1	815	1 520	83 000	155 000	**150KBE2601+L**	181	248	3	1	0.43	2.3	1.6	1.5	30
	270	108	76	4	1	740	1 140	75 500	116 000	**150KBE2702+L**	180	258	3	1	0.43	2.3	1.6	1.5	22.7
	270	109	87	4	1	830	1 330	84 500	135 000	**HR150KBE42+L**	180	258	3	1	0.44	2.3	1.6	1.5	24.3
	270	162	128	4	1	1 210	2 150	123 000	219 000	**HR150KBE2701+L**	182	260	3	1	0.44	2.3	1.6	1.5	39.7
	270	164	130	4	1	1 210	2 150	123 000	219 000	**HR150KBE52X+L**	182	260	3	1	0.44	2.3	1.6	1.5	37.3
	320	154	120	5	1.5	1 420	2 130	145 000	217 000	HR150KBE43+L	191	304	4	1.5	0.35	2.9	2.0	1.9	53.4
150.812 5.9375	244.475 9.6250	107.950 4.2500	79.375 3.1250	3.5	1.5	570	1 020	58 000	104 000	**∗ 81593 / 81963D+L**	177	235	3.5	1.5	0.35	2.9	1.9	1.9	16.9
152.400 6.0000	222.250 8.7500	100.010 3.9374	76.200 3.0000	8.0	0.8	490	1 060	50 000	108 000	**∗ M231648 / M231610D+L**	179	215	8.0	0.8	0.33	3.0	2.0	2.0	11.9
	222.250 8.7500	100.010 3.9374	76.200 3.0000	3.5	0.8	490	1 060	50 000	108 000	**∗ M231649 / M231610D+L**	175	215	3.5	0.8	0.33	3.0	2.0	2.0	12
	222.250 8.7500	106.360 4.1874	82.550 3.2500	3.5	0.8	490	1 060	50 000	108 000	**∗ M231649 / M231611D+L**	175	215	3.5	0.8	0.33	3.0	2.0	2.0	12.5
	244.475 9.6250	107.950 4.2500	79.375 3.1250	3.5	1.5	570	1 020	58 000	104 000	**∗ 81600 / 81963D+L**	178	235	3.5	1.5	0.35	2.9	1.9	1.9	16.6
	254.000 10.0000	149.225 5.8750	111.125 4.3750	7.0	1.5	885	1 660	90 000	169 000	**∗ 99600 / 99102D+L**	185	245	7.0	1.5	0.41	2.5	1.7	1.6	26.5
	254.000 10.0000	152.400 6.0000	114.300 4.5000	7.0	1.5	885	1 660	90 000	169 000	**∗ 99600 / 99101D+L**	185	245	7.0	1.5	0.41	2.5	1.7	1.6	27.1
	268.288 10.5625	160.338 6.3125	125.412 4.9375	6.4	1.5	1 040	1 960	106 000	200 000	**∗ EE107060 / 107105D+L**	187	256	6.4	1.5	0.39	2.6	1.7	1.7	34.6
	307.975 12.1250	200.025 7.8750	146.050 5.7500	9.7	2.3	1 280	2 150	130 000	219 000	**∗ EE450601 / 451215D+L**	199	289	9.7	2.3	0.33	3.1	2.1	2.0	60.1
	307.975 12.1250	200.025 7.8750	155.575 6.1250	9.7	2.3	1 510	2 380	154 000	243 000	**∗ HH234048 / HH234011D+L**	197	294	9.7	2.3	0.33	3.1	2.1	2.0	59.3
158.750 6.2500	225.425 8.8750	85.725 3.3750	69.850 2.7500	3.5	0.8	410	1 080	42 000	110 000	**∗ 46780 / 46720D+L**	183	219	3.5	0.8	0.38	2.6	1.8	1.7	11.1
	288.925 11.3750	142.875 5.6250	111.125 4.3750	7.0	1.5	1 050	1 870	107 000	191 000	**∗ 158KBE2851+L**	201	278	7.0	1.5	0.32	3.2	2.1	2.1	37.3
159	230	80	56	2.5	0.6	400	755	40 500	77 000	**159KBE2301+L**	180	224	2	0.6	0.52	1.9	1.3	1.3	9.4
	290	155	117	4	1	1 060	1 900	108 000	194 000	**159KBE2901+L**	198	280	3	1	0.55	1.8	1.2	1.2	40.3

Note ∗ Bearings marked ∗ are inch design.

KBE (TDO) Type, Double Cup, Single Cones

Bore Diameter 159.951 – 165.100 mm

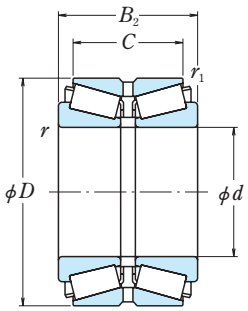

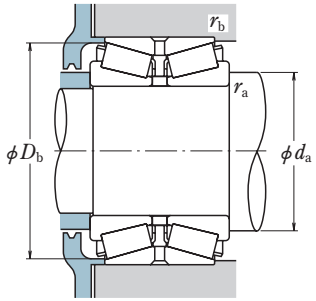

Dynamic Equivalent Load

$P = XF_r + YF_a$

$F_a/F_r \leqq e$		$F_a/F_r > e$	
X	Y	X	Y
1	Y_3	0.67	Y_2

Static Equivalent Load

$P_0 = F_r + Y_0 F_a$

The values of e, Y_2, Y_3, and Y_0 are given in the table below.

Boundary Dimensions (mm/inch)						Basic Load Ratings (kN)		{kgf}		Bearing Numbers	Abutment and Fillet Dimensions (mm)				Constant	Axial Load Factors			Mass (kg)
d	D	B_2	C	r min.	r_1 min.	C_r	C_{0r}	C_r	C_{0r}		d_a	D_b	r_a max.	r_b max.	e	Y_2	Y_3	Y_0	approx.
159.951 6.2973	244.475 9.6250	107.950 4.2500	79.375 3.1250	3.5	1.5	570	1 020	58 000	104 000	∗ **81629 / 81963D+L**	182	235	3.5	1.5	0.35	2.9	1.9	1.9	15.1
160	220	90	71	2.5	0.6	430	910	43 500	93 000	**160KBE2201+L**	178	215	2	0.6	0.35	2.9	1.9	1.9	9.1
	240	60	53	3	1	355	580	36 000	59 500	**160KBE30+L**	181	232	2.5	1	0.37	2.7	1.8	1.8	8.5
	240	75	60	3	1	395	710	40 500	72 500	**160KBE030+L**	182	232	2.5	1	0.40	2.5	1.7	1.6	10.5
	240	110	90	3	1	650	1 290	66 500	132 000	**160KBE2401+L**	183	233	2.5	1	0.38	2.6	1.8	1.7	16.2
	262	140	120	3	1	865	1 780	88 500	181 000	**160KBE2602+L**	191	255	2.5	1	0.44	2.3	1.5	1.5	28.3
	270	86	76	3	1	540	885	55 000	90 000	**160KBE31+L**	189	259	2.5	1	0.40	2.5	1.7	1.6	18.6
	270	108	86	3	1	775	1 380	79 000	140 000	**160KBE031+L**	190	260	2.5	1	0.39	2.6	1.7	1.7	23.1
	270	140	110	3	1	990	1 880	101 000	192 000	**160KBE2705+L**	191	261	2.5	1	0.39	2.6	1.7	1.7	30.1
	270	140	120	3	1	990	1 880	101 000	192 000	**160KBE2701+L**	191	262	2.5	1	0.39	2.6	1.7	1.7	30.6
	270	149	120	3	1	990	1 880	101 000	192 000	**160KBE2703+L**	191	261	2.5	1	0.39	2.6	1.7	1.7	31.7
	280	140	120	3	1	990	1 880	101 000	192 000	**160KBE2802+L**	191	267	2.5	1	0.39	2.6	1.7	1.7	34.7
	280	150	125	4	1	1 100	2 020	112 000	206 000	**160KBE2801+L**	194	270	3	1	0.32	3.2	2.1	2.1	35.9
	290	115	91	4	1	800	1 220	82 000	124 000	**160KBE42+L**	195	279	3	1	0.43	2.3	1.6	1.5	28.2
	290	178	144	4	1	1 360	2 440	139 000	249 000	**HR160KBE52X+L**	195	280	3	1	0.44	2.3	1.6	1.5	47.3
	340	160	126	5	1.5	1 310	1 920	134 000	196 000	**160KBE43+L**	205	323	4	1.5	0.36	2.8	1.9	1.8	60.4
160.325 6.3120	288.925 11.3750	142.875 5.6250	111.125 4.3750	7.0	1.5	1 050	1 870	107 000	191 000	∗ **HM237532 / HM237510D+L**	202	278	7.0	1.5	0.32	3.2	2.1	2.1	36.8
165	225	95	70	3	0.6	410	1 080	42 000	110 000	**165KBE2201+L**	185	219	2.5	0.6	0.38	2.6	1.8	1.7	10.6
	290	150	125	4	1	1 140	2 130	116 000	217 000	**165KBE2901+L**	199	278	3	1	0.33	3.1	2.1	2.0	39.5
165.100 6.5000	215.900 8.5000	58.740 2.3126	47.625 1.8750	1.5	0.8	263	590	26 800	60 000	∗ **L433749 / L433710D+L**	180	210	1.5	0.8	0.36	2.8	1.9	1.8	5.3
	225.425 8.8750	85.725 3.3750	69.850 2.7500	3.5	0.8	410	1 080	42 000	110 000	∗ **46790 / 46720D+L**	186	219	3.5	0.8	0.38	2.6	1.8	1.7	9.9
	247.650 9.7500	103.188 4.0625	84.138 3.3125	3.5	0.8	595	1 410	60 500	143 000	∗ **67780 / 67720D+L**	194	241	3.5	0.8	0.44	2.3	1.5	1.5	17.2
	254.000 10.0000	101.600 4.0000	76.200 3.0000	4.8	1.5	635	1 190	64 500	122 000	∗ **M235145 / M235113D+L**	191	244	4.8	1.5	0.32	3.2	2.1	2.1	16.4
	288.925 11.3750	142.875 5.6250	111.125 4.3750	7.0	1.5	1 050	1 870	107 000	191 000	∗ **HM237535 / HM237510D+L**	204	278	7.0	1.5	0.32	3.2	2.1	2.1	35.4

Note ∗ Bearings marked ∗ are inch design.

KBE (TDO) Type, Double Cup, Single Cones

Bore Diameter 165.100 – 171.450 mm

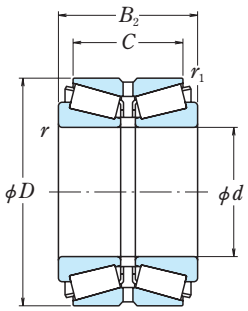

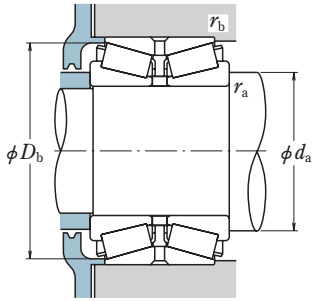

Dynamic Equivalent Load

$P = XF_r + YF_a$

$F_a/F_r \leqq e$		$F_a/F_r > e$	
X	Y	X	Y
1	Y_3	0.67	Y_2

Static Equivalent Load

$P_0 = F_r + Y_0 F_a$

The values of e, Y_2, Y_3, and Y_0 are given in the table below.

Boundary Dimensions (mm/inch)						Basic Load Ratings (kN)		{kgf}		Bearing Numbers	Abutment and Fillet Dimensions (mm)				Constant	Axial Load Factors			Mass (kg)
d	D	B_2	C	r min.	r_1 min.	C_r	C_{0r}	C_r	C_{0r}		d_a	D_b	r_a max.	r_b max.	e	Y_2	Y_3	Y_0	approx.
165.100 6.5000	288.925 11.3750	142.875 5.6250	111.125 4.3750	7.0	1.5	930	1 880	95 000	192 000	∗ **94649 / 94114D+L**	206	277	7.0	1.5	0.47	2.1	1.4	1.4	37.4
	288.925 11.3750	142.875 5.6250	111.125 4.3750	7.0	1.5	930	1 880	95 000	192 000	∗ **94650 / 94114D+L**	206	277	7.0	1.5	0.47	2.1	1.4	1.4	37.4
	288.925 11.3750	146.050 5.7500	114.300 4.5000	7.0	1.5	1 050	1 870	107 000	191 000	∗ **HM237535 / HM237511D+L**	204	278	7.0	1.5	0.32	3.2	2.1	2.1	36
	298.450 11.7500	142.875 5.6250	111.125 4.3750	7.0	1.5	930	1 880	95 000	192 000	∗ **94649 / 94118D+L**	206	282	7.0	1.5	0.47	2.1	1.4	1.4	41.3
	347.662 13.6875	146.050 5.7500	107.950 4.2500	9.7	1.5	1 310	2 010	134 000	205 000	∗ **EE618065 / 618136D+L**	214	326	9.7	1.5	0.33	3.0	2.0	2.0	58.7
	368.300 14.5000	193.675 7.6250	136.525 5.3750	9.7	1.5	1 500	2 690	153 000	274 000	∗ **EE420651 / 421451D+L**	234	353	9.7	1.5	0.42	2.4	1.6	1.6	93
168.275 6.6250	247.650 9.7500	103.188 4.0625	84.138 3.3125	3.5	0.8	595	1 410	60 500	143 000	∗ **67782 / 67720D+L**	195	241	3.5	0.8	0.44	2.3	1.5	1.5	16.5
170	250	85	65	3	1	435	845	44 500	86 000	**170KBE2501+L**	193	242	2	0.8	0.44	2.3	1.5	1.5	12.3
	260	67	60	3	1	400	700	40 500	71 000	**170KBE30+L**	194	251	2.5	1	0.40	2.5	1.7	1.6	11.8
	260	84	67	3	1	575	1 030	58 500	105 000	**170KBE030+L**	194	251	2.5	1	0.39	2.6	1.7	1.7	14.4
	280	88	78	3	1	630	1 040	64 000	106 000	**170KBE31+L**	198	270	2.5	1	0.39	2.6	1.7	1.7	19.7
	280	110	88	3	1	820	1 450	83 500	148 000	**170KBE031+L**	200	271	2.5	1	0.39	2.6	1.7	1.7	24.2
	280	110	90	3	1	820	1 450	83 500	148 000	**170KBE2801+L**	200	271	2.5	1	0.39	2.6	1.7	1.7	24.3
	280	123	100	3	1	810	1 660	82 500	170 000	**170KBE2803+L**	195	262	2	0.8	0.38	2.6	1.8	1.7	28.5
	280	150	130	3	1	1 110	2 160	113 000	220 000	**170KBE2802+L**	200	271	2.5	1	0.39	2.6	1.7	1.7	34.6
	310	122	94	5	1.5	900	1 380	92 000	141 000	170KBE042+L	207	297	4	1.5	0.43	2.3	1.6	1.5	34.1
	310	125	97	5	1.5	900	1 380	92 000	141 000	**170KBE42+L**	207	297	4	1.5	0.43	2.3	1.6	1.5	34.9
	310	192	152	5	1.5	1 590	2 910	162 000	297 000	**HR170KBE52X+L**	209	300	4	1.5	0.44	2.3	1.6	1.5	57.3
	320	180	140	5	1.5	1 410	2 510	144 000	256 000	**170KBE3201+L**	215	309	4	1.5	0.43	2.3	1.6	1.5	59.8
170.000 6.6929	254.000 10.0000	101.600 4.0000	76.200 3.0000	4.8	1.5	635	1 190	64 500	122 000	∗ **M235149 / M235113D+L**	194	244	4.8	1.5	0.32	3.2	2.1	2.1	15.4
171.450 6.7500	288.925 11.3750	142.875 5.6250	111.125 4.3750	7.0	1.5	930	1 880	95 000	192 000	∗ **94675 / 94114D+L**	209	277	7.0	1.5	0.47	2.1	1.4	1.4	35.5
	298.450 11.7500	142.875 5.6250	111.125 4.3750	7.0	1.5	930	1 880	95 000	192 000	∗ **94675 / 94118D+L**	209	282	7.0	1.5	0.47	2.1	1.4	1.4	39.5

Note ∗ Bearings marked ∗ are inch design.

KBE (TDO) Type, Double Cup, Single Cones

Bore Diameter 174.625 – 177.800 mm

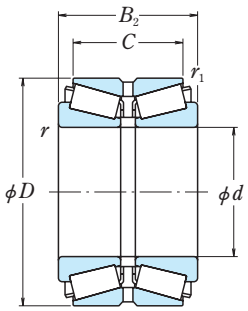

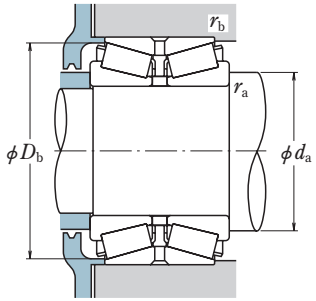

Dynamic Equivalent Load

$P = XF_r + YF_a$

$F_a/F_r \leqq e$		$F_a/F_r > e$	
X	Y	X	Y
1	Y_3	0.67	Y_2

Static Equivalent Load

$P_0 = F_r + Y_0 F_a$

The values of e, Y_2, Y_3, and Y_0 are given in the table below.

Boundary Dimensions (mm/inch)						Basic Load Ratings (kN)		{kgf}		Bearing Numbers	Abutment and Fillet Dimensions (mm)				Constant	Axial Load Factors			Mass (kg)
d	D	B_2	C	r min.	r_1 min.	C_r	C_{0r}	C_r	C_{0r}		d_a	D_b	r_a max.	r_b max.	e	Y_2	Y_3	Y_0	approx.
174.625 6.8750	247.650 9.7500	103.188 4.0625	84.138 3.3125	3.5	0.8	595	1 410	60 500	143 000	**∗ 67787 / 67720D+L**	199	241	3.5	0.8	0.44	2.3	1.5	1.5	15.1
	288.925 11.3750	142.875 5.6250	111.125 4.3750	7.0	1.5	1 050	1 870	107 000	191 000	**∗ HM237542 / HM237510D+L**	209	278	7.0	1.5	0.32	3.2	2.1	2.1	32.7
	288.925 11.3750	146.050 5.7500	114.300 4.5000	7.0	1.5	1 050	1 870	107 000	191 000	**∗ HM237542 / HM237511D+L**	209	278	7.0	1.5	0.32	3.2	2.1	2.1	33.1
175	320	180	140	5	1.5	1 410	2 510	144 000	256 000	**175KBE3201+L**	216	309	4	1.5	0.43	2.3	1.6	1.5	57.7
177.800 7.0000	227.012 8.9375	66.672 2.6249	52.388 2.0625	1.5	0.8	299	785	30 500	80 000	**∗ 36990 / 36920D+L**	193	222	1.5	0.8	0.44	2.3	1.5	1.5	6.4
	247.650 9.7500	103.188 4.0625	84.138 3.3125	3.5	0.8	595	1 410	60 500	143 000	**∗ 67790 / 67720D+L**	200	241	3.5	0.8	0.44	2.3	1.5	1.5	14.4
	247.650 9.7500	103.188 4.0625	84.138 3.3125	10.4	0.8	595	1 410	60 500	143 000	**∗ 67791 / 67720D+L**	207	241	10.4	0.8	0.44	2.3	1.5	1.5	14.2
	269.875 10.6250	119.062 4.6875	93.662 3.6875	3.5	1.5	795	1 750	81 000	179 000	**∗ M238840 / M238810D+L**	208	262	3.5	1.5	0.35	2.9	1.9	1.9	23.2
	285.750 11.2500	136.525 5.3750	92.075 3.6250	6.4	1.5	775	1 450	79 000	148 000	**∗ EE91702 / 91113XD+L**	210	274	6.4	1.5	0.43	2.3	1.6	1.5	28.7
	288.925 11.3750	142.875 5.6250	111.125 4.3750	7.0	1.5	1 050	1 870	107 000	191 000	**∗ HM237545 / HM237510D+L**	210	278	7.0	1.5	0.32	3.2	2.1	2.1	31.7
	288.925 11.3750	142.875 5.6250	111.125 4.3750	7.0	1.5	930	1 880	95 000	192 000	**∗ 94700 / 94114D+L**	213	277	7.0	1.5	0.47	2.1	1.4	1.4	33.6
	288.925 11.3750	146.050 5.7500	114.300 4.5000	7.0	1.5	1 050	1 870	107 000	191 000	**∗ HM237545 / HM237511D+L**	210	278	7.0	1.5	0.32	3.2	2.1	2.1	32.2
	288.925 11.3750	146.050 5.7500	114.300 4.5000	7.0	1.5	1 050	1 870	107 000	191 000	**∗ HM237545 / HM237511XD+L**	210	278	7.0	1.5	0.32	3.2	2.1	2.1	32.7
	298.450 11.7500	142.875 5.6250	111.125 4.3750	7.0	1.5	930	1 880	95 000	192 000	**∗ 94700 / 94118D+L**	213	282	7.0	1.5	0.47	2.1	1.4	1.4	37.5
	320.675 12.6250	185.738 7.3125	138.112 5.4375	3.5	1.5	1 350	2 600	138 000	265 000	**∗ EE222070 / 222127D+L**	218	308	3.5	1.5	0.40	2.5	1.7	1.7	59.6

Note ∗ Bearings marked ∗ are inch design.

KBE (TDO) Type, Double Cup, Single Cones

Bore Diameter 177.800 – 187.325 mm

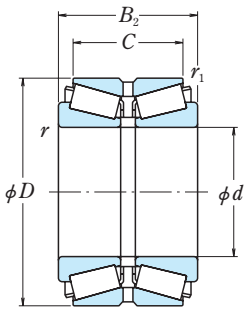

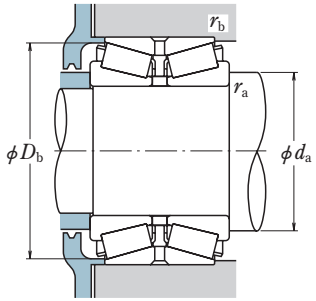

Dynamic Equivalent Load

$P = XF_r + YF_a$

$F_a/F_r \leqq e$		$F_a/F_r > e$	
X	Y	X	Y
1	Y_3	0.67	Y_2

Static Equivalent Load

$P_0 = F_r + Y_0 F_a$

The values of e, Y_2, Y_3, and Y_0 are given in the table below.

Boundary Dimensions (mm/inch)						Basic Load Ratings (kN)		{kgf}		Bearing Numbers	Abutment and Fillet Dimensions (mm)				Constant	Axial Load Factors			Mass (kg)
d	D	B_2	C	r min.	r_1 min.	C_r	C_{0r}	C_r	C_{0r}		d_a	D_b	r_a max.	r_b max.	e	Y_2	Y_3	Y_0	approx.
177.800 7.0000	320.675 12.6250	185.738 7.3125	138.112 5.4375	3.5	1.5	1 470	2 530	150 000	258 000	**∗H239640 / H239612D+L**	215	309	3.5	1.5	0.32	3.2	2.1	2.1	55.6
	320.675 12.6250	185.738 7.3125	138.112 5.4375	3.5	1.5	1 270	2 420	130 000	246 000	**∗ 177KBE3251+L**	218	309	3.5	1.5	0.49	2.1	1.4	1.4	58.9
	368.300 14.5000	193.675 7.6250	136.525 5.3750	12.7	1.5	1 500	2 690	153 000	274 000	**∗ EE420701 / 421451D+L**	243	353	12.7	1.5	0.42	2.4	1.6	1.6	87.6
179.972 7.0855	317.500 12.5000	146.050 5.7500	111.125 4.3750	3.5	1.5	990	2 120	101 000	216 000	**∗ 93708 / 93127D+L**	224	306	3.5	1.5	0.52	1.9	1.3	1.3	46.9
	319.976 12.5975	146.050 5.7500	111.125 4.3750	3.5	1.5	990	2 120	101 000	216 000	**∗ 93708 / 93128XD+L**	224	307	3.5	1.5	0.52	1.9	1.3	1.3	49.1
180	280 280 290	74 93 150	66 74 120	3 3 3	1 1 1	455 655 1 140	810 1 220 2 260	46 500 67 000 116 000	82 500 124 000 230 000	**180KBE30+L** **180KBE030+L** **180KBE2902+L**	207 207 210	269 269 280	2.5 2.5 2.5	1 1 1	0.40 0.35 0.40	2.5 2.9 2.5	1.7 1.9 1.7	1.6 1.9 1.6	15.4 19.5 35.7
	300 300 320	96 120 127	85 96 99	4 4 5	1.5 1.5 1.5	725 940 895	1 210 1 690 1 390	73 500 96 000 91 500	123 000 173 000 141 000	**180KBE31+L** **180KBE031+L** **180KBE42+L**	211 214 215	288 290 306	3 3 4	1.5 1.5 1.5	0.39 0.39 0.44	2.6 2.6 2.3	1.7 1.7 1.5	1.7 1.7 1.5	24.8 31.1 36.5
	320 340	192 180	152 140	5 5	1.5 1.5	1 640 1 410	3 050 2 510	168 000 144 000	315 000 256 000	**HR180KBE52X+L** **180KBE3401+L**	219 220	310 319	4 4	1.5 1.5	0.45 0.43	2.2 2.3	1.5 1.6	1.5 1.5	59.2 68.1
184.150 7.2500	236.538 9.3125	55.560 2.1874	41.275 1.6250	1.5	0.8	265	580	27 000	59 500	**∗ LL537649 / LL537610D+L**	199	230	1.5	0.8	0.37	2.7	1.8	1.8	5.5
	266.700 10.5000	103.188 4.0625	84.138 3.3125	3.5	0.8	590	1 440	60 000	146 000	**∗ 67883 / 67820D+L**	212	260	3.5	0.8	0.48	2.1	1.4	1.4	18.4
	288.925 11.3750	142.875 5.6250	111.125 4.3750	7.0	1.5	1 050	1 870	107 000	191 000	**∗ 184KBE2851+L**	214	278	7.0	1.5	0.32	3.2	2.1	2.1	29.6
	295.275 11.6250	142.875 5.6250	111.125 4.3750	7.0	1.5	1 050	1 870	107 000	191 000	**∗ 184KBE2951+L**	214	282	7.0	1.5	0.32	3.2	2.1	2.1	32.2
187.325 7.3750	266.700 10.5000	103.188 4.0625	84.138 3.3125	3.5	0.8	590	1 440	60 000	146 000	**∗ 67884 / 67820D+L**	214	260	3.5	0.8	0.48	2.1	1.4	1.4	17.7
	269.875 10.6250	119.063 4.6875	93.662 3.6875	3.5	1.5	795	1 750	81 000	179 000	**∗ M238849 / M238810D+L**	212	262	3.5	1.5	0.35	2.9	1.9	1.9	20.7
	320.675 12.6250	185.738 7.3125	138.112 5.4375	5.5	1.5	1 470	2 530	150 000	258 000	**∗ H239649 / H239612D+L**	222	309	5.5	1.5	0.32	3.2	2.1	2.1	51.6

Note ∗ Bearings marked ∗ are inch design.

KBE (TDO) Type, Double Cup, Single Cones

Bore Diameter 190 – 200 mm

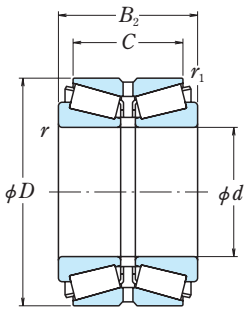

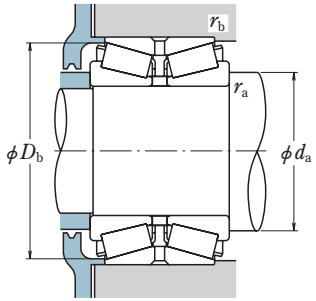

Dynamic Equivalent Load

$P = XF_r + YF_a$

$F_a/F_r \leqq e$		$F_a/F_r > e$	
X	Y	X	Y
1	Y_3	0.67	Y_2

Static Equivalent Load

$P_0 = F_r + Y_0 F_a$

The values of e, Y_2, Y_3, and Y_0 are given in the table below.

Boundary Dimensions (mm/inch)						Basic Load Ratings (kN)		{kgf}		Bearing Numbers	Abutment and Fillet Dimensions (mm)				Constant	Axial Load Factors			Mass (kg)
d	D	B_2	C	r min.	r_1 min.	C_r	C_{0r}	C_r	C_{0r}		d_a	D_b	r_a max.	r_b max.	e	Y_2	Y_3	Y_0	approx.
190	260	94	76	2.5	0.6	580	1 290	59 000	131 000	**190KBE2601+L**	210	254	2	0.6	0.39	2.6	1.7	1.7	13.5
	290	75	67	3	1	490	845	50 000	86 500	**190KBE30+L**	217	281	2.5	1	0.39	2.6	1.7	1.7	16.2
	290	94	75	3	1	670	1 230	68 000	126 000	**190KBE030+L**	217	281	2.5	1	0.40	2.5	1.7	1.6	20.1
	320	104	92	4	1.5	800	1 380	81 500	141 000	**190KBE31+L**	224	307	3	1.5	0.40	2.5	1.7	1.6	30.9
	320	130	104	4	1.5	1 070	1 960	109 000	200 000	**190KBE031+L**	225	307	3	1.5	0.39	2.6	1.7	1.7	39
	320	171	134	4	1	1 330	2 530	136 000	258 000	**190KBE3201+L**	225	308	3	1	0.38	2.7	1.8	1.8	50.1
	340	133	105	5	1.5	990	1 580	101 000	161 000	**190KBE42+L**	230	326	4	1.5	0.40	2.5	1.7	1.6	43.9
	340	204	160	5	1.5	1 910	3 550	194 000	360 000	**HR190KBE52X+L**	230	329	4	1.5	0.44	2.3	1.6	1.5	70.8
190.500 7.5000	266.700 10.5000	103.188 4.0625	84.138 3.3125	3.5	0.8	590	1 440	60 000	146 000	**∗ 67885 / 67820D+L**	215	260	3.5	0.8	0.48	2.1	1.4	1.4	16.9
	282.575 11.1250	107.950 4.2500	79.375 3.1250	3.5	1.5	615	1 200	62 500	123 000	**∗ 87750 / 87112D+L**	217	273	3.5	1.5	0.42	2.4	1.6	1.6	20.2
	317.500 12.5000	146.050 5.7500	111.125 4.3750	4.3	1.5	990	2 120	101 000	216 000	**∗ 93750 / 93127D+L**	231	306	4.3	1.5	0.52	1.9	1.3	1.3	43.7
196.850 7.7500	254.000 10.0000	61.910 2.4374	47.625 1.8750	1.5	0.8	305	715	31 000	72 500	**∗ L540049 / L540010D+L**	213	247	1.5	0.8	0.40	2.5	1.7	1.7	7.4
	317.500 12.5000	146.050 5.7500	111.125 4.3750	4.3	1.5	990	2 120	101 000	216 000	**∗ 93775 / 93127D+L**	234	306	4.3	1.5	0.52	1.9	1.3	1.3	41.5
200	290	121.45	88	6	1	765	1 720	78 000	175 000	**200KBE2901+L**	228	279	4	0.8	0.40	2.5	1.7	1.6	23.7
	310	82	73	3	1	585	1 070	59 500	109 000	**200KBE30+L**	229	299	2.5	1	0.40	2.5	1.7	1.6	21.2
	310	103	82	3	1	775	1 400	79 000	143 000	**200KBE030+L**	228	300	2.5	1	0.43	2.3	1.6	1.5	25.1
	310	152	123	3	1	1 300	2 740	133 000	279 000	**HR200KBE3101+L**	231	302	2.5	1	0.43	2.3	1.6	1.5	40.1
	320	146	110	5	1.5	990	2 120	101 000	216 000	**200KBE3201+L**	236	307	4	1.5	0.52	1.9	1.3	1.3	41.6
	330	180	140	5	1.5	1 390	2 730	142 000	279 000	**200KBE3301+L**	237	319	4	1.5	0.42	2.4	1.6	1.6	54.4
	340	112	100	4	1.5	940	1 670	96 000	170 000	**200KBE31+L**	237	326	3	1.5	0.40	2.5	1.7	1.6	38.8
	340	140	112	4	1.5	1 260	2 250	128 000	229 000	**200KBE031+L**	237	328	3	1.5	0.39	2.6	1.7	1.7	47
	340	183	150	4	1	1 580	3 050	161 000	310 000	**200KBE3401+L**	237	328	3	1	0.36	2.8	1.9	1.8	61.9
	350	140	112	4	1.5	1 260	2 250	128 000	229 000	**200KBE3502+L**	237	333	3	1.5	0.39	2.6	1.7	1.7	51.9
	356	152	111	6	1.5	1 190	2 470	122 000	252 000	**200KBE3501+L**	249	341	5	1.5	0.33	3.0	2.0	2.0	59.8
	360	142	110	5	1.5	1 100	1 780	112 000	181 000	**200KBE42+L**	242	345	4	1.5	0.40	2.5	1.7	1.6	52.6
	360	218	174	5	1.5	2 070	3 850	211 000	390 000	**HR200KBE52+L**	242	348	4	1.5	0.41	2.5	1.7	1.6	88.3

Note ∗ Bearings marked ∗ are inch design.

KBE (TDO) Type, Double Cup, Single Cones

Bore Diameter 200.025 – 206.375 mm

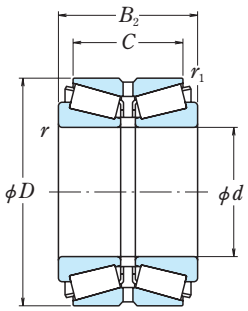

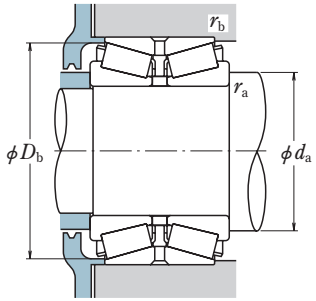

Dynamic Equivalent Load

$P = XF_r + YF_a$

$F_a/F_r \leqq e$		$F_a/F_r > e$	
X	Y	X	Y
1	Y_3	0.67	Y_2

Static Equivalent Load

$P_0 = F_r + Y_0 F_a$

The values of e, Y_2, Y_3, and Y_0 are given in the table below.

Boundary Dimensions (mm/inch)						Basic Load Ratings (kN)		{kgf}		Bearing Numbers	Abutment and Fillet Dimensions (mm)				Constant	Axial Load Factors			Mass (kg)
d	D	B_2	C	r min.	r_1 min.	C_r	C_{0r}	C_r	C_{0r}		d_a	D_b	r_a max.	r_b max.	e	Y_2	Y_3	Y_0	approx.
200.025 7.8750	355.600 14.0000	152.400 6.0000	111.125 4.3750	6.8	1.5	1 190	2 470	122 000	252 000	**∗ EE130787 / 131401D+L**	250	340	6.8	1.5	0.33	3.0	2.0	2.0	60.3
	355.600 14.0000	158.750 6.2500	117.475 4.6250	6.8	0.8	1 190	2 470	122 000	252 000	**∗ EE130787 / 131402D+L**	250	341	6.8	0.8	0.33	3.0	2.0	2.0	62.4
	384.175 15.1250	238.125 9.3750	193.675 7.6250	6.4	1.5	2 090	4 450	213 000	455 000	**∗ H247535 / H247510D+L**	258	369	6.4	1.5	0.33	3.0	2.0	2.0	122
201.612 7.9375	368.300 14.5000	193.675 7.6250	136.525 5.3750	3.3	1.5	1 500	2 690	153 000	274 000	**∗ EE420793 / 421451D+L**	246	353	3.3	1.5	0.42	2.4	1.6	1.6	77.2
203.200 8.0000	276.225 10.8750	90.485 3.5624	73.025 2.8750	3.5	0.8	580	1 240	59 000	127 000	**∗ LM241149 / LM241110D+L**	224	269	3.5	0.8	0.32	3.2	2.1	2.1	13.9
	282.575 11.1250	101.600 4.0000	82.550 3.2500	3.5	0.8	630	1 600	64 000	163 000	**∗ 67983 / 67920D+L**	230	276	3.5	0.8	0.51	2.0	1.3	1.3	19
	292.100 11.5000	125.415 4.9376	101.600 4.0000	3.5	1.5	930	2 100	94 500	214 000	**∗ M241547 / M241510D+L**	229	283	3.5	1.5	0.33	3.0	2.0	2.0	25.7
	317.500 12.5000	127.000 5.0000	88.900 3.5000	4.0	1.5	790	1 450	80 500	148 000	**∗ EE132083 / 132126D+L**	232	302	4.0	1.5	0.31	3.2	2.1	2.1	30.6
	317.500 12.5000	146.050 5.7500	111.125 4.3750	4.3	1.5	990	2 120	101 000	216 000	**∗ 93800 / 93127D+L**	237	306	4.3	1.5	0.52	1.9	1.3	1.3	39
	319.976 12.5975	146.050 5.7500	111.125 4.3750	4.3	1.5	990	2 120	101 000	216 000	**∗ 93800 / 93128D+L**	237	307	4.3	1.5	0.52	1.9	1.3	1.3	40.5
	368.300 14.5000	193.675 7.6250	136.525 5.3750	3.3	1.5	1 500	2 690	153 000	274 000	**∗ EE420801 / 421451D+L**	246	353	3.3	1.5	0.42	2.4	1.6	1.6	76.4
206	283	102	83	4	1.5	580	1 430	59 000	146 000	**206KBE2801+L**	231	275	3	1.5	0.51	2.0	1.3	1.3	18.1
206.375 8.1250	282.575 11.1250	101.600 4.0000	82.550 3.2500	3.5	0.8	630	1 600	64 000	163 000	**∗ 67985 / 67920D+L**	231	276	3.5	0.8	0.51	2.0	1.3	1.3	18.2
	317.500 12.5000	127.000 5.0000	88.900 3.5000	4.0	1.5	790	1 450	80 500	148 000	**∗ EE132084 / 132126D+L**	234	302	4.0	1.5	0.31	3.2	2.1	2.1	29.6
	336.550 13.2500	211.138 8.3125	169.862 6.6875	3.3	1.5	1 790	3 800	182 000	390 000	**∗ H242649 / H242610D+L**	242	325	3.3	1.5	0.33	3.0	2.0	2.0	68.1

Note ∗ Bearings marked ∗ are inch design.

KBE (TDO) Type, Double Cup, Single Cones

Bore Diameter 209.550 – 225.425 mm

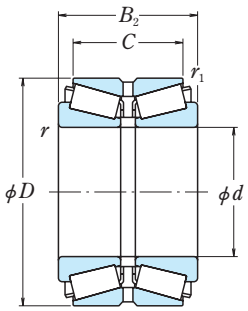

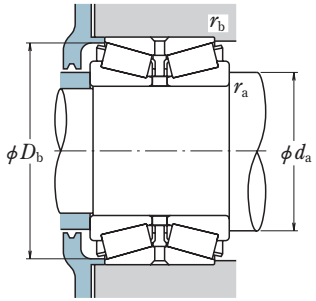

Dynamic Equivalent Load

$P = XF_r + YF_a$

$F_a/F_r \leqq e$		$F_a/F_r > e$	
X	Y	X	Y
1	Y_3	0.67	Y_2

Static Equivalent Load

$P_0 = F_r + Y_0 F_a$

The values of e, Y_2, Y_3, and Y_0 are given in the table below.

Boundary Dimensions (mm/inch)						Basic Load Ratings (kN)		{kgf}		Bearing Numbers	Abutment and Fillet Dimensions (mm)				Constant	Axial Load Factors			Mass (kg)
d	D	B_2	C	r min.	r_1 min.	C_r	C_{0r}	C_r	C_{0r}		d_a	D_b	r_a max.	r_b max.	e	Y_2	Y_3	Y_0	approx.
209.550 8.2500	317.500 12.5000	146.050 5.7500	111.125 4.3750	4.3	1.5	990	2 120	101 000	216 000	**∗ 93825 / 93127D+L**	240	306	4.3	1.5	0.52	1.9	1.3	1.3	37.1
	333.375 13.1250	149.225 5.8750	114.300 4.5000	6.4	1.5	1 180	2 380	120 000	243 000	**∗ HM743345 / HM743310D+L**	247	322	6.4	1.5	0.44	2.3	1.5	1.5	45.3
	355.600 14.0000	152.400 6.0000	111.125 4.3750	7.0	1.5	1 030	2 340	105 000	239 000	**∗ 96825 / 96140D+L**	260	342	7.0	1.5	0.59	1.7	1.1	1.1	58.3
210	300	110	85	1	1	735	1 550	75 000	158 000	**210KBE3001+L**	233	291	0.8	0.8	0.38	2.6	1.8	1.7	22.6
	355	116	103	4	1.5	905	1 520	92 500	155 000	**210KBE31+L**	248	342	3	1.5	0.46	2.2	1.5	1.4	41.7
	360	190	160	5	1.5	1 620	3 200	165 000	325 000	**210KBE3601+L**	251	348	3	1	0.39	2.6	1.8	1.7	74.7
212.725 8.3750	285.750 11.2500	98.425 3.8750	76.200 3.0000	3.5	0.8	600	1 510	61 000	154 000	**∗ LM742745 / LM742710D+L**	237	280	3.5	0.8	0.48	2.1	1.4	1.4	16.8
215.900 8.5000	285.750 11.2500	98.425 3.8750	76.200 3.0000	3.5	0.8	600	1 510	61 000	154 000	**∗ LM742749 / LM742710D+L**	239	280	3.5	0.8	0.48	2.1	1.4	1.4	16
	355.600 14.0000	152.400 6.0000	111.125 4.3750	6.8	1.5	1 190	2 470	122 000	252 000	**∗ EE130851 / 131401D+L**	258	340	6.8	1.5	0.33	3.0	2.0	2.0	54.1
	406.400 16.0000	195.262 7.6875	147.638 5.8125	6.4	1.5	2 040	3 600	208 000	365 000	**∗ EE820085 / 820161D+L**	267	389	6.4	1.5	0.39	2.5	1.7	1.7	101
220	300	110	88	3	1	730	1 710	74 500	174 000	**220KBE3001+L**	244	293	2.5	1	0.37	2.7	1.8	1.8	21.2
	340	90	80	4	1.5	695	1 280	71 000	131 000	**220KBE30+L**	253	328	3	1.5	0.40	2.5	1.7	1.6	27.9
	340	113	90	4	1.5	920	1 830	93 500	187 000	**220KBE030+L**	255	329	3	1.5	0.40	2.5	1.7	1.6	34.7
	370	120	107	5	1.5	1 110	1 940	113 000	198 000	**220KBE31+L**	257	353	4	1.5	0.39	2.6	1.7	1.7	48.3
	370	150	120	5	1.5	1 460	2 760	149 000	282 000	**220KBE031+L**	260	355	4	1.5	0.39	2.6	1.7	1.7	60.2
	400	150	114	5	1.5	1 390	2 300	142 000	235 000	**220KBE042+L**	266	381	4	1.5	0.40	2.5	1.7	1.6	70.9
	400	158	122	5	1.5	1 390	2 300	142 000	235 000	**220KBE42+L**	266	381	4	1.5	0.40	2.5	1.7	1.6	74.2
220.662 8.6875	314.325 12.3750	131.762 5.1875	106.362 4.1875	6.4	1.5	1 020	2 390	104 000	243 000	**∗ M244249 / M244210D+L**	250	305	6.4	1.5	0.33	3.0	2.0	2.0	30.9
225.425 8.8750	355.600 14.0000	152.400 6.0000	111.125 4.3750	6.8	1.5	1 190	2 470	122 000	252 000	**∗ EE130889 / 131401D+L**	263	340	6.8	1.5	0.33	3.0	2.0	2.0	50.2
	400.050 15.7500	187.325 7.3750	136.525 5.3750	1.5	1.5	1 620	3 000	165 000	310 000	**∗ EE430888 / 431576D+L**	266	379	1.5	1.5	0.44	2.3	1.5	1.5	88

Note ∗ Bearings marked ∗ are inch design.

KBE (TDO) Type, Double Cup, Single Cones

Bore Diameter 228.600 – 234.950 mm

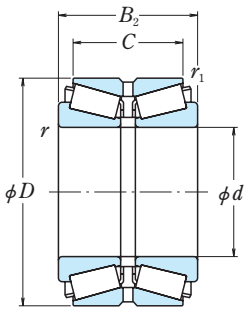

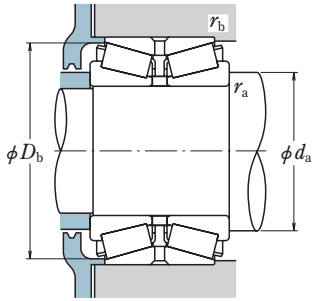

Dynamic Equivalent Load

$P = XF_r + YF_a$

$F_a/F_r \leqq e$		$F_a/F_r > e$	
X	Y	X	Y
1	Y_3	0.67	Y_2

Static Equivalent Load

$P_0 = F_r + Y_0 F_a$

The values of e, Y_2, Y_3, and Y_0 are given in the table below.

Boundary Dimensions (mm/inch)						Basic Load Ratings (kN)		{kgf}		Bearing Numbers	Abutment and Fillet Dimensions (mm)				Constant	Axial Load Factors			Mass (kg)
d	D	B_2	C	r min.	r_1 min.	C_r	C_{0r}	C_r	C_{0r}		d_a	D_b	r_a max.	r_b max.	e	Y_2	Y_3	Y_0	approx.
228.600 9.0000	327.025 12.8750	114.300 4.5000	82.550 3.2500	6.4	1.5	805	1 880	82 000	192 000	**∗ 8573 / 8520D+L**	261	316	6.4	1.5	0.41	2.5	1.7	1.6	28
	355.600 14.0000	152.400 6.0000	111.125 4.3750	6.8	1.5	1 190	2 470	122 000	252 000	**∗ EE130902 / 131401D+L**	265	340	6.8	1.5	0.33	3.0	2.0	2.0	48.8
	355.600 14.0000	152.400 6.0000	111.125 4.3750	7.0	1.5	1 030	2 340	105 000	239 000	**∗ 96900 / 96140D+L**	270	342	7.0	1.5	0.59	1.7	1.1	1.1	51
	355.600 14.0000	152.400 6.0000	114.300 4.5000	6.4	1.5	1 310	2 590	134 000	264 000	**∗ HM746646 / HM746610D+L**	266	345	6.4	1.5	0.47	2.1	1.4	1.4	49.1
	355.600 14.0000	158.750 6.2500	117.475 4.6250	6.8	0.8	1 190	2 470	122 000	252 000	**∗ EE130902 / 131402D+L**	265	341	6.8	0.8	0.33	3.0	2.0	2.0	50.4
	400.050 15.7500	187.325 7.3750	136.525 5.3750	10.4	1.5	1 620	3 000	165 000	310 000	**∗ EE430900 / 431576D+L**	277	379	10.4	1.5	0.44	2.3	1.5	1.5	86.1
	425.450 16.7500	209.550 8.2500	158.750 6.2500	7.0	1.5	2 200	4 000	224 000	405 000	**∗ EE700091 / 700168D+L**	281	406	7.0	1.5	0.33	3.0	2.0	2.0	118
230	380	200	160	5	1.5	1 930	3 800	197 000	390 000	**230KBE3801+L**	270	367	4	1.5	0.33	3.0	2.0	2.0	80.9
	400	188	136	7.5	1.5	1 620	3 000	165 000	310 000	**230KBE4002+L**	274	379	6	1	0.44	2.3	1.5	1.5	85.8
	410	180	120	5	1.5	1 770	3 150	181 000	320 000	**230KBE4101+L**	278	395	4	1.5	0.55	1.8	1.2	1.2	91.5
234.950 9.2500	311.150 12.2500	98.425 3.8750	73.025 2.8750	3.5	0.8	640	1 610	65 000	164 000	**∗ LM446349 / LM446310D+L**	259	304	3.5	0.8	0.36	2.8	1.9	1.8	18.8
	327.025 12.8750	114.300 4.5000	82.550 3.2500	6.4	1.5	805	1 880	82 000	192 000	**∗ 8575 / 8520D+L**	264	316	6.4	1.5	0.41	2.5	1.7	1.6	26.1
	355.600 14.0000	152.400 6.0000	111.125 4.3750	7.0	1.5	1 030	2 340	105 000	239 000	**∗ 96925 / 96140D+L**	273	342	7.0	1.5	0.59	1.7	1.1	1.1	48.3
	384.175 15.1250	238.125 9.3750	193.675 7.6250	6.4	1.5	2 090	4 450	213 000	455 000	**∗ H247549 / H247510D+L**	276	369	6.4	1.5	0.33	3.0	2.0	2.0	99.7

Note ∗ Bearings marked ∗ are inch design.

KBE (TDO) Type, Double Cup, Single Cones

Bore Diameter 240 – 250 mm

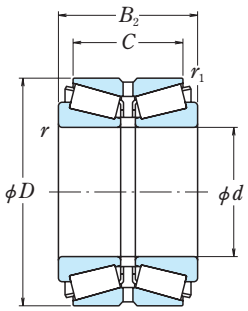

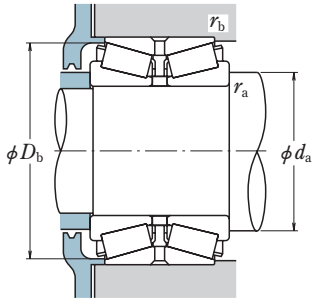

Dynamic Equivalent Load

$P = XF_r + YF_a$

$F_a/F_r \leqq e$		$F_a/F_r > e$	
X	Y	X	Y
1	Y_3	0.67	Y_2

Static Equivalent Load

$P_0 = F_r + Y_0 F_a$

The values of e, Y_2, Y_3, and Y_0 are given in the table below.

Boundary Dimensions (mm/inch)						Basic Load Ratings (kN)		{kgf}		Bearing Numbers	Abutment and Fillet Dimensions (mm)				Constant	Axial Load Factors			Mass (kg)
d	D	B_2	C	r min.	r_1 min.	C_r	C_{0r}	C_r	C_{0r}		d_a	D_b	r_a max.	r_b max.	e	Y_2	Y_3	Y_0	approx.
240	360	92	82	4	1.5	780	1 490	79 500	152 000	**240KBE30+L**	272	348	3	1.5	0.39	2.6	1.7	1.7	30.1
	360	115	92	4	1.5	1 020	2 040	104 000	208 000	**240KBE030+L**	272	348	3	1.5	0.35	2.9	1.9	1.9	37.3
	360	170	142	4	1	1 350	2 870	138 000	293 000	**240KBE3601+L**	274	351	3	1	0.39	2.6	1.7	1.7	54.1
	400	128	114	5	1.5	1 180	2 190	120 000	223 000	**240KBE31+L**	284	386	4	1.5	0.43	2.3	1.6	1.5	60
	400	160	128	5	1.5	1 620	3 050	165 000	310 000	**240KBE031+L**	282	385	4	1.5	0.39	2.6	1.7	1.7	73.6
	407	216	185	6	1.5	2 220	4 450	226 000	455 000	**240KBE4002+L**	285	393	5	1.5	0.33	3.0	2.0	2.0	106
241.300 9.5000	327.025 12.8750	114.300 4.5000	82.550 3.2500	6.4	1.5	805	1 880	82 000	192 000	**∗ 8578 / 8520D+L**	267	316	6.4	1.5	0.41	2.5	1.7	1.6	23.9
	349.148 13.7460	127.000 5.0000	101.600 4.0000	6.4	1.5	980	2 130	100 000	217 000	**∗ EE127095 / 127136D+L**	274	338	6.4	1.5	0.35	2.8	1.9	1.9	36.1
	350.838 13.8125	127.000 5.0000	101.600 4.0000	6.4	1.5	980	2 130	100 000	217 000	**∗ EE127095 / 127137D+L**	274	338	6.4	1.5	0.35	2.8	1.9	1.9	36.9
	355.498 13.9960	127.000 5.0000	101.600 4.0000	6.4	1.5	980	2 130	100 000	217 000	**∗ EE127095 / 127139D+L**	274	341	6.4	1.5	0.35	2.8	1.9	1.9	38.9
	393.700 15.5000	157.162 6.1875	109.538 4.3125	6.4	1.5	1 200	2 570	123 000	262 000	**∗ EE275095 / 275156D+L**	293	382	6.4	1.5	0.40	2.5	1.7	1.6	68
	406.400 16.0000	155.580 6.1252	107.950 4.2500	6.4	1.5	1 200	2 570	123 000	262 000	**∗ EE275095 / 275161D+L**	293	389	6.4	1.5	0.40	2.5	1.7	1.6	74.2
	406.400 16.0000	215.900 8.5000	184.150 7.2500	6.4	1.5	2 220	4 450	226 000	455 000	**∗ H249148 / H249111D+L**	287	392	6.4	1.5	0.33	3.0	2.0	2.0	105
	444.500 17.5000	209.550 8.2500	158.750 6.2500	6.4	1.5	2 410	4 500	246 000	455 000	**∗ EE923095 / 923176D+L**	295	423	6.4	1.5	0.34	3.0	2.0	2.0	133
	488.950 19.2500	254.000 10.0000	196.850 7.7500	6.4	1.5	2 950	5 700	300 000	580 000	**∗ EE295950 / 295192D+L**	315	469	6.4	1.5	0.31	3.2	2.2	2.1	207
244.475 9.6250	381.000 15.0000	171.450 6.7500	127.000 5.0000	6.4	1.5	1 410	3 100	144 000	315 000	**∗ EE126097 / 126151D+L**	286	367	6.4	1.5	0.52	1.9	1.3	1.3	65.1
249.250 9.8130	381.000 15.0000	171.450 6.7500	127.000 5.0000	6.4	1.5	1 410	3 100	144 000	315 000	**∗ EE126098 / 126151D+L**	288	367	6.4	1.5	0.52	1.9	1.3	1.3	62.6
250	380	98	87	4	1	795	1 460	81 500	149 000	**250KBE3801+L**	285	369	3	1	0.40	2.5	1.7	1.6	35.5

Note ∗ Bearings marked ∗ are inch design.

KBE (TDO) Type, Double Cup, Single Cones

Bore Diameter 254.000 – 260.350 mm

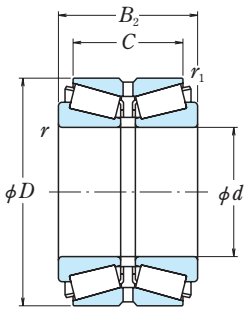

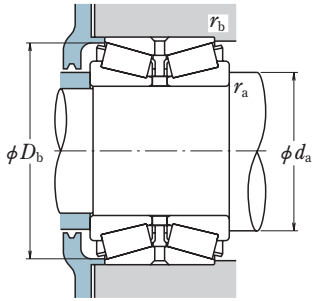

Dynamic Equivalent Load

$P = XF_r + YF_a$

$F_a/F_r \leqq e$		$F_a/F_r > e$	
X	Y	X	Y
1	Y_3	0.67	Y_2

Static Equivalent Load

$P_0 = F_r + Y_0 F_a$

The values of e, Y_2, Y_3, and Y_0 are given in the table below.

Boundary Dimensions (mm/inch)						Basic Load Ratings (kN)		{kgf}		Bearing Numbers	Abutment and Fillet Dimensions (mm)				Constant	Axial Load Factors			Mass (kg)
d	D	B_2	C	r min.	r_1 min.	C_r	C_{0r}	C_r	C_{0r}		d_a	D_b	r_a max.	r_b max.	e	Y_2	Y_3	Y_0	approx.
254.000 10.0000	323.850 12.7500	63.500 2.5000	50.800 2.0000	1.5	0.8	263	760	26 800	77 500	**∗ 29875 / 29820D+L**	276	315	1.5	0.8	0.35	2.9	1.9	1.9	12.4
	347.662 13.6875	95.250 3.7500	69.850 2.7500	3.5	1.5	755	1 610	77 000	164 000	**∗ LM249748 / LM249710D+L**	278	336	3.5	1.5	0.33	3.0	2.0	2.0	23.1
	358.775 14.1250	152.400 6.0000	117.475 4.6250	3.5	1.5	1 300	3 100	133 000	315 000	**∗ M249749 / M249710D+L**	284	348	3.5	1.5	0.33	3.0	2.0	2.0	44.6
	365.125 14.3750	130.175 5.1250	98.425 3.8750	6.4	1.5	990	2 200	101 000	224 000	**∗ EE134100 / 134144D+L**	289	354	6.4	1.5	0.37	2.7	1.8	1.8	39.8
	393.700 15.5000	157.162 6.1875	109.538 4.3125	6.4	1.5	1 200	2 570	123 000	262 000	**∗ EE275100 / 275156D+L**	299	382	6.4	1.5	0.40	2.5	1.7	1.6	61.9
	422.275 16.6250	173.038 6.8125	128.588 5.0625	6.8	1.5	1 670	3 200	170 000	325 000	**∗ EE551002 / 551664D+L**	299	403	6.8	1.5	0.33	3.0	2.0	2.0	85.6
	422.275 16.6250	173.038 6.8125	128.588 5.0625	6.8	1.5	1 950	3 700	199 000	375 000	**∗ HM252343 / HM252311D+L**	301	408	6.8	1.5	0.33	3.0	2.0	2.0	86.6
	422.275 16.6250	178.592 7.0312	139.700 5.5000	6.8	1.5	1 950	3 700	199 000	375 000	**∗ HM252343 / HM252310D+L**	301	408	6.8	1.5	0.33	3.0	2.0	2.0	89.7
	431.724 16.9970	173.038 6.8125	128.588 5.0625	6.8	1.5	1 670	3 200	170 000	325 000	**∗ EE551002 / 551701D+L**	299	408	6.8	1.5	0.33	3.0	2.0	2.0	91.9
	495.300 19.5000	168.595 6.6376	127.000 5.0000	6.4	1.5	1 840	3 550	188 000	365 000	**∗ EE941002 / 941953D+L**	327	471	6.4	1.5	0.40	2.5	1.7	1.7	137
260	400	104	92	5	1.5	895	1 670	91 500	171 000	**260KBE30+L**	298	385	4	1.5	0.40	2.5	1.7	1.6	43.4
	400	130	104	5	1.5	1 210	2 460	123 000	251 000	**260KBE030+L**	300	387	4	1.5	0.40	2.5	1.7	1.6	54.1
	400	155	108	9.5	1.6	1 260	2 440	128 000	249 000	**260KBE4001+L**	300	383	9.5	1.6	0.39	2.5	1.7	1.7	58
	440	144	128	5	1.5	1 540	2 760	157 000	282 000	**260KBE31+L**	306	423	4	1.5	0.39	2.6	1.7	1.7	82.5
	440	172	145	5	1.5	1 860	3 500	190 000	360 000	**260KBE4401+L**	305	422	4	1.5	0.38	2.6	1.8	1.7	98.1
	440	180	144	5	1.5	2 110	4 150	216 000	425 000	**260KBE031+L**	308	423	4	1.5	0.39	2.6	1.7	1.7	104
	445	144	128	5	1.5	1 540	2 760	157 000	282 000	**260KBE4403+L**	306	426	4	1.5	0.39	2.6	1.7	1.7	86
260.350 10.2500	365.125 14.3750	130.175 5.1250	98.425 3.8750	6.4	1.5	990	2 200	101 000	224 000	**∗ EE134102 / 134144D+L**	293	354	6.4	1.5	0.37	2.7	1.8	1.8	37.2
	400.050 15.7500	155.575 6.1250	107.950 4.2500	9.7	1.5	1 260	2 440	128 000	249 000	**∗ EE221026 / 221576D+L**	300	383	9.7	1.5	0.39	2.5	1.7	1.7	58.3

Note ∗ Bearings marked ∗ are inch design.

KBE (TDO) Type, Double Cup, Single Cones

Bore Diameter 260.350 – 270 mm

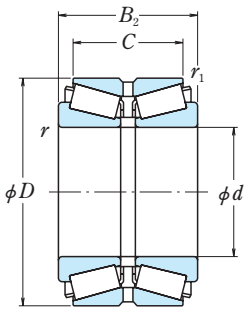

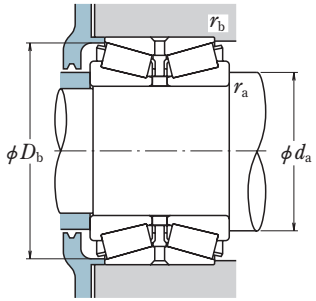

Dynamic Equivalent Load

$P = XF_r + YF_a$

$F_a/F_r \leqq e$		$F_a/F_r > e$	
X	Y	X	Y
1	Y_3	0.67	Y_2

Static Equivalent Load

$P_0 = F_r + Y_0 F_a$

The values of e, Y_2, Y_3, and Y_0 are given in the table below.

Boundary Dimensions (mm/inch)						Basic Load Ratings (kN)		{kgf}		Bearing Numbers	Abutment and Fillet Dimensions (mm)				Constant	Axial Load Factors			Mass (kg)
d	D	B_2	C	r min.	r_1 min.	C_r	C_{0r}	C_r	C_{0r}		d_a	D_b	r_a max.	r_b max.	e	Y_2	Y_3	Y_0	approx.
260.350 10.2500	406.400 16.0000	149.225 5.8750	117.475 4.6250	3.3	1.5	1 290	2 870	131 000	292 000	**∗ EE128102 / 128160D+L**	302	391	3.3	1.5	0.39	2.6	1.8	1.7	66.8
	422.275 16.6250	173.038 6.8125	128.588 5.0625	6.8	1.5	1 950	3 700	199 000	375 000	**∗ HM252349 / HM252311D+L**	304	408	6.8	1.5	0.33	3.0	2.0	2.0	83.1
	422.275 16.6250	178.592 7.0312	139.700 5.5000	6.8	1.5	1 950	3 700	199 000	375 000	**∗ HM252349 / HM252310D+L**	304	408	6.8	1.5	0.33	3.0	2.0	2.0	86.1
	422.275 16.6250	178.598 7.0314	139.700 5.5000	6.8	1.5	1 670	3 200	170 000	325 000	**∗ EE551026 / 551663D+L**	302	404	6.8	1.5	0.33	3.0	2.0	2.0	85.3
	488.950 19.2500	254.000 10.0000	196.850 7.7500	6.4	1.5	2 950	5 700	300 000	580 000	**∗ EE295102 / 295192D+L**	325	469	6.4	1.5	0.31	3.2	2.2	2.1	193
263.525 10.3750	355.600 14.0000	127.000 5.0000	101.600 4.0000	3.5	1.5	865	2 260	88 000	230 000	**∗ 76587 / 76520D+L**	293	347	3.5	1.5	0.36	2.8	1.9	1.8	33.2
266.700 10.5000	355.600 14.0000	127.000 5.0000	101.600 4.0000	3.5	1.5	1 060	2 520	108 000	257 000	**∗ LM451349 / LM451310D+L**	292	348	3.5	1.5	0.36	2.8	1.9	1.8	31.2
	355.600 14.0000	127.000 5.0000	101.600 4.0000	3.5	1.5	865	2 260	88 000	230 000	**∗ 76590 / 76520D+L**	294	347	3.5	1.5	0.36	2.8	1.9	1.8	31.9
	357.200 14.0630	127.000 5.0000	101.600 4.0000	3.5	1.5	1 060	2 520	108 000	257 000	**∗ LM451349 / LM451312D+L**	292	348	3.5	1.5	0.36	2.8	1.9	1.8	32
	393.700 15.5000	157.162 6.1875	109.538 4.3125	6.4	1.5	1 200	2 570	123 000	262 000	**∗ EE275105 / 275156D+L**	306	382	6.4	1.5	0.40	2.5	1.7	1.6	56.6
	406.400 16.0000	155.575 6.1250	107.950 4.2500	6.4	1.5	1 200	2 570	123 000	262 000	**∗ EE275105 / 275161D+L**	306	389	6.4	1.5	0.40	2.5	1.7	1.6	62.8
	422.275 16.6250	178.598 7.0314	139.700 5.5000	6.8	1.5	1 670	3 200	170 000	325 000	**∗ EE551050 / 551663D+L**	306	404	6.8	1.5	0.33	3.0	2.0	2.0	81.6
	431.724 16.9970	173.038 6.8125	128.588 5.0625	6.8	1.5	1 670	3 200	170 000	325 000	**∗ EE551050 / 551701D+L**	306	408	6.8	1.5	0.33	3.0	2.0	2.0	84.9
269.875 10.6250	381.000 15.0000	158.750 6.2500	123.825 4.8750	6.4	1.5	1 360	3 200	138 000	325 000	**∗ M252349 / M252310D+L**	304	370	6.4	1.5	0.33	3.0	2.0	2.0	51.6
270	355	120	95	3	1	890	2 260	90 500	230 000	**270KBE3501+L**	295	347	2.5	1	0.35	2.9	1.9	1.9	29.3

Note ∗ Bearings marked ∗ are inch design.

KBE (TDO) Type, Double Cup, Single Cones

Bore Diameter 273.050 – 289 mm

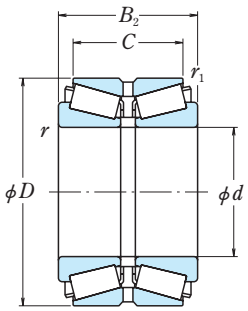

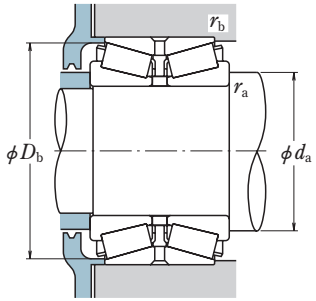

Dynamic Equivalent Load

$P = XF_r + YF_a$

$F_a/F_r \leqq e$		$F_a/F_r > e$	
X	Y	X	Y
1	Y_3	0.67	Y_2

Static Equivalent Load

$P_0 = F_r + Y_0 F_a$

The values of e, Y_2, Y_3, and Y_0 are given in the table below.

Boundary Dimensions (mm/inch)						Basic Load Ratings (kN)		{kgf}		Bearing Numbers	Abutment and Fillet Dimensions (mm)				Constant	Axial Load Factors			Mass (kg)
d	D	B_2	C	r min.	r_1 min.	C_r	C_{0r}	C_r	C_{0r}		d_a	D_b	r_a max.	r_b max.	e	Y_2	Y_3	Y_0	approx.
273.050 10.7500	393.700 15.5000	157.162 6.1875	109.538 4.3125	6.4	1.5	1 200	2 570	123 000	262 000	**∗ EE275108 / 275156D+L**	309	382	6.4	1.5	0.40	2.5	1.7	1.6	53.3
	406.400 16.0000	155.575 6.1250	107.950 4.2500	6.4	1.5	1 200	2 570	123 000	262 000	**∗ EE275108 / 275161D+L**	309	389	6.4	1.5	0.40	2.5	1.7	1.6	59.5
273.060 10.7504	422.280 16.6252	178.590 7.0311	177.800 7.0000	8.0	4.0	1 840	4 050	188 000	410 000	**∗ 273KBE4251+L**	318	409	8.0	4.0	0.33	3.0	2.0	2.0	88.5
279.400 11.0000	469.900 18.5000	200.025 7.8750	149.225 5.8750	9.7	1.5	2 030	4 150	207 000	420 000	**∗ EE722110 / 722186D+L**	336	451	9.7	1.5	0.38	2.7	1.8	1.7	127
	488.950 19.2500	254.000 10.0000	196.850 7.7500	1.3	1.5	2 950	5 700	300 000	580 000	**∗ EE295110 / 295192D+L**	329	469	1.3	1.5	0.31	3.2	2.2	2.1	177
280	400	150	120	6	1	1 290	2 870	131 000	292 000	**280KBE4001+L**	315	389	5	1	0.39	2.6	1.8	1.7	54.2
	420	106	94	5	1.5	915	1 820	93 500	185 000	**280KBE30+L**	318	406	4	1.5	0.44	2.3	1.5	1.5	46.7
	420	133	106	5	1.5	1 350	2 760	137 000	282 000	**280KBE030+L**	319	407	4	1.5	0.40	2.5	1.7	1.6	59.7
	425	133	106	5	2	1 350	2 760	137 000	282 000	**280KBE4202+L**	319	409	4	2	0.40	2.5	1.7	1.6	62.3
	460	146	130	6	2	1 660	3 000	169 000	305 000	**280KBE31+L**	323	440	5	2	0.39	2.6	1.7	1.7	88.2
	460	183	146	6	2	2 170	4 250	221 000	430 000	**280KBE031+L**	327	442	5	2	0.39	2.6	1.7	1.7	109
	500	195	145	6	1.5	2 470	4 500	252 000	460 000	**280KBE5001+L**	335	479	5	1.5	0.45	2.2	1.5	1.5	155
280.000 11.0236	406.400 16.0000	149.225 5.8750	117.475 4.6250	6.4	1.5	1 290	2 870	131 000	292 000	**∗ EE128114 / 128160D+L**	315	391	6.4	1.5	0.39	2.6	1.8	1.7	56.9
280.192 11.0312	406.400 16.0000	120.650 4.7500	85.725 3.3750	6.8	1.5	890	1 740	90 500	178 000	**∗ EE101103 / 101601D+L**	315	391	6.8	1.5	0.41	2.5	1.7	1.6	42.5
	406.400 16.0000	149.225 5.8750	117.475 4.6250	6.8	1.5	1 290	2 870	131 000	292 000	**∗ EE128111 / 128160D+L**	316	391	6.8	1.5	0.39	2.6	1.8	1.7	56.8
285.750 11.2500	358.775 14.1250	76.200 3.0000	53.975 2.1250	3.5	1.5	430	1 150	44 000	117 000	**∗ 545112 / 545142D+L**	307	348	3.5	1.5	0.49	2.0	1.4	1.3	15.8
	380.898 14.9960	139.700 5.5000	107.950 4.2500	3.5	1.5	1 060	2 990	108 000	305 000	**∗ LM654649 / LM654610D+L**	316	371	3.5	1.5	0.43	2.3	1.6	1.5	42
	469.900 18.5000	177.785 6.9994	127.000 5.0000	9.7	1.5	1 890	3 600	192 000	370 000	**∗ EE921124 / 921851D+L**	338	450	9.7	1.5	0.29	3.4	2.3	2.3	105
288.925 11.3750	406.400 16.0000	165.100 6.5000	130.175 5.1250	6.4	1.5	1 530	3 650	156 000	375 000	**∗ M255449 / M255410D+L**	324	395	6.4	1.5	0.34	3.0	2.0	2.0	61.7
289	422	186	146	6	1.5	2 040	4 650	208 000	470 000	**289KBE4201+L**	326	410	5	1.5	0.31	3.2	2.2	2.1	82.3

Note ∗ Bearings marked ∗ are inch design.

KBE (TDO) Type, Double Cup, Single Cones

Bore Diameter 290 – 310 mm

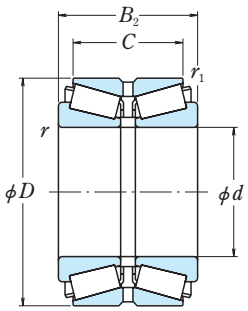

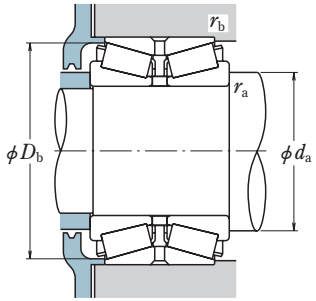

Dynamic Equivalent Load

$P = XF_r + YF_a$

$F_a/F_r \leqq e$		$F_a/F_r > e$	
X	Y	X	Y
1	Y_3	0.67	Y_2

Static Equivalent Load

$P_0 = F_r + Y_0 F_a$

The values of e, Y_2, Y_3, and Y_0 are given in the table below.

Boundary Dimensions (mm/inch)						Basic Load Ratings (kN)		{kgf}		Bearing Numbers	Abutment and Fillet Dimensions (mm)				Constant	Axial Load Factors			Mass (kg)
d	D	B_2	C	r min.	r_1 min.	C_r	C_{0r}	C_r	C_{0r}		d_a	D_b	r_a max.	r_b max.	e	Y_2	Y_3	Y_0	approx.
290	400	120	90	5	1.5	1 050	2 380	107 000	243 000	**290KBE4001+L**	322	389	4	1.5	0.41	2.4	1.6	1.6	40.7
	405	165	130	5.5	1	1 530	3 650	156 000	375 000	**290KBE4002+L**	324	395	5.5	1	0.34	3.0	2.0	2.0	59.9
292.100 11.5000	469.900 18.5000	200.025 7.8750	149.225 5.8750	9.7	1.5	2 030	4 150	207 000	420 000	∗ **EE722115 / 722186D+L**	342	451	9.7	1.5	0.38	2.7	1.8	1.7	118
	520.700 20.5000	228.600 9.0000	165.100 6.5000	6.4	1.5	2 660	4 900	271 000	500 000	∗ **EE224115 / 224205D+L**	345	492	6.4	1.5	0.33	3.1	2.1	2.0	180
	558.800 22.0000	298.450 11.7500	222.250 8.7500	6.4	1.5	4 250	8 200	435 000	840 000	∗ **EE790114 / 790223D+L**	362	537	6.4	1.5	0.39	2.5	1.7	1.7	312
298.450 11.7500	444.500 17.5000	146.050 5.7500	98.425 3.8750	8.0	1.5	1 170	2 280	120 000	233 000	∗ **EE291175 / 291751D+L**	339	427	8.0	1.5	0.38	2.7	1.8	1.7	63.9
300	420	148	118	5	2	1 290	2 960	132 000	300 000	**300KBE4202+L**	335	408	4	2	0.41	2.4	1.6	1.6	58.9
	460	118	105	5	1.5	1 130	2 180	115 000	222 000	**300KBE30+L**	344	446	4	1.5	0.42	2.4	1.6	1.6	64.8
	460	148	118	5	1.5	1 570	3 300	160 000	340 000	**300KBE030+L**	347	448	4	1.5	0.42	2.4	1.6	1.6	83.3
	500	160	142	6	2	1 970	3 600	201 000	370 000	**300KBE31+L**	350	481	5	2	0.39	2.6	1.7	1.7	115
	500	200	160	6	2	2 530	5 000	258 000	510 000	**300KBE031+L**	352	481	5	2	0.39	2.6	1.7	1.7	146
	502	200	160	6	2	2 530	5 000	258 000	510 000	**300KBE5002+L**	352	482	5	2	0.39	2.6	1.7	1.7	148
	600	310	220	6	1.5	4 450	7 900	455 000	805 000	**300KBE6001+L**	370	571	4	1	0.35	2.9	1.9	1.9	357
300.038 11.8125	422.275 16.6250	174.625 6.8750	136.525 5.3750	6.4	1.5	1 700	4 100	173 000	420 000	∗ **HM256849 / HM256810D+L**	337	411	6.4	1.5	0.34	3.0	2.0	2.0	70.6
304.800 12.0000	393.700 15.5000	107.950 4.2500	82.550 3.2500	6.4	1.5	910	2 280	92 500	233 000	∗ **L357049 / L357010D+L**	334	385	6.4	1.5	0.36	2.8	1.9	1.8	30
	412.750 16.2500	123.825 4.8750	92.075 3.6250	6.4	1.5	1 090	2 520	111 000	257 000	∗ **EE109120 / 109163D+L**	337	401	6.4	1.5	0.43	2.4	1.6	1.6	42.1
	444.500 17.5000	146.050 5.7500	98.425 3.8750	8.0	1.5	1 170	2 280	120 000	233 000	∗ **EE291201 / 291751D+L**	342	427	8.0	1.5	0.38	2.7	1.8	1.7	60.5
	495.300 19.5000	168.595 6.6376	127.000 5.0000	6.4	1.5	1 840	3 550	188 000	365 000	∗ **EE941205 / 941953D+L**	352	471	6.4	1.5	0.40	2.5	1.7	1.7	111
	495.300 19.5000	196.850 7.7500	146.050 5.7500	16.0	1.5	2 130	4 300	217 000	440 000	∗ **EE724120 / 724196D+L**	364	474	16.0	1.5	0.40	2.5	1.7	1.6	130
	558.800 22.0000	298.450 11.7500	222.250 8.7500	1.3	1.5	4 250	8 200	435 000	840 000	∗ **EE790120-N1 / 790223D+L**	364	537	1.3	1.5	0.39	2.5	1.7	1.7	298
310	470	200	148	9.5	1.5	2 230	4 800	227 000	490 000	**310KBE4701+L**	359	456	8	1.5	0.40	2.5	1.7	1.6	111

Note ∗ Bearings marked ∗ are inch design.

KBE (TDO) Type, Double Cup, Single Cones

Bore Diameter 317.500 – 340 mm

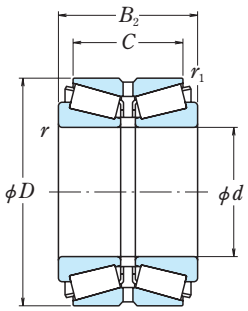

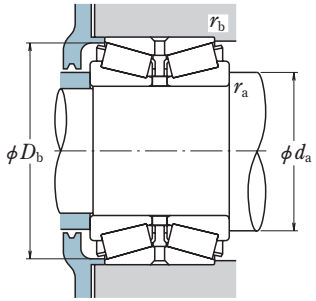

Dynamic Equivalent Load

$P = XF_r + YF_a$

$F_a/F_r \leqq e$		$F_a/F_r > e$	
X	Y	X	Y
1	Y_3	0.67	Y_2

Static Equivalent Load

$P_0 = F_r + Y_0 F_a$

The values of e, Y_2, Y_3, and Y_0 are given in the table below.

Boundary Dimensions (mm/inch)						Basic Load Ratings (kN)		{kgf}		Bearing Numbers	Abutment and Fillet Dimensions (mm)				Constant	Axial Load Factors			Mass (kg)
d	D	B_2	C	r min.	r_1 min.	C_r	C_{0r}	C_r	C_{0r}		d_a	D_b	r_a max.	r_b max.	e	Y_2	Y_3	Y_0	approx.
317.500 12.5000	444.500 17.5000	146.050 5.7500	98.425 3.8750	8.0	1.5	1 170	2 280	120 000	233 000	∗ **EE291250 / 291751D+L**	349	427	8.0	1.5	0.38	2.7	1.8	1.7	53.4
	447.675 17.6250	180.975 7.1250	146.050 5.7500	3.5	1.5	1 920	4 700	196 000	480 000	∗ **HM259049 / HM259010D+L**	353	435	3.5	1.5	0.33	3.0	2.0	2.0	83.6
320	480	121	108	5	1.5	1 310	2 550	134 000	260 000	**320KBE30+L**	359	462	4	1.5	0.40	2.5	1.7	1.6	70.9
	480	151	121	5	1.5	1 750	3 700	178 000	375 000	**320KBE030+L**	362	464	4	1.5	0.40	2.5	1.7	1.6	88
	480	215	163	5	1.5	2 580	5 850	263 000	595 000	**320KBE4801+L**	365	468	4	1.5	0.46	2.2	1.5	1.4	125
	540	176	130	6	2	2 360	4 450	241 000	455 000	**320KBE5401+L**	375	516	4	2	0.39	2.6	1.7	1.7	153
	540	176	157	6	2	2 430	4 600	248 000	470 000	**320KBE31+L**	375	520	5	2	0.39	2.6	1.7	1.7	153
	540	220	176	6	2	3 050	6 100	310 000	620 000	**320KBE031+L**	379	520	5	2	0.39	2.6	1.7	1.7	190
329.870 12.9870	533.400 21.0000	165.100 6.5000	114.300 4.5000	4.7	1.5	1 810	3 600	185 000	365 000	∗ **EE971298 / 972102D+L**	383	510	4.7	1.5	0.33	3.0	2.0	2.0	125
	533.400 21.0000	174.635 6.8754	123.825 4.8750	4.7	1.5	1 810	3 600	185 000	365 000	∗ **EE971298 / 972103D+L**	383	510	4.7	1.5	0.33	3.0	2.0	2.0	130
	546.100 21.5000	177.800 7.0000	152.400 6.0000	4.7	3.3	1 810	3 600	185 000	365 000	∗ **EE971298 / 972151D+L**	383	517	4.7	3.3	0.33	3.0	2.0	2.0	151
330	500	190	150	6	1.5	2 360	5 200	241 000	530 000	**330KBE5001+L**	377	485	5	1.5	0.39	2.6	1.7	1.7	125
330.200 13.0000	482.600 19.0000	133.350 5.2500	88.900 3.5000	7.0	1.5	1 210	2 840	124 000	289 000	∗ **EE161300 / 161901D+L**	377	465	7.0	1.5	0.50	2.0	1.4	1.3	73.6
	482.600 19.0000	177.800 7.0000	127.000 5.0000	6.4	1.5	1 700	3 650	174 000	375 000	∗ **EE526130 / 526191D+L**	370	465	6.4	1.5	0.39	2.6	1.7	1.7	92.6
330.25	528	292	210	spec.	1	3 250	7 250	330 000	740 000	**330KBE5202B+L**	393	513	—	1	0.43	2.3	1.6	1.5	221
333.375 13.1250	469.900 18.5000	190.500 7.5000	152.400 6.0000	6.4	1.5	1 830	4 500	186 000	460 000	∗ **HM261049 / HM261010D+L**	375	457	6.4	1.5	0.39	2.6	1.7	1.7	94.9
340	500	249.22	203.2	5	1.5	2 950	6 850	300 000	700 000	**340KBE5001+L**	381	485	4	1.5	0.28	3.6	2.4	2.4	149
	520	133	118	6	2	1 580	3 150	161 000	320 000	**340KBE30+L**	387	501	5	2	0.37	2.7	1.8	1.8	94.9
	520	165	133	6	2	2 140	4 300	218 000	440 000	**340KBE030A+L**	386	503	5	2	0.39	2.6	1.7	1.7	118
	580	190	169	6	2	2 690	5 150	274 000	525 000	**340KBE31+L**	399	554	5	2	0.39	2.6	1.7	1.7	194
	580	238	190	6	2	3 450	7 050	350 000	720 000	**340KBE031+L**	401	557	5	2	0.39	2.6	1.7	1.7	240
	580	305	241	6	2	4 700	10 200	480 000	1 040 000	**340KBE5801+L**	401	557	4	2	0.33	3.0	2.0	2.0	323

Note ∗ Bearings marked ∗ are inch design.

KBE (TDO) Type, Double Cup, Single Cones

Bore Diameter 342.900 – 368.300 mm

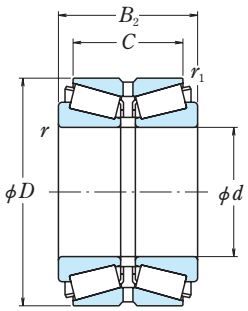

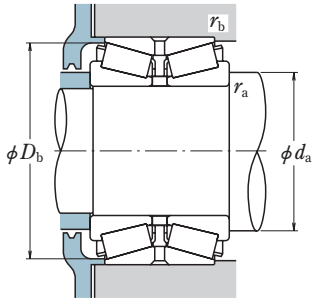

Dynamic Equivalent Load

$P = XF_r + YF_a$

$F_a/F_r \leqq e$		$F_a/F_r > e$	
X	Y	X	Y
1	Y_3	0.67	Y_2

Static Equivalent Load

$P_0 = F_r + Y_0 F_a$

The values of e, Y_2, Y_3, and Y_0 are given in the table below.

Boundary Dimensions (mm/inch)						Basic Load Ratings (kN)		{kgf}		Bearing Numbers	Abutment and Fillet Dimensions (mm)				Constant	Axial Load Factors			Mass (kg)
d	D	B_2	C	r min.	r_1 min.	C_r	C_{0r}	C_r	C_{0r}		d_a	D_b	r_a max.	r_b max.	e	Y_2	Y_3	Y_0	approx.
342.900 13.5000	533.400 21.0000	165.100 6.5000	114.300 4.5000	4.8	1.5	1 810	3 600	185 000	365 000	**∗ EE971354 / 972102D+L**	390	510	4.8	1.5	0.33	3.0	2.0	2.0	116
	533.400 21.0000	174.635 6.8754	123.825 4.8750	4.8	1.5	1 810	3 600	185 000	365 000	**∗ EE971354 / 972103D+L**	390	510	4.8	1.5	0.33	3.0	2.0	2.0	121
	546.100 21.5000	177.800 7.0000	152.400 6.0000	4.8	3.3	1 810	3 600	185 000	365 000	**∗ EE971354 / 972151D+L**	390	517	4.8	3.3	0.33	3.0	2.0	2.0	141
346.075 13.6250	482.600 19.0000	133.350 5.2500	88.900 3.5000	7.0	1.5	1 210	2 840	124 000	289 000	**∗ EE161363 / 161901D+L**	385	465	7.0	1.5	0.50	2.0	1.4	1.3	64.8
	488.950 19.2500	200.025 7.8750	158.750 6.2500	6.4	1.5	2 130	5 200	218 000	530 000	**∗ HM262749 / HM262710D+L**	386	475	6.4	1.5	0.33	3.0	2.0	2.0	109
349.250 13.7500	514.350 20.2500	193.675 7.6250	152.400 6.0000	6.4	1.5	2 270	5 450	232 000	555 000	**∗ EE333137 / 333203D+L**	394	495	6.4	1.5	0.37	2.7	1.8	1.8	130
355	515	194	152.4	6.4	1.5	2 270	5 450	232 000	555 000	**355KBE5101+L**	397	495	6.4	1.5	0.37	2.7	1.8	1.8	126
355.600 14.0000	444.500 17.5000	136.525 5.3750	111.125 4.3750	3.5	1.5	1 140	3 300	116 000	340 000	**∗ L163149 / L163110D+L**	381	435	3.5	1.5	0.31	3.3	2.2	2.1	44.7
	482.600 19.0000	133.350 5.2500	88.900 3.5000	7.0	1.5	1 210	2 840	124 000	289 000	**∗ EE161400 / 161901D+L**	390	465	7.0	1.5	0.50	2.0	1.4	1.3	59.3
	501.650 19.7500	155.575 6.1250	107.950 4.2500	6.4	1.5	1 360	3 300	139 000	335 000	**∗ EE231400 / 231976D+L**	403	489	6.4	1.5	0.44	2.3	1.5	1.5	85.8
	514.350 20.2500	193.675 7.6250	152.400 6.0000	6.4	1.5	2 270	5 450	232 000	555 000	**∗ EE333140 / 333203D+L**	397	495	6.4	1.5	0.37	2.7	1.8	1.8	125
360	540	134	120	6	2	1 690	3 300	173 000	335 000	**360KBE30+L**	405	522	5	2	0.39	2.6	1.7	1.7	97.6
	540	169	134	6	2	2 280	4 800	232 000	490 000	**360KBE030+L**	409	524	5	2	0.39	2.6	1.7	1.7	123
	560	300	240	6	2	4 100	9 500	420 000	970 000	**360KBE5601A+L**	410	540	4	2	0.28	3.6	2.4	2.4	254
	600	192	171	6	2	2 860	5 750	291 000	585 000	**360KBE31+L**	420	577	5	2	0.41	2.4	1.6	1.6	214
	600	240	192	6	2	3 850	8 000	390 000	815 000	**360KBE031+L**	420	577	5	2	0.39	2.6	1.7	1.7	260
	605	192	171	6	2	2 860	5 750	291 000	585 000	**360KBE6001+L**	420	579	5	2	0.41	2.4	1.6	1.6	220
368.300 14.5000	596.900 23.5000	203.200 8.0000	133.350 5.2500	9.7	2.3	2 860	5 750	291 000	585 000	**∗ EE181453 / 182351D+L**	428	570	9.7	2.3	0.41	2.4	1.6	1.6	196

Note ∗ Bearings marked ∗ are inch design.

KBE (TDO) Type, Double Cup, Single Cones

Bore Diameter 371.475 – 400 mm

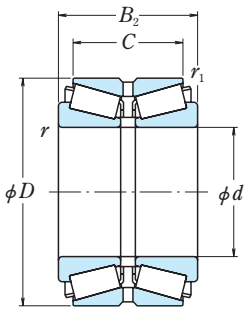

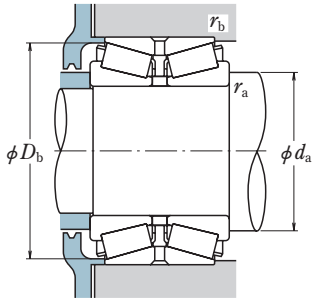

Dynamic Equivalent Load

$P = XF_r + YF_a$

$F_a/F_r \leqq e$		$F_a/F_r > e$	
X	Y	X	Y
1	Y_3	0.67	Y_2

Static Equivalent Load

$P_0 = F_r + Y_0 F_a$

The values of e, Y_2, Y_3, and Y_0 are given in the table below.

Boundary Dimensions (mm/inch)						Basic Load Ratings (kN)		{kgf}		Bearing Numbers	Abutment and Fillet Dimensions (mm)				Constant	Axial Load Factors			Mass (kg)
d	D	B_2	C	r min.	r_1 min.	C_r	C_{0r}	C_r	C_{0r}		d_a	D_b	r_a max.	r_b max.	e	Y_2	Y_3	Y_0	approx.
371.475 14.6250	501.650 19.7500	155.575 6.1250	107.950 4.2500	6.4	1.5	1 360	3 300	139 000	335 000	**∗ EE231462 / 231976D+L**	411	489	6.4	1.5	0.44	2.3	1.5	1.5	75.3
	514.350 20.2500	155.575 6.1250	107.950 4.2500	6.4	1.5	1 360	3 300	139 000	335 000	**∗ EE231462 / 232026D+L**	411	495	6.4	1.5	0.44	2.3	1.5	1.5	83.8
380	560	135	122	6	2	1 830	3 700	186 000	375 000	**380KBE30+L**	424	541	5	2	0.37	2.7	1.8	1.8	110
	560	171	135	6	2	2 480	5 450	253 000	555 000	**380KBE030B+L**	428	543	5	2	0.37	2.7	1.8	1.8	136
	620	194	173	6	2	2 560	4 850	261 000	495 000	**380KBE31+L**	437	596	5	2	0.39	2.6	1.7	1.7	206
	620	243	194	6	2	3 950	8 550	405 000	870 000	**380KBE031A1+L**	443	599	5	2	0.39	2.6	1.7	1.7	276
381.000 15.0000	508.000 20.0000	139.700 5.5000	88.900 3.5000	6.4	1.5	1 250	2 980	127 000	305 000	**∗ EE192150 / 192201D+L**	420	495	6.4	1.5	0.53	1.9	1.3	1.2	66.1
	546.100 21.5000	222.250 8.7500	177.800 7.0000	6.4	1.5	3 150	8 000	320 000	815 000	**∗ HM266447 / HM266410D+L**	428	531	6.4	1.5	0.33	3.0	2.0	2.0	162
384.175 15.1250	546.100 21.5000	222.250 8.7500	177.800 7.0000	6.4	1.5	3 150	8 000	320 000	815 000	**∗ HM266449-N3 / HM266410D+L**	429	531	6.4	1.5	0.33	3.0	2.0	2.0	159
385	550	220	180	6	1.5	3 150	8 000	320 000	815 000	**385KBE5501+L**	429	534	5	1.5	0.33	3.0	2.0	2.0	162
390	600	185	130	5	1.5	2 470	5 300	252 000	540 000	**390KBE6002+L**	442	575	4	1.5	0.37	2.7	1.8	1.8	178
	600	310	220	6	1.5	3 800	8 750	390 000	895 000	**390KBE6001+L**	444	581	4	1	0.35	2.9	1.9	1.9	279
	600	310	220	6	1.5	4 150	9 500	425 000	970 000	**390KBE6003+L**	444	582	4	1	0.34	2.9	2.0	1.9	290
393.700 15.5000	539.750 21.2500	142.875 5.6250	101.600 4.0000	6.4	1.5	1 400	3 300	142 000	335 000	**∗ EE234154 / 234213D+L**	438	526	6.4	1.5	0.48	2.1	1.4	1.4	84.7
	546.100 21.5000	158.750 6.2500	117.475 4.6250	6.4	1.5	1 400	3 300	142 000	335 000	**∗ EE234154 / 234216D+L**	438	529	6.4	1.5	0.48	2.1	1.4	1.4	97
	560.248 22.0570	146.050 5.7500	104.780 4.1252	6.4	1.5	1 400	3 300	142 000	335 000	**∗ EE234154 / 234223D+L**	438	536	6.4	1.5	0.48	2.1	1.4	1.4	100
396.875 15.6250	539.750 21.2500	142.875 5.6250	101.600 4.0000	6.4	1.5	1 400	3 300	142 000	335 000	**∗ EE234156 / 234213D+L**	439	526	6.4	1.5	0.48	2.1	1.4	1.4	82.5
	546.100 21.5000	158.750 6.2500	117.475 4.6250	6.4	1.5	1 400	3 300	142 000	335 000	**∗ EE234156 / 234216D+L**	439	529	6.4	1.5	0.48	2.1	1.4	1.4	94.6
400	540	140	100	6	1	1 400	3 300	142 000	335 000	**400KBE5401+L**	440	527	5	1	0.48	2.1	1.4	1.4	78.4
	600	148	132	6	2	2 080	4 250	212 000	435 000	**400KBE30+L**	450	579	5	2	0.37	2.7	1.8	1.8	135
	600	185	148	6	2	2 710	5 950	277 000	610 000	**400KBE030+L**	453	581	5	2	0.37	2.7	1.8	1.8	173
	650	200	178	6	3	3 300	6 750	340 000	685 000	**400KBE31D+L**	458	622	5	2.5	0.39	2.6	1.7	1.7	253
	650	250	200	6	3	4 200	9 150	430 000	935 000	**400KBE031B+L**	462	625	5	2.5	0.39	2.6	1.7	1.7	309

Note ∗ Bearings marked ∗ are inch design.

KBE (TDO) Type, Double Cup, Single Cones

Bore Diameter 406.400 – 425.450 mm

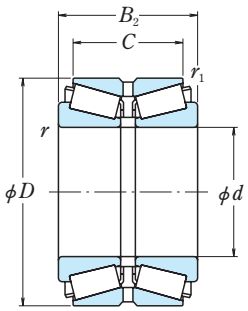

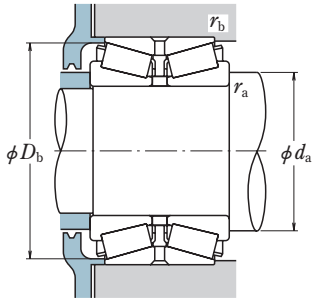

Dynamic Equivalent Load

$P = XF_r + YF_a$

$F_a/F_r \leqq e$		$F_a/F_r > e$	
X	Y	X	Y
1	Y_3	0.67	Y_2

Static Equivalent Load

$P_0 = F_r + Y_0 F_a$

The values of e, Y_2, Y_3, and Y_0 are given in the table below.

Boundary Dimensions (mm/inch)						Basic Load Ratings (kN)		{kgf}		Bearing Numbers	Abutment and Fillet Dimensions (mm)				Constant	Axial Load Factors			Mass (kg)
d	D	B_2	C	r min.	r_1 min.	C_r	C_{0r}	C_r	C_{0r}		d_a	D_b	r_a max.	r_b max.	e	Y_2	Y_3	Y_0	approx.
406.400 16.0000	539.750 21.2500	142.875 5.6250	101.600 4.0000	6.4	1.5	1 400	3 300	142 000	335 000	∗ **EE234160 / 234213D+L**	444	526	6.4	1.5	0.48	2.1	1.4	1.4	82.6
	546.100 21.5000	158.750 6.2500	117.475 4.6250	6.4	1.5	1 400	3 300	142 000	335 000	∗ **EE234160 / 234216D+L**	444	529	6.4	1.5	0.48	2.1	1.4	1.4	94.2
	546.100 21.5000	185.738 7.3125	144.462 5.6875	6.4	1.5	2 270	5 950	232 000	605 000	∗ **M667944 / M667910D+L**	449	536	6.4	1.5	0.42	2.4	1.6	1.6	113
	546.100 21.5000	185.738 7.3125	147.638 5.8125	6.4	1.5	2 270	5 950	232 000	605 000	∗ **M667944 / M667911D+L**	449	537	6.4	1.5	0.42	2.4	1.6	1.6	114
	574.675 22.6250	157.162 6.1875	106.362 4.1875	6.8	1.5	1 580	3 700	161 000	380 000	∗ **EE285160 / 285228D+L**	453	552	6.8	1.5	0.50	2.0	1.4	1.3	111
	609.524 23.9970	177.800 7.0000	133.350 5.2500	8.0	1.5	2 590	5 600	264 000	570 000	∗ **EE736160-N1 / 736239D+L**	459	585	8.0	1.5	0.35	2.9	1.9	1.9	163
	609.600 24.0000	187.325 7.3750	123.825 4.8750	6.8	1.5	2 520	5 500	257 000	560 000	∗ **EE911600 / 912401D+L**	459	586	6.8	1.5	0.38	2.6	1.8	1.7	172
	673.100 26.5000	192.639 7.5842	127.000 5.0000	6.4	1.5	3 000	6 200	305 000	630 000	∗ **EE571602 / 572651D+L**	479	646	6.4	1.5	0.40	2.5	1.7	1.7	251
409.575 16.1250	574.675 22.6250	157.162 6.1875	106.362 4.1875	6.8	1.5	1 580	3 700	161 000	380 000	∗ **EE285162 / 285228D+L**	455	552	6.8	1.5	0.50	2.0	1.4	1.3	109
411.162 16.1875	609.600 24.0000	187.325 7.3750	123.825 4.8750	6.8	1.5	2 520	5 500	257 000	560 000	∗ **EE911618 / 912401D+L**	461	586	6.8	1.5	0.38	2.6	1.8	1.7	167
415.925 16.3750	590.550 23.2500	244.475 9.6250	193.675 7.6250	6.4	1.5	3 450	8 600	350 000	875 000	∗ **M268749 / M268710D+L**	465	576	6.4	1.5	0.33	3.0	2.0	2.0	201
420	600	150	134	6	2	2 240	4 750	229 000	485 000	**420KBE6001A+L**	467	588	5	2	0.39	2.6	1.7	1.7	131
	620	150	134	6	2	2 240	4 750	229 000	485 000	**420KBE30+L**	467	598	5	2	0.39	2.6	1.7	1.7	151
	620	188	150	6	2	2 850	6 450	290 000	655 000	**420KBE030+L**	471	600	5	2	0.39	2.6	1.7	1.7	184
	700	224	200	6	3	3 950	8 200	405 000	840 000	**420KBE31C+L**	486	670	5	2.5	0.39	2.6	1.7	1.7	342
	700	274	200	6	2.5	4 650	9 600	475 000	975 000	**420KBE7001+L**	486	669	5	2	0.32	3.2	2.1	2.1	390
	700	280	224	6	3	5 150	11 500	525 000	1 170 000	**420KBE031B1+L**	493	673	5	2.5	0.39	2.6	1.7	1.7	422
425.450 16.7500	685.698 26.9960	311.150 12.2500	234.950 9.2500	12.7	3.3	5 200	11 400	530 000	1 160 000	∗ **EE328167-N1 / 328268D+L**	497	661	12.7	3.3	0.40	2.5	1.7	1.7	410

Note ∗ Bearings marked ∗ are inch design.

KBE (TDO) Type, Double Cup, Single Cones

Bore Diameter 431.800 – 479.425 mm

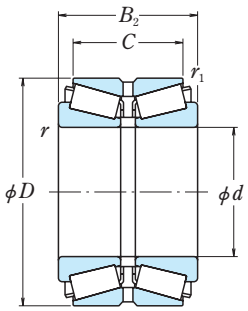

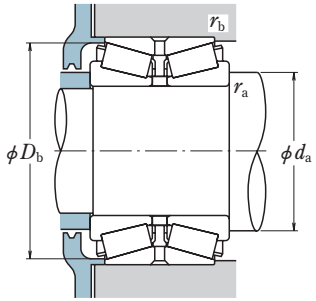

Dynamic Equivalent Load

$P = XF_r + YF_a$

$F_a/F_r \leqq e$		$F_a/F_r > e$	
X	Y	X	Y
1	Y_3	0.67	Y_2

Static Equivalent Load

$P_0 = F_r + Y_0 F_a$

The values of e, Y_2, Y_3, and Y_0 are given in the table below.

Boundary Dimensions (mm/inch)						Basic Load Ratings (kN)		{kgf}		Bearing Numbers	Abutment and Fillet Dimensions (mm)				Constant	Axial Load Factors			Mass (kg)
d	D	B_2	C	r min.	r_1 min.	C_r	C_{0r}	C_r	C_{0r}		d_a	D_b	r_a max.	r_b max.	e	Y_2	Y_3	Y_0	approx.
431.800 17.0000	571.500 22.5000	155.575 6.1250	111.125 4.3750	3.3	1.5	1 840	4 700	188 000	480 000	∗ **LM869448 / LM869410D+L**	471	560	3.3	1.5	0.55	1.8	1.2	1.2	98.4
	673.100 26.5000	192.639 7.5842	127.000 5.0000	6.4	1.5	3 000	6 200	305 000	630 000	∗ **EE571703-N2 / 572651D+L**	491	646	6.4	1.5	0.40	2.5	1.7	1.7	225
	673.100 26.5000	192.639 7.5842	152.400 6.0000	6.4	1.5	3 000	6 200	305 000	630 000	∗ **EE571703 / 572653D+L**	491	649	6.4	1.5	0.40	2.5	1.7	1.7	235
440	650	157	140	6	3	2 540	5 600	259 000	575 000	**440KBE30A+L**	493	628	5	2.5	0.37	2.7	1.8	1.8	175
	650	196	157	6	3	3 100	7 300	315 000	745 000	**440KBE030A+L**	497	630	5	2.5	0.37	2.7	1.8	1.8	214
	655	196	157	6	3	3 100	7 300	315 000	745 000	**440KBE6501+L**	497	633	5	2.5	0.37	2.7	1.8	1.8	220
	720	226	201	6	3	4 100	8 500	420 000	870 000	**440KBE31A+L**	505	691	5	2.5	0.39	2.6	1.7	1.7	355
	720	283	226	6	3	5 300	11 700	540 000	1 200 000	**440KBE031A1+L**	511	694	5	2.5	0.39	2.6	1.7	1.7	438
441.325 17.3750	660.400 26.0000	195.262 7.6875	138.112 5.4375	10.4	1.5	2 650	5 550	270 000	570 000	∗ **EE737173 / 737261D+L**	499	636	10.4	1.5	0.37	2.7	1.8	1.8	198
447.675 17.6250	635.000 25.0000	257.175 10.1250	206.375 8.1250	6.4	1.5	3 250	8 650	330 000	885 000	∗ **M270749 / M270710D+L**	502	617	6.4	1.5	0.33	3.0	2.0	2.0	243
457	573	170	135	6	2.5	1 760	5 250	179 000	535 000	**457KBE5701+L**	493	561	5	2	0.40	2.5	1.7	1.7	91.8
457.200 18.0000	596.900 23.5000	165.100 6.5000	120.650 4.7500	9.5	1.5	1 790	4 750	182 000	480 000	∗ **EE244180 / 244236D+L**	500	581	9.5	1.5	0.40	2.5	1.7	1.6	106
	660.400 26.0000	195.262 7.6875	138.112 5.4375	10.4	1.5	2 650	5 550	270 000	570 000	∗ **EE737181 / 737261D+L**	507	636	10.4	1.5	0.37	2.7	1.8	1.8	182
	730.148 28.7460	254.000 10.0000	177.800 7.0000	9.7	1.5	3 900	8 350	400 000	850 000	∗ **EE671801 / 672875D+L**	527	699	9.7	1.5	0.39	2.6	1.7	1.7	368
460	620	169	131	5	1.5	2 260	5 450	231 000	560 000	**460KBE6201+L**	501	605	4	1.5	0.40	2.5	1.7	1.6	132
	640	200	160	6	2.5	2 350	6 350	240 000	650 000	**460KBE6401+L**	517	627	5	2	0.47	2.1	1.4	1.4	185
	680	163	145	6	3	2 680	5 900	273 000	605 000	**460KBE30B+L**	515	657	5	2.5	0.40	2.5	1.7	1.6	199
	680	204	163	6	3	3 400	7 950	345 000	810 000	**460KBE030A2+L**	518	659	5	2.5	0.40	2.5	1.7	1.6	244
	760	240	214	7.5	4	3 650	7 100	370 000	725 000	**460KBE31A+L**	532	728	6	3	0.39	2.6	1.7	1.7	421
	760	300	240	7.5	4	5 850	13 100	595 000	1 330 000	**460KBE031A1+L**	538	732	6	3	0.39	2.6	1.7	1.7	522
479.425 18.8750	679.450 26.7500	276.225 10.8750	222.250 8.7500	6.4	1.5	4 800	12 800	490 000	1 300 000	∗ **M272749-N / M272710D+L**	535	663	6.4	1.5	0.34	3.0	2.0	1.9	309

Note ∗ Bearings marked ∗ are inch design.

KBE (TDO) Type, Double Cup, Single Cones

Bore Diameter 480 – 508.000 mm

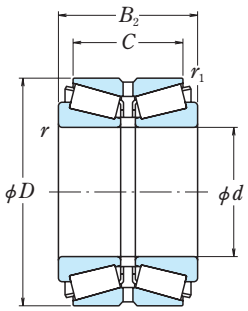

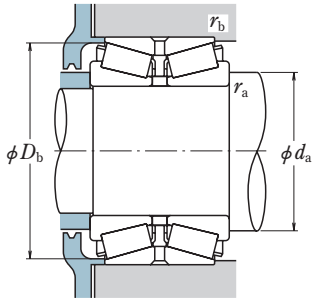

Dynamic Equivalent Load

$P = XF_r + YF_a$

$F_a/F_r \leqq e$		$F_a/F_r > e$	
X	Y	X	Y
1	Y_3	0.67	Y_2

Static Equivalent Load

$P_0 = F_r + Y_0 F_a$

The values of e, Y_2, Y_3, and Y_0 are given in the table below.

Boundary Dimensions (mm/inch)						Basic Load Ratings (kN)		{kgf}		Bearing Numbers	Abutment and Fillet Dimensions (mm)				Constant	Axial Load Factors			Mass (kg)
d	D	B_2	C	r min.	r_1 min.	C_r	C_{0r}	C_r	C_{0r}		d_a	D_b	r_a max.	r_b max.	e	Y_2	Y_3	Y_0	approx.
480	615	120	94	3	1	1 340	3 400	136 000	345 000	**480KBE6101+L**	514	600	2.5	1	0.35	2.9	1.9	1.9	80.5
	700	165	147	6	3	2 800	6 000	285 000	615 000	**480KBE30A1+L**	534	678	5	2.5	0.39	2.6	1.7	1.7	207
	700	206	165	6	3	3 550	8 100	360 000	825 000	**480KBE030A+L**	536	678	5	2.5	0.39	2.6	1.7	1.7	253
	790	248	221	7.5	4	4 800	10 000	490 000	1 020 000	**480KBE31+L**	553	757	6	3	0.39	2.6	1.7	1.7	472
	790	310	248	7.5	4	6 300	14 100	640 000	1 440 000	**480KBE031C+L**	559	760	6	3	0.39	2.6	1.7	1.7	579
482.600 19.0000	615.950 24.2500	184.150 7.2500	146.050 5.7500	6.4	1.5	2 380	6 900	243 000	705 000	∗ **LM272249 / LM272210D+L**	522	604	6.4	1.5	0.37	2.7	1.8	1.8	126
	634.873 24.9950	177.800 7.0000	142.875 5.6250	6.4	1.5	2 290	6 600	233 000	675 000	∗ **EE243190 / 243251D+L**	530	622	6.4	1.5	0.34	2.9	2.0	1.9	144
488.671 19.2390	660.400 26.0000	206.375 8.1250	158.750 6.2500	6.4	1.5	2 920	7 550	298 000	770 000	∗ **EE640191 / 640261D+L**	535	643	6.4	1.5	0.31	3.3	2.2	2.1	185
488.950 19.2500	634.873 24.9950	180.975 7.1250	136.525 5.3750	6.4	1.5	2 350	6 350	240 000	650 000	∗ **LM772748 / LM772710D+L**	532	623	6.4	1.5	0.47	2.1	1.4	1.4	134
	660.400 26.0000	206.375 8.1250	158.750 6.2500	6.4	1.5	2 920	7 550	298 000	770 000	∗ **EE640192 / 640261D+L**	535	643	6.4	1.5	0.31	3.3	2.2	2.1	185
489.026 19.2530	634.873 24.9950	177.800 7.0000	142.875 5.6250	6.4	1.5	2 290	6 600	233 000	675 000	∗ **EE243192 / 243251D+L**	533	622	6.4	1.5	0.34	2.9	2.0	1.9	137
498.475 19.6250	634.873 24.9950	177.800 7.0000	142.875 5.6250	6.4	1.5	2 290	6 600	233 000	675 000	∗ **EE243196 / 243251D+L**	538	622	6.4	1.5	0.34	2.9	2.0	1.9	127
500	720	167	149	6	3	2 730	6 100	278 000	620 000	**500KBE30H+L**	552	696	5	2.5	0.39	2.6	1.7	1.7	216
	720	209	167	6	3	3 600	8 700	365 000	885 000	**500KBE030B+L**	557	698	5	2.5	0.39	2.6	1.7	1.7	266
	830	264	235	7.5	4	5 400	11 500	550 000	1 170 000	**500KBE31A+L**	577	793	6	3	0.39	2.6	1.7	1.7	563
	830	330	264	7.5	4	7 000	16 000	715 000	1 630 000	**500KBE031+L**	583	797	6	3	0.39	2.6	1.7	1.7	692
	910	360	260	7.5	4	7 300	14 900	745 000	1 510 000	**500KBE9101+L**	599	868	6	3	0.55	1.8	1.2	1.2	929
505	660	235	180	6	1.5	3 250	9 000	330 000	920 000	**505KBE6601+L**	546	645	5	1.5	0.31	3.3	2.2	2.1	193
505.968 19.9200	736.600 29.0000	186.502 7.3426	114.300 4.5000	6.4	1.5	2 780	6 800	284 000	690 000	∗ **EE981992 / 982901D+L**	571	712	6.4	1.5	0.48	2.1	1.4	1.4	242
506	636	187	147	7	2	2 360	7 000	241 000	715 000	**506KBE6301+L**	546	625	7	2	0.35	2.8	1.9	1.9	128
508.000 20.0000	736.600 29.0000	186.502 7.3426	114.300 4.5000	6.4	1.5	2 780	6 800	284 000	690 000	∗ **EE982003 / 982901D+L**	572	712	6.4	1.5	0.48	2.1	1.4	1.4	240
	838.200 33.0000	304.800 12.0000	222.250 8.7500	9.5	3.3	6 200	14 100	635 000	1 440 000	∗ **EE426200 / 426331D+L**	595	804	9.5	3.3	0.48	2.1	1.4	1.4	638

Note ∗ Bearings marked ∗ are inch design.

KBE (TDO) Type, Double Cup, Single Cones

Bore Diameter 515 – 565.150 mm

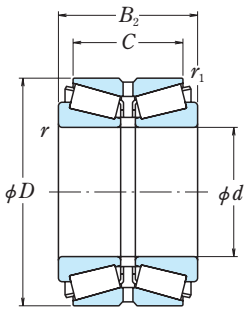

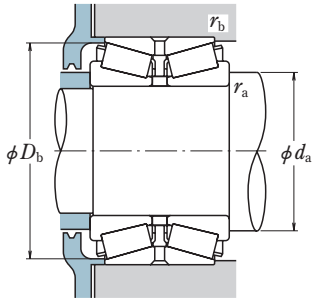

Dynamic Equivalent Load

$P = XF_r + YF_a$

$F_a/F_r \leqq e$		$F_a/F_r > e$	
X	Y	X	Y
1	Y_3	0.67	Y_2

Static Equivalent Load

$P_0 = F_r + Y_0 F_a$

The values of e, Y_2, Y_3, and Y_0 are given in the table below.

Boundary Dimensions (mm/inch)						Basic Load Ratings (kN)		{kgf}		Bearing Numbers	Abutment and Fillet Dimensions (mm)				Constant	Axial Load Factors			Mass (kg)
d	D	B_2	C	r min.	r_1 min.	C_r	C_{0r}	C_r	C_{0r}		d_a	D_b	r_a max.	r_b max.	e	Y_2	Y_3	Y_0	approx.
515	720	180	140	6	3	2 730	6 100	278 000	620 000	**515KBE7201+L**	560	693	5	2.5	0.39	2.6	1.7	1.7	204
520.700 20.5000	736.600 29.0000	186.502 7.3426	114.300 4.5000	6.4	1.5	2 780	6 800	284 000	690 000	∗ **EE982051 / 982901D+L**	579	712	6.4	1.5	0.48	2.1	1.4	1.4	225
530	780	185	163	6	3	3 600	8 200	365 000	835 000	**530KBE30A1+L**	589	752	5	2.5	0.37	2.7	1.8	1.8	295
	780	231	185	6	3	4 450	10 700	450 000	1 100 000	**530KBE030+L**	593	754	5	2.5	0.37	2.7	1.8	1.8	362
	870	272	239	7.5	4	5 850	12 500	595 000	1 270 000	**530KBE31+L**	610	834	6	3	0.39	2.6	1.7	1.7	620
	870	340	272	7.5	4	7 300	16 600	745 000	1 700 000	**530KBE031A+L**	614	836	6	3	0.39	2.6	1.7	1.7	771
533.400 21.0000	784.225 30.8750	190.500 7.5000	120.650 4.7500	6.4	1.5	3 000	7 000	305 000	710 000	∗ **EE522102 / 523088D+L**	596	752	6.4	1.5	0.48	2.1	1.4	1.4	276
	812.800 32.0000	269.875 10.6250	187.325 7.3750	9.7	3.3	4 950	11 300	505 000	1 150 000	∗ **EE626210 / 626321D+L**	607	783	9.7	3.3	0.44	2.3	1.5	1.5	465
546.100 21.5000	736.600 29.0000	165.100 6.5000	114.300 4.5000	6.4	3.3	2 190	5 200	223 000	530 000	∗ **EE542215 / 542291D+L**	598	715	6.4	3.3	0.51	2.0	1.3	1.3	168
558.800 22.0000	736.600 29.0000	165.100 6.5000	114.300 4.5000	6.4	3.3	2 190	5 200	223 000	530 000	∗ **EE542220 / 542291D+L**	604	715	6.4	3.3	0.51	2.0	1.3	1.3	154
	736.600 29.0000	187.328 7.3751	138.112 5.4375	6.4	1.5	3 000	7 800	305 000	795 000	∗ **EE843220 / 843291D+L**	606	718	6.4	1.5	0.34	2.9	2.0	1.9	195
	736.600 29.0000	225.425 8.8750	160.000 6.2992	6.4	1.5	3 350	9 200	345 000	935 000	∗ **558KBE7351+L**	606	718	6.4	1.5	0.35	2.9	1.9	1.9	234
	736.600 29.0000	225.425 8.8750	177.800 7.0000	6.4	1.5	3 950	11 200	400 000	1 150 000	∗ **LM377449-N4 / LM377410D+L**	607	720	6.4	1.5	0.35	2.9	1.9	1.9	247
	742.950 29.2500	187.328 7.3751	138.112 5.4375	6.4	1.5	3 000	7 800	305 000	795 000	∗ **EE843220 / 843292D+L**	606	721	6.4	1.5	0.34	2.9	2.0	1.9	203
560	735	225	180	6.4	1.5	3 950	11 200	400 000	1 150 000	**560KBE7301C+L**	608	719	6.4	1.5	0.35	2.9	1.9	1.9	244
	820	195	173	6	3	3 700	8 650	380 000	880 000	**560KBE30A1+L**	622	790	5	2.5	0.39	2.6	1.7	1.7	342
	820	244	195	6	3	4 900	12 400	500 000	1 260 000	**560KBE030J+L**	627	793	5	2.5	0.39	2.6	1.7	1.7	423
	920	280	246	7.5	4	6 300	13 400	640 000	1 370 000	**560KBE31+L**	643	881	6	3	0.39	2.6	1.7	1.7	724
	920	350	280	7.5	4	8 100	18 600	825 000	1 890 000	**560KBE031D+L**	649	885	6	3	0.39	2.6	1.7	1.7	891
560.000 22.0472	740.000 29.1339	190.000 7.4803	140.000 5.5118	6.4	1.5	3 000	7 800	305 000	795 000	∗ **560KBE7451+L**	606	720	6.4	1.5	0.34	2.9	2.0	1.9	200
565.150 22.2500	863.600 34.0000	317.500 12.5000	228.600 9.0000	8.0	3.3	6 550	15 200	665 000	1 550 000	∗ **EE929225-N1 / 929341D+L**	638	832	8.0	3.3	0.34	2.9	2.0	1.9	613

Note ∗ Bearings marked ∗ are inch design.

KBE (TDO) Type, Double Cup, Single Cones

Bore Diameter 570 – 670 mm

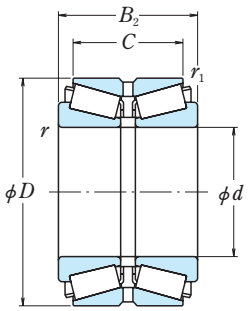

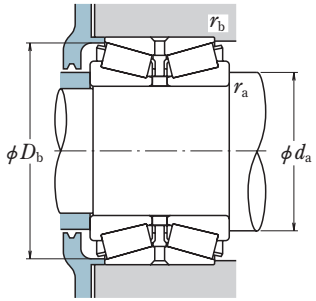

Dynamic Equivalent Load

$P = XF_r + YF_a$

$F_a/F_r \leqq e$		$F_a/F_r > e$	
X	Y	X	Y
1	Y_3	0.67	Y_2

Static Equivalent Load

$P_0 = F_r + Y_0 F_a$

The values of e, Y_2, Y_3, and Y_0 are given in the table below.

Boundary Dimensions (mm/inch)						Basic Load Ratings (kN)		{kgf}		Bearing Numbers	Abutment and Fillet Dimensions (mm)				Constant	Axial Load Factors			Mass (kg)
d	D	B_2	C	r min.	r_1 min.	C_r	C_{0r}	C_r	C_{0r}		d_a	D_b	r_a max.	r_b max.	e	Y_2	Y_3	Y_0	approx.
570	815	345	265	6	3	6 850	18 600	700 000	1 900 000	**570KBE8101+L**	633	791	5	2.5	0.33	3.0	2.0	2.0	551
580	800	300	235	6	3	5 900	15 600	600 000	1 590 000	**580KBE8003A+L**	635	781	5	2.5	0.33	3.1	2.1	2.0	430
600	870	200	176	6	3	4 150	9 650	420 000	985 000	**600KBE30B+L**	666	841	5	2.5	0.39	2.6	1.7	1.7	387
	870	250	200	6	3	5 350	13 400	545 000	1 370 000	**600KBE030C+L**	669	844	5	2.5	0.39	2.6	1.7	1.7	479
	980	300	264	7.5	4	7 350	16 300	750 000	1 660 000	**600KBE31C+L**	688	938	6	3	0.37	2.7	1.8	1.8	882
	980	388	300	7.5	4	9 700	23 200	990 000	2 370 000	**600KBE031A1+L**	696	943	6	3	0.37	2.7	1.8	1.8	1 120
602.945 23.7380	787.400 31.0000	206.375 8.1250	158.750 6.2500	6.4	1.5	3 450	9 600	350 000	980 000	**∗ EE649237 / 649311D+L**	655	771	6.4	1.5	0.37	2.7	1.8	1.8	244
	793.750 31.2500	206.375 8.1250	158.750 6.2500	6.4	1.5	3 450	9 600	350 000	980 000	**∗ EE649237 / 649313D+L**	655	774	6.4	1.5	0.37	2.7	1.8	1.8	253
607.720 23.9260	787.400 31.0000	206.375 8.1250	158.750 6.2500	6.4	1.5	3 450	9 600	350 000	980 000	**∗ EE649239 / 649311D+L**	658	771	6.4	1.5	0.37	2.7	1.8	1.8	237
609.600 24.0000	717.550 28.2500	127.000 5.0000	95.250 3.7500	6.4	1.5	1 530	4 600	156 000	470 000	**∗ LL579749 / LL579710D+L**	642	708	6.4	1.5	0.40	2.5	1.7	1.6	81.7
	787.400 31.0000	206.375 8.1250	158.750 6.2500	6.4	1.5	3 450	9 600	350 000	980 000	**∗ EE649240-N1 / 649311D+L**	659	771	6.4	1.5	0.37	2.7	1.8	1.8	234
	793.750 31.2500	206.375 8.1250	158.750 6.2500	6.4	1.5	3 450	9 600	350 000	980 000	**∗ EE649240 / 649313D+L**	659	774	6.4	1.5	0.37	2.7	1.8	1.8	243
	812.800 32.0000	190.500 7.5000	146.050 5.7500	6.4	3.3	2 860	7 850	292 000	800 000	**∗ EE743240 / 743321D+L**	664	785	6.4	3.3	0.33	3.1	2.1	2.0	241
620	825	190	145	6	1.5	2 860	7 850	292 000	800 000	**620KBE8201+L**	668	793	5	1.5	0.33	3.1	2.1	2.0	247
630	920	212	186	7.5	4	4 650	11 100	475 000	1 130 000	**630KBE30A+L**	702	887	6	3	0.36	2.8	1.9	1.8	464
	920	265	212	7.5	4	5 850	15 000	600 000	1 530 000	**630KBE030B+L**	705	889	6	3	0.36	2.8	1.9	1.8	574
	1 030	315	277	7.5	4	8 050	18 000	820 000	1 830 000	630KBE31+L	730	962	6	3	0.37	2.7	1.8	1.8	1 000
	1 030	389	315	7.5	4	10 100	23 000	1 030 000	2 340 000	**630KBE031B+L**	725	992	6	3	0.37	2.7	1.8	1.8	1 230
650	820	205	160	6	1	3 450	10 400	350 000	1 060 000	**650KBE8201+L**	697	804	5	1	0.35	2.8	1.9	1.9	245
	920	210	185	5	2	4 650	11 100	475 000	1 130 000	**650KBE9201A+L**	709	889	4	2	0.36	2.8	1.9	1.8	428
660	830	180	140	6	2.5	3 050	8 700	310 000	885 000	**660KBE8301A+L**	705	813	5	2	0.39	2.6	1.7	1.7	213
670	880	185	130	5	2	3 300	8 550	340 000	870 000	**670KBE8801+L**	721	857	4	2	0.45	2.2	1.5	1.5	278
	980	230	202	7.5	4	5 300	12 300	540 000	1 260 000	**670KBE30B+L**	743	946	6	3	0.37	2.7	1.8	1.8	571
	980	288	230	7.5	4	6 900	16 200	700 000	1 650 000	670KBE030B+L	742	948	6	3	0.37	2.7	1.8	1.8	706
	1 090	336	295	7.5	4	8 750	19 600	890 000	2 000 000	**670KBE31A1+L**	760	1 037	6	3	0.37	2.7	1.8	1.8	1 210
	1 090	392	336	7.5	4	10 300	24 300	1 050 000	2 480 000	**670KBE031B+L**	764	1 042	6	3	0.37	2.7	1.8	1.8	1 390

Note ∗ Bearings marked ∗ are inch design.

KBE (TDO) Type, Double Cup, Single Cones

Bore Diameter 673.100 – 870 mm

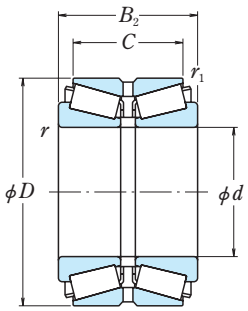

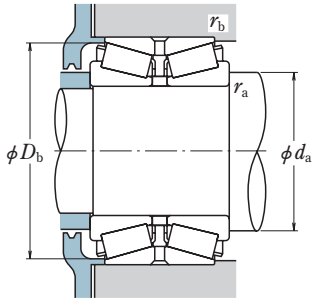

Dynamic Equivalent Load

$P = XF_r + YF_a$

$F_a/F_r \leqq e$		$F_a/F_r > e$	
X	Y	X	Y
1	Y_3	0.67	Y_2

Static Equivalent Load

$P_0 = F_r + Y_0 F_a$

The values of e, Y_2, Y_3, and Y_0 are given in the table below.

Boundary Dimensions (mm/inch)						Basic Load Ratings (kN)		{kgf}		Bearing Numbers	Abutment and Fillet Dimensions (mm)				Constant	Axial Load Factors			Mass (kg)
d	D	B_2	C	r min.	r_1 min.	C_r	C_{0r}	C_r	C_{0r}		d_a	D_b	r_a max.	r_b max.	e	Y_2	Y_3	Y_0	approx.
673.100 26.5000	793.750 31.2500	133.350 5.2500	98.426 3.8750	6.4	1.5	1 750	5 850	178 000	595 000	**∗ 673KBE7951+L**	710	781	6.4	1.5	0.36	2.8	1.9	1.8	108
685.800 27.0000	876.300 34.5000	200.025 7.8750	152.400 6.0000	6.4	1.5	3 700	11 100	375 000	1 130 000	**∗ EE655270 / 655346D+L**	737	857	6.4	1.5	0.42	2.4	1.6	1.6	282
700	980	350	270	7.5	4	8 200	22 500	835 000	2 300 000	**700KBE9801A+L**	772	953	6	3	0.33	3.0	2.0	2.0	782
	1 030	380	310	7.5	4	7 850	19 700	800 000	2 010 000	**700KBE1005WA+L**	784	998	6	3	0.35	2.8	1.9	1.9	1 040
710	950	238.5	175	6	2.5	4 600	11 400	470 000	1 160 000	**710KBE9502+L**	766	926	5	2	0.46	2.2	1.5	1.4	421
	1 030	236	208	7.5	4	5 750	14 000	585 000	1 420 000	**710KBE30D+L**	788	995	6	3	0.36	2.8	1.9	1.8	642
	1 030	295	236	7.5	4	7 100	17 200	725 000	1 760 000	**710KBE030C+L**	787	999	6	3	0.39	2.6	1.7	1.7	774
	1 150	393	345	9.5	5	10 700	25 000	1 100 000	2 550 000	**710KBE031+L**	812	1 103	8	4	0.37	2.7	1.8	1.8	1 550
711.200 28.0000	914.400 36.0000	190.500 7.5000	139.700 5.5000	6.4	1.5	3 200	9 650	325 000	985 000	**∗ EE755280 / 755361D+L**	767	891	6.4	1.5	0.38	2.6	1.8	1.7	298
723.900 28.5000	914.400 36.0000	187.325 7.3750	139.700 5.5000	3.3	1.5	3 200	9 650	325 000	985 000	**∗ EE755285-N1 / 755361D+L**	770	891	3.3	1.5	0.38	2.6	1.8	1.7	274
740	1 110	340	270	7.5	4	9 200	22 100	940 000	2 250 000	**740KBE1101A+L**	827	1 072	6	3	0.33	3.0	2.0	2.0	1 100
750	1 090	250	220	7.5	4	6 450	15 300	655 000	1 560 000	750KBE30+L	835	1 030	6	3	0.37	2.7	1.8	1.8	749
	1 090	313	250	7.5	4	8 000	20 000	815 000	2 040 000	**750KBE030+L**	833	1 055	6	3	0.37	2.7	1.8	1.8	931
	1 220	365	321	9.5	5	10 600	24 000	1 080 000	2 450 000	750KBE31+L	870	1 140	8	4	0.37	2.7	1.8	1.8	1 620
	1 220	395	365	9.5	5	12 000	28 200	1 230 000	2 880 000	750KBE031+L	870	1 155	8	4	0.37	2.7	1.8	1.8	1 750
762.000 30.0000	965.200 38.0000	187.325 7.3750	133.350 5.2500	6.4	1.5	3 600	10 400	365 000	1 060 000	**∗ EE752300 / 752381D+L**	815	943	6.4	1.5	0.40	2.5	1.7	1.7	303
774.700 30.5000	965.200 38.0000	187.325 7.3750	133.350 5.2500	6.4	1.5	3 600	10 400	365 000	1 060 000	**∗ EE752305 / 752381D+L**	822	943	6.4	1.5	0.40	2.5	1.7	1.7	281
800	1 150	258	227	7.5	4	6 550	15 700	670 000	1 600 000	**800KBE30C1+L**	881	1 113	6	3	0.39	2.6	1.7	1.7	843
	1 150	323	258	7.5	4	8 500	22 700	865 000	2 310 000	**800KBE030B1+L**	887	1 113	6	3	0.37	2.7	1.8	1.8	1 050
812.800 32.0000	1 016.000 40.0000	190.500 7.5000	146.050 5.7500	6.4	3.5	4 000	12 200	410 000	1 250 000	**∗ EE762320 / 762401D+L**	867	994	6.4	3.5	0.42	2.4	1.6	1.6	338
	1 066.800 42.0000	190.500 7.5000	146.050 5.7500	6.4	3.3	4 000	12 200	410 000	1 250 000	**∗ EE762320 / 762420XD+L**	867	1 019	6.4	3.3	0.42	2.4	1.6	1.6	437
850	1 220	272	239	7.5	4	7 450	18 800	760 000	1 920 000	850KBE30+L	945	1 155	6	3	0.37	2.7	1.8	1.8	988
	1 220	340	272	7.5	4	9 850	25 000	1 010 000	2 550 000	**850KBE030+L**	937	1 183	6	3	0.37	2.7	1.8	1.8	1 240
870	1 120	210	155	6	2.5	4 800	13 100	485 000	1 340 000	**870KBE1101+L**	929	1 092	5	2	0.40	2.5	1.7	1.6	484

Note ∗ Bearings marked ∗ are inch design.

KBE (TDO) Type, Double Cup, Single Cones

Bore Diameter 880 – 2 000 mm

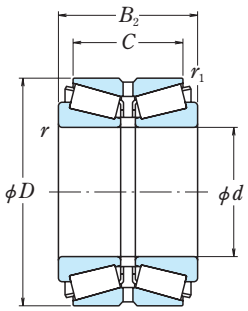

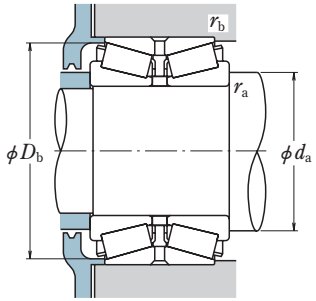

Dynamic Equivalent Load

$P = XF_r + YF_a$

$F_a/F_r \leqq e$		$F_a/F_r > e$	
X	Y	X	Y
1	Y_3	0.67	Y_2

Static Equivalent Load

$P_0 = F_r + Y_0 F_a$

The values of e, Y_2, Y_3, and Y_0 are given in the table below.

Boundary Dimensions (mm/inch)						Basic Load Ratings (kN)		{kgf}		Bearing Numbers	Abutment and Fillet Dimensions (mm)				Constant	Axial Load Factors			Mass (kg)
d	D	B_2	C	r min.	r_1 min.	C_r	C_{0r}	C_r	C_{0r}		d_a	D_b	r_a max.	r_b max.	e	Y_2	Y_3	Y_0	approx.
880	1 080	200	140	6	2.5	4 100	12 900	415 000	1 320 000	**880KBE1001+L**	935	1 061	5	2	0.46	2.2	1.5	1.4	379
900	1 280	280	246	7.5	4	8 150	20 600	830 000	2 100 000	900KBE30+L	995	1 210	6	3	0.37	2.7	1.8	1.8	1 110
	1 280	350	280	7.5	4	10 100	26 300	1 030 000	2 680 000	**900KBE030A+L**	989	1 240	6	3	0.39	2.6	1.7	1.7	1 350
914.400 36.0000	1 066.800 42.0000	139.700 5.5000	101.600 4.0000	6.4	3.3	2 460	8 350	251 000	850 000	∗ **LL686947 / LL686910D+L**	955	1 048	6.4	3.3	0.41	2.5	1.7	1.6	198
950	1 280	280	246	7.5	4	7 600	19 800	775 000	2 020 000	**950KBE1201A+L**	1 028	1 250	6	3	0.40	2.5	1.7	1.6	971
	1 360	300	264	7.5	4	9 250	23 700	940 000	2 420 000	950KBE30+L	1 055	1 290	6	3	0.37	2.7	1.8	1.8	1 360
	1 360	375	300	7.5	4	11 800	32 500	1 210 000	3 300 000	950KBE030+L	1 055	1 300	6	3	0.37	2.7	1.8	1.8	1 700
977.900 38.5000	1 130.300 44.5000	139.700 5.5000	101.600 4.0000	6.4	3.3	2 510	8 750	256 000	890 000	∗ **LL687949 / LL687910D+L**	1 019	1 112	6.4	3.3	0.43	2.3	1.6	1.5	210
1 000	1 180	240	190	6	1.5	5 100	19 700	520 000	2 010 000	**1000KBE1101+L**	1 047	1 160	5	1.5	0.32	3.2	2.1	2.1	451
1 050	1 390	300	215	7.5	4	8 550	24 300	875 000	2 480 000	**1050KBE1301+L**	1 132	1 352	6	3	0.37	2.7	1.8	1.8	1 140
	1 390	350	280	7.5	4	10 100	29 600	1 030 000	3 000 000	**1050KBE1302A+L**	1 134	1 357	6	3	0.35	2.9	1.9	1.9	1 360
1 120	1 360	250	180	7.5	4	6 050	20 700	620 000	2 110 000	**1120KBE1301+L**	1 185	1 335	6	3	0.49	2.0	1.4	1.3	718
1 150	1 420	250	200	7.5	4	6 100	19 900	625 000	2 030 000	**1150KBE1401+L**	1 223	1 394	6	3	0.47	2.1	1.4	1.4	808
1 270.000 50.0000	1 435.100 56.5000	146.050 5.7500	101.600 4.0000	6.4	3.3	2 800	11 100	286 000	1 130 000	∗ **LL889049 / LL889010D+L**	1 315	1 413	6.4	3.3	0.57	1.8	1.2	1.2	303
1 370	1 605	210	150	7.5	4	5 600	20 300	570 000	2 070 000	**1370KBE1601+L**	1 430	1 575	6	3	0.40	2.5	1.7	1.6	688
1 400	1 850	360	260	9.5	5	12 300	36 000	1 250 000	3 650 000	**1400KBE1801A+L**	1 509	1 800	8	4	0.52	1.9	1.3	1.3	2 410
1 562.100 61.5000	1 806.575 71.1250	279.400 11.0000	196.840 7.7496	9.7	4.8	7 400	31 500	755 000	3 200 000	∗ **EE299615 / 299711D+L**	1 632	1 777	9.7	4.8	0.48	2.1	1.4	1.4	1 110
2 000	2 360	200	145	9.5	5	6 250	25 100	635 000	2 560 000	**2000KBE2301+L**	2 090	2 299	8	4	0.36	2.8	1.9	1.9	1 500

Note ∗ Bearings marked ∗ are inch design.

KDE (TDO) Type, Double Cup, Single Cones, Steep Angle

Bore Diameter 100 – 130 mm

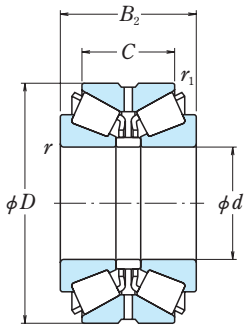

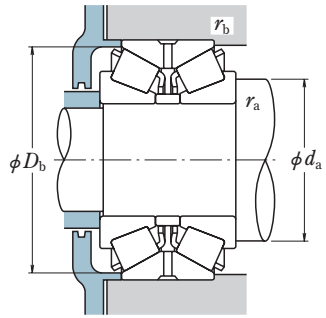

Dynamic Equivalent Load

$P = XF_r + YF_a$

$F_a/F_r \leqq e$		$F_a/F_r > e$	
X	Y	X	Y
1	Y_3	0.67	Y_2

Static Equivalent Load

$P_0 = F_r + Y_0 F_a$

The values of e, Y_2, Y_3, and Y_0 are given in the table below.

Boundary Dimensions (mm/inch)						Basic Load Ratings (kN)		{kgf}		Bearing Numbers	Abutment and Fillet Dimensions (mm)				Constant	Axial Load Factors			Mass (kg)
d	D	B_2	C	r min.	r_1 min.	C_r	C_{0r}	C_r	C_{0r}		d_a	D_b	r_a max.	r_b max.	e	Y_2	Y_3	Y_0	approx.
100	180	80	54	3	1	330	500	33 500	51 000	**100KDE1801+L**	124	171	2.5	1	0.73	1.4	0.92	0.90	7.5
	200	116	80	4	1.5	540	850	55 000	86 500	**100KDE2001+L**	131	186	3	1.5	0.63	1.6	1.1	1.0	15.1
110	240	118	81	4	1	580	815	59 500	83 000	**110KDE043+L**	148	227	3	1	0.81	1.2	0.83	0.81	21.8
111.125 4.3750	214.312 8.4375	115.888 4.5625	84.138 3.3125	3.5	1.5	610	980	62 500	100 000	**∗ H924045 / H924010D+L**	143	203	3.5	1.5	0.67	1.5	1.0	0.98	17.1
	241.300 9.5000	158.750 6.2500	107.950 4.2500	6.4	1.5	910	1 470	92 500	150 000	**∗ HH924349 / HH924310D+L**	152	225	6.4	1.5	0.73	1.4	0.93	0.91	31.6
114.300 4.5000	228.600 9.0000	115.888 4.5625	84.138 3.3125	3.5	2.3	645	1 060	65 500	108 000	**∗ HM926740 / HM926710D+L**	152	220	3.5	2.3	0.74	1.4	0.92	0.90	20.5
	228.600 9.0000	115.888 4.5625	84.138 3.3125	3.5	2.3	565	950	58 000	96 500	**∗ 97450 / 97901D+L**	151	213	3.5	2.3	0.74	1.4	0.92	0.90	20.6
115	230	116	84	3	1.5	645	1 060	65 500	108 000	**115KDE2301+L**	151	220	2.5	1.5	0.74	1.4	0.92	0.90	20.7
	330	228	124	6	1.5	1 490	2 150	152 000	219 000	**115KDE3301+L**	180	309	5	1.5	1.3	0.76	0.51	0.50	92.6
120	260	130	87	4	1	730	1 060	74 500	108 000	**120KDE043+L**	159	249	3	1	0.81	1.2	0.83	0.81	28.5
125	230	116	84	4	1.5	645	1 060	65 500	108 000	**125KDE2301+L**	157	220	3	1.5	0.74	1.4	0.92	0.90	19
125.298 4.9330	228.600 9.0000	115.888 4.5625	84.138 3.3125	3.5	2.3	565	950	58 000	96 500	**∗ 97493 / 97901D+L**	157	213	3.5	2.3	0.74	1.4	0.92	0.90	18.7
127	230	126	84	4	1.5	645	1 060	65 500	108 000	**127KDE2301+L**	158	220	3	1.5	0.74	1.4	0.92	0.90	19.6
127.000 5.0000	228.600 9.0000	115.888 4.5625	84.138 3.3125	3.5	2.3	645	1 060	65 500	108 000	**∗ HM926747 / HM926710D+L**	158	220	3.5	2.3	0.74	1.4	0.92	0.90	18.3
	228.600 9.0000	115.888 4.5625	84.138 3.3125	3.5	2.3	565	950	58 000	96 500	**∗ 97500 / 97901D+L**	157	213	3.5	2.3	0.74	1.4	0.92	0.90	18.4
127.792 5.0312	228.600 9.0000	115.888 4.5625	84.138 3.3125	3.5	2.3	645	1 060	65 500	108 000	**∗ HM926749 / HM926710D+L**	158	220	3.5	2.3	0.74	1.4	0.92	0.90	18.1
128	229	116	74	4	1	560	1 010	57 000	103 000	**128KDE2201+L**	162	218	2.5	1	1.1	0.96	0.64	0.63	18.6
130	280	137	87.5	5	1.5	845	1 210	86 500	123 000	**130KDE43+L**	172	262	4	1.5	0.83	1.2	0.81	0.79	34.7
	299	137	87.5	5	1.5	845	1 210	86 500	123 000	**130KDE2901+L**	172	278	4	1.5	0.83	1.2	0.81	0.79	40.6

Note ∗ Bearings marked ∗ are inch design.

KDE (TDO) Type, Double Cup, Single Cones, Steep Angle

Bore Diameter 150 – 342.900 mm

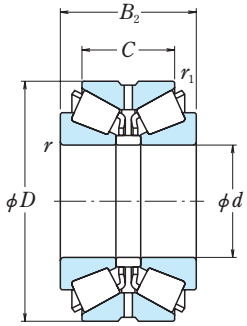

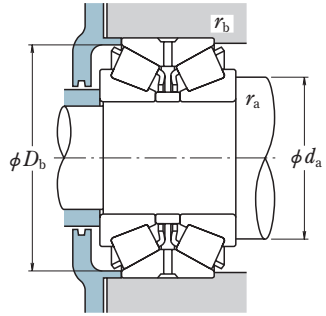

Dynamic Equivalent Load

$P = XF_r + YF_a$

$F_a/F_r \leqq e$		$F_a/F_r > e$	
X	Y	X	Y
1	Y_3	0.67	Y_2

Static Equivalent Load

$P_0 = F_r + Y_0 F_a$

The values of e, Y_2, Y_3, and Y_0 are given in the table below.

Boundary Dimensions (mm/inch)						Basic Load Ratings (kN)		{kgf}	
d	D	B_2	C	r min.	r_1 min.	C_r	C_{0r}	C_r	C_{0r}
150	280	160	104	4	1	1 010	1 710	103 000	174 000
155	330	180	120	6	1.5	1 300	2 120	133 000	216 000
161.925 6.3750	374.650 14.7500	184.150 7.2500	130.175 5.1250	6.4	1.5	1 460	2 180	149 000	223 000
203.200 8.0000	406.400 16.0000	196.850 7.7500	127.000 5.0000	6.4	3.3	1 600	2 610	163 000	267 000
228.397 8.9920	431.800 17.0000	196.850 7.7500	111.125 4.3750	6.4	3.3	1 520	2 640	155 000	269 000
228.460 8.9945	431.800 17.0000	196.850 7.7500	111.125 4.3750	6.4	3.3	1 520	2 640	155 000	269 000
228.600 9.0000	488.950 19.2500	254.000 10.0000	152.400 6.0000	6.4	1.5	2 750	5 000	280 000	510 000
230	380 430 450	175 215 265	115 130 164	5 6 6	1.5 1.5 1.5	1 470 2 040 2 730	2 890 3 700 4 850	149 000 208 000 279 000	295 000 380 000 495 000
254.000 10.0000	533.400 21.0000	276.225 10.8750	165.100 6.5000	6.4	1.5	3 150	5 550	320 000	565 000
260	530	275	163.9	6	2.5	3 150	5 650	320 000	580 000
285.750 11.2500	501.650 19.7500	203.200 8.0000	120.650 4.7500	6.4	3.3	2 160	4 100	220 000	420 000
311.150 12.2500	558.800 22.0000	190.500 7.5000	111.125 4.3750	9.7	3.3	2 140	4 250	218 000	435 000
314.36	558.8	254	174	6	1.5	3 500	7 050	355 000	715 000
317.5	558.8	254	174	6	1.5	3 500	7 050	355 000	715 000
317.500 12.5000	622.300 24.5000	304.800 12.0000	174.625 6.8750	14.3	3.3	3 900	7 550	395 000	770 000
342.900 13.5000	457.098 17.9960	142.875 5.6250	101.600 4.0000	3.3	1.5	1 170	3 050	119 000	310 000

Bearing Numbers	Abutment and Fillet Dimensions (mm)				Constant	Axial Load Factors			Mass (kg)
	d_a	D_b	r_a max.	r_b max.	e	Y_2	Y_3	Y_0	approx.
150KDE2801+L	189	265	3	1	0.81	1.2	0.84	0.82	38.5
155KDE3301+L	208	310	5	1.5	0.81	1.2	0.84	0.82	68.5
∗ **EE117063 / 117148D+L**	217	355	6.4	1.5	0.71	1.4	0.96	0.93	89.3
∗ **EE114080 / 114161D+L**	260	386	6.4	3.3	0.79	1.3	0.85	0.83	102
∗ **EE113089 / 113171D+L**	287	410	6.4	3.3	0.88	1.1	0.77	0.75	105
∗ **EE113091 / 113171D+L**	287	410	6.4	3.3	0.88	1.1	0.77	0.75	105
∗ **HH949549 / HH949510D+L**	307	470	6.4	1.5	0.94	1.1	0.72	0.70	215
230KDE3801+L	276	365	4	1.5	0.80	1.3	0.85	0.83	69.9
230KDE4301A+L	291	416	5	1.5	0.86	1.2	0.79	0.77	128
230KDE4501+L	295	433	5	1.5	0.87	1.2	0.78	0.76	175
∗ **HH953749 / HH953710D+L**	332	511	6.4	1.5	0.94	1.1	0.72	0.70	265
260KDE5301A+L	337	510	5	2	0.94	1.1	0.72	0.70	259
∗ **EE147112 / 147198D+L**	350	483	6.4	3.3	0.83	1.2	0.81	0.79	151
∗ **EE148122 / 148221D+L**	377	521	9.7	3.3	0.88	1.1	0.77	0.75	173
314KDE5501+L	384	542	5	1.5	0.70	1.4	0.97	0.94	257
317KDE5501+L	386	542	5	1.5	0.70	1.4	0.97	0.94	249
∗ **H961649 / H961610D+L**	414	597	14.3	3.3	0.94	1.1	0.72	0.70	386
∗ **LM961548 / LM961511D+L**	378	444	3.3	1.5	0.71	1.4	0.95	0.93	59.4

Note ∗ Bearings marked ∗ are inch design.

KDE (TDO) Type, Double Cup, Single Cones, Steep Angle

Bore Diameter 370 – 1 450 mm

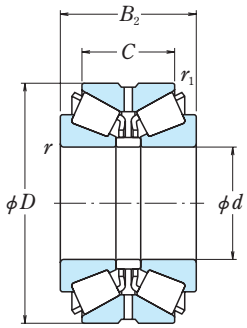

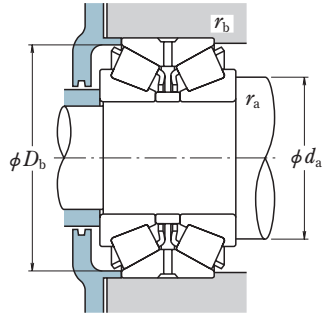

Dynamic Equivalent Load

$P = XF_r + YF_a$

$F_a/F_r \leqq e$		$F_a/F_r > e$	
X	Y	X	Y
1	Y_3	0.67	Y_2

Static Equivalent Load

$P_0 = F_r + Y_0 F_a$

The values of e, Y_2, Y_3, and Y_0 are given in the table below.

Boundary Dimensions (mm/inch)						Basic Load Ratings (kN)		{kgf}	
d	D	B_2	C	r min.	r_1 min.	C_r	C_{0r}	C_r	C_{0r}
370	680	280	188	7.5	4	4 400	8 500	450 000	865 000
400	650	280	180	6	2.5	3 800	8 400	385 000	855 000
	820	295	180	7.5	4	5 300	8 950	545 000	915 000
420	622.3	240	135	7.5	1.5	2 720	6 350	278 000	645 000
540	850	300	200	7.5	4	5 750	12 500	585 000	1 280 000
580	900	300	200	7.5	4	5 950	13 400	605 000	1 360 000
590	990	400	270	7.5	4	8 600	19 300	880 000	1 970 000
700	1 030	250	210	7.5	4	5 250	12 600	535 000	1 290 000
	1 030	280	210	7.5	4	6 050	15 100	615 000	1 540 000
780	1 150	330	210	7.5	4	7 450	18 500	755 000	1 880 000
850	1 250	360	235	7.5	4	8 650	21 300	885 000	2 170 000
950	1 500	540	380	9.5	4	15 500	44 500	1 580 000	4 500 000
980	1 200	150	100	6	3	2 580	8 350	263 000	850 000
1 450	1 900	460	280	9.5	2	15 000	48 000	1 530 000	4 900 000

Bearing Numbers	Abutment and Fillet Dimensions (mm)				Constant	Axial Load Factors			Mass (kg)
	d_a	D_b	r_a max.	r_b max.	e	Y_2	Y_3	Y_0	approx.
370KDE6801E+L	452	652	6	3	0.70	1.4	0.97	0.94	417
400KDE6501+L	478	628	5	2	0.87	1.2	0.78	0.76	340
400KDE8201+L	498	775	6	3	0.61	1.7	1.1	1.1	638
420KDE6201A1+L	493	610	6	1.5	1.3	0.80	0.54	0.52	232
540KDE8501+L	623	824	6	3	0.65	1.5	1.0	1.0	575
580KDE9001A+L	667	873	6	3	0.70	1.4	0.97	0.94	634
590KDE9901+L	695	954	6	3	0.67	1.5	1.0	0.98	1 140
700KDE1001A+L	786	1 004	6	3	0.70	1.4	0.97	0.94	674
700KDE1002A+L	790	1 004	6	3	0.70	1.4	0.97	0.94	749
780KDE1101+L	874	1 109	6	3	0.67	1.5	1.0	0.98	1 040
850KDE1201+L	949	1 209	6	3	0.65	1.5	1.0	1.0	1 320
950KDE1501+L	1 120	1 467	8	3	0.80	1.3	0.84	0.82	3 510
980KDE1201+L	1 046	1 177	5	2.5	0.68	1.5	0.99	0.97	341
1450KDE1901+L	1 582	1 868	8	2	0.83	1.2	0.81	0.79	3 240

KF (TNA) Type, Double Cup, Single Cones

Bore Diameter 101.600 – 125 mm

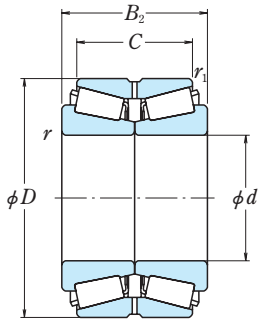

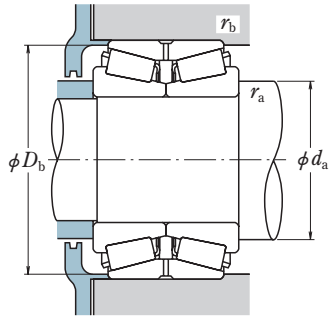

Dynamic Equivalent Load

$P = XF_r + YF_a$

$F_a/F_r \leqq e$		$F_a/F_r > e$	
X	Y	X	Y
1	Y_3	0.67	Y_2

Static Equivalent Load

$P_0 = F_r + Y_0 F_a$

The values of e, Y_2, Y_3, and Y_0 are given in the table below.

Boundary Dimensions (mm/inch)						Basic Load Ratings (kN)		{kgf}		Bearing Numbers	Abutment and Fillet Dimensions (mm)				Constant	Axial Load Factors			Mass (kg)
d	D	B_2	C	r min.	r_1 min.	C_r	C_{0r}	C_r	C_{0r}		d_a	D_b	r_a max.	r_b max.	e	Y_2	Y_3	Y_0	approx.
101.600 4.0000	161.925 6.3750	82.547 3.2499	61.912 2.4375	3.5	0.6	310	570	31 500	58 500	∗ **101KF1651**	120	155	3.5	0.6	0.47	2.1	1.4	1.4	5.9
	168.275 6.6250	92.075 3.6250	69.850 2.7500	3.5	0.8	380	685	39 000	70 000	∗ **NA691 / 672D**	121	161	3.5	0.8	0.47	2.1	1.4	1.4	7.3
	180.000 7.0866	104.775 4.1250	85.725 3.3750	3.5	0.8	440	750	45 000	76 500	∗ **NA780 / 773D**	124	171	3.5	0.8	0.39	2.6	1.8	1.7	10.2
	180.975 7.1250	104.775 4.1250	85.725 3.3750	3.5	1.5	440	750	45 000	76 500	∗ **NA780 / 774D**	124	171	3.5	1.5	0.39	2.6	1.8	1.7	10.4
	190.500 7.5000	127.000 5.0000	101.600 4.0000	3.5	1.5	605	1 000	61 500	102 000	∗ **NA861 / 854D**	125	180	3.5	1.5	0.33	3.0	2.0	2.0	14.5
	190.500 7.5000	127.000 5.0000	104.775 4.1250	3.5	1.5	665	1 040	68 000	107 000	∗ **HH221449NA / HH221410D**	126	183	3.5	1.5	0.33	3.0	2.0	2.0	14.4
104.775 4.1250	180.000 7.0866	104.775 4.1250	85.725 3.3750	3.5	0.8	440	750	45 000	76 500	∗ **NA782 / 773D**	125	171	3.5	0.8	0.39	2.6	1.8	1.7	9.8
	180.975 7.1250	104.775 4.1250	85.725 3.3750	3.5	1.5	440	750	45 000	76 500	∗ **NA782 / 774D**	125	171	3.5	1.5	0.39	2.6	1.8	1.7	9.9
110	170	70	55	2.5	0.6	300	500	31 000	51 000	**110KF1701**	127	165	2	0.6	0.41	2.5	1.7	1.6	5.0
114.300 4.5000	190.500 7.5000	106.362 4.1875	80.962 3.1875	3.5	1.5	510	925	52 000	94 500	∗ **NA71450 / 71751D**	136	182	3.5	1.5	0.42	2.4	1.6	1.6	10.9
	212.725 8.3750	142.875 5.6250	117.475 4.6250	3.5	1.5	975	1 620	99 500	165 000	∗ **HH224346NA / HH224310D**	140	205	3.5	1.5	0.33	3.1	2.1	2.0	21
	212.725 8.3750	142.875 5.6250	117.475 4.6250	3.5	1.5	820	1 400	83 500	143 000	∗ **NA938 / 932D**	139	201	3.5	1.5	0.33	3.1	2.1	2.0	21
	228.600 9.0000	115.888 4.5625	84.138 3.3125	3.5	2.3	565	950	58 000	96 500	∗ **NA97450 / 97901D**	151	218	3.5	2.3	0.74	1.4	0.9	0.9	20.7
115	190 210	106 143	80 118	4 4	1.5 1.5	510 975	925 1 620	52 000 99 500	94 500 165 000	**115KF1901** **115KF2101**	137 141	182 204	3 3	1.5 1.5	0.42 0.33	2.4 3.1	1.6 2.1	1.6 2.0	10.7 20
120	260	60	86	4	1	775	1 100	79 000	112 000	**120KF2601**	156	246	2.5	1	0.44	2.3	1.5	1.5	27
125	180 235 235	85 142 145	75 114 115	3 4 4	0.6 1.5 1.5	390 875 875	885 1 580 1 580	40 000 89 000 89 000	90 500 161 000 161 000	**125KF1801** **125KF2302** **125KF2301**	143 159 159	176 226 226	2 2.5 2.5	0.5 1 1	0.31 0.37 0.37	3.3 2.7 2.7	2.2 1.8 1.8	2.2 1.8 1.8	7.0 25.6 25.9

Note ∗ Bearings marked ∗ are inch design.

KF (TNA) Type, Double Cup, Single Cones

Bore Diameter 127.000 – 149.225 mm

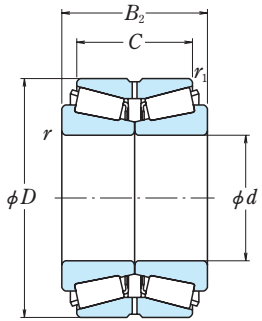

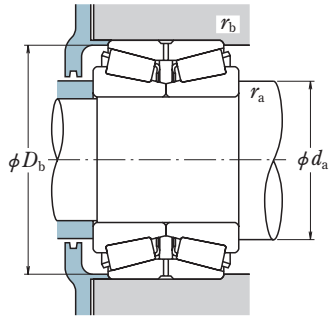

Dynamic Equivalent Load

$P = XF_r + YF_a$

$F_a/F_r \leqq e$		$F_a/F_r > e$	
X	Y	X	Y
1	Y_3	0.67	Y_2

Static Equivalent Load

$P_0 = F_r + Y_0 F_a$

The values of e, Y_2, Y_3, and Y_0 are given in the table below.

Boundary Dimensions (mm/inch)						Basic Load Ratings (kN)		{kgf}		Bearing Numbers	Abutment and Fillet Dimensions (mm)				Constant	Axial Load Factors			Mass (kg)
d	D	B_2	C	r min.	r_1 min.	C_r	C_{0r}	C_r	C_{0r}		d_a	D_b	r_a max.	r_b max.	e	Y_2	Y_3	Y_0	approx.
127.000 5.0000	182.562 7.1875	85.725 3.3750	73.025 2.8750	3.5	0.8	390	885	40 000	90 500	∗ **NA48291 / 48220D**	145	177	3.5	0.8	0.31	3.3	2.2	2.2	7.0
	206.375 8.1250	107.950 4.2500	82.550 3.2500	3.5	0.8	545	1 060	56 000	108 000	∗ **NA798 / 792D**	152	199	3.5	0.8	0.46	2.2	1.5	1.4	13
	234.950 9.2500	142.875 5.6250	114.300 4.5000	3.5	1.5	875	1 580	89 000	161 000	∗ **NA95500 / 95927D**	160	226	3.5	1.5	0.37	2.7	1.8	1.8	25.4
133	216	106	81	3.6	1.6	495	985	50 500	100 000	**133KF2101**	160	208	3.6	1.6	0.49	2.1	1.4	1.4	14.1
133.350 5.2500	215.900 8.5000	106.362 4.1875	80.962 3.1875	3.5	1.5	495	985	50 500	100 000	∗ **NA74525 / 74851D**	160	208	3.5	1.5	0.49	2.1	1.4	1.4	14
136.525 5.3750	190.500 7.5000	85.725 3.3750	73.025 2.8750	3.5	0.8	370	880	37 500	90 000	∗ **NA48390 / 48320D**	155	185	3.5	0.8	0.32	3.1	2.1	2.1	7.3
139.700 5.5000	244.475 9.6250	107.950 4.2500	79.375 3.1250	3.5	1.5	570	1 020	58 000	104 000	∗ **NA81550 / 81963D**	172	235	3.5	1.5	0.35	2.9	1.9	1.9	19.1
142.875 5.6250	200.025 7.8750	93.665 3.6876	73.025 2.8750	3.5	0.8	415	995	42 500	102 000	∗ **NA48686 / 48620D**	162	194	3.5	0.8	0.34	3.0	2.0	2.0	8.6
145	240	135	110	4	1	775	1 440	79 000	147 000	**145KF2402**	171	229	2.5	1	0.32	3.2	2.1	2.1	22.1
146.050 5.7500	236.538 9.3125	131.762 5.1875	106.362 4.1875	3.5	1.5	775	1 440	79 000	147 000	∗ **HM231140NA / HM231111D**	171	227	3.5	1.5	0.32	3.2	2.1	2.1	19.7
	236.538 9.3125	131.762 5.1875	106.362 4.1875	3.5	1.5	685	1 360	70 000	139 000	∗ **NA82576 / 82932D**	173	228	3.5	1.5	0.44	2.3	1.5	1.5	20.6
	241.300 9.5000	131.762 5.1875	106.362 4.1875	3.5	1.5	775	1 440	79 000	147 000	∗ **HM231140NA / HM231116D**	171	230	3.5	1.5	0.32	3.2	2.1	2.1	21.3
	241.300 9.5000	131.762 5.1875	106.362 4.1875	3.5	1.5	685	1 360	70 000	139 000	∗ **NA82576 / 82951D**	173	230	3.5	1.5	0.44	2.3	1.5	1.5	21.9
149.225 5.8750	236.538 9.3125	131.762 5.1875	106.362 4.1875	3.5	1.5	775	1 440	79 000	147 000	∗ **HM231149NA / HM231111D**	173	227	3.5	1.5	0.32	3.2	2.1	2.1	18.9
	236.538 9.3125	131.762 5.1875	106.362 4.1875	3.5	1.5	685	1 360	70 000	139 000	∗ **NA82587 / 82932D**	175	228	3.5	1.5	0.44	2.3	1.5	1.5	19.8
	241.300 9.5000	131.762 5.1875	106.362 4.1875	3.5	1.5	775	1 440	79 000	147 000	∗ **HM231149NA / HM231116D**	173	230	3.5	1.5	0.32	3.2	2.1	2.1	20.5
	241.300 9.5000	131.762 5.1875	106.362 4.1875	3.5	1.5	685	1 360	70 000	139 000	∗ **NA82587 / 82951D**	175	230	3.5	1.5	0.44	2.3	1.5	1.5	21.1

Note ∗ Bearings marked ∗ are inch design.

KF (TNA) Type, Double Cup, Single Cones

Bore Diameter 150 – 177.800 mm

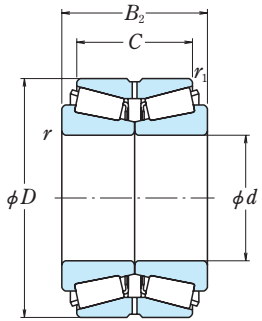

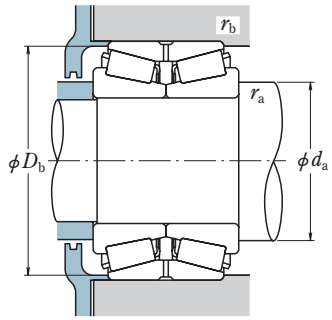

Dynamic Equivalent Load

$P = XF_r + YF_a$

$F_a/F_r \leqq e$		$F_a/F_r > e$	
X	Y	X	Y
1	Y_3	0.67	Y_2

Static Equivalent Load

$P_0 = F_r + Y_0 F_a$

The values of e, Y_2, Y_3, and Y_0 are given in the table below.

Boundary Dimensions (mm/inch)						Basic Load Ratings (kN)		{kgf}	
d	D	B_2	C	r min.	r_1 min.	C_r	C_{0r}	C_r	C_{0r}
150	250	142	112	4	1.5	885	1 660	90 000	169 000
	250	145	115	4	1.5	850	1 580	87 000	161 000
152.400	244.475	107.950	79.375	3.5	1.5	570	1 020	58 000	104 000
6.0000	9.6250	4.2500	3.1250						
	254.000	142.875	111.125	3.5	1.5	885	1 660	90 000	169 000
	10.0000	5.6250	4.3750						
	257.000	142.875	111.125	3.5	1.5	885	1 660	90 000	169 000
	10.1181	5.6250	4.3750						
165	225	95	70	4	0.6	410	1 080	42 000	110 000
	290	143	111	4	1.5	930	1 880	95 000	192 000
165.100	225.425	95.250	69.850	3.5	0.8	410	1 080	42 000	110 000
6.5000	8.8750	3.7500	2.7500						
	288.925	142.875	111.125	3.5	1.5	1 050	1 870	107 000	191 000
	11.3750	5.6250	4.3750						
	288.925	142.875	111.125	3.5	1.5	930	1 880	95 000	192 000
	11.3750	5.6250	4.3750						
	298.450	142.875	111.125	3.5	1.5	930	1 880	95 000	192 000
	11.7500	5.6250	4.3750						
165.496	225.425	95.250	69.850	3.5	0.8	410	1 080	42 000	110 000
6.5156	8.8750	3.7500	2.7500						
170	260	90	65	3	1	575	1 030	58 500	105 000
	310	195	150	5	1.5	1 540	2 890	157 000	295 000
174.625	247.650	103.188	84.138	3.5	0.8	555	1 290	56 500	131 000
6.8750	9.7500	4.0625	3.3125						
177.800	247.650	103.188	84.138	3.5	0.8	595	1 410	60 500	143 000
7.0000	9.7500	4.0625	3.3125						
	282.575	107.950	79.375	3.5	1.5	615	1 200	62 500	123 000
	11.1250	4.2500	3.1250						
	288.925	142.875	111.125	5.5	1.5	1 050	1 870	107 000	191 000
	11.3750	5.6250	4.3750						
	288.925	142.875	111.125	5.5	1.5	930	1 880	95 000	192 000
	11.3750	5.6250	4.3750						

Bearing Numbers	Abutment and Fillet Dimensions (mm)				Constant	Axial Load Factors			Mass (kg)
	d_a	D_b	r_a max.	r_b max.	e	Y_2	Y_3	Y_0	approx.
150KF2502	181	243	2.5	1	0.41	2.5	1.7	1.6	25.1
150KF2501WA	181	243	3	1.5	0.41	2.5	1.7	1.6	26.5
∗ **NA81600 / 81963D**	178	235	3.5	1.5	0.35	2.9	1.9	1.9	16.7
∗ **NA99600 / 99102D**	182	245	3.5	1.5	0.41	2.5	1.7	1.6	25.9
∗ **152KF2551**	182	246	3.5	1.5	0.41	2.5	1.7	1.6	26.9
165KF2201	186	219	3	0.6	0.38	2.6	1.8	1.7	10.7
165KF2951	203	278	2.5	1	0.47	2.1	1.4	1.4	38.3
∗ **NA46790 / 46720D**	186	219	3.5	0.8	0.38	2.6	1.8	1.7	10.8
∗ **HM237536NA / HM237510D**	201	278	3.5	1.5	0.32	3.2	2.1	2.1	35.7
∗ **NA94650 / 94114D**	203	277	3.5	1.5	0.47	2.1	1.4	1.4	37.5
∗ **NA94650 / 94118D**	203	282	3.5	1.5	0.47	2.1	1.4	1.4	41.5
∗ **NA46791 / 46720D**	186	219	3.5	0.8	0.38	2.6	1.8	1.7	10.7
170KF2601	194	251	2	0.8	0.39	2.6	1.7	1.7	15.1
170KF3101	209	297	3	1	0.33	3.0	2.0	2.0	59.6
∗ **NA67787 / 67720D**	198	241	3.5	0.8	0.44	2.3	1.5	1.5	14.9
∗ **NA67790 / 67720D**	200	241	3.5	0.8	0.44	2.3	1.5	1.5	14.5
∗ **NA87700 / 87112D**	210	273	3.5	1.5	0.42	2.4	1.6	1.6	23.4
∗ **HM237545NA / HM237510D**	209	278	5.5	1.5	0.32	3.2	2.1	2.1	31.9
∗ **NA94700 / 94114D**	211	277	5.5	1.5	0.47	2.1	1.4	1.4	33.7

Note ∗ Bearings marked ∗ are inch design.

KF (TNA) Type, Double Cup, Single Cones

Bore Diameter 177.800 – 253.975 mm

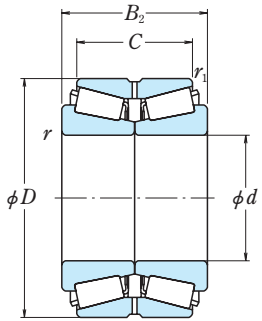

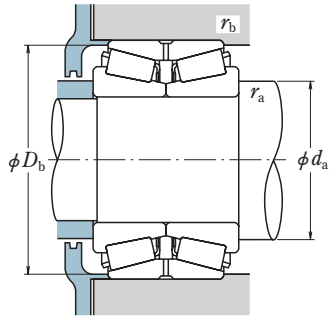

Dynamic Equivalent Load

$P = XF_r + YF_a$

$F_a/F_r \leqq e$		$F_a/F_r > e$	
X	Y	X	Y
1	Y_3	0.67	Y_2

Static Equivalent Load

$P_0 = F_r + Y_0 F_a$

The values of e, Y_2, Y_3, and Y_0 are given in the table below.

Boundary Dimensions (mm/inch)						Basic Load Ratings (kN)		{kgf}		Bearing Numbers	Abutment and Fillet Dimensions (mm)				Constant	Axial Load Factors			Mass (kg)
d	D	B_2	C	r min.	r_1 min.	C_r	C_{0r}	C_r	C_{0r}		d_a	D_b	r_a max.	r_b max.	e	Y_2	Y_3	Y_0	approx.
177.800 7.0000	298.450 11.7500	142.875 5.6250	111.125 4.3750	5.5	1.5	930	1 880	95 000	192 000	∗ **NA94700 / 94118D**	211	282	5.5	1.5	0.47	2.1	1.4	1.4	37.6
178	289	143	111	5.5	1.5	1 050	1 870	107 000	191 000	**178KF2801**	209	278	5.5	1.6	0.32	3.2	2.1	2.1	31.7
180	290	143	111	5.5	1.5	930	1 880	95 000	192 000	**180KF2901**	212	278	5.5	1.5	0.47	2.1	1.4	1.4	33.6
187.325 7.3750	320.675 12.6250	185.738 7.3125	138.112 5.4375	5.5	1.5	1 470	2 530	150 000	258 000	∗ **H239649NA / H239612D**	222	309	5.5	1.5	0.32	3.2	2.1	2.1	51.8
	320.675 12.6250	185.738 7.3125	138.112 5.4375	5.5	1.5	1 350	2 600	138 000	265 000	∗ **NA222075 / 222127D**	225	308	5.5	1.5	0.40	2.5	1.7	1.7	55.8
190.500 7.5000	260.350 10.2500	66.675 2.6250	50.800 2.0000	3.5	0.8	415	820	42 500	83 500	∗ **NA537075 / 537103D**	209	252	3.5	0.8	0.34	2.9	2.0	1.9	9.0
203.200 8.0000	276.225 10.8750	95.250 3.7500	73.025 2.8750	3.5	0.8	580	1 240	59 000	127 000	∗ **LM241149NW / LM241110D**	226	269	3.5	0.8	0.32	3.2	2.1	2.1	14.7
	317.500 12.5000	120.650 4.7500	88.900 3.5000	6.4	1.5	790	1 450	80 500	148 000	∗ **NA132083 / 132126D**	234	302	6.4	1.5	0.31	3.2	2.1	2.1	29.8
	317.500 12.5000	146.050 5.7500	111.125 4.3750	5.5	1.5	990	2 120	101 000	216 000	∗ **NA93800 / 93127D**	238	306	5.5	1.5	0.52	1.9	1.3	1.3	39.6
205	320	146	111	5	1.5	990	2 120	101 000	216 000	**205KF3201**	238	307	4	1.5	0.52	1.9	1.3	1.3	40.2
209.550 8.2500	317.500 12.5000	146.050 5.7500	111.125 4.3750	4.8	1.5	1 120	2 380	114 000	243 000	∗ **209KF3151**	242	308	4.8	1.5	0.46	2.2	1.5	1.4	37.9
220	340	130	110	4	1.5	920	1 830	93 500	187 000	**220KF3402**	255	330	2.5	1	0.40	2.5	1.7	1.6	39.7
228.600 9.0000	355.600 14.0000	146.050 5.7500	111.125 4.3750	6.4	1.5	1 190	2 470	122 000	252 000	∗ **NA130902 / 131401D**	264	340	6.4	1.5	0.33	3.0	2.0	2.0	47.8
230	355	146	111	6	1.5	1 160	2 370	118 000	242 000	**230KF3501WA**	264	340	4	1	0.33	3.0	2.0	2.0	48.2
234.950 9.2500	311.150 12.2500	101.600 4.0000	73.025 2.8750	3.5	0.8	640	1 610	65 000	164 000	∗ **LM446349NW / LM446310D**	259	304	3.5	0.8	0.36	2.8	1.9	1.8	19.3
241.300 9.5000	368.300 14.5000	120.650 4.7500	85.725 3.3750	6.4	1.5	790	1 630	80 500	167 000	∗ **NA170950 / 171451D**	275	348	6.4	1.5	0.36	2.8	1.9	1.8	39.8
244.475 9.6250	349.148 13.7460	133.350 5.2500	101.600 4.0000	6.4	1.5	980	2 130	100 000	217 000	∗ **NA127096 / 127136D**	275	338	6.4	1.5	0.35	2.8	1.9	1.9	36
253.975 9.9990	347.662 13.6875	101.600 4.0000	69.850 2.7500	3.5	1.5	755	1 610	77 000	164 000	∗ **LM249747NW / LM249710D**	278	336	3.5	1.5	0.33	3.0	2.0	2.0	24

Note ∗ Bearings marked ∗ are inch design.

KF (TNA) Type, Double Cup, Single Cones

Bore Diameter 254.000 – 406.400 mm

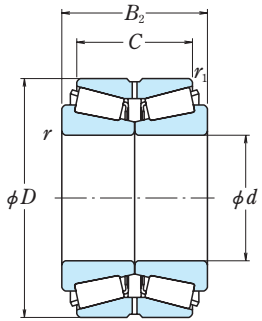

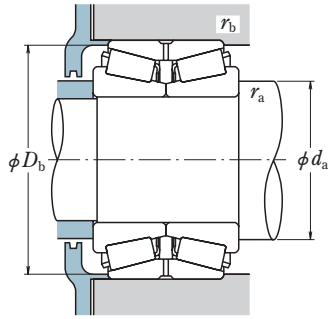

Dynamic Equivalent Load

$P = XF_r + YF_a$

$F_a/F_r \leqq e$		$F_a/F_r > e$	
X	Y	X	Y
1	Y_3	0.67	Y_2

Static Equivalent Load

$P_0 = F_r + Y_0 F_a$

The values of e, Y_2, Y_3, and Y_0 are given in the table below.

Boundary Dimensions (mm/inch)						Basic Load Ratings (kN)		{kgf}		Bearing Numbers	Abutment and Fillet Dimensions (mm)				Constant	Axial Load Factors			Mass (kg)
d	D	B_2	C	r min.	r_1 min.	C_r	C_{0r}	C_r	C_{0r}		d_a	D_b	r_a max.	r_b max.	e	Y_2	Y_3	Y_0	approx.
254.000 10.0000	422.275 16.6250	173.038 6.8125	128.588 5.0625	6.4	1.5	1 950	3 700	199 000	375 000	∗ **HM252344NA / HM252311D**	301	408	6.4	1.5	0.33	3.0	2.0	2.0	86.8
	431.724 16.9970	173.038 6.8125	128.588 5.0625	6.4	1.5	1 670	3 200	170 000	325 000	∗ **NA551002 / 551701D**	299	408	6.8	1.5	0.33	3.0	2.0	2.0	92.1
	431.724 16.9970	173.038 6.8125	128.588 5.0625	6.4	1.5	1 950	3 700	199 000	375 000	∗ **HM252343NA / HM252315D**	301	413	6.4	1.5	0.33	3.0	2.0	2.0	93.4
259.82	390	146	112	5	1.5	1 260	2 440	128 000	249 000	**260KF3901X**	295	379	4	1.5	0.39	2.5	1.7	1.7	52.3
260	390	146	112	5	1.5	1 260	2 440	128 000	249 000	**260KF3901**	295	379	4	1.5	0.39	2.5	1.7	1.7	52.3
260.350 10.2500	400.050 15.7500	146.050 5.7500	107.950 4.2500	6.4	1.5	1 260	2 440	128 000	249 000	∗ **NA221026 / 221576D**	297	383	6.4	1.5	0.39	2.5	1.7	1.7	56.9
	431.724 16.9970	173.038 6.8125	128.588 5.0625	6.4	1.5	1 950	3 700	199 000	375 000	∗ **HM252349NA / HM252315D**	304	413	6.4	1.5	0.33	3.0	2.0	2.0	89.9
266.700 10.5000	352.425 13.8750	107.950 4.2500	82.550 3.2500	6.4	1.5	855	2 110	87 000	215 000	∗ **LM251649NW / LM251610D**	295	343	6.4	1.5	0.32	3.2	2.1	2.1	26.3
280.192 11.0312	406.400 16.0000	120.650 4.7500	85.725 3.3750	6.4	1.5	890	1 740	90 500	178 000	∗ **NA101103 / 101601D**	315	391	6.4	1.5	0.41	2.5	1.7	1.6	43.2
300.787 11.8420	438.048 17.2460	161.925 6.3750	123.825 4.8750	6.4	1.5	1 520	3 500	155 000	360 000	∗ **NA329116 / 329173D**	339	422	6.4	1.5	0.33	3.0	2.0	2.0	73.9
304.800 12.0000	393.700 15.5000	107.950 4.2500	82.550 3.2500	6.4	1.5	910	2 280	92 500	233 000	∗ **L357049NW / L357010D**	335	385	6.4	1.5	0.36	2.8	1.9	1.8	30.2
	438.048 17.2460	161.925 6.3750	123.825 4.8750	6.4	1.5	1 520	3 500	155 000	360 000	∗ **NA329120 / 329173D**	341	422	6.4	1.5	0.33	3.0	2.0	2.0	71.5
	444.500 17.5000	139.700 5.5000	98.425 3.8750	6.4	1.5	1 170	2 280	120 000	233 000	∗ **NA291201 / 291751D**	341	427	6.4	1.5	0.38	2.7	1.8	1.7	59.7
355.600 14.0000	501.650 19.7500	146.050 5.7500	107.950 4.2500	6.4	1.5	1 360	3 300	139 000	335 000	∗ **NA231400 / 231976D**	403	489	6.4	1.5	0.44	2.3	1.5	1.5	83.2
	514.350 20.2500	146.050 5.7500	107.950 4.2500	6.4	1.5	1 360	3 300	139 000	335 000	∗ **NA231400 / 232026D**	403	495	6.4	1.5	0.44	2.3	1.5	1.5	91.6
406.400 16.0000	574.675 22.6250	157.162 6.1875	106.362 4.1875	6.4	1.5	1 580	3 700	161 000	380 000	∗ **NA285160 / 285228D**	453	552	6.4	1.5	0.50	2.0	1.4	1.3	112

Note ∗ Bearings marked ∗ are inch design.

KH (TDI) Type, Double Cone, Single Cups

Bore Diameter 100 – 130 mm

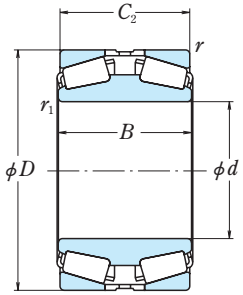

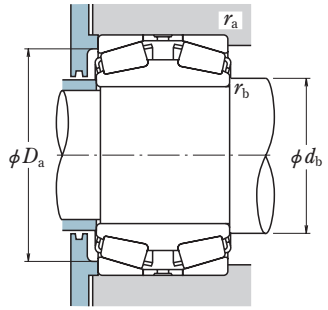

Dynamic Equivalent Load

$P = XF_r + YF_a$

$F_a/F_r \leqq e$		$F_a/F_r > e$	
X	Y	X	Y
1	Y_3	0.67	Y_2

Static Equivalent Load

$P_0 = F_r + Y_0 F_a$

The values of e, Y_2, Y_3, and Y_0 are given in the table below.

Boundary Dimensions (mm/inch)						Basic Load Ratings (kN)		{kgf}		Bearing Numbers	Abutment and Fillet Dimensions (mm)				Constant	Axial Load Factors			Mass (kg)
d	D	B	C_2	r_1 min.	r min.	C_r	C_{0r}	C_r	C_{0r}		d_b	D_a	r_a max.	r_b max.	e	Y_2	Y_3	Y_0	approx.
100	150	110	110	1	2	385	780	39 500	79 500	**100KH1501A+K**	108	138	2	1	0.22	4.5	3.0	2.9	6.4
101.600 4.0000	190.500 7.5000	127.000 5.0000	117.475 4.6250	1.5	3.3	605	1 000	61 500	102 000	**∗ 868D / 854+K**	113	168	3.3	1.5	0.33	3.0	2.0	2.0	14.5
	200.025 7.8750	127.000 5.0000	127.000 5.0000	1.5	3.3	605	1 000	61 500	102 000	**∗ 868D / 854X+K**	113	172	3.3	1.5	0.33	3.0	2.0	2.0	18.2
105	170	90	90	2.5	2	395	810	40 500	82 500	**105KH1701+K**	118	155	2	2	0.32	3.2	2.1	2.1	8.0
107.950 4.2500	190.500 7.5000	101.600 4.0000	98.425 3.8750	1.5	3.3	510	925	52 000	94 500	**∗ 71426D / 71750+K**	121	171	3.3	1.5	0.42	2.4	1.6	1.6	11.8
	212.725 8.3750	152.400 6.0000	142.885 5.6254	3.3	3.3	820	1 400	83 500	143 000	**∗ 946D / 932+K**	123	187	3.3	3.3	0.33	3.1	2.1	2.0	23.9
114.300 4.5000	190.500 7.5000	101.600 4.0000	98.425 3.8750	1.5	3.3	510	925	52 000	94 500	**∗ 71450D / 71750+K**	125	171	3.3	1.5	0.42	2.4	1.6	1.6	11
	212.725 8.3750	152.400 6.0000	142.875 5.6250	3.3	3.3	975	1 620	99 500	165 000	**∗ HH224346DD / HH224310+K**	127	191	3.3	3.3	0.33	3.1	2.1	2.0	21.9
	212.725 8.3750	152.400 6.0000	142.885 5.6254	3.3	3.3	820	1 400	83 500	143 000	**∗ 938D / 932+K**	127	187	3.3	3.3	0.33	3.1	2.1	2.0	22.5
120	170	120	120	2	1.5	425	915	43 500	93 000	**120KH1701A+K**	128	158	1.5	1.5	0.25	4.0	2.7	2.6	8.0
120.000 4.7244	182.562 7.1875	80.000 3.1496	80.000 3.1496	0.8	3.3	390	885	40 000	90 500	**∗ 120KH1851+K**	132	167	3.3	0.8	0.31	3.3	2.2	2.2	7.8
120.650 4.7500	234.950 9.2500	152.400 6.0000	139.700 5.5000	6.4	3.3	875	1 580	89 000	161 000	**∗ 95474D / 95925+K**	146	212	3.3	6.4	0.37	2.7	1.8	1.8	28.1
127.000 5.0000	182.562 7.1875	76.200 3.0000	76.200 3.0000	1.5	3.3	390	885	40 000	90 500	**∗ 48290D / 48220+K**	136	167	3.3	1.5	0.31	3.3	2.2	2.2	6.7
	234.950 9.2500	152.400 6.0000	139.700 5.5000	5.0	3.3	875	1 580	89 000	161 000	**∗ 95499D / 95925+K**	147	212	3.3	5.0	0.37	2.7	1.8	1.8	26.7
	254.000 10.0000	171.450 6.7500	161.925 6.3750	3.3	6.4	975	1 600	99 000	164 000	**∗ EE153053D / 153100+K**	146	223	6.4	3.3	0.32	3.1	2.1	2.1	36.5
130	190 260	120 120	120 120	1.5 3	1.5 3	490 910	1 100 1 480	50 000 93 000	112 000 151 000	**130KH1901+K** **130KH2603+K**	140 149	177 231	1.5 2.5	1.5 2.5	0.26 0.55	3.8 1.8	2.6 1.2	2.5 1.2	11.1 29.5

Note ∗ Bearings marked ∗ are inch design.

KH (TDI) Type, Double Cone, Single Cups

Bore Diameter 130.005 – 152.400 mm

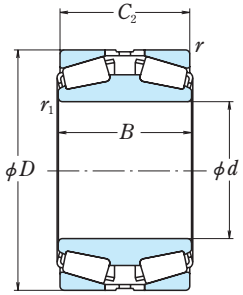

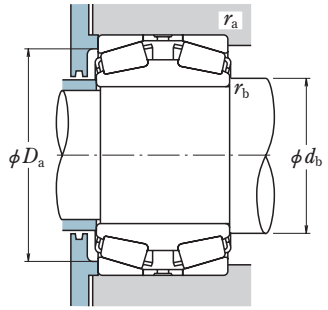

Dynamic Equivalent Load

$P = XF_r + YF_a$

$F_a/F_r \leqq e$		$F_a/F_r > e$	
X	Y	X	Y
1	Y_3	0.67	Y_2

Static Equivalent Load

$P_0 = F_r + Y_0 F_a$

The values of e, Y_2, Y_3, and Y_0 are given in the table below.

Boundary Dimensions (mm/inch)						Basic Load Ratings (kN)		{kgf}		Bearing Numbers	Abutment and Fillet Dimensions (mm)				Constant	Axial Load Factors			Mass (kg)
d	D	B	C_2	r_1 min.	r min.	C_r	C_{0r}	C_r	C_{0r}		d_b	D_a	r_a max.	r_b max.	e	Y_2	Y_3	Y_0	approx.
130.005 5.1183	215.900 8.5000	123.825 4.8750	123.825 4.8750	1.5	3.3	495	985	50 500	100 000	**∗ 74510D / 74850+K**	145	195	3.3	1.5	0.49	2.1	1.4	1.4	17.2
130.175 5.1250	215.900 8.5000	101.600 4.0000	101.600 4.0000	1.5	3.3	495	985	50 500	100 000	**∗ 74512D / 74850+K**	145	195	3.3	1.5	0.49	2.1	1.4	1.4	14.7
133.350 5.2500	196.850 7.7500	92.075 3.6250	92.075 3.6250	1.5	3.3	495	1 010	50 500	103 000	**∗ 67390D / 67322+K**	142	180	3.3	1.5	0.34	2.9	2.0	1.9	9.3
	215.900 8.5000	95.250 3.7500	95.250 3.7500	1.5	3.3	495	985	50 500	100 000	**∗ 133KH2151+K**	147	195	3.3	1.5	0.49	2.1	1.4	1.4	13.5
135	230	120	120	1	2.5	760	1 480	77 500	151 000	**135KH2301+K**	148	207	2	1	0.33	3.0	2.0	2.0	20.8
136.525 5.3750	225.425 8.8750	120.650 4.7500	120.650 4.7500	1.5	3.3	760	1 480	77 500	151 000	**∗ H228649D / H228610+K**	149	204	3.3	1.5	0.33	3.0	2.0	2.0	19
139.700 5.5000	200.025 7.8750	75.408 2.9688	77.788 3.0625	0.8	3.3	390	915	39 500	93 500	**∗ 48680D / 48620+K**	151	185	3.3	0.8	0.34	3.0	2.0	2.0	7.9
	295.275 11.6250	171.450 6.7500	165.100 6.5000	3.3	6.4	1 230	2 080	125 000	212 000	**∗ EE455048D / 455116+K**	162	256	6.4	3.3	0.31	3.3	2.2	2.2	55.4
140	210 300	53 150	53 150	2.5 1.5	2 4	305 1 180	530 1 830	31 000 120 000	54 000 187 000	140KH30+K **140KH3002+K**	157 161	195 264	2 3	2 1.5	0.40 0.55	2.5 1.8	1.7 1.2	1.6 1.2	6.4 50.2
146.050 5.7500	317.500 12.5000	171.450 6.7500	161.925 6.3750	13.5	6.8	1 510	2 380	154 000	243 000	**∗ HH234040D / HH234018+K**	180	279	6.8	13.5	0.33	3.1	2.1	2.0	62.7
149.225 5.8750	236.538 9.3125	105.346 4.1475	106.362 4.1875	1.5	3.3	685	1 360	70 000	139 000	**∗ 82587D / 82931+K**	160	213	3.3	1.5	0.44	2.3	1.5	1.5	17.5
152.400 6.0000	222.250 8.7500	84.138 3.3125	84.138 3.3125	1.5	1.5	490	1 060	50 000	108 000	**∗ M231649D / M231610+K**	164	207	1.5	1.5	0.33	3.0	2.0	2.0	11.1
	244.475 9.6250	92.075 3.6250	87.312 3.4375	1.5	3.3	570	1 020	58 000	104 000	**∗ 81601D / 81962+K**	167	225	3.3	1.5	0.35	2.9	1.9	1.9	15.3
	254.000 10.0000	158.750 6.2500	158.750 6.2500	1.5	3.3	885	1 660	90 000	169 000	**∗ 99603D / 99100+K**	165	230	3.3	1.5	0.41	2.5	1.7	1.6	29.6
	298.450 11.7500	111.125 4.3750	107.950 4.2500	3.3	3.3	960	1 450	98 000	148 000	**∗ EE517060D / 517117+K**	176	272	3.3	3.3	0.33	3.0	2.0	2.0	34.2
	317.500 12.5000	171.450 6.7500	161.925 6.3750	9.7	6.8	1 510	2 380	154 000	243 000	**∗ HH234048D / HH234018+K**	179	279	6.8	9.7	0.33	3.1	2.1	2.0	60.7

Note ∗ Bearings marked ∗ are inch design.

KH (TDI) Type, Double Cone, Single Cups

Bore Diameter 155.575 – 199.974 mm

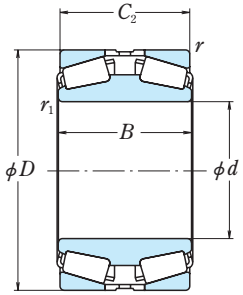

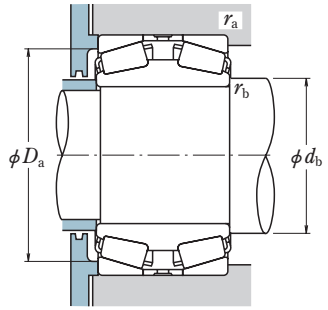

Dynamic Equivalent Load

$P = XF_r + YF_a$

$F_a/F_r \leqq e$		$F_a/F_r > e$	
X	Y	X	Y
1	Y_3	0.67	Y_2

Static Equivalent Load

$P_0 = F_r + Y_0 F_a$

The values of e, Y_2, Y_3, and Y_0 are given in the table below.

Boundary Dimensions (mm/inch)						Basic Load Ratings (kN)		{kgf}	
d	D	B	C_2	r_1 min.	r min.	C_r	C_{0r}	C_r	C_{0r}
155.575 6.1250	247.650 9.7500	122.238 4.8125	122.238 4.8125	1.5	3.3	910	1 790	93 000	182 000
160	340	136	150	1.5	4	1 400	2 140	143 000	219 000
165.100 6.5000	225.425 8.8750	76.200 3.0000	79.375 3.1250	0.8	3.3	410	1 080	42 000	110 000
173	350	155	155	5	4	1 430	2 410	146 000	246 000
174.625 6.8750	288.925 11.3750	123.825 4.8750	123.825 4.8750	1.5	3.3	1 050	1 870	107 000	191 000
177.800 7.0000	247.650 9.7500	90.488 3.5625	90.488 3.5625	1.5	3.3	555	1 290	56 500	131 000
	279.400 11.0000	112.712 4.4375	112.710 4.4374	1.5	3.3	785	1 540	80 000	157 000
	288.925 11.3750	123.825 4.8750	123.825 4.8750	1.5	3.3	1 050	1 870	107 000	191 000
	288.925 11.3750	123.825 4.8750	123.825 4.8750	1.5	3.3	930	1 880	95 000	192 000
	288.925 11.3750	158.750 6.2500	158.750 6.2500	1.5	3.3	1 050	1 870	107 000	191 000
	298.450 11.7500	123.825 4.8750	123.825 4.8750	1.5	3.3	930	1 880	95 000	192 000
187.325 7.3750	319.964 12.5970	161.920 6.3748	168.280 6.6252	3.3	4.8	1 270	2 400	129 000	245 000
	320.675 12.6250	161.925 6.3750	168.275 6.6250	3.3	4.8	1 470	2 530	150 000	258 000
190.500 7.5000	317.500 12.5000	133.350 5.2500	133.350 5.2500	6.4	3.3	990	2 120	101 000	216 000
195	305	120	120	3	2.5	1 050	2 020	108 000	206 000
199.974 7.8730	317.500 12.5000	133.350 5.2500	133.350 5.2500	6.4	3.3	990	2 120	101 000	216 000

Bearing Numbers	Abutment and Fillet Dimensions (mm)				Constant	Axial Load Factors			Mass (kg)
	d_b	D_a	r_a max.	r_b max.	e	Y_2	Y_3	Y_0	approx.
∗ H432549D / H432510+K	167	226	3.3	1.5	0.37	2.7	1.8	1.8	22.4
160KH3401+K	182	300	3	1.5	0.55	1.8	1.2	1.2	63
∗ 46790D / 46720+K	175	208	3.3	0.8	0.38	2.6	1.8	1.7	9.7
173KH3501+K	201	311	3	4	0.43	2.3	1.6	1.5	69.3
∗ HM237542D / HM237510+K	190	266	3.3	1.5	0.32	3.2	2.1	2.1	31.3
∗ 67790D / 67720+K	187	228	3.3	1.5	0.44	2.3	1.5	1.5	13.3
∗ 82680D / 82620+K	191	253	3.3	1.5	0.53	1.9	1.3	1.2	24.9
∗ HM237546D / HM237510+K	191	266	3.3	1.5	0.32	3.2	2.1	2.1	30.5
∗ 94706D / 94113+K	192	261	3.3	1.5	0.47	2.1	1.4	1.4	32.1
∗ HM237546DD / HM237510+K	191	266	3.3	1.5	0.32	3.2	2.1	2.1	36.7
∗ 94706D / 94118+K	192	265	3.3	1.5	0.47	2.1	1.4	1.4	36.3
∗ 187KH3151+K	206	287	4.8	3.3	0.40	2.5	1.7	1.7	52.4
∗ H239649D / H239612+K	204	292	4.8	3.3	0.32	3.2	2.1	2.1	51.2
∗ 93751D / 93125+K	216	288	3.3	6.4	0.52	1.9	1.3	1.3	43
195KH3001+K	211	282	2	2	0.37	2.7	1.8	1.8	31.9
∗ 93788D / 93125+K	221	288	3.3	6.4	0.52	1.9	1.3	1.3	40

Note ∗ Bearings marked ∗ are inch design.

KH (TDI) Type, Double Cone, Single Cups

Bore Diameter 200 – 235 mm

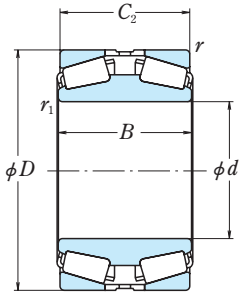

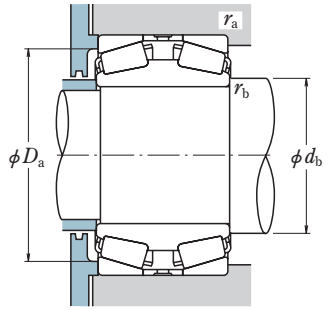

Dynamic Equivalent Load

$P = XF_r + YF_a$

$F_a/F_r \leqq e$		$F_a/F_r > e$	
X	Y	X	Y
1	Y_3	0.67	Y_2

Static Equivalent Load

$P_0 = F_r + Y_0 F_a$

The values of e, Y_2, Y_3, and Y_0 are given in the table below.

Boundary Dimensions (mm/inch)						Basic Load Ratings (kN)		{kgf}	
d	D	B	C_2	r_1 min.	r min.	C_r	C_{0r}	C_r	C_{0r}
200	420	138	138	5	5	1 740	2 750	177 000	280 000
203.200 8.0000	292.100 11.5000	107.950 4.2500	107.950 4.2500	1.5	3.3	930	2 100	94 500	214 000
	317.500 12.5000	133.350 5.2500	133.350 5.2500	6.4	3.3	990	2 120	101 000	216 000
	365.049 14.3720	152.400 6.0000	158.750 6.2500	3.3	3.3	1 500	2 690	153 000	274 000
206.375 8.1250	282.575 11.1250	87.312 3.4375	87.312 3.4375	0.8	3.3	630	1 600	64 000	163 000
	336.550 13.2500	184.150 7.2500	180.975 7.1250	1.5	3.3	1 790	3 800	182 000	390 000
210	365	170	170	4	4	1 740	3 400	177 000	345 000
216.103 8.5080	330.200 13.0000	142.875 5.6250	152.400 6.0000	3.3	3.3	1 090	2 260	111 000	231 000
219.075 8.6250	358.775 14.1250	200.025 7.8750	196.850 7.7500	1.5	6.4	1 890	3 950	192 000	405 000
220.662 8.6875	314.325 12.3750	115.888 4.5625	115.888 4.5625	1.5	3.3	1 020	2 390	104 000	243 000
225.425 8.8750	355.600 14.0000	165.100 6.5000	165.100 6.5000	8.0	1.5	1 190	2 470	122 000	252 000
228.600 9.0000	355.600 14.0000	165.100 6.5000	165.100 6.5000	8.0	1.5	1 190	2 470	122 000	252 000
	425.450 16.7500	165.100 6.5000	177.800 7.0000	3.5	6.4	2 200	4 000	224 000	405 000
234.950 9.2500	327.025 12.8750	93.662 3.6875	93.662 3.6875	1.5	3.3	805	1 880	82 000	192 000
	384.175 15.1250	209.550 8.2500	209.550 8.2500	1.5	6.4	2 090	4 450	213 000	455 000
235	375	170	170	3	3	1 850	3 800	189 000	385 000

Bearing Numbers	Abutment and Fillet Dimensions (mm)				Constant	Axial Load Factors			Mass (kg)
	d_b	D_a	r_a max.	r_b max.	e	Y_2	Y_3	Y_0	approx.
200KH4201+K	241	382	4	4	0.40	2.5	1.7	1.6	93.3
∗ 203KH2951+K	215	271	3.3	1.5	0.33	3.0	2.0	2.0	24.3
∗ 93801D / 93125+K	222	288	3.3	6.4	0.52	1.9	1.3	1.3	39.1
∗ EE420800D / 421437+K	229	332	3.3	3.3	0.42	2.4	1.6	1.6	68.5
∗ 67985D / 67920+K	216	261	3.3	0.8	0.51	2.0	1.3	1.3	16.8
∗ H242649D / H242610+K	222	306	3.3	1.5	0.33	3.0	2.0	2.0	64.2
210KH3601+K	234	330	3	3	0.42	2.4	1.6	1.6	74
∗ 9977D / 9920+K	232	301	3.3	3.3	0.55	1.8	1.2	1.2	43.2
∗ H244849D / H244810+K	236	323	6.4	1.5	0.33	3.0	2.0	2.0	77.8
∗ M244249D / M244210+K	233	292	3.3	1.5	0.33	3.0	2.0	2.0	29.6
∗ EE130888D / 131400+K	251	329	1.5	8.0	0.33	3.0	2.0	2.0	57.7
∗ EE130903D / 131400+K	253	329	1.5	8.0	0.33	3.0	2.0	2.0	56.7
∗ EE700090D / 700167+K	259	384	6.4	3.5	0.33	3.0	2.0	2.0	110
∗ 8576D / 8520+K	248	304	3.3	1.5	0.41	2.5	1.7	1.6	24.4
∗ H247549D / H247510+K	251	344	6.4	1.5	0.33	3.0	2.0	2.0	95.8
235KH3701+K	255	345	2.5	2.5	0.33	3.0	2.0	2.0	70.9

Note ∗ Bearings marked ∗ are inch design.

KH (TDI) Type, Double Cone, Single Cups

Bore Diameter 241.224 – 273.050 mm

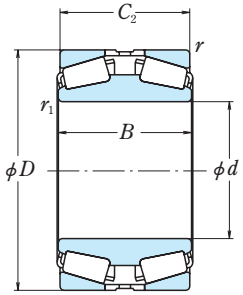

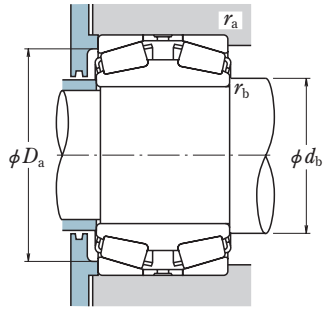

Dynamic Equivalent Load

$P = XF_r + YF_a$

$F_a/F_r \leqq e$		$F_a/F_r > e$	
X	Y	X	Y
1	Y_3	0.67	Y_2

Static Equivalent Load

$P_0 = F_r + Y_0 F_a$

The values of e, Y_2, Y_3, and Y_0 are given in the table below.

Boundary Dimensions (mm/inch)						Basic Load Ratings (kN)		{kgf}	
d	D	B	C_2	r_1 min.	r min.	C_r	C_{0r}	C_r	C_{0r}
241.224 9.4970	355.600 14.0000	107.950 4.2500	107.950 4.2500	1.5	3.3	980	2 130	100 000	217 000
241.300 9.5000	355.524 13.9970	109.525 4.3120	109.525 4.3120	3.3	3.3	980	2 130	100 000	217 000
241.478 9.5070	349.148 13.7460	107.950 4.2500	107.950 4.2500	1.5	3.3	980	2 130	100 000	217 000
244.475 9.6250	327.025 12.8750	92.075 3.6250	92.075 3.6250	1.5	3.3	755	1 840	77 000	188 000
247.650 9.7500	406.400 16.0000	219.075 8.6250	215.900 8.5000	3.3	6.4	2 630	5 850	268 000	595 000
254.000 10.0000	355.600 14.0000	92.862 3.6560	92.710 3.6500	1.5	3.3	790	1 630	80 500	167 000
	358.775 14.1250	130.175 5.1250	130.175 5.1250	3.3	3.3	1 300	3 100	133 000	315 000
	438.150 17.2500	165.100 6.5000	165.100 6.5000	3.3	6.4	2 130	3 950	217 000	405 000
	444.500 17.5000	133.350 5.2500	133.350 5.2500	3.3	6.4	1 700	3 000	174 000	305 000
259.5	481	250	250	2.5	5	3 450	7 100	350 000	725 000
260	440 440	144 144	144 144	5 5	4 5	1 770 1 870	4 150 3 500	181 000 191 000	420 000 360 000
260.350 10.2500	365.125 14.3750	107.950 4.2500	107.950 4.2500	3.3	6.4	990	2 200	101 000	224 000
269.875 10.6250	381.000 15.0000	136.525 5.3750	136.525 5.3750	3.3	3.3	1 360	3 200	138 000	325 000
273.050 10.7500	393.700 15.5000	130.180 5.1252	130.180 5.1252	2.5	2.0	1 200	2 570	123 000	262 000

Bearing Numbers	Abutment and Fillet Dimensions (mm)				Constant	Axial Load Factors			Mass (kg)
	d_b	D_a	r_a max.	r_b max.	e	Y_2	Y_3	Y_0	approx.
∗ EE127094D / 127140+K	257	328	3.3	1.5	0.35	2.8	1.9	1.9	36.8
∗ 241KH3551+K	259	328	3.3	3.3	0.35	2.8	1.9	1.9	37.1
∗ EE127097D / 127135+K	257	325	3.3	1.5	0.35	2.8	1.9	1.9	33.8
∗ LM247748D / LM247710+K	256	306	3.3	1.5	0.49	2.1	1.4	1.4	21.6
∗ HH249949D / HH249910+K	268	366	6.4	3.3	0.33	3.0	2.0	2.0	115
∗ EE171000D / 171400+K	266	331	3.3	1.5	0.36	2.8	1.9	1.8	27.1
∗ M249748D / M249710+K	269	335	3.3	3.3	0.33	3.0	2.0	2.0	42
∗ EE738101D / 738172+K	283	400	6.4	3.3	0.36	2.8	1.9	1.8	107
∗ EE822101D / 822175+K	283	405	6.4	3.3	0.34	2.9	2.0	1.9	86.7
259KH4801+K	288	429	4	2	0.45	2.2	1.5	1.5	213
260KH31+K **260KH4402+K**	301 290	407 402	3 4	4 4	0.35 0.42	2.9 2.4	1.9 1.6	1.9 1.6	95.8 93
∗ EE134103D / 134143+K	277	339	6.4	3.3	0.37	2.7	1.8	1.8	34.4
∗ M252349D / M252310+K	287	356	3.3	3.3	0.33	3.0	2.0	2.0	48.6
∗ 273KH3951+K	291	368	2.0	2.5	0.40	2.5	1.7	1.6	49.8

Note ∗ Bearings marked ∗ are inch design.

KH (TDI) Type, Double Cone, Single Cups

Bore Diameter 279.400 – 333.375 mm

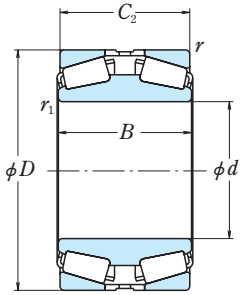

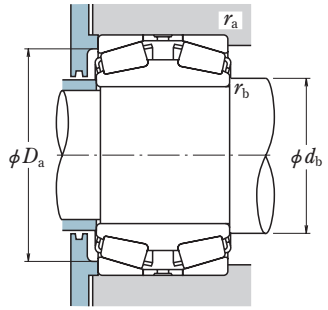

Dynamic Equivalent Load

$P = XF_r + YF_a$

$F_a/F_r \leqq e$		$F_a/F_r > e$	
X	Y	X	Y
1	Y_3	0.67	Y_2

Static Equivalent Load

$P_0 = F_r + Y_0 F_a$

The values of e, Y_2, Y_3, and Y_0 are given in the table below.

Boundary Dimensions (mm/inch)						Basic Load Ratings (kN)		{kgf}	
d	D	B	C_2	r_1 min.	r min.	C_r	C_{0r}	C_r	C_{0r}
279.400 11.0000	469.900 18.5000	166.688 6.5625	169.862 6.6875	6.4	3.3	2 030	4 150	207 000	420 000
279.578 11.0070	380.898 14.9960	117.475 4.6250	117.475 4.6250	1.5	3.3	1 060	2 990	108 000	305 000
285	500	200	200	6	5	2 980	5 800	305 000	590 000
285.750 11.2500	380.898 14.9960	117.475 4.6250	117.475 4.6250	1.5	3.3	1 060	2 990	108 000	305 000
300.038 11.8125	422.275 16.6250	150.812 5.9375	150.812 5.9375	3.3	3.3	1 700	4 100	173 000	420 000
304.648 11.9940	438.048 17.2460	131.762 5.1875	131.762 5.1875	3.3	3.3	1 520	3 500	155 000	360 000
	438.048 17.2460	134.938 5.3125	133.350 5.2500	3.3	4.8	1 530	3 500	156 000	355 000
304.800 12.0000	495.300 19.5000	134.938 5.3125	137.952 5.4312	1.5	3.3	1 840	3 550	188 000	365 000
	558.800 22.0000	285.750 11.2500	285.750 11.2500	3.3	6.4	4 250	8 200	435 000	840 000
305.003 12.0080	438.048 17.2460	134.938 5.3125	133.350 5.2500	3.3	4.8	1 530	3 500	156 000	355 000
305.054 12.0100	500.000 19.6850	200.000 7.8740	200.000 7.8740	3.3	6.4	2 880	6 050	294 000	620 000
310	440	110	110	4	3	1 250	2 780	128 000	283 000
317.500 12.5000	422.275 16.6250	128.588 5.0625	128.588 5.0625	1.5	3.3	1 360	3 500	138 000	355 000
	447.675 17.6250	158.750 6.2500	158.750 6.2500	3.3	3.3	1 920	4 700	196 000	480 000
330	540	186	186	5	5	2 950	7 450	300 000	760 000
333.375 13.1250	469.900 18.5000	166.690 6.5626	166.690 6.5626	3.3	3.3	2 100	5 200	215 000	530 000

Bearing Numbers	Abutment and Fillet Dimensions (mm)				Constant	Axial Load Factors			Mass (kg)
	d_b	D_a	r_a max.	r_b max.	e	Y_2	Y_3	Y_0	approx.
∗ **EE722111D / 722185+K**	313	431	3.3	6.4	0.38	2.7	1.8	1.7	119
∗ **LM654645D / LM654610+K**	296	355	3.3	1.5	0.43	2.3	1.6	1.5	41
285KH5001A+K	318	456	4	5	0.35	2.8	1.9	1.9	170
∗ **LM654648D / LM654610+K**	300	355	3.3	1.5	0.43	2.3	1.6	1.5	38.5
∗ **HM256849D / HM256810+K**	318	395	3.3	3.3	0.34	3.0	2.0	2.0	66.7
∗ **EE329117D / 329172+K**	324	408	3.3	3.3	0.33	3.0	2.0	2.0	66.3
∗ **EE129121D / 129172+K**	325	407	4.8	3.3	0.42	2.4	1.6	1.6	65.6
∗ **EE941206D / 941950+K**	329	455	3.3	1.5	0.40	2.5	1.7	1.7	103
∗ **EE790119D / 790221+K**	341	506	6.4	3.3	0.39	2.5	1.7	1.7	307
∗ **EE129123D / 129172+K**	325	407	4.8	3.3	0.42	2.4	1.6	1.6	65.4
∗∗ **HM858548D / HM858511+K**	333	457	6.4	3.3	0.33	3.0	2.0	2.0	164
310KH4401+K	331	413	2.5	3	0.37	2.7	1.8	1.8	53.2
∗ **LM258649D / LM258610+K**	333	399	3.3	1.5	0.33	3.1	2.1	2.0	49.7
∗ **HM259049D / HM259010+K**	335	418	3.3	3.3	0.33	3.0	2.0	2.0	79.6
330KH5401+K	373	497	4	4	0.33	3.0	2.0	2.0	184
∗ **333KH4651+K**	352	440	3.3	3.3	0.33	3.0	2.0	2.0	91.4

Note ∗ Bearings marked ∗ are inch design.
∗∗ The maximum outside diameter is listed and its tolerance is negative (See table **2.4.2** on page **A 24**).

KH (TDI) Type, Double Cone, Single Cups

Bore Diameter 340 – 406 mm

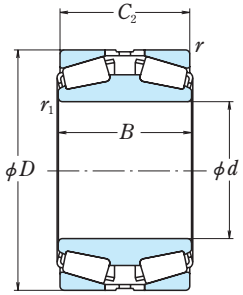

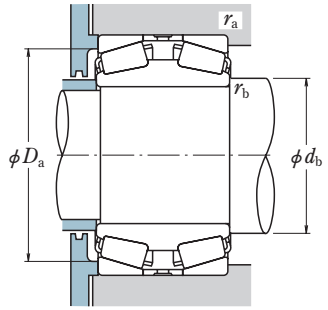

Dynamic Equivalent Load

$P = XF_r + YF_a$

$F_a/F_r \leqq e$		$F_a/F_r > e$	
X	Y	X	Y
1	Y_3	0.67	Y_2

Static Equivalent Load

$P_0 = F_r + Y_0 F_a$

The values of e, Y_2, Y_3, and Y_0 are given in the table below.

Boundary Dimensions (mm/inch)						Basic Load Ratings (kN)		{kgf}	
d	D	B	C_2	r_1 min.	r min.	C_r	C_{0r}	C_r	C_{0r}
340	520	133	133	5	5	2 020	4 100	206 000	420 000
	580	190	190	6	5	2 690	5 150	274 000	525 000
	580	241	241	5	5	3 800	7 750	385 000	790 000
342.900	533.400	146.050	139.700	3.3	3.3	1 810	3 600	185 000	365 000
13.5000	21.0000	5.7500	5.5000						
	571.500	163.512	163.512	3.3	6.4	2 700	5 050	275 000	515 000
	22.5000	6.4375	6.4375						
346.075	488.950	174.625	174.625	3.3	3.3	2 130	5 200	218 000	530 000
13.6250	19.2500	6.8750	6.8750						
355.600	444.500	114.300	112.712	1.5	3.3	1 140	3 300	116 000	340 000
14.0000	17.5000	4.5000	4.4375						
	457.200	120.650	120.650	1.5	3.3	1 400	3 750	142 000	385 000
	18.0000	4.7500	4.7500						
360	540	134	134	6	5	2 100	4 350	214 000	445 000
	600	192	192	6	5	3 500	7 100	355 000	725 000
368.300	523.875	185.738	185.738	3.3	6.4	2 950	7 450	300 000	760 000
14.5000	20.6250	7.3125	7.3125						
374.574	546.100	193.675	193.675	3.3	6.4	3 150	8 000	320 000	815 000
14.7470	21.5000	7.6250	7.6250						
380	530	200	200	5	5	2 380	6 200	242 000	630 000
384.175	546.100	193.675	193.675	3.3	6.4	3 150	8 000	320 000	815 000
15.1250	21.5000	7.6250	7.6250						
385	530	180	180	2	4	2 130	5 300	217 000	540 000
393.700	546.100	120.650	141.288	3.3	6.4	1 400	3 300	142 000	335 000
15.5000	21.5000	4.7500	5.5625						
400	530	105	120	1.5	4	1 340	3 350	137 000	345 000
	590	142	142	3	3	2 300	5 000	235 000	510 000
	590	144.5	144.5	5	5	2 150	4 550	219 000	465 000
406	635	224	224	3	6	4 200	10 800	425 000	1 100 000

Bearing Numbers	Abutment and Fillet Dimensions (mm)				Constant	Axial Load Factors			Mass (kg)
	d_b	D_a	r_a max.	r_b max.	e	Y_2	Y_3	Y_0	approx.
340KH30+K	382	484	4	4	0.39	2.6	1.7	1.7	105
340KH31+K	377	530	4	5	0.39	2.6	1.7	1.7	205
340KH5801+K	376	531	4	4	0.37	2.7	1.8	1.8	265
∗ EE971355D / 972100+K	372	497	3.3	3.3	0.33	3.0	2.0	2.0	114
∗ EE536136D / 536225+K	381	529	6.4	3.3	0.33	3.0	2.0	2.0	172
∗ HM262749D / HM262710+K	366	457	3.3	3.3	0.33	3.0	2.0	2.0	104
∗ L163149D / L163110+K	369	423	3.3	1.5	0.31	3.3	2.2	2.1	41
∗ LM263149D / LM263110+K	370	435	3.3	1.5	0.32	3.2	2.1	2.1	50.5
360KH30+K	391	505	4	5	0.39	2.6	1.7	1.7	111
360KH31B+K	399	551	4	5	0.39	2.6	1.7	1.7	235
∗ HM265049D / HM265010+K	390	487	6.4	3.3	0.33	3.0	2.0	2.0	135
∗ HM266445D / HM266410+K	402	508	6.4	3.3	0.33	3.0	2.0	2.0	159
380KH5302+K	404	495	4	4	0.33	3.0	2.0	2.0	134
∗ HM266449D / HM266410+K	407	508	6.4	3.3	0.33	3.0	2.0	2.0	150
385KH5301+K	404	497	3	2	0.38	2.7	1.8	1.7	117
∗ EE234157D / 234215+K	419	507	6.4	3.3	0.48	2.1	1.4	1.4	92.2
400KH5301+K	418	499	3	1	0.56	1.8	1.2	1.2	69.1
400KH5901+K	428	553	2.5	2.5	0.42	2.4	1.6	1.6	138
400KH5902+K	430	550	4	4	0.42	2.4	1.6	1.6	131
406KH6301+K	451	593	5	2.5	0.33	3.0	2.0	2.0	287

Note ∗ Bearings marked ∗ are inch design.

KH (TDI) Type, Double Cone, Single Cups

Bore Diameter 406.400 – 458 mm

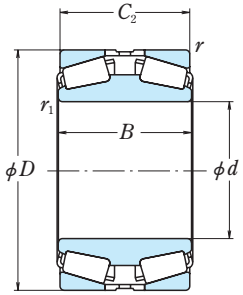

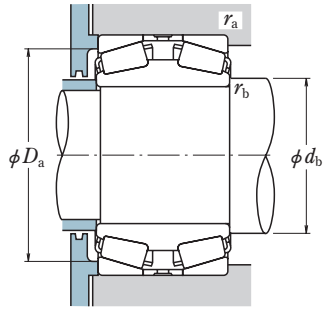

Dynamic Equivalent Load

$P = XF_r + YF_a$

$F_a/F_r \leqq e$		$F_a/F_r > e$	
X	Y	X	Y
1	Y_3	0.67	Y_2

Static Equivalent Load

$P_0 = F_r + Y_0 F_a$

The values of e, Y_2, Y_3, and Y_0 are given in the table below.

Boundary Dimensions (mm/inch)						Basic Load Ratings (kN)		{kgf}	
d	D	B	C_2	r_1 min.	r min.	C_r	C_{0r}	C_r	C_{0r}
406.400 16.0000	546.100 21.5000	120.650 4.7500	141.288 5.5625	1.5	6.4	1 400	3 300	142 000	335 000
	546.100 21.5000	138.112 5.4375	138.112 5.4375	1.5	6.4	1 730	4 300	176 000	435 000
406.476 16.0030	673.049 26.4980	195.262 7.6875	195.262 7.6875	3.3	6.4	3 850	7 950	390 000	810 000
415.000 16.3386	593.000 23.3465	152.000 5.9843	152.000 5.9843	3.5	3.5	2 350	5 400	240 000	550 000
419.100 16.5000	622.300 24.5000	155.575 6.1250	152.705 6.0120	3.5	6.8	2 770	6 150	283 000	630 000
419.227 16.5050	736.448 28.9940	406.400 16.0000	406.400 16.0000	6.4	6.4	8 550	19 900	875 000	2 030 000
431.800 17.0000	571.500 22.5000	130.175 5.1250	133.350 5.2500	1.5	3.3	1 850	4 650	188 000	470 000
	635.000 25.0000	173.038 6.8125	173.038 6.8125	6.4	6.4	3 200	7 250	325 000	740 000
440	650	157	157	6	6	2 810	6 200	287 000	635 000
447.675 17.6250	635.000 25.0000	223.838 8.8125	223.838 8.8125	3.3	6.4	3 250	8 650	330 000	885 000
448	635	224	224	3	6	4 200	10 800	425 000	1 100 000
453.000 17.8346	593.000 23.3465	136.000 5.3543	136.000 5.3543	1.5	3.3	1 920	5 000	196 000	510 000
457.073 17.9950	749.300 29.5000	412.750 16.2500	419.100 16.5000	3.3	6.4	8 700	21 200	885 000	2 160 000
457.200 18.0000	596.900 23.5000	130.175 5.1250	133.350 5.2500	1.5	3.3	1 790	4 750	182 000	480 000
	596.900 23.5000	133.350 5.2500	136.525 5.3750	1.5	3.3	1 920	5 000	196 000	510 000
	863.498 33.9960	368.300 14.5000	368.300 14.5000	6.4	6.4	9 500	19 700	965 000	2 010 000
458	830.5	377	377	7.5	7.5	9 100	19 700	930 000	2 010 000

Bearing Numbers	Abutment and Fillet Dimensions (mm)				Constant	Axial Load Factors			Mass (kg)
	d_b	D_a	r_a max.	r_b max.	e	Y_2	Y_3	Y_0	approx.
∗ **EE234161D / 234215+K**	423	507	6.4	1.5	0.48	2.1	1.4	1.4	84.7
∗ **LM767749D / LM767710+K**	425	511	6.4	1.5	0.47	2.1	1.4	1.4	89.9
∗ **EE623161D / 623265+K**	448	620	6.4	3.3	0.36	2.8	1.9	1.8	292
∗ **415KH5951+K**	441	555	3.5	3.5	0.48	2.1	1.4	1.4	139
∗ **EE261650D / 262450+K**	452	580	6.8	3.5	0.38	2.6	1.8	1.7	168
∗ **EE323166D / 323290+K**	463	662	6.4	6.4	0.37	2.7	1.8	1.8	775
∗ **EE239171D / 239225+K**	450	542	3.3	1.5	0.38	2.6	1.8	1.7	92
∗ **EE931170D / 931250+K**	468	595	6.4	6.4	0.32	3.1	2.1	2.1	193
440KH30+K	488	606	5	5	0.39	2.6	1.7	1.7	183
∗ **M270749D / M270710+K**	475	591	6.4	3.3	0.33	3.0	2.0	2.0	232
448KH6301+K	472	593	5	2.5	0.33	3.0	2.0	2.0	238
∗ **453KH5951+K**	473	564	3.3	1.5	0.47	2.1	1.4	1.4	98.8
∗ **EE925179D / 925295+K**	497	686	6.4	3.3	0.31	3.3	2.2	2.2	760
∗ **EE244181D / 244235+K**	475	565	3.3	1.5	0.40	2.5	1.7	1.6	96.9
∗ **L770849D / L770810+K**	476	566	3.3	1.5	0.47	2.1	1.4	1.4	98.9
∗ **457KH8651+K**	517	783	6.4	6.4	0.37	2.7	1.8	1.8	1 030
458KH8301+K	512	750	6	6	0.40	2.5	1.7	1.6	937

Note ∗ Bearings marked ∗ are inch design.

KH (TDI) Type, Double Cone, Single Cups

Bore Diameter 460 – 596 mm

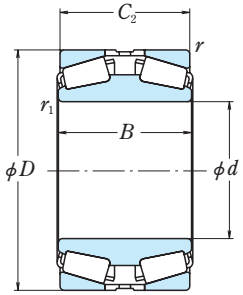

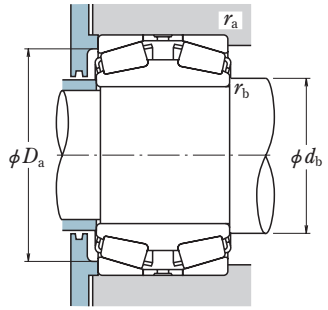

Dynamic Equivalent Load

$P = XF_r + YF_a$

$F_a/F_r \leqq e$		$F_a/F_r > e$	
X	Y	X	Y
1	Y_3	0.67	Y_2

Static Equivalent Load

$P_0 = F_r + Y_0 F_a$

The values of e, Y_2, Y_3, and Y_0 are given in the table below.

Boundary Dimensions (mm/inch)						Basic Load Ratings (kN)		{kgf}		Bearing Numbers	Abutment and Fillet Dimensions (mm)				Constant	Axial Load Factors			Mass (kg)
d	D	B	C_2	r_1 min.	r min.	C_r	C_{0r}	C_r	C_{0r}		d_b	D_a	r_a max.	r_b max.	e	Y_2	Y_3	Y_0	approx.
460	760	240	240	7.5	7.5	5 350	11 600	545 000	1 190 000	460KH31+K	530	700	6	6	0.39	2.6	1.7	1.7	448
479.425 18.8750	679.450 26.7500	238.125 9.3750	238.125 9.3750	3.3	6.4	4 800	12 800	490 000	1 300 000	∗ **M272749D / M272710+K**	506	635	6.4	3.3	0.34	3.0	2.0	1.9	290
480	790	248	248	7.5	7.5	5 700	12 500	580 000	1 280 000	**480KH31+K**	530	726	6	6	0.39	2.6	1.7	1.7	517
482.600 19.0000	615.950 24.2500	158.750 6.2500	158.750 6.2500	3.3	6.4	2 380	6 900	243 000	705 000	∗ **482KH6151+K**	501	582	6.4	3.3	0.37	2.7	1.8	1.8	118
489.026 19.2530	634.873 24.9950	153.988 6.0625	153.988 6.0625	3.3	3.3	2 350	6 350	240 000	650 000	∗ **LM772749D / LM772710+K**	508	602	3.3	3.3	0.47	2.1	1.4	1.4	125
489.25	655 700	260 260	260 260	1.5 2	4 5	3 850 4 750	11 000 13 500	395 000 485 000	1 120 000 1 370 000	**489KH6501+K** **489KH7001+K**	507 520	616 653	3 4	1 1.5	0.38 0.36	2.7 2.8	1.8 1.9	1.7 1.8	252 333
508.000 20.0000	762.000 30.0000	219.075 8.6250	219.075 8.6250	6.4	6.4	4 750	11 400	485 000	1 160 000	∗ **EE531201D / 531300+K**	551	710	6.4	6.4	0.38	2.6	1.8	1.7	370
519.112 20.4375	736.600 29.0000	258.762 10.1875	258.762 10.1875	3.3	6.4	5 000	13 300	510 000	1 360 000	∗ **M275349D / M275310+K**	550	687	6.4	3.3	0.33	3.0	2.0	2.0	363
530	780 870	185 272	185 272	6 7.5	6 7.5	4 150 6 800	9 350 14 500	425 000 695 000	950 000 1 470 000	**530KH30+K** **530KH31+K**	568 581	731 800	5 6	5 6	0.37 0.39	2.7 2.6	1.8 1.7	1.8 1.7	321 661
536.575 21.1250	761.873 29.9950	269.875 10.6250	269.875 10.6250	3.3	6.4	5 550	15 100	565 000	1 540 000	∗ **M276449D / M276410+K**	567	710	6.4	3.3	0.33	3.0	2.0	2.0	409
540 **550**	710 750	140 130	150 150	5 6	4 5	2 180 2 630	5 650 6 350	222 000 269 000	575 000 650 000	**540KH7101+K** **550KH7501+K**	568 583	675 707	3 4	4 5	0.40 0.49	2.5 2.1	1.7 1.4	1.6 1.4	151 196
558.800 22.0000	736.600 29.0000	196.850 7.7500	196.850 7.7500	3.3	6.4	3 950	11 200	400 000	1 150 000	∗ **LM377449D / LM377410+K**	583	696	6.4	3.3	0.35	2.9	1.9	1.9	237
560 **570**	920 710	280 140	280 150	7.5 4	7.5 4	7 300 2 230	15 400 6 450	740 000 228 000	1 570 000 660 000	**560KH31+K** **570KH7101+K**	635 593	845 680	6 3	6 3	0.39 0.32	2.6 3.1	1.7 2.1	1.7 2.1	762 130
571.500 22.5000	812.800 32.0000	285.750 11.2500	285.750 11.2500	3.3	6.4	6 850	18 600	700 000	1 900 000	∗ **M278749D-N3 / M278710+K**	603	759	6.4	3.3	0.33	3.0	2.0	2.0	502
590	770	150	160	6	5	2 600	7 300	265 000	740 000	**590KH7701+K**	620	732	4	5	0.39	2.6	1.7	1.7	191
595.312 23.4375	844.550 33.2500	296.862 11.6875	296.862 11.6875	3.3	6.4	6 850	19 000	700 000	1 930 000	∗ **M280049D / M280010+K**	630	790	6.4	3.3	0.33	3.0	2.0	2.0	558
596	760	115.25	115	6	5	1 500	5 000	152 000	510 000	**596KH7601+K**	633	723	4	5	0.44	2.3	1.5	1.5	137

Note ∗ Bearings marked ∗ are inch design.

KH (TDI) Type, Double Cone, Single Cups

Bore Diameter 600 – 1 290 mm

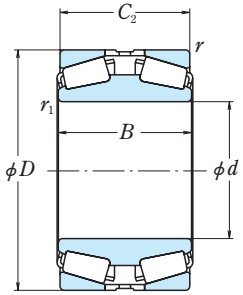

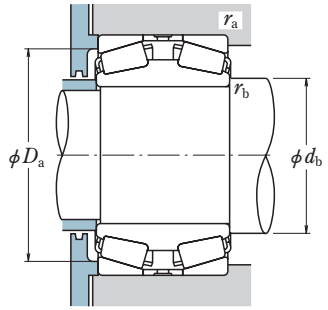

Dynamic Equivalent Load

$P = XF_r + YF_a$

$F_a/F_r \leqq e$		$F_a/F_r > e$	
X	Y	X	Y
1	Y_3	0.67	Y_2

Static Equivalent Load

$P_0 = F_r + Y_0 F_a$

The values of e, Y_2, Y_3, and Y_0 are given in the table below.

Boundary Dimensions (mm/inch)						Basic Load Ratings (kN)		{kgf}		Bearing Numbers	Abutment and Fillet Dimensions (mm)				Constant	Axial Load Factors			Mass (kg)
d	D	B	C_2	r_1 min.	r min.	C_r	C_{0r}	C_r	C_{0r}		d_b	D_a	r_a max.	r_b max.	e	Y_2	Y_3	Y_0	approx.
600	760	115	115	6	5	1 500	5 000	152 000	510 000	**600KH7601+K**	635	723	4	5	0.44	2.3	1.5	1.5	133
	820	160	160	6	6	3 300	8 300	340 000	845 000	**600KH8201+K**	637	774	5	5	0.42	2.4	1.6	1.6	258
609.600	787.400	171.450	171.450	3.3	6.4	3 450	9 600	350 000	980 000	**∗ EE649241D / 649310+K**	634	749	6.4	3.3	0.37	2.7	1.8	1.8	216
24.0000	31.0000	6.7500	6.7500																
670	980	230	230	7.5	7.5	6 300	14 600	640 000	1 490 000	670KH30+K	717	920	6	6	0.37	2.7	1.8	1.8	601
	1 090	336	336	7.5	7.5	10 300	23 500	1 050 000	2 400 000	**670KH31+K**	733	1 008	6	6	0.37	2.7	1.8	1.8	1 270
690	980	355	355	6	6	9 400	26 000	960 000	2 650 000	**690KH9801+K**	729	917	5	5	0.35	2.9	1.9	1.9	891
710	1 030	236	236	7.5	7.5	6 600	16 100	675 000	1 650 000	710KH30+K	785	965	6	6	0.37	2.7	1.8	1.8	671
	1 150	345	345	9.5	9.5	11 100	26 100	1 130 000	2 660 000	710KH31+K	800	1 055	8	8	0.37	2.7	1.8	1.8	1 440
714.375	1 016.000	339.725	339.725	3.3	6.4	9 500	26 200	970 000	2 670 000	**∗ M383240D-N1 / M383210+K**	756	953	6.4	3.3	0.35	2.9	1.9	1.9	924
28.1250	40.0000	13.3750	13.3750																
750	1 090	250	250	7.5	7.5	7 350	18 100	750 000	1 850 000	750KH30+K	830	1 025	6	6	0.37	2.7	1.8	1.8	798
	1 220	365	365	9.5	9.5	12 500	29 500	1 270 000	3 000 000	750KH31+K	855	1 125	8	8	0.37	2.7	1.8	1.8	1 730
790	970	125.25	125	5	5	2 310	7 350	236 000	750 000	**790KH9701+K**	824	931	4	4	0.36	2.8	1.9	1.8	211
825.500	1 168.400	412.750	412.750	4.8	12.7	13 000	38 000	1 320 000	3 900 000	**∗ 825KH1151+K**	873	1 089	12.7	4.8	0.33	3.0	2.0	2.0	1 490
32.5000	46.0000	16.2500	16.2500																
850	1 250	370	370	7.5	7.5	12 200	32 000	1 250 000	3 300 000	**850KH1201+K**	905	1 166	6	6	0.40	2.5	1.7	1.6	1 600
863.600	1 130.300	323.850	323.850	4.7	12.7	9 800	31 000	995 000	3 150 000	**∗ LM286249D / LM286210+K**	901	1 067	12.7	4.7	0.33	3.0	2.0	2.0	915
34.0000	44.5000	12.7500	12.7500																
880	1 220	340	340	4	7.5	10 700	30 000	1 090 000	3 050 000	**880KH1201+K**	928	1 151	6	3	0.34	2.9	2.0	1.9	1 260
939.800	1 333.500	463.550	463.550	4.8	12.7	15 700	46 000	1 600 000	4 700 000	**∗ LM287849D / LM287810+K**	996	1 246	12.7	4.8	0.33	3.0	2.0	2.0	2 120
37.0000	52.5000	18.2500	18.2500																
1 000	1 320	240	240	7.5	7.5	7 400	20 500	755 000	2 090 000	**1000KH1301+K**	1 053	1 257	6	6	0.33	3.0	2.0	2.0	907
1 005	1 360	400	400	7.5	7.5	13 300	40 500	1 350 000	4 150 000	**1005KH1301+K**	1 054	1 281	6	6	0.42	2.4	1.6	1.6	1 730
1 180	1 660	510	510	9.5	9.5	21 500	63 500	2 200 000	6 500 000	**1180KH1601+K**	1 248	1 561	8	8	0.35	2.9	1.9	1.9	3 610
1 290	1 690	400	400	7.5	7.5	16 100	53 000	1 650 000	5 400 000	**1290KH1601+K**	1 348	1 606	6	6	0.35	2.8	1.9	1.9	2 500

Note ∗ Bearings marked ∗ are inch design.

KDH (TDI) Type, Double Cone, Single Cups, Steep Angle

Bore Diameter 100 – 260 mm

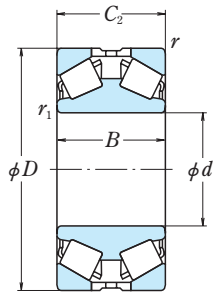

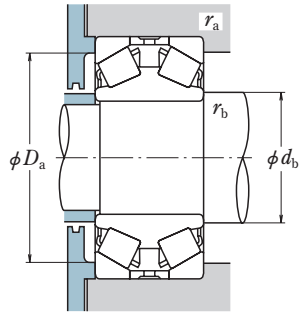

Dynamic Equivalent Load

$P = XF_r + YF_a$

$F_a/F_r \leqq e$		$F_a/F_r > e$	
X	Y	X	Y
1	Y_3	0.67	Y_2

Static Equivalent Load

$P_0 = F_r + Y_0 F_a$

The values of e, Y_2, Y_3, and Y_0 are given in the table below.

Boundary Dimensions (mm/inch)						Basic Load Ratings (kN)		{kgf}	
d	D	B	C_2	r_1 min.	r min.	C_r	C_{0r}	C_r	C_{0r}
100	215	105	105	3	3	510	720	52 000	73 000
	215	105	110	1	3	625	900	64 000	92 000
	250	120	120	2.5	3	800	1 120	81 500	114 000
	250	120	120	2.5	3	695	955	71 000	97 500
110	240	118	118	1	3	750	1 080	76 500	110 000
114.300	228.600	98.860	107.950	1.5	3.3	645	1 060	65 500	108 000
4.5000	9.0000	3.8921	4.2500						
120	230	120	120	1	2	725	1 290	73 500	131 000
	260	130	130	1	3	875	1 340	89 000	137 000
125	230	100	108	1.5	2.5	645	1 060	65 500	108 000
	305	180	180	4	3	1 270	2 020	130 000	206 000
127.000	228.600	151.244	160.338	1.5	3.3	565	950	58 000	96 500
5.0000	9.0000	5.9545	6.3125						
150	320	144	144	5	4	1 110	1 750	113 000	179 000
170	360	144	144	2.5	4	1 110	2 130	113 000	218 000
	360	144	160	2.5	4	1 160	1 840	119 000	187 000
180	320	104	104	4	4	795	1 350	81 500	138 000
	330	190	190	1.5	5	1 610	3 200	164 000	325 000
190	320	104	104	3	3	815	1 410	83 000	144 000
200	360	170	170	1.5	4	1 300	2 360	132 000	240 000
210	355	130	127	6	3	1 030	2 340	105 000	239 000
	440	175	244	5	6	2 070	3 350	211 000	340 000
	480	230	230	6	6	3 000	5 150	305 000	525 000
215.900	355.600	130.175	127.000	6.4	3.3	1 030	2 340	105 000	239 000
8.5000	14.0000	5.1250	5.0000						
228.600	431.800	158.750	158.750	6.4	6.4	1 520	2 640	155 000	269 000
9.0000	17.0000	6.2500	6.2500						
	431.800	177.800	177.800	5.0	5.0	1 980	3 600	202 000	365 000
	17.0000	7.0000	7.0000						
260	389.5	105	105	1.5	3	945	1 880	96 000	192 000
	458.5	155	155	5	5	1 760	3 300	179 000	340 000

Bearing Numbers	Abutment and Fillet Dimensions (mm)				Constant	Axial Load Factors			Mass (kg)
	d_b	D_a	r_a max.	r_b max.	e	Y_2	Y_3	Y_0	approx.
100KDH2102+K	119	188	2.5	2.5	0.81	1.2	0.83	0.81	16.8
100KDH2101+K	111	183	2.5	1	0.81	1.2	0.83	0.81	18.3
100KDH2501+K	122	216	2.5	2	0.71	1.4	0.95	0.93	29.2
100KDH2502+K	124	216	2.5	2	0.90	1.1	0.75	0.73	28
110KDH2401+K	126	207	2.5	1	0.81	1.2	0.83	0.81	24.6
∗ **114KDH2251+K**	133	201	3.3	1.5	0.74	1.4	0.92	0.90	19.7
120KDH2301+K	133	198	2	1	0.80	1.3	0.85	0.83	23.3
120KDH2601+K	137	224	2.5	1	0.81	1.2	0.83	0.81	32.8
125KDH2301+K	138	203	2	1.5	0.74	1.4	0.92	0.90	18.5
125KDH3001+K	156	267	2.5	3	0.73	1.4	0.93	0.91	64.9
∗ **97500D / 97900+K**	138	198	3.3	1.5	0.74	1.4	0.92	0.90	25.4
150KDH3201+K	176	277	3	4	0.89	1.1	0.76	0.74	53.4
170KDH3605+K	204	312	3	2	1.1	0.95	0.64	0.62	72.6
170KDH3602+K	195	309	3	2	1.1	0.92	0.62	0.61	70.7
180KDH3201+K	203	285	3	3	0.74	1.4	0.92	0.90	34.8
180KDH3301+K	200	291	4	1.5	0.58	1.7	1.2	1.1	72.6
190KDH3201+K	211	290	2.5	2.5	0.76	1.3	0.88	0.86	32.3
200KDH3601+K	219	317	3	1.5	0.97	1.0	0.70	0.68	72.7
210KDH3501+K	241	321	2.5	5	0.59	1.7	1.1	1.1	53.8
210KDH4402+K	243	384	5	4	1.1	0.92	0.62	0.61	151
210KDH4801+K	251	416	5	5	0.70	1.4	0.97	0.94	215
∗ **96851D / 96140+K**	244	321	3.3	6.4	0.59	1.7	1.1	1.1	52.1
∗ **EE113090D / 113170+K**	259	378	6.4	6.4	0.88	1.1	0.77	0.75	99.5
∗ **228KDH4351+K**	257	382	5.0	5.0	0.93	1.1	0.73	0.71	117
260KDH3801+K	277	358	2.5	1.5	0.87	1.2	0.78	0.76	42.7
260KDH4501A+K	293	411	4	4	0.87	1.2	0.78	0.76	110

Note ∗ Bearings marked ∗ are inch design.

KDH (TDI) Type, Double Cone, Single Cups, Steep Angle

Bore Diameter 260.350 – 540 mm

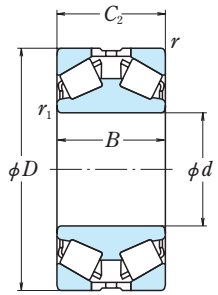

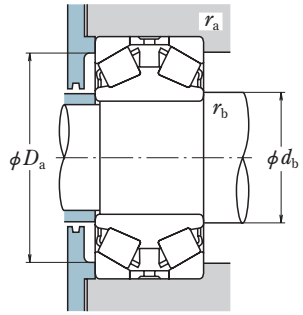

Dynamic Equivalent Load

$P = XF_r + YF_a$

$F_a/F_r \leqq e$		$F_a/F_r > e$	
X	Y	X	Y
1	Y_3	0.67	Y_2

Static Equivalent Load

$P_0 = F_r + Y_0 F_a$

The values of e, Y_2, Y_3, and Y_0 are given in the table below.

Boundary Dimensions (mm/inch)						Basic Load Ratings (kN)		{kgf}	
d	D	B	C_2	r_1 min.	r min.	C_r	C_{0r}	C_r	C_{0r}
260.350 10.2500	419.100 16.5000	155.575 6.1250	158.750 6.2500	3.3	3.3	1 640	3 650	168 000	370 000
279.400 11.0000	482.600 19.0000	177.800 7.0000	177.800 7.0000	6.0	4.8	2 380	4 650	243 000	475 000
279.578 11.0070	381.000 15.0000	88.900 3.5000	111.125 4.3750	3.3	6.4	825	1 800	84 000	184 000
290	450	180	180	2.5	4	1 970	4 250	201 000	435 000
300	500	200	200	5	5	2 500	6 050	255 000	615 000
	520	180	210	4	4	2 310	4 500	236 000	460 000
304.800 12.0000	499.948 19.6830	158.750 6.2500	203.200 8.0000	3.3	6.4	2 040	4 050	208 000	415 000
305.079	500	200	200	6.4	4.8	2 500	6 050	255 000	615 000
320	620	264	296	6	5	3 900	7 550	395 000	770 000
330	650	248	248	6	7.5	3 350	6 100	340 000	620 000
350	618	200	200	6	6	2 880	5 450	293 000	555 000
360	550	148	148	6	5	1 940	3 900	198 000	400 000
400	650	200	200	6	6	2 870	6 300	293 000	640 000
460	618	150	150	5	4	1 600	4 150	163 000	420 000
500	720	185	218	6	6	2 950	6 800	300 000	695 000
540	860	256	256	7.5	7.5	5 400	12 100	555 000	1 240 000

Bearing Numbers	Abutment and Fillet Dimensions (mm)				Constant	Axial Load Factors			Mass (kg)
	d_b	D_a	r_a max.	r_b max.	e	Y_2	Y_3	Y_0	approx.
∗ EE435103D / 435165+K	282	378	3.3	3.3	0.61	1.7	1.1	1.1	85.2
∗ 279KDH4851+K	310	433	4.8	6.0	0.70	1.4	0.97	0.94	139
∗ 89111D / 89150+K	296	354	6.4	3.3	0.58	1.7	1.2	1.1	32.6
290KDH4501+K	308	408	3	2	0.64	1.6	1.1	1.0	103
300KDH5001+K	332	447	4	4	0.70	1.4	0.97	0.94	167
300KDH5201A+K	326	461	3	3	1.2	0.85	0.57	0.56	178
∗ 304KDH4951+K	327	444	6.4	3.3	1.2	0.85	0.57	0.56	145
305KDH5001A+K	335	447	4.8	6.4	0.70	1.4	0.97	0.94	162
320KDH6201+K	361	542	4	5	0.94	1.1	0.72	0.70	399
330KDH6501+K	379	572	6	5	1.3	0.80	0.54	0.52	369
350KDH6102	395	556	5	5	0.87	1.2	0.78	0.76	236
360KDH5501+K	389	506	4	5	0.70	1.4	0.97	0.94	123
400KDH6503+K	439	586	5	5	1.1	0.96	0.64	0.63	264
460KDH6101A+K	484	575	3	4	1.1	0.96	0.64	0.63	117
500KDH7201+K	532	664	5	5	0.70	1.4	0.97	0.95	262
540KDH8601+K	591	786	6	6	0.70	1.4	0.97	0.94	575

Note ∗ Bearings marked ∗ are inch design.

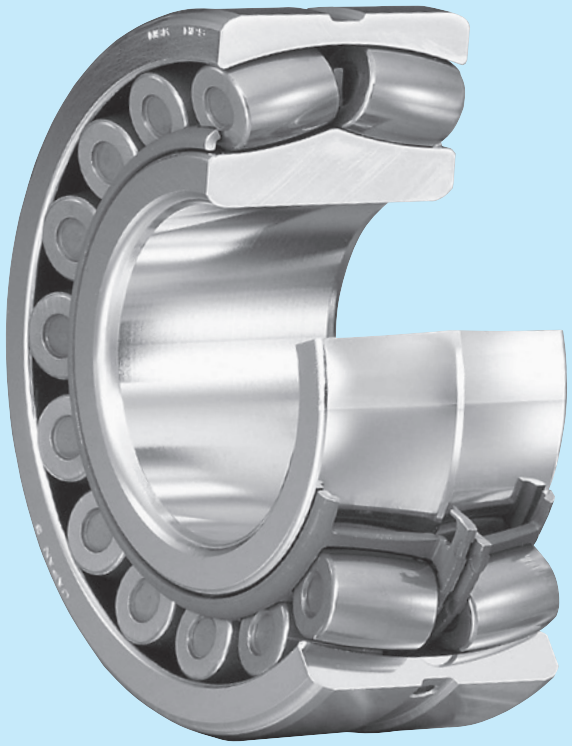

SPHERICAL ROLLER BEARINGS

Spherical Roller Bearings

Cylindrical Bores, Tapered Bores Bore Diameter 100 – 1590mm ····· B290

Design, Types, and Features

These bearings have two rows of barrel-shaped rollers between the inner ring, which has two raceways, and the outer ring that has one spherical raceway. Since they have self-aligning capability, if there is deflection of the shaft or housing or misalignment of their axes, it is automatically corrected so excessive force is not applied to the bearings.

Some bearings have tapered bores and may be mounted directly on tapered shafts or cylindrical shafts using adapters or withdrawal sleeves.

As shown in Table 1, various types of standard spherical roller bearings are available.

Table 1 Types and Features of Spherical Roller Bearings

Types	Cross Section	Inner Ring	Rollers	Cages	Guide Ring	Features
EA		No central integral rib or side ribs	Symmetrical	Two piece pressed steel	None	Higher load capacity Lower torque
C,CD	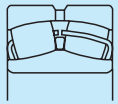	No central integral rib or side ribs	Symmetrical	Two piece pressed steel	Yes	Higher load capacity
CA		Side ribs	Symmetrical	One piece machined brass	Yes	Higher load capacity

All spherical roller bearings (the bearing numbers are suffixed with E4) have an oil groove and holes in the outer ring to supply lubricant.

To use bearings with oil grooves and holes, it is recommended to provide an oil groove in the housing bore, since the depth of the groove in the bearing is limited. The number and dimensions of the oil groove and holes are shown in Tables 2 and 3.

When bearings with a hole for a locking pin to prevent outer ring rotation are required, please inform NSK.

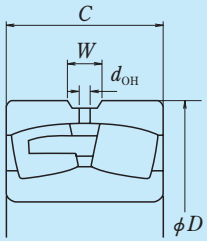

Table 2 Dimensions of Oil Grooves and Holes

Units:mm

Nominal Outer Ring Width C over	incl	Oil Groove Width W	Hole Diameter d_{OH}
40	**50**	7	4
50	**65**	8	5
65	**80**	10	6
80	**100**	12	8
100	**120**	15	10
120	**160**	20	12
160	**200**	25	15
200	**250**	30	20
250	**315**	35	20
315	**400**	40	25
400	**—**	40	25

Table 3 Number of Oil Holes

Nominal Outside Dia D (mm) over	incl	Number of Holes
—	**180**	4
180	**250**	6
250	**315**	6
315	**400**	6
400	**500**	6
500	**630**	8
630	**800**	8
800	**1000**	8
1000	**1250**	8
1250	**1600**	8
1600	**2000**	8

Tolerances and Running Accuracy.....Table 2.2 (Pages A16 to A19)

Recommendes Fits.....Table 3.2 (Page A35)
Table 3.4 (Page A36)

Internal Clearance.....Table 3.12 (Page A42)

Permissible Misalignment

The permissible misalignment of spherical roller bearings varies depending on the size and load, but it is approximately 1° to 2.5° with average loads.

Precautions for Use of Spherical Roller Bearings

If the load on spherical roller bearings becomes too small, or if the ratio of the axial and radial loads exceeds 'e' (e is listed in the bearing tables) during operation, slippage between the rollers and raceways occurs, which may result in smearing. Especially with large bearings since the weight of the rollers and cage is high. If such load conditions are expected, please consult with NSK for selection of the bearings.

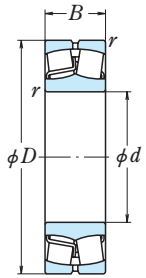

Cylindrical Bore

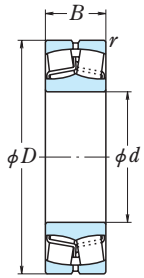

Tapered Bore

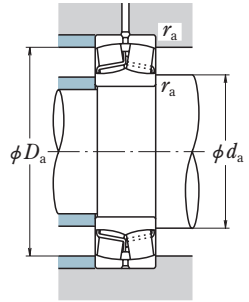

Dynamic Equivalent Load

$P = XF_r + YF_a$

$F_a/F_r \leqq e$		$F_a/F_r > e$	
X	Y	X	Y
1	Y_3	0.67	Y_2

Static Equivalent Load

$P_0 = F_r + Y_0 F_a$

The values of e, Y_2, Y_3, and Y_0 are given in the table below.

Boundary Dimensions (mm)				Basic Load Ratings (kN)		{kgf}		Bearing Numbers		Abutment and Fillet Dimensions (mm)			Constant	Axial Load Factors			Mass (kg)
d	D	B	r min.	C_r	C_{0r}	C_r	C_{0r}	Cylindrical Bore	Tapered Bore(1)	d_a	D_a	r_a max.	e	Y_2	Y_3	Y_0	approx.
100	180	46	2.1	365	490	37 000	50 000	**22220EAE4**	**22220EAKE4**	117	164	2	0.24	4.3	2.9	2.8	4.84
	180	60.3	2.1	420	605	42 500	61 500	**23220CE4**	**23220CKE4**	117	164	2	0.32	3.2	2.1	2.1	6.5
	215	73	3	690	930	70 500	94 500	**22320EAE4**	**22320EAKE4**	119	196	2.5	0.33	3.0	2.0	2.0	12.7
110	170	45	2	293	465	29 900	47 500	**23022CDE4**	**23022CDKE4**	123	156	2	0.24	4.2	2.8	2.8	3.7
	180	56	2	385	630	39 500	64 000	**23122CE4**	**23122CKE4**	125	166	2	0.28	3.5	2.4	2.3	5.6
	180	69	2	460	750	47 000	76 500	**24122CE4**	**24122CK30E4**	122	166	2	0.36	2.8	1.9	1.8	6.7
	200	53	2.1	485	645	49 500	66 000	**22222EAE4**	**22222EAKE4**	127	184	2	0.25	4.0	2.7	2.6	6.99
	200	69.8	2.1	515	760	52 500	77 500	**23222CE4**	**23222CKE4**	127	184	2	0.34	3.0	2.0	1.9	9.4
	240	80	3	825	1 120	84 000	115 000	**22322EAE4**	**22322EAKE4**	129	221	2.5	0.33	3.1	2.1	2.0	17.6
120	180	46	2	315	525	32 000	53 500	**23024CDE4**	**23024CDKE4**	133	166	2	0.22	4.5	3.0	2.9	4.0
	180	60	2	395	705	40 500	72 000	**24024CE4**	**24024CK30E4**	130	166	2	0.32	3.2	2.1	2.1	5.2
	200	62	2	465	720	47 500	73 500	**23124CE4**	**23124CKE4**	136	186	2	0.29	3.5	2.4	2.3	7.7
	200	80	2	575	950	58 500	96 500	**24124CE4**	**24124CK30E4**	136	186	2	0.37	2.7	1.8	1.8	9.9
	215	58	2.1	550	765	56 000	78 000	**22224EAE4**	**22224EAKE4**	138	198	2	0.25	3.9	2.7	2.6	8.8
	215	76	2.1	630	970	64 500	99 000	**23224CE4**	**23224CKE4**	138	198	2	0.34	2.9	2.0	1.9	12
	260	86	3	955	1 320	97 000	134 000	**22324EAE4**	**22324EAKE4**	140	241	2.5	0.32	3.1	2.1	2.0	22.2
130	200	52	2	400	655	40 500	67 000	**23026CDE4**	**23026CDKE4**	146	186	2	0.23	4.3	2.9	2.8	5.9
	200	69	2	495	865	50 500	88 000	**24026CE4**	**24026CK30E4**	142	186	2	0.31	3.2	2.2	2.1	7.7
	210	64	2	505	825	51 500	84 500	**23126CE4**	**23126CKE4**	146	196	2	0.28	3.6	2.4	2.4	8.6
	210	80	2	590	1 010	60 000	103 000	**24126CE4**	**24126CK30E4**	146	196	2	0.35	2.9	1.9	1.9	10.6
	230	64	3	655	940	67 000	96 000	**22226EAE4**	**22226EAKE4**	150	211	2.5	0.26	3.8	2.6	2.5	11
	230	80	3	700	1 080	71 500	110 000	**23226CE4**	**23226CKE4**	150	211	2.5	0.34	2.9	2.0	1.9	14.2
	280	93	4	995	1 350	101 000	137 000	**22326CE4**	**22326CKE4**	154	256	3	0.34	2.9	2.0	1.9	27.9
140	210	53	2	420	715	43 000	73 000	**23028CDE4**	**23028CDKE4**	156	196	2	0.22	4.5	3.0	2.9	6.4
	210	69	2	525	945	53 500	96 500	**24028CE4**	**24028CK30E4**	153	196	2	0.29	3.4	2.3	2.2	8.2
	225	68	2.1	580	945	59 000	96 500	**23128CE4**	**23128CKE4**	157	208	2	0.28	3.6	2.4	2.3	10.4
	225	85	2.1	670	1 160	68 500	118 000	**24128CE4**	**24128CK30E4**	155	208	2	0.35	2.9	1.9	1.9	12.8
	250	68	3	645	930	65 500	95 000	**22228CDE4**	**22228CDKE4**	161	231	2.5	0.25	4.0	2.7	2.6	14.4
	250	88	3	835	1 300	85 000	133 000	**23228CE4**	**23228CKE4**	161	231	2.5	0.35	2.9	1.9	1.9	18.6
	300	102	4	1 160	1 590	118 000	162 000	**22328CE4**	**22328CKE4**	165	276	3	0.35	2.9	1.9	1.9	35.2
150	225	56	2.1	470	815	48 000	83 000	**23030CDE4**	**23030CDKE4**	167	208	2	0.22	4.6	3.1	3.0	7.8
	225	75	2.1	590	1 090	60 500	111 000	**24030CE4**	**24030CK30E4**	164	208	2	0.30	3.4	2.3	2.2	10.4
	250	80	2.1	725	1 180	74 000	121 000	**23130CE4**	**23130CKE4**	169	233	2	0.30	3.4	2.3	2.2	15.7
	250	100	2.1	890	1 530	91 000	156 000	**24130CE4**	**24130CK30E4**	169	233	2	0.38	2.6	1.8	1.7	19.6
	270	73	3	765	1 120	78 000	114 000	**22230CDE4**	**22230CDKE4**	171	250	2.5	0.26	3.9	2.6	2.5	18.3
	270	96	3	975	1 560	99 500	159 000	**23230CE4**	**23230CKE4**	171	250	2.5	0.35	2.9	1.9	1.9	24
	320	108	4	1 220	1 690	125 000	172 000	**22330CAE4**	**22330CAKE4**	175	295	3	0.35	2.9	1.9	1.9	41.2

Note (1) The suffix K or K30 represents bearings with tapered bores (taper 1 : 12 or 1 : 30).
Remarks An oil groove and holes are standard for the E4 type.

Bore Diameter 160 – 190 mm

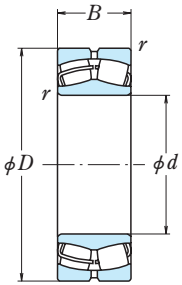

Cylindrical Bore

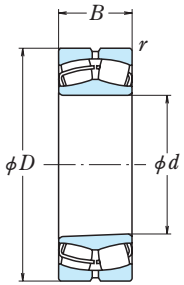

Tapered Bore

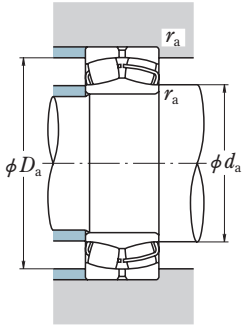

Dynamic Equivalent Load

$P = XF_r + YF_a$

$F_a/F_r \leqq e$		$F_a/F_r > e$	
X	Y	X	Y
1	Y_3	0.67	Y_2

Static Equivalent Load

$P_0 = F_r + Y_0 F_a$

The values of e, Y_2, Y_3, and Y_0 are given in the table below.

Boundary Dimensions (mm)				Basic Load Ratings (kN)		{kgf}		Bearing Numbers		Abutment and Fillet Dimensions (mm)			Constant	Axial Load Factors			Mass (kg)
d	D	B	r min.	C_r	C_{0r}	C_r	C_{0r}	Cylindrical Bore	Tapered Bore(1)	d_a	D_a	r_a max.	e	Y_2	Y_3	Y_0	approx.
160	220	45	2	360	675	37 000	69 000	**23932CAE4**	**23932CAKE4**	177	205	2	0.18	5.6	3.8	3.7	4.9
	240	60	2.1	540	955	55 000	97 500	**23032CDE4**	**23032CDKE4**	179	223	2	0.22	4.5	3.0	2.9	9.5
	240	80	2.1	680	1 260	69 000	128 000	**24032CE4**	**24032CK30E4**	176	223	2	0.30	3.4	2.3	2.2	12.6
	270	86	2.1	855	1 400	87 000	143 000	**23132CE4**	**23132CKE4**	179	252	2	0.30	3.4	2.3	2.2	20.1
	270	109	2.1	1 040	1 760	106 000	179 000	**24132CE4**	**24132CK30E4**	179	252	2	0.39	2.6	1.7	1.7	25.2
	290	80	3	910	1 320	93 000	135 000	**22232CDE4**	**22232CDKE4**	181	270	2.5	0.26	3.8	2.6	2.5	23
	290	104	3	1 100	1 770	112 000	180 000	**23232CE4**	**23232CKE4**	181	270	2.5	0.34	2.9	2.0	1.9	30.2
	340	114	4	1 360	1 900	139 000	193 000	**22332CAE4**	**22332CAKE4**	186	315	3	0.35	2.9	1.9	1.9	49
170	230	45	2	350	660	35 500	67 500	**23934BCAE4**	**23934BCAKE4**	188	215	2	0.17	5.8	3.9	3.8	5.3
	260	67	2.1	640	1 090	65 000	112 000	**23034CDE4**	**23034CDKE4**	190	243	2	0.23	4.3	2.9	2.8	12.9
	260	90	2.1	825	1 520	84 000	155 000	**24034CE4**	**24034CK30E4**	187	243	2	0.31	3.2	2.2	2.1	17.2
	280	88	2.1	940	1 570	96 000	160 000	**23134CE4**	**23134CKE4**	190	262	2	0.29	3.5	2.3	2.3	21.6
	280	109	2.1	1 080	1 860	110 000	190 000	**24134CE4**	**24134CK30E4**	190	262	2	0.37	2.7	1.8	1.8	26.4
	310	86	4	990	1 500	101 000	153 000	**22234CDE4**	**22234CDKE4**	196	286	3	0.26	3.8	2.6	2.5	28.6
	310	110	4	1 200	1 910	122 000	195 000	**23234CE4**	**23234CKE4**	196	286	3	0.34	2.9	2.0	1.9	36.1
	360	120	4	1 580	2 110	161 000	215 000	**22334CAE4**	**22334CAKE4**	196	335	3	0.35	2.9	1.9	1.9	57.5
180	250	52	2	470	890	48 000	90 500	**23936CAE4**	**23936CAKE4**	198	235	2	0.18	5.5	3.7	3.6	7.5
	280	74	2.1	750	1 270	76 000	129 000	**23036CDE4**	**23036CDKE4**	200	262	2	0.24	4.2	2.8	2.8	16.9
	280	100	2.1	965	1 750	98 500	178 000	**24036CE4**	**24036CK30E4**	200	262	2	0.32	3.1	2.1	2.0	22.5
	300	96	3	1 050	1 760	108 000	180 000	**23136CE4**	**23136CKE4**	202	280	2.5	0.30	3.4	2.3	2.2	27.3
	300	118	3	1 190	2 040	121 000	208 000	**24136CE4**	**24136CK30E4**	202	280	2.5	0.37	2.7	1.8	1.8	32.9
	320	86	4	1 020	1 540	104 000	157 000	**22236CDE4**	**22236CDKE4**	206	295	3	0.26	3.9	2.6	2.6	29.9
	320	112	4	1 300	2 110	133 000	215 000	**23236CE4**	**23236CKE4**	206	295	3	0.33	3.0	2.0	2.0	38.6
	380	126	4	1 740	2 340	177 000	238 000	**22336CAE4**	**22336CAKE4**	206	354	3	0.34	2.9	2.0	1.9	66.4
190	260	52	2	460	875	47 000	89 500	**23938CAE4**	**23938CAKE4**	208	245	2	0.18	5.7	3.8	3.7	7.9
	290	75	2.1	775	1 350	79 000	138 000	**23038CAE4**	**23038CAKE4**	211	272	2	0.24	4.2	2.8	2.8	17.5
	290	100	2.1	975	1 840	99 500	188 000	**24038CE4**	**24038CK30E4**	209	272	2	0.31	3.2	2.2	2.1	23.7
	320	104	3	1 190	2 020	121 000	206 000	**23138CE4**	**23138CKE4**	213	299	2.5	0.31	3.3	2.2	2.2	34.2
	320	128	3	1 370	2 330	140 000	238 000	**24138CE4**	**24138CK30E4**	210	299	2.5	0.40	2.5	1.7	1.6	41.1
	340	92	4	1 140	1 730	116 000	176 000	**22238CAE4**	**22238CAKE4**	217	315	3	0.26	3.8	2.6	2.5	35.2
	340	120	4	1 440	2 350	147 000	240 000	**23238CE4**	**23238CKE4**	217	315	3	0.35	2.9	1.9	1.9	47.3
	400	132	5	1 890	2 590	193 000	264 000	**22338CAE4**	**22338CAKE4**	221	370	4	0.34	2.9	2.0	1.9	77.4

Note (1) The suffix K or K30 represents bearings with tapered bores (taper 1 : 12 or 1 : 30).

Bore Diameter 200 – 260 mm

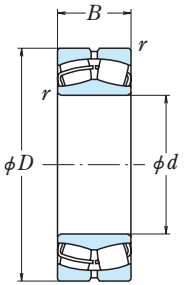

Cylindrical Bore

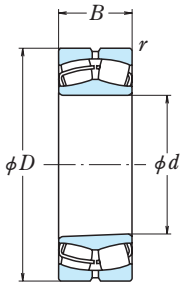

Tapered Bore

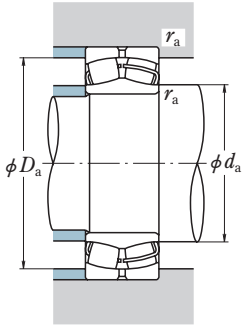

Dynamic Equivalent Load

$P = XF_r + YF_a$

$F_a/F_r \leqq e$		$F_a/F_r > e$	
X	Y	X	Y
1	Y_3	0.67	Y_2

Static Equivalent Load

$P_0 = F_r + Y_0 F_a$

The values of e, Y_2, Y_3, and Y_0 are given in the table below.

Boundary Dimensions (mm)				Basic Load Ratings (kN)		{kgf}		Bearing Numbers		Abutment and Fillet Dimensions (mm)			Constant	Axial Load Factors			Mass (kg)
d	D	B	r min.	C_r	C_{0r}	C_r	C_{0r}	Cylindrical Bore	Tapered Bore(1)	d_a	D_a	r_a max.	e	Y_2	Y_3	Y_0	approx.
200	280	60	2.1	570	1 060	58 000	108 000	**23940CAE4**	**23940CAKE4**	221	262	2	0.20	5.1	3.4	3.3	10.9
	310	82	2.1	940	1 700	96 000	174 000	**23040CAE4**	**23040CAKE4**	221	292	2	0.25	4.0	2.7	2.6	22.2
	310	109	2.1	1 140	2 120	116 000	216 000	**24040CE4**	**24040CK30E4**	221	292	2	0.32	3.1	2.1	2.0	30.1
	340	112	3	1 360	2 330	139 000	238 000	**23140CE4**	**23140CKE4**	223	319	2.5	0.31	3.2	2.2	2.1	42.3
	340	140	3	1 570	2 670	160 000	272 000	**24140CE4**	**24140CK30E4**	223	319	2.5	0.39	2.6	1.8	1.7	50.9
	360	98	4	1 300	2 010	133 000	204 000	**22240CAE4**	**22240CAKE4**	227	335	3	0.26	3.8	2.6	2.5	42.4
	360	128	4	1 660	2 750	169 000	281 000	**23240CE4**	**23240CKE4**	227	335	3	0.34	2.9	2.0	1.9	56.6
	420	138	5	2 000	2 990	204 000	305 000	**22340CAE4**	**22340CAKE4**	231	390	4	0.34	2.9	2.0	1.9	91.7
220	300	60	2.1	625	1 240	64 000	126 000	**23944CAE4**	**23944CAKE4**	242	282	2	0.18	5.7	3.8	3.7	12.1
	340	90	3	1 090	1 980	111 000	202 000	**23044CAE4**	**23044CAKE4**	244	319	2.5	0.24	4.1	2.8	2.7	29.4
	340	118	3	1 360	2 600	138 000	265 000	**24044CE4**	**24044CK30E4**	244	319	2.5	0.31	3.2	2.1	2.1	39.4
	370	120	4	1 570	2 710	160 000	276 000	**23144CE4**	**23144CKE4**	248	344	3	0.30	3.3	2.2	2.2	52.6
	370	150	4	1 800	3 200	183 000	325 000	**24144CE4**	**24144CK30E4**	248	344	3	0.39	2.6	1.7	1.7	66.7
	400	108	4	1 570	2 430	160 000	247 000	**22244CAE4**	**22244CAKE4**	248	374	3	0.27	3.7	2.5	2.4	58.6
	400	144	4	2 020	3 400	206 000	350 000	**23244CE4**	**23244CKE4**	248	374	3	0.35	2.9	1.9	1.9	79.7
	460	145	5	2 350	3 400	240 000	345 000	**22344CAE4**	**22344CAKE4**	252	429	4	0.33	3.0	2.0	2.0	115
240	320	60	2.1	635	1 300	65 000	133 000	**23948CAE4**	**23948CAKE4**	263	301	2	0.17	6.0	4.0	3.9	13.1
	360	92	3	1 160	2 140	118 000	218 000	**23048CAE4**	**23048CAKE4**	265	339	2.5	0.24	4.2	2.8	2.7	32.3
	360	118	3	1 390	2 730	141 000	278 000	**24048CE4**	**24048CK30E4**	265	339	2.5	0.29	3.4	2.3	2.2	42
	400	128	4	1 790	3 100	182 000	320 000	**23148CE4**	**23148CKE4**	269	374	3	0.30	3.3	2.2	2.2	64.4
	400	160	4	2 130	3 800	217 000	385 000	**24148CE4**	**24148CK30E4**	267	374	3	0.38	2.7	1.8	1.8	79
	440	120	4	1 870	2 890	191 000	294 000	**22248CAE4**	**22248CAKE4**	269	413	3	0.27	3.7	2.5	2.4	79.7
	440	160	4	2 440	4 050	249 000	415 000	**23248CAE4**	**23248CAKE4**	269	413	3	0.37	2.7	1.8	1.8	105
	500	155	5	2 600	3 800	265 000	385 000	**22348CAE4**	**22348CAKE4**	273	468	4	0.32	3.2	2.1	2.1	146
260	360	75	2.1	930	1 870	95 000	191 000	**23952CAE4**	**23952CAKE4**	283	341	2	0.19	5.4	3.6	3.5	22.8
	400	104	4	1 430	2 580	145 000	263 000	**23052CAE4**	**23052CAKE4**	290	374	3	0.25	4.1	2.7	2.7	46.2
	400	140	4	1 810	3 500	185 000	360 000	**24052CAE4**	**24052CAK30E4**	290	374	3	0.32	3.1	2.1	2.1	62
	440	144	4	2 160	3 750	221 000	385 000	**23152CAE4**	**23152CAKE4**	290	413	3	0.32	3.2	2.1	2.1	87.6
	440	180	4	2 560	4 700	261 000	480 000	**24152CAE4**	**24152CAK30E4**	290	413	3	0.39	2.6	1.7	1.7	108
	480	130	5	2 180	3 400	222 000	345 000	**22252CAE4**	**22252CAKE4**	294	448	4	0.27	3.7	2.5	2.5	103
	480	174	5	2 740	4 550	279 000	460 000	**23252CAE4**	**23252CAKE4**	294	448	4	0.37	2.7	1.8	1.8	135
	540	165	6	3 100	4 600	320 000	470 000	**22352CAE4**	**22352CAKE4**	300	501	5	0.32	3.2	2.1	2.1	179

Note (1) The suffix K or K30 represents bearings with tapered bores (taper 1 : 12 or 1 : 30).

Bore Diameter 280 – 360 mm

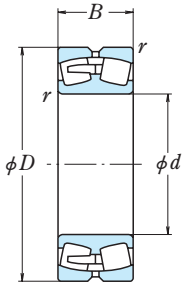

Cylindrical Bore

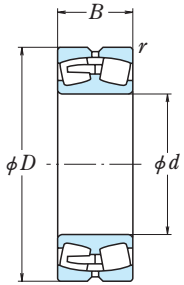

Tapered Bore

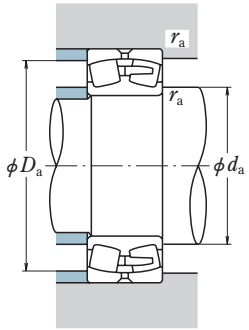

Dynamic Equivalent Load

$P = XF_r + YF_a$

$F_a/F_r \leqq e$		$F_a/F_r > e$	
X	Y	X	Y
1	Y_3	0.67	Y_2

Static Equivalent Load

$P_0 = F_r + Y_0 F_a$

The values of e, Y_2, Y_3, and Y_0 are given in the table below.

Boundary Dimensions (mm)				Basic Load Ratings (kN)		{kgf}		Bearing Numbers		Abutment and Fillet Dimensions (mm)			Constant	Axial Load Factors			Mass (kg)
d	D	B	r min.	C_r	C_{0r}	C_r	C_{0r}	Cylindrical Bore	Tapered Bore(1)	d_a	D_a	r_a max.	e	Y_2	Y_3	Y_0	approx.
280	380	75	2.1	925	1 950	94 500	199 000	**23956CAE4**	**23956CAKE4**	304	360	2	0.18	5.7	3.9	3.8	24.3
	420	106	4	1 540	2 950	157 000	300 000	**23056CAE4**	**23056CAKE4**	310	393	3	0.24	4.2	2.8	2.7	50.1
	420	140	4	1 880	3 800	191 000	385 000	**24056CAE4**	**24056CAK30E4**	310	393	3	0.31	3.3	2.2	2.2	65.8
	460	146	5	2 230	4 000	228 000	410 000	**23156CAE4**	**23156CAKE4**	315	429	4	0.30	3.3	2.2	2.2	93.6
	460	180	5	2 640	5 000	269 000	505 000	**24156CAE4**	**24156CAK30E4**	315	429	4	0.37	2.7	1.8	1.8	114
	500	130	5	2 280	3 650	233 000	370 000	**22256CAE4**	**22256CAKE4**	315	468	4	0.25	4.0	2.7	2.6	109
	500	176	5	2 880	4 900	294 000	500 000	**23256CAE4**	**23256CAKE4**	315	468	4	0.35	2.9	1.9	1.9	145
	580	175	6	3 500	5 150	355 000	525 000	**22356CAE4**	**22356CAKE4**	321	540	5	0.31	3.2	2.1	2.1	219
300	420	90	3	1 230	2 490	125 000	254 000	**23960CAE4**	**23960CAKE4**	327	397	2.5	0.19	5.2	3.5	3.4	37.9
	460	118	4	1 920	3 700	196 000	375 000	**23060CAE4**	**23060CAKE4**	331	433	3	0.24	4.2	2.8	2.7	70
	460	160	4	2 310	4 600	235 000	470 000	**24060CAE4**	**24060CAK30E4**	331	433	3	0.32	3.1	2.1	2.0	92.9
	500	160	5	2 670	4 800	273 000	490 000	**23160CAE4**	**23160CAKE4**	335	468	4	0.31	3.3	2.2	2.2	124
	500	200	5	3 100	5 800	315 000	595 000	**24160CAE4**	**24160CAK30E4**	335	468	4	0.38	2.6	1.8	1.7	151
	540	140	5	2 610	4 250	266 000	430 000	**22260CAE4**	**22260CAKE4**	335	507	4	0.25	4.0	2.7	2.6	138
	540	192	5	3 400	5 900	350 000	600 000	**23260CAE4**	**23260CAKE4**	335	507	4	0.35	2.9	1.9	1.9	188
	620	185	7.5	3 950	5 900	400 000	600 000	**22360CAE4**	**22360CAKE4**	350	572	6	0.31	3.3	2.2	2.2	264
320	440	90	3	1 300	2 750	132 000	281 000	**23964CAE4**	**23964CAKE4**	348	417	2.5	0.18	5.5	3.7	3.6	40.9
	480	121	4	1 960	3 850	200 000	395 000	**23064CAE4**	**23064CAKE4**	352	452	3	0.24	4.2	2.8	2.8	74.9
	480	160	4	2 440	5 050	249 000	515 000	**24064CAE4**	**24064CAK30E4**	352	452	3	0.31	3.3	2.2	2.2	99
	540	176	5	3 050	5 500	315 000	560 000	**23164CAE4**	**23164CAKE4**	356	507	4	0.31	3.2	2.1	2.1	161
	540	218	5	3 550	6 650	360 000	675 000	**24164CAE4**	**24164CAK30E4**	356	507	4	0.39	2.6	1.7	1.7	194
	580	150	5	2 990	4 850	305 000	495 000	**22264CAE4**	**22264CAKE4**	356	546	4	0.26	3.9	2.6	2.6	173
	580	208	5	3 900	6 900	395 000	700 000	**23264CAE4**	**23264CAKE4**	356	546	4	0.36	2.8	1.9	1.8	237
340	460	90	3	1 330	2 840	136 000	289 000	**23968CAE4**	**23968CAKE4**	369	437	2.5	0.18	5.7	3.8	3.7	42.1
	520	133	5	2 280	4 400	232 000	445 000	**23068CAE4**	**23068CAKE4**	377	488	4	0.24	4.2	2.8	2.8	100
	520	180	5	2 920	6 050	298 000	615 000	**24068CAE4**	**24068CAK30E4**	377	488	4	0.32	3.2	2.1	2.1	134
	580	190	5	3 600	6 600	370 000	670 000	**23168CAE4**	**23168CAKE4**	377	546	4	0.31	3.2	2.1	2.1	205
	580	243	5	4 250	7 900	430 000	810 000	**24168CAE4**	**24168CAK30E4**	377	546	4	0.40	2.5	1.7	1.7	255
	620	224	6	4 400	7 800	450 000	795 000	**23268CAE4**	**23268CAKE4**	383	580	5	0.36	2.8	1.9	1.8	292
360	480	90	3	1 390	3 050	142 000	315 000	**23972CAE4**	**23972CAKE4**	389	456	2.5	0.17	6.0	4.1	4.0	44.4
	540	134	5	2 390	4 700	244 000	480 000	**23072CAE4**	**23072CAKE4**	398	507	4	0.24	4.2	2.8	2.8	105
	540	180	5	2 930	6 100	299 000	625 000	**24072CAE4**	**24072CAK30E4**	398	507	4	0.32	3.2	2.1	2.1	138
	600	192	5	3 800	7 100	390 000	725 000	**23172CAE4**	**23172CAKE4**	398	566	4	0.31	3.2	2.2	2.1	215
	600	243	5	4 200	8 000	430 000	815 000	**24172CAE4**	**24172CAK30E4**	398	566	4	0.40	2.5	1.7	1.7	262
	650	232	6	4 800	8 550	490 000	870 000	**23272CAE4**	**23272CAKE4**	404	609	5	0.36	2.8	1.9	1.8	330

Note (1) The suffix K or K30 represents bearings with tapered bores (taper 1 : 12 or 1 : 30).

Bore Diameter 380 – 480 mm

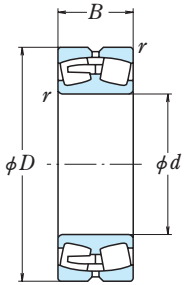

Cylindrical Bore

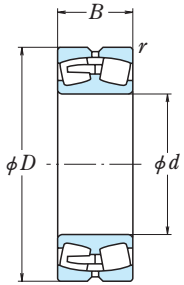

Tapered Bore

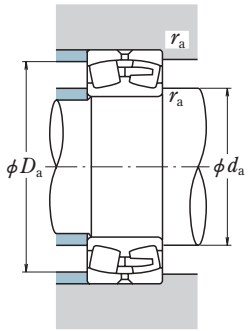

Dynamic Equivalent Load

$P = XF_r + YF_a$

$F_a/F_r \leqq e$		$F_a/F_r > e$	
X	Y	X	Y
1	Y_3	0.67	Y_2

Static Equivalent Load

$P_0 = F_r + Y_0 F_a$

The values of e, Y_2, Y_3, and Y_0 are given in the table below.

Boundary Dimensions (mm)				Basic Load Ratings (kN)		{kgf}		Bearing Numbers		Abutment and Fillet Dimensions (mm)			Constant	Axial Load Factors			Mass (kg)
d	D	B	r min.	C_r	C_{0r}	C_r	C_{0r}	Cylindrical Bore	Tapered Bore(1)	d_a	D_a	r_a max.	e	Y_2	Y_3	Y_0	approx.
380	520	106	4	1 870	4 100	190 000	420 000	**23976CAE4**	**23976CAKE4**	414	491	3	0.18	5.5	3.7	3.6	64.9
	560	135	5	2 500	5 100	255 000	520 000	**23076CAE4**	**23076CAKE4**	419	527	4	0.22	4.5	3.0	3.0	112
	560	180	5	3 050	6 600	315 000	670 000	**24076CAE4**	**24076CAK30E4**	419	527	4	0.29	3.4	2.3	2.3	147
	620	194	5	4 000	7 600	405 000	775 000	**23176CAE4**	**23176CAKE4**	419	586	4	0.30	3.3	2.2	2.2	227
	620	243	5	4 350	8 450	440 000	865 000	**24176CAE4**	**24176CAK30E4**	419	586	4	0.38	2.6	1.8	1.7	273
	680	240	6	5 150	9 200	525 000	940 000	**23276CAE4**	**23276CAKE4**	425	638	5	0.35	2.9	1.9	1.9	369
400	540	106	4	1 890	4 250	193 000	435 000	**23980CAE4**	**23980CAKE4**	435	511	3	0.18	5.7	3.9	3.8	68.6
	600	148	5	2 970	5 900	305 000	605 000	**23080CAE4**	**23080CAKE4**	439	566	4	0.23	4.4	3.0	2.9	145
	600	200	5	3 600	7 600	370 000	775 000	**24080CAE4**	**24080CAK30E4**	439	566	4	0.31	3.3	2.2	2.2	192
	650	200	6	4 150	7 900	420 000	805 000	**23180CAE4**	**23180CAKE4**	446	609	5	0.29	3.4	2.3	2.3	256
	650	250	6	4 950	10 100	505 000	1 030 000	**24180CAE4**	**24180CAK30E4**	446	609	5	0.37	2.7	1.8	1.8	314
	720	256	6	5 800	10 400	590 000	1 060 000	**23280CAE4**	**23280CAKE4**	446	678	5	0.36	2.8	1.9	1.9	446
420	560	106	4	1 870	4 250	191 000	430 000	**23984CAE4**	**23984CAKE4**	456	531	3	0.17	6.0	4.0	3.9	71.1
	620	150	5	2 910	5 850	297 000	595 000	**23084CAE4**	**23084CAKE4**	460	586	4	0.23	4.3	2.9	2.8	150
	620	200	5	3 750	8 100	380 000	825 000	**24084CAE4**	**24084CAK30E4**	460	586	4	0.31	3.2	2.2	2.1	197
	700	224	6	5 000	9 400	510 000	960 000	**23184CAE4**	**23184CAKE4**	466	658	5	0.31	3.3	2.2	2.2	338
	700	280	6	6 000	12 000	610 000	1 220 000	**24184CAE4**	**24184CAK30E4**	466	658	5	0.38	2.6	1.8	1.7	418
	760	272	7.5	6 450	11 700	660 000	1 190 000	**23284CAE4**	**23284CAKE4**	475	709	6	0.35	2.9	1.9	1.9	531
440	600	118	4	2 190	4 800	223 000	490 000	**23988CAE4**	**23988CAKE4**	477	570	3	0.18	5.7	3.9	3.8	96.3
	650	157	6	3 150	6 350	320 000	645 000	**23088CAE4**	**23088CAKE4**	487	609	5	0.23	4.3	2.9	2.8	172
	650	212	6	4 150	9 100	425 000	930 000	**24088CAE4**	**24088CAK30E4**	487	609	5	0.31	3.2	2.1	2.1	229
	720	226	6	5 300	10 300	540 000	1 060 000	**23188CAE4**	**23188CAKE4**	487	678	5	0.30	3.3	2.2	2.2	358
	720	280	6	6 000	12 100	610 000	1 230 000	**24188CAE4**	**24188CAK30E4**	487	678	5	0.37	2.7	1.8	1.8	431
	790	280	7.5	6 900	12 800	705 000	1 300 000	**23288CAE4**	**23288CAKE4**	496	738	6	0.35	2.9	1.9	1.9	589
460	620	118	4	2 220	4 950	227 000	505 000	**23992CAE4**	**23992CAKE4**	498	589	3	0.17	5.9	4.0	3.9	99.6
	680	163	6	3 450	7 100	355 000	725 000	**23092CAE4**	**23092CAKE4**	508	638	5	0.22	4.6	3.1	3.0	199
	680	218	6	4 500	9 950	460 000	1 010 000	**24092CAE4**	**24092CAK30E4**	508	638	5	0.29	3.4	2.3	2.3	264
	760	240	7.5	5 700	10 900	580 000	1 110 000	**23192CAE4**	**23192CAKE4**	516	709	6	0.31	3.3	2.2	2.2	420
	760	300	7.5	6 300	12 400	640 000	1 270 000	**24192CAE4**	**24192CAK30E4**	516	709	6	0.39	2.6	1.7	1.7	509
	830	296	7.5	7 350	13 700	750 000	1 400 000	**23292CAE4**	**23292CAKE4**	516	778	6	0.36	2.8	1.9	1.8	687
480	650	128	5	2 580	5 850	263 000	595 000	**23996CAE4**	**23996CAKE4**	523	615	4	0.18	5.7	3.8	3.7	120
	700	165	6	3 800	7 950	385 000	810 000	**23096CAE4**	**23096CAKE4**	529	658	5	0.22	4.6	3.1	3.0	210
	700	218	6	4 600	10 200	470 000	1 040 000	**24096CAE4**	**24096CAK30E4**	529	658	5	0.30	3.4	2.3	2.2	268
	790	248	7.5	6 050	11 700	620 000	1 200 000	**23196CAE4**	**23196CAKE4**	537	738	6	0.31	3.3	2.2	2.2	472
	790	308	7.5	7 150	14 600	730 000	1 490 000	**24196CAE4**	**24196CAK30E4**	537	738	6	0.39	2.6	1.7	1.7	567
	870	310	7.5	7 850	14 400	805 000	1 470 000	**23296CAE4**	**23296CAKE4**	537	817	6	0.36	2.8	1.9	1.8	792

Note (1) The suffix K or K30 represents bearings with tapered bores (taper 1 : 12 or 1 : 30).

Bore Diameter 500 – 630 mm

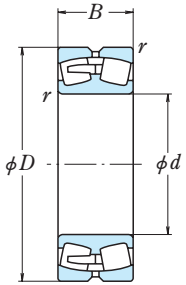

Cylindrical Bore

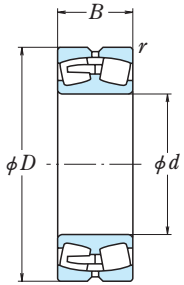

Tapered Bore

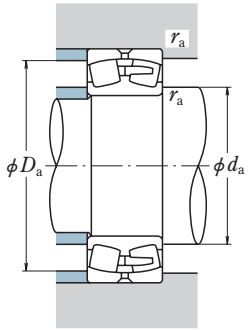

Dynamic Equivalent Load

$P = XF_r + YF_a$

$F_a/F_r \leqq e$		$F_a/F_r > e$	
X	Y	X	Y
1	Y_3	0.67	Y_2

Static Equivalent Load

$P_0 = F_r + Y_0 F_a$

The values of e, Y_2, Y_3, and Y_0 are given in the table below.

Boundary Dimensions (mm)				Basic Load Ratings (kN)		{kgf}		Bearing Numbers		Abutment and Fillet Dimensions (mm)			Constant	Axial Load Factors			Mass (kg)
d	D	B	r min.	C_r	C_{0r}	C_r	C_{0r}	Cylindrical Bore	Tapered Bore(1)	d_a	D_a	r_a max.	e	Y_2	Y_3	Y_0	approx.
500	670	128	5	2 460	5 550	250 000	565 000	**239/500CAE4**	**239/500CAKE4**	543	635	4	0.17	6.0	4.0	3.9	123
	720	167	6	3 750	8 100	385 000	825 000	**230/500CAE4**	**230/500CAKE4**	550	678	5	0.21	4.8	3.2	3.1	219
	720	218	6	4 450	9 900	450 000	1 010 000	**240/500CAE4**	**240/500CAK30E4**	550	678	5	0.30	3.4	2.3	2.2	276
	830	264	7.5	6 850	13 400	700 000	1 360 000	**231/500CAE4**	**231/500CAKE4**	558	778	6	0.31	3.2	2.2	2.1	564
	830	325	7.5	8 000	16 000	815 000	1 630 000	**241/500CAE4**	**241/500CAK30E4**	558	778	6	0.39	2.6	1.7	1.7	666
	920	336	7.5	9 000	16 600	915 000	1 690 000	**232/500CAE4**	**232/500CAKE4**	558	866	6	0.38	2.7	1.8	1.8	969
530	710	136	5	2 930	6 800	299 000	695 000	**239/530CAE4**	**239/530CAKE4**	575	674	4	0.17	6.0	4.0	3.9	148
	780	185	6	4 400	9 200	450 000	940 000	**230/530CAE4**	**230/530CAKE4**	581	736	5	0.22	4.6	3.1	3.0	296
	780	250	6	5 400	11 800	550 000	1 210 000	**240/530CAE4**	**240/530CAK30E4**	581	736	5	0.31	3.3	2.2	2.2	390
	870	272	7.5	7 150	14 100	730 000	1 440 000	**231/530CAE4**	**231/530CAKE4**	589	817	6	0.30	3.3	2.2	2.2	628
	870	335	7.5	8 500	17 500	870 000	1 790 000	241/530CAE4	241/530CAK30E4	589	817	6	0.38	2.6	1.8	1.7	773
	980	355	9.5	10 100	18 800	1 030 000	1 920 000	**232/530CAE4**	**232/530CAKE4**	597	917	8	0.38	2.7	1.8	1.7	1 170
540	820	195	6	5 000	10 700	510 000	1 090 000	540SL8261E4	—	591	776	5	0.22	4.5	3.0	2.9	377
560	750	140	5	3 100	7 250	320 000	740 000	**239/560CAE4**	**239/560CAKE4**	606	713	4	0.16	6.1	4.1	4.0	170
	820	195	6	5 000	10 700	510 000	1 090 000	**230/560CAE4**	**230/560CAKE4**	612	776	5	0.22	4.5	3.0	2.9	344
	820	258	6	5 950	13 300	605 000	1 360 000	**240/560CAE4**	**240/560CAK30E4**	612	776	5	0.30	3.3	2.2	2.2	440
	920	280	7.5	7 850	15 500	800 000	1 580 000	**231/560CAE4**	**231/560CAKE4**	620	866	6	0.30	3.4	2.3	2.2	727
	920	355	7.5	9 400	19 600	960 000	2 000 000	**241/560CAE4**	**241/560CAK30E4**	620	866	6	0.39	2.6	1.8	1.7	886
	1 030	365	9.5	10 900	20 500	1 110 000	2 090 000	**232/560CAE4**	**232/560CAKE4**	629	966	8	0.36	2.8	1.9	1.8	1 320
580	780	130	5	2 740	6 500	280 000	665 000	580SL7861E4	—	627	742	4	0.15	6.9	4.6	4.5	178
600	800	150	5	3 450	8 100	350 000	830 000	**239/600CAE4**	**239/600CAKE4**	647	762	4	0.17	5.9	3.9	3.9	205
	820	175	6	3 800	8 850	385 000	900 000	600SL8261E4	—	654	776	5	0.18	5.5	3.7	3.6	271
	870	200	6	5 450	12 200	555 000	1 240 000	**230/600CAE4**	**230/600CAKE4**	654	825	5	0.21	4.8	3.3	3.2	389
	870	272	6	6 600	15 100	675 000	1 540 000	**240/600CAE4**	**240/600CAK30E4**	654	825	5	0.30	3.3	2.2	2.2	529
	980	300	7.5	8 750	17 500	895 000	1 790 000	**231/600CAE4**	**231/600CAKE4**	662	925	6	0.30	3.4	2.3	2.2	898
	980	375	7.5	9 850	20 300	1 000 000	2 070 000	**241/600CAE4**	**241/600CAK30E4**	662	925	6	0.38	2.7	1.8	1.7	1 050
	1 090	388	9.5	12 700	24 900	1 300 000	2 540 000	**232/600CAE4**	**232/600CAKE4**	670	1 025	8	0.36	2.8	1.9	1.8	1 590
630	850	145	6	3 450	7 950	350 000	810 000	—	630SL8561KE4	685	805	5	0.15	6.6	4.4	4.3	227
	850	165	6	4 000	9 350	405 000	950 000	**239/630CAE4**	**239/630CAKE4**	685	805	5	0.18	5.6	3.8	3.7	259
	920	212	7.5	5 900	12 700	600 000	1 300 000	**230/630CAE4**	**230/630CAKE4**	693	866	6	0.22	4.7	3.1	3.1	468
	920	290	7.5	7 550	17 400	770 000	1 770 000	**240/630CAE4**	**240/630CAK30E4**	693	866	6	0.30	3.3	2.2	2.2	637
	1 030	315	7.5	9 600	19 400	980 000	1 970 000	231/630CAE4	231/630CAKE4	693	974	6	0.30	3.4	2.3	2.2	1 040
	1 030	400	7.5	11 300	23 900	1 160 000	2 440 000	**241/630CAE4**	**241/630CAK30E4**	693	974	6	0.38	2.7	1.8	1.7	1 250
	1 150	412	12	13 400	25 600	1 370 000	2 610 000	**232/630CAE4**	**232/630CAKE4**	712	1 074	10	0.36	2.8	1.9	1.8	1 850

Note (1) The suffix K or K30 represents bearings with tapered bores (taper 1 : 12 or 1 : 30).

Bore Diameter 670 – 800 mm

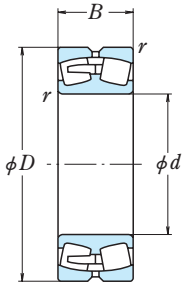

Cylindrical Bore

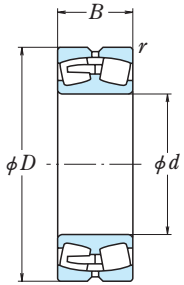

Tapered Bore

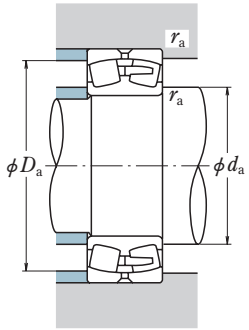

Dynamic Equivalent Load

$P = XF_r + YF_a$

$F_a/F_r \leqq e$		$F_a/F_r > e$	
X	Y	X	Y
1	Y_3	0.67	Y_2

Static Equivalent Load

$P_0 = F_r + Y_0 F_a$

The values of e, Y_2, Y_3, and Y_0 are given in the table below.

Boundary Dimensions (mm)				Basic Load Ratings (kN)		{kgf}		Bearing Numbers		Abutment and Fillet Dimensions (mm)			Constant	Axial Load Factors			Mass (kg)
d	D	B	r min.	C_r	C_{0r}	C_r	C_{0r}	Cylindrical Bore	Tapered Bore(1)	d_a	D_a	r_a max.	e	Y_2	Y_3	Y_0	approx.
670	900	170	6	4 350	10 300	445 000	1 050 000	**239/670CAE4**	**239/670CAKE4**	726	854	5	0.17	5.8	3.9	3.8	300
	920	170	6	4 350	10 300	445 000	1 050 000	670SL9261E4	—	726	874	5	0.17	5.8	3.9	3.8	343
	980	230	7.5	6 850	15 000	700 000	1 530 000	**230/670CAE4**	**230/670CAKE4**	735	925	6	0.22	4.7	3.1	3.1	571
	980	308	7.5	8 450	19 500	860 000	1 990 000	**240/670CAE4**	**240/670CAK30E4**	735	925	6	0.30	3.3	2.2	2.2	773
	1 090	336	7.5	10 600	21 600	1 080 000	2 200 000	231/670CAE4	231/670CAKE4	735	1 032	6	0.30	3.3	2.2	2.2	1 230
	1 090	412	7.5	12 400	26 500	1 270 000	2 700 000	**241/670CAE4**	**241/670CAK30E4**	735	1 032	6	0.37	2.7	1.8	1.8	1 440
	1 220	438	12	14 900	28 700	1 520 000	2 920 000	**232/670CAE4**	**232/670CAKE4**	753	1 142	10	0.37	2.7	1.8	1.8	2 210
675	920	153	6	3 950	8 950	400 000	910 000	675SL9261E4	—	732	874	5	0.15	6.9	4.6	4.5	296
700	1 020	250	7.5	6 500	14 600	660 000	1 490 000	700SL1061E4	—	766	964	6	0.22	4.6	3.1	3.0	690
710	950	180	6	4 800	11 700	490 000	1 200 000	**239/710CAE4**	**239/710CAKE4**	768	903	5	0.17	5.8	3.9	3.8	352
	1 030	236	7.5	7 100	15 800	725 000	1 610 000	**230/710CAE4**	**230/710CAKE4**	776	974	6	0.22	4.6	3.1	3.0	647
	1 030	315	7.5	8 850	20 700	905 000	2 110 000	**240/710CAE4**	**240/710CAK30E4**	776	974	6	0.29	3.4	2.3	2.2	861
	1 150	345	9.5	11 800	24 500	1 210 000	2 500 000	231/710CAE4	231/710CAKE4	785	1 083	8	0.29	3.4	2.3	2.3	1 420
	1 150	438	9.5	13 900	30 500	1 410 000	3 100 000	241/710CAE4	241/710CAK30E4	785	1 083	8	0.38	2.6	1.8	1.7	1 730
	1 280	450	12	15 700	30 500	1 600 000	3 100 000	**232/710CAE4**	**232/710CAKE4**	795	1 201	10	0.36	2.8	1.9	1.8	2 470
730	980	170	6	4 600	10 700	470 000	1 100 000	—	730SL9861KE4	789	932	5	0.15	6.6	4.4	4.3	347
750	1 000	185	6	5 250	12 800	535 000	1 310 000	**239/750CAE4**	**239/750CAKE4**	810	952	5	0.17	6.0	4.1	4.0	398
	1 000	200	6	5 250	12 800	535 000	1 310 000	750SL1061E4	—	810	952	5	0.17	6.0	4.1	4.0	433
	1 090	250	7.5	7 750	17 200	790 000	1 750 000	**230/750CAE4**	**230/750CAKE4**	818	1 032	6	0.22	4.6	3.1	3.0	768
	1 090	335	7.5	10 100	24 000	1 030 000	2 450 000	240/750CAE4	240/750CAK30E4	818	1 032	6	0.29	3.4	2.3	2.2	1 030
	1 220	365	9.5	13 100	27 300	1 330 000	2 790 000	231/750CAE4	231/750CAKE4	826	1 152	8	0.29	3.4	2.3	2.3	1 700
	1 360	475	15	17 700	35 500	1 800 000	3 600 000	**232/750CAE4**	**232/750CAKE4**	847	1 270	12	0.36	2.8	1.9	1.8	2 980
760	1 140	285	7.5	8 600	19 200	880 000	1 960 000	—	760SL1161KE4	828	1 081	6	0.23	4.4	3.0	2.9	1 010
780	1 180	285	7.5	9 350	20 700	955 000	2 110 000	780SL1161E4	—	849	1 121	6	0.22	4.5	3.0	2.9	1 130
800	1 060	195	6	5 600	13 700	570 000	1 400 000	**239/800CAE4**	**239/800CAKE4**	862	1 011	5	0.17	6.0	4.0	3.9	462
	1 150	258	7.5	8 350	19 100	850 000	1 950 000	**230/800CAE4**	**230/800CAKE4**	870	1 091	6	0.21	4.7	3.2	3.1	870
	1 150	280	7.5	8 350	19 100	850 000	1 950 000	**800SL1161E4**	—	870	1 091	6	0.21	4.7	3.2	3.1	941
	1 150	345	7.5	10 900	26 300	1 110 000	2 680 000	**240/800CAE4**	**240/800CAK30E4**	870	1 091	6	0.27	3.7	2.5	2.5	1 130
	1 280	375	9.5	13 800	29 200	1 410 000	2 970 000	**231/800CAE4**	**231/800CAKE4**	878	1 211	8	0.28	3.6	2.4	2.3	1 870
	1 420	488	15	20 300	41 000	2 070 000	4 150 000	**232/800CAE4**	**232/800CAKE4**	899	1 328	12	0.35	2.8	1.9	1.9	3 250

Note (1) The suffix K or K30 represents bearings with tapered bores (taper 1 : 12 or 1 : 30).

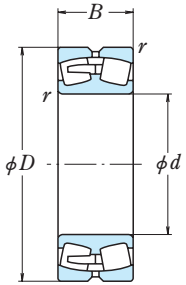

Cylindrical Bore

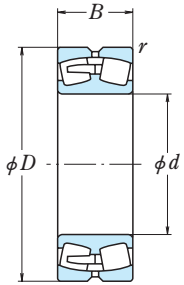

Tapered Bore

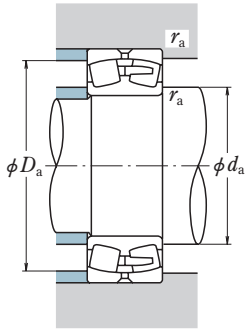

Dynamic Equivalent Load

$P = XF_r + YF_a$

$F_a/F_r \leqq e$		$F_a/F_r > e$	
X	Y	X	Y
1	Y_3	0.67	Y_2

Static Equivalent Load

$P_0 = F_r + Y_0 F_a$

The values of e, Y_2, Y_3, and Y_0 are given in the table below.

Boundary Dimensions (mm)				Basic Load Ratings (kN)		{kgf}		Bearing Numbers		Abutment and Fillet Dimensions (mm)			Constant	Axial Load Factors			Mass (kg)
d	D	B	r min.	C_r	C_{0r}	C_r	C_{0r}	Cylindrical Bore	Tapered Bore(1)	d_a	D_a	r_a max.	e	Y_2	Y_3	Y_0	approx.
850	1 120	200	6	6 100	15 200	620 000	1 550 000	**239/850CAE4**	**239/850CAKE4**	914	1 070	5	0.16	6.2	4.2	4.1	523
	1 220	272	7.5	9 300	21 400	945 000	2 190 000	**230/850CAE4**	**230/850CAKE4**	922	1 160	6	0.21	4.8	3.2	3.1	1 020
	1 220	305	7.5	9 300	23 500	950 000	2 390 000	**850SL1261E4**	—	922	1 160	6	0.22	4.6	3.1	3.0	1 170
	1 220	365	7.5	11 600	28 300	1 180 000	2 890 000	**240/850CAE4**	**240/850CAK30E4**	922	1 160	6	0.28	3.6	2.4	2.4	1 350
	1 360	400	12	15 800	34 000	1 610 000	3 500 000	231/850CAE4	231/850CAKE4	941	1 279	10	0.28	3.5	2.4	2.3	2 260
	1 500	515	15	22 300	45 500	2 270 000	4 650 000	**232/850CAE4**	**232/850CAKE4**	951	1 407	12	0.35	2.8	1.9	1.9	3 890
900	1 180	206	6	6 600	16 700	670 000	1 700 000	**239/900CAE4**	**239/900CAKE4**	966	1 128	5	0.16	6.4	4.3	4.2	591
	1 280	280	7.5	9 850	22 800	1 000 000	2 330 000	230/900CAE4	230/900CAKE4	974	1 219	6	0.20	4.9	3.3	3.2	1 160
	1 280	305	7.5	10 300	24 800	1 050 000	2 530 000	**900SL1261E4**	—	974	1 219	6	0.20	4.9	3.3	3.2	1 250
	1 280	375	7.5	12 800	31 500	1 300 000	3 250 000	240/900CAE4	240/900CAK30E4	974	1 219	6	0.28	3.6	2.4	2.4	1 520
	1 420	412	12	16 700	36 500	1 700 000	3 700 000	**231/900CAE4**	**231/900CAKE4**	993	1 338	10	0.28	3.6	2.4	2.4	2 490
	1 580	515	15	23 400	47 500	2 380 000	4 850 000	232/900CAE4	232/900CAKE4	1 003	1 485	12	0.33	3.0	2.0	2.0	4 300
950	1 250	224	7.5	7 600	19 900	775 000	2 030 000	**239/950CAE4**	**239/950CAKE4**	1 026	1 189	6	0.16	6.3	4.2	4.1	732
	1 360	300	7.5	11 300	26 500	1 160 000	2 710 000	**230/950CAE4**	**230/950CAKE4**	1 026	1 297	6	0.21	4.8	3.2	3.2	1 400
	1 360	412	7.5	14 500	36 500	1 480 000	3 700 000	**240/950CAE4**	**240/950CAK30E4**	1 026	1 297	6	0.28	3.6	2.4	2.3	1 880
	1 400	300	7.5	11 400	25 200	1 160 000	2 570 000	**950SL1462E4**	—	1 026	1 336	6	0.20	5.1	3.4	3.3	1 570
	1 660	530	15	24 700	50 500	2 520 000	5 150 000	**232/950CAE4**	**232/950CAKE4**	1 055	1 564	12	0.32	3.1	2.1	2.1	4 800
1 000	1 320	236	7.5	8 200	21 700	835 000	2 210 000	239/1000CAE4	239/1000CAKE4	1 078	1 258	6	0.16	6.4	4.3	4.2	881
	1 420	308	7.5	11 900	28 100	1 210 000	2 860 000	230/1000CAE4	230/1000CAKE4	1 078	1 356	6	0.20	4.9	3.3	3.2	1 560
	1 420	320	7.5	11 500	28 400	1 170 000	2 890 000	**1000SL1461E4**	—	1 078	1 356	6	0.20	5.1	3.5	3.4	1 630
	1 420	412	7.5	15 300	38 500	1 560 000	3 950 000	**240/1000CAE4**	**240/1000CAK30E4**	1 078	1 356	6	0.27	3.7	2.5	2.4	2 010
1 060	1 400	250	7.5	9 300	24 400	950 000	2 490 000	**239/1060CAE4**	**239/1060CAKE4**	1 140	1 336	6	0.16	6.1	4.1	4.0	1 030
	1 500	325	9.5	13 000	31 500	1 330 000	3 200 000	**230/1060CAE4**	**230/1060CAKE4**	1 149	1 426	8	0.21	4.9	3.3	3.2	1 790
	1 500	340	9.5	13 000	31 500	1 330 000	3 200 000	**1060SL1561E4**	—	1 149	1 426	8	0.21	4.9	3.3	3.2	1 850
	1 500	438	9.5	16 800	43 000	1 720 000	4 350 000	240/1060CAE4	240/1060CAK30E4	1 149	1 426	8	0.28	3.6	2.4	2.4	2 410
1 120	1 460	250	7.5	9 500	26 000	970 000	2 650 000	239/1120CAE4	239/1120CAKE4	1 203	1 395	6	0.15	6.6	4.4	4.3	1 100
	1 580	345	9.5	14 700	36 000	1 500 000	3 650 000	**230/1120CAE4**	**230/1120CAKE4**	1 211	1 505	8	0.20	4.9	3.3	3.2	2 150
	1 580	360	9.5	14 700	36 000	1 500 000	3 650 000	1120SL1562E4	—	1 211	1 505	8	0.20	4.9	3.3	3.2	2 230
	1 580	380	9.5	15 500	38 500	1 580 000	3 950 000	**1120SL1561E4**	—	1 211	1 505	8	0.21	4.8	3.2	3.2	2 330
	1 580	462	9.5	18 700	49 500	1 910 000	5 050 000	**240/1120CAE4**	**240/1120CAK30E4**	1 211	1 505	8	0.27	3.7	2.5	2.5	2 790

Note (1) The suffix K or K30 represents bearings with tapered bores (taper 1 : 12 or 1 : 30).

Bore Diameter 1 180 – 1 590 mm

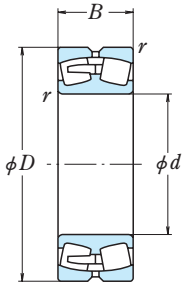

Cylindrical Bore

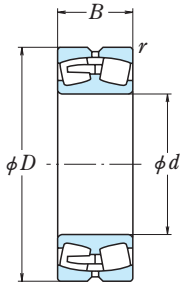

Tapered Bore

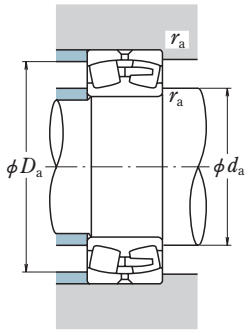

Dynamic Equivalent Load

$P = XF_r + YF_a$

$F_a/F_r \leqq e$		$F_a/F_r > e$	
X	Y	X	Y
1	Y_3	0.67	Y_2

Static Equivalent Load

$P_0 = F_r + Y_0 F_a$

The values of e, Y_2, Y_3, and Y_0 are given in the table below.

Boundary Dimensions (mm)				Basic Load Ratings (kN)		{kgf}		Bearing Numbers		Abutment and Fillet Dimensions (mm)			Constant	Axial Load Factors			Mass (kg)
d	D	B	r min.	C_r	C_{0r}	C_r	C_{0r}	Cylindrical Bore	Tapered Bore(1)	d_a	D_a	r_a max.	e	Y_2	Y_3	Y_0	approx.
1 180	1 660	475	9.5	20 200	52 500	2 060 000	5 350 000	240/1180CAE4	240/1180CAK30E4	1 273	1 583	8	0.27	3.7	2.5	2.4	3 180
1 200	1 700	410	9.5	17 000	44 000	1 730 000	4 500 000	**1200SL1761E4**	—	1 294	1 622	8	0.21	4.8	3.2	3.1	2 980
1 220	1 680	380	9.5	15 800	40 500	1 610 000	4 150 000	**1220SL1661E4**	—	1 315	1 603	8	0.19	5.2	3.5	3.4	2 500
1 250	1 630	280	7.5	11 600	31 500	1 180 000	3 200 000	239/1250CAE4	239/1250CAKE4	1 338	1 562	6	0.15	6.6	4.4	4.3	1 540
	1 750	390	9.5	17 400	44 500	1 770 000	4 500 000	**1250SL1761E4**	—	1 346	1 671	8	0.20	5.0	3.3	3.3	2 860
	1 750	400	9.5	18 000	46 000	1 830 000	4 700 000	**1250SL1762E4**	—	1 346	1 671	8	0.20	5.1	3.4	3.3	2 970
	1 750	500	9.5	21 000	59 500	2 140 000	6 050 000	**240/1250CAE4**	**240/1250CAK30E4**	1 346	1 671	8	0.25	4.0	2.7	2.6	3 700
1 320	1 720	350	7.5	13 500	38 500	1 380 000	3 900 000	**1320SL1761E4**	—	1 411	1 650	6	0.17	5.9	4.0	3.9	2 100
	1 850	480	12	21 200	58 500	2 160 000	5 950 000	**1320SL1861E4**	—	1 429	1 760	10	0.22	4.5	3.0	2.9	4 060
	1 850	530	12	22 600	63 500	2 310 000	6 500 000	**240/1320CAE4**	**240/1320CAK30E4**	1 429	1 760	10	0.26	3.9	2.6	2.6	4 400
1 350	1 800	500	7.5	19 200	56 500	1 960 000	5 750 000	1350SL1851E4	—	1 442	1 728	6	0.25	4.0	2.7	2.6	3 660
1 370	1 780	265	9.5	11 900	31 500	1 210 000	3 250 000	—	1370SL1761KE4	1 471	1 701	8	0.13	7.7	5.1	5.0	1 650
1 400	1 820	315	9.5	14 300	40 500	1 460 000	4 100 000	239/1400CAE4	239/1400CAKE4	1 502	1 740	8	0.16	6.5	4.3	4.2	2 140
	1 900	440	12	18 000	54 500	1 830 000	5 600 000	**1400SL1962E4**	—	1 513	1 809	10	0.20	5.0	3.3	3.3	3 710
	1 900	530	12	22 700	64 500	2 310 000	6 600 000	1400SL1951E4	—	1 513	1 809	10	0.25	4.0	2.7	2.6	4 510
	1 950	545	12	24 500	65 000	2 500 000	6 650 000	**240/1400CAE4**	**240/1400CAK30E4**	1 513	1 858	10	0.25	4.0	2.7	2.6	4 900
1 470	1 900	375	12	15 500	48 000	1 580 000	4 900 000	1470SL1961E4	—	1 585	1 809	10	0.16	6.4	4.3	4.2	2 770
1 500	1 900	375	12	15 500	48 000	1 580 000	4 900 000	**1500SL1961E4**	—	1 617	1 809	10	0.16	6.4	4.3	4.2	2 540
1 590	2 000	380	9.5	16 100	50 000	1 640 000	5 100 000	**1590SL2061E4**	—	1 700	1 916	8	0.15	6.7	4.5	4.4	2 770

Note (1) The suffix K or K30 represents bearings with tapered bores (taper 1 : 12 or 1 : 30).

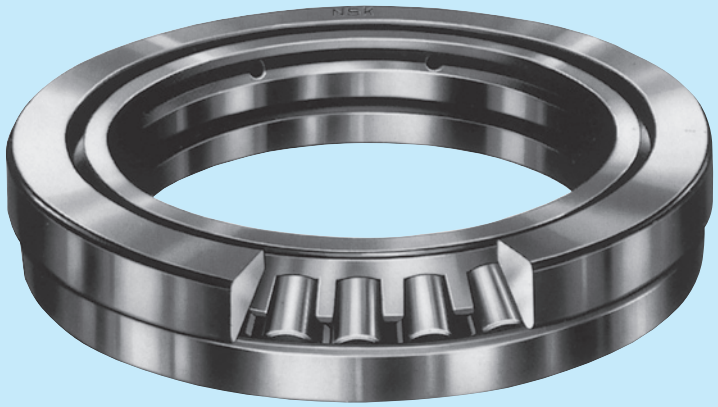

THRUST BEARINGS

Thrust Ball Bearings Bore Diameter 90 – 630mm ····· B312
Cylindrical Roller Thrust Bearings
Bore Diameter 100 – 360mm ····· B318
Tapered Roller Thrust Bearings
Bore Diameter 101.600 – 600mm ····· B322
Spherical Thrust Roller Bearings
Bore Diameter 100 – 900mm ····· B328

Design, Types, and Features

Thrust Ball Bearings

Thrust ball bearings are composed of washer-like bearing rings with raceway grooves. Single-direction thrust ball bearings can sustain an axial load in only one direction.

Pressed cages are usually used, but larger ones are machined brass. The basic load ratings listed in the bearing tables are based on the standard cage type. If the type of cage is different for bearings with the same number, the number of balls may vary. In such a case, the load rating will differ from the one listed in the bearing tables.

Table 1 Standard Cages for Thrust Ball Bearings

Pressed Steel	Machined Brass
51118 – 51152X	51156X – 511/630X
51218 – 51236X	51238X – 512/630X
51318 – 51336X	51338X – 51392
51418X	51420X – 51448X

Cylindrical Roller Thrust Bearings

These are thrust bearings containing cylindrical rollers. They can sustain only axial loads, but they are suitable for heavy loads and have high axial rigidity.

The cages are machined brass.

TT

TTF

Tapered Roller Thrust Bearings

These are thrust bearings containing tapered rollers. TT-type bearings, which have a rib on the housing washer, can accurately guide the shaft in the radial direction. TTF-type bearings, which have no rib on the housing washer, can tolerate some eccentricity during operation.

Spherical Thrust Roller Bearings

These are thrust bearings containing barrel-shaped rollers (convex rollers). They have a self-aligning capability and are free of any influence of mounting error or shaft deflection. Besides the original type, the E type with pressed cages, and the EM type with machined brass cage for high load capacity are also available. Their bearing numbers are suffixed by E.

Since there are several places where lubrication is difficult, such as the area between the roller heads and shaft washer rib, the sliding surfaces between cage and guide sleeve, etc., oil lubrication should be used even at low speed.

The cages in the original type are machined brass.

Tolerances and Running Accuracy

Thrust Ball Bearings.....Table 2.5 (Pages A26 and A27)
Cylindrical Roller Thrust Bearings.....According to Table 2.5 (Pages A26 and A27)
Tapered Roller Thrust Bearings.....Table 2.6 (Page A28)
Spherical Thrust Roller Bearings.....Table 2.7 (Page A29)

Recommended Fits.....Table 3.3 (Page A35)
Table 3.5 (Page A36)

Thrust Ball Bearings
Cylindrical Roller Thrust Bearings
Tapered Roller Thrust Bearings
Spherical Thrust Roller Bearings

For inch design tapered roller thrust bearings, please contact NSK.

Dimensions Related to Mounting

The dimensions related to mounting of spherical thrust roller bearings are listed in the Bearing Table.

If the bearing load is heavy, it is necessary to design the shaft shoulder with ample strength in order to provide sufficient support for the shaft washerib.

Permissible Misalignment

The permissible misalignment of spherical thrust roller bearings varies depending on the size, but it is approximately 1° to 2° with average loads.

Minimum Axial Load

It is necessary to apply some axial load to thrust bearings to prevent slippage between the rolling elements and raceways. For more details, please contact NSK.

Bore Diameter 90 – 170 mm

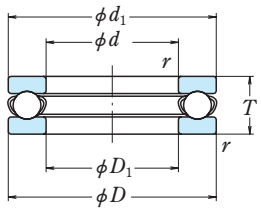

With Flat Seat

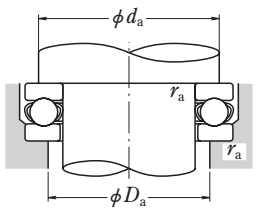

Boundary Dimensions (mm)				Basic Load Ratings (kN)		Basic Load Ratings {kgf}		Bearing Numbers(1)	Dimensions (mm)		Abutment and Fillet Dimensions (mm)			Mass (kg)
d	D	T	r min.	C_a	C_{0a}	C_a	C_{0a}		d_1	D_1	d_a min.	D_a max.	r_a max.	approx.
90	120	22	1	60.0	190	6 150	19 400	**51118**	120	92	108	102	1	0.646
	135	35	1.1	114	310	11 600	31 500	**51218**	135	93	117	108	1	1.69
	155	50	1.5	214	525	21 900	53 500	**51318**	155	93	129	116	1.5	3.83
	190	77	2.1	330	825	33 500	84 000	**51418X**	187	93	149	131	2	10.2
100	135	25	1	86.0	268	8 750	27 300	**51120**	135	102	121	114	1	0.96
	150	38	1.1	135	375	13 700	38 500	**51220**	150	103	130	120	1	2.25
	170	55	1.5	239	595	24 300	61 000	**51320**	170	103	142	128	1.5	4.98
	210	85	3	370	985	38 000	100 000	**51420X**	205	103	165	145	2.5	14.8
110	145	25	1	88.0	288	8 950	29 400	**51122**	145	112	131	124	1	1.04
	160	38	1.1	136	395	13 900	40 000	**51222**	160	113	140	130	1	2.42
	190	63	2	282	755	28 800	77 000	**51322X**	187	113	158	142	2	7.18
	230	95	3	415	1 150	42 000	118 000	**51422X**	225	113	181	159	2.5	20
120	155	25	1	90.0	310	9 150	31 500	**51124**	155	122	141	134	1	1.12
	170	39	1.1	141	430	14 400	44 000	**51224**	170	123	150	140	1	2.7
	210	70	2.1	330	930	33 500	95 000	**51324X**	205	123	173	157	2	9.7
	250	102	4	480	1 400	49 000	142 000	**51424X**	245	123	196	174	3	26.2
130	170	30	1	105	350	10 700	36 000	**51126**	170	132	154	146	1	1.68
	190	45	1.5	183	550	18 700	56 000	**51226X**	187	133	166	154	1.5	3.95
	225	75	2.1	350	1 030	35 500	105 000	**51326X**	220	134	186	169	2	12.1
	270	110	4	525	1 590	53 500	162 000	**51426X**	265	134	212	188	3	32.3
140	180	31	1	107	375	11 000	38 500	**51128X**	178	142	164	156	1	1.83
	200	46	1.5	186	575	18 900	59 000	**51228X**	197	143	176	164	1.5	4.3
	240	80	2.1	370	1 130	37 500	115 000	**51328X**	235	144	199	181	2	15.6
	280	112	4	550	1 750	56 500	178 000	**51428X**	275	144	222	198	3	34.7
150	190	31	1	110	400	11 200	41 000	**51130X**	188	152	174	166	1	1.95
	215	50	1.5	238	735	24 300	75 000	**51230X**	212	153	189	176	1.5	5.52
	250	80	2.1	380	1 200	39 000	123 000	**51330X**	245	154	209	191	2	16.7
	300	120	4	620	2 010	63 000	205 000	**51430X**	295	153	238	212	3	43.5
160	200	31	1	113	425	11 500	43 500	**51132X**	198	162	184	176	1	2.07
	225	51	1.5	249	805	25 400	82 000	**51232X**	222	163	199	186	1.5	6.04
	270	87	3	450	1 470	46 000	150 000	**51332X**	265	164	225	205	2.5	21.5
	320	130	5	650	2 210	66 000	226 000	**51432X**	315	164	254	226	4	52.7
170	215	34	1.1	135	510	13 800	52 000	**51134X**	213	172	197	188	1	2.72
	240	55	1.5	280	915	28 500	93 000	**51234X**	237	173	212	198	1.5	7.41
	280	87	3	465	1 570	47 500	160 000	**51334X**	275	174	235	215	2.5	22.5
	340	135	5	715	2 480	73 000	253 000	**51434X**	335	174	269	241	4	61.2

Note (1) The suffix X represents the inner ring (Shaft washer) outside diameter d_1 which smaller than the outer ring (housing washer) outside diameter D.

Bore Diameter 180 – 340 mm

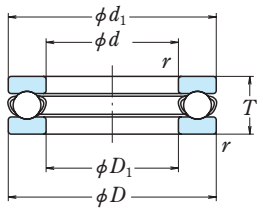

With Flat Seat

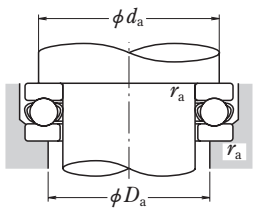

Boundary Dimensions (mm)				Basic Load Ratings (kN)		Basic Load Ratings {kgf}		Bearing Numbers(1)	Dimensions (mm)		Abutment and Fillet Dimensions (mm)			Mass (kg)
d	D	T	r min.	C_a	C_{0a}	C_a	C_{0a}		d_1	D_1	d_a min.	D_a max.	r_a max.	approx.
180	225	34	1.1	136	530	13 800	54 000	**51136X**	222	183	207	198	1	2.79
	250	56	1.5	284	955	28 900	97 000	**51236X**	247	183	222	208	1.5	7.94
	300	95	3	480	1 680	49 000	171 000	**51336X**	295	184	251	229	2.5	28.3
	360	140	5	750	2 730	76 500	278 000	**51436X**	355	184	285	255	4	70.5
190	240	37	1.1	172	655	17 500	67 000	**51138X**	237	193	220	210	1	3.6
	270	62	2	320	1 110	32 500	113 000	**51238X**	267	194	238	222	2	11.8
	320	105	4	550	1 960	56 000	199 000	**51338X**	315	195	266	244	3	36.5
	380	150	5	865	3 300	88 000	355 000	51438X	375	195	300	270	4	85.5
200	250	37	1.1	173	675	17 600	69 000	**51140X**	247	203	230	220	1	3.75
	280	62	2	315	1 110	32 500	113 000	**51240X**	277	204	248	232	2	12.3
	340	110	4	600	2 220	61 500	227 000	**51340X**	335	205	282	258	3	43.6
	400	155	5	850	3 330	87 000	335 000	**51440**	400	204	317	285	4	99
220	270	37	1.1	179	740	18 200	75 500	**51144X**	267	223	250	240	1	4.09
	300	63	2	325	1 210	33 500	123 000	**51244X**	297	224	268	252	2	13.6
	360	112	4	615	2 380	63 000	243 000	**51344**	360	225	304	278	3	48.6
	420	160	6	885	3 600	90 500	370 000	**51444**	420	228	341	303	5	107
240	300	45	1.5	229	935	23 400	95 000	**51148X**	297	243	276	264	1.5	6.55
	340	78	2.1	420	1 650	43 000	168 000	**51248X**	335	244	299	281	2	23.7
	380	112	4	630	2 540	64 500	259 000	**51348**	380	245	324	298	3	51.9
	440	160	6	915	3 900	93 500	400 000	**51448X**	435	245	359	321	5	115
260	320	45	1.5	233	990	23 800	101 000	**51152X**	317	263	296	284	1.5	7.01
	360	79	2.1	435	1 800	44 500	184 000	**51252X**	355	264	319	301	2	25.1
	420	130	5	750	3 200	76 500	330 000	**51352**	420	263	357	324	4	75.9
280	350	53	1.5	315	1 310	32 000	134 000	**51156X**	347	283	322	308	1.5	12
	380	80	2.1	450	1 950	46 000	199 000	**51256X**	375	284	339	321	2	27.1
	440	130	5	765	3 400	78 000	350 000	51356X	435	285	375	345	4	78.8
300	380	62	2	360	1 560	36 500	159 000	**51160X**	376	304	348	332	2	17.2
	420	95	3	540	2 410	55 000	246 000	**51260X**	415	304	371	349	2.5	43.5
	480	140	5	860	3 950	87 500	405 000	**51360**	480	305	407	375	4	103
320	400	63	2	365	1 660	37 500	169 000	**51164X**	396	324	368	352	2	18.6
	440	95	3	585	2 680	59 500	273 000	**51264X**	435	325	391	369	2.5	45
	500	140	5	880	4 200	90 000	430 000	**51364**	500	325	427	395	4	109
340	420	64	2	375	1 760	38 500	179 000	**51168X**	416	344	388	372	2	19.9
	460	96	3	595	2 800	60 500	285 000	**51268X**	455	345	411	389	2.5	47.9
	540	160	5	1 020	5 100	104 000	520 000	**51368**	540	345	457	425	4	151

Note (1) The suffix X represents the inner ring (Shaft washer) outside diameter d_1 which smaller than the outer ring (housing washer) outside diameter D.

Bore Diameter 360 – 630 mm

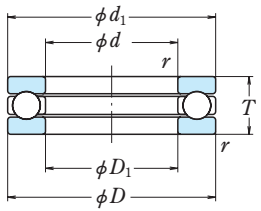

With Flat Seat

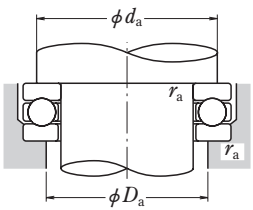

Boundary Dimensions (mm)				Basic Load Ratings (kN)		Basic Load Ratings {kgf}		Bearing Numbers(1)	Dimensions (mm)		Abutment and Fillet Dimensions (mm)			Mass (kg)
d	D	T	r min.	C_a	C_{0a}	C_a	C_{0a}		d_1	D_1	d_a min.	D_a max.	r_a max.	approx.
360	440	65	2	385	1 860	39 000	190 000	**51172X**	436	364	408	392	2	21.5
	500	110	4	705	3 500	72 000	355 000	**51272X**	495	365	442	418	3	68.8
	560	160	5	1 120	5 700	114 000	585 000	**51372**	560	365	477	445	4	156
380	460	65	2	385	1 910	39 500	195 000	**51176X**	456	384	427	413	2	22.4
	520	112	4	740	3 800	75 500	390 000	**51276**	520	385	464	438	3	74.5
	600	175	6	1 140	6 100	116 000	620 000	51376X	595	385	509	471	5	199
400	480	65	2	395	2 010	40 000	205 000	**51180X**	476	404	447	433	2	23.5
	540	112	4	730	3 800	74 500	390 000	**51280**	540	405	484	458	3	77.7
	620	175	6	1 170	6 450	119 000	655 000	51380X	615	405	529	491	5	207
420	500	65	2	400	2 110	41 000	215 000	**51184X**	495	424	467	453	2	24.4
	580	130	5	850	4 650	86 500	470 000	**51284**	580	425	517	485	4	109
	650	180	6	1 150	6 450	118 000	655 000	**51384**	650	425	556	516	5	232
440	540	80	2.1	515	2 850	53 000	291 000	**51188X**	535	444	498	482	2	40.5
	600	130	5	865	4 850	88 000	490 000	**51288**	600	445	537	505	4	115
	680	190	6	1 220	7 150	124 000	730 000	51388X	675	445	579	541	5	269
460	560	80	2.1	520	2 930	53 000	299 000	**51192X**	555	464	518	502	2	42
	620	130	5	880	5 050	89 500	515 000	**51292**	620	465	557	525	4	119
	710	195	6	1 200	7 150	123 000	730 000	**51392**	710	465	606	566	5	291
480	580	80	2.1	530	3 100	54 000	315 000	**51196X**	575	484	538	522	2	43.7
	650	135	5	890	5 250	90 500	535 000	**51296**	650	485	582	550	4	137
530	640	85	3	640	3 900	65 500	395 000	**511/530X**	635	534	597	575	2.5	56.7
	710	140	5	1 010	6 200	103 000	635 000	**512/530**	710	535	637	605	4	165
560	670	85	3	655	4 100	66 500	415 000	**511/560X**	665	564	625	605	2.5	59.6
	750	150	5	1 200	7 800	122 000	795 000	**512/560**	750	565	672	640	4	200
600	710	85	3	675	4 400	68 500	450 000	**511/600X**	705	605	665	645	2.5	63.3
	800	160	5	1 170	7 800	120 000	795 000	**512/600**	800	605	717	685	4	241
630	750	95	3	685	4 600	69 500	470 000	**511/630X**	745	634	700	680	2.5	83
	850	175	6	1 400	10 000	143 000	1 020 000	**512/630X**	845	635	759	721	5	299

Note (1) The suffix X represents the inner ring (Shaft washer) outside diameter d_1 which smaller than the outer ring (housing washer) outside diameter D.

Bore Diameter 100 – 220 mm

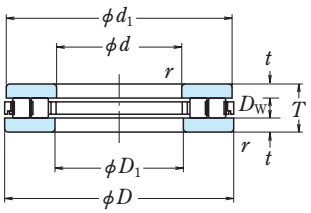

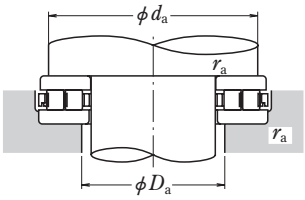

Boundary Dimensions (mm)				Basic Load Ratings (kN)		{kgf}		Bearing Numbers	Dimensions (mm)				Abutment and Fillet Dimensions (mm)			Mass (kg)
d	D	T	r min.	C_a	C_{0a}	C_a	C_{0a}		d_1	D_1	D_w	t	d_a min.	D_a max.	r_a max.	approx.
100	170	42	1.5	292	1 110	29 700	113 000	**100TMP93**	170	103	16	13	159	110	1.5	4.25
110	160	38	1.1	228	855	23 300	87 000	**110TMP12**	160	113	15	11.5	150	119	1	2.66
	190	48	2	390	1 490	40 000	152 000	**110TMP93**	190	113	19	14.5	179	120	2	6.15
120	170	39	1.1	233	895	23 800	91 500	**120TMP12**	170	123	15	12	160	129	1	2.93
	210	54	2.1	505	1 930	51 500	197 000	**120TMP93**	210	123	22	16	199	129	2	8.55
	250	78	4	870	3 250	89 000	330 000	**120TMP94**	245	125	30	24	233	135	3	20.6
130	190	45	1.5	300	1 090	31 000	111 000	**130TMP12**	187	133	19	13	177	142	1.5	4.5
	225	58	2.1	585	2 370	59 500	241 000	**130TMP93**	225	133	22	18	214	140	2	10.4
	270	85	4	895	3 300	91 500	335 000	**130TMP94**	270	133	32	26.5	254	150	3	26.2
140	200	46	2	285	1 120	29 000	114 000	**140TMP12**	197	143	17	14.5	188	153	2	4.85
	240	60	2.1	610	2 360	62 500	240 000	**140TMP93**	240	143	25	17.5	226	154	2	12.2
	280	85	4	990	3 800	101 000	385 000	**140TMP94**	280	143	32	26.5	262	158	3	27.5
150	215	50	2	375	1 500	38 000	153 000	**150TMP12**	215	153	19	15.5	202	163	2	6.15
	250	60	2.1	635	2 510	64 500	256 000	**150TMP93**	250	153	25	17.5	236	165	2	12.8
	300	90	4	1 090	4 350	111 000	445 000	**150TMP94**	295	155	32	29	280	166	3	33.4
160	200	31	1	173	815	17 700	83 000	**160TMP11**	200	162	11	10	191	168	1	2.21
	270	67	3	745	3 150	76 000	320 000	**160TMP93**	265	164	25	21	255	173	2.5	16.9
170	240	55	1.5	485	1 960	49 500	200 000	**170TMP12**	237	173	22	16.5	227	182	1.5	8.2
	280	67	3	800	3 500	81 500	360 000	**170TMP93**	280	173	25	21	265	183	2.5	17.7
180	300	73	3	1 000	4 000	102 000	410 000	**180TMP93**	300	185	32	20.5	284	194	2.5	22.5
	360	109	5	1 640	6 200	167 000	630 000	**180TMP94**	354	189	45	32	335	205	4	58.2
190	270	62	3	705	2 630	71 500	269 000	**190TMP12**	266	195	30	16	255	200	2.5	11.8
	320	78	4	1 080	4 500	110 000	460 000	**190TMP93**	320	195	32	23	303	205	3	27.6
200	250	37	1.1	365	1 690	37 500	172 000	**200TMP11**	247	203	17	10	242	207	1	4.1
	340	85	4	1 180	5 150	120 000	525 000	**200TMP93**	340	205	32	26.5	322	218	3	34.5
220	270	37	1.1	385	1 860	39 500	189 000	**220TMP11**	267	223	17	10	262	227	1	4.5
	300	63	2	770	3 100	78 500	315 000	**220TMP12**	297	224	30	16.5	287	232	2	13.5
	360	85	4	1 210	5 450	124 000	560 000	**220TMP93**	360	220	32	26.5	342	238	3	36.9

Bore Diameter 240 – 360 mm

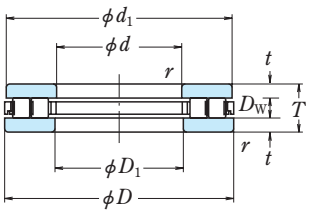

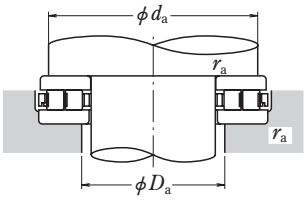

Boundary Dimensions (mm)				Basic Load Ratings (kN)		{kgf}		Bearing Numbers	Dimensions (mm)				Abutment and Fillet Dimensions (mm)			Mass (kg)
d	D	T	r min.	C_a	C_{0a}	C_a	C_{0a}		d_1	D_1	D_w	t	d_a min.	D_a max.	r_a max.	approx.
240	300	45	1.5	435	2 160	44 500	220 000	**240TMP11**	297	243	18	13.5	288	251	1.5	7.2
	340	78	2.1	965	4 100	98 500	420 000	**240TMP12**	335	244	32	23	322	258	2	23.3
	380	85	4	1 290	6 100	132 000	620 000	**240TMP93**	380	240	32	26.5	362	258	3	39.4
260	320	45	1.5	460	2 350	46 500	240 000	**260TMP11**	317	263	18	13.5	308	272	1.5	7.75
	360	79	2.1	995	4 350	101 000	445 000	**260TMP12**	355	264	32	23.5	342	276	2	25.2
	420	95	1.1	1 670	7 700	170 000	785 000	**260TMP93**	420	260	38	28.5	398	282	1	55.2
280	350	53	1.5	545	2 800	55 500	285 000	**280TMP11**	347	283	20	16.5	335	294	1.5	11.6
	380	80	2.1	1 050	4 750	107 000	485 000	**280TMP12**	375	284	32	24	362	296	2	27.2
	440	95	5	1 800	8 650	184 000	885 000	**280TMP93**	438	282	38	28.5	421	299	4	58.4
300	380	62	2	795	4 000	81 000	410 000	**300TMP11**	376	304	25	18.5	365	315	2	16.7
	420	95	3	1 390	6 250	142 000	635 000	**300TMP12**	415	304	38	28.5	398	322	2.5	42
	480	109	5	2 260	10 500	230 000	1 080 000	**300TMP93**	480	300	45	32	460	318	4	81.7
320	400	63	2	820	4 250	84 000	435 000	**320TMP11**	396	324	25	19	385	335	2	18
	440	95	3	1 420	6 550	145 000	665 000	**320TMP12**	435	325	38	28.5	418	340	2.5	44.5
	500	109	5	2 200	10 400	224 000	1 060 000	**320TMP93**	500	325	45	32	474	346	4	85.9
340	460	96	3	1 450	6 800	148 000	695 000	**340TMP12**	455	345	38	29	438	360	2.5	47.4
	540	122	5	2 790	13 300	284 000	1 360 000	**340TMP93**	540	345	50	36	516	364	4	115
360	500	110	4	1 870	8 600	191 000	875 000	**360TMP12**	495	365	45	32.5	475	383	3	68.1
	560	122	5	2 870	14 000	292 000	1 430 000	**360TMP93**	560	360	50	36	536	384	4	120

TT, TTF Types

Bore Diameter 101.600 – 168.275 mm

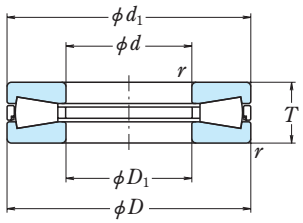

TT

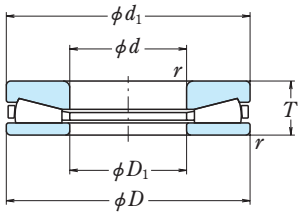

TTF

Boundary Dimensions (mm/inch)				Basic Load Ratings (kN)		{kgf}		Bearing Numbers	Dimensions (mm)		Corner Radius of Shaft or Housing	Mass (kg)
d	D	T	r min.	C_a	C_{0a}	C_a	C_{0a}		D_1	d_1	r_a max.	approx.
101.600 4.0000	215.900 8.5000	46.038 1.8125	3.3	710	2 900	72 500	295 000	**∗101TT2151**	103.200	214.300	3.3	8.9
111.760 4.4000	223.520 8.8000	55.880 2.2000	3.3	790	2 920	80 500	298 000	**∗111TT2251**	113.300	221.900	3.3	11.2
114.300 4.5000	250.825 9.8750	53.975 2.1250	4.0	970	4 100	99 000	420 000	**∗114TT2551**	114.500	250.825	4.0	14.4
127.000 5.0000	266.700 10.5000	58.738 2.3125	4.8	1 040	4 350	107 000	445 000	**∗127TT2551**	128.600	265.100	4.8	17.3
	266.700 10.5000	58.738 2.3125	4.8	1 030	4 500	105 000	445 000	**∗127TTF2651**	128.600	265.100	4.8	17.3
128.575 5.0620	265.100 10.4370	63.500 2.5000	6.4	1 040	4 350	107 000	445 000	**∗128TT2651**	128.900	265.100	6.4	18.2
130	250	70	2.1	1 100	4 100	113 000	420 000	**130TTF2501**	130.3	250	2	17
135 **150**	245 300	65 90	2.1 5	855 1 470	3 100 6 300	87 000 150 000	315 000 640 000	**135TT2401** **150TTF3001**	135.3 152	245 306	2 4	14.5 34.2
152.400 6.0000	317.500 12.5000	69.850 2.7500	6.4	1 470	6 300	150 000	640 000	**∗152TTF3151**	152.700	315.900	6.4	28.9
	317.500 12.5000	69.850 2.7500	6.4	1 550	6 700	158 000	685 000	**∗152TT3152**	152.400	317.500	6.4	28.9
165.100 6.5000	311.150 12.2500	88.900 3.5000	6.4	1 560	5 250	159 000	535 000	**∗165TT3151**	165.400	311.150	6.4	33
168.275 6.6250	304.800 12.0000	69.850 2.7500	6.4	1 230	5 000	126 000	510 000	**∗168TTF3051**	169.000	302.500	6.4	24.1

Note ∗ Bearings marked ∗ are inch design.

TT, TTF Types

Bore Diameter 170 – 241.300 mm

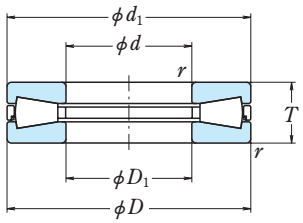

TT

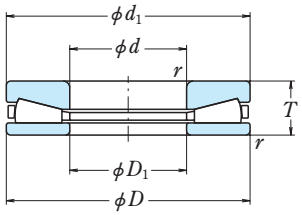

TTF

Boundary Dimensions (mm/inch)				Basic Load Ratings (kN)		{kgf}		Bearing Numbers	Dimensions (mm)		Corner Radius of Shaft or Housing	Mass (kg)
d	D	T	r min.	C_a	C_{0a}	C_a	C_{0a}		D_1	d_1	r_a max.	approx.
170	320	100	5	1 650	5 550	168 000	570 000	**170TT3201**	170.5	320	4	39.3
174.625 6.8750	358.775 14.1250	82.550 3.2500	6.4	1 740	7 400	177 000	755 000	**∗174TT3551**	174.625	358.775	6.4	43.3
	358.775 14.1250	82.550 3.2500	6.4	1 740	7 400	177 000	755 000	**∗174TTF3551**	174.625	358.775	6.4	43.3
177.800 7.0000	368.300 14.5000	82.550 3.2500	8.0	1 900	8 250	194 000	840 000	**∗177TT3651**	180.400	365.800	8.0	45.9
203.200 8.0000	419.100 16.5000	92.075 3.6250	9.7	2 530	11 300	258 000	1 160 000	**∗203TT4151**	205.600	416.700	9.7	66.1
	419.100 16.5000	92.075 3.6250	9.7	2 530	11 300	258 000	1 160 000	**∗203TTF4153A**	203.200	419.100	9.7	66.1
	419.100 16.5000	120.650 4.7500	9.7	2 530	11 300	258 000	1 160 000	**∗203TT4152**	205.600	416.700	9.7	86.6
	419.100 16.5000	120.650 4.7500	9.7	2 530	11 300	258 000	1 160 000	**∗203TTF4152**	205.600	416.700	9.7	86.6
206.375 8.1250	419.100 16.5000	120.370 4.7390	C10	2 590	11 700	264 000	1 190 000	**∗206TT4151**	206.375	419.100	6	85.5
228.600 9.0000	482.600 19.0000	104.775 4.1250	11.2	3 350	16 400	345 000	1 670 000	**∗228TT4851**	228.900	482.600	11.2	101
	482.600 19.0000	104.775 4.1250	11.2	3 350	16 400	345 000	1 670 000	**∗228TTF4851**	230.600	480.600	11.2	101
234.950 9.2500	546.100 21.5000	127.000 5.0000	15.9	4 600	21 400	470 000	2 180 000	**∗234TT5451**	237.000	544.000	15.9	165
241	404	110	4	2 200	8 650	224 000	880 000	**241TTF4002**	241	404	3	61.8
241.300 9.5000	496.888 19.5625	129.000 5.0787	C8	3 450	16 700	350 000	1 700 000	**∗241TT4952**	241.300	496.888	5	130

Note ∗ Bearings marked ∗ are inch design.

TT, TTF Types

Bore Diameter 254.000 – 600 mm

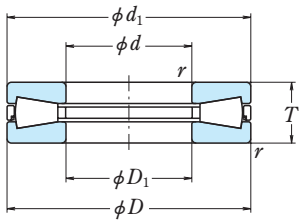

TT

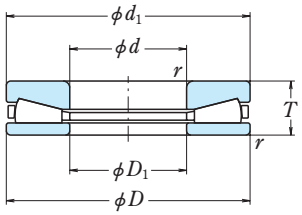

TTF

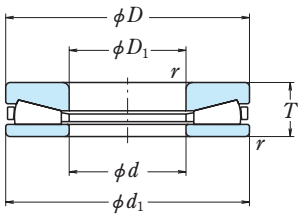

TTF-1

Boundary Dimensions (mm/inch)				Basic Load Ratings (kN)		{kgf}	
d	D	T	r min.	C_a	C_{0a}	C_a	C_{0a}
254.000 10.0000	539.750 21.2500	117.475 4.6250	11.2	3 950	18 600	405 000	1 890 000
260	360	75	2.1	1 110	4 650	113 000	475 000
273.050 10.7500	552.450 21.7500	133.350 5.2500	C8	4 400	20 700	445 000	2 110 000
279.400 11.0000	603.250 23.7500	136.525 5.3750	11.2	5 400	25 200	550 000	2 570 000
330	440	85	3	1 300	6 300	132 000	640 000
340	460	96	3	1 690	7 750	172 000	790 000
350	460	85	2	1 370	6 600	140 000	675 000
360	470	85	4	1 440	6 950	147 000	710 000
	600	120	4	3 700	20 100	380 000	2 050 000
380	550	110	4	2 760	12 100	282 000	1 240 000
406.400 16.0000	711.200 28.0000	146.050 5.7500	9.7	5 900	28 600	605 000	2 920 000
	838.200 33.0000	177.800 7.0000	12.7	8 950	46 500	910 000	4 750 000
431.800 17.0000	863.600 34.0000	228.600 9.0000	10.4	15 100	69 500	1 540 000	7 100 000
440	600	105	4	2 720	13 900	277 000	1 420 000
450	570	100	3	2 170	10 500	221 000	1 070 000
460	580	90	3	1 890	9 550	193 000	970 000
500	630	82	3	2 020	11 600	206 000	1 180 000
508	730.25	120.65	6	4 900	26 100	500 000	2 660 000
508.000 20.0000	990.600 39.0000	196.850 7.7500	12.7	12 000	65 000	1 220 000	6 650 000
558	780	120	9.5	4 800	25 500	485 000	2 600 000
558.800 22.0000	1 066.800 42.0000	285.750 11.2500	10.4	21 100	94 500	2 150 000	9 600 000
560	670	85	3	1 950	10 700	199 000	1 090 000
600	710	86	3	1 900	10 700	194 000	1 090 000

Bearing Numbers	Dimensions (mm) D_1	d_1	Corner Radius of Shaft or Housing r_a max.	Mass (kg) approx.
∗254TTF5351	254.000	539.750	11.2	142
260TTF3601	260.3	360	2	24.8
∗273TT5551	273.050	552.450	5	164
∗279TT6051	279.700	603.250	11.2	208
330TTF4401	331	440	2.5	38.5
340TTF4603	340	460	2.5	49.2
350TTF4602A(1)	351	450	2	40.4
360TTF4701	360.4	470	3	41.4
360TTF6201	366	620	3	148
380TTF5501	381	550	3	92.9
∗406TT7151	406.800	711.200	9.7	266
∗406TT8351	406.800	837.800	12.7	510
∗431TTF8651	435.000	862.000	10.4	683
440TTF6001	440	600	3	93.3
450TTF5701	455	569	2.5	65.4
460TTF5801	465	579	2.5	60
500TTF6301	505	628	2.5	64.3
508TT7301	509	730.25	5	177
∗508TT9951	508.000	990.600	12.7	760
558TT7801	558	780	8	190
∗558TTF1051	561.980	1 065.219	10.4	1 260
560TTF6701	565	668	2.5	61.4
600TTF7101	604	710	2.5	66.2

Note ∗ Bearings marked ∗ are inch design.
(1) For this bearing, the dimensional symbols are defined by Figure TTF-1.

Bore Diameter 100 – 260 mm

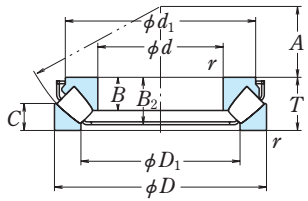

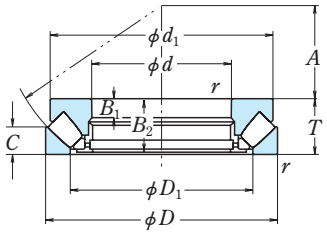

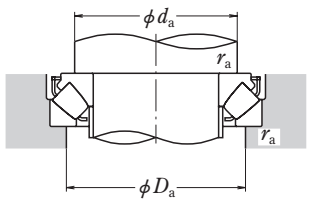

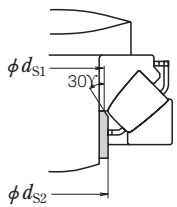

Dynamic Equivalent Load

$P = 1.2F_r + F_a$

Static Equivalent Load

$P_0 = 2.8F_r + F_a$

However, $F_r/F_a \leqq 0.55$ most be satisfied.

Boundary Dimensions (mm)				Basic Load Ratings (kN)		{kgf}		Bearing Numbers	Dimensions (mm)						Spacer Sleeve Dimensions (mm)		Abutment and Fillet Dimensions (mm)			Mass (kg)
d	D	T	r min.	C_a	C_{0a}	C_a	C_{0a}		d_1	D_1	B, B_1	B_2	C	A	d_{S1} max.	d_{S2} max.	d_a(1) min.	D_a max.	r_a max.	approx.
100	170	42	1.5	410	1 280	41 500	131 000	**29320E**	152	128	26.2	38	20.8	58	107	107	130	150	1.5	3.6
	210	67	3	840	2 400	86 000	245 000	**29420E**	185	144	43	59.5	33	62	111	111	150	175	2.5	10.3
110	190	48	2	530	1 710	54 000	174 000	**29322E**	169.5	142.5	30.3	43.5	24	64	117	117	145	165	2	5.2
	230	73	3	1 010	2 930	103 000	299 000	**29422E**	200	157	47	64.5	36	69	121	129	165	190	2.5	13.3
120	210	54	2.1	645	2 100	65 500	214 000	**29324E**	187.5	156.5	34	48.5	27	70	130	130	160	180	2	7.3
	250	78	4	1 160	3 400	119 000	350 000	**29424E**	215	171	50.5	69.5	38	74	132	142	180	205	3	16.6
130	225	58	2.1	740	2 450	75 500	250 000	**29326E**	203.5	168.5	37	53.5	28	76	141	143	170	195	2	8.9
	270	85	4	1 330	3 900	135 000	400 000	**29426E**	235	185	54	74.5	42	81	143	153	195	225	3	21.1
140	240	60	2.1	840	2 810	85 500	287 000	**29328E**	216.5	179	38.5	54	30	82	148	154	185	205	2	10.4
	280	85	4	1 370	4 200	140 000	425 000	**29428E**	244.5	195.5	54	74.5	42	86	153	162	205	235	3	22.2
150	250	60	2.1	870	2 900	89 000	296 000	**29330E**	224	190	38	54.5	29	87	158	163	195	215	2	10.8
	300	90	4	1 580	4 900	162 000	500 000	**29430E**	266	209	58	81	44	92	164	175	220	250	3	27.3
160	270	67	3	1 010	3 400	103 000	345 000	**29332E**	243	203	42	60	33	92	169	176	210	235	2.5	14.3
	320	95	5	1 740	5 400	178 000	550 000	**29432E**	278	224.5	60.5	84.5	46	99	175	189	230	265	4	32.1
170	280	67	3	1 050	3 500	107 000	355 000	**29334E**	252	214.5	42.2	60.5	32	96	178	188	220	245	2.5	14.8
	340	103	5	1 680	5 800	171 000	595 000	**29434**	310	243	37	99	50	104	—	—	245	285	4	43.5
180	300	73	3	1 230	4 200	125 000	430 000	**29336E**	270	227	46	65.5	36	103	189	195	235	260	2.5	19
	360	109	5	1 870	6 500	190 000	660 000	**29436**	330	255	39	105	52	110	—	—	260	300	4	52
190	320	78	4	1 370	4 700	140 000	480 000	**29338E**	288.5	244	49	69	38	110	200	211	250	275	3	23
	380	115	5	2 100	7 450	215 000	760 000	**29438**	345	271	41	111	55	117	—	—	275	320	4	60
200	280	48	2	540	2 310	55 000	236 000	**29240**	266	236	15	46	24	108	—	—	235	255	2	8.5
	340	85	4	1 570	5 450	160 000	555 000	**29340E**	306.5	257	53.5	75	41	116	211	224	265	295	3	28.5
	400	122	5	2 290	8 150	234 000	835 000	**29440**	365	280	43	117	59	122	—	—	290	335	4	69
220	300	48	2	560	2 500	57 000	255 000	**29244**	285	254	15	46	24	117	—	—	260	275	2	9.2
	360	85	4	1 340	5 200	137 000	530 000	**29344**	335	280	29	81	41	125	—	—	285	315	3	33
	420	122	6	2 350	8 650	240 000	880 000	**29444**	385	308	43	117	58	132	—	—	310	355	5	74
240	340	60	2.1	800	3 450	82 000	350 000	**29248**	325	283	19	57	30	130	—	—	285	305	2	16.5
	380	85	4	1 360	5 400	139 000	550 000	**29348**	355	300	29	81	41	135	—	—	300	330	3	35.5
	440	122	6	2 420	9 100	247 000	930 000	**29448**	405	326	43	117	59	142	—	—	330	375	5	79
260	360	60	2.1	855	3 850	87 500	395 000	**29252**	345	302	19	57	30	139	—	—	305	325	2	18
	420	95	5	1 700	6 800	173 000	695 000	**29352**	390	329	32	91	45	148	—	—	330	365	4	48.5
	480	132	6	2 820	10 700	287 000	1 090 000	**29452**	445	357	48	127	64	154	—	—	360	405	5	105

Note (1) For heavy load applications, a d_a value should be chosen which is large enough to support the shaft washer rib.

Bore Diameter 280 – 480 mm

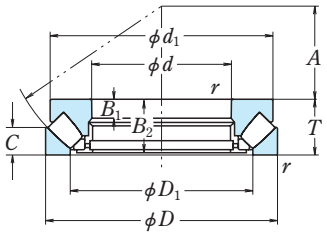

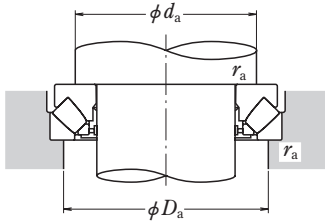

Dynamic Equivalent Load

$P = 1.2F_r + F_a$

Static Equivalent Load

$P_0 = 2.8F_r + F_a$

However, $F_r/F_a \leqq 0.55$ most be satisfied.

Boundary Dimensions (mm)				Basic Load Ratings (kN)		{kgf}		Bearing Numbers	Dimensions (mm)						Spacer Sleeve Dimensions (mm)		Abutment and Fillet Dimensions (mm)			Mass (kg)
d	D	T	r min.	C_a	C_{0a}	C_a	C_{0a}		d_1	D_1	B_1	B_2	C	A	d_{S1} max.	d_{S2} max.	d_a(1) min.	D_a max.	r_a max.	approx.
280	380	60	2.1	885	4 100	90 000	420 000	**29256**	365	323	19	57	30	150	—	—	325	345	2	19
	440	95	5	1 830	7 650	187 000	780 000	**29356**	410	348	32	91	46	158	—	—	350	390	4	52.5
	520	145	6	3 400	13 100	345 000	1 330 000	**29456**	480	384	52	140	68	166	—	—	390	440	5	132
300	420	73	3	1 160	5 150	118 000	525 000	**29260**	400	353	21	69	38	162	—	—	355	380	2.5	30
	480	109	5	2 190	9 100	224 000	925 000	**29360**	450	379	37	105	50	168	—	—	380	420	4	74
	540	145	6	3 500	13 700	355 000	1 390 000	**29460**	500	402	52	140	70	175	—	—	410	460	5	140
320	440	73	3	1 190	5 450	122 000	555 000	**29264**	420	372	21	69	38	172	—	—	375	400	2.5	32.5
	500	109	5	2 230	9 400	227 000	960 000	**29364**	470	399	37	105	53	180	—	—	400	440	4	77
	580	155	7.5	3 650	14 600	370 000	1 490 000	**29464**	555	436	55	149	75	191	—	—	435	495	6	175
340	460	73	3	1 230	5 750	125 000	590 000	**29268**	440	395	21	69	37	183	—	—	395	420	2.5	33.5
	540	122	5	2 640	11 200	269 000	1 140 000	**29368**	510	428	41	117	59	192	—	—	430	470	4	103
	620	170	7.5	4 400	17 400	450 000	1 780 000	**29468**	590	462	61	164	82	201	—	—	465	530	6	218
360	500	85	4	1 550	7 300	158 000	745 000	**29272**	480	423	25	81	44	194	—	—	420	455	3	51
	560	122	5	2 670	11 500	272 000	1 180 000	**29372**	525	448	41	117	59	202	—	—	450	495	4	107
	640	170	7.5	4 200	17 200	430 000	1 750 000	**29472**	610	480	61	164	82	210	—	—	485	550	6	228
380	520	85	4	1 620	7 800	165 000	795 000	**29276**	496	441	27	81	42	202	—	—	440	475	3	52
	600	132	6	3 300	14 200	335 000	1 450 000	**29376**	568	477	44	127	63	216	—	—	480	525	5	140
	670	175	7.5	4 800	19 500	490 000	1 990 000	**29476**	640	504	63	168	85	230	—	—	510	575	6	254
400	540	85	4	1 640	8 000	167 000	815 000	**29280**	517	460	27	81	42	212	—	—	460	490	3	55
	620	132	6	3 250	14 500	330 000	1 480 000	**29380**	590	494	44	127	64	225	—	—	500	550	5	150
	710	185	7.5	5 350	22 100	545 000	2 250 000	**29480**	680	536	67	178	89	236	—	—	540	610	6	306
420	580	95	5	2 010	9 800	205 000	1 000 000	**29284**	553	489	30	91	46	225	—	—	490	525	4	72
	650	140	6	3 600	16 000	365 000	1 630 000	**29384**	620	520	48	135	68	235	—	—	525	575	5	170
	730	185	7.5	5 650	23 500	575 000	2 400 000	**29484**	700	556	67	178	89	244	—	—	560	630	6	323
440	600	95	5	2 030	10 100	207 000	1 030 000	**29288**	575	508	30	91	49	235	—	—	510	545	4	77
	680	145	6	3 750	16 700	380 000	1 710 000	**29388**	645	548	49	140	70	245	—	—	550	600	5	190
	780	206	9.5	6 550	27 200	665 000	2 770 000	**29488**	745	588	74	199	100	260	—	—	595	670	8	407
460	620	95	5	2 060	10 300	210 000	1 050 000	**29292**	592	530	30	91	46	245	—	—	530	570	4	80
	710	150	6	4 100	18 400	420 000	1 880 000	**29392**	666	567	51	144	72	257	—	—	575	630	5	210
	800	206	9.5	6 900	28 300	700 000	2 890 000	**29492**	765	608	74	199	100	272	—	—	615	690	8	420
480	650	103	5	2 370	12 100	241 000	1 240 000	**29296**	624	556	33	99	55	259	—	—	555	595	4	97
	730	150	6	4 150	19 000	425 000	1 940 000	**29396**	690	590	51	144	72	270	—	—	595	650	5	215
	850	224	9.5	7 200	31 000	730 000	3 150 000	**29496**	810	638	81	216	108	280	—	—	645	730	8	545

Note (1) For heavy load applications, a d_a value should be chosen which is large enough to support the shaft washer rib.

Bore Diameter 500 – 1060 mm

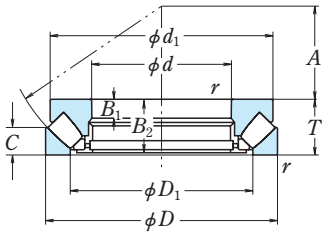

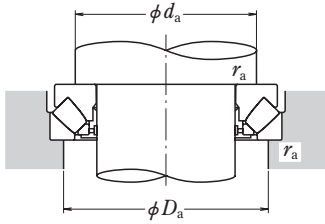

Dynamic Equivalent Load

$P = 1.2F_r + F_a$

Static Equivalent Load

$P_0 = 2.8F_r + F_a$

However, $F_r/F_a \leqq 0.55$ most be satisfied.

Boundary Dimensions (mm)				Basic Load Ratings (kN)		{kgf}		Bearing Numbers	Dimensions (mm)						Spacer Sleeve Dimensions (mm)		Abutment and Fillet Dimensions (mm)			Mass (kg)
d	D	T	r min.	C_a	C_{0a}	C_a	C_{0a}		d_1	D_1	B_1	B_2	C	A	d_{S1} max.	d_{S2} max.	d_a(1) min.	D_a max.	r_a max.	approx.
500	670	103	5	2 390	12 400	244 000	1 270 000	**292/500**	645	574	33	99	55	268	—	—	575	615	4	100
	750	150	6	4 350	20 400	445 000	2 080 000	**293/500**	715	611	51	144	74	280	—	—	615	670	5	220
	870	224	9.5	7 850	33 000	800 000	3 350 000	**294/500**	830	661	81	216	107	290	—	—	670	750	8	560
530	800	160	7.5	5 050	23 300	515 000	2 380 000	**293/530**	760	648	54	154	76	295	—	—	655	710	6	284
	920	236	9.5	8 550	37 000	870 000	3 750 000	**294/530**	880	696	85	228	114	310	—	—	715	790	8	660
	920	236	9.5	10 500	42 000	1 070 000	4 300 000	**294/530EM**	840	686	86	228	116	308	—	—	725	800	8	628
560	850	175	7.5	5 700	26 700	580 000	2 730 000	**293/560**	810	687	59	168	85	310	—	—	695	750	6	354
	980	250	12	9 600	42 000	980 000	4 300 000	**294/560**	935	744	91	242	124	325	—	—	755	835	10	800
	980	250	12	11 900	48 500	1 210 000	4 950 000	**294/560EM**	890	727	90	241	122	328	—	—	770	850	10	756
600	800	122	5	3 300	17 800	340 000	1 810 000	**292/600**	772	688	39	117	58	321	—	—	690	735	4	169
	1 030	258	12	10 100	43 000	1 030 000	4 400 000	**294/600**	985	780	93	249	127	345	—	—	800	885	10	895
630	1 090	280	12	11 600	51 500	1 180 000	5 250 000	**294/630**	1 040	830	100	268	136	365	—	—	845	935	10	1 100
	1 090	280	12	14 400	61 000	1 470 000	6 200 000	**294/630EM**	995	815	101	270	137	365	—	—	860	950	10	1 050
670	1 150	290	15	12 500	56 000	1 270 000	5 700 000	**294/670**	1 090	870	105	278	140	385	—	—	895	990	12	1 250
	1 150	290	15	15 700	67 000	1 600 000	6 800 000	**294/670EM**	1 050	864	104	280	141	387	—	—	905	1 000	12	1 200
710	1 220	308	15	14 300	65 500	1 460 000	6 700 000	**294/710**	1 160	920	132	292	148	407	—	—	950	1 050	12	1 500
	1 220	308	15	17 700	76 000	1 810 000	7 750 000	**294/710EM**	1 110	917	111	298	149	415	—	—	965	1 060	12	1 430
750	1 280	315	15	15 100	69 000	1 530 000	7 000 000	**294/750**	1 220	970	128	301	152	429	—	—	995	1 105	12	1 680
	1 280	315	15	18 900	81 000	1 920 000	8 250 000	**294/750EM**	1 170	964	113	305	153	436	—	—	1 020	1 110	12	1 600
800	1 360	335	15	16 600	77 500	1 700 000	7 900 000	**294/800**	1 300	1 030	121	323	162	445	—	—	1 060	1 175	12	2 010
	1 360	335	15	20 900	91 000	2 130 000	9 250 000	**294/800EM**	1 250	1 030	120	324	163	462	—	—	1 080	1 180	12	1 920
850	1 440	354	15	23 100	102 000	2 360 000	2 360 000	**294/850EM**	1 315	1 095	127	342	172	501	—	—	1 160	1 260	12	2 250
900	1 520	372	15	19 900	96 000	2 030 000	9 750 000	**294/900**	1 450	1 164	135	360	185	520	—	—	1 190	1 315	12	2 760
	1 520	372	15	24 100	109 000	2 460 000	11 100 000	**294/900EM**	1 420	1 165	134	359	185	530	—	—	1 220	1 330	12	2 700
1 000	1 670	402	15	26 200	123 000	2 670 000	12 500 000	**294/1000EM**	1 550	1 300	145	385	195	590	—	—	1 360	1 470	12	3 450
1 060	1 770	426	15	27 300	128 000	2 780 000	13 000 000	**294/1060EM**	1 630	1 385	153	400	205	610	—	—	1 440	1 560	12	4 030

Note (1) For heavy load applications, a d_a value should be chosen which is large enough to support the shaft washer rib.

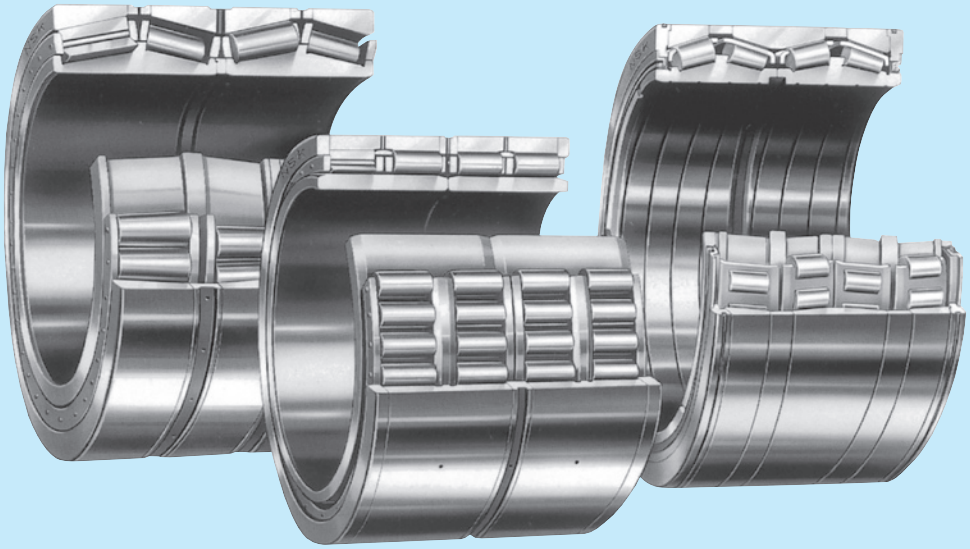

ROLLING BEARINGS FOR STEEL MILLS

Design, Types, and Features

Roll Neck Bearings

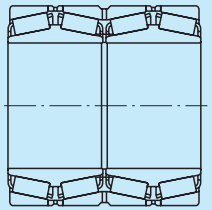

Four-Row Tapered Roller Bearings, KV (TQO)

Roll neck bearings for rolling mills are limited in size by the roll neck diameter and minimum roll diameter. Four-row tapered roller bearings are designed to have the highest possible load rating within this limited space.

This type of bearing has two double-cone assemblies, two cups, one double cup, and three spacers. The bearings have their internal clearance adjusted for each set, so it is necessary to assemble them correctly in accordance with their serial numbers and matching symbols.

This type of bearing is loosely fitted on its roll neck to facilitate mounting and disassembly. Accordingly, the roll neck must be lubricated to prevent scoring between the roll neck and bore surface caused by creep. For this reason and to prevent wear and seizure of the side surfaces of the cone and cone spacer, oil grooves are provided on one side of each cone and both sides of the cone spacer. The double cup and cup spacers are provided with an oil groove and holes.

Any hairline crack in the cone side caused by creep may result in its braking. Therefore, to prevent this and to improve the impact resistance, this type of bearing is usually made of carburized steel.

The cage is either a window type or pin type.

Bearings for oil mist lubrication are available. They have nozzle holes in the cup spacers, O-ring grooves, and O-rings in the cups.

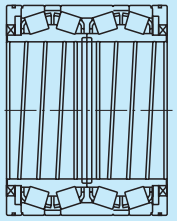

Sealed-Clean Four-Row Tapered Roller Bearings, KVE

These are basically the same as four-row tapered roller bearings. Their features are as follows:

- Long fatigue life
- Large reduction in lubrication grease consumption
- Extension of chock overhaul intervals and reduction of maintenance cost
- Bearing surrounding area remains cleaner

There are two basic types; one is a two seal type and the other is a four seal type. (Refer to Figures 3 and 4 on Page B343)

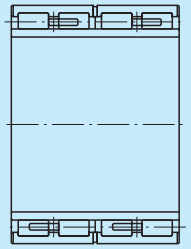

Four-Row Cylindrical Roller Bearings, RV

Four-row cylindrical roller bearings are mainly used on the roll necks of hot or cold rolling mills used for forming blooms, plates, and other stock. There are many variations of the bearings; the inner and outer rings may or may not have ribs, the inner ring may be in one or two pieces, the bore may be cylindrical or tapered, and other variations are available.

All four-row cylindrical roller bearings can sustain only radial loads and no axial loads; therefore, they must be used in combination with thrust berrings such as angular contact ball bearings, tapered roller bearings.

Since the inner ring raceway is generally cylindrical and without ribs, it can be separated from the outer ring assembly. This makes it possible to tightly fit the inner ring on the roll neck and regrind the roll with the inner ring raceway as the reference surface in order to minimize the roll runout. Some special bearings have an oversized inner ring raceway that allows raceway grinding after fitting on the roll neck. This permits grinding the raceway and roll surface together to further minimize runout. Such bearings are widely used where high accuracy is required.

With the inner ring tightly fit on the roll neck, there is no danger of creep, even at high speeds. Oil mist lubrication is possible with fittings and an O-ring in the outer ring.

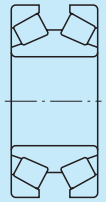

Double-Cone Tapered Roller Bearings, KDH (TDI)

Refer to Page B98.

Some variations of the cone are available such as a notch to prevent creep. For details, contact NSK.

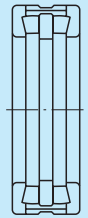

Double-Direction Tapered Roller Thrust Bearings, TFD

The axial clearance or preload of the bearings is adjusted using spacers or springs.

Single-Row Deep Groove Ball Bearings

Refer to Page B5.

Matched Angular Contact Ball Bearings

Refer to Page B21.

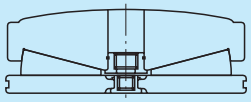

TFX

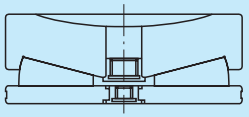

TFV

Tapered Roller Thrust Bearings for Adjusting Screws

These bearings, which are used at the ends of the adjusting screws of rolling mills, are full complement types for maximum load capacity. The face profile of the shaft washer of the TFX type is convex and that of the TFV type is concave. Holes or threads are provided in the inner or outer ring for lifting as shown in the figures. Since some bearings have special profiles, boundary dimensions, and tolerances, contact NSK when selecting one of these bearings.

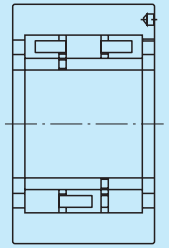

3PL

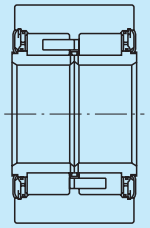

2U

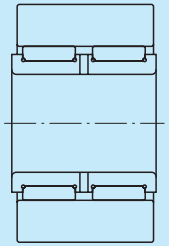

2S

Back-Up Roll Bearings for Sendzimir Mills

The bearings for this application have very thick outer rings compared with ordinary bearings because the bearing periphery serves as the back-up roll. Since these bearings must maintain high precision under heavy load, they are designed to have the maximum load capacity. The types available are cylindrical roller bearings, tapered roller bearings, spherical roller bearings, and needle roller bearings, with cylindrical roller bearings being most popular.

Since 3PL type cylindrical roller bearings and needle roller bearings cannot sustain axial loads, plastic thrust rings are used for the axial loads.

Several back-up roll bearings are mounted on one shaft and their outer ring peripheries serve as the back-up roll. Therefore, the outer ring radial runout and thickness variation after mounting are strictly controlled.

If the outer ring peripheries become rough, the bearings can be reused by regrinding the surface.

Roll Arrangement of a 20-high Sendzimir Mill

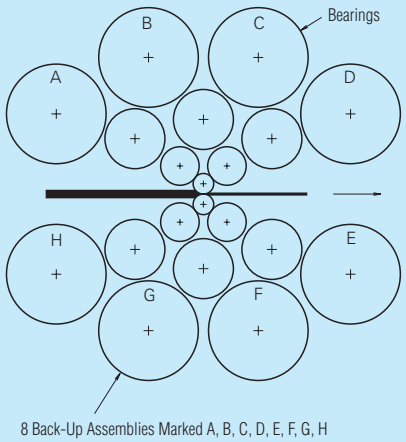

Tolerances and Running Accuracy, Recommended Fits, and Internal Clearances

Table 1 Index

Bearing Types		Tolerances and Running Accuracy	Recommended Fits	Internal Clearances
Four-row tapered roller bearings Sealed-clean four-row tapered roller bearings	Metric	Table 2. 3 (Pages A20 to A23)	Table 2, 3 (Pages B338, B339)	Table 6 (Page B340) For sealed-clean bearings, contact NSK
	Inch	Table 2. 4 (Pages A24, A25)	Table 4, 5 (Pages B339)	
Four-row cylindrical roller bearings		Table 2. 2 (Pages A16 to A19)	(1)	Table 3.11 (Page A41) Contact NSK
Double-cone tapered roller bearings	Metric	Table 2. 3 (Pages A20 to A23)	Table 3. 3 and 3. 5 (Pages A35, A36)	Table 3.13 (Page A43)
	Inch	Table 2. 4 (Pages A24, A25)	Table 3. 6 and 3. 7 (Pages A37, A38)	
Double-direction tapered roller thrust bearings		Table 2. 7 (Pages A29)	Table 3. 3 and 3. 5 (Pages A35, A36)	Contact NSK
Combined and angular contact ball bearings		Table 2. 2 (Pages A16 to A19)	Table 3. 3 and 3. 5 (Pages A35, A36)	Table 3.14 (Page A44)
Single-row deep groove ball bearings		Table 2. 2 (Pages A16 to A19)	Table 3. 3 and 3. 5 (Pages A35, A36)	Table 3.9 (Page A40)

Note (1) For back-up rolls of rolling mills : The tolerances for roll neck diameter should be the figures in Table 7 (Page B340). G7 is recommended for the fit with the chock bore.

For other roll necks : Fits should generally be the figures in Tables 3.2 and 3.4 (Pages A35 and A36).

Table 2 Fits of Metric Design Four-Row Tapered Roller Bearings with Roll Necks

Units : μm

Nominal Bore Diameter d (mm)		Single Plane Mean Bore Dia. Deviation Δ_{dmp}		Tolerances for Roll Neck Diameter		Clearances		Wear Limits of Roll Neck Ref.
over	incl	high	low	high	low	min.	max.	
80	**120**	0	– 20	– 120	– 150	100	150	300
120	**180**	0	– 25	– 150	– 175	125	175	350
180	**250**	0	– 30	– 175	– 200	145	200	400
250	**315**	0	– 35	– 210	– 250	175	250	500
315	**400**	0	– 40	– 240	– 300	200	300	600
400	**500**	0	– 45	– 245	– 300	200	300	600
500	**630**	0	– 50	– 250	– 300	200	300	600
630	**800**	0	– 75	– 325	– 400	250	400	800
800	**1 000**	0	– 100	– 375	– 450	275	450	900
1 000	**1 250**	0	– 125	– 425	– 500	300	500	1 000
1 250	**1 600**	0	– 160	– 510	– 600	350	600	1 200

Table 3 Fits of Metric Design Four-Row Tapered Roller Bearings with Chocks

Units : μm

Nominal Outside Diameter D (mm)		Single Plane Mean Outside Dia. Deviation Δ_{Dmp}		Tolerances for Chock Bore Diameter		Clearances		Wear Limits of Chock Ref.
over	incl	high	low	high	low	min.	max.	
120	**150**	0	– 18	+ 57	+ 25	25	75	150
150	**180**	0	– 25	+100	+ 50	50	125	250
180	**250**	0	– 30	+120	+ 50	50	150	300
250	**315**	0	– 35	+115	+ 50	50	150	300
315	**400**	0	– 40	+110	+ 50	50	150	300
400	**500**	0	– 45	+105	+ 50	50	150	300
500	**630**	0	– 50	+100	+ 50	50	150	300
630	**800**	0	– 75	+150	+ 75	75	225	450
800	**1 000**	0	–100	+150	+ 75	75	250	500
1 000	**1 250**	0	–125	+175	+100	100	300	600
1 250	**1 600**	0	–160	+215	+125	125	375	750
1 600	**2 000**	0	–200	+250	+150	150	450	900

Table 4 Fits of Inch Design Four-Row Tapered Roller Bearings with Roll Necks

Units : μm

Nominal Bore Diameter d				Bore Diameter Deviation Δ_{ds}		Tolerances for Roll Neck Diameter		Clearances		Wear Limits of Roll Neck Ref.
over (mm)	over (inch)	incl (mm)	incl (inch)	high	low	high	low	min.	max.	
101.600	4.0000	**127.000**	5.0000	+ 25	0	–100	–125	100	150	300
127.000	5.0000	**152.400**	6.0000	+ 25	0	–125	–150	125	175	350
152.400	6.0000	**203.200**	8.0000	+ 25	0	–150	–175	150	200	400
203.200	8.0000	**304.800**	12.0000	+ 25	0	–175	–200	175	225	450
304.800	12.0000	**609.600**	24.0000	+ 51	0	–200	–250	200	301	600
609.600	24.0000	**914.400**	36.0000	+ 76	0	–250	–325	250	401	800
914.400	36.0000	**1 219.200**	48.0000	+102	0	–300	–400	300	502	1 000
1 219.200	48.0000	—	—	+127	0	–375	–475	375	602	1 200

Table 5 Fits of Inch Design Four-Row Tapered Roller Bearings with Chocks

Units : μm

Nominal Bore Diameter D				Outside Dia. Deviation Δ_{Ds}		Tolerances for Chock Bore Diameter		Clearances		Wear Limits of Chock Ref.
over (mm)	over (inch)	incl (mm)	incl (inch)	high	low	high	low	min.	max.	
—	—	**304.800**	12.0000	+ 25	0	+ 75	+ 50	25	75	150
304.800	12.0000	**609.600**	24.0000	+ 51	0	+150	+100	49	150	300
609.600	24.0000	**914.400**	36.0000	+ 76	0	+225	+150	74	225	450
914.400	36.0000	**1 219.200**	48.0000	+102	0	+300	+200	98	300	600
1 219.200	48.0000	**1 524.000**	60.0000	+127	0	+375	+250	123	375	750
1 524.000	60.0000	—	—	+157	0	+450	+300	143	450	900

Table 6 Standard Radial Internal Clearances in Four-Row Tapered Roller Bearings

Units : μm

Nominal Bore Diameter d (mm)		Clearances	
over	incl	high	low
80	**120**	25	45
120	**180**	30	50
180	**250**	40	60
250	**315**	50	70
315	**400**	60	80
400	**500**	70	90
500	**630**	80	100
630	**800**	100	120
800	**1 000**	120	140

Table 7 Recommended Back-up Roll Neck Tolerances and Fits for Four-Row Cylindrical Roller Bearings

Units : μm

Nominal Bore Diameter d or Outside Diameter D (mm)		Tolerances for Roll Neck Diameter		Tolerances for Chock Bore Diameter (G7)	
over	incl	high	low	high	low
80	**120**	+ 45	+ 23(n6)	—	—
120	**140**	+ 52	+ 27(n6)	+ 54	+ 14
140	**180**	+ 68	+ 43(p6)	+ 54	+ 14
180	**200**	+ 79	+ 50(p6)	+ 61	+ 15
200	**225**	+109	+ 80(r6)	+ 61	+ 15
225	**250**	+113	+ 84(r6)	+ 61	+ 15
250	**280**	+126	+ 94(r6)	+ 69	+ 17
280	**315**	+165	+130	+ 69	+ 17
315	**355**	+165	+130	+ 75	+ 18
355	**400**	+190	+150	+ 75	+ 18
400	**450**	+220	+170	+ 83	+ 20
450	**500**	+250	+190	+ 83	+ 20
500	**560**	+280	+210	+ 92	+ 22
560	**630**	+320	+250	+ 92	+ 22
630	**710**	+350	+270	+104	+ 24
710	**800**	+390	+310	+104	+ 24
800	**900**	+440	+350	+116	+ 26
900	**1 000**	+480	+390	+116	+ 26
1 000	**1 250**	+530	+430	+133	+ 28
1 250	**1 600**	—	—	+155	+ 30

Precautions for Mounting

Four-Row Tapered Roller Bearings

Four-row tapered roller bearings often have eight parts as shown below (two double cones with rollers, one double cup, two single cups, and three spacers). Each part is marked with a common serial number and matching symbol to indicate the assembly sequence. The common serial numbers (e.g., AE-11) prevent the mixing of parts between bearings. The assembly symbols, which consist of one or two letters, follow the serial numbers and indicate the position of each part in the assembled bearing. It is important to carefully observe these markings because an improper combination can result in an excessively small internal clearance that may cause seizure or an excessively large clearance that may cause premature fatigue due to a reduced loaded zone.

Example of serial numbers and matching symbols on four-row tapered roller bearings.

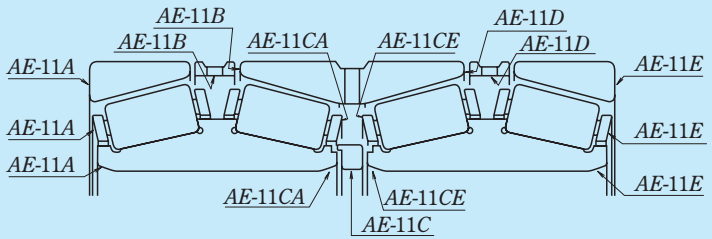

The sides of the cups are also marked with four load position numbers (① through ④) spaced at 90° intervals around each cup to show the proper angular orientation in an assembled bearing. To prolong bearing life, these load position numbers should be indexed 90° during remounting following maintenance.

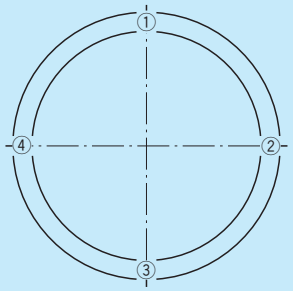

Load Position Numbers on
Four-Row Bearing Outer Rings

Sealed-Clean Four-Row Tapered Roller Bearings

When using Sealed-Clean bearings, it is important to provide proper water drain holes at both ends and to place an O-ring between the bearing retaining ring and roll neck. Since this bearing is mounted or dismounted as an assembly as shown in the photo below, use the proper lifting tools.

Consult NSK regarding the recommended greases most appropriate for Sealed-Clean four-row tapered roller bearings.

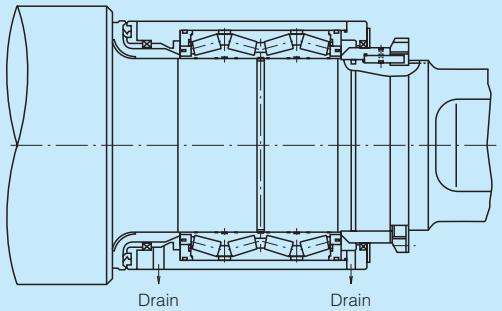

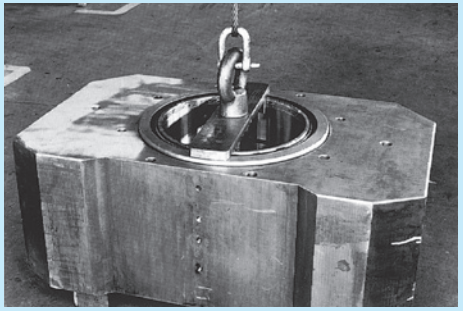

Four-Row Cylindrical Roller Bearings

Four-row cylindrical roller bearings have either cylindrical bores or tapered bores and are mounted on the shaft with interference. As shown in the figure below, four-row cylindrical roller bearings have serial numbers and matching symbols marked on the various parts. In this example, matching symbols are marked on two outer rings, one middle and two outer loose ribs, and four cages with rollers. It is important for all these parts to be correctly positioned when mounting them in their chock by paying attention to the matching symbols.

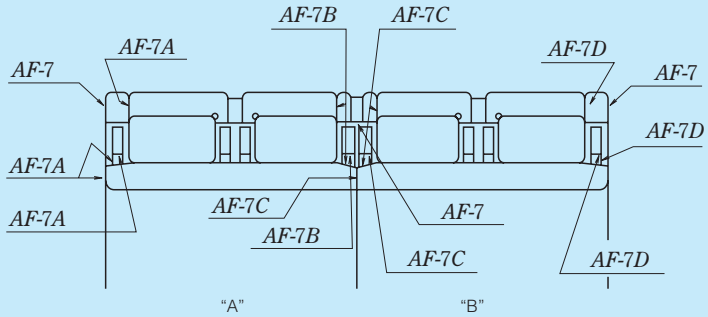

Matching Symbols

Figures of Typical Four-Row Tapered Roller Bearings

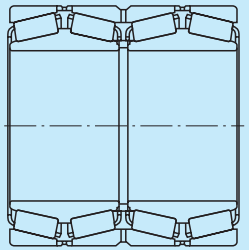

With Window Type Cages
Figure 1

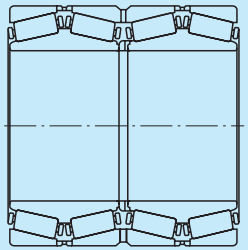

With Pin Type Cages
Figure 2

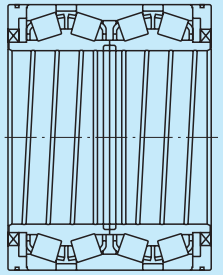

Basic Design of Two Seal Type
Figure 3

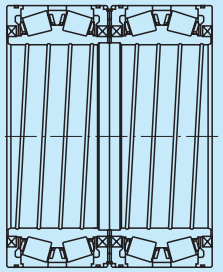

Basic Design of Four Seal Type
Figure 4

	Variations of Bearing in Figure 3
3-1	Oil holes in cup spacers
3-2	Without intermediate bore seal (for dry rolling)
3-3	Without intermediate bore seal, with holes in cup spacers
3-4	With cone spacer, with intermediate bore seal
3-5	For vertical roll (special cup spacers)

	Variations of Bearing in Figure 4
4-1	Oil holes in cup spacers
4-2	Clearance between cone faces

KV (TQO) Type

Bore Diameter 100 – 139.700 mm

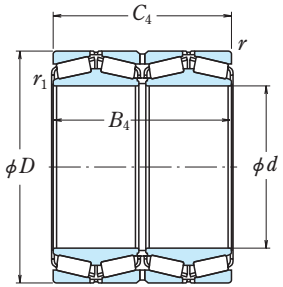

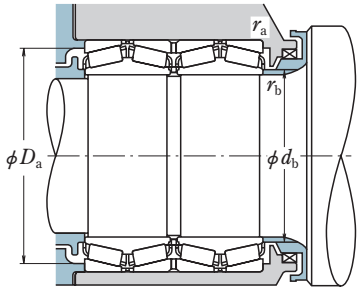

Dynamic Equivalent Load

$P = XF_r + YF_a$

$F_a/F_r \leqq e$		$F_a/F_r > e$	
X	Y	X	Y
1	Y_3	0.67	Y_2

Static Equivalent Load

$P_0 = F_r + Y_0 F_a$

Where $Y_0 \fallingdotseq Y_3$

The values of e, Y_2, and Y_3 are given in the table below.

Boundary Dimensions (mm/inch)						Basic Load Ratings (kN)		{kgf}		Bearing Numbers	Fig-ure(1)	Abutment and Fillet Dimensions (mm)				Constant	Axial Load Factors		Mass (kg)	Reference Bearing Numbers
d	D	B_4	C_4	r_1 min.	r min.	C_r	C_{0r}	C_r	C_{0r}			d_b	D_a	r_a max.	r_b max.	e	Y_2	Y_3	approx.	
100	140	104	104	2	2	370	765	38 000	78 000	**100KV895**	1	108	130	2	1.5	0.29	3.4	2.3	4.9	—
	170	155	155	2.5	2	800	1 320	81 500	135 000	**100KV1701**	1	112	156	2	2	0.32	3.2	2.1	14	—
105	150	110	110	1	1.5	410	805	42 000	82 000	**105KV1501**	1	113	139	1	1	0.40	2.5	1.7	6.2	—
	160	150	150	1	1.5	635	1 220	65 000	124 000	**105KV1601**	1	113	146	1	1	0.37	2.7	1.8	10.8	—
	190	210	210	2.5	2	1 260	2 230	128 000	227 000	**105KV1901**	1	118	171	2	2	0.35	2.9	1.9	26	—
107.950	146.050	106.365	106.365	1.5	1.5	320	705	32 500	72 000	**∗107KV1451**	1	116	136	1.5	1.5	0.39	2.6	1.7	5.1	L521949DE-910-910DE
4.2500	5.7500	4.1876	4.1876																	
110	155	114	114	2.5	2	435	895	44 000	91 000	**110KV895**	1	119	144	2	2	0.29	3.4	2.3	6.6	—
	160	115	115	1	1.5	535	1 010	55 000	103 000	**110KV1601**	1	118	149	1	1	0.43	2.3	1.6	7.4	—
	180	120	120	2.5	2	600	940	61 000	96 000	110KV81	1	126	166	2	2	0.39	2.6	1.7	12.1	—
115	160	120	120	1	1.5	505	1 070	51 500	109 000	**115KV1601a**	1	123	149	1	1	0.39	2.6	1.7	7.4	—
120	170	124	124	2.5	2	550	1 080	56 500	110 000	**120KV895**	1	129	159	2	2	0.32	3.2	2.1	8.5	—
	180	100	100	2.5	2	460	790	47 000	80 500	**120KV80**	1	132	167	2	2	0.40	2.5	1.7	8.5	—
	200	132	132	2.5	2	770	1 260	78 500	128 000	**120KV81**	1	134	184	2	2	0.39	2.6	1.7	16.5	—
120.650	161.925	106.365	106.365	1.5	1.5	340	695	35 000	70 500	∗120KV1651	1	129	151	1.5	1.5	0.43	2.3	1.6	6.1	L624549D-514-514D
4.7500	6.3750	4.1876	4.1876																	
	174.625	141.288	139.703	0.8	1.5	655	1 320	67 000	134 000	**∗120KV1752**	1	129	162	1.5	0.8	0.42	2.4	1.6	11	M224749D-710-710D
	6.8750	5.5625	5.5001																	
127.000	182.562	158.750	158.750	1.5	3.3	780	1 770	79 500	181 000	**∗127KV1851**	1	136	167	3.3	1.5	0.31	3.3	2.2	13.8	48290D-220-220D
5.0000	7.1875	6.2500	6.2500																	
130	184	134	134	2.5	2	625	1 290	63 500	132 000	**130KV895**	1	140	172	2	2	0.31	3.2	2.2	11.1	—
	200	112	112	2.5	2	600	1 020	61 000	104 000	**130KV80**	1	143	186	2	2	0.40	2.5	1.7	12.5	—
	210	136	136	2.5	2	790	1 270	80 500	129 000	**130KV81**	1	143	194	2	2	0.39	2.6	1.7	17.2	—
130.175	196.850	200.025	200.025	1.5	3.3	990	2 030	101 000	207 000	**∗130KV1951**	1	140	180	3.3	1.5	0.34	2.9	2.0	20.9	67391D-322-323D
5.1250	7.7500	7.8750	7.8750																	
133.350	196.850	193.675	193.675	1.5	3.3	990	2 030	101 000	207 000	**∗133KV1951**	1	142	180	3.3	1.5	0.34	2.9	2.0	19.3	67390D-322-322D
5.2500	7.7500	7.6250	7.6250																	
135	180	160	160	2	1.5	535	1 280	54 500	130 000	**135KV1802**	1	144	169	1.5	2	0.28	3.6	2.4	11.1	—
	185	140	140	1	1	635	1 370	64 500	140 000	**135KV1803**	1	143	174	1	1	0.29	3.4	2.3	10.9	—
136.525	190.500	161.925	161.925	1.5	3.3	740	1 760	75 500	180 000	∗136KV1951	1	146	175	3.3	1.5	0.32	3.1	2.1	14.1	48393D-320-320D
5.3750	7.5000	6.3750	6.3750																	
139.700	200.025	157.165	160.340	0.8	3.3	780	1 830	79 500	187 000	**∗139KV2051**	1	151	185	3.3	0.8	0.34	3.0	2.0	16.2	48680D-620-620D
5.5000	7.8750	6.1876	6.3126																	

Note ∗ Bearings marked ∗ are inch design.
(1) Refer to page **B 343**

KV (TQO) Type

Bore Diameter 140 – 170 mm

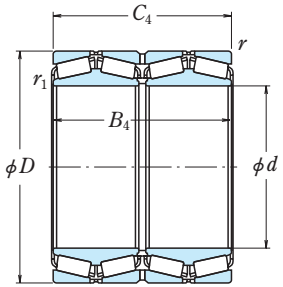

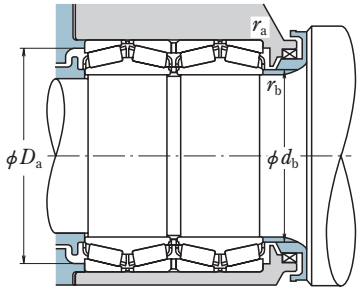

Dynamic Equivalent Load

$P = XF_r + YF_a$

$F_a/F_r \leqq e$		$F_a/F_r > e$	
X	Y	X	Y
1	Y_3	0.67	Y_2

Static Equivalent Load

$P_0 = F_r + Y_0 F_a$

Where $Y_0 \doteqdot Y_3$

The values of e, Y_2, and Y_3 are given in the table below.

Boundary Dimensions (mm/inch)						Basic Load Ratings (kN)		{kgf}		Bearing Numbers	Fig-ure(1)	Abutment and Fillet Dimensions (mm)				Constant	Axial Load Factors		Mass (kg)	Reference Bearing Numbers
d	D	B_4	C_4	r_1 min.	r min.	C_r	C_{0r}	C_r	C_{0r}			d_b	D_a	r_a max.	r_b max.	e	Y_2	Y_3	approx.	
140	198	144	144	1	1.5	775	1 590	79 000	162 000	**140KV1901**	1	148	185	1.5	1	0.43	2.3	1.6	13.6	—
	198	144	144	2.5	2	715	1 450	72 500	148 000	**140KV895**	1	150	184	2	2	0.36	2.8	1.9	13.6	—
	210	111	111	2.5	2	605	1 060	61 500	108 000	**140KV2101A**	1	153	196	2	2	0.40	2.5	1.7	13	—
	210	114	114	2.5	2	605	1 060	61 500	108 000	140KV80	1	153	196	2	2	0.40	2.5	1.7	13.8	—
	210	115	115	2.5	2	605	1 060	61 500	108 000	**140KV2102**	1	153	196	2	2	0.40	2.5	1.7	13.3	—
	225	145	145	3	2.5	880	1 450	89 500	148 000	**140KV81**	1	154	208	2	2	0.40	2.5	1.7	20.9	—
	270	290	290	3	3	2 190	3 900	223 000	395 000	**140KV2701**	1	160	238	2.5	2.5	0.55	1.8	1.2	75.5	—
145	195	130	130	2	1.5	655	1 430	66 500	146 000	**145KV1901**	1	154	184	1.5	1.5	0.31	3.3	2.2	10.7	—
150	210	155	155	3	2	875	1 880	89 000	192 000	**150KV89**	1	160	196	2	2	0.40	2.5	1.7	16.2	—
	210	190	190	1.5	2	985	2 310	101 000	235 000	**150KV2101**	1	158	194	2	1	0.39	2.5	1.7	20.3	—
	212	155	155	3	2.5	875	1 880	89 000	192 000	**150KV895**	1	160	196	2	2	0.40	2.5	1.7	17	—
	225	120	120	3	2.5	715	1 270	72 500	130 000	**150KV80**	1	164	209	2	2	0.40	2.5	1.7	16.3	—
	250	170	170	3	2.5	1 260	2 140	128 000	218 000	**150KV81**	1	167	231	2	2	0.40	2.5	1.7	32.2	—
152.400 6.0000	222.250 8.7500	174.625 6.8750	174.625 6.8750	1.5	1.5	985	2 120	100 000	216 000	**∗152KV2251**	1	164	207	1.5	1.5	0.33	3.0	2.0	22.7	M231649D-610-610D
152.781 6.0150	244.475 9.6250	192.088 7.5625	187.325 7.3750	1.5	3.3	1 140	2 040	116 000	208 000	∗152KV2452	1	167	225	3.3	1.5	0.35	2.9	1.9	34.2	81603D-962-963D
160	226	165	165	3	2.5	925	2 060	94 500	210 000	**160KV895**	1	172	210	2	2	0.29	3.4	2.3	20.5	—
	240	130	130	3	2.5	790	1 420	80 500	145 000	**160KV80**	1	175	224	2	2.5	0.40	2.5	1.7	19.9	—
	265	173	173	3	2.5	1 320	2 210	135 000	225 000	**160KV2601**	1	179	246	2	2	0.40	2.5	1.7	36.2	—
	270	180	180	3	2.5	1 320	2 210	135 000	225 000	**160KV81**	1	179	249	2	2.5	0.40	2.5	1.7	40.3	—
165	270	240	240	6	3	1 780	3 600	181 000	365 000	**165KV2701**	1	186	247	2.5	5	0.36	2.8	1.9	55	—
165.100 6.5000	225.425 8.8750	165.100 6.5000	168.275 6.6250	0.8	3.3	820	2 160	84 000	220 000	**∗165KV2252**	1	175	208	3.3	0.8	0.38	2.6	1.8	20.2	46791D-720-721D
170	230	175	175	2.5	2	990	2 310	101 000	235 000	**170KV89**	1	180	216	2	2	0.34	2.9	2.0	20.6	—
	240	175	175	3	2.5	1 100	2 400	112 000	245 000	**170KV895**	1	181	223	2	2.5	0.40	2.5	1.7	24.5	—
	260	144	144	3	2.5	950	1 660	97 000	169 000	**170KV80**	1	186	242	2	2	0.40	2.5	1.7	25.7	—
	260	160	160	3	2.5	1 160	2 100	118 000	214 000	170KV2601	1	189	242	2	2	0.39	2.6	1.7	29.5	—
	280	181	181	3	2.5	1 500	2 570	153 000	262 000	**170KV2801**	1	187	259	2	2	0.40	2.5	1.7	42.3	—
	280	185	185	3	2.5	1 500	2 570	153 000	262 000	**170KV81**	1	187	259	2	2	0.40	2.5	1.7	43	—

Note ∗ Bearings marked ∗ are inch design.
(1) Refer to page **B 343**

KV (TQO) Type

Bore Diameter 177.800 – 203.200 mm

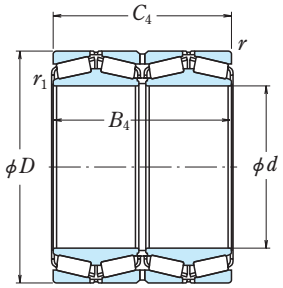

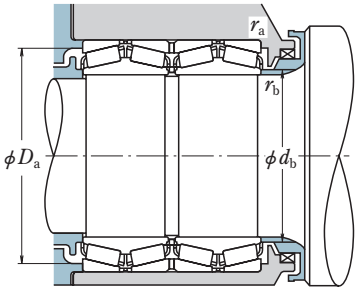

Dynamic Equivalent Load

$P = XF_r + YF_a$

$F_a/F_r \leqq e$		$F_a/F_r > e$	
X	Y	X	Y
1	Y_3	0.67	Y_2

Static Equivalent Load

$P_0 = F_r + Y_0 F_a$

Where $Y_0 \fallingdotseq Y_3$

The values of e, Y_2, and Y_3 are given in the table below.

Boundary Dimensions (mm/inch)						Basic Load Ratings (kN)		{kgf}		Bearing Numbers	Fig-ure(1)	Abutment and Fillet Dimensions (mm)				Constant	Axial Load Factors		Mass (kg)	Reference Bearing Numbers
d	D	B_4	C_4	r_1 min.	r min.	C_r	C_{0r}	C_r	C_{0r}			d_b	D_a	r_a max.	r_b max.	e	Y_2	Y_3	approx.	
177.800 7.0000	247.650 9.7500	192.088 7.5625	192.088 7.5625	1.5	3.3	1 110	2 570	113 000	262 000	**∗177KV2452**	1	187	228	3.3	1.5	0.44	2.3	1.5	27.9	67791D-720-721D
	273.050 10.7500	234.950 9.2500	234.947 9.2499	1.5	3.3	1 680	3 450	171 000	355 000	∗177KV2752	1	195	249	3.3	1.5	0.53	1.9	1.3	49.9	82681D-622-622D
	288.925 11.3750	266.700 10.5000	266.700 10.5000	1.5	3.3	2 110	3 750	215 000	380 000	**∗177KV2853**	1	191	267	3.3	1.5	0.32	3.2	2.1	64	HM237545D-510-511XD
	304.800 12.0000	238.230 9.3791	233.362 9.1875	3.3	3.3	1 900	3 250	194 000	330 000	**∗177KV3051**	1	198	280	3.3	3.3	0.36	2.8	1.9	68	EE280700D-1200-1201D
180	250	185	185	2.5	2	1 160	2 720	118 000	278 000	**180KV89**	1	190	231	2	2	0.44	2.3	1.5	27.9	—
	254	185	185	2	2.5	1 230	2 750	126 000	280 000	**180KV895**	1	190	235	2	2	0.47	2.1	1.4	29.2	—
	254	185	185	2	2.5	1 250	2 750	127 000	280 000	**180KV2501**	1	191	237	2	2	0.33	3.0	2.0	29.3	—
	260	160	160	2.5	2	1 030	2 040	105 000	208 000	**180KV2601**	1	194	243	2	2	0.37	2.7	1.8	27.1	—
	260	200	200	2.5	2	1 260	2 690	129 000	274 000	**180KV2602**	1	193	242	2	2	0.35	2.8	1.9	34.1	—
	280	158	158	3	2.5	1 230	2 240	126 000	228 000	**180KV80**	1	197	260	2	2	0.35	2.9	1.9	35.4	—
	300	202	202	3	3	1 610	2 720	164 000	277 000	**180KV81**	1	200	277	2.5	2.5	0.40	2.5	1.7	54.5	—
	300	280	280	3	3	2 210	4 350	226 000	445 000	**180KV3001**	1	200	274	2.5	2.5	0.34	3.0	2.0	79.8	—
187.325 7.3750	269.875 10.6250	211.138 8.3125	211.138 8.3125	1.5	3.3	1 590	3 500	162 000	360 000	**∗187KV2651**	1	199	250	3.3	1.5	0.35	2.9	1.9	39.3	M238849D-810-810D
190	260	200	200	2.5	2	1 260	2 690	128 000	274 000	**190KV89**	1	201	245	2	2	0.36	2.8	1.9	29	—
	268	196	196	3	2.5	1 380	3 100	141 000	315 000	**190KV895**	1	202	249	2	2.5	0.40	2.5	1.7	34.1	—
	270	190	190	1.5	2.5	1 380	3 100	141 000	315 000	**190KV2702**	1	201	250	2	1.5	0.40	2.5	1.7	34.7	—
	290	160	160	3	2.5	1 250	2 210	128 000	225 000	**190KV80**	1	207	271	2	2	0.39	2.6	1.7	36.1	—
	320	218	218	3	3	1 990	3 550	203 000	360 000	**190KV81**	1	210	293	2.5	2.5	0.40	2.5	1.7	71.2	—
190.500 7.5000	266.700 10.5000	187.325 7.3750	188.912 7.4375	1.5	3.3	1 180	2 870	120 000	293 000	**∗190KV2651**	1	202	246	3.3	1.5	0.48	2.1	1.4	32.8	67885D-820-820D
198.438 7.8125	284.162 11.1875	225.425 8.8750	225.425 8.8750	1.5	3.3	1 740	3 900	177 000	395 000	**∗198KV2851**	1	210	264	3.3	1.5	0.33	3.0	2.0	46.1	M240648D-611-611D
200	280	206	206	3	2.5	1 530	3 450	156 000	350 000	**200KV89**	1	213	262	2	2.5	0.40	2.5	1.7	38.1	—
	282	206	206	3	2.5	1 530	3 450	156 000	350 000	**200KV895**	1	213	263	2	2.5	0.40	2.5	1.7	39.6	—
	310	174	174	3	2.5	1 380	2 640	141 000	269 000	**200KV80**	1	219	288	2	2.5	0.40	2.5	1.7	47.2	—
	310	200	200	3	2.5	1 660	3 100	169 000	315 000	**200KV3101**	1	218	288	2	2	0.39	2.6	1.7	53.6	—
	340	234	234	3	3	2 220	4 100	227 000	420 000	**200KV81**	1	225	313	2.5	2.5	0.40	2.5	1.7	87.3	—
203.200 8.0000	317.500 12.5000	266.700 10.5000	266.700 10.5000	6.4	3.3	2 290	4 650	234 000	470 000	**∗203KV3154**	1	224	292	3.3	6.4	0.45	2.2	1.5	77.2	93800D-125-127D

Note ∗ Bearings marked ∗ are inch design.
(1) Refer to page **B 343**

KV (TQO) Type

Bore Diameter 205 – 234.950 mm

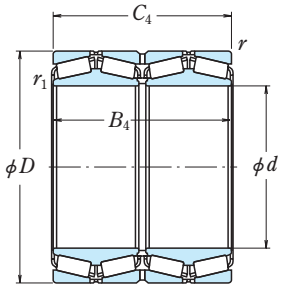

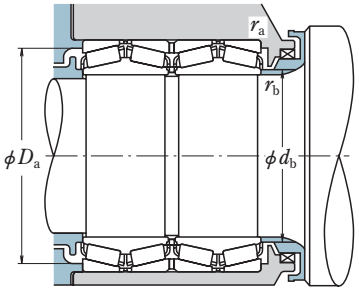

Dynamic Equivalent Load

$P = XF_r + YF_a$

$F_a/F_r \leqq e$		$F_a/F_r > e$	
X	Y	X	Y
1	Y_3	0.67	Y_2

Static Equivalent Load

$P_0 = F_r + Y_0 F_a$

Where $Y_0 \fallingdotseq Y_3$

The values of e, Y_2, and Y_3 are given in the table below.

Boundary Dimensions (mm/inch)						Basic Load Ratings (kN)		{kgf}		Bearing Numbers	Fig-ure(1)	Abutment and Fillet Dimensions (mm)				Constant	Axial Load Factors		Mass (kg)	Reference Bearing Numbers
d	D	B_4	C_4	r_1 min.	r min.	C_r	C_{0r}	C_r	C_{0r}			d_b	D_a	r_a max.	r_b max.	e	Y_2	Y_3	approx.	
205	320	205	205	3	3	1 710	3 150	175 000	320 000	**205KV3201**	1	224	297	2.5	2.5	0.40	2.5	1.7	58.1	—
206.375 8.1250	282.575 11.1250	190.500 7.5000	190.500 7.5000	0.8	3.3	1 160	2 870	118 000	292 000	**∗206KV2854**	1	217	261	3.3	0.8	0.51	2.0	1.3	35.2	67986D-920-921D
	282.575 11.1250	210.000 8.2677	210.000 8.2677	1.0	3.3	1 420	3 300	145 000	335 000	**∗206KV2857**	1	216	263	3.3	1.0	0.43	2.3	1.6	38.5	—
215.900 8.5000	288.925 11.3750	177.800 7.0000	177.800 7.0000	1.5	3.3	1 200	3 000	122 000	310 000	**∗215KV2851**	1	226	268	3.3	1.5	0.48	2.1	1.4	32.9	LM742749D-714-714D
216.103 8.5080	330.200 13.0000	263.525 10.3750	269.875 10.6250	1.5	3.3	2 250	4 700	229 000	480 000	**∗216KV3351**	1	230	301	3.3	1.5	0.55	1.8	1.2	80.6	9974DW-920-920D
220	300	230	230	3	2.5	1 650	4 000	168 000	410 000	**220KV89**	1	232	279	2	2.5	0.41	2.5	1.7	47.1	—
	310	226	226	3	3	1 770	4 000	181 000	410 000	**220KV895**	1	235	289	2.5	2.5	0.40	2.5	1.7	52.2	—
	320	200	200	3	2.5	1 660	3 500	170 000	355 000	**220KV3201**	1	236	299	2	2.5	0.40	2.5	1.7	51.9	—
	320	250	250	3	3	2 050	4 750	209 000	485 000	**220KV3202**	1	234	295	2.5	2.5	0.33	3.0	2.0	68	—
	330	260	260	3	3	2 250	4 700	229 000	480 000	**220KV3301**	1	234	302	2.5	2.5	0.55	1.8	1.2	75.7	—
	340	190	190	3	3	1 480	2 790	151 000	285 000	**220KV80**	1	242	315	2.5	2.5	0.40	2.5	1.7	60.5	—
	370	250	250	4	4	2 500	4 500	255 000	460 000	**220KV81**	1	245	340	3	3	0.39	2.6	1.7	106	—
220.662 8.6875	314.325 12.3750	239.712 9.4375	239.712 9.4375	1.5	3.3	2 050	4 750	209 000	485 000	**∗220KV3151**	1	233	292	3.3	1.5	0.33	3.0	2.0	60.4	M244249D-210-210D
	314.325 12.3750	290.000 11.4173	290.000 11.4173	1.5	3.3	2 270	5 450	231 000	555 000	**∗220KV3152**	1	233	291	3.3	1.5	0.33	3.0	2.0	71.8	—
225	320	230	230	2.5	2	1 800	4 150	184 000	425 000	**225KV3201**	1	239	298	2	2	0.41	2.4	1.6	58.8	—
228.600 9.0000	355.600 14.0000	254.000 10.0000	254.000 10.0000	5.5	1.5	2 500	5 050	255 000	515 000	**∗228KV3556**	1	252	332	1.5	5.5	0.33	3.0	2.0	92.2	EE130901D-400-401D
	355.600 14.0000	266.700 10.5000	260.350 10.2500	1.5	1.5	2 390	4 950	244 000	505 000	∗228KV3555	1	260	329	1.5	1.5	0.33	3.0	2.0	96.7	EE130904D-1400-1402D
	364.000 14.3307	296.875 11.6880	296.875 11.6880	3.3	3.3	2 870	5 850	293 000	595 000	**∗228KV3651**	1	249	334	3.3	3.3	0.38	2.6	1.8	115	—
	400.050 15.7500	296.875 11.6880	296.875 11.6880	3.3	3.3	2 990	5 450	305 000	555 000	**∗228KV4051**	1	254	364	3.3	3.3	0.37	2.7	1.8	152	EE529091D-157-158XD
230	315	190	190	2.5	2	1 510	3 450	154 000	350 000	**230KV3101**	1	243	296	2	2	0.36	2.8	1.9	43.1	—
234.950 9.2500	327.025 12.8750	196.850 7.7500	196.850 7.7500	1.5	3.3	1 660	3 650	169 000	370 000	**∗234KV3252**	1	248	306	3.3	1.5	0.41	2.5	1.7	49.2	8576D-520-520D

Note ∗ Bearings marked ∗ are inch design.
(1) Refer to page **B 343**

KV (TQO) Type

Bore Diameter 240 – 260.350 mm

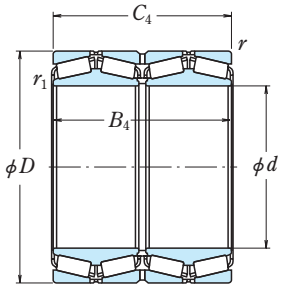

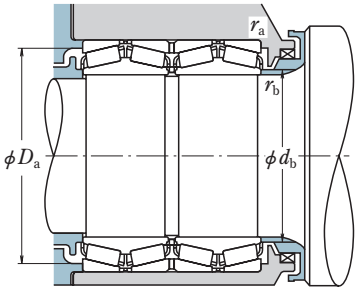

Dynamic Equivalent Load

$P = XF_r + YF_a$

$F_a/F_r \leqq e$		$F_a/F_r > e$	
X	Y	X	Y
1	Y_3	0.67	Y_2

Static Equivalent Load

$P_0 = F_r + Y_0 F_a$

Where $Y_0 \fallingdotseq Y_3$

The values of e, Y_2, and Y_3 are given in the table below.

Boundary Dimensions (mm/inch)						Basic Load Ratings (kN)		{kgf}		Bearing Numbers	Fig-ure(1)	Abutment and Fillet Dimensions (mm)				Constant	Axial Load Factors		Mass (kg)	Reference Bearing Numbers
d	D	B_4	C_4	r_1 min.	r min.	C_r	C_{0r}	C_r	C_{0r}			d_b	D_a	r_a max.	r_b max.	e	Y_2	Y_3	approx.	
240	320	250	250	3	2.5	1 840	4 750	188 000	485 000	**240KV89**	1	253	301	2	2	0.33	3.0	2.0	54.7	—
	338	248	248	3	3	2 280	5 300	233 000	540 000	**240KV895**	1	254	316	2.5	2.5	0.36	2.8	1.9	68.5	—
	350	230	230	1.5	2	2 140	4 500	218 000	460 000	**240KV3501**	1	254	327	2	1	0.42	2.4	1.6	72	—
	360	194	194	3	3	1 850	3 600	189 000	370 000	**240KV80**	1	262	338	2.5	2.5	0.35	2.9	1.9	66.9	—
	360	218	218	3	3	2 050	4 150	209 000	425 000	240KV3601	1	270	337	2.5	2.5	0.43	2.3	1.6	76.5	—
	400	266	266	4	4	2 680	4 900	273 000	500 000	**240KV81**	1	268	369	3	3	0.40	2.5	1.7	127	—
240.000 9.4488	365.000 14.3701	290.000 11.4173	290.000 11.4173	2.5	2.5	2 720	5 700	277 000	580 000	**∗240KV3652**	1M	256	336	2.5	2.5	0.46	2.2	1.5	106	—
241.224 9.4970	355.498 13.9960	228.600 9.0000	228.600 9.0000	1.5	3.3	1 960	4 250	200 000	435 000	∗241KV3551	1	257	328	3.3	1.5	0.35	2.8	1.9	77.1	EE127094D-138-139D
241.478 9.5070	349.148 13.7460	228.600 9.0000	228.600 9.0000	1.5	3.3	1 960	4 250	200 000	435 000	**∗241KV3453**	1	257	325	3.3	1.5	0.35	2.8	1.9	70.3	EE127097D-135-136D
244.475 9.6250	327.025 12.8750	193.675 7.6250	193.675 7.6250	1.5	3.3	1 510	3 700	154 000	375 000	**∗244KV3251**	1	256	306	3.3	1.5	0.49	2.1	1.4	44.6	LM247748D-710-710D
	327.025 12.8750	193.680 7.6252	193.680 7.6252	1.5	3.3	1 690	3 950	172 000	405 000	**∗244KV3252**	1	256	308	3.3	1.5	0.32	3.1	2.1	44.9	—
247.650 9.7500	400.050 15.7500	249.235 9.8124	253.995 9.9998	1.5	3.3	2 510	4 850	256 000	495 000	**∗247KV4051**	1	271	369	3.3	1.5	0.39	2.5	1.7	119	EE220975D-1575-1576D
250	360	186	186	2.5	2	1 770	3 550	180 000	360 000	**250KV3601**	1	267	338	2	2	0.40	2.5	1.7	59.1	—
	365	270	270	2.5	3.3	2 600	6 150	265 000	630 000	**250KV3602**	1	266	338	3.3	2.5	0.33	3.0	2.0	96.2	—
	370	220	220	4	4	1 980	4 400	202 000	450 000	**250KV3701**	1	273	344	3	3	0.37	2.7	1.8	80.8	—
	381	320	320	2.5	3	3 150	7 100	320 000	725 000	**250KV3801**	1	266	348	2.5	2	0.55	1.8	1.2	130	—
254.000 10.0000	358.775 14.1250	269.875 10.6250	269.875 10.6250	1.5	3.3	2 600	6 150	265 000	630 000	**∗254KV3551**	1	267	335	3.3	1.5	0.33	3.0	2.0	85.6	M249748D-710-710D
	358.775 14.1250	274.875 10.8219	269.875 10.6250	2.5	3.3	2 600	6 150	265 000	630 000	**∗254KV3552**	1	268	335	3.3	2.5	0.33	3.0	2.0	86	—
260	360	272	272	3	2.5	2 520	5 950	257 000	605 000	**260KV89**	1	275	338	2	2.5	0.34	3.0	2.0	82.2	—
	368	268	268	4	4	2 490	5 550	253 000	570 000	**260KV895**	1	277	344	3	3	0.32	3.2	2.1	87.1	—
	400	213	213	4	4	2 230	4 200	227 000	430 000	260KV4001	1	284	372	3	3	0.40	2.5	1.7	92.9	—
	400	220	220	4	4	2 230	4 200	227 000	430 000	**260KV80**	1	283	372	3	3	0.40	2.5	1.7	96	—
	400	320	320	4	4	3 750	7 950	385 000	810 000	**260KV4002**	1	280	370	3	3	0.35	2.8	1.9	144	—
	440	300	300	5	4	3 550	8 250	360 000	845 000	**260KV81**	1	301	407	3	4	0.35	2.9	1.9	196	—
260.350 10.2500	365.125 14.3750	228.600 9.0000	228.600 9.0000	3.3	6.4	1 980	4 400	202 000	450 000	**∗260KV3651**	1	277	339	6.4	3.3	0.37	2.7	1.8	71.2	EE134102D-143-144D

Note ∗ Bearings marked ∗ are inch design.
(1) Refer to page **B 343**
The letter "M" indicates bearing for oil mist lubrication.

KV (TQO) Type

Bore Diameter 266.700 – 279.578 mm

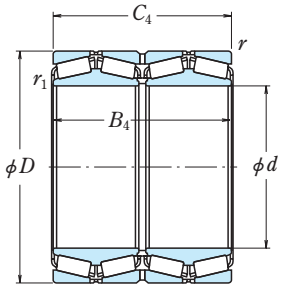

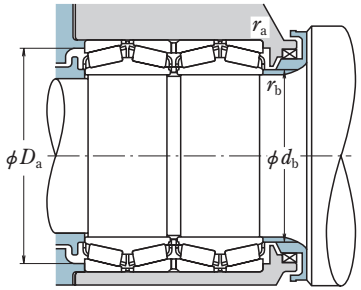

Dynamic Equivalent Load

$P = XF_r + YF_a$

$F_a/F_r \leqq e$		$F_a/F_r > e$	
X	Y	X	Y
1	Y_3	0.67	Y_2

Static Equivalent Load

$P_0 = F_r + Y_0 F_a$

Where $Y_0 \fallingdotseq Y_3$

The values of e, Y_2, and Y_3 are given in the table below.

Boundary Dimensions (mm/inch)						Basic Load Ratings (kN)		{kgf}	
d	D	B_4	C_4	r_1 min.	r min.	C_r	C_{0r}	C_r	C_{0r}
266.700 10.5000	355.600 14.0000	230.188 9.0625	228.600 9.0000	1.5	3.3	2 110	5 050	215 000	515 000
	393.700 15.5000	269.878 10.6251	269.878 10.6251	3.3	6.4	2 610	5 550	266 000	570 000
	406.400 16.0000	268.290 10.5626	260.355 10.2502	3.3	6.4	2 610	5 550	266 000	570 000
269.875 10.6250	381.000 15.0000	282.575 11.1250	282.575 11.1250	3.3	3.3	2 710	6 350	277 000	650 000
270	364 410	260 222	260 222	1.5 4	2 4	2 240 2 320	5 700 4 400	228 000 237 000	580 000 445 000
276.225 10.8750	380.898 14.9960	187.325 7.3750	203.200 8.0000	3.3	6.4	1 650	3 600	168 000	370 000
	393.700 15.5000	269.878 10.6251	269.878 10.6251	1.5	6.4	2 850	6 400	290 000	650 000
	406.400 16.0000	268.290 10.5626	260.355 10.2502	1.5	6.4	2 400	5 150	245 000	525 000
279.400 11.0000	393.700 15.5000	269.875 10.6250	269.875 10.6250	1.5	6.4	2 350	5 450	239 000	555 000
	469.900 18.5000	346.075 13.6250	349.250 13.7500	6.4	3.3	4 050	8 250	415 000	840 000
	495.300 19.5000	282.735 11.1313	285.750 11.2500	1.5	3.3	3 700	7 150	375 000	730 000
	495.300 19.5000	289.085 11.3813	292.100 11.5000	1.5	3.3	3 700	7 150	375 000	730 000
279.578 11.0070	380.898 14.9960	244.475 9.6250	244.475 9.6250	1.5	3.3	2 110	6 000	216 000	610 000
	381.000 15.0000	187.325 7.3750	193.675 7.6250	3.3	3.3	1 650	3 600	168 000	370 000

Bearing Numbers	Figure(1)	Abutment and Fillet Dimensions (mm)				Constant	Axial Load Factors		Mass (kg)	Reference Bearing Numbers
		d_b	D_a	r_a max.	r_b max.	e	Y_2	Y_3	approx.	
∗266KV3552	1	277	335	3.3	1.5	0.36	2.8	1.9	60.6	LM451349D-310-310D
∗266KV3951	1	288	364	6.4	3.3	0.40	2.5	1.7	108	EE275106D-155-156D
∗266KV4051	1	288	372	6.4	3.3	0.40	2.5	1.7	121	EE275106D-160-161D
∗269KV3851	1	287	356	3.3	3.3	0.33	3.0	2.0	99.3	M252349D-310-310D
270KV3601 **270KV80**	1M 1	282 293	342 381	2 3	1 3	0.39 0.35	2.6 2.9	1.7 1.9	76.7 99.7	— —
∗276KV3851	1	294	352	6.4	3.3	0.58	1.7	1.2	64.4	89108D-149-149XD
∗276KV3951	1	291	364	6.4	1.5	0.40	2.5	1.7	102	EE275109DW-155-156D
∗276KV4051	1	291	371	6.4	1.5	0.40	2.5	1.7	112	EE275109D-160-161D
∗279KV3951	1	294	362	6.4	1.5	0.40	2.5	1.7	100	EE135111D-155-156D
∗279KV4651	1	313	431	3.3	6.4	0.38	2.7	1.8	243	EE722111D-185-186D
∗279KV4951	1	311	460	3.3	1.5	0.40	2.5	1.7	235	EE941106D-950-951XD
∗279KV4952	1	311	460	3.3	1.5	0.40	2.5	1.7	240	EE941106D-950-952XD
∗279KV3854	1	296	355	3.3	1.5	0.43	2.3	1.6	84.1	LM654644D-610-610D
∗279KV3855	1	296	357	3.3	3.3	0.58	1.7	1.2	60.7	89111D-148-151XD

Note ∗ Bearings marked ∗ are inch design.
(1) Refer to page **B 343**
The letter "M" indicates bearing for oil mist lubrication.

KV (TQO) Type

Bore Diameter 280 – 304.800 mm

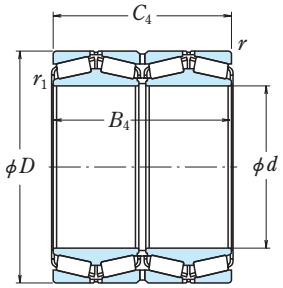

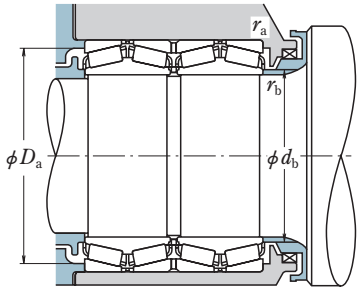

Dynamic Equivalent Load

$P = XF_r + YF_a$

$F_a/F_r \leqq e$		$F_a/F_r > e$	
X	Y	X	Y
1	Y_3	0.67	Y_2

Static Equivalent Load

$P_0 = F_r + Y_0 F_a$

Where $Y_0 \fallingdotseq Y_3$

The values of e, Y_2, and Y_3 are given in the table below.

Boundary Dimensions (mm/inch)						Basic Load Ratings (kN)		{kgf}		Bearing Numbers	Fig-ure(1)	Abutment and Fillet Dimensions (mm)				Constant	Axial Load Factors		Mass (kg)	Reference Bearing Numbers
d	D	B_4	C_4	r_1 min.	r min.	C_r	C_{0r}	C_r	C_{0r}			d_b	D_a	r_a max.	r_b max.	e	Y_2	Y_3	approx.	
280	380	290	290	2	3	2 550	6 400	260 000	650 000	**280KV3801**	1	294	356	2.5	1.5	0.37	2.7	1.8	93.7	—
	395	288	288	4	4	2 770	6 650	283 000	675 000	**280KV895**	1	299	369	3	3	0.35	2.9	1.9	109	—
	420	224	224	4	4	2 480	4 950	253 000	505 000	280KV80	1	305	393	3	3	0.40	2.5	1.7	109	—
	420	250	250	4	4	2 780	5 700	284 000	580 000	280KV4202	1	306	385	3	3	0.42	2.4	1.6	117	—
	460	305	305	5	5	4 000	7 700	410 000	785 000	**280KV81**	1	307	422	4	4	0.39	2.6	1.7	197	—
	460	324	324	5	5	4 100	7 850	420 000	800 000	280KV4602	1	311	421	4	4	0.47	2.1	1.4	214	—
285.750 11.2500	380.898 14.9960	244.475 9.6250	244.475 9.6250	1.5	3.3	2 110	6 000	216 000	610 000	**∗285KV3851**	1	300	355	3.3	1.5	0.43	2.3	1.6	78.8	LM654648DW-610-610D
288.925 11.3750	406.400 16.0000	298.450 11.7500	298.450 11.7500	3.3	3.3	3 050	7 350	315 000	745 000	**∗288KV4051**	1	306	380	3.3	3.3	0.34	3.0	2.0	119	M255449D-410-410D
292.100 11.5000	422.275 16.6250	269.875 10.6250	269.875 10.6250	6.4	3.3	2 970	6 650	305 000	680 000	∗292KV4251	1	318	395	3.3	6.4	0.32	3.2	2.1	124	EE330116D-166-167D
300	420	310	310	4	4	3 250	8 150	330 000	830 000	**300KV4201**	1	321	394	3	3	0.29	3.4	2.3	132	—
	424	310	310	4	4	3 050	7 700	315 000	785 000	**300KV895**	1	322	394	3	3	0.40	2.5	1.7	138	—
	430	280	280	3	3	3 050	6 950	315 000	710 000	**300KV4302**	1	319	401	2.5	2.5	0.47	2.1	1.4	129	—
	430	300	300	3	3	3 550	8 250	360 000	845 000	**300KV4301**	1	319	403	2.5	2.5	0.35	2.9	1.9	141	—
	460	248	248	4	4	2 910	6 050	297 000	615 000	**300KV80**	1	331	430	3	3	0.42	2.4	1.6	146	—
	460	360	360	4	4	4 450	9 900	455 000	1 010 000	**300KV4601**	1	324	427	3	3	0.31	3.3	2.2	216	—
	470	270	270	4	4	3 750	7 500	380 000	765 000	**300KV4702A**	1	327	436	3	3	0.33	3.0	2.0	181	—
	470	292	292	4	4	4 100	8 350	415 000	855 000	**300KV4703A**	1	327	436	3	3	0.33	3.0	2.0	196	—
	470	310	310	4	4	3 900	7 850	395 000	805 000	**300KV4701**	1	326	436	3	3	0.36	2.8	1.9	197	—
	500	332	332	5	5	4 650	8 950	475 000	915 000	**300KV81**	1	331	459	4	4	0.39	2.6	1.7	254	—
	500	380	380	5	5	4 900	9 600	500 000	980 000	**300KV5001**	1	331	458	4	4	0.35	2.9	1.9	300	—
300.038 11.8125	422.275 16.6250	311.150 12.2500	311.150 12.2500	3.3	3.3	3 400	8 200	345 000	840 000	**∗300KV4251**	1	318	395	3.3	3.3	0.34	3.0	2.0	136	HM256849D-810-810D
304.648 11.9940	438.048 17.2460	280.990 11.0626	279.400 11.0000	3.3	4.8	3 050	6 750	310 000	685 000	**∗304KV4353**	1	324	407	4.8	3.3	0.47	2.1	1.4	133	M757448DW-410-410D
304.800 12.0000	419.100 16.5000	269.875 10.6250	269.875 10.6250	1.5	6.4	2 930	7 250	299 000	740 000	**∗304KV4152**	1	320	391	6.4	1.5	0.33	3.0	2.0	112	M257149DW-110-110D
	482.600 19.0000	345.000 13.5827	345.000 13.5827	3.3	4.8	5 150	10 400	525 000	1 060 000	**∗304KV4853**	2	322	444	4.8	3.3	0.33	3.0	2.0	245	—
	482.600 19.0000	365.125 14.3750	377.825 14.8750	3.3	4.8	5 150	10 500	525 000	1 070 000	**∗304KV4852**	2	313	444	4.8	3.3	0.37	2.7	1.8	223	—

Note ∗ Bearings marked ∗ are inch design.
(1) Refer to page **B 343**

KV (TQO) Type

Bore Diameter 304.800 – 335.000 mm

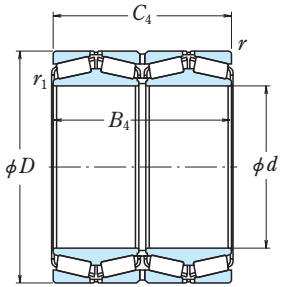

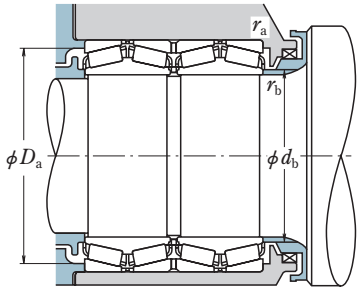

Dynamic Equivalent Load

$P = XF_r + YF_a$

$F_a/F_r \leqq e$		$F_a/F_r > e$	
X	Y	X	Y
1	Y_3	0.67	Y_2

Static Equivalent Load

$P_0 = F_r + Y_0 F_a$

Where $Y_0 \fallingdotseq Y_3$

The values of e, Y_2, and Y_3 are given in the table below.

Boundary Dimensions (mm/inch)						Basic Load Ratings (kN)		{kgf}	
d	D	B_4	C_4	r_1 min.	r min.	C_r	C_{0r}	C_r	C_{0r}
304.800 12.0000	495.300 19.5000	342.900 13.5000	349.250 13.7500	3.3	6.4	4 250	8 600	435 000	880 000
304.902 12.0040	412.648 16.2460	266.700 10.5000	266.700 10.5000	3.3	3.3	2 880	7 100	294 000	725 000
305.000 12.0079	438.048 17.2460	280.990 11.0626	279.400 11.0000	3.3	4.8	3 050	6 750	310 000	685 000
310	430	310	310	3	3	3 450	8 500	350 000	865 000
	455	222	222	4	4	2 520	5 100	257 000	520 000
	460	325	325	1.5	5	4 050	9 200	415 000	940 000
317.500 12.5000	422.275 16.6250	269.875 10.6250	269.875 10.6250	1.5	3.3	2 710	7 000	277 000	715 000
	447.675 17.6250	327.025 12.8750	327.025 12.8750	3.3	3.3	3 850	9 400	390 000	960 000
320	440	335	335	3	3	3 550	8 750	360 000	895 000
	460	325	325	4	4	3 850	8 650	390 000	885 000
	460	338	338	4	4	3 950	9 200	405 000	940 000
	480	254	254	4	4	3 150	6 250	320 000	640 000
	480	360	360	1.5	2.5	4 400	10 000	445 000	1 020 000
	540	364	364	5	5	5 750	11 500	585 000	1 170 000
327.025 12.8750	482.600 19.0000	306.388 12.0625	311.150 12.2500	1.5	3.3	3 400	7 350	345 000	745 000
330	460	240	240	3	3	2 630	6 400	268 000	655 000
330.200 13.0000	508.000 20.0000	292.100 11.5000	292.100 11.5000	6.4	3.3	4 000	8 150	405 000	835 000
333.375 13.1250	469.900 18.5000	342.900 13.5000	342.900 13.5000	3.3	3.3	4 200	10 400	430 000	1 060 000
335.000 13.1890	460.000 18.1102	342.900 13.5000	342.900 13.5000	3.3	3.3	3 900	9 850	395 000	1 010 000

Bearing Numbers	Figure(1)	Abutment and Fillet Dimensions (mm)				Constant	Axial Load Factors		Mass (kg)	Reference Bearing Numbers
		d_b	D_a	r_a max.	r_b max.	e	Y_2	Y_3	approx.	
∗304KV4955	1	331	451	6.4	3.3	0.40	2.5	1.7	255	EE724121D-195-196D
∗304KV4153	1	320	389	3.3	3.3	0.31	3.2	2.1	103	M257248DW-210-210D
∗305KV4352	1	324	407	4.8	3.3	0.47	2.1	1.4	137	M757449DW-410-410D
310KV4301	1	327	403	2.5	2.5	0.34	2.9	2.0	135	—
310KV4501	1	336	427	3	3	0.39	2.6	1.7	117	—
310KV4601	1	329	426	4	1	0.41	2.4	1.6	186	—
∗317KV4251	1	333	399	3.3	1.5	0.33	3.1	2.1	102	LM258648DW-610-610D
∗317KV4451	1	335	418	3.3	3.3	0.33	3.0	2.0	162	HM259049D-010-010D
320KV89	1	337	413	2.5	2.5	0.33	3.0	2.0	146	—
320KV4601	1	340	429	3	3	0.42	2.4	1.6	170	—
320KV895	1	340	427	3	3	0.40	2.5	1.7	178	—
320KV80	1	346	448	3	3	0.39	2.6	1.7	156	—
320KV4802	1	339	444	2	1	0.47	2.1	1.4	227	—
320KV81	2	354	495	4	4	0.39	2.6	1.7	352	—
∗327KV4851	1	347	447	3.3	1.5	0.39	2.6	1.7	185	EE526129D-190-191D
330KV4601	1	354	433	2.5	2.5	0.47	2.1	1.4	123	—
∗330KV5051	1	360	473	3.3	6.4	0.40	2.5	1.7	214	—
∗333KV4651	1	352	440	3.3	3.3	0.33	3.0	2.0	186	HM261049DW-010-010D
∗335KV4651	1	351	429	3.3	3.3	0.39	2.6	1.7	167	—

Note ∗ Bearings marked ∗ are inch design.
(1) Refer to page **B 343**

KV (TQO) Type

Bore Diameter 340 – 360 mm

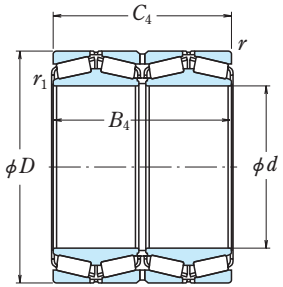

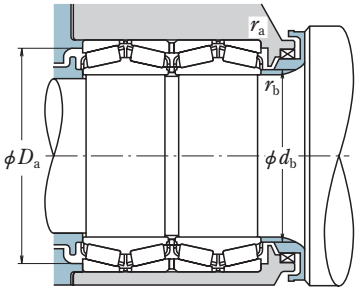

Dynamic Equivalent Load

$P = XF_r + YF_a$

$F_a/F_r \leqq e$		$F_a/F_r > e$	
X	Y	X	Y
1	Y_3	0.67	Y_2

Static Equivalent Load

$P_0 = F_r + Y_0 F_a$

Where $Y_0 \fallingdotseq Y_3$

The values of e, Y_2, and Y_3 are given in the table below.

Boundary Dimensions (mm/inch)						Basic Load Ratings (kN)		{kgf}		Bearing Numbers	Fig-ure(1)	Abutment and Fillet Dimensions (mm)				Constant	Axial Load Factors		Mass (kg)	Reference Bearing Numbers
d	D	B_4	C_4	r_1 min.	r min.	C_r	C_{0r}	C_r	C_{0r}			d_b	D_a	r_a max.	r_b max.	e	Y_2	Y_3	approx.	
340	460	254	254	3	3	2 630	6 400	268 000	655 000	**340KV4601**	1	359	433	2.5	2.5	0.47	2.1	1.4	118	—
	480	350	350	5	5	4 000	10 100	410 000	1 030 000	**340KV895**	1	364	449	4	4	0.29	3.4	2.3	198	—
	520	278	278	6	5	4 050	8 250	415 000	840 000	340KV80	1	382	484	4	5	0.39	2.6	1.7	213	—
	520	325	325	5	5	4 700	9 600	480 000	980 000	**340KV5202**	2	370	485	4	4	0.30	3.4	2.3	251	—
	580	392	392	5	5	6 150	12 200	625 000	1 250 000	340KV81	2	394	530	4	4	0.39	2.6	1.7	442	—
341.312 13.4375	457.098 17.9960	254.000 10.0000	254.000 10.0000	1.5	3.3	2 930	7 250	299 000	740 000	**∗341KV4551**	1	355	429	3.3	1.5	0.45	2.2	1.5	116	LM761648DW-610-610D
343.052 13.5060	457.098 17.9960	254.000 10.0000	254.000 10.0000	1.5	3.3	2 930	7 250	299 000	740 000	**∗343KV4555**	1	355	429	3.3	1.5	0.45	2.2	1.5	114	LM761649DW-610-610D
346.075 13.6250	488.950 19.2500	358.775 14.1250	358.775 14.1250	3.3	3.3	4 550	11 200	465 000	1 140 000	**∗346KV4854**	1	364	456	3.3	3.3	0.36	2.8	1.9	210	HM262749D-710-710D
347.662 13.6875	469.900 18.5000	260.350 10.2500	260.350 10.2500	1.5	3.3	3 100	7 500	315 000	765 000	∗347KV4652	1	365	444	3.3	1.5	0.33	3.0	2.0	129	LM262449DW-410-410D
	469.900 18.5000	292.100 11.5000	292.100 11.5000	3.3	3.3	3 400	8 400	345 000	855 000	**∗347KV4651**	1	366	444	3.3	3.3	0.33	3.0	2.0	144	M262449DW-410-410D
355	490	316	316	2	4	4 100	9 750	415 000	995 000	**355KV4901**	1	373	462	3	1.5	0.33	3.0	2.0	177	—
355.600 14.0000	444.500 17.5000	241.300 9.5000	241.300 9.5000	1.5	3.3	2 270	6 650	232 000	675 000	∗355KV4451	1	370	422	3.3	1.5	0.31	3.3	2.2	84.9	L163149D-110-110D
	457.200 18.0000	252.412 9.9375	252.412 9.9375	1.5	3.3	2 790	7 550	285 000	770 000	**∗355KV4552**	1	370	435	3.3	1.5	0.32	3.2	2.1	104	LM263149D-110-110D
	482.600 19.0000	265.112 10.4375	269.875 10.6250	1.5	3.3	3 050	7 250	310 000	740 000	**∗355KV4852**	1	372	452	3.3	1.5	0.47	2.1	1.4	140	LM763449DW-410-410D
	488.950 19.2500	317.500 12.5000	317.500 12.5000	1.5	3.3	4 100	9 750	415 000	995 000	**∗355KV4853**	1	373	462	3.3	1.5	0.33	3.0	2.0	174	M263349D-310-310D
360	480	370	370	3	3	4 150	11 100	420 000	1 130 000	**360KV4801**	1	376	452	2.5	2.5	0.33	3.0	2.0	181	—
	480	375	375	1	2	3 900	10 300	395 000	1 050 000	**360KV4803**	1	373	453	2	1	0.40	2.5	1.7	179	—
	480	375	375	3	3	4 150	11 200	425 000	1 140 000	**360KV89**	1	375	452	2.5	2.5	0.33	3.0	2.0	183	—
	508	370	370	3	5	4 750	11 900	485 000	1 220 000	**360KV895**	1	379	473	4	2.5	0.40	2.5	1.7	235	—
	520	370	370	3	5	5 050	11 700	515 000	1 190 000	**360KV5201**	1	381	485	4	2.5	0.33	3.1	2.1	256	—
	540	280	280	5	5	4 200	8 700	430 000	885 000	**360KV80**	2	391	505	4	4	0.39	2.6	1.7	229	—
	540	360	360	5	5	4 600	10 000	470 000	1 020 000	**360KV5401**	1	386	498	4	4	0.40	2.5	1.7	278	—
	600	396	396	5	5	7 000	14 200	715 000	1 450 000	**360KV81**	2	398	551	4	4	0.39	2.6	1.7	465	—
	600	540	540	5	5	9 050	19 900	920 000	2 030 000	**360KV6001**	2	395	547	4	4	0.42	2.4	1.6	628	—

Note ∗ Bearings marked ∗ are inch design.
(1) Refer to page **B 343**

KV (TQO) Type

Bore Diameter 368.300 – 406.400 mm

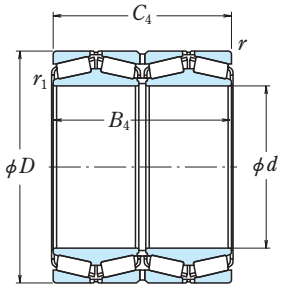

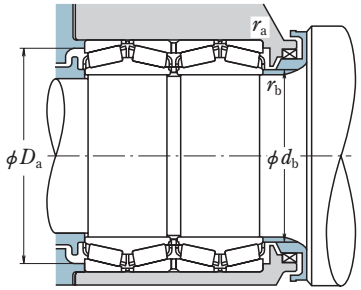

Dynamic Equivalent Load

$P = XF_r + YF_a$

$F_a/F_r \leqq e$		$F_a/F_r > e$	
X	Y	X	Y
1	Y_3	0.67	Y_2

Static Equivalent Load

$P_0 = F_r + Y_0 F_a$

Where $Y_0 \fallingdotseq Y_3$

The values of e, Y_2, and Y_3 are given in the table below.

Boundary Dimensions (mm/inch)						Basic Load Ratings (kN)		{kgf}		Bearing Numbers	Fig-ure(1)	Abutment and Fillet Dimensions (mm)				Constant	Axial Load Factors		Mass (kg)	Reference Bearing Numbers
d	D	B_4	C_4	r_1 min.	r min.	C_r	C_{0r}	C_r	C_{0r}			d_b	D_a	r_a max.	r_b max.	e	Y_2	Y_3	approx.	
368.300 14.5000	523.875 20.6250	382.588 15.0625	382.588 15.0625	3.3	6.4	5 900	14 900	600 000	1 520 000	**∗368KV5251**	2	389	487	6.4	3.3	0.33	3.0	2.0	274	HM265049DW-010-010D
	596.900 23.5000	342.900 13.5000	342.900 13.5000	6.4	6.4	5 700	11 500	585 000	1 170 000	**∗368KV5951**	2	407	549	6.4	6.4	0.41	2.4	1.6	385	EE181455D-2350-2351D
370	490	292	292	3	3	3 450	9 300	350 000	950 000	**370KV4901**	1	388	463	2.5	2.5	0.34	2.9	2.0	151	—
374.650 14.7500	501.650 19.7500	250.825 9.8750	260.350 10.2500	1.5	3.3	2 750	6 600	280 000	675 000	∗374KV5051	1	393	472	3.3	1.5	0.44	2.3	1.5	141	LM765149D-110-110D
380	520	350	350	4	4	4 250	11 000	435 000	1 130 000	**380KV5201**	1	403	488	3	3	0.31	3.3	2.2	219	—
	520	400	400	2.5	4	5 050	12 900	515 000	1 320 000	**380KV5202**	1	398	489	3	2	0.35	2.9	1.9	243	—
	536	390	390	5	5	5 200	13 100	530 000	1 330 000	**380KV895**	1	401	499	4	4	0.40	2.5	1.7	272	—
	560	282	282	5	5	4 200	9 050	430 000	920 000	380KV80	2	418	523	4	4	0.42	2.4	1.6	244	—
	560	285	285	5	5	4 500	9 550	455 000	975 000	**380KV5603**	2	412	525	4	4	0.37	2.7	1.8	246	—
	560	360	360	1.5	5	5 200	11 200	530 000	1 140 000	**380KV5605**	2	402	523	4	1.5	0.35	2.9	1.9	298	—
	620	400	400	5	5	7 150	14 800	730 000	1 510 000	**380KV81**	2	416	571	4	4	0.40	2.5	1.7	490	—
384.175 15.1250	546.100 21.5000	400.050 15.7500	400.050 15.7500	3.3	6.4	6 700	16 600	680 000	1 700 000	**∗384KV5452**	2	406	509	6.4	3.3	0.33	3.0	2.0	309	HM266449D-410-410D
385.762 15.1875	514.350 20.2500	317.500 12.5000	317.500 12.5000	3.3	3.3	4 050	10 400	415 000	1 060 000	**∗385KV5151**	1	403	485	3.3	3.3	0.42	2.4	1.6	181	LM665949DW-910-910D
390	510	350	350	1.5	3	4 250	11 700	430 000	1 200 000	**390KV5101**	1	405	483	2.5	1.5	0.33	3.0	2.0	188	—
393.700 15.5000	546.100 21.5000	288.925 11.3750	288.925 11.3750	1.5	6.4	3 450	8 550	350 000	875 000	∗393KV5452	1	419	511	6.4	1.5	0.47	2.1	1.4	205	LM767745D-710-710D
395	545	269.2	288.7	4	7.5	3 450	8 550	350 000	875 000	**395KV5401**	1	422	511	6	3	0.47	2.1	1.4	196	—
400	564	412	412	5	5	5 500	13 800	560 000	1 400 000	**400KV895**	1	424	525	4	4	0.40	2.5	1.7	315	—
	590	304	304	5	5	4 600	10 000	470 000	1 020 000	**400KV5901**	2	431	551	4	4	0.42	2.4	1.6	287	—
	600	308	308	5	5	5 150	11 100	525 000	1 140 000	**400KV80**	2	435	561	4	4	0.37	2.7	1.8	316	—
	650	414	414	6	6	7 800	16 600	795 000	1 690 000	400KV81	2	452	595	5	5	0.39	2.6	1.7	555	—
406.400 16.0000	546.100 21.5000	268.288 10.5625	288.925 11.3750	3.3	6.4	3 550	8 600	360 000	875 000	**∗406KV5453**	1	424	507	6.4	3.3	0.62	1.6	1.1	178	EE234161D-215-216D
	546.100 21.5000	288.925 11.3750	288.925 11.3750	1.5	6.4	3 450	8 550	350 000	875 000	**∗406KV5455**	1	425	511	6.4	1.5	0.47	2.1	1.4	186	LM767749DW-710-710D
	546.100 21.5000	330.000 12.9921	330.000 12.9921	3.3	6.4	4 500	11 500	460 000	1 170 000	**∗406KV5458**	1	424	512	6.4	3.3	0.41	2.5	1.7	214	—

Note ∗ Bearings marked ∗ are inch design.
(1) Refer to page **B 343**

KV (TQO) Type

Bore Diameter 406.400 – 450 mm

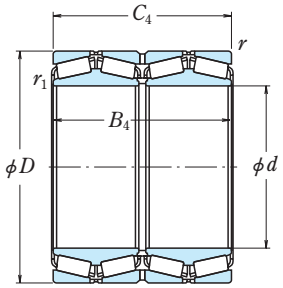

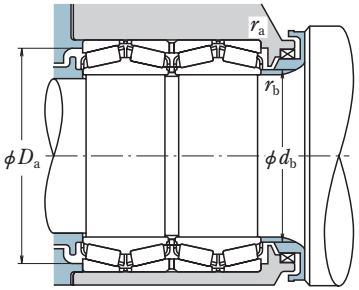

Dynamic Equivalent Load

$P = XF_r + YF_a$

$F_a/F_r \leqq e$		$F_a/F_r > e$	
X	Y	X	Y
1	Y_3	0.67	Y_2

Static Equivalent Load

$P_0 = F_r + Y_0 F_a$

Where $Y_0 \fallingdotseq Y_3$

The values of e, Y_2, and Y_3 are given in the table below.

Boundary Dimensions (mm/inch)						Basic Load Ratings (kN)		{kgf}		Bearing Numbers	Fig-ure(1)	Abutment and Fillet Dimensions (mm)				Constant	Axial Load Factors		Mass (kg)	Reference Bearing Numbers
d	D	B_4	C_4	r_1 min.	r min.	C_r	C_{0r}	C_r	C_{0r}			d_b	D_a	r_a max.	r_b max.	e	Y_2	Y_3	approx.	
406.400 16.0000	565.150 22.2500	381.000 15.0000	381.000 15.0000	1.5	3.3	6 050	15 300	615 000	1 560 000	**∗406KV5656**	2	427	532	3.3	1.5	0.33	3.0	2.0	301	M267949D-910-910XD
	590.550 23.2500	400.050 15.7500	400.050 15.7500	3.3	6.4	5 500	13 200	560 000	1 350 000	**∗406KV5951**	1	432	548	6.4	3.3	0.33	3.1	2.1	357	EE833161D-232-233D
409.575 16.1250	546.100 21.5000	334.962 13.1875	334.962 13.1875	1.5	6.4	4 550	11 900	465 000	1 210 000	**∗409KV5451**	1	426	513	6.4	1.5	0.42	2.4	1.6	213	M667947D-910-910D
415.925 16.3750	590.550 23.2500	434.975 17.1250	434.975 17.1250	3.3	6.4	7 500	19 500	765 000	1 990 000	**∗415KV5951**	2	439	550	6.4	3.3	0.33	3.0	2.0	395	M268749D-710-710D
416	574	480	480	4	4	6 500	17 100	665 000	1 740 000	**416KV5702**	2	440	542	3	3	0.28	3.6	2.4	366	—
420	560	437	437	3	5	5 400	14 500	550 000	1 480 000	**420KV5601**	1	440	529	4	2.5	0.31	3.3	2.2	284	—
	592	432	432	5	5	5 850	14 700	595 000	1 500 000	**420KV895**	1	444	550	4	4	0.41	2.5	1.7	363	—
	620	312	312	5	5	5 450	12 100	555 000	1 240 000	420KV80	2	463	578	4	4	0.39	2.6	1.7	331	—
	620	355	355	5	5	5 800	13 100	590 000	1 340 000	**420KV6202**	1	453	581	4	4	0.39	2.6	1.7	364	—
	650	460	460	6	6	7 700	17 200	785 000	1 760 000	**420KV6501**	1	453	600	5	5	0.40	2.5	1.7	547	—
	700	460	460	6	6	9 350	20 300	955 000	2 070 000	420KV81	2	485	642	5	5	0.39	2.6	1.7	736	—
430	570	336	336	2	6	4 600	11 900	470 000	1 210 000	430KV5701	1	455	534	5	1.5	0.35	2.9	1.9	233	—
431.800 17.0000	571.500 22.5000	279.400 11.0000	279.400 11.0000	1.5	3.3	3 700	9 400	375 000	960 000	**∗431KV5753**	1	448	539	3.3	1.5	0.55	1.8	1.2	190	LM869449D-410-410D
	571.500 22.5000	336.550 13.2500	336.550 13.2500	1.5	6.4	4 500	11 900	460 000	1 210 000	**∗431KV5755**	1	449	537	6.4	1.5	0.42	2.4	1.6	241	LM769349D-310-310D
	635.000 25.0000	355.600 14.0000	355.600 14.0000	6.4	6.4	6 400	14 500	655 000	1 480 000	**∗431KV6351**	2	468	595	6.4	6.4	0.32	3.1	2.1	392	EE931170D-250-251XD
431.902 17.0040	685.698 26.9960	533.273 20.9950	533.400 21.0000	6.4	6.4	10 400	22 800	1 060 000	2 330 000	**∗431KV6851**	2	468	630	6.4	6.4	0.40	2.5	1.7	761	EE328172D-269-268D
440	620	454	454	6	6	7 600	20 200	775 000	2 060 000	**440KV895**	2	465	576	5	5	0.40	2.5	1.7	442	—
	635	470	470	2.5	5	8 650	21 800	880 000	2 230 000	**440KV6301**	2	465	593	4	2	0.33	3.0	2.0	509	—
	650	326	326	6	6	5 600	12 400	575 000	1 270 000	440KV80	1	488	606	5	5	0.39	2.6	1.7	381	—
	720	465	465	6	6	9 550	19 800	975 000	2 010 000	440KV81	1	497	665	5	5	0.39	2.6	1.7	771	—
447.675 17.6250	635.000 25.0000	463.550 18.2500	463.550 18.2500	3.3	6.4	6 500	17 300	665 000	1 770 000	**∗447KV6351**	1	475	591	6.4	3.3	0.33	3.0	2.0	471	M270749DW-710-710D
448	635	464	464	2.5	5	8 350	21 600	855 000	2 210 000	**448KV6301**	1	472	594	4	2	0.33	3.0	2.0	485	—
450	580	450	450	1.5	6	5 000	14 300	510 000	1 460 000	**450KV5801**	1	466	549	5	1	0.31	3.2	2.2	282	—
	595	368	368	4	4	5 050	13 700	510 000	1 400 000	**450KV5901**	1	473	563	3	3	0.33	3.0	2.0	273	—

Note ∗ Bearings marked ∗ are inch design.
(1) Refer to page **B 343**

KV (TQO) Type

Bore Diameter 457.200 – 490 mm

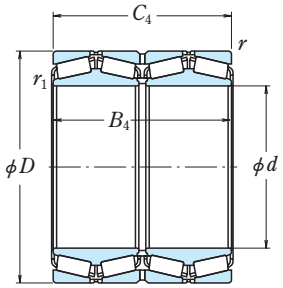

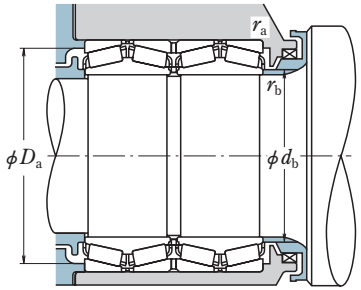

Dynamic Equivalent Load

$P = XF_r + YF_a$

$F_a/F_r \leqq e$		$F_a/F_r > e$	
X	Y	X	Y
1	Y_3	0.67	Y_2

Static Equivalent Load

$P_0 = F_r + Y_0 F_a$

Where $Y_0 \fallingdotseq Y_3$

The values of e, Y_2, and Y_3 are given in the table below.

Boundary Dimensions (mm/inch)						Basic Load Ratings (kN)		{kgf}	
d	D	B_4	C_4	r_1 min.	r min.	C_r	C_{0r}	C_r	C_{0r}
457.200 18.0000	596.900 23.5000	276.225 10.8750	279.400 11.0000	1.5	3.3	3 850	10 000	390 000	1 020 000
	596.900 23.5000	276.225 10.8750	279.400 11.0000	1.5	3.3	4 100	10 300	420 000	1 050 000
460	586	266	266	3	3	3 550	9 300	360 000	945 000
	590	360	360	3	3	4 900	14 100	500 000	1 440 000
	615	360	360	3	5	4 800	12 800	490 000	1 310 000
	625	421	421	3	9	6 550	17 600	670 000	1 800 000
	650	474	474	6	6	7 200	18 500	735 000	1 890 000
	680	338	338	6	6	6 500	15 100	660 000	1 540 000
	760	494	494	7.5	7.5	10 700	23 300	1 090 000	2 380 000
475	660	450	450	3	5	6 650	17 900	680 000	1 820 000
479.425 18.8750	679.450 26.7500	495.300 19.5000	495.300 19.5000	3.3	6.4	9 600	25 500	980 000	2 600 000
480	678	494	494	6	6	9 600	25 500	980 000	2 600 000
	700	342	342	6	6	6 400	14 300	655 000	1 460 000
	790	510	510	7.5	7.5	10 500	21 500	1 070 000	2 190 000
482.600 19.0000	615.950 24.2500	330.200 13.0000	330.200 13.0000	3.3	6.4	4 750	13 800	485 000	1 410 000
	615.950 24.2500	330.200 13.0000	330.200 13.0000	6.5	6.4	4 750	13 800	485 000	1 410 000
	635.000 25.0000	421.000 16.5748	421.000 16.5748	3.0	6.4	6 800	19 100	695 000	1 950 000
	647.700 25.5000	417.512 16.4375	417.512 16.4375	3.3	6.4	7 100	19 400	725 000	1 970 000
488.950 19.2500	622.300 24.5000	365.125 14.3750	365.125 14.3750	3.8	6.4	4 900	14 400	500 000	1 470 000
	660.400 26.0000	365.125 14.3750	361.950 14.2500	8.0	6.4	6 550	16 900	670 000	1 720 000
489.026 19.2530	634.873 24.9950	320.675 12.6250	320.675 12.6250	3.3	3.3	4 700	12 700	480 000	1 300 000
490	625	385	385	3	4	5 550	16 200	565 000	1 650 000

Bearing Numbers	Figure(1)	Abutment and Fillet Dimensions (mm)				Constant	Axial Load Factors		Mass (kg)	Reference Bearing Numbers
		d_b	D_a	r_a max.	r_b max.	e	Y_2	Y_3	approx.	
∗457KV5952	1	476	566	3.3	1.5	0.47	2.1	1.4	201	L770847DW-810-810D
∗457KV5956	1	473	567	3.3	1.5	0.47	2.1	1.4	197	—
460KV5801	1	478	559	2.5	2.5	0.46	2.2	1.5	168	—
460KV5901	1	481	564	2.5	2.5	0.28	3.6	2.4	242	—
460KV6101	1	481	577	4	2.5	0.45	2.2	1.5	289	—
460KV6201	2	482	584	9	3	0.33	3.0	2.0	381	M271149D-110-110D
460KV895	1	485	606	5	5	0.40	2.5	1.7	477	—
460KV80	2	513	635	5	5	0.40	2.5	1.7	433	—
460KV81	2	530	698	6	6	0.39	2.6	1.7	923	—
475KV6601	1	501	618	4	2.5	0.37	2.7	1.8	463	—
∗479KV6751	2	506	635	6.4	3.3	0.34	3.0	2.0	595	M272749DW-710-710D
480KV895	2	509	634	5	5	0.34	3.0	2.0	586	—
480KV80	2	527	655	5	5	0.39	2.6	1.7	453	—
480KV81	2	550	725	6	6	0.39	2.6	1.7	1 030	—
∗482KV6152	1	501	582	6.4	3.3	0.37	2.7	1.8	242	LM272249D-210-210D
∗482KV6152a	1	504	582	6.4	6.5	0.37	2.7	1.8	242	LM272248DW-210-210D
∗482KV6351	2	502	599	6.4	3.0	0.33	3.0	2.0	355	M272449D-410-410D
∗482KV6451	1	505	609	6.4	3.3	0.37	2.7	1.8	400	M272647DW-610-610D
∗488KV6251	1	508	589	6.4	3.8	0.29	3.4	2.3	265	—
∗488KV6652	2	519	625	6.4	8.0	0.31	3.3	2.2	365	EE640193D-260-261D
∗489KV6351	1	508	602	3.3	3.3	0.47	2.1	1.4	256	LM772749DW-710-710D
490KV6201	2	508	595	3	2.5	0.32	3.2	2.1	284	—

Note ∗ Bearings marked ∗ are inch design.
(1) Refer to page **B 343**

KV (TQO) Type

Bore Diameter 500 – 535 mm

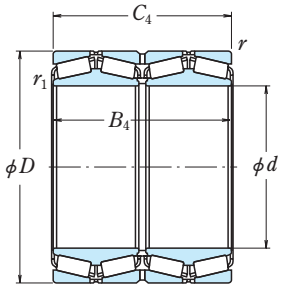

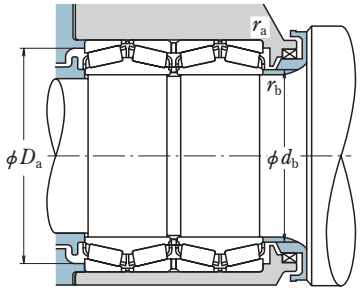

Dynamic Equivalent Load

$P = XF_r + YF_a$

$F_a/F_r \leqq e$		$F_a/F_r > e$	
X	Y	X	Y
1	Y_3	0.67	Y_2

Static Equivalent Load

$P_0 = F_r + Y_0 F_a$

Where $Y_0 \fallingdotseq Y_3$

The values of e, Y_2, and Y_3 are given in the table below.

Boundary Dimensions (mm/inch)						Basic Load Ratings (kN)		{kgf}		Bearing Numbers	Fig-ure(1)	Abutment and Fillet Dimensions (mm)				Constant	Axial Load Factors		Mass (kg)	Reference Bearing Numbers
d	D	B_4	C_4	r_1 min.	r min.	C_r	C_{0r}	C_r	C_{0r}			d_b	D_a	r_a max.	r_b max.	e	Y_2	Y_3	approx.	
500	670	515	515	5	5	8 400	24 600	860 000	2 510 000	**500KV89**	2	525	630	4	4	0.33	3.0	2.0	518	—
	705	515	515	6	6	9 700	26 600	990 000	2 710 000	**500KV895**	2	530	658	5	5	0.37	2.7	1.8	654	—
	710	425	430	5	5	8 050	19 500	820 000	1 980 000	**500KV7101**	2	527	666	4	4	0.37	2.7	1.8	530	—
	720	348	348	6	6	6 500	14 800	665 000	1 510 000	**500KV80**	2	534	675	5	5	0.40	2.5	1.7	476	—
	720	400	400	5	5	7 950	18 700	810 000	1 900 000	**500KV7202**	2	534	676	4	4	0.33	3.0	2.0	548	—
	729.805	440	440	6	6	9 300	22 200	950 000	2 270 000	**500KV7301**	2	536	683	5	5	0.33	3.0	2.0	639	—
	830	540	540	7.5	7.5	12 500	26 400	1 280 000	2 690 000	500KV81	2	570	760	6	6	0.39	2.6	1.7	1 210	—
500.25	640	450	450	4	4	6 750	19 900	690 000	2 030 000	**500KV6403A**	2M	520	609	3	3	0.28	3.6	2.4	366	—
501.650 19.7500	673.100 26.5000	400.050 15.7500	387.350 15.2500	6.4	6.4	6 600	18 000	675 000	1 830 000	**∗501KV6751**	2	530	635	6.4	6.4	0.31	3.2	2.1	400	EE641198D-265-266D
	711.200 28.0000	520.700 20.5000	520.700 20.5000	3.3	6.4	9 900	26 600	1 010 000	2 710 000	**∗501KV7151**	2	532	664	6.4	3.3	0.33	3.0	2.0	678	M274149DW-110-110D
508	749.3	355.6	355.6	6	6	6 900	15 400	705 000	1 570 000	**508KV7401**	2	548	702	5	5	0.36	2.8	1.9	548	—
	762	420	420	6	2	8 550	19 100	875 000	1 950 000	**508KV7601**	2	548	717	2	5	0.36	2.8	1.9	693	—
508.000 20.0000	762.000 30.0000	463.550 18.2500	463.550 18.2500	6.4	6.4	9 500	22 700	970 000	2 320 000	**∗508KV7653**	2	551	710	6.4	6.4	0.38	2.6	1.8	765	EE531201D-300-301XD
509.948 20.0767	654.924 25.7844	377.000 14.8425	379.000 14.9213	1.5	6.4	6 100	17 600	620 000	1 800 000	**∗509KV6552**	2	526	618	6.4	1.5	0.41	2.4	1.6	319	—
514.350 20.2500	673.100 26.5000	422.275 16.6250	422.275 16.6250	3.3	6.4	6 700	19 000	685 000	1 930 000	**∗514KV6751**	1	535	636	6.4	3.3	0.31	3.2	2.1	397	LM274449DW-410-410D
	736.600 29.0000	290.104 11.4214	317.505 12.5002	3.3	3.3	5 550	13 600	565 000	1 380 000	∗514KV7352	2	560	685	3.3	3.3	0.48	2.1	1.4	431	982025D-900-901D
519.112 20.4375	736.600 29.0000	536.575 21.1250	536.575 21.1250	6.4	6.4	10 000	26 700	1 020 000	2 720 000	**∗519KV7351**	2	553	687	6.4	6.4	0.33	3.0	2.0	740	M275349D-310-310D
520	735	535	535	6	6	10 000	26 700	1 020 000	2 720 000	**520KV895**	2	553	687	5	5	0.33	3.0	2.0	731	—
530	730	535	540	5	5	10 000	26 500	1 020 000	2 710 000	**530KV7301A**	1	557	688	4	4	0.33	3.0	2.0	657	—
	750	480	480	6	6	9 550	24 900	975 000	2 540 000	**530KV7501**	2	564	703	5	5	0.33	3.0	2.0	694	—
	750	550	550	6	6	10 500	28 000	1 070 000	2 860 000	**530KV895**	2	563	700	5	5	0.33	3.0	2.0	788	—
	780	385	385	6	6	8 300	18 700	845 000	1 900 000	530KV80	2	582	730	5	5	0.37	2.7	1.8	644	—
	780	570	570	6	6	12 100	30 000	1 230 000	3 100 000	**530KV7801**	1	566	728	5	5	0.33	3.0	2.0	956	—
	870	560	560	7.5	7.5	13 600	28 900	1 390 000	2 950 000	530KV81	1	578	800	6	6	0.39	2.6	1.7	1 360	—
535	760	560	560	6	6	11 100	30 000	1 130 000	3 050 000	**535KV895**	2	568	710	5	5	0.33	3.0	2.0	833	—

Note ∗ Bearings marked ∗ are inch design.
(1) Refer to page **B 343**
The letter "M" indicates bearing for oil mist lubrication.

KV (TQO) Type

Bore Diameter 536.575 – 585.788 mm

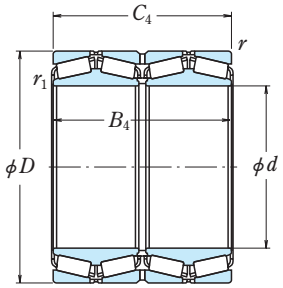

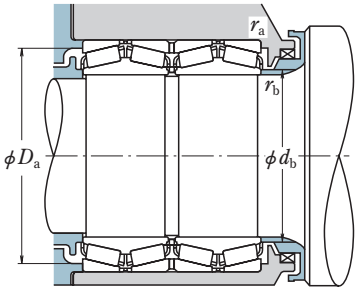

Dynamic Equivalent Load

$P = XF_r + YF_a$

$F_a/F_r \leqq e$		$F_a/F_r > e$	
X	Y	X	Y
1	Y_3	0.67	Y_2

Static Equivalent Load

$P_0 = F_r + Y_0 F_a$

Where $Y_0 \fallingdotseq Y_3$

The values of e, Y_2, and Y_3 are given in the table below.

Boundary Dimensions (mm/inch)						Basic Load Ratings (kN)		{kgf}		Bearing Numbers	Fig-ure(1)	Abutment and Fillet Dimensions (mm)				Constant	Axial Load Factors		Mass (kg)	Reference Bearing Numbers
d	D	B_4	C_4	r_1 min.	r min.	C_r	C_{0r}	C_r	C_{0r}			d_b	D_a	r_a max.	r_b max.	e	Y_2	Y_3	approx.	
536.575 21.1250	761.873 29.9950	558.800 22.0000	558.800 22.0000	3.3	6.4	11 100	30 000	1 130 000	3 050 000	**∗536KV7651**	2	567	710	6.4	3.3	0.33	3.0	2.0	836	M276449DW-410-410D
555.625 21.8750	698.500 27.5000	349.250 13.7500	349.250 13.7500	3.3	6.4	5 150	16 000	525 000	1 640 000	**∗555KV6951**	1	577	664	6.4	3.3	0.33	3.0	2.0	311	—
558.75	965.3	495.3	495.3	spec.	7.5	12 900	28 600	1 320 000	2 910 000	**558KV9601**	2	629	879	6	—	0.32	3.2	2.1	1 590	—
558.800 22.0000	736.600 29.0000	322.262 12.6875	322.262 12.6875	3.3	6.4	6 050	15 800	620 000	1 620 000	**∗558KV7351**	2	585	699	6.4	3.3	0.34	2.9	2.0	379	EE843221D-290-291D
	736.600 29.0000	322.262 12.6875	322.262 12.6875	3.3	6.4	5 950	15 500	610 000	1 580 000	**∗558KV7357**	1	584	699	6.4	3.3	0.34	2.9	2.0	369	EE843220DW-290-291D
	736.600 29.0000	409.575 16.1250	409.575 16.1250	3.3	6.4	7 050	19 400	720 000	1 980 000	**∗558KV7352B**	2	582	696	6.4	3.3	0.35	2.9	1.9	457	—
	736.600 29.0000	430.000 16.9291	430.000 16.9291	3.3	6.4	8 450	23 600	860 000	2 400 000	**∗558KV7356**	1	581	697	6.4	3.3	0.35	2.9	1.9	492	—
	736.600 29.0000	450.000 17.7165	450.000 17.7165	3.3	6.4	8 950	25 300	910 000	2 580 000	**∗558KV7354**	2	581	696	6.4	3.3	0.35	2.9	1.9	531	—
	736.600 29.0000	455.600 17.9370	457.200 18.0000	3.3	6.4	8 950	25 300	910 000	2 580 000	**∗558KV7355**	2	581	696	6.4	3.3	0.35	2.9	1.9	536	LM277149DA-110-110D
560	805	590	590	6	6	13 700	37 000	1 400 000	3 800 000	**560KV895**	2	599	756	5	5	0.33	3.0	2.0	1 030	—
	820	405	405	6	6	9 100	20 600	930 000	2 100 000	560KV80	2	613	768	5	5	0.37	2.7	1.8	742	—
	920	575	575	7.5	7.5	14 600	31 000	1 480 000	3 150 000	560KV81	2	635	845	6	6	0.39	2.6	1.7	1 560	—
	920	618	618	7.5	7.5	16 000	34 000	1 630 000	3 500 000	**560KV9201**	2	612	850	6	6	0.40	2.5	1.7	1 670	—
570	780	515	515	6	6	10 600	29 700	1 090 000	3 050 000	**570KV7801**	2	600	734	5	5	0.36	2.8	1.9	752	—
	810	590	590	6	6	12 700	35 000	1 300 000	3 550 000	570KV895	2	615	750	5	5	0.33	3.0	2.0	998	—
571.500 22.5000	812.800 32.0000	593.725 23.3750	593.725 23.3750	3.3	6.4	13 700	37 000	1 400 000	3 800 000	**∗571KV8151F**	2	603	759	6.4	3.3	0.33	3.0	2.0	1 020	M278749DW-710-710D
584.200 23.0000	762.000 30.0000	396.875 15.6250	401.638 15.8125	3.3	6.4	7 250	20 800	740 000	2 120 000	∗584KV7651	2	615	717	6.4	3.3	0.47	2.1	1.4	488	LM778549DW-510-510D
	901.573 35.4950	523.080 20.5937	539.750 21.2500	3.3	9.7	13 100	29 100	1 330 000	2 970 000	**∗584KV9051**	2	631	836	9.7	3.3	0.33	3.0	2.0	1 280	EE665231D-355-356D
585.788 23.0625	771.525 30.3750	479.425 18.8750	479.425 18.8750	3.3	6.4	9 750	28 200	995 000	2 870 000	**∗585KV7752**	2	609	729	6.4	3.3	0.33	3.0	2.0	624	LM278849D-810-810D

Note ∗ Bearings marked ∗ are inch design.
(1) Refer to page **B 343**

KV (TQO) Type

Bore Diameter 595 – 657.225 mm

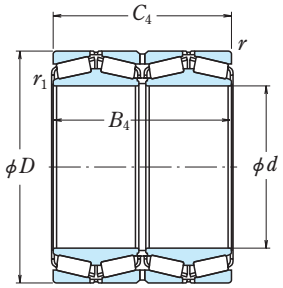

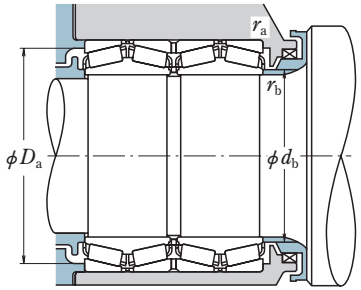

Dynamic Equivalent Load

$P = XF_r + YF_a$

$F_a/F_r \leqq e$		$F_a/F_r > e$	
X	Y	X	Y
1	Y_3	0.67	Y_2

Static Equivalent Load

$P_0 = F_r + Y_0 F_a$

Where $Y_0 \fallingdotseq Y_3$

The values of e, Y_2, and Y_3 are given in the table below.

Boundary Dimensions (mm/inch)						Basic Load Ratings (kN)		{kgf}		Bearing Numbers	Fig-ure(1)	Abutment and Fillet Dimensions (mm)				Constant	Axial Load Factors		Mass (kg)	Reference Bearing Numbers
d	D	B_4	C_4	r_1 min.	r min.	C_r	C_{0r}	C_r	C_{0r}			d_b	D_a	r_a max.	r_b max.	e	Y_2	Y_3	approx.	
595	845	615	615	6	6	13 700	38 000	1 400 000	3 850 000	**595KV895**	2	633	791	5	5	0.33	3.0	2.0	1 140	—
595.312 23.4375	844.550 33.2500	615.950 24.2500	615.950 24.2500	3.3	6.4	13 300	36 500	1 360 000	3 750 000	**∗595KV8451**	2	630	790	6.4	3.3	0.33	3.0	2.0	1 140	M280049D-010-010D
600	855	620	620	6	6	13 900	38 500	1 420 000	3 900 000	600KV895	2	643	791	5	5	0.33	3.0	2.0	1 170	—
	870	415	415	6	6	9 250	21 700	940 000	2 210 000	**600KV80A**	2	643	817	5	5	0.37	2.7	1.8	842	—
	980	615	615	7.5	7.5	16 600	36 500	1 690 000	3 750 000	600KV81	2	680	905	6	6	0.39	2.6	1.7	1 890	—
603.250 23.7500	857.250 33.7500	622.300 24.5000	622.300 24.5000	3.3	6.4	13 900	37 000	1 420 000	3 800 000	**∗603KV8551**	2	635	802	6.4	3.3	0.33	3.0	2.0	1 190	M280249D-210-210XD
609.600 24.0000	787.400 31.0000	361.950 14.2500	361.950 14.2500	3.3	6.4	6 700	18 700	680 000	1 910 000	**∗609KV7851A**	2	633	744	6.4	3.3	0.48	2.1	1.4	454	EE649241D-310-311D
	813.562 32.0300	479.425 18.8750	479.425 18.8750	3.3	6.4	9 950	28 200	1 010 000	2 880 000	**∗609KV8152**	2	637	768	6.4	3.3	0.33	3.0	2.0	718	—
	863.600 34.0000	660.400 26.0000	660.400 26.0000	3.3	6.4	14 700	41 000	1 500 000	4 200 000	∗609KV8651	2	648	807	6.4	3.3	0.33	3.0	2.0	1 260	M280349D-310-310D
611.500 24.0748	832.800 32.7874	593.720 23.3748	593.720 23.3748	3.3	6.4	13 300	38 000	1 360 000	3 850 000	**∗611KV8351**	2	639	783	6.4	3.3	0.33	3.0	2.0	981	—
630	890	650	650	7.5	7.5	15 400	43 000	1 570 000	4 400 000	630KV895	2	674	825	6	6	0.33	3.0	2.0	1 310	—
	920	440	440	7.5	7.5	10 600	25 500	1 090 000	2 600 000	630KV80	2	690	860	6	6	0.37	2.7	1.8	1 010	—
	920	457.2	457.2	4	3	10 600	25 400	1 080 000	2 590 000	**630KV9201**	2	676	865	2.5	3	0.37	2.7	1.8	1 060	—
	920	600	600	7.5	7.5	15 000	38 500	1 530 000	3 950 000	**630KV9202**	1	670	858	6	6	0.36	2.8	1.9	1 360	—
	1 030	645	645	7.5	7.5	18 400	42 500	1 880 000	4 350 000	630KV81	2	720	945	6	6	0.37	2.7	1.8	2 190	—
635	900	655	655	7.5	7.5	15 800	44 500	1 610 000	4 550 000	635KV895	2	695	840	6	6	0.33	3.0	2.0	1 360	—
	900	660	660	5	6	15 500	43 500	1 580 000	4 400 000	**635KV9001**	2	673	843	5	4	0.33	3.0	2.0	1 380	—
635.000 25.0000	901.700 35.5000	654.050 25.7500	654.050 25.7500	3.3	6.4	15 500	43 500	1 580 000	4 400 000	**∗635KV9051**	2	671	843	6.4	3.3	0.33	3.0	2.0	1 380	M281049D-010-010D
646.112 25.4375	857.250 33.7500	542.925 21.3750	542.925 21.3750	3.3	6.4	11 500	34 500	1 170 000	3 550 000	∗646KV8551	2	678	810	6.4	3.3	0.33	3.0	2.0	880	LM281049DW-010-010D
650	1 030	560	560	7.5	7.5	15 700	35 500	1 600 000	3 650 000	**650KV1001**	2	715	958	6	6	0.31	3.2	2.1	1 830	—
655	935	675	675	7.5	7.5	16 600	45 000	1 690 000	4 600 000	655KV895	2	705	870	6	6	0.33	3.0	2.0	1 530	—
657.225 25.8750	933.450 36.7500	676.275 26.6250	676.275 26.6250	3.3	6.4	16 600	45 000	1 690 000	4 600 000	**∗657KV9351**	2	693	875	6.4	3.3	0.33	3.0	2.0	1 520	M281649D-610-610D

Note ∗ Bearings marked ∗ are inch design.
(1) Refer to page **B 343**

KV (TQO) Type

Bore Diameter 660 – 711.200 mm

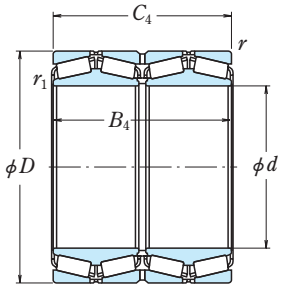

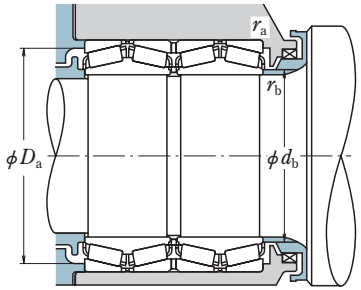

Dynamic Equivalent Load

$P = XF_r + YF_a$

$F_a/F_r \leqq e$		$F_a/F_r > e$	
X	Y	X	Y
1	Y_3	0.67	Y_2

Static Equivalent Load

$P_0 = F_r + Y_0 F_a$

Where $Y_0 \fallingdotseq Y_3$

The values of e, Y_2, and Y_3 are given in the table below.

Boundary Dimensions (mm/inch)						Basic Load Ratings (kN)		{kgf}		Bearing Numbers	Fig-ure(1)	Abutment and Fillet Dimensions (mm)				Constant	Axial Load Factors		Mass (kg)	Reference Bearing Numbers
d	D	B_4	C_4	r_1 min.	r min.	C_r	C_{0r}	C_r	C_{0r}			d_b	D_a	r_a max.	r_b max.	e	Y_2	Y_3	approx.	
660	1 070	642	642	7.5	7.5	19 000	43 000	1 930 000	4 400 000	**660KV1001**	2	728	992	6	6	0.33	3.0	2.0	2 340	—
660.011 25.9847	855.015 33.6620	319.990 12.5980	319.990 12.5980	5.2	5.2	6 500	18 000	665 000	1 840 000	**∗660KV8552**	2	688	811	5.2	5.2	0.52	1.9	1.3	484	—
660.400 26.0000	812.800 32.0000	365.125 14.3750	365.125 14.3750	3.3	6.4	7 350	22 800	750 000	2 330 000	**∗660KV8151**	2	680	778	6.4	3.3	0.33	3.0	2.0	416	L281149D-110-110D
670	950	700	700	7.5	7.5	18 000	49 500	1 830 000	5 050 000	670KV895	2	718	900	6	6	0.33	3.0	2.0	1 620	—
	960	700	700	7.5	7.5	18 600	48 500	1 900 000	4 950 000	**670KV9602**	2	710	900	6	6	0.33	3.0	2.0	1 690	—
	980	475	475	7.5	7.5	12 600	29 200	1 280 000	2 980 000	670KV80	2	730	920	6	6	0.37	2.7	1.8	1 240	—
	1 090	690	690	7.5	7.5	20 600	47 000	2 100 000	4 800 000	670KV81	2	750	1 000	6	6	0.37	2.7	1.8	2 600	—
679.450 26.7500	901.700 35.5000	552.450 21.7500	552.450 21.7500	3.3	6.4	12 200	36 500	1 240 000	3 750 000	**∗679KV9051**	2	710	852	6.4	3.3	0.33	3.0	2.0	1 000	LM281849DW-810-810D
680	870	460	460	5	5	9 700	30 000	990 000	3 100 000	**680KV8701**	2	707	827	4	4	0.42	2.4	1.6	695	—
	1 000	505	505	10	10	13 000	31 500	1 330 000	3 200 000	**680KV1001**	2	737	936	10	10	0.33	3.0	2.0	1 380	—
680.000 26.7717	870.000 34.2520	460.000 18.1102	460.000 18.1102	5.0	5.0	9 700	30 000	990 000	3 100 000	**∗680KV8751**	2	706	827	5.0	5.0	0.42	2.4	1.6	695	—
682.625 26.8750	965.200 38.0000	701.675 27.6250	701.675 27.6250	3.3	6.4	17 700	50 000	1 800 000	5 100 000	∗682KV9651	2	734	900	6.4	3.3	0.33	3.0	2.0	1 670	M282249D-210-210D
685	965	700	700	7.5	7.5	17 700	50 000	1 800 000	5 100 000	685KV895	2	734	900	6	6	0.33	3.0	2.0	1 650	—
685.800 27.0000	876.300 34.5000	352.425 13.8750	355.600 14.0000	3.3	6.4	7 400	22 200	755 000	2 270 000	**∗685KV8751**	2	714	832	6.4	3.3	0.42	2.4	1.6	543	EE655271DW-345-346D
708.025 27.8750	930.275 36.6250	565.150 22.2500	565.150 22.2500	3.3	6.4	13 200	40 500	1 350 000	4 100 000	**∗708KV9351**	2	737	880	6.4	3.3	0.33	3.0	2.0	1 070	LM282549D-510-510D
710	900	410	410	3.3	6.4	8 100	24 400	825 000	2 490 000	**710KV9001**	2	735	853	6.4	3.3	0.53	1.9	1.3	637	L882449D-410-410D
	1 000	730	730	7.5	7.5	19 400	55 500	1 970 000	5 650 000	710KV895	2	760	945	6	6	0.33	3.0	2.0	1 850	—
	1 030	490	490	7.5	7.5	13 200	32 500	1 350 000	3 300 000	710KV80	2	785	965	6	6	0.37	2.7	1.8	1 390	—
	1 150	710	710	9.5	9.5	22 200	52 000	2 260 000	5 300 000	710KV81	2	800	1 055	8	8	0.37	2.7	1.8	2 970	—
711.200 28.0000	914.400 36.0000	317.500 12.5000	317.500 12.5000	3.3	6.4	6 400	19 300	655 000	1 970 000	**∗711KV9151**	2	747	871	6.4	3.3	0.38	2.6	1.8	549	EE755281D-360-361D
	914.400 36.0000	317.500 12.5000	317.500 12.5000	16.0	6.4	6 400	19 300	655 000	1 970 000	**∗711KV9151a**	2	760	871	6.4	16.0	0.38	2.6	1.8	549	EE755280DW-360-361D
	914.400 36.0000	355.600 14.0000	355.600 14.0000	3.3	6.4	7 300	22 200	745 000	2 260 000	**∗711KV9152**	2	742	869	6.4	3.3	0.44	2.3	1.5	607	—

Note ∗ Bearings marked ∗ are inch design.
(1) Refer to page **B 343**

KV (TQO) Type

Bore Diameter 714.375 – 863.600 mm

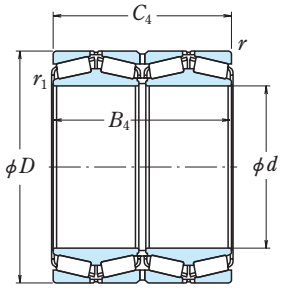

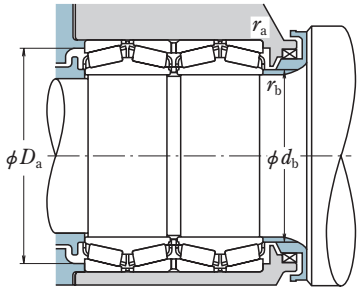

Dynamic Equivalent Load

$P = XF_r + YF_a$

$F_a/F_r \leqq e$		$F_a/F_r > e$	
X	Y	X	Y
1	Y_3	0.67	Y_2

Static Equivalent Load

$P_0 = F_r + Y_0 F_a$

Where $Y_0 \fallingdotseq Y_3$

The values of e, Y_2, and Y_3 are given in the table below.

Boundary Dimensions (mm/inch)						Basic Load Ratings (kN)		{kgf}		Bearing Numbers	Fig-ure(1)	Abutment and Fillet Dimensions (mm)				Constant	Axial Load Factors		Mass (kg)	Reference Bearing Numbers
d	D	B_4	C_4	r_1 min.	r min.	C_r	C_{0r}	C_r	C_{0r}			d_b	D_a	r_a max.	r_b max.	e	Y_2	Y_3	approx.	
714.375 28.1250	1 016.000 40.0000	704.850 27.7500	704.850 27.7500	3.3	6.4	19 000	52 500	1 940 000	5 350 000	**∗714KV1051**	2	756	953	6.4	3.3	0.35	2.9	1.9	1 890	M383240D-210-210D
717.550 28.2500	946.150 37.2500	565.150 22.2500	565.150 22.2500	3.3	6.4	13 400	41 000	1 370 000	4 150 000	∗717KV9451	2	753	894	6.4	3.3	0.33	3.0	2.0	1 100	LM282847DW-810-810D
730	1 035	755	755	7.5	7.5	20 400	58 500	2 080 000	6 000 000	730KV895	2	796	970	6	6	0.33	3.0	2.0	2 070	—
730.250 28.7500	1 035.050 40.7500	755.650 29.7500	755.650 29.7500	3.3	6.4	20 900	58 000	2 130 000	5 950 000	**∗730KV1051**	2	769	971	6.4	3.3	0.33	3.0	2.0	2 090	M283449DW-410-410D
749.300 29.5000	990.600 39.0000	605.000 23.8189	605.000 23.8189	3.3	6.4	15 200	47 000	1 550 000	4 800 000	**∗749KV9951**	2	782	938	6.4	3.3	0.33	3.0	2.0	1 310	LM283649D-610-610D
	1 066.800 42.0000	723.900 28.5000	736.600 29.0000	spec.	12.7	20 600	58 000	2 100 000	5 900 000	**∗749KV1051**	2	800	994	12.7	—	0.33	3.1	2.1	2 190	EE325296D-420-421XD
750	1 090 1 220	515 750	515 750	7.5 9.5	7.5 9.5	14 700 24 900	36 500 59 000	1 500 000 2 540 000	3 700 000 6 000 000	750KV80 750KV81	2 2	830 855	1 025 1 125	6 8	6 8	0.37 0.37	2.7 2.7	1.8 1.8	1 640 3 550	— —
762.000 30.0000	1 066.800 42.0000	723.900 28.5000	736.600 29.0000	5.0	12.7	21 000	59 500	2 150 000	6 050 000	**∗762KV1051**	2	803	995	12.7	5.0	0.33	3.1	2.1	2 100	M284148DW-111-110D
	1 079.500 42.5000	787.400 31.0000	787.400 31.0000	4.8	12.7	22 800	63 500	2 330 000	6 500 000	**∗762KV1052**	2	802	1 007	12.7	4.8	0.33	3.1	2.1	2 380	M284249DW-210-210D
785	1 030	605	605	6	7.5	15 300	47 500	1 560 000	4 850 000	**785KV1002**	2	817	971	6	5	0.42	2.4	1.6	1 390	—
785.000 30.9055	1 040.000 40.9449	560.000 22.0472	560.000 22.0472	4.8	9.7	14 200	41 500	1 450 000	4 200 000	**∗785KV1051**	2	820	981	9.7	4.8	0.42	2.4	1.6	1 330	—
800.000 31.4961	1 120.000 44.0945	820.000 32.2835	820.000 32.2835	7.0	7.0	23 800	69 000	2 430 000	7 050 000	**∗800KV1151**	2	843	1 050	7.0	7.0	0.33	3.0	2.0	2 600	—
825.500 32.5000	1 168.400 46.0000	844.550 33.2500	844.550 33.2500	4.8	12.7	25 900	76 000	2 640 000	7 750 000	**∗825KV1151**	2	873	1 089	12.7	4.8	0.33	3.0	2.0	3 020	M285848DW-810-810D
840.000 33.0709	1 170.000 46.0630	840.000 33.0709	840.000 33.0709	7.0	7.0	25 900	76 000	2 640 000	7 750 000	**∗840KV1151**	2	885	1 099	7.0	7.0	0.33	3.0	2.0	2 900	—
863.600 34.0000	1 130.300 44.5000	669.925 26.3750	669.925 26.3750	4.8	12.7	19 600	62 000	1 990 000	6 300 000	**∗863KV1151**	2	901	1 067	12.7	4.8	0.33	3.0	2.0	1 870	LM286249DW-210-210D
	1 181.100 46.5000	666.750 26.2500	666.750 26.2500	4.8	12.7	19 600	62 000	1 990 000	6 300 000	∗863KV1153	2	901	1 092	12.7	4.8	0.33	3.0	2.0	2 210	LM286449D-410-410D
	1 219.200 48.0000	876.300 34.5000	889.000 35.0000	4.8	12.7	28 300	81 000	2 890 000	8 250 000	**∗863KV1252**	2	911	1 139	12.7	4.8	0.33	3.0	2.0	3 350	—

Note ∗ Bearings marked ∗ are inch design.
(1) Refer to page **B 343**

KV (TQO) Type

Bore Diameter 901.700 – 1 500 mm

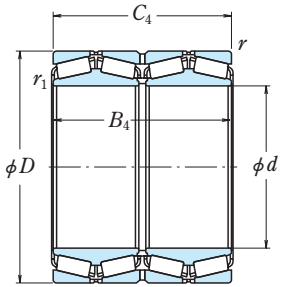

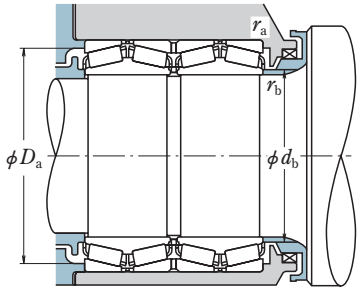

Dynamic Equivalent Load

$P = XF_r + YF_a$

$F_a/F_r \leqq e$		$F_a/F_r > e$	
X	Y	X	Y
1	Y_3	0.67	Y_2

Static Equivalent Load

$P_0 = F_r + Y_0 F_a$

Where $Y_0 \fallingdotseq Y_3$

The values of e, Y_2, and Y_3 are given in the table below.

Boundary Dimensions (mm/inch)						Basic Load Ratings (kN)		{kgf}	
d	D	B_4	C_4	r_1 min.	r min.	C_r	C_{0r}	C_r	C_{0r}
901.700 35.5000	1 295.400 51.0000	901.700 35.5000	914.400 36.0000	4.8	12.7	30 500	88 000	3 100 000	8 950 000
938.212 36.9375	1 270.000 50.0000	825.500 32.5000	825.500 32.5000	4.8	12.7	26 100	79 500	2 660 000	8 100 000
939.800 37.0000	1 333.500 52.5000	952.500 37.5000	952.500 37.5000	4.8	12.7	31 500	92 000	3 200 000	9 400 000
1 006.475 39.6250	1 295.400 51.0000	764.000 30.0787	764.000 30.0787	4.8	12.7	23 100	76 500	2 360 000	7 800 000
1 200.150 47.2500	1 593.850 62.7500	990.600 39.0000	990.600 39.0000	4.8	12.7	39 500	128 000	4 000 000	13 100 000
1 500	1 915	1 220	1 105	spec.	spec.	44 500	168 000	4 550 000	17 100 000

Bearing Numbers	Figure(1)	Abutment and Fillet Dimensions (mm)				Constant	Axial Load Factors		Mass (kg)	Reference Bearing Numbers
		d_b	D_a	r_a max.	r_b max.	e	Y_2	Y_3	approx.	
∗901KV1251	2	960	1 205	12.7	4.8	0.33	3.0	2.0	4 010	EE634356D-510-510D
∗938KV1251	2	990	1 190	12.7	4.8	0.33	3.0	2.0	3 090	LM287649D-610-610D
∗939KV1351	2	996	1 246	12.7	4.8	0.33	3.0	2.0	4 380	LM287849DW-810-810D
∗1006KV1251	2	1 055	1 225	12.7	4.8	0.33	3.0	2.0	2 590	LM288249D-210-210D
∗1200KV1551	2	1 249	1 506	12.7	4.8	0.33	3.0	2.0	5 560	LM288949D-910-910D
1500KV1901	2	1 580	1 815	13	6	0.33	3.0	2.0	8 410	—

Note ∗ Bearings marked ∗ are inch design.
(1) Refer to page **B 343**

KVE (TQO) Type

Bore Diameter 101.600 – 276.225 mm

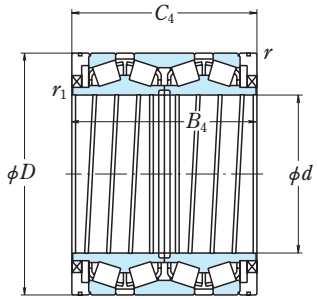

KVE

Dynamic Equivalent Load

$P = XF_r + YF_a$

$F_a/F_r \leqq e$		$F_a/F_r > e$	
X	Y	X	Y
1	Y_3	0.67	Y_2

Static Equivalent Load

$P_0 = F_r + Y_0 F_a$

Where $Y_0 \fallingdotseq Y_3$

The values of e, Y_2, and Y_3 are given in the table below.

Boundary Dimensions (mm/inch)						Basic Load Ratings (kN)		{kgf}		Bearing Numbers	Figure(1)	Constant	Axial Load Factors		Mass (kg)
d	D	B_4	C_4	r_1 min.	r min.	C_r	C_{0r}	C_r	C_{0r}			e	Y_2	Y_3	approx.
101.600	200.025	320.000	320.000	1.0	3.0	1 450	2 420	148 000	247 000	**∗101KVE2051**	3-2	0.36	2.8	1.9	47.8
4.0000	7.8750	12.5984	12.5984												
150	210	240	240	1	2.5	990	2 270	101 000	231 000	**150KVE2101E**	3-1	0.32	3.2	2.1	26.1
170	240	175	175	2.5	2.5	1 010	2 000	103 000	204 000	STF170KVS2401Eg	5	0.32	3.2	2.1	23
187.325	269.875	230.000	230.000	2.0	3.3	1 460	3 200	149 000	325 000	**∗187KVE2651E**	3-1	0.29	3.4	2.3	43.6
7.3750	10.6250	9.0551	9.0551												
215.900	288.925	177.800	177.800	0.8	3.3	1 070	2 350	109 000	239 000	**∗STF215KVS2851Eg**	5	0.49	2.1	1.4	38
8.5000	11.3750	7.0000	7.0000												
216.103	330.2	263.525	269.875	1.5	3.3	2 290	4 550	233 000	465 000	**∗STF216KVS3351Eg**	5	0.46	2.2	1.5	77
8.5080	13.0000	10.3750	10.6250												
220	295	315	315	1	2.5	1 410	3 450	144 000	350 000	**220KVE2902**	4-1	0.40	2.5	1.7	61.2
	295	335	335	1	2.5	1 410	3 450	144 000	350 000	**220KVE2901**	4-1	0.40	2.5	1.7	65
	300	270	270	2.5	2.5	1 650	4 000	168 000	410 000	**220KVE3001E**	3-2	0.41	2.5	1.7	56.5
	320	290	290	1.5	2.5	1 970	4 500	201 000	460 000	**220KVE3201E**	3	0.33	3.0	2.0	78.7
	330	260	260	4	3	2 330	4 800	237 000	490 000	**STF220KVS3301Eg**	5	0.40	2.5	1.7	76
225	320	230	230	1	2	1 510	3 300	154 000	335 000	**225KVE3201E**	3	0.41	2.4	1.6	59.9
228.600	400.050	296.875	296.875	3.3	3.3	2 410	4 250	246 000	435 000	**∗228KVE4052E**	3	0.46	2.2	1.5	161
9.0000	15.7500	11.6880	11.6880												
234.950	327.025	196.850	196.850	1.5	3.3	1 550	3 200	158 000	325 000	**∗STF234KVS3251Eg**	5	0.46	2.2	1.5	49
9.2500	12.8750	7.7500	7.7500												
240	320	250	250	3	3	1 510	3 700	154 000	375 000	**240KVE3202E**	3	0.33	3.0	2.0	56.3
	338	248	248	2	3	1 820	4 000	185 000	405 000	**240KVE3301E**	3	0.43	2.3	1.6	70.6
	338	290	290	2	3	2 120	5 000	216 000	510 000	**240KVE3302E**	3	0.42	2.4	1.6	82.6
244.475	327.025	193.680	193.680	1.5	3	1 450	3 300	148 000	325 000	∗STF244KVS3251Eg	5	0.40	2.5	1.7	43
9.6250	12.8750	7.6250	7.6250												
245	345	310	310	2	3	2 700	6 650	275 000	680 000	**STF245KVS3402Eg**	5	0.40	2.5	1.7	85
250	365	270	270	2.5	3	2 210	4 650	225 000	475 000	**250KVE3601AE**	3	0.33	3.0	2.0	96
	365	270	270	2.5	3	2 210	4 650	225 000	475 000	**250KVE3601E**	3-1	0.33	3.0	2.0	96
254.000	358.775	269.875	269.875	1.5	3.3	2 420	5 500	247 000	560 000	**STF254KVS3552Eg**	5	0.40	2.5	1.7	86
10.0000	14.1250	10.6250	10.6250												
260	365	340	340	2.7	4	2 960	7 350	300 000	750 000	**STF260KVS3601Eg**	5	0.40	2.5	1.7	110
	365	340	340	2.5	4	2 960	7 350	300 000	750 000	**STF260KVS3651Eg**	5	0.40	2.5	1.7	110
260.350	422.275	314.325	317.500	6.4	3.3	3 600	7 050	370 000	720 000	**∗STF260KVS4251Eg**	5	0.33	3.0	2.0	170
10.2500	16.6250	12.3750	12.5000												
266.700	355.600	230.188	228.600	1.5	3.3	1 960	4 600	200 000	470 000	**∗STF266KVS3551Eg**	5	0.35	2.9	1.9	62
10.5000	14.0000	9.0625	9.0000												
276.225	393.700	269.875	269.875	1.5	3.3	2 720	6 100	277 000	620 000	**∗STF276KVS3952Eg**	5	0.45	2.2	1.5	105
10.8750	15.5000	10.6251	10.6251												

Note ∗ Bearings marked ∗ are inch design.
(1) Refer to page **B 343**

KVE (TQO) Type

Bore Diameter 279.400 – 420 mm

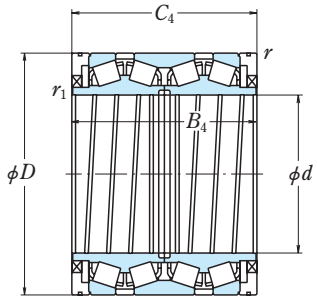

KVE

Dynamic Equivalent Load

$P = XF_r + YF_a$

$F_a/F_r \leqq e$		$F_a/F_r > e$	
X	Y	X	Y
1	Y_3	0.67	Y_2

Static Equivalent Load

$P_0 = F_r + Y_0 F_a$

Where $Y_0 \fallingdotseq Y_3$

The values of e, Y_2, and Y_3 are given in the table below.

Boundary Dimensions (mm/inch)						Basic Load Ratings (kN)		Basic Load Ratings {kgf}		Bearing Numbers	Figure(1)	Constant	Axial Load Factors		Mass (kg)
d	D	B_4	C_4	r_1 min.	r min.	C_r	C_{0r}	C_r	C_{0r}			e	Y_2	Y_3	approx.
279.400 11.0000	393.700 15.5000	269.875 10.6250	269.875 10.6250	1.5	6.4	2 720	6 100	277 000	620 000	**∗STF279KVS3952Eg**	5	0.45	2.2	1.5	102
	393.700 15.5000	270.630 10.6547	269.875 10.6250	1.5	6.4	2 290	5 150	233 000	525 000	**∗279KVE3951E**	3	0.41	2.5	1.7	105
279.4	393.7	320	320	1.5	6.4	3 100	7 350	315 000	745 000	**STF279KVS3954Eg**	5	0.40	2.5	1.7	120
	410	420	420	1	6.4	3 300	7 400	335 000	755 000	**279KVE4101**	4	0.42	2.4	1.6	190
280	380	290	290	1.5	3	2 230	5 350	227 000	545 000	**280KVE3801E**	3	0.37	2.7	1.8	96.2
	395	340	340	1.5	2.5	2 950	7 050	300 000	720 000	**280KVE3901E**	3-4	0.40	2.5	1.7	133
	395	340	340	1.5	2.5	2 950	7 050	300 000	720 000	**280KVE3902E**	3	0.40	2.5	1.7	133
	410	268	268	1.5	6.4	2 330	4 600	237 000	470 000	**280KVE4101E**	3-4	0.33	3.0	2.0	121
	412	340	340	3	3	3 300	7 400	335 000	755 000	**280KVE4102E**	3-1	0.42	2.4	1.6	156
290	400	346	346	3	4	3 250	8 400	330 000	855 000	**STF290KVS4001Eg**	5	0.40	2.5	1.7	112
304.648 11.9940	438.048 17.2460	280.990 11.6260	279.400 11.0000	3.3	3.3	3 100	6 750	315 000	690 000	**∗STF304KVS4351Eg**	5	0.45	2.2	1.5	132
304.648 11.9940	438.048 17.2460	281.740 11.0921	279.400 11.0000	3.3	3.3	2 630	5 600	268 000	570 000	**∗304KVE4351E**	3-2	0.47	2.1	1.4	140
304.8 12.0000	419.100 16.5000	269.875 10.6250	269.875 10.6250	1.5	6.4	2 850	6 550	291 000	665 000	∗STF304KVS4151Eg	5	0.33	3.0	2.0	111
304.902 12.0040	412.648 16.2460	266.700 10.5000	266.700 10.5000	1.5	3.3	2 760	6 500	281 000	665 000	**∗STF304KVS4152Eg**	5	0.33	3.0	2.0	100
310	430	310	310	3	3	3 350	8 200	345 000	835 000	**STF310KVS4301Eg**	5	0.46	2.2	1.5	140
	430	350	350	2.7	3	3 700	9 550	375 000	970 000	STF310KVS4302Eg	5	0.46	2.2	1.5	155
317.500 12.5000	422.275 16.6250	269.875 10.6250	269.875 10.6250	1.5	3.3	2 740	6 750	279 000	690 000	**∗STF317KVS4251Eg**	5	0.34	3.0	2.0	100
317.500 12.5000	447.675 17.6250	367.000 14.4488	367.000 14.4488	2.5	3.0	3 450	8 100	350 000	825 000	**∗317KVE4451E**	3	0.46	2.2	1.5	184
343.052 13.5060	457.098 17.9960	254.000 10.0000	254.000 10.0000	1.5	3.3	2 830	6 700	289 000	685 000	**∗STF343KVS4551Eg**	5	0.45	2.2	1.5	110
	457.098 17.9960	299.000 11.7717	299.000 11.7717	1.5	3.3	2 830	6 950	289 000	705 000	**∗343KVE4561E**	3	0.46	2.2	1.5	137
355.600 14.0000	457.200 18.0000	252.412 9.9375	252.412 9.9375	1.5	3.3	2 650	6 750	270 000	685 000	**∗STF355KVS4551Eg**	5	0.32	3.2	2.1	98
395	545	360	360	2.5	5	3 650	9 250	375 000	945 000	**395KVE5401E**	3-1	0.47	2.1	1.4	255
406.400 16.0000	546.100 21.5000	288.925 11.3750	288.925 11.3750	1.5	6.4	3 950	9 450	400 000	965 000	**∗STF406KVS5451Eg**	5	0.48	2.1	1.4	184
	546.100 21.5000	346.000 13.6221	346.000 13.6221	0.5	6.4	2 560	5 800	261 000	590 000	**∗406KVE5454E**	4-1	0.47	2.1	1.4	231
420	590	395	375	2.5	5	3 550	8 200	365 000	835 000	**420KVE5901E**	3-1	0.80	1.3	0.8	332

Note ∗ Bearings marked ∗ are inch design.
(1) Refer to page **B 343**

KVE (TQO) Type

Bore Diameter 440 – 825.5 mm

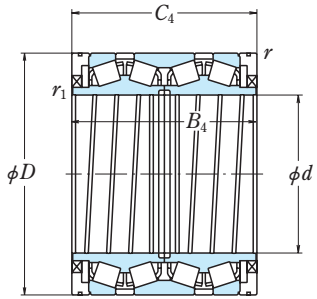

KVE

Dynamic Equivalent Load

$P = XF_r + YF_a$

$F_a/F_r \leqq e$		$F_a/F_r > e$	
X	Y	X	Y
1	Y_3	0.67	Y_2

Static Equivalent Load

$P_0 = F_r + Y_0 F_a$

Where $Y_0 \fallingdotseq Y_3$

The values of e, Y_2, and Y_3 are given in the table below.

Boundary Dimensions (mm/inch)						Basic Load Ratings (kN)		Basic Load Ratings {kgf}		Bearing Numbers	Figure(1)	Constant	Axial Load Factors		Mass (kg)
d	D	B_4	C_4	r_1 min.	r min.	C_r	C_{0r}	C_r	C_{0r}			e	Y_2	Y_3	approx.
440	590	510	510	4	4	5 450	14 300	555 000	1 460 000	**440KVE5901E**	4-1	0.38	2.7	1.8	396
	620	454	454	4	6	6 500	15 700	665 000	1 600 000	**440KVE6201E**	3-1	0.33	3.0	2.0	435
450	595	368	368	4	5	5 550	15 000	565 000	1 520 000	**STF450KVS5901Eg**	5	0.33	3.0	2.0	272
457.200	596.900	276.220	279.400	1.5	3.3	4 000	9 850	405 000	1 010 000	**∗STF457KVS5951Eg**	5	0.47	2.2	1.4	206
18.0000	23.5000	10.8748	11.0000												
460	590	470	470	2.5	5	4 900	14 100	500 000	1 440 000	**460KVE5901E**	3-1	0.28	3.6	2.4	322
480	615	435	435	3	5	4 650	12 800	470 000	1 310 000	**480KVE6101A**	4-2	0.32	3.2	2.1	323
	678	574	574	3	5	8 400	21 500	860 000	2 190 000	**480KVE6702E**	4-1	0.34	3.0	2.0	662
482.600	615.950	330.200	330.200	4.3	6.4	4 900	13 500	500 000	1 370 000	**∗STF482KVS6151Eg**	5	0.33	3.1	2.1	235
19.0000	24.2500	13.0000	13.0000												
482.600	615.950	330.200	330.200	4.3	6.4	3 650	9 650	370 000	985 000	**∗482KVE6152E**	3	0.37	2.7	1.8	243
19.0000	24.2500	13.0000	13.0000												
	615.950	419.100	402.050	2.3	6.4	4 700	13 600	480 000	1 380 000	**∗482KVE6155E**	3	0.38	2.7	1.8	302
	24.2500	16.5000	15.8287												
	647.700	417.512	417.512	3.3	6.4	5 500	13 800	560 000	1 410 000	**∗482KVE6453E**	3-5	0.37	2.7	1.8	392
	25.5000	16.4375	16.4375												
488.950	622.300	365.125	365.125	3.8	6.4	3 450	8 950	350 000	915 000	**∗488KVE6251E**	4	0.29	3.5	2.3	272
19.2500	24.5000	14.3750	14.3750												
490	625	435	435	3	5	4 550	12 500	465 000	1 280 000	**490KVE6201A**	4-2	0.32	3.2	2.1	329
509.948	654.924	377.000	379.000	1.5	6.4	4 800	13 000	490 000	1 330 000	**∗509KVE6554E**	3	0.41	2.4	1.6	321
20.0767	25.7844	14.8425	14.9213												
520	735	535	535	5	6	8 800	22 700	900 000	2 310 000	**520KVE7301E**	3-1	0.33	3.0	2.0	726
558.800	736.600	540.000	540.000	3.3	6.4	8 950	25 300	910 000	2 580 000	**∗558KVE7351E**	3-3	0.35	2.9	1.9	625
22.0000	29.0000	21.2598	21.2598												
595.312	844.550	615.950	615.950	1.5	6.4	12 600	33 000	1 290 000	3 350 000	**∗595KVE8451E**	3	0.33	3.0	2.0	1 110
23.4375	33.2500	24.2500	24.2500												
	844.550	615.950	615.950	3.3	6.4	10 900	27 200	1 110 000	2 780 000	**∗595KVE8452E**	4	0.35	2.9	1.9	1 110
	33.2500	24.2500	24.2500												
609.600	787.400	361.950	361.950	1.5	6.4	5 450	14 400	555 000	1 470 000	**∗609KVE7851E**	3	0.42	2.4	1.6	452
24.0000	31.0000	14.2500	14.2500												
711.200	914.400	387.350	317.500	3.3	6.4	6 400	19 300	655 000	1 970 000	**∗711KVE9152A**	3	0.38	2.6	1.8	585
28.0000	36.0000	15.2500	12.5000												
	914.400	410.000	410.000	3.3	6.4	7 000	20 100	715 000	2 050 000	**∗711KVE9153E**	3-1	0.44	2.3	1.5	681
	36.0000	16.1417	16.1417												
	914.400	425.450	387.350	8.0	6.4	6 400	19 300	655 000	1 970 000	**∗711KVE9155E**	3	0.38	2.6	1.8	675
	36.0000	16.7500	15.2500												
785	1 015	700	700	4	6	13 500	41 000	1 380 000	4 150 000	**785KVE1001E**	4-1	0.40	2.5	1.7	1 460
825.5	1 160	565	565	5	6	13 900	33 500	1 420 000	3 400 000	**825KVE1101E**	3	0.40	2.5	1.7	1 890

Note ∗ Bearings marked ∗ are inch design.
(1) Refer to page **B 343**

Figures of Typical Four-Row Cylindrical Roller Bearings

Cylindrical Bores

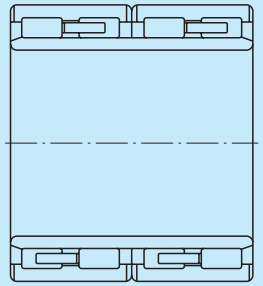

Figure 1

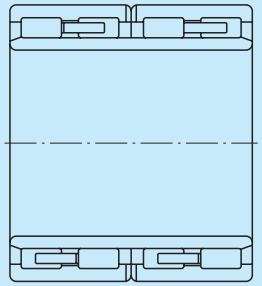

Figure 2

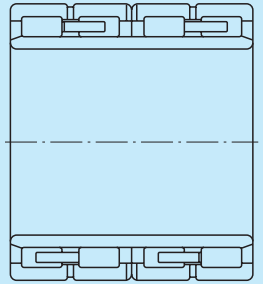

Figure 3

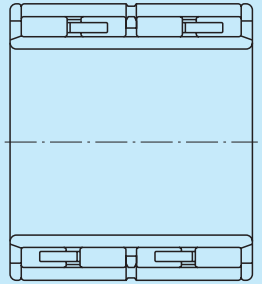

Figure 4

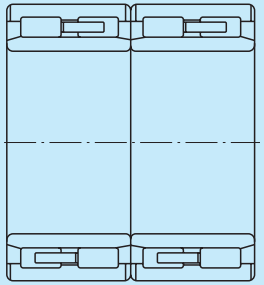

Figure 5

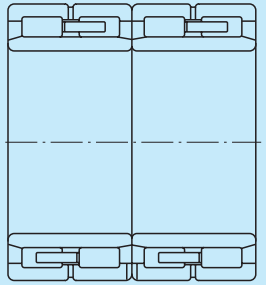

Figure 6

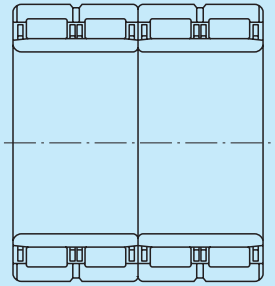

Figure 7

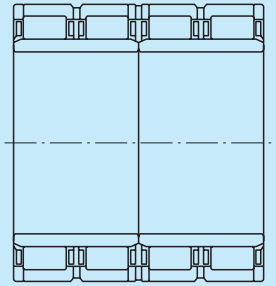

Figure 8

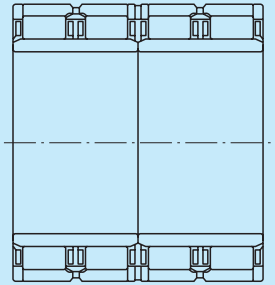

Figure 9

RV Type

Bore Diameter 100 – 170 mm

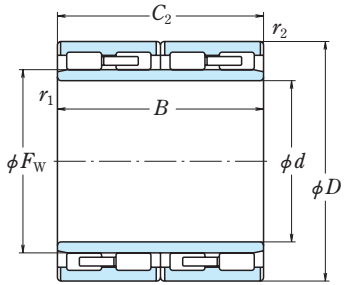

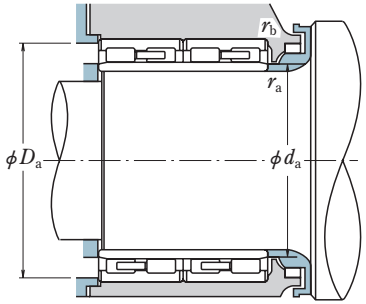

Boundary Dimensions (mm)							Basic Load Ratings (kN)		{kgf}	
d	D	B	C_2	F_w	r_1 min.	r_2 min.	C_r	C_{0r}	C_r	C_{0r}
100	140	104	104	111	1.5	1.1	400	820	41 000	84 000
110	170	120	120	127	2	2	615	1 100	62 500	112 000
120	165	87	87	134.5	1.1	1.1	365	725	37 500	74 000
	180	105	105	136	2	2	530	880	54 000	89 500
	215	174	174	147	2.1	2.1	1 060	1 600	108 000	164 000
127	174.625	150.812	150.812	139.5	1.5	1.5	735	1 580	75 000	161 000
	203.2	127	127	147.5	2	2	705	1 110	72 000	113 000
130	200	125	125	149	2	2	700	1 190	71 000	121 000
	200	104	104	149	2	2	570	950	58 000	97 000
140	210	116	116	160	2	2	640	1 130	65 500	116 000
145	210	155	155	166	1.5	1.5	925	1 920	94 000	196 000
	225	156	156	169	2	2	975	1 820	99 000	185 000
150	220	150	150	168	2	2	900	1 700	91 500	174 000
	225	150	150	168.5	1.5	2.1	970	1 810	99 000	184 000
	225	136	136	168.776	2.1	2.1	820	1 460	84 000	149 000
	230	130	130	174	2.1	2.1	845	1 520	86 000	155 000
	230	156	156	174	2	2	965	1 810	98 500	185 000
159.99	220	180	180	176	2	2	1 050	2 410	107 000	245 000
160	230	130	130	178	2	2	780	1 340	79 500	136 000
	230	168	168	180	2	2	1 040	2 200	107 000	225 000
	230	180	180	178	2	2	1 080	2 280	110 000	232 000
	240	120	120	183	2.1	2.1	745	1 320	76 000	135 000
	240	170	170	183	2	2	1 080	2 050	110 000	209 000
	240	145	145	180.016	2.1	2.1	920	1 600	93 500	163 000
170	230	120	120	187	2	2	755	1 610	77 000	164 000
	240	160	160	190	2	2	1 000	2 130	102 000	217 000
	250	168	168	192	2.1	2.1	1 210	2 320	123 000	237 000
	250	170	170	192	2.1	2.1	1 210	2 320	123 000	237 000
	255	180	180	193	2.1	2.1	1 310	2 500	134 000	255 000
	260	150	150	195	2.1	2.1	1 030	1 840	105 000	187 000

Bearing Numbers	Figure(1)	Abutment and Fillet Dimensions (mm)				Mass (kg)
		d_a	D_a	r_a max.	r_b max.	approx.
100RV1401	3	110	130	1.5	1	4.8
110RV1701	1	122	157	2	2	9.9
120RV1601	1	130	155	1	1	5.4
120RV1801	1	132	167	2	2	8.9
120RV2101	1	134	199	2	2	26.6
127RV1722	1	138	163	1.5	1.5	10.5
127RV2001	1	139	190	2	2	15.4
130RV2001	1	142	187	2	2	14
130RV2003	1	142	187	2	2	11.7
140RV2101	1	152	196	2	2	13.9
145RV2101	1	157	197	1.5	1.5	17.8
145RV2201	1	158	211	2	2	23
150RV2201	1	163	206	2	2	20
150RV2203	1	162	209	1.5	2	20.8
150RV2204	1	165	209	2	2	18.6
150RV2301	1	165	214	2	2	19.6
150RV2302	1	163	216	2	2	23.6
159RV2201	2	173	206	2	2	20.6
160RV2301	1	173	216	2	2	16.4
160RV2302	1	173	216	2	2	22.7
160RV2303	2	173	216	2	2	24.2
160RV2401	1	175	224	2	2	18.8
160RV2402	1	173	226	2	2	26.6
160RV2403	1	175	224	2	2	22.3
170RV2301	1	183	216	2	2	14
170RV2402	1	183	226	2	2	22.8
170RV2501	1	185	234	2	2	27.4
170RV2502	1	185	234	2	2	27.7
170RV2503	1	185	239	2	2	31.5
170RV2602	1	185	244	2	2	28.2

Note (1) Refer to page **B 386**

RV Type

Bore Diameter 180 – 240 mm

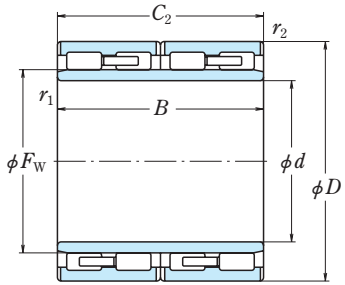

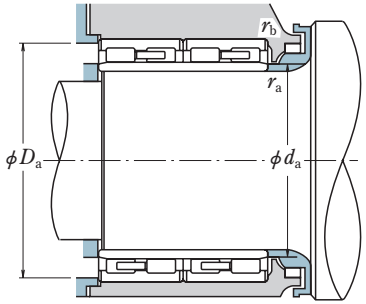

Boundary Dimensions (mm)							Basic Load Ratings (kN)		Basic Load Ratings {kgf}	
d	D	B	C_2	F_w	r_1 min.	r_2 min.	C_r	C_{0r}	C_r	C_{0r}
180	250	156	156	200	2	2	1 020	2 230	104 000	227 000
	260	168	168	202	2.1	2.1	1 150	2 300	118 000	235 000
	265	180	180	204	2.1	2.1	1 340	2 690	136 000	275 000
	265	180	180	203	2.1	2.1	1 230	2 420	126 000	247 000
	280	180	180	205.085	2.1	2.1	1 410	2 490	144 000	254 000
190	260	168	168	212	2	2	1 140	2 600	116 000	265 000
	270	200	200	212	2.1	2.1	1 470	3 100	150 000	315 000
	270	170	170	213	2.1	2.1	1 290	2 610	132 000	266 000
	270	170	170	212	2	2	1 290	2 610	132 000	266 000
	280	200	200	214	2.1	2.1	1 480	2 920	151 000	298 000
200	250	200	200	215	1	1	900	2 500	92 000	255 000
	280	200	200	224	2.1	2.1	1 410	3 200	144 000	325 000
	280	200	200	222	2.1	2.1	1 410	3 200	144 000	325 000
	280	190	190	223	2.1	2.1	1 350	3 050	138 000	310 000
	280	170	170	223	2.1	2.1	1 150	2 460	117 000	251 000
	290	192	192	226	2.1	2.1	1 420	3 000	145 000	305 000
	310	230	230	229	2.1	2.1	1 840	3 500	188 000	360 000
	320	216	216	231	3	3	2 120	3 900	216 000	400 000
210	290	192	192	236	2.1	2.1	1 400	3 350	142 000	340 000
219.954	310	183	183	244.5	1.5	1	1 480	3 150	151 000	320 000
220	310	192	192	247	2.1	2.1	1 540	3 450	157 000	350 000
	310	225	225	245	2.1	2.1	1 740	3 900	178 000	395 000
	320	210	210	248	2.1	2.1	1 790	3 650	182 000	375 000
	320	210	210	246	2.1	2.1	1 900	3 750	194 000	380 000
222.25	320.675	241.3	241.3	251	2.1	2.1	1 990	4 350	203 000	445 000
230	330	206	206	260	2.1	2.1	1 760	3 900	180 000	395 000
	340	260	260	261	3	3	2 390	5 100	244 000	520 000
	365	250	250	266	3	3	2 310	4 300	236 000	435 000
240	330	220	220	270	3	3	1 770	4 400	180 000	445 000
	340	220	220	268	3	3	1 890	3 900	193 000	400 000
	360	220	220	272	3	3	2 250	4 350	230 000	445 000

Bearing Numbers	Figure(1)	Abutment and Fillet Dimensions (mm)				Mass (kg)
		d_a	D_a	r_a max.	r_b max.	approx.
180RV2501	1	193	236	2	2	23.4
180RV2601	1	195	244	2	2	29.2
180RV2602	1	195	248	2	2	33.7
180RV2603	1	195	248	2	2	33.4
180RV2802	3	195	263	2	2	40.9
190RV2601	1	203	245	2	2	26.6
190RV2701	1	206	253	2	2	36
190RV2702	1	206	253	2	2	30.4
190RV2703	1	203	255	2	2	30.6
190RV2801	1	206	263	2	2	41.3
200RV2521	SP	210	240	1	1	22.3
200RV2801	1	216	263	2	2	38.3
200RV2802	1	216	263	2	2	38.6
200RV2803	1	216	263	2	2	36.4
200RV2804	1	216	263	2	2	32.3
200RV2901	1	216	273	2	2	42.3
200RV3102	1	216	293	2	2	63.7
200RV3231	4	218	300	2.5	2.5	69.9
210RV2901	1	226	273	2	2	39
219RV3131	4	233	298	1.5	1	45.3
220RV3101	1	236	293	2	2	46.1
220RV3102	1	236	293	2	2	52.9
220RV3201	1	236	302	2	2	56
220RV3203	SP	236	302	2	2	57
222RV3201	2	238	303	2	2	65
230RV3301	1	246	312	2	2	58.2
230RV3401	1	248	320	2.5	2.5	81
230RV3601	5	248	344	2.5	2.5	98.3
240RV3301	1	259	310	2.5	2.5	57.7
240RV3403	1	259	320	2.5	2.5	61.7
240RV3601	2	259	340	2.5	2.5	77.8

Note (1) Refer to pages **B 386** and **B 387**
The letters "SP" indicate a special design. Please consult NSK for details.

RV Type

Bore Diameter 250 – 360 mm

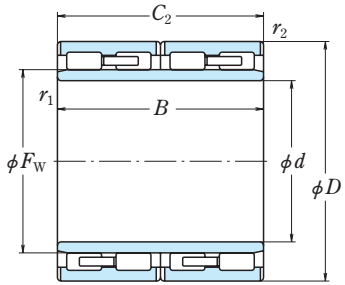

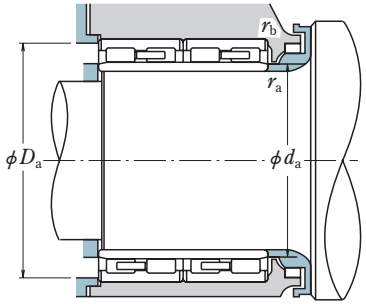

Boundary Dimensions (mm)							Basic Load Ratings (kN)		Basic Load Ratings {kgf}		Bearing Numbers	Figure(1)	Abutment and Fillet Dimensions (mm)				Mass (kg)
d	D	B	C_2	F_w	r_1 min.	r_2 min.	C_r	C_{0r}	C_r	C_{0r}			d_a	D_a	r_a max.	r_b max.	approx.
250	350	220	220	278	3	3	1 930	4 200	197 000	430 000	**250RV3501**	1	269	330	2.5	2.5	64.8
259.948	368	218	218	290	2.1	1.1	2 010	4 350	205 000	445 000	**259RV3631**	4	277	354	2	1	76.7
260	355	260	260	286	2.1	2.1	2 090	5 000	213 000	510 000	**260RV3521**	5	277	337	2	2	74.5
	370	220	220	292	3	3	2 050	4 450	209 000	455 000	**260RV3701**	1	279	349	2.5	2.5	76
	380	280	280	294	3	3	2 820	6 250	288 000	635 000	**260RV3801**	1	279	359	2.5	2.5	107
	400	290	290	296	4	4	3 250	6 350	335 000	650 000	260RV4001	1	282	376	3	3	133
270	380	230	230	298	2.1	2.1	2 330	5 050	238 000	515 000	270RV3801	1	287	361	2	2	83
280	390	220	220	312	3	3	2 120	4 800	217 000	490 000	**280RV3901**	1	299	369	2.5	2.5	80.9
	390	240	240	312	3	3	2 360	5 500	241 000	560 000	**280RV3902**	1	299	369	2.5	2.5	88.5
	390	275	275	308	3	1.1	2 860	6 450	291 000	660 000	280RV3903	1	299	375	2.5	1	100
	400	285	285	316	3	3	3 000	6 950	305 000	710 000	**280RV4021**	5	299	379	2.5	2.5	117
290	390	234	234	320	3	3	2 270	5 600	232 000	570 000	**290RV3901**	1	310	369	2.5	2.5	79.7
	410	240	240	320	3	3	2 570	5 450	263 000	555 000	**290RV4101**	1	310	389	2.5	2.5	99
	420	300	300	327	3	3	3 300	7 500	335 000	765 000	**290RV4201**	1	310	398	2.5	2.5	138
300	400	300	300	328	2	2	2 720	8 900	278 000	700 000	**300RV4021**	5	316	383	2	2	103
	420	240	240	332	3	3	2 670	5 750	272 000	585 000	**300RV4201**	1	320	398	2.5	2.5	101
	420	300	300	332	2	2	3 200	7 200	325 000	735 000	**300RV4221**	5	316	402	2	2	128
310	420	300	300	338	3	3	3 300	8 050	340 000	820 000	**310RV4201**	1	330	398	2.5	2.5	119
	430	240	240	344.5	3	3	2 610	5 950	266 000	605 000	**310RV4301**	1	330	408	2.5	2.5	107
320	450	240	240	358	3	3	2 760	6 150	282 000	630 000	**320RV4501**	1	340	428	2.5	2.5	120
	480	350	350	364	4	1.5	4 850	10 500	495 000	1 070 000	320RV4811	8	343	462	3	1.5	232
330	430	230	230	358	3	3	2 340	5 850	238 000	595 000	**330RV4301**	1	350	408	2.5	2.5	86.3
	440	200	200	360	3	3	2 160	4 750	220 000	485 000	**330RV4401**	3	350	418	2.5	2.5	83.8
	460	340	340	365	4	4	3 550	8 650	365 000	880 000	**330RV4601**	1	353	435	3	3	174
340	450	250	250	371	3	3	2 720	6 750	277 000	690 000	**340RV4501**	1	361	428	2.5	2.5	108
	450	250	250	368	3	3	2 720	6 750	277 000	690 000	**340RV4502**	3	361	428	2.5	2.5	108
	480	350	350	378	4	4	4 050	9 400	410 000	955 000	**340RV4801**	1	364	454	3	3	198
	480	350	350	378	spec.	1.5	4 600	11 100	470 000	1 130 000	**340RV4812E**	1	355	462	2.9	1.5	208
345	480	350	350	376	3	3	4 400	10 300	450 000	1 050 000	**345RV4821**	6	366	457	2.5	2.5	190
360	480	290	290	394	3	3	3 250	8 300	335 000	850 000	**360RV4801**	1	381	457	2.5	2.5	146
	510	370	370	400	4	4	4 500	10 100	455 000	1 030 000	**360RV5101**	1	384	484	3	3	234

Note (1) Refer to pages **B 386** and **B 387**

RV Type

Bore Diameter 370 – 460 mm

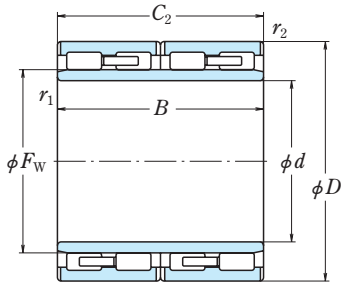

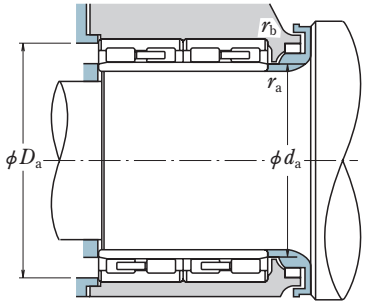

Boundary Dimensions (mm)							Basic Load Ratings (kN)		Basic Load Ratings {kgf}	
d	D	B	C_2	F_w	r_1 min.	r_2 min.	C_r	C_{0r}	C_r	C_{0r}
370	480	250	250	401	3	3	2 830	7 350	289 000	745 000
	520	380	380	409	4	2	6 000	14 400	615 000	1 460 000
	540	400	400	415	4	4	5 250	12 000	535 000	1 230 000
380	500	290	290	414	3	3	3 350	8 800	345 000	895 000
	520	290	290	418	4	4	3 750	8 850	385 000	900 000
	520	280	280	417	4	4	3 650	8 450	370 000	865 000
	540	340	340	424	5	5	4 700	10 900	475 000	1 110 000
	540	400	400	424	5	5	5 050	12 000	515 000	1 220 000
	540	400	400	422	5	2	6 000	14 400	610 000	1 470 000
	540	400	380	424	5	2	5 750	13 800	590 000	1 410 000
390	510	290	290	424	3	3	3 400	9 000	350 000	920 000
	550	400	400	434	5	5	5 150	12 400	525 000	1 260 000
400	520	250	250	432	4	4	3 000	7 700	305 000	785 000
	550	300	300	441	4	4	4 150	9 750	420 000	995 000
	560	400	400	446	5	5	5 650	13 600	575 000	1 390 000
	560	410	410	445	5	2	6 550	16 500	670 000	1 680 000
	560	400	400	446	5	5	4 750	11 300	485 000	1 150 000
	560	410	410	445	5	2	6 550	16 500	670 000	1 680 000
406.4	609.6	304.8	304.8	460	5	5	4 650	9 150	475 000	930 000
410	600	440	440	460	5	5	7 350	16 600	750 000	1 690 000
420	560	280	280	457	4	4	3 800	9 250	390 000	945 000
	560	400	400	458	4	4	4 950	13 000	505 000	7 330 000
	600	440	440	470	5	2	7 100	17 200	725 000	1 750 000
430	591	420	420	476	4	4	5 200	13 400	530 000	1 370 000
440	620	450	450	487	5	5	7 350	17 800	750 000	1 820 000
	620	450	450	490	4	4	7 450	19 000	760 000	1 940 000
450	630	450	450	500	4	4	6 950	17 500	710 000	1 780 000
460	620	400	400	506	4	4	5 500	14 700	560 000	1 500 000
	620	400	400	502	4	4	6 400	16 600	650 000	1 690 000
	620	460	460	502	4	4	7 100	19 100	725 000	1 950 000
	650	470	470	509	6	3	8 400	20 900	860 000	2 130 000
	670	500	500	522	6	6	8 900	22 700	910 000	2 320 000

Bearing Numbers	Figure(1)	Abutment and Fillet Dimensions (mm)				Mass (kg)
		d_a	D_a	r_a max.	r_b max.	approx.
370RV4801	1	391	457	2.5	2.5	116
370RV5211	SP	394	500	3	2	263
370RV5401	1	394	513	3	3	311
380RV5001	1	401	477	2.5	2.5	153
380RV5201	1	404	493	3	3	181
380RV5202	1	404	493	3	3	174
380RV5431	4	408	509	4	4	259
380RV5401	3	408	509	4	4	280
380RV5411	8	408	520	4	2	305
380RV5412	SP	408	520	4	2	294
390RV5101	1	412	487	2.5	2.5	156
390RV5521	6	419	519	4	4	303
400RV5202	3	425	493	3	3	136
400RV5501	1	425	523	3	3	212
400RV5612	8	429	529	4	4	308
400RV5613	8M	429	539	4	2	315
400RV5621	6	429	529	4	4	304
400RV5611	8	429	539	4	2	315
406RV6001	1	435	577	4	4	307
410RV6011	8	439	568	4	4	438
420RV5601	1	445	533	3	3	190
420RV5602	6	445	533	3	3	270
420RV6011	8	449	579	4	2	419
430RV5921	5	455	563	3	3	347
440RV6213	8	470	588	4	4	430
440RV6221	5	466	591	3	3	430
450RV6321	5	476	601	3	3	440
460RV6201	1	486	591	3	3	347
460RV6211	8	486	591	3	3	358
460RV6212	8M	486	591	3	3	412
460RV6511	8	496	624	5	2.5	514
460RV6721	7	496	631	5	5	596

Note (1) Refer to pages **B 386** and **B 387**
The letter "M" indicates bearing for oil mist lubrication.
The letters "SP" indicate a special design. Please consult NSK for details.

RV Type

Bore Diameter 480 – 640 mm

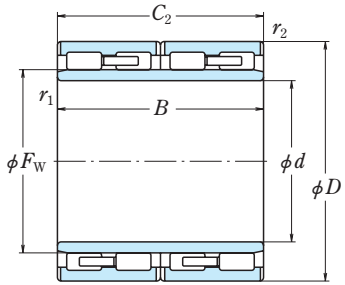

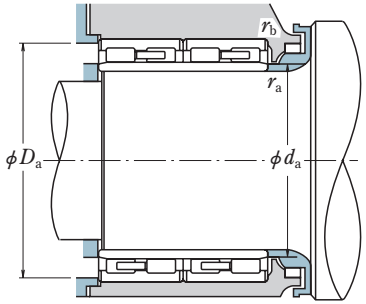

Boundary Dimensions (mm)							Basic Load Ratings (kN)		Basic Load Ratings {kgf}	
d	D	B	C_2	F_w	r_1 min.	r_2 min.	C_r	C_{0r}	C_r	C_{0r}
480	680	500	500	534	5	5	9 000	23 100	915 000	2 360 000
	680	500	500	534	5	5	9 000	23 100	915 000	2 360 000
	700	400	400	538	6	6	7 650	17 400	780 000	1 780 000
500	670	450	450	540	5	5	8 300	22 300	850 000	2 280 000
	680	420	405	550	5	5	6 700	17 600	685 000	1 790 000
	690	510	510	550	5	5	8 850	23 900	900 000	2 440 000
	690	510	510	552	5	5	9 000	24 600	920 000	2 500 000
	700	515	515	554	5	5	9 100	23 800	930 000	2 430 000
	710	480	480	558	5	5	8 500	21 200	865 000	2 160 000
	720	530	530	560	6	6	9 950	25 300	1 020 000	2 580 000
510	670	320	320	554	5	5	4 950	12 700	505 000	1 290 000
520	735	535	535	574.5	5	5	10 400	26 300	1 060 000	2 680 000
530	780	570	570	601	6	6	11 800	29 200	1 200 000	2 980 000
	780	570	570	595	6	6	11 800	29 200	1 210 000	2 970 000
536.176	762.03	558.8	558.8	600	5	5	10 800	28 800	1 100 000	2 940 000
	762.03	558.8	558.8	598	spec.	4	11 600	30 000	1 180 000	3 050 000
550	740	510	510	602	5	5	9 150	25 700	935 000	2 620 000
560	800	600	600	620	6	6	12 400	31 500	1 270 000	3 200 000
570	815	594	594	628	6	6	13 700	33 500	1 390 000	3 450 000
571.1	812.97	594	594	636	6	5	13 200	34 500	1 350 000	3 500 000
600	820	575	575	660	spec.	3	12 900	35 500	1 310 000	3 650 000
	870	640	640	682	7.5	4	15 700	40 000	1 600 000	4 100 000
	870	640	640	672	7.5	4	15 700	40 000	1 600 000	4 100 000
610	850	570	570	670	6	5	12 600	33 000	1 290 000	3 350 000
	870	660	660	680	6	6	15 400	41 500	1 570 000	4 250 000
634.5	901.87	674	674	705	7.5	4	16 200	43 500	1 650 000	4 450 000
640	870	610	610	697	6	3	14 200	40 000	1 450 000	4 050 000

Bearing Numbers	Figure(1)	Abutment and Fillet Dimensions (mm)				Mass (kg)
		d_a	D_a	r_a max.	r_b max.	approx.
480RV6801	7	510	646	4	4	610
480RV6811	8	510	646	4	4	610
480RV7031	9	517	660	5	5	538
500RV6712E	SP	531	637	4	4	464
500RV6812	8	531	646	4	4	451
500RV6913	8M	531	656	4	4	580
500RV6921	7	531	656	4	4	580
500RV7021	7	531	666	4	4	622
500RV7111	8	531	676	4	4	632
500RV7211	8	537	680	5	5	782
510RV6701	1	541	637	4	4	298
520RV7331	9	551	700	4	4	750
530RV7811	8M	568	738	5	5	960
530RV7813	8	568	738	5	5	960
536RV7631	9	568	727	4	4	849
536RV7612E	SP	568	731	5.8	3	849
550RV7411A	8M	582	705	4	4	648
560RV8011	8	598	758	5	5	1 020
570RV8111	8	608	773	5	5	960
571RV8111	8	610	777	5	4	947
600RV8212E	SP	629	790	5.5	2.5	931
600RV8711	8M	645	836	6	3	1 320
600RV8713	8	645	836	6	3	1 320
610RV8511	8	649	813	5	4	1 040
610RV8711	8	649	827	5	5	1 330
634RV9031	9	680	868	6	3	1 440
640RV8711	8M	680	839	5	2.5	1 100

Note (1) Refer to pages **B 386** and **B 387**
The letter "M" indicates bearing for oil mist lubrication.
The letters "SP" indicate a special design. Please consult NSK for details.

RV Type

Bore Diameter 650 – 850 mm

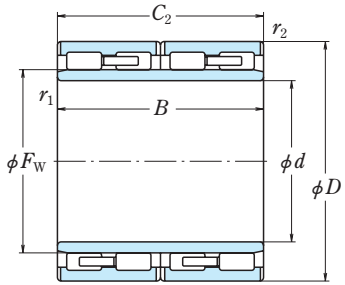

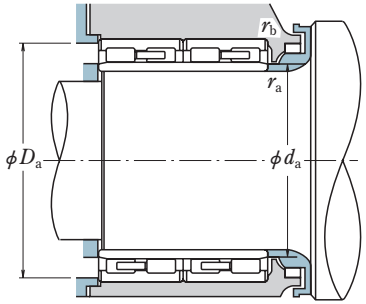

Boundary Dimensions (mm)							Basic Load Ratings (kN)		Basic Load Ratings {kgf}	
d	D	B	C_2	F_w	r_1 min.	r_2 min.	C_r	C_{0r}	C_r	C_{0r}
650	920	670	670	723	7.5	7.5	16 200	44 000	1 660 000	4 500 000
	920	690	690	723	7.5	7.5	16 600	45 000	1 690 000	4 600 000
690	980	715	715	767.5	7.5	7.5	17 900	48 000	1 820 000	4 900 000
	980	750	750	766	7.5	7.5	19 200	53 000	1 960 000	5 400 000
	980	750	750	766	7.5	7.5	19 200	53 000	1 960 000	5 400 000
700	930	620	620	763	6	6	12 900	38 000	1 320 000	3 900 000
	980	700	700	774	6	6	17 800	49 000	1 820 000	5 000 000
710	1 000	715	715	787.5	7.5	7.5	18 700	50 500	1 900 000	5 150 000
725	1 000	700	700	796	6	6	18 200	51 000	1 860 000	5 200 000
	1 000	700	700	796	6	6	17 700	49 500	1 810 000	5 050 000
730	960	620	620	790	6	3	15 000	44 500	1 530 000	4 500 000
	1 030	750	750	809	6	6	20 700	56 500	2 120 000	5 800 000
750	1 000	670	670	813	6	6	16 800	49 500	1 710 000	5 050 000
755	1 070	750	750	837	7.5	7.5	21 700	58 500	2 220 000	6 000 000
760	1 030	750	750	834	7.5	7.5	18 200	53 500	1 860 000	5 450 000
	1 080	805	790	845	6	6	22 200	61 000	2 260 000	6 200 000
761.425	1 079.602	787.4	787.4	845	7.5	7.5	22 200	61 000	2 260 000	6 200 000
800	1 080	700	700	878	6	3	19 600	58 000	2 000 000	5 900 000
	1 080	750	750	880	6	6	19 200	56 500	1 950 000	5 750 000
	1 080	750	750	880	6	6	18 700	56 500	1 910 000	5 750 000
820	1 100	745	720	892	6	3	19 700	58 500	2 010 000	6 000 000
	1 130	800	800	903	7.5	7.5	22 900	66 500	2 330 000	6 800 000
	1 130	825	800	903	7.5	7.5	22 900	66 500	2 330 000	6 800 000
	1 160	840	840	911	7.5	7.5	25 600	72 000	2 610 000	7 300 000
840	1 160	840	840	920	2	7.5	24 900	71 000	2 540 000	7 250 000
850	1 150	840	840	928	7.5	4	23 300	68 500	2 370 000	7 000 000
	1 180	650	650	945	7.5	7.5	19 600	53 000	2 000 000	5 400 000
	1 180	850	850	940	7.5	7.5	24 600	72 000	2 510 000	7 350 000
	1 180	875	850	940	7.5	7.5	24 600	72 000	2 510 000	7 350 000

Bearing Numbers	Figure(1)	Abutment and Fillet Dimensions (mm)				Mass (kg)
		d_a	D_a	r_a max.	r_b max.	approx.
650RV9212	8	696	870	6	6	1 470
650RV9211	8	696	870	6	6	1 520
690RV9831	9	737	929	6	6	1 790
690RV9832	9M	737	929	6	6	1 880
690RV9812	8	737	929	6	6	1 880
700RV9311	8	741	885	5	5	1 200
700RV9821	7	741	934	5	5	1 720
710RV1011	8	757	948	6	6	1 840
725RV1011	8	767	954	5	5	1 670
725RV1021	7	767	954	5	5	1 670
730RV9611	8	772	928	5	2.5	1 250
730RV1011	8	772	983	5	5	2 050
750RV1011	8	792	954	5	5	1 520
755RV1011	8	803	1 017	6	6	2 230
760RV1031	9	808	978	6	6	1 880
760RV1032A	9M	802	1 032	5	5	2 430
761RV1032	9	810	1 026	6	6	2 390
800RV1011	8	843	1 045	5	2.5	1 910
800RV1012	8	843	1 032	5	5	2 050
800RV1032	9	843	1 032	5	5	2 050
820RV1132	SP	863	1 065	5	2.5	2 000
820RV1117	8M	870	1 076	6	6	2 510
820RV1134	SP	870	1 076	6	6	2 530
820RV1111A	8	870	1 105	6	6	2 900
840RV1111	8M	866	1 105	2	6	2 790
850RV1114	8	900	1 111	6	3	2 610
850RV1133	9	900	1 125	6	6	2 260
850RV1111	8M	900	1 125	6	6	2 850
850RV1112A	8M	900	1 125	6	6	2 880

Note (1) Refer to page **B 387**
The letter "M" indicates bearing for oil mist lubrication.
The letters "SP" indicate a special design. Please consult NSK for details.

RV Type

Bore Diameter 860 – 1 120 mm

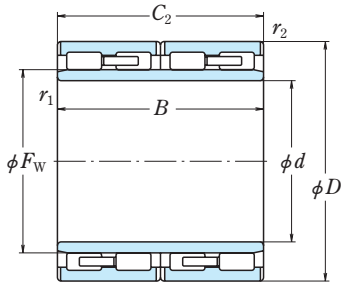

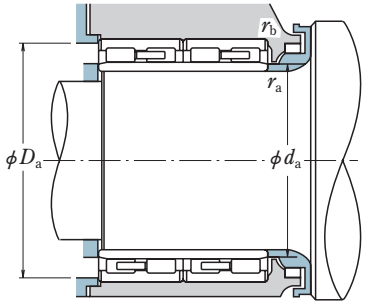

Boundary Dimensions (mm)							Basic Load Ratings (kN)		Basic Load Ratings {kgf}	
d	D	B	C_2	F_w	r_1 min.	r_2 min.	C_r	C_{0r}	C_r	C_{0r}
860	1 130	670	670	934	6	6	18 400	56 500	1 870 000	5 800 000
	1 160	735	710	940	7.5	4	20 400	60 000	2 080 000	6 100 000
900	1 220	840	840	989	7.5	4	26 800	80 000	2 730 000	8 200 000
	1 230	895	870	985	7.5	7.5	25 800	76 000	2 630 000	7 750 000
	1 280	930	930	1 000	7.5	7.5	32 000	89 500	3 250 000	9 100 000
920	1 280	865	850	1 015	7.5	7.5	28 000	80 000	2 860 000	8 150 000
950	1 360	1 000	1 000	1 075	9.5	5	37 500	10 8000	3 800 000	11 000 000
1 120	1 580	1 150	1 150	1 255	9.5	9.5	43 500	13 4500	4 450 000	13 700 000

Bearing Numbers	Figure(1)	Abutment and Fillet Dimensions (mm)				Mass (kg)
		d_a	D_a	r_a max.	r_b max.	approx.
860RV1132	9	904	1 081	5	5	1 780
860RV1133	9	910	1 121	6	3	2 200
900RV1212	8	951	1 179	6	3	2 950
900RV1211	8M	951	1 174	6	6	3 200
900RV1213	8	951	1 223	6	6	3 990
920RV1211A	8M	972	1 223	6	6	3 510
950RV1311	8	1 010	1 313	8	4	4 910
1120RV1511	8	1 084	1 509	8	8	7 400

Note (1) Refer to page **B 387**
The letter "M" indicates bearing for oil mist lubrication.

KDH (TDI) Type, Steep Angle

Bore Diameter 110 – 305.079 mm

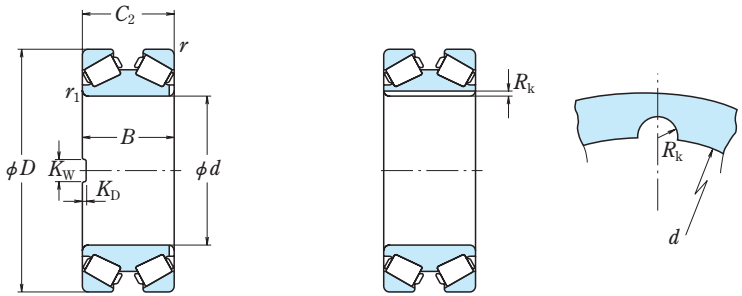

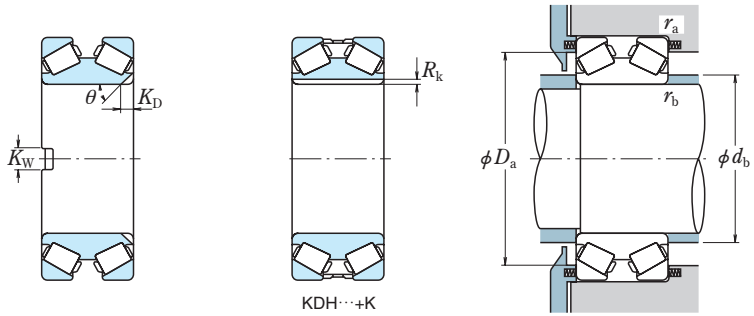

Boundary Dimensions (mm/inch) d	D	B	C_2	r_1 min.	r min.	Basic Load Ratings (kN) C_a	C_{0a}	(kgf) C_a	C_{0a}	Bearing Numbers
110	240	118	118	1	3	605	—	62 000	—	**110KDH2401A+K**
140	270	120	120	3	3	585	—	60 000	—	**140KDH2701+K**
150	320	144	144	5	4	985	—	100 000	—	**150KDH3201A+K**
170	360	144	160	2.5	4	1 260	—	129 000	—	**170KDH3601+K**
190	320	104	104	3	3	620	—	63 500	—	**190KDH3201A**
	320	114	114	3	3	620	—	63 500	—	**190KDH3202A+K**
200	380	180	180	1.5	4	1 500	—	153 000	—	**200KDH3801+K**
210	355	130	127	6	3	610	—	62 000	—	**210KDH3501A+K**
	355	130	127	5	3	610	—	62 000	—	**210KDH3501B+K**
	440	175	244	5	6	2 250	—	229 000	—	**210KDH4401+K**
220	360	120	120	3	3	745	—	76 000	—	**220KDH3601+K**
240	460	140	140	5	5	1 330	—	136 000	—	**240KDH4601**
260	389.5	105	105	1.5	3	815	—	83 000	—	**260KDH3801A+K**
	500	180	180	5	5	1 880	—	192 000	—	**260KDH5001+K**
279.400	482.600	177.800	177.800	6.0	4.8	1 660	—	169 000	—	**∗279KDH4852**
11.0000	19.0000	7.0000	7.0000							
285	380	92	92	1	2.5	545	—	55 500	—	**285KDH3802**
298	419.5	120	120	1.5	3	845	—	86 000	—	**298KDH4101+K**
300	440	105	105	4	4	860	—	87 500	—	**300KDH4401**
	440	105	105	4	4	860	—	87 500	—	**300KDH4401B+K**
	500	200	200	5	5	1 830	—	186 000	—	**300KDH5003+K**
	520	180	180	4	4	1 840	—	187 000	—	**300KDH5202**
305.003	559.867	169.980	176.350	6.4	4.8	2 140	—	218 000	—	**∗305KDH5551+K**
12.0080	22.0420	6.6921	6.9429							
305.069	559.999	200	200	6.5	spec.	2 410	—	246 000	—	**305KDH5501+K**
	559.999	200	200	6.5	9.5	2 410	—	246 000	—	**305KDH5501B**
305.079	500	200	200	6.4	4.8	1 740	—	177 000	—	**305KDH5001**
	500	200	200	6.4	4.8	1 740	—	177 000	—	**305KDH5001C**
	500	200	200	6.4	4.8	1 740	—	177 000	—	**305KDH5001E+K**

Key Way (mm) R_K	Notches K_W (mm)	K_D (mm)	θ (°)	(1) No. of Notches	Abutment and Fillet Dimensions (mm) d_b	D_a	r_a max.	r_b max.	Constant e	Axial Load Factors Y_2	Y_3	Y_0	Mass (kg) approx.
—	30	7	90	1X2	126	207	2.5	1	0.81	1.2	0.83	—	24.6
—	—	—	—	—	165	238	2.5	2.5	0.70	1.4	0.97	—	33
—	25	10	90	2X1	176	277	3	4	0.89	1.1	0.76	—	53.4
—	50	7	90	1X2	195	309	3	2	1.1	0.92	0.62	—	70.7
—	50	7	90	1X2	211	290	2.5	2.5	0.76	1.3	0.88	—	31
—	38	12	90	2X2	211	290	2.5	2.5	0.76	1.3	0.88	—	35.2
—	32	15	90	1X2	220	330	3	1.5	0.97	1.0	0.70	—	89.8
—	30	20	45	1X2	241	321	2.5	5	0.59	1.7	1.1	—	53.8
—	30.5	20	45	1X2	240	321	2.5	4	0.59	1.7	1.1	—	53.8
—	51	15	90	2X1	243	384	5	4	1.1	0.92	0.62	—	151
—	40	22	45	1X2	242	325	2.5	2.5	0.88	1.1	0.77	—	45.5
—	50	15	90	2X2	277	407	4	4	0.87	1.2	0.78	—	98.5
—	30	9	90	1X2	277	358	2.5	1.5	0.87	1.2	0.78	—	42.7
—	50	15	90	2X2	296	444	4	4	0.87	1.2	0.78	—	162
—	40	12	90	1X2	310	433	4.8	6.0	0.70	1.4	0.97	—	132
—	32	13	45	1X2	298	358	2	0.8	0.70	1.4	0.97	—	27.3
—	20	8.5	90	1X2	313	388	2.5	1	0.81	1.2	0.83	—	50.6
6.55	—	—	—	—	324	408	3	3	0.87	1.2	0.78	—	49.6
—	32.1	22.22	45	1X2	324	408	3	3	0.87	1.2	0.78	—	52.2
—	50.8	34.92	45	2X2	333	453	4	4	0.76	1.3	0.89	—	161
—	50	30	45	2X2	331	466	3	3	0.81	1.2	0.83	—	152
—	—	—	—	—	340	492	4.8	6.4	0.89	1.1	0.76	—	180
—	50.8	19.05	90	2X2	349	503	—	6.5	1.1	0.93	0.63	—	206
—	50.8	39.69	45	2X2	349	494	9.5	6.5	1.1	0.93	0.63	—	198
9.5	—	—	—	—	335	447	4.8	6.4	0.70	1.4	0.97	—	158
—	51.2	30	45	2X2	335	446	4.8	6.4	0.70	1.4	0.97	—	158
9.5	40	22	45	1X2	335	447	4.8	6.4	0.70	1.4	0.97	—	162

Note ∗ Bearings marked ∗ are inch design.

Remarks 1. Double-row tapered roller bearings with the suffix + K have outer ring spacers.
2. C_a of the basic load ratings is not the limiting load. For this bearing type, apply a preload.

Note (1) (No. of notches) X (No. of faces)

Remarks 3. Please consult with NSK for selection, operation, basic static load ratings (C_{0a}) and axial load factors (Y_0) of bearings.

KDH (TDI) Type, Steep Angle

Bore Diameter 305.079 – 400 mm

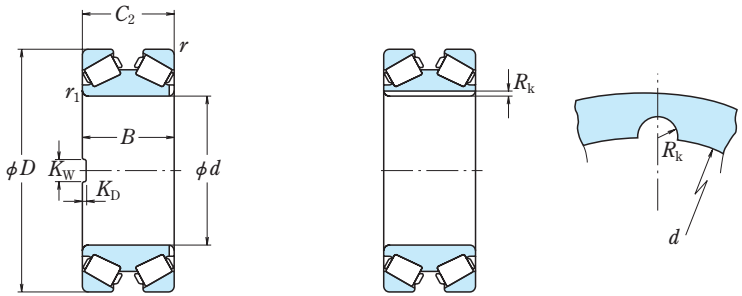

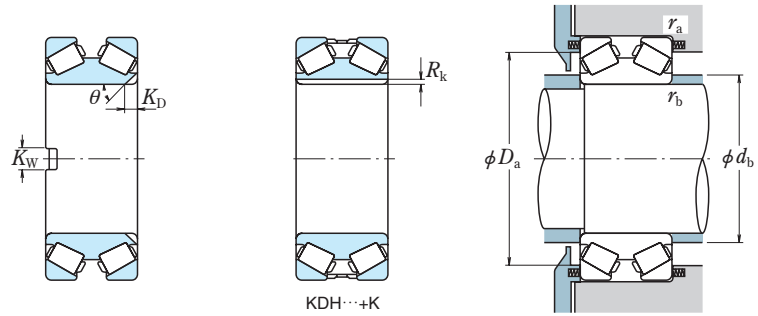

Boundary Dimensions (mm/inch) d	D	B	C_2	r_1 min.	r min.	Basic Load Ratings (kN) C_a	C_{0a}	(kgf) C_a	C_{0a}	Bearing Numbers
305.079	500	200	200	5	5	1 880	—	191 000	—	305KDH5003A
	500	200	200	6.4	4.8	1 640	—	167 000	—	**305KDH5004**
	500	200	200	6.4	4.8	1 640	—	167 000	—	**305KDH5004A**
	500	200	200	5	5	1 640	—	167 000	—	305KDH5004B
	500	200	200	6.4	4.8	1 640	—	167 000	—	**305KDH5004D+K**
	500	200	200	6.4	4.8	1 640	—	167 000	—	**305KDH5004J**
	500	200	200	5	5	1 640	—	167 000	—	**305KDH5004L**
305.08	500	200	200	5	5	1 640	—	167 000	—	**305KDH5004C**
305.105	559.867	169.98	200	4	spec.	2 170	—	221 000	—	**305KDH5502**
318	449.5	120	120	2.5	4	945	—	96 000	—	**318KDH4401+K**
320	560	280	280	5	5	2 230	—	228 000	—	**320KDH5602+K**
330	458.5	120	120	4	3	1 080	—	111 000	—	**330KDH4501+K**
	458.5	120	120	3	3	1 080	—	111 000	—	**330KDH4502+K**
340	590	192	192	5	5	2 130	—	218 000	—	**340KDH5901+K**
350	618	200	200	6	6	2 480	—	253 000	—	**350KDH6101+K**
	590	192	192	5	5	2 130	—	218 000	—	**350KDH5901+K**
360	550	148	148	5	5	1 250	—	127 000	—	**360KDH5502+K**
370	630	240	240	6	5	2 910	—	297 000	—	**370KDH6301+K**
380	559.5	160	160	5	5	1 340	—	137 000	—	**380KDH5501A+K**
	650	240	240	4	6	3 200	—	325 000	—	**380KDH6501+K**
	650	240	240	3	6	3 800	—	390 000	—	**380KDH6502+K**
381	695	250	280	4	6	3 950	—	400 000	—	**381KDH6901+K**
400	650	200	200	6	6	3 000	—	305 000	—	**400KDH6501**
	650	200	200	6	6	3 000	—	305 000	—	**400KDH6501A**
	650	200	200	6	6	3 000	—	305 000	—	**400KDH6501B**
	650	240	192	5	4	3 000	—	305 000	—	**400KDH6506**
	650	240	240	6	6	3 250	—	330 000	—	**400KDH6502**
	650	240	240	6	6	3 250	—	330 000	—	**400KDH6502A**
	650	240	240	6	6	3 250	—	330 000	—	**400KDH6502D**
	650	240	240	6	6	3 250	—	330 000	—	**400KDH6502J**
	650	240	240	5	6	3 250	—	330 000	—	**400KDH6502L**
	650	240	240	5	6	3 200	—	325 000	—	**400KDH6504**
	650	240	240	6	6	3 200	—	325 000	—	**400KDH6505**
	780	280	300	7.5	7.5	5 500	—	560 000	—	**400KDH7802+K**

Key Way (mm) R_K	Notches K_W (mm)	K_D (mm)	θ (°)	(1) No. of Notches	Abutment and Fillet Dimensions (mm) d_b	D_a	r_a max.	r_b max.	Constant e	Axial Load Factors Y_2	Y_3	Y_0	Mass (kg) approx.
8.05	51.3	34.92	45	1X2	340	450	4	4	0.82	1.2	0.82	—	160
9.5	50.8	34.9	45	1X2	337	447	4.8	6.4	0.70	1.4	0.97	—	157
—	50.8	34.9	45	1X2	337	447	4.8	6.4	0.70	1.4	0.97	—	157
8.05	51.3	34.92	45	1X2	337	446	4	4	0.70	1.4	0.97	—	157
—	32	34.9	45	1X2	337	447	4.8	6.4	0.70	1.4	0.97	—	161
—	50.8	34.9	45	2X2	337	447	4.8	6.4	0.70	1.4	0.97	—	157
8.05	51.5	35	45	1X2	337	447	4	4	0.70	1.4	0.97	—	156
—	51.5	35	45	2X2	337	447	4	4	0.70	1.4	0.97	—	156
—	—	—	—	—	337	484	—	3	1.1	0.89	0.60	—	193
—	20	8.5	90	1X2	336	415	3	2	0.87	1.2	0.78	—	57.5
—	50	20	90	1X2	360	499	4	4	0.67	1.5	1.0	—	309
—	32	12	90	1X2	350	423	2.5	3	1.1	0.96	0.64	—	58.5
—	50	15	45	1X2	350	424	2.5	2.5	1.1	0.96	0.64	—	59
9.5	—	—	—	—	380	535	4	4	0.70	1.4	0.97	—	225
—	50	20	90	2X2	395	556	5	5	0.87	1.2	0.78	—	256
—	—	—	—	—	385	535	4	4	0.70	1.4	0.97	—	217
—	50	15	90	1X2	394	505	4	4	0.71	1.4	0.95	—	132
—	34	20	90	2X2	409	568	4	5	0.81	1.2	0.83	—	315
—	—	—	—	—	410	512	4	4	0.70	1.4	0.96	—	136
—	50	15	90	2X2	417	583	5	3	0.87	1.2	0.78	—	340
—	50.8	40	45	2X2	417	579	5	2.5	1.1	0.96	0.64	—	335
—	50	30	45	2X2	422	620	5	3	0.87	1.2	0.78	—	454
11.3	—	—	—	—	438	586	5	5	1.1	0.96	0.64	—	245
—	50.8	19	90	1X2	438	586	5	5	1.1	0.96	0.64	—	245
12.5	—	—	—	—	438	586	5	5	1.1	0.96	0.64	—	245
—	63.6	35	90	1X2	438	591	3	4	1.1	0.96	0.64	—	250
12.5	—	—	—	—	437	589	5	5	0.87	1.2	0.78	—	301
23	64.3	32	45	2X2	437	589	5	5	0.87	1.2	0.78	—	301
—	64.3	32	45	1X2	437	589	5	5	0.87	1.2	0.78	—	301
—	63.6	32	45	1X2	437	589	5	5	0.87	1.2	0.78	—	301
40	64.3	32	45	1X2	436	589	5	4	0.87	1.2	0.78	—	301
—	63.6	32	45	1X2	439	586	5	4	0.87	1.2	0.78	—	301
12.5	64.2	41.3	90	1X2	439	585	5	5	0.87	1.2	0.78	—	308
—	50	25	90	2X2	455	680	6	6	1.3	0.80	0.54	—	628

Remarks
1. Double-row tapered roller bearings with the suffix + K have outer ring spacers.
2. C_a of the basic load ratings is not the limiting load. For this bearing type, apply a preload.
3. Please consult with NSK for selection, operation, basic static load ratings (C_{0a}) and axial load factors (Y_0) of bearings.

Note (1) (No. of notches) X (No. of faces)

KDH (TDI) Type, Steep Angle

Bore Diameter 440 – 1 200 mm

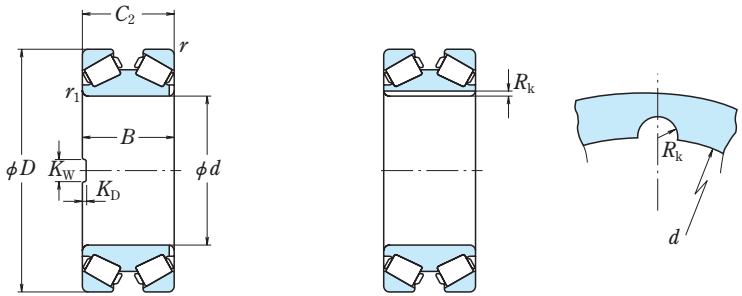

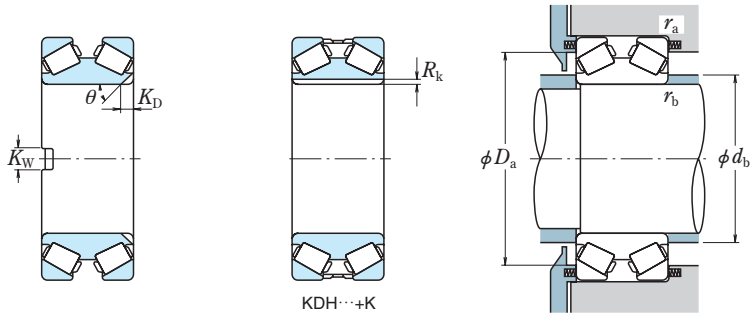

Boundary Dimensions (mm/inch)						Basic Load Ratings (kN)		{kgf}		Bearing Numbers
d	D	B	C_2	r_1 min.	r min.	C_a	C_{0a}	C_a	C_{0a}	
440	650	155	155	6	6	1 930	—	197 000	—	**440KDH6501+K**
450	820	300	300	7.5	7.5	5 500	—	560 000	—	**450KDH8201+K**
	830	288	320	7.5	7.5	5 750	—	585 000	—	**450KDH8301A+K**
460	618	150	150	5	4	1 670	—	170 000	—	**460KDH6101+K**
470	720	216	216	5	4	3 050	—	310 000	—	**470KDH7201A+K**
480	689.5	180	180	6	6	2 230	—	228 000	—	**480KDH6801+K**
482.600 19.0000	733.425 28.8750	200.000 7.8740	200.000 7.8740	6.4	17.4	2 710	—	276 000	—	**∗482KDH7351**
500	820	256	256	7.5	7.5	3 400	—	345 000	—	**500KDH8201+K**
510	733.5	200.025	200.025	3.3	4.8	2 530	—	258 000	—	510KDH7301
	800	285	285	7.5	7.5	4 450	—	450 000	—	**510KDH8001A**
510.13	800	285	285	7.5	7.5	4 450	—	450 000	—	**510KDH8003A**
560	820	242	242	4	6	3 100	—	315 000	—	**560KDH8201**
600	1 000	350	350	7.5	7.5	6 800	—	690 000	—	**600KDH1001C+K**
635	940	260	260	2.5	5	4 700	—	475 000	—	**635KDH9401**
	940	260	260	3.3	6.4	5 200	—	530 000	—	**635KDH9402**
635.08	939.9	305.5	305.5	2.5	5	5 400	—	550 000	—	635KDH9301
685.800 27.0000	939.800 37.0000	234.950 9.2500	227.813 8.9690	3.3	6.4	3 900	—	400 000	—	**∗685KDH9351**
785	1 150	285	285	3	6	5 800	—	590 000	—	**785KDH1101**
900	1 220	340	340	2.5	6	5 900	—	600 000	—	**900KDH1251**
1 200	1 500	230	230	7.5	7.5	4 650	—	475 000	—	**1200KDH1501**

Key Way (mm)	Notches				Abutment and Fillet Dimensions (mm)				Constant	Axial Load Factors			Mass (kg)
R_K	K_W (mm)	K_D (mm)	θ (°)	(1) No. of Notches	d_b	D_a	r_a max.	r_b max.	e	Y_2	Y_3	Y_0	approx.
—	50	15	90	1X2	475	599	5	5	0.87	1.2	0.78	—	178
—	40	25	90	2X2	508	732	6	6	1.1	0.96	0.64	—	683
14.5	50	20	90	2X2	505	733	6	6	1.1	0.96	0.64	—	745
—	50	15	90	2X2	484	575	3	4	1.1	0.96	0.64	—	123
—	50	20	90	1X2	503	660	3	4	0.87	1.2	0.78	—	319
—	50	15	90	2X1	514	638	5	5	0.87	1.2	0.78	—	218
—	50.8	19.05	90	2X2	518	660	17.4	6.4	0.78	1.3	0.87	—	285
—	—	—	—	—	549	749	6	6	0.61	1.7	1.1	—	546
—	50.8	38.1	45	2X2	546	677	4.8	3.3	0.82	1.2	0.82	—	270
—	70	40	45	1X2	549	725	6	6	0.87	1.2	0.78	—	511
13	70	40	45	1X2	550	725	6	6	0.87	1.2	0.78	—	511
—	50	25	45	1X2	596	757	5	3	0.72	1.4	0.94	—	430
15	50	25	90	1X1	657	897	6	6	0.87	1.2	0.78	—	1 120
—	70.3	51	45	1X2	678	872	4	2	0.87	1.2	0.78	—	592
—	70.3	51	45	1X2	676	866	6.4	3.3	1.1	0.92	0.62	—	578
—	70.3	50.8	45	1X2	690	862	4	2	0.87	1.2	0.78	—	726
—	63.5	38.1	45	2X2	722	875	6.4	3.3	0.87	1.2	0.78	—	460
—	90	50	60	2X1	847	1 072	5	2.5	0.87	1.2	0.78	—	966
—	89.5	51	45	1X2	942	1 141	5	2	0.78	1.3	0.86	—	1 120
—	70.3	45	45	1X2	1 253	1 421	6	6	1.1	0.96	0.64	—	991

Note ∗ Bearings marked ∗ are inch design.

Remarks
1. Double-row tapered roller bearings with the suffix + K have outer ring spacers.
2. C_a of the basic load ratings is not the limiting load. For this bearing type, apply a preload.
3. Please consult with NSK for selection, operation, basic static load ratings (C_{0a}) and axial load factors (Y_0) of bearings.

Note (1) (No. of notches) X (No. of faces)

TFD Type

Bore Diameter 120 – 900 mm

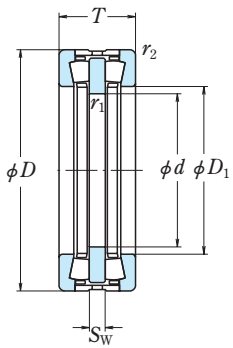

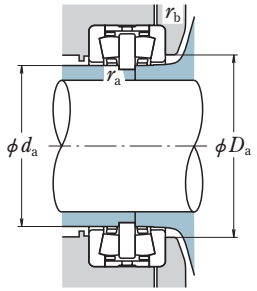

Boundary Dimensions (mm)					Basic Load Ratings (kN)	{kgf}	Bearing Numbers	Dimensions (mm)		Abutment and Fillet Dimensions (mm)				Mass (kg)
d	D	T	r_1 min.	r_2 min.	C_a	C_a		S_W	D_1	d_a	D_a	r_a max.	r_b max.	approx.
120	250	95	1.1	3	640	65 000	**120TFD2501**	20	145	144	161	1	2.5	21.9
130	280	125	1.1	3	1 020	104 000	**130TFD2801**	30	163	150	178	1	2.5	36.8
160	225	78	1	1.5	325	33 500	**160TFD2201**	18	175	169	180	1	1.5	9.3
170	240	84	1	2	395	40 000	170TFD2401	20	184	180	190	1	2	11.6
180	280	90	1	2	640	65 000	**180TFD2801**	20	196	191	202	1	2	19.8
	400	200	2	4	1 970	201 000	**180TFD4001**	50	212	208	222	2	3	122
190	330	120	1.1	2	1 110	113 000	**190TFD3301**	26	215	206	226	1	2	41.9
200	280	96	0.6	2.1	495	50 500	200TFD2801	22	216	210	222	0.6	2	17.7
220	300	96	1	2	460	47 000	**220TFD3001**	22	240	233	246	1	2	19.1
230	410	150	2	4	1 450	148 000	**230TFD4101**	34	270	264	280	2	3	82.8
240	320	96	0.6	2.1	565	58 000	240TFD3201	22	256	249	262	0.6	2	20.6
250	380	100	1.1	1.1	1 010	103 000	250TFD3801	22	275	264	280	1	1	39.2
260	360	92	1	2	620	63 500	**260TFD3601**	20	285	273	290	1	2	27.3
300	420	100	1.5	1.5	935	95 000	300TFD4201	23	330	321	335	1.5	1.5	41.4
320	440	108	1.5	3	980	100 000	320TFD4401	26	355	344	363	1.5	2.5	47.2
	470	130	1.1	3	1 290	131 000	320TFD4701	30	350	335	358	1	2.5	73.8
350	490	130	1.1	3	1 350	137 000	**350TFD4901**	30	390	375	398	1	2.5	73.2
	540	135	3	3	1 790	182 000	350TFD5401	30	400	385	408	2.5	2.5	109
380	560	130	1.5	3	1 470	150 000	**380TFD5601**	32	430	410	438	1.5	2.5	105
420	620	170	1.5	3	2 460	251 000	**420TFD6201**	35	465	450	473	1.5	2.5	169
440	660	155	3	5	2 430	248 000	440TFD6601	35	505	485	517	2.5	4	180
450	645	155	4	4	2 280	233 000	450TFD6401	38	490	472	500	3	3	159
460	680	155	2	4	2 450	250 000	**460TFD6801**	30	510	496	520	2	3	186
470	720	200	2	4	3 200	330 000	**470TFD7201**	40	535	508	545	2	3	285
530	710	218	2	3	2 500	255 000	530TFD7101	57	575	555	583	2	2.5	233
550	760	230	2	5	2 770	283 000	550TFD7601	50	610	576	622	2	4	303
	760	230	5	2	3 200	325 000	**550TFD7602**	50	590	574	596	4	2	303
600	910	290	6	6	5 200	530 000	**600TFD9101**	70	680	660	696	5	5	650
670	900	230	3	6	3 700	380 000	670TFD9001	50	725	700	740	2.5	5	398
900	1 180	220	2	6	4 450	455 000	900TFD1101	48	990	955	1 005	2	5	614

Remarks 1. C_a of the basic load ratings is not the limiting load. For this bearing type, it is recommended to apply a preload.
2. Please consult with NSK for selection and operation of bearings.

Figures of Typical Back-up Roll Bearings for Sendzimir Mills

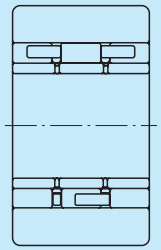

Figure 1

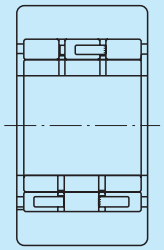

Figure 2

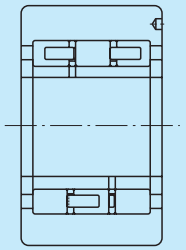

Figure 3

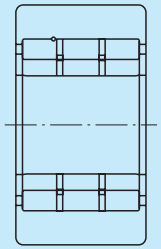

Figure 4

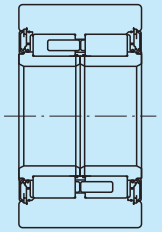

Figure 5

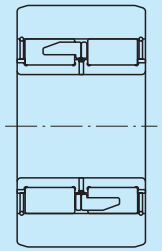

Figure 6

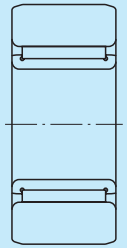

Figure 7

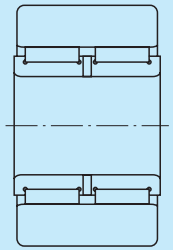

Figure 8

Bore Diameter 31.75 – 180 mm

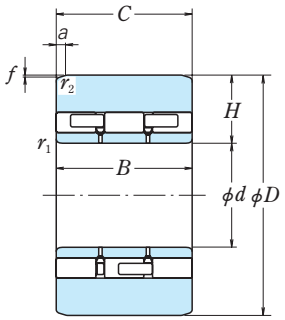

Boundary Dimensions (mm)						Basic Load Ratings (kN)	Basic Load Ratings {kgf}	Bearing Numbers	Figure(1)	Outer Ring Edge Bevel (mm)		Radial Thickness When Delivered (mm)		Model No. of Mill	Brg. Quantity Per Mill	Mass (kg) approx.
d	D	B, B_2	C	r_1 min.	r_2	C_r	C_r			a	f	H				
31.75	76.2	46.23	45.85	1	0.8	91.0	9 300	**2S31Z-4**	8	—	—	22.200	+0.010 0	ZR34-7 1/2 ZR34-10 ZR34-12 1/2	24 32 40	1.2
50	110	56	56	1.1	2	179	18 200	**3U50-1A**	4	6	0.010	29.980	+0.010 0	—	—	3.0
55	120	26	26	1.6	1.6	74.5	7 600	**S55-2**	7	—	—	32.500		ZR16-11 1/2	10	1.6
	120	52.2	52	1.6	1.6	159	16 200	**S55-1**	7	7	0.040	32.500		ZR16-11 1/2	16	3.4
70	160	90	90	1.1	1.5	410	42 000	**3PL70-1**	1	6	0.026	45.000	−0.018 −0.048	ZR33-13 ZR33B-18	— 32	10.7
90	220	120	120	1	2	655	67 000	**3U90-1**	2	6	0.010	64.980	+0.010 0	—	—	27.7
	220	130	130	1	2	680	69 500	**3U90-4**	3	6	0.010	64.982	+0.010 −0.010	—	—	30
100	225	120	120	2	3	715	73 000	**3PL100-1A**	1	8	0.093	62.470	+0.010 0	ZR23-25 ZR23-31	32 40	28
120	300	160	160	2.5	2.5	1 180	120 000	**3U120-4**	3	12	0.007	89.966	+0.010 −0.010	—	—	69.4
130	300	160	159.5	2	2	1 470	150 000	**3PL130-2C**	1	9	0.210	84.950	+0.010 0	ZR22B-40	40	66.8
	300	160	159.5	2	7	1 320	135 000	**2L130-2E**	6	9	0.210	84.950	+0.010 0	ZR22B-40	40	62.8
	300	172.64	170	2	2.5	1 240	126 000	**2U130-16**	5	50	0.009	84.950	+0.030 0	ZR22-50	48	71.2
	300	172.64	172.64	2	5	1 540	157 000	**3PL130-1C**	1	10	0.131	84.950	+0.010 0	ZR22-50	48	72.4
	300	172.64	172.64	2	5	1 540	157 000	**3PL130-1F**	1	10	0.131	84.950	+0.010 0	ZR22B-42 ZR22-50 ZR22B-50	40 48 48	72.4
179.984	406.4	224	220.66	3	3.3	1 950	199 000	**2U179Z-3**	5	15.9	0.093	113.205	0 −0.015	ZR21A-44 ZR21B-62	32 48	168
180	406.42	171.04	171.04	2.1	5	2 060	210 000	**3PL180-3**	1	25	0.145	113.155	0 −0.010	—	—	130
	406.4	217	217	2.1	2.5	2 550	260 000	**3PL180-1B**	1	10	0.058	113.160	0 −0.015	ZS07-60 ZS07-75 ZR21A-62 ZR21B-62	24 56 48 48	165
	406.4	224	220	2.1	2.5	2 050	209 000	**3U180-2**	2	10	0.058	113.160	0 −0.012	ZR21B-60 ZR21B-62	48 48	167
	406.42	224	224	2.1	2.5	2 610	266 000	**3PL180-2**	1	10	0.058	113.210	0 −0.012	—	—	171

Remarks 1. C_r of the basic load ratings is not the limiting load.
2. Please consult with NSK for selection and operation of bearings.

Note (1) Refer to page **B 433**

TRIPLE-RING BEARINGS FOR PAPER MAKING MACHINES

Bore Diameter 180 – 380mm ····· B438

Design, Types, and Features

Controlled crown rolls (CC rolls) having adjustable camber are used extensively for bottom press rolls and bottom calender rolls. Earlier designs used two tapered roller bearings with a spherical roller bearing. Recently, triple-ring bearings have been used to simplify the surrounding structure and installation.

Two spherical roller bearings (or spherical roller bearing and cylindrical roller bearing) are combined into one unit. Triple-ring bearings have three bearing rings (Inner, intermediate, and outer rings).

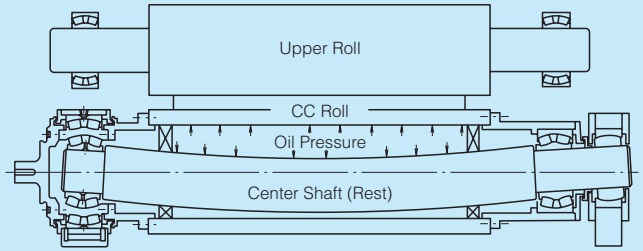

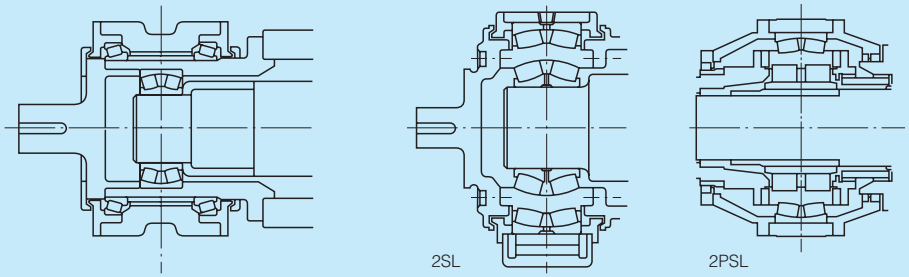

- Bearings have high load capacity (symmetrical rollers and no center rib).
- Inner bearing has no floating guide ring which further improves the load capacity.
- Ultra-clean carburizing grade bearing steel is used in critical components.
- High precision dimensional tolerances (suffix UPA).
- Specially designed inner ring and cage improve the inner bearing lubrication.
- Oil holes and grooves in the inner and outer rings are standard.

Bore Diameter 180 – 380 mm

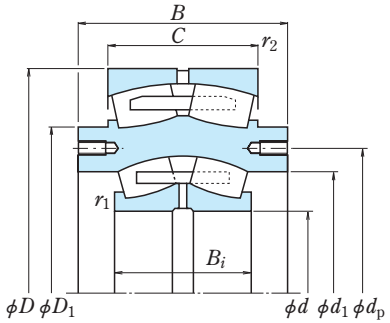

2SL

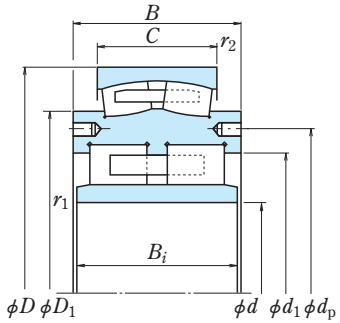

2PSL

Boundary Dimensions (mm)					Basic Load Ratings (kN)				Basic Load Ratings {kgf}				Bearing Numbers	Dimensions (mm)					Mass (kg)
					Inner Brg.		Outer Brg.		Inner Brg.		Outer Brg.								
d	D	B	r_1 min.	r_2 min.	C_r	C_{0r}	C_r	C_{0r}	C_r	C_{0r}	C_r	C_{0r}		B_i	C	d_1	d_p	D_1	approx.
180	480	215.9	4	4	1 490	2 500	2 440	5 050	151 000	255 000	249 000	515 000	**2SL180-2UPA**	140	160	263.38	304.8	355.725	165
200	520	241.3	4	5	1 820	3 050	2 920	6 050	186 000	315 000	298 000	615 000	**2SL200-2UPA**	160	180	294	342.9	393.575	230
220	600	279.4	4	5	2 220	3 750	3 600	7 600	226 000	385 000	370 000	775 000	**2SL220-2UPA**	180	200	325.5	385.35	444.375	330
240	600	225.0	4	4	2 700	4 600	2 840	6 500	275 000	470 000	290 000	665 000	**2PSL240-1UPA**	205	160	373	438	488	285
	620	279.4	4	5	2 760	4 800	3 700	7 900	282 000	490 000	375 000	805 000	**2SL240-2UPA**	200	200	361	412.75	469.775	410
260	680	317.5	5	6	3 250	5 700	4 500	9 950	335 000	580 000	460 000	1 010 000	**2SL260-2UPA**	218	218	383.54	457.2	520.575	490
280	720	317.5	5	6	3 400	6 150	4 450	9 900	345 000	625 000	450 000	1 010 000	**2SL280-2UPA**	218	218	409.3	482.6	545.975	525
300	780	342.9	5	6	4 050	7 450	5 400	11 900	415 000	760 000	550 000	1 210 000	**2SL300-2UPA**	243	250	444.5	527.05	606.325	735
320	820	368.3	5	6	4 550	8 400	5 950	13 300	465 000	855 000	605 000	1 360 000	**2SL320-2UPA**	258	258	477.3	552.45	634.9	840
340	870	393.7	6	6	5 400	9 950	6 600	15 100	550 000	1 020 000	675 000	1 540 000	**2SL340-2UPA**	280	272	506.141	609.6	676.175	1 050
380	980	431.8	6	7.5	6 100	11 500	8 100	18 500	625 000	1 170 000	825 000	1 890 000	**2SL380-2UPA**	300	308	561	647.7	738.1	1 460

CROSSED ROLLER BEARINGS FOR INDUSTRIAL ROBOTS

Bore Diameter 100 – 600mm ····· B444

Design, Types, and Features

Crossed roller bearings are thin-cross section bearings consisting of one inner ring, a two-part outer ring, cylindrical rollers, and separators. The rollers are alternately oriented at right angles to each other and kept apart by separators.

One bearing can sustain both radial and axial loads and also strong moments. Since the load capacity is high and they are both light and compact, they are commonly used in the rotating joints of robots.

Preloading the bearings increases rigidity and improves positioning accuracy. Therefore, they are suitable for the support bearings of indexing mechanisms, rotary tables, etc. that are generally required to have high rigidity.

Sealed crossed roller bearings are prelubricated with lithium grease and can be used without maintenance.

Since the internal clearances in NSK crossed roller bearings are factory adjusted, they can be installed directly without trouble some shim adjustment. Simple mounting of bearings is possible since the outer ring parts are inseparable.

An example of the composition of bearing numbers is shown below:

NRXT 100 20 DD C8 P5

- NRXT — Bearing Type Symbol
- 100 — Bore Diameter in mm
- 20 — Width in mm
- DD — Seal Symbol
  DD: Seals on both sides
  E : Lubrication holes
- C8 — Internal Clearance
  C8: Negative clearance
  C1: Positive clearance
- P5 — Accuracy Class Symbol

NSK

Recommended Fits and Internal Clearances

Table 1 Recommended Fits

Internal Clearance	Operating Conditions		Shaft	Housing
C8	Rotating Inner Ring	Normal Loads	h5 (Target Interference 0 to 5μm)	H6 (Target Clearance 0 to 10μm)
		Shock or Vibration		
	Rotating Outer Ring	Normal Loads	g5 (Target Clearance 0 to 10μm)	JS6 or J6 (Target Interference 0 to 5μm)
		Shock or Vibration		
C1	Rotating Inner Ring	Normal Loads	js5 or j5	H6
		Shock or Vibration	k5	JS6 or J6
	Rotating Outer Ring	Normal Loads	g6	JS6 or J6
		Shock or Vibration	h5	k6

Remarks If the preload is high, the fits in parentheses ( ) are recommended.

Table 2 Internal Clearances

Units : μm

Bore diameter d (mm)		Internal Clearances			
		C8 (1)		C1	
over	incl	min.	max.	min.	max.
100	**120**	–15	0	10	30
120	**140**	–15	0	10	35
140	**160**	–15	0	10	35
160	**180**	–15	0	10	40
180	**200**	–15	0	15	45
200	**225**	–20	0	15	50
225	**250**	–20	0	15	50
250	**280**	–20	0	20	55
280	**315**	–20	0	20	60
315	**355**	–25	0	20	65
355	**400**	–25	0	25	75
400	**450**	–30	0	25	85
450	**500**	–30	0	25	95
500	**560**	–30	0	30	105
560	**630**	–30	0	30	115

Note (1) Bearings with C8 (negative) clearances are produced with tolerances of Class P5 or better.

Bore Diameter 100 – 600 mm

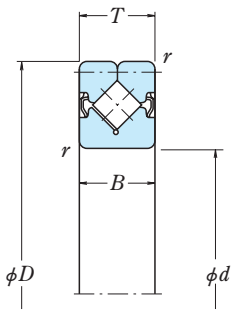

Sealed

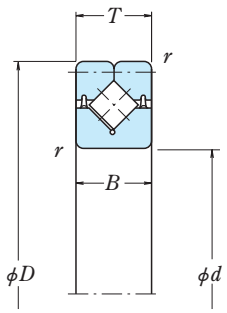

Sealed
($d \geqq 500$)

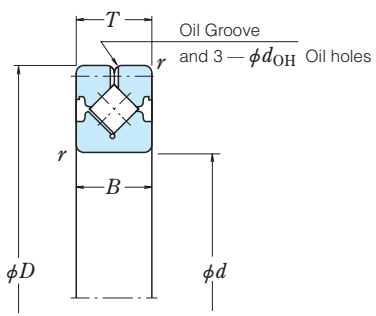

Open

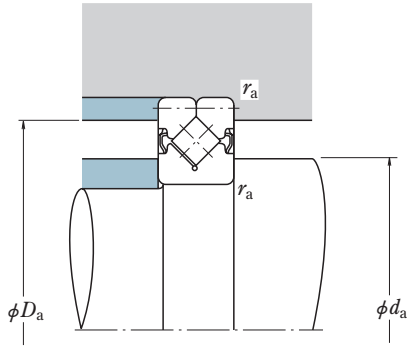

Boundary Dimensions (mm)				Basic Load Ratings (kN)		{kgf}		Bearing	Numbers	Oil Holes (mm)	Abutment and Fillet Dimensions (mm)					Mass (kg)
d	D	$B \cdot T$	r min.	C_r	C_{0r}	C_r	C_{0r}	Sealed	Open	d_{OH}	d_a min.	d_a max.	D_a min.	D_a max.	r_a max.	approx.
100	150	20	1	33.0	52.5	3 350	5 350	**NRXT10020DD**	**NRXT10020E**	2.5	117	119	131	133	1	1.37
110	160	20	1	35.0	59.0	3 600	6 000	**NRXT11020DD**	**NRXT11020E**	2.5	127	129	141	143	1	1.49
120	170	20	1.1	36.0	62.0	3 650	6 350	**NRXT12020DD**	**NRXT12020E**	2.5	137	139	151	153	1	1.6
	180	25	1.1	70.0	110	7 150	11 200	**NRXT12025DD**	**NRXT12025E**	2.5	140	144	156	160	1	2.47
130	190	25	1.1	72.5	118	7 400	12 000	**NRXT13025DD**	**NRXT13025E**	2.5	150	154	166	170	1	2.63
140	200	25	1.1	75.0	125	7 650	12 800	**NRXT14025DD**	**NRXT14025E**	2.5	160	164	176	180	1	2.8
150	210	25	1.1	77.0	133	7 850	13 600	**NRXT15025DD**	**NRXT15025E**	2.5	170	174	186	190	1	2.96
	230	30	1.1	119	192	12 200	19 600	**NRXT15030DD**	**NRXT15030E**	3	176	184	196	204	1	5.55
200	260	25	1.5	88.0	172	9 000	17 500	**NRXT20025DD**	**NRXT20025E**	2.5	219	223	237	241	1.5	3.75
	280	30	1.5	136	247	13 800	25 200	**NRXT20030DD**	**NRXT20030E**	3	225	233	247	255	1.5	6.3
250	310	25	2	98.0	211	10 000	21 500	**NRXT25025DD**	**NRXT25025E**	2.5	269	273	287	291	2	4.55
	330	30	2	150	300	15 300	30 500	**NRXT25030DD**	**NRXT25030E**	3	275	283	297	305	2	7.65
300	360	25	2.1	107	250	10 900	25 500	**NRXT30025DD**	**NRXT30025E**	2.5	319	323	337	341	2	5.3
	395	35	2.1	194	405	19 700	41 500	**NRXT30035DD**	**NRXT30035E**	3	329	334	354	361	2	12.6
	405	40	2.1	199	425	20 300	43 000	**NRXT30040DD**	**NRXT30040E**	4	336	342	362	369	2	16.5
400	480	35	2.1	188	465	19 200	47 500	**NRXT40035DD**	**NRXT40035E**	3	426	430	450	456	2	13.4
	510	40	2.1	226	545	23 100	56 000	**NRXT40040DD**	**NRXT40040E**	4	439	444	464	471	2	22.5
500	600	40	2.1	239	625	24 400	64 000	**NRXT50040DD**	**NRXT50040E**	4	533	547	553	567	2	24.4
	625	50	3	325	810	33 000	82 500	**NRXT50050DD**	**NRXT50050E**	5	540	557	563	580	2.5	39.5
600	700	40	3	261	745	26 600	75 500	**NRXT60040DD**	**NRXT60040E**	4	633	647	653	667	2.5	28.9

Figures of Typical Deep Groove Ball Bearings

Figure 1

Figure 2

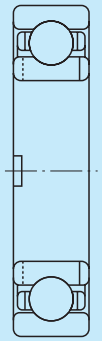

Figure 3

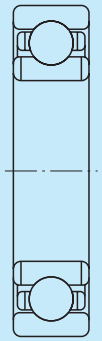

Figure 4

Figures of Typical Angular Contact Ball Bearings

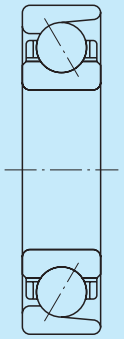

Figure 1

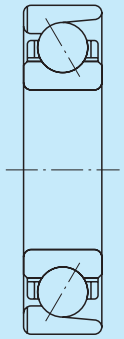

Figure 2

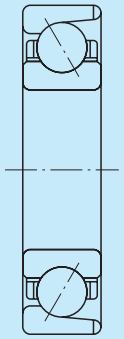

Figure 3

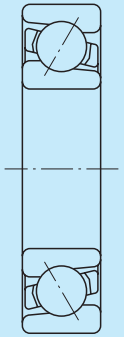

Figure 4

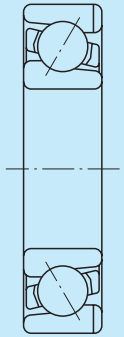

Figure 5

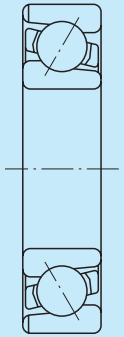

Figure 6

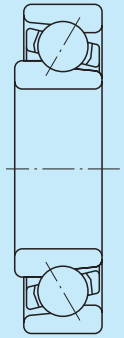

Figure 7

Bore Diameter 145 – 250 mm

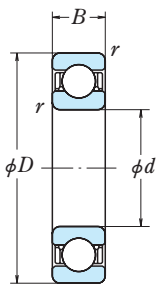

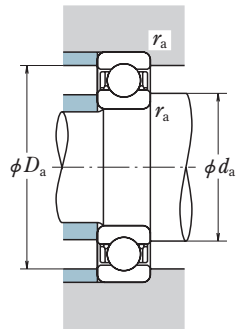

Dynamic Equivalent Load

$P = XF_r + YF_a$

$\frac{f_0 F_r}{C_{0r}}$	e	$\frac{F_a}{F_r} \leqq e$		$\frac{F_a}{F_r} > e$	
		X	Y	X	Y
0.172	0.19	1	0	0.56	2.30
0.345	0.22	1	0	0.56	1.99
0.689	0.26	1	0	0.56	1.71
1.03	0.28	1	0	0.56	1.55
1.38	0.30	1	0	0.56	1.45
2.07	0.34	1	0	0.56	1.31
3.45	0.38	1	0	0.56	1.15
5.17	0.42	1	0	0.56	1.04
6.89	0.44	1	0	0.56	1.00

Static Equivalent Load

$\frac{F_a}{F_r} > 0.8,\ P_0 = 0.6F_r + 0.5F_a$

$\frac{F_a}{F_r} \leqq 0.8,\ P_0 = F_r$

Boundary Dimensions (mm)				Basic Load Ratings (kN)		Basic Load Ratings {kgf}		Factor	Bearing Numbers	Figure(1)	Abutment and Fillet Dimensions (mm)			Mass (kg)
d	D	B	r min.	C_r	C_{0r}	C_r	C_{0r}	f_0			d_a	D_a	r_a max.	approx.
145	220	38	2.1	132	124	13 500	12 700	15.6	B145-1	1	163	204	2	5.15
150	230	35	2.1	126	126	12 800	12 800	15.9	**B150-6**	1	168	214	2	5.42
	279	45	3	176	168	18 000	17 100	15.1	**B150-8**	1	170	260	2.5	13
160	229.5	33	2	108	111	11 000	11 300	16.3	**B160-51**	2	176	216	2	4.45
	229.5	36	2	108	111	11 000	11 300	16.3	**B160-4**	1	176	216	2	4.76
	249.5	38	2.1	147	143	15 000	14 600	15.8	**B160-3**	1	178	233	2	6.96
170	249.5	38	2	135	137	13 800	13 900	16.1	B170-13	1	187	235	2	6.27
	254.5	38	2.1	153	154	15 600	15 700	15.9	**B170-51**	1	189	238	2	6.88
180	259.5	33	2	140	147	14 300	15 000	16.2	**B180-3**	1	197	245	2	5.82
	265	33	2	140	147	14 300	15 000	16.2	**B180-10**	1	197	250	2	6.41
185	269.5	38	2	158	166	16 100	17 000	16.1	**B185-1**	1	202	255	2	7.24
190	259.5	33	2	113	127	11 500	13 000	16.6	**B190-3A**	1	207	245	2	5.09
	269.5	33	2.1	145	157	14 700	16 000	16.3	**B190-5**	1	210	253	2	6.09
	269.5	33	2.1	145	157	14 700	16 000	16.3	**B190-5A**	2	210	253	2	6.06
	279.5	38	2.1	143	158	14 600	16 100	16.4	**B190-12**	1	210	263	2	8.08
200	279.5	38	2.1	143	158	14 600	16 100	16.4	**6940X**	1	220	263	2	7.21
	289.5	38	2.1	162	179	16 600	18 200	16.3	**B200-1**	1	220	272	2	8.41
210	299.5	38	2.1	167	191	17 100	19 400	16.4	B210-4	1	230	282	2	8.57
220	309.5	38	2.1	176	202	18 000	20 600	16.3	**B220-2**	1	241	292	2	9.07
	319.5	46	2.1	201	234	20 500	23 900	16.1	**B220-51**	1	241	302	2	12.2
	319.5	50	2.1	135	166	13 800	17 000	16.8	**B220-7**	1	241	302	2	13.4
230	329.5	38	2.1	181	216	18 500	22 000	16.5	**B230-7**	1	251	312	2	11
	329.5	40	2.1	191	227	19 500	23 100	16.3	**B230-5**	1	251	312	2	11.4
	329.5	40	2.1	191	227	19 500	23 100	16.3	**B230-6A**	2	251	312	2	11.3
	339.5	45	3	224	266	22 800	27 200	16.0	**B230-51**	2	253	319	2.5	14
240	329.5	38	2.1	154	191	15 700	19 400	16.8	**B240-8**	1	262	312	2	9.85
	329.5	40	2.1	180	217	18 400	22 100	16.5	**B240-7**	1	262	312	2	9.99
	336	38	2.1	154	191	15 700	19 400	16.8	**B240-13**	1	262	318	2	10.8
250	349.5	46	2.1	205	253	20 900	25 800	16.4	**B250-3**	1	272	331	2	13.6

Notes (1) Refer to page **B 410**

Bore Diameter 260 – 500 mm

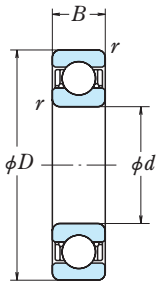

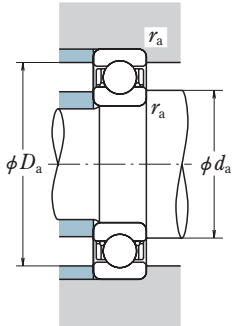

Dynamic Equivalent Load

$P = XF_r + YF_a$

$\frac{f_0 F_r}{C_{0r}}$	e	$\frac{F_a}{F_r} \leqq e$		$\frac{F_a}{F_r} > e$	
		X	Y	X	Y
0.172	0.19	1	0	0.56	2.30
0.345	0.22	1	0	0.56	1.99
0.689	0.26	1	0	0.56	1.71
1.03	0.28	1	0	0.56	1.55
1.38	0.30	1	0	0.56	1.45
2.07	0.34	1	0	0.56	1.31
3.45	0.38	1	0	0.56	1.15
5.17	0.42	1	0	0.56	1.04
6.89	0.44	1	0	0.56	1.00

Static Equivalent Load

$\frac{F_a}{F_r} > 0.8,\ P_0 = 0.6F_r + 0.5F_a$

$\frac{F_a}{F_r} \leqq 0.8,\ P_0 = F_r$

Boundary Dimensions (mm)				Basic Load Ratings (kN)		{kgf}		Factor	Bearing Numbers	Figure(1)	Abutment and Fillet Dimensions (mm)			Mass (kg)
d	D	B	r min.	C_r	C_{0r}	C_r	C_{0r}	f_0			d_a	D_a	r_a max.	approx.
260	369.5	46	2.1	211	270	21 500	27 600	16.5	**B260-2**	1	282	351	2	16.1
	369.5	50	2.1	143	195	14 600	19 800	17.1	**B260-14**	1	282	351	2	17.6
	379.5	56	4	253	320	25 800	32 500	16.0	**B260-51**	2	288	356	3	21
	399.5	65	4	291	375	29 700	38 500	15.8	**6052X1**	1	288	375	3	29.3
270	379.5	46	2.1	237	310	24 200	31 500	16.3	**B270-2**	1	293	361	2	16.8
280	389.5	46	2.1	216	288	22 000	29 300	16.6	**B280-5**	1	303	370	2	17.1
	419.5	65	4	300	410	31 000	41 500	16.0	**6056X1**	1	308	395	3	31.1
290	400	52	4	243	330	24 800	33 500	16.5	**B290-1**	1	319	376	3	19.3
	409.5	56	3	270	370	27 600	37 500	16.3	**B290-2**	1	316	388	2.5	22.9
	409.5	60	3	203	275	20 700	28 100	16.9	**B290-5**	1	316	388	2.5	24.7
	419.5	60	5	277	375	28 300	38 500	16.2	**B290-52**	2	323	391	4	26.8
300	419.5	56	3	269	370	27 400	38 000	16.4	**6960X**	1	326	398	2.5	23.8
305	444.5	70	4	310	440	32 000	45 000	16.1	**B305-1**	1	334	419	3	35.8
310	429.5	60	4	267	370	27 300	38 000	16.4	**B310-2**	1	340	405	3	25.6
320	449.5	56	3	266	375	27 100	38 000	16.5	**B320-3**	1	347	427	2.5	28.5
340	449.5	56	3	245	355	25 000	36 000	16.8	**B340-5**	1	368	427	2.5	23.2
	479.5	65	4	320	475	32 500	48 500	16.4	**B340-51X**	1	371	454	3	36.3
	480	65	4	320	475	32 500	48 500	16.4	**B340-51**	1	371	454	3	36.5
	540	90	5	440	665	45 000	68 000	15.7	**B340-2**	1	375	509	4	78.2
360	509.5	70	5	365	550	37 000	56 000	16.2	**B360-6**	1	396	479	4	44.5
	539.5	82	5	460	720	47 000	73 500	15.7	**6072X1**	1	396	509	4	65
390	549.5	80	4	390	630	40 000	64 500	16.4	**B390-5**	1	423	522	3	58.7
400	720	130	6	630	1 080	64 000	110 000	15.5	**B400-3**	3	444	680	5	236
420	559.5	65	4	340	570	35 000	58 500	16.8	**6948X1**	1	454	532	3	43.4
440	599	80	4	425	720	43 000	73 500	16.5	**B440-3**	1	475	571	3	63.6
450	629	80	4	420	725	43 000	74 000	16.5	**B450-2**	4	485	600	3	78.6
480	689.5	95	6	545	980	55 500	100 000	16.2	**B480-3**	1	527	650	5	114
500	689	100	6	540	980	55 500	100 000	16.2	**B500-11**	1	548	649	5	106
	700	90	5	495	915	50 500	93 500	16.5	**B500-3**	1	541	666	4	106

Notes (1) Refer to page **B 410**

Bore Diameter 510 – 850 mm

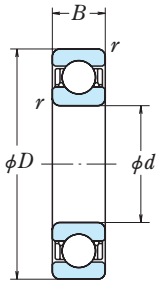

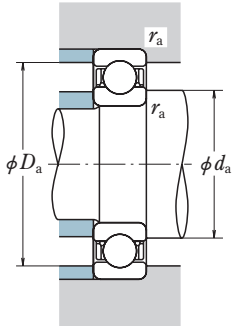

Dynamic Equivalent Load

$P = XF_r + YF_a$

$\frac{f_0 F_r}{C_{0r}}$	e	$\frac{F_a}{F_r} \leqq e$		$\frac{F_a}{F_r} > e$	
		X	Y	X	Y
0.172	0.19	1	0	0.56	2.30
0.345	0.22	1	0	0.56	1.99
0.689	0.26	1	0	0.56	1.71
1.03	0.28	1	0	0.56	1.55
1.38	0.30	1	0	0.56	1.45
2.07	0.34	1	0	0.56	1.31
3.45	0.38	1	0	0.56	1.15
5.17	0.42	1	0	0.56	1.04
6.89	0.44	1	0	0.56	1.00

Static Equivalent Load

$\frac{F_a}{F_r} > 0.8,\ P_0 = 0.6F_r + 0.5F_a$

$\frac{F_a}{F_r} \leqq 0.8,\ P_0 = F_r$

Boundary Dimensions (mm)				Basic Load Ratings (kN)		Basic Load Ratings {kgf}		Factor	Bearing Numbers	Figure(1)	Abutment and Fillet Dimensions (mm)			Mass (kg)
d	D	B	r min.	C_r	C_{0r}	C_r	C_{0r}	f_0			d_a	D_a	r_a max.	approx.
510	728	125	3	560	1 050	57 000	107 000	16.3	**B510-2**	3	544	687	2.5	159
530	760	100	6	620	1 180	63 500	121 000	16.2	B530-1	1	579	719	5	147
540	800	115	6	645	1 270	65 500	130 000	16.3	**B540-2**	4	589	758	5	199
550	740	90	5	510	980	52 000	100 000	16.7	**B550-2**	1	593	705	4	109
560	819.5	115	6	735	1 500	75 000	153 000	16.2	**60/560X**	1	610	777	5	203
570	799	115	6	705	1 400	72 000	143 000	16.1	**B570-3**	1	620	757	5	173
590	868	140	3	725	1 510	74 000	154 000	16.3	**B590-1**	3	628	825	2.5	282
600	869	110	7.5	725	1 510	74 000	154 000	16.3	**B600-15**	1	658	820	6	217
610	849.5	100	6	660	1 370	67 000	140 000	16.5	**B610-7**	1	662	807	5	173
	869	120	6	725	1 520	74 000	155 000	16.3	**B610-3**	3	662	826	5	225
700	979	150	6	765	1 740	78 000	177 000	16.6	**B700-1**	3	756	933	5	348
725	999	150	6	760	1 740	77 500	178 000	16.7	**B725-1**	3	782	953	5	338
760	1 080	150	7.5	775	1 860	79 000	189 000	16.8	**B760-1**	1	824	1 027	6	451
820	1 160	160	7.5	790	1 970	80 500	201 000	17.0	**B820-1**	3	887	1 105	6	547
	1 160	160	7.5	790	1 970	80 500	201 000	17.0	**B820-1A**	3	887	1 105	6	547
	1 160	160	7.5	790	1 970	80 500	201 000	17.0	**B820-1C**	1	887	1 105	6	547
840	1 159	140	7.5	810	2 070	83 000	211 000	17.0	**B840-1**	3	907	1 104	6	450
850	1 178	160	7.5	810	2 080	82 500	212 000	17.0	**B850-2**	1	918	1 123	6	535

Notes (1) Refer to page **B 410**

Bore Diameter 120 – 185 mm

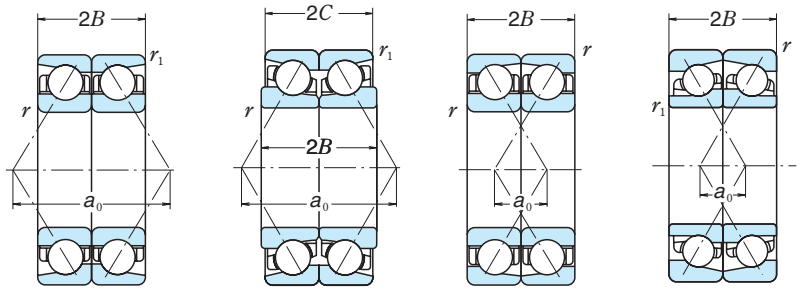

Back-to-Back DB | Back-to-Back DB | Front-to-Front DF | Front-to-Front DF

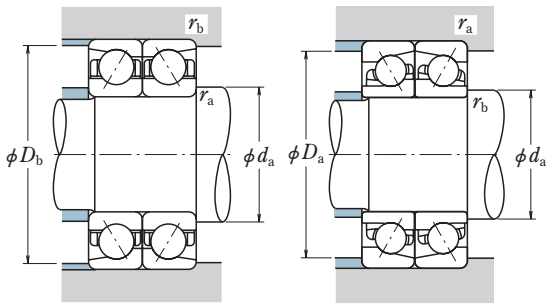

Dynamic Equivalent Load $P = XF_r + YF_a$

Contact Angle	e	DB or DF			
		$F_a/F_r \leqq e$		$F_a/F_r > e$	
		X	Y	X	Y
30°	0.80	1	0.78	0.63	1.24
40°	1.14	1	0.55	0.57	0.93

Static Equivalent Load $P_0 = X_0F_r + Y_0F_a$

Contact Angle	DB or DF	
	X_0	Y_0
30°	1	0.66
40°	1	0.52

Boundary Dimensions (mm)						Basic Load Ratings (Matched) (kN)		{kgf}		Bearing Numbers(1)			Figure(2)	Load Center Spacings (mm) a_0		Abutment and Fillet Dimensions (mm)						Mass (kg)
d	D	$2B$	$2C$	r min.	r_1(3) min.	C_r	C_{0r}	C_r	C_{0r}	Single	Matched			DB	DF	d_a	d_b(4)	D_a	D_b	r_a max.	r_b(5) max.	approx.
120	190	66	66	2	2	187	236	19 000	24 100	**BA120-4**	**DB**	—	4	122.5	—	136	—	—	176	2	2	6.75
	190	66	66	2	2	187	236	19 000	24 100	**BA120-4E**	**DB**	—	5	122.5	—	136	—	—	176	2	2	6.75
140	209.5	66	66	2	1	194	265	19 800	27 000	**7028AX**	**DB**	**DF**	1	134.0	68.0	156	—	195	199	2	1	7.72
	209.5	66	66	2	1	174	239	17 700	24 400	**7028BX**	**DB**	**DF**	1	179.8	113.8	156	—	195	199	2	1	7.83
	220	56	56	2	—	199	278	20 300	28 400	**BA140-52**	—	**DF**	1	—	75.9	156	—	205	—	2	—	8.09
145	220	76	76	2.1	—	233	300	23 700	30 500	BA145-1	—	DF	1	—	67.7	164	—	203	—	2	—	9.97
150	224.5	70	70	2.1	1.1	222	305	22 700	31 500	**BA150-4E**	**DB**	—	2	143.3	—	169	—	—	213	2	1	9.29
	225	73	73	2.1	1.1	222	305	22 700	31 500	**BA150-1**	**DB**	—	1	144.8	—	169	—	—	213	2	1	9.74
	225	73	73	2.1	2.1	222	305	22 700	31 500	**BA150-1A**	—	**DF**	4	—	71.8	—	169	208	—	2	2	9.36
	229.9	70	70	2.1	1.1	247	335	25 200	34 000	**BA150-2A**	**DB**	—	5	144.2	—	169	—	—	218	2	1	10.1
	230	70	70	2.1	1.1	247	335	25 200	34 000	**BA150-2**	**DB**	—	4	144.2	—	169	—	—	218	2	1	10.2
	230	70	70	2.1	2.1	247	335	25 200	34 000	**BA150-2a**	**DB**	—	5	144.2	—	169	—	—	213	2	2	10.1
	230	70	70	2.1	1.1	247	335	25 200	34 000	**BA150-3**	**DB**	—	1	144.7	—	169	—	—	218	2	1	10.5
	235	76	76	2.1	1.1	271	360	27 600	36 500	**BA150-7**	**DB**	—	1	149.1	—	169	—	—	223	2	1	12.2
	279	90	90	3	1.1	405	560	41 000	57 000	**BA150-9**	**DB**	—	1	166.3	—	171	—	—	266	2.5	1	25.1
160	215	56	50	1.5	1.5	144	238	14 700	24 300	**BA160-7**	**DB**	—	7	133.3	—	176	—	—	201	1.5	1.5	4.98
	215	56	50	1.5	1	128	213	13 100	21 800	**BT160-3**	**DB**	—	7	182.3	—	176	—	—	204	1.5	1	5.23
	219.5	56	56	2	1	156	241	15 900	24 600	**7932AAX**	**DB**	**DF**	4	137.7	81.7	177	173	205	209	2	1	5.8
	229.5	66	66	2	1	175	253	17 800	25 800	**BT160-51**	**DB**	—	2	196.6	—	177	—	—	219	2	1	8.66
	249.5	76	76	2.1	—	252	355	25 700	36 000	**BA160-3**	—	**DF**	3	—	77.5	179	—	232	—	2	—	13.7
	249.5	76	76	2.1	1.1	252	355	25 700	36 000	**BA160-3E**	**DB**	—	2	153.5	—	179	—	—	237	2	1	13.6
170	240	56	56	2	—	147	241	15 000	24 600	**BT170-1**	—	**DF**	3	—	139.8	188	—	225	—	2	—	8.3
	249.5	76	76	2.1	1.1	257	370	26 200	38 000	BA170-3	DB	—	1	159.2	—	190	—	—	237	2	1	12.3
	254.5	76	76	2.1	1.1	275	385	28 000	39 000	**BA170-51**	—	**DF**	4	—	84.7	—	185	237	—	2	1	12.7
175	235	60	54	2	1	146	242	14 900	24 700	**BT175-1**	**DB**	—	7	199.0	—	193	—	—	224	2	1	6.68
	280	92	92	2.1	1.1	325	480	33 500	49 000	**BA175-1**	—	**DF**	6	—	85.3	—	190	262	—	2	1	20.6
180	249.5	66	66	2	1	213	335	21 700	34 000	**7936AAX**	**DB**	**DF**	4	157.1	91.1	198	194	234	238	2	1	9.01
	259.5	66	66	2	1	262	390	26 700	40 000	**BA180-2**	**DB**	—	1	160.0	—	198	—	—	248	2	1	11.4
	259.5	66	66	2	1	262	390	26 700	40 000	**BA180-2E**	**DB**	—	2	160.0	—	198	—	—	248	2	1	11.4
	259.5	66	66	2	—	262	390	26 700	40 000	**BA180-2E1**	—	**DF**	3	—	94.0	198	—	244	—	2	—	11.4
	265	66	66	2	1	233	350	23 800	36 000	**BT180-2**	**DB**	—	5	219.7	—	198	—	—	253	2	1	12
185	269.5	76	76	2	2	288	425	29 300	43 000	**BA185-1**	**DB**	—	4	169.3	—	203	—	—	254	2	2	13.8

Note (1) The suffixes A, AA and B of 79 and 70 series represent contact angles of 30° and 40° respectively. The prefixes BA and BT represent contact angles of 30° and 40° respectively.
(2) Refer to page **B 411**
(3) Bearings, whose r_1 column have a dash (—), are DF combinations and their inner rings are deep grove type. Use r (min.) for the r_1 value.

Note (4) For bearings that are listed for both the DB and DF arrangements, if a dash (—) appears in the d_b column, use the value in the d_a column, use the value in the d_a column.
(5) If a dash (—) appears in the r_b (max.) column, use the value in the r_a (max.) column.

Bore Diameter 190 – 240 mm

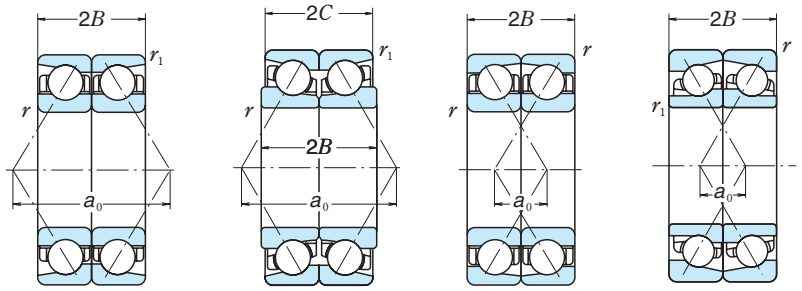

Back-to-Back DB | Back-to-Back DB | Front-to-Front DF | Front-to-Front DF

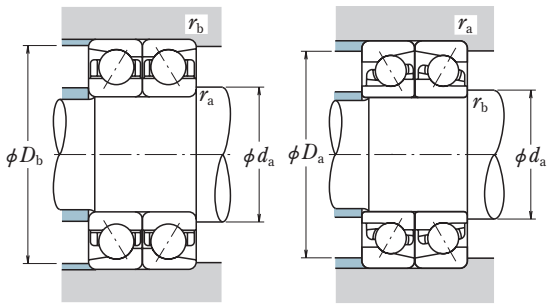

Dynamic Equivalent Load $P = XF_r + YF_a$

Contact Angle	e	DB or DF			
		$F_a/F_r \leqq e$		$F_a/F_r > e$	
		X	Y	X	Y
30°	0.80	1	0.78	0.63	1.24
40°	1.14	1	0.55	0.57	0.93

Static Equivalent Load $P_0 = X_0F_r + Y_0F_a$

Contact Angle	DB or DF	
	X_0	Y_0
30°	1	0.66
40°	1	0.52

Boundary Dimensions (mm)						Basic Load Ratings (Matched) (kN)		{kgf}		Bearing Numbers(1)			Figure(2)	Load Center Spacings (mm) a_0		Abutment and Fillet Dimensions (mm)						Mass (kg)
d	D	$2B$	$2C$	r min.	r_1(3) min.	C_r	C_{0r}	C_r	C_{0r}	Single	Matched			DB	DF	d_a	d_b(4)	D_a	D_b	r_a max.	r_b(5) max.	approx.
190	255	66	58	1.1	1.1	179	305	18 200	31 500	**BT190-1**	**DB**	—	7	215.2	—	205	—	—	243	1	1	8.69
	269.5	66	66	2.1	—	266	410	27 200	41 500	**BA190-1**	—	**DF**	1	—	99.8	211	—	252	—	2	—	11.8
	269.5	66	66	2.1	1.1	266	410	27 200	41 500	**BA190-1E**	**DB**	—	2	165.8	—	211	—	—	257	2	1	11.8
	269.5	66	66	2.1	—	266	410	27 200	41 500	**BA190-1E2**	—	**DF**	3	—	99.8	211	—	252	—	2	—	11.8
	269.5	66	66	2.1	2.1	266	410	27 200	41 500	**BA190-4**	**DB**	—	4	165.8	—	211	—	—	252	2	2	11.6
195	270	70	70	2	—	249	405	25 400	41 000	**BA195-1**	—	**DF**	3	—	99.2	214	—	254	—	2	—	12
199	280	76	76	2.1	1.1	278	445	28 300	45 500	**BA199-1A**	**DB**	—	2	176.6	—	220	—	—	267	2	1	14.1
200	279.5	76	76	2.1	1.1	278	445	28 300	45 500	**7940AAX**	**DB**	**DF**	4	176.6	100.6	221	216	262	267	2	1	13.3
	279.5	76	76	2.1	1.1	247	400	25 200	40 500	**7940BAX**	**DB**	**DF**	4	239.4	163.4	221	216	262	267	2	1	13.6
	289.5	76	76	2.1	1.1	299	465	30 500	47 500	**BA200-3**	**DB**	—	4	179.5	—	221	—	—	276	2	1	16
	289.5	76	76	2.1	1.1	299	465	30 500	47 500	**BA200-3E**	**DB**	—	5	179.5	—	221	—	—	276	2	1	16
	289.5	76	76	2.1	1.1	267	420	27 200	42 500	**BT200-1E**	—	**DF**	6	—	167.6	—	216	271	—	2	1	16.2
210	299.5	76	76	2.1	1.1	280	465	28 600	47 500	BA210-2	DB	—	1	185.2	—	231	—	—	286	2	1	16.9
220	300	76	70	1	1.5	231	405	23 500	41 500	**BT220-1**	**DB**	—	7	252.5	—	236	—	—	285	1	1.5	14.6
	309.5	76	76	2.1	1.1	335	545	34 000	56 000	**BA220-1**	**DB**	**DF**	1	191.0	115.0	242	—	291	296	2	1	17.8
	309.5	76	76	2.1	1.1	335	545	34 000	56 000	**BA220-1A**	**DB**	—	2	191.0	—	242	—	—	296	2	1	17.8
	309.5	76	76	2.1	—	335	545	34 000	56 000	**BA220-1B**	—	**DF**	3	—	115.0	242	—	291	—	2	—	17.9
	309.5	76	76	2.1	—	297	490	30 500	50 000	**BT220-2A**	—	**DF**	3	—	184.4	242	—	291	—	2	—	17.8
	309.5	76	76	2.1	1.1	297	490	30 500	50 000	**BT220-2E**	**DB**	—	2	260.4	—	242	—	—	296	2	1	18.2
	319.5	92	92	2.1	1.1	335	560	34 500	57 000	**BT220-51**	**DB**	**DF**	4	272.6	180.6	242	237	301	306	2	1	23.5
	329.5	100	100	2.1	—	415	690	42 500	70 500	**BA220-2**	—	**DF**	3	—	108.8	242	—	311	—	2	—	29.9
	329.5	102	102	3	1.1	370	620	38 000	63 500	**BT220-3**	**DB**	—	1	281.8	—	244	—	—	316	2.5	1	30.3
225	345	112	112	3	—	460	790	46 500	80 500	**BA225-1**	—	**DF**	1	—	108.5	249	—	324	—	2.5	—	37.4
230	320	80	80	2.1	—	300	535	30 500	54 500	**BA230-1**	—	**DF**	3	—	121.7	252	—	301	—	2	—	19.5
	329.5	80	80	2.1	1.1	360	615	37 000	62 500	**BA230-2**	**DB**	—	1	201.7	—	252	—	—	316	2	1	22.7
	329.5	80	80	2.1	1.1	360	615	37 000	62 500	**BA230-2A**	**DB**	—	5	201.7	—	252	—	—	316	2	1	21.7
	329.5	80	80	2.1	1.1	360	615	37 000	62 500	**BA230-2B**	**DB**	—	4	201.7	—	252	—	—	316	2	1	21.2
	339.5	90	90	3	1.1	370	625	37 500	63 500	**BT230-51**	**DB**	—	2	284.1	—	254	—	—	325	2.5	1	27.1
240	329.5	80	80	2.1	—	292	520	29 800	53 000	**BA240-1**	—	**DF**	3	—	124.5	263	—	311	—	2	—	20.1
	329.5	80	80	2.1	1.1	305	535	31 000	54 500	**BT240-1**	**DB**	**DF**	6	279.1	199.1	263	257	311	316	2	1	19.4
	329.5	80	80	2.1	1.1	305	535	31 000	54 500	**BT240-1E**	**DB**	—	5	279.1	—	263	—	—	316	2	1	19.7
	339.5	80	80	3	1.1	290	495	29 600	50 500	**BT240-2**	**DB**	—	1	283.3	—	265	—	—	325	2.5	1	22.7
	359.5	112	112	3	1.1	435	780	44 500	79 500	**7048BX**	**DB**	**DF**	1	307.7	195.7	265	—	338	345	2.5	1	39.5

Note (1) The suffixes A, AA and B of 79 and 70 series represent contact angles of 30° and 40° respectively. The prefixes BA and BT represent contact angles of 30° and 40° respectively.
(2) Refer to page **B 411**
(3) Bearings, whose r_1 column have a dash (—), are DF combinations and their inner rings are deep grove type. Use r (min.) for the r_1 value.

Note (4) For bearings that are listed for both the DB and DF arrangements, if a dash (—) appears in the d_b column, use the value in the d_a column, use the value in the d_a column.
(5) If a dash (—) appears in the r_b (max.) column, use the value in the r_a (max.) columin.

Bore Diameter 250 – 580 mm

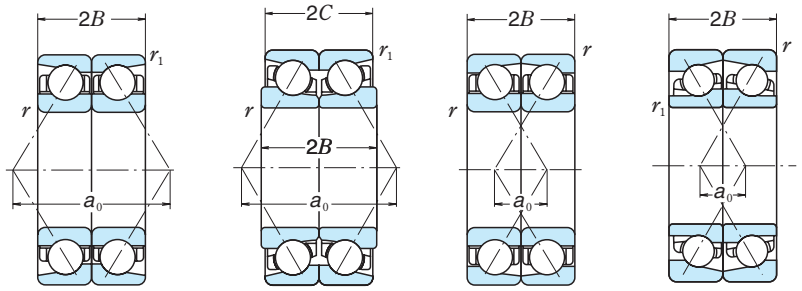

Back-to-Back DB | Back-to-Back DB | Front-to-Front DF | Front-to-Front DF

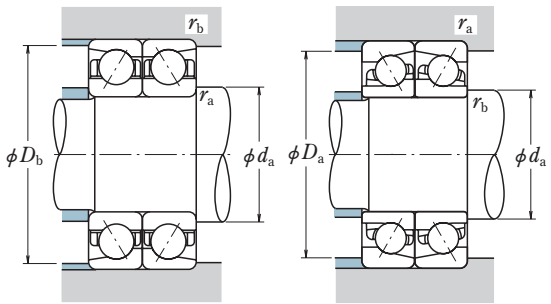

Dynamic Equivalent Load $P = XF_r + YF_a$

Contact Angle	e	DB or DF			
		$F_a/F_r \leqq e$		$F_a/F_r > e$	
		X	Y	X	Y
30°	0.80	1	0.78	0.63	1.24
40°	1.14	1	0.55	0.57	0.93

Static Equivalent Load $P_0 = X_0F_r + Y_0F_a$

Contact Angle	DB or DF	
	X_0	Y_0
30°	1	0.66
40°	1	0.52

Boundary Dimensions (mm)						Basic Load Ratings (Matched) (kN)		{kgf}		Bearing Numbers(1)			Figure(2)	Load Center Spacings (mm) a_0		Abutment and Fillet Dimensions (mm)						Mass (kg)
d	D	$2B$	$2C$	r min.	r_1 min.	C_r	C_{0r}	C_r	C_{0r}	Single	Matched			DB	DF	d_a	d_b(3)	D_a	D_b	r_a max.	r_b max.	approx.
250	340	76	70	0.6	2	274	515	27 900	52 500	**BT250-2**	**DB**	—	7	281.9	—	266	—	—	323	0.6	2	19
	349.5	92	92	3	1.1	355	640	36 000	65 000	**BT250-51**	**DB**	—	1	297.7	—	275	—	—	335	2.5	1	26.8
260	369.5	92	92	2.1	1.1	415	770	42 000	78 500	**BA260-1**	**DB**	**DF**	1	227.6	135.6	283	—	350	355	2	1	31.5
	369.5	92	92	2.1	1.1	395	720	40 000	73 000	**BT260-51**	**DB**	—	4	310.3	—	283	—	—	355	2	1	30.9
	369.5	92	92	2.1	2.1	395	720	40 000	73 000	**BT260-51aE**	—	**DF**	6	—	218.3	—	283	350	—	2	2	30.9
	379.5	112	112	4	2	430	785	44 000	80 000	**BT260-52**	**DB**	—	2	324.5	—	290	—	—	362	3	2	41.5
	399.5	130	130	4	1.5	505	945	51 500	96 500	**7052BX**	**DB**	**DF**	1	341.9	211.9	290	—	373	382	3	1.5	57.6
270	379.5	92	92	2.1	1.1	400	750	41 000	76 500	**BT270-1**	**DB**	—	6	318.7	—	294	—	—	365	2	1	31.7
277	420	130	130	4	1.5	530	1 040	54 000	106 000	**BT277-1**	**DB**	—	1	358.7	—	307	—	—	402	3	1.5	63.1
280	389.5	92	92	2.1	1.1	380	740	38 500	75 500	**BT280-51**	**DB**	—	1	327.1	—	304	—	—	374	2	1	34.4
	400	104	104	4	1.5	425	820	43 500	84 000	**BT280-2**	**DB**	—	2	337.3	—	310	—	—	383	3	1.5	41.5
285	380	92	92	3	2	297	570	30 500	58 000	**BT285-1**	**DB**	—	4	325.0	—	311	—	—	362	2.5	2	28.5
290	409.5	112	112	3	1.1	485	920	49 500	94 000	**BA290-2**	**DB**	—	1	258.1	—	317	—	—	394	2.5	1	44.2
	409.5	112	112	3	1.1	430	830	44 000	84 500	**BT290-2**	**DB**	—	1	349.7	—	317	—	—	394	2.5	1	45.3
	419.5	120	120	5	2	475	935	48 500	95 500	**BT290-52**	**DB**	—	2	357.9	—	325	—	—	401	4	2	54
300	419.5	112	112	3	1.1	510	1 000	52 000	102 000	**7960AX**	**DB**	**DF**	1	263.8	151.8	327	—	397	404	2.5	1	48.6
	419.5	112	112	3	1.1	455	900	46 000	92 000	**7960BAX**	**DB**	**DF**	4	358.1	246.1	327	320	397	404	2.5	1	46.7
310	429.5	120	120	4	1.5	520	1 040	53 000	107 000	**BA310-2**	**DB**	—	1	273.6	—	342	—	—	412	3	1.5	52.5
	429.5	120	120	4	1.5	460	940	47 000	95 500	**BT310-51**	**DB**	—	1	370.5	—	342	—	—	412	3	1.5	52.2
320	449.5	112	112	3	3	540	1 130	55 000	115 000	**BA320-1**	**DB**	—	1	278.3	—	348	—	—	426	2.5	2.5	55.4
	449.5	112	112	3	1.1	480	1 010	49 000	103 000	**BT320-51**	**DB**	—	6	379.1	—	348	—	—	433	2.5	1	54.4
340	480	130	130	4	1.5	535	1 150	54 500	117 000	**BT340-51**	**DB**	—	1	409.0	—	373	—	—	461	3	1.5	71.6
	540	180	180	5	2	780	1 720	79 500	176 000	**BT340-1**	**DB**	—	2	459.2	—	377	—	—	519	4	2	161
360	509.5	140	140	5	2	615	1 340	63 000	137 000	**BT360-3**	—	**DF**	4	—	295.0	—	385	477	—	4	2	85
380	519.5	130	130	4	1.5	565	1 300	57 500	132 000	**7976BX**	**DB**	**DF**	1	442.6	312.6	414	—	491	500	3	1.5	81.1
	540	164	164	5	2	680	1 500	69 500	153 000	**BA380-1**	**DB**	—	1	347.6	—	419	—	—	519	4	2	115
	540	164	164	5	2	610	1 350	62 000	138 000	**BT380-1**	**DB**	—	1	468.2	—	419	—	—	519	4	2	116
420	559.5	130	130	4	1.5	590	1 440	60 000	147 000	**7984BX**	**DB**	**DF**	1	476.2	346.2	456	—	530	539	3	1.5	88.3
580	780	160	160	5	2	910	2 700	93 000	276 000	**BA580-1**	**DB**	—	1	472.6	—	627	—	—	754	4	2	217

Note (1) The suffixes A, AA and B of 79 and 70 series represent contact angles of 30° and 40° respectively. The prefixes BA and BT represent contact angles of 30° and 40° respectively.

(2) Refer to page **B 411**

Note (3) For bearings that are listed for both the DB and DF arrangements, if a dash (—) appears in the d_b column, use the value in the d_a column.

TFX Type For Adjusting Screws

Outside Diameter 149.225 – 533.400 mm

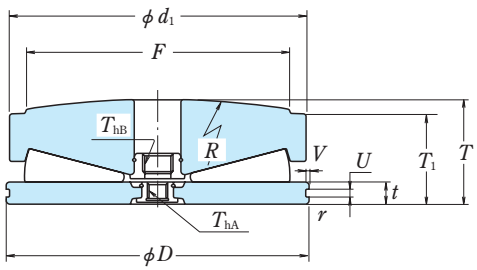

Boundary Dimensions (mm/inch)					Basic Load Ratings (kN)	{kgf}
D	d_1	F min.	T	T_1	C_{0a}	C_{0a}
149.225 5.875	146.86 5.782	127.0 5.000	54.97 2.164	47.62 1.875	2 520	257 000
174.625 6.875	172.26 6.782	152.4 6.000	61.39 2.417	52.37 2.062	3 650	375 000
203.200 8.000	200.84 7.907	177.8 7.000	75.62 2.977	65.07 2.562	4 850	495 000
220.000 8.661	220.00 8.661	195.0 7.677	78.00 3.071	66.00 2.598	6 100	620 000
266.700 10.500	264.34 10.407	228.6 9.000	94.41 3.717	81.00 3.189	8 350	855 000
320.675 12.625	318.31 12.532	279.4 11.000	110.97 4.369	95.25 3.750	12 600	1 280 000
377.825 14.875	375.46 14.782	330.2 13.000	129.01 5.079	111.12 4.375	17 700	1 810 000
404.400 15.921	407.21 16.032	355.6 14.000	142.23 5.600	122.22 4.812	20 500	2 090 000
409.575 16.125	407.21 16.032	355.6 14.000	142.23 5.600	122.22 4.812	20 500	2 090 000
438.150 17.250	435.79 17.157	381.0 15.000	150.67 5.932	130.18 5.125	22 200	2 260 000
471.000 18.543	453.00 17.835	390.0 15.354	145.54 5.730	124.00 4.882	24 100	2 460 000
482.600 19.000	480.21 18.906	381.0 15.000	145.54 5.730	130.18 5.125	27 700	2 820 000
495.300 19.500	492.94 19.407	431.8 17.000	170.61 6.717	146.05 5.750	31 500	3 200 000
523.875 20.625	521.52 20.532	457.2 18.000	176.66 6.955	153.29 6.035	34 500	3 500 000
533.400 21.000	531.01 20.906	457.0 17.992	177.80 7.000	161.92 6.375	34 500	3 500 000

Bearing Numbers	Dimensions (mm)							Mass (kg)
	R	t	r min.	U	V	T_{hA}	T_{hB}	approx.
149TFX01	457.2	12.70	1.6	4.8	1.2	M12X	—	6.6
174TFX01	457.2	12.70	1.6	4.8	1.2	M12	M18	10.1
203TFX01	508.0	15.88	1.6	6.3	1.2	M12	M18	16.8
220TFX01	550.0	15.88	1.5	6.3	1.2	M12	—	20.3
266TFX01	609.6	19.05	1.6	7.9	2.0	M20	—	36
320TFX01	762.0	22.22	1.5	10.3	2.4	M24	—	61.5
377TFX01	914.4	25.40	1.5	10.3	2.4	M24	M30	98.7
407TFX01	1 016.0	28.57	3.3	—	—	M24	M30	127
409TFX01	1 016.0	28.57	3.3	9.5	2.5	M24	M30	128
438TFX01	1 016.0	31.75	3.2	13.5	3.2	M24	M36	155
471TFX01	1 100.0	38.10	3.5	—	—	M24	M36	174
482TFX01	1 905.0	38.10	1.6	13.5	3.2	M24	M36	184
495TFX01	1 066.8	34.92	3.3	13.5	3.2	M24	M30	225
523TFX01	1 270.0	34.92	3.3	13.5	3.2	M24	M36	261
533TFX01	1 981.2	31.75	1.6	9.5	9.5	M24	M36	273

Remark Please consult with NSK for selection and operation of bearings.

TFX Type For Adjusting Screws

Outside Diameter 555.625 – 900 mm

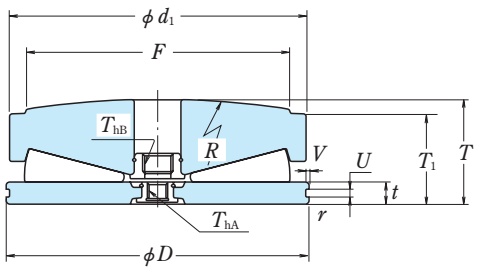

Boundary Dimensions (mm/inch)					Basic Load Ratings (kN)	{kgf}
D	d_1	F min.	T	T_1	C_{0a}	C_{0a}
555.625 21.875	553.26 21.782	482.6 19.000	191.15 7.525	165.10 6.500	38 000	3 900 000
581.025 22.875	578.66 22.782	508.0 20.000	193.78 7.629	168.28 6.625	41 500	4 200 000
581.025 22.875	578.66 22.782	508.0 20.000	196.65 7.742	168.28 6.625	41 500	4 200 000
609.600 24.000	607.24 23.907	533.4 21.000	204.01 8.032	177.80 7.000	47 000	4 800 000
609.600 24.000	607.24 23.907	533.4 21.000	204.01 8.032	170.01 6.693	47 000	4 800 000
641.350 25.250	638.99 25.157	558.8 22.000	212.67 8.373	184.15 7.250	51 500	5 250 000
692.150 27.250	689.75 27.155	495.3 19.500	311.45 12.262	280.00 11.024	59 500	6 050 000
710 **800**	710 800	480 700	260 250	235 206	54 500 71 500	5 600 000 7 300 000
847.6 **900**	841 930	650 750	250 275	212 231	79 000 93 000	8 050 000 9 500 000

Bearing Numbers	Dimensions (mm)							Mass (kg)
	R	t	r min.	U	V	T_{hA}	T_{hB}	approx.
555TFX01	1 270.0	38.10	3.3	12.7	3.2	M24	—	318
581TFX01	1 422.4	38.10	3.2	13.5	3.2	M24	M42	353
581TFX02	1 308.1	38.10	3.3	13.5	3.2	8UNC	7UNC	358
609TFX01	1 524.0	38.10	3.3	13.5	3.2	M30	M42	409
609TFX03	1 524.0	38.10	3.3	13.5	3.2	M24	M42	409
641TFX01	1 524.0	38.10	3.3	13.5	3.2	M24	M42	472
692TFX01	1 803.4	38.10	3.0	13.5	3.2	M24	M42	805
710TFX01	1 400	40	4	—	—	M24	M24	706
800TFX01	1 524	43	7	—	—	M36	M48	857
847TFX01	1 652	43	5	—	—	M42	M42	966
930TFX01	1 800	60	4	—	—	M36	M48	1 270

Remark Please consult with NSK for selection and operation of bearings.

TFV Type For Adjusting Screws

Outside Diameter 149.225 – 555.625 mm

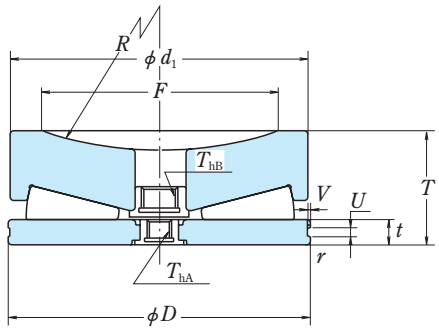

Boundary Dimensions (mm/inch)				Basic Load Ratings (kN)	(kgf)	Bearing Numbers	Dimensions (mm)							Mass (kg)
D	d_1	F min.	T	C_{0a}	C_{0a}		R	t	r min.	U	V	T_{hA}	T_{hB}	approx.
149.225 5.875	146.86 5.782	127.0 5.000	47.62 1.875	2 520	257 000	149TV01	228.6	12.70	1.6	4.8	1.2	M12X	—	5.6
203.200 8.000	200.80 7.905	177.8 7.000	65.07 2.562	4 850	495 000	**203TFV01**	254.0	15.88	1.6	6.3	1.2	—	—	14.3
266.700 10.500	264.34 10.407	228.6 9.000	80.95 3.187	8 400	855 000	**266TFV01**	304.8	19.05	1.6	7.9	2.0	M20	—	30.8
266.700 10.500	264.34 10.407	228.6 9.000	86.37 3.400	8 350	855 000	**266TFV02**	250.0	19.05	1.6	7.9	2.0	M20	—	35.5
320.675 12.625	318.31 12.532	279.4 11.000	95.25 3.750	12 600	1 280 000	320TFV01	381.0	22.22	1.5	10.3	2.4	M24	—	52.3
377.825 14.875	375.46 14.782	330.2 13.000	111.12 4.375	17 700	1 810 000	377TFV01	457.2	25.40	1.5	10.3	2.4	M24	M30	84.7
409.575 16.125	407.21 16.032	355.6 14.000	122.22 4.812	20 500	2 090 000	409TFV01	508.0	28.58	3.2	10.3	2.4	M24	M30	109
438.150 17.250	435.79 17.157	381.0 15.000	130.18 5.125	22 200	2 260 000	438TFV01	508.0	31.75	3.2	13.5	3.2	M24	M36	133
495.300 19.500	492.94 19.407	431.8 17.000	146.05 5.750	31 500	3 200 000	**495TFV01**	558.8	34.92	3.3	13.5	3.2	M24	M36	191
508.000 20.000	501.65 19.750	341.3 13.438	165.10 6.500	31 000	3 150 000	**508TFV01**	508.0	34.92	3.2	12.7	3.2	M24	M36	228
523.875 20.625	521.51 20.532	457.2 18.000	152.40 6.000	34 500	3 500 000	523TFV01	635.0	34.92	3.2	13.5	3.2	M24	M36	223
551.600 21.716	539.75 21.250	435.5 17.146	158.75 6.250	35 000	3 550 000	551TFV01	635.0	24.65	4.0	10.6	2.5	M24	M42	258
554	555	414	190.5	38 000	3 900 000	**554TFV01**	1 270	50	3	9.5	6.0	M24	—	312
554.000 21.811	555.00 21.850	465.4 18.324	190.50 7.500	38 000	3 900 000	**554TFV01A**	1 270.0	50.00	3.0	—	—	M24	M42	312
555.625 21.875	553.26 21.782	482.6 19.000	165.10 6.500	38 000	3 900 000	555TFV01	635.0	38.10	3.2	13.5	3.2	M24	M36	272

Remark Please consult with NSK for selection and operation of bearings.

TFV Type For Adjusting Screws

Outside Diameter 581.025 – 880 mm

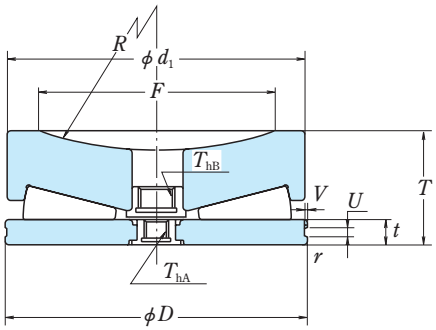

Boundary Dimensions (mm/inch)				Basic Load Ratings (kN)	(kgf)	Bearing Numbers	Dimensions (mm)							Mass (kg)
D	d_1	F min.	T	C_{0a}	C_{0a}		R	t	r min.	U	V	T_{hA}	T_{hB}	approx.
581.025 22.875	578.66 22.782	508.0 20.000	168.28 6.625	41 500	4 200 000	581TFV01	711.2	38.10	3.2	13.5	3.2	M24	M42	303
609.600 24.000	607.24 23.907	533.4 21.000	177.80 7.000	47 000	4 800 000	609TFV01	762.0	38.10	3.3	13.5	3.2	M30	M42	353
615.2	607	400	243.92	47 000	4 800 000	**615TFV01**	635	38.1	3	13.5	3.5	M30	—	493
641.350 25.250	638.99 25.157	558.8 22.000	184.15 7.250	51 500	5 250 000	641TFV01	762.0	38.10	3.2	13.5	3.2	M24	M42	405
880	930	627	234.95	93 000	9 500 000	**930TFV01**	1 524	50	4	—	—	M42	M42	1 090

Remark Please consult with NSK for selection and operation of bearings.

CONTENTS

SPECIAL NSK BEARINGS AND RELATED EQUIPMENT

Pages

Split Bearings for Tunnel Excavating Shields ..... C 2
Ladder Bearings for Convertors ..... C 4
Super-Large Double-Split Bearings for Convertor Trunnions ..... C 6
Double-Split Bearing Units for Segmented Drive Rolls in Continuous Casters ..... C 7
Sealed-Clean Bearings for Guide Rolls and Pinch Rolls in Continuous Casters ..... C 8
Sealed-Clean Bearings for Chain Conveyors C10
Sealed-Clean Bearings for Sintering Equipment C11
Roll Units for Tension Levelers C12
Bearing Heaters C14
Bearing Monitors C15

APPLICATION DRAWINGS

Pages

Eccentric Shaft, Vibrating Screen C16
Adjusting Screw Thrust Block, Hot Strip Rollings Mill C17
Table Roller, Hot Strip Rolling Mill C18
Work Roll Chock Assembly, Steel Strip Rolling Mill C19
Backup Roll Chock Assembly, Cold Strip Rolling Mill C20
Work Roll Chock Assembly, Cold Strip Rolling Mill C21
Horizontal Roll Chock Assembly, Large-Size Universal Rolling Mill C22
Finishing Roll Chock Assembly, Wire Rolling Mill C23
Final Drive, Bulldozer C24
Axle Assembly, Dump Truck C25
Bent Axis Type Axial Piston Pump C26
Tapered Roller Bearing, Heavy Dusty Extruder C27
Axlebox Bearing, New Commuter Train C28
Traction Motor, Bullet Train (SHINKANSEN) C29
Flywheel and Clutch Assembly, Large-Size Press C30
Suction Roll, Paper Making Machine C31
Dryer Roll, Paper Making Machine (Free End) C32
Press Roll, Paper Making Machine (Free End) C33

APPENDICES

Appendix Table 1 Conversion from SI (International Units) System C34
Appendix Table 2 N-kgf Force Conversion Table C36
Appendix Table 3 kg-lb Mass Conversion Table C37
Appendix Table 4 °C-°F Temperature Conversion Table C38
Appendix Table 5 Viscosity Conversion Table C39
Appendix Table 6 inch-mm Dimension Conversion Table C40
Appendix Table 7 Hardness Conversion Table C42
Appendix Table 8 Physical and Mechanical Properties of Materials C43
Appendix Table 9 Tolerances for Shaft Diameters C44
Appendix Table 10 Tolerances for Housing Bore Diameters C46
Appendix Table 11 Values of Standard Tolerance Grades IT C48
Appendix Table 12 Speed Factor f_n C50
Appendix Table 13 Fatigue Life Factor f_n and Fatigue Life $L \cdot L_h$ C51
Index of Inch Design Tapered Roller Bearings C52

Split Bearings for Tunnel Excavating Shields

Features

- ○ High reliability proven by successful performance worldwide
- ○ Optimum design derived from extensive experience and computerized analyses
- ○ Advanced production equipment, skilled workmanship, and systematic quality assurance
- ○ High quality ring and cage materials

Excavating shield equipped with NSK bearing for Strait of Dover (Pas de Calais) between United Kingdom and France

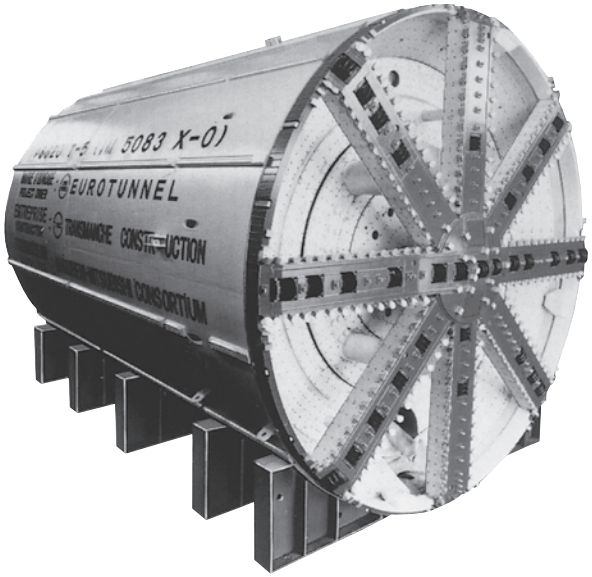

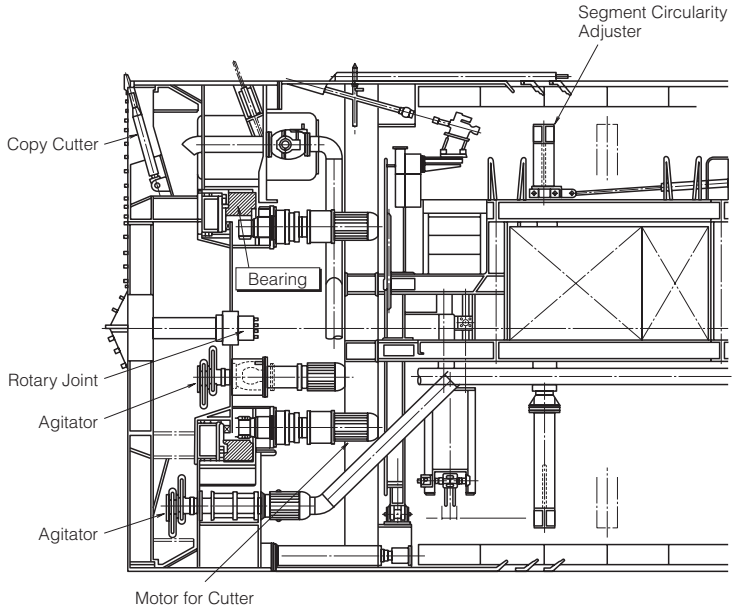

Slewing Bearings

NSK supplies a wide range of types and sizes of slewing bearings that are not listed here. Contact NSK for information concerning them.

The figure below is a typical triplex cylindrical roller bearing with an internal gear. Other types with external gears and with out gears are also available.

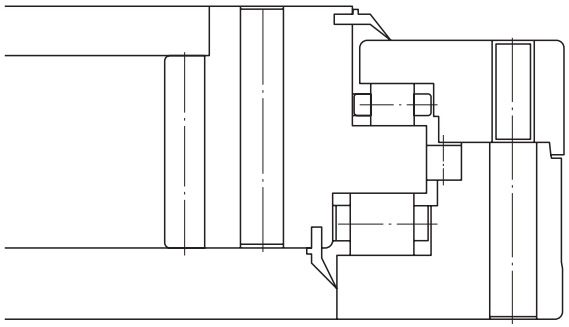

Ladder Bearings for Convertors

Features

TRL ladder bearings are linear motion bearings consisting of a single or double row of cylindrical rollers between flat raceways. They are used to relieve the axial displacement of the trunnion bearings and housings caused by heat.

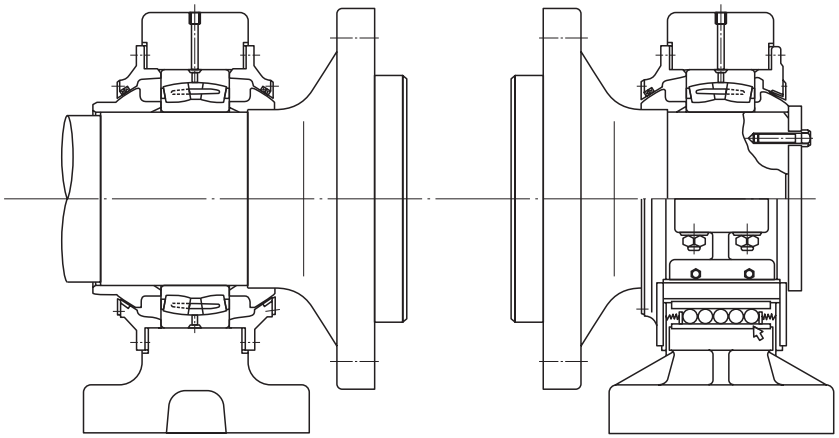

Structure of Convertor Trunnion Necks

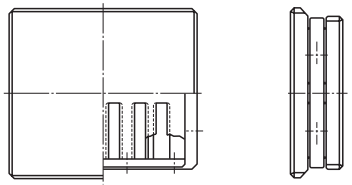

Figure 1

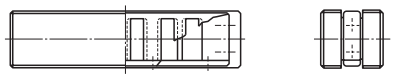

Figure 2

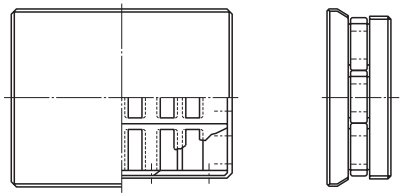

Figure 3

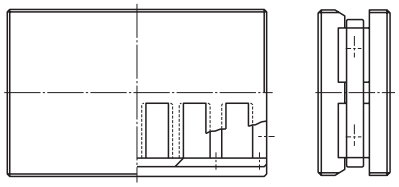

Figure 4

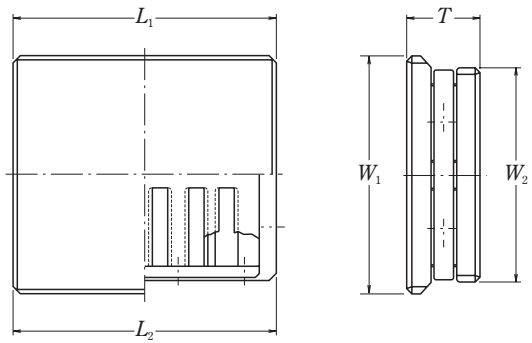

Bearing Numbers	Dimensions (mm) T	W_1	W_2	L_1	L_2	Figure	Basic Load Ratings (kN) C_{0a}
60TRL02B	60	200	180	220	220	1	3 500
60TRL08	60	240	240	240	240	1	4 800
60TRL09	60	230	230	265	265	1	4 800
60TRL12	60	230	230	230	230	1	5 600
65TRL01	65	215	200	220	220	1	4 400
80TRL02	80	300	300	400	400	1	9 550
90TRL03	90	250	230	300	300	3	6 600
90TRL04	90	265	245	300	300	3	7 100
90TRL05	90	250	230	300	300	1	6 950
90TRL06	90	84	84	270	270	2	2 360
90TRL08	90	112	112	280	280	2	3 450
95TRL02	95	280	280	440	440	4	11 900
96TRL02	96	300	300	310	310	4	9 800
110TRL02	110	350	350	490	490	4	17 100
110TRL03	110	350	350	500	500	4	17 100
160TRL01	160	400	400	550	550	4	25 700

Super-Large Double-Split Bearings for Convertor Trunnions

Features

- ○ double-split bearing for the driven convertor trunnion enables changing the bearing without removing the bull gear.
- ○ Large reduction in bearing replacement time and expense
- ○ Substitution is possible within the space required for standard bearings.

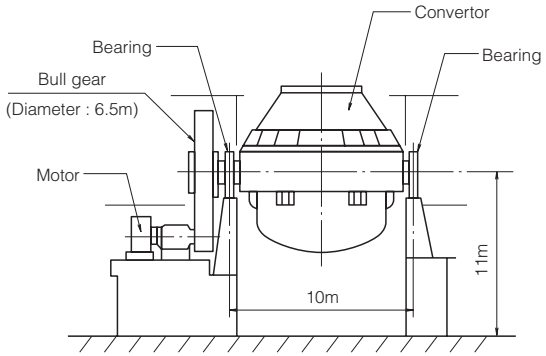

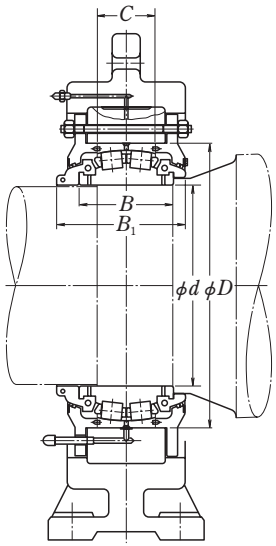

Bearing Numbers	Boundary Dimensions (mm)					Basic Load Ratings (kN)	
	d	D	C	B	B_1	C_r	C_{0r}
950SLPT1451	950	1 400	300	520	600	12 300	27 900
1200SLPT1752	1 200	1 700	410	660	730	17 300	43 500
1400SLPT1951	1 400	1 900	530	880	880	22 800	65 000

Double-Split Bearing Units for Segmented Drive Rolls in Continuous Casters

(Full-Complement Double-Split Cylindrical Roller Bearings)

Features

- ○ Integrated full-complement double-split cylindrical roller bearings with high load capacity within a limited space
- ○ Three seals for maximum protection; special seal, self-lubricating seal, and labyrinth seal
- ○ Smooth self-aligning capability prevents edge loads on rollers
- ○ Direct inner ring coupling for high precision and easy handling
- ○ Sufficient space for water jacket enables effective cooling.

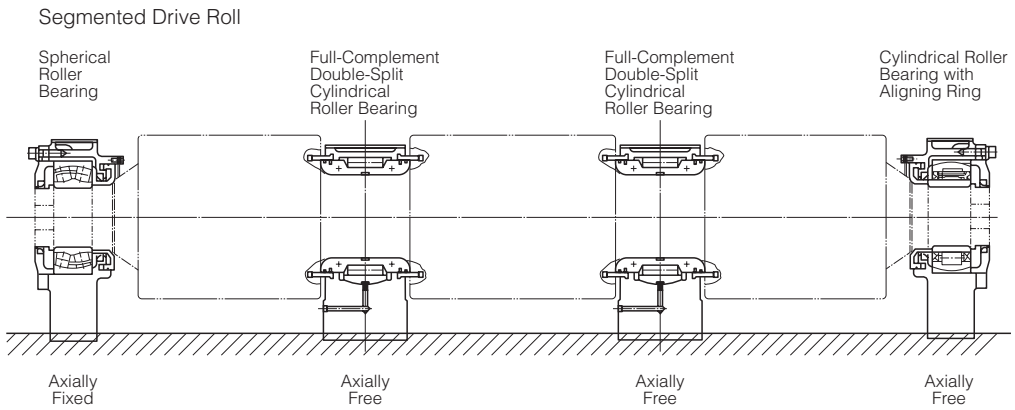

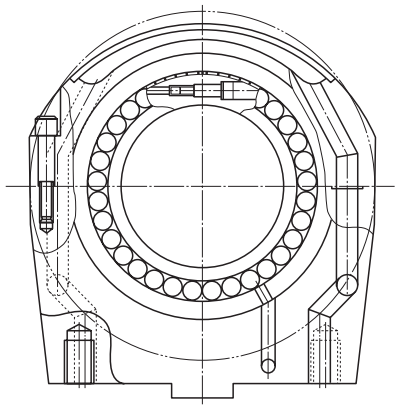

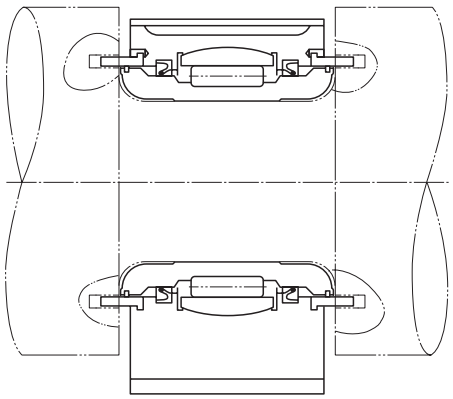

Sealed-Clean Bearings for Guide Rolls and Pinch Rolls in Continuous Casters

Features

- Special design of flexible seals assures excellent sealing and smooth axial movement of the seal lips to allow roll bending and thermal elongation.
- Special grease has been developed to lubricate continuous caster bearings. Since its heat resistance, pressure resistance, and rust preventive capability are excellent, bearings operate for a long time without maintenance.

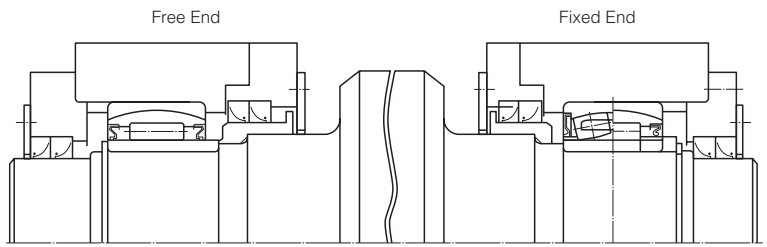

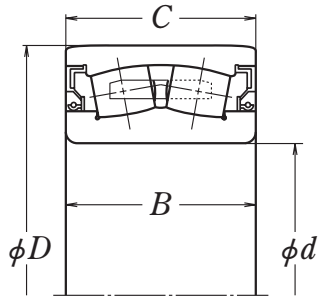

SLE Type

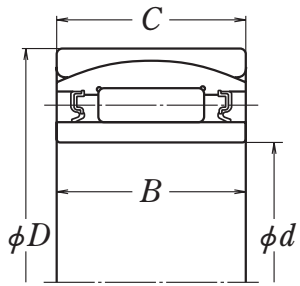

RUBE Type

	Bearing Numbers	Boundary Dimensions (mm)				Basic Load Ratings (kN)	
		d	D	B	C	C_r	C_{0r}
SLE Type	**110SLE414**	110	180	69	69	385	630
	110SLE224	110	200	53	53	310	425
	120SLE414	120	200	80	80	510	810
	140SLE304	140	210	53	53	315	490
	160SLE404	160	240	80	80	605	1 040
	180SLE404	180	280	100	100	880	1 590
	180SLE413	180	300	118	118	1 050	1 760
	190SLE414	190	320	128	128	1 320	2 210
	200SLE414	200	340	140	140	1 550	2 670
RUBE Type	**110RUBE1702PV**	110	170	70	60	280	665
	120RUBE2101PV	120	215	80	76	470	820
	130RUBE2001PV	130	200	77	69	405	935
	130RUBE41E1PV	130	210	80	80	450	1 010
	140RUBE2101PV	140	210	77	69	385	885
	150RUBE2701PV	150	270	104	96	785	1 520
	150RUBE40PV	150	225	75	75	465	1 160
	150RUBE41PV	150	250	100	100	595	1 290
	160RUBE40APV	160	240	80	80	485	1 180
	170RUBE3102PV	170	310	118	110	990	1 910
	180RUBE2801PV	180	280	107	100	785	1 870
	180RUBE40APV	180	280	100	100	785	1 870

Sealed-Clean Bearings for Chain Conveyors

Features

- More effective sealing with side contact seals
- Improved shock resistance by adopting case-hardened steel for the outer rings
- Long periods of operation without replenishing the grease are possible because of the high quality grease supplied.

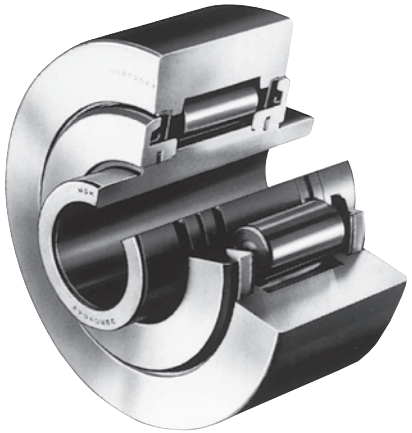

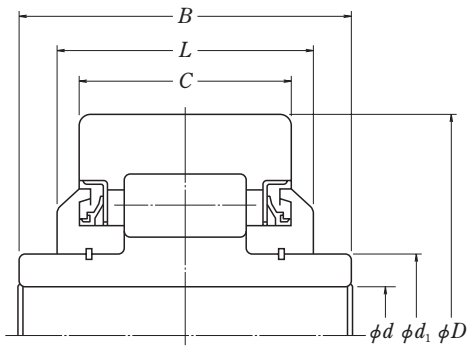

Bearing Numbers	Boundary Dimensions (mm)					
	d	d_1	D	C	B	L
28RCV13	28.2	39.95	125	55	85.4	60
30RCV17	30.3	50.03	135	65	103	78
30RCV21	30.2	45.0	135	55	94	62
30RCV25	30.3	50.03	135	65	105	70
38RCV07	38.25	55.75	150	70	114.2	83.2
38RCV13	38.7	56.0	150	70	114.2	76
41RCV07	41.75	64.16	175	80	125	85

Sealed-Clean Bearings for Sintering Equipment

Features

Pallet Wheel Bearings

Internal oil seals on both sides of the bearing and an external seal with a unique lip design on the inboard side prevent the entry of foreign matter and assure maintenance-free operation and long life.

Bearings for Inboard Rollers

Existing journal (sliding) bearings are being replaced by sealed cylindrical roller bearings because they require less maintenance and reduce cost.

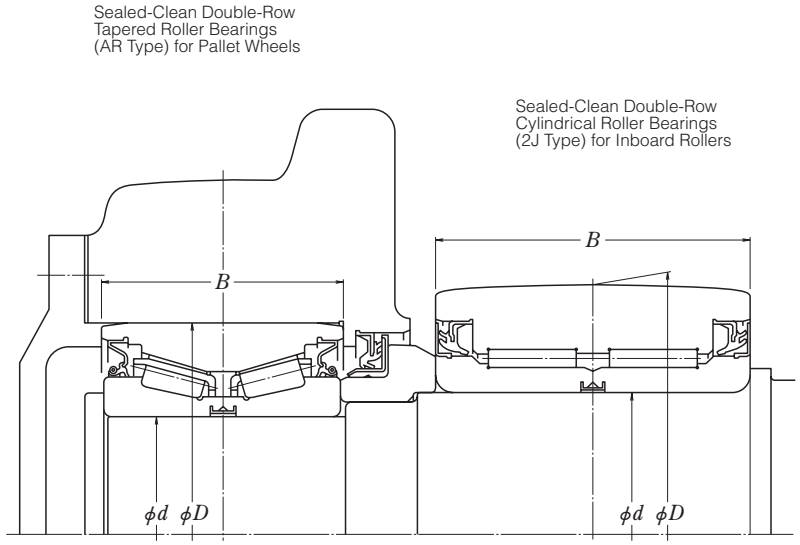

Application	Bearing Numbers	Boundary Dimensions (mm)			Basic Load Ratings (kN)		{kgf}	
		d	D	B	C_r	C_{0r}	C_r	C_{0r}
Pallet Wheels	**AR100-34**	100	180	100	350	675	35 500	69 000
	AR110-27	110	200	100	415	805	42 000	82 000
Inboard Rollers	**2J120-11**	120	210	132	425	1 390	49 500	183 000
	2J160Z-4	160.11	250	130	485	1 800	43 500	142 000

Roll Units for Tension Levelers

Features

Exclusive Roll Units Continuous Galvanizing Lines and Continuous Pickling Lines

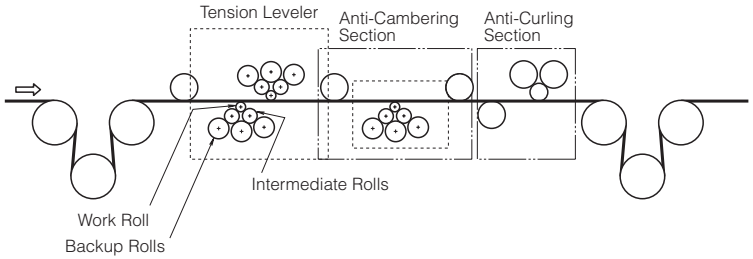

Line speeds: 0 to 1 500m/min

Work Roll and Intermediate Roll Units

Rolls units with integrated thrust blocks at both ends offer high precision and high speed capability.

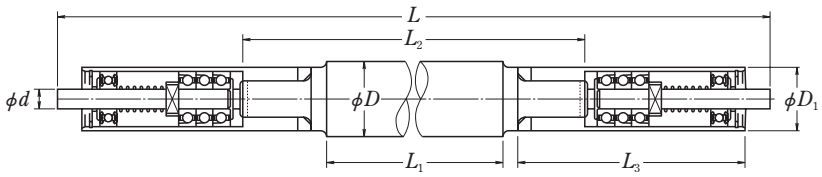

Unit bearing Numbers	Boundary Dimensions (mm)						
	D	d	L	L_1	L_2	D_1	L_3
10UMB09+WX1812-01	18	10	1 391	1 200	1 258	32	70.5
10UMB09+WX2012-01	20	10	1 391	1 200	1 258	32	70.5
12UMB15+WX3015-01	30	10	1 748	1 500	1 580	28	85
15UMB01B+IX5015-01	50	15	1 730	1 500	1 580	38	85

Backup Roll Units

High-accuracy, low-torque backup roll units with highly effective seals

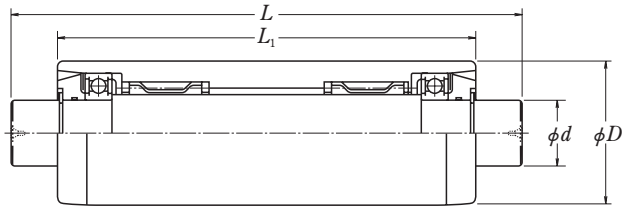

Figure 1

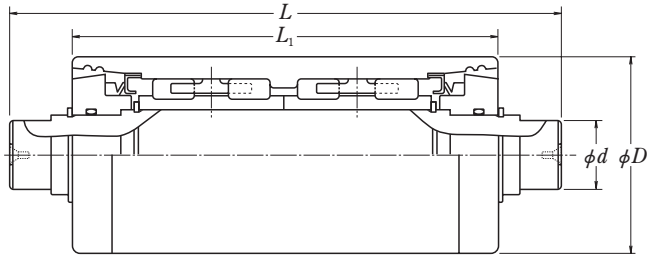

Figure 2

Unit bearing Numbers	Boundary Dimensions (mm)				Basic Load Ratings (kN)		Figure
	D	d	L_1	L_2	C_rH	$C_{0r}H$	
25UMB10	50	22	193	152	66.5	99	1
27UMB01	50	22	203	162	79	126	1
27UMB03	50	22	191	150	79	126	1
35UMB08	63	22	193	152	67	139	1
35UMB25	63	22	203	162	87.5	165	1
35UMB27	63	22	191	150	87.5	165	1
34UMB07B	75	26	208	160	131	195	2

Bearing Heaters

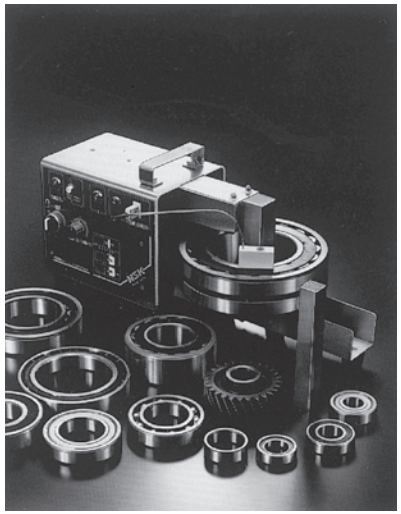

Features

○**Fast, Uniform Heating**
Induction heating reduces bearing mounting time and cost.

○**No Oil Tanks Required**
Since no oil is necessary, there can be no spills or other mess and bearings remain clean.

○**Safe Operation**
Since there are no flames, there is no fire hazard, and an internal circuit breaker guards against an electrical short.

○**Compact and Light**
Most NSK Bearing Heaters are light enough to be carried easily and uesd anyplace.

○**Automatic Temperature Control**
A thermostatic control can be set at any temperature up to 200°C. When the desired level is reached, a buzzer sounds and constant temperature is maintained.

○**Automatic Demagnetizing**
When the heating is finished, the bearing is quickly and automatically demagnetized.

○**Bearing Rest**
A convenient rest supports the bearing and allows it to be easily positioned.

○**Versatility**
Besides bearings, other metallic rings such as inner ring spacers can also be heated for shrink fitting or for other purposes.

Composition of Bearing Heater Model Numbers

CHE 02 10 - 50 E

- **CHE** — **NSK Bearing Heater**
- **02** — **Capacity** (KVA)
- **10** — **Voltage**
  - 10 : 100V
  - 12 : 120V
  - 20 : 200V
  - 22 : 220V
- **50** — **Frequency**
  - 50 : 50Hz
  - 60 : 60Hz
- **E** — **English Model**

· Be sure to give the voltage and frequency when placing an order.
· Consult NSK for any voltage other than the ones above.

Standard Specifications

Model No.		CHE0210	CHE0220	CHE0420	CHE0720	CHE1220	CHE2020
Power voltage (V)		100	200	200	200	200	200
Capacity (kVA)		2	2	4	7	12	20
No. of phases		Single			Single		
Frequency (Hz)		50 or 60			50 or 60		
External dimensions (mm)	Height	236			504	1115	1115
	Width	158			500	600	600
	Length	372		472	710	1280	1365
Mass of main body (kg)		16.0	16.5	18.5	75	242	278
Applicable bearing sizes (mm)	*A*	Max 110			Max 175	Max 310	Max 355
	B	Max 80			Max 200	Max 300	Max 400
	d	Min ϕ 20			Min ϕ 35	Min ϕ 50	Min ϕ 50

Bearing Monitors

NSK Bearing Monitors measure and process the vibrational acceleration of bearings to give early warning of trouble and allow rationalization of maintenance.

Features

○ Instruments detect various kinds of abnormalities.
○ Readings are in basic g units (1g=9.8m/sec^2).
○ Various output circuits allow further analysis.
○ Model NB-4 is a pocket-size type utilizing microelectronics. Besides checking bearing, it is convenient for general vibration measurements.

NB-4

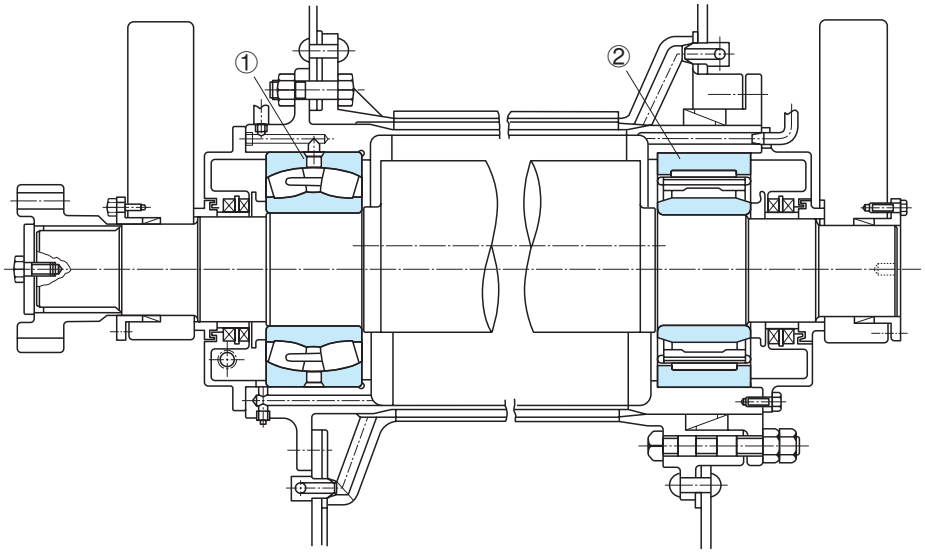

Figure 1 Eccentric shaft, Vibrating Screen

Bearing No.		① **23340CAME4-VS**	② **NU3340A-VS**
Dimensions (Bore × O.D. × Width)		ϕ200×ϕ420×165 mm	ϕ200×ϕ420×165 mm
Load	Radical	250 kN	250 kN
	Axial	—	—
Speed		750 min^{-1}	
Fits		Shaft k6	
		Housing N6	
Lubrication		Circulating Lubrication	

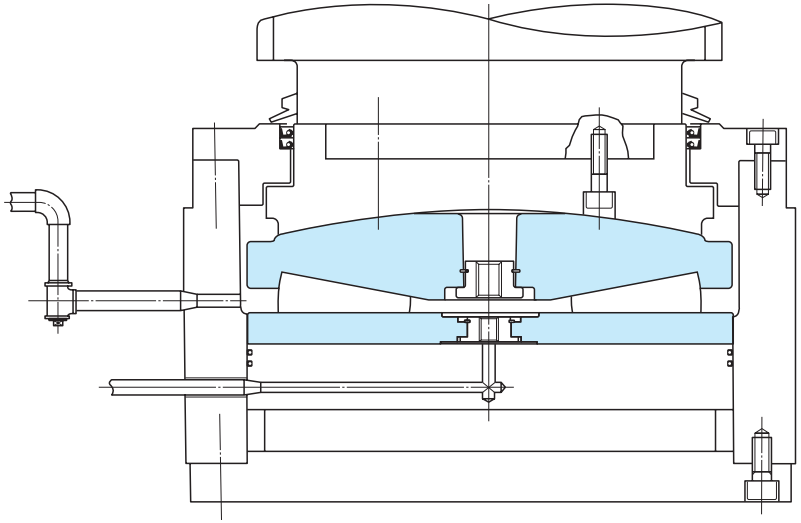

Figure 2 Adjusting Screw Thrust Block, Hot Strip Rolling Mill

Bearing No.		**581TFX01**
Dimensions (O.D. × Width)		ϕ581.025×192.99 mm
Load	Radical	—
	Axial	15 700 kN
Speed		3 to 4 min^{-1}
Fits		Shaft : —
		Housing : —
Lubrication		Oil Bath Lubrication

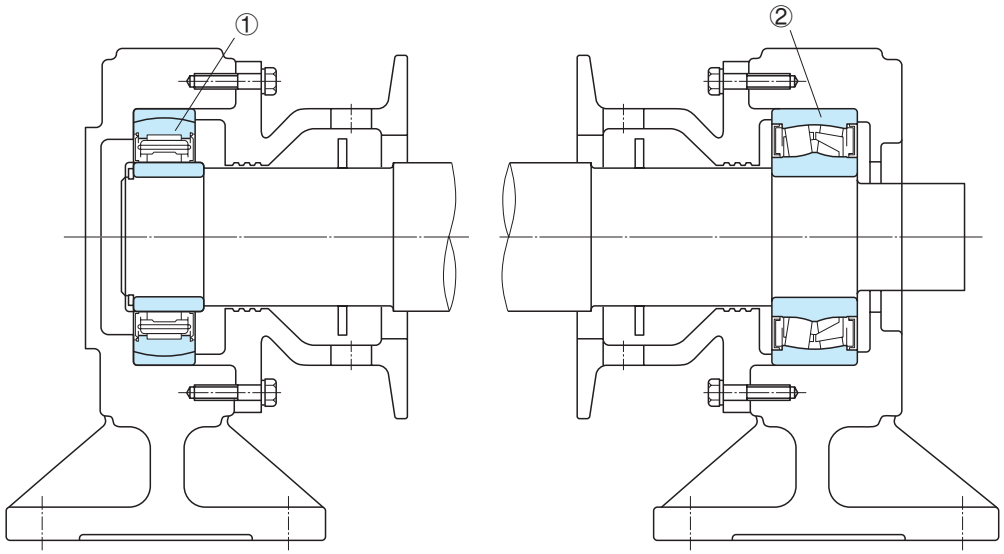

Figure 3 Table Roller, Hot Strip Rolling Mill

Bearing No.		① **90RUBE1903**	② **90SLE231LL**
Dimensions (Bore × O.D. × Width)		ϕ90× ϕ190×46 mm	ϕ90× ϕ190×64 mm
Load	Radical	2.95 kN	2.95 kN
	Axial	—	—
Speed		Max 1650 min^{-1}	
Fits		Shaft n6	Shaft n6
		Housing G7	Housing G7
Lubrication		Grease (Sealed-Clean)	

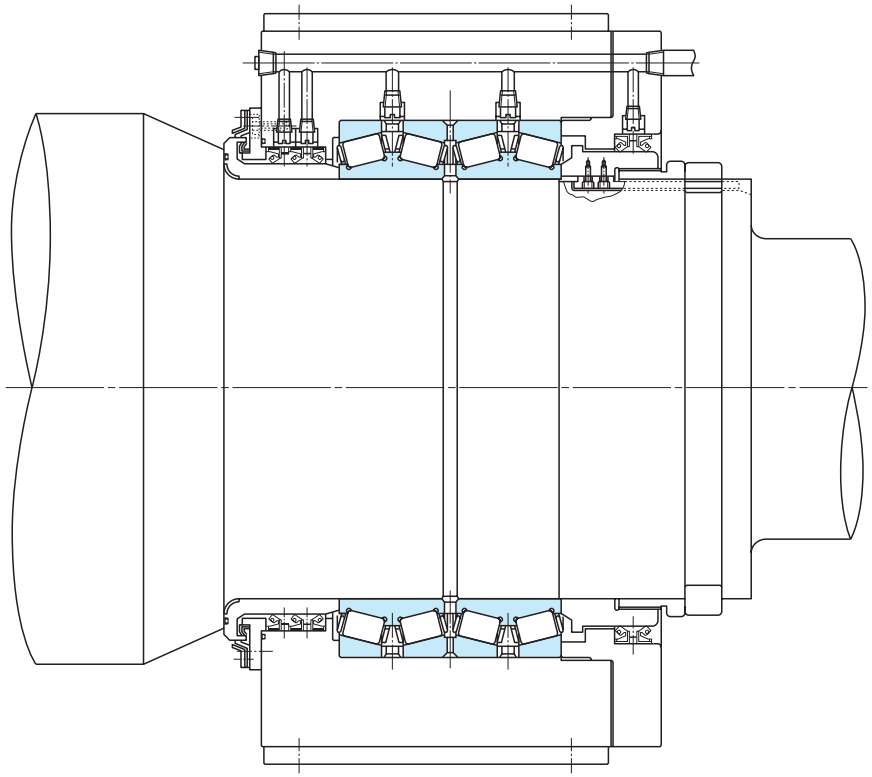

Figure 4 Work Roll Chock Assembly, Steel Strip Rolling Mill

Bearing No.		**685KV8751g**
Dimensions (Bore × O.D. × Width)		ϕ685.800× ϕ876.300×355.600/352.422 mm
Load	Radical	1810 kN
	Axial	1230 KN
Speed		80 min^{-1}
Fits		Shaft $^{-0.250}_{-0.325}$
		Housing $^{+0.225}_{+0.150}$
Lubrication		Grease

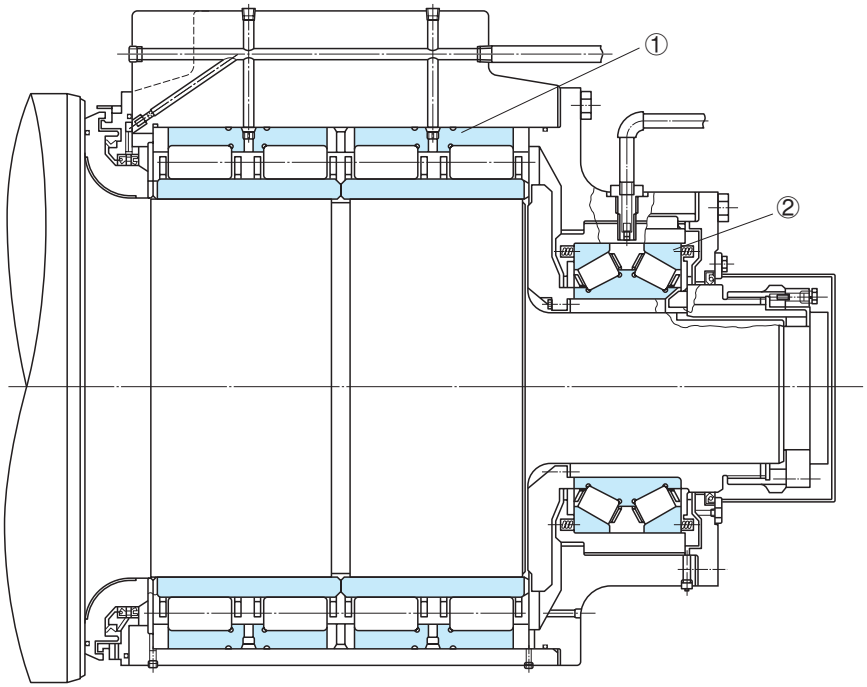

Figure 5 Back-Up Roll Chock Assembly, Cold Strip Rolling Mill

Bearing No.		① **920RV1211A**	② **482KDH7351A**
Dimensions (Bore × O.D. × Width)		ϕ920×ϕ1280×850 mm	ϕ482.600×ϕ733.425×200 mm
Load	Radical	7840 kN	—
	Axial	—	167 kN
Speed		314 min^{-1}	
Fits		Shaft $^{+0.480}_{+0.390}$	Shaft : Loose
		Housing G7	Housing : Loose
Lubrication		Oil Mist Lubrication	

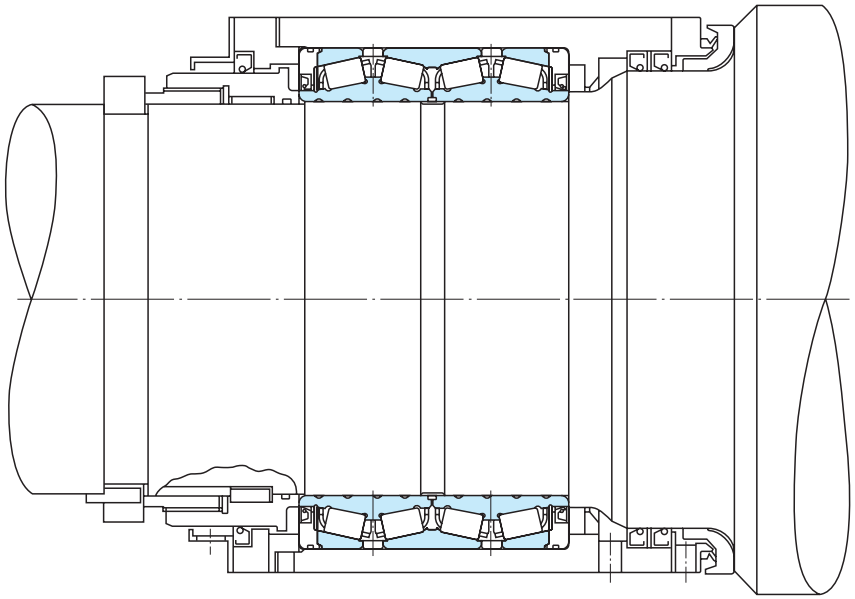

Figure 6 Work Roll Chock Assembly, Cold Strip Rolling Mill

Bearing No.		**343KVE4557BEg**
Dimensions (Bore × O.D. × Width)		ϕ343.052×ϕ457.098×254.000 mm
Load	Radical	392 KN
	Axial	98 kN
Speed		Max 1050 min^{-1}
Fits		Shaft $^{-0.200}_{-0.250}$
		Housing $^{+0.150}_{+0.100}$
Lubrication		Grease (Sealed-Clean)

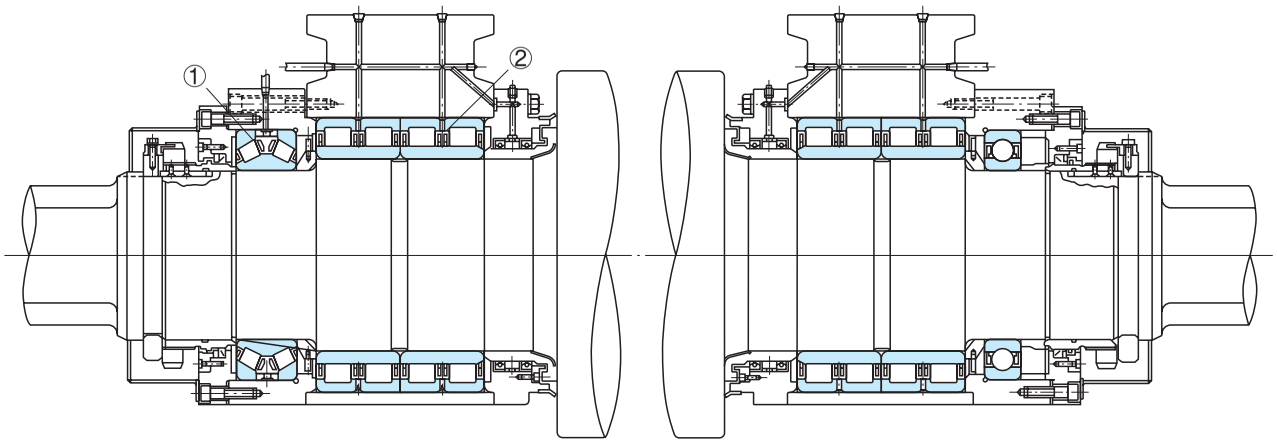

Figure 7 Horizontal Roll Chock Assembly, Large-Size Universal Rolling Mill

Bearing No.		① **305KDH5601+K**	② **2J530–1gDR**
Dimensions (Bore × O.D. × Width)		ϕ 305.069× ϕ 560×200 mm	ϕ 530× ϕ 730×540 mm
Load	Radical	—	5880 kN
	Axial	1180 kN	—
Speed		150 min^{-1}	
Fits		Shaft : Loose	Shaft : Loose
		Housing : Loose	Housing G7
Lubrication		Grease	

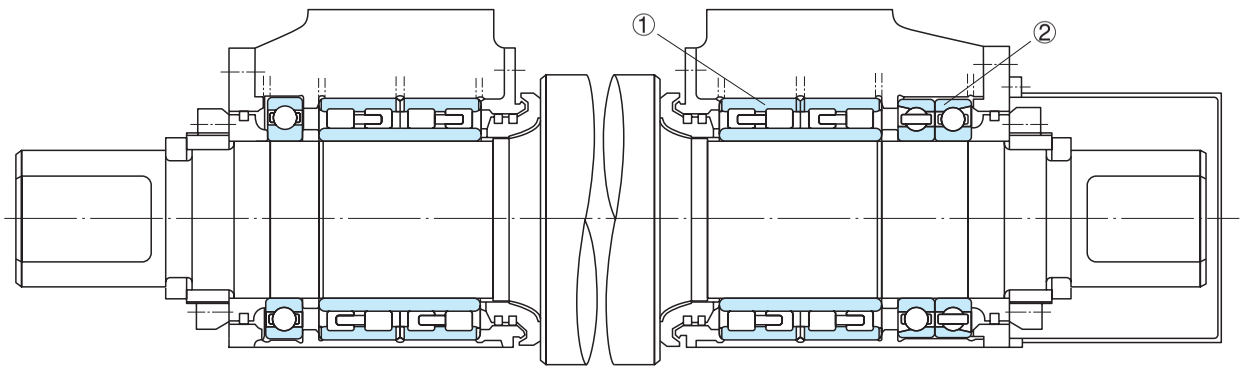

Figure 8 Finishing Roll Chock Assembly, Wire Rolling Mill

Bearing No.		① **150RV2302**	② **BA150-3DB**
Dimensions (Bore × O.D. × Width)		ϕ 150× ϕ 230×156 mm	ϕ 150× ϕ 230×70 mm
Load	Radical	49kN	—
	Axial	—	9.8kN
Speed		1695 min^{-1}	
Fits		Shaft p6	Shaft f6
		Housing G7	Housing Clearance 0.5
Lubrication		Grease	

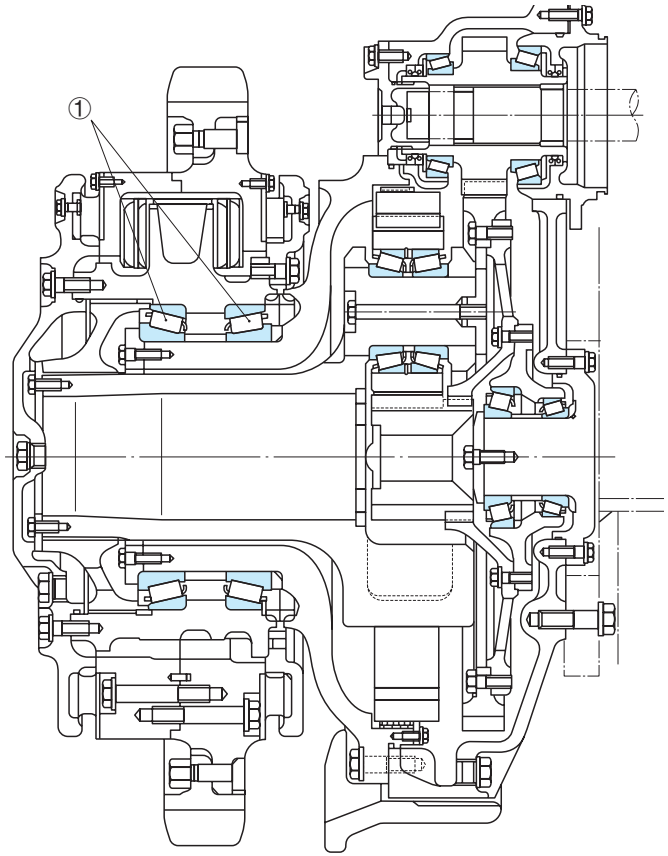

Figure 9 Final Drive, Bulldozer

Bearing No.		① **LM361649/LM361610DB+LR**
Dimensions (Bore × O.D. × Width)		ϕ342.900×ϕ450.850×66.675 (combined)mm
Load	Radical	—
	Axial	—
Speed		—
Fits		—
		—
Lubrication		—

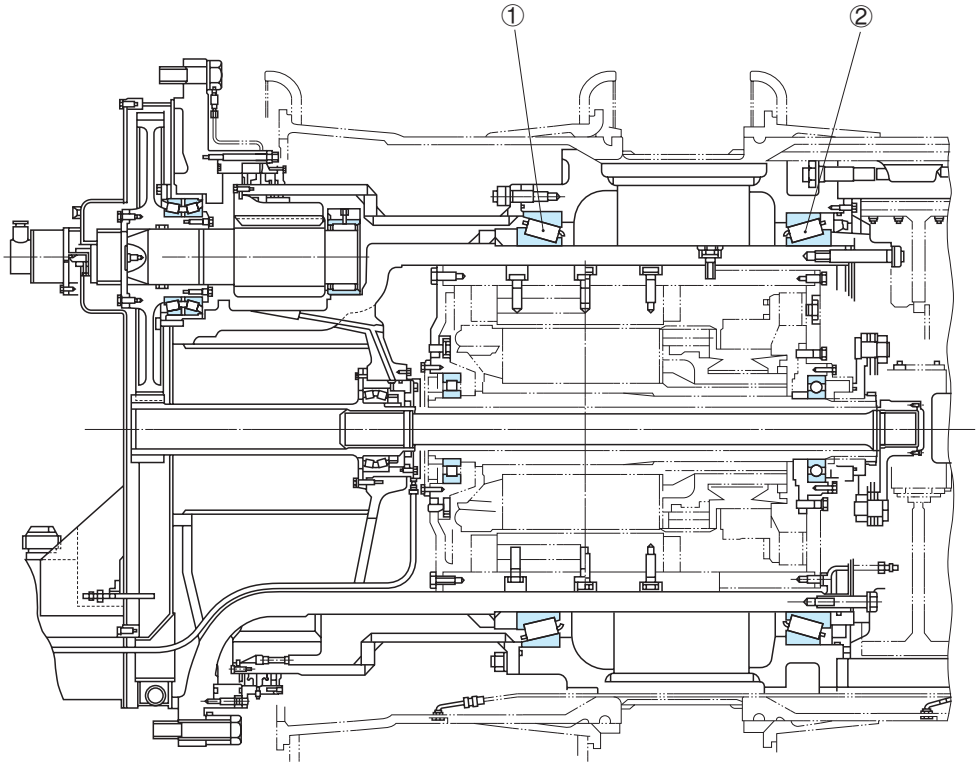

Figure 10 Axle Assembly, Dump Truck

Bearing No.		① **R785-1**	② **R780-2**
Dimensions (Bore × O.D. × Width)		ϕ785×ϕ925×95 mm	ϕ780×ϕ925×95 mm
Load	Radical	—	
	Axial	—	
Speed		Max 120 min^{-1}	
Fits		Shaft : transition fit	
		Housing : interference fit	
Lubrication		Splash Lubrication	

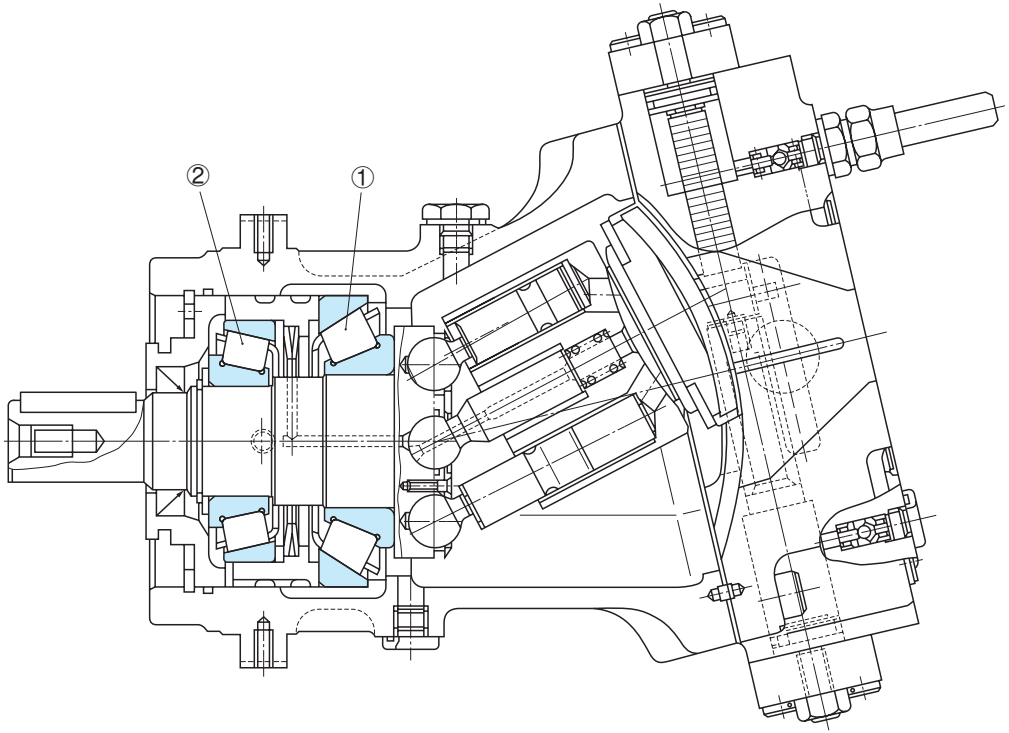

Figure 11 Bent Axis Type Axial Piston Pump

Bearing No.		① **30326D**	② **HR30317J**
Dimensions (Bore × O.D. × Width)		ϕ 130× ϕ 280×63.75 mm	ϕ 85× ϕ 180×44.5 mm
Load	Radical	89.5 kN	37.8 kN
	Axial	137kN	—
Speed		1800 min^{-1}	
Fits		Shaft p6	
		Housing K7	
Lubrication		Circulating Lubrication	

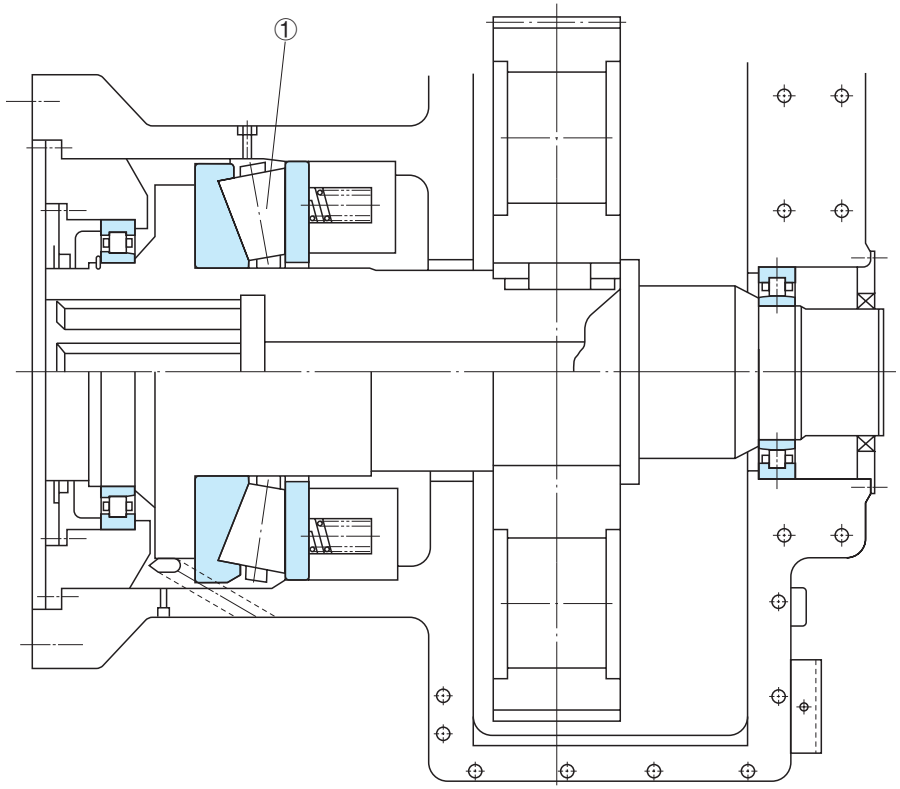

Figure 12 Tapered Roller Thrust Bearing in Heavy Duty Extruder

Bearing No.		① **431TTF8651**
Dimensions (Bore × O.D. × Width)		ϕ 431.800× ϕ 863.600×228.600 mm
Load	Radical	3920 kN
	Axial	—
Speed		150 min^{-1}
Fits		Shaft $^{0}_{-0.051}$
		Housing $^{+0.152}_{+0.076}$
Lubrication		Circulating Lubrication

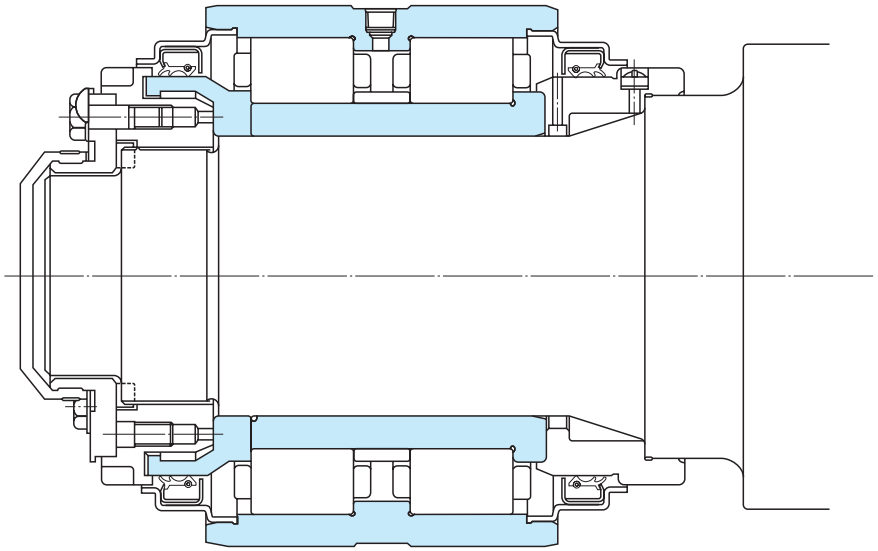

Figure 13 Axlebox Bearing, New Commuter Train

Bearing Numbers	Bore Dia.	Boundary Dimensions (mm) Out-side Dia.	Outer Ring Width	Inner Ring Width
2M110-3	110	220	160	154
110JRF01	110	220	170	182
120JRF04	120	220	175	182
2M120-7	120	240	160	—
JC26	120	240	160	162
JC32	120	230	150	142
130JRF03	130	240	160	160
2M130-8	130	260	180	182
130JRF02	130	260	175	182

Bearing No.		**JC32**
Dimensions (Bore × O.D. × Width)		ϕ120×ϕ230×150 mm
Load	Radical	Max 90 kN
	Axial	27kN
Speed		700 min^{-1}
Fits		Shaft n6
		Housing : —
Lubrication		Grease

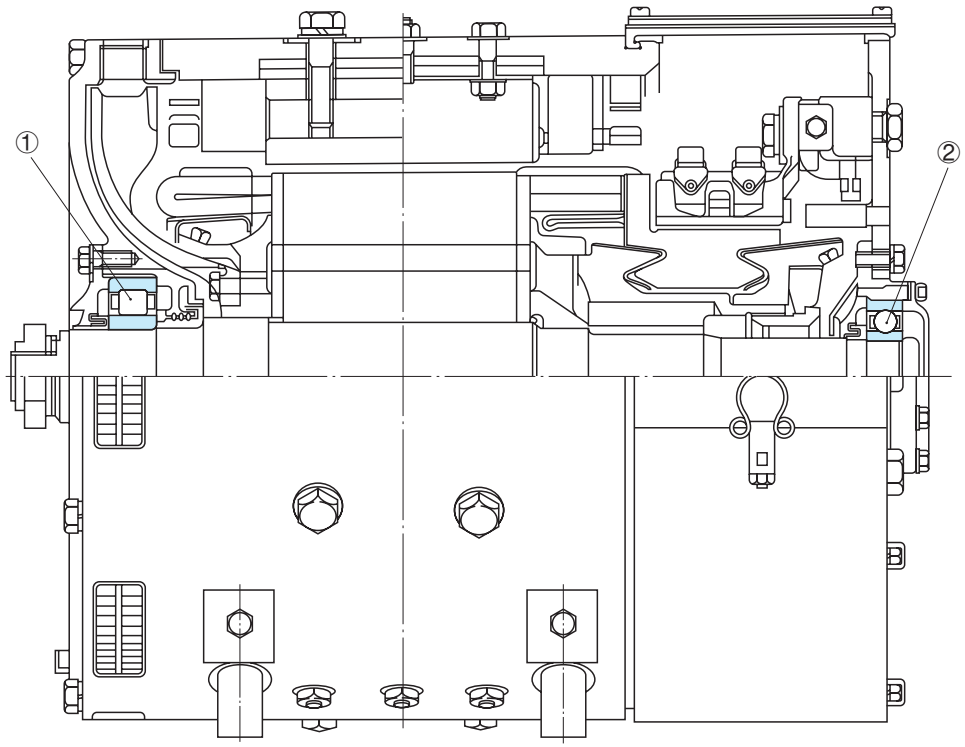

Figure 14 Traction Motor, Bullet Train (SHINKANSEN)

Bearing No.		① **NU316MA3C4EP6**	② **6312C4P6**
Dimensions (Bore × O.D. × Width)		ϕ80×ϕ170×39 mm	ϕ60×ϕ130×31 mm
Load	Radical	4.2 kN	1.9 kN
	Axial	—	—
Speed		3700 min^{-1}	
Fits		Shaft n6	Shaft m5
		Housing $^{-0.004}_{-0.021}$	Housing K6
Lubrication		Grease	

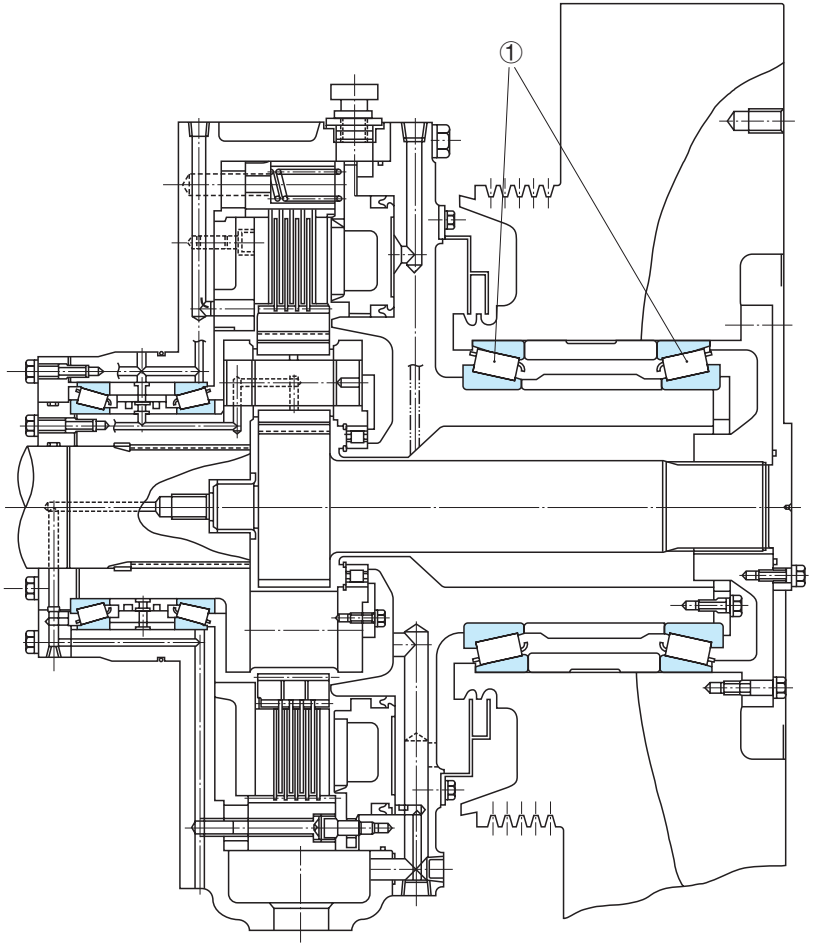

Figure 15 Flywheel and Clutch Assembly, Large-Size Press

Bearing No.		① **32960DB+KLR172**
Dimensions (Bore × O.D. × Width)		ϕ300×ϕ420×76 (combined)mm
Load	Radical	27.5 kN
	Axial	—
Speed		Max 900 min^{-1}
Fits		Shaft h6
		Housing K6
Lubrication		Circulating Lubrication

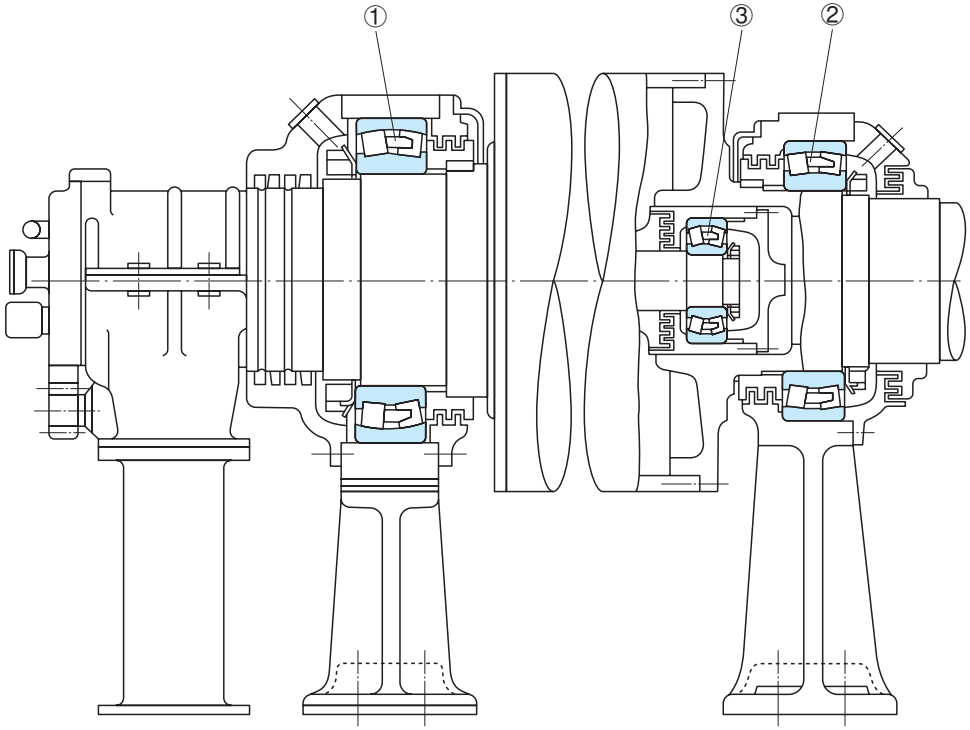

Figure 16 Suction Roll, Paper Making Machine

Bearing No.		① **230/600CAM E4**	② **23184CAM E4**	③ **22330CAM**
Dimensions (Bore × O.D. × Width)		ϕ600×ϕ870×200 mm	ϕ420×ϕ700×280 mm	ϕ150×ϕ320×108 mm
Load	Radical	108 kN	83 kN	44 kN
	Axial	—	—	—
Speed		328 min^{-1}		
Fits		Shaft : Tight		Shaft : Loose
		Housing : Loose		Housing : Tight
Lubrication		Circulating Lubrication		

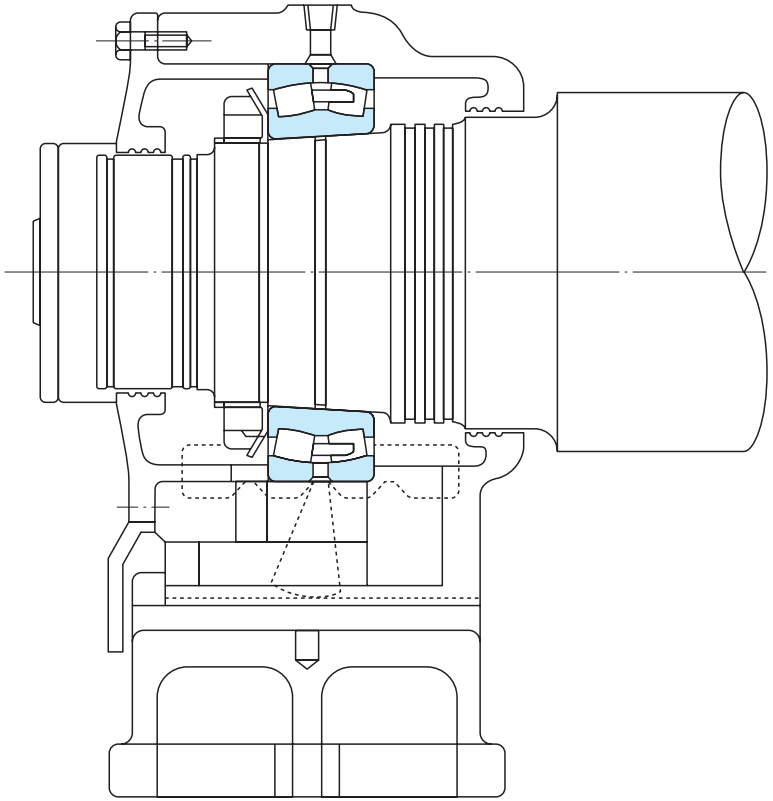

Figure 17 Dryer Roll, Paper Making Machine (Free End)

Bearing No.		**23152CAg3MKE4S11**
Dimensions (Bore × O.D. × Width)		ϕ260× ϕ440×144 mm
Load	Radical	63 kN
	Axial	—
Speed		148 min^{-1}
Fits		Shaft —
		Housing $^{+0.10}_{+0.05}$
Lubrication		Circulating Lubrication

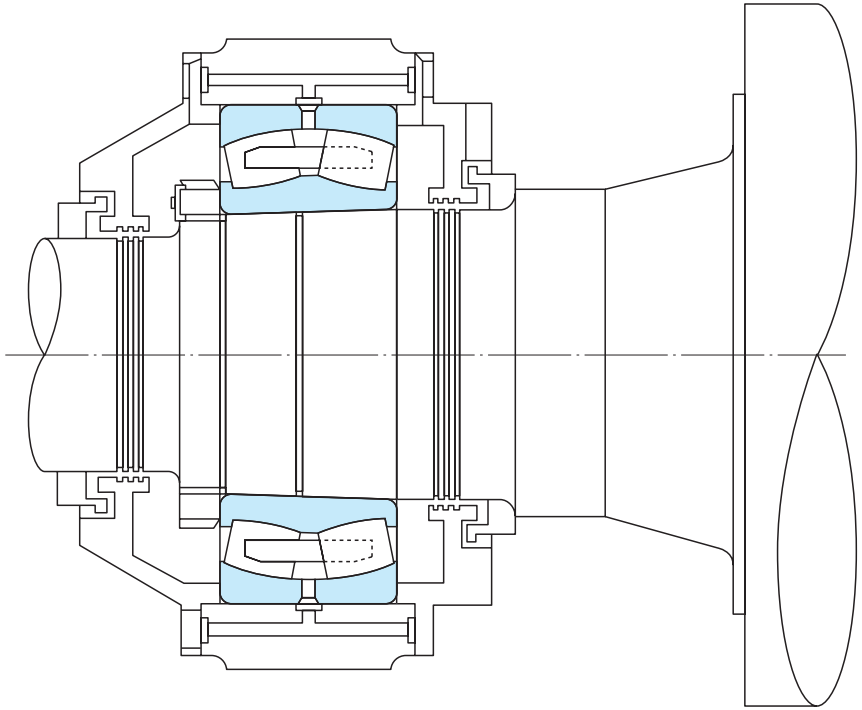

Figure 18 Press Roll, Paper Making Machine (Fixed End)

Bearing No.		**23276CAMKE4**
Dimensions (Bore × O.D. × Width)		ϕ380× ϕ680×240 mm
Load	Radical	260 kN
	Axial	—
Speed		341 min^{-1}
Fits		Shaft —
		Housing H7
Lubrication		Circulating Lubrication

Appendix Table 1 Conversion Table from SI (International Units) System

Comparison of SI, CGS, and Engineering Units

Units / Unit System	Length	Mass	Time	Temp.	Acceleration	Force	Stress	Pressure	Energy	Power
SI	m	kg	s	K	m/s^2	N	Pa	Pa	J	W
CGS System	cm	g	s	°C	Gal	dyn	dyn/cm^2	dyn/cm^2	erg	erg/s
Engineering Unit System	m	$kgf \cdot s^2/m$	s	°C	m/s^2	kgf	kgf/m^2	kgf/m^2	$kgf \cdot m$	$kgf \cdot m/s$

Prefixes Used In SI System

Multiples	Prefix	Symbols	Multiples	Prefix	Symbols
10^{18}	Exa	E	10^{-1}	Deci	d
10^{15}	Peta	P	10^{-2}	Centi	c
10^{12}	Tera	T	10^{-3}	Milli	m
10^{9}	Giga	G	10^{-6}	Micro	μ
10^{6}	Mega	M	10^{-9}	Nano	n
10^{3}	Kilo	k	10^{-12}	Pico	p
10^{2}	Hecto	h	10^{-15}	Femto	f
10	Deca	da	10^{-18}	Ato	a

Conversion Factors from SI Units

Parameter	SI Units		Units other than SI		Conversion Factors from SI Units
	Names of Units	Symbols	Name of Units	Symbols	
Angle	Radian	rad	Degree Minute Second	° ′ ″	$180/\pi$ $10\,800/\pi$ $648\,000/\pi$
Length	Meter	m	Micrometer Angstrom	μm Å	10^6 10^{10}
Area	Square meter	m^2	Are Hectare	a ha	10^{-2} 10^{-4}
Volume	Cubic meter	m^3	Liter Deciliter	l, L dl, dL	10^3 10^4
Time	Second	s	Minute Hour Day	min h d	1/60 1/3 600 1/86 400
Frequency	Hertz	Hz	Cycle	s^{-1}	1
Speed of Rotation	Revolution per second	s^{-1}	Revolution per miunte	rpm	60
Speed	Meter per second	m/s	Kilometer per hour Knot	km/h kn	3 600/1 000 3 600/1 852
Acceleration	Meter per second per second	m/s^2	Gal g	Gal g	10^2 1/9.806 65
Mass	Kilogram	kg	Ton	t	10^{-3}
Force	Newton	N	Kilogram-force Ton-force Dyne	kgf tf dyn	1/9.806 65 1/ (9.806 65×10^3) 10^5
Torque or Moment	Newton · meter	N · m	Kilogram-force meter	kgf · m	1/9.806 65
Stress	Pascal	Pa (N/m^2)	Kilogram-force per square centimeter Kilogram-force per square millimeter	kgf/cm^2 kgf/mm^2	1/ (9.806 65×10^4) 1/ (9.806 65×10^6)

Conversion Factors from SI Units (Continued)

Parameter	SI Units		Units other than SI		Conversion Factors from SI Units
	Names of Units	Symbols	Name of Units	Symbols	
Pressure	Pascal (Newton per square meter)	Pa (N/m^2)	Kilogram-force per square meter Water Column Mercury Column Torr Bar Atmosphere	kgf/m^2 mH_2O mmHg Torr bar atm	1/9.806 65 1/ (9.806 65×10^3) 760/ (1.013 25×10^5) 760/ (1.013 25×10^5) 10^{-5} 1/ (1.013 25×10^5)
Energy	Joule (Newton · meter)	J (N · m)	Erg Calorie (International) Kilogram-force meter Kilowatt hour French horse power hour	erg cal_{IT} kgf · m kW · h PS · h	10^7 1/4.186 8 1/9.806 65 1/ (3.6×10^6) ≈ 3.776 72×10^{-7}
Work	Watt (Joule per second)	W (J/s)	Kilogram-force meter per second Kilocalorie per hour French horse power	kgf · m/s kcal/h PS	1/9.806 65 1/1.163 ≈ 1/735.498 8
Viscosity, Viscosity Index	Pascal second	Pa · s	Poise	P	10
Kinematic Viscosity, Kinematic Viscosity Index	Square meter per second	m^2/s	Stokes Centistokes	St cSt	10^4 10^6
Temperature	Kelvin, Degree celsius	K, °C	Degree	°C	(See Note (1))
Electric Current, Magnetomotive Force	Ampere	A	Ampere	A	1
Voltage, Electromotive Force	Volt	V	(Watts per ampere)	(W/A)	1
Magnetic Field Strength	Ampere per meter	A/m	Oersted	Oe	$4\pi/10^3$
Magnetic Flux Density	Tesla	T	Gauss Gamma	Gs γ	10^4 10^9
Electrical Resistance	Ohm	Ω	(Volts per ampere)	(V/A)	1

Note (1) The conversion from T K into θ °C is $\theta = T - 273.15$ but for a temperature difference, it is $\Delta T = \Delta\theta$. However, ΔT and $\Delta\theta$ represent temperature differences measured using the Kelvin and Celsius scales respectively.

Remarks The names and symbols in ( ) are equivalent to those directly above them or on their left.
Example of conversion 1N=1/9.806 65kgf

Appendix Table 2 N-kgf Conversion Table

(Method of using this table) For example, to convert 10N into kgf, read the figure in the right kgf column adjacent to the 10 in the center column in the 1st block. This means that 10N is 1.0197kgf. To convert 10kgf into N, read the figure in the left N column of the same row, which indicates that the answer is 98.066N.

1 N = 0.1019716 kgf
1 kgf = 9.80665 N

N		kgf	N		kgf	N		kgf
9.8066	**1**	0.1020	333.43	**34**	3.4670	657.05	**67**	6.8321
19.613	**2**	0.2039	343.23	**35**	3.5690	666.85	**68**	6.9341
29.420	**3**	0.3059	353.04	**36**	3.6710	676.66	**69**	7.0360
39.227	**4**	0.4079	362.85	**37**	3.7729	686.47	**70**	7.1380
49.033	**5**	0.5099	372.65	**38**	3.8749	696.27	**71**	7.2400
58.840	**6**	0.6118	382.46	**39**	3.9769	706.08	**72**	7.3420
68.647	**7**	0.7138	392.27	**40**	4.0789	715.89	**73**	7.4439
78.453	**8**	0.8158	402.07	**41**	4.1808	725.69	**74**	7.5459
88.260	**9**	0.9177	411.88	**42**	4.2828	735.50	**75**	7.6479
98.066	**10**	1.0197	421.69	**43**	4.3848	745.31	**76**	7.7498
107.87	**11**	1.1217	431.49	**44**	4.4868	755.11	**77**	7.8518
117.68	**12**	1.2237	441.30	**45**	4.5887	764.92	**78**	7.9538
127.49	**13**	1.3256	451.11	**46**	4.6907	774.73	**79**	8.0558
137.29	**14**	1.4276	460.91	**47**	4.7927	784.53	**80**	8.1577
147.10	**15**	1.5296	470.72	**48**	4.8946	794.34	**81**	8.2597
156.91	**16**	1.6315	480.53	**49**	4.9966	804.15	**82**	8.3617
166.71	**17**	1.7335	490.33	**50**	5.0986	813.95	**83**	8.4636
176.52	**18**	1.8355	500.14	**51**	5.2006	823.76	**84**	8.5656
186.33	**19**	1.9375	509.95	**52**	5.3025	833.57	**85**	8.6676
196.13	**20**	2.0394	519.75	**53**	5.4045	843.37	**86**	8.7696
205.94	**21**	2.1414	529.56	**54**	5.5065	853.18	**87**	8.8715
215.75	**22**	2.2434	539.37	**55**	5.6084	862.99	**88**	8.9735
225.55	**23**	2.3453	549.17	**56**	5.7104	872.79	**89**	9.0755
235.36	**24**	2.4473	558.98	**57**	5.8124	882.60	**90**	9.1774
245.17	**25**	2.5493	568.79	**58**	5.9144	892.41	**91**	9.2794
254.97	**26**	2.6513	578.59	**59**	6.0163	902.21	**92**	9.3814
264.78	**27**	2.7532	588.40	**60**	6.1183	912.02	**93**	9.4834
274.59	**28**	2.8552	598.21	**61**	6.2203	921.83	**94**	9.5853
284.39	**29**	2.9572	608.01	**62**	6.3222	931.63	**95**	9.6873
294.20	**30**	3.0591	617.82	**63**	6.4242	941.44	**96**	9.7893
304.01	**31**	3.1611	627.63	**64**	6.5262	951.25	**97**	9.8912
313.81	**32**	3.2631	637.43	**65**	6.6282	961.05	**98**	9.9932
323.62	**33**	3.3651	647.24	**66**	6.7301	970.86	**99**	10.095

Appendix Table 3 kg-lb Conversion Table

(Method of using this table) For example, to convert 10kg into lb, read the figure in the right lb column adjacent to the 10 in the center column in the 1st block. This means that 10kg is 22.046lb. To convert 10lb into kg, read the figure in the left kg column of the same row, which indicates that the answer is 4.536kg.

1 kg = 2.2046226 lb
1 lb = 0.45359237 kg

kg		lb	kg		lb	kg		lb
0.454	**1**	2.205	15.422	**34**	74.957	30.391	**67**	147.71
0.907	**2**	4.409	15.876	**35**	77.162	30.844	**68**	149.91
1.361	**3**	6.614	16.329	**36**	79.366	31.298	**69**	152.12
1.814	**4**	8.818	16.783	**37**	81.571	31.751	**70**	154.32
2.268	**5**	11.023	17.237	**38**	83.776	32.205	**71**	156.53
2.722	**6**	13.228	17.690	**39**	85.980	32.659	**72**	158.73
3.175	**7**	15.432	18.144	**40**	88.185	33.112	**73**	160.94
3.629	**8**	17.637	18.597	**41**	90.390	33.566	**74**	163.14
4.082	**9**	19.842	19.051	**42**	92.594	34.019	**75**	165.35
4.536	**10**	22.046	19.504	**43**	94.799	34.473	**76**	167.55
4.990	**11**	24.251	19.958	**44**	97.003	34.927	**77**	169.76
5.443	**12**	26.455	20.412	**45**	99.208	35.380	**78**	171.96
5.897	**13**	28.660	20.865	**46**	101.41	35.834	**79**	174.17
6.350	**14**	30.865	21.319	**47**	103.62	36.287	**80**	176.37
6.804	**15**	33.069	21.772	**48**	105.82	36.741	**81**	178.57
7.257	**16**	35.274	22.226	**49**	108.03	37.195	**82**	180.78
7.711	**17**	37.479	22.680	**50**	110.23	37.648	**83**	182.98
8.165	**18**	39.683	23.133	**51**	112.44	38.102	**84**	185.19
8.618	**19**	41.888	23.587	**52**	114.64	38.555	**85**	187.39
9.072	**20**	44.092	24.040	**53**	116.84	39.009	**86**	189.60
9.525	**21**	46.297	24.494	**54**	119.05	39.463	**87**	191.80
9.979	**22**	48.502	24.948	**55**	121.25	39.916	**88**	194.01
10.433	**23**	50.706	25.401	**56**	123.46	40.370	**89**	196.21
10.886	**24**	52.911	25.855	**57**	125.66	40.823	**90**	198.42
11.340	**25**	55.116	26.308	**58**	127.87	41.277	**91**	200.62
11.793	**26**	57.320	26.762	**59**	130.07	41.730	**92**	202.83
12.247	**27**	59.525	27.216	**60**	132.28	42.184	**93**	205.03
12.701	**28**	61.729	27.669	**61**	134.48	42.638	**94**	207.23
13.154	**29**	63.934	28.123	**62**	136.69	43.091	**95**	209.44
13.608	**30**	66.139	28.576	**63**	138.89	43.545	**96**	211.64
14.061	**31**	68.343	29.030	**64**	141.10	43.998	**97**	213.85
14.515	**32**	70.548	29.484	**65**	143.30	44.452	**98**	216.05
14.969	**33**	72.753	29.937	**66**	145.51	44.906	**99**	218.26

Appendix Table 4 °C-°F Conversion Table

(Method of using this table) For example, to convert 38°C into °F, read the figure in the right °F column adjacent to the 38 in the center column in the 2nd block. This means that 38°C is 100.4°F. To convet 38°F into °C, read the figure in the left °C column of the same row, which indicates that the answer is 3.3°C.

$$C = \frac{9}{5}(F-32)$$

$$F = 32 + \frac{9}{5}C$$

°C		°F	°C		°F	°C		°F	°C		°F
−73.3	**−100**	−148.0	0.0	**32**	89.6	21.7	**71**	159.8	43.3	**110**	230
−62.2	**− 80**	−112.0	0.6	**33**	91.4	22.2	**72**	161.6	46.1	**115**	239
−51.1	**− 60**	− 76.0	1.1	**34**	93.2	22.8	**73**	163.4	48.9	**120**	248
−40.0	**− 40**	− 40.0	1.7	**35**	95.0	23.3	**74**	165.2	51.7	**125**	257
−34.4	**− 30**	− 22.0	2.2	**36**	96.8	23.9	**75**	167.0	54.4	**130**	266
−28.9	**− 20**	− 4.0	2.8	**37**	98.6	24.4	**76**	168.8	57.2	**135**	275
−23.3	**− 10**	14.0	3.3	**38**	100.4	25.0	**77**	170.6	60.0	**140**	284
−17.8	**0**	32.0	3.9	**39**	102.2	25.6	**78**	172.4	65.6	**150**	302
−17.2	**1**	33.8	4.4	**40**	104.0	26.1	**79**	174.2	71.1	**160**	320
−16.7	**2**	35.6	5.0	**41**	105.8	26.7	**80**	176.0	76.7	**170**	338
−16.1	**3**	37.4	5.6	**42**	107.6	27.2	**81**	177.8	82.2	**180**	356
−15.6	**4**	39.2	6.1	**43**	109.4	27.8	**82**	179.6	87.8	**190**	374
−15.0	**5**	41.0	6.7	**44**	111.2	28.3	**83**	181.4	93.3	**200**	392
−14.4	**6**	42.8	7.2	**45**	113.0	28.9	**84**	183.2	98.9	**210**	410
−13.9	**7**	44.6	7.8	**46**	114.8	29.4	**85**	185.0	104.4	**220**	428
−13.3	**8**	46.4	8.3	**47**	116.6	30.0	**86**	186.8	110.0	**230**	446
−12.8	**9**	48.2	8.9	**48**	118.4	30.6	**87**	188.6	115.6	**240**	464
−12.2	**10**	50.0	9.4	**49**	120.2	31.1	**88**	190.4	121.1	**250**	482
−11.7	**11**	51.8	10.0	**50**	122.0	31.7	**89**	192.2	148.9	**300**	572
−11.1	**12**	53.6	10.6	**51**	123.8	32.2	**90**	194.0	176.7	**350**	662
−10.6	**13**	55.4	11.1	**52**	125.6	32.8	**91**	195.8	204	**400**	752
−10.0	**14**	57.2	11.7	**53**	127.4	33.3	**92**	197.6	232	**450**	842
− 9.4	**15**	59.0	12.2	**54**	129.2	33.9	**93**	199.4	260	**500**	932
− 8.9	**16**	60.8	12.8	**55**	131.0	34.4	**94**	201.2	288	**550**	1022
− 8.3	**17**	62.6	13.3	**56**	132.8	35.0	**95**	203.0	316	**600**	1112
− 7.8	**18**	64.4	13.9	**57**	134.6	35.6	**96**	204.8	343	**650**	1202
− 7.2	**19**	66.2	14.4	**58**	136.4	36.1	**97**	206.6	371	**700**	1292
− 6.7	**20**	68.0	15.0	**59**	138.2	36.7	**98**	208.4	399	**750**	1382
− 6.1	**21**	69.8	15.6	**60**	140.0	37.2	**99**	210.2	427	**800**	1472
− 5.6	**22**	71.6	16.1	**61**	141.8	37.8	**100**	212.0	454	**850**	1562
− 5.0	**23**	73.4	16.7	**62**	143.6	38.3	**101**	213.8	482	**900**	1652
− 4.4	**24**	75.2	17.2	**63**	145.4	38.9	**102**	215.6	510	**950**	1742
− 3.9	**25**	77.0	17.8	**64**	147.2	39.4	**103**	217.4	538	**1 000**	1832
− 3.3	**26**	78.8	18.3	**65**	149.0	40.0	**104**	219.2	593	**1 100**	2012
− 2.8	**27**	80.6	18.9	**66**	150.8	40.6	**105**	221.0	649	**1 200**	2192
− 2.2	**28**	82.4	19.4	**67**	152.6	41.1	**106**	222.8	704	**1 300**	2372
− 1.7	**29**	84.2	20.0	**68**	154.4	41.7	**107**	224.6	760	**1 400**	2552
− 1.1	**30**	86.0	20.6	**69**	156.2	42.2	**108**	226.4	816	**1 500**	2732
− 0.6	**31**	87.8	21.1	**70**	158.0	42.8	**109**	228.2	871	**1 600**	2912

Appendix Table 5 Viscosity Conversion Table

Kinematic Viscosity mm^2/s	Saybolt Universal SUS (sec)		No.1 Type Redwood R (sec)		Engler E (degree)
	100°F	210°F	50°C	100°C	
2	32.6	32.8	30.8	31.2	1.14
3	36.0	36.3	33.3	33.7	1.22
4	39.1	39.4	35.9	36.5	1.31
5	42.3	42.6	38.5	39.1	1.40
6	45.5	45.8	41.1	41.7	1.48
7	48.7	49.0	43.7	44.3	1.56
8	52.0	52.4	46.3	47.0	1.65
9	55.4	55.8	49.1	50.0	1.75
10	58.8	59.2	52.1	52.9	1.84
11	62.3	62.7	55.1	56.0	1.93
12	65.9	66.4	58.2	59.1	2.02
13	69.6	70.1	61.4	62.3	2.12
14	73.4	73.9	64.7	65.6	2.22
15	77.2	77.7	68.0	69.1	2.32
16	81.1	81.7	71.5	72.6	2.43
17	85.1	85.7	75.0	76.1	2.54
18	89.2	89.8	78.6	79.7	2.64
19	93.3	94.0	82.1	83.6	2.76
20	97.5	98.2	85.8	87.4	2.87
21	102	102	89.5	91.3	2.98
22	106	107	93.3	95.1	3.10
23	110	111	97.1	98.9	3.22
24	115	115	101	103	3.34
25	119	120	105	107	3.46
26	123	124	109	111	3.58
27	128	129	112	115	3.70
28	132	133	116	119	3.82
29	137	138	120	123	3.95
30	141	142	124	127	4.07
31	145	146	128	131	4.20
32	150	150	132	135	4.32
33	154	155	136	139	4.45
34	159	160	140	143	4.57

Kinematic Viscosity mm^2/s	Saybolt Universal SUS (sec)		No.1 Type Redwood R (sec)		Engler E (degree)
	100°F	210°F	50°C	100°C	
35	163	164	144	147	4.70
36	168	170	148	151	4.83
37	172	173	153	155	4.96
38	177	178	156	159	5.08
39	181	183	160	164	5.21
40	186	187	164	168	5.34
41	190	192	168	172	5.47
42	195	196	172	176	5.59
43	199	201	176	180	5.72
44	204	205	180	185	5.85
45	208	210	184	189	5.98
46	213	215	188	193	6.11
47	218	219	193	197	6.24
48	222	224	197	202	6.37
49	227	228	201	206	6.50
50	231	233	205	210	6.63
55	254	256	225	231	7.24
60	277	279	245	252	7.90
65	300	302	266	273	8.55
70	323	326	286	294	9.21
75	346	349	306	315	9.89
80	371	373	326	336	10.5
85	394	397	347	357	11.2
90	417	420	367	378	11.8
95	440	443	387	399	12.5
100	464	467	408	420	13.2
120	556	560	490	504	15.8
140	649	653	571	588	18.4
160	742	747	653	672	21.1
180	834	840	734	757	23.7
200	927	933	816	841	26.3
250	1 159	1 167	1 020	1 051	32.9
300	1 391	1 400	1 224	1 241	39.5

Remarks $1 mm^2/s = 1 cSt$

Appendix Table 6 inch-mm Conversion Table

1″=25.4mm

inch		0	1	2	3	4	5	6	7	8	9	10
Fraction	Decimal	mm										
0	**0.000000**	**0.000**	**25.400**	**50.800**	**76.200**	**101.600**	**127.000**	**152.400**	**177.800**	**203.200**	**228.600**	**254.000**
1/64	0.015625	0.397	25.797	51.197	76.597	101.997	127.397	152.797	178.197	203.597	228.997	254.397
1/32	0.031250	0.794	26.194	51.594	76.994	102.394	127.794	153.194	178.594	203.994	229.394	254.794
3/64	0.046875	1.191	26.591	51.991	77.391	102.791	128.191	153.591	178.991	204.391	229.791	255.191
1/16	**0.062500**	**1.588**	**26.988**	**52.388**	**77.788**	**103.188**	**128.588**	**153.988**	**179.388**	**204.788**	**230.188**	**255.588**
5/64	0.078125	1.984	27.384	52.784	78.184	103.584	128.984	154.384	179.784	205.184	230.584	255.984
3/32	0.093750	2.381	27.781	53.181	78.581	103.981	129.381	154.781	180.181	205.581	230.981	256.381
7/64	0.109375	2.778	28.178	53.578	78.978	104.378	129.778	155.178	180.578	205.978	231.378	256.778
1/8	**0.125000**	**3.175**	**28.575**	**53.975**	**79.375**	**104.775**	**130.175**	**155.575**	**180.975**	**206.375**	**231.775**	**257.175**
9/64	0.140625	3.572	28.972	54.372	79.772	105.172	130.572	155.972	181.372	206.772	232.172	257.572
5/32	0.156250	3.969	29.369	54.769	80.169	105.569	130.969	156.369	181.769	207.169	232.569	257.969
11/64	0.171875	4.366	29.766	55.166	80.566	105.966	131.366	156.766	182.166	207.566	232.966	258.366
3/16	**0.187500**	**4.762**	**30.162**	**55.562**	**80.962**	**106.362**	**131.762**	**157.162**	**182.562**	**207.962**	**233.362**	**258.762**
13/64	0.203125	5.159	30.559	55.959	81.359	106.759	132.159	157.559	182.959	208.359	233.759	259.159
7/32	0.218750	5.556	30.956	56.356	81.756	107.156	132.556	157.956	183.356	208.756	234.156	259.556
15/64	0.234375	5.953	31.353	56.753	82.153	107.553	132.953	158.353	183.753	209.153	234.553	259.953
1/4	**0.250000**	**6.350**	**31.750**	**57.150**	**82.550**	**107.950**	**133.350**	**158.750**	**184.150**	**209.550**	**234.950**	**260.350**
17/64	0.265625	6.747	32.147	57.547	82.947	108.347	133.747	159.147	184.547	209.947	235.347	260.747
9/32	0.281250	7.144	32.544	57.944	83.344	108.744	134.144	159.544	184.944	210.344	235.744	261.144
19/64	0.296875	7.541	32.941	58.341	83.741	109.141	134.541	159.941	185.341	210.741	236.141	261.541
5/16	**0.312500**	**7.938**	**33.338**	**58.738**	**84.138**	**109.538**	**134.938**	**160.338**	**185.738**	**211.138**	**236.538**	**261.938**
21/64	0.328125	8.334	33.734	59.134	84.534	109.934	135.334	160.734	186.134	211.534	236.934	262.334
11/32	0.343750	8.731	34.131	59.531	84.931	110.331	135.731	161.131	186.531	211.931	237.331	262.731
23/64	0.359375	9.128	34.528	59.928	85.328	110.728	136.128	161.528	186.928	212.328	237.728	263.128
3/8	**0.375000**	**9.525**	**34.925**	**60.325**	**85.725**	**111.125**	**136.525**	**161.925**	**187.325**	**212.725**	**238.125**	**263.525**
25/64	0.390625	9.922	35.322	60.722	86.122	111.522	136.922	162.322	187.722	213.122	238.522	263.922
13/32	0.406250	10.319	35.719	61.119	86.519	111.919	137.319	162.719	188.119	213.519	238.919	264.319
27/64	0.421875	10.716	36.116	61.516	86.916	112.316	137.716	163.116	188.516	213.916	239.316	264.716
7/16	**0.437500**	**11.112**	**36.512**	**61.912**	**87.312**	**112.712**	**138.112**	**163.512**	**188.912**	**214.312**	**239.712**	**265.112**
29/64	0.453125	11.509	36.909	62.309	87.709	113.109	138.509	163.909	189.309	214.709	240.109	265.509
15/32	0.468750	11.906	37.306	62.706	88.106	113.506	138.906	164.306	189.706	215.106	240.506	265.906
31/64	0.484375	12.303	37.703	63.103	88.503	113.903	139.303	164.703	190.103	215.503	240.903	266.303
1/2	**0.500000**	**12.700**	**38.100**	**63.500**	**88.900**	**114.300**	**139.700**	**165.100**	**190.500**	**215.900**	**241.300**	**266.700**
33/64	0.515625	13.097	38.497	63.897	89.297	114.697	140.097	165.497	190.897	216.297	241.697	267.097
17/32	0.531250	13.494	38.894	64.294	89.694	115.094	140.494	165.894	191.294	216.694	242.094	267.494
35/64	0.546875	13.891	39.291	64.691	90.091	115.491	140.891	166.291	191.691	217.091	242.491	267.891
9/16	**0.562500**	**14.288**	**39.688**	**65.088**	**90.488**	**115.888**	**141.288**	**166.688**	**192.088**	**217.488**	**242.888**	**268.288**
37/64	0.578125	14.684	40.084	65.484	90.884	116.284	141.684	167.084	192.484	217.884	243.284	268.684
19/32	0.593750	15.081	40.481	65.881	91.281	116.681	142.081	167.481	192.881	218.281	243.681	269.081
39/64	0.609375	15.478	40.878	66.278	91.678	117.078	142.478	167.878	193.278	218.678	244.078	269.478
5/8	**0.625000**	**15.875**	**41.275**	**66.675**	**92.075**	**117.475**	**142.875**	**168.275**	**193.675**	**219.075**	**244.475**	**269.875**
41/64	0.640625	16.272	41.672	67.072	92.472	117.872	143.272	168.672	194.072	219.472	244.872	270.272
21/32	0.656250	16.669	42.069	67.469	92.869	118.269	143.669	169.069	194.469	219.869	245.269	270.669
43/64	0.671875	17.066	42.466	67.866	93.266	118.666	144.066	169.466	194.866	220.266	245.666	271.066
11/16	**0.687500**	**17.462**	**42.862**	**68.262**	**93.662**	**119.062**	**144.462**	**169.862**	**195.262**	**220.662**	**246.062**	**271.462**
45/64	0.703125	17.859	43.259	68.659	94.059	119.459	144.859	170.259	195.659	221.059	246.459	271.859
23/32	0.718750	18.256	43.656	69.056	94.456	119.856	145.256	170.656	196.056	221.456	246.856	272.256
47/64	0.734375	18.653	44.053	69.453	94.853	120.253	145.653	171.053	196.453	221.853	247.253	272.653
3/4	**0.750000**	**19.050**	**44.450**	**69.850**	**95.250**	**120.650**	**146.050**	**171.450**	**196.850**	**222.250**	**247.650**	**273.050**
49/64	0.765625	19.447	44.847	70.247	95.647	121.047	146.447	171.847	197.247	222.647	248.047	273.447
25/32	0.781250	19.844	45.244	70.644	96.044	121.444	146.844	172.244	197.644	223.044	248.444	273.844
51/64	0.796875	20.241	45.641	71.041	96.441	121.841	147.241	172.641	198.041	223.441	248.841	274.241
13/16	**0.812500**	**20.638**	**46.038**	**71.438**	**96.838**	**122.238**	**147.638**	**173.038**	**198.438**	**223.838**	**249.238**	**274.638**
53/64	0.828125	21.034	46.434	71.834	97.234	122.634	148.034	173.434	198.834	224.234	249.634	275.034
27/32	0.843750	21.431	46.831	72.231	97.631	123.031	148.431	173.831	199.231	224.631	250.031	275.431
55/64	0.859375	21.828	47.228	72.628	98.028	123.428	148.828	174.228	199.628	225.028	250.428	275.828
7/8	**0.875000**	**22.225**	**47.625**	**73.025**	**98.425**	**123.825**	**149.225**	**174.625**	**200.025**	**225.425**	**250.825**	**276.225**
57/64	0.890625	22.622	48.022	73.422	98.822	124.222	149.622	175.022	200.422	225.822	251.222	276.622
29/32	0.906250	23.019	48.419	73.819	99.219	124.619	150.019	175.419	200.819	226.219	251.619	277.019
59/64	0.921875	23.416	48.816	74.216	99.616	125.016	150.416	175.816	201.216	226.616	252.016	277.416
15/16	**0.937500**	**23.812**	**49.212**	**74.612**	**100.012**	**125.412**	**150.812**	**176.212**	**201.612**	**227.012**	**252.412**	**277.812**
61/64	0.953125	24.209	49.609	75.009	100.409	125.809	151.209	176.609	202.009	227.409	252.809	278.209
31/32	0.968750	24.606	50.006	75.406	100.806	126.206	151.606	177.006	202.406	227.806	253.206	278.606
63/64	0.984375	25.003	50.403	75.803	101.203	126.603	152.003	177.403	202.803	228.203	253.603	279.003

1″=25.4mm

inch		11	12	13	14	15	16	17	18	19	20
Fraction	Decimal	mm									
0	**0.0000**	**279.400**	**304.800**	**330.200**	**355.600**	**381.000**	**406.400**	**431.800**	**457.200**	**482.600**	**508.000**
1/16	0.0625	280.988	306.388	331.788	357.188	382.588	407.988	433.388	458.788	484.188	509.588
1/8	0.1250	282.575	307.975	333.375	358.775	384.175	409.575	434.975	460.375	485.775	511.175
3/16	0.1875	284.162	309.562	334.962	360.362	385.762	411.162	436.562	461.962	487.362	512.762
1/4	**0.2500**	**285.750**	**311.150**	**336.550**	**361.950**	**387.350**	**412.750**	**438.150**	**463.550**	**488.950**	**514.350**
5/16	0.3125	287.338	312.738	338.138	363.538	388.938	414.338	439.738	465.138	490.538	515.938
3/8	0.3750	288.925	314.325	339.725	365.125	390.525	415.925	441.325	466.725	492.125	517.525
7/16	0.4375	290.512	315.912	341.312	366.712	392.112	417.512	442.912	468.312	493.712	519.112
1/2	**0.5000**	**292.100**	**317.500**	**342.900**	**368.300**	**393.700**	**419.100**	**444.500**	**469.900**	**495.300**	**520.700**
9/16	0.5625	293.688	319.088	344.488	369.888	395.288	420.688	446.088	471.488	496.888	522.288
5/8	0.6250	295.275	320.675	346.075	371.475	396.875	422.275	447.675	473.075	498.475	523.875
11/16	0.6875	296.862	322.262	347.662	373.062	398.462	423.862	449.262	474.662	500.062	525.462
3/4	**0.7500**	**298.450**	**323.850**	**349.250**	**374.650**	**400.050**	**425.450**	**450.850**	**476.250**	**501.650**	**527.050**
13/16	0.8125	300.038	325.438	350.838	376.238	401.638	427.038	452.438	477.838	503.238	528.638
7/8	0.8750	301.625	327.025	352.425	377.825	403.225	428.625	454.025	479.425	504.825	530.225
15/16	0.9375	303.212	328.612	354.012	379.412	404.812	430.212	455.612	481.012	506.412	531.812

1″=25.4mm

inch		21	22	23	24	25	26	27	28	29	30
Fraction	Decimal	mm									
0	**0.0000**	**533.400**	**558.800**	**584.200**	**609.600**	**635.000**	**660.400**	**685.800**	**711.200**	**736.600**	**762.000**
1/16	0.0625	534.988	560.388	585.788	611.188	636.588	661.988	687.388	712.788	738.188	763.588
1/8	0.1250	536.575	561.975	587.375	612.775	638.175	663.575	688.975	714.375	739.775	765.175
3/16	0.1875	538.162	563.562	588.962	614.362	639.762	665.162	690.562	715.962	741.362	766.762
1/4	**0.2500**	**539.750**	**565.150**	**590.550**	**615.950**	**641.350**	**666.750**	**692.150**	**717.550**	**742.950**	**768.350**
5/16	0.3125	541.338	566.738	592.138	617.538	642.938	668.338	693.738	719.138	744.538	769.938
3/8	0.3750	542.925	568.325	593.725	619.125	644.525	669.925	695.325	720.725	746.125	771.525
7/16	0.4375	544.512	569.912	595.312	620.712	646.112	671.512	696.912	722.312	747.712	773.112
1/2	**0.5000**	**546.100**	**571.500**	**596.900**	**622.300**	**647.700**	**673.100**	**698.500**	**723.900**	**749.300**	**774.700**
9/16	0.5625	547.688	573.088	598.488	623.888	649.288	674.688	700.088	725.488	750.888	776.288
5/8	0.6250	549.275	574.675	600.075	625.475	650.875	676.275	701.675	727.075	752.475	777.875
11/16	0.6875	550.862	576.262	601.662	627.062	652.462	677.862	703.262	728.662	754.062	779.462
3/4	**0.7500**	**552.450**	**577.850**	**603.250**	**628.650**	**654.050**	**679.450**	**704.850**	**730.250**	**755.650**	**781.050**
13/16	0.8125	554.038	579.438	604.838	630.238	655.638	681.038	706.438	731.838	757.238	782.638
7/8	0.8750	555.625	581.025	606.425	631.825	657.225	682.625	708.025	733.425	758.825	784.225
15/16	0.9375	557.212	582.612	608.012	633.412	658.812	684.212	709.612	735.012	760.412	785.812

1″=25.4mm

inch		31	32	33	34	35	36	37	38	39	40
Fraction	Decimal	mm									
0	**0.0000**	**787.400**	**812.800**	**838.200**	**863.600**	**889.000**	**914.400**	**939.800**	**965.200**	**990.600**	**1016.000**
1/16	0.0625	788.988	814.388	839.788	865.188	890.588	915.988	941.388	966.788	992.188	1017.588
1/8	0.1250	790.575	815.975	841.375	866.775	892.175	917.575	942.975	968.375	993.775	1019.175
3/16	0.1875	792.162	817.562	842.962	868.362	893.762	919.162	944.562	969.962	995.362	1020.762
1/4	**0.2500**	**793.750**	**819.150**	**844.550**	**869.950**	**895.350**	**920.750**	**946.150**	**971.550**	**996.950**	**1022.350**
5/16	0.3125	795.338	820.738	846.138	871.538	896.938	922.338	947.738	973.138	998.538	1023.938
3/8	0.3750	796.925	822.325	847.725	873.125	898.525	923.925	949.325	974.725	1000.125	1025.525
7/16	0.4375	798.512	823.912	849.312	874.712	900.112	925.512	950.912	976.312	1001.712	1027.112
1/2	**0.5000**	**800.100**	**825.500**	**850.900**	**876.300**	**901.700**	**927.100**	**952.500**	**977.900**	**1003.300**	**1028.700**
9/16	0.5625	801.688	827.088	852.488	877.888	903.288	928.688	954.088	979.488	1004.888	1030.288
5/8	0.6250	803.275	828.675	854.075	879.475	904.875	930.275	955.675	981.075	1006.475	1031.875
11/16	0.6875	804.862	830.262	855.662	881.062	906.462	931.862	957.262	982.662	1008.062	1033.462
3/4	**0.7500**	**806.450**	**831.850**	**857.250**	**882.650**	**908.050**	**933.450**	**958.850**	**984.250**	**1009.650**	**1035.050**
13/16	0.8125	808.038	833.438	858.838	884.238	909.638	935.038	960.438	985.838	1011.238	1036.638
7/8	0.8750	809.625	835.025	860.425	885.825	911.225	936.625	962.025	987.425	1012.825	1038.225
15/16	0.9375	811.212	836.612	862.012	887.412	912.812	938.212	963.621	989.012	1014.412	1039.812

Appendix Table 7 Hardness Conversion Table (Reference)

Rockwell C Scale Hardness (1 471N) (150kgf)	Vickers Hardness	Brinell Hardness: Standard Ball	Brinell Hardness: Tungsten Carbide Ball	Rockwell Hardness: A Scale Load 588.4N {60kgf} Brale Indenter	Rockwell Hardness: B Scale Load 980.7N {100kgf} 1.558mm (1/16in) Ball	Shore Hardness
68	940	—	—	85.6	—	97
67	900	—	—	85.0	—	95
66	865	—	—	84.5	—	92
65	832	—	739	83.9	—	91
64	800	—	722	83.4	—	88
63	772	—	705	82.8	—	87
62	746	—	688	82.3	—	85
61	720	—	670	81.8	—	83
60	697	—	654	81.2	—	81
59	674	—	634	80.7	—	80
58	653	—	615	80.1	—	78
57	633	—	595	79.6	—	76
56	613	—	577	79.0	—	75
55	595	—	560	78.5	—	74
54	577	—	543	78.0	—	72
53	560	—	525	77.4	—	71
52	544	500	512	76.8	—	69
51	528	487	496	76.3	—	68
50	513	475	481	75.9	—	67
49	498	464	469	75.2	—	66
48	484	451	455	74.7	—	64
47	471	442	443	74.1	—	63
46	458	432	432	73.6	—	62
45	446	421	421	73.1	—	60
44	434	409	409	72.5	—	58
43	423	400	400	72.0	—	57
42	412	390	390	71.5	—	56
41	402	381	381	70.9	—	55
40	392	371	371	70.4	—	54
39	382	362	362	69.9	—	52
38	372	353	353	69.4	—	51
37	363	344	344	68.9	—	50
36	354	336	336	68.4	(109.0)	49
35	345	327	327	67.9	(108.5)	48
34	336	319	319	67.4	(108.0)	47
33	327	311	311	66.8	(107.5)	46
32	318	301	301	66.3	(107.0)	44
31	310	294	294	65.8	(106.0)	43
30	302	286	286	65.3	(105.5)	42
29	294	279	279	64.7	(104.5)	41
28	286	271	271	64.3	(104.0)	41
27	279	264	264	63.8	(103.0)	40
26	272	258	258	63.3	(102.5)	38
25	266	253	253	62.8	(101.5)	38
24	260	247	247	62.4	(101.0)	37
23	254	243	243	62.0	100.0	36
22	248	237	237	61.5	99.0	35
21	243	231	231	61.0	98.5	35
20	238	226	226	60.5	97.8	34
(**18**)	230	219	219	—	96.7	33
(**16**)	222	212	212	—	95.5	32
(**14**)	213	203	203	—	93.9	31
(**12**)	204	194	194	—	92.3	29
(**10**)	196	187	187	—	90.7	28
(**8**)	188	179	179	—	89.5	27
(**6**)	180	171	171	—	87.1	26
(**4**)	173	165	165	—	85.5	25
(**2**)	166	158	158	—	83.5	24
(**0**)	160	152	152	—	81.7	24

Appendix Table 8 Physical and Mechanical Properties of Materials

Materials	Specific Gravity	Coefficient of Linear Expansion (0°～100°C) (K^{-1})	Hardness (Brinell)	Modulus of Direct Elasticity (MPa) {kgf/mm²}	Tensile Strength (MPa) {kgf/mm²}	Yield Point (MPa) {kgf/mm²}	Elongation (%)
Bearing Steel (hardened)	7.83	12.5×10^{-6}	650～740	208 000 (21 200)	1 570～1 960 (160～200)	—	—
Martensitic Stainless Steel SUS 440C	7.68	10.1×10^{-6}	580	200 000 (20 400)	1 960 (200)	1 860 (190)	—
Mild Steel (C=0.12～0.20%)	7.86	11.6×10^{-6}	100～130	206 000 (21 000)	373～471 (38～48)	216～294 (22～30)	24～36
Hard Steel (C=0.3～0.5%)	7.84	11.3×10^{-6}	160～200	206 000 (21 000)	539～686 (55～70)	333～451 (34～46)	14～26
Austenitic Stainless Steel SUS 304	8.03	16.3×10^{-6}	150	193 000 (19 700)	588 (60)	245 (25)	60
Cast Iron: Gray Iron FC 200	7.3	10.4×10^{-6}	223	98 100 (10 000)	Min. 200 (20)	—	—
Cast Iron: Spheroidal graphite Iron FCD 400	7.0	11.7×10^{-6}	Max. 201		Min. 400 (41)	—	Min. 12
Aluminum	2.69	23.7×10^{-6}	15～26	70 600 (7 200)	78 (8)	34 (3.5)	35
Zinc	7.14	31×10^{-6}	30～60	92 200 (9 400)	147 (15)	—	30～40
Copper	8.93	16.2×10^{-6}	50	123 000 (12 500)	196 (20)	69 (7)	15～20
Brass (Annealed)	8.5	19.1×10^{-6}	45	103 000 (10 500)	294～343 (30～35)	—	65～75
Brass (Machined)			85～130		363～539 (37～55)		15～50

Remarks The hardness of hardened bearing steel and martensitic stainless steel is usually expressed using the Rockwell C Scale, but for comparison, it is converted into Brinell hardness.

Appendix Table 9 Tolerances for Shaft Diameters

Units: μm

Diameter Classification (mm) over	Diameter Classification (mm) incl	Single Plane Mean Bore Deviation (Normal) Δ_{dmp}	d6	e6	f6	g5	g6	h5	h6	h7	h8	h9	h10	js5	js6
3	6	0 − 8	− 30 − 38	− 20 − 28	− 10 − 18	− 4 − 9	− 4 − 12	0 − 5	0 − 8	0 − 12	0 − 18	0 − 30	0 − 48	± 2.5	± 4
6	10	0 − 8	− 40 − 49	− 25 − 34	− 13 − 22	− 5 − 11	− 5 − 14	0 − 6	0 − 9	0 − 15	0 − 22	0 − 36	0 − 58	± 3	± 4.5
10	18	0 − 8	− 50 − 61	− 32 − 43	− 16 − 27	− 6 − 14	− 6 − 17	0 − 8	0 − 11	0 − 18	0 − 27	0 − 43	0 − 70	± 4	± 5.5
18	30	0 − 10	− 65 − 78	− 40 − 53	− 20 − 33	− 7 − 16	− 7 − 20	0 − 9	0 − 13	0 − 21	0 − 33	0 − 52	0 − 84	± 4.5	± 6.5
30	50	0 − 12	− 80 − 96	− 50 − 66	− 25 − 41	− 9 − 20	− 9 − 25	0 − 11	0 − 16	0 − 25	0 − 39	0 − 62	0 −100	± 5.5	± 8
50	80	0 − 15	−100 −119	− 60 − 79	− 30 − 49	− 10 − 23	− 10 − 29	0 − 13	0 − 19	0 − 30	0 − 46	0 − 74	0 −120	± 6.5	± 9.5
80	120	0 − 20	−120 −142	− 72 − 94	− 36 − 58	− 12 − 27	− 12 − 34	0 − 15	0 − 22	0 − 35	0 − 54	0 − 87	0 −140	± 7.5	±11
120	180	0 − 25	−145 −170	− 85 −110	− 43 − 68	− 14 − 32	− 14 − 39	0 − 18	0 − 25	0 − 40	0 − 63	0 −100	0 −160	± 9	±12.5
180	250	0 − 30	−170 −199	−100 −129	− 50 − 79	− 15 − 35	− 15 − 44	0 − 20	0 − 29	0 − 46	0 − 72	0 −115	0 −185	±10	±14.5
250	315	0 − 35	−190 −222	−110 −142	− 56 − 88	− 17 − 40	− 17 − 49	0 − 23	0 − 32	0 − 52	0 − 81	0 −130	0 −210	±11.5	±16
315	400	0 − 40	−210 −246	−125 −161	− 62 − 98	− 18 − 43	− 18 − 54	0 − 25	0 − 36	0 − 57	0 − 89	0 −140	0 −230	±12.5	±18
400	500	0 − 45	−230 −270	−135 −175	− 68 −108	− 20 − 47	− 20 − 60	0 − 27	0 − 40	0 − 63	0 − 97	0 −155	0 −250	±13.5	±20
500	630	0 − 50	−260 −304	−145 −189	− 76 −120	—	− 22 − 66	—	0 − 44	0 − 70	0 −110	0 −175	0 −280	—	±22
630	800	0 − 75	−290 −340	−160 −210	− 80 −130	—	− 24 − 74	—	0 − 50	0 − 80	0 −125	0 −200	0 −320	—	±25
800	1 000	0 −100	−320 −376	−170 −226	− 86 −142	—	− 26 − 82	—	0 − 56	0 − 90	0 −140	0 −230	0 −360	—	±28
1 000	1 250	0 −125	−350 −416	−195 −261	− 98 −164	—	− 28 − 94	—	0 − 66	0 −105	0 −165	0 −260	0 −420	—	±33
1 250	1 600	0 −160	−390 −468	−220 −298	−110 −188	—	− 30 −108	—	0 − 78	0 −125	0 −195	0 −310	0 −500	—	±39
1 600	2 000	0 −200	−430 −522	−240 −332	−120 −212	—	− 32 −124	—	0 − 92	0 −150	0 −230	0 −370	0 −600	—	±46

j5	j6	j7	k5	k6	k7	m5	m6	n6	p6	r6	r7	Diameter Classification (mm) over	Diameter Classification (mm) incl
+ 3 − 2	+ 6 − 2	+ 8 − 4	+ 6 + 1	+ 9 + 1	+ 13 + 1	+ 9 + 4	+ 12 + 4	+ 16 + 8	+ 20 + 12	+ 23 + 15	+ 27 + 15	3	6
+ 4 − 2	+ 7 − 2	+10 − 5	+ 7 + 1	+10 + 1	+ 16 + 1	+12 + 6	+ 15 + 6	+ 19 + 10	+ 24 + 15	+ 28 + 19	+ 34 + 19	6	10
+ 5 − 3	+ 8 − 3	+12 − 6	+ 9 + 1	+12 + 1	+ 19 + 1	+15 + 7	+ 18 + 7	+ 23 + 12	+ 29 + 18	+ 34 + 23	+ 41 + 23	10	18
+ 5 − 4	+ 9 − 4	+13 − 8	+11 + 2	+15 + 2	+ 23 + 2	+17 + 8	+ 21 + 8	+ 28 + 15	+ 35 + 22	+ 41 + 28	+ 49 + 28	18	30
+ 6 − 5	+11 − 5	+15 −10	+13 + 2	+18 + 2	+ 27 + 2	+20 + 9	+ 25 + 9	+ 33 + 17	+ 42 + 26	+ 50 + 34	+ 59 + 34	30	50
+ 6 − 7	+12 − 7	+18 −12	+15 + 2	+21 + 2	+ 32 + 2	+24 +11	+ 30 + 11	+ 39 + 20	+ 51 + 32	+ 60 + 41	+ 71 + 41	50	65
										+ 62 + 43	+ 73 + 43	65	80
+ 6 − 9	+13 − 9	+20 −15	+18 + 3	+25 + 3	+ 38 + 3	+28 +13	+ 35 + 13	+ 45 + 23	+ 59 + 37	+ 73 + 51	+ 86 + 51	80	100
										+ 76 + 54	+ 89 + 54	100	120
+ 7 −11	+14 −11	+22 −18	+21 + 3	+28 + 3	+ 43 + 3	+33 +15	+ 40 + 15	+ 52 + 27	+ 68 + 43	+ 88 + 63	+103 + 63	120	140
										+ 90 + 65	+105 + 65	140	160
										+ 93 + 68	+108 + 68	160	180
+ 7 −13	+16 −13	+25 −21	+24 + 4	+33 + 4	+ 50 + 4	+37 +17	+ 46 + 17	+ 60 + 31	+ 79 + 50	+106 + 77	+123 + 77	180	200
										+109 + 80	+126 + 80	200	225
										+113 + 84	+130 + 84	225	250
+ 7 −16	±16	±26	+27 + 4	+36 + 4	+ 56 + 4	+43 +20	+ 52 + 20	+ 66 + 34	+ 88 + 56	+126 + 94	+146 + 94	250	280
										+130 + 98	+150 + 98	280	315
+ 7 −18	±18	+29 −28	+29 + 4	+40 + 4	+ 61 + 4	+46 +21	+ 57 + 21	+ 73 + 37	+ 98 + 62	+144 +108	+165 +108	315	355
										+150 +114	+171 +114	355	400
+ 7 −20	±20	+31 −32	+32 + 5	+45 + 5	+ 68 + 5	+50 +23	+ 63 + 23	+ 80 + 40	+108 + 68	+166 +126	+189 +126	400	450
										+172 +132	+195 +132	450	500
—	—	—	—	+44 0	+ 70 0	—	+ 70 + 26	+ 88 + 44	+122 + 78	+194 +150	+220 +150	500	560
										+199 +155	+225 +155	560	630
—	—	—	—	+50 0	+ 80 0	—	+ 80 + 30	+100 + 50	+138 + 88	+225 +175	+255 +175	630	710
										+235 +185	+265 +185	710	800
—	—	—	—	+56 0	+ 90 0	—	+ 90 + 34	+112 + 56	+156 +100	+266 +210	+300 +210	800	900
										+276 +220	+310 +220	900	1 000
—	—	—	—	+66 0	+105 0	—	+106 + 40	+132 + 66	+186 +120	+316 +250	+355 +250	1 000	1 120
										+326 +260	+365 +260	1 120	1 250
—	—	—	—	+78 0	+125 0	—	+126 + 48	+156 + 78	+218 +140	+378 +300	+425 +300	1 250	1 400
										+408 +330	+455 +330	1 400	1 600
—	—	—	—	+92 0	+150 0	—	+150 + 58	+184 + 92	+262 +170	+462 +370	+520 +370	1 600	1 800
										+492 +400	+550 +400	1 800	2 000

Appendix Table 10

Tolerances for Housing Bore Diameters

Units: μm

Diameter Classification (mm) over	Diameter Classification (mm) incl	Single Plane Mean O.D. Deviation (Normal) Δ_{Dmp}	E6	F6	F7	G6	G7	H6	H7	H8	J6	J7	JS6	JS7	K5	K6	K7	M5	M6	M7	N5	N6	N7	P6	P7	Diameter Classification (mm) over	Diameter Classification (mm) incl
10	18	0 − 8	+ 43 + 32	+ 27 + 16	+ 34 + 16	+ 17 + 6	+ 24 + 6	+ 11 0	+ 18 0	+ 27 0	+ 6 − 5	+10 − 8	± 5.5	± 9	+ 2 − 6	+ 2 − 9	+ 6 − 12	− 4 − 12	− 4 − 15	0 − 18	− 9 − 17	− 9 − 20	− 5 − 23	− 15 − 26	− 11 − 29	10	18
18	30	0 − 9	+ 53 + 40	+ 33 + 20	+ 41 + 20	+ 20 + 7	+ 28 + 7	+ 13 0	+ 21 0	+ 33 0	+ 8 − 5	+12 − 9	± 6.5	±10.5	+ 1 − 8	+ 2 − 11	+ 6 − 15	− 5 − 14	− 4 − 17	0 − 21	− 12 − 21	− 11 − 24	− 7 − 28	− 18 − 31	− 14 − 35	18	30
30	50	0 − 11	+ 66 + 50	+ 41 + 25	+ 50 + 25	+ 25 + 9	+ 34 + 9	+ 16 0	+ 25 0	+ 39 0	+10 − 6	+14 −11	± 8	±12.5	+ 2 − 9	+ 3 − 13	+ 7 − 18	− 5 − 16	− 4 − 20	0 − 25	− 13 − 24	− 12 − 28	− 8 − 33	− 21 − 37	− 17 − 42	30	50
50	80	0 − 13	+ 79 + 60	+ 49 + 30	+ 60 + 30	+ 29 + 10	+ 40 + 10	+ 19 0	+ 30 0	+ 46 0	+13 − 6	+18 −12	± 9.5	±15	+ 3 −10	+ 4 − 15	+ 9 − 21	− 6 − 19	− 5 − 24	0 − 30	− 15 − 28	− 14 − 33	− 9 − 39	− 26 − 45	− 21 − 51	50	80
80	120	0 − 15	+ 94 + 72	+ 58 + 36	+ 71 + 36	+ 34 + 12	+ 47 + 12	+ 22 0	+ 35 0	+ 54 0	+16 − 6	+22 −13	±11	±17.5	+ 2 −13	+ 4 − 18	+ 10 − 25	− 8 − 23	− 6 − 28	0 − 35	− 18 − 33	− 16 − 38	− 10 − 45	− 30 − 52	− 24 − 59	80	120
120 150	150 180	0 − 18 0 − 25	+110 + 85	+ 68 + 43	+ 83 + 43	+ 39 + 14	+ 54 + 14	+ 25 0	+ 40 0	+ 63 0	+18 − 7	+26 −14	±12.5	±20	+ 3 −15	+ 4 − 21	+ 12 − 28	− 9 − 27	− 8 − 33	0 − 40	− 21 − 39	− 20 − 45	− 12 − 52	− 36 − 61	− 28 − 68	120	180
180	250	0 − 30	+129 +100	+ 79 + 50	+ 96 + 50	+ 44 + 15	+ 61 + 15	+ 29 0	+ 46 0	+ 72 0	+22 − 7	+30 −16	±14.5	±23	+ 2 −18	+ 5 − 24	+ 13 − 33	− 11 − 31	− 8 − 37	0 − 46	− 25 − 45	− 22 − 51	− 14 − 60	− 41 − 70	− 33 − 79	180	250
250	315	0 − 35	+142 +110	+ 88 + 56	+108 + 56	+ 49 + 17	+ 69 + 17	+ 32 0	+ 52 0	+ 81 0	+25 − 7	+36 −16	±16	±26	+ 3 −20	+ 5 − 27	+ 16 − 36	− 13 − 36	− 9 − 41	0 − 52	− 27 − 50	− 25 − 57	− 14 − 66	− 47 − 79	− 36 − 88	250	315
315	400	0 − 40	+161 +125	+ 98 + 62	+119 + 62	+ 54 + 18	+ 75 + 18	+ 36 0	+ 57 0	+ 89 0	+29 − 7	+39 −18	±18	±28.5	+ 3 −22	+ 7 − 29	+ 17 − 40	− 14 − 39	− 10 − 46	0 − 57	− 30 − 55	− 26 − 62	− 16 − 73	− 51 − 87	− 41 − 98	315	400
400	500	0 − 45	+175 +135	+108 + 68	+131 + 68	+ 60 + 20	+ 83 + 20	+ 40 0	+ 63 0	+ 97 0	+33 − 7	+43 −20	±20	±31.5	+ 2 −25	+ 8 − 32	+ 18 − 45	− 16 − 43	− 10 − 50	0 − 63	− 33 − 60	− 27 − 67	− 17 − 80	− 55 − 95	− 45 −108	400	500
500	630	0 − 50	+189 +145	+120 + 76	+146 + 76	+ 66 + 22	+ 92 + 22	+ 44 0	+ 70 0	+110 0	—	—	±22	±35	—	0 − 44	0 − 70	—	− 26 − 70	− 26 − 96	—	− 44 − 88	− 44 −114	− 78 −122	− 78 −148	500	630
630	800	0 − 75	+210 +160	+130 + 80	+160 + 80	+ 74 + 24	+104 + 24	+ 50 0	+ 80 0	+125 0	—	—	±25	±40	—	0 − 50	0 − 80	—	− 30 − 80	− 30 110	—	− 50 −100	− 50 −130	− 88 −138	− 88 −168	630	800
800	1 000	0 −100	+226 +170	+142 + 86	+176 + 86	+ 82 + 26	+116 + 26	+ 56 0	+ 90 0	+140 0	—	—	±28	±45	—	0 − 56	0 − 90	—	− 34 − 90	− 34 −124	—	− 56 −112	− 56 −146	−100 −156	−100 −190	800	1 000
1 000	1 250	0 −125	+261 +195	+164 + 98	+203 + 98	+ 94 + 28	+133 + 28	+ 66 0	+105 0	+165 0	—	—	±33	±52.5	—	0 − 66	0 −105	—	− 40 −106	− 40 −145	—	− 66 −132	− 66 −171	−120 −186	−120 −225	1 000	1 250
1 250	1 600	0 −160	+298 +220	+188 +110	+235 +110	+108 + 30	+155 + 30	+ 78 0	+125 0	+195 0	—	—	±39	±62.5	—	0 − 78	0 −125	—	− 48 −126	− 48 −173	—	− 78 −156	− 78 −203	−140 −218	−140 −265	1 250	1 600
1 600	2 000	0 −200	+332 +240	+212 +120	+270 +120	+124 + 32	+182 + 32	+ 92 0	+150 0	+230 0	—	—	±46	±75	—	0 − 92	0 −150	—	− 58 −150	− 58 −208	—	− 92 −184	92 −242	−170 −262	−170 −320	1 600	2 000
2 000	2 500	0 −250	+370 +260	+240 +130	+305 +130	+144 + 34	+209 + 34	+110 0	+175 0	+280 0	—	—	±55	±87.5	—	0 −110	0 −175	—	− 68 −178	− 68 −243	—	−110 −220	−110 −285	−195 −305	−195 −370	2 000	2 500

Appendix Table 11 Values of Standard Tolerance Grades IT

Basic Size (mm)		Standard Grades										
		1	2	3	4	5	6	7	8	9	10	11
over	incl	Tolerances (μm)										
—	3	0.8	1.2	2	3	4	6	10	14	25	40	60
3	6	1	1.5	2.5	4	5	8	12	18	30	48	75
6	10	1	1.5	2.5	4	6	9	15	22	36	58	90
10	18	1.2	2	3	5	8	11	18	27	43	70	110
18	30	1.5	2.5	4	6	9	13	21	33	52	84	130
30	50	1.5	2.5	4	7	11	16	25	39	62	100	160
50	80	2	3	5	8	13	19	30	46	74	120	190
80	120	2.5	4	6	10	15	22	35	54	87	140	220
120	180	3.5	5	8	12	18	25	40	63	100	160	250
180	250	4.5	7	10	14	20	29	46	72	115	185	290
250	315	6	8	12	16	23	32	52	81	130	210	320
315	400	7	9	13	18	25	36	57	89	140	230	360
400	500	8	10	15	20	27	40	63	97	155	250	400
500	630	9	11	16	22	32	44	70	110	175	280	440
630	800	10	13	18	25	36	50	80	125	200	320	500
800	1 000	11	15	21	28	40	56	90	140	230	360	560
1 000	1 250	13	18	24	33	47	66	105	165	260	420	660
1 250	1 600	15	21	29	39	55	78	125	195	310	500	780
1 600	2 000	18	25	35	46	65	92	150	230	370	600	920
2 000	2 500	22	30	41	55	78	110	175	280	440	700	1 100
2 500	3 150	26	36	50	68	96	135	210	330	540	860	1 350

Grades							Basic Size (mm)	
12	13	14	15	16	17	18		
Tolerances (mm)							over	incl
0.10	0.14	0.25	0.40	0.60	1.00	1.40	—	3
0.12	0.18	0.30	0.48	0.75	1.20	1.80	3	6
0.15	0.22	0.36	0.58	0.90	1.50	2.20	6	10
0.18	0.27	0.43	0.70	1.10	1.80	2.70	10	18
0.21	0.33	0.52	0.84	1.30	2.10	3.30	18	30
0.25	0.39	0.62	1.00	1.60	2.50	3.90	30	50
0.30	0.46	0.74	1.20	1.90	3.00	4.60	50	80
0.35	0.54	0.87	1.40	2.20	3.50	5.40	80	120
0.40	0.63	1.00	1.60	2.50	4.00	6.30	120	180
0.46	0.72	1.15	1.85	2.90	4.60	7.20	180	250
0.52	0.81	1.30	2.10	3.20	5.20	8.10	250	315
0.57	0.89	1.40	2.30	3.60	5.70	8.90	315	400
0.63	0.97	1.55	2.50	4.00	6.30	9.70	400	500
0.70	1.10	1.75	2.80	4.40	7.00	11.00	500	630
0.80	1.25	2.00	3.20	5.00	8.00	12.50	630	800
0.90	1.40	2.30	3.60	5.60	9.00	14.00	800	1 000
1.05	1.65	2.60	4.20	6.60	10.50	16.50	1 000	1 250
1.25	1.95	3.10	5.00	7.80	12.50	19.50	1 250	1 600
1.50	2.30	3.70	6.00	9.20	15.00	23.00	1 600	2 000
1.75	2.80	4.40	7.00	11.00	17.50	28.00	2 000	2 500
2.10	3.30	5.40	8.60	13.50	21.00	33.00	2 500	3 150

Remarks 1. Standard tolerance grades IT14 to IT18 shall not be used for basic sizes less than or equal to 1mm.
2. Values for standard tolerance grades IT1 to IT5 for basic sizes over 500mm are included for experimental use.

Appendix Table 12 Speed Factor f_n

Ball Bearings $f_n=(0.03\ n)^{-1/3}$

Roller Bearings $f_n=(0.03\ n)^{-3/10}$

Speed n (rpm)	Speed Factor f_n Ball Bearings	Speed Factor f_n Roller Bearings
10	1.49	1.44
11	1.45	1.39
12	1.41	1.36
13	1.37	1.33
14	1.34	1.30
15	1.30	1.27
16	1.28	1.25
17	1.25	1.22
18	1.23	1.20
19	1.21	1.18
20	1.19	1.17
21	1.17	1.15
22	1.15	1.13
23	1.13	1.12
24	1.12	1.10
25	1.10	1.09
26	1.09	1.08
27	1.07	1.07
28	1.06	1.05
29	1.05	1.04
30	1.04	1.03
31	1.02	1.02
32	1.01	1.01
33.3	**1.00**	**1.00**
34	0.993	0.994
36	0.975	0.977
38	0.957	0.961
40	0.941	0.947
42	0.926	0.933
44	0.912	0.920
46	0.898	0.908
48	0.886	0.896
50	0.874	0.885
55	0.846	0.861
60	0.822	0.838
65	0.800	0.818
70	0.781	0.800
75	0.763	0.784
80	0.747	0.769
85	0.732	0.755
90	0.718	0.742
95	0.705	0.730
100	0.693	0.719
110	0.672	0.699
120	0.652	0.681
130	0.635	0.665
140	0.620	0.650
150	0.606	0.637
160	0.593	0.625
170	0.581	0.613
180	0.570	0.603
190	0.560	0.593
200	0.550	0.584
220	0.533	0.568
240	0.518	0.553
260	0.504	0.540
280	0.492	0.528
300	0.481	0.517
320	0.471	0.507
340	0.461	0.498
360	0.452	0.490
380	0.444	0.482
400	0.437	0.475
420	0.430	0.468
440	0.423	0.461
460	0.417	0.455
480	0.411	0.449
500	0.405	0.444
550	0.393	0.431
600	0.382	0.420
650	0.372	0.410
700	0.362	0.401
750	0.354	0.393
800	0.347	0.385
850	0.340	0.378
900	0.333	0.372
950	0.327	0.366
1 000	0.322	0.360
1 050	0.317	0.355
1 100	0.312	0.350
1 150	0.307	0.346
1 200	0.303	0.341
1 250	0.299	0.337
1 300	0.295	0.333
1 400	0.288	0.326
1 500	0.281	0.319
1 600	0.275	0.313
1 700	0.270	0.307
1 800	0.265	0.302
1 900	0.260	0.297
2 000	0.255	0.293
2 100	0.251	0.289
2 200	0.247	0.285
2 300	0.244	0.281
2 400	0.240	0.277
2 500	0.237	0.274
2 600	0.234	0.271
2 700	0.231	0.268
2 800	0.228	0.265
2 900	0.226	0.262
3 000	0.223	0.259
3 200	0.218	0.254
3 400	0.214	0.250
3 600	0.210	0.245
3 800	0.206	0.242
4 000	0.203	0.238
4 200	0.199	0.234
4 400	0.196	0.231
4 600	0.194	0.228
4 800	0.191	0.225
5 000	0.188	0.222
5 200	0.186	0.220
5 400	0.183	0.217
5 600	0.181	0.215
5 800	0.179	0.213
6 000	0.177	0.211
6 200	0.175	0.209
6 400	0.173	0.207
6 600	0.172	0.205
6 800	0.170	0.203
7 000	0.168	0.201
7 200	0.167	0.199
7 400	0.165	0.198
7 600	0.164	0.196
7 800	0.162	0.195
8 000	0.161	0.193
8 500	0.158	0.190
9 000	0.155	0.186
9 500	0.152	0.183
10 000	0.149	0.181
11 000	0.145	0.176
12 000	0.141	0.171
13 000	0.137	0.167
14 000	0.134	0.163
15 000	0.130	0.160
16 000	0.128	0.157
17 000	0.125	0.154
18 000	0.123	0.151
19 000	0.121	0.149
20 000	0.119	0.147
22 000	0.115	0.143
24 000	0.112	0.139
26 000	0.109	0.136
28 000	0.106	0.133
30 000	0.104	0.130
32 000	0.101	0.127
34 000	0.099	0.125
36 000	0.097	0.123
38 000	0.096	0.121
40 000	0.094	0.119

Appendix Table 13 Fatigue Life Factor f_h and Fatigue Life $L \cdot L_h$

Ball Bearings $L=(C/P)^3$ $L_h=500f_h^{\ 3}$

Roller Bearings $L=(C/P)^{10/3}$ $L_h=500f_h^{\ 10/3}$

C/P or f_h	Ball Bearing Life L (10^6 rev)	Ball Bearing Life L_h (h)	Roller Bearing Life L (10^6 rev)	Roller Bearing Life L_h (h)
0.70	0.34	172	0.30	152
0.75	0.42	211	0.38	192
0.80	0.51	256	0.48	238
0.85	0.61	307	0.58	291
0.90	0.73	365	0.70	352
0.95	0.86	429	0.84	421
1.00	**1.00**	**500**	**1.00**	**500**
1.05	1.16	579	1.18	588
1.10	1.33	665	1.37	687
1.15	1.52	760	1.59	797
1.20	1.73	864	1.84	918
1.25	1.95	977	2.10	1 050
1.30	2.20	1 100	2.40	1 200
1.35	2.46	1 230	2.72	1 360
1.40	2.74	1 370	3.07	1 530
1.45	3.05	1 520	3.45	1 730
1.50	3.38	1 690	3.86	1 930
1.55	3.72	1 860	4.31	2 150
1.60	4.10	2 050	4.79	2 400
1.65	4.49	2 250	5.31	2 650
1.70	4.91	2 460	5.86	2 930
1.75	5.36	2 680	6.46	3 230
1.80	5.83	2 920	7.09	3 550
1.85	6.33	3 170	7.77	3 890
1.90	6.86	3 430	8.50	4 250
1.95	7.41	3 710	9.26	4 630
2.00	8.00	4 000	10.1	5 040
2.05	8.62	4 310	10.9	5 470
2.10	9.26	4 630	11.9	5 930
2.15	9.94	4 970	12.8	6 410
2.20	10.6	5 320	13.8	6 920
2.25	11.4	5 700	14.9	7 460
2.30	12.2	6 080	16.1	8 030
2.35	13.0	6 490	17.3	8 630
2.40	13.8	6 910	18.5	9 250
2.45	14.7	7 350	19.8	9 910
2.50	15.6	7 810	21.2	10 600
2.55	16.6	8 290	22.7	11 300
2.60	17.6	8 790	24.2	12 100
2.65	18.6	9 300	25.8	12 900
2.70	19.7	9 840	27.4	13 700
2.75	20.8	10 400	29.1	14 600
2.80	22.0	11 000	30.9	15 500
2.85	23.1	11 600	32.8	16 400
2.90	24.4	12 200	34.8	17 400
2.95	25.7	12 800	36.8	18 400
3.00	27.0	13 500	38.9	19 500
3.05	28.4	14 200	41.1	20 600
3.10	29.8	14 900	43.4	21 700
3.15	31.3	15 600	45.8	22 900
3.20	32.8	16 400	48.3	24 100
3.25	34.3	17 200	50.8	25 400
3.30	35.9	18 000	53.5	26 800
3.35	37.6	18 800	56.3	28 100
3.40	39.3	19 700	59.1	29 600
3.45	41.1	20 500	62.0	31 000
3.50	42.9	21 400	65.1	32 500
3.55	44.7	22 400	68.2	34 100
3.60	46.7	23 300	71.5	35 800
3.65	48.6	24 300	74.9	37 400
3.70	50.7	25 300	78.3	39 200
3.75	52.7	26 400	81.9	41 000
3.80	54.9	27 400	85.6	42 800
3.85	57.1	28 500	89.4	44 700
3.90	59.3	29 700	93.4	46 700
3.95	61.6	30 800	97.4	48 700
4.00	64.0	32 000	102	50 800
4.05	66.4	33 200	106	52 900
4.10	68.9	34 500	110	55 200
4.15	71.5	35 700	115	57 400
4.20	74.1	37 000	120	59 800
4.25	76.8	38 400	124	62 200
4.30	79.5	39 800	129	64 600
4.35	82.3	41 200	134	67 200
4.40	85.2	42 600	140	69 800
4.45	88.1	44 100	145	72 500
4.50	91.1	45 600	150	75 200
4.55	94.2	47 100	156	78 000
4.60	97.3	48 700	162	80 900
4.65	101	50 300	168	83 900
4.70	104	51 900	174	87 000
4.75	107	53 600	180	90 100
4.80	111	55 300	187	93 300
4.85	114	57 000	193	96 600
4.90	118	58 800	200	99 900
4.95	121	60 600	207	103 000
5.00	125	62 500	214	107 000
5.10	133	66 300	228	114 000
5.20	141	70 300	244	122 000
5.30	149	74 400	260	130 000
5.40	157	78 700	276	138 000
5.50	166	83 200	294	147 000
5.60	176	87 800	312	156 000
5.70	185	92 600	331	165 000
5.80	195	97 600	351	175 000
5.90	205	103 000	371	186 000
6.00	216	108 000	392	196 000
6.50	275	137 000	513	256 000
7.00	343	172 000	656	328 000
7.50	422	211 000	826	413 000
8.00	512	256 000	1 020	512 000
8.50	614	307 000	1 250	627 000
9.00	729	365 000	1 520	758 000
9.50	857	429 000	1 820	908 000
10.0	1 000	—	2 150	—
11.0	1 330	—	2 960	—
12.0	1 730	—	3 960	—
13.0	2 200	—	5 170	—
14.0	2 740	—	6 610	—
15.0	3 380	—	8 320	—

Index Table Index of Inch Design Tapered Roller Bearings

Bearing No. CONE / CUP	ANSI/ ABMA TYPE	Pages
687 / 672A	TS	B115
687 / 672D+L	TDO	B183
687 / 672	TS	B115
NA691 / 672D	TNA	B253
780 / 772	TS	B115
780 / 773D+L	TDO	B183
780 / 774D+L	TDO	B183
NA780 / 773D	TNA	B253
NA780 / 774D	TNA	B253
782 / 772	TS	B117
782 / 773D+L	TDO	B185
782 / 774D+L	TDO	B185
NA782 / 773D	TNA	B253
NA782 / 774D	TNA	B253
783 / 772	TS	B115
783 / 774D+L	TDO	B183
786 / 772	TS	B117
786 / 774D+L	TDO	B185
787 / 772	TS	B117
795 / 792D+L	TDO	B189
795 / 792	TS	B123
797 / 792D+L	TDO	B191
797 / 792	TS	B127
NA798 / 792D	TNA	B255
799 / 792D+L	TDO	B189
799 / 792	TS	B127
799A / 792D+L	TDO	B191
799A / 792	TS	B127
861 / 854	TS	B117
861 / 854D+L	TDO	B183
NA861 / 854D	TNA	B253
863X / 854	TS	B115
868D / 854+K	TDI	B263
868D / 854X+K	TDI	B263
896 / 892	TS	B131
896 / 892D+L	TDO	B193
898 / 892	TS	B131
898A / 892	TS	B131
936 / 932D+L	TDO	B185
936 / 932	TS	B119
938 / 932D+L	TDO	B187
938 / 932	TS	B121
NA938 / 932D	TNA	B253
938D / 932+K	TDI	B263
941 / 932D+L	TDO	B183
941 / 932	TS	B117
946D / 932+K	TDI	B263
8573 / 8520	TS	B153
8573 / 8520D+L	TDO	B215
8575 / 8520	TS	B155
8575 / 8520D+L	TDO	B215
8576D / 8520+K	TDI	B269
8578 / 8520	TS	B157
8578 / 8520D+L	TDO	B217

Bearing No. CONE / CUP	ANSI/ ABMA TYPE	Pages
9977D / 9920+K	TDI	B269
29875 / 29819	TS	B159
29875 / 29820	TS	B159
29875 / 29820D+L	TDO	B219
29880 / 29820	TS	B161
36690 / 36620D+L	TDO	B195
36690 / 36620	TS	B135
36691 / 36620	TS	B135
36990 / 36920D+L	TDO	B205
36990 / 36920	TS	B143
37425 / 37625	TS	B119
38880 / 38820	TS	B161
38885 / 38820	TS	B161
46780 / 46720	TS	B139
46780 / 46720D+L	TDO	B199
46790 / 46720	TS	B139
46790 / 46720D+L	TDO	B201
NA46790 / 46720D	TNA	B257
46790D / 46720+K	TDI	B267
NA46791 / 46720D	TNA	B257
46792 / 46720	TS	B141
48190 / 48120	TS	B119
48282 / 48220	TS	B123
48286 / 48220D+L	TDO	B189
48286 / 48220	TS	B123
48290 / 48220D+L	TDO	B189
48290 / 48220	TS	B125
48290D / 48220+K	TDI	B263
NA48291 / 48220D	TNA	B255
48385 / 48320D+L	TDO	B191
48385 / 48320	TS	B129
48385 / 48328	TS	B129
NA48390 / 48320D	TNA	B255
48393 / 48320D+L	TDO	B193
48393 / 48320	TS	B131
48506 / 48750	TS	B127
48680D / 48620+K	TDI	B265
48684 / 48620	TS	B133
48684 / 48620D+L	TDO	B195
48685 / 48620	TS	B133
NA48686 / 48620D	TNA	B255
52393 / 52618	TS	B115
52393 / 52638	TS	B115
52400 / 52637D+L	TDO	B183
52400 / 52618	TS	B115
52400 / 52637	TS	B115
52401 / 52618	TS	B115
56418 / 56650	TS	B117
56418 / 56650D+L	TDO	B185
56418 / 56662	TS	B117
56425 / 56650D+L	TDO	B185
56425 / 56650	TS	B119
56425 / 56662	TS	B119
64433 / 64700D+L	TDO	B185

Bearing No. CONE / CUP	ANSI/ ABMA TYPE	Pages
64433 / 64700	TS	B119
64450 / 64700D+L	TDO	B187
64450 / 64700	TS	B121
64452 / 64700D+L	TDO	B187
64452 / 64700	TS	B121
67388 / 67320	TS	B125
67388 / 67322D+L	TDO	B189
67388 / 67322	TS	B125
67388 / 67325D+L	TDO	B189
67389 / 67320	TS	B127
67389 / 67322D+L	TDO	B191
67389 / 67322	TS	B127
67389 / 67325D+L	TDO	B191
67390 / 67320	TS	B129
67390 / 67322D+L	TDO	B191
67390 / 67322	TS	B129
67390 / 67325D+L	TDO	B191
67390D / 67322+K	TDI	B265
67391 / 67320	TS	B129
67391 / 67322D+L	TDO	B191
67391 / 67322	TS	B129
67780 / 67720D+L	TDO	B201
67780 / 67720	TS	B139
67782 / 67720D+L	TDO	B203
67782 / 67720	TS	B141
67787 / 67720D+L	TDO	B205
67787 / 67720	TS	B143
NA67787 / 67720D	TNA	B257
67790 / 67720D+L	TDO	B205
67790 / 67720	TS	B143
NA67790 / 67720D	TNA	B257
67790D / 67720+K	TDI	B267
67791 / 67720D+L	TDO	B205
67791 / 67720	TS	B143
67883 / 67820	TS	B145
67883 / 67820D+L	TDO	B207
67884 / 67820	TS	B145
67884 / 67820D+L	TDO	B207
67885 / 67820	TS	B147
67885 / 67820D+L	TDO	B209
67983 / 67920D+L	TDO	B211
67983 / 67920	TS	B149
67985 / 67920D+L	TDO	B211
67985 / 67920	TS	B151
67985D / 67920+K	TDI	B269
67989 / 67920	TS	B151
68450 / 68709	TS	B121
68450 / 68712	TS	B121
68462 / 68712	TS	B123
71412 / 71750	TS	B117
71412 / 71751D+L	TDO	B185
71425 / 71750	TS	B119
71425 / 71751D+L	TDO	B185
71426D / 71750+K	TDI	B263

Bearing No. CONE / CUP	ANSI/ ABMA TYPE	Pages
71432 / 71750	TS	B119
71432 / 71751D+L	TDO	B185
71437 / 71750	TS	B121
71437 / 71751D+L	TDO	B187
71450 / 71750	TS	B121
NA71450 / 71751D	TNA	B253
71450D / 71750+K	TDI	B263
71453 / 71750	TS	B123
73551 / 73875	TS	B131
73551 / 73876D+L	TDO	B193
74472 / 74846X	TS	B123
74472 / 74850	TS	B123
74500 / 74850	TS	B125
74500 / 74851D+L	TDO	B189
74500 / 74856	TS	B125
74510D / 74850+K	TDI	B265
74512D / 74850+K	TDI	B265
74525 / 74846X	TS	B129
74525 / 74850	TS	B129
74525 / 74851D+L	TDO	B193
74525 / 74856	TS	B129
NA74525 / 74851D	TNA	B255
74537 / 74846X	TS	B131
74537 / 74850	TS	B131
74537 / 74851D+L	TDO	B193
74537 / 74856	TS	B131
74550 / 74846X	TS	B131
74550 / 74850	TS	B131
74550 / 74851D+L	TDO	B193
74550A / 74846X	TS	B131
74551X / 74846X	TS	B133
74551X / 74850	TS	B133
74551X / 74856	TS	B133
76587 / 76520D+L	TDO	B221
76590 / 76520D+L	TDO	B221
80170 / 80217	TS	B175
80170 / 80222	TS	B175
80176 / 80217	TS	B175
80176 / 80222	TS	B175
80385 / 80325	TS	B175
80480 / 80425	TS	B177
80780 / 80720	TS	B179
NA81550 / 81963D	TNA	B255
81575 / 81962	TS	B135
81575 / 81963D+L	TDO	B197
81590 / 81962	TS	B137
81593 / 81963D+L	TDO	B199
81600 / 81962	TS	B137
81600 / 81963D+L	TDO	B199
NA81600 / 81963D	TNA	B257
81601D / 81962+K	TDI	B265
81606 / 81962	TS	B137
81629 / 81962	TS	B139
81629 / 81963D+L	TDO	B201

Bearing No. CONE / CUP	ANSI/ ABMA TYPE	Pages
81637/81962	TS	B139
82550/82931	TS	B131
85550/82932D+L	TDO	B193
82550/82950	TS	B133
82550/82951D+L	TDO	B193
82562/82931	TS	B133
82562/82932D+L	TDO	B195
82562/82950	TS	B135
82562/82951D+L	TDO	B195
82576/82931	TS	B135
82576/82932D+L	TDO	B195
82576/82950	TS	B135
NA82576/82932D	TNA	B255
NA82576/82951D	TNA	B255
82587/82931	TS	B137
82587/82932D+L	TDO	B197
82587/82950	TS	B137
82587/82951D+L	TDO	B197
NA82587/82932D	TNA	B255
NA82587/82951D	TNA	B255
82587D/82931+K	TDI	B265
82680D/82620+K	TDI	B267
84115/84155	TS	B165
86650/86100	TS	B139
86669/86100	TS	B141
NA87700/87112D	TNA	B257
87737/87111	TS	B145
87750/87111	TS	B147
87750/87112D+L	TDO	B209
87762/87111	TS	B147
88900/88126	TS	B153
88900/88128	TS	B153
88925/88126	TS	B155
88925/88128	TS	B155
89111D/89150+K	TDI	B285
EE91702/91112	TS	B143
EE91702/91113XD+L	TDO	B205
93708/93125	TS	B145
93708/93126	TS	B145
93708/93127D+L	TDO	B207
93708/93128XD+L	TDO	B207
93750/93125	TS	B147
93750/93126	TS	B147
93750/93127D+L	TDO	B209
93751D/93125+K	TDI	B267
93775/93125	TS	B147
93775/93126	TS	B147
93775/93127D+L	TDO	B209
93787/93125	TS	B149
93787/93126	TS	B149
93788D/93125+K	TDI	B267
93800/93125	TS	B149
93800/93126	TS	B149
93800/93127D+L	TDO	B211

Bearing No. CONE / CUP	ANSI/ ABMA TYPE	Pages
93800/93128D+L	TDO	B211
NA93800/93127D	TNA	B259
93800A/93125	TS	B149
93800A/93126	TS	B149
93801D/93125+K	TDI	B269
93825/93125	TS	B151
93825/93126	TS	B151
93825/93127D+L	TDO	B213
93825A/93125	TS	B151
93825A/93126	TS	B151
94649/94113	TS	B139
94649/94114D+L	TDO	B203
94649/94118	TS	B139
94649/94118D+L	TDO	B203
94650/94114D+L	TDO	B203
NA94650/94114D	TNA	B257
NA94650/94118D	TNA	B257
94675/94113	TS	B141
94675/94114D+L	TDO	B203
94675/94118	TS	B141
94675/94118D+L	TDO	B203
94687/94113	TS	B143
94687/94118	TS	B143
94700/94113	TS	B143
94700/94114D+L	TDO	B205
94700/94118D+L	TDO	B205
NA94700/94114D	TNA	B257
NA94700/94118D	TNA	B259
94706D/94113+K	TDI	B267
94706D/94118+K	TDI	B267
95474D/95925+K	TDI	B263
95475/95925	TS	B123
95491/95925	TS	B125
95491/95927D+L	TDO	B189
95499D/95925+K	TDI	B263
95500/95927D+L	TDO	B189
95500/95975	TS	B127
95500/95925	TS	B125
NA95500/95927D	TNA	B255
95502/95925	TS	B125
95525/95925	TS	B129
95525/95927D+L	TDO	B193
95525/95928	TS	B129
95525/95975	TS	B129
95528/95925	TS	B129
95528/95927D+L	TDO	B193
95528/95928	TS	B129
95528/95975	TS	B129
96825/96140	TS	B151
96825/96140D+L	TDO	B213
96851D/96140+K	TDI	B283
96900/96140	TS	B153
96900/96140D+L	TDO	B215
96925/96140	TS	B155

Bearing No. CONE / CUP	ANSI/ ABMA TYPE	Pages
96925/96140D+L	TDO	B215
97450/97900	TS	B121
97450/97901D+L	TDO	B247
NA97450/97901D	TNA	B253
97472X/97905X	TS	B123
97493/97901D+L	TDO	B247
97500/97900	TS	B125
97500/97901D+L	TDO	B247
97500D/97900+K	TDI	B283
98400/98788	TS	B117
98400/98789D+L	TDO	B183
99537/99100	TS	B131
99537/99101D+L	TDO	B193
99550/99098X	TS	B133
99550/99100	TS	B133
99550/99101D+L	TDO	B193
99550/99102D+L	TDO	B193
99575/99100	TS	B135
99575/99102D+L	TDO	B197
99587/99102D+L	TDO	B197
99600/99100	TS	B137
99600/99101D+L	TDO	B199
99600/99102D+L	TDO	B199
NA99600/99102D	TNA	B257
99603D/99100+K	TDI	B265
EE101103/101600	TS	B163
EE101103/101601D+L	TDO	B223
NA101103/101601D	TNA	B261
EE107057/107105	TS	B135
EE107057/107105D+L	TDO	B197
EE107060/107105	TS	B137
EE107060/107105D+L	TDO	B199
EE108065/108142	TS	B141
EE109120/109163D+L	TDO	B225
EE111175/111700	TS	B165
EE113089/113170	TS	B153
EE113089/113171D+L	TDO	B249
EE113090D/113170+K	TDI	B283
EE113091/113170	TS	B153
EE113091/113171D+L	TDO	B249
EE114080/114160	TS	B151
EE114080/114161D+L	TDO	B249
EE116050/116097	TS	B127
EE117063/117148	TS	B139
EE117063/117148D+L	TDO	B249
EE122080/122125	TS	B149
EE125094/125145	TS	B157
EE125095/125145	TS	B157
EE126097/126150	TS	B157
EE126097/126151D+L	TDO	B217
EE126098/126151D+L	TDO	B217
EE127094D/127140+K	TDI	B271
EE127095/127135	TS	B157
EE127095/127136D+L	TDO	B217

Bearing No. CONE / CUP	ANSI/ ABMA TYPE	Pages
EE127095/127137D+L	TDO	B217
EE127095/127139D+L	TDO	B217
EE127095/127140	TS	B157
NA127096/127136D	TNA	B259
EE127097D/127135+K	TDI	B271
EE128102/128160	TS	B161
EE128102/128160D+L	TDO	B221
EE128111/128160	TS	B163
EE128111/128160D+L	TDO	B223
EE128111/128161	TS	B163
EE128114/128160D+L	TDO	B223
EE129121D/129172+K	TDI	B273
EE129123D/129172+K	TDI	B273
EE130787/131400	TS	B149
EE130787/131401D+L	TDO	B211
EE130787/131402D+L	TDO	B211
EE130851/131400	TS	B153
EE130851/131401D+L	TDO	B213
EE130888D/131400+K	TDI	B269
EE130889/131400	TS	B153
EE130889/131401D+L	TDO	B213
EE130902/131400	TS	B155
EE130902/131401D+L	TDO	B215
EE130902/131402D+L	TDO	B215
NA130902/131401D	TNA	B259
EE130903D/131400+K	TDI	B269
EE132083/132125	TS	B149
EE132083/132126D+L	TDO	B211
NA132083/132126D	TNA	B259
EE132084/132125	TS	B151
EE132084/132126D+L	TDO	B211
EE134100/134143	TS	B159
EE134100/134144D+L	TDO	B219
EE134100/134145	TS	B159
EE134102/134143	TS	B161
EE134102/134144D+L	TDO	B219
EE134102/134145	TS	B161
EE134103D/134143+K	TDI	B271
HH144642/HH144614	TS	B149
EE147112/147198D+L	TDO	B249
EE148122/148221D+L	TDO	B249
EE153050/153100	TS	B127
EE153050/153103D+L	TDO	B189
EE153053D/153100+K	TDI	B263
EE161300/161850	TS	B167
EE161300/161900	TS	B167
EE161300/161901D+L	TDO	B227
EE161300/161925	TS	B167
EE161363/161850	TS	B169
EE161363/161900	TS	B169
EE161363/161901D+L	TDO	B229
EE161363/161925	TS	B169
EE161394/161850	TS	B169
EE161394/161900	TS	B169

Bearing No. CONE / CUP	ANSI/ ABMA TYPE	Pages
EE161394/161925	TS	B169
EE161400/161850	TS	B169
EE161400/161900	TS	B169
EE161400/161901D+L	TDO	B229
EE161400/161925	TS	B169
L163149/L163110	TS	B169
L163149/L163110D+L	TDO	B229
L163149D/L163110+K	TDI	B275
EE170950/171400	TS	B157
EE170950/171450	TS	B157
NA170950/171451D	TNA	B259
EE170975/171400	TS	B159
EE170975/171450	TS	B159
EE171000D/171400+K	TDI	B271
EE175301/175350	TS	B181
EE181453/182350	TS	B171
EE181453/182351D+L	TDO	B229
EE192148/192200	TS	B171
EE192150/192200	TS	B171
EE192150/192201D+L	TDO	B231
EE203130/203190	TS	B167
EE203136/203190	TS	B169
EE203137/203190	TS	B169
EE215040/215098	TS	B117
EE219065/219122	TS	B141
EE219068/219117	TS	B143
EE221026/221575	TS	B161
EE221026/221576D+L	TDO	B219
NA221026/221576D	TNA	B261
HH221449/HH221410	TS	B117
HH221449/HH221410D+L	TDO	B183
HH221449/HH221416	TS	B117
HH221449NA/HH221410D	TNA	B253
EE222070/222126	TS	B145
EE222070/222127D+L	TDO	B205
EE222070/222128	TS	B145
NA222075/222127D	TNA	B259
EE224115/224205D+L	TDO	B225
HH224334/HH224310	TS	B115
HH224335/HH224310	TS	B117
HH224335/HH224310D+L	TDO	B183
HH224340/HH224310	TS	B119
HH224340/HH224310D+L	TDO	B185
HH224346/HH224310	TS	B121
HH224346/HH224310D+L	TDO	B187
HH224346DD/HH224310+K	TDI	B263
HH224346NA/HH224310D	TNA	B253
HH224349/HH224310	TS	B121
HH224349/HH224310D+L	TDO	B187
M224748/M224710D+L	TDO	B189
M224748/M224710	TS	B123
M224749/M224710D+L	TDO	B189
LL225749/LL225710	TS	B125
L225849/L225810	TS	B125

Bearing No. CONE / CUP	ANSI/ ABMA TYPE	Pages
L225849/L225818	TS	B125
HH228340/HH228310	TS	B123
HH228349/HH228310	TS	B127
H228649D/H228610+K	TDI	B265
HM231132/HM231110	TS	B131
HM231132/HM231111D+L	TDO	B193
HM231132/HM231115	TS	B133
HM231132/HM231116D+L	TDO	B193
HM231136/HM231110	TS	B133
HM231136/HM231115	TS	B133
HM231140/HM231110	TS	B135
HM231140/HM231111D+L	TDO	B195
HM231140/HM231115	TS	B135
HM231140/HM231116D+L	TDO	B197
HM231140NA/HM231111D	TNA	B255
HM231140NA/HM231116D	TNA	B255
HM231148/HM231110	TS	B137
HM231148/HM231111D+L	TDO	B197
HM231148/HM231115	TS	B137
HM231149/HM231110	TS	B137
HM231149/HM231111D+L	TDO	B197
HM231149/HM231115	TS	B137
HM231149/HM231116D+L	TDO	B197
HM231149NA/HM231111D	TNA	B255
HM231149NA/HM231116D	TNA	B255
EE231400/231975	TS	B169
EE231400/231976D+L	TDO	B229
EE231400/232025	TS	B171
NA231400/231976D	TNA	B261
NA231400/232026D	TNA	B261
EE231462/231975	TS	B171
EE231462/231976D+L	TDO	B231
EE231462/232025	TS	B171
EE231462/232026D+L	TDO	B231
HH231637/HH231610	TS	B127
HH231637/HH231615	TS	B127
M231648/M231610D+L	TDO	B199
M231649/M231610	TS	B137
M231649/M231610D+L	TDO	B199
M231649/M231611D+L	TDO	B199
HH231649/HH231610	TS	B133
HH231649/HH231615	TS	B133
M231649D/M231610+K	TDI	B265
HH234031/HH234010	TS	B133
HH234031/HH234018	TS	B133
HH234040/HH234010	TS	B135
HH234040/HH234011D+L	TDO	B197
HH234040/HH234018	TS	B135
HH234040D/HH234018+K	TDI	B265
HH234048/HH234010	TS	B137
HH234048/HH234011D+L	TDO	B199
HH234048/HH234018	TS	B137
HH234048D/HH234018+K	TDI	B265
EE234154/234213D+L	TDO	B231

Bearing No. CONE / CUP	ANSI/ ABMA TYPE	Pages
EE234154/234215	TS	B173
EE234154/234216D+L	TDO	B231
EE234154/234220	TS	B173
EE234154/234223D+L	TDO	B231
EE234156/234213D+L	TDO	B231
EE234156/234215	TS	B173
EE234156/234216D+L	TDO	B231
EE234156/234220	TS	B173
EE234157D/234215+K	TDI	B275
EE234160/234213D+L	TDO	B233
EE234160/234215	TS	B173
EE234160/234216D+L	TDO	B233
EE234160/234220	TS	B173
EE234161D/234215+K	TDI	B277
M235145/M235113	TS	B139
M235145/M235113D+L	TDO	B201
M235149/M235113	TS	B141
M235149/M235113D+L	TDO	B203
M236849/M236810	TS	B143
HM237532/HM237510	TS	B139
HM237532/HM237510D+L	TDO	B201
HM237535/HM237510	TS	B139
HM237535/HM237510D+L	TDO	B201
HM237535/HM237511D+L	TDO	B203
HM237536NA/HM237510D	TNA	B257
HM237542/HM237510	TS	B143
HM237542/HM237510D+L	TDO	B205
HM237542/HM237511D+L	TDO	B205
HM237542D/HM237510+K	TDI	B267
HM237545/HM237510	TS	B143
HM237545/HM237510D+L	TDO	B205
HM237545/HM237511D+L	TDO	B205
HM237545/HM237511XD+L	TDO	B205
HM237545NA/HM237510D	TNA	B257
HM237546D/HM237510+K	TDI	B267
HM237546DD/HM237510+K	TDI	B267
H238140/H238110	TS	B141
H238148/H238110	TS	B143
M238840/M238810	TS	B143
M238840/M238810D+L	TDO	B205
M238849/M238810D+L	TDO	B207
M238849/M238810	TS	B145
EE239171D/239225+K	TDI	B277
H239640/H239610	TS	B145
H239640/H239612	TS	B145
H239640/H239612D+L	TDO	B207
H239649/H239610	TS	B145
H239649/H239612	TS	B145
H239649/H239612D+L	TDO	B207
H239649D/H239612+K	TDI	B267
H239649NA/H239612D	TNA	B259
LM241149/LM241110	TS	B149
LM241149/LM241110D+L	TDO	B211
LM241149NW/LM241110D	TNA	B259

Bearing No. CONE / CUP	ANSI/ ABMA TYPE	Pages
M241547/M241510D+L	TDO	B211
M241549/M241510	TS	B151
EE241693/242375	TS	B175
EE241701/242375	TS	B175
H242649/H242610	TS	B151
H242649/H242610D+L	TDO	B211
H242649D/H242610+K	TDI	B269
EE243190/243250	TS	B177
EE243190/234251D+L	TDO	B237
EE243192/243250	TS	B177
EE243192/243251D+L	TDO	B237
EE243196/243250	TS	B177
EE243196/243251D+L	TDO	B237
EE244180/244235	TS	B175
EE244180/244236D+L	TDO	B235
EE244181D/244235+K	TDI	B277
M244249/M244210	TS	B153
M244249/M244210D+L	TDO	B213
M244249D/M244210+K	TDI	B269
H244849D/H244810+K	TDI	B269
M246942/M246910	TS	B155
M246949/M246910	TS	B157
H247535/H247510	TS	B149
H247535/H247510D+L	TDO	B211
H247549/H247510	TS	B157
H247549/H247510D+L	TDO	B215
H247549D/H247510+K	TDI	B269
LM247748D/LM247710+K	TDI	B271
H249148/H249111D+L	TDO	B217
M249734/M249710	TS	B155
M249736/M249710	TS	B157
LM249747NW/LM249710D	TNA	B259
LM249748/LM249710D+L	TDO	B219
M249748D/M249710+K	TDI	B271
M249749/M249710	TS	B159
M249749/M249710D+L	TDO	B219
HH249949/HH249910	TS	B159
HH249949D/HH249910+K	TDI	B271
EE251001/251575	TS	B159
LM251649NW/LM251610D	TNA	B261
HM252343/HM252310	TS	B159
HM252343/HM252310D+L	TDO	B219
HM252343/HM252311D+L	TDO	B219
HM252343/HM252315	TS	B159
HM252343NA/HM252315D	TNA	B261
HM252344NA/HM252311D	TNA	B261
M252349/M252310	TS	B163
M252349/M252310D+L	TDO	B221
HM252349/HM252310	TS	B161
HM252349/HM252310D+L	TDO	B221
HM252349/HM252311D+L	TDO	B221
HM252349/HM252315	TS	B161
M252349D/M252310+K	TDI	B271
HM252349NA/HM252315D	TNA	B261

Bearing No. CONE / CUP	ANSI/ ABMA TYPE	Pages
M255449/M255410	TS	B163
M255449/M255410D+L	TDO	B223
HM256849/HM256810	TS	B165
HM256849/HM256810D+L	TDO	B225
HM256849D/HM256810+K	TDI	B273
LM256649D/LM258610+K	TDI	B273
HM259049/HM259010	TS	B167
HM259049/HM259010D+L	TDO	B227
HM259049D/HM259010+K	TDI	B273
HM261049/HM261010D+L	TDO	B227
EE261650D/262450+K	TDI	B277
HM262749/HM262710	TS	B169
HM262749/HM262710D+L	TDO	B229
HM262749D/HM262710+K	TDI	B275
LM263149D/LM263110+K	TDI	B275
HM265049D/HM265010+K	TDI	B275
HM266445D/HM266410+K	TDI	B275
HM266447/HM266410	TS	B171
HM266447/HM266410D+L	TDO	B231
HM266449/HM266410	TS	B171
HM266449/HM266410D+L	TDO	B231
HM266449D/HM266410+K	TDI	B275
M268749/M268710D+L	TDO	B233
M270749/M270710	TS	B175
M270749/M270710D+L	TDO	B235
M270749D/M270710+K	TDI	B277
LM272249/LM272210	TS	B177
LM272249/LM272210D+L	TDO	B237
M272749/M272710	TS	B177
M272749/M272710D+L	TDO	B235
M272749D/M272710+K	TDI	B279
EE275095/275155	TS	B157
EE275095/275156D+L	TDO	B217
EE275095/275160	TS	B157
EE275095/275161D+L	TDO	B217
EE275100/275155	TS	B159
EE275100/275156D+L	TDO	B219
EE275100/275160	TS	B159
EE275105/275155	TS	B161
EE275105/275156D+L	TDO	B221
EE275105/275160	TS	B163
EE275105/275161D+L	TDO	B221
EE275108/275155	TS	B163
EE275108/275156D+L	TDO	B223
EE275108/275160	TS	B163
EE275108/275161D+L	TDO	B223
M275349D/M275310+K	TDI	B279
M276449D/M276410+K	TDI	B279
EE277455/277565	TS	B181
M278749/M278710	TS	B179
M278749D/M278710+K	TDI	B279
M280049D/M280010+K	TDI	B279
EE280702/281200	TS	B143
L281148/L281110	TS	B179

Bearing No. CONE / CUP	ANSI/ ABMA TYPE	Pages
LM283649/LM283610	TS	B181
EE285160/285226	TS	B173
EE285160/285228D+L	TDO	B233
NA285160/285228D	TNA	B261
EE285162/285226	TS	B173
EE285162/285228D+L	TDO	B233
LM286249D/LM286210+K	TDI	B281
LM287849D/LM287810+K	TDI	B281
EE291175/291749	TS	B165
EE291175/291750	TS	B165
EE291175/291751D+L	TDO	B225
EE291201/291749	TS	B165
EE291201/291750	TS	B165
EE291201/291751D+L	TDO	B225
NA291201/291751D	TNA	B261
EE291250/291749	TS	B167
EE291250/291750	TS	B167
EE291250/291751D+L	TDO	B227
EE295102/295192D+L	TDO	B221
EE295102/295193	TS	B161
EE295110/295192D+L	TDO	B223
EE295110/295193	TS	B163
EE295950/295192D+L	TDO	B217
EE295950/295193	TS	B157
EE299615/299711D+L	TDO	B245
EE321145/321240	TS	B171
EE323166D/323290+K	TDI	B277
L327249/L327210D+L	TDO	B191
L327249/L327210	TS	B129
EE328167/328268D+L	TDO	B233
EE328167/328269	TS	B173
LM328448/LM328410	TS	B131
NA329116/329173D	TNA	B261
EE329117D/329172+K	TDI	B273
NA329120/329173D	TNA	B261
EE333137/333197	TS	B169
EE333137/333203D+L	TDO	B229
EE333140/333197	TS	B169
EE333140/333203D+L	TDO	B229
EE342043/342091D+L	TDO	B185
M349549/M349510	TS	B161
EE350750/351687	TS	B147
L357049/L357010	TS	B165
L357049/L357010D+L	TDO	B225
L357049NW/L357010D	TNA	B261
LM361649/LM361610	TS	B167
LL365348/LL365310	TS	B171
LM377449/LM377410	TS	B179
LM377449/LM377410D+L	TDO	B239
LM377449D/LM377410+K	TDI	B279
EE380080/380190	TS	B151
M383240D/M383210+K	TDI	B281
EE390090/390200	TS	B155
EE390095/390200	TS	B157

Bearing No. CONE / CUP	ANSI/ ABMA TYPE	Pages
EE420651/421417	TS	B141
EE420651/421451D+L	TDO	B203
EE420701/421437	TS	B145
EE420701/421450	TS	B145
EE420701/421451D+L	TDO	B207
EE420751/421450	TS	B147
EE420793/421417	TS	B149
EE420793/421451D+L	TDO	B211
EE420800D/421437+K	TDI	B269
EE420801/421417	TS	B151
EE420801/421437	TS	B151
EE420801/421450	TS	B151
EE420801/421451D+L	TDO	B211
EE426200/426331D+L	TDO	B237
LL428349/LL428310	TS	B131
EE430888/431575	TS	B153
EE430888/431576D+L	TDO	B213
EE430900/431575	TS	B155
EE430900/431576D+L	TDO	B215
EE430902/431575	TS	B155
L432349/L432310	TS	B139
H432549D/H432510+K	TDI	B267
L433749/L433710	TS	B139
L433749/L433710D+L	TDO	B201
EE435102/435165	TS	B161
EE435103D/435165+K	TDI	B285
HH437549/HH437510	TS	B141
LM446349/LM446310D+L	TDO	B215
LM446349NW/LM446310D	TNA	B259
EE450577/451212	TS	B135
EE450601/451212	TS	B137
EE450601/451215D+L	TDO	B199
LM451345/LM451310	TS	B161
LM451349/LM451310	TS	B161
LM451349/LM451310D+L	TDO	B221
LM451349/LM451312D+L	TDO	B221
EE455048D/455116+K	TDI	B265
L467549/L467510	TS	B173
EE470075/470128	TS	B147
EE470078/470128	TS	B145
L476549/L476510	TS	B179
LL481448/LL481411	TS	B181
LL483449/LL483418	TS	B181
EE517060D/517117+K	TDI	B265
L521945/L521910	TS	B115
L521949/L521910D+L	TDO	B185
EE522102/523087	TS	B177
EE522102/523088D+L	TDO	B239
LM522546/LM522510	TS	B119
LM522548/LM522510	TS	B119
LM522549/LM522510	TS	B119
JHM522649/JHM522610	TS	B119
EE526130/526190	TS	B167
EE526130/526191D+L	TDO	B227

Bearing No. CONE / CUP	ANSI/ ABMA TYPE	Pages
EE526132/526190	TS	B167
LL529749/LL529710	TS	B135
EE531201D/531300+K	TDI	B279
JHM534149/JHM534110	TS	B141
HM535349/HM535310	TS	B141
EE536136D/536225+K	TDI	B275
NA537075/537103D	TNA	B259
LL537649/LL537610	TS	B145
LL537649/LL537610D+L	TDO	B207
L540049/L540010	TS	B147
L540049/L540010D+L	TDO	B209
EE542215/542290	TS	B179
EE542215/542291D+L	TDO	B239
EE542220/542290	TS	B179
EE542220/542291D+L	TDO	B239
543085/543114	TS	B153
543086/543114	TS	B153
544090/544116	TS	B153
544090/544118	TS	B153
544091/544116	TS	B155
544091/544118	TS	B155
545112/545141	TS	B163
545112/545142D+L	TDO	B223
LM545849/LM545810	TS	B155
EE551002/551664D+L	TDO	B219
EE551002/551701D+L	TDO	B219
NA551002/551701D	TNA	B261
EE551026/551662	TS	B161
EE551026/551663D+L	TDO	B221
EE551050/551662	TS	B163
EE551050/551663D+L	TDO	B221
EE551050/551701D+L	TDO	B221
L555249/L555210	TS	B165
LM565943/LM565910	TS	B171
LM565946/LM565910	TS	B171
LM565949/LM565910	TS	B171
LM567943/LM567910	TS	B173
LM567949/LM567910	TS	B173
L570649/L570610	TS	B175
EE571602/572650	TS	B173
EE571602/572651D+L	TDO	B233
EE571703/572650	TS	B175
EE571703/572651D+L	TDO	B235
EE571703/572653D+L	TDO	B235
LL575343/LL575310	TS	B177
LL575349/LL575310	TS	B177
LL579749/LL579710D+L	TDO	B241
L580049/L580010	TS	B179
EE618065/618136D+L	TDO	B203
L623149/L623110	TS	B121
EE623161D/623265+K	TDI	B277
L624549/L624510	TS	B123
EE626210/626321D+L	TDO	B239
LL639249/LL639210	TS	B147

Bearing No. CONE / CUP	ANSI/ ABMA TYPE	Pages
EE640191/640260	TS	B177
EE640191/640261D+L	TDO	B237
EE640192/640260	TS	B177
EE640192/640261D+L	TDO	B237
LL641149/LL641110	TS	B149
EE649237/649310	TS	B179
EE649237/649311D+L	TDO	B241
EE649237/649313D+L	TDO	B241
EE649239/649310	TS	B179
EE649239/649311D+L	TDO	B241
EE649240/649310	TS	B179
EE649240/649311D+L	TDO	B241
EE649240/649313D+L	TDO	B241
EE649241D/649310+K	TDI	B281
LM654645D/LM654610+K	TDI	B273
LM654648D/LM654610+K	TDI	B273
LM654649/LM654610	TS	B163
LM654649/LM654610D+L	TDO	B223
EE655270/655345	TS	B181
EE655270/655346D+L	TDO	B243
LM665949/LM665910	TS	B171
M667944/M667910D+L	TDO	B233
M667944/M667911D+L	TDO	B233
EE671801/672875D+L	TDO	B235
680235/680270	TS	B179
LL686947/LL686910D+L	TDO	B245
LL687949/LL687910	TS	B181
LL687949/LL687910D+L	TDO	B245
EE700090D/700167+K	TDI	B269
EE700091/700167	TS	B155
EE700091/700168D+L	TDO	B215
JM720249/JM720210	TS	B115
JHM720249/JHM720210	TS	B115
EE722110/722185	TS	B163
EE722110/722186D+L	TDO	B223
EE722111D/722185+K	TDI	B273
EE722115/722185	TS	B165
EE722115/722186D+L	TDO	B225
EE724120/724195	TS	B165
EE724120/724196D+L	TDO	B225
JL724348/JL724314	TS	B123
JL725346/JL725316	TS	B125
JM734449/JM734410	TS	B141
LL735449/LL735410	TS	B143
EE736160/736239D+L	TDO	B233
EE737173/737261D+L	TDO	B235
EE737181/737260	TS	B175
EE737181/737261D+L	TDO	B235
EE738101D/738172+K	TDI	B271
JM738249/JM738210	TS	B147
LM739749/LM739710	TS	B147
LM742745/LM742710	TS	B153
LM742745/LM742710D+L	TDO	B213
LM742749/LM742710	TS	B153
LM742749/LM742710D+L	TDO	B213
EE743240/743321D+L	TDO	B241
HM743337/HM743310	TS	B149
HM743345/HM743310	TS	B151
HM743345/HM743310D+L	TDO	B213
HM746646/HM746610	TS	B155
HM746646/HM746610D+L	TDO	B215
EE749260/749336	TS	B179
EE750502/751200	TS	B127
EE750576/751204D+L	TDO	B197
EE752300/752380	TS	B181
EE752300/752381D+L	TDO	B243
EE752305/752380	TS	B181
EE752305/752381D+L	TDO	B243
EE755280/755360	TS	B181
EE755280/755361D+L	TDO	B243
EE755285/755360	TS	B181
EE755285/755361D+L	TDO	B243
LM757049/LM757010	TS	B165
EE762320/762401D+L	TDO	B243
EE762320/762420XD+L	TDO	B243
EE763330/763410	TS	B181
LM767749D/LM767710+K	TDI	B277
L770849D/L770810+K	TDI	B277
LM770945/LM770910	TS	B175
LM770949/LM770910	TS	B175
LL771948/LL771911	TS	B175
LM772748/LM772710	TS	B177
LM772748/LM772710D+L	TDO	B237
LM772749D/LM772710+K	TDI	B279
EE776430/776520	TS	B181
LL778149/LL778110	TS	B179
LL788349/LL788310	TS	B181
EE790114/790221	TS	B165
EE790114/790223D+L	TDO	B225
EE790119D/790221+K	TDI	B273
EE790120/790221	TS	B165
EE790120/790223D+L	TDO	B225
JLM820048/JLM820012	TS	B115
EE820085/820161D+L	TDO	B213
JM822049/JM822010	TS	B119
EE822100/822175	TS	B159
EE822101D/822175+K	TDI	B271
HH840249/HH840210	TS	B147
JHM840449/JHM840410	TS	B147
EE843220/843290	TS	B179
EE843220/843291D+L	TDO	B239
EE843220/843292D+L	TDO	B239
H852849/H852810	TS	B163
L853049/L853010	TS	B163
HM858548D/HM858511+K	TDI	B273
H859049/H859010	TS	B167
L860048/L860010	TS	B167
L860049/L860010	TS	B167
L865547/L865512	TS	B171
LM869448/LM869410	TS	B175
LM869448/LM869410D+L	TDO	B235
L879947/L879910	TS	B179
LL889049/LL889010	TS	B181
LL889049/LL889010D+L	TDO	B245
EE911600/912401D+L	TDO	B233
EE911618/912400	TS	B173
EE911618/912401D+L	TDO	B233
EE921124/921850	TS	B163
EE921124/921851D+L	TDO	B223
EE923095/923175	TS	B157
EE923095/923176D+L	TDO	B217
HH923649/HH923610	TS	B117
HH923649/HH923611	TS	B117
H924045/H924010	TS	B121
H924045/H924010D+L	TDO	B247
HH924349/HH924310D+L	TDO	B247
EE925179D/925295+K	TDI	B277
HM926740/HM926710	TS	B121
HM926740/HM926710D+L	TDO	B247
HH926744/HH926710	TS	B121
HH926744/HH926716	TS	B121
HM926745/HM926710	TS	B125
HM926747/HM926710	TS	B125
HM926747/HM926710D+L	TDO	B247
HH926749/HH926710	TS	B123
HH926749/HH926716	TS	B123
HM926749/HM926710	TS	B127
HM926749/HM926710D+L	TDO	B247
EE929225/929341D+L	TDO	B239
EE931170D/931250+K	TDI	B277
HH932132/HH932110	TS	B127
HH932145/HH932110	TS	B135
HH932145/HH932115	TS	B135
H936340/H936310	TS	B139
H936340/H936316	TS	B139
H936349/H936310	TS	B141
H936349/H936316	TS	B141
EE941002/941950	TS	B159
EE941002/941953D+L	TDO	B219
EE941205/941950	TS	B165
EE941205/941953D+L	TDO	B225
EE941206D/941950+K	TDI	B273
HH949549/HH949510	TS	B155
HH949549/HH949510D+L	TDO	B249
HH953749/HH953710	TS	B159
HH953749/HH953710D+L	TDO	B249
M959442/M959410	TS	B165
LM961548/LM961511D+L	TDO	B249
H961649/H961610	TS	B167
H961649/H961610D+L	TDO	B249
EE971298/972100	TS	B167
EE971298/972102D+L	TDO	B227
EE971298/972103D+L	TDO	B227
EE971298/972151D+L	TDO	B227
EE971354/972100	TS	B167
EE971354/972102D+L	TDO	B229
EE971354/972103D+L	TDO	B229
EE971354/972151D+L	TDO	B229
EE971355D/972100+K	TDI	B275
EE981992/982900	TS	B177
EE981992/982901D+L	TDO	B237
EE982003/982900	TS	B177
EE982003/982901D+L	TDO	B237
EE982028/982900	TS	B177
EE982051/982900	TS	B177
EE982051/982901D+L	TDO	B239

Worldwide Sales Offices and Manufacturing Plants

P: Phone F: Fax C: Country Code Printed in Japan

NSK LTD.-HEADQUARTERS, TOKYO, JAPAN www.nsk.com
Nissei Bldg., 1-6-3 Ohsaki, Shinagawa-ku, Tokyo 141-8560, Japan
INDUSTRIAL MACHINERY BEARINGS DIVISION-HEADQUARTERS
P: 03-3779-7227 F: 03-3779-7644 C: 81
AFTERMARKET BUSINESS DIVISION-HEADQUARTERS
P: 03-3779-8893 F: 03-3779-7644 C: 81
AUTOMOTIVE BUSINESS DIVISION-HEADQUARTERS
P: 03-3779-7189 F: 03-3779-7917 C: 81
PRECISION MACHINERY & PARTS DIVISION-HEADQUARTERS
P: 03-3779-7163 F: 03-3779-7644 C: 81

Africa

South Africa:

NSK SOUTH AFRICA (PTY) LTD.
JOHANNESBURG 25 Galaxy Avenue, Linbro Business Park, Sandton, Gauteng, P.O. Box 1157, Kelvin, 2054, South Africa
P: 011-458-3600 F: 011-458-3608 C: 27

Asia and Oceania

Australia:

NSK AUSTRALIA PTY. LTD. www.au.nsk.com
MELBOURNE 11 Dalmore Drive, Scoresby, Victoria 3179, Australia
P: 03-9764-8302 F: 03-9764-8304 C: 61
SYDNEY 24-28 River Road West, Parramatta, New South Wales 2150, Australia
P: 02-8843-8100 F: 02-9893-8406 C: 61
BRISBANE 1/69 Selhurst Street, Coopers Plains, Queensland 4108, Australia
P: 07-3347-2600 F: 07-3345-5376 C: 61
PERTH Unit 1, 71 Tacoma Circuit, Canning Vale, Western Australia 6155, Australia
P: 08-9256-5000 F: 08-9256-1044 C: 61

China:

NSK HONG KONG LTD.
HONG KONG RM 814, World Commerce Centre, Harbour City, T.S.T, KLN, Hong Kong
P: 2739-9933 F: 2739-9323 C: 852
SHENZHEN Room 8B08-09, Jueshi Tower, Jiabing Road, Luohu, Shenzhen, China (518001)
P: 0755-25904886 F: 0755-25904883 C: 86

KUNSHAN NSK CO., LTD.
OFFICE/PLANT 258 South Huang Pu Jiang Rd., Kunshan Economic & Technical Development Zone, Jiang Su, China (215335)
P: 0512-5771-5654 F: 0512-5771-5689 C: 86

CHANGSHU NSK NEEDLE BEARING CO., LTD.
OFFICE/PLANT No. 66 Dongnan Road, Changshu Southeast Economic Development Zone, Changshu City, Jiangsu, China (215500)
P: 0512-5230-1111 F: 0512-5230-6011 C: 86

NSK STEERING SYSTEMS DONGGUAN CO., LTD.
OFFICE/PLANT High-tech Park, Shilong Road, Liaolong Section, Dongguan, China (523119)
P: 0769-2262-0960 F: 0769-2316-2867 C: 86

ZHANGJIAGANG NSK PRECISION MACHINERY CO., LTD.
OFFICE/PLANT No. 34 Zhenxiao Road, Zhangjiagang Economic Development Zone, Zhangjiagang City, Jiangsu, China (215600)
P: 0512-5867-6496 F: 0512-5818-0970 C: 86

SUZHOU NSK BEARINGS CO., LTD.
OFFICE/PLANT No. 22 Taishan Road, Suzhou New District, Jiangsu, China (215129)
P: 0512-6665-5666 F: 0512-6665-9138 C: 86

NSK CHINA TECHNOLOGY CENTER
JIANGSU 258 South Huang Pu Jiang Rd., Kunshan Economic & Technical Development Zone, Jiang Su, China (215335)
P: 0512-5771-5654 F: 0512-5771-0748 C: 86

NSK (SHANGHAI) TRADING CO., LTD.
SHANGHAI 10th Fl. Building No. A, Shanghai Far East International Plaza, 319 Xian Xia Road, Shanghai, China (200051)
P: 021-6235-0198 F: 021-6235-1033 C: 86

NSK REPRESENTATIVE OFFICES
BEIJING Room 2118, Beijing Fortune Bldg., 5 Dong San Huan Bei Lu, Chao Yang District, Beijing, China (100004)
P: 010-6590-8161 F: 010-6590-8168 C: 86
GUANGZHOU Room 2009-2011, Guangdong Telecom Plaza, 18 Zhongshan Er Road, Guangzhou, China (510080)
P: 020-37864501 F: 020-37864501 C: 86
CHENGDU Room1901, Green Land Hotel, No.99 Zhongfieci Xi Street, Chengdu, China (610016)
P: 028-8661-4200 F: 028-8661-4343 C: 86

NSK (CHINA) INVESTMENT CO., LTD www.nsk.com.cn
HEAD OFFICE 10th Fl. Building No. A, Shanghai Far East International Plaza, 319 Xian Xia Road, Shanghai, China (200051)
P: 021-6235-0198 F: 021-6235-1033 C: 86
CHANGCHUN Room 1001, Building A, Zhongyin Building, 727 Xi'an Road, Changchun, Jilin Province, China (130061)
P: 0431-8898-8682 F: 0431-8898-8670 C: 86

NSK CHINA SALES CO., LTD.
SHANGHAI 10th Fl. Building No. A, Shanghai Far East International Plaza, 319 Xian Xia Road, Shanghai, China (200051)
P: 021-6235-0198 F: 021-6235-1033 C: 86
TIAN JIN Room 06, 09F The Exchange Tower 2, No. 189 Nan Jing Road, Heping District, Tianjin, China (300050)
P: 022-8319-5030 F: 022-8319-5033 C: 86

NSK-WARNER (SHANGHAI) CO., LTD.
PLANT No. 2518 Huancheng Road (West) Fengxian District, Shanghai,China (201401)
P: 021-3365-5757 F: 021-3365-5262 C: 86

AKS PRECISION BALL (HANGZHOU) CO., LTD.
PLANT No. 189 Hongda Road, Qiaonan Area of Economic & Technological Development Zone, Hangzhou, Zhejiang, China (311231)
P: 0571-2280-1288 F: 0571-2280-1268 C: 86

India:

RANE NSK STEERING SYSTEMS LTD.
CHENNAI 14, Rajagopalan Salai, Vallancherry, Guduvancherry-603 202, Tami Nadu, India
P:044-274-66001 F:044-274-66001 C:91
BAWAL Plot No.28A, Sector 6, HSIIDC Growth Centre Bawal, District Rewari, Haryana, Pin-123 501, India
P:01284-264281 F:01284-264280 C:91

NSK INDIA SALES CO.PVT.LTD.
CHENNAI Girijuja Enclave, 56, First Avenue, Shastri Nagar, Adyar, Chennai-600 020, India
P:044-2446-6862 F:044-2446-6861 C:91
GURGAON 311, JMD Pacific Square, Sector 15 (II), 32nd Milestone, National Highway-8, Gurgaon, Haryana (Delhi), India
P:0124-4104-630 F:0124-4104-632 C:91
KOLKATA 502, Trinity Towers, 83, Topsia Road, Kolkata-700 046, India
P:033-4001-2062 F:033-4001-2064 C:91
MUMBAI 321, A Wing, Akura Centre, 82, Mahakali Caves Road, Andheri East, Mumbai-400 093, India
P:022-2838-7787 F:022-2838-5191 C:91

NSK-ABC BEARINGS LTD.
HEAD OFFICE Plot No.AE, SIPCOT Oragadam Growth Centre, Mathur Village, Sriperumbudur-602 105, Tami Nadu, India
P:044-2714-3000 F:044-2714-3099 C:91

Indonesia:

PT. NSK BEARINGS MANUFACTURING INDONESIA
JAKARTA PLANT Blok M4, Kawasan Berikat MM2100 Industrial Town Cikarang Barat, Bekasi 17520, Indonesia
P: 021-898-0155 F: 021-898-0156 C: 62

PT. NSK INDONESIA www.id.nsk.com
JAKARTA Summitmas II, 6th Floor, Jl. Jend Sudirman Kav. 61-62, Jakarta 12190, Indonesia
P: 021-252-3458 F: 021-252-3223 C: 62

Korea:

NSK KOREA CO., LTD. www.kr.nsk.com
SEOUL 9F (West Wing) Posco Center 892, Deachi 4 Dong Kangnam-Ku, Seoul, Korea
P: 02-3287-0300 F: 02-3287-0345 C: 82
CHANGWON 60 Seongsan-Dong, Changwon, Kyungsangnam-Do, Korea
PLANT P: 055-287-6001 F: 055-285-9982 C: 82

Malaysia:

NSK BEARINGS (MALAYSIA) SDN BHD www.my.nsk.com
HEAD OFFICE No. 2, Jalan Pemaju, U1/15, Seksyen U1, Hicom Glenmarie Industrial Park, 40150 Shah Alam, Selangor, Malaysia
P: 03-7803-8859 F: 03-7806-5982 C: 60
PRAI No.36, Jalan kilik, Taman Inderawasih, 13600 Prai, Penang, Malaysia
P: 04-3996227 F: 04-3991830 C: 60
JOHOR BAHRU 88 Jalan Ros Merah 2/17, Taman Johor Jaya, 81100 Johor Bahru, Johor, Malaysia
P: 07-3546291 F: 07-3554291 C: 60
KOTA KINABALU Lot 10, Lrg Kurma 4, Likas Ind. Centre, 5/12 Miles Jln Tuaran, 88450 Inanam, Sabah, Malaysia
P: 088-421260 F: 088-421261 C: 60
IPOH Gr. Floor, 89 Jalan Bendahara, 31650 Ipoh, Perak, Malaysia
P: 05-2555000 F: 05-2553373 C: 60

NSK MICRO PRECISION (M) SDN. BHD. www.my.nsk.com
MALAYSIA PLANT No.43 Jalan Taming Dua,Taman Taming Jaya 43300 Balakong, Selangor Darul Ehsan, Malaysia
P: 03-8961-3960 F: 03-8961-3968 C: 60

New Zealand:

NSK NEW ZEALAND LTD. www.nsk-rhp.co.nz
AUCKLAND 3 Te Apunga Place, Mt. Wellington, Auckland, New Zealand
P: 09-276-4992 F: 09-276-4082 C: 64

Philippines:

NSK REPRESENTATIVE OFFICE
MANILA 8th Floor The Salcedo Towers 169 H.V. dela Costa St., Salcedo Village Makati City, Philippines 1227
P: 02-759-6246 F: 02-759-6249 C: 63

Singapore:

NSK INTERNATIONAL (SINGAPORE) PTE LTD.
SINGAPORE 238A, Thomson Road, #24-01/05, Novena Square Tower A, Singapore 307684
P: 6496-8000 F: 6250-5845 C: 65

NSK SINGAPORE (PRIVATE) LTD. www.nsk-singapore.com.sg
SINGAPORE 238A, Thomson Road, #24-01/05, Novena Square Tower A, Singapore 307684
P: 6496-8000 F: 6250-5845 C: 65

Taiwan:

TAIWAN NSK PRECISION CO., LTD.
TAIPEI 11F., No. 87, Songjiang Rd., Jhongshan District, Taipei City 104, Taiwan R.O.C.
P: 02-2509-3305 F: 02-2509-1393 C: 886
TAICHUNG 107-7, Sec. 3, Wen Xing Rd., Taichung 407, Taiwan R.O.C.
P: 04-2311-7978 F: 04-2311-2627 C: 886
TAINAN 48, Lane 62, Fusing Rd., Sinshin Township, Tainan County 744, Taiwan R.O.C.
P: 06-589-2703 F: 06-589-2719 C: 886

TAIWAN NSK TECHNOLOGY CO., LTD.
TAIPEI 11F., No. 87, Songjiang Rd., Jhongshan District, Taipei City 104, Taiwan R.O.C.
P: 02-2509-3305 F: 02-2509-1393 C: 886

Thailand:

NSK BEARINGS (THAILAND) CO., LTD.
BANGKOK 25th Floor RS Tower, 121/76-77 Rachadaphisek Rd., Dindaeng, BKK 10400, Thailand
P: 02641-2150 F: 02641-2161 C: 66

NSK BEARINGS MANUFACTURING (THAILAND) CO., LTD.
OFFICE/PLANT 700/430 Moo 7, Amata Nakorn Industrial Estate, T.Donhualor, A.Muangchonburi, Chonburi 20000, Thailand
P: 038-454-010 F: 038-454-017 C: 66

SIAM NSK STEERING SYSTEMS CO., LTD.
OFFICE/PLANT 90 Moo 9, Wellgrow Industrial Estate, Km.36 Bangna-Trad Rd., Bangwao, Bangpakong, Chachoengsao 24180, Thailand
P: 038-522-343 F: 038-522-351 C: 66

NSK ASIA PACIFIC TECHNOLOGY CENTRE (THAILAND) CO., LTD.
CHONBURI 700/430 Moo 7, Amata Nakorn Industrial Estate, T.Donhualor, A.Muangchonburi, Chonburi 20000, Thailand
P: 038-454-631 F: 038-454-634 C: 66

Vietnam:

NSK VIETNAM CO., LTD.
HEAD OFFICE Techno Center, Room 204-205, Thang Long Industrial Park, Dong Anh District, Hanoi, Vietnam
P: 04-955-0159 F: 04-955-0158 C: 84

NSK REPRESENTATIVE OFFICE
HO CHI MINH CITY Suite 307, Metropolitan Building, 235 Dong Khoi Street, District 1,HCMC, Vietnam
P: 08-822-7907 F: 08-822-7910 C: 84

Europe

NSK EUROPE LTD. (EUROPEAN HEADQUARTERS) www.eu.nsk.com
MAIDENHEAD Belmont Place, Belmont Road, Maidenhead, Berkshire SL6 6TB, U.K.
P: 01628-509-800 F: 01628-509-808 C: 44

France:

NSK FRANCE S.A.S
PARIS Quartier de l'Europe, 2 Rue Georges Guynemer, 78283 Guyancourt, France
P: 01-30-57-39-39 F: 01-30-57-00-01 C: 33

Germany:

NSK DEUTSCHLAND GMBH
HEAD OFFICE Harkortstrasse 15, D-40880 Ratingen, Germany
P: 02102-4810 F: 02102-4812-290 C: 49
STUTTGART Liebknechtstrasse 33, DE-70565 Stuttgart-Vaihingen, Germany
P: 0711-79082-0 F: 0711-79082-289 C: 49
WOLFSBURG Heinrich-Nordhoff-Strasse 101, D-38440 Wolfsburg, Germany
P: 05361-27647-10 F: 05361-27647-70 C: 49
INGOLDSTADT Ingoldstadt, D-85055 Ingoldstadt, Germany
P: 0841-901-4640 F: 0841-901-4642 C: 49

NSK PRECISION EUROPE GMBH
DÜSSELDORF Harkortstrasse 15, D-40880 Ratingen, Germany
P: 02102-4810 F: 02102-4812-290 C: 49

NEUWEG FERTIGUNG GMBH
OFFICE/PLANT Ehinger Strasse 5, D-89597 Munderkingen, Germany
P: 07393-540 F: 07393-5414 C: 49

Italy:

NSK ITALIA S.P.A.
MILANO Via Garibaldi, 215, 20024 Garbagnate Milanese (Milano), Italy
P: 0299-5191 F: 0299-028373 C: 39

INDUSTRIA CUSCINETTI S.P.A.
TORINO PLANT Via Giotto 4, I-10080, S. Benigno C. se (Torino), Italy
P: 011-982-4811 F: 011-988-0284 C: 39

Netherlands:

NSK EUROPEAN DISTRIBUTION CENTRE B.V.
De Kroonstraat 38, 5048 AP Tilburg, Netherlands
P: 013-4647647 F: 013-4647648 C: 31

Poland:

NSK EUROPE LTD. REPRESENTATIVE OFFICE
WARSAW Ul. Migdalowa 4/73, 02-796, Warsaw, Poland
P: 022-645-1525 F: 022-645-1529 C: 48

NSK BEARINGS POLSKA S.A.
OFFICE/PLANT Ul. Jagiellonska 109, 25-734 Kielce, Poland
P: 041-366-5000 F: 041-367-0500 C: 48

NSK EUROPEAN TECHNOLOGY CENTER, POLAND OFFICE
Ul. Jagiellonska 109, 25-734 Kielce, Poland
P: 041-366-5812 F: 041-366-5206 C: 48

NSK STEERING SYSTEMS EUROPE (POLSKA) SP.ZO.O.
CORPORATE Ul. Mariana Jachimowicza 17, 58-306 Walbrzych, Poland
OFFICE/PLANT P: 074-664-4101 F: 074-664-4104 C: 48

NSK NEEDLE BEARING POLAND SP.ZO.O.
OFFICE/PLANT UL. Jagiellonska 109, 25-734 Kielce, Poland
P: 041-345-2469 F: 041-345-0361 C: 48

Spain:

NSK SPAIN S.A.
BARCELONA C/Tarragona 161, 2º Planta, 08014, Barcelona, Spain
P: 093-433-5775 F: 093-433-5776 C: 34

Turkey:

NSK RULMANLARI ORTA DOGU TIC. LTD. STI.
ISTANBUL 19 Mayis Mah. Ataturk Cad. Ulya Engin Is Merkezi No. 68 Kat. 6, Kozyatagi 34734, Istanbul, Turkey
P: 0216-355-0398 F: 0216-355-0399 C: 90

United Kingdom:

NSK BEARINGS EUROPE LTD.
PETERLEE 3 Bridge Road, South West Industrial Estate, Peterlee, Co. Durham SR8 2JD, U.K.
PLANT P: 0191-586-6111 F: 0191-586-3482 C: 44
NEWARK Northern Road, Newark, Nottinghamshire NG24 2JF, U.K.
PLANT P: 01636-605-123 F: 01636-605-000 C: 44

NSK EUROPEAN TECHNOLOGY CENTRE
NEWARK Northern Road, Newark, Nottinghamshire NG24 2JF, U.K.
P: 01636-605-123 F: 01636-643-241 C: 44

NSK UK LTD.
NEWARK Northern Road, Newark, Nottinghamshire NG24 2JF, U.K.
P: 01636-605-123 F: 01636-605-000 C: 44

NSK PRECISION UK LTD.
PLANT Northern Road, Newark, Nottinghamshire NG24 2JF, U.K.
P: 01636-605-123 F: 01636-605-000 C: 44

NSK STEERING SYSTEMS EUROPE LTD.
HEAD OFFICE Belmont Place, Belmont Road, Maidenhead, Berkshire SL6 6TB, U.K.
P: 01628-509-800 F: 01628-509-808 C: 44
COVENTRY Oak Court Unit 4-5, Pilgrims Walk Prologis Park, Coventry, West Midlands CV6 4QH, U.K.
P: 02476-337-182 F: 02476-339-182 C: 44
PETERLEE 6/7 Doxford Drive, South West Industrial Estate, Peterlee, Co. Durham SR8 2PP, U.K.
PLANT P: 0191-518-6400 F: 0191-518-6421 C: 44

North and South America

NSK AMERICAS, INC. (AMERICAN HEADQUARTERS)
ANN ARBOR 4200 Goss Road, Ann Arbor, Michigan 48105, U.S.A.
P: 734-913-7500 F: 734-913-7511 C: 1

Argentina:

NSK ARGENTINA SRL
BUENOS AIRES Garcia del Rio 2477 Piso 7 Oficina "A" (1429) Buenos Aires-Argentina
P: 11-4704-5100 F: 11-4704-0033 C: 54

Brazil:

NSK BRASIL LTDA. www.br.nsk.com
HEAD OFFICE Rua 13 de Maio,Andar-Bela Vista-CEP 01327-905 São Paulo, SP, Brazil
P: 011-3269-4786 F: 011-3269-4720 C: 55
Av. Varadas,Sr.Joao Batista Fitipaldi, 66, CEP 06465-000, Vila Maluf, Suzano, SP, Brazil
P: 011-4744-2527 F: 011-4744-2529 C: 55
BELO HORIZONTE Rua Cearà 1431-4th andar-sala 405-Funcionarios Belo Horizonte-MG, Brazil 30150-311
P: 031-3274-2591 F: 031-3273-4408 C: 55
JOINVILLE Rua Blumenau, 178-sala 910-Centro Joinville-SC, Brazil 89204-250
P: 047-3422-5445 F: 047-3422-5817 C: 55
PORTO ALEGRE Av. Cristovão Colombo, 1694-sala 202-Floresta Porto Alegre-RS, Brazil 90560 001
P: 051-3222-1324 F: 051-3222-2599 C: 55
RECIFE Av. Conde da Boa Vista,739-6th andar-conj.604-Boa Viagem Recife-PE, Brazil 51020-020
P: 081-3326-3781 F: 081-3326-5047 C: 55

Canada:

NSK CANADA INC. www.ca.nsk.com
HEAD OFFICE 5585 McAdam Road, Mississauga, Ontario, Canada L4Z 1N4
P: 905-890-0740 F: 800-800-2788 C: 1
TORONTO 5585 McAdam Road, Mississauga, Ontario, Canada L4Z 1N4
P: 877-994-6675 F: 800-800-2788 C: 1
MONTREAL 2150-32E Avenue, Lachine, Quebec, Canada H8T 3H7
P: 514-633-1220 F: 800-800-2788 C: 1
VANCOUVER 3353 Wayburne Drive, Burnaby, British Columbia, Canada V5G 4L4
P: 877-994-6675 F: 800-800-2788 C: 1

Mexico:

NSK RODAMIENTOS MEXICANA, S.A. DE C.V. www.mx.nsk.com
MEXICO CITY Av. Presidente Juarez No.2007 Lote 5, Col. San Jeronimo Tepetlacalco, Tlalnepantla, Estado de Mexico, Mexico, C.P.54090
P: 55-5390-4312 F: 55-5390-8175 C: 52

United States of America:

NSK CORPORATION www.us.nsk.com
HEAD OFFICE 4200 Goss Road, Ann Arbor, Michigan 48105, U.S.A.
P: 734-913-7500 F: 734-913-7511 C: 1
NSK AMERICAN 4200 Goss Road, Ann Arbor, Michigan 48105, U.S.A.
TECHNOLOGY CENTER P: 734-913-7500 F: 734-913-7511 C: 1
CLARINDA PLANT 1100 N. First Street, Clarinda, Iowa 51632, U.S.A.
P: 712-542-5121 F: 712-542-4905 C: 1
FRANKLIN PLANT 3450 Bearing Drive, Franklin, Indiana 46131, U.S.A.
P: 317-738-5000 F: 317-738-5050 C: 1
LIBERTY PLANT 1112 East Kitchel Road, Liberty, Indiana 47353, U.S.A.
P: 765-458-5000 F: 765-458-7832 C: 1

NSK PRECISION AMERICA, INC. www.npa.nsk.com
OFFICE/PLANT 3450 Bearing Drive, Franklin, Indiana 46131, U.S.A.
P: 317-738-5000 F: 317-738-5050 C: 1
SAN JOSE 780 Montague Expressway, Suite 508, San Jose, California 95131, U.S.A.
P: 408-944-9400 F: 408-944-9405 C: 1

NSK STEERING SYSTEMS AMERICA, INC. www.nssa.nsk.com
OFFICE/PLANT 110 Shields Drive, Bennington, Vermont 05201, U.S.A.
P: 802-442-5448 F: 802-442-2253 C: 1
ANN ARBOR 4200 Goss Road, Ann Arbor, Michigan 48105, U.S.A.
P: 734-913-7500 F: 734-913-7102 C: 1

NSK-WARNER U.S.A., INC.
TROY 3001 West Big Beaver Road, Suite 701, Troy, Michigan 48084, U.S.A.
P: 248-822-8688 F: 248-822-1111 C: 1

NSK LATIN AMERICA, INC. www.la.nsk.com
MIAMI 2500 NW 107th Avenue, Suite 300, Miami, Florida 33172, U.S.A.
P: 305-477-0605 F: 305-477-0377 C: 1

NSK Ltd. has a basic policy not to export any products or technology designated as controlled items by export-related laws. When exporting the products in this brochure, the laws of the exporting country must be observed. Specifications are subject to change without notice and without any obligation on the part of the manufacturer. Every care has been taken to ensure the accuracy of the data contained in this brochure, but no liability can be accepted for any loss or damage suffered through errors or omissions. We will gratefully acknowledge any additions or corrections.

NSK used environmentally friendly paper and printing methods for this publication.

CAT. No. E125f 2008 E-9 Printed in Japan ©NSK Ltd. 1989