Super Precision Bearings

Spindle bearings
Super precision cylindrical roller bearings
Axial angular contact ball bearings

SCHAEFFLER GROUP
INDUSTRIAL

Super precision bearings

Spindle bearings
Super precision cylindrical roller bearings
Axial angular contact ball bearings

All data have been prepared with a great deal
of care and checked for their accuracy.
However, no liability can be assumed
for any incorrect or incomplete data.
We reserve the right to make technical changes.

© Schaeffler Technologies GmbH & Co. KG
Issued: 2010, September

Reproduction in whole or in part without
our authorisation is prohibited.

Foreword

“added competence” for your success

With its forward-looking high precision bearing solutions for feed spindles, main spindles, rotary tables and linear guidance units in machine tools, Schaeffer Group Industrial with its brands INA and FAG has been at the forefront of the world market for decades.

Precision and operational security

FAG super precision bearings for main spindles stand for very high precision and absolute operational security. Innovative FAG spindle bearing solutions are continually raising standards in relation to speeds, accuracy and rating life. For the main spindle system and the overall machine tool system to be successful, however, bearing components alone are no longer sufficient as a guarantee. Significant increases in performance and the creation of unique selling propositions for the customer are now achieved when the bearing manufacturer offers advice and carries out development work on the basis of wide-ranging system knowledge as well as being able to provide support through a range of service functions. It is through close partnership with the manufacturers of spindles and machine tools and through shared knowledge, founded on experience, of the requirements of end users and their customers that the potential exists for achieving a leading role in the market.

Higher speed, better accuracy, longer life, more cost-effectiveness

The competence in application engineering, advisory work and production technology built up by the Schaeffler Group over more than 100 years is always provided, together with one of the largest product portfolios worldwide, to our customers to enhance their own know-how. In return, the Schaeffler Group benefits from close proximity to the actual application and from intensive contact with its partners. This mindset of co-operative partnership in order to achieve “higher speed, better accuracy, longer life and more cost-effectiveness” in both the subsystem and the complete system is described by the Schaeffler Sector Management Production Machinery as “added competence”.

Optimised customer benefit

The objective of the Sector Management Production Machinery within Schaeffler Group Industrial is optimum benefit for the customer. In the case of main spindle bearings too, this standard extends well beyond the manufacture of a good product. At the focus is the point of use and the end user together with all his requirements. For all the areas of the company involved in the manufacture of FAG super precision bearings, this creates requirements for top quality and technological leadership, maximum proximity to the customer and the very highest cost-effectiveness for the specific application.

The integration of important functions such as sealing, lubrication, location, damping, anti-corrosion protection and many others leads to a reduction in the number of interfaces as well as increased operational security, freedom from maintenance, time advantages in the market and cost savings. Customer benefit is also increased by the provision of fundamental research, calculation programs, mounting aids and training through a close-knit network of sales and production facilities. The reliable, timely and local presence of Schaeffler employees secures our greatest resource: our “personal contact” with you, our partners.

Foreword

Figure 1
The very highest precision and purity in production ...

Figure 2
... in the mounting of bearings

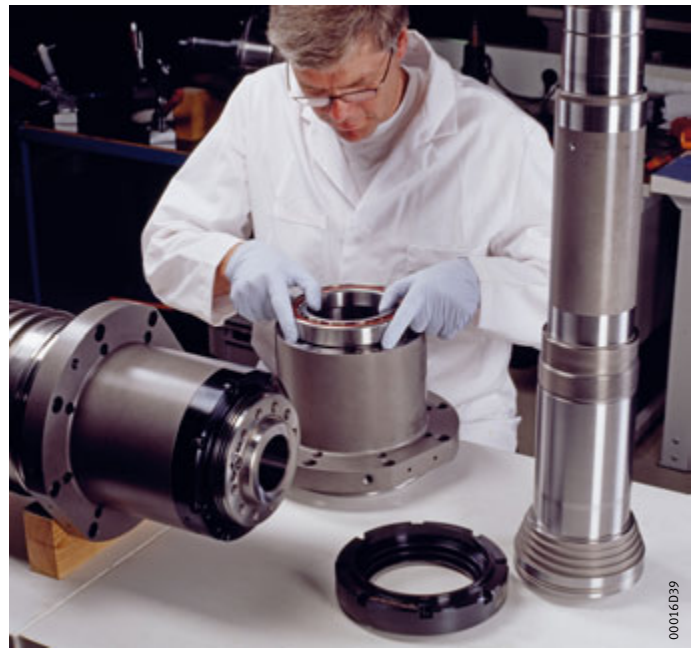

Figure 3
... in the mounting of spindles

Figure 4
... in the results of production

Foreword

Solutions for the main spindle

The starting point and objective of all activities in the company is proximity to and benefit for the customer. Precise knowledge of specific application requirements and processes is the decisive factor in selection of the technically optimum product that also incurs the lowest system costs. This may be sourced from the fully developed standard range of spindle bearings, which is unsurpassed in its scope worldwide. Equally, it may lie in an individual, application-specific solution that is provided rapidly and reliably by the Schaeffler Group.

FAG super precision bearings set standards in machine tools, in the textile industry, in woodworking machinery and wherever extreme demands are placed on reliability, running accuracy and high speeds, individually or in combination. Due to the comprehensive product range, it is possible to achieve optimum designs for all bearing positions and applications.

Technical and economic leadership

Building on principles developed in the research facilities of the Schaeffler Group and close contact with customers, further development is carried out continually on existing products and the product range is steadily expanded. FAG super precision bearings are always a combination of the technical solution to a bearing application with the economic solution. This is clear from the complete consideration of the bearing arrangement system in calculation, simulation and design as well as in distribution, assembly and service.

Schaeffler Group Industrial also offers proven calculation and simulation tools, for in-house use or as a service, as well as comprehensive training and advice events.

FAG accuracy P4S

The accuracy of bearings initially appears to be sufficiently well described in the DIN, ISO and ABEC accuracy classes.
For FAG super precision bearings, however, this is not enough. Where it is necessary to achieve tolerances to P4 or better, the performance characteristics involved are not described in the reference works.

In terms of the most important characteristics, FAG super precision bearings fulfil the accuracy standard P2. This applies to the running accuracies and parallelism of FAG bearings manufactured in accordance with the FAG standard P4S. Very high precision bearing arrangements can therefore be realised using the standard FAG super precision bearings.

The right material

FAG super precision bearings are made from high quality materials. Through specific heat treatment, a long material fatigue life and wear resistance is achieved with the result that the bearings can be run permanently in many cases.

There is a particular role for the material Cronidur 30, which turns a spindle bearing into an X-life ultra bearing. With its unique characteristics of reverse bending strength and corrosion resistance, it achieves significantly extended life, higher permissible contact pressures for fatigue strength, higher permissible speeds and significantly longer lubricant service life.

In the case of spindle bearings, hybrid bearings comprising a steel ring and ceramic balls are now a standard type. Ceramic rollers are also used in cylindrical roller bearings.

Hybrid bearings

Silicon nitride Si_3N_4 is the ceramic material that, with the combination of the typical characteristics of ceramic materials, achieves the highest performance.

In comparison with steel rolling elements, ceramic rolling elements offer many advantages:

- excellent tribological behaviour in the combination of steel and ceramic. In hybrid bearings, the strain on the material and lubricant is significantly reduced.
- lower density, which reduces the centrifugal forces on the rolling elements and thus improves the kinematics of the bearing.
- a lower coefficient of thermal expansion of the ceramic rolling elements. This has a positive effect on the change in bearing preload in response to temperature differences in operation.

This leads to significantly longer running times. As a result, hybrid bearings are now widely used for low speeds as well.

Optimised lubricants

In consideration of the bearing as a complete system, the lubricant plays an important role. The decision between grease and oil lubrication has a significant influence on the system costs.

The objective of the Schaeffler Group is to facilitate and as appropriate drive forward the reliable application of grease lubrication up to very high speeds. Before a lubricant is approved for use in the bearing, it is subjected to a very stringent approval process. The calculations and suitability tests relating to the application-specific requirements, such as a spindle running at high speed, are particularly important for the temperature and running-in behaviour.

The result of this demanding process is an approved product specification for the particular lubricant and precise compliance with the specification is ensured by ongoing assessments.

Foreword

About this catalogue

Catalogue SP 1 gives an overview of the FAG product range of super precision bearing arrangements as well as the most important rules covering bearing selection, bearing arrangement design and mounting.

One function of the catalogue is to present the product range of FAG super precision bearings for main spindles. In addition, it is also intended as a technical compendium for the selection and design of bearing arrangements using super precision bearings.

This catalogue brings together the most important technical principles for the designer. It thus gives a transparent representation of the FAG portfolio covering all components, competences and services.

Structure

The catalogue is divided into five parts. The first chapter describes the technical principles relating to the super precision bearings. This includes a presentation of the necessary steps and calculation methods for the selection and design of a spindle bearing arrangement. In particular, the calculation of rating life, lubrication and the calculation of speeds and rigidity are described in detail. The section Tolerances contains information on the bearing tolerances and adjacent construction tolerances for the specific series. Since particular care must be ensured during mounting of spindle bearings in terms of the procedure, tools and ambient conditions, comprehensive detail is provided on this subject in the section “Fitting”.

The technical principles are followed by product chapters with the relevant dimension tables. After a short introduction to the types presented, the design variants and a description of the nomenclature, the essential technical characteristics and performance features are described with the aid of tables. In accordance with the different bearing types, this part is structured on the basis of spindle bearings, cylindrical roller bearings and double direction axial angular contact ball bearings.

The Schaeffler Group offers not only the “standard range” but also special solutions in the super precision field for individual customers. The chapter “Customer solutions”, containing descriptions of the options in this field, can be found at the end of this catalogue.

Replacement for ...

Catalogue SP 1 is completely new and replaces the previous catalogue:

- Super Precision Bearings AC 41 130/7

The data represent the state of current technology and manufacture as at September 2010. They take account of the progress over recent years in rolling bearing technology as well as the experience gained through practical application. Any data in earlier catalogues that do not correspond to the data in this catalogue are therefore invalid.

Contents

	Page
Product index	10
Technical principles	14
Spindle bearings	70
Super precision cylindrical roller bearings	160
Axial angular contact ball bearings	202
Customer solutions	220
Appendix	228
Addresses	
Checklists and order forms	

Product index

		Page
2344	Axial angular contact ball bearings, double direction, fitting on small taper side	204
2347	Axial angular contact ball bearings, double direction, fitting on large taper side	204
B70	Standard spindle bearings, steel balls, medium series	72
B719	Standard spindle bearings, steel balls, light series	72
B72	Standard spindle bearings, steel balls, heavy series	72
HC70	Hybrid spindle bearings with small balls, ceramic balls, medium series	72
HC719	Hybrid spindle bearings with small balls, ceramic balls, light series	72
HCB70	Hybrid standard spindle bearings, ceramic balls, medium series	72
HCB719	Hybrid standard spindle bearings, ceramic balls, light series	72
HCB72	Hybrid standard spindle bearings, ceramic balls, heavy series	72
HCN10	High speed cylindrical roller bearings, single row, ceramic rollers, ribs on inner ring, ribless outer ring, medium series	162
HCRS70	Hybrid high speed spindle bearings, ceramic balls, medium series	72
HCRS719	Hybrid high speed spindle bearings, ceramic balls, light series	72
HS70	Spindle bearings with small balls, steel balls, medium series	72
HS719	Spindle bearings with small balls, steel balls, light series	72

Page

N10 Cylindrical roller bearings, single row, ribs on inner ring, ribless outer ring, medium series ... 162

N19 Cylindrical roller bearings, single row, ribs on inner ring, ribless outer ring, light series ... 162

NN30 Cylindrical roller bearings, double row, ribs on inner ring, ribless outer ring, medium series ... 162

NNU49 Cylindrical roller bearings, double row, ribs on outer ring, ribless inner ring, light series ... 162

RS70 High speed spindle bearings, steel balls, medium series ... 72

RS719 High speed spindle bearings, steel balls, light series ... 72

XC70 Hybrid spindle bearings with small balls, Cronidur, ceramic balls, medium series ... 72

XC719 Hybrid spindle bearings with small balls, Cronidur, ceramic balls, light series ... 72

XCB70 Hybrid standard spindle bearings, Cronidur, ceramic balls, medium series ... 72

XCB719 Hybrid standard spindle bearings, Cronidur, ceramic balls, light series ... 72

00016A75

00016A76

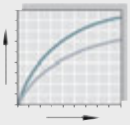

00015CE8

Technical principles

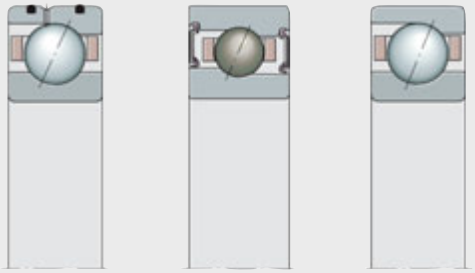

00016A70

Spindle bearings

Universal bearings

- Single row
- With large or small balls
- Steel or ceramic balls
- Steel or Cronidur rings
- Open or sealed
- Direct Lube

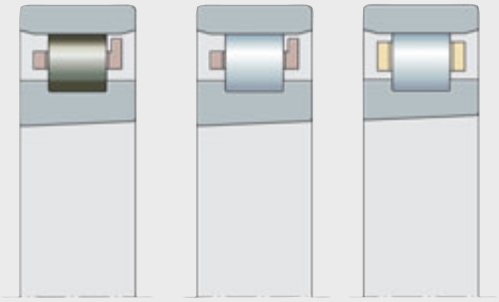

00016A71

Super precision cylindrical roller bearings

Single row

Double row

Steel or ceramic rollers

Open

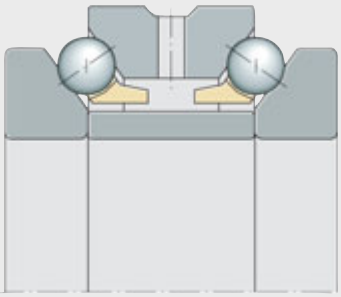

00016A72

Axial angular contact ball bearings

Double direction

Open

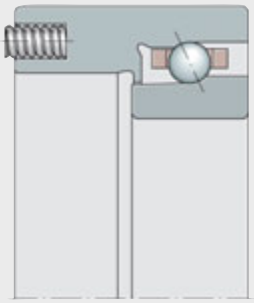

00016A73

Customer solutions

Spindle bearings

- Spring preloaded non-locating bearing unit
- Thin dense chromium coating on outside diameter
- Open bearings supplied greased

Cylindrical roller bearings

- Bearings with cylindrical bore and special radial internal clearance

Appendix

Addresses

Checklists and order forms

Technical principles

Load carrying capacity and operating life
Rigidity
Lubrication
Tolerances
Design and examples of bearing arrangements
Bearing monitoring
Fitting

Technical principles

Page

Load carrying capacity and operating life

Operating life of super precision bearings 17
- Fatigue strength 17
- Cleanliness 18
- Static load safety factor 19
- Equivalent static bearing load 19
- Operating temperature 19

Rigidity

Axial rigidity 20

Lift-off force 20

Lubrication

Principles 21
- Selection of the type of lubrication 21
- Lubricant viscosity 22

Grease lubrication 23
- Greases with special suitability 24
- Grease quantities 25
- Grease operating life 27
- Grease distribution cycle 28

Oil lubrication 30
- Lubrication method 30

Tolerances

Tolerances of super precision bearings 32

Chamfer dimension 36

Machining tolerances of adjacent parts 39
- Geometrical tolerances of the shaft 39
- Geometrical tolerances of the housing 40
- Geometrical tolerances of the spacer sleeves 40

Technical principles

Page

Design and examples of bearing arrangements

Design and applications 41
- Preload 41
- Rigidity 42
- Bearing contact angle 43
- Bearing selection according to ball size and material 43
- Selection of the optimum bearing spacing 44
- Sealing 44
- Stages in bearing arrangement design 45
- Design of main spindles using BEARINX® 46
- Comparison of bearing arrangements 48
- Examples of bearing arrangements 49

Bearing monitoring

Factors in bearing monitoring 52

Types of monitoring 52
- Periodic monitoring 52
- Continuous monitoring 52
- One-off monitoring 52
- Temperature monitoring 53

Fitting

Handling 54
- Provision of parts 54
- Allocation of parts 54

Mounting 54
- Guidelines 54
- Mounting record 55
- Matching operations 55
- Greasing 55
- Axial clamping of inner rings 56
- Recommendations for shaft nuts 59
- Clearance adjustment of cylindrical roller bearings 59

Industrial mounting service 63
- Devices for the mounting of super precision bearings 63
- Training 69
- Other products and services 69

Operating life of super precision bearings

Super precision bearings must guide machine parts with high precision and must support forces securely at very high speeds. The bearings are therefore selected predominantly according to the criteria of accuracy, rigidity and running behaviour.

In order that they can fulfil these tasks securely, they must run without wear. This requires the formation of a load-bearing hydrodynamic lubricant film at the contact points of the rolling contact partners. Under these conditions, the bearings will achieve their fatigue life in a large number of applications.

If the design is appropriate to the fatigue life, the operating life of the bearing is normally restricted by the lubricant operating life, see also section Grease operating life, page 27.

The decisive factors for the operating life from the perspective of load are the Hertzian pressures occurring at the contact points and the bearing kinematics. For high performance spindle bearings, it is therefore advisable to design the bearing arrangement individually using specific calculation programs.

Since failure as a result of fatigue plays no part in practice in the case of spindle bearings, calculation of the rating life L_{10} in accordance with DIN ISO 281 is not appropriate.

Fatigue strength

In order to check the fatigue strength, the load ratio S_0* is calculated in accordance with the following formula:

$$S_0^* = \frac{C_0}{P_0^*}$$

S_0* –
Load ratio for fatigue strength (dynamic load safety factor)

C_0 N
Basic static load rating

P_0* –
The equivalent load P_0* is calculated from the dynamic load forces in accordance with the formula for the equivalent static load.

If the load ratio is $S_0^* > 8$, this fulfils the essential precondition for fatigue strength.

A more precise method is individual calculation of the Hertzian pressures, see table, page 45, and checking of the bearing kinematics using a calculation program, see section Design of main spindles using BEARINX®, page 46.

If the other preconditions for an effective separating lubricant film (viscosity ratio $\kappa \geqq 2$) and very high cleanliness are fulfilled, calculation of the rating life is not necessary.

If these preconditions are not fulfilled, the influence of lubrication and contamination on the operating life can be estimated by carrying out manual calculation using an expanded rating life calculation in accordance with ISO 281 for manual calculation or in accordance with DIN ISO 281 Appendix 4 for computer-aided methods.

Cleanliness

In super precision bearings, cleanliness at the contact surfaces plays an important role since contaminants strongly promote wear and thus reduce the operating life.

Guide values for lubricant cleanliness in bearings with oil lubrication are derived from hydraulic conditions and can be seen in the tables.

In bearings with grease lubrication, the highest level of cleanliness is present in practice if the bearings are already greased by the manufacturer and sealed by means of sealing washers.

Recommended oil purity classes with point contact

(D – d)/2 mm	Required oil purity class according to ISO 4406	Required filter retention rate according to ISO 4572	Maximum size of overrolled particles[1)] µm
incl. 12,5	11/8	$\beta_3 \geqq 200$	10
over 12,5 incl. 20	12/9	$\beta_3 \geqq 200$	15
over 20 incl. 35	13/10	$\beta_3 \geqq 75$	25
over 35	14/11	$\beta_3 \geqq 75$	40

1) The data are correct if, in the heavily loaded raceway area, no large particles with a hardness > 50 HRC are overrolled.

Recommended oil purity classes with line contact

(D – d)/2 mm	Required oil purity class according to ISO 4406	Required filter retention rate according to ISO 4572	Maximum size of overrolled particles µm
incl. 12,5	12/9	$\beta_3 \geqq 200$	20
over 12,5 incl. 20	13/10	$\beta_3 \geqq 75$	25
over 20 incl. 35	14/11	$\beta_3 \geqq 75$	40
over 35	14/11	$\beta_3 \geqq 75$	75

The oil purity class as an indicator of the probability of overrolling by life-reducing particles in the bearing can be determined using specimens, for example by filter manufacturers and institutes. The purity classes are achieved when the total circulating oil quantity runs once through the filter in a few minutes.

A filter retention rate $\beta_3 \geqq 200$ means, for example, that only one particle out of 200 particles > 3 µm passes the filter in the so-called multipass test.

Filters coarser than $\beta_3 \geqq 75$ can have detrimental consequences for the other subassemblies in the oil circuit.

Before mounting of the bearing arrangement, the feed lines must be flushed in order to ensure good cleanliness.

Static load safety factor

In super precision bearings, static loading such as the tool ejection force is rarely checked.

The parameter for static loading is the static load safety factor S_0.

$$S_0 = \frac{C_0}{P_0}$$

S_0 –
Static load safety factor

C_0 N
Basic static load rating

P_0 N
Equivalent static bearing load for combined load,
see section Equivalent static bearing load.
The calculation formulae are given in the relevant product chapters.

Equivalent static bearing load

The equivalent static bearing load P_0 is determined from the axial and radial loads acting on the bearing.

It induces the same load at the centre point of the most heavily loaded contact point between the rolling element and raceway as the combined bearing load occurring in practice. The load carrying capacity of the most heavily loaded bearing must be checked.

Operating temperature

The rings of super precision bearings are dimensionally stabilised up to +150 °C. Up to this value, it is not necessary to take account of any temperature influence on the material characteristics.

The temperature limits on the cage (+100 °C), bearing seals (+100 °C) and lubricant must be observed, see section Lubrication, page 21.

For use at higher temperatures, please consult Application Engineering at Schaeffler Group Industrial.

Rigidity

The rigidity of a bearing set is dependent on the bearing arrangement and the preload. The rigidity of the complete system is determined not only by the rigidity of the bearing arrangement but also significantly by the rigidity of the shaft and housing. In the application, the rigidity can be increased by means of the mounting and operating conditions.

Axial rigidity

The axial rigidity c_a is the quotient of the axial load and axial displacement.

$$c_a = \frac{F_a}{\delta_a}$$

c_a Axial rigidity	N/µm
F_a Axial force	N
δ_a Axial displacement.	µm

Values for the axial rigidity, see dimension tables in the section Spindle bearings and Axial angular contact ball bearings.

Lift-off force

The lift-off force K_{aE} corresponds to an external axial load F_a above which the preload ceases to have an effect. In the example, bearing 2 is relieved of load and is thus free of preload, *Figure 1*.

① Bearing 1
② Bearing 2
③ Deflection
④ Axial load
F_V = preload force
F_a = axial force
F_{a1} = axial load on bearing 1
a_1 = deflection of bearing 1
a_{10} = initial deflection of bearing 1
F_{a1} = axial load on bearing 2
a_2 = deflection of bearing 2
a_{20} = initial deflection of bearing 2
K_{aE} = lift-off force
δ_a = axial displacement

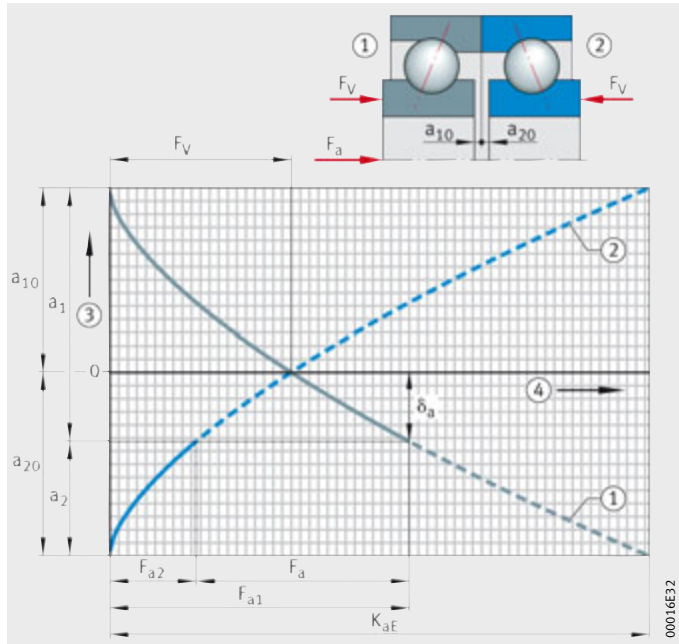

Figure 1
Preload force, axial load, lift-off force

Lubrication

Principles

Lubrication and maintenance are important in order to achieve reliable function, an adequate operating life, wear-free running and a low vibration level in super precision bearings. An essential precondition here is the formation of a lubricant film that separates the rolling contact partners at their contact points.

In order to achieve this:

- it must be ensured that lubricant is present at all contact points and at all times
- the lubrication method defined must be appropriate to the required speed
- a lubricant with the correct characteristics must be selected.

Selection of the type of lubrication

It should be determined as early as possible in the design process whether bearings should be lubricated using grease or oil. The decisive factor is the maximum operating speed required.

This catalogue states, for each bearing, the maximum speeds for the two most important lubrication methods used with super precision bearings, grease lubrication and minimal quantity oil lubrication, see dimension tables. These speeds are valid for single bearings and must be recalculated in the case of rigidly preloaded bearing arrangements by multiplication with the reduction factors, see table, page 86.

Criteria for grease lubrication

Grease lubrication is predominantly used for super precision bearings.

This is a simple means of providing advantages such as:

- low friction
- lubrication “for life”
- very little design work required
- low system costs.

Criteria for oil lubrication

Minimal quantity oil lubrication is used when the spindle speed is too high for grease lubrication. If high speed parameters are to be applied over long intervals, it may be advisable to use minimal quantity oil lubrication in order to achieve the required lubricant operating life. This may also be appropriate in those cases where grease lubrication would still be possible according to the achievable speed parameter for lubrication since the achievable grease operating life decreases with increasing speed, *Figure 3*, page 27.

Lubricant viscosity

The condition of the lubricant film is determined by the viscosity ratio κ, which is defined as the quotient of the operating viscosity ν and reference viscosity ν_1.

$$\kappa = \frac{\nu}{\nu_1}$$

κ –
Viscosity ratio
ν $mm^2 \cdot s^{-1}$
Kinematic viscosity of the lubricant at operating temperature
ν_1 $mm^2 \cdot s^{-1}$
Reference viscosity of the lubricant at operating temperature.
The reference viscosity ν_1 is a function of the bearing size and speed.
Calculation of the value, *Figure 1*.

The operating viscosity is the actual viscosity of the lubricant during operation. It is a function of the operating temperature and the basic viscosity of the lubricant and can be determined from the V/T diagram, *Figure 2*, page 23.

In the case of greases, the viscosity of the base oil is used.
For successful operation, the aim should be to achieve a viscosity at operating temperature that is at least twice as high as the reference viscosity, $\kappa = \nu/\nu_1 \geqq 2$. Higher viscosity ratios do not give any further improvement in the lubricant film but do have the effect of increasing friction.

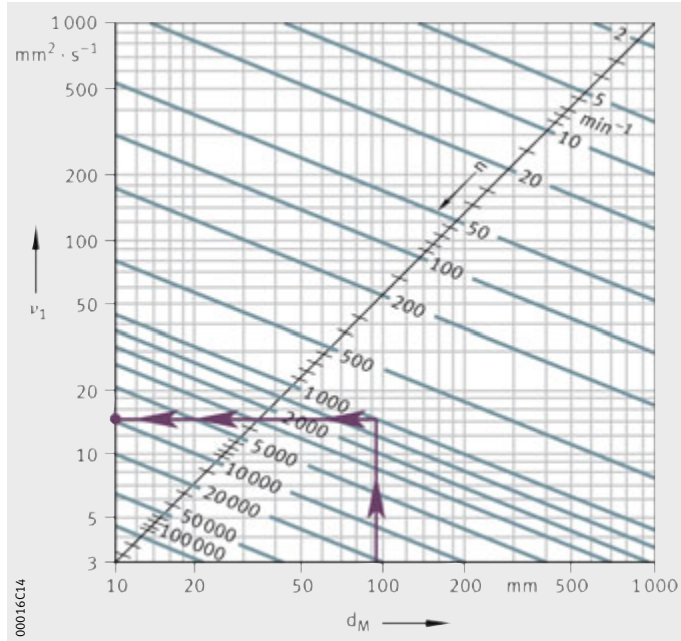

ν_1 = reference viscosity
d_M = mean bearing diameter
n = speed

Figure 1
Reference viscosity ν_1

ν = operating viscosity
ϑ = operating temperature
ν_{40} = viscosity at +40 °C

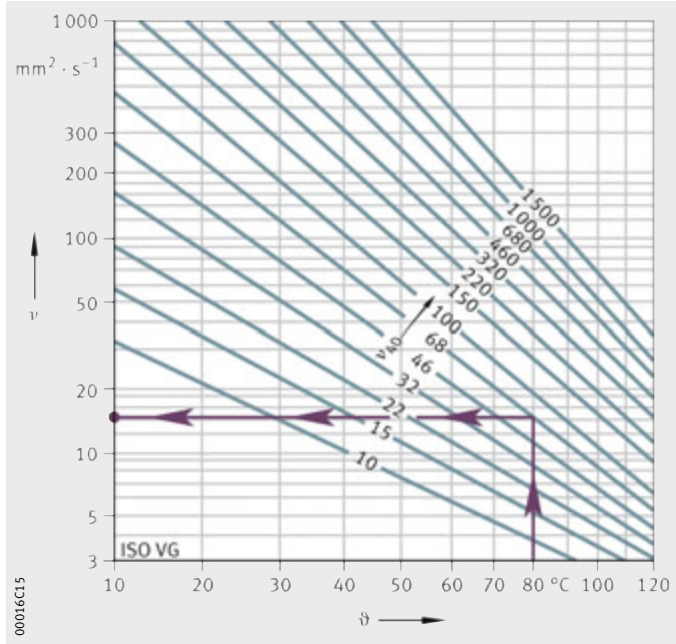

Figure 2
V/T diagram

Grease lubrication

Development in greases and bearings has led to an enormous improvement in performance, principally in relation to the achievable speeds. It is now possible to achieve speed parameters $n \cdot d_M$ up to 2 000 000 $min^{-1} \cdot mm$.

The use of spindle bearings already greased “for life” and sealed brings further advantages, such as very high cleanliness since the interior of the bearing is protected. It also gives simplified mounting.

Greases with special suitability

Many of the rolling bearings supplied by Schaeffler Group Industrial are filled with grease. The greases used have proved particularly suitable for the application in mechanical-dynamic tests.
An overview of suitable FAG greases for super precision bearings is shown in table.

Greases for super precision bearings

Greases	Designation			
	L075	L252	L055	L298
Designation according to DIN 51825	KEHC3K–50	KHCP2/3K–40	KPHC2N–30	KPHCP3P–40
Thickener	Poly-carbamide	Lithium complex	Lithium	Poly-carbamide
Base oil	PAO and ester oil	PAO and ester oil	PAO and mineral oil	PAO and ester oil
Base oil viscosity at +40 °C	22	25	85	55
Base oil viscosity at +100 °C	5	5	12,5	9
NLGI class	3	2 to 3	2	3
Maximum operating temperature[1] °C	80	80	80	110
Speed parameter $n \cdot d_M$[2] $min^{-1} \cdot mm$	2 000 000	2 000 000	800 000	1 300 000
Specific mass ≈g/cm³	0,92	0,94	0,9	0,86
Application as	high speed grease		high pressure grease	high temperature grease

[1] Without minimisation of service life.

[2] The speed parameter $n \cdot d_M$ is the product of the mean bearing diameter and the speed (values apply for point contact).

L075 and L252

High speed greases have been developed for operation in spindles for machine tools. This class of greases includes the FAG high speed greases L075 and L252.

In the case of sealed bearings with standard greasing, the grease grade is not stated on the packaging or on the bearing. Open bearings greased with high speed grease are identified by the application-oriented grease group GA21 on the bearing and on the packaging.

L298

L298 is also a high speed grease that, due to its higher base oil viscosity, is used at continuous temperatures up to approx. +110 °C.

L055

L055 is a high pressure grease that has proved extremely effective in the end bearings of ball screw drives, in indexing table bearings and for example also in tailstock lathe centre bearing arrangements.

Grease quantities

The individual bearing series require different grease quantities. The recommendations are matched to the space within the bearing that is not disturbed by rotating parts, see tables on page 25 and page 26.
Guidelines on greasing, see section Mounting, page 54.

Recommended grease quantities for cylindrical roller bearings and double direction axial angular contact ball bearings

Bore code	Bearing series Grease quantity cm^3				
	N10	N19	NN30	NNU49	2344 2347
06	0,69	–	0,76	–	3,90
07	0,91	–	0,95	–	5,00
08	1,15	–	1,14	–	6,10
09	1,44	–	1,61	–	7,80
10	1,56	0,81	1,74	–	8,35
11	2,25	1,05	2,55	–	12,20
12	2,45	1,13	2,70	–	12,20
13	2,60	1,20	2,85	–	13,30
14	3,10	2,05	4,20	2,90	17,80
15	3,30	2,20	4,45	3,10	18,90
16	4,30	2,30	6,10	3,25	25,60
17	4,50	3,15	6,40	4,50	27,80
18	5,75	3,30	7,85	4,75	38,90
19	6,00	3,45	8,20	4,95	38,90
20	6,20	4,05	8,50	6,25	44,40
21	7,75	4,25	10,60	6,50	61,10
22	8,50	4,45	13,70	6,75	61,10
24	9,05	5,85	15,90	10,10	66,70
26	14,90	7,65	21,20	13,60	105,60
28	15,70	8,05	24,10	12,10	116,70
30	19,00	12,00	29,30	21,20	138,90
32	23,00	12,60	37,20	22,40	172,20
34	30,80	13,30	48,80	23,60	227,80
36	38,30	19,10	63,50	32,70	316,70
38	55,80	20,00	67,40	34,20	311,10
40	67,90	29,70	86,70	54,50	411,10
44	72,50	32,10	110,10	59,00	522,20
48	112,50	34,50	127,50	63,60	622,20
52	119,10	52,60	177,30	109,50	833,30
56	157,70	55,90	196,70	116,60	850,00

Recommended grease quantities for spindle bearings

Bore code	Bearing series Grease quantity cm^3				
	HS719 HC719 XC719	HS70 HC70 XC70	B719 HCB719 XCB719	B70 HCB70 XCB70	B72 HCB72
6	–	0,12	–	0,04	–
7	–	0,13	–	0,06	–
8	–	0,17	–	0,11	–
9	–	0,21	–	0,10	–
00	0,17	0,26	0,09	0,17	0,26
01	0,18	0,28	0,10	0,21	0,36
02	0,28	0,46	0,17	0,32	0,48
03	0,32	0,58	0,17	0,42	0,68
04	0,58	0,98	0,36	0,76	1,12
05	0,68	1,14	0,40	0,86	1,44
06	0,92	1,72	0,42	1,12	2,10
07	1,18	2,20	0,64	1,74	3,00
08	1,62	2,60	1,36	2,35	3,80
09	2,10	3,65	1,60	3,00	4,55
10	2,35	4,00	1,74	3,30	5,45
11	3,40	5,95	2,20	4,60	6,50
12	3,60	6,40	2,50	4,95	8,00
13	3,90	6,80	2,65	5,30	9,35
14	5,80	9,20	4,35	7,10	10,80
15	6,10	9,70	4,60	7,50	12,90
16	7,00	12,80	4,90	9,65	12,30
17	8,55	13,40	6,80	10,30	18,30
18	9,40	17,70	7,10	13,30	19,10
19	9,85	18,40	7,45	13,90	26,10
20	12,80	19,20	9,70	14,60	27,20
21	13,30	24,60	10,10	15,00	36,30
22	14,70	28,20	10,40	21,90	43,90
24	17,90	30,30	14,20	23,60	38,80
26	24,00	43,70	18,10	36,10	41,90
28	25,60	46,30	19,30	38,30	58,60
30	37,80	57,10	28,40	44,70	81,30
32	39,90	69,70	30,00	58,20	120,90
34	–	–	31,70	65,30	120,40
36	–	–	47,40	94,90	125,70
38	–	–	50,00	99,10	155,40
40	–	–	70,60	118,30	187,80
44	–	–	68,30	172,60	250,10
48	–	–	73,70	185,30	–
52	–	–	118,20	267,00	–
56	–	–	126,00	283,90	–

The spindle bearings HS, HC and XC are available greased and sealed as HSS, HCS and XCS.

Spindle bearings B719, B70 and some bearings of series B72, are also available greased and sealed, design 2RSD, see dimension tables.

Grease operating life

The grease operating life is the period during which the bearing function is maintained by the lubricant introduced.

It is dependent on the following factors:

- the grease quantity
- the grease type
- the bearing type
- the speed
- the temperature
- the mounting, operating and environmental conditions.

The grease operating life F_{10} must be taken into consideration as the decisive factor in many applications instead of the fatigue limit life.

The grease operating life is dependent on the bearing-specific speed parameter $k_f \cdot n \cdot d_M$, *Figure 3*.

F_{10} = grease operating life
$k_f \cdot n \cdot d_M$ = bearing-specific speed parameter
k_f = factor for bearing type
n = operating speed or equivalent speed
d_M = mean bearing diameter
① Steel bearings
② Hybrid bearings
③ X-life ultra bearings

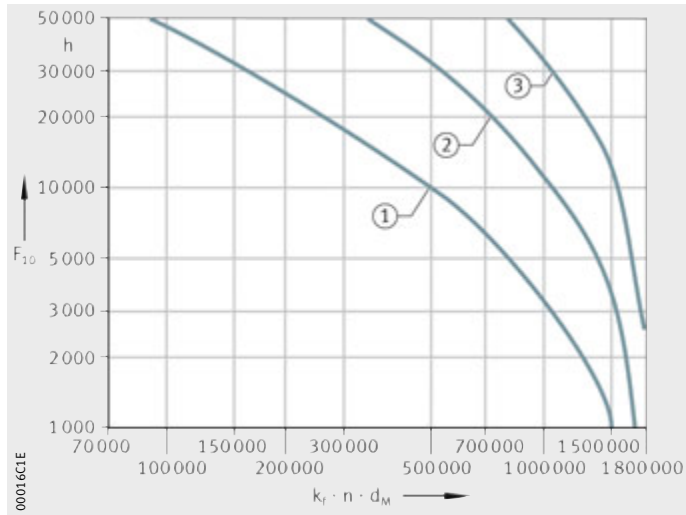

Figure 3
Grease operating life F_{10}

Factor k_f, as a function of bearing type

Bearing type		Factor k_f
Spindle bearings with contact angle	15°	0,75
	20°	0,8
	25°	0,9
Super precision cylindrical roller bearings	Single row	1
	Double row	2
Double direction axial angular contact ball bearings		2,5

Unfavourable operating and environmental conditions such as moisture, vibrations and air flows through the bearings must be taken into consideration as appropriate.

Where operation is at varying speeds for known time periods, the total grease operating life can be calculated according to the following formula:

$$F_{10\,tot} = \frac{100}{\sum_{i=1}^{n} \frac{q_i}{F_{10\,i}}}$$

$F_{10\,tot}$ h
Total grease operating life

n –
Number of load cases

q_i %
Time periods

$F_{10\,i}$ h
Grease operating life for individual speeds in speed duty cycle.

Grease distribution cycle

In order to distribute the grease, start/stop operation is recommended. This prevents high detrimental temperatures at the contact point. During the stop phase, the temperatures of the individual bearing components are levelled out, preventing detrimental increases in preload.

It is recommended that the temperature should be monitored during the grease distribution cycle as well as during the subsequent continuous running. The temperature sensor should mounted as close as possible to the outer ring.

A progressive increase in temperature must be avoided at all costs. This will occur, for example, if there is an excessive increase in preload.

Running-in process

Grease distribution is completed once a stable bearing temperature has been achieved.

Recommendations for the grease distribution cycle of super precision bearings, *Figure 4*.

The running-in process comprises several cycles of start/stop operation at different speeds and for different running times, while the stationary times after each cycle are very important. The number of cycles required may vary according to the bearing size, the number of bearings, the maximum speed and the bearing environment.

Further cycles should be carried out for an increased running time and with a shortened stationary time until the equilibrium temperature is achieved.

① Speed
② Running and stationary times
③ Running time
④ Stationary time
⑤ Time 11 min, 40 s
⑥ Time 56 min, 40 s

Figure 4
Grease distribution cycle for open and sealed spindle bearings

Grease quantity card

For use in the workshop, a DIN A5 card laminated in film is available. This compiles: the grease quantities, see tables, page 25 and page 26, and the grease distribution cycle, *Figure 4*.

Lubrication

Oil lubrication

For the lubrication of super precision bearings, fully synthetic oils with high pressure capacity are essentially suitable.

Proven oils have the designation ISO VG 68 + EP.
This means that the oil has a nominal viscosity of 68 mm^2/s at +40 °C and Extreme Pressure additives.

Lubrication method

Minimal quantity oil lubrication

Lubrication of FAG spindle bearings requires very little oil. Quantities of the magnitude of approx. 100 mm^3/h are sufficient if it can be ensured that all the rolling and sliding surfaces are coated with oil. Such minimal quantity lubrication gives only small friction losses.

Minimal quantity oil lubrication is used when the spindle speed is too high for grease lubrication. The standard method is now pneumatic oil lubrication. Speeds achieved with minimal quantity lubrication, see dimension tables.

Guide values for the oil quantity in pneumatic oil lubrication are shown in *Figure 5*. Specific flow conditions in the bearing arrangement can have a significant influence on the oil quantity. For hybrid bearings, the upper part of the range is always more applicable, while steel bearings tend to fall within the lower part of the range.

Oil quantities for super precision cylindrical roller bearings with pneumatic oil lubrication are shown in *Figure 6*.

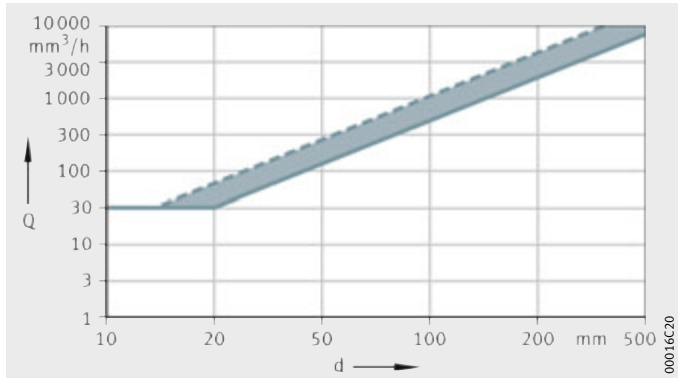

Q = oil quantity
d = bearing bore

Figure 5
Oil quantity
for spindle bearings
with pneumatic oil lubrication

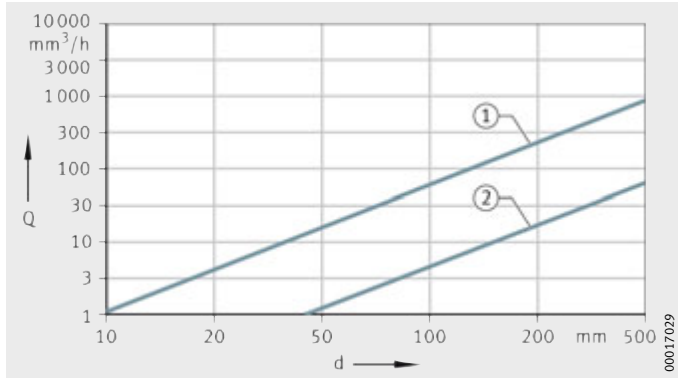

Q = oil quantity
d = bearing bore
① Bearings with ribs on the inner ring and $n \cdot d_m \leqq 10^6\ min^{-1} \cdot mm$
② Bearings with ribs on the outer ring and $n \cdot d_m \leqq 600\,000\ min^{-1} \cdot mm$

Figure 6
Oil quantity
for cylindrical roller bearings
with pneumatic oil lubrication

Spindle bearings B, HCB, HS, HC, XC, XCB, RS and HCRS are also available as a Direct Lube design.

Recommendations for pneumatic oil lubrication

Feature	Recommendation
Oil purity class	See tables in the section Cleanliness, page 18
Air cleanliness	Particle size max. 1 µm
Dryness of air	Dew point at +2 °C
Air pressure in the feed pipe	≈ 3 bar
Nozzle diameter	0,5 mm to 1 mm

Number of nozzles

- Provide individual nozzles for each bearing
- One nozzle per 150 mm pitch circle size.

Nozzle design

- Feed parallel to the spindle axis between the inner ring rib and cage bore.

Injection pitch circle diameter

- Injection pitch circle diameter E_{tk}, see dimension tables.

Feed pipes

- Inside diameter 2 mm to 2,5 mm
- Flexible and transparent plastic pipe, allowing visible oil flow on the inner wall of the pipe.

Length

- At least 1 m, optimally 4 m, up to approx. 10 m
- Coiling with approx. five turns
- Centre axis horizontal or inclined at an angle up to 30°
- Not more than approx. 500 mm before the nozzle
- When lubrication is stopped, oil collects in the bottom of the turns and is rapidly available at restart.
  As a result, there is only a short delay when starting the spindle.

Oil outlets

- On both sides of each bearing
- Accumulation of oil can cause hot running
- In the case of vertical spindles, provide an outlet under each bearing so that the other bearings arranged below are not overlubricated. The diameter of the outlet hole should if possible be ≧ 5 mm.
- All outlet holes from all bearings on one spindle must be linked to each other in order to equalise pressures.

Further information can be obtained from the manufacturers of pneumatic oil lubrication devices.

Pneumatic oil lubrication devices

Oil quantities per injection cycle mm^3	Injection cycles per hour
3, 5, 10, (30, 60, 100)	6 to 10 times

Tolerances

Tolerances of super precision bearings

The tolerances of super precision bearings are standardised in accordance with DIN 620. Definitions for the dimensions and accuracies are given in DIN ISO 1132.

In order to ensure full use of the bearing performance capacity and a high machining accuracy, the dimensional and geometrical accuracy of super precision bearings is produced within very narrow tolerance ranges.

Dimensional and geometrical tolerances conform to the accuracy standard:

- P2 for all super precision spindle bearings
- SP for all super precision cylindrical roller bearings and axial angular contact ball bearings.

Super precision cylindrical roller bearings and axial angular contact ball bearings are also available by agreement in the higher accuracy class UP.

The measurement principles for the tolerances are shown in the tables on pages 32 to 35. Tolerance values, see relevant product chapter.

Bore diameter

Bore diameter	Measurement principle
d = Nominal bore diameter (small diameter with tapered bore)	–
d_1 = Nominal large bore diameter with tapered bore	–
$\Delta_{ds} = d_s - d$ Deviation of single bore diameter from nominal dimension a = Measurement distance	00016C22
$\Delta_{dmp} = d_{mp} - d$ Deviation of mean bore diameter from nominal dimension in a single radial plane a = Measurement distance	00016C23
$\Delta_{d1mp} = d_{1mp} - d_1$ Deviation of mean large bore diameter with tapered bore from nominal dimension	–
$V_{dp} = d_{ps\,max} - d_{ps\,min}$ Variation of bore diameter in a single radial plane (V_{dp} ≙ out of roundness to DIN 620, $V_{dp/2}$ ≙ roundness to DIN ISO 1132; measurement principle ≙ out of roundness) a = Measurement distance	00016C23
$V_{dmp} = d_{mp\,max} - d_{mp\,min}$ Variation of mean bore diameter in various radial planes a = Measurement distance	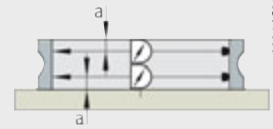 00016C24

Measurement distance a see page 36 to page 38.

Outside diameter

Outside diameter	Measurement principle
D = Nominal outside diameter	–
Δ_{Ds} = $D_s - D$ Deviation of single outside diameter from nominal dimension a = Measurement distance	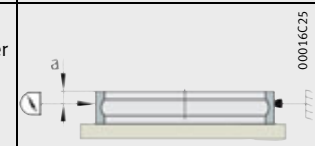
Δ_{Dmp} = $D_{mp} - D$ Deviation of mean outside diameter from nominal dimension in a single radial plane a = Measurement distance	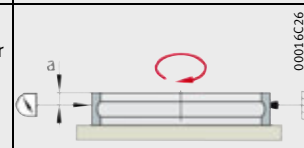
V_{Dp} = $D_{ps\,max} - D_{ps\,min}$ Variation of outside diameter in a single radial plane (V_{Dp} ≙ out of roundness to DIN 620, $V_{Dp/2}$ ≙ roundness to DIN ISO 1132; measurement principle ≙ out of roundness) a = Measurement distance	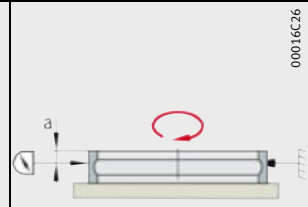
V_{Dmp} = $D_{mp\,max} - D_{mp\,min}$ Variation of mean outside diameter in various radial planes a = Measurement distance	

Measurement distance a see page 36 to page 38.

Width and height

Width and height	Measurement principle
$\Delta_{Bs} = B_s - B$ Deviation of single inner ring width from nominal dimension	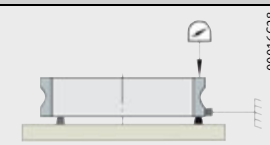
$\Delta_{Cs} = C_s - C$ Deviation of single outer ring width from nominal dimension	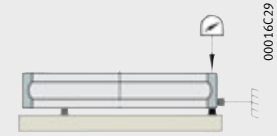
$V_{Bs} = B_{s\,max} - B_{s\,min}$ Variation of inner ring width	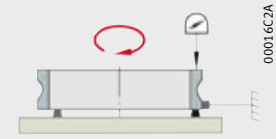
$V_{Cs} = C_{s\,max} - C_{s\,min}$ Variation of outer ring width	
$\Delta_{Hs} = H_s - H$ Deviation of total height of single axial bearing from nominal dimension	–

Running accuracy

Running accuracy	Measurement principle
K_{ia} = Radial runout of inner ring of assembled bearing	00016C2C
K_{ea} = Radial runout of outer ring of assembled bearing	00016C2D
S_d = Axial runout of inner ring face to the bore	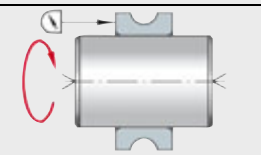 00016C2E
S_D = Runout of outer ring outside surface generatrix to the face a = Measurement distance	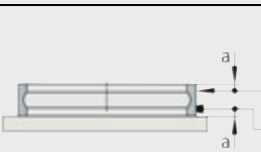 00016C2F
S_{ia} = Axial runout of inner ring of assembled bearing	00016C30
S_{ea} = Axial runout of outer ring of assembled bearing	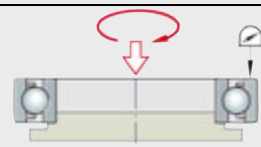 00016C31
S_i = Variation of washer thickness of shaft locating washer	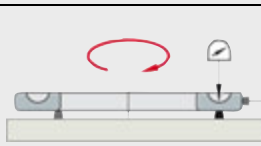 00016C32
S_e = Variation of washer thickness of housing locating washer	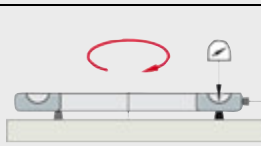 00016C32

Measurement distance a see page 36 to page 38.

Measurement forces according to DIN 620.

Chamfer dimension

The tables describe the chamfer dimensions for:

- radial bearings with a cylindrical bore
- radial bearings with a tapered bore, see table, page 37
- axial bearings, see table, page 38.

For r_{min}, $r_{1\,min}$, $r_{max\,r}$, $r_{s\,max\,r}$, $r_{max\,a}$, $r_{1\,max\,a}$ and measurement distance a, *Figure 1*, page 38.

Chamfer dimension of radial bearings with cylindrical bore

Bore d mm		Chamfer dimension			Measurement distance a mm
		r_{min} $r_{1\,min}$ mm	radial $r_{max\,r}$ $r_{s\,max\,r}$ mm	axial $r_{max\,a}$ $r_{1\,max\,a}$ mm	
over	incl.				
–	25	**0,1**	0,2	0,4	0,9
–	25	**0,15**	0,3	0,6	1,1
–	40	**0,2**	0,5	0,8	1,3
–	40	**0,3**	0,6	1	1,5
40	120	**0,3**	0,8	1	1,5
120	250	**0,3**	1	1,7	2,2
–	40	**0,6**	1	2	2,5
40	250	**0,6**	1,3	2	2,5
250	400	**0,6**	1,5	2,6	3,1
–	50	**1**	1,5	3	3,6
50	400	**1**	1,9	3	3,6
400	500	**1**	2,5	3,5	4,2
–	120	**1,1**	2	3,5	4,2
120	400	**1,1**	2,5	4	4,8
400	500	**1,1**	2,7	4,5	5,4
–	120	**1,5**	2,3	4	4,8
120	400	**1,5**	3	5	6
400	800	**1,5**	3,5	5	6
–	80	**2**	3	4,5	5,4
80	220	**2**	3,5	5	6
220	800	**2**	3,8	6	7,2
–	280	**2,1**	4	6,5	7,8
280	1200	**2,1**	4,5	7	8,4
–	100	**2,5**	3,8	6	7,2
100	280	**2,5**	4,5	6	7,2
280	800	**2,5**	5	7	8,4
800	1200	**2,5**	5	7,5	9
–	280	**3**	5	8	9,6
280	1200	**3**	5,5	8	9,6
–	1200	**4**	6,5	9	10,8
–	2000	**5**	8	10	12
–	3000	**6**	10	13	15,6
–	3000	**7,5**	12,5	17	20,4

Chamfer dimension of radial bearings with tapered bore

Bore d mm		Chamfer dimension			Measurement distance a mm
		r_{min} $r_{1\,min}$ mm	radial $r_{max\,r}$ $r_{s\,max\,r}$ mm	axial $r_{max\,a}$ $r_{1\,max\,a}$ mm	
over	incl.				
–	25	**0,05**	0,15	0,25	0,8
–	25	**0,1**	0,3	0,5	1
–	40	**0,1**	0,3	0,5	1
–	40	**0,15**	0,45	0,75	1,3
40	120	**0,15**	0,45	0,75	1,3
120	250	**0,2**	0,6	1	1,5
–	40	**0,25**	0,75	1,25	1,8
40	250	**0,3**	0,9	1,5	2
250	400	**0,35**	1,05	1,75	2,3
–	50	**0,4**	1,2	2	2,5
50	400	**0,45**	1,35	2,25	2,8
400	500	**0,5**	1,5	2,5	3
–	120	**0,5**	1,5	2,5	3
120	400	**0,55**	1,65	2,75	3,3
400	500	**0,6**	1,8	3	3,5
–	120	**0,6**	1,8	3	3,5
120	400	**0,7**	2,1	3,5	4,2
400	800	**0,7**	2,1	3,5	4,2
–	80	**0,7**	2,1	3,5	4,2
80	220	**0,8**	2,4	4	4,8
220	800	**0,9**	2,7	4,5	5,4
–	280	**0,9**	2,7	4,5	5,4
280	1 200	**1**	3	5	6
–	100	**0,9**	2,7	4,5	5,4
100	280	**1**	3	5	6
280	800	**1,1**	3,3	5,5	6,6
800	1 200	**1,1**	3,3	5,5	6,6
–	280	**1,2**	3,6	6	7,2
280	1 200	**1,2**	3,6	6	7,2
–	1 200	**1,5**	4,5	7,5	9
–	2 000	**1,8**	5,5	9	10,8
–	3 000	**2,2**	6,5	11	13,2
–	3 000	**3**	9	15	18

Tolerances

Chamfer dimension of axial bearings

Bore d mm		Chamfer dimension			Measurement distance a mm
		r_{min} $r_{1\,min}$ mm	radial $r_{max\,r}$ $r_{s\,max\,r}$ mm	axial $r_{max\,a}$ $r_{1\,max\,a}$ mm	
over	incl.				
–	25	**0,1**	0,2	0,2	0,7
–	25	**0,15**	0,3	0,3	0,8
–	40	**0,2**	0,5	0,5	1
–	120	–	0,8	0,8	1,3
120	250	**0,3**	1	1	1,5
–	400	**0,6**	1,5	1,5	2
–	500	–	2,2	2,2	2,6
500	800	**1**	2,6	2,6	3,1
–	800	**1,1**	2,7	2,7	3,2
–	1 200	**1,5**	3,5	3,5	4,2
–	1 200	**2**	4	4	4,8
–	1 200	**2,1**	4,5	4,5	5,4
–	2 000	**3**	5,5	5,5	6,6
–	2 000	**4**	6,5	6,5	7,8
–	3 000	**5**	8	8	9,6
–	3 000	**6**	10	10	12
–	3 000	**7,5**	12,5	12,5	15

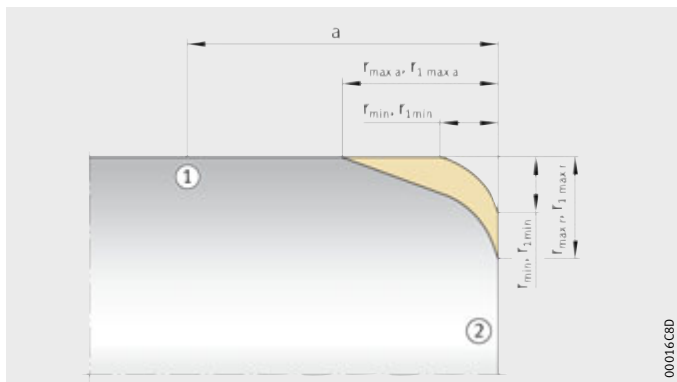

① Bore or outside diameter
② Lateral face

Figure 1
Limit chamfer dimensions

Legend

r_{min}, $r_{1\,min}$ mm
Symbol for smallest chamfer dimension in radial and axial direction

$r_{max\,r}$, $r_{1\,max\,r}$ mm
Largest chamfer dimension in radial direction

$r_{max\,a}$, $r_{1\,max\,a}$ mm
Largest chamfer dimension in axial direction

Measurement distance a mm
Start of inspection area for bore or outside diameter tolerances.

Machining tolerances of adjacent parts

The performance capacity of super precision bearings in relation to speed suitability and running accuracy continues to increase. However, this increased performance capacity is only effective and can only be used to the full if the precision of the adjacent parts is in harmony with the precision of the bearings.

In order to ensure better and faster selection of fits as well as secure functioning and interchangeability of the super precision bearing, the dimensional and geometrical tolerances that have proved effective in many applications are compiled in tables.
For spindle bearings, see page 88 and tables, page 91,
for cylindrical roller bearings, see page 170 to 174,
for axial angular contact ball bearings, see page 209 and page 210.

The mean roughness values Ra of the bearing seats must not be exceeded, in order that the recommended fits remain within a restricted change (burnishing). The generally valid rules of rolling bearing engineering that take account of the direction and action of loading, the rotation of the inner or outer ring and changes in the fit due to temperature and centrifugal force must also be observed.

Geometrical tolerances of the shaft

d = nominal shaft diameter
d′ = small taper diameter (= d + lower deviation, see table, page 171 and page 172)
d_1' = large taper diameter $d_1' = d' + 1/12 \cdot L$
L = taper length L = 0,95 · B (bearing width)
t_1 = cylindricity tolerance to DIN ISO 1101
t_2 = roundness tolerance to DIN ISO 1101
t_3 = flatness tolerance to DIN ISO 1101
t_4 = axial runout tolerance to DIN ISO 1101
t_5 = coaxiality tolerance to DIN ISO 1101
AT_D = taper angle tolerance to DIN ISO 7178
Ra = mean roughness to DIN ISO 4768

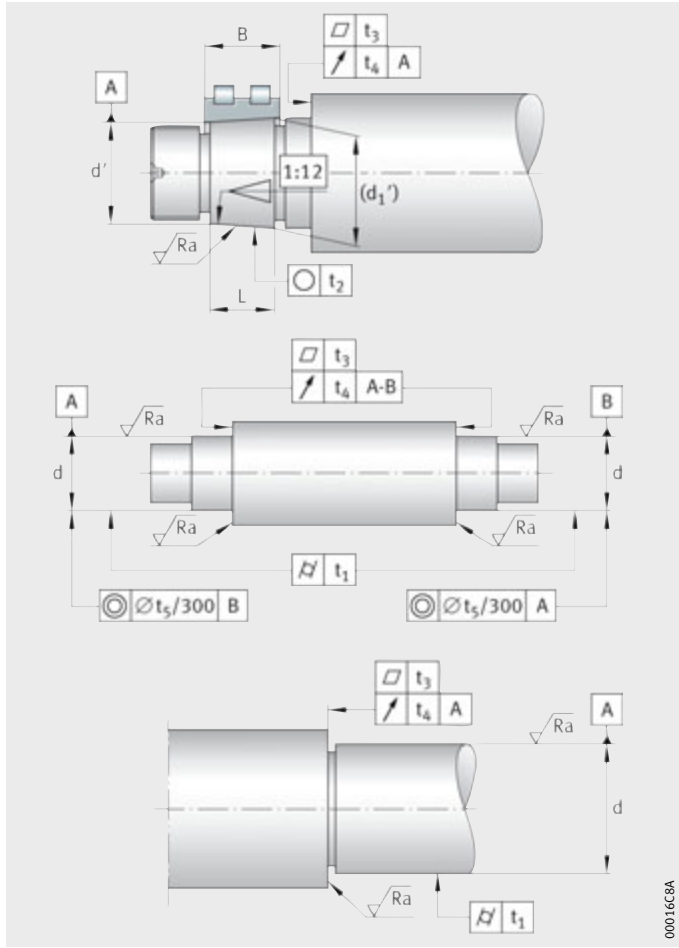

Figure 2
Geometrical tolerances of the shaft

Geometrical tolerances of the housing

D = nominal housing bore diameter
t_1 = cylindricity tolerance to DIN ISO 1101
t_3 = flatness tolerance to DIN ISO 1101
t_4 = axial runout tolerance to DIN ISO 1101
t_5 = coaxiality tolerance to DIN ISO 1101
Ra = mean roughness to DIN ISO 4768

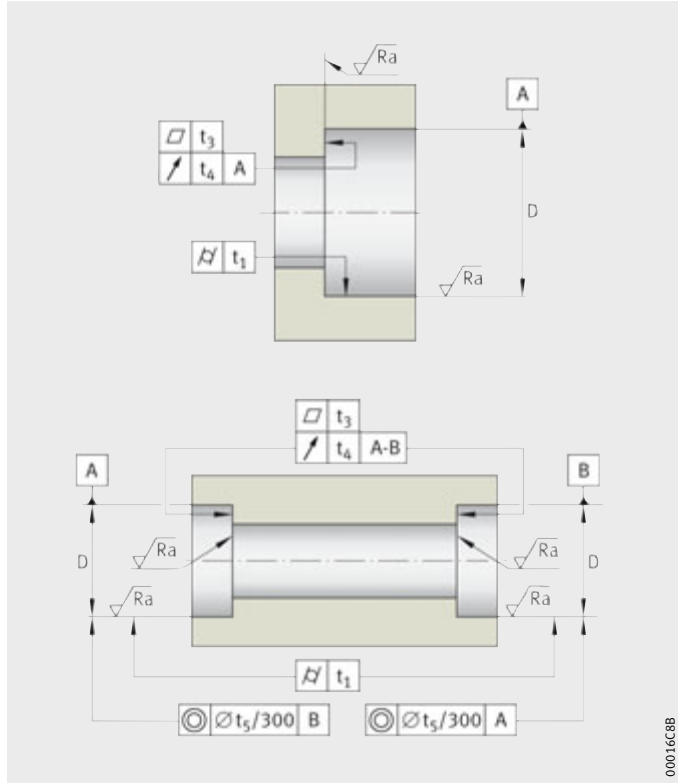

Figure 3
Geometrical tolerances of the housing

Geometrical tolerances of the spacer sleeves

d_2 = nominal spacer sleeve bore diameter
D_2 = nominal spacer sleeve outside diameter
t_1 = cylindricity tolerance to DIN ISO 1101
t_4 = axial runout tolerance to DIN ISO 1101
t_6 = parallelism tolerance to DIN ISO 1101
t_7 = roundness tolerance to DIN ISO 1101
Ra = mean roughness to DIN ISO 4768

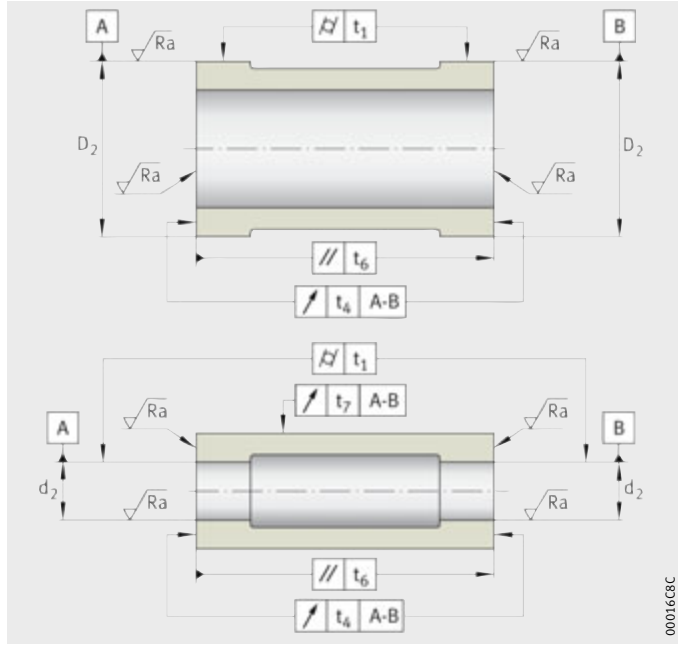

Figure 4
Geometrical tolerances of the spacer sleeves

Design and examples of bearing arrangements

Design and applications

In practical application, a large number of different spindle bearing arrangements are used. The selection and arrangement are determined by their specific use in turning, milling and grinding or in high frequency motor spindles. The design of the bearing arrangement is also influenced in relation to the bearing size and bearing type by the operating conditions. Finally, consideration of the cost-effectiveness of various technical design possibilities also plays a major role.

The bearing arrangement must run clearance-free and normally with preload in operation in order to fulfil the high accuracy requirements (P4 and above). There are also requirements for very high speeds (with grease lubrication, up to $n \cdot d_M = 2 \cdot 10^6\ min^{-1} \cdot mm$ and with pneumatic oil lubrication up to $n \cdot d_M = 3{,}1 \cdot 10^6\ min^{-1} \cdot mm$) at operating temperatures as low as possible. This requires the use of super precision bearings and correspondingly accurate adjacent parts.

The following guidelines are intended to assist in the selection of bearings and bearing arrangements.

The following aspects are considered:

- preload
- rigidity
- bearing contact angle
- ball size and material
- distance between the bearings
- sealing
- stages in bearing arrangement design
- comparison of bearing arrangements
- examples of bearing arrangements.

Preload

Rigidly adjusted bearing arrangements, especially those with a short distance between the bearings, react with a high degree of sensitivity to temperatures between the shaft and housing, since the preload within the bearing set may increase sharply and the bearing sets may brace against each other if the sliding seat does not function.

Radial bracing may occur in particular with spindle bearings having a 15° contact angle. This also applies to cylindrical roller bearings or non-locating bearing pairs with a sliding seat.

In contrast, rigid bearing arrangements with a large distance between the bearings, elastically adjusted bearing arrangements and bearings having a 20° or 25° contact angle with react with a lesser degree of sensitivity.

Bearings with ceramic rolling elements generally have lower operating temperatures. Furthermore, the increase in the preload in the rigid system with increasing ΔT is smaller in this case than with steel balls.

For rigidly preloaded bearing arrangements, speed reduction factors must be applied, see page 86.

In bearing arrangements adjusted by springs or hydraulic means, the stated speeds are achieved due to the lower thermal sensitivity, see dimension tables. In bearings with a 15° contact angle, the ΔT between the shaft and housing may restrict the speed.

For the spring, a preload force is selected that corresponds to at least the mean bearing preload M, see table, page 86.

Rigidity

The rigidity of the bearing arrangement system is influenced by the shaft diameter, the number of bearings, the bearing size, the preload and the contact angle.

Contact angle and rigidity

The rigidity of a bearing set is dependent on the bearing arrangement and the preload. The rigidity of the complete system is determined not only by the rigidity of the bearing arrangement but also significantly by the rigidity of the shaft and housing.

Bearings with a 15° contact angle have only 45% of the axial rigidity of bearings with a 25° contact angle, but have a radial rigidity only 10% higher than these. Calculation of the radial and axial rigidity, see page 20 and page 169.

If the spindle bearing arrangement and boom is considered as a complete system, the total rigidity of a bearing arrangement with 25° bearings is normally better in a radial direction due to the wider support base than in a bearing arrangement with 15° bearings. A bearing arrangement with 20° bearings offers a good intermediate value in this case.

Rigidity of a preloaded bearing arrangement

The rigidity of a rigidly preloaded bearing arrangement increases during mounting due to the influence of fit compared with the catalogue data. In operation, it generally increases further due to the expansion of the ring as a result of centrifugal force at high speeds and due to the thermally induced radial expansion of the shaft and inner ring.

Bearing contact angle

The available contact angles of the spindle bearings have different advantages and areas of application, see table.

Contact angles, advantages and applications

Advantages and applications	Contact angle		
	15°	20°	25°
Advantages	▪ Radial rigidity ▪ Radial load carrying capacity ▪ Somewhat higher speed at small ΔT	▪ Good axial and radial rigidity ▪ Combined loads ▪ Very high speeds at high ΔT	▪ Axial rigidity ▪ Radial system rigidity ▪ Axial load carrying capacity ▪ Combined axial and radial load carrying capacity ▪ High permissible ΔT between inner ring and outer ring
Applications	▪ Grinding machines ▪ Precision machining equipment ▪ Bearing arrangement on belt side	▪ Milling at high output ▪ Machining centres ▪ Motor spindles	▪ Lathes ▪ Milling machines ▪ Drilling machines ▪ Machining centres ▪ Motor spindles

Bearing selection according to ball size and material

Spindle bearings having a designation beginning with B or RS are filled with large balls while the other types have small balls.

Bearings with large balls have a higher load carrying capacity and are therefore more suitable for high loads than bearings with small balls. The latter should be selected in preference for high speeds.

Ceramic

Bearings with ceramic rolling elements have additional speed advantages.

X-life ultra bearings

X-life ultra bearings have rings made from Cronidur 30 and balls made from ceramic. Bearings of this design with small balls have a designation starting with XC, bearings with large balls start with XCB.

Specifications for bearing selection

Bearing selection is aided by a comparison of the specifications and performance data of spindle bearings, see table.

Comparison of bearing designs

Ball size	Ball material	Bearing type	Load carrying capacity	Speed suitability	Service life
Large	Steel	B	High	Moderate	Good
Large	Steel	RS	High	High	Good
Small	Steel	HS	Moderate	High	Better
Large	Ceramic	HCB	Moderate	High	Much better
Large	Ceramic	HCRS	Moderate	Highest	Much better
Small	Ceramic	HC	Low	Highest	Best
X-life ultra bearings	Ceramic	XC, XCB	Premium	Premium	Premium

Design and examples of bearing arrangements

Selection of the optimum bearing spacing

In rigidly preloaded bearing arrangements, it is recommended that a thermally neutral bearing spacing is selected at which the effects of the radial and axial thermal expansion of the shaft in relation to the influence on preload are compensated.

This thermally optimum bearing spacing L corresponds for spindle bearings with a 25° contact angle to approx. three times and in the case of a 20° contact angle to four times the shaft diameter d; in bearings with a 15° contact angle, L is approx. 5 · d, where the axial thermal expansion often takes effect too slowly due to the long bearing spacing. Such an approach is not very advisable in practice.

Sealing

Main spindle bearing arrangements must be effectively sealed, especially at the spindle nose. If a non-contact labyrinth seal with a protective collar, narrow radial gaps (to h8/C9), wide axial gaps (gap width ≧ 3 mm) and outlet holes is required due to the high speeds, complete sealing integrity against cooling lubricant, swarf and dust must be ensured during rotation and standstill.

When using grease lubrication, sealed bearings assist the effect of the labyrinth and prevent air flows through the bearing arrangement. Solutions with labyrinth seals for horizontal and vertical spindles are shown in *Figure 1* and *Figure 2*.

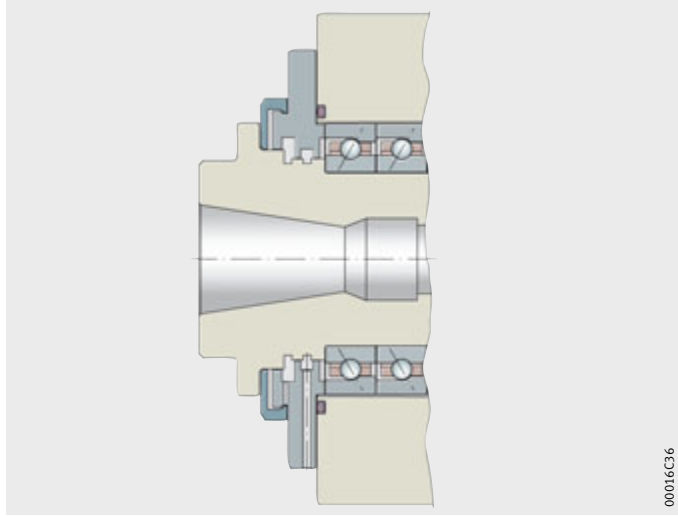

Figure 1
Labyrinth seal for horizontal spindle

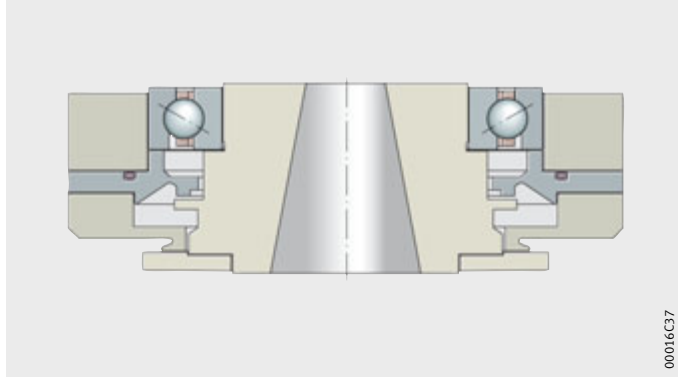

Figure 2
Labyrinth seal for vertical spindle

Stages in bearing arrangement design

In the design of a spindle bearing arrangement, the following stages must be performed:

1. Define the operating conditions (speeds, forces, time periods, spacings and diameters, temperatures, environmental influences).
2. Select the bearing arrangement on the basis of the application and the requirements, see table, page 48.
3. Define the lubrication, see section Lubrication, page 21.
4. Select the bearing type and bearing size on the basis of speed suitability, design envelope and lubrication.
5. Check the grease operating life, *Figure 3*, page 27.
6. Calculate the load distribution on the bearings.
7. Check the fatigue strength of the bearing arrangement, see section Fatigue strength, page 17.

Bearing design using a calculation program

If a calculation program is available, the following stages can also be performed:

- Calculate the bearing kinematics (spin/roll ratio, ball advance and retardation) and pressures (p_0) and compare with the design limits.
- Assess the rating life taking account of lubrication and cleanliness.
- Calculate the bending line, deflections and rigidity.
- Calculate the natural frequencies or critical whirling speeds.
- Optimise the bearing arrangement.

Schaeffler Technologies GmbH & Co. KG also offers the calculations by agreement as a service. It is advisable in this case to submit the complete bearing arrangement data using the template for bearing arrangement calculations in the appendix of the catalogue. This form is also available for download at www.fag.de

Design limits

Criteria	Limit values
Spin/roll ratio	max. 0,5
Maximum ball advance and ball retardation	Dependent on the internal design of the bearing
Hertzian pressures	Fatigue strength limits: Point contact with 100Cr6: 2 000 MPa with Cronidur 30: 2 500 MPa Line contact with 100Cr6: 1 500 MPa with Cronidur 30: 1 900 MPa

Design and examples of bearing arrangements

Design of main spindles using BEARINX®

Assistance in rolling bearing design

As early as the development phase, the Schaeffler Group offers its customers the support they require for the secure application of super precision bearings.

A key component in design work is the design of the rolling bearings. To this end, the Schaeffler Group has successfully used calculation programs for more than thirty years.

The computer-aided examination of rolling bearing behaviour under realistically modelled operating conditions in the design phase helps to speed up development work and contributes to higher operational security.

BEARINX® – a leading calculation program

In BEARINX®, the Schaeffler Group Industrial has developed one of the leading programs for the calculation of rolling bearings. It facilitates the detailed analysis of rolling bearing arrangements, from individual bearings to complex shaft systems, transmissions and linear guidance systems. The complete calculation is carried out in a consistent calculation model. Even for extensive applications, the contact pressure at each individual rolling element is included in the calculation.

The current version of BEARINX® includes a special module for calculation of spindle bearings. The functional scope of BEARINX® incorporates the influences of centrifugal force on load distribution and the running behaviour of rolling elements in angular contact ball bearings.

BEARINX® takes account of factors including:

- the non-linear elastic deflection behaviour of the bearings
- the elasticity of shafts and axes
- the influence of fit, temperature and speed on the operating clearance or preload of the bearings and on their contact angle
- the profiling of rollers and raceways and raceway osculations
- load-induced displacements in contact angle in ball bearings and angular contact ball bearings
- the influence of lubrication conditions, contamination and actual contact pressure on the fatigue life.

BEARINX® offers the option of determining the actual load on spindle bearings.

Spindle calculation using BEARINX®

Spindle calculation using BEARINX® offers, *Figure 3* and *Figure 4*:

- recommendations for mounting fits as a function of the specified speed
- calculation of design parameters for contact pressure and kinematics in the bearing
- kinematic bearing frequencies for vibration analyses
- calculation of the rigidity of the bearing arrangement at the operating point taking account of all relevant influences
- diagrammatic shaft responses such as shaft deflection and shaft inclination
- critical whirling speeds and the diagrammatic representation of the natural mode
- calculation of the fatigue life in accordance with DIN ISO 281 Appendix 4
- many other pieces of additional information.

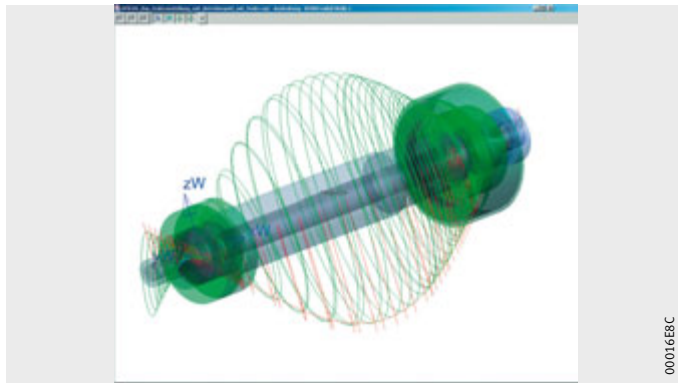

Figure 3
Deflection of the shaft

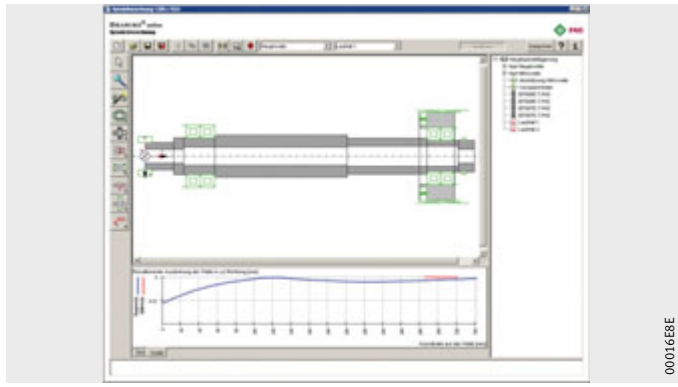

Figure 4
Calculation of the load distribution

Design and examples of bearing arrangements

Comparison of bearing arrangements

The data are guide values, based on a spindle with a:

- shaft diameter d = 70 mm
- bearing spacing L = 3 · d
- boom A = L/2.

Comparison of applications and performance data

Bearing arrangement		Typical application	Speed suitability	System rigidity		Load carrying capacity		Temperature behaviour	
front	rear		%	%		%		Load	
				axial	radial	axial	radial	Operating temperature	Sensitivity
==≦	==	Universal	50	100	100	60	100	+	+
<< >>	==	Grinding	72	65	100	75	50	++	++
<< >	==	Turning	65	44	86	75	47	+	++
<< >	< >	Turning, grinding	65	44	84	75	44	++	+
< >	=	Wood, motor	75	32	79	35	42	+++	+++
< >	< >	Drilling, motor	75	32	77	35	40	+++	+++
<	>	Milling, drilling	85	30	62	35	22	+++++	+++++++
<<	>>	Milling, drilling, universal	80	61	95	75	44	++++	++++++
<<<	>>	Milling, drilling, universal	75	76	98	100	46	+++	+++++
<	≈>	Motor	100	23	60	30	27	+++++++	+++++++
<<	≈>>	Motor	100	46	92	60	52	++++++	++++++
< ≈>	≈>	Motor	100	25	89	25	60	++++++	+++++++
< ≈>	=	Motor	80	23	82	30	46	++++++	++++
<< ≈>	≈>	Motor	100	46	93	50	65	++++++	+++++
<< ≈>>	≈>>	Motor	100	48	98	48	65	++++	+++++

100	Optimum
+	Very unfavourable
+++++++	Very good
<	Spindle bearing
=	Single row cylindrical roller bearing
==	Double row cylindrical roller bearing
≦	Double direction axial angular contact ball bearing
≈	Spring

Examples of bearing arrangements

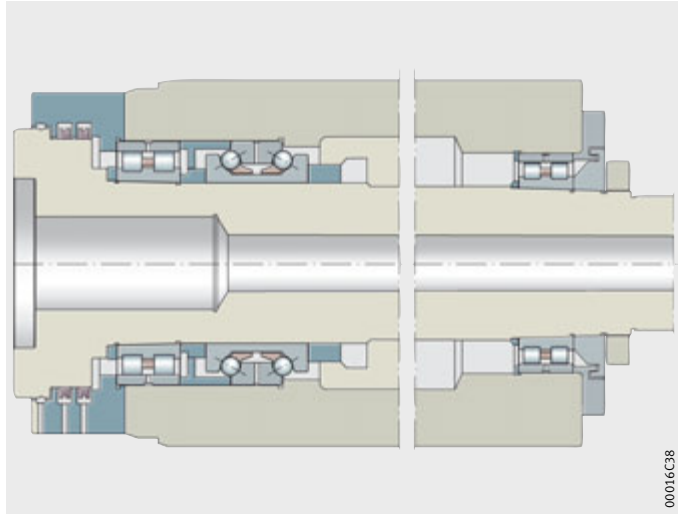

Machining centre

Figure 5
Milling spindle for high loads

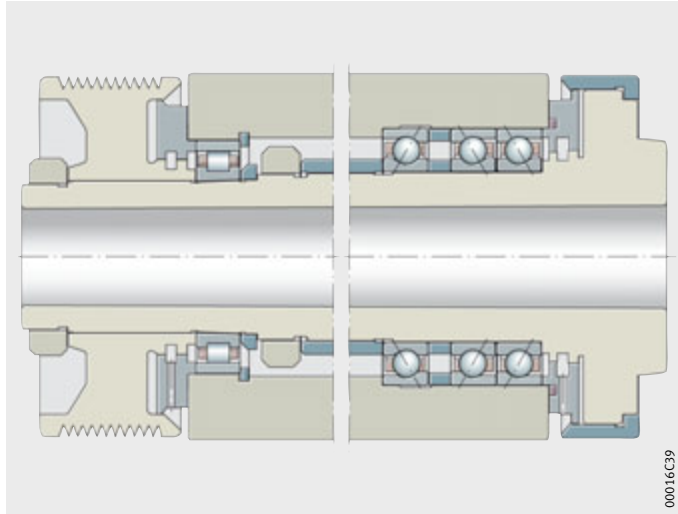

Figure 6
Turning spindle

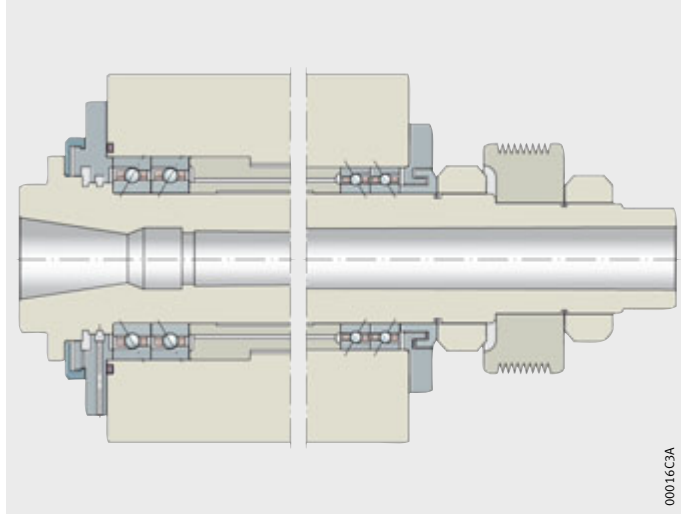

Machining centre

Figure 7
Milling spindle for high speeds

Design and examples of bearing arrangements

Machining centre

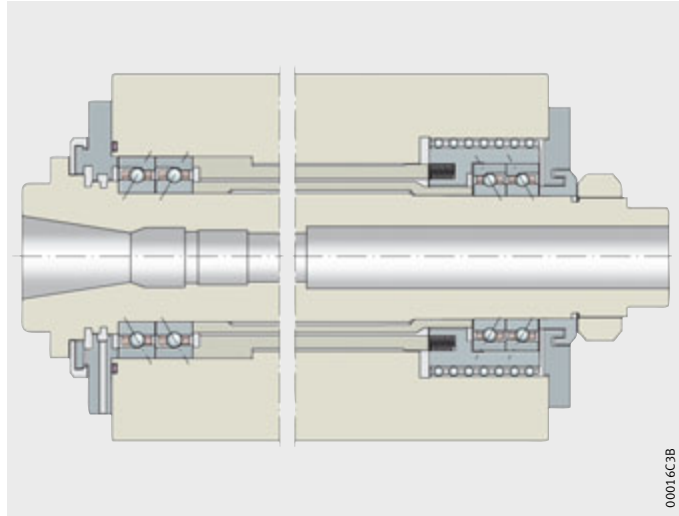

Figure 8
Milling spindle for very high speeds

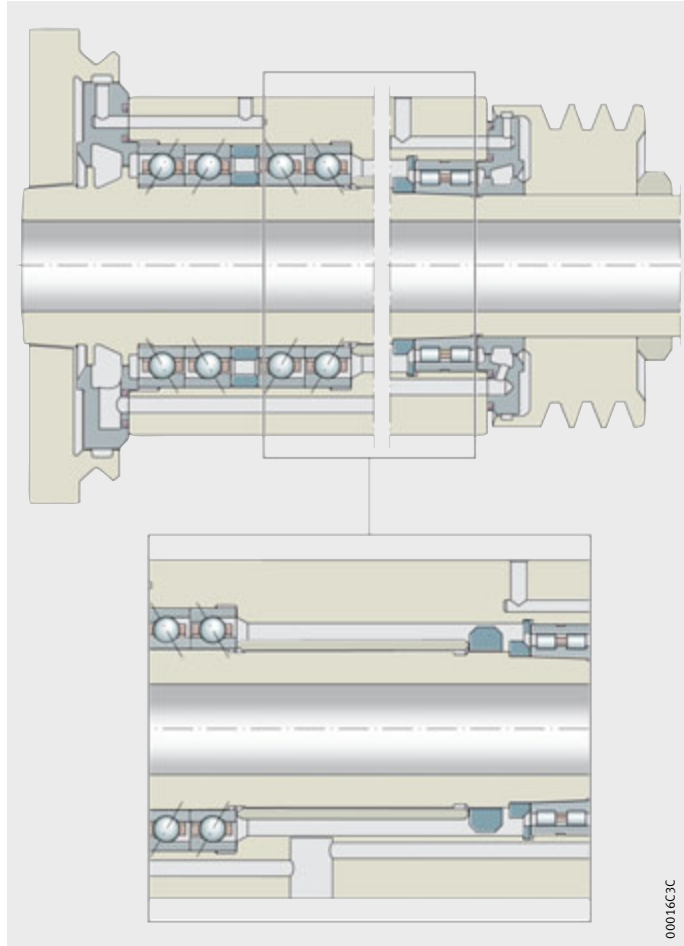

Figure 9
Grinding spindle

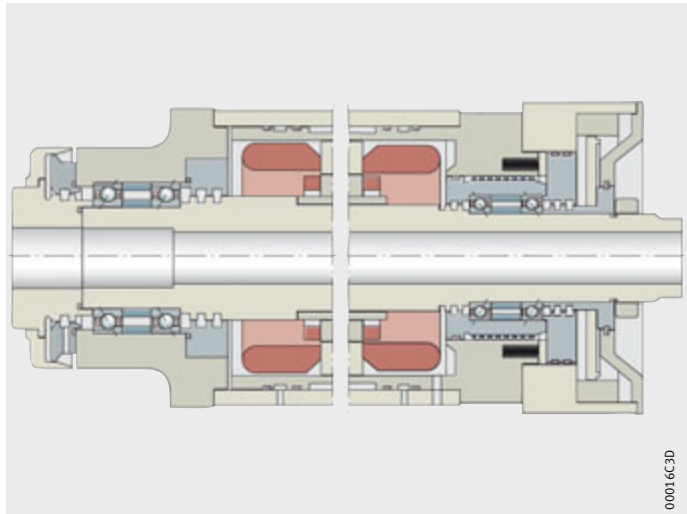

Figure 10
High frequency motor spindle

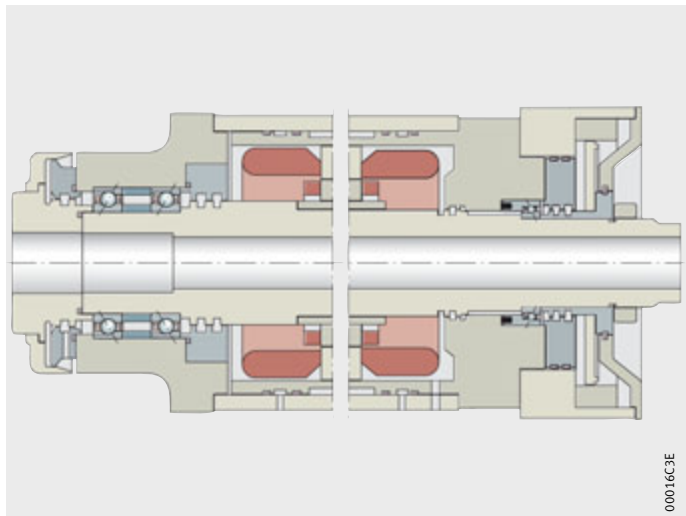

Spring-preloaded non-locating bearing unit SPP

Figure 11
High frequency motor spindle

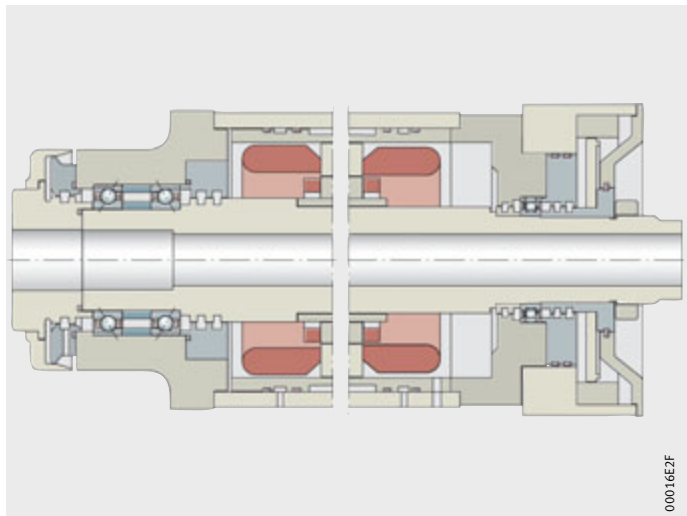

Cylindrical roller bearing N10..-K-TR-PVPA1-SP

Figure 12
High frequency motor spindle

Bearing monitoring

Factors in bearing monitoring

The measurement values to be considered for bearing monitoring are all the factors that respond to changes in the bearing or in the operating conditions. This can include forces, vibrations, temperatures or drive power.

In relation to the monitoring of bearings, however, it should be noted that the absolute values of a measurement parameter are of little significance in themselves. Greater importance should be attached to the occurrence of any changes. For example, a constant temperature of +40 °C is not detrimental to a rolling bearing. However, an increase in the temperature over a short period from +35 °C to +40 °C may well be an early indication of bearing damage.

Types of monitoring

Periodic monitoring

When selecting a suitable monitoring method, it must be noted that continuous progress in damage over an extended period can only be expected at low and moderate speeds. In such cases, periodic monitoring may be appropriate.

Continuous monitoring

In the range of high to very high speeds, abrupt failure must be included in the risk assessment, which means that continuous monitoring is the only method that should be used in order to limit damage.

One-off monitoring

One-off monitoring is only used for quality assurance in the case of newly manufactured or repaired spindles.
For example, measurement of run-down time or natural frequency measurement can be considered here. These methods can be used for the rapid and reliable detection of preload errors.

Temperature measurement and the measurement of vibration velocities and accelerations are also methods commonly used for quality assurance. As is the case with measurement of run-down time, however, these can only be used as comparative methods.

Temperature monitoring

In many cases, temperature is highly significant as an indicator of the operating behaviour of a bearing. In the case of bearings with grease lubrication, it can generally be used to detect damage or forthcoming failure in good time.

Where changes in preload or malfunction of non-locating bearings occur, there are relatively stable specimens of typical temperature curves.

The temperature is generally measured on the stationary ring, which is normally the outer ring. Assessment is generally based on the change in temperature over time.

In order to achieve relialbe temperature measurement, the following rules must be observed:

- measurement as close as possible to the bearing
- measurement as continuously as possible
- bearing deformation by measurement sensors should be prevented.

A bearing will normally show a stable temperature behaviour. Towards the end of the grease operating life, however, the temperature will fluctuate. Intervention is necessary at the latest when a progressive pattern becomes apparent.

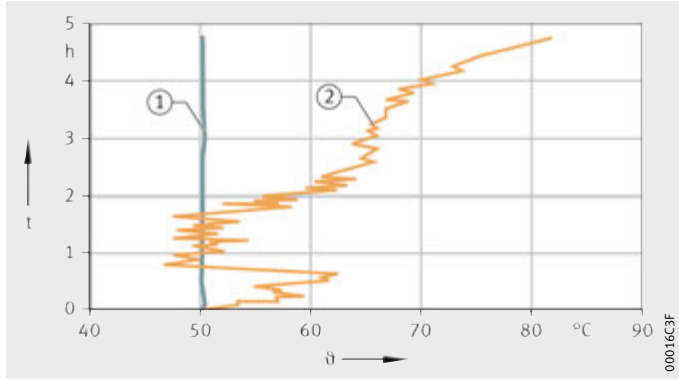

t = time
ϑ = temperature
① Normal
② End of grease operating life

Figure 1
Bearing temperature behaviour

Fitting

Handling

FAG super precision bearings are manufactured in extremely clean conditions, closely inspected and protected by high quality packaging. In order to maintain the full performance capacity of the bearings, they must be handled with great care during mounting. This can best be achieved by the use of a separate, clean room for mounting purposes.

Provision of parts

Only approved parts should be used for mounting.
Depending on the part, approval comprises dimensional inspection, optical inspection or even prebalancing.

Allocation of parts

Fits have a major influence on the function of a bearing arrangement. It is advisable in certain cases to allocate bearings to the spindle or housing diameter. Spindle bearings are subdivided by bore and outside diameter tolerance into groups whose mean deviation is indicated on the packaging and the bearing. The width of a spindle bearing is also marked on the bearing as a deviation from the nominal dimension.

Mounting Guidelines

The following guidelines must be observed in all cases:

- The mounting area must be kept clean and free from dust.
- Protect bearings from dust, contaminants and moisture. Contaminants have a detrimental influence on the running, running noise and operating life of rolling bearings.
- Before starting work on mounting, familiarise yourself with the design by means of the final assembly drawing.
- Before fitting, check whether the bearing presented for mounting corresponds to the data in the drawing.
- Check the housing bore and shaft seat for dimensional and geometrical accuracy and cleanliness.
- Do not cool the bearings excessively. Moisture due to condensation can lead to corrosion in the bearings and bearing seats.
- Bearings with grease lubrication must be greased before mounting.
- When mounting bearings on the shaft, make sure that forces are never directed through the rolling elements.
- Parts that must be mounted with interference (press fit) should be heated (heating temperatures of +60 °C to +70 °C are normally adequate). The most suitable means of achieving this is an induction heating device, see section Induction heating devices, page 67.
- Observe the values for axial clamping by means of precision nuts.
- The covers used for clamping must be matched to the bearings.
- Check the correct functioning of the bearing arrangement.

Mounting record

In order to ensure quality, it is recommended that measurement values are recorded, such as:

- seat diameter, interference
- differences in intermediate ring dimensions
- equilibrium temperatures
- radial and axial runout.

The use of a checklist may be helpful here. The appendix to the catalogue includes a specimen and a template, which are also available to download from the Internet at www.fag.de.

Matching operations

In order to maintain optimum performance or achieve precise positioning of the spindle in relation to the housing, it is often necessary to carry out special matching operations on the components. This applies, for example, to the covers used to clamp the bearings. Before clamping, a gap should be present, *Figure 1*.

Matching of the intermediate rings may be advisable in the case of high speed spindles in order to compensate the influence of fit and ring expansion on the preload.

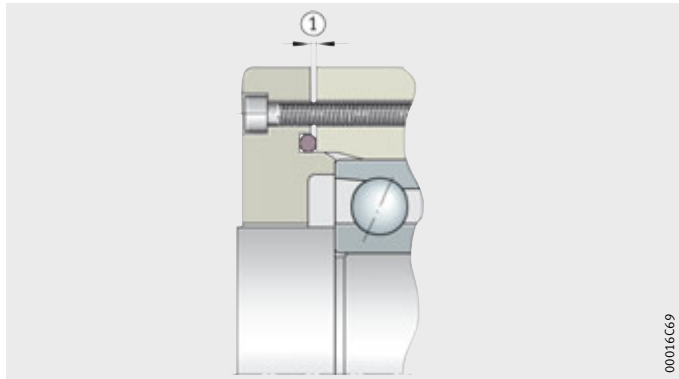

① Gap before tightening of the end cover fixing screws

Bearing bore d ≦ 100 mm: 0,01 to 0,03 mm

Bearing bore d > 100 mm: 0,02 to 0,04 mm

Figure 1
Matching end cover (recommendation)

Greasing

The preservative applied to FAG super precision bearings is such that it is not necessary to wash out the bearings before greasing. Suitable rolling bearing greases and grease quantities, see table, page 24, 25 and page 26. The setting of the grease quantity places high requirements on the greasing and measurement equipment used. The use of already greased and sealed bearings from the Schaeffler Group is recommended.

Greasing must be carried out under extremely clean conditions.

Test run and grease distribution

In bearings with grease lubrication, a grease distribution cycle must be carried out on the bearings before the test run on the spindle. Information on the grease distribution cycle, see *Figure 4*, page 29. Information on the grease distribution cycle is also available for download as an overview card at www.fag.de and can be obtained in laminated form from the Schaeffler Group.

Fitting

Axial clamping of inner rings

Values for axial clamping of inner rings on the shaft using a precision nut, see tables.

In order to eliminate or reduce settling effects, the nut should first be tightened to three times the stated torque, loosened and then finally tightened to the nominal torque.

Spindle bearings

For spindle bearings B, HS, HC and XC of diameter series 719, 70 and 72, the applicable values are those given in the tables on page 56 and page 57. The stated values correspond to an end face pressure of approx. 10 MPa.

Recommended clamping forces and nut tightening torques for spindle bearings

Bore/ bore code	Clamping force kN			Tightening torque Nm			Thread
	719	70	72	719	70	72	
6	–	1,49	–	–	1,52	–	M6×0,5
7	–	1,51	–	–	1,70	–	M7×0,5
8	–	1,53	–	–	1,89	–	M8×0,75
9	–	1,55	–	–	2,09	–	M9×0,75
00	0,66	1,58	1,36	0,96	2,30	1,99	M10×0,75
01	0,71	1,64	1,45	1,19	2,75	2,43	M12×1
02	0,79	1,75	1,60	1,60	3,52	3,23	M15×1
03	0,86	1,84	1,73	1,93	4,11	3,87	M17×1
04	0,99	1,99	1,96	2,54	5,13	5,04	M20×1
05	1,24	2,32	2,45	3,87	7,25	7,65	M25×1,5
06	1,55	2,73	3,07	5,96	10,0	11,3	M30×1,5
07	1,91	3,22	3,83	8,10	13,6	16,2	M35×1,5
08	2,34	3,79	4,74	11,2	18,2	22,7	M40×1,5
09	2,82	4,45	5,79	15,1	23,8	31,0	M45×1,5
10	3,36	5,19	7,00	19,8	30,6	41,3	M50×1,5
11	3,96	6,02	8,36	25,6	38,9	54,0	M55×2
12	4,62	6,94	9,88	32,4	48,6	69,3	M60×2
13	5,34	7,94	11,6	40,4	60,1	87,5	M65×2
14	6,12	9,04	13,4	49,7	73,4	109	M70×2
15	6,95	10,2	15,4	60,3	88,7	134	M75×2
16	7,85	11,5	17,6	72,4	106	163	M80×2
17	8,81	12,9	20,0	86,2	126	195	M85×2
18	9,82	14,3	22,5	102	148	233	M90×2

Recommended clamping forces and nut tightening torques for spindle bearings
continued

Bore/ bore code	Clamping force kN			Tightening torque Nm			Thread
	719	70	72	719	70	72	
19	10,9	15,9	25,2	119	173	275	M95×2
20	12,0	17,5	28,1	138	201	322	M100×2
21	13,2	19,3	31,2	159	231	374	M105×2
22	14,5	21,1	34,4	182	265	433	M110×2
24	17,2	25,0	41,5	235	342	567	M120×2
26	20,1	29,4	49,3	297	434	729	M130×2
28	23,3	34,1	57,9	370	541	920	M140×2
30	26,7	39,1	67,3	454	666	1144	M150×2
32	30,4	44,6	77,4	550	808	1402	M160×3
34	34,3	50,5	88,4	659	971	1699	M170×3
36	38,4	56,8	100,2	781	1154	2036	M180×3
38	42,8	63,4	112,7	918	1360	2417	M190×3
40	47,4	70,5	126,2	1070	1589	2845	M200×3
44	57,5	85,8	155,5	1423	2125	3853	Tr220×4
48	68,4	103	–	1847	2773	–	Tr240×4
52	80,4	–	–	2349	–	–	Tr260×4
56	93,4	–	–	2935	–	–	Tr280×4
60	107	–	–	3612	–	–	Tr300×4
64	122	–	–	4387	–	–	Tr320×5
68	138	–	–	5266	–	–	Tr340×5
72	155	–	–	6255	–	–	Tr360×5
84	212	–	–	9957	–	–	Tr420×5
92	255	–	–	13103	–	–	Tr460×5
500	302	–	–	16855	–	–	Tr500×5

Fitting

Axial angular contact ball bearings

For double direction axial angular contact ball bearings 2344 and 2347, the applicable values are those given in the table.

Recommended clamping forces for axial angular contact ball bearings

Bore mm	Bore code	Clamping force kN		Tightening torque Nm		Thread
		over	incl.	over	incl.	
25	05	1,2	2,5	3,8	7,8	M25×1,5
30	06	1,4	2,8	5,2	10,3	M30×1,5
35	07	1,7	3,1	7,2	13,1	M35×1,5
40	08	2,4	3,8	11,3	18,2	M40×1,5
45	09	2,3	3,7	12,3	19,8	M45×1,5
50	10	2,6	4,0	15,3	23,6	M50×1,5
55	11	3,0	4,3	19,4	27,8	M55×2
60	12	3,3	4,7	23,1	32,9	M60×2
65	13	3,7	5,1	28,0	38,6	M65×2
70	14	4,1	5,4	33,3	43,8	M70×2
75	15	4,4	5,8	38,2	50,3	M75×2
80	16	4,8	6,2	44,3	57,2	M80×2
85	17	5,3	6,6	51,9	64,6	M85×2
90	18	5,7	7,1	58,9	73,4	M90×2
95	19	6,1	7,5	66,5	81,7	M95×2
100	20	6,5	7,9	74,4	90,5	M100×2
105	21	7,0	8,4	84,0	101	M105×2
110	22	7,4	8,8	92,9	111	M110×2
120	24	8,4	9,8	115	134	M120×2
130	26	9,3	10,8	137	160	M130×2
140	28	10,3	11,8	164	188	M140×2
150	30	11,3	12,8	192	218	M150×2
160	32	12,4	13,8	225	250	M160×3
170	34	13,4	14,9	258	286	M170×3
180	36	14,5	16,0	295	325	M180×3
190	38	15,7	17,2	337	369	M190×3
200	40	16,8	18,3	379	413	M200×3
220	44	19,2	20,7	476	513	Tr220×4
240	48	21,6	23,3	583	629	Tr240×4
260	52	24,2	25,8	707	754	Tr260×4
280	56	26,8	28,4	842	893	Tr280×4
300	60	29,5	31,1	993	1047	Tr300×4
320	64	32,2	33,9	1155	1216	Tr320×5
340	68	35,0	36,8	1333	1402	Tr340×5
360	72	37,9	39,7	1528	1600	Tr360×5
380	76	40,9	42,7	1739	1816	Tr380×5
400	80	32,9	45,8	1472	2050	Tr400×5

Recommendations for shaft nuts

Spindle bearing sets are generally clamped on the shaft using shaft nuts. Nuts with axial bores are to be used in preference over locknuts for tightening on the shaft, since they minimise the air turbulence that occurs at high speeds.

The contact faces of the nuts should be ground in a single clamping operation together with the thread. The recommended maximum axial runout tolerance is 2 µm.

In order to prevent impairment of the runout during the clamping operation, the clamping inserts should be ground together with the thread and the axial face.

Clearance adjustment of cylindrical roller bearings

Cylindrical roller bearings with a tapered bore are mounted with clearance, clearance-free or with preload.

Mounting procedure for cylindrical roller bearings

An example is given below of the mounting procedure for cylindrical roller bearings with a tapered bore and a separable outer ring, N10 and NN30, and the enveloping circle gauge MGA 31.
The FAG gauge can be used to precisely set the radial internal clearance or preload of cylindrical roller bearings.

- Measure the raceway diameter of the mounted outer ring using a conventional internal gauge, *Figure 2*.

Figure 2
Measuring the raceway diameter of the outer ring

- Transfer this dimension to the two hardened and precision ground measuring surfaces of the enveloping circle gauge, *Figure 3*.

Figure 3
Transferring the raceway diameter to the enveloping circle gauge

- Then position the gauge on the inner ring and roller and cage assembly premounted on the tapered shaft, *Figure 4*.

Figure 4
Positioning the enveloping circle gauge

- Drive up the bearing axially until the precision indicator of the enveloping circle gauge shows the required radial internal clearance or preload.
- Then determine the distance between the bearing inner ring and the shaft shoulder using gauge blocks at four measurement points offset by 90°, *Figure 5*.
- After dismounting the bearing inner ring, grind the width of a gauge ring to match the determined distance and slide this over cylindrical section of the shaft.
- Finally, mount the bearing inner ring again and secure using a nut.

Figure 5
Measuring the distance to the shaft shoulder

Setting the clearance without a gauge

If an enveloping circle gauge is not available, the clearance can be set to a fairly precise value by measuring the axial drive-up distance of the inner ring on the tapered shaft seat, taper 1:12.

This drive-up distance is approx. 13 to 19 times (factor F, see table, page 62) larger than the radial expansion induced in this way. Surface burnishing and the elastic expansion of the inner ring and the contraction of the shaft are contributory factors here.

Drive-up distance A:

$$A = F \cdot \Delta G$$

A — mm
Drive-up distance
F — –
Factor, see table, page 62
ΔG — µm
Change in radial clearance.

Hollow shaft ratio and drive-up factor

Hollow shaft ratio d_B/d' [1]	Drive-up factor F
0 to 0,2	13
0,2 to 0,3	14
0,3 to 0,4	15
0,4 to 0,5	16
0,5 to 0,6	17
0,6 to 0,8	18
0,8 to 0,9	19

[1] d_B = bore of hollow shaft
d' = tapered seat diameter, measured at the centre of the taper.

Example

The cylindrical roller bearing is to be clearance-free after mounting.

Procedure

- Insert the outer ring in the housing bore.
- Mount the inner ring with the spindle in the housing, rotating the spindle back and forth in order to avoid scraping marks.
- Slide the inner ring onto the taper until the radial clearance reaches a value, for example, of 20 µm, rotating the spindle back and forth.

The measurement itself is carried out through radial displacement of the inner ring relative to the outer ring, for example by raising the spindle, while the dial gauge should be positioned as close as possible to the bearing.

Scraping marks can be avoided in the mounting of cylindrical roller bearings if the inner ring is not tilted relative to the outer ring and the spindle is rotated back and forth while it is being slid into place.

Mounting can be made easier by heating of the housing and outer ring.

- Determine the distance between the inner ring and the locating shoulder, for example by means of gauge blocks at four measurement points offset by 90°.
- Grind the gauge ring to width and insert in place.
- Mount the bearing and check for freedom from clearance.

The mounting procedure as described ensures that, after mounting, the bearing has the required radial internal clearance and the position of the bearing inner ring on the shaft is not altered by vibrations during operation.

Calculation of the drive-up distance A

Drive-up distance A = factor F · change in radial clearance ΔG

Given data

Hollow shaft ratio d_B/d' = 0,55
Drive-up factor F, see table = 17
Change in radial clearance ΔG = 20 µm

Calculation

Drive-up distance A = 17 · 20 µm = 340 µm = 0,34 mm

Industrial mounting service

The Schaeffler Group offers high quality products, services and training on all types of bearing arrangements.

The Industrial mounting service includes:

- mounting and dismantling of rolling bearings of all types
- approval inspection of adjacent parts (shafts and housings)
- maintenance and inspection of bearing arrangements
- defect analysis on bearing arrangements not running satisfactorily
- advice on rationalisation of mounting operations
- design and manufacture of special tools.

Advantages

The use of these services offers many advantages:

- increases in the bearing operating life
- considerable cost reductions
- prevention of unplanned downtime
- increased plant availability.

The Schaeffler Group also provides a wide range of tools and gauges for the mounting of spindle bearings.

Devices for the mounting of super precision bearings

Gauges and heating devices for the mounting of spindle bearings can be obtained via the Schaeffler Group. In some cases, these are also provided on a rental basis.

FAG enveloping circle gauge MGI 21

The enveloping circle gauge is used to set the radial internal clearance of cylindrical roller bearings with a separable inner ring. It is suitable for cylindrical roller bearings NU4920-K to NNU4948-K and NNU4920 to NNU4948. Bearings with a bore diameter from 100 to 240 mm have separable inner rings.

In the FAG enveloping circle gauge MGI 21, the internal enveloping circle of the roller and cage assembly is measured by two hardened and precision ground surfaces, one of which is movable.

After mounting of the outer ring, the gauge is set to the internal enveloping circle of the roller and cage assembly. This dimension is measured using a snap gauge, for example the SNAP-GAUGE. It is then possible to set the inner ring to the diameter that gives the required radial internal clearance.

Bearings with a tapered bore are slid onto the tapered seat of the shaft. For bearings with a cylindrical bore, preground inner rings are used (suffix F12) and finish ground to the required raceway diameter.

Ordering example for NNU4920: **MGI21-4920**

FAG enveloping circle gauge MGI 21

Figure 6
Gauge for cylindrical roller bearings with separable inner ring

FAG enveloping circle gauge MGA 31

The MGA 31 is used to set the radial internal clearance of cylindrical roller bearings with a tapered bore and separable outer ring. It is suitable for cylindrical roller bearings NN3006-K to NN3048-K and N1006-K to N1048-K. The gauge is used to precisely set the radial internal clearance or preload of cylindrical roller bearings.

The raceway diameter of the mounted outer ring is measured using a conventional internal gauge. This dimension is transferred to the two hardened and precision ground measuring surfaces of the enveloping circle gauge. The tapered shaft with the premounted inner ring and roller and cage assembly can then be inserted in the gauge. The shaft is moved axially by the hydraulic method until the precision indicator of the enveloping circle gauge shows the required radial internal clearance or preload.

Ordering example for NN3006-K: **MGA31-3006**

FAG enveloping circle gauge MGA 31

Figure 7
Gauge for cylindrical roller bearings with separable outer ring

FAG snap gauge SNAP-GAUGE

This gauge is used for inspecting the diameter of cylindrical shafts and workpieces of all types directly on the machine tool and for setting of the enveloping circle gauge MGI 21.

The actual dimension of the workpiece can be determined precisely. The snap gauge functions as a comparator gauge. Its setting is checked using master shims that can be obtained for each diameter.

Ordering example for shaft diameter 120 mm:
SNAP-GAUGE-100/150 (snap gauge)
SNAP-GAUGE.MASTER120 (master shim)

Ordering designation for SNAP-GAUGE

Ordering designation	Measurement range mm
SNAP-GAUGE-30/60	30 – 60
SNAP-GAUGE-60/100	60 – 100
SNAP-GAUGE-100/150	100 – 150

FAG snap gauge SNAP-GAUGE

Figure 8
Snap gauge

FAG taper gauge MGK 132

The FAG taper gauge MGK 132 is recommended for measuring outer tapers with a taper angle from 0° to 6° and taper diameters from 90 mm to 510 mm.

With this gauge, the reproducibility of measurement results is within 1 μm. The MGK 132 rests on the workpiece with four hardened, ground and lapped ledges. The ledges form an angle of 90°.
A stop on the front or rear precisely defines the position of the gauge on the taper. Between the support ledges, the measurement slide runs on preloaded roller bearings. A dial gauge fixed in the housing acts against the measurement slide and indicates the deviation of the taper diameter from the nominal value. The gauge is set using a reference taper, which is available by agreement.

FAG taper gauge MGK 132

Figure 9
Taper gauge

FAG taper gauge MGK 133

The taper gauge MGK 133 is suitable for outer tapers of 1:12 and 1:30 and taper diameters from 27 mm to 205 mm.

It rests on the taper with four hardened and polished support pins. The position of the gauge on the taper is defined by these pins and one stop. The stop can be attached to either the front or back of the gauge. The gauge contains two movable measuring brackets, one of which is in contact with the smaller taper diameter while the other, at a fixed distance, is in contact with the larger taper diameter. The deviation of the taper diameter from the nominal value is displayed in both measurement planes by a precision indicator.

The reproducibility of the measurement results is less than 1 µm. The gauge is set using a reference taper, which is available by agreement.

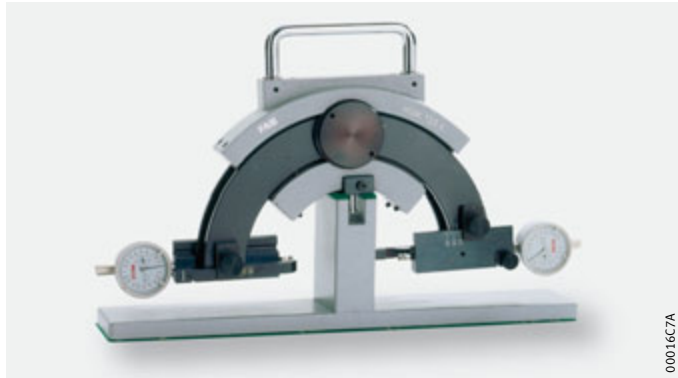

FAG taper gauge MGK 133

Figure 10
Taper gauge

Induction heating devices

Many rolling bearings and other rotationally symmetrical parts made from steel have tight fits on the shaft. This applies in particular to high speed spindle bearings, since very high interference values must be selected here in order to prevent the inner rings lifting off under centrifugal force. Rapid and clean induction heating is superior to the conventional methods. It is therefore particularly suitable for batch mounting. The induction heating devices HEATER10 to 150 are suitable for workpieces up to 150 kg and can be used in either a mobile or stationary capacity.

Detailed information, including information on larger designs, is given in brochure TPI WL 80-54.

Induction heating devices and their characteristics are shown in the tables on page 67 and page 68.

Characteristics of heating devices

Heating devices	HEATER10	HEATER20
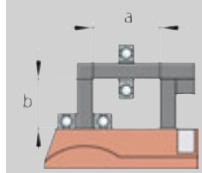		
Power consumption max.[1]	2,3 kVA	3,6 kVA
Voltage	230 V	230 V
Frequency[2]	50 Hz	50 Hz
Current	10 A	16 A
Mass	7 kg	17 kg
Length	230 mm	345 mm
Width	200 mm	200 mm
Height	240 mm	240 mm
Dimension a	65 mm	120 mm
Dimension b	95 mm	100 mm
Ledges (incl.) for workpieces with bore min.	20 mm	20 mm
	45 mm	35 mm
	65 mm	60 mm
	Stepped stand	
Ledges (accessories) for workpieces with bore min.	10 mm	10 mm
	15 mm	15 mm
		45 mm

[1] If lower voltage is used, the power will be reduced.

[2] Heating devices with other rated voltages and frequencies and higher power ratings are available on request.

Characteristics of heating devices
continued

Heating devices	HEATER35	HEATER150
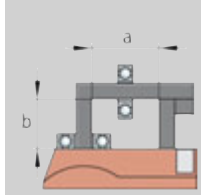		
Power consumption max.[1]	3,6 kVA	12,8 kVA
Voltage	230 V	400 V
Frequency[2]	50 Hz	50 Hz
Current	16 A	32 A
Mass	31 kg	51 kg
Length	420 mm	505 mm
Width	260 mm	260 mm
Height	365 mm	440 mm
Dimension a	180 mm	210 mm
Dimension b	160 mm	210 mm
Ledges (incl.) for workpieces with bore min.	70 mm	100 mm
Ledges (accessories) for workpieces with bore min.	15 mm	20 mm
	20 mm	30 mm
	35 mm	45 mm
	45 mm	60 mm
	60 mm	70 mm
		85 mm

1) If lower voltage is used, the power will be reduced.

2) Heating devices with other rated voltages and frequencies and higher power ratings are available on request.

Equipment rental

Customers who require special mounting and measuring equipment only infrequently, for example in order to carry out repairs, can rent these from the Schaeffler Group on a weekly basis for a fee.
Where mounting of spindle bearings is carried out only rarely, rental of taper and enveloping circle gauges and of heating devices may be an economical alternative to the purchase of the necessary equipment.

Training

In relation to the maintenance of machine tool main spindles, the Schaeffler Group regularly offers a one-day training course on mounting, especially for supervisors and fitters at machine tool operators and manufacturers.

The content of this traing course covers utilisation of the full performance capacity of FAG super precision bearings, reduction of costs through the use of modern bearing arrangement concepts and the mounting and monitoring of FAG super precision bearings.
The training course covers not only new spindle designs but also options for achieving improvements in existing spindles.

The spindle bearing training course is divided into a theoretical section and a practical section.

Theoretical principles

The following theoretical principles are covered:

- types, designs and performance characteristics of FAG super precision bearings
- tolerances for the adjacent parts and their influence on bearing performance
- lubrication of rolling bearings and rolling bearing failures
- monitoring of bearings in operation
- failure analysis of FAG super precision bearings.

Practical handling

The practical section of the training course covers the following aspects:

- mounting of spindle bearings
- mounting of cylindrical roller bearings with a tapered shaft seat
- use of induction heating devices
- use of special gauges such as enveloping circle gauges and taper gauges.

Training courses can also be held on site at the customer's premises upon request.

Other products and services

The catalogue WL 80 250/4 contains a complete overview of the portfolio offered in the field of industrial services.
The catalogue and further information on all the services described here can be obtained from:

Schaeffler Group
FAG Industrial Services GmbH
Tel. +49 2407 9149-66
Fax +49 2407 9149-59

FAG

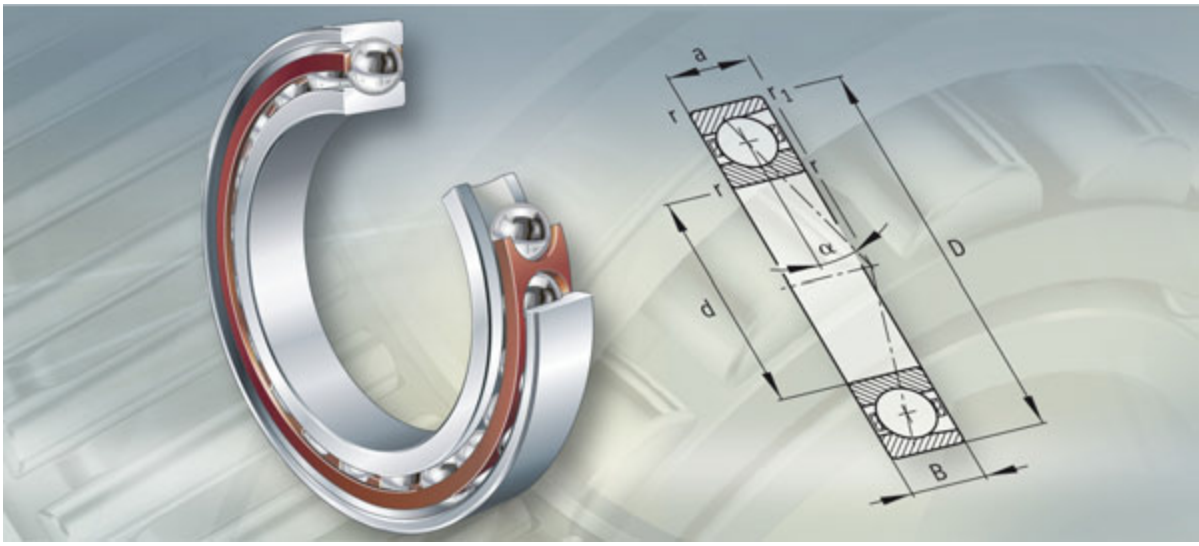

Spindle bearings

Single row
For main spindles in machine tools

Spindle bearings

		Page
Product overview	Spindle bearings	72
Features	Extensive range of product variants	73
	Universal bearings	74
	Universal bearing sets	75
	Load carrying capacity and contact angle	76
	Bearing types and product characteristics	77
	Hybrid bearings	78
	X-life ultra bearings	79
	Open and sealed spindle bearings	80
	Direct Lube bearings	81
	Operating temperature	81
	Cage	81
	Bearing designations	82
	Marking of bearings	83
Design and safety guidelines	Load carrying capacity and operating life	84
	Equivalent static bearing load	84
	Static load safety factor	85
	Distribution of load over several bearings	85
	Speeds	86
	Rigidity	87
	Design of bearing arrangements	88
Accuracy	Tolerances	92
Dimension tables	Spindle bearings With large or small balls, steel or ceramic balls, steel or Cronidur rings, open or sealed	96

Universal bearings

With small or large balls

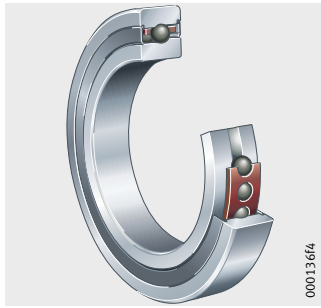

Steel or ceramic balls

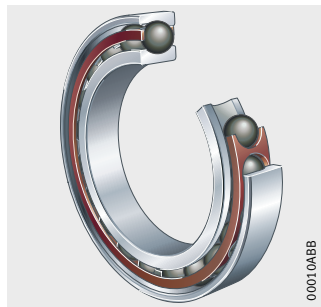

Bearing rings
Standard rolling bearing steel or Cronidur 30

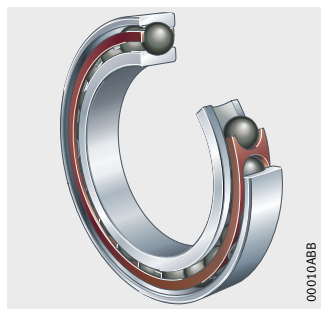

Open or sealed

Direct Lube bearings
For pneumatic oil lubrication

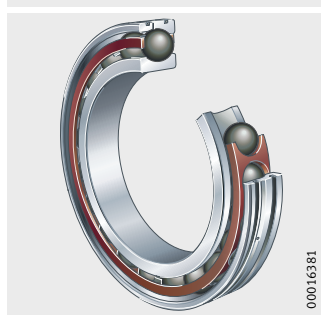

Spindle bearings

Features

FAG spindle bearings are super precision single row angular contact ball bearings with solid outer and inner rings, ball and cage assemblies and solid window cages, *Figure 1*.
The dimensions are standardised.

Due to their very narrow tolerances, the spindle bearings are particularly suitable for applications involving the highest requirements for guidance accuracy, such as bearing arrangements for main spindles in machine tools.

Extensive range of product variants

The bearings are available in all the designs that are relevant to bearing arrangements for main spindles in machine tools. This extensive range of variants is presented in the dimension tables. In addition to the products listed therein, further designs are available by agreement.

This extensive product range gives the designer all possible scope for developing technically innovative, operationally secure and economical bearing arrangements. This results in significant performance improvements and cost savings in machine tools.

In new designs, this can allow the machine manufacturer to achieve a unique position in the market. In existing designs too, refitting with FAG spindle bearings can still give further increases in the performance and profitability of machines.

Figure 1
FAG spindle bearings

Universal bearings

FAG spindle bearings are always designed as universal bearings, which means that:

- the bearing rings are of the same width
- the projection on both sides of the bearing is of the same size, *Figure 2*.

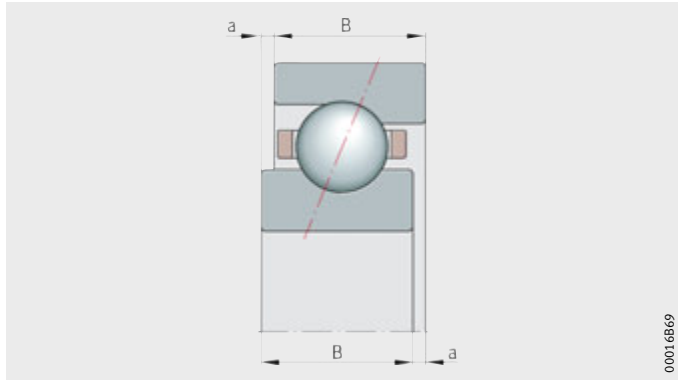

B = bearing width
a = projection

Figure 2
Universal preload system

Advantages

Single bearings can be fitted in any arrangement required, such as a rigid X, O or tandem arrangement or with spring preloading, or can be combined in different sets. Universal bearing sets, see page 75.

In order to ensure uniform load-bearing in the tandem arrangement, the bearings used should have the same deviation in the inner ring bore and the outside diameter.

In an O arrangement and with rigid adjustment, sorting through checking of the interference between the shaft and bearing bore or the housing and bearing outside diameter can help to control the variations in the actual preload after mounting.

Arrangement of the bearings can be carried out in accordance with the arrow on the cylindrical surface of the outer ring, *Figure 3*, page 75. This provides logistical advantages for the customer, especially in spare parts procurement and stockholding of bearings.

Universal bearing sets

Bearing sets comprise universal bearings with the same deviation in the inner ring bore and the same deviation in the outside diameter.

The deviation stands, starting from the actual value code, for the inner ring bore or the outside diameter on the bearing ring.

The sets are of identical technical quality to single bearings with the same deviation in the inner ring bore and the outside diameter.

Marking of bearing sets

The first letter indicates the number of bearings in the set:

- D = 2 bearings (duplex)
- T = 3 bearings (triplex)
- Q = 4 bearings (quadruplex).

A “U” stands for “Universal”, for example in DU. After these letters, the preload class is then indicated, for example “L” for light preload, in this case DUL. For bearing designations, see also page 82.

Universal bearing sets can be fitted in any arrangement required. Possible bearing arrangements are shown in *Figure 3*.

F_r = radial load
F_a = axial load

① DU becomes DB, 2 bearing set in an O arrangement
② DU becomes DF, 2 bearing set in an X arrangement
③ DU becomes DT, 2 bearing set in a tandem arrangement

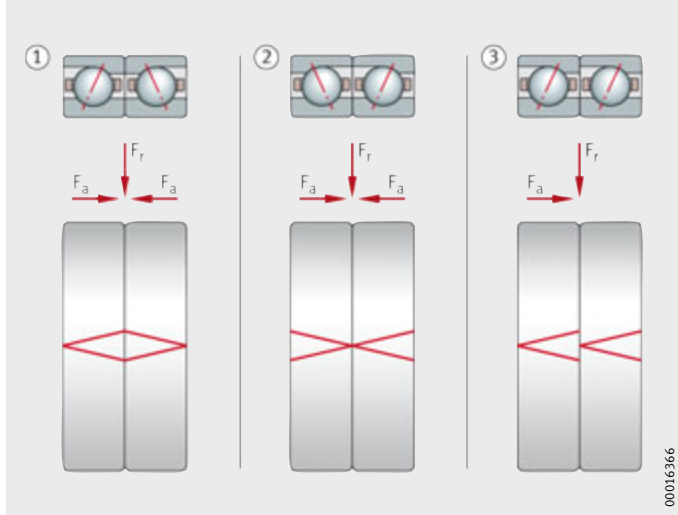

Figure 3
Bearing arrangements for a DU set

Ready-to-fit bearing sets

Ready-to-fit bearing sets are also available by agreement. In this case, the fitting sequence is indicated by a large arrow.

Ready-to-fit bearing sets correspond in technical terms to the universal bearing sets. However, the latter offer significant logistical advantages over the ready-to-fit sets, especially in spare parts procurement and stockholding.

Load carrying capacity and contact angle

Universal bearings can support axial loads in one direction as well as radial loads.

If bearings are used in an O or X arrangement, they can support axial forces in both directions as well as moments, *Figure 3*, page 75.

Bearings in a tandem arrangement can support axial loads in one direction only, *Figure 3*, page 75.

Contact angle

The contact angle indicates the axial load carrying capacity of the bearing. As the contact angle increases, so does the axial load carrying capacity.

FAG spindle bearings are available with the contact angle:

- α = 15° (suffix C)
- α = 20° (suffix D)
- α = 25° (suffix E).

The position of the contact angle is marked on the cylindrical surface of the outer ring, *Figure 4*. The open side of the symbol indicates the side of the outer ring capable of supporting axial load (the large shoulder).

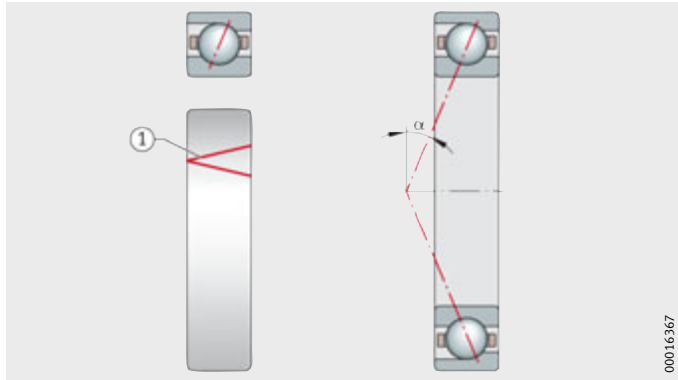

α = contact angle
① Marking

Figure 4
Marking of the contact angle on the single bearing

Bearing types and product characteristics

Universal spindle bearings are available in the designs:
B, RS and H bearings.

B spindle bearings

- Classical spindle bearing
- With large balls
- Contact angle 15° and 25°
- High load carrying capacity and high rigidity
- For moderate speed level.

RS spindle bearings

- New design
- With large balls
- Contact angle 20°
- Suitable for high to very high speeds due to bearing internal design with optimised friction
- Kinematic insensitivity to tilting
- High load carrying capacity especially under combined axial and radial load
- Particularly suitable for high speed milling spindles and motor spindles.

H spindle bearings (high speed design)

- With small balls
- Contact angle 15° and 25°
- Suitable for very high speeds due to internal design with optimised friction and very low centrifugal forces on the rolling elements
- High rigidity at high speeds
- Particularly suitable for very high speed spindles and grinding spindles.

Design of bearing types

The bearings are available with steel and ceramic balls and in an open, sealed and DLR design.

B and H spindle bearings are also available with Cronidur rings.

RS spindle bearings can be supplied by agreement with Cronidur rings.

For bearing selection according to ball size and bearing arrangement, see table and section Technical principles.

Possible bearing designs

Ball size[1) 2)]	Balls		Bearing rings		Sealing	
	Steel	Ceramic	Standard rolling bearing steel	Cronidur 30	Open	Gap seals on both sides
With small balls	■	■	■	■	■	■
With large balls	■	■	■	■	■	■

1) Also available in x-life ultra design:
ceramic balls, bearing rings made from Cronidur 30.

2) The design with steel balls and Cronidur bearing rings is not available.

Hybrid bearings

Ceramic has become firmly established as an important group of materials for rolling bearing components. Since this material has a range of excellent characteristics, it is used with increasing frequency in combination with coatings, special materials or very specific application requirements.

Steel/ceramic as a material combination

Hybrid spindle bearings have bearing rings made from steel and, in contrast to standard spindle bearings, rolling elements made from ceramic (silicon nitride Si_3N_4), *Figure 5*.

While these bearings were originally envisaged only for the high speed range, they are now used at significantly lower speeds too. The reasons for this include their robust design and reliability as well as the significantly longer grease operating life.

① Ceramic rolling elements
② Direct Lube design with circumferential annular grooves

Figure 5
Hybrid spindle bearings

Advantages

Rolling bearings made from steel tend to undergo adhesive wear at the rolling contact in conditions of poor lubrication. Metallic contact leads, particularly under high contact pressure at the rolling contact, to cold bonding at the surface, resulting in wear. Due to the favourable tribological characteristics of the steel/ceramic material combination, the wear resistance is significantly higher in this case.

In comparison with a steel/steel combination, the steel/ceramic combination places significantly less strain on the lubricant, since the contact ellipses are smaller in hybrid bearings. As a result, there is less shearing of the lubricant. At the same time, there is less thermal strain in comparison with bearings made completely from steel.

Hybrid spindle bearings achieve very high speeds, have lower friction and heat generation, a longer operating life, place less strain on the lubricant and are insensitive to lubricant starvation.

Through the use of hybrid bearings, the operating limits of bearings with grease lubrication have been shifted to significantly higher speed ranges. This results in considerable savings on overall machine system costs.

X-life ultra bearings

X-life ultra bearings are suitable for very high speeds and have very high load carrying capacity. These hybrid bearings have balls made from ceramic (Si_3N_4) and bearing rings made from Cronidur 30, a highly nitrided, corrosion-resistant steel, *Figure 6*.

Advantages

Cronidur 30 has, in comparison with the normal rolling bearing steel 100Cr6, a significantly finer structure. As a result, less heat is generated in the bearing and the permissible contact pressure is higher.

Tests on the material fatigue life have given life values higher by a factor of ten.

In the mixed friction region Cronidur 30 has proved highly effective in comparison with the standard material 100Cr6.

It is also significantly superior to the conventional rolling bearing steels on the criteria of corrosion resistance and high temperature hardness.

The longer life of X-life ultra bearings compared to conventional bearings makes a considerable contribution to reducing system costs.

All types of spindle bearings are available as X-life ultra bearings.

Figure 6
X-life ultra spindle bearings

Open and sealed spindle bearings

Spindle bearings are super precision machine elements that react with high sensitivity to harmful influences from the environment (for example ingress of contamination and air streams).

Sealing

In sealed designs, the rolling element system is protected by gap seals on both sides of the bearings, *Figure 7*.

Due to their particular advantages, these non-contact seals have long been the state of the art for sealed main spindle bearings.

In the designs with small balls (HSS, HCS, XCS), sealed FAG spindle bearings have long since defined the technical standard. In order to make comprehensive use of the major advantages of sealing in specific applications, almost all series are now available with this successful sealing concept.

Suffixes

Sealed bearings with small balls have the letter S (Sealed) in the designation. Spindle bearings with large balls have the suffix 2RSD.

① Gap seals

Figure 7
Sealed spindle bearings

Lubrication

Since the grease operating life can generally be equated to the bearing operating life, machine life values are also directly influenced by the correct grease quantity and selection of the lubricant. Sealed bearings are therefore supplied already greased with the correct quantity of a high performance grease.

This high speed lubricant was specially developed for FAG spindle bearings, where it is used as the standard grease, and covers the wide range of application conditions of high speed spindle bearing arrangements. Furthermore, the increase in the use of sealed bearings reflects the change from oil lubrication to economical grease lubrication with ready-to-fit, maintenance-free bearings with lifetime lubrication.

When selecting a lubricant, the operating temperature of the lubricant must be taken into consideration.

Further information on lubrication, see section Technical principles.

Direct Lube bearings

These bearings are designed for extremely high speeds. They are used where pneumatic oil lubrication is necessary and a reliable supply of lubricant must be ensured. They are thus an ideal addition to the spindle bearing range, *Figure 8*.

Direct Lube bearings provide reliable feed of lubricant directly to the contact point. This is achieved by means of circumferential annular grooves and radial feed holes.

The bearing is sealed off from the spindle housing by means of integrated high precision O rings.

In addition, the adjacent construction can be simplified since the bearing design means that it no longer has to include certain expensive elements. This reduces both the design envelope and the costs.

① Circumferential annular grooves

Figure 8
Direct Lube bearings

Operating temperature

Spindle bearings are suitable for operating temperatures from –30 °C to +100 °C, restricted by the lubricant as well as the seal and cage material.

The FAG high performance grease for sealed spindle bearings is suitable up to a continuous temperature of +80 °C.

Cage

Spindle bearings have solid window cages made from laminated fabric (suffix T). The cage is guided on the outer ring.

Check the chemical resistance of the seal and cage material when using synthetic greases and lubricants with EP additives.

Additives in the oil can impair the operating life of the cages at high temperatures.

Bearing designations

The structure for spindle bearings is shown in *Figure 9*.

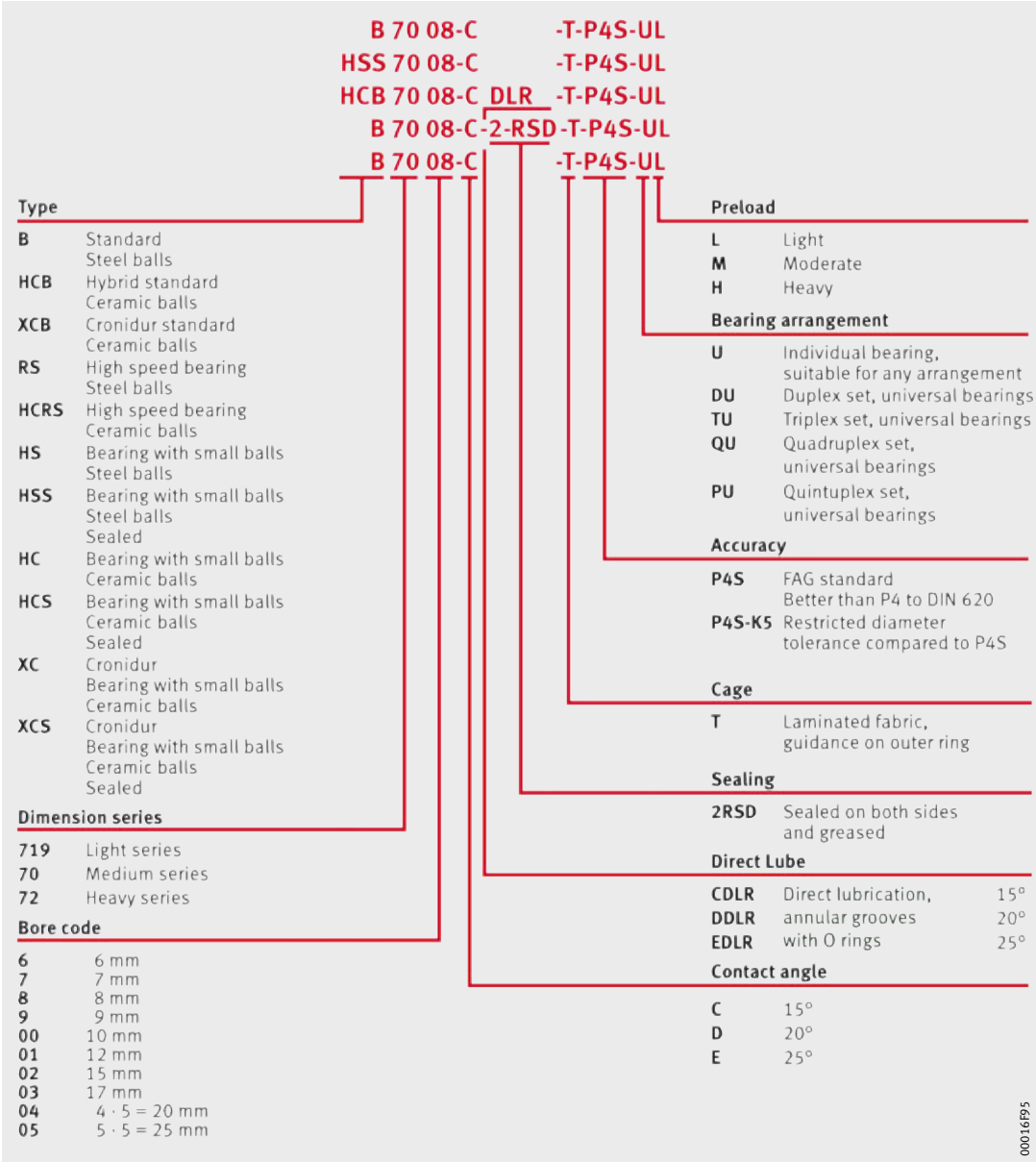

Figure 9
Bearing designations

Marking of bearings

FAG spindle bearings for machine tools have a uniform designation system.

In addition to the actual bearing designation, this also contains information on the:

- tolerance of the bore and outside diameter
- bearing width
- mounting position indicated by the marking on the cylindrical surface of the outer ring (indication of the contact angle), *Figure 4*, page 76.

Marking on the end faces of the bearing rings is shown in *Figure 10* and *Figure 11*.

① Symbol for contact angle
② Trademark
③ Short designation
④ Country of manufacture
⑤ Special material for outer ring
⑥ Internal code
⑦ Actual value code for the outside diameter and actual deviation from the nominal dimension for the bearing width
⑧ Actual value code for the bore
⑨ Special material for the inner ring
⑩ Symbol for the largest wall thickness of the inner ring

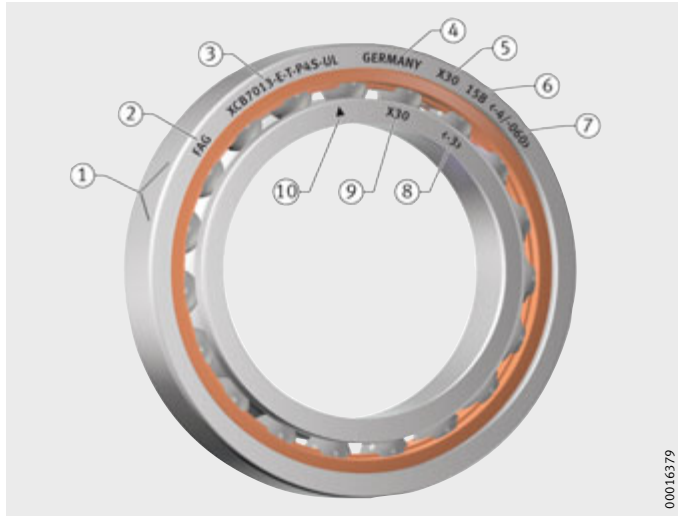

Figure 10
Marking of open spindle bearings

① Symbol for contact angle
② Trademark
③ Designation
④ Country of manufacture
⑤ Internal code
⑥ Actual value code for the outside diameter and actual deviation from the nominal dimension for the bearing width, actual value code for the bore
⑦ Symbol for the largest wall thickness of the inner ring

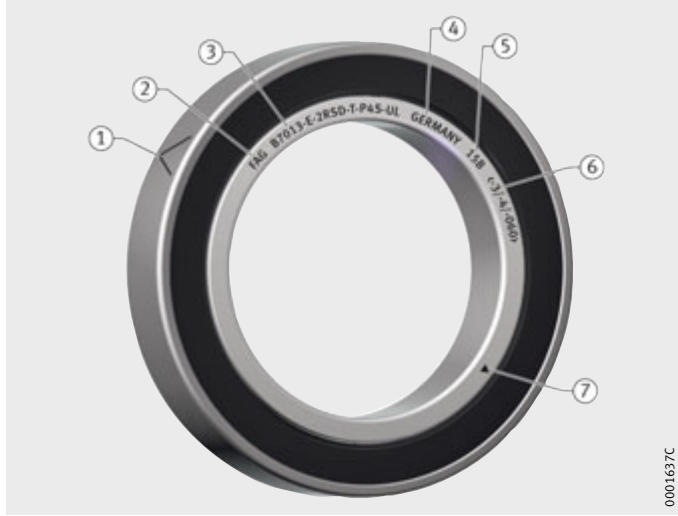

Figure 11
Marking of sealed spindle bearings

Design and safety guidelines

Load carrying capacity and operating life

Bearing arrangements with super precision spindle bearings are generally designed in accordance with the requirements for load carrying capacity, rigidity and accuracy.

In practice, failure due to fatigue is not significant for these bearings. Calculation of the rating life L_{10} in accordance with DIN ISO 281 in order to determine the operating life is therefore not appropriate.

Equivalent static bearing load

Universal bearings can support axial loads in one direction as well as radial loads.

For bearings under static loading, the following applies:

Bearings with contact angle 15°

Load ratio	Equivalent static load
$\frac{F_{0a}}{F_{0r}} \leq 1{,}09$	$P_0 = F_{0r}$
$\frac{F_{0a}}{F_{0r}} > 1{,}09$	$P_0 = 0{,}5 \cdot F_{0r} + 0{,}46 \cdot F_{0a}$

Bearings with contact angle 20°

Load ratio	Equivalent static load
$\frac{F_{0a}}{F_{0r}} \leq 1{,}2$	$P_0 = F_{0r}$
$\frac{F_{0a}}{F_{0r}} > 1{,}2$	$P_0 = 0{,}5 \cdot F_{0r} + 0{,}42 \cdot F_{0a}$

Bearings with contact angle 25°

Load ratio	Equivalent static load
$\frac{F_{0a}}{F_{0r}} \leq 1{,}3$	$P_0 = F_{0r}$
$\frac{F_{0a}}{F_{0r}} > 1{,}3$	$P_0 = 0{,}5 \cdot F_{0r} + 0{,}38 \cdot F_{0a}$

F_{0a} N
Axial static bearing load

F_{0r} N
Radial static bearing load

P_0 N
Equivalent static bearing load for combined load.

Static load safety factor

Whether the static load carrying capacity of a bearing is sufficient for a given static load, can be checked with the aid of the static load safety factor S_0. For calculation of the static load safety factor, see section Technical principles.

In order to utilise the high accuracy of the spindle bearings, a static load safety factor $S_0 > 3$ is necessary. For hybrid bearings, $S_0 \geqq 1$ is only possible with an extremely short-lived and concentrically acting axial load (tool ejection force).

Distribution of load over several bearings

Where there are several bearings at one bearing position, the external load is distributed over the single bearings, see table. The load carrying capacity of the most heavily loaded bearing must be checked.

This must be based on the radial and axial loads acting on the specific bearing position, which must be calculated from the external loads and the distances between the loading point and bearing positions.

Distribution of load

Arrangement	Proportion of load on most heavily loaded bearing	
	F_a %	F_r %
	100	60
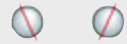	100	60
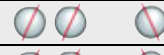	50	60
	50	60
	33	60
	33	60

Speeds

The achievable speeds are dependent on the overall energy balance in the system.

The decisive factors are:

- the number of bearings
- the arrangement of the bearings
- the internal load (preload class)
- the external load
- the lubrication
- the heat dissipation.

The limiting speeds in the dimension tables are based on elastically preloaded single bearings and are guide values that may deviate up or down depending on the operating conditions. However, they give an indication of the speed capacity under relatively low load and when using elastically preloaded single bearings with good heat dissipation.

The data for grease lubrication are valid when using the high speed grease in the correct quantity.

Reduction factors

The speed limits stated are reduced in the case of bearings fitted with rigid preload or high preload (in order to achieve better rigidity of the spindle) as well as in bearing pairs and bearing groups.
The speeds in the dimension tables must therefore be multiplied by reduction factors. The factors f_r to be used are shown in the table.

Speed reduction for spindle bearing sets

Bearing arrangement	Bearing preload		
	L	M	H
	Factor f_r		
Large bearing spacing			
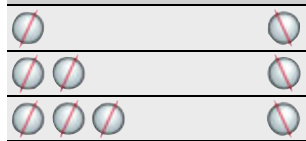	0,85	0,75	0,5
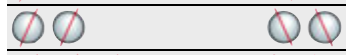	0,8	0,7	0,5
	0,75	0,65	0,45
Small bearing spacing			
	0,75	0,6	0,35
	0,65	0,5	0,3
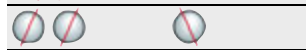	0,65	0,5	0,3
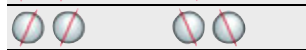	0,72	0,57	0,37
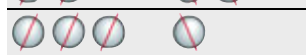	0,54	0,4	0,37

Rigidity

The axial and radial rigidity of a bearing set is dependent on the bearing arrangement and the preload.

Axial rigidity of a bearing set

The axial rigidity c_a and the lift-off force K_{aE} of a bearing set under a concentrically acting axial load is shown in the table.

Axial rigidity

Bearing arrangement	Suffix	Axial rigidity c_a [1] N/µm	Lift-off force K_{aE} N
	DB	c_a	$3 \cdot F_V$
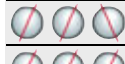	TBT	$1{,}64 \cdot c_a$	$6 \cdot F_V$
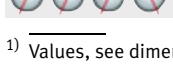	QBC	$2 \cdot c_a$	$6 \cdot F_V$
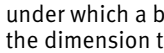	QBT	$2{,}24 \cdot c_a$	$9 \cdot F_V$
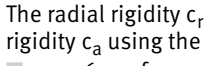	PBC	$2{,}64 \cdot c_a$	$9 \cdot F_V$

[1] Values, see dimension tables.

Radial rigidity of a bearing set

The deflection of a bearing set is almost linear up to the lift-off force under which a bearing becomes free of load. The values stated in the dimension tables for the axial rigidity c_a are valid for bearing pairs in an O or X arrangement.

The radial rigidity c_r can be calculated approximately from the axial rigidity c_a using the following factors:

- $c_r \approx 6 \cdot c_a$ for $\alpha = 15°$
- $c_r \approx 3{,}5 \cdot c_a$ for $\alpha = 20°$
- $c_r \approx 2 \cdot c_a$ for $\alpha = 25°$.

In sets with more than two bearings, there is an increase in the rigidity values and the lift-off force. The approximation values for the axial rigidity and lift-off force under a concentrically acting axial force are shown in the table Axial rigidity.

The radial rigidity c_r for sets under a radial force acting at the centre of the set is calculated approximately from the radial rigidity of the bearing pair according to the table.

Radial rigidity

Bearing arrangement	Suffix	Radial rigidity c_r N/µm
	DB	c_r
	TBT	$1{,}36 \cdot c_r$
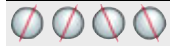	QBC	$2 \cdot c_r$

Design of bearing arrangements

In order to make comprehensive use of the performance capacity of spindle bearings, the adjacent construction must be of an appropriate design.

Machining tolerances of shaft and housing

Recommendations for the machining tolerances of the shaft and housing as parts adjacent to the bearing, see tables.

Machining tolerances of the shaft

Nominal shaft diameter d mm		Deviation for d µm		Cylindricity µm t_1	Flatness µm t_3	Axial runout µm t_4	Coaxiality µm t_5	Mean roughness µm R_a
over	incl.							
–	10	2	−2	0,6	0,6	1	2,5	0,2
10	18	2,5	−2,5	0,8	0,8	1,2	3	0,2
18	30	3	−3	1	1	1,5	4	0,2
30	50	3,5	−3,5	1	1	1,5	4	0,2
50	80	4	−4	1,2	1,2	2	5	0,4
80	120	5	−5	1,5	1,5	2,5	6	0,4
120	180	6	−6	2	2	3,5	8	0,4
180	250	7	−7	3	3	4,5	10	0,4
250	315	8	−8	4	4	6	12	0,8
315	400	9	−9	5	5	7	13	0,8
400	500	10	−10	6	6	8	15	0,8
500	630	11	−11	7	7	9	16	0,8
630	800	12	−12	8	8	10	18	0,8

Machining tolerances of the housing

Nominal housing bore diameter D mm		Deviation for D µm				Cylindricity µm t_1	Flatness µm t_3	Axial runout µm t_4	Coaxiality µm t_5	Mean roughness µm R_a
over	incl.	Locating bearing		Non-locating bearing						
10	18	+3	−2	+7	+2	1,2	1,2	2	3	0,4
18	30	+4	−2	+8	+2	1,5	1,5	2,5	4	0,4
30	50	+4	−3	+10	+3	1,5	1,5	2,5	4	0,4
50	80	+5	−3	+11	+3	2	2	3	5	0,4
80	120	+6	−4	+14	+4	2,5	2,5	4	6	0,8
120	180	+8	−4	+17	+5	3,5	3,5	5	8	0,8
180	250	+10	−4	+21	+7	4,5	4,5	7	10	0,8
250	315	+12	−4	+24	+8	6	6	8	12	1,6
315	400	+13	−5	+27	+9	7	7	9	13	1,6
400	500	+15	−5	+30	+10	8	8	10	15	1,6
500	630	+16	−6	+33	+11	9	9	11	16	1,6
630	800	+18	−6	+36	+12	10	10	12	18	1,6
800	1000	+21	−7	+42	+14	11	11	14	21	1,6

Fit as a function of speed

FAG spindle bearings are suitable for the highest speeds. When using grease lubrication, it is possible to achieve speed parameters $n \cdot d_m$ up to $2 \cdot 10^6$ mm/min, and in the case of oil lubrication even $3 \cdot 10^6$ mm/min and higher.

These speeds induce high centrifugal forces that act on the inner rings and cause their expansion. Such expansion of the ring leads to the inner ring lifting off the shaft and thus to clearance between the inner ring and shaft.

This may have the following consequences:

- fretting corrosion
- rotation of the ring on the shaft
- poor shaft guidance with an increased tendency towards vibration
- reduced bearing performance due to possible tilting.

Calculation of the interference

This can be prevented by correspondingly tight fits on the shaft. The necessary interference can be taken from the diagram or calculated using BEARINX®, *Figure 12*, page 90. The values calculated in this way will give a fit under which there will still be interference of 1 µm at the highest speed.

The value f_w can be taken from the following diagrams. For the bearing types B, HCB, XCB, RS and HCRS, see *Figure 13*, page 90. For the bearing types HS, HC and XC, see *Figure 14*, page 90.

High interference leads, particularly in the case of rigidly adjusted bearings, to an increase in preload. In turn, this leads to increased temperature in the bearing arrangement and to impaired speed capacity. The increase in preload must be compensated by means of appropriate measures.

At values $f_w \cdot n^2 > 1{,}2$ (red area), *Figure 12*, page 90, it is recommended that advice should be obtained from the Application Engineering facilities of the Schaeffler Group.

Example

If $f_w \cdot n^2 < 1{,}2$, the shaft dimension is calculated as follows:

Given data

- Spindle bearing
  – HCS71914E.T.P4S.UL
- Speed n
  – 16 000 min^{-1}
- Inner ring actual dimension
  (the deviation from the actual dimension is written on the bearing ring)
  – 70 mm – 3 µm = 69,997 mm
- Bore of hollow shaft
  – 35 mm (≙ 50% of diameter)
- Factor for determining the fit, as a function of the speed for bearing types HS, HC and XC, *Figure 12*, page 90
  – $f_W = 4{,}30 \cdot 10^{-9}$

Calculation

$n^2 \cdot f_W = 1{,}1$

With the value 1,1 and the curve ②, *Figure 12*, page 90, the necessary interference is calculated as 9 µm.

The actual dimension of the shaft must thus be 70,006 mm, in order that the inner ring is still firmly seated on the shaft at a speed of n = 16 000 min^{-1}.

ü = interference, as a function of speed
n = speed
f_W = factor for determining the fit
① Solid shaft
② Hollow shaft 50%
③ Hollow shaft 75%

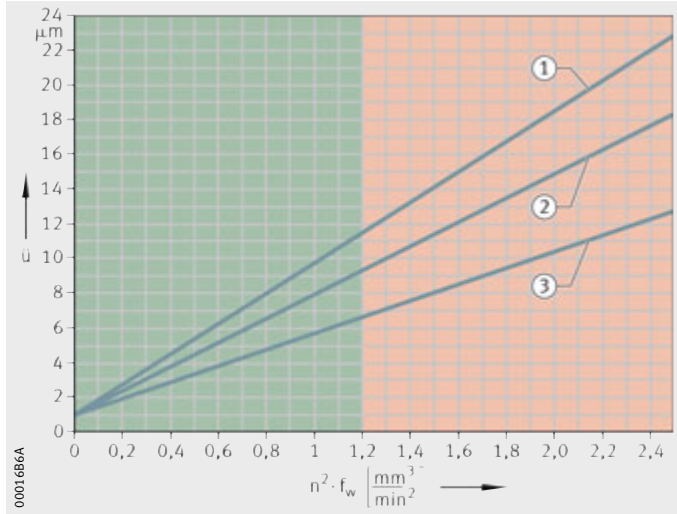

Figure 12
Calculation of the interference between the shaft and inner ring

f_W = factor for determining the fit between the inner ring and shaft, as a function of speed
d = bearing bore
① B70, HCB70, XCB70, RS70, HCRS70
② B719, HCB719, XCB719, RS719, HCRS719
③ B72, HCB72

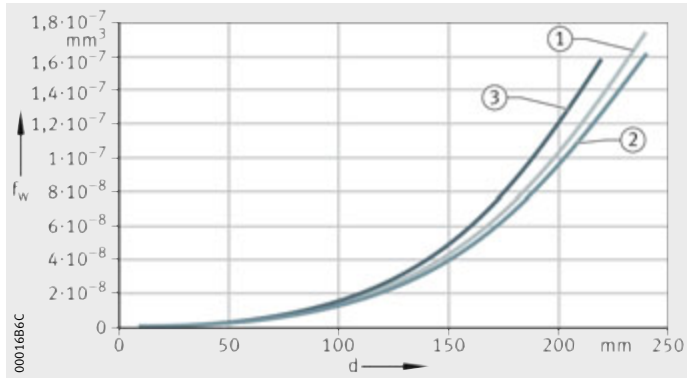

Figure 13
Factor f_W for B, HCB, XCB, RS, HCRS

f_W = factor for determining the fit between the inner ring and shaft, as a function of speed
d = bearing bore
① HC70, HS70, XC70
② HC719, HS719, XC719

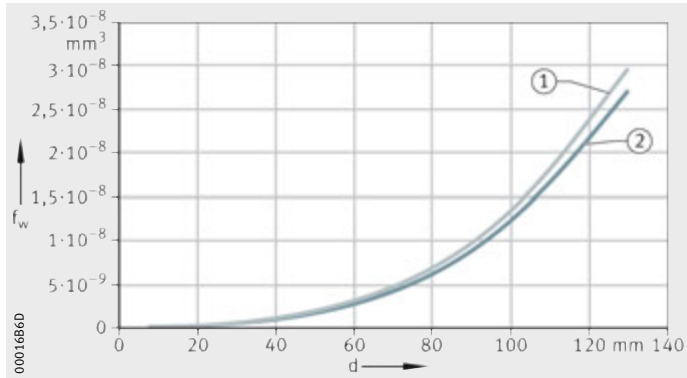

Figure 14
Factor f_W for HS, HC, XC

Machining tolerances of spacer sleeves

Recommendations for the machining tolerances of the inner and outer spacer sleeve, see tables.

Unless stated otherwise in the drawing, both spacer sleeves should be of the same length. The end faces of both sleeves should therefore be finish ground in a single clamping operation.

Machining tolerances of the inner spacer sleeve

Nominal sleeve bore diameter d_2 mm		Deviation for d_2 µm		Cylindricity µm	Axial runout µm	Parallelism µm	Radial runout µm	Mean roughness[1] µm
over	incl.			t_1	t_4	t_6	t_7	R_a
–	10	9	0	2,5	1	1	2,5	0,4
10	18	11	0	3	1,2	1,2	3	0,4
18	30	13	0	4	1,5	1,5	4	0,4
30	50	16	0	4	1,5	1,5	4	0,4
50	80	19	0	5	2	2	5	0,4
80	120	22	0	6	2,5	2,5	6	0,8
120	180	25	0	8	3,5	3,5	8	0,8
180	250	29	0	10	4,5	4,5	10	0,8
250	315	32	0	12	6	6	12	1,6
315	400	36	0	13	7	7	13	1,6
400	500	40	0	15	8	8	15	1,6
500	630	44	0	16	9	9	16	1,6
630	800	50	0	18	10	10	18	1,6

[1] Including end faces.

Machining tolerances of the outer spacer sleeve

Nominal sleeve outside diameter D_2 mm		Deviation for D_2 µm		Cylindricity µm	Axial runout µm	Parallelism µm	Mean roughness[1] µm
over	incl.			t_1	t_4	t_6	R_a
10	18	–6	–17	3	2	1,2	0,4
18	30	–7	–20	4	2,5	1,5	0,4
30	50	–9	–25	4	2,5	1,5	0,4
50	80	–10	–29	5	3	2	0,4
80	120	–12	–34	6	4	2,5	0,8
120	180	–14	–39	8	5	3,5	0,8
180	250	–15	–44	10	7	4,5	0,8
250	315	–17	–49	12	8	6	1,6
315	400	–18	–54	13	9	7	1,6
400	500	–20	–60	15	10	8	1,6
500	630	–22	–66	16	11	9	1,6
630	800	–24	–74	18	12	10	1,6
800	1000	–27	–83	21	14	11	1,6

[1] Including end faces.

Accuracy

The tolerances of super precision spindle bearings are standardised in accordance with DIN 620. Definitions for the dimensions and accuracies are given in DIN ISO 1132.

Tolerances

In order to ensure full use of the bearing performance capacity and a high machining accuracy, the dimensional and geometrical accuracy of FAG spindle bearings is produced within very narrow tolerance ranges. The bearing tolerances conform to P4, the running accuracy and parallelism conform to P2.

P4S is a Schaeffler standard that is better than P4 according to DIN 620.

The radial runout tolerance of the inner ring at P4S, P4, P5 is shown in *Figure 15*.

The tolerances of the inner and outer ring for tolerance class P4S are shown in the tables on pages 93 to 94.

Restricted diameter tolerance to P4S-K5

Spindle bearings are also available by agreement with a restricted diameter tolerance. The tolerance range is at the centre of the diameter tolerance, while the tolerance width is 1/3 of the diameter tolerance. The diameter tolerances stated are thus narrower than P2. Tolerances for K5, see tables, page 95.

Actual value codes and actual deviation

The actual value codes for the bore and the outside diameter as well as the actual deviation of the bearing width from the nominal dimension are stated on the end faces of the inner and outer rings, *Figure 10* and *Figure 11*, page 83.

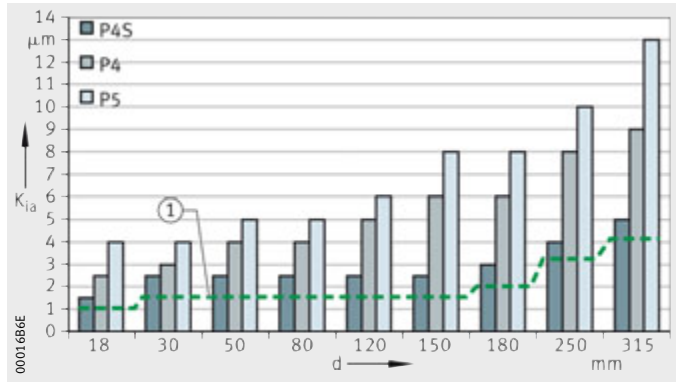

K_{ia} = radial runout
d = bore diameter
① ACTUAL

Figure 15
Radial runout tolerances of the inner ring with P4S, P4, P5

Tolerances of inner and outer ring

Tolerances of the inner and outer ring in spindle bearings, see tables.

Tolerances of the inner ring (tolerance class P4S)

Nominal bearing bore diameter d mm		Deviation Δ_{dmp} µm		Width variation V_{Bs} µm	Width deviation Δ_{Bs} µm	
over	incl.					
–	10	0	–4	1,5	0	–100
10	18	0	–4	1,5	0	–100
18	30	0	–5	1,5	0	–120
30	50	0	–6	1,5	0	–120
50	80	0	–7	1,5	0	–150
80	120	0	–8	2,5	0	–200
120	150	0	–10	2,5	0	–250
150	180	0	–10	4	0	–250
180	250	0	–12	5	0	–300
250	315	0	–15	6	0	–350
315	400	0	–19	7	0	–400
400	500	0	–23	8	0	–450
500	630	0	–26	10	0	–500
630	800	0	–32	12	0	–750

Tolerances of the inner ring (tolerance class P4S) continued

Nominal bearing bore diameter d mm		Variation (out of roundness) V_{dp} µm		Variation of mean diameter V_{dmp} µm	Radial runout K_{ia} µm	Axial runout	
						S_d µm	S_{ia} µm
over	incl.	Series 9	Series 0,2				
–	10	2,5	2	1,5	1,5	1,5	1,5
10	18	2,5	2	1,5	1,5	1,5	1,5
18	30	2,5	2	1,5	2,5	1,5	2,5
30	50	3	2,5	2	2,5	1,5	2,5
50	80	3,5	3	2	2,5	1,5	2,5
80	120	4	3	2,5	2,5	2,5	2,5
120	150	5	3	3	2,5	2,5	2,5
150	180	5	4	3	3	4	5
180	250	6	4	4	4	5	5
250	315	8	5	5	5	6	7
315	400	10	6	6	7	7	9
400	500	12	8	8	8	8	11
500	630	13	10	8	9	10	13
630	800	16	10	10	10	12	15

Tolerances of the outer ring (tolerance class P4S)

Nominal outside diameter D mm		Deviation Δ_{Ds}, Δ_{Dmp} µm		Variation (out of roundness) V_{Dp} [1] µm	
over	incl.			Series 9	Series 0,2
10	18	0	–4	2,5	2
18	30	0	–5	2,5	2
30	50	0	–6	3	2,5
50	80	0	–7	3,5	3
80	120	0	–8	4	3
120	150	0	–9	5	4
150	180	0	–10	5	4
180	250	0	–11	6	5
250	315	0	–13	7	6
315	400	0	–15	8	6
400	500	0	–18	9	7
500	630	0	–22	11	9
630	800	0	–26	13	10
800	1000	0	–33	17	14

The width deviation Δ_{Cs} is identical to Δ_{Bs} of the corresponding inner ring.

[1] Valid for open bearings;
for sealed bearings and DLR bearings, the values apply before assembly.

Tolerances of the outer ring (tolerance class P4S) continued

Nominal outside diameter D mm		Variation of mean diameter V_{dmp} µm	Width variation V_{Cs} µm	Radial runout K_{ea} µm	Axial runout	
					S_D µm	S_{ea} µm
over	incl.					
10	18	1,5	1,5	1,5	1,5	1,5
18	30	1,5	1,5	2,5	1,5	2,5
30	510	2	1,5	2,5	1,5	2,5
50	80	2	1,5	3	1,5	4
80	120	2,5	2,5	4	2,5	5
120	150	3	2,5	4	2,5	5
150	180	3	2,5	5	2,5	5
180	250	4	4	7	4	7
250	315	4	5	7	5	7
315	400	5	7	8	7	8
400	500	6	7	9	8	10
500	630	7	8	11	9	12
630	800	8	9	13	10	14
800	1000	11	11	15	12	17

Tolerances of the bearing bore (tolerance class P4S-K5)

Nominal bearing bore diameter d mm		Deviation Δ_{ds}, Δ_{dmp} µm	
over	incl.		
–	10	–1,5	–3
10	18	–1,5	–3
18	30	–1,5	–4
30	50	–2	–5
50	80	–2,5	–5
80	120	–2,5	–5,5
120	150	–3	–7
150	180	–3	–7
180	250	–4	–8
250	315	–5	–10
315	400	–6	–13
400	500	–7	–16
500	630	–8	–18
630	800	–11	–21

Tolerances of the outside diameter (tolerance class P4S-K5)

Nominal outside diameter D mm		Deviation Δ_{DS}, Δ_{Dmp} µm	
over	incl.		
10	18	–1,5	–3
18	30	–1,5	–3,5
30	50	–2	–4
50	80	–2,5	–5
80	120	–2,5	–5,5
120	150	–3	–6
150	180	–3	–7
180	250	–3,5	–7,5
250	315	–4	–9
315	400	–5	–10
400	500	–6	–12
500	630	–7	–15
630	800	–8	–18
800	1000	–11	–22

Spindle bearings

With large or small balls
Steel or ceramic balls
Steel or Cronidur rings
Open or sealed

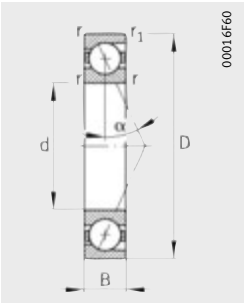

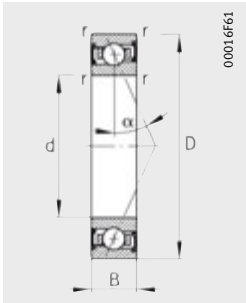

Dimension table · Dimensions in mm

Designation[1]	Mass	Dimensions					Contact angle	Mounting dimensions				
Series 70	m	d	D	B	r	r_1	α	d_a h12	D_a H12	r_a	r_{a1}	E_{tk}
	≈kg				min.		°			max.		nom.
B706-C-T-P4S	0,005	**6**	17	6	0,3	0,3	15	8,5	14,5	0,3	0,1	10,5
B706-E-T-P4S	0,005	**6**	17	6	0,3	0,3	25	8,5	14,5	0,3	0,1	10,5
HCB706-C-T-P4S	0,004	**6**	17	6	0,3	0,3	15	8,5	14,5	0,3	0,1	10,5
HCB706-E-T-P4S	0,004	**6**	17	6	0,3	0,3	25	8,5	14,5	0,3	0,1	10,5
XCB706-C-T-P4S	0,004	**6**	17	6	0,3	0,3	15	8,5	14,5	0,3	0,1	10,5
XCB706-E-T-P4S	0,004	**6**	17	6	0,3	0,3	25	8,5	14,5	0,3	0,1	10,5
HS706-C-T-P4S[4]	0,01	**6**	17	6	0,3	–	15	8,5	14,5	0,3	0,1	10,5
HS706-E-T-P4S[4]	0,01	**6**	17	6	0,3	–	25	8,5	14,5	0,3	0,1	10,5
HC706-E-T-P4S[4]	0,01	**6**	17	6	0,3	–	25	8,5	14,5	0,3	0,1	10,5
XC706-E-T-P4S[4]	0,01	**6**	17	6	0,3	–	25	8,5	14,5	0,3	0,1	10,5
B707-C-T-P4S	0,008	**7**	19	6	0,3	0,3	15	10	16	0,3	0,1	12
B707-E-T-P4S	0,008	**7**	19	6	0,3	0,3	25	10	16	0,3	0,1	12
HCB707-C-T-P4S	0,007	**7**	19	6	0,3	0,3	15	10	16	0,3	0,1	12
HCB707-E-T-P4S	0,007	**7**	19	6	0,3	0,3	25	10	16	0,3	0,1	12
XCB707-C-T-P4S	0,007	**7**	19	6	0,3	0,3	15	10	16	0,3	0,1	12
XCB707-E-T-P4S	0,007	**7**	19	6	0,3	0,3	25	10	16	0,3	0,1	12
HS707-C-T-P4S[4]	0,01	**7**	19	6	0,3	–	15	10	16	0,3	0,1	12
HS707-E-T-P4S[4]	0,01	**7**	19	6	0,3	–	25	10	16	0,3	0,1	12
HC707-E-T-P4S[4]	0,01	**7**	19	6	0,3	–	25	10	16	0,3	0,1	12
XC707-E-T-P4S[4]	0,01	**7**	19	6	0,3	–	25	10	16	0,3	0,1	12

1) Explanation of short designation, see section Bearing designations, page 82, *Figure 9*.
2) Explanation, see section Technical principles.
3) Minimal oil quantity lubrication.
4) The bearings are also available with gap seals.
Ordering example: **HSS706-E-T-P4S-UL**.

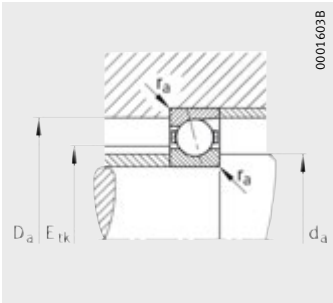

Mounting dimensions

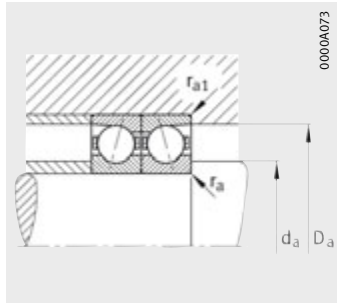

Mounting dimensions

Basic load ratings		Limiting speeds		Preload force[2] F_v			Lift-off force[2] K_{aE}			Axial rigidity[2] c_a		
dyn. C_r	stat. C_{0r}	n_G grease	n_G oil[3]	L	M	H	L	M	H	L	M	H
kN	kN	min^{-1}	min^{-1}	N	N	N	N	N	N	N/µm	N/µm	N/µm
2,36	0,97	110 000	170 000	9	34	77	28	119	294	8,6	16,4	25,5
2,28	0,93	95 000	150 000	14	60	132	42	187	429	20,9	36,5	51,4
1,63	0,67	150 000	240 000	5	17	39	15	56	138	7,5	13	19,5
1,56	0,66	130 000	200 000	5	28	67	15	85	211	16,5	30,3	43
3,65	0,67	170 000	260 000	5	17	39	15	56	138	7,5	13	19,5
3,45	0,66	150 000	240 000	5	28	67	15	85	211	16,5	30,3	43
1,56	0,7	150 000	220 000	5	16	31	15	52	108	6,2	10,5	14,7
1,5	0,66	130 000	200 000	8	25	51	23	75	157	15,3	23,8	31,6
1,04	0,46	170 000	260 000	6	18	35	18	54	107	16,2	23,7	30,6
2,32	0,46	190 000	280 000	6	18	35	18	54	107	16,2	23,7	30,6
2,6	1,14	95 000	150 000	9	38	85	28	133	324	9,3	18,4	28,4
2,5	1,1	85 000	130 000	16	65	145	47	202	470	23,2	40,4	57,1
1,8	0,8	130 000	200 000	5	18	43	15	59	152	8,1	14,2	21,7
1,73	0,77	120 000	180 000	5	30	73	15	91	228	17,8	33,5	47,5
4,05	0,8	150 000	220 000	5	18	43	15	59	152	8,1	14,2	21,7
3,9	0,77	130 000	200 000	5	30	73	15	91	228	17,8	33,5	47,5
1,7	0,8	130 000	200 000	6	17	34	18	55	118	7,1	11,4	16,2
1,6	0,77	120 000	180 000	9	27	54	26	81	166	17,2	26,1	34,4
1,1	0,53	150 000	220 000	6	19	37	18	57	112	17,4	25,9	33,1
2,45	0,53	160 000	260 000	6	19	37	18	57	112	17,4	25,9	33,1

Spindle bearings

With large or small balls
Steel or ceramic balls
Steel or Cronidur rings
Open or sealed

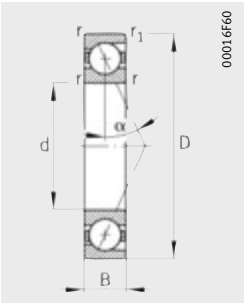

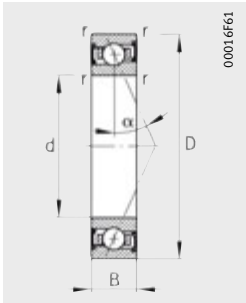

Dimension table (continued) · Dimensions in mm

Designation[1]	Mass	Dimensions					Contact angle	Mounting dimensions				
Series 70	m	d	D	B	r	r_1	α	d_a h12	D_a H12	r_a	r_{a1}	E_{tk}
	≈kg				min.		°			max.		nom.
B708-C-T-P4S	0,01	**8**	22	7	0,3	0,3	15	11	19	0,3	0,1	14
B708-E-T-P4S	0,01	**8**	22	7	0,3	0,3	25	11	19	0,3	0,1	14
HCB708-C-T-P4S	0,009	**8**	22	7	0,3	0,3	15	11	19	0,3	0,1	14
HCB708-E-T-P4S	0,009	**8**	22	7	0,3	0,3	25	11	19	0,3	0,1	14
XCB708-C-T-P4S	0,009	**8**	22	7	0,3	0,3	15	11	19	0,3	0,1	14
XCB708-E-T-P4S	0,009	**8**	22	7	0,3	0,3	25	11	19	0,3	0,1	14
HS708-C-T-P4S[4]	0,01	**8**	22	7	0,3	–	15	11	19	0,3	0,1	14
HS708-E-T-P4S[4]	0,01	**8**	22	7	0,3	–	25	11	19	0,3	0,1	14
HC708-E-T-P4S[4]	0,01	**8**	22	7	0,3	–	25	11	19	0,3	0,1	14
XC708-E-T-P4S[4]	0,01	**8**	22	7	0,3	–	25	11	19	0,3	0,1	14
B709-C-T-P4S	0,015	**9**	24	7	0,3	0,3	15	12	21	0,3	0,1	15,3
B709-E-T-P4S	0,015	**9**	24	7	0,3	0,3	25	12	21	0,3	0,1	15,3
HCB709-C-T-P4S	0,013	**9**	24	7	0,3	0,3	15	12	21	0,3	0,1	15,3
HCB709-E-T-P4S	0,013	**9**	24	7	0,3	0,3	25	12	21	0,3	0,1	15,3
XCB709-C-T-P4S	0,013	**9**	24	7	0,3	0,3	15	12	21	0,3	0,1	15,3
XCB709-E-T-P4S	0,013	**9**	24	7	0,3	0,3	25	12	21	0,3	0,1	15,3
HS709-C-T-P4S[4]	0,02	**9**	24	7	0,3	–	15	12	21	0,3	0,1	15,3
HS709-E-T-P4S[4]	0,02	**9**	24	7	0,3	–	25	12	21	0,3	0,1	15,3
HC709-E-T-P4S[4]	0,02	**9**	24	7	0,3	–	25	12	21	0,3	0,1	15,3
XC709-E-T-P4S[4]	0,02	**9**	24	7	0,3	–	25	12	21	0,3	0,1	15,3

1) Explanation of short designation, see section Bearing designations, page 82, *Figure 9*.
2) Explanation, see section Technical principles.
3) Minimal oil quantity lubrication.
4) The bearings are also available with gap seals.
Ordering example: **HSS708-E-T-P4S-UL**.

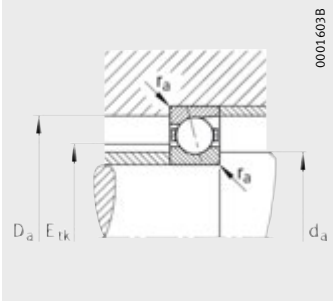

Mounting dimensions

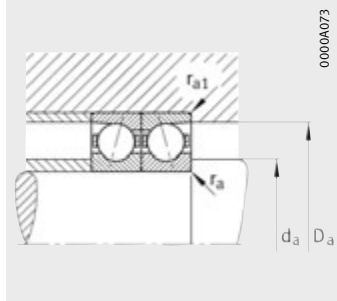

Mounting dimensions

Basic load ratings		Limiting speeds		Preload force[2] F_v			Lift-off force[2] K_{aE}			Axial rigidity[2] c_a		
dyn. C_r	stat. C_{0r}	n_G grease	n_G oil[3]	L	M	H	L	M	H	L	M	H
kN	kN	min^{-1}	min^{-1}	N	N	N	N	N	N	N/µm	N/µm	N/µm
3,8	1,73	80 000	130 000	15	59	129	47	206	490	12	22,9	34,9
3,75	1,66	75 000	110 000	19	90	207	56	277	668	26,4	47,9	68,6
2,65	1,2	110 000	170 000	6	29	66	18	95	232	9,2	18	26,8
2,55	1,16	100 000	160 000	10	39	100	29	118	312	23,4	39,1	56,5
6	1,2	130 000	190 000	6	29	66	18	95	232	9,2	18	26,8
5,7	1,16	110 000	170 000	10	39	100	29	118	312	23,4	39,1	56,5
1,9	1	110 000	170 000	6	19	38	18	62	131	8	13,4	18,7
1,8	0,95	100 000	150 000	10	30	61	29	89	187	20,1	30,2	40,3
1,22	0,66	130 000	200 000	7	21	42	20	62	127	19,7	29,7	38,9
2,7	0,66	140 000	220 000	7	21	42	20	62	127	19,7	29,7	38,9
5,2	2,4	75 000	110 000	23	85	181	72	293	676	14,4	26,5	39,6
5,1	2,32	67 000	100 000	31	131	292	91	401	930	32,4	56,3	79
3,6	1,66	100 000	160 000	8	39	90	24	127	311	10,6	20,5	30,2
3,45	1,6	95 000	140 000	15	56	137	44	168	423	28,3	45,7	64,6
8	1,66	110 000	180 000	8	39	90	24	127	311	10,6	20,5	30,2
7,65	1,6	100 000	160 000	15	56	137	44	168	423	28,3	45,7	64,6
2,65	1,43	100 000	150 000	9	26	53	27	84	181	10,2	16,3	22,9
2,5	1,37	90 000	140 000	14	43	86	41	128	262	25,2	37,9	49,8
1,73	0,95	120 000	180 000	10	30	59	29	89	179	25	37,3	48,5
3,9	0,95	130 000	200 000	10	30	59	29	89	179	25	37,3	48,5

Spindle bearings

With large or small balls
Steel or ceramic balls
Steel or Cronidur rings
Open or sealed

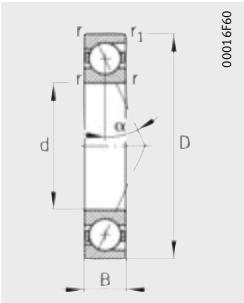

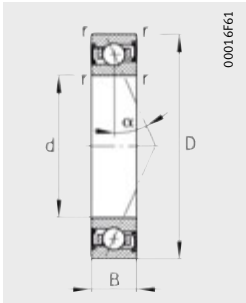

Dimension table (continued) · Dimensions in mm

Designation[1) 4)]			Mass	Dimensions					Contact angle	Mounting dimensions	
Series 719	Series 70	Series 72	m	d	D	B	r	r_1	α	d_a h12	D_a H12
			≈kg				min.		°		
B71900-C-T-P4S	–	–	0,009	**10**	22	6	0,3	0,3	15	13	19,5
B71900-E-T-P4S	–	–	0,009	**10**	22	6	0,3	0,3	25	13	19,5
HCB71900-C-T-P4S	–	–	0,008	**10**	22	6	0,3	0,3	15	13	19,5
HCB71900-E-T-P4S	–	–	0,008	**10**	22	6	0,3	0,3	25	13	19,5
XCB71900-C-T-P4S	–	–	0,008	**10**	22	6	0,3	0,3	15	13	19,5
XCB71900-E-T-P4S	–	–	0,008	**10**	22	6	0,3	0,3	25	13	19,5
HS71900-C-T-P4S	–	–	0,01	**10**	22	6	0,3	–	15	13	19,5
HS71900-E-T-P4S	–	–	0,01	**10**	22	6	0,3	–	25	13	19,5
HC71900-E-T-P4S	–	–	0,01	**10**	22	6	0,3	–	25	13	19,5
XC71900-E-T-P4S	–	–	0,01	**10**	22	6	0,3	–	25	13	19,5
–	**B7000-C-T-P4S**	–	0,02	**10**	26	8	0,3	0,3	15	14	22
–	**B7000-E-T-P4S**	–	0,02	**10**	26	8	0,3	0,3	25	14	22
–	**HCB7000-C-T-P4S**	–	0,02	**10**	26	8	0,3	0,3	15	14	22
–	**HCB7000-E-T-P4S**	–	0,02	**10**	26	8	0,3	0,3	25	14	22
–	**XCB7000-C-T-P4S**	–	0,02	**10**	26	8	0,3	0,3	15	14	22
–	**XCB7000-E-T-P4S**	–	0,02	**10**	26	8	0,3	0,3	25	14	22
–	**HS7000-C-T-P4S**	–	0,02	**10**	26	8	0,3	–	15	14	22
–	**HS7000-E-T-P4S**	–	0,02	**10**	26	8	0,3	–	25	14	22
–	**HC7000-E-T-P4S**	–	0,02	**10**	26	8	0,3	–	25	14	22
–	**XC7000-E-T-P4S**	–	0,02	**10**	26	8	0,3	–	25	14	22
–	–	**B7200-C-T-P4S**	0,03	**10**	30	9	0,6	0,6	15	14,5	25,5
–	–	**B7200-E-T-P4S**	0,03	**10**	30	9	0,6	0,6	25	14,5	25,5
–	–	**HCB7200-C-T-P4S**	0,03	**10**	30	9	0,6	0,6	15	14,5	25,5
–	–	**HCB7200-E-T-P4S**	0,03	**10**	30	9	0,6	0,6	25	14,5	25,5

1) Explanation of short designation, see section Bearing designations, page 82, *Figure 9*.
2) Explanation, see section Technical principles.
3) Minimal oil quantity lubrication.
4) The bearings are also available with gap seals.
Ordering examples: **B7000-C-2RSD-T-P4S-UL**
HSS7000-E-T-P4S-UL.

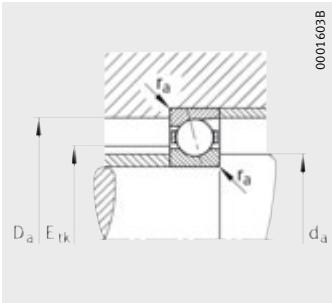

Mounting dimensions

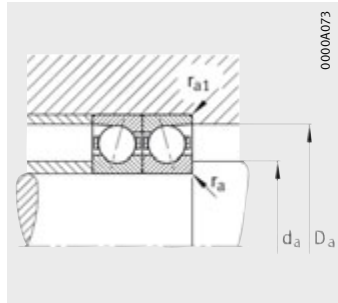

Mounting dimensions

			Basic load ratings		Limiting speeds		Preload force[2] F_v			Lift-off force[2] K_{aE}			Axial rigidity[2] c_a		
r_a	r_{a1}	E_{tk}	dyn. C_r	stat. C_{0r}	n_G grease	n_G oil[3]	L	M	H	L	M	H	L	M	H
max.		nom.	kN	kN	min^{-1}	min^{-1}	N	N	N	N	N	N	N/µm	N/µm	N/µm
0,3	0,3	15,2	3	1,53	75 000	120 000	14	51	114	44	179	438	12,6	23,5	36,6
0,3	0,3	15,2	2,9	1,46	70 000	110 000	17	63	149	50	193	476	27	44,8	64,5
0,3	0,3	15,2	2,08	1,06	110 000	160 000	5	20	49	15	65	171	9,2	16,7	25,5
0,3	0,3	15,2	2	1	95 000	150 000	9	25	70	27	75	217	24,9	35,4	52,7
0,3	0,3	15,2	4,65	1,06	120 000	180 000	5	20	49	15	65	171	9,2	16,7	25,5
0,3	0,3	15,2	4,5	1	110 000	160 000	9	25	70	27	75	217	24,9	35,4	52,7
0,3	0,3	15	1,96	1,1	100 000	160 000	7	20	39	21	65	134	8,9	14,3	19,8
0,3	0,3	15	1,86	1,04	95 000	140 000	11	32	64	32	95	195	22	32,6	42,9
0,3	0,3	15	1,29	0,72	120 000	180 000	7	22	44	20	65	133	20,8	31,9	41,6
0,3	0,3	15	2,9	0,72	130 000	200 000	7	22	44	20	65	133	20,8	31,9	41,6
0,3	0,1	16,4	4,25	2,08	67 000	100 000	17	67	145	53	227	531	12,6	23,3	34,9
0,3	0,1	16,4	4,05	2	60 000	95 000	22	100	224	64	303	706	27,9	49,6	69,4
0,3	0,1	16,4	2,9	1,43	95 000	140 000	7	32	73	21	103	249	9,9	18,4	27
0,3	0,1	16,4	2,8	1,4	85 000	130 000	11	43	110	32	128	337	24,8	40,4	58,1
0,3	0,1	16,4	6,4	1,43	100 000	160 000	7	32	73	21	103	249	9,9	18,4	27
0,3	0,1	16,4	6,3	1,4	95 000	140 000	11	43	110	32	128	337	24,8	40,4	58,1
0,3	0,1	16,8	2,75	1,6	90 000	140 000	9	27	55	27	87	187	10,7	17,3	24,2
0,3	0,1	16,8	2,6	1,5	85 000	130 000	15	44	89	44	131	271	27,2	40,1	52,9
0,3	0,1	16,8	1,8	1,06	110 000	160 000	10	31	62	29	92	188	26,3	39,7	51,7
0,3	0,1	16,8	4	1,06	120 000	180 000	10	31	62	29	92	188	26,3	39,7	51,7
0,6	0,6	18,8	5,85	2,9	56 000	85 000	25	92	198	77	313	730	16,2	29,9	44,9
0,6	0,6	18,8	5,6	2,8	50 000	75 000	31	139	312	89	419	980	35	62,5	88,2
0,6	0,6	18,8	4	2,04	70 000	110 000	13	57	126	39	186	441	13,9	26,2	38,8
0,6	0,6	18,8	3,9	1,96	60 000	90 000	22	81	194	64	241	597	35,4	56,9	80,7

Spindle bearings

With large or small balls
Steel or ceramic balls
Steel or Cronidur rings
Open or sealed

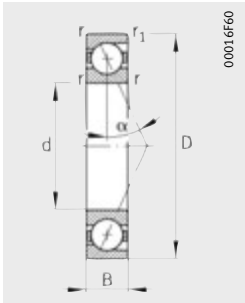

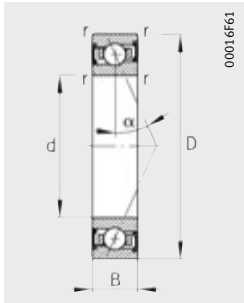

Dimension table (continued) · Dimensions in mm

Designation[1) 4)]			Mass	Dimensions					Contact angle	Mounting dimensions	
Series 719	Series 70	Series 72	m	d	D	B	r	r_1	α	d_a h12	D_a H12
			≈kg				min.		°		
B71901-C-T-P4S	–	–	0,01	**12**	24	6	0,3	0,3	15	15	21,5
B71901-E-T-P4S	–	–	0,01	**12**	24	6	0,3	0,3	25	15	21,5
HCB71901-C-T-P4S	–	–	0,01	**12**	24	6	0,3	0,3	15	15	21,5
HCB71901-E-T-P4S	–	–	0,01	**12**	24	6	0,3	0,3	25	15	21,5
XCB71901-C-T-P4S	–	–	0,01	**12**	24	6	0,3	0,3	15	15	21,5
XCB71901-E-T-P4S	–	–	0,01	**12**	24	6	0,3	0,3	25	15	21,5
HS71901-C-T-P4S	–	–	0,01	**12**	24	6	0,3	–	15	15	21,5
HS71901-E-T-P4S	–	–	0,01	**12**	24	6	0,3	–	25	15	21,5
HC71901-E-T-P4S	–	–	0,01	**12**	24	6	0,3	–	25	15	21,5
XC71901-E-T-P4S	–	–	0,01	**12**	24	6	0,3	–	25	15	21,5
–	**B7001-C-T-P4S**	–	0,02	**12**	28	8	0,3	0,3	15	16,5	24,5
–	**B7001-E-T-P4S**	–	0,02	**12**	28	8	0,3	0,3	25	16,5	24,5
–	**HCB7001-C-T-P4S**	–	0,02	**12**	28	8	0,3	0,3	15	16,5	24,5
–	**HCB7001-E-T-P4S**	–	0,02	**12**	28	8	0,3	0,3	25	16,5	24,5
–	**XCB7001-C-T-P4S**	–	0,02	**12**	28	8	0,3	0,3	15	16,5	24,5
–	**XCB7001-E-T-P4S**	–	0,02	**12**	28	8	0,3	0,3	25	16,5	24,5
–	**HS7001-C-T-P4S**	–	0,02	**12**	28	8	0,3	–	15	16,5	24,5
–	**HS7001-E-T-P4S**	–	0,02	**12**	28	8	0,3	–	25	16,5	24,5
–	**HC7001-E-T-P4S**	–	0,02	**12**	28	8	0,3	–	25	16,5	24,5
–	**XC7001-E-T-P4S**	–	0,02	**12**	28	8	0,3	–	25	16,5	24,5
–	–	**B7201-C-T-P4S**	0,04	**12**	32	10	0,6	0,6	15	16,5	27,5
–	–	**B7201-E-T-P4S**	0,04	**12**	32	10	0,6	0,6	25	16,5	27,5
–	–	**HCB7201-C-T-P4S**	0,03	**12**	32	10	0,6	0,6	15	16,5	27,5
–	–	**HCB7201-E-T-P4S**	0,03	**12**	32	10	0,6	0,6	25	16,5	27,5

1) Explanation of short designation, see section Bearing designations, page 82, *Figure 9*.
2) Explanation, see section Technical principles.
3) Minimal oil quantity lubrication.
4) The bearings are also available with gap seals.
Ordering examples: **B7001-C-2RSD-T-P4S-UL**
HSS7001-E-T-P4S-UL.

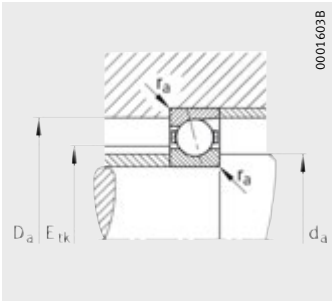

Mounting dimensions

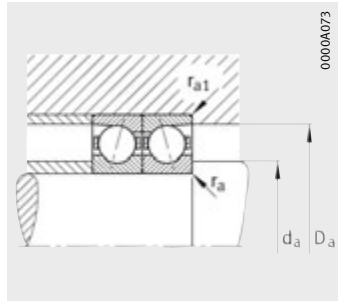

Mounting dimensions

			Basic load ratings		Limiting speeds		Preload force[2] F_v			Lift-off force[2] K_{aE}			Axial rigidity[2] c_a		
r_a	r_{a1}	E_{tk}	dyn. C_r	stat. C_{0r}	n_G grease	n_G oil[3]	L	M	H	L	M	H	L	M	H
max.		nom.	kN	kN	min^{-1}	min^{-1}	N	N	N	N	N	N	N/µm	N/µm	N/µm
0,3	0,3	17,2	3,35	1,86	67 000	100 000	15	56	126	47	195	479	14,3	26,8	41,5
0,3	0,3	17,2	3,2	1,76	60 000	95 000	19	67	162	56	204	515	31,4	50,7	73,5
0,3	0,3	17,2	2,32	1,29	95 000	140 000	6	22	54	18	71	187	11	19	29,1
0,3	0,3	17,2	2,2	1,22	85 000	130 000	10	26	75	29	78	231	27,9	40	59,8
0,3	0,3	17,2	5,2	1,29	100 000	160 000	6	22	54	18	71	187	11	19	29,1
0,3	0,3	17,2	5,2	1,22	95 000	140 000	10	26	75	29	78	231	27,9	40	59,8
0,3	0,3	17	2,04	1,2	90 000	140 000	7	21	41	21	68	140	9,3	15,2	21
0,3	0,3	17	1,93	1,14	85 000	130 000	11	33	66	32	98	201	23,1	34,5	45,4
0,3	0,3	17	1,34	0,8	110 000	160 000	8	23	46	23	68	139	23	34	44,4
0,3	0,3	17	3	0,8	120 000	180 000	8	23	46	23	68	139	23	34	44,4
0,3	0,1	18,6	4,75	2,6	60 000	90 000	19	74	161	58	249	584	14,5	26,9	40,1
0,3	0,1	18,6	4,55	2,5	53 000	85 000	23	110	250	67	332	784	32	57,4	80,6
0,3	0,1	18,6	3,25	1,8	85 000	130 000	9	44	99	27	141	339	13,1	25,2	37,3
0,3	0,1	18,6	3,15	1,73	75 000	120 000	15	58	147	43	170	445	32,8	53,6	77,2
0,3	0,1	18,6	7,2	1,73	90 000	140 000	9	44	99	27	141	339	13,1	25,2	37,3
0,3	0,1	18,6	7,1	1,73	85 000	130 000	15	58	147	43	170	445	32,8	53,6	77,2
0,3	0,1	18,8	2,7	1,63	80 000	130 000	9	27	54	27	87	184	10,7	17,3	24,1
0,3	0,1	18,8	2,55	1,53	75 000	110 000	15	44	87	44	131	264	27,2	40,2	52,3
0,3	0,1	18,8	1,76	1,08	95 000	140 000	10	30	61	29	89	184	26,3	39,2	51,2
0,3	0,1	18,8	3,9	1,08	100 000	160 000	10	30	61	29	89	184	26,3	39,2	51,2
0,6	0,6	21,1	7,65	3,9	50 000	75 000	35	124	264	108	422	971	19,1	34,7	51,8
0,6	0,6	21,1	7,35	3,75	45 000	67 000	47	191	420	136	576	1 319	42,7	73,3	102,4
0,6	0,6	21,1	5,3	2,7	63 000	95 000	19	78	170	57	254	593	16,6	30,6	45
0,6	0,6	21,1	5,1	2,6	56 000	85 000	32	113	263	93	337	809	42,2	67,2	94

Spindle bearings

With large or small balls
Steel or ceramic balls
Steel or Cronidur rings
Open or sealed

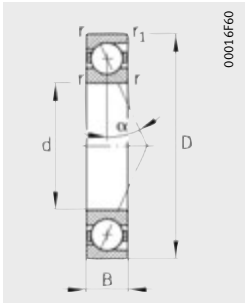

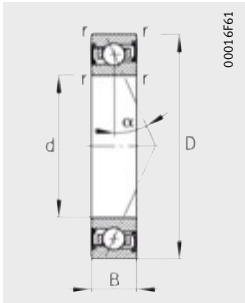

Dimension table (continued) · Dimensions in mm

Designation[1) 4)]			Mass	Dimensions					Contact angle	Mounting dimensions	
Series 719	Series 70	Series 72	m	d	D	B	r	r_1	α	d_a h12	D_a H12
			≈kg				min.		°		
B71902-C-T-P4S	–	–	0,02	**15**	28	7	0,3	0,3	15	18	25,5
B71902-E-T-P4S	–	–	0,02	**15**	28	7	0,3	0,3	25	18	25,5
HCB71902-C-T-P4S	–	–	0,01	**15**	28	7	0,3	0,3	15	18	25,5
HCB71902-E-T-P4S	–	–	0,01	**15**	28	7	0,3	0,3	25	18	25,5
XCB71902-C-T-P4S	–	–	0,01	**15**	28	7	0,3	0,3	15	18	25,5
XCB71902-E-T-P4S	–	–	0,01	**15**	28	7	0,3	0,3	25	18	25,5
HS71902-C-T-P4S	–	–	0,02	**15**	28	7	0,3	–	15	18	25,5
HS71902-E-T-P4S	–	–	0,02	**15**	28	7	0,3	–	25	18	25,5
HC71902-E-T-P4S	–	–	0,02	**15**	28	7	0,3	–	25	18	25,5
XC71902-E-T-P4S	–	–	0,02	**15**	28	7	0,3	–	25	18	25,5
–	**B7002-C-T-P4S**	–	0,03	**15**	32	9	0,3	0,3	15	19	29
–	**B7002-E-T-P4S**	–	0,03	**15**	32	9	0,3	0,3	25	19	29
–	**HCB7002-C-T-P4S**	–	0,03	**15**	32	9	0,3	0,3	15	19	29
–	**HCB7002-E-T-P4S**	–	0,03	**15**	32	9	0,3	0,3	25	19	29
–	**XCB7002-C-T-P4S**	–	0,03	**15**	32	9	0,3	0,3	15	19	29
–	**XCB7002-E-T-P4S**	–	0,03	**15**	32	9	0,3	0,3	25	19	29
–	**HS7002-C-T-P4S**	–	0,03	**15**	32	9	0,3	–	15	19	29
–	**HS7002-E-T-P4S**	–	0,03	**15**	32	9	0,3	–	25	19	29
–	**HC7002-E-T-P4S**	–	0,03	**15**	32	9	0,3	–	25	19	29
–	**XC7002-E-T-P4S**	–	0,03	**15**	32	9	0,3	–	25	19	29
–	–	**B7202-C-T-P4S**	0,04	**15**	35	11	0,6	0,6	15	19,5	30,5
–	–	**B7202-E-T-P4S**	0,04	**15**	35	11	0,6	0,6	25	19,5	30,5
–	–	**HCB7202-C-T-P4S**	0,04	**15**	35	11	0,6	0,6	15	19,5	30,5
–	–	**HCB7202-E-T-P4S**	0,04	**15**	35	11	0,6	0,6	25	19,5	30,5

1) Explanation of short designation, see section Bearing designations, page 82, *Figure 9*.
2) Explanation, see section Technical principles.
3) Minimal oil quantity lubrication.
4) The bearings are also available with gap seals.
Ordering examples: **B7002-C-2RSD-T-P4S-UL**
HSS7002-E-T-P4S-UL.

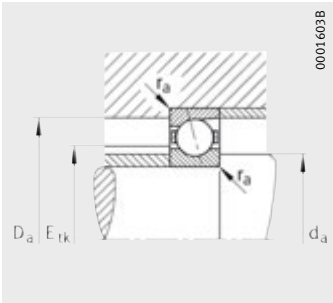

Mounting dimensions

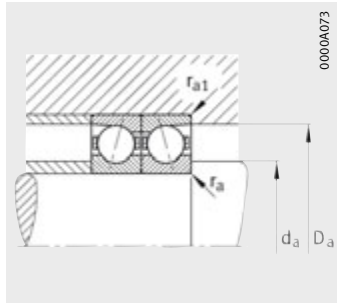

Mounting dimensions

			Basic load ratings		Limiting speeds		Preload force[2] F_v			Lift-off force[2] K_{aE}			Axial rigidity[2] c_a		
r_a	r_{a1}	E_{tk}	dyn. C_r	stat. C_{0r}	n_G grease	n_G oil[3]	L	M	H	L	M	H	L	M	H
max.		nom.	kN	kN	min^{-1}	min^{-1}	N	N	N	N	N	N	N/µm	N/µm	N/µm
0,3	0,3	20,9	5	2,9	56 000	85 000	20	77	167	63	265	624	17	31,4	47,4
0,3	0,3	20,9	4,8	2,75	50 000	75 000	22	112	259	64	342	824	35	65,2	92,8
0,3	0,3	20,9	3,45	2	75 000	120 000	11	38	87	34	124	303	15	25	37
0,3	0,3	20,9	3,35	1,93	70 000	110 000	17	48	125	50	144	386	36,3	53,1	76,7
0,3	0,3	20,9	6,7	2	85 000	130 000	11	38	87	34	124	303	15	25	37
0,3	0,3	20,9	7,5	1,93	75 000	120 000	17	48	125	50	144	386	36,3	53,1	76,7
0,3	0,3	20,3	2,8	1,76	75 000	110 000	9	28	56	27	90	190	11,2	18,2	25,4
0,3	0,3	20,3	2,65	1,66	67 000	100 000	15	46	92	43	136	279	27,8	42,4	55,7
0,3	0,3	20,3	1,83	1,16	85 000	130 000	11	32	63	32	95	190	28,5	42	54,1
0,3	0,3	20,3	4,05	1,16	95 000	150 000	11	32	63	32	95	190	28,5	42	54,1
0,3	0,1	22,3	6,2	3,4	53 000	80 000	28	102	216	87	345	787	16,9	30,2	44,6
0,3	0,1	22,3	6	3,25	45 000	70 000	36	154	344	105	467	1 080	37,4	64,8	90,3
0,3	0,1	22,3	4,3	2,36	70 000	110 000	11	51	114	33	164	388	13	24,4	35,4
0,3	0,1	22,3	4,15	2,24	63 000	100 000	18	68	166	53	203	508	33,4	53,5	75,2
0,3	0,1	22,3	9,65	2,36	80 000	120 000	11	51	114	33	164	388	13	24,4	35,4
0,3	0,1	22,3	9,3	2,24	70 000	110 000	18	68	166	53	203	508	33,4	53,5	75,2
0,3	0,1	22,2	3,75	2,45	70 000	110 000	13	38	75	39	122	254	13,8	22	30,4
0,3	0,1	22,2	3,55	2,32	63 000	95 000	20	61	122	58	181	370	33,7	50,9	66,7
0,3	0,1	22,2	2,45	1,6	80 000	120 000	14	42	84	41	125	254	33,9	50,2	65,1
0,3	0,1	22,2	5,5	1,6	90 000	140 000	14	42	84	41	125	254	33,9	50,2	65,1
0,6	0,6	23,3	9,65	5	45 000	67 000	47	165	347	149	575	1 309	22,4	40,4	60,2
0,6	0,6	23,3	9,3	4,8	40 000	60 000	65	256	555	192	789	1 779	50,2	85,3	118,6
0,6	0,6	23,3	6,7	3,45	56 000	85 000	21	86	186	64	283	653	17,9	32,7	47,5
0,6	0,6	23,3	6,4	3,35	48 000	70 000	24	123	286	71	372	892	40,1	72,1	100,5

Spindle bearings

With large or small balls
Steel or ceramic balls
Steel or Cronidur rings
Open or sealed

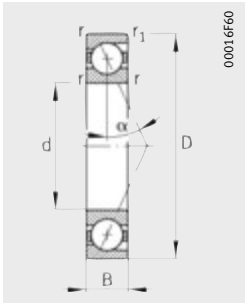

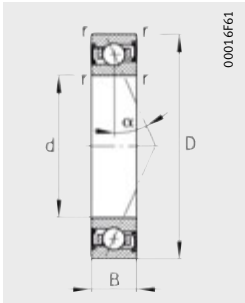

Dimension table (continued) · Dimensions in mm

Designation[1) 4)]			Mass	Dimensions					Contact angle	Mounting dimensions	
Series 719	Series 70	Series 72	m	d	D	B	r	r_1	α	d_a h12	D_a H12
			≈kg				min.		°		
B71903-C-T-P4S	–	–	0,02	**17**	30	7	0,3	0,3	15	20	27,5
B71903-E-T-P4S	–	–	0,02	**17**	30	7	0,3	0,3	25	20	27,5
HCB71903-C-T-P4S	–	–	0,01	**17**	30	7	0,3	0,3	15	20	27,5
HCB71903-E-T-P4S	–	–	0,01	**17**	30	7	0,3	0,3	25	20	27,5
XCB71903-C-T-P4S	–	–	0,01	**17**	30	7	0,3	0,3	15	20	27,5
XCB71903-E-T-P4S	–	–	0,01	**17**	30	7	0,3	0,3	25	20	27,5
HS71903-C-T-P4S	–	–	0,02	**17**	30	7	0,3	–	15	20	27,5
HS71903-E-T-P4S	–	–	0,02	**17**	30	7	0,3	–	25	20	27,5
HC71903-E-T-P4S	–	–	0,02	**17**	30	7	0,3	–	25	20	27,5
XC71903-E-T-P4S	–	–	0,02	**17**	30	7	0,3	–	25	20	27,5
–	**B7003-C-T-P4S**	–	0,04	**17**	35	10	0,3	0,3	15	21	32
–	**B7003-E-T-P4S**	–	0,04	**17**	35	10	0,3	0,3	25	21	32
–	**HCB7003-C-T-P4S**	–	0,03	**17**	35	10	0,3	0,3	15	21	32
–	**HCB7003-E-T-P4S**	–	0,03	**17**	35	10	0,3	0,3	25	21	32
–	**XCB7003-C-T-P4S**	–	0,03	**17**	35	10	0,3	0,3	15	21	32
–	**XCB7003-E-T-P4S**	–	0,03	**17**	35	10	0,3	0,3	25	21	32
–	**HS7003-C-T-P4S**	–	0,04	**17**	35	10	0,3	–	15	21	32
–	**HS7003-E-T-P4S**	–	0,04	**17**	35	10	0,3	–	25	21	32
–	**HC7003-E-T-P4S**	–	0,04	**17**	35	10	0,3	–	25	21	32
–	**XC7003-E-T-P4S**	–	0,04	**17**	35	10	0,3	–	25	21	32
–	–	**B7203-C-T-P4S**	0,06	**17**	40	12	0,6	0,6	15	22,5	34,5
–	–	**B7203-E-T-P4S**	0,06	**17**	40	12	0,6	0,6	25	22,5	34,5
–	–	**HCB7203-C-T-P4S**	0,06	**17**	40	12	0,6	0,6	15	22,5	34,5
–	–	**HCB7203-E-T-P4S**	0,06	**17**	40	12	0,6	0,6	25	22,5	34,5

1) Explanation of short designation, see section Bearing designations, page 82, *Figure 9*.
2) Explanation, see section Technical principles.
3) Minimal oil quantity lubrication.
4) The bearings are also available with gap seals.
Ordering examples: **B7003-C-2RSD-T-P4S-UL**
HSS7003-E-T-P4S-UL.

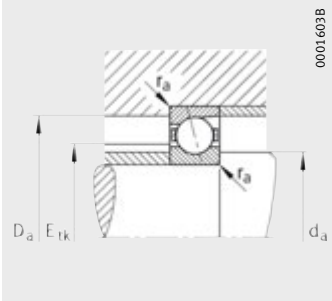

Mounting dimensions

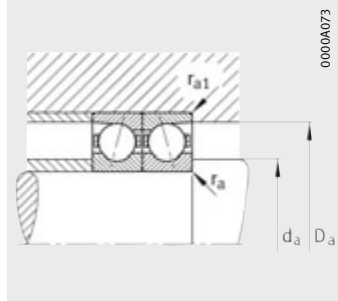

Mounting dimensions

			Basic load ratings		Limiting speeds		Preload force[2] F_v			Lift-off force[2] K_{aE}			Axial rigidity[2] c_a		
r_a	r_{a1}	E_{tk}	dyn. C_r	stat. C_{0r}	n_G grease	n_G oil[3]	L	M	H	L	M	H	L	M	H
max.		nom.	kN	kN	min^{-1}	min^{-1}	N	N	N	N	N	N	N/µm	N/µm	N/µm
0,3	0,3	22,2	5,3	3,15	50 000	80 000	21	81	176	66	279	656	18,1	33,5	50,4
0,3	0,3	22,2	5	3	45 000	70 000	23	116	268	67	354	850	37,4	69,2	98,1
0,3	0,3	22,2	3,65	2,2	70 000	110 000	11	39	91	34	127	316	15,7	26,4	39,3
0,3	0,3	22,2	3,45	2,08	63 000	100 000	18	50	132	53	150	407	38,9	56,5	81,9
0,3	0,3	22,2	8,15	2,2	80 000	120 000	11	39	91	34	127	316	15,7	26,4	39,3
0,3	0,3	22,2	7,65	2,08	70 000	110 000	18	50	132	53	150	407	38,9	56,5	81,9
0,3	0,3	22,3	2,9	1,9	70 000	110 000	10	29	58	30	93	196	12,1	19,2	26,6
0,3	0,3	22,3	2,7	1,8	63 000	95 000	16	47	94	46	139	285	29,7	44,5	58,5
0,3	0,3	22,3	1,9	1,27	80 000	120 000	11	32	64	32	95	193	29,7	43,8	56,7
0,3	0,3	22,3	4,25	1,27	90 000	140 000	11	32	64	32	95	193	29,7	43,8	56,7
0,3	0,1	24,1	8,65	4,9	45 000	70 000	41	146	308	127	492	1 115	21,3	37,8	55,4
0,3	0,1	24,1	8,3	4,75	43 000	63 000	54	221	487	158	668	1 527	47,9	81,3	112,6
0,3	0,1	24,1	6	3,45	63 000	100 000	18	73	163	54	234	553	17,2	30,5	44,2
0,3	0,1	24,1	5,7	3,25	56 000	90 000	28	104	249	82	311	762	43	68,9	96,1
0,3	0,1	24,1	13,4	3,45	70 000	110 000	18	73	163	54	234	553	17,2	30,5	44,2
0,3	0,1	24,1	12,7	3,25	63 000	100 000	28	104	249	82	311	762	43	68,9	96,1
0,3	0,1	24,7	3,8	2,65	63 000	95 000	13	38	76	39	121	256	14,3	22,6	31,5
0,3	0,1	24,7	3,65	2,5	56 000	85 000	21	62	124	61	183	375	35,7	53	69,5
0,3	0,1	24,7	2,5	1,73	75 000	110 000	14	43	86	41	127	259	35,3	52,3	68
0,3	0,1	24,7	5,6	1,73	80 000	120 000	14	43	86	41	127	259	35,3	52,3	68
0,6	0,6	26,7	10,8	5,85	38 000	56 000	53	186	391	167	647	1 470	23,7	42,9	63,7
0,6	0,6	26,7	10,4	5,6	36 000	53 000	75	289	626	222	891	2 006	53,9	90,7	126
0,6	0,6	26,7	7,5	4,05	50 000	75 000	25	98	212	77	323	744	19,6	34,9	50,6
0,6	0,6	26,7	7,2	3,9	43 000	63 000	28	142	327	82	430	1 020	42,7	77,3	107,3

Spindle bearings

With large or small balls
Steel or ceramic balls
Steel or Cronidur rings
Open or sealed
Design DLR

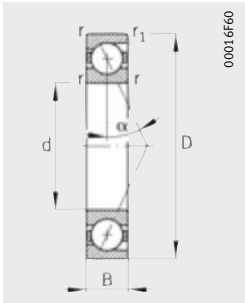

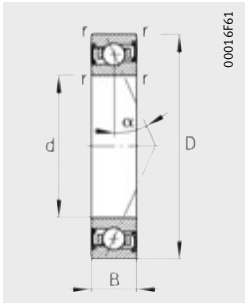

Dimension table (continued) · Dimensions in mm

Designation[1) 4)]			Mass	Dimensions								Contact angle	Mounting dimensions	
Series 719	Series 70	Series 72	m	d	D	B	r	r_1	B_N	S_N	S_B	α	d_a h12	D_a H12
			≈kg				min.					°		
B71904-C-T-P4S	–	–	0,03	**20**	37	9	0,3	0,3	–	–	–	15	24	33,5
B71904-E-T-P4S	–	–	0,03	**20**	37	9	0,3	0,3	–	–	–	25	24	33,5
HCB71904-C-T-P4S	–	–	0,03	**20**	37	9	0,3	0,3	–	–	–	15	24	33,5
HCB71904-E-T-P4S	–	–	0,03	**20**	37	9	0,3	0,3	–	–	–	25	24	33,5
XCB71904-C-T-P4S	–	–	0,03	**20**	37	9	0,3	0,3	–	–	–	15	24	33,5
XCB71904-E-T-P4S	–	–	0,03	**20**	37	9	0,3	0,3	–	–	–	25	24	33,5
HS71904-C-T-P4S	–	–	0,04	**20**	37	9	0,3	–	–	–	–	15	24	33,5
HS71904-E-T-P4S	–	–	0,04	**20**	37	9	0,3	–	–	–	–	25	24	33,5
HC71904-E-T-P4S	–	–	0,04	**20**	37	9	0,3	–	–	–	–	25	24	33,5
XC71904-E-T-P4S	–	–	0,04	**20**	37	9	0,3	–	–	–	–	25	24	33,5
–	**B7004-C-T-P4S**	–	0,07	**20**	42	12	0,6	0,6	–	–	–	15	25	37
–	**B7004-E-T-P4S**	–	0,07	**20**	42	12	0,6	0,6	–	–	–	25	25	37
–	**HCB7004-C-T-P4S**	–	0,06	**20**	42	12	0,6	0,6	2,2	6,6	1,4	15	25	37
–	**HCB7004-E-T-P4S**	–	0,06	**20**	42	12	0,6	0,6	2,2	6,6	1,4	25	25	37
–	**XCB7004-C-T-P4S**	–	0,06	**20**	42	12	0,6	0,6	2,2	6,6	1,4	15	25	37
–	**XCB7004-E-T-P4S**	–	0,06	**20**	42	12	0,6	0,6	2,2	6,6	1,4	25	25	37
–	**HS7004-C-T-P4S**	–	0,08	**20**	42	12	0,6	–	–	–	–	15	25	37
–	**HS7004-E-T-P4S**	–	0,08	**20**	42	12	0,6	–	–	–	–	25	25	37
–	**HC7004-E-T-P4S**	–	0,08	**20**	42	12	0,6	–	2,2	6,6	1,4	25	25	37
–	**XC7004-E-T-P4S**	–	0,08	**20**	42	12	0,6	–	2,2	6,6	1,4	25	25	37
–	–	**B7204-C-T-P4S**	0,1	**20**	47	14	1	1	–	–	–	15	26,5	40,5
–	–	**B7204-E-T-P4S**	0,1	**20**	47	14	1	1	–	–	–	25	26,5	40,5
–	–	**HCB7204-C-T-P4S**	0,09	**20**	47	14	1	1	–	–	–	15	26,5	40,5
–	–	**HCB7204-E-T-P4S**	0,09	**20**	47	14	1	1	–	–	–	25	26,5	40,5

1) Explanation of short designation, see section Bearing designations, page 82, *Figure 9*.

2) Explanation, see section Technical principles.

3) Minimal oil quantity lubrication.

4) The bearings are also available with gap seals.
Ordering examples: **B7004-C-2RSD-T-P4S-UL**
HSS7004-E-T-P4S-UL.

5) Ordering examples for Direct Lube design: **HCB7004-EDLR-T-P4S-UL**
HC7004-EDLR-T-P4S-UL.

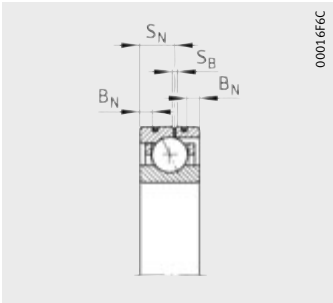

Design DLR[5)]

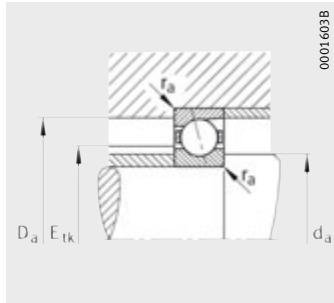

Mounting dimensions

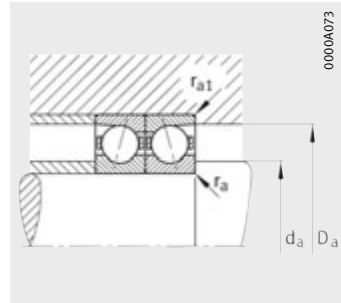

Mounting dimensions

			Basic load ratings		Limiting speeds		Preload force[2)] F_v			Lift-off force[2)] K_{aE}			Axial rigidity[2)] c_a		
r_a	r_{a1}	E_{tk}	dyn. C_r	stat. C_{0r}	n_G grease	n_G oil[3)]	L	M	H	L	M	H	L	M	H
max.		nom.	kN	kN	min^{-1}	min^{-1}	N	N	N	N	N	N	N/µm	N/µm	N/µm
0,3	0,3	26,8	7,35	4,55	43 000	63 000	41	137	297	130	478	1 127	24,5	43,5	66,1
0,3	0,3	26,8	6,95	4,4	38 000	60 000	38	172	390	111	526	1 240	47,1	84	118,4
0,3	0,3	26,8	5	3,2	60 000	90 000	13	58	132	39	189	457	17	32,1	47,2
0,3	0,3	26,8	4,8	3,05	53 000	80 000	27	77	193	80	231	595	47,7	69,4	98,9
0,3	0,3	26,8	11,2	3,2	63 000	100 000	13	58	132	39	189	457	17	32,1	47,2
0,3	0,3	26,8	10,8	3,05	60 000	90 000	27	77	193	80	231	595	47,7	69,4	98,9
0,3	0,3	27,2	3,9	2,85	56 000	90 000	13	39	78	39	124	262	14,8	23,6	32,8
0,3	0,3	27,2	3,75	2,7	53 000	80 000	21	63	127	61	186	384	37,1	55,3	72,7
0,3	0,3	27,2	2,55	1,86	67 000	100 000	15	44	89	44	130	268	37,6	54,7	71,4
0,3	0,3	27,2	5,7	1,86	75 000	110 000	15	44	89	44	130	268	37,6	54,7	71,4
0,6	0,3	28,8	10,4	6	38 000	60 000	52	179	377	161	604	1 369	22,8	40	58,8
0,6	0,3	28,8	10	5,7	34 000	53 000	71	277	598	207	839	1 879	51,7	86,7	119,3
0,6	0,3	28,8	7,2	4,15	53 000	80 000	24	94	203	73	303	692	18,9	33	47,2
0,6	0,3	28,8	6,95	4	48 000	75 000	26	132	305	76	394	934	41,3	73,6	101,6
0,6	0,3	28,8	16	4,15	60 000	90 000	24	94	203	73	303	692	18,9	33	47,2
0,6	0,3	28,8	15,6	4	53 000	80 000	26	132	305	76	394	934	41,3	73,6	101,6
0,6	0,3	29,3	6,2	4,55	53 000	80 000	21	62	125	63	198	420	19,8	31,5	43,7
0,6	0,3	29,3	5,85	4,3	48 000	75 000	34	101	202	98	299	610	49,1	73,6	96,3
0,6	0,3	29,3	4,05	3	60 000	95 000	23	70	140	67	207	421	48,8	72,6	94,2
0,6	0,3	29,3	9	3	67 000	100 000	23	70	140	67	207	421	48,8	72,6	94,2
1	1	31,7	14,6	8,15	32 000	48 000	74	252	527	229	856	1 934	27,8	49,4	73,1
1	1	31,7	14	7,8	30 000	45 000	105	393	843	304	1 184	2 644	63	105	145,2
1	1	31,7	10	5,6	43 000	63 000	45	163	347	137	533	1 211	25,4	44,3	64,3
1	1	31,7	9,65	5,4	36 000	53 000	56	242	538	162	724	1 655	56,9	97,9	134,4

Spindle bearings

With large or small balls
Steel or ceramic balls
Steel or Cronidur rings
Open or sealed
Design DLR

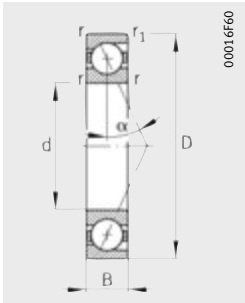

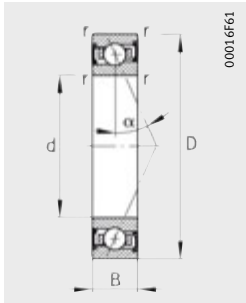

Dimension table (continued) · Dimensions in mm

Designation[1) 4)]			Mass	Dimensions								Contact angle
Series 719	Series 70	Series 72	m	d	D	B	r	r_1	B_N	S_N	S_B	α
			≈kg				min.					°
B71905-C-T-P4S	–	–	0,04	**25**	42	9	0,3	0,3	–	–	–	15
B71905-E-T-P4S	–	–	0,04	**25**	42	9	0,3	0,3	–	–	–	25
HCB71905-C-T-P4S	–	–	0,04	**25**	42	9	0,3	0,3	–	–	–	15
HCB71905-E-T-P4S	–	–	0,04	**25**	42	9	0,3	0,3	–	–	–	25
XCB71905-C-T-P4S	–	–	0,04	**25**	42	9	0,3	0,3	–	–	–	15
XCB71905-E-T-P4S	–	–	0,04	**25**	42	9	0,3	0,3	–	–	–	25
HS71905-C-T-P4S	–	–	0,05	**25**	42	9	0,3	–	–	–	–	15
HS71905-E-T-P4S	–	–	0,05	**25**	42	9	0,3	–	–	–	–	25
HC71905-E-T-P4S	–	–	0,05	**25**	42	9	0,3	–	–	–	–	25
XC71905-E-T-P4S	–	–	0,05	**25**	42	9	0,3	–	–	–	–	25
–	**B7005-C-T-P4S**	–	0,08	**25**	47	12	0,6	0,6	–	–	–	15
–	**B7005-E-T-P4S**	–	0,08	**25**	47	12	0,6	0,6	–	–	–	25
–	**HCB7005-C-T-P4S**	–	0,06	**25**	47	12	0,6	0,6	2,2	6,6	1,4	15
–	**HCB7005-E-T-P4S**	–	0,06	**25**	47	12	0,6	0,6	2,2	6,6	1,4	25
–	**XCB7005-C-T-P4S**	–	0,06	**25**	47	12	0,6	0,6	2,2	6,6	1,4	15
–	**XCB7005-E-T-P4S**	–	0,06	**25**	47	12	0,6	0,6	2,2	6,6	1,4	25
–	**HS7005-C-T-P4S**	–	0,09	**25**	47	12	0,6	–	–	–	–	15
–	**HS7005-E-T-P4S**	–	0,09	**25**	47	12	0,6	–	–	–	–	25
–	**HC7005-E-T-P4S**	–	0,09	**25**	47	12	0,6	–	2,2	6,6	1,4	25
–	**XC7005-E-T-P4S**	–	0,09	**25**	47	12	0,6	–	2,2	6,6	1,4	25
–	–	**B7205-C-T-P4S**	0,12	**25**	52	15	1	1	–	–	–	15
–	–	**B7205-E-T-P4S**	0,12	**25**	52	15	1	1	–	–	–	25
–	–	**HCB7205-C-T-P4S**	0,11	**25**	52	15	1	1	–	–	–	15
–	–	**HCB7205-E-T-P4S**	0,11	**25**	52	15	1	1	–	–	–	25

1) Explanation of short designation, see section Bearing designations, page 82, *Figure 9*.

2) Explanation, see section Technical principles.

3) Minimal oil quantity lubrication.

4) The bearings are also available with gap seals.
Ordering examples: **B7005-C-2RSD-T-P4S-UL**
HSS7005-E-T-P4S-UL.

5) Ordering examples for Direct Lube design: **HCB7005-EDLR-T-P4S-UL**
HC7005-EDLR-T-P4S-UL.

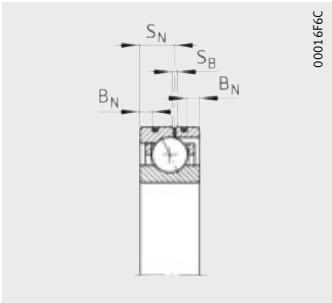

Design DLR[5)]

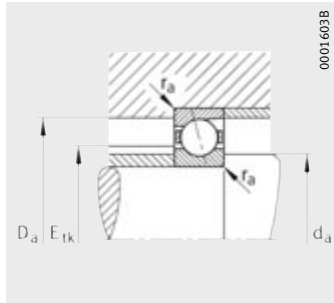

Mounting dimensions

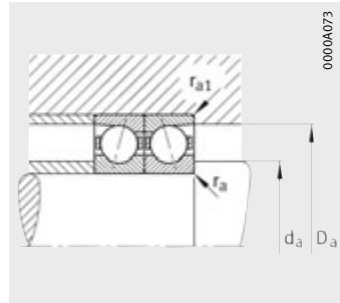

Mounting dimensions

Mounting dimensions					Basic load ratings		Limiting speeds		Preload force[2)] F_v			Lift-off force[2)] K_{aE}			Axial rigidity[2)] c_a		
d_a h12	D_a H12	r_a	r_{a1}	E_{tk}	dyn. C_r	stat. C_{0r}	n_G grease	n_G oil[3)]	L	M	H	L	M	H	L	M	H
		max.		nom.	kN	kN	min^{-1}	min^{-1}	N	N	N	N	N	N	N/µm	N/µm	N/µm
29	38,5	0,3	0,3	31,8	8,15	5,7	36 000	56 000	40	141	326	125	484	1 221	27	48,6	75,7
29	38,5	0,3	0,3	31,8	7,8	5,5	32 000	50 000	40	189	430	117	575	1 358	54,5	97,9	137,7
29	38,5	0,3	0,3	31,8	5,6	4	50 000	75 000	13	64	147	39	207	505	19,3	37,3	54,9
29	38,5	0,3	0,3	31,8	5,3	3,8	45 000	67 000	30	84	214	88	251	658	55,7	80,9	116
29	38,5	0,3	0,3	31,8	12,5	4	56 000	85 000	13	64	147	39	207	505	19,3	37,3	54,9
29	38,5	0,3	0,3	31,8	11,8	3,8	50 000	75 000	30	84	214	88	251	658	55,7	80,9	116
29	38,5	0,3	0,3	32,2	4,25	3,35	48 000	75 000	14	42	84	42	133	280	16,8	26,6	36,8
29	38,5	0,3	0,3	32,2	4	3,15	43 000	67 000	23	69	138	66	203	416	41,9	62,9	82,4
29	38,5	0,3	0,3	32,2	2,75	2,2	56 000	85 000	16	47	94	47	139	282	42,6	62	80,1
29	38,5	0,3	0,3	32,2	6,1	2,2	63 000	95 000	16	47	94	47	139	282	42,6	62	80,1
30	42	0,6	0,3	33,5	14,6	9,15	34 000	50 000	74	254	533	229	852	1 921	29,7	51,8	75,7
30	42	0,6	0,3	33,5	13,7	8,65	30 000	45 000	101	384	828	295	1 161	2 586	67,6	111,9	153,4
30	42	0,6	0,3	33,5	10	6,3	45 000	70 000	34	130	281	103	416	950	24,6	42,4	60,4
30	42	0,6	0,3	33,5	9,5	6	40 000	63 000	39	189	431	114	564	1 318	54,9	96,4	132,1
30	42	0,6	0,3	33,5	22,4	6,3	50 000	80 000	34	130	281	103	416	950	24,6	42,4	60,4
30	42	0,6	0,3	33,5	21,2	6	45 000	70 000	39	189	431	114	564	1 318	54,9	96,4	132,1
30	42	0,6	0,3	34,3	6,3	4,9	45 000	70 000	21	64	127	63	204	426	20,5	32,9	45,3
30	42	0,6	0,3	34,3	6	4,65	40 000	63 000	35	104	207	101	307	624	51,4	76,7	100,3
30	42	0,6	0,3	34,3	4,05	3,25	53 000	80 000	24	71	143	70	210	430	51,3	75,5	98,1
30	42	0,6	0,3	34,3	9	3,25	56 000	90 000	24	71	143	70	210	430	51,3	75,5	98,1
31,5	45,5	1	1	36,5	15,6	9,3	28 000	43 000	79	269	562	244	911	2 054	30,2	53,5	79
31,5	45,5	1	1	36,5	15	9	26 000	40 000	113	420	901	327	1 264	2 821	68,8	114,2	157,7
31,5	45,5	1	1	36,5	10,8	6,55	36 000	53 000	47	172	367	142	560	1 275	27,3	47,8	69,2
31,5	45,5	1	1	36,5	10,4	6,2	32 000	48 000	58	252	563	168	750	1 728	61,4	105,2	144,9

Spindle bearings

With large or small balls
Steel or ceramic balls
Steel or Cronidur rings
Open or sealed
Design DLR

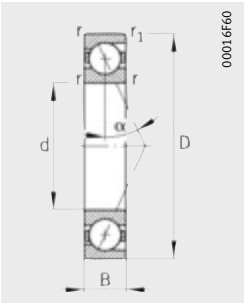

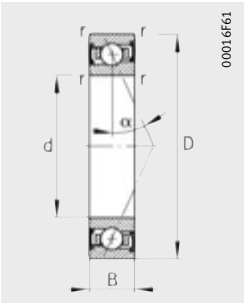

Dimension table (continued) · Dimensions in mm

Designation[1) 4)]			Mass	Dimensions								Contact angle
Series 719	Series 70	Series 72	m	d	D	B	r	r_1	B_N	S_N	S_B	α
			≈kg				min.					°
B71906-C-T-P4S	–	–	0,05	**30**	47	9	0,3	0,3	–	–	–	15
B71906-E-T-P4S	–	–	0,05	**30**	47	9	0,3	0,3	–	–	–	25
HCB71906-C-T-P4S	–	–	0,04	**30**	47	9	0,3	0,3	1,1	5,3	1,4	15
HCB71906-E-T-P4S	–	–	0,04	**30**	47	9	0,3	0,3	1,1	5,3	1,4	25
XCB71906-C-T-P4S	–	–	0,04	**30**	47	9	0,3	0,3	1,1	5,3	1,4	15
XCB71906-E-T-P4S	–	–	0,04	**30**	47	9	0,3	0,3	1,1	5,3	1,4	25
RS71906-D-T-P4S	–	–	0,05	**30**	47	9	0,3	0,3	–	–	–	20
HCRS71906-D-T-P4S	–	–	0,04	**30**	47	9	0,3	0,3	1,1	5,3	1,4	20
HS71906-C-T-P4S	–	–	0,05	**30**	47	9	0,3	–	–	–	–	15
HS71906-E-T-P4S	–	–	0,05	**30**	47	9	0,3	–	–	–	–	25
HC71906-E-T-P4S	–	–	0,05	**30**	47	9	0,3	–	1,1	5,3	1,4	25
XC71906-E-T-P4S	–	–	0,05	**30**	47	9	0,3	–	1,1	5,3	1,4	25
–	**B7006-C-T-P4S**	–	0,11	**30**	55	13	1	1	–	–	–	15
–	**B7006-E-T-P4S**	–	0,11	**30**	55	13	1	1	–	–	–	25
–	**HCB7006-C-T-P4S**	–	0,1	**30**	55	13	1	1	2,8	7,2	1,4	15
–	**HCB7006-E-T-P4S**	–	0,1	**30**	55	13	1	1	2,8	7,2	1,4	25
–	**XCB7006-C-T-P4S**	–	0,1	**30**	55	13	1	1	2,8	7,2	1,4	15
–	**XCB7006-E-T-P4S**	–	0,1	**30**	55	13	1	1	2,8	7,2	1,4	25
–	**RS7006-D-T-P4S**	–	0,11	**30**	55	13	1	1	–	–	–	20
–	**HCRS7006-D-T-P4S**	–	0,1	**30**	55	13	1	1	2,8	7,2	1,4	20
–	**HS7006-C-T-P4S**	–	0,13	**30**	55	13	1	–	–	–	–	15
–	**HS7006-E-T-P4S**	–	0,13	**30**	55	13	1	–	–	–	–	25
–	**HC7006-E-T-P4S**	–	0,12	**30**	55	13	1	–	2,8	7,2	1,4	25
–	**XC7006-E-T-P4S**	–	0,12	**30**	55	13	1	–	2,8	7,2	1,4	25
–	–	**B7206-C-T-P4S**	0,19	**30**	62	16	1	1	–	–	–	15
–	–	**B7206-E-T-P4S**	0,19	**30**	62	16	1	1	–	–	–	25
–	–	**HCB7206-C-T-P4S**	0,17	**30**	62	16	1	1	–	–	–	15
–	–	**HCB7206-E-T-P4S**	0,17	**30**	62	16	1	1	–	–	–	25

1) Explanation of short designation, see section Bearing designations, page 82, *Figure 9*.

2) Explanation, see section Technical principles.

3) Minimal oil quantity lubrication.

4) The bearings are also available with gap seals.
Ordering examples: **B7006-C-2RSD-T-P4S-UL**
HSS7006-E-T-P4S-UL.

5) Ordering examples for Direct Lube design: **HCB7006-EDLR-T-P4S-UL**
HC7006-EDLR-T-P4S-UL.

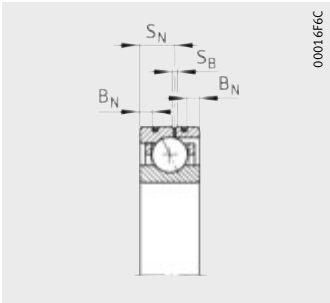

Design DLR[5)]

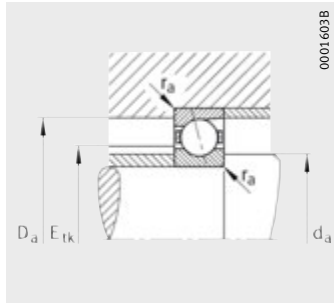

Mounting dimensions

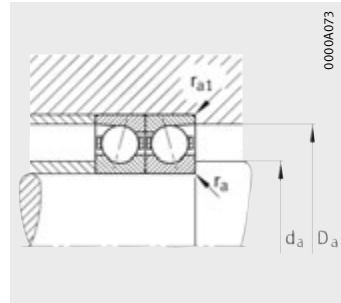

Mounting dimensions

Mounting dimensions					Basic load ratings		Limiting speeds		Preload force[2)] F_v			Lift-off force[2)] K_{aE}			Axial rigidity[2)] c_a		
d_a h12	D_a H12	r_a	r_{a1}	E_{tk}	dyn. C_r	stat. C_{0r}	n_G grease	n_G oil[3)]	L	M	H	L	M	H	L	M	H
		max.		nom.	kN	kN	min^{-1}	min^{-1}	N	N	N	N	N	N	N/µm	N/µm	N/µm
34	43,5	0,3	0,3	36,8	8,65	6,55	30 000	48 000	42	158	345	131	542	1 284	29,5	54,3	82,1
34	43,5	0,3	0,3	36,8	8,15	6,3	28 000	43 000	40	194	445	117	588	1 399	58,7	105,7	148,9
34	43,5	0,3	0,3	36,8	6	4,65	43 000	67 000	14	66	153	42	212	522	21,3	40,2	59,2
34	43,5	0,3	0,3	36,8	5,6	4,4	38 000	60 000	30	86	223	88	257	683	59,9	87,7	125,9
34	43,5	0,3	0,3	36,8	13,4	4,65	48 000	75 000	14	66	153	42	212	522	21,3	40,2	59,2
34	43,5	0,3	0,3	36,8	12,5	4,4	43 000	67 000	30	86	223	88	257	683	59,9	87,7	125,9
34	43,5	0,3	0,3	36,8	8,5	6,4	36 000	56 000	39	116	232	117	360	743	41	62,6	83,7
34	43,5	0,3	0,3	36,8	5,85	4,55	45 000	70 000	27	80	160	80	243	499	40,4	60,6	79,8
34	43,5	0,3	0,3	36,8	6,4	5,2	43 000	63 000	21	64	129	63	203	431	21,1	33,7	46,8
34	43,5	0,3	0,3	36,8	6	4,9	38 000	60 000	35	105	209	101	310	629	53,1	79,4	103,6
34	43,5	0,3	0,3	36,8	4,15	3,45	48 000	75 000	24	72	145	70	213	435	53	78,3	101,5
34	43,5	0,3	0,3	36,8	9,3	3,45	53 000	85 000	24	72	145	70	213	435	53	78,3	101,5
36	49	1	0,3	40,4	15	10,2	28 000	43 000	75	260	545	234	885	1 998	32,7	57,8	85,1
36	49	1	0,3	40,4	14,3	9,8	24 000	38 000	102	397	861	300	1 211	2 721	74,1	124,1	171,3
36	49	1	0,3	40,4	10,4	7,2	38 000	60 000	35	137	297	107	445	1 022	27,2	47,7	68,5
36	49	1	0,3	40,4	10	6,8	34 000	53 000	38	193	446	111	580	1 377	58,9	106	146,6
36	49	1	0,3	40,4	23,2	7,2	43 000	67 000	35	137	297	107	445	1 022	27,2	47,7	68,5
36	49	1	0,3	40,4	22,4	6,8	38 000	60 000	38	193	446	111	580	1 377	58,9	106	146,6
36	49	1	0,3	40,4	15	10	32 000	50 000	68	205	410	204	638	1 317	46,2	71	95,1
36	49	1	0,3	40,4	10,2	7,1	40 000	63 000	46	139	278	136	423	869	45,1	68,2	90
36	49	1	0,3	40,5	8,8	7,1	38 000	56 000	29	88	176	87	280	589	24,2	38,7	53,4
36	49	1	0,3	40,5	8,3	6,7	34 000	53 000	48	143	285	139	422	859	60,8	90,6	118,3
36	49	1	0,3	40,5	5,7	4,65	43 000	67 000	33	99	198	96	293	595	60,5	89,6	115,9
36	49	1	0,3	40,5	12,7	4,65	48 000	75 000	33	99	198	96	293	595	60,5	89,6	115,9
37,5	54,5	1	1	43,7	23,2	14,6	24 000	38 000	122	412	856	388	1 445	3 250	42,1	75,5	112,3
37,5	54,5	1	1	43,7	22	14	22 000	36 000	175	637	1 357	517	1 967	4 361	94,8	157,3	217,9
37,5	54,5	1	1	43,7	16	10,2	30 000	45 000	75	268	566	233	902	2 040	38,4	67,5	98,3
37,5	54,5	1	1	43,7	15,3	9,8	26 000	40 000	100	407	895	295	1 243	2 820	87,5	148	203,6

Spindle bearings

With large or small balls
Steel or ceramic balls
Steel or Cronidur rings
Open or sealed
Design DLR

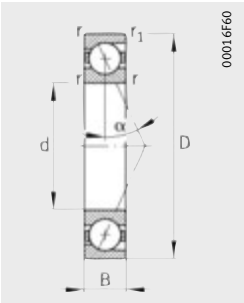

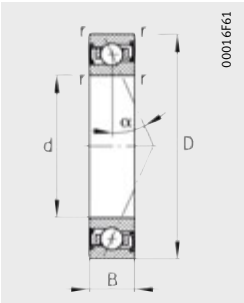

Dimension table (continued) · Dimensions in mm

Designation[1) 4)]			Mass	Dimensions								Contact angle
Series 719	Series 70	Series 72	m	d	D	B	r	r_1	B_N	S_N	S_B	α
			≈kg				min.					°
B71907-C-T-P4S	–	–	0,07	**35**	55	10	0,6	0,6	–	–	–	15
B71907-E-T-P4S	–	–	0,07	**35**	55	10	0,6	0,6	–	–	–	25
HCB71907-C-T-P4S	–	–	0,06	**35**	55	10	0,6	0,6	1,6	5,8	1,4	15
HCB71907-E-T-P4S	–	–	0,06	**35**	55	10	0,6	0,6	1,6	5,8	1,4	25
XCB71907-C-T-P4S	–	–	0,06	**35**	55	10	0,6	0,6	1,6	5,8	1,4	15
XCB71907-E-T-P4S	–	–	0,06	**35**	55	10	0,6	0,6	1,6	5,8	1,4	25
RS71907-D-T-P4S	–	–	0,07	**35**	55	10	0,6	0,6	–	–	–	20
HCRS71907-D-T-P4S	–	–	0,06	**35**	55	10	0,6	0,6	1,6	5,8	1,4	20
HS71907-C-T-P4S	–	–	0,08	**35**	55	10	0,6	–	–	–	–	15
HS71907-E-T-P4S	–	–	0,08	**35**	55	10	0,6	–	–	–	–	25
HC71907-E-T-P4S	–	–	0,08	**35**	55	10	0,6	–	1,6	5,8	1,4	25
XC71907-E-T-P4S	–	–	0,08	**35**	55	10	0,6	–	1,6	5,8	1,4	25
–	**B7007-C-T-P4S**	–	0,15	**35**	62	14	1	1	–	–	–	15
–	**B7007-E-T-P4S**	–	0,15	**35**	62	14	1	1	–	–	–	25
–	**HCB7007-C-T-P4S**	–	0,13	**35**	62	14	1	1	2,8	8	1,4	15
–	**HCB7007-E-T-P4S**	–	0,13	**35**	62	14	1	1	2,8	8	1,4	25
–	**XCB7007-C-T-P4S**	–	0,13	**35**	62	14	1	1	2,8	8	1,4	15
–	**XCB7007-E-T-P4S**	–	0,13	**35**	62	14	1	1	2,8	8	1,4	25
–	**RS7007-D-T-P4S**	–	0,15	**35**	62	14	1	1	–	–	–	20
–	**HCRS7007-D-T-P4S**	–	0,13	**35**	62	14	1	1	2,8	8	1,4	20
–	**HS7007-C-T-P4S**	–	0,17	**35**	62	14	1	–	–	–	–	15
–	**HS7007-E-T-P4S**	–	0,17	**35**	62	14	1	–	–	–	–	25
–	**HC7007-E-T-P4S**	–	0,17	**35**	62	14	1	–	2,8	8	1,4	25
–	**XC7007-E-T-P4S**	–	0,17	**35**	62	14	1	–	2,8	8	1,4	25
–	–	**B7207-C-T-P4S**	0,28	**35**	72	17	1,1	1,1	–	–	–	15
–	–	**B7207-E-T-P4S**	0,28	**35**	72	17	1,1	1,1	–	–	–	25
–	–	**HCB7207-C-T-P4S**	0,24	**35**	72	17	1,1	1,1	–	–	–	15
–	–	**HCB7207-E-T-P4S**	0,24	**35**	72	17	1,1	1,1	–	–	–	25

1) Explanation of short designation, see section Bearing designations, page 82, *Figure 9*.

2) Explanation, see section Technical principles.

3) Minimal oil quantity lubrication.

4) The bearings are also available with gap seals.
Ordering examples: **B7007-C-2RSD-T-P4S-UL**
HSS7007-E-T-P4S-UL.

5) Ordering examples for Direct Lube design: **HCB7007-EDLR-T-P4S-UL**
HC7007-EDLR-T-P4S-UL.

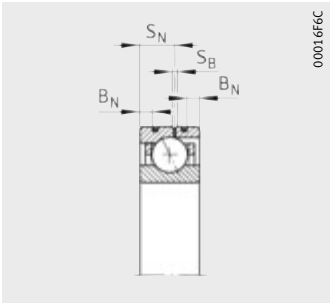

Design DLR[5)]

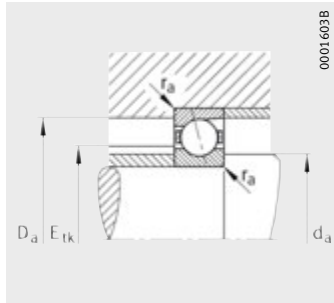

Mounting dimensions

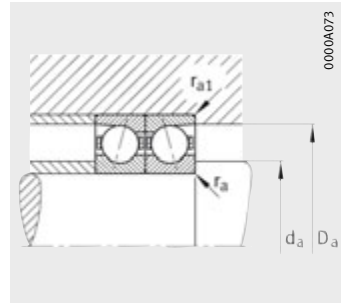

Mounting dimensions

Mounting dimensions					Basic load ratings		Limiting speeds		Preload force[2)] F_v			Lift-off force[2)] K_{aE}			Axial rigidity[2)] c_a		
d_a h12	D_a H12	r_a	r_{a1}	E_{tk}	dyn. C_r	stat. C_{0r}	n_G grease	n_G oil[3)]	L	M	H	L	M	H	L	M	H
		max.		nom.	kN	kN	min^{-1}	min^{-1}	N	N	N	N	N	N	N/µm	N/µm	N/µm
40	51,5	0,6	0,6	44	11,8	9,5	26 000	40 000	61	209	481	190	711	1 782	36,3	64,1	99,3
40	51,5	0,6	0,6	44	11	9	24 000	36 000	61	276	619	178	835	1 945	73,5	129,4	180,6
40	51,5	0,6	0,6	44	8,15	6,55	36 000	56 000	21	96	217	63	309	741	26,7	49,7	72,4
40	51,5	0,6	0,6	44	7,65	6,3	32 000	50 000	44	127	316	129	380	968	74,1	108,9	154
40	51,5	0,6	0,6	44	18	6,55	40 000	60 000	21	96	217	63	309	741	26,7	49,7	72,4
40	51,5	0,6	0,6	44	17	6,3	36 000	56 000	44	127	316	129	380	968	74,1	108,9	154
40	51,5	0,6	0,6	44	11,4	9,3	30 000	48 000	52	156	311	156	484	997	50	76,7	102,5
40	51,5	0,6	0,6	44	8	6,55	38 000	60 000	36	109	218	107	332	681	49,3	74,6	98,4
40	51,5	0,6	0,6	43,3	6,95	6,2	36 000	56 000	24	71	142	72	224	471	24,8	38,9	53,6
40	51,5	0,6	0,6	43,3	6,55	5,85	32 000	50 000	38	115	230	110	339	690	61,4	91,7	119,6
40	51,5	0,6	0,6	43,3	4,5	4,05	40 000	63 000	26	79	159	75	233	476	60,5	90,4	117,1
40	51,5	0,6	0,6	43,3	10	4,05	45 000	70 000	26	79	159	75	233	476	60,5	90,4	117,1
41	56	1	0,3	45,6	19	13,7	24 000	38 000	97	333	697	303	1 132	2 548	38,7	67,8	99,5
41	56	1	0,3	45,6	18,3	12,9	22 000	34 000	136	518	1 116	400	1 577	3 525	88,4	146,9	202,1
41	56	1	0,3	45,6	13,2	9,5	34 000	53 000	46	177	382	140	574	1 312	32,2	56,2	80,5
41	56	1	0,3	45,6	12,5	9	30 000	45 000	54	255	581	159	767	1 789	72,4	126,2	173,3
41	56	1	0,3	45,6	29	9,5	38 000	56 000	46	177	382	140	574	1 312	32,2	56,2	80,5
41	56	1	0,3	45,6	28	9	34 000	53 000	54	255	581	159	767	1 789	72,4	126,2	173,3
41	56	1	0,3	45,6	18,6	13,4	28 000	43 000	85	254	508	255	791	1 634	54,9	84,2	113
41	56	1	0,3	45,6	12,9	9,5	36 000	56 000	59	176	352	175	537	1 102	54,2	81,6	107,7
41	56	1	0,3	46,5	9,3	8,3	34 000	50 000	32	95	190	96	300	632	27,4	43,1	59,5
41	56	1	0,3	46,5	8,8	7,8	30 000	45 000	51	154	308	147	453	926	67,8	101,5	132,7
41	56	1	0,3	46,5	6,1	5,4	38 000	60 000	36	107	214	105	316	642	68,5	100,6	130,2
41	56	1	0,3	46,5	13,7	5,4	43 000	67 000	36	107	214	105	316	642	68,5	100,6	130,2
44	63	1	1	50,7	25,5	18	20 000	34 000	136	454	942	427	1 555	3 475	45,3	79,1	116
44	63	1	1	50,7	24,5	17	19 000	32 000	197	714	1 521	580	2 185	4 825	103,9	170,4	234,1
44	63	1	1	50,7	17,6	8,8	26 000	40 000	66	241	514	202	786	1 777	37,9	65,1	93,2
44	63	1	1	50,7	16,6	8,5	22 000	36 000	84	362	804	247	1 091	2 489	86,9	147,5	201,3

Spindle bearings

With large or small balls
Steel or ceramic balls
Steel or Cronidur rings
Open or sealed
Design DLR

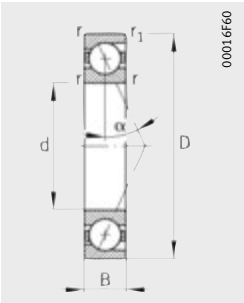

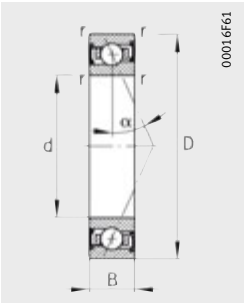

Dimension table (continued) · Dimensions in mm

Designation[1) 4)]			Mass	Dimensions								Contact angle
Series 719	Series 70	Series 72	m	d	D	B	r	r_1	B_N	S_N	S_B	α
			≈kg				min.					°
B71908-C-T-P4S	–	–	0,11	**40**	62	12	0,6	0,6	–	–	–	15
B71908-E-T-P4S	–	–	0,11	**40**	62	12	0,6	0,6	–	–	–	25
HCB71908-C-T-P4S	–	–	0,09	**40**	62	12	0,6	0,6	2,2	6,6	1,4	15
HCB71908-E-T-P4S	–	–	0,09	**40**	62	12	0,6	0,6	2,2	6,6	1,4	25
XCB71908-C-T-P4S	–	–	0,09	**40**	62	12	0,6	0,6	2,2	6,6	1,4	15
XCB71908-E-T-P4S	–	–	0,09	**40**	62	12	0,6	0,6	2,2	6,6	1,4	25
RS71908-D-T-P4S	–	–	0,11	**40**	62	12	0,6	0,6	–	–	–	20
HCRS71908-D-T-P4S	–	–	0,09	**40**	62	12	0,6	0,6	2,2	6,6	1,4	20
HS71908-C-T-P4S	–	–	0,13	**40**	62	12	0,6	–	–	–	–	15
HS71908-E-T-P4S	–	–	0,13	**40**	62	12	0,6	–	–	–	–	25
HC71908-E-T-P4S	–	–	0,12	**40**	62	12	0,6	–	2,2	6,6	1,4	25
XC71908-E-T-P4S	–	–	0,12	**40**	62	12	0,6	–	2,2	6,6	1,4	25
–	**B7008-C-T-P4S**	–	0,19	**40**	68	15	1	1	–	–	–	15
–	**B7008-E-T-P4S**	–	0,19	**40**	68	15	1	1	–	–	–	25
–	**HCB7008-C-T-P4S**	–	0,17	**40**	68	15	1	1	2,8	8,5	1,4	15
–	**HCB7008-E-T-P4S**	–	0,17	**40**	68	15	1	1	2,8	8,5	1,4	25
–	**XCB7008-C-T-P4S**	–	0,17	**40**	68	15	1	1	2,8	8,5	1,4	15
–	**XCB7008-E-T-P4S**	–	0,17	**40**	68	15	1	1	2,8	8,5	1,4	25
–	**RS7008-D-T-P4S**	–	0,19	**40**	68	15	1	1	–	–	–	20
–	**HCRS7008-D-T-P4S**	–	0,17	**40**	68	15	1	1	2,8	8,5	1,4	20
–	**HS7008-C-T-P4S**	–	0,22	**40**	68	15	1	–	–	–	–	15
–	**HS7008-E-T-P4S**	–	0,22	**40**	68	15	1	–	–	–	–	25
–	**HC7008-E-T-P4S**	–	0,2	**40**	68	15	1	–	2,8	8,5	1,4	25
–	**XC7008-E-T-P4S**	–	0,2	**40**	68	15	1	–	2,8	8,5	1,4	25
–	–	**B7208-C-T-P4S**	0,37	**40**	80	18	1,1	1,1	–	–	–	15
–	–	**B7208-E-T-P4S**	0,37	**40**	80	18	1,1	1,1	–	–	–	25
–	–	**HCB7208-C-T-P4S**	0,33	**40**	80	18	1,1	1,1	–	–	–	15
–	–	**HCB7208-E-T-P4S**	0,33	**40**	80	18	1,1	1,1	–	–	–	25

1) Explanation of short designation, see section Bearing designations, page 82, *Figure 9*.

2) Explanation, see section Technical principles.

3) Minimal oil quantity lubrication.

4) The bearings are also available with gap seals.
Ordering examples: **B7008-C-2RSD-T-P4S-UL**
HSS7008-E-T-P4S-UL.

5) Ordering examples for Direct Lube design: **HCB7008-EDLR-T-P4S-UL**
HC7008-EDLR-T-P4S-UL.

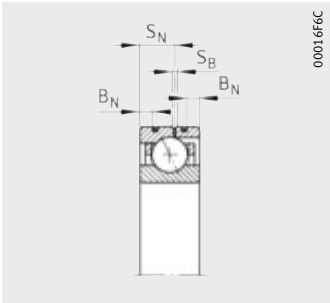

Design DLR[5)]

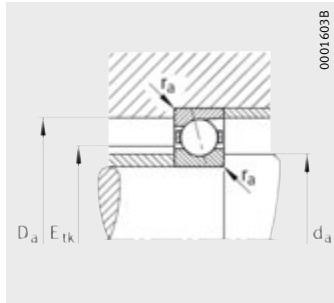

Mounting dimensions

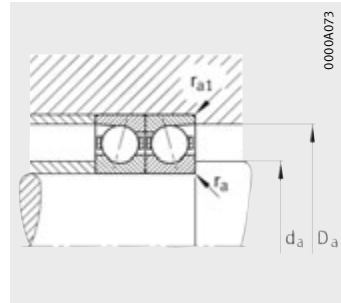

Mounting dimensions

Mounting dimensions					Basic load ratings		Limiting speeds		Preload force[2)] F_v			Lift-off force[2)] K_{aE}			Axial rigidity[2)] c_a		
d_a h12	D_a H12	r_a max.	r_{a1} max.	E_{tk} nom.	dyn. C_r kN	stat. C_{0r} kN	n_G grease min^{-1}	n_G oil[3)] min^{-1}	L N	M N	H N	L N	M N	H N	L N/µm	M N/µm	H N/µm
45	58,5	0,6	0,6	49,1	17,6	13,7	24 000	36 000	85	300	633	265	1 019	2 315	41,1	72,9	107,4
45	58,5	0,6	0,6	49,1	16,6	13,2	20 000	32 000	112	450	984	328	1 366	3 101	91,7	155,3	215
45	58,5	0,6	0,6	49,1	12,2	9,65	32 000	50 000	39	156	341	119	505	1 170	33,9	59,8	86,1
45	58,5	0,6	0,6	49,1	11,4	9,15	28 000	45 000	76	222	519	224	666	1 596	90,7	133,7	185,4
45	58,5	0,6	0,6	49,1	27	9,65	36 000	53 000	39	156	341	119	505	1 170	33,9	59,8	86,1
45	58,5	0,6	0,6	49,1	25,5	9,15	32 000	50 000	76	222	519	224	666	1 596	90,7	133,7	185,4
45	58,5	0,6	0,6	49,1	17,3	13,4	26 000	40 000	79	236	472	237	733	1 515	58,4	89,3	119,6
45	58,5	0,6	0,6	49,1	11,8	9,5	34 000	53 000	54	161	322	160	490	1 006	57,2	86,1	113,5
45	58,5	0,6	0,6	49,3	7,2	6,95	32 000	48 000	25	74	147	75	233	484	27	42,3	57,7
45	58,5	0,6	0,6	49,3	6,8	6,4	28 000	43 000	40	120	239	115	352	715	66,9	99,9	130
45	58,5	0,6	0,6	49,3	4,75	4,5	36 000	56 000	28	83	166	81	244	496	67	98,7	127,8
45	58,5	0,6	0,6	49,3	10,6	4,5	40 000	63 000	28	83	166	81	244	496	67	98,7	127,8
46	62	1	0,3	50,8	20,4	16	22 000	34 000	102	353	743	318	1 201	2 722	43,5	76,9	113,2
46	62	1	0,3	50,8	19,6	15	20 000	30 000	142	547	1 180	417	1 665	3 728	99,2	165,8	228,5
46	62	1	0,3	50,8	14,3	11	30 000	45 000	48	187	406	146	607	1 397	36,2	63,5	91,3
46	62	1	0,3	50,8	13,4	10,6	28 000	43 000	55	269	617	161	809	1 900	80,3	142,5	196,1
46	62	1	0,3	50,8	32	11	34 000	50 000	48	187	406	146	607	1 397	36,2	63,5	91,3
46	62	1	0,3	50,8	30	10,6	30 000	45 000	55	269	617	161	809	1 900	80,3	142,5	196,1
46	62	1	0,3	50,8	20	15,6	26 000	40 000	91	273	546	273	848	1 751	61	93,4	125,1
46	62	1	0,3	50,8	14	11	32 000	50 000	64	191	382	190	582	1 194	60,4	90,9	119,9
46	62	1	0,3	52	10	9,3	30 000	45 000	34	101	201	102	318	665	30,3	47,5	65,2
46	62	1	0,3	52	9,3	8,65	26 000	40 000	54	163	327	156	479	981	75,1	112	146,4
46	62	1	0,3	52	6,4	6,1	34 000	53 000	38	113	225	110	333	673	75,1	110,9	143,1
46	62	1	0,3	52	14,3	6,1	38 000	60 000	38	113	225	110	333	673	75,1	110,9	143,1
48	72	1	1	56,7	32	22,4	18 000	30 000	176	584	1 204	554	2 007	4 451	49,6	86,5	126,5
48	72	1	1	56,7	30,5	21,6	17 000	28 000	259	912	1 925	764	2 796	6 112	114,2	185,5	253,8
48	72	1	1	56,7	22	15,6	24 000	38 000	89	314	662	273	1 027	2 296	42,1	71,5	102
48	72	1	1	56,7	21,2	15	20 000	34 000	118	477	1 045	347	1 441	3 235	97,6	162,5	220,5

Spindle bearings

With large or small balls
Steel or ceramic balls
Steel or Cronidur rings
Open or sealed
Design DLR

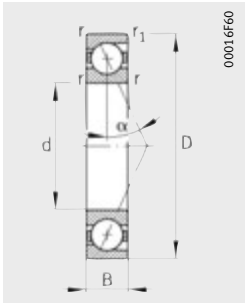

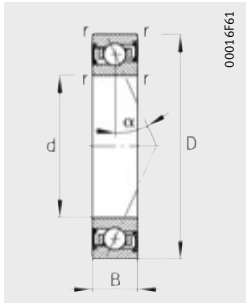

Dimension table (continued) · Dimensions in mm

Designation[1) 4)]			Mass	Dimensions								Contact angle
Series 719	Series 70	Series 72	m	d	D	B	r	r_1	B_N	S_N	S_B	α
			≈kg				min.					°
B71909-C-T-P4S	–	–	0,13	**45**	68	12	0,6	0,6	–	–	–	15
B71909-E-T-P4S	–	–	0,13	**45**	68	12	0,6	0,6	–	–	–	25
HCB71909-C-T-P4S	–	–	0,11	**45**	68	12	0,6	0,6	2,2	6,6	1,4	15
HCB71909-E-T-P4S	–	–	0,11	**45**	68	12	0,6	0,6	2,2	6,6	1,4	25
XCB71909-C-T-P4S	–	–	0,11	**45**	68	12	0,6	0,6	2,2	6,6	1,4	15
XCB71909-E-T-P4S	–	–	0,11	**45**	68	12	0,6	0,6	2,2	6,6	1,4	25
RS71909-D-T-P4S	–	–	0,13	**45**	68	12	0,6	0,6	–	–	–	20
HCRS71909-D-T-P4S	–	–	0,11	**45**	68	12	0,6	0,6	2,2	6,6	1,4	20
HS71909-C-T-P4S	–	–	0,14	**45**	68	12	0,6	–	–	–	–	15
HS71909-E-T-P4S	–	–	0,14	**45**	68	12	0,6	–	–	–	–	25
HC71909-E-T-P4S	–	–	0,13	**45**	68	12	0,6	–	2,2	6,6	1,4	25
XC71909-E-T-P4S	–	–	0,13	**45**	68	12	0,6	–	2,2	6,6	1,4	25
–	**B7009-C-T-P4S**	–	0,23	**45**	75	16	1	1	–	–	–	15
–	**B7009-E-T-P4S**	–	0,23	**45**	75	16	1	1	–	–	–	25
–	**HCB7009-C-T-P4S**	–	0,2	**45**	75	16	1	1	3,4	9,3	1,4	15
–	**HCB7009-E-T-P4S**	–	0,2	**45**	75	16	1	1	3,4	9,3	1,4	25
–	**XCB7009-C-T-P4S**	–	0,2	**45**	75	16	1	1	3,4	9,3	1,4	15
–	**XCB7009-E-T-P4S**	–	0,2	**45**	75	16	1	1	3,4	9,3	1,4	25
–	**RS7009-D-T-P4S**	–	0,23	**45**	75	16	1	1	–	–	–	20
–	**HCRS7009-D-T-P4S**	–	0,2	**45**	75	16	1	1	3,4	9,3	1,4	20
–	**HS7009-C-T-P4S**	–	0,27	**45**	75	16	1	–	–	–	–	15
–	**HS7009-E-T-P4S**	–	0,27	**45**	75	16	1	–	–	–	–	25
–	**HC7009-E-T-P4S**	–	0,26	**45**	75	16	1	–	3,4	9,3	1,4	25
–	**XC7009-E-T-P4S**	–	0,26	**45**	75	16	1	–	3,4	9,3	1,4	25
–	–	**B7209-C-T-P4S**	0,41	**45**	85	19	1,1	1,1	–	–	–	15
–	–	**B7209-E-T-P4S**	0,41	**45**	85	19	1,1	1,1	–	–	–	25
–	–	**HCB7209-C-T-P4S**	0,34	**45**	85	19	1,1	1,1	–	–	–	15
–	–	**HCB7209-E-T-P4S**	0,34	**45**	85	19	1,1	1,1	–	–	–	25

1) Explanation of short designation, see section Bearing designations, page 82, *Figure 9*.

2) Explanation, see section Technical principles.

3) Minimal oil quantity lubrication.

4) The bearings are also available with gap seals.
Ordering examples: **B7009-C-2RSD-T-P4S-UL**
HSS7009-E-T-P4S-UL.

5) Ordering examples for Direct Lube design: **HCB7009-EDLR-T-P4S-UL**
HC7009-EDLR-T-P4S-UL.

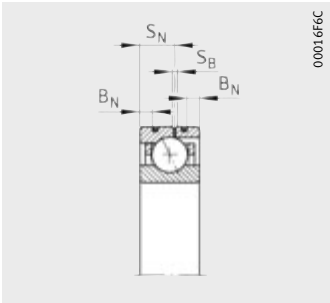

Design DLR[5)]

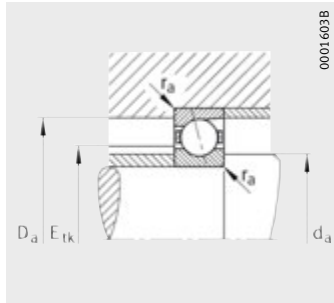

Mounting dimensions

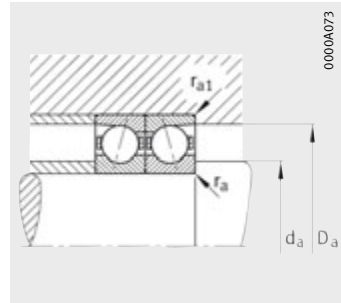

Mounting dimensions

Mounting dimensions					Basic load ratings		Limiting speeds		Preload force[2)] F_v			Lift-off force[2)] K_{aE}			Axial rigidity[2)] c_a		
d_a h12	D_a H12	r_a	r_{a1}	E_{tk}	dyn. C_r	stat. C_{0r}	n_G grease	n_G oil[3)]	L	M	H	L	M	H	L	M	H
		max.		nom.	kN	kN	min^{-1}	min^{-1}	N	N	N	N	N	N	N/µm	N/µm	N/µm
50	63,5	0,6	0,6	54,4	18,6	15,6	20 000	32 000	89	315	667	276	1 064	2 425	44,4	78,7	116
50	63,5	0,6	0,6	54,4	17,6	15	19 000	28 000	116	473	1 038	339	1 433	3 261	99,2	168,8	233,6
50	63,5	0,6	0,6	54,4	12,9	10,8	28 000	45 000	41	164	360	124	529	1 229	36,6	64,8	93,3
50	63,5	0,6	0,6	54,4	12,2	10,4	26 000	40 000	79	230	541	232	689	1 659	98,2	144,8	200,8
50	63,5	0,6	0,6	54,4	29	10,8	32 000	48 000	41	164	360	124	529	1 229	36,6	64,8	93,3
50	63,5	0,6	0,6	54,4	27	10,4	28 000	45 000	79	230	541	232	689	1 659	98,2	144,8	200,8
50	63,5	0,6	0,6	54,4	18	15,3	24 000	38 000	82	246	491	246	762	1 570	63,2	96,7	129,2
50	63,5	0,6	0,6	54,4	12,5	10,8	32 000	48 000	57	171	341	169	520	1 063	62,4	94	123,6
50	63,5	0,6	0,6	54,5	10	9,65	28 000	43 000	34	103	205	102	323	677	31	48,8	67,1
50	63,5	0,6	0,6	54,5	9,5	9	26 000	40 000	55	166	331	159	487	992	77,5	115,4	150,5
50	63,5	0,6	0,6	54,5	6,55	6,3	32 000	50 000	38	115	230	110	339	688	77	114,4	147,8
50	63,5	0,6	0,6	54,5	14,6	6,3	36 000	56 000	38	115	230	110	339	688	77	114,4	147,8
51	69	1	0,3	56,2	27,5	21,2	19 000	30 000	145	490	1 019	453	1 669	3 734	50,2	87,8	128,6
51	69	1	0,3	56,2	26,5	20	17 000	26 000	209	768	1 638	614	2 344	5 176	115,5	190	260,6
51	69	1	0,3	56,2	19	14,6	26 000	40 000	72	264	562	220	858	1 935	42,5	73	104,2
51	69	1	0,3	56,2	18	14	24 000	38 000	90	393	876	264	1 182	2 706	97	165,3	225,7
51	69	1	0,3	56,2	42,5	14,6	30 000	45 000	72	264	562	220	858	1 935	42,5	73	104,2
51	69	1	0,3	56,2	40	14	26 000	40 000	90	393	876	264	1 182	2 706	97	165,3	225,7
51	69	1	0,3	56,2	27	20,8	22 000	36 000	123	369	737	369	1 146	2 364	68,8	105,4	141
51	69	1	0,3	56,2	18,6	14,6	30 000	45 000	85	254	508	252	773	1 586	67,7	101,9	134,4
51	69	1	0,3	57,7	12,9	12,2	26 000	40 000	44	131	263	131	412	870	34,3	54,2	74,9
51	69	1	0,3	57,7	12,2	11,4	24 000	36 000	71	214	428	204	628	1 283	85,7	128,1	167,4
51	69	1	0,3	57,7	8,3	8	30 000	48 000	49	147	294	142	431	876	85,5	126,1	163,3
51	69	1	0,3	57,7	18,6	8	34 000	53 000	49	147	294	142	431	876	85,5	126,1	163,3
52,5	78	1	1	61,8	33,5	24,5	17 000	28 000	184	607	1 252	578	2 078	4 609	52,7	91,5	133,6
52,5	78	1	1	61,8	32	23,6	15 000	24 000	270	955	2 016	796	2 916	6 388	121,6	197,3	270
52,5	78	1	1	61,8	23,2	12,2	22 000	36 000	93	329	694	285	1 074	2 400	44,8	76,1	108,3
52,5	78	1	1	61,8	22	11,6	18 000	30 000	121	493	1 083	356	1 487	3 346	103,4	172,2	233,8

Spindle bearings

With large or small balls
Steel or ceramic balls
Steel or Cronidur rings
Open or sealed
Design DLR

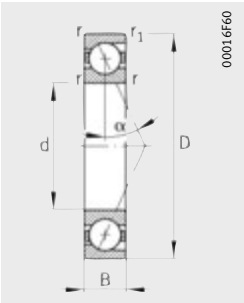

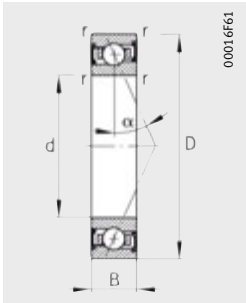

Dimension table (continued) · Dimensions in mm

Designation[1) 4)]			Mass	Dimensions								Contact angle
Series 719	Series 70	Series 72	m	d	D	B	r	r_1	B_N	S_N	S_B	α
			≈kg				min.					°
B71910-C-T-P4S	–	–	0,13	**50**	72	12	0,6	0,6	–	–	–	15
B71910-E-T-P4S	–	–	0,13	**50**	72	12	0,6	0,6	–	–	–	25
HCB71910-C-T-P4S	–	–	0,11	**50**	72	12	0,6	0,6	2,2	6,6	1,4	15
HCB71910-E-T-P4S	–	–	0,11	**50**	72	12	0,6	0,6	2,2	6,6	1,4	25
XCB71910-C-T-P4S	–	–	0,11	**50**	72	12	0,6	0,6	2,2	6,6	1,4	15
XCB71910-E-T-P4S	–	–	0,11	**50**	72	12	0,6	0,6	2,2	6,6	1,4	25
RS71910-D-T-P4S	–	–	0,13	**50**	72	12	0,6	0,6	–	–	–	20
HCRS71910-D-T-P4S	–	–	0,11	**50**	72	12	0,6	0,6	2,2	6,6	1,4	20
HS71910-C-T-P4S	–	–	0,15	**50**	72	12	0,6	–	–	–	–	15
HS71910-E-T-P4S	–	–	0,15	**50**	72	12	0,6	–	–	–	–	25
HC71910-E-T-P4S	–	–	0,14	**50**	72	12	0,6	–	2,2	6,6	1,4	25
XC71910-E-T-P4S	–	–	0,14	**50**	72	12	0,6	–	2,2	6,6	1,4	25
–	**B7010-C-T-P4S**	–	0,25	**50**	80	16	1	1	–	–	–	15
–	**B7010-E-T-P4S**	–	0,25	**50**	80	16	1	1	–	–	–	25
–	**HCB7010-C-T-P4S**	–	0,21	**50**	80	16	1	1	3,4	9,3	1,4	15
–	**HCB7010-E-T-P4S**	–	0,21	**50**	80	16	1	1	3,4	9,3	1,4	25
–	**XCB7010-C-T-P4S**	–	0,21	**50**	80	16	1	1	3,4	9,3	1,4	15
–	**XCB7010-E-T-P4S**	–	0,21	**50**	80	16	1	1	3,4	9,3	1,4	25
–	**RS7010-D-T-P4S**	–	0,25	**50**	80	16	1	1	–	–	–	20
–	**HCRS7010-D-T-P4S**	–	0,21	**50**	80	16	1	1	3,4	9,3	1,4	20
–	**HS7010-C-T-P4S**	–	0,29	**50**	80	16	1	–	–	–	–	15
–	**HS7010-E-T-P4S**	–	0,29	**50**	80	16	1	–	–	–	–	25
–	**HC7010-E-T-P4S**	–	0,27	**50**	80	16	1	–	3,4	9,3	1,4	25
–	**XC7010-E-T-P4S**	–	0,27	**50**	80	16	1	–	3,4	9,3	1,4	25
–	–	**B7210-C-T-P4S**	0,46	**50**	90	20	1,1	1,1	–	–	–	15
–	–	**B7210-E-T-P4S**	0,46	**50**	90	20	1,1	1,1	–	–	–	25
–	–	**HCB7210-C-T-P4S**	0,39	**50**	90	20	1,1	1,1	–	–	–	15
–	–	**HCB7210-E-T-P4S**	0,39	**50**	90	20	1,1	1,1	–	–	–	25

1) Explanation of short designation, see section Bearing designations, page 82, *Figure 9*.

2) Explanation, see section Technical principles.

3) Minimal oil quantity lubrication.

4) The bearings are also available with gap seals.
Ordering examples: **B7010-C-2RSD-T-P4S-UL**
HSS7010-E-T-P4S-UL.

5) Ordering examples for Direct Lube design: **HCB7010-EDLR-T-P4S-UL**
HC7010-EDLR-T-P4S-UL.

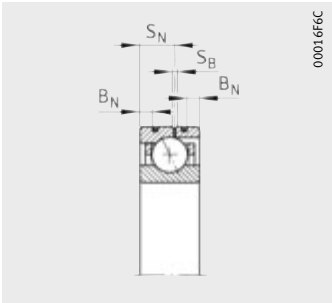

Design DLR[5)]

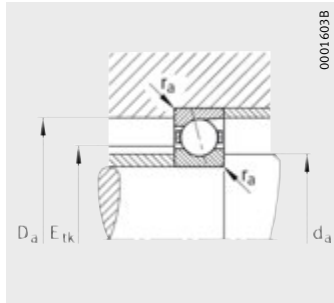

Mounting dimensions

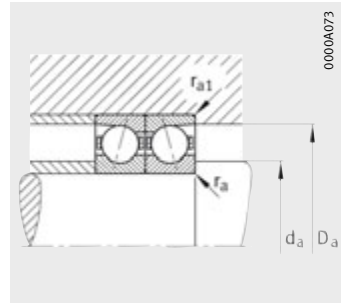

Mounting dimensions

Mounting dimensions					Basic load ratings		Limiting speeds		Preload force[2)] F_v			Lift-off force[2)] K_{aE}			Axial rigidity[2)] c_a		
d_a h12	D_a H12	r_a max.	r_{a1} max.	E_{tk} nom.	dyn. C_r kN	stat. C_{0r} kN	n_G grease min^{-1}	n_G oil[3)] min^{-1}	L N	M N	H N	L N	M N	H N	L N/µm	M N/µm	H N/µm
55	67,5	0,6	0,6	58,9	19	16,6	19 000	30 000	90	321	679	279	1 081	2 459	46	81,4	119,7
55	67,5	0,6	0,6	58,9	18	15,6	17 000	26 000	118	482	1 059	345	1 458	3 322	103,1	175,1	242,3
55	67,5	0,6	0,6	58,9	13,2	11,6	26 000	40 000	41	166	366	124	534	1 246	37,8	66,9	96,4
55	67,5	0,6	0,6	58,9	12,2	11	24 000	36 000	79	232	549	232	694	1 681	101,4	149,7	208
55	67,5	0,6	0,6	58,9	29	11,6	30 000	45 000	41	166	366	124	534	1 246	37,8	66,9	96,4
55	67,5	0,6	0,6	58,9	27	11	26 000	40 000	79	232	549	232	694	1 681	101,4	149,7	208
55	67,5	0,6	0,6	58,9	18,6	16,3	22 000	34 000	85	254	508	255	787	1 623	66,1	100,8	134,7
55	67,5	0,6	0,6	58,9	12,7	11,4	28 000	45 000	58	173	347	172	525	1 080	64,8	97,3	128,2
55	67,5	0,6	0,6	59	10,4	10,2	26 000	40 000	35	105	209	105	329	687	32,8	51,4	70,2
55	67,5	0,6	0,6	59	9,8	9,65	24 000	36 000	58	173	345	167	507	1 033	82,4	122,5	159,7
55	67,5	0,6	0,6	59	6,7	6,7	30 000	48 000	39	117	235	113	344	702	81,5	120,3	155,8
55	67,5	0,6	0,6	59	15	6,7	34 000	53 000	39	117	235	113	344	702	81,5	120,3	155,8
56	74	1	0,3	61,2	28,5	22,8	18 000	28 000	150	507	1 054	468	1 722	3 850	52,7	92	134,7
56	74	1	0,3	61,2	27	21,6	16 000	24 000	211	779	1 663	619	2 372	5 240	120,4	198,1	271,5
56	74	1	0,3	61,2	19,6	16	24 000	38 000	74	275	586	226	892	2 014	44,6	76,9	109,7
56	74	1	0,3	61,2	18,6	15,3	22 000	34 000	89	397	889	261	1 192	2 741	100,5	172,3	235,5
56	74	1	0,3	61,2	44	16	28 000	43 000	74	275	586	226	892	2 014	44,6	76,9	109,7
56	74	1	0,3	61,2	41,5	15,3	24 000	38 000	89	397	889	261	1 192	2 741	100,5	172,3	235,5
56	74	1	0,3	61,2	28	22,4	20 000	32 000	127	382	764	381	1 185	2 447	72,3	110,8	148,2
56	74	1	0,3	61,2	19,3	15,6	26 000	43 000	88	263	527	261	800	1 644	71,3	107,2	141,4
56	74	1	0,3	62,7	13,4	13,2	24 000	38 000	46	137	273	137	430	900	36,7	57,7	79,4
56	74	1	0,3	62,7	12,5	12,2	22 000	34 000	74	222	444	212	650	1 329	91,2	136,2	178
56	74	1	0,3	62,7	8,65	8,5	28 000	43 000	51	154	308	148	451	917	91,3	134,6	174,3
56	74	1	0,3	62,7	19,3	8,5	32 000	48 000	51	154	308	148	451	917	91,3	134,6	174,3
57	83	1	1	66,2	43	31,5	16 000	26 000	242	792	1 631	761	2 708	6 004	60,4	104,4	152,5
57	83	1	1	66,2	40,5	30,5	14 000	22 000	355	1 230	2 583	1 045	3 757	8 185	139,2	224,3	306,1
57	83	1	1	66,2	30	22	20 000	34 000	123	425	893	377	1 384	3 080	51,4	86,5	122,8
57	83	1	1	66,2	28	21,2	17 000	28 000	169	657	1 425	498	1 985	4 409	121	198,4	268,1

Spindle bearings

With large or small balls
Steel or ceramic balls
Steel or Cronidur rings
Open or sealed
Design DLR

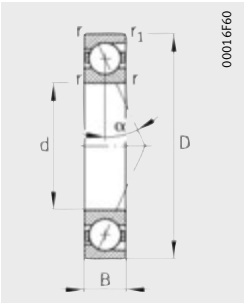

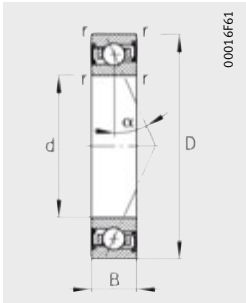

Dimension table (continued) · Dimensions in mm

Designation[1) 4)]			Mass	Dimensions								Contact angle
Series 719	Series 70	Series 72	m	d	D	B	r	r_1	B_N	S_N	S_B	α
			≈kg				min.					°
B71911-C-T-P4S	–	–	0,18	**55**	80	13	1	1	–	–	–	15
B71911-E-T-P4S	–	–	0,18	**55**	80	13	1	1	–	–	–	25
HCB71911-C-T-P4S	–	–	0,15	**55**	80	13	1	1	2,8	7,2	1,4	15
HCB71911-E-T-P4S	–	–	0,15	**55**	80	13	1	1	2,8	7,2	1,4	25
XCB71911-C-T-P4S	–	–	0,15	**55**	80	13	1	1	2,8	7,2	1,4	15
XCB71911-E-T-P4S	–	–	0,15	**55**	80	13	1	1	2,8	7,2	1,4	25
RS71911-D-T-P4S	–	–	0,18	**55**	80	13	1	1	–	–	–	20
HCRS71911-D-T-P4S	–	–	0,15	**55**	80	13	1	1	2,8	7,2	1,4	20
HS71911-C-T-P4S	–	–	0,2	**55**	80	13	1	–	–	–	–	15
HS71911-E-T-P4S	–	–	0,2	**55**	80	13	1	–	–	–	–	25
HC71911-E-T-P4S	–	–	0,19	**55**	80	13	1	–	2,8	7,2	1,4	25
XC71911-E-T-P4S	–	–	0,19	**55**	80	13	1	–	2,8	7,2	1,4	25
–	**B7011-C-T-P4S**	–	0,37	**55**	90	18	1,1	1,1	–	–	–	15
–	**B7011-E-T-P4S**	–	0,37	**55**	90	18	1,1	1,1	–	–	–	25
–	**HCB7011-C-T-P4S**	–	0,32	**55**	90	18	1,1	1,1	4,3	9,7	1,4	15
–	**HCB7011-E-T-P4S**	–	0,32	**55**	90	18	1,1	1,1	4,3	9,7	1,4	25
–	**XCB7011-C-T-P4S**	–	0,32	**55**	90	18	1,1	1,1	4,3	9,7	1,4	15
–	**XCB7011-E-T-P4S**	–	0,32	**55**	90	18	1,1	1,1	4,3	9,7	1,4	25
–	**RS7011-D-T-P4S**	–	0,37	**55**	90	18	1,1	1,1	–	–	–	20
–	**HCRS7011-D-T-P4S**	–	0,32	**55**	90	18	1,1	1,1	4,3	9,7	1,4	20
–	**HS7011-C-T-P4S**	–	0,43	**55**	90	18	1,1	–	–	–	–	15
–	**HS7011-E-T-P4S**	–	0,43	**55**	90	18	1,1	–	–	–	–	25
–	**HC7011-E-T-P4S**	–	0,4	**55**	90	18	1,1	–	4,3	9,7	1,4	25
–	**XC7011-E-T-P4S**	–	0,4	**55**	90	18	1,1	–	4,3	9,7	1,4	25
–	–	**B7211-C-T-P4S**	0,61	**55**	100	21	1,5	1,5	–	–	–	15
–	–	**B7211-E-T-P4S**	0,61	**55**	100	21	1,5	1,5	–	–	–	25
–	–	**HCB7211-C-T-P4S**	0,51	**55**	100	21	1,5	1,5	–	–	–	15
–	–	**HCB7211-E-T-P4S**	0,51	**55**	100	21	1,5	1,5	–	–	–	25

1) Explanation of short designation, see section Bearing designations, page 82, *Figure 9*.

2) Explanation, see section Technical principles.

3) Minimal oil quantity lubrication.

4) The bearings are also available with gap seals.
Ordering examples: **B7011-C-2RSD-T-P4S-UL**
HSS7011-E-T-P4S-UL.

5) Ordering examples for Direct Lube design: **HCB7011-EDLR-T-P4S-UL**
HC7011-EDLR-T-P4S-UL.

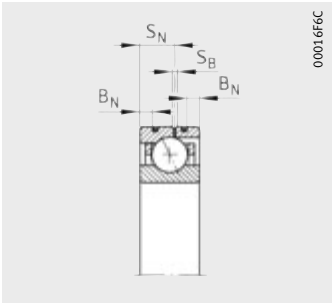

Design DLR[5)]

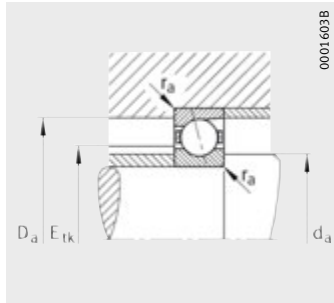

Mounting dimensions

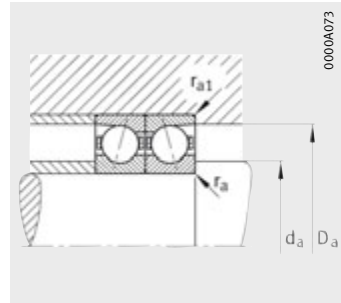

Mounting dimensions

Mounting dimensions					Basic load ratings		Limiting speeds		Preload force[2)] F_v			Lift-off force[2)] K_{aE}			Axial rigidity[2)] c_a		
d_a h12	D_a H12	r_a	r_{a1}	E_{tk}	dyn. C_r	stat. C_{0r}	n_G grease	n_G oil[3)]	L	M	H	L	M	H	L	M	H
		max.		nom.	kN	kN	min^{-1}	min^{-1}	N	N	N	N	N	N	N/µm	N/µm	N/µm
60	75,5	0,6	0,6	65,1	22,8	20,4	17 000	26 000	112	391	825	347	1 317	2 985	51,2	90	131,9
60	75,5	0,6	0,6	65,1	21,6	19,3	15 000	24 000	149	592	1 287	436	1 791	4 036	115,5	194,2	267,4
60	75,5	0,6	0,6	65,1	16	14,3	24 000	36 000	51	204	444	154	656	1 510	42,1	74,2	106,2
60	75,5	0,6	0,6	65,1	15	13,4	22 000	32 000	58	298	693	170	893	2 125	94,2	168,8	233,2
60	75,5	0,6	0,6	65,1	35,5	14,3	26 000	40 000	51	204	444	154	656	1 510	42,1	74,2	106,2
60	75,5	0,6	0,6	65,1	33,5	13,4	24 000	36 000	58	298	693	170	893	2 125	94,2	168,8	233,2
60	75,5	0,6	0,6	65,1	22,4	20	20 000	32 000	102	306	612	305	947	1 953	72,6	111	148,1
60	75,5	0,6	0,6	65,1	15,3	14	26 000	40 000	70	209	418	207	634	1 300	71,4	107,2	141
60	75,5	0,6	0,6	65,2	13,4	13,7	24 000	36 000	46	139	279	137	436	919	37,5	59,4	81,8
60	75,5	0,6	0,6	65,2	12,7	12,7	22 000	32 000	75	225	451	215	659	1 349	93,9	140,1	183,1
60	75,5	0,6	0,6	65,2	8,8	8,8	28 000	43 000	52	156	313	150	457	931	93,6	138,5	179,3
60	75,5	0,6	0,6	65,2	19,6	8,8	30 000	48 000	52	156	313	150	457	931	93,6	138,5	179,3
62	83	1	0,6	68,1	38	31	16 000	24 000	207	687	1 424	647	2 336	5 203	61,9	107,2	156,5
62	83	1	0,6	68,1	36	29	14 000	22 000	298	1 066	2 257	876	3 243	7 117	142,4	231,6	316,4
62	83	1	0,6	68,1	26	21,6	22 000	34 000	104	373	789	317	1 212	2 713	52,6	89,6	127,3
62	83	1	0,6	68,1	25	20,4	20 000	30 000	134	553	1 219	394	1 664	3 754	121,6	202,9	275,4
62	83	1	0,6	68,1	58,5	21,6	24 000	38 000	104	373	789	317	1 212	2 713	52,6	89,6	127,3
62	83	1	0,6	68,1	56	20,4	22 000	34 000	134	553	1 219	394	1 664	3 754	121,6	202,9	275,4
62	83	1	0,6	68,1	37,5	30	19 000	28 000	171	512	1 024	513	1 588	3 277	84	128,5	171,8
62	83	1	0,6	68,1	25,5	21,2	24 000	38 000	116	348	696	344	1 058	2 169	82,2	123,7	162,9
62	83	1	0,6	69,7	18,6	19	22 000	34 000	64	192	383	191	603	1 264	42,6	67,2	92,4
62	83	1	0,6	69,7	17,6	17,6	20 000	30 000	105	315	630	301	922	1 883	106,6	159,2	207,9
62	83	1	0,6	69,7	12,2	12,2	26 000	40 000	73	219	437	211	643	1 303	106,7	157,8	203,9
62	83	1	0,6	69,7	27	12,2	28 000	43 000	73	219	437	211	643	1 303	106,7	157,8	203,9
63	92	1,5	1,5	73,7	46,5	37,5	14 000	22 000	261	849	1 750	816	2 885	6 395	67,3	115,6	168,4
63	92	1,5	1,5	73,7	44	35,5	13 000	20 000	381	1 331	2 797	1 120	4 055	8 833	155,5	250,7	341,7
63	92	1,5	1,5	73,7	32	18,3	18 000	30 000	134	466	979	410	1 513	3 363	57,7	97	137,5
63	92	1,5	1,5	73,7	30,5	17,6	15 000	24 000	178	702	1 527	524	2 111	4 710	134,4	220,8	298,5

Spindle bearings

With large or small balls
Steel or ceramic balls
Steel or Cronidur rings
Open or sealed
Design DLR

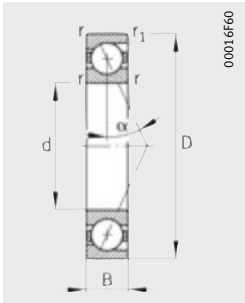

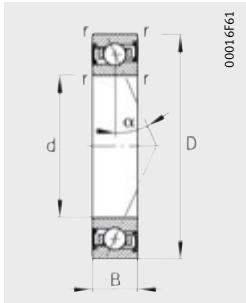

Dimension table (continued) · Dimensions in mm

Designation[1) 4)]			Mass	Dimensions								Contact angle
Series 719	Series 70	Series 72	m	d	D	B	r	r_1	B_N	S_N	S_B	α
			≈kg				min.					°
B71912-C-T-P4S	–	–	0,19	**60**	85	13	1	1	–	–	–	15
B71912-E-T-P4S	–	–	0,19	**60**	85	13	1	1	–	–	–	25
HCB71912-C-T-P4S	–	–	0,16	**60**	85	13	1	1	2,8	7,2	1,4	15
HCB71912-E-T-P4S	–	–	0,16	**60**	85	13	1	1	2,8	7,2	1,4	25
XCB71912-C-T-P4S	–	–	0,16	**60**	85	13	1	1	2,8	7,2	1,4	15
XCB71912-E-T-P4S	–	–	0,16	**60**	85	13	1	1	2,8	7,2	1,4	25
RS71912-D-T-P4S	–	–	0,19	**60**	85	13	1	1	–	–	–	20
HCRS71912-D-T-P4S	–	–	0,16	**60**	85	13	1	1	2,8	7,2	1,4	20
HS71912-C-T-P4S	–	–	0,21	**60**	85	13	1	–	–	–	–	15
HS71912-E-T-P4S	–	–	0,21	**60**	85	13	1	–	–	–	–	25
HC71912-E-T-P4S	–	–	0,19	**60**	85	13	1	–	2,8	7,2	1,4	25
XC71912-E-T-P4S	–	–	0,19	**60**	85	13	1	–	2,8	7,2	1,4	25
–	**B7012-C-T-P4S**	–	0,4	**60**	95	18	1,1	1,1	–	–	–	15
–	**B7012-E-T-P4S**	–	0,4	**60**	95	18	1,1	1,1	–	–	–	25
–	**HCB7012-C-T-P4S**	–	0,34	**60**	95	18	1,1	1,1	4,3	9,7	1,4	15
–	**HCB7012-E-T-P4S**	–	0,34	**60**	95	18	1,1	1,1	4,3	9,7	1,4	25
–	**XCB7012-C-T-P4S**	–	0,34	**60**	95	18	1,1	1,1	4,3	9,7	1,4	15
–	**XCB7012-E-T-P4S**	–	0,34	**60**	95	18	1,1	1,1	4,3	9,7	1,4	25
–	**RS7012-D-T-P4S**	–	0,4	**60**	95	18	1,1	1,1	–	–	–	20
–	**HCRS7012-D-T-P4S**	–	0,34	**60**	95	18	1,1	1,1	4,3	9,7	1,4	20
–	**HS7012-C-T-P4S**	–	0,46	**60**	95	18	1,1	–	–	–	–	15
–	**HS7012-E-T-P4S**	–	0,46	**60**	95	18	1,1	–	–	–	–	25
–	**HC7012-E-T-P4S**	–	0,43	**60**	95	18	1,1	–	4,3	9,7	1,4	25
–	**XC7012-E-T-P4S**	–	0,43	**60**	95	18	1,1	–	4,3	9,7	1,4	25
–	–	**B7212-C-T-P4S**	0,8	**60**	110	22	1,5	1,5	–	–	–	15
–	–	**B7212-E-T-P4S**	0,8	**60**	110	22	1,5	1,5	–	–	–	25
–	–	**HCB7212-C-T-P4S**	0,7	**60**	110	22	1,5	1,5	–	–	–	15
–	–	**HCB7212-E-T-P4S**	0,7	**60**	110	22	1,5	1,5	–	–	–	25

1) Explanation of short designation, see section Bearing designations, page 82, *Figure 9*.

2) Explanation, see section Technical principles.

3) Minimal oil quantity lubrication.

4) The bearings are also available with gap seals.
Ordering examples: **B7012-C-2RSD-T-P4S-UL**
HSS7012-E-T-P4S-UL.

5) Ordering examples for Direct Lube design: **HCB7012-EDLR-T-P4S-UL**
HC7012-EDLR-T-P4S-UL.

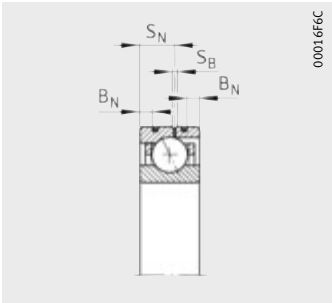

Design DLR[5)]

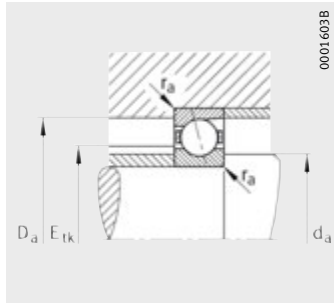

Mounting dimensions

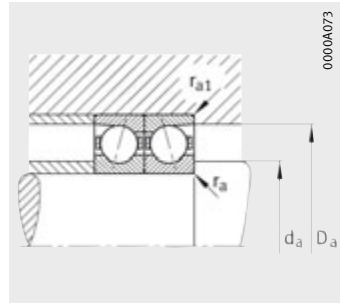

Mounting dimensions

Mounting dimensions					Basic load ratings		Limiting speeds		Preload force[2)] F_v			Lift-off force[2)] K_{aE}			Axial rigidity[2)] c_a		
d_a h12	D_a H12	r_a	r_{a1}	E_{tk}	dyn. C_r	stat. C_{0r}	n_G grease	n_G oil[3)]	L	M	H	L	M	H	L	M	H
		max.		nom.	kN	kN	min^{-1}	min^{-1}	N	N	N	N	N	N	N/µm	N/µm	N/µm
65	80,5	0,6	0,6	70,1	24	22,8	16 000	24 000	117	410	866	362	1 376	3 119	55	96,5	141,2
65	80,5	0,6	0,6	70,1	22,8	21,6	14 000	22 000	156	622	1 353	455	1 879	4 234	124,4	209,2	287,9
65	80,5	0,6	0,6	70,1	16,6	16	22 000	34 000	54	215	470	163	690	1 590	45,5	79,9	114,3
65	80,5	0,6	0,6	70,1	15,6	15	20 000	30 000	57	302	707	167	903	2 162	99,4	179,6	248,3
65	80,5	0,6	0,6	70,1	37,5	16	24 000	38 000	54	215	470	163	690	1 590	45,5	79,9	114,3
65	80,5	0,6	0,6	70,1	34,5	15	22 000	34 000	57	302	707	167	903	2 162	99,4	179,6	248,3
65	80,5	0,6	0,6	70,1	23,2	22,4	19 000	28 000	106	317	633	317	979	2 015	78	118,8	158,3
65	80,5	0,6	0,6	70,1	16,3	15,6	24 000	38 000	74	222	445	219	673	1 382	77,2	116	152,6
65	80,5	0,6	0,6	70,2	14	14,6	22 000	34 000	48	145	289	143	454	949	39,8	62,8	86,2
65	80,5	0,6	0,6	70,2	13,2	13,4	20 000	30 000	78	235	469	224	688	1 401	99,7	148,7	193,8
65	80,5	0,6	0,6	70,2	9	9,5	26 000	40 000	53	160	320	153	468	951	98,7	146	188,8
65	80,5	0,6	0,6	70,2	20	9,5	28 000	43 000	53	160	320	153	468	951	98,7	146	188,8
67	88	1	0,6	73,1	39	33,5	15 000	22 000	211	704	1 459	658	2 387	5 310	64,5	111,7	162,8
67	88	1	0,6	73,1	36,5	31,5	13 000	20 000	299	1 075	2 281	878	3 263	7 173	147,9	240,4	328,4
67	88	1	0,6	73,1	27	23,2	20 000	32 000	105	378	801	320	1 224	2 743	54,7	93	132
67	88	1	0,6	73,1	25,5	22	19 000	28 000	137	572	1 263	402	1 720	3 885	127	213	289
67	88	1	0,6	73,1	60	23,2	22 000	36 000	105	378	801	320	1 224	2 743	54,7	93	132
67	88	1	0,6	73,1	57	22	20 000	32 000	137	572	1 263	402	1 720	3 885	127	213	289
67	88	1	0,6	73,1	38	32,5	18 000	26 000	173	519	1 037	518	1 607	3 311	87,5	133,7	178,4
67	88	1	0,6	73,1	26,5	22,8	22 000	34 000	121	362	723	358	1 100	2 251	86,6	130,1	171,2
67	88	1	0,6	74,7	19,3	20	20 000	32 000	67	201	402	200	630	1 323	45,4	71,4	98,2
67	88	1	0,6	74,7	18,3	19	18 000	28 000	107	322	644	307	941	1 921	112,7	168,1	219,3
67	88	1	0,6	74,7	12,7	13,2	24 000	36 000	75	225	451	217	660	1 343	113,2	167,1	216,1
67	88	1	0,6	74,7	28,5	13,2	26 000	40 000	75	225	451	217	660	1 343	113,2	167,1	216,1
69,5	101,5	1,5	1,5	81,2	55	44	13 000	20 000	315	1 022	2 100	986	3 479	7 697	71,4	122,8	178,8
69,5	101,5	1,5	1,5	81,2	52	42,5	12 000	19 000	467	1 599	3 333	1 374	4 877	10 509	165,9	265,8	360,8
69,5	101,5	1,5	1,5	81,2	38	30,5	16 000	26 000	162	557	1 164	496	1 811	4 002	61,3	102,7	145,2
69,5	101,5	1,5	1,5	81,2	36	29	14 000	22 000	229	867	1 866	674	2 612	5 767	145,8	236,5	318,7

Spindle bearings

With large or small balls
Steel or ceramic balls
Steel or Cronidur rings
Open or sealed
Design DLR

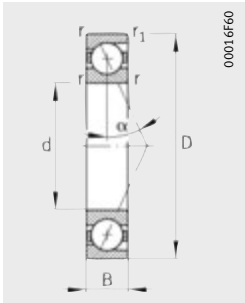

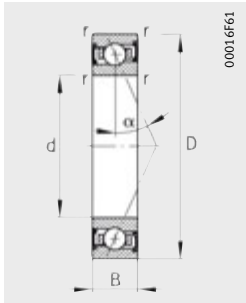

Dimension table (continued) · Dimensions in mm

Designation[1) 4)]			Mass	Dimensions								Contact angle
Series 719	Series 70	Series 72	m	d	D	B	r	r_1	B_N	S_N	S_B	α
			≈kg				min.					°
B71913-C-T-P4S	–	–	0,2	**65**	90	13	1	1	–	–	–	15
B71913-E-T-P4S	–	–	0,2	**65**	90	13	1	1	–	–	–	25
HCB71913-C-T-P4S	–	–	0,17	**65**	90	13	1	1	2,8	7,2	1,4	15
HCB71913-E-T-P4S	–	–	0,17	**65**	90	13	1	1	2,8	7,2	1,4	25
XCB71913-C-T-P4S	–	–	0,17	**65**	90	13	1	1	2,8	7,2	1,4	15
XCB71913-E-T-P4S	–	–	0,17	**65**	90	13	1	1	2,8	7,2	1,4	25
RS71913-D-T-P4S	–	–	0,2	**65**	90	13	1	1	–	–	–	20
HCRS71913-D-T-P4S	–	–	0,17	**65**	90	13	1	1	2,8	7,2	1,4	20
HS71913-C-T-P4S	–	–	0,23	**65**	90	13	1	–	–	–	–	15
HS71913-E-T-P4S	–	–	0,23	**65**	90	13	1	–	–	–	–	25
HC71913-E-T-P4S	–	–	0,21	**65**	90	13	1	–	2,8	7,2	1,4	25
XC71913-E-T-P4S	–	–	0,21	**65**	90	13	1	–	2,8	7,2	1,4	25
–	**B7013-C-T-P4S**	–	0,42	**65**	100	18	1,1	1,1	–	–	–	15
–	**B7013-E-T-P4S**	–	0,42	**65**	100	18	1,1	1,1	–	–	–	25
–	**HCB7013-C-T-P4S**	–	0,36	**65**	100	18	1,1	1,1	4	10,4	1,4	15
–	**HCB7013-E-T-P4S**	–	0,36	**65**	100	18	1,1	1,1	4	10,4	1,4	25
–	**XCB7013-C-T-P4S**	–	0,36	**65**	100	18	1,1	1,1	4	10,4	1,4	15
–	**XCB7013-E-T-P4S**	–	0,36	**65**	100	18	1,1	1,1	4	10,4	1,4	25
–	**RS7013-D-T-P4S**	–	0,42	**65**	100	18	1,1	1,1	–	–	–	20
–	**HCRS7013-D-T-P4S**	–	0,36	**65**	100	18	1,1	1,1	4	10,4	1,4	20
–	**HS7013-C-T-P4S**	–	0,48	**65**	100	18	1,1	–	–	–	–	15
–	**HS7013-E-T-P4S**	–	0,48	**65**	100	18	1,1	–	–	–	–	25
–	**HC7013-E-T-P4S**	–	0,45	**65**	100	18	1,1	–	4	10,4	1,4	25
–	**XC7013-E-T-P4S**	–	0,45	**65**	100	18	1,1	–	4	10,4	1,4	25
–	–	**B7213-C-T-P4S**	1,02	**65**	120	23	1,5	1,5	–	–	–	15
–	–	**B7213-E-T-P4S**	1,02	**65**	120	23	1,5	1,5	–	–	–	25
–	–	**HCB7213-C-T-P4S**	0,88	**65**	120	23	1,5	1,5	–	–	–	15
–	–	**HCB7213-E-T-P4S**	0,88	**65**	120	23	1,5	1,5	–	–	–	25

1) Explanation of short designation, see section Bearing designations, page 82, *Figure 9*.

2) Explanation, see section Technical principles.

3) Minimal oil quantity lubrication.

4) The bearings are also available with gap seals.
Ordering examples: **B7013-C-2RSD-T-P4S-UL**
HSS7013-E-T-P4S-UL.

5) Ordering examples for Direct Lube design: **HCB7013-EDLR-T-P4S-UL**
HC7013-EDLR-T-P4S-UL.

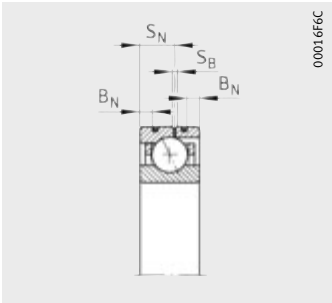

Design DLR[5)]

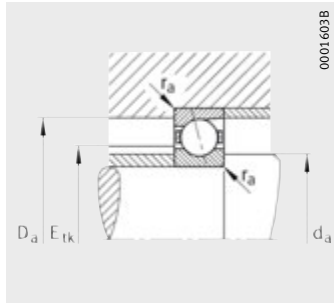

Mounting dimensions

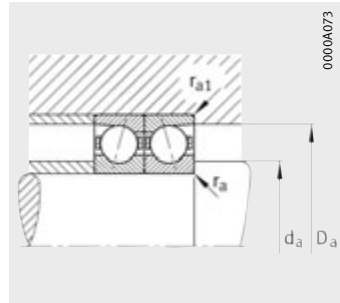

Mounting dimensions

Mounting dimensions					Basic load ratings		Limiting speeds		Preload force[2)] F_v			Lift-off force[2)] K_{aE}			Axial rigidity[2)] c_a		
d_a h12	D_a H12	r_a	r_{a1}	E_{tk}	dyn. C_r	stat. C_{0r}	n_G grease	n_G oil[3)]	L	M	H	L	M	H	L	M	H
		max.		nom.	kN	kN	min^{-1}	min^{-1}	N	N	N	N	N	N	N/µm	N/µm	N/µm
70	85,5	0,6	0,6	75,1	24,5	24	15 000	22 000	118	417	883	364	1 396	3 172	56,5	99,4	145,6
70	85,5	0,6	0,6	75,1	22,8	22,4	13 000	20 000	153	617	1 348	447	1 860	4 207	127,1	214	294,5
70	85,5	0,6	0,6	75,1	17	16,6	20 000	32 000	55	219	479	166	702	1 617	47,1	82,6	117,9
70	85,5	0,6	0,6	75,1	16	16	19 000	28 000	57	307	721	167	918	2 203	102,3	185,7	256,8
70	85,5	0,6	0,6	75,1	38	16,6	22 000	36 000	55	219	479	166	702	1 617	47,1	82,6	117,9
70	85,5	0,6	0,6	75,1	35,5	16	20 000	32 000	57	307	721	167	918	2 203	102,3	185,7	256,8
70	85,5	0,6	0,6	75,1	23,6	23,2	18 000	26 000	113	339	678	337	1 042	2 143	88,2	133,8	177,4
70	85,5	0,6	0,6	75,1	16,3	16,3	22 000	34 000	78	234	468	231	707	1 445	87,2	130,3	170,5
70	85,5	0,6	0,6	75,2	14,3	15,3	20 000	32 000	49	147	295	145	459	965	41,6	65,6	90
70	85,5	0,6	0,6	75,2	13,4	14,3	18 000	28 000	80	239	478	229	698	1 426	104,6	155,7	203,1
70	85,5	0,6	0,6	75,2	9,3	10	24 000	36 000	55	166	331	159	486	983	104,4	154,4	199,1
70	85,5	0,6	0,6	75,2	20,8	10	26 000	40 000	55	166	331	159	486	983	104,4	154,4	199,1
72	93	1	0,6	78,1	40	35,5	14 000	22 000	216	720	1 495	672	2 433	5 422	67,1	116,1	169,1
72	93	1	0,6	78,1	38	33,5	13 000	19 000	310	1 118	2 372	910	3 391	7 452	155,1	252,3	344,4
72	93	1	0,6	78,1	27,5	24,5	19 000	30 000	109	391	830	332	1 264	2 837	57,4	97,3	138,1
72	93	1	0,6	78,1	26	23,6	17 000	26 000	137	579	1 281	402	1 739	3 934	131,6	221,3	300,2
72	93	1	0,6	78,1	61	24,5	22 000	34 000	109	391	830	332	1 264	2 837	57,4	97,3	138,1
72	93	1	0,6	78,1	58,5	23,6	19 000	30 000	137	579	1 281	402	1 739	3 934	131,6	221,3	300,2
72	93	1	0,6	78,1	39	34,5	16 000	26 000	177	532	1 065	530	1 645	3 396	91,3	139,4	186,1
72	93	1	0,6	78,1	27	24,5	22 000	32 000	123	369	737	364	1 120	2 291	90,2	135,5	178,1
72	93	1	0,6	79,7	20	21,6	19 000	30 000	70	209	418	208	654	1 373	48	75,5	103,8
72	93	1	0,6	79,7	19	20	17 000	26 000	112	336	672	321	981	2 002	119,7	178,3	232,5
72	93	1	0,6	79,7	12,9	14	22 000	34 000	77	230	460	222	674	1 367	119,2	176	227,1
72	93	1	0,6	79,7	28,5	14	24 000	38 000	77	230	460	222	674	1 367	119,2	176	227,1
75,5	109,5	1,5	1,5	88,2	57	48	12 000	19 000	325	1 051	2 163	1 015	3 565	7 874	75,1	128,6	186,9
75,5	109,5	1,5	1,5	88,2	54	45,5	11 000	18 000	482	1 656	3 455	1 417	5 043	10 873	174,9	280,1	380,1
75,5	109,5	1,5	1,5	88,2	40	23,6	15 000	24 000	170	580	1 213	520	1 882	4 161	64,9	108,3	153,1
75,5	109,5	1,5	1,5	88,2	37,5	22,4	13 000	20 000	234	892	1 918	688	2 684	5 918	153,2	248,9	334,9

Spindle bearings

With large or small balls
Steel or ceramic balls
Steel or Cronidur rings
Open or sealed
Design DLR

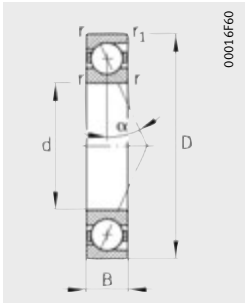

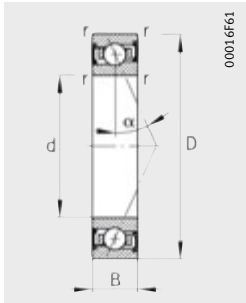

Dimension table (continued) · Dimensions in mm

Designation[1) 4)]			Mass	Dimensions								Contact angle
Series 719	Series 70	Series 72	m	d	D	B	r	r_1	B_N	S_N	S_B	α
			≈kg				min.					°
B71914-C-T-P4S	–	–	0,33	**70**	100	16	1	1	–	–	–	15
B71914-E-T-P4S	–	–	0,33	**70**	100	16	1	1	–	–	–	25
HCB71914-C-T-P4S	–	–	0,28	**70**	100	16	1	1	3,1	9,3	1,4	15
HCB71914-E-T-P4S	–	–	0,28	**70**	100	16	1	1	3,1	9,3	1,4	25
XCB71914-C-T-P4S	–	–	0,28	**70**	100	16	1	1	3,1	9,3	1,4	15
XCB71914-E-T-P4S	–	–	0,28	**70**	100	16	1	1	3,1	9,3	1,4	25
RS71914-D-T-P4S	–	–	0,33	**70**	100	16	1	1	–	–	–	20
HCRS71914-D-T-P4S	–	–	0,28	**70**	100	16	1	1	3,1	9,3	1,4	20
HS71914-C-T-P4S	–	–	0,37	**70**	100	16	1	–	–	–	–	15
HS71914-E-T-P4S	–	–	0,37	**70**	100	16	1	–	–	–	–	25
HC71914-E-T-P4S	–	–	0,35	**70**	100	16	1	–	3,1	9,3	1,4	25
XC71914-E-T-P4S	–	–	0,35	**70**	100	16	1	–	3,1	9,3	1,4	25
–	**B7014-C-T-P4S**	–	0,59	**70**	110	20	1,1	1,1	–	–	–	15
–	**B7014-E-T-P4S**	–	0,59	**70**	110	20	1,1	1,1	–	–	–	25
–	**HCB7014-C-T-P4S**	–	0,5	**70**	110	20	1,1	1,1	4	11,6	1,4	15
–	**HCB7014-E-T-P4S**	–	0,5	**70**	110	20	1,1	1,1	4	11,6	1,4	25
–	**XCB7014-C-T-P4S**	–	0,5	**70**	110	20	1,1	1,1	4	11,6	1,4	15
–	**XCB7014-E-T-P4S**	–	0,5	**70**	110	20	1,1	1,1	4	11,6	1,4	25
–	**RS7014-D-T-P4S**	–	0,59	**70**	110	20	1,1	1,1	–	–	–	20
–	**HCRS7014-D-T-P4S**	–	0,5	**70**	110	20	1,1	1,1	4	11,6	1,4	20
–	**HS7014-C-T-P4S**	–	0,67	**70**	110	20	1,1	–	–	–	–	15
–	**HS7014-E-T-P4S**	–	0,67	**70**	110	20	1,1	–	–	–	–	25
–	**HC7014-E-T-P4S**	–	0,63	**70**	110	20	1,1	–	4	11,6	1,4	25
–	**XC7014-E-T-P4S**	–	0,63	**70**	110	20	1,1	–	4	11,6	1,4	25
–	–	**B7214-C-T-P4S**	1,12	**70**	125	24	1,5	1,5	–	–	–	15
–	–	**B7214-E-T-P4S**	1,12	**70**	125	24	1,5	1,5	–	–	–	25
–	–	**HCB7214-C-T-P4S**	0,96	**70**	125	24	1,5	1,5	–	–	–	15
–	–	**HCB7214-E-T-P4S**	0,96	**70**	125	24	1,5	1,5	–	–	–	25

1) Explanation of short designation, see section Bearing designations, page 82, *Figure 9*.

2) Explanation, see section Technical principles.

3) Minimal oil quantity lubrication.

4) The bearings are also available with gap seals.
Ordering examples: **B7014-C-2RSD-T-P4S-UL**
HSS7014-E-T-P4S-UL.

5) Ordering examples for Direct Lube design: **HCB7014-EDLR-T-P4S-UL**
HC7014-EDLR-T-P4S-UL.

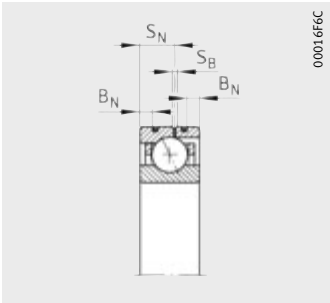

Design DLR[5)]

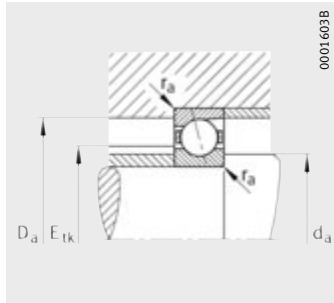

Mounting dimensions

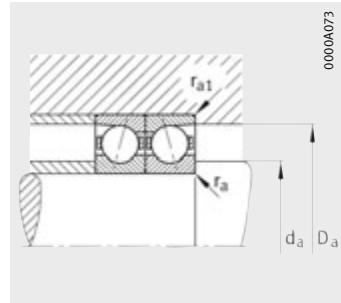

Mounting dimensions

Mounting dimensions					Basic load ratings		Limiting speeds		Preload force[2)] F_v			Lift-off force[2)] K_{aE}			Axial rigidity[2)] c_a		
d_a h12	D_a H12	r_a	r_{a1}	E_{tk}	dyn. C_r	stat. C_{0r}	n_G grease	n_G oil[3)]	L	M	H	L	M	H	L	M	H
		max.		nom.	kN	kN	min^{-1}	min^{-1}	N	N	N	N	N	N	N/µm	N/µm	N/µm
76	94,5	0,6	0,6	82,2	33,5	32,5	14 000	20 000	172	588	1 230	532	1 970	4 418	66,5	115,5	168,2
76	94,5	0,6	0,6	82,2	31,5	31	12 000	19 000	234	890	1 917	684	2 691	5 984	151,6	250,6	342,8
76	94,5	0,6	0,6	82,2	23,2	22,8	19 000	28 000	82	311	671	248	997	2 271	55,7	96	136,7
76	94,5	0,6	0,6	82,2	22	21,6	17 000	26 000	96	452	1 026	281	1 351	3 143	125,8	218,6	299
76	94,5	0,6	0,6	82,2	52	22,8	20 000	32 000	82	311	671	248	997	2 271	55,7	96	136,7
76	94,5	0,6	0,6	82,2	49	21,6	19 000	28 000	96	452	1 026	281	1 351	3 143	125,8	218,6	299
76	94,5	0,6	0,6	82,2	32,5	31,5	16 000	24 000	156	467	934	466	1 435	2 951	101,5	153,7	203,9
76	94,5	0,6	0,6	82,2	22,4	22,4	20 000	32 000	107	322	644	316	973	1 988	100	149,7	195,9
76	94,5	0,6	0,6	82,3	18,3	20	19 000	28 000	64	192	383	190	600	1 254	47,6	75	102,6
76	94,5	0,6	0,6	82,3	17,3	18,6	17 000	26 000	103	308	616	295	898	1 833	119	176,9	230,7
76	94,5	0,6	0,6	82,3	12	13,2	22 000	34 000	71	214	428	205	626	1 271	118,8	175,4	226,7
76	94,5	0,6	0,6	82,3	27	13,2	24 000	36 000	71	214	428	205	626	1 271	118,8	175,4	226,7
77	102	1	0,6	85	50	43	13 000	20 000	278	915	1 888	866	3 095	6 864	73,9	127,3	185,1
77	102	1	0,6	85	46,5	41,5	11 000	18 000	398	1 397	2 945	1 167	4 242	9 262	170,1	274,3	373,5
77	102	1	0,6	85	34	30	18 000	28 000	140	492	1 036	427	1 590	3 538	63	106,1	150,1
77	102	1	0,6	85	32,5	29	16 000	24 000	184	736	1 609	541	2 208	4 948	146,7	241,9	327,1
77	102	1	0,6	85	76,5	30	20 000	30 000	140	492	1 036	427	1 590	3 538	63	106,1	150,1
77	102	1	0,6	85	72	29	18 000	28 000	184	736	1 609	541	2 208	4 948	146,7	241,9	327,1
77	102	1	0,6	85	48	42,5	15 000	24 000	218	655	1 310	652	2 025	4 176	98,6	150,6	201
77	102	1	0,6	85	33,5	30	19 000	30 000	152	457	915	450	1 387	2 845	97,6	146,8	193,1
77	102	1	0,6	86,7	26	28	18 000	28 000	89	268	536	265	837	1 757	52,5	82,6	113,5
77	102	1	0,6	86,7	24,5	26	16 000	24 000	146	437	874	419	1 277	2 608	131,9	196,4	256,2
77	102	1	0,6	86,7	17	18,3	20 000	32 000	101	304	607	292	892	1 807	131,8	194,9	251,5
77	102	1	0,6	86,7	38	18,3	22 000	34 000	101	304	607	292	892	1 807	131,8	194,9	251,5
80	115	1,5	1,5	92,7	69,5	58,5	11 000	18 000	404	1 301	2 664	1 264	4 419	9 712	83,8	143,2	207,6
80	115	1,5	1,5	92,7	65,5	56	10 000	17 000	600	2 030	4 233	1 765	6 187	13 319	194,9	310,5	421
80	115	1,5	1,5	92,7	48	40,5	14 000	22 000	208	708	1 477	635	2 298	5 066	71,8	119,8	169
80	115	1,5	1,5	92,7	45,5	39	12 000	19 000	295	1 101	2 350	868	3 315	7 237	171,5	276,5	370,8

Spindle bearings

With large or small balls
Steel or ceramic balls
Steel or Cronidur rings
Open or sealed
Design DLR

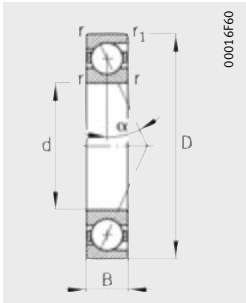

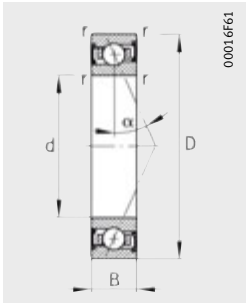

Dimension table (continued) · Dimensions in mm

Designation[1) 4)]			Mass	Dimensions								Contact angle
Series 719	Series 70	Series 72	m	d	D	B	r	r_1	B_N	S_N	S_B	α
			≈kg				min.					°
B71915-C-T-P4S	–	–	0,35	**75**	105	16	1	1	–	–	–	15
B71915-E-T-P4S	–	–	0,35	**75**	105	16	1	1	–	–	–	25
HCB71915-C-T-P4S	–	–	0,3	**75**	105	16	1	1	3,1	9,3	1,4	15
HCB71915-E-T-P4S	–	–	0,3	**75**	105	16	1	1	3,1	9,3	1,4	25
XCB71915-C-T-P4S	–	–	0,3	**75**	105	16	1	1	3,1	9,3	1,4	15
XCB71915-E-T-P4S	–	–	0,3	**75**	105	16	1	1	3,1	9,3	1,4	25
RS71915-D-T-P4S	–	–	0,35	**75**	105	16	1	1	–	–	–	20
HCRS71915-D-T-P4S	–	–	0,3	**75**	105	16	1	1	3,1	9,3	1,4	20
HS71915-C-T-P4S	–	–	0,4	**75**	105	16	1	–	–	–	–	15
HS71915-E-T-P4S	–	–	0,4	**75**	105	16	1	–	–	–	–	25
HC71915-E-T-P4S	–	–	0,37	**75**	105	16	1	–	3,1	9,3	1,4	25
XC71915-E-T-P4S	–	–	0,37	**75**	105	16	1	–	3,1	9,3	1,4	25
–	**B7015-C-T-P4S**	–	0,62	**75**	115	20	1,1	1,1	–	–	–	15
–	**B7015-E-T-P4S**	–	0,62	**75**	115	20	1,1	1,1	–	–	–	25
–	**HCB7015-C-T-P4S**	–	0,53	**75**	115	20	1,1	1,1	4	11,6	1,4	15
–	**HCB7015-E-T-P4S**	–	0,53	**75**	115	20	1,1	1,1	4	11,6	1,4	25
–	**XCB7015-C-T-P4S**	–	0,53	**75**	115	20	1,1	1,1	4	11,6	1,4	15
–	**XCB7015-E-T-P4S**	–	0,53	**75**	115	20	1,1	1,1	4	11,6	1,4	25
–	**RS7015-D-T-P4S**	–	0,62	**75**	115	20	1,1	1,1	–	–	–	20
–	**HCRS7015-D-T-P4S**	–	0,53	**75**	115	20	1,1	1,1	4	11,6	1,4	20
–	**HS7015-C-T-P4S**	–	0,71	**75**	115	20	1,1	–	–	–	–	15
–	**HS7015-E-T-P4S**	–	0,71	**75**	115	20	1,1	–	–	–	–	25
–	**HC7015-E-T-P4S**	–	0,66	**75**	115	20	1,1	–	4	11,6	1,4	25
–	**XC7015-E-T-P4S**	–	0,66	**75**	115	20	1,1	–	4	11,6	1,4	25
–	–	**B7215-C-T-P4S**	1,21	**75**	130	25	1,5	1,5	–	–	–	15
–	–	**B7215-E-T-P4S**	1,21	**75**	130	25	1,5	1,5	–	–	–	25
–	–	**HCB7215-C-T-P4S**	1,05	**75**	130	25	1,5	1,5	–	–	–	15
–	–	**HCB7215-E-T-P4S**	1,05	**75**	130	25	1,5	1,5	–	–	–	25

1) Explanation of short designation, see section Bearing designations, page 82, *Figure 9*.

2) Explanation, see section Technical principles.

3) Minimal oil quantity lubrication.

4) The bearings are also available with gap seals.
Ordering examples: **B7015-C-2RSD-T-P4S-UL**
HSS7015-E-T-P4S-UL.

5) Ordering examples for Direct Lube design: **HCB7015-EDLR-T-P4S-UL**
HC7015-EDLR-T-P4S-UL.

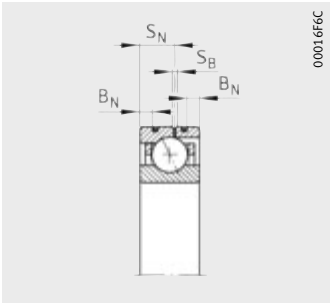

Design DLR[5)]

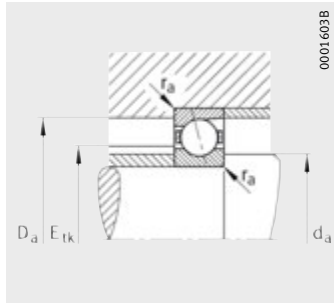

Mounting dimensions

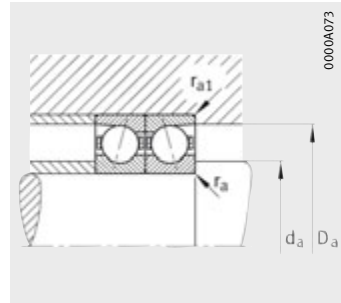

Mounting dimensions

Mounting dimensions					Basic load ratings		Limiting speeds		Preload force[2)] F_v			Lift-off force[2)] K_{aE}			Axial rigidity[2)] c_a		
d_a h12	D_a H12	r_a	r_{a1}	E_{tk}	dyn. C_r	stat. C_{0r}	n_G grease	n_G oil[3)]	L	M	H	L	M	H	L	M	H
		max.		nom.	kN	kN	min^{-1}	min^{-1}	N	N	N	N	N	N	N/µm	N/µm	N/µm
81	99,5	0,6	0,6	87,2	34	34,5	13 000	20 000	174	596	1 246	537	1 991	4 460	68,5	118,8	172,7
81	99,5	0,6	0,6	87,2	32	32,5	11 000	18 000	236	901	1 943	689	2 721	6 055	156,2	258,3	353,3
81	99,5	0,6	0,6	87,2	23,6	24	18 000	28 000	84	320	691	254	1 025	2 336	57,7	99,6	141,7
81	99,5	0,6	0,6	87,2	22	22,8	16 000	24 000	96	457	1 039	280	1 365	3 179	128,9	225,4	308,4
81	99,5	0,6	0,6	87,2	53	24	20 000	30 000	84	320	691	254	1 025	2 336	57,7	99,6	141,7
81	99,5	0,6	0,6	87,2	49	22,8	18 000	28 000	96	457	1 039	280	1 365	3 179	128,9	225,4	308,4
81	99,5	0,6	0,6	87,2	32,5	33,5	15 000	24 000	156	467	934	465	1 433	2 946	104,3	157,8	209
81	99,5	0,6	0,6	87,2	22,8	23,6	19 000	30 000	109	328	655	322	990	2 020	103,5	154,8	202,3
81	99,5	0,6	0,6	87,3	19	21,2	18 000	28 000	65	196	391	193	611	1 276	49,8	78,3	107
81	99,5	0,6	0,6	87,3	17,6	20	16 000	24 000	105	315	630	301	918	1 872	124,8	185,4	241,4
81	99,5	0,6	0,6	87,3	12,2	13,7	20 000	32 000	73	219	437	211	641	1 297	125	184,1	237,4
81	99,5	0,6	0,6	87,3	27	13,7	22 000	34 000	73	219	437	211	641	1 297	125	184,1	237,4
82	107	1	0,6	90	51	46,5	12 000	19 000	283	931	1 923	880	3 138	6 964	76,8	131,9	191,7
82	107	1	0,6	90	48	44	11 000	17 000	408	1 439	3 027	1 196	4 365	9 505	177,7	286,7	389,8
82	107	1	0,6	90	35,5	32,5	17 000	26 000	144	509	1 071	439	1 643	3 650	65,9	111	156,8
82	107	1	0,6	90	33,5	30,5	15 000	24 000	190	762	1 667	557	2 285	5 122	153,6	253,5	342,7
82	107	1	0,6	90	80	32,5	19 000	28 000	144	509	1 071	439	1 643	3 650	65,9	111	156,8
82	107	1	0,6	90	75	30,5	17 000	26 000	190	762	1 667	557	2 285	5 122	153,6	253,5	342,7
82	107	1	0,6	90	50	45,5	14 000	22 000	228	683	1 365	682	2 111	4 349	103,8	158,2	211
82	107	1	0,6	90	34,5	32	18 000	28 000	157	471	942	465	1 428	2 926	102,2	153,5	201,8
82	107	1	0,6	91,7	26,5	29	17 000	26 000	91	273	547	270	852	1 790	54	85	116,7
82	107	1	0,6	91,7	25	27	15 000	24 000	148	444	888	425	1 297	2 647	135,8	201,9	263,2
82	107	1	0,6	91,7	17,3	18,6	19 000	30 000	101	304	607	292	891	1 805	134,9	199,2	257
82	107	1	0,6	91,7	38	18,6	22 000	32 000	101	304	607	292	891	1 805	134,9	199,2	257
85	120	1,5	1,5	97,7	72	63	11 000	18 000	416	1 346	2 757	1 299	4 560	10 021	87,8	150,1	217,4
85	120	1,5	1,5	97,7	68	60	9 500	16 000	619	2 103	4 389	1 820	6 402	13 790	204,9	326,6	442,6
85	120	1,5	1,5	97,7	50	44	14 000	22 000	215	733	1 531	656	2 375	5 239	75,5	125,8	177,4
85	120	1,5	1,5	97,7	47,5	41,5	12 000	19 000	306	1 142	2 439	900	3 436	7 503	180,6	291,2	390,2

Spindle bearings

With large or small balls
Steel or ceramic balls
Steel or Cronidur rings
Open or sealed
Design DLR

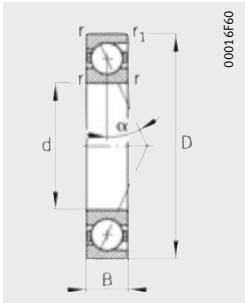

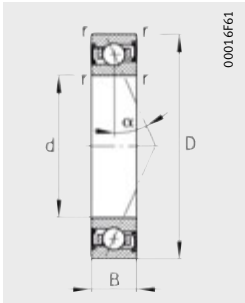

Dimension table (continued) · Dimensions in mm

Designation[1) 4)]			Mass	Dimensions								Contact angle
Series 719	Series 70	Series 72	m	d	D	B	r	r_1	B_N	S_N	S_B	α
			≈kg				min.					°
B71916-C-T-P4S	–	–	0,37	**80**	110	16	1	1	–	–	–	15
B71916-E-T-P4S	–	–	0,37	**80**	110	16	1	1	–	–	–	25
HCB71916-C-T-P4S	–	–	0,31	**80**	110	16	1	1	3,1	9,3	1,4	15
HCB71916-E-T-P4S	–	–	0,31	**80**	110	16	1	1	3,1	9,3	1,4	25
XCB71916-C-T-P4S	–	–	0,31	**80**	110	16	1	1	3,1	9,3	1,4	15
XCB71916-E-T-P4S	–	–	0,31	**80**	110	16	1	1	3,1	9,3	1,4	25
RS71916-D-T-P4S	–	–	0,37	**80**	110	16	1	1	–	–	–	20
HCRS71916-D-T-P4S	–	–	0,31	**80**	110	16	1	1	3,1	9,3	1,4	20
HS71916-C-T-P4S	–	–	0,41	**80**	110	16	1	–	–	–	–	15
HS71916-E-T-P4S	–	–	0,41	**80**	110	16	1	–	–	–	–	25
HC71916-E-T-P4S	–	–	0,38	**80**	110	16	1	–	3,1	9,3	1,4	25
XC71916-E-T-P4S	–	–	0,38	**80**	110	16	1	–	3,1	9,3	1,4	25
–	**B7016-C-T-P4S**	–	0,84	**80**	125	22	1,1	1,1	–	–	–	15
–	**B7016-E-T-P4S**	–	0,84	**80**	125	22	1,1	1,1	–	–	–	25
–	**HCB7016-C-T-P4S**	–	0,71	**80**	125	22	1,1	1,1	4,7	12,2	2,2	15
–	**HCB7016-E-T-P4S**	–	0,71	**80**	125	22	1,1	1,1	4,7	12,2	2,2	25
–	**XCB7016-C-T-P4S**	–	0,71	**80**	125	22	1,1	1,1	4,7	12,2	2,2	15
–	**XCB7016-E-T-P4S**	–	0,71	**80**	125	22	1,1	1,1	4,7	12,2	2,2	25
–	**RS7016-D-T-P4S**	–	0,84	**80**	125	22	1,1	1,1	–	–	–	20
–	**HCRS7016-D-T-P4S**	–	0,71	**80**	125	22	1,1	1,1	4,7	12,2	2,2	20
–	**HS7016-C-T-P4S**	–	0,96	**80**	125	22	1,1	–	–	–	–	15
–	**HS7016-E-T-P4S**	–	0,96	**80**	125	22	1,1	–	–	–	–	25
–	**HC7016-E-T-P4S**	–	0,89	**80**	125	22	1,1	–	4,7	12,2	2,2	25
–	**XC7016-E-T-P4S**	–	0,89	**80**	125	22	1,1	–	4,7	12,2	2,2	25
–	–	**B7216-C-T-P4S**	1,52	**80**	140	26	2	2	–	–	–	15
–	–	**B7216-E-T-P4S**	1,52	**80**	140	26	2	2	–	–	–	25
–	–	**HCB7216-C-T-P4S**	1,4	**80**	140	26	2	2	–	–	–	15
–	–	**HCB7216-E-T-P4S**	1,4	**80**	140	26	2	2	–	–	–	25

1) Explanation of short designation, see section Bearing designations, page 82, *Figure 9*.

2) Explanation, see section Technical principles.

3) Minimal oil quantity lubrication.

4) The bearings are also available with gap seals.
Ordering examples: **B7016-C-2RSD-T-P4S-UL**
HSS7016-E-T-P4S-UL.

5) Ordering examples for Direct Lube design: **HCB7016-EDLR-T-P4S-UL**
HC7016-EDLR-T-P4S-UL.

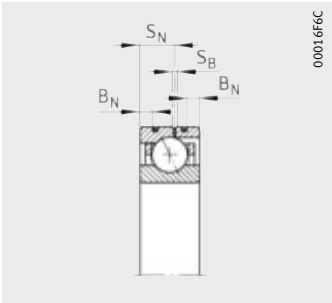

Design DLR[5)]

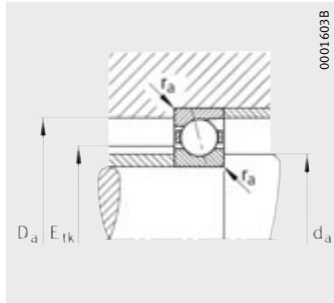

Mounting dimensions

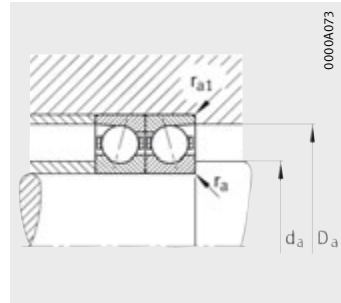

Mounting dimensions

Mounting dimensions					Basic load ratings		Limiting speeds		Preload force[2)] F_v			Lift-off force[2)] K_{aE}			Axial rigidity[2)] c_a		
d_a h12	D_a H12	r_a	r_{a1}	E_{tk}	dyn. C_r	stat. C_{0r}	n_G grease	n_G oil[3)]	L	M	H	L	M	H	L	M	H
		max.		nom.	kN	kN	min^{-1}	min^{-1}	N	N	N	N	N	N	N/µm	N/µm	N/µm
86	104	0,6	0,6	92,2	34,5	36	12 000	19 000	175	603	1 262	539	2 009	4 504	70,3	122	177,2
86	104	0,6	0,6	92,2	32,5	34	11 000	17 000	238	911	1 969	695	2 748	6 127	160,9	266	363,7
86	104	0,6	0,6	92,2	24	25	17 000	26 000	83	319	689	251	1 019	2 320	59	101,8	144,5
86	104	0,6	0,6	92,2	22,4	23,6	15 000	24 000	96	462	1 052	280	1 379	3 215	132,5	232,3	317,6
86	104	0,6	0,6	92,2	54	25	19 000	28 000	83	319	689	251	1 019	2 320	59	101,8	144,5
86	104	0,6	0,6	92,2	50	23,6	17 000	26 000	96	462	1 052	280	1 379	3 215	132,5	232,3	317,6
86	104	0,6	0,6	92,2	33,5	34,5	14 000	22 000	160	481	963	477	1 475	3 036	108	163,6	216,8
86	104	0,6	0,6	92,2	23,2	24,5	18 000	28 000	111	333	667	328	1 005	2 056	106,9	159,7	208,9
86	104	0,6	0,6	92,2	21,2	24	17 000	26 000	73	218	437	217	679	1 425	52,9	82,6	113,1
86	104	0,6	0,6	92,2	19,6	22,4	15 000	24 000	117	352	704	335	1 026	2 092	131,8	196,3	255,6
86	104	0,6	0,6	92,2	13,7	15,6	19 000	30 000	81	244	488	234	714	1 448	132	194,7	251,1
86	104	0,6	0,6	92,2	30,5	15,6	22 000	32 000	81	244	488	234	714	1 448	132	194,7	251,1
88	117	1	0,6	96,8	63	58,5	11 000	17 000	357	1 163	2 391	1 110	3 920	8 635	86,3	147,5	213,5
88	117	1	0,6	96,8	60	55	10 000	15 000	529	1 830	3 825	1 552	5 557	11 989	201,7	323,3	437,9
88	117	1	0,6	96,8	44	40,5	15 000	24 000	185	643	1 345	564	2 077	4 585	74,5	124,8	175,8
88	117	1	0,6	96,8	41,5	39	14 000	22 000	250	967	2 089	734	2 902	6 423	175,2	285,5	384,2
88	117	1	0,6	96,8	98	40,5	17 000	26 000	185	643	1 345	564	2 077	4 585	74,5	124,8	175,8
88	117	1	0,6	96,8	93	39	15 000	24 000	250	967	2 089	734	2 902	6 423	175,2	285,5	384,2
88	117	1	0,6	96,8	62	57	13 000	20 000	282	846	1 693	843	2 612	5 388	115,7	176,5	235,3
88	117	1	0,6	96,8	43	40	17 000	26 000	196	587	1 174	580	1 779	3 644	114,4	171,7	225,6
88	117	1	0,6	98,9	31,5	34,5	15 000	24 000	109	328	657	323	1 024	2 150	59,1	93,2	127,9
88	117	1	0,6	98,9	30	32,5	14 000	22 000	175	524	1 049	502	1 530	3 127	147,9	220	287
88	117	1	0,6	98,9	20,4	22,8	18 000	28 000	123	368	736	355	1 079	2 185	148,4	219,2	282,8
88	117	1	0,6	98,9	45,5	22,8	20 000	30 000	123	368	736	355	1 079	2 185	148,4	219,2	282,8
94	126	2	2	105,2	73,5	68	10 000	17 000	424	1 354	2 701	1 309	4 516	10 274	91,7	155	220,5
94	126	2	2	105,2	71	64	9 000	15 000	662	2 249	4 899	1 928	6 770	14 523	221,2	351,9	475,3
94	126	2	2	105,2	51	47,5	12 000	19 000	224	761	1 570	669	2 400	5 217	79,4	131,4	183,7
94	126	2	2	105,2	49	45	11 000	18 000	325	1 219	2 611	935	3 583	7 847	193,9	312,5	418,7

Spindle bearings

With large or small balls
Steel or ceramic balls
Steel or Cronidur rings
Open or sealed
Design DLR

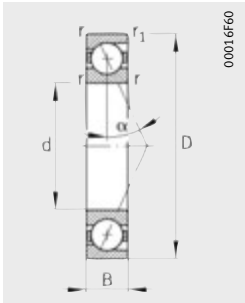

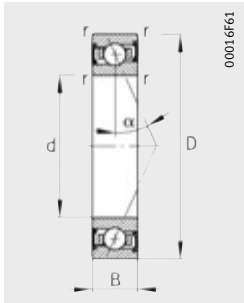

Dimension table (continued) · Dimensions in mm

Designation[1]			Mass	Dimensions								Contact angle
Series 719[4]	Series 70[4]	Series 72	m	d	D	B	r	r_1	B_N	S_N	S_B	α
			≈kg				min.					°
B71917-C-T-P4S	–	–	0,53	**85**	120	18	1,1	1,1	–	–	–	15
B71917-E-T-P4S	–	–	0,53	**85**	120	18	1,1	1,1	–	–	–	25
HCB71917-C-T-P4S	–	–	0,45	**85**	120	18	1,1	1,1	4	10,4	2,2	15
HCB71917-E-T-P4S	–	–	0,45	**85**	120	18	1,1	1,1	4	10,4	2,2	25
XCB71917-C-T-P4S	–	–	0,45	**85**	120	18	1,1	1,1	4	10,4	2,2	15
XCB71917-E-T-P4S	–	–	0,45	**85**	120	18	1,1	1,1	4	10,4	2,2	25
RS71917-D-T-P4S	–	–	0,53	**85**	120	18	1,1	1,1	–	–	–	20
HCRS71917-D-T-P4S	–	–	0,45	**85**	120	18	1,1	1,1	4	10,4	2,2	20
HS71917-C-T-P4S	–	–	0,61	**85**	120	18	1,1	–	–	–	–	15
HS71917-E-T-P4S	–	–	0,61	**85**	120	18	1,1	–	–	–	–	25
HC71917-E-T-P4S	–	–	0,57	**85**	120	18	1,1	–	4	10,4	2,2	25
XC71917-E-T-P4S	–	–	0,57	**85**	120	18	1,1	–	4	10,4	2,2	25
–	**B7017-C-T-P4S**	–	0,89	**85**	130	22	1,1	1,1	–	–	–	15
–	**B7017-E-T-P4S**	–	0,89	**85**	130	22	1,1	1,1	–	–	–	25
–	**HCB7017-C-T-P4S**	–	0,74	**85**	130	22	1,1	1,1	4,7	12,2	2,2	15
–	**HCB7017-E-T-P4S**	–	0,74	**85**	130	22	1,1	1,1	4,7	12,2	2,2	25
–	**XCB7017-C-T-P4S**	–	0,74	**85**	130	22	1,1	1,1	4,7	12,2	2,2	15
–	**XCB7017-E-T-P4S**	–	0,74	**85**	130	22	1,1	1,1	4,7	12,2	2,2	25
–	**RS7017-D-T-P4S**	–	0,89	**85**	130	22	1,1	1,1	–	–	–	20
–	**HCRS7017-D-T-P4S**	–	0,74	**85**	130	22	1,1	1,1	4,7	12,2	2,2	20
–	**HS7017-C-T-P4S**	–	0,99	**85**	130	22	1,1	–	–	–	–	15
–	**HS7017-E-T-P4S**	–	0,99	**85**	130	22	1,1	–	–	–	–	25
–	**HC7017-E-T-P4S**	–	0,93	**85**	130	22	1,1	–	4,7	12,2	2,2	25
–	**XC7017-E-T-P4S**	–	0,93	**85**	130	22	1,1	–	4,7	12,2	2,2	25
–	–	**B7217-C-T-P4S**	1,85	**85**	150	28	2	2	–	–	–	15
–	–	**B7217-E-T-P4S**	1,85	**85**	150	28	2	2	–	–	–	25
–	–	**HCB7217-C-T-P4S**	1,58	**85**	150	28	2	2	–	–	–	15
–	–	**HCB7217-E-T-P4S**	1,58	**85**	150	28	2	2	–	–	–	25

1) Explanation of short designation, see section Bearing designations, page 82, *Figure 9*.

2) Explanation, see section Technical principles.

3) Minimal oil quantity lubrication.

4) The bearings are also available with gap seals.
Ordering examples: **B7017-C-2RSD-T-P4S-UL**
HSS7017-E-T-P4S-UL.

5) Ordering examples for Direct Lube design: **HCB7017-EDLR-T-P4S-UL**
HC7017-EDLR-T-P4S-UL.

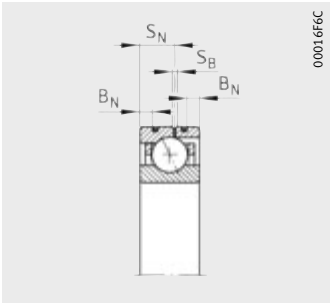

Design DLR[5)]

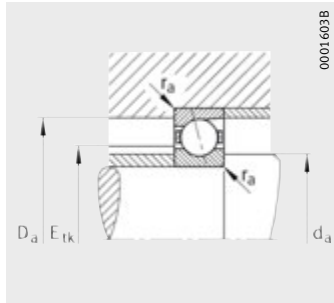

Mounting dimensions

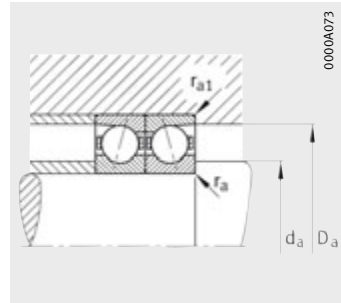

Mounting dimensions

Mounting dimensions					Basic load ratings		Limiting speeds		Preload force[2)] F_v			Lift-off force[2)] K_{aE}			Axial rigidity[2)] c_a		
d_a h12	D_a H12	r_a	r_{a1}	E_{tk}	dyn. C_r	stat. C_{0r}	n_G grease	n_G oil[3)]	L	M	H	L	M	H	L	M	H
		max.		nom.	kN	kN	min^{-1}	min^{-1}	N	N	N	N	N	N	N/µm	N/µm	N/µm
92	114	0,6	0,6	99,2	45	46,5	11 000	17 000	239	804	1 672	739	2 687	5 982	80,3	138	200
92	114	0,6	0,6	99,2	42,5	44	10 000	15 000	336	1 232	2 631	983	3 716	8 205	185,3	301,8	411,4
92	114	0,6	0,6	99,2	31	32,5	15 000	24 000	120	438	934	363	1 405	3 160	68,6	116,5	164,9
92	114	0,6	0,6	99,2	29	30,5	14 000	22 000	148	642	1 436	433	1 921	4 389	157,3	266,2	361,7
92	114	0,6	0,6	99,2	69,5	32,5	17 000	26 000	120	438	934	363	1 405	3 160	68,6	116,5	164,9
92	114	0,6	0,6	99,2	64	30,5	15 000	24 000	148	642	1 436	433	1 921	4 389	157,3	266,2	361,7
92	114	0,6	0,6	99,2	44	45,5	13 000	20 000	211	632	1 265	629	1 939	3 989	121,3	183,6	243,3
92	114	0,6	0,6	99,2	30	32	17 000	26 000	144	431	862	425	1 300	2 656	119,4	178,2	232,9
92	114	0,6	0,6	99,7	22	26	15 000	24 000	76	228	456	225	708	1 482	56,4	88,3	120,7
92	114	0,6	0,6	99,7	20,4	24,5	14 000	22 000	123	368	736	352	1 071	2 184	141,7	210,4	273,8
92	114	0,6	0,6	99,7	14,3	17	18 000	28 000	84	253	506	242	739	1 499	140,9	208	268,3
92	114	0,6	0,6	99,7	32	17	20 000	30 000	84	253	506	242	739	1 499	140,9	208	268,3
93	122	1	0,6	101,8	65,5	62	11 000	16 000	370	1 209	2 484	1 150	4 070	8 957	90,3	154,3	223,1
93	122	1	0,6	101,8	62	58,5	9 500	15 000	545	1 888	3 949	1 598	5 728	12 364	210,6	337,5	457,1
93	122	1	0,6	101,8	45	43	15 000	22 000	192	667	1 401	585	2 152	4 772	78	130,5	184,1
93	122	1	0,6	101,8	42,5	40,5	13 000	20 000	260	1 008	2 179	763	3 024	6 697	183,6	299,5	402,9
93	122	1	0,6	101,8	100	43	16 000	26 000	192	667	1 401	585	2 152	4 772	78	130,5	184,1
93	122	1	0,6	101,8	95	40,5	15 000	22 000	260	1 008	2 179	763	3 024	6 697	183,6	299,5	402,9
93	122	1	0,6	101,8	64	60	13 000	19 000	291	874	1 747	870	2 697	5 555	120,9	184,4	245,6
93	122	1	0,6	101,8	44	42,5	16 000	24 000	200	601	1 201	592	1 820	3 724	119,1	178,8	234,8
93	122	1	0,6	103,9	32	36	15 000	22 000	109	328	657	323	1 022	2 144	60,5	95,1	130,2
93	122	1	0,6	103,9	30	33,5	13 000	20 000	178	534	1 067	509	1 559	3 178	151,9	226,4	294,9
93	122	1	0,6	103,9	20,8	23,2	17 000	26 000	123	368	736	355	1 079	2 183	151,8	224,1	288,9
93	122	1	0,6	103,9	46,5	23,2	19 000	30 000	123	368	736	355	1 079	2 183	151,8	224,1	288,9
98	138	2	2	112,3	96,5	85	9 000	15 000	573	1 825	3 734	1 789	6 176	13 586	99,8	169,5	245,6
98	138	2	2	112,3	91,5	80	8 000	13 000	869	2 889	5 972	2 554	8 786	18 785	234,3	370,6	500,9
98	138	2	2	112,3	67	58,5	11 000	18 000	301	999	2 066	920	3 234	7 057	86,4	142,4	199,8
98	138	2	2	112,3	63	56	10 000	17 000	437	1 567	3 319	1 287	4 722	10 222	207,8	330,5	441,6

Spindle bearings

With large or small balls
Steel or ceramic balls
Steel or Cronidur rings
Open or sealed
Design DLR

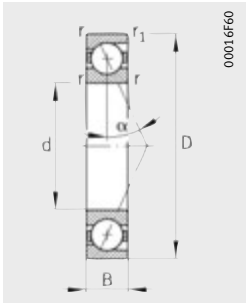

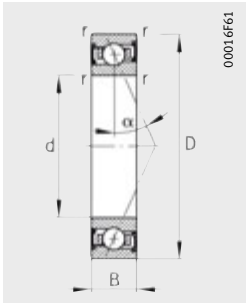

Dimension table (continued) · Dimensions in mm

Designation[1]			Mass	Dimensions								Contact angle
Series 719[4]	Series 70[4]	Series 72[4]	m	d	D	B	r	r_1	B_N	S_N	S_B	α
			≈kg				min.					°
B71918-C-T-P4S	–	–	0,55	**90**	125	18	1,1	1,1	–	–	–	15
B71918-E-T-P4S	–	–	0,55	**90**	125	18	1,1	1,1	–	–	–	25
HCB71918-C-T-P4S	–	–	0,47	**90**	125	18	1,1	1,1	4	10,4	2,2	15
HCB71918-E-T-P4S	–	–	0,47	**90**	125	18	1,1	1,1	4	10,4	2,2	25
XCB71918-C-T-P4S	–	–	0,47	**90**	125	18	1,1	1,1	4	10,4	2,2	15
XCB71918-E-T-P4S	–	–	0,47	**90**	125	18	1,1	1,1	4	10,4	2,2	25
RS71918-D-T-P4S	–	–	0,55	**90**	125	18	1,1	1,1	–	–	–	20
HCRS71918-D-T-P4S	–	–	0,47	**90**	125	18	1,1	1,1	4	10,4	2,2	20
HS71918-C-T-P4S	–	–	0,63	**90**	125	18	1,1	–	–	–	–	15
HS71918-E-T-P4S	–	–	0,63	**90**	125	18	1,1	–	–	–	–	25
HC71918-E-T-P4S	–	–	0,58	**90**	125	18	1,1	–	4	10,4	2,2	25
XC71918-E-T-P4S	–	–	0,58	**90**	125	18	1,1	–	4	10,4	2,2	25
–	**B7018-C-T-P4S**	–	1,15	**90**	140	24	1,5	1,5	–	–	–	15
–	**B7018-E-T-P4S**	–	1,15	**90**	140	24	1,5	1,5	–	–	–	25
–	**HCB7018-C-T-P4S**	–	0,96	**90**	140	24	1,5	1,5	5,5	14,5	2,2	15
–	**HCB7018-E-T-P4S**	–	0,96	**90**	140	24	1,5	1,5	5,5	14,5	2,2	25
–	**XCB7018-C-T-P4S**	–	0,96	**90**	140	24	1,5	1,5	5,5	14,5	2,2	15
–	**XCB7018-E-T-P4S**	–	0,96	**90**	140	24	1,5	1,5	5,5	14,5	2,2	25
–	**RS7018-D-T-P4S**	–	1,15	**90**	140	24	1,5	1,5	–	–	–	20
–	**HCRS7018-D-T-P4S**	–	0,96	**90**	140	24	1,5	1,5	5,5	14,5	2,2	20
–	**HS7018-C-T-P4S**	–	1,31	**90**	140	24	1,5	–	–	–	–	15
–	**HS7018-E-T-P4S**	–	1,31	**90**	140	24	1,5	–	–	–	–	25
–	**HC7018-E-T-P4S**	–	1,22	**90**	140	24	1,5	–	5,5	14,5	2,2	25
–	**XC7018-E-T-P4S**	–	1,22	**90**	140	24	1,5	–	5,5	14,5	2,2	25
–	–	**B7218-C-T-P4S**	2,26	**90**	160	30	2	2	–	–	–	15
–	–	**B7218-E-T-P4S**	2,26	**90**	160	30	2	2	–	–	–	25
–	–	**HCB7218-C-T-P4S**	1,86	**90**	160	30	2	2	–	–	–	15
–	–	**HCB7218-E-T-P4S**	1,86	**90**	160	30	2	2	–	–	–	25

1) Explanation of short designation, see section Bearing designations, page 82, *Figure 9*.

2) Explanation, see section Technical principles.

3) Minimal oil quantity lubrication.

4) The bearings are also available with gap seals.
Ordering examples: **B7018-C-2RSD-T-P4S-UL**
HSS7018-E-T-P4S-UL.

5) Ordering examples for Direct Lube design: **HCB7018-EDLR-T-P4S-UL**
HC7018-EDLR-T-P4S-UL.

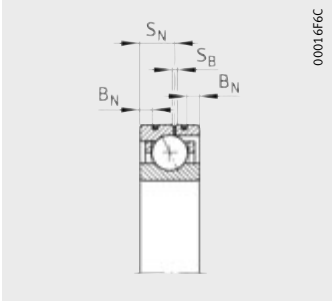

Design DLR[5)]

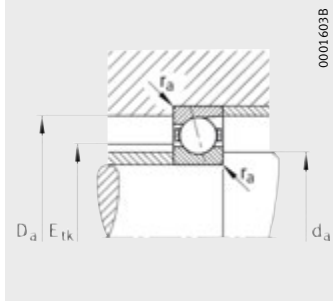

Mounting dimensions

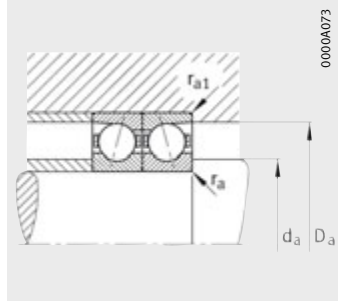

Mounting dimensions

Mounting dimensions					Basic load ratings		Limiting speeds		Preload force[2)] F_v			Lift-off force[2)] K_{aE}			Axial rigidity[2)] c_a		
d_a h12	D_a H12	r_a	r_{a1}	E_{tk}	dyn. C_r	stat. C_{0r}	n_G grease	n_G oil[3)]	L	M	H	L	M	H	L	M	H
		max.		nom.	kN	kN	min^{-1}	min^{-1}	N	N	N	N	N	N	N/µm	N/µm	N/µm
97	119	0,6	0,6	104,2	45,5	49	11 000	16 000	240	811	1 688	740	2 703	6 019	82,3	141,6	204,9
97	119	0,6	0,6	104,2	43	46,5	9 500	15 000	337	1 243	2 655	985	3 745	8 266	190,3	310,5	422,9
97	119	0,6	0,6	104,2	31,5	34	15 000	22 000	122	445	950	369	1 425	3 207	70,9	120,1	169,8
97	119	0,6	0,6	104,2	30	32	13 000	20 000	149	653	1 461	436	1 953	4 461	162	274,9	373,3
97	119	0,6	0,6	104,2	71	34	16 000	26 000	122	445	950	369	1 425	3 207	70,9	120,1	169,8
97	119	0,6	0,6	104,2	67	32	15 000	22 000	149	653	1 461	436	1 953	4 461	162	274,9	373,3
97	119	0,6	0,6	104,2	45	47,5	13 000	19 000	216	647	1 293	644	1 984	4 074	125,6	190	251,4
97	119	0,6	0,6	104,2	30,5	33,5	16 000	24 000	146	438	877	431	1 320	2 699	123,2	183,9	240,3
97	119	0,6	0,6	104,5	23,6	28,5	15 000	22 000	83	249	498	246	772	1 620	58,2	91	124,5
97	119	0,6	0,6	104,5	22,4	26,5	13 000	20 000	133	398	796	381	1 158	2 362	145,7	216	281,2
97	119	0,6	0,6	104,5	15,6	18,6	17 000	26 000	92	276	552	265	807	1 636	145,3	214,5	276,5
97	119	0,6	0,6	104,5	34,5	18,6	19 000	30 000	92	276	552	265	807	1 636	145,3	214,5	276,5
100	131	1,5	0,6	108,6	76,5	72	10 000	15 000	440	1 427	2 925	1 369	4 810	10 569	95,8	163,5	236,2
100	131	1,5	0,6	108,6	72	68	9 000	14 000	649	2 217	4 623	1 905	6 732	14 476	223,6	356,6	482,2
100	131	1,5	0,6	108,6	53	50	14 000	22 000	227	775	1 622	691	2 501	5 523	82,6	137,2	193,2
100	131	1,5	0,6	108,6	50	47,5	12 000	19 000	319	1 207	2 585	937	3 625	7 934	196,9	318,6	427
100	131	1,5	0,6	108,6	118	50	15 000	24 000	227	775	1 622	691	2 501	5 523	82,6	137,2	193,2
100	131	1,5	0,6	108,6	112	47,5	14 000	22 000	319	1 207	2 585	937	3 625	7 934	196,9	318,6	427
100	131	1,5	0,6	108,6	75	69,5	12 000	18 000	341	1 024	2 048	1 019	3 159	6 512	127,6	194,5	259,2
100	131	1,5	0,6	108,6	52	49	15 000	24 000	237	710	1 420	701	2 151	4 404	126,2	189,3	248,6
100	131	1,5	0,6	111	37,5	43	14 000	22 000	130	389	777	386	1 212	2 536	66,1	103,5	141,6
100	131	1,5	0,6	111	35,5	40	12 000	19 000	207	621	1 242	592	1 813	3 689	164,4	244,9	318,6
100	131	1,5	0,6	111	24,5	28	16 000	24 000	146	437	874	422	1 278	2 593	165,7	244	314,9
100	131	1,5	0,6	111	55	28	18 000	28 000	146	437	874	422	1 278	2 593	165,7	244	314,9
104	147	2	2	118,8	122	104	8 500	14 000	738	2 332	4 746	2 308	7 904	17 237	109,7	185,7	267,8
104	147	2	2	118,8	116	100	7 500	12 000	1 136	3 717	7 651	3 343	11 322	24 113	258,6	406,9	549,2
104	147	2	2	118,8	85	73,5	11 000	18 000	399	1 309	2 691	1 224	4 252	9 221	96,1	157,7	220,9
104	147	2	2	118,8	80	69,5	9 000	15 000	580	2 021	4 246	1 707	6 083	13 095	230,4	362,8	483,7

Spindle bearings

With large or small balls
Steel or ceramic balls
Steel rings
Open or sealed
Design DLR

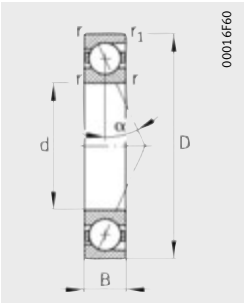

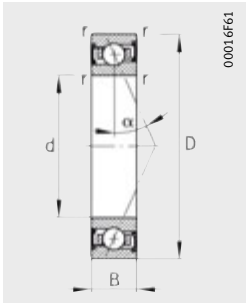

Dimension table (continued) · Dimensions in mm

Designation[1]			Mass	Dimensions								Contact angle
Series 719[4]	Series 70[4]	Series 72	m	d	D	B	r	r_1	B_N	S_N	S_B	α
			≈kg				min.					°
B71919-C-T-P4S	–	–	0,58	**95**	130	18	1,1	1,1	–	–	–	15
B71919-E-T-P4S	–	–	0,58	**95**	130	18	1,1	1,1	–	–	–	25
HCB71919-C-T-P4S	–	–	0,49	**95**	130	18	1,1	1,1	4	10,4	2,2	15
HCB71919-E-T-P4S	–	–	0,49	**95**	130	18	1,1	1,1	4	10,4	2,2	25
RS71919-D-T-P4S	–	–	0,58	**95**	130	18	1,1	1,1	–	–	–	20
HCRS71919-D-T-P4S	–	–	0,49	**95**	130	18	1,1	1,1	4	10,4	2,2	20
HS71919-C-T-P4S	–	–	0,66	**95**	130	18	1,1	–	–	–	–	15
HS71919-E-T-P4S	–	–	0,66	**95**	130	18	1,1	–	–	–	–	25
HC71919-E-T-P4S	–	–	0,61	**95**	130	18	1,1	–	4	10,4	2,2	25
–	**B7019-C-T-P4S**	–	1,2	**95**	145	24	1,5	1,5	–	–	–	15
–	**B7019-E-T-P4S**	–	1,2	**95**	145	24	1,5	1,5	–	–	–	25
–	**HCB7019-C-T-P4S**	–	1,01	**95**	145	24	1,5	1,5	5,5	14,5	2,2	15
–	**HCB7019-E-T-P4S**	–	1,01	**95**	145	24	1,5	1,5	5,5	14,5	2,2	25
–	**RS7019-D-T-P4S**	–	1,2	**95**	145	24	1,5	1,5	–	–	–	20
–	**HCRS7019-D-T-P4S**	–	1,01	**95**	145	24	1,5	1,5	5,5	14,5	2,2	20
–	**HS7019-C-T-P4S**	–	1,34	**95**	145	24	1,5	–	–	–	–	15
–	**HS7019-E-T-P4S**	–	1,34	**95**	145	24	1,5	–	–	–	–	25
–	**HC7019-E-T-P4S**	–	1,25	**95**	145	24	1,5	–	5,5	14,5	2,2	25
–	–	**B7219-C-T-P4S**	2,78	**95**	170	32	2,1	2,1	–	–	–	15
–	–	**B7219-E-T-P4S**	2,78	**95**	170	32	2,1	2,1	–	–	–	25
–	–	**HCB7219-C-T-P4S**	2,36	**95**	170	32	2,1	2,1	–	–	–	15
–	–	**HCB7219-E-T-P4S**	2,36	**95**	170	32	2,1	2,1	–	–	–	25

1) Explanation of short designation, see section Bearing designations, page 82, *Figure 9*.

2) Explanation, see section Technical principles.

3) Minimal oil quantity lubrication.

4) The bearings are also available with gap seals.
Ordering examples: **B7019-C-2RSD-T-P4S-UL**
HSS7019-E-T-P4S-UL.

5) Ordering examples for Direct Lube design: **HCB7019-EDLR-T-P4S-UL**
HC7019-EDLR-T-P4S-UL.

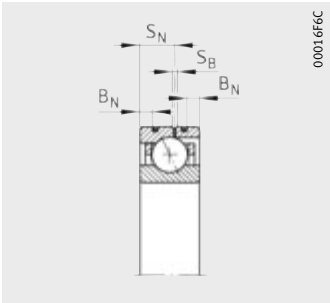

Design DLR[5)]

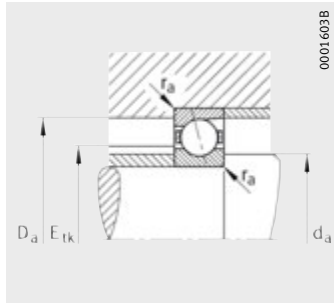

Mounting dimensions

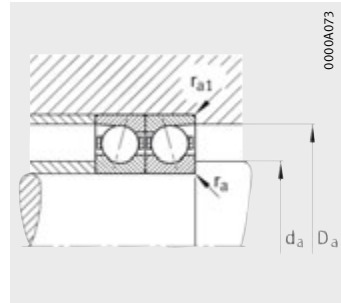

Mounting dimensions

Mounting dimensions					Basic load ratings		Limiting speeds		Preload force[2)] F_v			Lift-off force[2)] K_{aE}			Axial rigidity[2)] c_a		
d_a h12	D_a H12	r_a	r_{a1}	E_{tk}	dyn. C_r	stat. C_{0r}	n_G grease	n_G oil[3)]	L	M	H	L	M	H	L	M	H
		max.		nom.	kN	kN	min^{-1}	min^{-1}	N	N	N	N	N	N	N/µm	N/µm	N/µm
102	124	0,6	0,6	109,2	46,5	51	10 000	16 000	245	827	1 724	755	2 752	6 135	84,9	145,9	211,1
102	124	0,6	0,6	109,2	44	48	9 000	14 000	343	1 269	2 713	1 002	3 820	8 439	196,4	320,5	436,5
102	124	0,6	0,6	109,2	32	35,5	14 000	22 000	121	443	947	365	1 415	3 185	72,3	122,5	173
102	124	0,6	0,6	109,2	30,5	33,5	13 000	19 000	150	663	1 487	439	1 982	4 537	166,6	283,4	384,9
102	124	0,6	0,6	109,2	45,5	49	12 000	18 000	218	654	1 308	649	2 003	4 116	129,2	195,4	258,5
102	124	0,6	0,6	109,2	31	34,5	15 000	24 000	148	445	891	437	1 341	2 740	127	189,6	247,6
102	124	0,6	0,6	109,5	24,5	30	14 000	22 000	85	255	509	252	789	1 651	60,8	94,8	129,4
102	124	0,6	0,6	109,5	22,8	28	13 000	19 000	138	414	828	395	1 205	2 455	152,8	226,9	295
102	124	0,6	0,6	109,5	16	19,3	16 000	24 000	96	288	575	277	842	1 704	153,1	225,5	290,4
105	136	1,5	0,6	113,6	78	76,5	9 500	15 000	447	1 452	2 980	1 388	4 880	10 731	99,4	169,3	244,3
105	136	1,5	0,6	113,6	75	72	8 500	13 000	675	2 308	4 813	1 981	7 005	15 060	234,4	373,7	505,1
105	136	1,5	0,6	113,6	54	53	13 000	20 000	238	811	1 692	724	2 617	5 757	86,7	144,1	202,4
105	136	1,5	0,6	113,6	51	51	12 000	18 000	325	1 231	2 641	954	3 694	8 096	204,9	331,4	444,1
105	136	1,5	0,6	113,6	76,5	75	11 000	17 000	348	1 044	2 088	1 039	3 217	6 628	132,8	202,2	269,1
105	136	1,5	0,6	113,6	53	52	14 000	22 000	241	723	1 447	713	2 188	4 482	131,2	196,7	258,3
105	136	1,5	0,6	116	38	44	13 000	20 000	130	389	777	385	1 210	2 529	67,4	105,5	144,1
105	136	1,5	0,6	116	35,5	41,5	12 000	18 000	211	633	1 265	604	1 847	3 756	169,3	251,8	327,5
105	136	1,5	0,6	116	24,5	28,5	15 000	24 000	146	437	874	422	1 277	2 591	169,3	249,1	321,4
110,5	154	2	2	125,8	127	114	8 000	13 000	768	2 426	4 937	2 398	8 203	17 878	115,7	195,6	281,8
110,5	154	2	2	125,8	122	108	7 000	11 000	1 193	3 906	8 042	3 509	11 890	25 320	274,2	431,5	582
110,5	154	2	2	125,8	88	80	10 000	17 000	411	1 353	2 784	1 258	4 384	9 513	101	165,9	232,1
110,5	154	2	2	125,8	83	75	8 500	14 000	598	2 092	4 400	1 759	6 291	13 552	242,8	382,6	510

Spindle bearings

With large or small balls
Steel or ceramic balls
Steel or Cronidur rings
Open or sealed
Design DLR

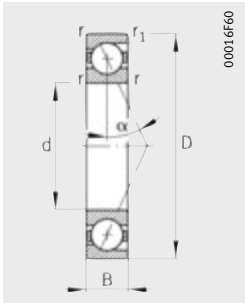

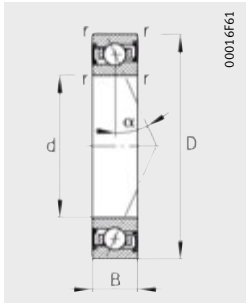

Dimension table (continued) · Dimensions in mm

Designation[1]			Mass	Dimensions								Contact angle
Series 719[4]	Series 70[4]	Series 72	m	d	D	B	r	r_1	B_N	S_N	S_B	α
			≈kg				min.					°
B71920-C-T-P4S	–	–	0,79	**100**	140	20	1,1	1,1	–	–	–	15
B71920-E-T-P4S	–	–	0,79	**100**	140	20	1,1	1,1	–	–	–	25
HCB71920-C-T-P4S	–	–	0,66	**100**	140	20	1,1	1,1	4	12	2,2	15
HCB71920-E-T-P4S	–	–	0,66	**100**	140	20	1,1	1,1	4	12	2,2	25
XCB71920-C-T-P4S	–	–	0,66	**100**	140	20	1,1	1,1	4	12	2,2	15
XCB71920-E-T-P4S	–	–	0,66	**100**	140	20	1,1	1,1	4	12	2,2	25
RS71920-D-T-P4S	–	–	0,79	**100**	140	20	1,1	1,1	–	–	–	20
HCRS71920-D-T-P4S	–	–	0,66	**100**	140	20	1,1	1,1	4	12	2,2	20
HS71920-C-T-P4S	–	–	0,9	**100**	140	20	1,1	–	–	–	–	15
HS71920-E-T-P4S	–	–	0,9	**100**	140	20	1,1	–	–	–	–	25
HC71920-E-T-P4S	–	–	0,84	**100**	140	20	1,1	–	4	12	2,2	25
XC71920-E-T-P4S	–	–	0,84	**100**	140	20	1,1	–	4	12	2,2	25
–	**B7020-C-T-P4S**	–	1,26	**100**	150	24	1,5	1,5	–	–	–	15
–	**B7020-E-T-P4S**	–	1,26	**100**	150	24	1,5	1,5	–	–	–	25
–	**HCB7020-C-T-P4S**	–	1,05	**100**	150	24	1,5	1,5	5,5	14,5	2,2	15
–	**HCB7020-E-T-P4S**	–	1,05	**100**	150	24	1,5	1,5	5,5	14,5	2,2	25
–	**XCB7020-C-T-P4S**	–	1,05	**100**	150	24	1,5	1,5	5,5	14,5	2,2	15
–	**XCB7020-E-T-P4S**	–	1,05	**100**	150	24	1,5	1,5	5,5	14,5	2,2	25
–	**RS7020-D-T-P4S**	–	1,26	**100**	150	24	1,5	1,5	–	–	–	20
–	**HCRS7020-D-T-P4S**	–	1,05	**100**	150	24	1,5	1,5	5,5	14,5	2,2	20
–	**HS7020-C-T-P4S**	–	1,4	**100**	150	24	1,5	–	–	–	–	15
–	**HS7020-E-T-P4S**	–	1,4	**100**	150	24	1,5	–	–	–	–	25
–	**HC7020-E-T-P4S**	–	1,29	**100**	150	24	1,5	–	5,5	14,5	2,2	25
–	**XC7020-E-T-P4S**	–	1,29	**100**	150	24	1,5	–	5,5	14,5	2,2	25
–	–	**B7220-C-T-P4S**	3,32	**100**	180	34	2,1	2,1	–	–	–	15
–	–	**B7220-E-T-P4S**	3,32	**100**	180	34	2,1	2,1	–	–	–	25
–	–	**HCB7220-C-T-P4S**	2,87	**100**	180	34	2,1	2,1	–	–	–	15
–	–	**HCB7220-E-T-P4S**	2,87	**100**	180	34	2,1	2,1	–	–	–	25

1) Explanation of short designation, see section Bearing designations, page 82, *Figure 9*.

2) Explanation, see section Technical principles.

3) Minimal oil quantity lubrication.

4) The bearings are also available with gap seals.
Ordering examples: **B7020-C-2RSD-T-P4S-UL**
HSS7020-E-T-P4S-UL.

5) Ordering examples for Direct Lube design: **HCB7020-EDLR-T-P4S-UL**
HC7020-EDLR-T-P4S-UL.

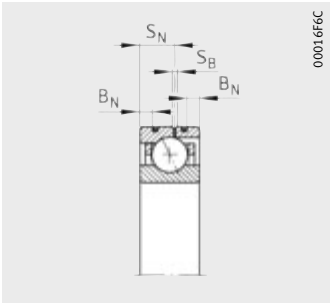

Design DLR[5)]

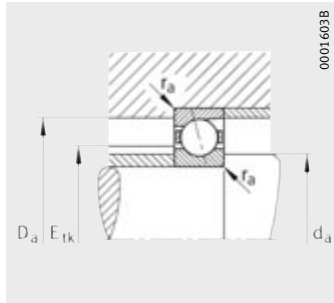

Mounting dimensions

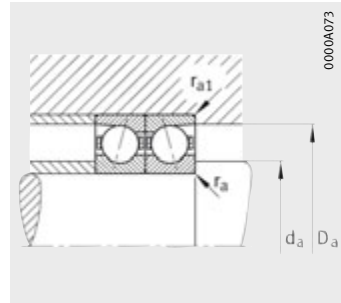

Mounting dimensions

Mounting dimensions					Basic load ratings		Limiting speeds		Preload force[2)] F_v			Lift-off force[2)] K_{aE}			Axial rigidity[2)] c_a		
d_a h12	D_a H12	r_a	r_{a1}	E_{tk}	dyn. C_r	stat. C_{0r}	n_G grease	n_G oil[3)]	L	M	H	L	M	H	L	M	H
		max.		nom.	kN	kN	min^{-1}	min^{-1}	N	N	N	N	N	N	N/µm	N/µm	N/µm
107	133	0,6	0,6	117,2	58,5	64	9 500	14 000	318	1 059	2 194	980	3 524	7 827	94,6	161,7	233,7
107	133	0,6	0,6	117,2	55	60	8 500	13 000	453	1 626	3 437	1 323	4 902	10 706	219,8	355,1	481,6
107	133	0,6	0,6	117,2	40,5	44	13 000	20 000	161	576	1 220	488	1 841	4 106	81,4	136,6	192,3
107	133	0,6	0,6	117,2	38	42,5	12 000	18 000	204	852	1 881	596	2 544	5 745	188	313,9	424,3
107	133	0,6	0,6	117,2	90	44	14 000	22 000	161	576	1 220	488	1 841	4 106	81,4	136,6	192,3
107	133	0,6	0,6	117,2	85	42,5	13 000	20 000	204	852	1 881	596	2 544	5 745	188	313,9	424,3
107	133	0,6	0,6	117,2	57	62	11 000	17 000	273	819	1 638	813	2 508	5 153	141,8	214,5	283,7
107	133	0,6	0,6	117,2	39	43	14 000	22 000	187	560	1 121	552	1 687	3 448	139,9	208,5	272,3
107	133	0,6	0,6	116,7	29	36	13 000	20 000	102	306	611	301	947	1 978	65,5	102,4	139,7
107	133	0,6	0,6	116,7	27,5	33,5	12 000	18 000	166	497	994	476	1 447	2 950	165,5	245,4	319,2
107	133	0,6	0,6	116,7	19	23,6	15 000	24 000	115	345	690	332	1 009	2 046	165,4	243,6	314,1
107	133	0,6	0,6	116,7	42,5	23,6	17 000	26 000	115	345	690	332	1 009	2 046	165,4	243,6	314,1
110	141	1,5	0,6	118,6	81,5	81,5	9 000	14 000	467	1 516	3 112	1 450	5 092	11 199	104,1	177,2	255,8
110	141	1,5	0,6	118,6	76,5	76,5	8 000	13 000	685	2 347	4 902	2 009	7 114	15 314	243,1	387,4	523,6
110	141	1,5	0,6	118,6	56	56	13 000	19 000	238	818	1 707	723	2 632	5 787	89,4	148,6	208,5
110	141	1,5	0,6	118,6	53	53	11 000	17 000	334	1 272	2 731	980	3 815	8 366	213,5	345,9	463,5
110	141	1,5	0,6	118,6	125	56	14 000	22 000	238	818	1 707	723	2 632	5 787	89,4	148,6	208,5
110	141	1,5	0,6	118,6	118	53	13 000	19 000	334	1 272	2 731	980	3 815	8 366	213,5	345,9	463,5
110	141	1,5	0,6	118,6	78	80	11 000	16 000	355	1 065	2 129	1 060	3 278	6 749	138	209,9	279,1
110	141	1,5	0,6	118,6	54	56	14 000	22 000	246	737	1 474	727	2 229	4 561	136,3	204,2	267,9
110	141	1,5	0,6	121	38	45,5	13 000	19 000	134	402	804	397	1 250	2 618	69,5	108,9	149
110	141	1,5	0,6	121	36	42,5	11 000	17 000	215	644	1 288	615	1 879	3 822	173,9	258,6	336,2
110	141	1,5	0,6	121	25	30	15 000	22 000	148	444	888	428	1 297	2 631	173,8	255,7	329,8
110	141	1,5	0,6	121	56	30	16 000	24 000	148	444	888	428	1 297	2 631	173,8	255,7	329,8
114,5	165,5	2,1	2,1	132,4	132	122	7 500	12 000	796	2 519	5 128	2 482	8 499	18 521	121,7	205,5	295,8
114,5	165,5	2,1	2,1	132,4	125	116	6 700	10 000	1 217	3 994	8 229	3 576	12 137	25 856	287	451,4	608,5
114,5	165,5	2,1	2,1	132,4	91,5	85	9 500	16 000	428	1 408	2 898	1 309	4 556	9 884	106,4	174,6	244,2
114,5	165,5	2,1	2,1	132,4	86,5	81,5	8 000	13 000	623	2 181	5 427	1 832	6 554	16 724	256,2	403,6	548,1

Spindle bearings

With large or small balls
Steel or ceramic balls
Steel rings
Open or sealed
Design DLR

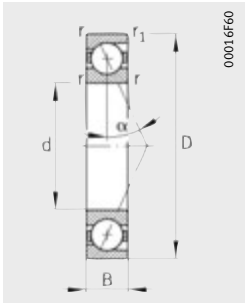

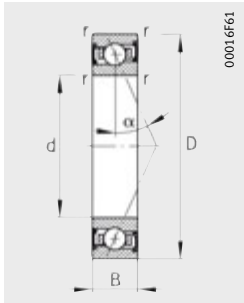

Dimension table (continued) · Dimensions in mm

Designation[1]			Mass	Dimensions								Contact angle
Series 719[4]	Series 70[4]	Series 72	m	d	D	B	r	r_1	B_N	S_N	S_B	α
			≈kg				min.					°
B71921-C-T-P4S	–	–	0,8	**105**	145	20	1,1	1,1	–	–	–	15
B71921-E-T-P4S	–	–	0,8	**105**	145	20	1,1	1,1	–	–	–	25
HCB71921-C-T-P4S	–	–	0,7	**105**	145	20	1,1	1,1	4	12	2,2	15
HCB71921-E-T-P4S	–	–	0,7	**105**	145	20	1,1	1,1	4	12	2,2	25
RS71921-D-T-P4S	–	–	0,8	**105**	145	20	1,1	1,1	–	–	–	20
HCRS71921-D-T-P4S	–	–	0,7	**105**	145	20	1,1	1,1	4	12	2,2	20
HS71921-C-T-P4S	–	–	0,9	**105**	145	20	1,1	–	–	–	–	15
HS71921-E-T-P4S	–	–	0,9	**105**	145	20	1,1	–	–	–	–	25
HC71921-E-T-P4S	–	–	0,9	**105**	145	20	1,1	–	4	12	2,2	25
–	**B7021-C-T-P4S**	–	1,6	**105**	160	26	2	2	–	–	–	15
–	**B7021-E-T-P4S**	–	1,6	**105**	160	26	2	2	–	–	–	25
–	**HCB7021-C-T-P4S**	–	1,3	**105**	160	26	2	2	6	15,2	2,2	15
–	**HCB7021-E-T-P4S**	–	1,3	**105**	160	26	2	2	6	15,2	2,2	25
–	**RS7021-D-T-P4S**	–	1,6	**105**	160	26	2	2	–	–	–	20
–	**HCRS7021-D-T-P4S**	–	1,3	**105**	160	26	2	2	6	15,2	2,2	20
–	**HS7021-C-T-P4S**	–	1,8	**105**	160	26	2	–	–	–	–	15
–	**HS7021-E-T-P4S**	–	1,8	**105**	160	26	2	–	–	–	–	25
–	**HC7021-E-T-P4S**	–	1,6	**105**	160	26	2	–	6	15,2	2,2	25
–	–	**B7221-C-T-P4S**	4	**105**	190	36	2,1	2,1	–	–	–	15
–	–	**B7221-E-T-P4S**	4	**105**	190	36	2,1	2,1	–	–	–	25
–	–	**HCB7221-C-T-P4S**	3,3	**105**	190	36	2,1	2,1	–	–	–	15
–	–	**HCB7221-E-T-P4S**	3,3	**105**	190	36	2,1	2,1	–	–	–	25

1) Explanation of short designation, see section Bearing designations, page 82, *Figure 9*.

2) Explanation, see section Technical principles.

3) Minimal oil quantity lubrication.

4) The bearings are also available with gap seals.
Ordering examples: **B7021-C-2RSD-T-P4S-UL**
HSS7021-E-T-P4S-UL.

5) Ordering examples for Direct Lube design: **HCB7021-EDLR-T-P4S-UL**
HC7021-EDLR-T-P4S-UL.

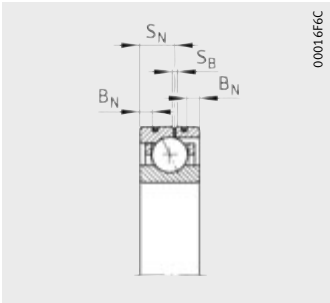

Design DLR[5)]

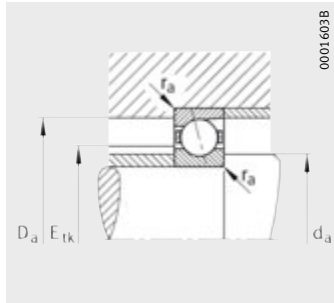

Mounting dimensions

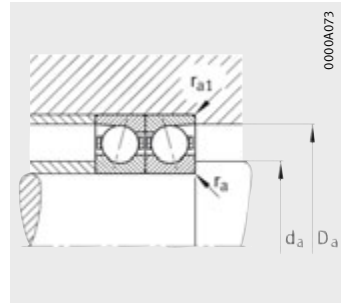

Mounting dimensions

Mounting dimensions					Basic load ratings		Limiting speeds		Preload force[2)] F_v			Lift-off force[2)] K_{aE}			Axial rigidity[2)] c_a		
d_a h12	D_a H12	r_a	r_{a1}	E_{tk}	dyn. C_r	stat. C_{0r}	n_G grease	n_G oil[3)]	L	M	H	L	M	H	L	M	H
		max.		nom.	kN	kN	min^{-1}	min^{-1}	N	N	N	N	N	N	N/µm	N/µm	N/µm
112	138	0,6	0,6	121,2	58,5	64	9 000	14 000	318	1 059	2 194	980	3 524	7 826	94,6	161,7	233,7
112	138	0,6	0,6	121,2	55	60	8 000	13 000	453	1 626	3 437	1 323	4 902	10 705	219,8	355,1	481,6
112	138	0,6	0,6	121,2	40	45	13 000	19 000	161	576	1 220	487	1 840	4 105	81,2	136,6	192,3
112	138	0,6	0,6	121,2	38	42,5	11 000	17 000	204	852	1 881	596	2 543	5 745	188	313,8	424,3
112	138	0,6	0,6	121,2	56	62	11 000	16 000	268	805	1 609	798	2 464	5 058	140,9	213	281,6
112	138	0,6	0,6	121,2	39	44	14 000	22 000	187	560	1 121	552	1 687	3 448	139,9	208,5	272,3
112	138	0,6	0,6	121,7	30	38	13 000	19 000	104	311	622	307	961	2 008	68,3	106,4	144,9
112	138	0,6	0,6	121,7	28	35,5	11 000	17 000	169	506	1 012	484	1 472	2 999	172,2	255,3	331,8
112	138	0,6	0,6	121,7	19,6	24,5	15 000	22 000	117	352	704	337	1 029	2 086	171,9	253,8	327,1
116	150	2	1	125,8	83	85	8 500	13 000	476	1 526	3 057	1 462	5 056	10 804	108,1	182,2	258,7
116	150	2	1	125,8	78	81,5	7 500	12 000	713	2 450	5 109	2 073	7 346	15 795	258,3	411	554,2
116	150	2	1	125,8	57	60	12 000	18 000	246	845	1 750	732	2 651	5 772	93,1	154,1	214,8
116	150	2	1	125,8	54	57	11 000	16 000	347	1 325	2 854	997	3 883	8 545	226	365,6	489,7
116	150	2	1	125,8	80	83	10 000	16 000	364	1 092	2 184	1 086	3 359	6 916	143,4	218	289,8
116	150	2	1	125,8	56	58,5	13 000	20 000	255	764	1 529	754	2 309	4 729	142,3	213,1	279,5
116	150	2	1	127,9	49	58,5	12 000	18 000	170	509	1 018	504	1 580	3 317	75,9	118,7	162,4
116	150	2	1	127,9	46,5	54	11 000	16 000	276	828	1 656	790	2 412	4 919	190,6	283,4	368,9
116	150	2	1	127,9	32	38	14 000	22 000	192	575	1 150	555	1 682	3 412	191	281,3	362,9
120,5	174,5	2,1	2,1	139,9	163	146	7 000	11 000	997	3 140	6 377	3 116	10 597	23 098	132	222,4	320,4
120,5	174,5	2,1	2,1	139,9	156	140	6 300	9 500	1 558	5 040	10 337	4 587	15 335	32 479	313,5	490,7	660,3
120,5	174,5	2,1	2,1	139,9	112	102	9 000	15 000	535	1 734	3 559	1 635	5 604	12 126	115,2	187,9	262,4
120,5	174,5	2,1	2,1	139,9	106	98	7 500	12 000	805	2 756	5 751	2 371	8 297	17 714	280,6	438,8	583,1

Spindle bearings

With large or small balls
Steel or ceramic balls
Steel or Cronidur rings
Open or sealed
Design DLR

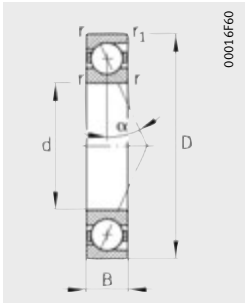

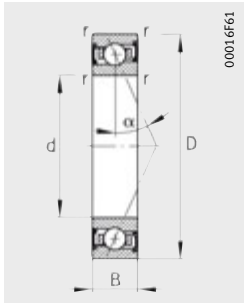

Dimension table (continued) · Dimensions in mm

Designation[1]			Mass	Dimensions								Contact angle
Series 719[4]	Series 70[4]	Series 72	m	d	D	B	r	r_1	B_N	S_N	S_B	α
			≈kg				min.					°
B71922-C-T-P4S	–	–	0,8	**110**	150	20	1,1	1,1	–	–	–	15
B71922-E-T-P4S	–	–	0,8	**110**	150	20	1,1	1,1	–	–	–	25
HCB71922-C-T-P4S	–	–	0,7	**110**	150	20	1,1	1,1	4	12	2,2	15
HCB71922-E-T-P4S	–	–	0,7	**110**	150	20	1,1	1,1	4	12	2,2	25
XCB71922-C-T-P4S	–	–	0,7	**110**	150	20	1,1	1,1	4	12	2,2	15
XCB71922-E-T-P4S	–	–	0,7	**110**	150	20	1,1	1,1	4	12	2,2	25
RS71922-D-T-P4S	–	–	0,8	**110**	150	20	1,1	1,1	–	–	–	20
HCRS71922-D-T-P4S	–	–	0,7	**110**	150	20	1,1	1,1	4	12	2,2	20
HS71922-C-T-P4S	–	–	1	**110**	150	20	1,1	–	–	–	–	15
HS71922-E-T-P4S	–	–	1	**110**	150	20	1,1	–	–	–	–	25
HC71922-E-T-P4S	–	–	0,9	**110**	150	20	1,1	–	4	12	2,2	25
XC71922-E-T-P4S	–	–	0,9	**110**	150	20	1,1	–	4	12	2,2	25
–	**B7022-C-T-P4S**	–	2	**110**	170	28	2	2	–	–	–	15
–	**B7022-E-T-P4S**	–	2	**110**	170	28	2	2	–	–	–	25
–	**HCB7022-C-T-P4S**	–	1,7	**110**	170	28	2	2	6	16,2	2,2	15
–	**HCB7022-E-T-P4S**	–	1,7	**110**	170	28	2	2	6	16,2	2,2	25
–	**XCB7022-C-T-P4S**	–	1,7	**110**	170	28	2	2	6	16,2	2,2	15
–	**XCB7022-E-T-P4S**	–	1,7	**110**	170	28	2	2	6	16,2	2,2	25
–	**RS7022-D-T-P4S**	–	2	**110**	170	28	2	2	–	–	–	20
–	**HCRS7022-D-T-P4S**	–	1,7	**110**	170	28	2	2	6	16,2	2,2	20
–	**HS7022-C-T-P4S**	–	2,2	**110**	170	28	2	–	–	–	–	15
–	**HS7022-E-T-P4S**	–	2,2	**110**	170	28	2	–	–	–	–	25
–	**HC7022-E-T-P4S**	–	2,1	**110**	170	28	2	–	6	16,2	2,2	25
–	**XC7022-E-T-P4S**	–	2,1	**110**	170	28	2	–	6	16,2	2,2	25
–	–	**B7222-C-T-P4S**	4,7	**110**	200	38	2,1	2,1	–	–	–	15
–	–	**B7222-E-T-P4S**	4,7	**110**	200	38	2,1	2,1	–	–	–	25
–	–	**HCB7222-C-T-P4S**	4	**110**	200	38	2,1	2,1	–	–	–	15
–	–	**HCB7222-E-T-P4S**	4	**110**	200	38	2,1	2,1	–	–	–	25

1) Explanation of short designation, see section Bearing designations, page 82, *Figure 9*.

2) Explanation, see section Technical principles.

3) Minimal oil quantity lubrication.

4) The bearings are also available with gap seals.
Ordering examples: **B7022-C-2RSD-T-P4S-UL**
HSS7022-E-T-P4S-UL.

5) Ordering examples for Direct Lube design: **HCB7022-EDLR-T-P4S-UL**
HC7022-EDLR-T-P4S-UL.

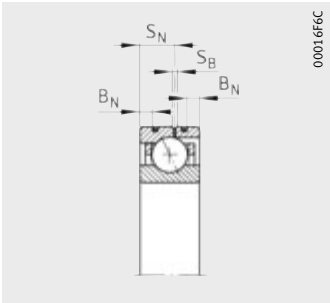

Design DLR[5)]

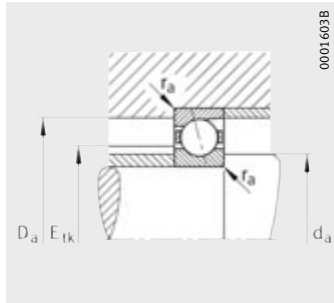

Mounting dimensions

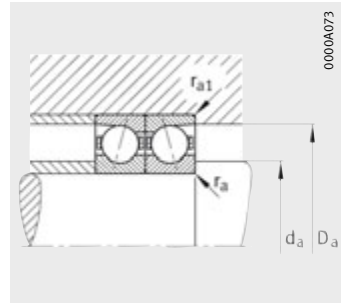

Mounting dimensions

Mounting dimensions					Basic load ratings		Limiting speeds		Preload force[2)] F_v			Lift-off force[2)] K_{aE}			Axial rigidity[2)] c_a		
d_a h12	D_a H12	r_a	r_{a1}	E_{tk}	dyn. C_r	stat. C_{0r}	n_G grease	n_G oil[3)]	L	M	H	L	M	H	L	M	H
		max.		nom.	kN	kN	min^{-1}	min^{-1}	N	N	N	N	N	N	N/µm	N/µm	N/µm
117	143	0,6	0,6	126,2	58,5	67	8 500	13 000	316	1 056	2 191	972	3 501	7 781	96,5	164,8	237,9
117	143	0,6	0,6	126,2	56	63	8 000	12 000	458	1 651	3 495	1 337	4 973	10 873	226,3	365,8	496,2
117	143	0,6	0,6	126,2	40,5	46,5	12 000	19 000	163	583	1 236	493	1 860	4 150	83,7	140,4	197,5
117	143	0,6	0,6	126,2	39	44	11 000	17 000	205	861	1 905	599	2 569	5 813	193,3	323	436,8
117	143	0,6	0,6	126,2	90	46,5	13 000	20 000	163	583	1 236	493	1 860	4 150	83,7	140,4	197,5
117	143	0,6	0,6	126,2	86,5	44	12 000	19 000	205	861	1 905	599	2 569	5 813	193,3	323	436,8
117	143	0,6	0,6	126,2	57	64	10 000	16 000	273	819	1 638	813	2 505	5 144	145,4	219,7	290,3
117	143	0,6	0,6	126,2	40	45,5	13 000	20 000	192	575	1 150	567	1 732	3 535	144,8	215,8	281,7
117	143	0,6	0,6	126,4	34,5	44	12 000	19 000	121	362	724	357	1 120	2 342	71,5	111,7	152,3
117	143	0,6	0,6	126,4	32,5	40,5	11 000	17 000	196	587	1 173	560	1 709	3 480	180,2	267,6	347,7
117	143	0,6	0,6	126,4	22,8	28,5	14 000	22 000	135	405	810	390	1 185	2 395	180,2	265,2	341,3
117	143	0,6	0,6	126,4	51	28,5	16 000	24 000	135	405	810	390	1 185	2 395	180,2	265,2	341,3
121	159	2	1	133,3	110	110	8 000	12 000	648	2 072	4 235	2 011	6 949	15 201	119,6	202,1	290,9
121	159	2	1	133,3	104	104	7 500	12 000	975	3 262	6 760	2 857	9 878	21 147	281,3	444,8	600
121	159	2	1	133,3	75	76,5	12 000	18 000	340	1 140	2 363	1 035	3 667	8 007	103,8	170,9	239,2
121	159	2	1	133,3	72	72	11 000	16 000	479	1 742	3 707	1 408	5 232	11 364	248	395,3	527,8
121	159	2	1	133,3	166	76,5	13 000	20 000	340	1 140	2 363	1 035	3 667	8 007	103,8	170,9	239,2
121	159	2	1	133,3	160	72	12 000	18 000	479	1 742	3 707	1 408	5 232	11 364	248	395,3	527,8
121	159	2	1	133,3	108	106	9 500	15 000	491	1 474	2 948	1 466	4 539	9 350	158,2	240,7	320,2
121	159	2	1	133,3	73,5	75	12 000	19 000	334	1 003	2 007	987	3 032	6 208	155,3	232,7	305,3
121	159	2	1	135,4	50	60	12 000	18 000	174	523	1 045	516	1 623	3 403	78,2	122,3	167,3
121	159	2	1	135,4	46,5	56	11 000	16 000	280	840	1 679	802	2 446	4 984	195,8	290,9	378,4
121	159	2	1	135,4	32,5	39	14 000	22 000	192	575	1 150	555	1 681	3 409	195,2	287,3	370,4
121	159	2	1	135,4	72	39	15 000	24 000	192	575	1 150	555	1 681	3 409	195,2	287,3	370,4
126,5	183,5	2,1	2,1	147,4	163	150	6 700	10 000	997	3 139	6 376	3 115	10 591	23 087	132	222,4	320,3
126,5	183,5	2,1	2,1	147,4	153	143	6 000	9 000	1 525	4 939	10 131	4 487	15 015	31 793	311	486,8	654,6
126,5	183,5	2,1	2,1	147,4	112	104	8 500	14 000	535	1 734	3 558	1 635	5 602	12 118	115,2	187,8	262,3
126,5	183,5	2,1	2,1	147,4	106	98	7 000	11 000	789	2 705	5 648	2 322	8 137	17 383	278,5	435,7	578,9

Spindle bearings

With large or small balls
Steel or ceramic balls
Steel or Cronidur rings
Open or sealed

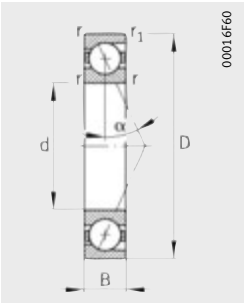

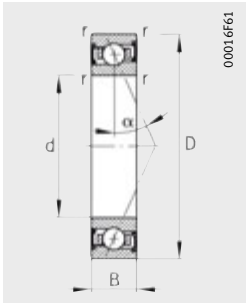

Dimension table (continued) · Dimensions in mm

Designation[1]			Mass	Dimensions					Contact angle	Mounting dimensions	
Series 719[4]	Series 70[4]	Series 72	m	d	D	B	r	r_1	α	d_a h12	D_a H12
			≈kg				min.		°		
B71924-C-T-P4S	–	–	1,2	**120**	165	22	1,1	1,1	15	128	157
B71924-E-T-P4S	–	–	1,2	**120**	165	22	1,1	1,1	25	128	157
HCB71924-C-T-P4S	–	–	1	**120**	165	22	1,1	1,1	15	128	157
HCB71924-E-T-P4S	–	–	1	**120**	165	22	1,1	1,1	25	128	157
XCB71924-C-T-P4S	–	–	1	**120**	165	22	1,1	1,1	15	128	157
XCB71924-E-T-P4S	–	–	1	**120**	165	22	1,1	1,1	25	128	157
RS71924-D-T-P4S	–	–	1,2	**120**	165	22	1,1	1,1	20	128	157
HCRS71924-D-T-P4S	–	–	1	**120**	165	22	1,1	1,1	20	128	157
HS71924-C-T-P4S	–	–	1,3	**120**	165	22	1,1	–	15	128	157
HS71924-E-T-P4S	–	–	1,3	**120**	165	22	1,1	–	25	128	157
HC71924-E-T-P4S	–	–	1,3	**120**	165	22	1,1	–	25	128	157
XC71924-E-T-P4S	–	–	1,3	**120**	165	22	1,1	–	25	128	157
–	**B7024-C-T-P4S**	–	2,1	**120**	180	28	2	2	15	131	169
–	**B7024-E-T-P4S**	–	2,1	**120**	180	28	2	2	25	131	169
–	**HCB7024-C-T-P4S**	–	1,8	**120**	180	28	2	2	15	131	169
–	**HCB7024-E-T-P4S**	–	1,8	**120**	180	28	2	2	25	131	169
–	**XCB7024-C-T-P4S**	–	1,8	**120**	180	28	2	2	15	131	169
–	**XCB7024-E-T-P4S**	–	1,8	**120**	180	28	2	2	25	131	169
–	**RS7024-D-T-P4S**	–	2,1	**120**	180	28	2	2	20	131	169
–	**HCRS7024-D-T-P4S**	–	1,8	**120**	180	28	2	2	20	131	169
–	**HS7024-C-T-P4S**	–	2,3	**120**	180	28	2	–	15	131	169
–	**HS7024-E-T-P4S**	–	2,3	**120**	180	28	2	–	25	131	169
–	**HC7024-E-T-P4S**	–	2,1	**120**	180	28	2	–	25	131	169
–	**XC7024-E-T-P4S**	–	2,1	**120**	180	28	2	–	25	131	169
–	–	**B7224-C-T-P4S**	5,5	**120**	215	40	2,1	2,1	15	140	195
–	–	**B7224-E-T-P4S**	5,5	**120**	215	40	2,1	2,1	25	140	195
–	–	**HCB7224-C-T-P4S**	4,4	**120**	215	40	2,1	2,1	15	140	195
–	–	**HCB7224-E-T-P4S**	4,4	**120**	215	40	2,1	2,1	25	140	195

1) Explanation of short designation, see section Bearing designations, page 82, *Figure 9*.

2) Explanation, see section Technical principles.

3) Minimal oil quantity lubrication.

4) The bearings are also available with gap seals.
Ordering examples: **B7024-C-2RSD-T-P4S-UL**
HSS7024-E-T-P4S-UL.

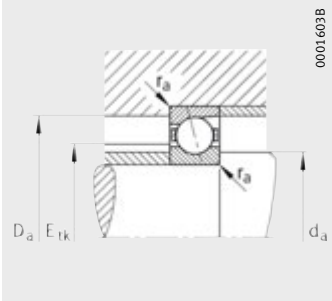

Mounting dimensions

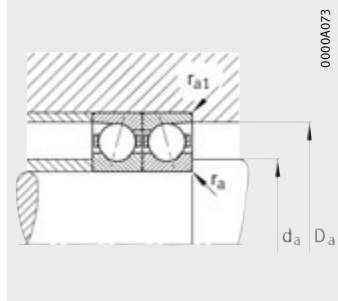

Mounting dimensions

			Basic load ratings		Limiting speeds		Preload force[2] F_v			Lift-off force[2] K_{aE}			Axial rigidity[2] c_a		
r_a	r_{a1}	E_{tk}	dyn. C_r	stat. C_{0r}	n_G grease	n_G oil[3]	L	M	H	L	M	H	L	M	H
max.		nom.	kN	kN	min^{-1}	min^{-1}	N	N	N	N	N	N	N/µm	N/µm	N/µm
0,6	0,6	138,2	73,5	85	8 000	12 000	408	1 344	2 773	1 257	4 462	9 838	109,5	186	267,5
0,6	0,6	138,2	69,5	80	7 000	11 000	591	2 087	4 388	1 726	6 291	13 620	256,2	411,5	555,9
0,6	0,6	138,2	51	58,5	11 000	17 000	212	742	1 566	642	2 370	5 263	95,1	158,4	222,4
0,6	0,6	138,2	48	55	10 000	15 000	277	1 110	2 421	811	3 315	7 395	222,7	365,9	492,3
0,6	0,6	138,2	114	58,5	12 000	19 000	212	742	1 566	642	2 370	5 263	95,1	158,4	222,4
0,6	0,6	138,2	108	55	11 000	17 000	277	1 110	2 421	811	3 315	7 395	222,7	365,9	492,3
0,6	0,6	138,2	71	81,5	9 500	14 000	340	1 020	2 041	1 012	3 118	6 406	162,7	245,6	324,5
0,6	0,6	138,2	49	57	12 000	19 000	235	704	1 408	693	2 119	4 324	161	239,8	312,8
0,6	0,6	138,9	36,5	48	11 000	17 000	127	382	764	374	1 179	2 462	77,6	121,2	164,9
0,6	0,6	138,9	34	45	10 000	15 000	207	621	1 242	591	1 806	3 680	196,3	291,4	378,6
0,6	0,6	138,9	23,6	31	13 000	20 000	143	428	856	413	1 248	2 528	196,6	288,6	371,6
0,6	0,6	138,9	53	31	14 000	22 000	143	428	856	413	1 248	2 528	196,6	288,6	371,6
2	1	143,3	112	116	7 500	12 000	657	2 107	4 308	2 035	7 046	15 410	123,7	208,9	300,3
2	1	143,3	106	110	6 700	10 000	989	3 317	6 881	2 896	10 031	21 490	291,7	461,2	621,8
2	1	143,3	78	81,5	10 000	16 000	351	1 175	2 437	1 068	3 775	8 244	108,3	178	248,9
2	1	143,3	73,5	76,5	9 500	14 000	488	1 782	3 795	1 434	5 334	11 621	257,6	410,6	548,6
2	1	143,3	173	81,5	12 000	18 000	351	1 175	2 437	1 068	3 775	8 244	108,3	178	248,9
2	1	143,3	163	76,5	10 000	16 000	488	1 782	3 795	1 434	5 334	11 621	257,6	410,6	548,6
2	1	143,3	110	114	9 000	14 000	501	1 502	3 003	1 495	4 620	9 510	164,3	249,8	332
2	1	143,3	75	80	11 000	18 000	341	1 024	2 048	1 007	3 093	6 328	161,4	241,8	316,9
2	1	145,4	51	63	10 000	16 000	179	536	1 072	530	1 659	3 480	82,1	128	175
2	1	145,4	48	58,5	9 500	14 000	288	863	1 725	824	2 511	5 114	205,8	305,6	397,2
2	1	145,4	33,5	41,5	12 000	19 000	199	598	1 196	575	1 747	3 543	205,8	303,1	390,8
2	1	145,4	75	41,5	13 000	20 000	199	598	1 196	575	1 747	3 543	205,8	303,1	390,8
2,1	2,1	158	204	196	6 000	9 000	1 269	3 957	8 038	3 947	13 275	28 900	140	233,9	335,7
2,1	2,1	158	196	186	5 300	8 000	2 003	6 418	13 107	5 898	19 505	41 076	335,4	522	699,7
2,1	2,1	158	140	137	7 500	12 000	684	2 190	4 478	2 088	7 051	15 167	122,8	198,5	275,8
2,1	2,1	158	134	129	6 300	9 500	1 047	3 506	7 288	3 085	10 550	22 362	301,6	467,4	618,6

Spindle bearings

With large or small balls
Steel or ceramic balls
Steel or Cronidur rings
Open or sealed

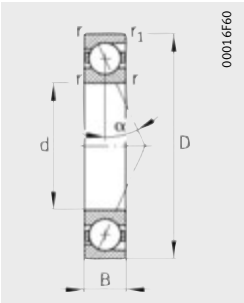

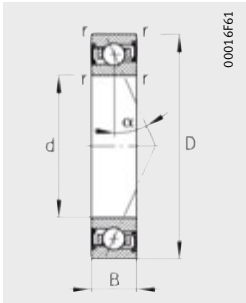

Dimension table (continued) · Dimensions in mm

Designation[1]			Mass	Dimensions					Contact angle	Mounting dimensions	
Series 719[4]	Series 70[4]	Series 72	m	d	D	B	r	r_1	α	d_a h12	D_a H12
			≈kg				min.		°		
B71926-C-T-P4S	–	–	1,5	**130**	180	24	1,5	1,5	15	139	171
B71926-E-T-P4S	–	–	1,5	**130**	180	24	1,5	1,5	25	139	171
HCB71926-C-T-P4S	–	–	1,3	**130**	180	24	1,5	1,5	15	139	171
HCB71926-E-T-P4S	–	–	1,3	**130**	180	24	1,5	1,5	25	139	171
XCB71926-C-T-P4S	–	–	1,3	**130**	180	24	1,5	1,5	15	139	171
XCB71926-E-T-P4S	–	–	1,3	**130**	180	24	1,5	1,5	25	139	171
RS71926-D-T-P4S	–	–	1,5	**130**	180	24	1,5	1,5	20	139	171
HCRS71926-D-T-P4S	–	–	1,3	**130**	180	24	1,5	1,5	20	139	171
HS71926-C-T-P4S	–	–	1,8	**130**	180	24	1,5	–	15	139	171
HS71926-E-T-P4S	–	–	1,8	**130**	180	24	1,5	–	25	139	171
HC71926-E-T-P4S	–	–	1,7	**130**	180	24	1,5	–	25	139	171
XC71926-E-T-P4S	–	–	1,7	**130**	180	24	1,5	–	25	139	171
–	**B7026-C-T-P4S**	–	3,2	**130**	200	33	2	2	15	142	189
–	**B7026-E-T-P4S**	–	3,2	**130**	200	33	2	2	25	142	189
–	**HCB7026-C-T-P4S**	–	2,7	**130**	200	33	2	2	15	142	189
–	**HCB7026-E-T-P4S**	–	2,7	**130**	200	33	2	2	25	142	189
–	**XCB7026-C-T-P4S**	–	2,7	**130**	200	33	2	2	15	142	189
–	**XCB7026-E-T-P4S**	–	2,7	**130**	200	33	2	2	25	142	189
–	**RS7026-D-T-P4S**	–	3,2	**130**	200	33	2	2	20	142	189
–	**HCRS7026-D-T-P4S**	–	2,7	**130**	200	33	2	2	20	142	189
–	**HS7026-C-T-P4S**	–	3,7	**130**	200	33	2	–	15	142	189
–	**HS7026-E-T-P4S**	–	3,7	**130**	200	33	2	–	25	142	189
–	**HC7026-E-T-P4S**	–	3,5	**130**	200	33	2	–	25	142	189
–	**XC7026-E-T-P4S**	–	3,5	**130**	200	33	2	–	25	142	189
–	–	**B7226-C-T-P4S**	6,3	**130**	230	40	3	3	15	148	211,5
–	–	**B7226-E-T-P4S**	6,3	**130**	230	40	3	3	25	148	211,5
–	–	**HCB7226-C-T-P4S**	5,2	**130**	230	40	3	3	15	148	211,5
–	–	**HCB7226-E-T-P4S**	5,2	**130**	230	40	3	3	25	148	211,5

1) Explanation of short designation, see section Bearing designations, page 82, *Figure 9*.

2) Explanation, see section Technical principles.

3) Minimal oil quantity lubrication.

4) The bearings are also available with gap seals.
Ordering examples: **B7026-C-2RSD-T-P4S-UL**
HSS7026-E-T-P4S-UL.

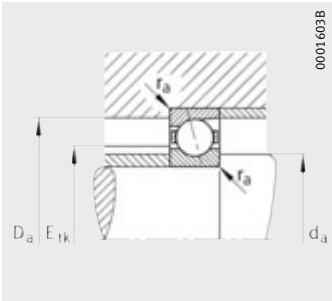

Mounting dimensions

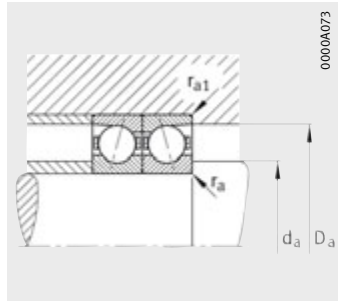

Mounting dimensions

			Basic load ratings		Limiting speeds		Preload force[2] F_v			Lift-off force[2] K_{aE}			Axial rigidity[2] c_a		
r_a	r_{a1}	E_{tk}	dyn. C_r	stat. C_{0r}	n_G grease	n_G oil[3]	L	M	H	L	M	H	L	M	H
max.		nom.	kN	kN	min^{-1}	min^{-1}	N	N	N	N	N	N	N/µm	N/µm	N/µm
0,6	0,6	150,2	86,5	100	7 000	11 000	489	1 600	3 291	1 508	5 317	11 665	117,5	199	285,6
0,6	0,6	150,2	81,5	95	6 700	10 000	714	2 477	5 193	2 087	7 472	16 123	275,6	439,7	593,2
0,6	0,6	150,2	60	69,5	10 000	15 000	258	887	1 858	781	2 837	6 249	102,6	169,8	237,6
0,6	0,6	150,2	57	65,5	9 000	14 000	349	1 354	2 923	1 022	4 049	8 917	242,7	395	529,1
0,6	0,6	150,2	134	69,5	11 000	17 000	258	887	1 858	781	2 837	6 249	102,6	169,8	237,6
0,6	0,6	150,2	127	65,5	10 000	15 000	349	1 354	2 923	1 022	4 049	8 917	242,7	395	529,1
0,6	0,6	150,2	85	96,5	8 500	13 000	407	1 221	2 443	1 211	3 734	7 670	174,3	263,2	347,8
0,6	0,6	150,2	58,5	68	11 000	17 000	280	841	1 681	826	2 531	5 163	172,2	256,8	334,9
0,6	0,6	151	41,5	56	10 000	16 000	145	436	871	427	1 345	2 804	82,1	128,1	174,1
0,6	0,6	151	39	52	9 000	14 000	238	713	1 426	680	2 074	4 214	208,3	308,9	400,9
0,6	0,6	151	27	36,5	12 000	18 000	163	488	975	470	1 423	2 879	207,5	305,2	392,7
0,6	0,6	151	60	36,5	13 000	20 000	163	488	975	470	1 423	2 879	207,5	305,2	392,7
2	1	157,2	143	150	6 700	10 000	857	2 720	5 545	2 658	9 109	19 842	137,9	231,8	332,6
2	1	157,2	137	143	6 000	9 500	1 322	4 358	8 972	3 877	13 200	27 997	327,9	515,3	692,2
2	1	157,2	100	104	9 500	14 000	460	1 518	3 139	1 402	4 882	10 629	120,9	197,6	275,9
2	1	157,2	95	98	8 500	13 000	673	2 379	5 019	1 976	7 133	15 398	292,4	461,5	614,7
2	1	157,2	224	104	10 000	16 000	460	1 518	3 139	1 402	4 882	10 629	120,9	197,6	275,9
2	1	157,2	212	98	9 500	14 000	673	2 379	5 019	1 976	7 133	15 398	292,4	461,5	614,7
2	1	157,2	140	146	8 000	12 000	637	1 911	3 822	1 900	5 874	12 093	181,3	275,5	366
2	1	157,2	98	102	10 000	16 000	446	1 338	2 675	1 318	4 043	8 268	179,9	269,4	353,2
2	1	159,7	65,5	83	9 500	15 000	228	683	1 367	675	2 113	4 422	92,9	144,9	197,6
2	1	159,7	62	78	8 500	13 000	368	1 104	2 208	1 053	3 212	6 547	233,4	346,6	450,6
2	1	159,7	42,5	54	11 000	17 000	257	771	1 541	741	2 254	4 567	234,1	345	444,5
2	1	159,7	95	54	12 000	19 000	257	771	1 541	741	2 254	4 567	234,1	345	444,5
2,5	2,5	170,5	212	216	5 600	8 500	1 316	4 108	8 347	4 084	13 741	29 821	147,9	246,8	353,2
2,5	2,5	170,5	204	204	5 000	7 500	2 079	6 671	13 628	6 116	20 247	42 633	355,2	552,6	740,1
2,5	2,5	170,5	146	150	7 000	11 000	719	2 304	4 709	2 193	7 407	15 918	130,6	210,9	292,8
2,5	2,5	170,5	140	143	6 000	9 000	1 079	3 624	7 521	3 177	10 892	23 040	318,7	494	652,9

Spindle bearings

With large balls
Steel or ceramic balls
Steel rings
Open or sealed

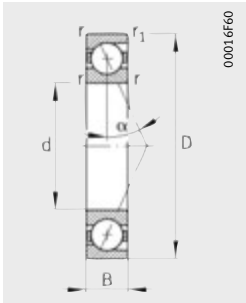

Dimension table (continued) · Dimensions in mm

Designation[1]			Mass	Dimensions					Contact angle	Mounting dimensions	
Series 719	Series 70	Series 72	m	d	D	B	r	r_1	α	d_a h12	D_a H12
			≈kg				min.		°		
B71928-C-T-P4S[4]	–	–	1,6	**140**	190	24	1,5	1,5	15	149	181
B71928-E-T-P4S[4]	–	–	1,6	**140**	190	24	1,5	1,5	25	149	181
HCB71928-C-T-P4S[4]	–	–	1,4	**140**	190	24	1,5	1,5	15	149	181
HCB71928-E-T-P4S[4]	–	–	1,4	**140**	190	24	1,5	1,5	25	149	181
–	**B7028-C-T-P4S**[4]	–	3,4	**140**	210	33	2	2	15	152	199
–	**B7028-E-T-P4S**[4]	–	3,4	**140**	210	33	2	2	25	152	199
–	**HCB7028-C-T-P4S**[4]	–	2,8	**140**	210	33	2	2	15	152	199
–	**HCB7028-E-T-P4S**[4]	–	2,8	**140**	210	33	2	2	25	152	199
–	–	**B7228-C-T-P4S**	8,1	**140**	250	42	3	3	15	163	226,5
–	–	**B7228-E-T-P4S**	8,1	**140**	250	42	3	3	25	163	226,5
–	–	**HCB7228-C-T-P4S**	6,8	**140**	250	42	3	3	15	163	226,5
–	–	**HCB7228-E-T-P4S**	6,8	**140**	250	42	3	3	25	163	226,5
B71930-C-T-P4S	–	–	2,5	**150**	210	28	2	1	15	160	199
B71930-E-T-P4S	–	–	2,5	**150**	210	28	2	1	25	160	199
HCB71930-C-T-P4S	–	–	2,1	**150**	210	28	2	1	15	160	199
HCB71930-E-T-P4S	–	–	2,1	**150**	210	28	2	1	25	160	199
–	**B7030-C-T-P4S**	–	4,1	**150**	225	35	2,1	2,1	15	163	213
–	**B7030-E-T-P4S**	–	4,1	**150**	225	35	2,1	2,1	25	163	213
–	**HCB7030-C-T-P4S**	–	3,3	**150**	225	35	2,1	2,1	15	163	213
–	**HCB7030-E-T-P4S**	–	3,3	**150**	225	35	2,1	2,1	25	163	213
–	–	**B7230-C-T-P4S**	10,3	**150**	270	45	3	3	15	178	241,5
–	–	**B7230-E-T-P4S**	10,3	**150**	270	45	3	3	25	178	241,5
–	–	**HCB7230-C-T-P4S**	9	**150**	270	45	3	3	15	178	241,5
–	–	**HCB7230-E-T-P4S**	9	**150**	270	45	3	3	25	178	241,5

1) Explanation of short designation, see section Bearing designations, page 82, *Figure 9*.
2) Explanation, see section Technical principles.
3) Minimal oil quantity lubrication.
4) The bearings are also available with gap seals.
Ordering example: **B7028-C-2RSD-T-P4S-UL**

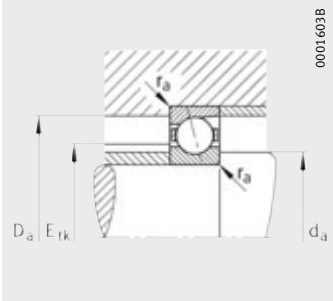

Mounting dimensions

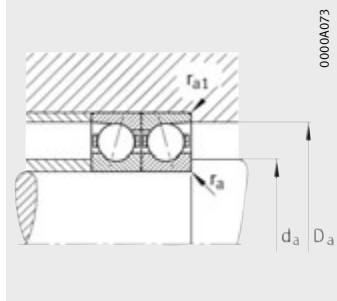

Mounting dimensions

			Basic load ratings		Limiting speeds		Preload force[2] F_v			Lift-off force[2] K_{aE}			Axial rigidity[2] c_a		
r_a	r_{a1}	E_{tk}	dyn. C_r	stat. C_{0r}	n_G grease	n_G oil[3]	L	M	H	L	M	H	L	M	H
max.		nom.	kN	kN	min^{-1}	min^{-1}	N	N	N	N	N	N	N/µm	N/µm	N/µm
0,6	0,6	160,2	90	108	6 700	10 000	506	1 661	3 412	1 557	5 502	12 044	124,7	210,9	301,9
0,6	0,6	160,2	85	102	6 000	9 500	740	2 576	5 405	2 162	7 760	16 750	293,3	467,9	630,8
0,6	0,6	160,2	62	76,5	9 500	14 000	266	919	1 928	804	2 932	6 464	108,9	180,1	251,8
0,6	0,6	160,2	58,5	71	8 500	13 000	354	1 387	3 002	1 036	4 142	9 141	256,5	418,2	560,2
2	1	167,2	146	160	6 300	10 000	873	2 775	5 657	2 703	9 270	20 180	142,9	240,1	343,9
2	1	167,2	140	150	5 600	9 000	1 345	4 446	9 159	3 941	13 450	28 537	340,3	534,9	718,2
2	1	167,2	102	110	9 000	14 000	480	1 583	3 273	1 463	5 089	11 075	126,7	206,9	288,7
2	1	167,2	96,5	104	8 000	12 000	687	2 434	5 127	2 016	7 292	15 712	304	479,8	638,4
2,5	2,5	185,5	220	232	5 000	7 500	1 363	4 259	8 634	4 222	14 208	30 737	155,8	259,6	370,7
2,5	2,5	185,5	212	224	4 500	6 700	2 154	6 923	14 150	6 331	20 931	44 194	374,8	582,4	780,4
2,5	2,5	185,5	153	163	6 300	9 500	747	2 397	4 901	2 276	7 692	16 528	137,9	222,5	308,6
2,5	2,5	185,5	146	156	5 300	8 000	1 133	3 811	7 910	3 335	11 447	24 211	338,1	524,1	692,5
1	1	174,3	122	143	6 300	9 500	710	2 286	4 680	2 188	7 583	16 579	141,4	237,8	340,6
1	1	174,3	114	134	5 600	8 500	1 046	3 541	7 369	3 055	10 662	22 894	332,6	525,8	707,9
1	1	174,3	85	100	8 500	13 000	375	1 261	2 622	1 137	4 024	8 792	123,6	202,5	282,3
1	1	174,3	80	95	7 500	12 000	519	1 925	4 116	1 523	5 747	12 558	294,8	471,4	629,5
2,1	1	178,5	183	193	6 000	9 000	1 111	3 503	7 142	3 449	11 700	25 557	157,2	263	377,6
2,1	1	178,5	173	186	5 300	8 000	1 705	5 555	11 417	5 003	16 818	35 626	373,2	583,4	782,8
2,1	1	178,5	127	137	8 000	13 000	601	1 960	4 031	1 829	6 289	13 611	138,1	224,5	312,6
2,1	1	178,5	120	129	7 500	11 000	898	3 106	6 501	2 639	9 320	19 942	336,8	527,5	700,2
2,5	2,5	200,5	228	255	4 500	6 700	1 411	4 410	8 942	4 364	14 677	31 741	163,8	272,4	388,5
2,5	2,5	200,5	216	240	4 000	6 000	2 186	7 023	14 400	6 418	21 195	44 874	391,6	607,6	814,2
2,5	2,5	200,5	156	176	5 600	8 500	768	2 470	5 053	2 336	7 909	16 996	144,6	233,3	323,2
2,5	2,5	200,5	150	166	5 000	7 500	1 144	3 861	8 025	3 364	11 580	24 520	352,8	547	722,5

Spindle bearings

With large balls
Steel or ceramic balls
Steel rings
Open or sealed

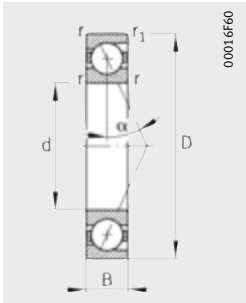

Dimension table (continued) · Dimensions in mm

Designation[1]			Mass	Dimensions					Contact angle	Mounting dimensions	
Series 719	Series 70	Series 72	m	d	D	B	r	r_1	α	d_a h12	D_a H12
			≈kg				min.		°		
B71932-C-T-P4S[4]	–	–	2,7	**160**	220	28	2	1	15	170	209
B71932-E-T-P4S[4]	–	–	2,7	**160**	220	28	2	1	25	170	209
HCB71932-C-T-P4S[4]	–	–	2,2	**160**	220	28	2	1	15	170	209
HCB71932-E-T-P4S[4]	–	–	2,2	**160**	220	28	2	1	25	170	209
–	**B7032-C-T-P4S**	–	5,1	**160**	240	38	2,1	2,1	15	174	228
–	**B7032-E-T-P4S**	–	5,1	**160**	240	38	2,1	2,1	25	174	228
–	**HCB7032-C-T-P4S**	–	4,3	**160**	240	38	2,1	2,1	15	174	228
–	**HCB7032-E-T-P4S**	–	4,3	**160**	240	38	2,1	2,1	25	174	228
–	–	**B7232-C-T-P4S**	13	**160**	290	48	3	3	15	191	259
–	–	**B7232-E-T-P4S**	13	**160**	290	48	3	3	25	191	259
–	–	**HCB7232-C-T-P4S**	11,6	**160**	290	48	3	3	15	191	259
–	–	**HCB7232-E-T-P4S**	11,6	**160**	290	48	3	3	25	191	259
B71934-C-T-P4S	–	–	2,8	**170**	230	28	2	1,5	15	180	219
B71934-E-T-P4S	–	–	2,8	**170**	230	28	2	1,5	25	180	219
HCB71934-C-T-P4S	–	–	2,4	**170**	230	28	2	1,5	15	180	219
HCB71934-E-T-P4S	–	–	2,4	**170**	230	28	2	1,5	25	180	219
–	**B7034-C-T-P4S**	–	6,7	**170**	260	42	2,1	2,1	15	185	246
–	**B7034-E-T-P4S**	–	6,7	**170**	260	42	2,1	2,1	25	185	246
–	–	**B7234-C-T-P4S**	16	**170**	310	52	4	4	15	205	275
–	–	**B7234-E-T-P4S**	16	**170**	310	52	4	4	25	205	275
B71936-C-T-P4S	–	–	4,2	**180**	250	33	2	1	15	192	238
B71936-E-T-P4S	–	–	4,2	**180**	250	33	2	1	25	192	238
HCB71930-C-T-P4S	–	–	3,5	**180**	250	33	2	1	15	192	238
HCB71936-E-T-P4S	–	–	3,5	**180**	250	33	2	1	25	192	238
–	**B7036-C-T-P4S**	–	8,9	**180**	280	46	2,1	2,1	15	196	264
–	**B7036-E-T-P4S**	–	8,9	**180**	280	46	2,1	2,1	25	196	264
–	–	**B7236-C-T-P4S**	16,8	**180**	320	52	4	4	15	213,5	286,5
–	–	**B7236-E-T-P4S**	16,8	**180**	320	52	4	4	25	213,5	286,5

1) Explanation of short designation, see section Bearing designations, page 82, *Figure 9*.

2) Explanation, see section Technical principles.

3) Minimal oil quantity lubrication.

4) The bearings are also available with gap seals.
Ordering example: **B7032-C-2RSD-T-P4S-UL**.

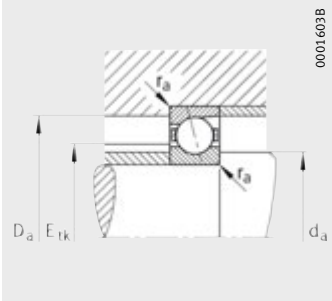

Mounting dimensions

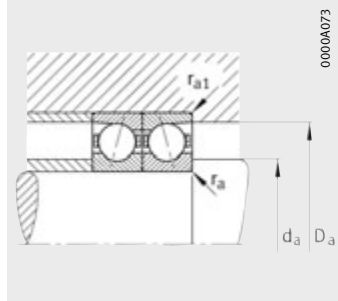

Mounting dimensions

			Basic load ratings		Limiting speeds		Preload force[2] F_v			Lift-off force[2] K_{aE}			Axial rigidity[2] c_a		
r_a	r_{a1}	E_{tk}	dyn. C_r	stat. C_{0r}	n_G grease	n_G oil[3]	L	M	H	L	M	H	L	M	H
max.		nom.	kN	kN	min^{-1}	min^{-1}	N	N	N	N	N	N	N/µm	N/µm	N/µm
1	1	184,3	125	150	6 000	9 000	727	2 341	4 793	2 238	7 755	16 952	146,1	245,5	351,4
1	1	184,3	116	140	5 300	8 000	1 061	3 597	7 491	3 097	10 821	23 248	342,8	541,8	729,2
1	1	184,3	85	104	8 000	12 000	382	1 286	2 676	1 157	4 099	8 959	127,5	208,8	290,9
1	1	184,3	80	98	7 500	11 000	529	1 965	4 204	1 552	5 864	12 818	304,5	487	650,1
2	1	191	190	208	5 600	8 500	1 152	3 635	7 412	3 573	12 127	26 413	164,1	274,5	393,4
2	1	191	176	196	5 000	7 500	1 728	5 642	11 602	5 066	17 061	36 142	386,8	604,6	810,7
2	1	191	129	143	7 500	12 000	624	2 034	4 184	1 898	6 521	14 111	144,4	234,6	326,4
2	1	191	122	137	7 000	11 000	911	3 160	6 621	2 676	9 473	20 288	349,4	547,3	726,5
2,5	2,5	215,5	245	285	4 300	6 300	1 513	4 734	9 601	4 669	15 702	33 935	179,9	298,6	425,1
2,5	2,5	215,5	232	270	3 800	5 600	2 339	7 529	15 450	6 844	22 687	48 049	430,4	668	894,5
2,5	2,5	215,5	170	200	5 300	8 000	832	2 676	5 478	2 528	8 552	18 377	159,6	257,2	356
2,5	2,5	215,5	160	190	4 500	6 700	1 231	4 167	8 669	3 618	12 488	26 454	389	603,5	796,8
1	1	194,3	129	163	5 600	8 500	747	2 410	4 941	2 295	7 954	17 399	154,3	258,7	369,9
1	1	194,3	122	150	5 000	7 500	1 111	3 777	7 870	3 242	11 353	24 396	365,5	577,8	777,2
1	1	194,3	88	114	7 500	12 000	392	1 328	2 765	1 186	4 222	9 226	134,9	220,8	307,2
1	1	194,3	83	106	7 000	11 000	542	2 028	4 349	1 589	6 046	13 242	322,2	516,2	689,2
2	1	203,8	236	270	5 300	8 000	1 458	4 562	9 252	4 504	15 154	32 763	171,7	285,2	406,4
2	1	203,8	224	255	4 500	7 000	2 263	7 276	14 926	6 641	21 942	46 466	411,2	637,9	854,5
3	3	228,6	300	360	4 000	6 000	1 878	5 842	11 825	5 792	19 336	41 658	190,3	314,3	446,1
3	3	228,6	280	345	3 600	5 300	2 879	9 183	18 737	8 424	27 661	58 033	454,6	702,4	936
1	1	208,3	163	204	5 300	8 000	966	3 086	6 300	2 974	10 221	22 230	168,9	282,3	402,7
1	1	208,3	156	193	4 500	7 000	1 478	4 921	10 164	4 320	14 823	31 493	403,5	633,6	849,1
1	1	208,3	114	143	7 000	11 000	516	1 708	3 546	1 565	5 442	11 841	148,5	241,1	335,1
1	1	208,3	106	134	6 300	10 000	734	2 644	5 595	2 150	7 894	17 065	357,4	565,8	752,2
2	1	218,8	245	285	4 800	7 500	1 513	4 733	9 600	4 669	15 697	33 928	179,9	298,6	425,1
2	1	218,8	232	275	4 300	6 700	2 339	7 529	15 449	6 843	22 685	48 042	430,4	668	894,5
3	3	238,6	305	390	3 800	5 600	1 906	5 935	12 015	5 866	19 581	42 153	198	326,4	462,3
3	3	238,6	290	365	3 400	5 000	2 977	9 503	19 395	8 706	28 601	60 002	477,2	737,1	981,7

Spindle bearings

With large balls
Steel or ceramic balls
Steel rings
Open
Design DLR

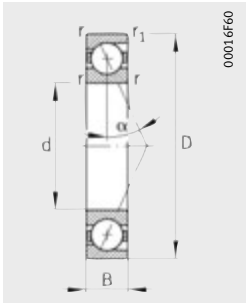

Dimension table (continued) · Dimensions in mm

Designation[1]			Mass	Dimensions								Contact angle	Mounting dimensions	
Series 719	Series 70	Series 72	m	d	D	B	r	r_1	B_N	S_N	S_B	α	d_a h12	D_a H12
			≈kg				min.					°		
B71938-C-T-P4S	–	–	4,4	**190**	260	33	2	1	–	–	–	15	202	247
B71938-E-T-P4S	–	–	4,4	**190**	260	33	2	1	–	–	–	25	202	247
HCB71938-C-T-P4S	–	–	3,6	**190**	260	33	2	1	–	–	–	15	202	247
HCB71938-E-T-P4S	–	–	3,6	**190**	260	33	2	1	–	–	–	25	202	247
–	**B7038-C-T-P4S**	–	9,3	**190**	290	46	2,1	2,1	–	–	–	15	206	274
–	**B7038-E-T-P4S**	–	9,3	**190**	290	46	2,1	2,1	–	–	–	25	206	274
–	–	**B7238-C-T-P4S**	20,3	**190**	340	55	4	4	–	–	–	15	223,5	306,5
–	–	**B7238-E-T-P4S**	20,3	**190**	340	55	4	4	–	–	–	25	223,5	306,5
B71940-C-T-P4S	–	–	6,1	**200**	280	38	2,1	1,1	7	22	2,2	15	214	266
B71940-E-T-P4S	–	–	6,1	**200**	280	38	2,1	1,1	7	22	2,2	25	214	266
HCB71940-C-T-P4S	–	–	5,1	**200**	280	38	2,1	1,1	7	22	2,2	15	214	266
HCB71940-E-T-P4S	–	–	5,1	**200**	280	38	2,1	1,1	7	22	2,2	25	214	266
–	**B7040-C-T-P4S**	–	12	**200**	310	51	2,1	2,1	–	–	–	15	217	293
–	**B7040-E-T-P4S**	–	12	**200**	310	51	2,1	2,1	–	–	–	25	217	293
–	–	**B7240-C-T-P4S**	24,4	**200**	360	58	4	4	–	–	–	15	238,5	321,5
–	–	**B7240-E-T-P4S**	24,4	**200**	360	58	4	4	–	–	–	25	238,5	321,5
B71944-C-T-P4S	–	–	6,7	**220**	300	38	2,1	1,1	–	–	–	15	234	286
B71944-E-T-P4S	–	–	6,7	**220**	300	38	2,1	1,1	–	–	–	25	234	286
HCB71944-C-T-P4S	–	–	5,6	**220**	300	38	2,1	1,1	–	–	–	15	234	286
HCB71944-E-T-P4S	–	–	5,6	**220**	300	38	2,1	1,1	–	–	–	25	234	286
–	**B7044-C-T-P4S**	–	16	**220**	340	56	3	3	–	–	–	15	239	321
–	**B7044-E-T-P4S**	–	16	**220**	340	56	3	3	–	–	–	25	239	321
–	–	**B7244-C-T-P4S**	33,6	**220**	400	65	4	4	–	–	–	15	264	356
–	–	**B7244-E-T-P4S**	33,6	**220**	400	65	4	4	–	–	–	25	264	356

1) Explanation of short designation, see section Bearing designations, page 82, *Figure 9*.
2) Explanation, see section Technical principles.
3) Minimal oil quantity lubrication.
4) Ordering example for Direct Lube design: **HCB71940-EDLR-T-P4S-UL**.

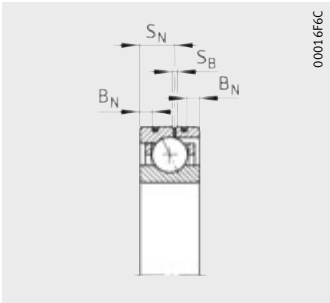

Design DLR[4)]

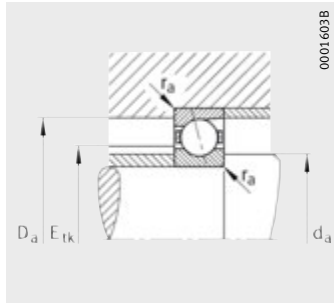

Mounting dimensions

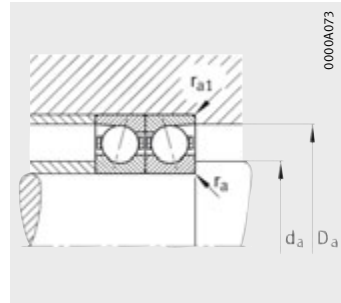

Mounting dimensions

			Basic load ratings		Limiting speeds		Preload force[2)] F_v			Lift-off force[2)] K_{aE}			Axial rigidity[2)] c_a		
r_a	r_{a1}	E_{tk}	dyn. C_r	stat. C_{0r}	n_G grease	n_G oil[3)]	L	M	H	L	M	H	L	M	H
max.		nom.	kN	kN	min^{-1}	min^{-1}	N	N	N	N	N	N	N/µm	N/µm	N/µm
1	1	218,3	166	212	5 000	7 500	894	2 996	6 210	2 736	9 846	21 803	167,2	283,7	407,1
1	1	218,3	156	200	4 500	6 700	1 259	4 576	9 707	3 666	13 727	29 966	390,1	630,2	851,6
1	1	218,3	116	150	6 700	10 000	449	1 619	3 440	1 353	5 130	11 428	144	240,8	337
1	1	218,3	108	140	6 000	9 500	564	2 402	5 321	1 650	7 148	16 175	334,3	559,2	754,7
2	1	228,8	250	305	4 500	7 000	1 445	4 671	9 575	4 437	15 414	33 658	181,9	304,8	435,1
2	1	228,8	236	290	4 000	6 300	2 141	7 290	15 228	6 260	21 908	47 088	430,9	680,6	915,2
3	3	253,6	315	415	3 400	5 000	1 860	5 955	12 166	5 701	19 571	42 506	202,3	336,4	477,6
3	3	253,6	300	390	3 200	4 800	2 816	9 424	19 525	8 217	28 309	60 271	484,1	759,4	1 016,1
1	1	232,4	204	255	4 500	7 000	1 133	3 734	7 704	3 479	12 312	27 075	180,4	304,6	436,2
1	1	232,4	193	240	4 000	6 300	1 643	5 803	12 213	4 794	17 453	37 826	424,3	679,6	916,6
1	1	232,4	140	176	6 300	10 000	578	2 027	4 272	1 747	6 443	14 237	156,1	258,7	361,2
1	1	232,4	134	166	5 600	9 000	761	3 056	6 660	2 225	9 111	20 237	367,3	603,1	808,9
2	1	241,5	305	390	4 300	6 700	1 805	5 771	11 787	5 539	19 000	41 275	193,5	322,1	457,8
2	1	241,5	290	365	3 800	6 000	2 730	9 122	18 891	7 970	27 422	58 373	462,5	725,5	971,1
3	3	268,6	325	440	3 200	4 800	1 916	6 138	12 545	5 866	20 139	43 737	211	350,6	497,4
3	3	268,6	310	415	3 000	4 500	2 901	9 725	20 159	8 461	29 193	62 166	505,7	793,3	1 061
1	1	252,4	216	285	4 300	6 700	1 191	3 942	8 140	3 646	12 940	28 444	196,9	331,8	474
1	1	252,4	204	270	3 800	6 000	1 714	6 084	12 867	4 995	18 257	39 642	463,3	741,8	999,9
1	1	252,4	150	200	6 000	9 000	618	2 176	4 593	1 861	6 882	15 259	171,7	284,2	396,9
1	1	252,4	140	190	5 300	8 000	799	3 255	7 114	2 334	9 694	21 583	402,2	663,1	889,5
2,5	1	266,5	325	440	4 000	6 000	1 916	6 138	12 545	5 866	20 139	43 737	211	350,6	497,4
2,5	1	266,5	310	415	3 600	5 300	2 901	9 725	20 159	8 461	29 193	62 166	505,7	793,3	1 061
3	3	296,2	400	560	2 800	4 300	2 406	7 621	15 567	7 360	24 861	54 043	225,4	371,1	525,7
3	3	296,2	380	540	2 600	4 000	3 670	12 081	24 979	10 706	36 160	76 950	542,6	843,8	1 127

Spindle bearings

With large balls
Steel or ceramic balls
Steel rings
Open
Design DLR

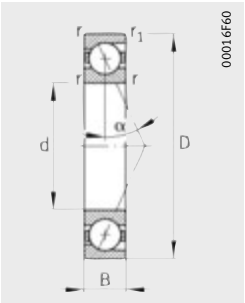

Dimension table (continued) · Dimensions in mm

Designation[1]		Mass	Dimensions								Contact angle	Mounting dimensions				
Series 719	Series 70	m	d	D	B	r	r_1	B_N	S_N	S_B	α	d_a h12	D_a H12	r_a	r_{a1}	E_{tk}
		≈kg				min.					°			max.		nom.
B71948-C-T-P4S	–	7,2	**240**	320	38	2,1	1,1	7	22	2,2	15	254	307	1	1	272,4
B71948-E-T-P4S	–	7,2	**240**	320	38	2,1	1,1	7	22	2,2	25	254	307	1	1	272,4
HCB71948-C-T-P4S	–	6	**240**	320	38	2,1	1,1	7	22	2,2	15	254	307	1	1	272,4
HCB71948-E-T-P4S	–	6	**240**	320	38	2,1	1,1	7	22	2,2	25	254	307	1	1	272,4
–	**B7048-C-T-P4S**	17	**240**	360	56	3	3	–	–	–	15	260	341	2,5	1	286,5
–	**B7048-E-T-P4S**	17	**240**	360	56	3	3	–	–	–	25	260	341	2,5	1	286,5
B71952-C-T-P4S	–	12,1	**260**	360	46	2,1	1,1	8	26	2,2	15	278	342	1	1	300,5
B71952-E-T-P4S	–	12,1	**260**	360	46	2,1	1,1	8	26	2,2	25	278	342	1	1	300,5
B71956-C-T-P4S	–	12,9	**280**	380	46	2,1	1,1	–	–	–	25	298	362	1	1	320,5
B71956-E-T-P4S	–	12,9	**280**	380	46	2,1	1,1	–	–	–	25	298	362	1	1	320,5
B71960-C-T-P4S	–	20,4	**300**	420	56	3	1,1	–	–	–	25	322	398	1,5	1	348,6
B71960-E-T-P4S	–	20,4	**300**	420	56	3	1,1	–	–	–	25	322	398	1,5	1	348,6
B71964-C-T-P4S	–	21,6	**320**	440	56	3	1,1	–	–	–	25	342	418	1,5	1	368,6
B71964-E-T-P4S	–	21,6	**320**	440	56	3	1,1	–	–	–	25	342	418	1,5	1	368,6
B71968-C-T-P4S	–	22,7	**340**	460	56	3	1,1	–	–	–	25	362	438	1,5	1	388,6
B71968-E-T-P4S	–	22,7	**340**	460	56	3	1,1	–	–	–	25	362	438	1,5	1	388,6
B71972-C-T-P4S	–	23,9	**360**	480	56	3	1,1	–	–	–	25	382	458	1,5	1	408,6
B71972-E-T-P4S	–	23,9	**360**	480	56	3	1,1	–	–	–	25	382	458	1,5	1	408,6
B71976-C-T-P4S	–	35,1	**380**	520	65	4	1,5	–	–	–	25	403	497	1,5	1	436
B71976-E-T-P4S	–	35,1	**380**	520	65	4	1,5	–	–	–	25	403	497	1,5	1	436

1) Explanation of short designation, see section Bearing designations, page 82, *Figure 9*.
2) Explanation, see section Technical principles.
3) Minimal oil quantity lubrication.
4) Ordering example for Direct Lube design: **HCB71948-EDLR-T-P4S-UL**.

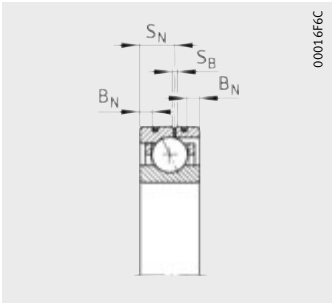

Design DLR[4)]

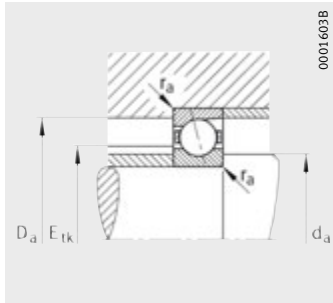

Mounting dimensions

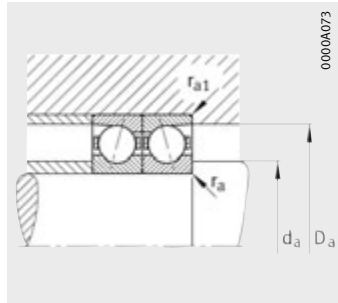

Mounting dimensions

Basic load ratings		Limiting speeds		Preload force[2)] F_v			Lift-off force[2)] K_{aE}			Axial rigidity[2)] c_a		
dyn. C_r	stat. C_{0r}	n_G grease	n_G oil[3)]	L	M	H	L	M	H	L	M	H
N	N	min^{-1}	min^{-1}	kN	kN	N	N	N	N	N/µm	N/µm	N/µm
224	310	4 000	6 000	1 230	4 079	8 431	3 759	13 355	29 363	207,8	349,8	499,1
212	285	3 600	5 300	1 768	6 303	13 347	5 149	18 893	41 059	489,6	784,5	1 057,1
153	216	5 300	8 500	632	2 237	4 729	1 900	7 059	15 665	180,7	299,2	417,4
146	200	4 800	7 500	794	3 280	7 196	2 318	9 755	21 789	419,8	694,6	932
335	465	3 600	5 600	1 971	6 321	12 923	6 028	20 706	44 965	219,7	364,8	517,2
315	440	3 200	5 000	2 933	9 860	20 455	8 547	29 565	62 978	523,7	821,7	1 098,4
285	415	3 600	5 300	1 625	5 291	10 870	4 955	17 278	37 700	222,8	371,5	527,4
270	390	3 200	4 800	2 393	8 255	17 265	6 977	24 698	53 045	530,5	838,7	1 124,2
300	450	3 200	5 000	1 706	5 562	11 434	5 196	18 131	39 565	237,5	395,6	561,2
280	425	3 000	4 500	2 463	8 534	17 870	7 176	25 504	54 810	562,2	889,2	1 191,1
360	570	3 000	4 500	2 097	6 764	13 849	6 380	21 926	47 710	249,9	412,9	583,7
340	540	2 800	4 300	3 116	10 570	21 984	9 061	31 517	67 389	598,5	938,7	1 254,1
375	620	2 800	4 300	2 177	7 017	14 413	6 612	22 683	49 487	265,7	437,8	618,7
355	585	2 600	4 000	3 235	11 010	22 920	9 401	32 795	70 159	637,3	999,9	1 335,1
380	640	2 800	4 300	2 061	6 876	14 282	6 235	22 142	48 709	265,6	442,4	626,4
360	610	2 400	3 800	2 930	10 616	22 515	8 516	31 562	68 780	630,3	1 008,6	1 354,6
390	695	2 600	4 000	2 101	7 037	14 635	6 343	22 593	49 716	279	464,3	656,5
375	640	2 400	3 600	3 030	11 025	23 411	8 803	32 751	71 437	666,9	1 068	1 434
490	900	2 400	3 600	2 751	9 014	18 369	8 248	28 664	61 657	304,2	500,4	698,9
465	850	2 200	3 400	4 075	14 365	30 222	11 742	42 339	91 186	743,9	1 176,6	1 569,8

Spindle bearings

With large balls
Steel balls
Steel rings
Open

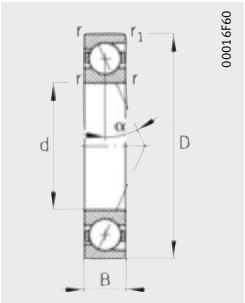

Dimension table (continued) · Dimensions in mm

Designation[1)]	Mass	Dimensions					Contact angle	Mounting dimensions				
Series 719	m	d	D	B	r	r_1	α	d_a h12	D_a H12	r_a	r_{a1}	E_{tk}
	≈kg				min.		°			max.		nom.
B71980-C-T-P4S	35,9	**400**	540	65	4	1,5	15	423	517	1,5	1	456
B71980-E-T-P4S	35,9	**400**	540	65	4	1,5	25	423	517	1,5	1	456
B71984-C-T-P4S	37,6	**420**	560	65	4	1,5	15	443	537	1,5	1	476
B71984-E-T-P4S	37,6	**420**	560	65	4	1,5	25	443	537	1,5	1	476
B71988-C-T-P4S	46,5	**440**	600	74	4	1,5	15	473	567	1,5	1	506
B71988-E-T-P4S	46,5	**440**	600	74	4	1,5	25	473	567	1,5	1	506
B71992-C-T-P4S	55,4	**460**	620	74	4	1,5	15	493	587	1,5	1	526
B71992-E-T-P4S	55,4	**460**	620	74	4	1,5	25	493	587	1,5	1	526
B71996-C-T-P4S	61,8	**480**	650	78	5	2	15	518	612	2,5	1	551
B71996-E-T-P4S	61,8	**480**	650	78	5	2	25	518	612	2,5	1	551
B719/500-C-T-P4S	68,2	**500**	670	78	5	2	15	538	632	2,5	1	571
B719/500-E-T-P4S	68,2	**500**	670	78	5	2	25	538	632	2,5	1	571

1) Explanation of short designation, see section Bearing designations, page 82, *Figure 9*.
2) Explanation, see section Technical principles.
3) Minimal oil quantity lubrication.

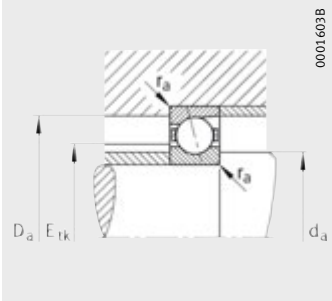

Mounting dimensions

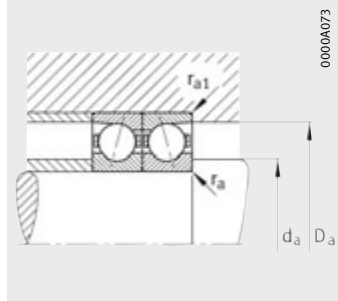

Mounting dimensions

Basic load ratings		Limiting speeds		Preload force[2)] F_v			Lift-off force[2)] K_{aE}			Axial rigidity[2)] c_a		
dyn. C_r	stat. C_{0r}	n_G grease	n_G oil[3)]	L	M	H	L	M	H	L	M	H
kN	kN	min^{-1}	min^{-1}	N	N	N	N	N	N	N/µm	N/µm	N/µm
500	950	2 200	3 600	2 801	9 191	18 741	8 394	29 195	62 818	313,2	515	719
475	880	2 000	3 200	4 149	14 653	30 846	11 952	43 170	93 012	766,5	1 212,6	1 617,6
510	980	2 200	3 400	2 839	9 357	19 309	8 565	29 947	65 251	320,4	528,2	741,9
475	915	2 000	3 000	4 017	14 226	29 996	11 640	42 213	91 049	761,4	1 206,4	1 610,3
520	1 040	2 000	3 200	2 890	9 530	19 478	8 640	30 146	64 937	337,3	553,7	771,8
490	956	1 900	2 800	4 211	15 011	31 691	12 119	44 142	95 297	823	1 304	1 738,5
530	1 080	2 000	3 000	2 927	9 690	20 023	8 808	30 891	67 307	344,3	566,6	794,1
500	1 000	1 800	2 800	4 182	14 905	31 485	12 108	44 175	95 395	823	1 305,6	1 741,8
530	1 100	1 900	3 000	2 747	9 398	19 439	8 183	29 589	64 458	343,6	569,9	796,3
500	1 020	1 700	2 600	3 809	14 543	31 315	10 942	42 672	93 919	827,3	1 340,1	1 797
550	1 160	1 800	2 800	2 827	9 719	20 317	8 467	30 828	67 881	358,6	596,5	837,6
520	1 080	1 600	2 600	3 842	14 698	31 683	11 098	43 473	95 732	846,5	1 373,9	1 843,5

FAG

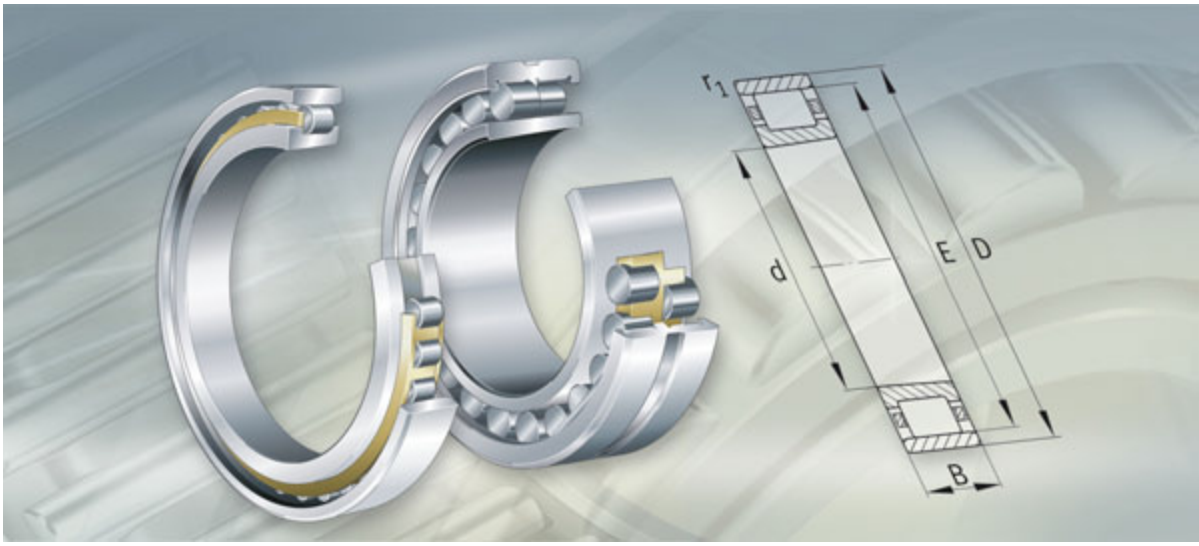

Super precision cylindrical roller bearings

Single row
Double row

Super precision cylindrical roller bearings

		Page
Product overview	Super precision cylindrical roller bearings	162
Features	Ideal non-locating bearings	163
	Bearings with smaller cross-section	163
	Single row cylindrical roller bearings	163
	Double row cylindrical roller bearings	165
	Sealing	165
	Lubrication	165
	Operating temperature	165
	Cages	165
	Bearing designations	166
	Marking of bearings	167
Design and safety guidelines	Load carrying capacity and operating life	168
	Equivalent static bearing load	168
	Static load safety factor	168
	Clearance adjustment of cylindrical roller bearings	168
	Speeds	169
	Radial rigidity	169
	Design of bearing arrangements	170
Accuracy		175
	Tolerances of class SP for single row bearings	176
	Tolerances of class SP for double row bearings	178
	Tolerances of class UP for single and double row bearings	180
	Radial internal clearance	182
Dimension tables	Super precision cylindrical roller bearings, single row, steel or ceramic rollers	184
	Super precision cylindrical roller bearings, single row, steel rollers	192
	Super precision cylindrical roller bearings, double row	196

Single row, tapered bore

Standard

N10..-K, N19..-K

Hybrid bearings with half the number of rollers

HCN10..-K-H193

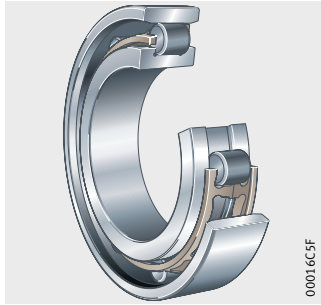

Thermally robust design

N10..-K-TR, HCN10..-K-TR

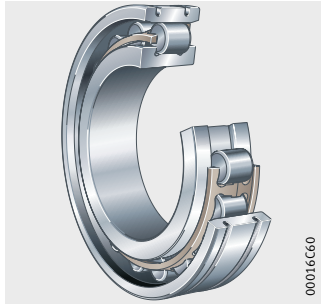

Double row, tapered bore

NN30..-K, NNU49..-K

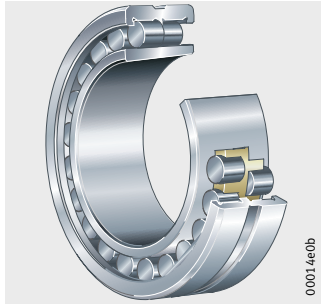

Features

FAG super precision cylindrical roller bearings comprise solid outer rings, solid inner rings with a tapered bore (taper 1:12) and cylindrical roller and cage assemblies with cages made from brass or PEEK (polyether ether ketone). The outer ring is removable and can thus be mounted separately from the normal bearing package. The inner ring is only removable in the case of series NNU49.

The single and double row bearings are used when very high precision under very high radial load is required.
Typical areas of application include machine tools and printing machinery. In these cases, they facilitate bearing arrangements with high accuracy, high radial rigidity and very high load carrying capacity. In machine tool building, they provide radial support for the main spindle.

Ideal non-locating bearings

Since variations in length during rotary motion can be compensated between the rollers and the ribless raceway without constraining forces, the cylindrical roller bearings are highly suitable as non-locating bearings. Axial forces are supported by axial bearings, such as double direction axial angular contact ball bearings.

The standard series N10, N19, HCN10 (single row) and NN30, NNU49 (double row) are an established part of the FAG super precision range. Diameter ranges not shown in the catalogue are available by agreement.

Bearings with smaller cross-section

The super precision cylindrical roller bearings N19 and NNU49 have a smaller cross-section. As a result, smaller centre distances can be achieved in multi-spindle arrangements.
In addition, diameter ranges not described in the dimension tables can be supplied by agreement.

Single row cylindrical roller bearings

Single row super precision cylindrical roller bearings are available:

- with a tapered or cylindrical bore on the inner ring
- as hybrid cylindrical roller bearings with half the number of rollers
- in a thermally robust design
- as a Direct Lube design.

In series N10 and N19, the rollers are guided on the inner ring and held at a spacing from each other by a cage made from brass or PEEK, *Figure 1*.

N10, N19

Figure 1
Single row cylindrical roller bearing

Hybrid cylindrical roller bearings with half the number of rollers

In hybrid cylindrical roller bearings, the rollers are made from a high performance ceramic. This material gives a significant reduction in the friction and wear in the bearing. In addition, there is less strain on the lubricant and temperatures in the bearing are lower.
As a result, cylindrical roller bearings of the hybrid design achieve the highest permissible speeds of any cylindrical roller bearings. Furthermore, the low coefficient of thermal expansion of the ceramic rollers reduces the increase in preload at higher temperatures.

When these hybrid bearings are used, spindles and machinery achieve considerably longer life and the systems are significantly more viable. Ceramic rollers also lead to increased rigidity in both static and dynamic terms. This has a positive effect on the quality of the machining results.

Hybrid cylindrical roller bearings with half the number of rollers have the suffix H193, *Figure 2*. Due to the reduction in the number of rollers, the speed can be increased further, but the radial rigidity then decreases.

HCN10..-K-H193

Figure 2
Hybrid bearing with half the number of rollers

Thermally robust design

With these bearings (suffix TR), temperature fluctuations on the non-locating bearing side of motor spindles can be compensated very effectively even at the very highest speeds.

This is due to the radial elasticity of the outer ring. This has two undercuts and a slight recess across the central area. As a result, the contact forces are lower under variable temperature differences.

Due to these advantages, the bearing is the ideal non-locating bearing for motor spindle applications.

Double row cylindrical roller bearings

In bearings of series NN30, the rollers are guided on the inner ring. The outer ring is ground cylindrical and is removable, *Figure 3*.

Series NNU49 has a cylindrically ground, separable inner ring. The rollers are guided on the outer ring.

NN30

Figure 3
Double row cylindrical roller bearing

Sealing

Super precision cylindrical roller bearings are supplied in an open design.

Lubrication

Due to the high surface quality of the raceways and rollers, FAG cylindrical roller bearings are particularly suitable for grease lubrication.

Pneumatic oil lubrication

When using pneumatic oil lubrication, they can be lubricated via the end faces.

For pneumatic oil lubrication, single row cylindrical roller bearings in a Direct Lube design (suffix DLR) are also available.
In these bearings, lubrication is carried out directly via an annular groove and radial holes in the outer ring. The bearing is sealed off from the housing by means of inserted O rings.

Oil lubrication

Double row bearings have a lubrication groove and lubrication holes in the outer ring.

When selecting a lubricant, the operating temperature of the lubricant must be taken into consideration.

Operating temperature

The bearings can be used at operating temperatures from –30 °C to +150 °C.

Cages

Single row super precision cylindrical roller bearings have solid cages made from brass (suffix M1) or PEEK (polyether ether ketone). These cages are identified by the suffix PVPA1.

Double row bearings have solid cages made from brass (suffix M).

Bearing designations

The designation structure for single row cylindrical roller bearings is shown in *Figure 4*, the structure for double row bearings is shown in *Figure 5*.

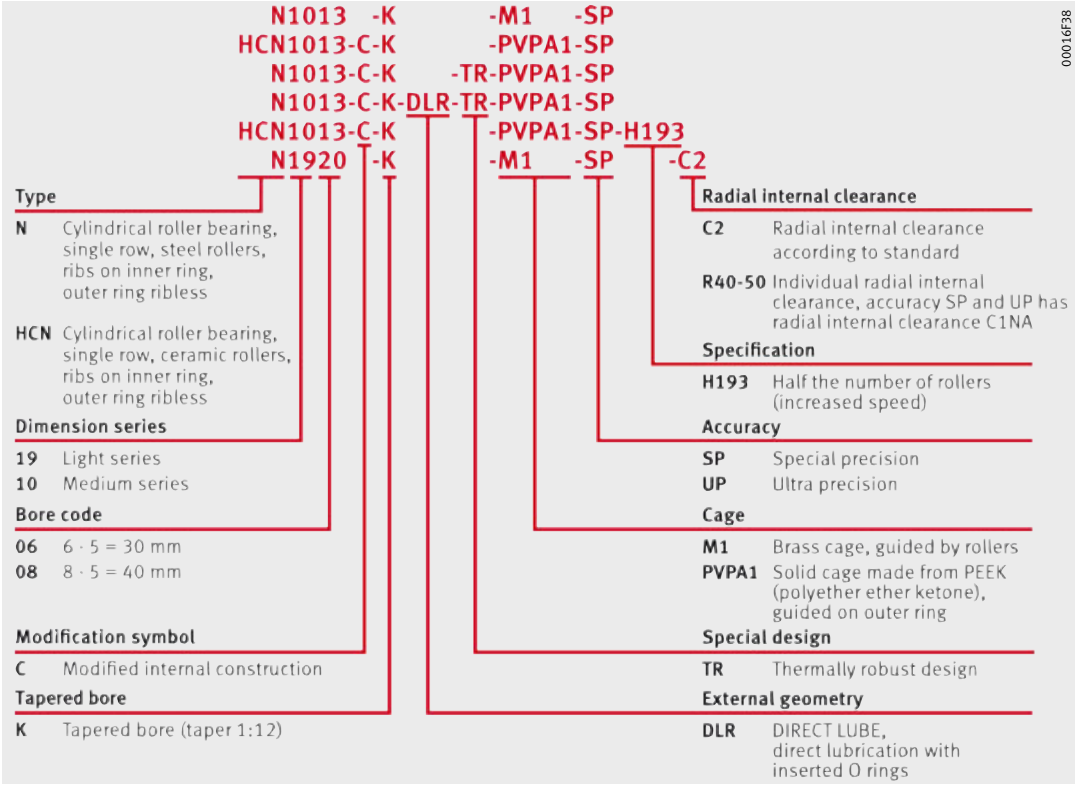

Figure 4
Bearing designations

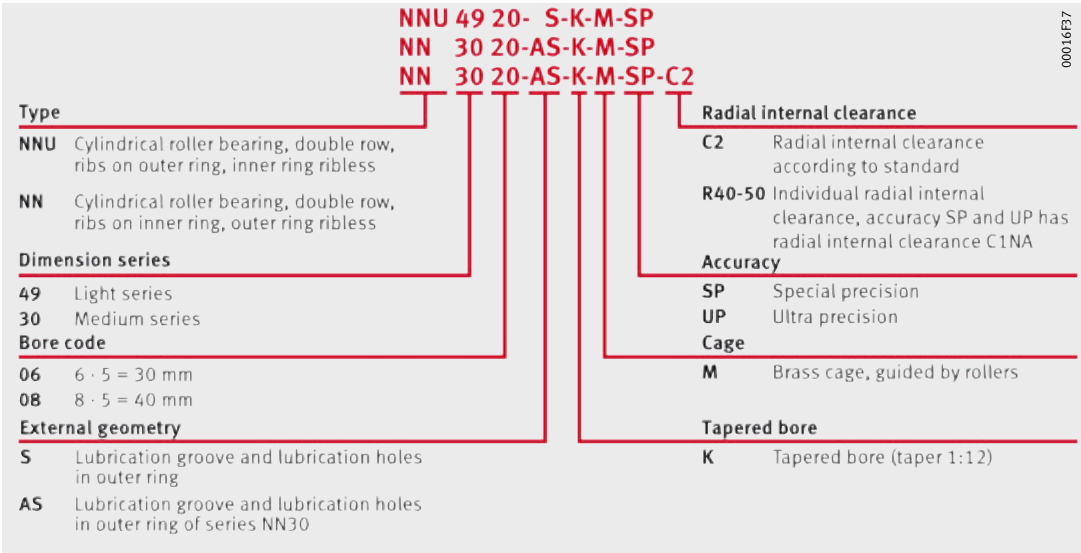

Figure 5
Bearing designations

Marking of bearings

Marking of the bearings on the end faces of the bearing rings is shown in *Figure 6* and *Figure 7*.

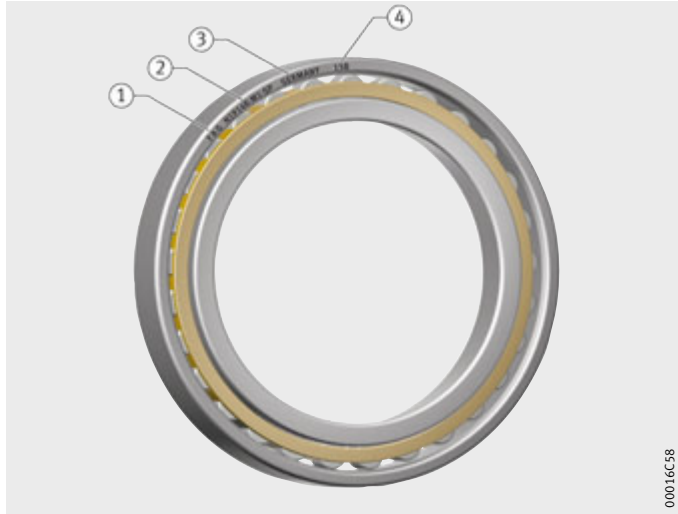

① Trademark
② Short designation (bearing designation)
③ Country of manufacture
④ Internal code

Figure 6
Marking of single row bearings

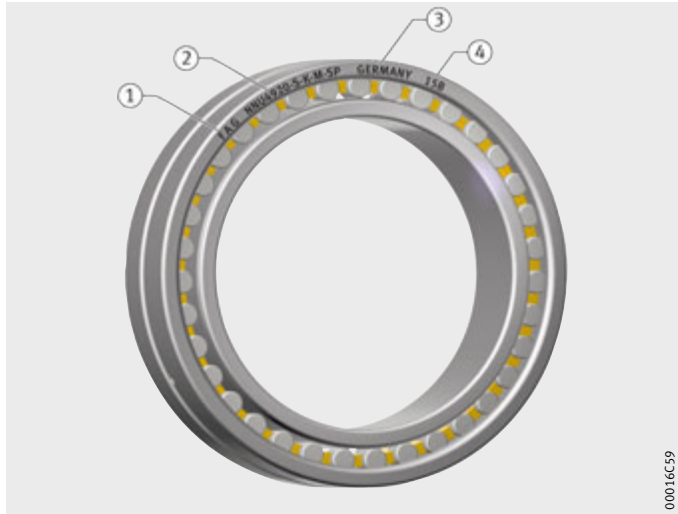

① Trademark
② Short designation (bearing designation)
③ Country of manufacture
④ Internal code

Figure 7
Marking of double row bearings

Design and safety guidelines

Load carrying capacity and operating life

Bearing arrangements with super precision cylindrical roller bearings are generally designed in accordance with the requirements for load carrying capacity, rigidity and accuracy.

In practice, failure due to fatigue is not significant for these bearings. Calculation of the rating life L_{10} in accordance with DIN ISO 281 in order to determine the operating life is therefore not appropriate.

Equivalent static bearing load

Super precision cylindrical roller bearings support radial forces only.

For bearings under static loading, the following applies:

$$P_0 = F_{0r}$$

P_0 N
Equivalent static bearing load

F_{0r} N
Radial static bearing load.

Static load safety factor

Whether the static load carrying capacity of a bearing is sufficient for a given static load, can be checked using the static load safety factor S_0. For calculation of static load safety factor, see section Technical principles, section Load carrying capacity and operating life.

In order to utilise the high accuracy of the bearings, a static load safety factor $S_0 > 3$ is necessary.

Clearance adjustment of cylindrical roller bearings

Cylindrical roller bearings with a tapered bore are fitted with clearance, clearance-free or with preload, see table, page 169. This can be carried out precisely with the aid of an FAG enveloping circle gauge to ± 1 µm.

Speeds

The limiting speeds n_G given in the dimension tables are valid for lubrication with grease or for minimal quantity lubrication with oil and must not be exceeded.

For cylindrical roller bearings, the achievable speed is determined by the radial internal clearance in operation. Guide values are given in the table. Speeds n_G grease and n_G oil, see dimension tables.

Achievable speeds

Single row cylindrical roller bearings	
Clearance or preload µm	Achievable speed min^{-1}
−5 to 0	$<0{,}75 \cdot n_G$ grease
0 (clearance-free)	$0{,}75$ to $1{,}0 \cdot n_G$ grease
0 to 5	1 to $1{,}1 \cdot n_G$ grease
0 to 5	$1{,}0 \cdot n_G$ oil
Double row cylindrical roller bearings	
Clearance or preload µm	Achievable speed min^{-1}
−5 to 0	$<0{,}50 \cdot n_G$ grease
$2 \cdot 10^{-5} \cdot d_M$	$0{,}50$ to $0{,}75 \cdot n_G$ grease
$4 \cdot 10^{-5} \cdot d_M$	$0{,}75$ to $1{,}0 \cdot n_G$ grease
$1 \cdot 10^{-4} \cdot d_M$	$1{,}0 \cdot n_G$ oil

$d_M = (d + D)/2$
These values are guide values for ΔT up to 5 K between the inner and outer ring.
For use in applications with larger temperature differentials,
for example in motor spindles, please consult the Application Engineering facilities of the Schaeffler Group.

Radial rigidity

The radial rigidity c_r is the quotient of the radial load and radial displacement.

$$c_r = \frac{F_r}{\delta_r}$$

c_r N/µm
Radial rigidity, see dimension tables
F_r N
Radial force
δ_r µm
Radial displacement.

Design of bearing arrangements

In order to make comprehensive use of the performance capacity of super precision cylindrical roller bearings, the adjacent construction must be of an appropriate design.

Machining tolerances of the cylindrical shaft

Recommendations for the machining tolerances of the cylindrical shaft (for bearings of tolerance class SP or UP) are shown in the tables.

Tolerances of the cylindrical shaft for tolerance class SP

Nominal shaft diameter d mm		Deviation for d µm		Cylindricity µm	Flatness µm	Axial runout µm	Coaxiality µm	Mean roughness µm
over	incl.			t_1	t_3	t_6	t_5	R_a
18	30	3	−3	1	1	1,5	4	0,2
30	509	3,5	−3,5	1	1	1,5	4	0,2
50	80	4	−4	1,2	1,2	2	5	0,4
80	120	5	−5	1,5	1,5	2,5	6	0,4
120	180	6	−6	2	2	3,5	8	0,4
180	250	7	−7	3	3	4,5	10	0,4
250	315	8	−8	4	4	6	12	0,8
315	400	9	−9	5	5	7	13	0,8
400	500	10	−10	6	6	8	15	0,8
500	630	11	−11	7	7	9	16	0,8
630	800	12	−12	8	8	10	18	0,8

Tolerances of the cylindrical shaft for tolerance class UP

Nominal shaft diameter d mm		Deviation for d µm		Cylindricity µm	Flatness µm	Axial runout µm	Coaxiality µm	Mean roughness µm
over	incl.			t_1	t_3	t_6	t_5	R_a
18	30	2	−2	0,6	0,6	1	2,5	0,2
30	50	2	−2	0,6	0,6	1	2,5	0,2
50	80	2,5	−2,5	0,8	0,8	1,2	3	0,2
80	120	3	−3	1	1	1,5	4	0,2
120	180	4	−4	1,2	1,2	2	5	0,2
180	250	5	−5	2	2	3	7	0,2
250	315	6	−6	2,5	2,5	4	8	0,4
315	400	6,5	−6,5	3	3	5	9	0,4
400	500	7,5	−7,5	4	4	6	10	0,4
500	630	8	−8	5	5	7	11	0,4
630	800	9	−9	5	5	8	12	0,4

Machining tolerances of the tapered shaft

Recommendations for the machining tolerances of the tapered shaft (for bearings of tolerance class SP or UP) are shown in the tables.

Tolerances of the tapered shaft for tolerance class SP

Nominal shaft diameter (bearing bore) d mm		Deviation of small taper diameter[1] µm		Roundness µm	Flatness µm	Axial runout µm	Mean roughness µm
over	incl.			t_2	t_3	t_6	R_a
18	30	+73	+64	1	1	1,5	0,2
30	40	+91	+80	1	1	1,5	0,2
40	50	+108	+97	1	1	1,5	0,2
50	65	+135	+122	1,2	1,2	2	0,2
65	80	+159	+146	1,2	1,2	2	0,2
80	100	+193	+178	1,5	1,5	2,5	0,2
100	120	+225	+210	1,5	1,5	2,5	0,2
120	140	+266	+248	2	2	3,5	0,2
140	160	+298	+280	2	2	3,5	0,2
160	180	+328	+310	2	2	3,5	0,2
180	200	+370	+350	3	3	4,5	0,2
200	225	+405	+385	3	3	4,5	0,2
225	250	+445	+425	3	3	4,5	0,2
250	280	+498	+475	4	4	6	0,4
280	315	+548	+525	4	4	6	0,4
315	355	+615	+590	5	5	7	0,4
355	400	+685	+660	5	5	7	0,4
400	450	+767	+740	6	6	8	0,4
450	500	+847	+820	6	6	8	0,4
500	560	+928	+900	7	7	9	0,4
560	630	+1008	+980	7	7	9	0,4
630	710	+1092	+1060	8	8	10	0,4

[1] In relation to the nominal shaft diameter d, see section Calculation example, page 172.

Tolerances of the tapered shaft for tolerance class UP

Nominal shaft diameter (bearing bore) d mm		Deviation of small taper diameter[1] µm		Round-ness µm	Flat-ness µm	Axial runout µm	Mean roughness µm
over	incl.			t_2	t_3	t_6	R_a
18	30	+73	+64	0,6	0,6	1	0,2
30	40	+91	+80	0,6	0,6	1	0,2
40	50	+108	+97	0,6	0,6	1	0,2
50	65	+135	+122	0,8	0,8	1,2	0,2
65	80	+159	+146	0,8	0,8	1,2	0,2
80	100	+193	+178	1	1	1,5	0,2
100	120	+225	+210	1	1	1,5	0,2
120	140	+266	+248	1,2	1,2	2	0,2
140	160	+298	+280	1,2	1,2	2	0,2
160	180	+328	+310	1,2	1,2	2	0,2
180	200	+370	+350	2	2	3	0,2
200	225	+405	+385	2	2	3	0,2
225	250	+445	+425	2	2	3	0,2
250	280	+498	+475	2,5	2,5	4	0,4
280	315	+548	+525	2,5	2,5	4	0,4
315	355	+615	+590	3	3	5	0,4
355	400	+685	+660	3	3	5	0,4
400	450	+767	+740	4	4	6	0,4
450	500	+847	+820	4	4	6	0,4
500	560	+928	+900	5	5	7	0,4
560	630	+1008	+980	5	5	7	0,4
630	710	+1092	+1060	5	5	8	0,4

[1] In relation to the nominal shaft diameter d, see section Calculation example.

Shaft tolerance for bearings of tolerance class SP

For cylindrical roller bearings, the tolerance of the tapered shaft can be calculated according to the following example.

Calculation example

Bearing bore 70 mm
Tolerance class SP
Small taper diameter d' = d + lower deviation
= 70 mm + 0,146 mm = 70,146 mm
Tolerance = upper deviation – lower deviation
= 0,159 mm – 0,146 mm = (+) 0,013 mm

Machining tolerances of the taper angle

The taper angle tolerance AT_D applies vertical to the axis and is defined as the differential diameter.

When using FAG taper gauges MGK132, the AT_D values stated should be halved (inclination angle tolerance).

For taper lengths with nominal dimensions between the values stated in the table, the taper angle tolerance AT_D is determined by means of interpolation.

Deviation of taper angle

The deviation of the taper angle of the shaft seat for bearings of tolerance class SP is shown in the table.

Deviation

Nominal taper length L mm		Taper angle tolerance AT_D µm			
L_U over	L_O incl.	AT_{DU}		AT_{DO}	
16	25	+2	0	+3,2	0
25	40	+2,5	0	+4	0
40	63	+3,2	0	+5	0
63	100	+4	0	+6,3	0
100	160	+5	0	+8	0
160	250	+6,3	0	+10	0

Calculation example

Taper length of shaft seat 50 mm, tolerance class SP.

$$AT_D = \frac{AT_{DO} - AT_{DU}}{L_o - L_u} \cdot L$$

$$AT_D = \frac{5-3,2}{63-40} \cdot 50 = 3,91\,\mu m$$

Taper angle tolerance AT_D = +4 µm.

Machining tolerances of the housing

Recommendations for the machining tolerances of the housing (for bearings of tolerance class SP or UP) are shown in the tables.

Housing design for tolerance class SP

Nominal housing bore diameter D mm		Deviation for D µm		Cylindricity µm	Flatness µm	Axial runout µm	Coaxiality µm	Mean roughness µm
over	incl.			t_1	t_3	t_6	t_5	R_a
30	50	+2	−9	1,5	1,5	2,5	4	0,4
50	80	+3	−10	2	2	3	5	0,4
80	120	+2	−13	2,5	2,5	4	6	0,8
120	180	+3	−15	3,5	3,5	5	8	0,8
180	250	+2	−18	4,5	4,5	7	10	0,8
250	315	+3	−20	6	6	8	12	1,6
315	400	+3	−22	7	7	9	13	1,6
400	500	+2	−25	8	8	10	15	1,6
500	630	0	−29	9	9	11	16	1,6
630	800	0	−32	10	10	12	18	1,6
800	1000	0	−36	11	11	14	21	1,6

Housing design for tolerance class UP

Nominal housing bore diameter D mm		Deviation for D µm		Cylindricity µm	Flatness µm	Axial runout µm	Coaxiality µm	Mean roughness µm
over	incl.			t_1	t_3	t_6	t_5	R_a
30	50	+1	−6	1	1	1,5	2,5	0,2
50	80	+1	−7	1,2	1,2	2	3	0,4
80	120	+1	−9	1,5	1,5	2,5	4	0,4
120	180	+1	−11	2	2	3,5	5	0,4
180	250	0	−14	3	3	4,5	7	0,4
250	315	0	−16	4	4	6	8	0,8
315	400	+1	−17	5	5	7	9	0,8
400	500	0	−20	6	6	8	10	0,8
500	630	0	−22	7	7	9	11	1,6
630	800	0	−24	8	8	10	12	1,6
800	1000	0	−27	9	9	11	14	1,6

Accuracy

The main dimensions of the bearings conform to DIN 620-1.

The dimensional and geometrical tolerances conform to tolerance class SP.

Super precision cylindrical roller bearings are also available by agreement in the higher tolerance class UP.

For the deviation of the tapered bore Δ_{dmp}, see *Figure 8* and tables.

α = inclination angle at end of taper = 2° 23′ 9,4″

2α = taper angle at end of taper = 4° 46′ 18,8″

B = width of inner ring

d = nominal bearing bore diameter

d_1 = bore diameter at large end of taper

Δ_{dmp} = deviation of bore diameter from nominal dimension in a single radial plane

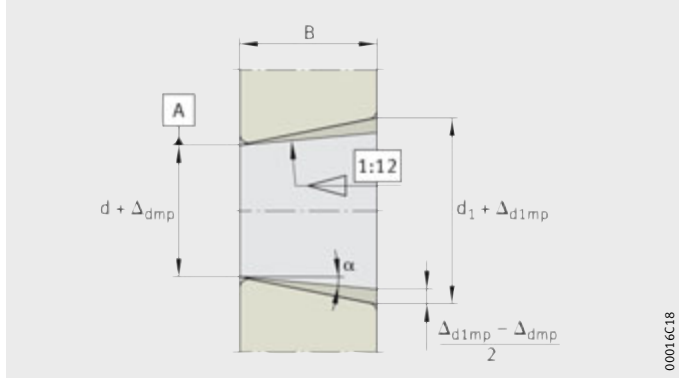

Figure 8
Tolerances for tapered bores

Tolerances of class SP for single row bearings

The following values are valid for the series N10, N19 and HCN10.

Tolerances of the inner ring (tolerance class SP)

Nominal bore diameter d mm		Deviation of cylindrical bore Δ_{ds}, Δ_{dmp} µm		Deviation of tapered bore Δ_{dmp} µm		Width variation V_{Bs} µm	Width deviation Δ_{Bs} µm	
over	incl.							
18	30	0	−6	10	0	1,5	0	−120
30	50	0	−8	12	0	2	0	−120
50	80	0	−9	15	0	3	0	−150
80	120	0	−10	20	0	3	0	−200
120	180	0	−13	25	0	4	0	−250
180	250	0	−15	30	0	5	0	−300
250	315	0	−18	35	0	6	0	−350
315	400	0	−23	40	0	7	0	−400
400	500	0	−27	45	0	8	0	−450
500	630	0	−30	50	0	10	0	−500
630	800	0	−40	65	0	12	0	−750

Tolerances of the inner ring (tolerance class SP) continued

Nominal bore diameter d mm		Variation (out of roundness) V_{dp} µm Bore		Variation of mean diameter V_{dmp} µm	Deviation $\Delta_{d1mp} - \Delta_{dmp}$ µm		Radial runout K_{ia} µm	Axial runout S_d µm	S_{ia} µm
over	incl.	cylindrical	tapered						
18	30	3	3	3	4	0	3	3	4
30	50	4	4	4	4	0	4	3	4
50	80	5	5	5	5	0	4	4	5
80	120	5	5	5	6	0	5	4	5
120	180	7	7	7	8	0	6	5	7
180	250	8	8	8	9	0	8	6	8
250	315	9	9	9	11	0	9	7	10
315	400	12	12	12	12	0	10	9	12
400	500	14	14	14	14	0	12	11	15
500	630	15	15	15	15	0	14	13	18
630	800	20	20	20	18	0	17	15	21

Tolerances of the outer ring (tolerance class SP)

Nominal outside diameter D mm		Deviation of outside diameter Δ_{Ds}, Δ_{Dmp} µm		Variation (out of roundness) V_{Dp} µm
over	incl.			
30	50	0	−7	4
50	80	0	−9	5
80	120	0	−10	5
120	150	0	−11	6
150	180	0	−13	7
180	250	0	−15	8
250	315	0	−18	9
315	400	0	−20	10
400	500	0	−23	12
500	630	0	−28	14
630	800	0	−35	18
800	1000	0	−40	20

The width deviation Δ_{Cs} is identical to Δ_{Bs} of the corresponding inner ring.

Tolerances of the outer ring (tolerance class SP) continued

Nominal outside diameter D mm		Variation of mean diameter V_{Dmp} µm	Width variation V_{Cs} µm	Radial runout K_{ea} µm	Inclination variation S_D µm	Axial runout S_{ea} µm
over	incl.					
30	50	4	2,5	5	4	5
50	80	5	3	5	4	5
80	120	5	4	6	5	6
120	150	6	5	7	5	7
150	180	7	5	8	5	8
180	250	8	7	10	7	10
250	315	9	7	11	8	10
315	400	10	8	13	10	13
400	500	12	9	15	11	15
500	630	14	11	17	13	18
630	800	18	13	20	15	22
800	1000	20	15	23	17	26

Tolerances of class SP for double row bearings

The following values are valid for the series NN30 and NNU49.

Tolerances of the inner ring (tolerance class SP)

Nominal bore diameter d mm		Deviation of cylindrical bore Δ_{ds}, Δ_{dmp} µm		Deviation of tapered bore Δ_{dmp} µm		Width variation V_{Bs} µm	Width deviation Δ_{Bs} µm	
over	incl.							
18	30	0	−6	10	0	2,5	0	−120
30	50	0	−8	12	0	3	0	−120
50	80	0	−9	15	0	4	0	−150
80	120	0	−10	20	0	4	0	−200
120	180	0	−13	25	0	5	0	−250
180	250	0	−15	30	0	6	0	−300
250	315	0	−18	35	0	8	0	−350
315	400	0	−23	40	0	10	0	−400
400	500	0	−27	45	0	12	0	−450
500	630	0	−30	50	0	14	0	−500
630	800	0	−40	65	0	17	0	−750

Tolerances of the inner ring (tolerance class SP) continued

Nominal bore diameter d mm		Variation (out of roundness) V_{dp} µm Bore		Variation of mean diameter V_{dmp} µm	Deviation $\Delta_{d1mp} - \Delta_{dmp}$ µm		Radial runout K_{ia} µm	Axial runout S_d µm	Axial runout S_{ia} µm
over	incl.	cylindrical	tapered						
18	30	3	3	3	4	0	3	4	4
30	50	4	4	4	4	0	4	4	4
50	80	5	5	5	5	0	4	5	5
80	120	5	5	5	6	0	5	5	5
120	180	7	7	7	8	0	6	6	7
180	250	8	8	8	9	0	8	7	8
250	315	9	9	9	11	0	8	8	10
315	400	12	12	12	12	0	10	10	12
400	500	14	14	14	14	0	10	12	15
500	630	15	15	15	15	0	12	14	18
630	800	20	20	20	18	0	15	17	21

Tolerances of the outer ring (tolerance class SP)

Nominal outside diameter D mm		Deviation of outside diameter Δ_{Ds}, Δ_{Dmp} µm		Variation (out of roundness) V_{Dp} µm
over	incl.			
30	50	0	−7	4
50	80	0	−9	5
80	120	0	−10	5
120	150	0	−11	6
150	180	0	−13	7
180	250	0	−15	8
250	315	0	−18	9
315	400	0	−20	10
400	500	0	−23	12
500	630	0	−28	14
630	800	0	−35	18
800	1000	0	−40	20

The width deviation Δ_{Cs} is identical to Δ_{Bs} of the corresponding inner ring.

Tolerances of the outer ring (tolerance class SP) continued

Nominal outside diameter D mm		Variation of mean diameter V_{Dmp} µm	Width variation V_{Cs} µm	Radial runout K_{ea} µm	Inclination variation S_D µm	Axial runout S_{ea} µm
over	incl.					
30	50	4	2,5	5	4	5
50	80	5	3	5	4	5
80	120	5	4	6	5	6
120	150	6	5	7	5	7
150	180	7	5	8	5	8
180	250	8	7	10	7	10
250	315	9	7	11	8	10
315	400	10	8	13	10	13
400	500	12	9	15	11	15
500	630	14	11	17	13	18
630	800	18	13	20	15	22
800	1000	20	15	23	17	26

Tolerances of class UP for single and double row bearings

The following values are valid for single and double row cylindrical roller bearings.

Tolerances of the inner ring (tolerance class UP)

Nominal bore diameter d mm		Deviation of cylindrical bore Δ_{ds}, Δ_{dmp} µm		Deviation of tapered bore Δ_{dmp} µm		Width variation V_{Bs} µm	Width deviation Δ_{Bs} µm	
over	incl.							
18	30	0	−5	6	0	1,5	0	−25
30	50	0	−6	7	0	2	0	−30
50	80	0	−7	8	0	2,5	0	−40
80	120	0	−8	10	0	3	0	−50
120	180	0	−10	12	0	4	0	−60
180	250	0	−12	14	0	5	0	−75
250	315	0	−15	15	0	5	0	−100
315	400	0	−19	17	0	6	0	−100
400	500	0	−23	19	0	7	0	−100
500	630	0	−26	20	0	8	0	−125
630	800	0	−34	22	0	11	0	−125

Tolerances of the inner ring (tolerance class UP) continued

Nominal bore diameter d mm		Variation (out of roundness) V_{dp} µm Bore		Variation of mean diameter V_{dmp} µm	Deviation $\Delta_{d1mp} - \Delta_{dmp}$ µm		Radial runout K_{ia} µm	Axial runout S_d µm	S_{ia} µm
over	incl.	cylindrical	tapered						
18	30	2,5	2,5	2,5	2	0	1,5	3	3
30	50	3	3	3	3	0	2	3	3
50	80	3,5	3,5	3,5	3	0	2	4	3
80	120	4	4	4	4	0	3	4	4
120	180	5	5	5	4	0	3	5	6
180	250	6	6	6	5	0	4	6	7
250	315	8	8	8	6	0	4	6	8
315	400	10	10	10	6	0	5	7	9
400	500	12	12	12	7	0	5	8	10
500	630	13	13	13	8	0	6	9	12
630	800	17	17	17	9	0	7	11	18

Tolerances of the outer ring (tolerance class UP)

Nominal outside diameter D mm		Deviation of outside diameter Δ_{Ds}, Δ_{Dmp} µm		Variation (out of roundness) V_{Dp} µm
over	incl.			
30	50	0	−5	3
50	80	0	−6	3
80	120	0	−7	4
120	150	0	−8	4
150	180	0	−9	5
180	250	0	−10	5
250	315	0	−12	6
315	400	0	−14	7
400	500	0	−17	9
500	630	0	−20	10
630	800	0	−25	13
800	1000	0	−30	15

The width deviation Δ_{Cs} is identical to Δ_{Bs} of the corresponding inner ring.

Tolerances of the outer ring (tolerance class UP) continued

Nominal outside diameter D mm		Variation of mean diameter V_{Dmp} µm	Width variation V_{Cs} µm	Radial runout K_{ea} µm	Inclination variation S_D µm	Axial runout S_{ea} µm
over	incl.					
30	50	3	1,5	3	2	3
50	80	3	2	3	2	4
80	120	4	3	3	3	5
120	150	4	4	4	3	5
150	180	5	4	4	3	5
180	250	5	5	5	4	7
250	315	6	5	6	4	7
315	400	7	6	7	5	8
400	500	9	7	8	5	10
500	630	10	8	9	6	12
630	800	13	11	11	7	14
800	1000	15	12	12	10	17

Radial internal clearance

The values in the table are valid for single and double row cylindrical roller bearings with a tapered or cylindrical bore.

The internal clearance groups conform to DIN 620-4.

Radial internal clearance of bearings with tapered bore

Nominal bore diameter d mm		Internal clearance group							
		C1[1] µm		C2[2] µm		CN[2] µm		C3[2] µm	
over	incl.	min.	max.	min.	max.	min.	max.	min.	max.
24	30	15	25	20	45	35	60	45	70
30	40	15	25	20	45	40	65	55	80
40	50	17	30	25	55	45	75	60	90
50	65	20	35	30	60	50	80	70	100
65	80	25	40	35	70	60	95	85	120
80	100	35	55	40	75	70	105	95	130
100	120	40	60	50	90	90	130	115	155
120	140	45	70	55	100	100	145	130	175
140	160	50	75	60	110	110	160	145	195
160	180	55	85	75	125	125	175	160	210
180	200	60	90	85	140	140	195	180	235
200	225	60	95	95	155	155	215	200	260
220	250	65	100	105	170	170	235	220	285
250	280	75	110	115	185	185	255	240	310
280	315	80	120	130	205	205	280	265	340
315	355	90	135	145	225	225	305	290	370
355	400	100	150	165	255	255	345	330	420
400	450	110	170	185	285	285	385	370	470
450	500	120	190	205	315	315	425	410	520
500	560	130	210	230	350	350	470	455	575
560	630	140	230	260	380	380	500	500	620
630	710	160	260	295	435	435	575	565	705

Radial internal clearance without measurement load.

1) Bearings of accuracy SP and UP have a radial internal clearance C1.
The bearing rings are not interchangeable (NA).

2) The internal clearance groups C2, CN and C3 can be ordered using suffixes for the accuracy SP and UP.
The bearing rings are interchangeable.

Radial internal clearance of bearings with cylindrical bore

Nominal bore diameter d mm		Internal clearance group							
		C1[1] µm		C2[2] µm		CN[2] µm		C3[2] µm	
over	incl.	min.	max.	min.	max.	min.	max.	min.	max.
24	30	5	15	0	25	20	45	35	60
30	40	5	15	5	30	25	50	45	70
40	50	5	18	5	35	30	60	50	80
50	65	5	20	10	40	40	70	60	90
65	80	10	25	10	45	40	75	65	100
80	100	10	30	15	50	50	85	75	110
100	120	10	30	15	55	50	90	85	125
120	140	10	35	15	60	60	105	100	145
140	160	10	35	20	70	70	120	115	165
160	180	10	40	25	75	75	125	120	170
180	200	15	45	35	90	90	145	140	195
200	225	15	50	45	105	105	165	160	220
220	250	15	50	45	110	110	175	170	235
250	280	20	55	55	125	125	195	190	260
280	315	20	60	55	130	130	205	200	275
315	355	20	65	65	145	145	225	225	305
355	400	25	75	100	190	190	280	280	370
400	450	25	85	110	210	210	310	310	410
450	500	25	95	110	220	220	330	330	440
500	560	25	100	120	240	240	360	360	480
560	630	30	110	140	260	260	380	380	500
630	710	30	130	145	285	285	425	425	565

Radial internal clearance without measurement load.

1) Bearings of accuracy SP and UP have a radial internal clearance C1.
The bearing rings are not interchangeable (NA).

2) The internal clearance groups C2, CN and C3 can be ordered using suffixes for the accuracy SP and UP.
The bearing rings are interchangeable.

Super precision cylindrical roller bearings

Single row
Steel or ceramic rollers

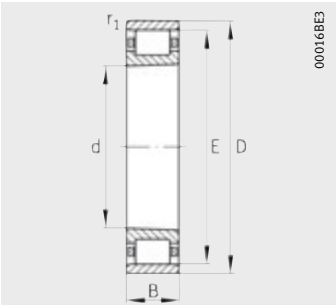

N10, N19
Steel rollers

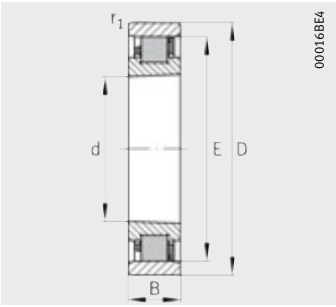

HCN10
Ceramic rollers

Dimension table · Dimensions in mm

Designation[1]		Mass	Dimensions							
Standard	Hybrid, with half the number of rollers	m ≈kg	d	D	B	r_1 min.	E	B_N	S_N	S_B
N1006-K-M1-SP	–	0,13	**30**	55	13	0,6	48,5	2,8	7,2	1,4
N1006-K-PVPA1-SP[2]	–	0,13	**30**	55	13	0,6	48,5	2,8	7,2	1,4
–	**HCN1006-K-PVPA1-SP-H193**[2]	0,12	**30**	55	13	0,6	48,5	2,8	7,2	1,4
N1007-K-M1-SP	–	0,17	**35**	62	14	0,6	55	2,8	8	1,4
N1007-C-K-PVPA1-SP[2]	–	0,17	**35**	62	14	0,6	55	2,8	8	1,4
–	**HCN1007-C-K-PVPA1-SP-H193**[2]	0,16	**35**	62	14	0,6	55	2,8	8	1,4
N1008-K-M1-SP	–	0,22	**40**	68	15	0,6	61	2,8	8,5	1,4
N1008-K-PVPA1-SP[2]	–	0,22	**40**	68	15	0,6	61	2,8	8,5	1,4
–	**HCN1008-K-PVPA1-SP-H193**[2]	0,21	**40**	68	15	0,6	61	2,8	8,5	1,4
N1009-K-M1-SP	–	0,27	**45**	75	16	0,6	67,5	3,4	9,3	1,4
N1009-C-K-PVPA1-SP[2]	–	0,27	**45**	75	16	0,6	67,5	3,4	9,3	1,4
–	**HCN1009-C-K-PVPA1-SP-H193**[2]	0,26	**45**	75	16	0,6	67,5	3,4	9,3	1,4
N1910-K-M1-SP	–	0,15	**50**	72	12	0,6	66,5	–	–	–
N1010-K-M1-SP	–	0,3	**50**	80	16	0,6	72,5	3,4	9,3	1,4
N1010-C-K-PVPA1-SP[2]	–	0,3	**50**	80	16	0,6	72,5	3,4	9,3	1,4
–	**HCN1010-C-K-PVPA1-SP-H193**[2]	0,22	**50**	80	16	0,6	72,5	3,4	9,3	1,4
N1911-K-M1-SP	–	0,21	**55**	80	13	1	73,5	–	–	–
N1011-K-M1-SP	–	0,44	**55**	90	18	1	80,5	4,3	9,7	1,4
N1011-K-PVPA1-SP[2]	–	0,44	**55**	90	18	1	80,5	4,3	9,7	1,4
–	**HCN1011-K-PVPA1-SP-H193**[2]	0,43	**55**	90	18	1	80,5	4,3	9,7	1,4

Description of suffixes

C	Modified internal construction
K	Tapered bore (taper 1:12)
M1	Brass cage, guided by rollers
PVPA1	Solid cage made from PEEK, guided on outer ring
SP	Special precision
H193	Half the number of rollers

1) The bearings are also available in the following designs:
- with cylindrical bore, example: **N1006-M1-SP**
- as Direct Lube design, example: **N1006-K-DLR-M1-SP**, **N1006-K-DLR-PVPA1-SP**.

2) Also available as thermally robust design (suffix TR), example: **N1006-K-TR-PVPA1-SP**.

3) Axial displacement of outer ring from central position.

4) Minimal oil quantity lubrication.

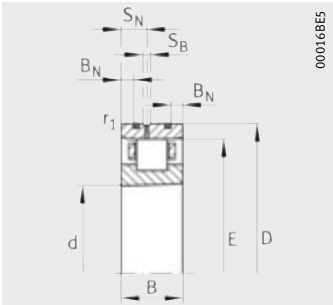

Direct Lube

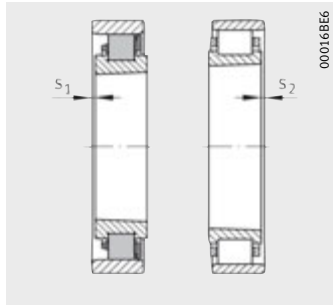

Axial displacement

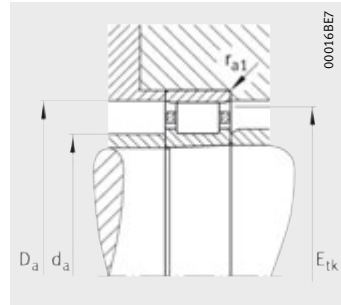

Mounting dimensions

Axial displacement[3]		Mounting dimensions				Basic load ratings		Limiting speeds		Radial spring rigidity
s_1	s_2	d_a h12	D_a H12	E_{tk} nom.	r_{a1} max.	dyn. C_r N	stat. C_{0r} N	n_G grease min^{-1}	n_G oil[4] min^{-1}	c_r N/µm
1,9	1,9	36,5	49,4	47	0,6	20 400	20 400	20 000	24 000	370
0,85	2,2	36,5	49,4	39,7	0,6	17 000	16 300	34 000	38 000	300
0,85	2,2	36,5	49,4	39,7	0,6	11 300	8 600	43 000	48 000	230
2	2	42	56,1	53,4	0,6	23 600	24 500	18 000	20 000	410
0,9	2,4	43	56,1	45,8	0,6	19 800	16 700	30 000	34 000	300
0,9	2,4	43	56,1	45,8	0,6	11 200	8 700	38 000	43 000	230
2,1	2,1	47	62,1	59,3	0,6	28 500	30 500	16 000	18 000	470
0,95	2,5	47	62,1	50,8	0,6	23 600	24 000	26 000	30 000	370
0,95	2,5	47	62,1	50,8	0,6	15 300	12 100	34 000	38 000	270
2,2	2,2	52,5	68,6	65,6	0,6	33 500	37 500	15 000	17 000	530
1,2	2,5	53,5	68,7	56,9	0,6	25 500	27 000	24 000	28 000	410
1,2	2,5	53,5	68,7	56,9	0,6	16 300	13 700	30 000	34 000	300
1,8	1,8	55,5	67	65,1	0,6	22 400	27 500	15 000	17 000	530
2,2	2,2	57,5	73,6	70,6	0,6	36 000	41 500	14 000	16 000	580
1,15	2,7	58,5	73,7	61,9	0,6	27 000	30 500	22 000	26 000	460
1,15	2,7	58,5	73,7	61,9	0,6	17 300	15 200	28 000	32 000	330
1,9	1,9	61,5	74	72	1	25 000	31 500	14 000	16 000	540
2,5	2,5	64,5	81,8	78,5	1	41 500	50 000	12 000	14 000	650
1,4	3	64,5	81,8	68,8	1	36 000	41 500	20 000	24 000	540
1,4	3	64,5	81,8	68,8	1	22 600	20 200	26 000	30 000	370

Super precision cylindrical roller bearings

Single row
Steel or ceramic rollers

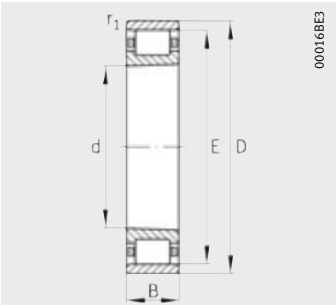

N10, N19
Steel rollers

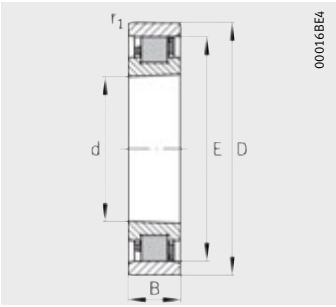

HCN10
Ceramic rollers

Dimension table (continued) · Dimensions in mm

Designation[1]		Mass	Dimensions							
Standard	Hybrid, with half the number of rollers	m ≈kg	d	D	B	r_1 min.	E	B_N	S_N	S_B
N1912-K-M1-SP	–	0,22	**60**	85	13	1	78,5	–	–	–
N1012-K-M1-SP	–	0,47	**60**	95	18	1	85,5	4,3	9,7	1,4
N1012-K-PVPA1-SP[2]	–	0,47	**60**	95	18	1	85,5	4,3	9,7	1,4
–	**HCN1012-K-PVPA1-SP-H193**[2]	0,36	**60**	95	18	1	85,5	4,3	9,7	1,4
N1913-K-M1-SP	–	0,24	**65**	90	13	1	83,5	–	–	–
N1013-K-M1-SP	–	0,5	**65**	100	18	1	90,5	4	10,4	1,4
N1013-C-K-PVPA1-SP[2]	–	0,5	**65**	100	18	1	91	4	10,4	1,4
–	**HCN1013-C-K-PVPA1-SP-H193**[2]	0,49	**65**	100	18	1	91	4	10,4	1,4
N1914-K-M1-SP	–	0,38	**70**	100	16	1	92	–	–	–
N1014-K-M1-SP	–	0,69	**70**	110	20	1	100	4	11,6	1,4
N1014-K-PVPA1-SP[2]	–	0,69	**70**	110	20	1	100	4	11,6	1,4
–	**HCN1014-K-PVPA1-SP-H193**[2]	0,49	**70**	110	20	1	100	4	11,6	1,4
N1915-K-M1-SP	–	0,41	**75**	105	16	1	97	–	–	–
N1015-K-M1-SP	–	0,73	**75**	115	20	1	105	4	11,6	1,4
N1015-K-PVPA1-SP[2]	–	0,73	**75**	115	20	1	105	4	11,6	1,4
–	**HCN1015-K-PVPA1-SP-H193**[2]	0,71	**75**	115	20	1	105	4	11,6	1,4
N1916-K-M1-SP	–	0,43	**80**	110	16	1	102	–	–	–
N1016-K-M1-SP	–	0,97	**80**	125	22	1	113,5	4,7	12,2	2,2
N1016-K-PVPA1-SP[2]	–	0,99	**80**	125	22	1	113,5	4,7	12,2	2,2
–	**HCN1016-K-PVPA1-SP-H193**[2]	0,97	**80**	125	22	1	113,5	4,7	12,2	2,2

Description of suffixes

C	Modified internal construction
K	Tapered bore (taper 1:12)
M1	Brass cage, guided by rollers
PVPA1	Solid cage made from PEEK, guided on outer ring
SP	Special precision
H193	Half the number of rollers

1) The bearings are also available in the following designs:
- with cylindrical bore, example: **N1012-M1-SP**
- as Direct Lube design, example: **N1012-K-DLR-M1-SP**, **N1012-K-DLR-PVPA1-SP**.

2) Also available as thermally robust design (suffix TR), example: **N1012-K-TR-PVPA1-SP**.

3) Axial displacement of outer ring from central position.

4) Minimal oil quantity lubrication.

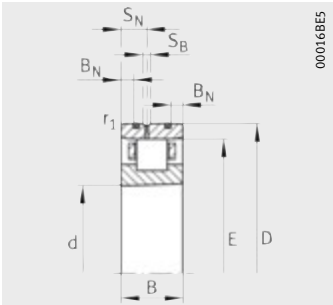

Direct Lube

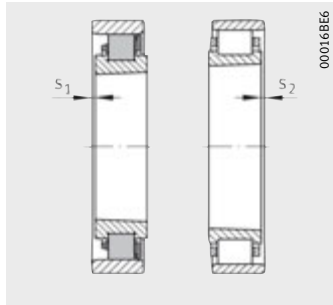

Axial displacement

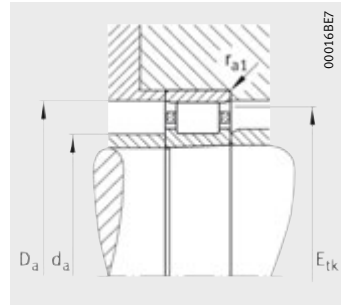

Mounting dimensions

Axial displacement[3]		Mounting dimensions				Basic load ratings		Limiting speeds		Radial spring rigidity
s_1	s_2	d_a h12	D_a H12	E_{tk} nom.	r_{a1} max.	dyn. C_r N	stat. C_{0r} N	n_G grease min^{-1}	n_G oil[4] min^{-1}	c_r N/µm
1,9	1,9	66,5	79	77	1	26 000	34 000	13 000	15 000	580
2,5	2,5	69,5	86,8	83,5	1	44 000	55 000	11 000	13 000	710
1,25	3	69,5	86,8	73,8	1	38 000	45 500	18 000	20 000	590
1,25	3	69,5	86,8	73,8	1	23 900	22 200	24 000	28 000	410
1,9	1,9	71,5	84	82	1	29 000	40 000	12 000	14 000	680
2,5	2,5	74,5	91,8	88,5	1	45 000	58 500	11 000	13 000	730
1,4	2,5	75	92,3	77,8	1	40 000	50 000	17 000	19 000	640
1,4	2,5	75	92,3	77,8	1	25 000	24 300	22 000	26 000	440
2,3	2,3	78	93	90,3	1	36 500	49 000	11 000	13 000	710
2,5	2,5	80	101,3	97,5	1	64 000	81 500	10 000	12 000	820
1,25	3,3	80	101,3	85,4	1	57 000	69 500	16 000	18 000	700
1,25	3,3	80	101,3	85,4	1	34 000	31 500	20 000	24 000	460
2,3	2,3	83	98	95,3	1	38 000	53 000	10 000	12 000	760
2,5	2,5	85	106,3	102,5	1	65 500	85 000	9 500	11 000	850
1	3	85	106,3	90,4	1	60 000	75 000	15 000	17 000	770
1	3	85	106,3	90,4	1	36 000	34 500	19 000	22 000	500
2,3	2,3	88	103	100,3	1	39 000	56 000	9 500	11 000	810
3	3	91,5	115	110,8	1	76 500	98 000	8 500	9 500	900
1,1	3,5	91,5	115	97,4	1	71 000	88 000	14 000	16 000	810
1,1	3,5	91,5	115	97,4	1	43 000	41 500	18 000	20 000	540

Super precision cylindrical roller bearings

Single row
Steel or ceramic rollers

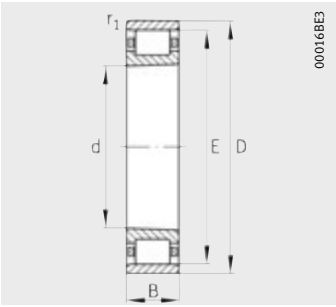

N10, N19
Steel rollers

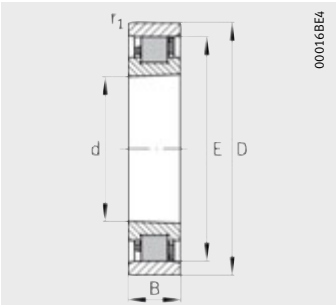

HCN10
Ceramic rollers

Dimension table (continued) · Dimensions in mm

Designation[1]		Mass	Dimensions							
Standard	Hybrid, with half the number of rollers	m ≈kg	d	D	B	r_1 min.	E	B_N	S_N	S_B
N1917-K-M1-SP	–	0,61	**85**	120	18	1	110,5	–	–	–
N1017-K-M1-SP	–	1,04	**85**	130	22	1	118,5	4,7	12,2	2,2
N1017-K-PVPA1-SP[2]	–	1,04	**85**	130	22	1	118,5	4,7	12,2	2,2
–	**HCN1017-K-PVPA1-SP-H193**[2]	0,75	**85**	130	22	1	118,5	4,7	12,2	2,2
N1918-K-M1-SP	–	0,64	**90**	125	18	1	115,5	–	–	–
N1018-K-M1-SP	–	1,34	**90**	140	24	1,1	127	5,5	14,5	2,2
N1018-K-PVPA1-SP[2]	–	1,34	**90**	140	24	1,1	127	5,5	14,5	2,2
–	**HCN1018-K-PVPA1-SP-H193**[2]	1,32	**90**	140	24	1,1	127	5,5	14,5	2,2
N1919-K-M1-SP	–	0,67	**95**	130	18	1	120,5	–	–	–
N1019-K-M1-SP	–	1,4	**95**	145	24	1,1	132	5,5	14,5	2,2
N1019-K-PVPA1-SP[2]	–	1,4	**95**	145	24	1,1	132	5,5	14,5	2,2
–	**HCN1019-K-PVPA1-SP-H193**[2]	1,38	**95**	145	24	1,1	132	5,5	14,5	2,2
N1920-K-M1-SP	–	0,92	**100**	140	20	1	130	–	–	–
N1020-K-M1-SP	–	1,46	**100**	150	24	1,1	137	5,5	14,5	2,2
N1020-K-PVPA1-SP[2]	–	1,46	**100**	150	24	1,1	137	5,5	14,5	2,2
–	**HCN1020-K-PVPA1-SP-H193**[2]	1,44	**100**	150	24	1,1	137	5,5	14,5	2,2
N1921-K-M1-SP	–	0,96	**105**	145	20	1	135	–	–	–
N1021-K-M1-SP	–	1,82	**105**	160	26	1,1	145,5	6	15,2	2,2
N1021-K-PVPA1-SP[2]	–	1,82	**105**	160	26	1,1	145,5	6	15,2	2,2
–	**HCN1021-K-PVPA1-SP-H193**[2]	1,8	**105**	160	26	1,1	145,5	6	15,2	2,2

Description of suffixes

K	Tapered bore (taper 1:12)
M1	Brass cage, guided by rollers
PVPA1	Solid cage made from PEEK, guided on outer ring
SP	Special precision
H193	Half the number of rollers

1) The bearings are also available in the following designs:
- with cylindrical bore, example: **N1017-M1-SP**
- as Direct Lube design, example: **N1017-K-DLR-M1-SP**, **N1017-K-DLR-PVPA1-SP**.

2) Also available as thermally robust design (suffix TR), example: **N1017-K-TR-PVPA1-SP**.

3) Axial displacement of outer ring from central position.

4) Minimal oil quantity lubrication.

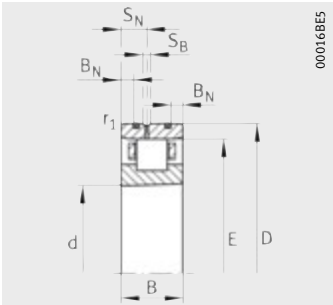

Direct Lube

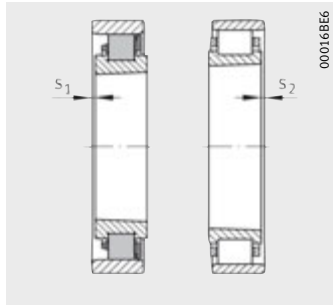

Axial displacement

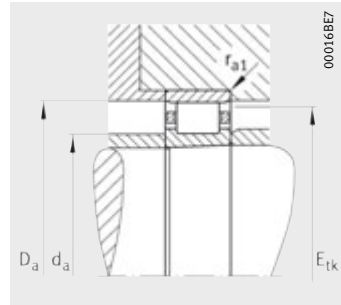

Mounting dimensions

Axial displacement[3]		Mounting dimensions				Basic load ratings		Limiting speeds		Radial spring rigidity
s_1	s_2	d_a h12	D_a H12	E_{tk} nom.	r_{a1} max.	dyn. C_r N	stat. C_{0r} N	n_G grease min^{-1}	n_G oil[4] min^{-1}	c_r N/µm
2,5	2,5	94,5	112	108,5	1	50 000	71 000	8 500	9 500	880
3	3	96,5	120	115,8	1	78 000	104 000	8 000	9 000	940
1,5	2,7	96,5	120	102,4	1	69 500	88 000	13 000	15 000	810
1,5	2,7	96,5	120	102,4	1	42 500	41 500	17 000	19 000	540
2,5	2,5	99,5	117	113,5	1	51 000	75 000	8 500	9 500	930
3,2	3,2	103	128,6	124	1,1	93 000	125 000	7 500	8 500	1 030
1,2	3,7	103	128,6	109,4	1,1	83 000	108 000	12 000	14 000	900
1,2	3,7	103	128,6	109,4	1,1	51 000	50 000	15 000	17 000	590
2,5	2,5	104,5	122	118,5	1	52 000	78 000	8 000	9 000	960
3,2	3,2	108	133,6	129	1,1	96 500	129 000	7 000	8 000	1 070
1,2	3,7	108	133,6	114,4	1,1	88 000	118 000	12 000	14 000	970
1,2	3,7	108	133,6	114,4	1,1	54 000	54 000	15 000	17 000	640
2,5	2,5	110	132	127,5	1	78 000	112 000	7 000	8 000	1 100
3,2	3,2	113	138,6	134	1,1	98 000	134 000	6 700	7 500	1 110
1,1	3,5	113	138,6	119,4	1,1	88 000	118 000	11 000	13 000	970
1,1	3,5	113	138,6	119,4	1,1	53 000	55 000	14 000	16 000	640
2,5	2,5	115	137	132,5	1	78 000	116 000	6 700	7 500	1 140
3,4	3,4	119,5	147,2	142,3	1,1	112 000	153 000	6 300	7 000	1 160
0,6	3,2	119,5	147,2	126,5	1,1	104 000	140 000	10 000	12 000	1 070
0,6	3,2	119,5	147,2	126,5	1,1	62 000	64 000	13 000	15 000	690

Super precision cylindrical roller bearings

Single row
Steel or ceramic rollers

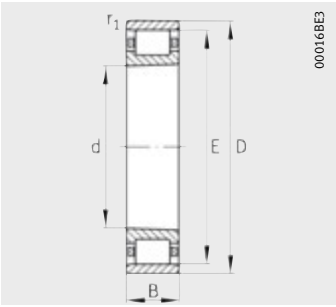

N10, N19
Steel rollers

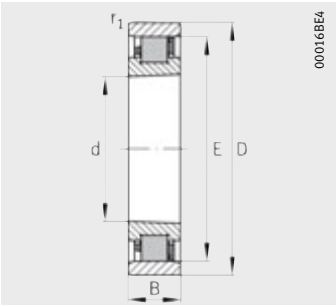

HCN10
Ceramic rollers

Dimension table (continued) · Dimensions in mm

Designation[1]		Mass	Dimensions							
Standard	Hybrid, with half the number of rollers	m ≈kg	d	D	B	r_1 min.	E	B_N	S_N	S_B
N1922-K-M1-SP	–	0,99	**110**	150	20	1	140	–	–	–
N1022-K-M1-SP	–	2,3	**110**	170	28	1,1	155	6	16,2	2,2
N1022-K-PVP1A-SP[2]	–	2,3	**110**	170	28	1,1	155	6	16,2	2,2
–	**HCN1022-K-PVPA1-SP-H193**[2]	2,28	**110**	170	28	1,1	155	6	16,2	2,2
N1924-K-M1-SP	–	1,36	**120**	165	22	1	153,5	–	–	–
N1024-K-M1-SP	–	2,42	**120**	180	28	1,1	165	6	16,2	2,2
N1024-K-PVPA1-SP[2]	–	2,2	**120**	180	28	1,1	165	6	16,2	2,2
–	**HCN1024-K-PVPA1-SP-H193**[2]	1,77	**120**	180	28	1,1	165	6	16,2	2,2
N1926-K-M1-SP	–	1,8	**130**	180	24	1,1	167	–	–	–
N1026-K-M1-SP	–	3,72	**130**	200	33	1,1	182	–	–	–
N1928-K-M1-SP	–	1,92	**140**	190	24	1,1	177	–	–	–
N1028-K-M1-SP	–	3,94	**140**	210	33	1,1	192	–	–	–
N1930-K-M1-SP	–	2,95	**150**	210	28	1,1	194	–	–	–
N1030-K-M1-SP	–	4,75	**150**	225	35	1,5	205,5	–	–	–
N1932-K-M1-SP	–	3,1	**160**	220	28	1,1	204	–	–	–
N1032-K-M1-SP	–	5,75	**160**	240	38	1,5	220	–	–	–
N1934-K-M1-SP	–	3,26	**170**	230	28	1,1	214	–	–	–
N1034-K-M1-SP	–	7,77	**170**	260	42	2,1	237	–	–	–
N1936-K-M1-SP	–	4,81	**180**	250	33	1,1	232	–	–	–
N1036-K-M1-SP	–	10,2	**180**	280	46	2,1	255	–	–	–

Description of suffixes

K	Tapered bore (taper 1:12)
M1	Brass cage, guided by rollers
PVPA1	Solid cage made from PEEK, guided on outer ring
SP	Special precision
H193	Half the number of rollers

1) The bearings are also available in the following designs:
- with cylindrical bore, example: **N1022-M1-SP**
- as Direct Lube design, example: **N1022-K-DLR-M1-SP**, **N1022-K-DLR-PVPA1-SP**.

2) Also available as thermally robust design (suffix TR), example: **N1022-K-TR-PVPA1-SP**.

3) Axial displacement of outer ring from central position.

4) Minimal oil quantity lubrication.

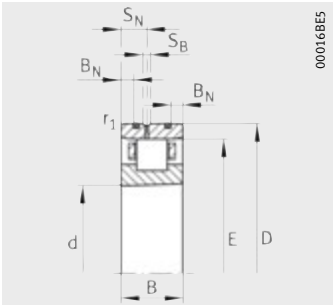

Direct Lube

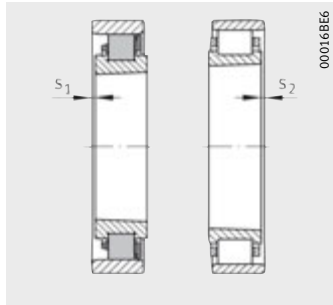

Axial displacement

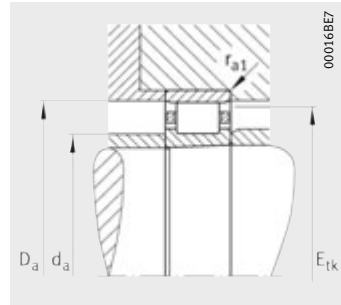

Mounting dimensions

Axial displacement[3]		Mounting dimensions				Basic load ratings		Limiting speeds		Radial spring rigidity
s_1	s_2	d_a h12	D_a H12	E_{tk} nom.	r_{a1} max.	dyn. C_r N	stat. C_{0r} N	n_G grease min^{-1}	n_G oil[4] min^{-1}	c_r N/µm
2,5	2,5	120	142	137,5	1	80 000	120 000	6 700	7 500	1 170
3,4	3,4	125	156,7	151,3	1,1	165 000	190 000	6 000	6 700	1 240
1	4	125	156,7	133,1	1,1	156 000	175 000	9 500	11 000	1 150
1	4	125	156,7	133,1	1,1	78 000	79 000	12 000	14 000	740
3	3	131,5	156	150,8	1	95 000	143 000	6 000	6 700	1 270
3,4	3,4	135	166,7	161,3	1,1	174 000	207 000	5 600	6 300	1 340
1	4	135	166,7	143,1	1,1	164 000	192 000	9 000	10 000	1 240
1	4	135	166,7	143,1	1,1	82 000	87 000	11 000	13 000	810
3,2	3,2	143	170	164	1,1	110 000	170 000	5 300	6 000	1 350
4,2	4,2	148	184,1	177,8	1,1	180 000	250 000	5 000	5 600	1 420
3,2	3,2	153	180	174	1,1	116 000	186 000	4 300	4 800	1 480
4,2	4,2	158	194,1	187,8	1,1	183 000	265 000	4 500	5 000	1 480
3,6	3,6	166	197	190,5	1,1	150 000	236 000	4 500	5 000	1 590
4,4	4,4	169,5	207,8	201	1,5	208 000	310 000	4 300	4 800	1 630
3,6	3,6	176	206	200,5	1,1	153 000	250 000	4 300	4 800	1 690
4,6	4,6	180	222,4	215	1,5	245 000	355 000	4 000	4 500	1 680
3,6	3,6	186	216	210,5	1,1	160 000	265 000	3 800	4 300	1 780
5	5	193	239,7	231,5	2,1	300 000	430 000	3 600	4 000	1 860
4,2	4,2	198	234	227,8	1,1	208 000	335 000	3 600	4 000	1 820
5,6	5,6	205	257,8	248,8	2,1	360 000	520 000	3 400	3 800	1 960

Super precision cylindrical roller bearings

Single row
Steel rollers

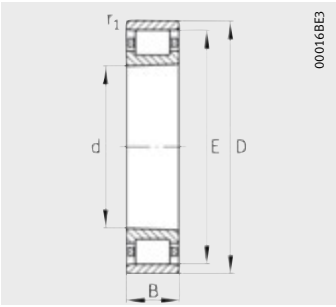

N10, N19

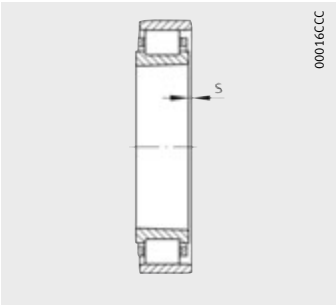

Axial displacement

Dimension table (continued) · Dimensions in mm

Designation[1]	Mass	Dimensions					Axial displacement[2]
	m	d	D	B	r_1	E	s
	≈kg				min.		
N1938-K-M1-SP	5,05	**190**	260	33	1,1	242	4,2
N1038-K-M1-SP	10,6	**190**	290	46	2,1	265	5,6
N1940-K-M1-SP	7,07	**200**	280	38	1,5	259	4,8
N1040-K-M1-SP	14	**200**	310	51	2,1	281	6,4
N1944-K-M1-SP	7,64	**220**	300	38	1,5	279	4,8
N1044-K-M1-SP	17,9	**220**	340	56	3	310	6,6
N1948-K-M1-SP	8,2	**240**	320	38	1,5	299	4,8
N1048-K-M1-SP	19,3	**240**	360	56	3	330	6,6
N1952-K-M1-SP	14	**260**	360	46	1,5	334	5,4
N1052-K-M1-SP	28,8	**260**	400	65	4	364	8,1
N1956-K-M1-SP	14,9	**280**	380	46	1,5	354	5,4
N1056-K-M1-SP	30,9	**280**	420	65	4	384	8,1
N1960-K-M1-SP	23,6	**300**	420	56	3	390	6,6
N1060-K-M1-SP	43,7	**300**	460	74	4	420	8,7
N1964-K-M1-SP	24,9	**320**	440	56	3	410	6,6
N1064-K-M1-SP	45,1	**320**	480	74	4	440	8,7
N1968-K-M1-SP	26,3	**340**	460	56	3	430	6,6
N1068-K-M1-SP	60,7	**340**	520	82	5	475	9,3
N1972-K-M1-SP	27,5	**360**	480	56	3	450	6,6
N1072-K-M1-SP	64,4	**360**	540	82	5	495	9,3

Description of suffixes

K Tapered bore (taper 1:12)
M1 Brass cage, guided by rollers
SP Special precision

1) The bearings are also available with a cylindrical bore, example: **N1938-M1-SP**.

2) Axial displacement of outer ring from central position.

3) Minimal oil quantity lubrication.

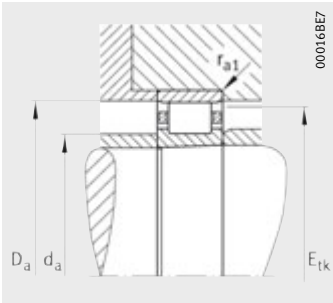

Mounting dimensions

Mounting dimensions				Basic load ratings		Limiting speeds		Radial spring rigidity
d_a h12	D_a H12	E_{tk} nom.	r_{a1} max.	dyn. C_r N	stat. C_{0r} N	n_G grease min^{-1}	n_G oil[3] min^{-1}	c_r N/µm
208	244	237,8	1,1	220 000	365 000	3 400	3 800	1 990
215	267,8	258,8	2,1	365 000	550 000	3 200	3 600	2 040
221	261	254,3	1,5	265 000	430 000	3 200	3 600	2 110
229	284,3	274,5	2,1	400 000	600 000	3 000	3 400	2 130
241	281	274,3	1,5	265 000	450 000	3 000	3 400	2 170
250	313,5	302,5	3	510 000	765 000	2 600	3 000	2 360
261	301	294,3	1,5	285 000	500 000	2 800	3 200	2 430
270	333,5	322,5	3	540 000	850 000	2 400	2 800	2 560
286	336	328	1,5	430 000	750 000	2 400	2 800	2 840
296	368,2	355,5	4	655 000	1 020 000	2 200	2 600	2 710
306	356	348	1,5	440 000	800 000	2 200	2 600	3 000
316	388,2	375,5	4	680 000	1 100 000	2 000	2 400	2 930
330	392	382,5	3	610 000	1 060 000	1 900	2 200	3 150
340	424,6	410	4	900 000	1 430 000	1 800	2 000	3 200
350	412	402,5	3	620 000	1 100 000	1 800	2 000	3 250
360	444,6	430	4	915 000	1 500 000	1 700	1 900	3 330
370	433	422,5	3	655 000	1 200 000	1 700	1 900	3 550
385	480	463,8	5	1 120 000	1 830 000	1 600	1 800	3 610
390	453	442,5	3	655 000	1 220 000	1 600	1 800	3 640
405	500	483,8	5	1 140 000	1 900 000	1 500	1 700	3 750

Super precision cylindrical roller bearings

Single row
Steel rollers

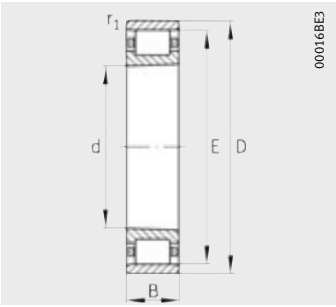

N10, N19

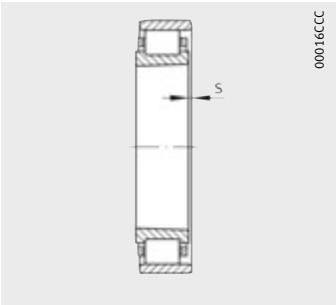

Axial displacement

Dimension table (continued) · Dimensions in mm

Designation[1]	Mass	Dimensions					Axial displacement[2]
	m	d	D	B	r_1	E	s
	≈kg				min.		
N1976-K-M1-SP	40	**380**	520	65	4	484	8,1
N1076-K-M1-SP	66,6	**380**	560	82	5	515	9,3
N1980-K-M1-SP	41,7	**400**	540	65	4	504	8,1
N1080-K-M1-SP	88,1	**400**	600	90	5	550	10,4
N1984-K-M1-SP	43,5	**420**	560	65	4	524	8,1
N1084-K-M1-SP	90,7	**420**	620	90	5	570	10,4
N1988-K-M1-SP	60,2	**440**	600	74	4	558	9,1
N1088-K-M1-SP	106	**440**	650	94	6	597	10,8
N1992-K-M1-SP	62,6	**460**	620	74	4	578	9,1
N1092-K-M1-SP	120	**460**	680	100	6	624	11,6
N1996-K-M1-SP	73,1	**480**	650	78	5	605	9,5
N1096-K-M1-SP	125	**480**	700	100	6	644	11,6
N19/500-K-M1-SP	75,7	**500**	670	78	5	625	9,5
N10/500-K-M1-SP	130	**500**	720	100	6	664	11,6

Description of suffixes

K Tapered bore (taper 1:12)
M1 Brass cage, guided by rollers
SP Special precision

1) The bearings are also available with a cylindrical bore, example: **N1976-M1-SP**.

2) Axial displacement of outer ring from central position.

3) Minimal oil quantity lubrication.

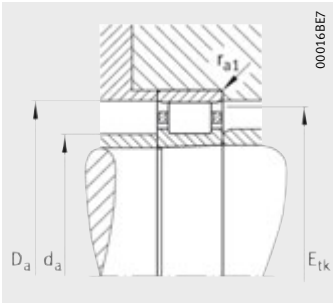

Mounting dimensions

Mounting dimensions				Basic load ratings		Limiting speeds		Radial spring rigidity
d_a h12	D_a H12	E_{tk} nom.	r_{a1} max.	dyn. C_r N	stat. C_{0r} N	n_G grease min^{-1}	n_G oil[3] min^{-1}	c_r N/µm
416	487	475,5	4	815 000	1 500 000	1 500	1 700	3 900
425	520	503,8	5	1 180 000	2 000 000	1 400	1 600	3 900
436	507	495,5	4	815 000	1 560 000	1 500	1 700	4 100
450	555,4	537,5	5	1 370 000	2 320 000	1 300	1 500	4 090
456	527	515,5	4	850 000	1 630 000	1 400	1 600	4 230
470	575,4	557,5	5	1 400 000	2 450 000	1 300	1 500	4 240
482	562	548,5	4	1 020 000	1 960 000	1 300	1 500	4 500
493	602,6	584	6	1 560 000	2 750 000	1 200	1 400	4 580
502	582	568,5	4	1 060 000	2 080 000	1 300	1 500	4 740
516	630,2	610,5	6	1 660 000	3 000 000	1 100	1 300	4 760
525	609	595	5	1 140 000	2 240 000	1 200	1 400	4 870
536	650,2	630,5	6	1 700 000	3 100 000	1 100	1 300	4 930
545	629	615	5	1 180 000	2 360 000	1 200	1 400	5 120
556	670,2	650,5	6	1 760 000	3 200 000	1 000	1 200	5 100

Super precision cylindrical roller bearings

Double row

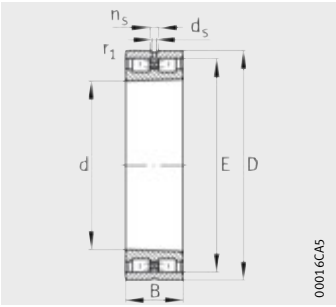

NN30

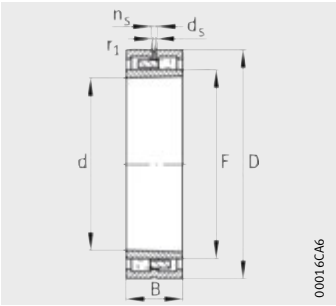

NNU49

Dimension table · Dimensions in mm

Designation[1]	Mass	Dimensions							
	m	d	D	B	r_1	E	F	n_s	d_s
	≈kg				min.				
NN3006-AS-K-M-SP	0,19	**30**	55	19	1	48,5	–	4,8	3,2
NN3007-AS-K-M-SP	0,25	**35**	62	20	1	55	–	4,8	3,2
NN3008-AS-K-M-SP	0,3	**40**	68	21	1	61	–	4,8	3,2
NN3009-AS-K-M-SP	0,39	**45**	75	23	1	67,5	–	4,8	3,2
NN3010-AS-K-M-SP	0,43	**50**	80	23	1	72,5	–	4,8	3,2
NN3011-AS-K-M-SP	0,63	**55**	90	26	1,1	81	–	4,8	3,2
NN3012-AS-K-M-SP	0,67	**60**	95	26	1,1	86,1	–	4,8	3,2
NN3013-AS-K-M-SP	0,72	**65**	100	26	1,1	91	–	4,8	3,2
NNU4914-S-K-M-SP	0,73	**70**	100	30	1	–	80	4,8	3,2
NN3014-AS-K-M-SP	1,04	**70**	110	30	1,1	100	–	6,5	3,2
NNU4915-S-K-M-SP	0,77	**75**	105	30	1	–	85	4,8	3,2
NN3015-AS-K-M-SP	1,09	**75**	115	30	1,1	105	–	6,5	3,2
NNU4916-S-K-M-SP	0,81	**80**	110	30	1	–	90	4,8	3,2
NN3016-AS-K-M-SP	1,51	**80**	125	34	1,1	113	–	6,5	3,2
NNU4917-S-K-M-SP	1,2	**85**	120	35	1,1	–	96,5	4,8	3,2
NN3017-AS-K-M-SP	1,58	**85**	130	34	1,1	118	–	6,5	3,2
NNU4918-S-K-M-SP	1,26	**90**	125	35	1,1	–	101,5	4,8	3,2
NN3018-AS-K-M-SP	2,05	**90**	140	37	1,5	127	–	6,5	3,2
NNU4919-S-K-M-SP	1,32	**95**	130	35	1,1	–	106,5	4,8	3,2
NN3019-AS-K-M-SP	2,14	**95**	145	37	1,5	132	–	6,5	3,2
NNU4920-S-K-M-SP	1,86	**100**	140	40	1,1	–	113	6,5	3,2
NN3020-AS-K-M-SP	2,23	**100**	150	37	1,5	137	–	6,5	3,2
NNU4921-S-K-M-SP	1,93	**105**	145	40	1,1	–	118	6,5	3,2
NN3021-AS-K-M-SP	2,84	**105**	160	41	2	146	–	6,5	3,2

Description of suffixes

AS Lubrication groove and lubrication holes in outer ring (series NN30)
S Lubrication groove and lubrication holes in outer ring
K Tapered bore (taper 1:12)
M Brass cage, guided by rollers
SP Special precision

1) The bearings are also available with a cylindrical bore, example: **NN3006-AS-M-SP**.

2) Axial displacement of outer ring from central position.

3) Minimal oil quantity lubrication.

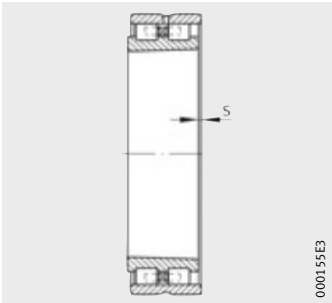

Axial displacement

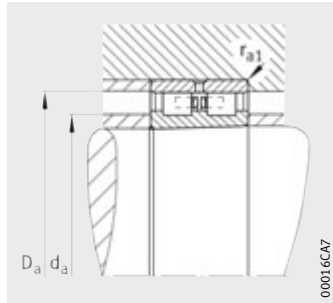

Mounting dimensions

Axial displacement[2)]	Mounting dimensions			Basic load ratings		Limiting speeds		Radial spring rigidity
s	d_a h12	D_a H12	r_{a1} max.	dyn. C_r N	stat. C_{0r} N	n_G grease min^{-1}	n_G oil[3)] min^{-1}	c_r N/µm
1,4	38	50	1	29 000	34 000	16 000	19 000	680
1,4	43	57	1	36 000	44 000	14 000	17 000	790
1,4	48	63	1	45 000	59 000	12 000	15 000	950
1,7	54	69	1	54 000	72 000	11 000	14 000	1 080
1,7	59	74	1	57 000	80 000	10 000	13 000	1 180
1,9	65	83	1,1	72 000	100 000	9 000	11 000	1 300
1,9	70	88	1,1	75 000	110 000	8 500	10 000	1 410
1,9	75	93	1,1	77 000	116 000	8 000	9 500	1 470
1,8	79	92	1	60 000	104 000	7 500	9 000	1 700
2,3	82	102	1,1	98 000	150 000	7 000	8 500	1 660
1,8	84	97	1	63 000	114 000	7 000	8 500	1 870
2,3	87	107	1,1	100 000	156 000	6 700	8 000	1 730
1,8	89	102	1	66 000	122 000	6 700	8 000	1 980
2,5	93	116	1,1	120 000	186 000	6 300	7 500	1 850
2	96	111	1,1	90 000	166 000	6 300	7 500	2 280
2,5	98	121	1,1	125 000	200 000	6 000	7 000	1 990
2	101	116	1,1	93 000	176 000	6 000	7 000	2 420
2,6	105	130	1,5	140 000	224 000	5 600	6 700	2 020
2	106	121	1,1	95 000	186 000	5 600	6 700	2 560
2,6	110	135	1,5	143 000	236 000	5 300	6 300	2 100
2	112	129	1,1	129 000	255 000	5 300	6 300	3 000
2,6	115	140	1,5	146 000	245 000	5 300	6 300	2 170
2	117	134	1,1	129 000	260 000	5 300	6 300	3 080
2,6	120	149	2	190 000	310 000	4 800	5 600	2 320

Super precision cylindrical roller bearings

Double row

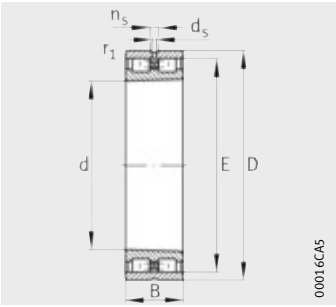

NN30

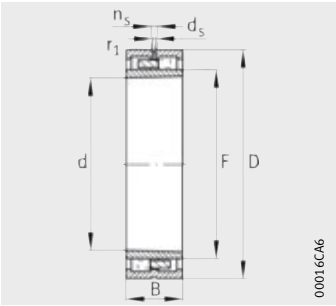

NNU49

Dimension table (continued) · Dimensions in mm

Designation[1]	Mass	Dimensions							
	m	d	D	B	r_1	E	F	n_s	d_s
	≈kg				min.				
NNU4922-S-K-M-SP	2,01	**110**	150	40	1,1	–	123	6,5	3,2
NN3022-AS-K-M-SP	3,61	**110**	170	45	2	155	–	6,5	3,2
NNU4924-S-K-M-SP	2,71	**120**	165	45	1,1	–	134,5	6,5	3,2
NN3024-AS-K-M-SP	3,94	**120**	180	46	2	165	–	6,5	3
NNU4926-S-K-M-SP	3,73	**130**	180	50	1,5	–	146	6,5	3,2
NN3026-AS-K-M-SP	5,79	**130**	200	52	2	182	–	9,5	4,8
NNU4928-S-K-M-SP	4,04	**140**	190	50	1,5	–	156	6,5	3,2
NN3028-AS-K-M-SP	6,22	**140**	210	53	2	192	–	9,5	4,8
NNU4930-S-K-M-SP	6,1	**150**	210	60	2	–	168,5	6,5	3,2
NN3030-AS-K-M-SP	7,58	**150**	225	56	2,1	206	–	9,5	4,8
NNU4932-S-K-M-SP	6,41	**160**	220	60	2	–	178,5	6,5	3,2
NN3032-AS-K-M-SP	9,23	**160**	240	60	2,1	219	–	9,5	4,8
NNU4934-S-K-M-SP	6,73	**170**	230	60	2	–	188,5	6,5	3,2
NN3034-AS-K-M-SP	12,5	**170**	260	67	2,1	236	–	9,5	4,8
NNU4936-S-K-M-SP	9,96	**180**	250	69	2	–	202	9,5	4,8
NN3036-AS-K-M-SP	16,4	**180**	280	74	2,1	255	–	12,2	6,3
NNU4938-S-K-M-SP	10,4	**190**	260	69	2	–	212	9,5	4,8
NN3038-AS-K-M-SP	17,3	**190**	290	75	2,1	265	–	12,2	6,3
NNU4940-S-K-M-SP	14,7	**200**	280	80	2,1	–	225	12,2	6,3
NN3040-AS-K-M-SP	22,2	**200**	310	82	2,1	282	–	12,2	6,3
NNU4944-S-K-M-SP	15,9	**220**	300	80	2,1	–	245	12,2	6,3
NN3044-AS-K-M-SP	29,1	**220**	340	90	3	310	–	15	8
NNU4948-S-K-M-SP	17,1	**240**	320	80	2,1	–	265	12,2	6,3
NN3048-AS-K-M-SP	31,6	**240**	360	92	3	330	–	15	8

Description of suffixes

AS Lubrication groove and lubrication holes in outer ring (series NN30)
S Lubrication groove and lubrication holes in outer ring
K Tapered bore (taper 1:12)
M Brass cage, guided by rollers
SP Special precision

[1] The bearings are also available with a cylindrical bore, example: **NN3022-AS-M-SP**.

[2] Axial displacement of outer ring from central position.

[3] Minimal oil quantity lubrication.

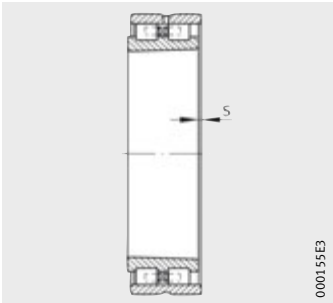

Axial displacement

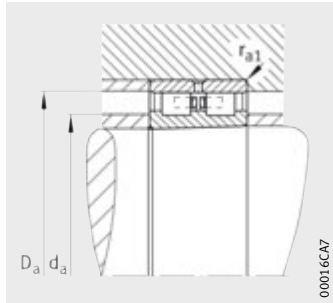

Mounting dimensions

Axial displacement[2)]	Mounting dimensions			Basic load ratings		Limiting speeds		Radial spring rigidity
s	d_a h12	D_a H12	r_{a1} max.	dyn. C_r N	stat. C_{0r} N	n_G grease min^{-1}	n_G oil[3)] min^{-1}	c_r N/µm
2	122	139	1,1	132 000	270 000	5 000	6 000	3 170
2,9	127	158	2	220 000	360 000	4 500	5 300	2 500
2,3	133	155	1,1	176 000	340 000	4 500	5 300	3 200
3,1	137	168	2	232 000	390 000	4 300	5 000	2 700
2,7	145	166	1,5	190 000	390 000	4 000	4 800	3 600
3,1	150	186	2	290 000	500 000	3 800	4 500	2 980
1,8	155	176	1,5	190 000	400 000	3 800	4 500	3 700
3,4	160	196	2	300 000	520 000	3 600	4 300	3 090
2,7	167	197	2	325 000	655 000	3 600	4 300	4 280
3,8	172	210	2,1	335 000	585 000	3 400	4 000	3 300
2,7	177	207	2	335 000	680 000	3 400	4 000	4 420
4,3	183	224	2,1	375 000	670 000	3 200	3 800	3 510
2,7	187	217	2	340 000	695 000	3 200	3 800	4 560
4,6	196	241	2,1	450 000	800 000	3 000	3 600	3 770
3,2	200	232	2	405 000	850 000	3 000	3 600	5 160
4,8	209	260	2,1	570 000	1 000 000	2 800	3 400	4 040
3,2	210	242	2	405 000	880 000	2 800	3 400	5 310
4,8	219	271	2,1	585 000	1 040 000	2 600	3 200	4 190
4,3	223	259	2,1	490 000	1 040 000	2 600	3 200	5 510
5,7	232	288	2,1	655 000	1 200 000	2 400	3 000	4 410
4,3	243	279	2,1	510 000	1 140 000	2 400	3 000	6 000
5,7	254	317	3	800 000	1 460 000	2 200	2 800	4 770
4,3	263	299	2,1	530 000	1 200 000	2 200	2 800	6 320
6,1	274	337	3	850 000	1 560 000	2 000	2 600	5 140

Super precision cylindrical roller bearings

Double row

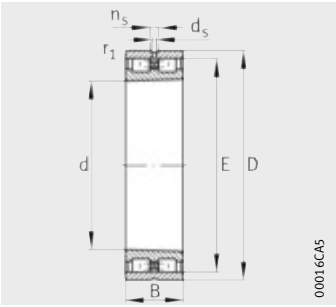

NN30

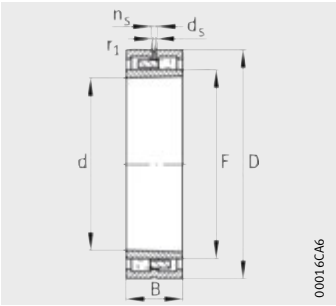

NNU49

Dimension table (continued) · Dimensions in mm

Designation[1]	Mass	Dimensions							
	m	d	D	B	r_1	E	F	n_s	d_s
	≈kg				min.				
NNU4952-S-K-M-SP	29,7	**260**	360	100	2,1	–	292	15	8
NN3052-AS-K-M-SP	46,2	**260**	400	104	4	364	–	15	8
NNU4956-S-K-M-SP	31,6	**280**	380	100	2,1	–	312	15	8
NN3056-AS-K-M-SP	49,7	**280**	420	106	4	384	–	15	8
NNU4960-S-K-M-SP	49,1	**300**	420	118	3	–	339	17,7	9,5
NN3060-AS-K-M-SP	68,8	**300**	460	118	4	418	–	17,7	9,5
NNU4964-S-K-M-SP	51,8	**320**	440	118	3	–	359	17,7	9,5
NN3064-AS-K-M-SP	74,2	**320**	480	121	4	438	–	17,7	9
NNU4968-S-K-M-SP	54,5	**340**	460	118	3	–	379	17,7	9,5
NN3068-AS-K-M-SP	99,3	**340**	520	133	5	473	–	17,7	9,5
NNU4972-S-K-M-SP	57,3	**360**	480	118	3	–	399	17,7	9,5
NN3072-AS-K-M-SP	104	**360**	540	134	5	493	–	17,7	9,5
NNU4976-S-K-M-SP	85,8	**380**	520	140	4	–	426	17,7	9,5
NN3076-AS-K-M-SP	110	**380**	560	135	5	513	–	17,7	9,5
NNU4980-S-K-M-SP	89,4	**400**	540	140	4	–	446	17,7	9,5
NN3080-AS-K-M-SP	143	**400**	600	148	5	549	–	17,7	9,5
NNU4984-S-K-M-SP	93,2	**420**	560	140	4	–	466	17,7	9,5
NN3084-AS-K-M-SP	150	**420**	620	150	5	569	–	17,7	9,5
NNU4988-S-K-M-SP	129	**440**	600	160	4	–	490	17,7	9,5
NN3088-AS-K-M-SP	172	**440**	650	157	6	597	–	23,5	12,5
NNU4992-S-K-M-SP	134	**460**	620	160	4	–	510	17,7	9,5
NN3092-AS-K-M-SP	197	**460**	680	163	6	624	–	23,5	12,5
NNU4996-S-K-M-SP	158	**480**	650	170	5	–	534	17,7	9,5
NN3096-AS-K-M-SP	206	**480**	700	165	6	644	–	23,5	12,5
NNU49/500-S-K-M-SP	162	**500**	670	170	5	–	568	17,7	9,5
NN30/500-AS-K-M-SP	214	**500**	720	167	6	664	–	23,5	12

Description of suffixes

AS Lubrication groove and lubrication holes in outer ring (series NN30)
S Lubrication groove and lubrication holes in outer ring
K Tapered bore (taper 1:12)
M Brass cage, guided by rollers
SP Special precision

1) The bearings are also available with a cylindrical bore, example: **NN3052-AS-M-SP**.

2) Axial displacement of outer ring from central position.

3) Minimal oil quantity lubrication.

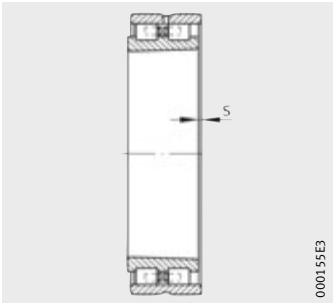

Axial displacement

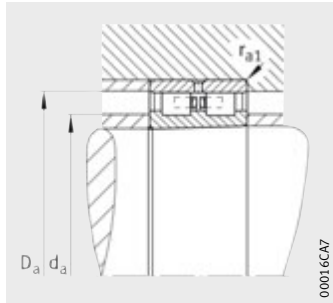

Mounting dimensions

Axial displacement[2)]	Mounting dimensions			Basic load ratings		Limiting speeds		Radial spring rigidity
s	d_a h12	D_a H12	r_{a1} max.	dyn. C_r N	stat. C_{0r} N	n_G grease min^{-1}	n_G oil[3)] min^{-1}	c_r N/µm
5,4	289	334	2,1	750 000	1 700 000	2 000	2 600	7 080
6,6	300	372	4	1 060 000	2 000 000	1 900	2 400	5 680
5,4	309	354	2,1	765 000	1 800 000	1 900	2 400	7 480
6,9	320	392	4	1 080 000	2 080 000	1 800	2 200	5 890
6,3	336	389	3	1 040 000	2 400 000	1 700	2 000	8 280
7,5	346	427	4	1 270 000	2 400 000	1 600	1 900	5 930
6,3	356	409	3	1 060 000	2 550 000	1 600	1 900	8 750
8	366	447	4	1 320 000	2 600 000	1 600	1 900	6 440
6,3	376	429	3	1 100 000	2 650 000	1 500	1 800	9 230
8,8	393	483	5	1 630 000	3 250 000	1 400	1 700	7 170
6,3	396	449	3	1 140 000	2 800 000	1 500	1 800	9 700
8,8	413	503	5	1 660 000	3 350 000	1 400	1 700	7 430
7,2	423	482	4	1 430 000	3 600 000	1 400	1 700	10 970
9,1	433	523	5	1 700 000	3 450 000	1 300	1 600	7 690
7,2	443	502	4	1 500 000	3 800 000	1 300	1 600	11 540
9,5	459	560	5	2 160 000	4 500 000	1 200	1 500	8 660
7,2	463	522	4	1 530 000	4 000 000	1 300	1 600	12 120
10	479	580	5	2 120 000	4 500 000	1 200	1 500	8 660
6,8	487	558	4	2 040 000	5 200 000	1 200	1 500	12 690
10,2	501	609	6	2 450 000	5 100 000	1 100	1 400	9 240
6,8	507	578	4	2 120 000	5 500 000	1 100	1 400	13 390
10,9	524	636	6	2 600 000	5 400 000	1 100	1 400	9 430
7,2	531	606	5	2 360 000	6 100 000	1 100	1 400	14 110
11,2	544	656	6	2 700 000	5 850 000	1 000	1 300	10 060
7,2	551	626	5	2 320 000	6 100 000	1 000	1 300	14 110
11,7	564	677	6	2 650 000	5 850 000	1 000	1 300	10 060

FAG

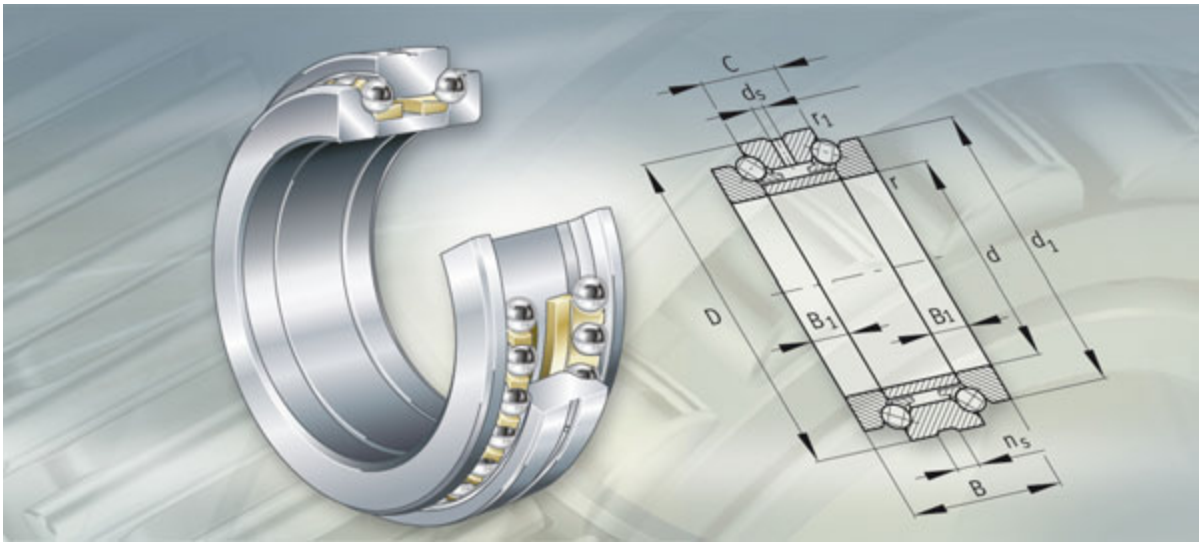

Axial angular contact ball bearings

Double direction

Axial angular contact ball bearings

		Page
Product overview	Axial angular contact ball bearings	204
Features	Designs	205
	Sealing	206
	Lubrication	206
	Operating temperature	206
	Cages	206
	Bearing designations	207
	Marking of bearings	207
Design and safety guidelines	Load carrying capacity and operating life	208
	Equivalent static bearing load	208
	Static load safety factor	208
	Speeds	208
	Preload	208
	Design of bearing arrangements	209
Accuracy	Tolerances	211
Dimension tables	Axial angular contact ball bearings, double direction	214

Double direction

2344, 2347

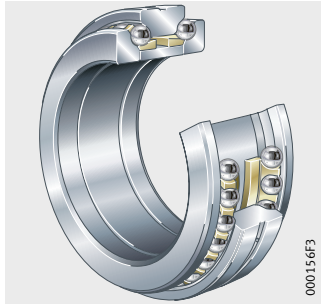

Axial angular contact ball bearings

Features

Double direction axial angular contact ball bearings are highly rigid, axially preloaded super precision bearings with restricted tolerances to class SP for the bearing arrangements of precision spindles in machine tools.

These bearings without self-retention comprise solid shaft locating washers, a spacer ring, a housing locating washer and ball and cage assemblies with solid cages. The bearing parts are matched to each other and can be fitted separately, but must not be interchanged with parts from bearings of the same size.

Due to the contact angle of 60°, they can support high axial forces from one side.

In bearing arrangements of main spindles, the axial angular contact ball bearing is combined with a double row cylindrical roller bearing with a tapered bore, which supports the radial forces, *Figure 1* and *Figure 2*.

Designs

Axial angular contact ball bearings are available in two designs. Series 2344 can be fitted on the small diameter of the shaft taper and series 2347 on the large diameter, *Figure 1* and *Figure 2*.

These series have the same nominal outside diameter as cylindrical roller bearings NN30..-AS-K.
The outside diameter tolerance is designed to give a loose fit when the seats of the axial angular contact ball bearing and the cylindrical roller bearing are machined together.

① Nominal diameter
② Loose fit
③ Tolerance example:
Upper deviation = –0,033
Lower deviation = –0,058
④ Tolerance example:
Upper deviation = 0
Lower deviation = –0,011

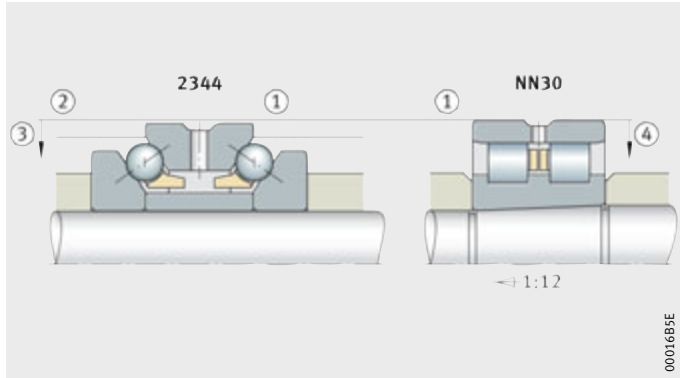

Figure 1
Series 2344
on small taper diameter

① Nominal diameter
② Loose fit
③ Tolerance example:
Upper deviation = 0
Lower deviation = –0,011
④ Tolerance example:
Upper deviation = –0,033
Lower deviation = –0,058

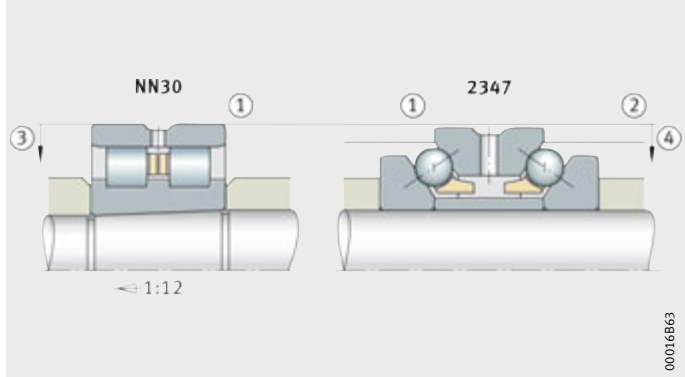

Figure 2
Series 2347
on large taper diameter

Sealing

Axial angular contact ball bearings are of an open design.

Lubrication

The bearings can be lubricated with oil or grease.

The housing locating washers are designed with a lubrication groove and lubrication holes in the centre. Due to the substantial displacement effect, the bearings require considerably larger quantities of oil than any adjacent cylindrical roller bearings.

The design must be such that the oil leaving the axial angular contact ball bearings does not enter the adjacent cylindrical roller bearings.

When selecting a lubricant, the operating temperature of the lubricant must be taken into consideration.

Operating temperature

Axial angular contact ball bearings can be used at operating temperatures from –30 °C to +150 °C.

Note the information on the operating temperatures of greases in section Technical principles, section Lubrication, page 21.

Cages

Each row of rolling elements has a ball-guided solid brass cage.

The cage is indicated by the suffix M.

Bearing designations

The diagram shows the structure of the short designation (bearing designation), *Figure 3*.

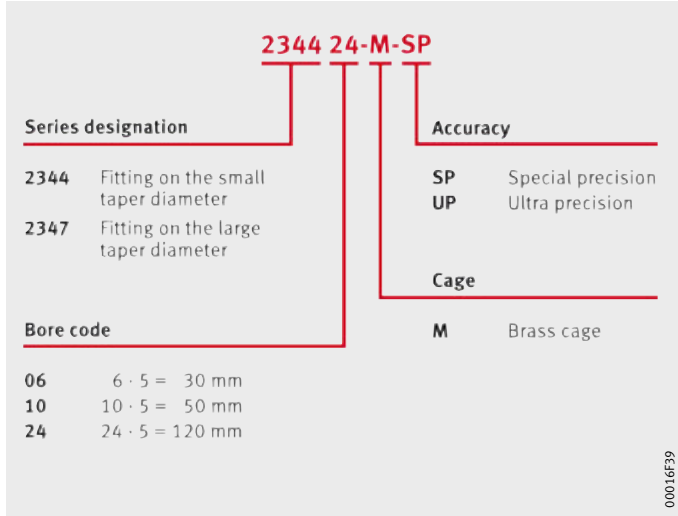

Figure 3
Bearing designations

Marking of bearings

Marking of the bearings on the end faces of the bearing rings is shown in *Figure 4*.

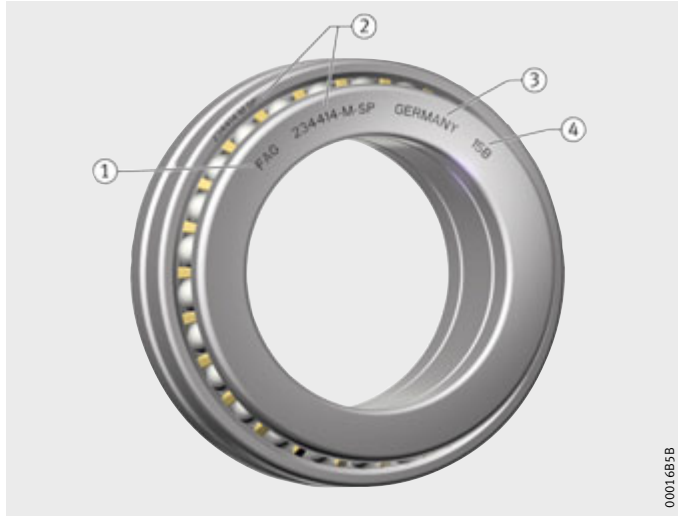

① Trademark
② Short designation (bearing designation)
③ Country of manufacture
④ Internal code

Figure 4
Marking of bearings

Design and safety guidelines

Load carrying capacity and operating life

Bearing arrangements with double direction axial angular contact ball bearings are generally designed in accordance with the requirements for load carrying capacity, rigidity and accuracy.

In practice, failure due to fatigue is not significant for these bearings. Calculation of the rating life L_{10} in accordance with DIN ISO 281 in order to determine the operating life is therefore not appropriate.

Equivalent static bearing load

Axial angular contact ball bearings can support axial forces only.

For bearings under static loading, the following applies:

$$P_{0a} = F_{0a}$$

P_{0a} N
Equivalent static bearing load

F_{0a} N
Axial static bearing load.

Static load safety factor

Whether the static load carrying capacity of a bearing is sufficient for a given static load, can be checked with the aid of the static load safety factor S_0. For calculation of the static load safety factor, see section Technical principles, section Load carrying capacity and operating life, page 17.

In order to utilise the high accuracy of the bearings, a static load safety factor $S_0 > 2{,}5$ is necessary.

Speeds

Double direction axial angular contact ball bearings are suitable for moderate speeds.

For higher speeds, single row angular contact ball bearings of the design BAX with a contact angle of 30° or optionally 40° are available, see TPI 202, Axial bearings BAX.
These bearings are fitted in pairs and subjected to axial load only.

Preload

The preload is determined by the spacer ring arranged between the two shaft locating washers.

Design of bearing arrangements

In order to make comprehensive use of the performance capacity of double direction axial angular contact ball bearings, the adjacent construction must be of an appropriate design.

Machining tolerances of the shaft

Recommendations for the machining tolerances of the shaft (for bearings of tolerance class SP or UP) are shown in the tables.

Shaft design for tolerance class SP

Nominal shaft diameter d mm		Deviation for d µm		Cylindricity µm	Flatness µm	Runout µm	Mean roughness µm
over	incl.			t_1	t_3	t_4	R_a
18	30	0	−6	1	1	1,5	0,2
30	50	0	−7	1	1	1,5	0,2
50	80	0	−8	1,2	1,2	2	0,4
80	120	0	−10	1,5	1,5	2,5	0,4
120	180	0	−12	2	2	3,5	0,4
180	250	0	−14	3	3	4,5	0,4
250	315	0	−16	4	4	6	0,8
315	400	0	−18	5	5	7	0,8
400	500	0	−20	6	6	8	0,8

Shaft design for tolerance class UP

Nominal shaft diameter d mm		Deviation for d µm		Cylindricity µm	Flatness µm	Runout µm	Mean roughness µm
over	incl.			t_1	t_3	t_4	R_a
18	30	0	−4	0,6	0,6	1	0,2
30	50	0	−4	0,6	0,6	1	0,2
50	80	0	−5	0,8	0,8	1,2	0,2
80	120	0	−6	1	1	1,5	0,2
120	180	0	−8	1,2	1,2	2	0,2
180	250	0	−10	2	2	3	0,2
250	315	0	−12	2,5	2,5	4	0,4
315	400	0	−13	3	3	5	0,4
400	500	0	−15	4	4	6	0,4

Machining tolerances of the housing

Recommendations for the machining tolerances of the housing (for bearings of tolerance class SP or UP) are shown in the tables.

Housing design for tolerance class SP

Nominal bore housing diameter D mm		Deviation for D µm		Cylindricity µm	Flatness µm	Runout µm	Mean roughness µm
over	incl.			t_1	t_3	t_4	R_a
30	50	+2	−9	1,5	1	1,5	0,8
50	80	+3	−10	2	1,2	2	0,8
80	120	+2	−13	2,5	1,5	2,5	0,8
120	180	+3	−15	3,5	2	3,5	0,8
180	250	+2	−18	4,5	3	4,5	0,8
250	315	+3	−20	6	4	6	1,6
315	400	+3	−22	7	5	7	1,6
400	500	+2	−25	8	6	8	1,6
500	630	0	−30	9	7	9	1,6
630	800	0	−32	10	8	10	1,6

Housing design for tolerance class UP

Nominal bore housing diameter D mm		Deviation for D µm		Cylindricity µm	Flatness µm	Runout µm	Mean roughness µm
over	incl.			t_1	t_3	t_4	R_a
30	50	+1	−6	1	0,6	1	0,2
50	80	+1	−7	1,2	0,8	1,2	0,4
80	120	+1	−9	1,5	1	1,5	0,4
120	180	+1	−11	2	1,2	2	0,4
180	250	0	−14	3	2	3	0,4
250	315	0	−16	4	2,5	4	0,8
315	400	+1	−17	5	3	5	0,8
400	500	0	−20	6	4	6	0,8
500	630	0	−22	7	5	7	1,6
630	800	0	−24	8	6	8	1,6

Accuracy

The dimensions and accuracies of the bearings are defined in DIN ISO 1132.

Tolerances

Machining tolerances of the shaft locating washer

The machining tolerances of the shaft locating washer (for bearings of tolerance class SP or UP) are shown in the tables.

The dimensional and geometrical tolerances correspond to tolerance class SP as defined by the Schaeffler Group. Bearings of tolerance class UP are available by agreement.

Machining tolerances of the shaft locating washer (tolerance class SP)

Nominal bore diameter d mm		Deviation Δ_{dmp} µm		Variation (out of roundness) V_{dp} µm	Wall thickness variation S_i µm	Height deviation Δ_{Hs} µm	
over	incl.						
18	30	0	−8	6	3	50	−150
30	50	0	−10	8	3	75	−200
50	80	0	−12	9	4	100	−250
80	120	0	−15	11	4	125	−300
120	150	0	−18	14	5	150	−350
150	180	0	−18	14	5	150	−350
180	250	0	−22	17	5	175	−400
250	315	0	−25	19	7	200	−450
315	400	0	−30	22	7	250	−600
400	500	0	−35	26	9	300	−750

Machining tolerances of the shaft locating washer (tolerance class UP)

Nominal bore diameter d mm		Deviation Δ_{dmp} µm		Variation (out of roundness) V_{dp} µm	Wall thickness variation S_i µm	Height deviation Δ_{Hs} µm	
over	incl.						
18	30	0	−6	5	1,5	50	−150
30	50	0	−8	6	1,5	75	−200
50	80	0	−9	7	2	100	−250
80	120	0	−10	8	2	125	−300
120	150	0	−13	10	3	150	−350
150	180	0	−13	10	3	150	−350
180	250	0	−15	12	3	175	−400
250	315	0	−18	14	4	200	−450
315	400	0	−23	18	4	250	−600
400	500	0	−27	20	5	300	−750

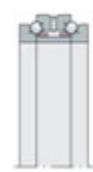

Machining tolerances of the housing locating washer

The machining tolerances of the housing locating washer (for bearings of tolerance class SP or UP) are shown in the tables.

Machining tolerances of the housing locating washer (tolerance class SP)

Nominal outside diameter D mm		Deviation of outside diameter Δ_{Dmp} µm		Variation (out of roundness) V_{Dp} µm	Wall thickness variation S_e µm	Width deviation Δ_{Cs} µm
over	incl.					
30	50	–20	–36	5	3	–120
50	80	–24	–43	6	4	–120
80	120	–28	–50	8	4	–125
120	150	–33	–58	9	5	–125
150	180	–33	–58	9	5	–125
180	250	–37	–66	10	5	–125
250	315	–41	–73	12	7	–150
315	400	–46	–82	13	7	–150
400	500	–50	–90	15	9	–200
500	630	–55	–99	16	11	–200
630	800	–60	–110	18	13	–250

Machining tolerances of the housing locating washer (tolerance class UP)

Nominal outside diameter D mm		Deviation of outside diameter Δ_{Dmp} µm		Variation (out of roundness) V_{Dp} µm	Wall thickness variation S_e µm	Width deviation Δ_{Cs} µm
over	incl.					
30	50	–20	–36	5	1,5	–120
50	80	–24	–43	6	2	–120
80	120	–28	–50	8	2	–125
120	150	–33	–58	9	3	–125
150	180	–33	–58	9	3	–125
180	250	–37	–66	10	3	–125
250	315	–41	–73	12	4	–150
315	400	–46	–82	13	4	–150
400	500	–50	–90	15	5	–200
500	630	–55	–99	16	6	–200
630	800	–55	–99	18	7	–250

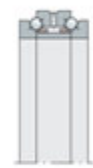

Axial angular contact ball bearings

Double direction

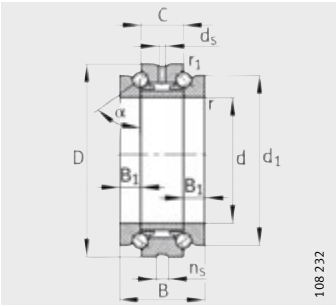

2344, 2347
α = 60°

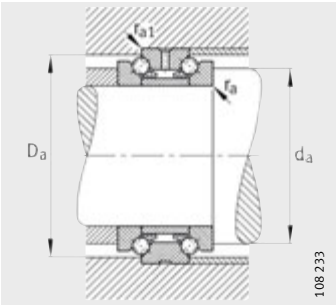

Mounting dimensions

Dimension table · Dimensions in mm

Designation	Mass	Dimensions									
	m	d	D	B	C	d_1	B_1	r	r_1	d_s	n_s
	≈kg							min.	min.		
234406-M-SP	0,29	**30**	55	32	16	47	8	1	0,15	3,2	4,8
234706-M-SP	0,27	**32**	55	32	16	47	8	1	0,15	3,2	4,8
234407-M-SP	0,38	**35**	62	34	17	53	8,5	1	0,15	3,2	4,8
234707-M-SP	0,35	**37**	62	34	17	53	8,5	1	0,15	3,2	4,8
234408-M-SP	0,46	**40**	68	36	18	58,5	9	1	0,15	3,2	4,8
234708-M-SP	0,43	**42**	68	36	18	58,5	9	1	0,15	3,2	4,8
234409-M-SP	0,58	**45**	75	38	19	65	9,5	1	0,15	3,2	4,8
234709-M-SP	0,54	**47**	75	38	19	65	9,5	1	0,15	3,2	4,8
234410-M-SP	0,63	**50**	80	38	19	70	9,5	1	0,15	3,2	4,8
234710-M-SP	0,58	**52**	80	38	19	70	9,5	1	0,15	3,2	4,8
234411-M-SP	0,94	**55**	90	44	22	78	11	1,1	0,3	3,2	6,5
234711-M-SP	0,88	**57**	90	44	22	78	11	1,1	0,3	3,2	6,5
234412-M-SP	1,01	**60**	95	44	22	83	11	1,1	0,3	3,2	6,5
234712-M-SP	0,94	**62**	95	44	22	83	11	1,1	0,3	3,2	6,5
234413-M-SP	1,08	**65**	100	44	22	88	11	1,1	0,3	3,2	6,5
234713-M-SP	1,01	**67**	100	44	22	88	11	1,1	0,3	3,2	6,5
234414-M-SP	1,49	**70**	110	48	24	97	12	1,1	0,3	3,2	6,5
234714-M-SP	1,36	**73**	110	48	24	97	12	1,1	0,3	3,2	6,5
234415-M-SP	1,57	**75**	115	48	24	102	12	1,1	0,3	3,2	6,5
234715-M-SP	1,43	**78**	115	48	24	102	12	1,1	0,3	3,2	6,5
234416-M-SP	2,16	**80**	125	54	27	110	13,5	1,1	0,3	3,2	6,5
234716-M-SP	1,98	**83**	125	54	27	110	13,5	1,1	0,3	3,2	6,5
234417-M-SP	2,25	**85**	130	54	27	115	13,5	1,1	0,3	4,8	9,5
234717-M-SP	2,07	**88**	130	54	27	115	13,5	1,1	0,3	4,8	9,5
234418-M-SP	2,92	**90**	140	60	30	123	15	1,5	0,3	4,8	9,5
234718-M-SP	2,71	**93**	140	60	30	123	15	1,5	0,3	4,8	9,5
234419-M-SP	3,04	**95**	145	60	30	128	15	1,5	0,3	4,8	9,5
234719-M-SP	2,83	**98**	145	60	30	128	15	1,5	0,3	4,8	9,5

1) Minimal oil quantity lubrication.

2) The lift-off force is the force at which the row of balls released from load by an axial force acting concentrically on the bearing becomes free of load.

3) The values are valid up to an axial force equal to 2,2% of the basic dynamic load rating C_a.

Mounting dimensions				Basic load ratings		Limiting speeds		Preload force	Lift-off force[2]	Axial rigidity[3]
d_a h12	D_a H12	r_a max.	r_{a1} max.	dyn. C_a N	stat. C_{0a} N	n_G grease min^{-1}	n_G oil[1] min^{-1}	F_v N	K_{aE} N	c_a N/µm
40,5	50,5	1	0,15	15 300	36 000	11 000	16 000	108	308	276
40,5	50,5	1	0,15	15 300	36 000	11 000	16 000	108	308	276
46,5	57	1	0,15	18 900	47 000	9 500	14 000	134	382	316
46,5	57	1	0,15	18 900	47 000	9 500	14 000	134	382	316
51,5	63,5	1	0,15	22 900	59 000	8 500	12 000	160	456	354
51,5	63,5	1	0,15	22 900	59 000	8 500	12 000	160	456	354
57,5	70	1	0,15	25 000	67 000	7 500	10 000	180	514	387
57,5	70	1	0,15	25 000	67 000	7 500	10 000	180	514	387
62,5	75	1	0,15	26 000	72 000	7 000	9 500	183	522	410
62,5	75	1	0,15	26 000	72 000	7 000	9 500	183	522	410
69	84,5	1,1	0,3	36 500	99 000	6 300	8 500	260	743	458
69	84,5	1,1	0,3	36 500	99 000	6 300	8 500	260	743	458
74	89,5	1,1	0,3	36 000	98 000	6 000	8 000	255	728	455
74	89,5	1,1	0,3	36 000	98 000	6 000	8 000	255	728	455
79	94,5	1,1	0,3	38 500	111 000	5 600	7 500	275	785	506
79	94,5	1,1	0,3	38 500	111 000	5 600	7 500	275	785	506
86,5	103,5	1,1	0,3	46 000	134 000	5 300	7 000	325	926	552
86,5	103,5	1,1	0,3	46 000	134 000	5 300	7 000	325	926	552
91,5	108,5	1,1	0,3	47 500	144 000	5 000	6 700	340	969	589
91,5	108,5	1,1	0,3	47 500	144 000	5 000	6 700	340	969	589
98,5	117	1,1	0,3	56 000	175 000	4 500	6 000	400	1 140	640
98,5	117	1,1	0,3	56 000	175 000	4 500	6 000	400	1 140	640
103,5	122	1,1	0,3	57 000	181 000	4 500	6 000	400	1 140	655
103,5	122	1,1	0,3	57 000	181 000	4 500	6 000	400	1 140	655
110,5	130,5	1,5	0,3	66 000	213 000	4 000	5 300	465	1 326	708
110,5	130,5	1,5	0,3	66 000	213 000	4 000	5 300	465	1 326	708
115,5	135,5	1,5	0,3	66 000	219 000	4 000	5 300	465	1 326	724
115,5	135,5	1,5	0,3	66 000	219 000	4 000	5 300	465	1 326	724

Axial angular contact ball bearings

Double direction

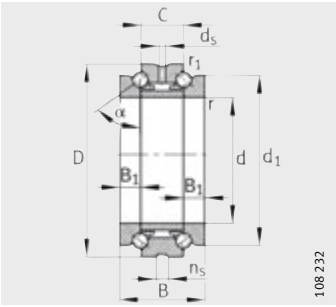

2344, 2347
α = 60°

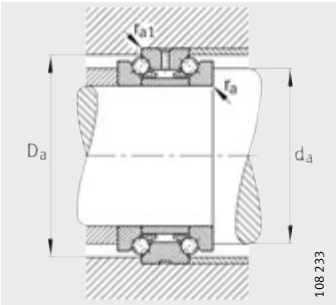

Mounting dimensions

Dimension table (continued) · Dimensions in mm

Designation	Mass	Dimensions									
	m	d	D	B	C	d_1	B_1	r	r_1	d_s	n_s
	≈kg							min.	min.		
234420-M-SP	3,17	**100**	150	60	30	133	15	1,5	0,3	4,8	9,5
234720-M-SP	2,95	**103**	150	60	30	133	15	1,5	0,3	4,8	9,5
234421-M-SP	4,07	**105**	160	66	33	142	16,5	2	0,6	4,8	9,5
234721-M-SP	3,73	**109**	160	66	33	142	16,5	2	0,6	4,8	9,5
234422-M-SP	5,19	**110**	170	72	36	150	18	2	0,6	4,8	9,5
234722-M-SP	4,79	**114**	170	72	36	150	18	2	0,6	4,8	9,5
234424-M-SP	5,56	**120**	180	72	36	160	18	2	0,6	4,8	9,5
234724-M-SP	5,14	**124**	180	72	36	160	18	2	0,6	4,8	9,5
234426-M-SP	8,28	**130**	200	84	42	177	21	2	0,6	6,3	12,2
234726-M-SP	7,58	**135**	200	84	42	177	21	2	0,6	6,3	12,2
234428-M-SP	8,78	**140**	210	84	42	187	21	2,1	0,6	6,3	12,2
234728-M-SP	8,07	**145**	210	84	42	187	21	2,1	0,6	6,3	12,2
234430-M-SP	10,8	**150**	225	90	45	200	22,5	2,1	0,6	8	15
234730-M-SP	9,95	**155**	225	90	45	200	22,5	2,1	0,6	8	15
234432-M-SP	12,9	**160**	240	96	48	212	24	2,1	0,6	8	15
234732-M-SP	12	**165**	240	96	48	212	24	2,1	0,6	8	15
234434-M-SP	17,7	**170**	260	108	54	230	27	2,1	0,6	8	15
234734-M-SP	16,3	**176**	260	108	54	230	27	2,1	0,6	8	15
234436-M-SP	23,4	**180**	280	120	60	248	30	2,1	0,6	8	15
234736-M-SP	21,5	**187**	280	120	60	248	30	2,1	0,6	8	15
234438-M-SP	24,7	**190**	290	120	60	258	30	2,1	0,6	8	15
234738-M-SP	22,6	**197**	290	120	60	258	30	2,1	0,6	8	15

1) Minimal oil quantity lubrication.

2) The lift-off force is the force at which the row of balls released from load by an axial force acting concentrically on the bearing becomes free of load.

3) The values are valid up to an axial force equal to 2,2% of the basic dynamic load rating C_a.

Mounting dimensions				Basic load ratings		Limiting speeds		Preload force	Lift-off force[2]	Axial rigidity[3]
d_a h12	D_a H12	r_a max.	r_{a1} max.	dyn. C_a N	stat. C_{0a} N	n_G grease min^{-1}	n_G oil[1] min^{-1}	F_v N	K_{aE} N	c_a N/µm
120,5	140,5	1,5	0,3	67 000	226 000	3 800	5 000	685	1 956	843
120,5	140,5	1,5	0,3	67 000	226 000	3 800	5 000	685	1 956	843
128	150	2	0,6	74 000	250 000	3 600	4 800	530	1 511	775
128	150	2	0,6	74 000	250 000	3 600	4 800	530	1 511	775
134,5	160	2	0,6	98 000	325 000	3 400	4 500	695	1 983	853
134,5	160	2	0,6	98 000	325 000	3 400	4 500	695	1 983	853
144,5	170	2	0,6	101 000	345 000	3 200	4 300	960	2 736	996
144,5	170	2	0,6	101 000	345 000	3 200	4 300	960	2 736	996
159	188	2	0,6	128 000	440 000	2 800	3 800	900	2 570	978
159	188	2	0,6	128 000	440 000	2 800	3 800	900	2 570	978
169	198	2,1	0,6	132 000	470 000	2 600	3 600	930	2 649	1 034
169	198	2,1	0,6	132 000	470 000	2 600	3 600	930	2 649	1 034
181	211,5	2,1	0,6	142 000	520 000	2 600	3 600	1 320	3 764	1 183
181	211,5	2,1	0,6	142 000	520 000	2 600	3 600	1 320	3 764	1 183
192,5	226	2,1	0,6	168 000	600 000	2 400	3 400	1 180	3 362	1 149
192,5	226	2,1	0,6	168 000	600 000	2 400	3 400	1 180	3 362	1 149
206,5	245	2,1	0,6	207 000	740 000	2 200	3 200	1 847	5 270	1 362
206,5	245	2,1	0,6	207 000	740 000	2 200	3 200	1 847	5 270	1 362
221	263	2,1	0,6	235 000	840 000	2 000	3 000	1 660	4 733	1 315
221	263	2,1	0,6	235 000	840 000	2 000	3 000	1 660	4 733	1 315
231	273	2,1	0,6	244 000	900 000	1 900	2 800	2 110	6 021	1 495
231	273	2,1	0,6	244 000	900 000	1 900	2 800	2 110	6 021	1 495

Axial angular contact ball bearings

Double direction

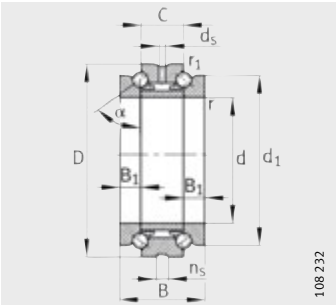

2344, 2347
α = 60°

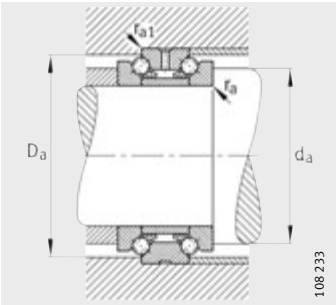

Mounting dimensions

Dimension table (continued) · Dimensions in mm

Designation	Mass	Dimensions									
	m	d	D	B	C	d_1	B_1	r	r_1	d_s	n_s
	≈kg							min.	min.		
234440-M-SP	31,5	**200**	310	132	66	274	33	2,1	0,6	8	15
234740-M-SP	29,2	**207**	310	132	66	274	33	2,1	0,6	8	15
234444-M-SP	41,7	**220**	340	144	72	304	36	3	1,1	9,5	17,7
234744-M-SP	38,5	**228**	340	144	72	304	36	3	1,1	9,5	17,7
234448-M-SP	43,8	**240**	360	144	72	322	36	3	1,1	9,5	17,7
234748-M-SP	40,4	**248**	360	144	72	322	36	3	1,1	9,5	17,7
234452-M-SP	64,5	**260**	400	164	82	354	41	4	1,5	9,5	17,7
234752-M-SP	59,7	**269**	400	164	82	354	41	4	1,5	9,5	17,7
234456-M-SP	69	**280**	420	164	82	374	41	4	1,5	9,5	17,7
234756-M-SP	63,8	**289**	420	164	82	374	41	4	1,5	9,5	17,7
234460-M-SP	98,4	**300**	460	190	95	406	47,5	4	1,5	9,5	17,7
234760-M-SP	91,2	**310**	460	190	95	406	47,5	4	1,5	9,5	17,7
234464-M-SP	102	**320**	480	190	95	426	47,5	4	1,5	9,5	17,7
234764-M-SP	94,9	**330**	480	190	95	426	47,5	4	1,5	9,5	17,7
234468-M-SP	138	**340**	520	212	106	459	53	4	1,5	9,5	17,7
234768-M-SP	129	**350**	520	212	106	459	53	4	1,5	9,5	17,7
234472-M-SP	144	**360**	540	212	106	479	53	4	1,5	9,5	17,7
234772-M-SP	135	**370**	540	212	106	479	53	4	1,5	9,5	17,7
234476-M-SP	154	**380**	560	212	106	499	53	4	1,5	9,5	17,7
234776-M-SP	144	**390**	560	212	106	499	53	4	1,5	9,5	17,7
234480-M-SP	198	**400**	600	236	118	532	59	5	2	9,5	17,7
234780-M-SP	187	**410**	600	236	118	532	59	5	2	9,5	17,7

1) Minimal oil quantity lubrication.

2) The lift-off force is the force at which the row of balls released from load by an axial force acting concentrically on the bearing becomes free of load.

3) The values are valid up to an axial force equal to 2,2% of the basic dynamic load rating C_a.

Mounting dimensions				Basic load ratings		Limiting speeds		Preload force	Lift-off force[2]	Axial rigidity[3]
d_a h12	D_a H12	r_a max.	r_{a1} max.	dyn. C_a N	stat. C_{0a} N	n_G grease min^{-1}	n_G oil[1] min^{-1}	F_v N	K_{aE} N	c_a N/µm
245	291,5	2,1	0,6	285 000	1 060 000	1 800	2 600	2 000	5 704	1 449
245	291,5	2,1	0,6	285 000	1 060 000	1 800	2 600	2 000	5 704	1 449
269	318	3	1,1	340 000	1 330 000	1 600	2 200	2 400	6 848	1 629
269	318	3	1,1	340 000	1 330 000	1 600	2 200	2 400	6 848	1 629
289	338	3	1,1	350 000	1 420 000	1 500	2 000	2 500	7 134	1 729
289	338	3	1,1	350 000	1 420 000	1 500	2 000	2 500	7 134	1 729
317,5	374,5	4	1,5	400 000	1 680 000	1 400	1 900	2 900	8 257	1 814
317,5	374,5	4	1,5	400 000	1 680 000	1 400	1 900	2 900	8 257	1 814
337,5	394,5	4	1,5	415 000	1 790 000	1 300	1 800	3 000	8 542	1 920
337,5	394,5	4	1,5	415 000	1 790 000	1 300	1 800	3 000	8 542	1 920
366	428,5	4	1,5	480 000	2 170 000	1 200	1 700	3 400	9 682	2 027
366	428,5	4	1,5	480 000	2 170 000	1 200	1 700	3 400	9 682	2 027
386	448,5	4	1,5	495 000	2 310 000	1 200	1 700	3 550	10 109	2 150
386	448,5	4	1,5	495 000	2 310 000	1 200	1 700	2 550	10 109	1 150
413	485,5	4	1,5	580 000	2 850 000	1 100	1 600	4 150	11 820	2 265
413	485,5	4	1,5	580 000	2 850 000	1 100	1 600	4 150	11 820	2 265
433	505,5	4	1,5	590 000	2 950 000	1 000	1 500	4 150	11 820	2 317
433	505,5	4	1,5	590 000	2 950 000	1 000	1 500	4 150	11 820	2 317
453	525,5	4	1,5	610 000	3 150 000	1 000	1 500	4 300	12 248	2 447
453	525,5	4	1,5	610 000	3 150 000	1 000	1 500	4 300	12 248	2 447
480	561,5	5	2	680 000	3 650 000	900	1 300	4 900	13 959	2 539
480	561,5	5	2	680 000	3 650 000	900	1 300	4 900	13 959	2 539

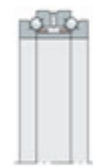

FAG

Customer solutions

Customer solutions

		Page
Spindle bearings	Spring preloaded non-locating bearing units	222
	Thin dense chromium coating on outside diameter	224
	Open spindle bearings supplied greased	225
Cylindrical roller bearings	Cylindrical roller bearings with cylindrical bore and special radial internal clearance	226
	Cylindrical roller bearings with reduced number of rollers	227

Customer solutions

The dimension tables in this catalogue cover spindle bearings corresponding to the standardised design envelope.

The chapter Customer solutions presents solutions with ordering designations that allow these spindle bearing products to be adapted as well as possible to the mounting situation on the spindle. The products do not fall outside the standardised design envelope. They can thus be used without any problems in new designs with existing spindle configurations.

Due to the system of series designations, the bearing type from which the product is derived is retained in the ordering designation. This also takes account of the fundamental series philosophy underlying these special solutions, which stands for speed, flexibility and security of supply.

Furthermore, any type of bearing design is available by agreement as a special solution with a drawing number.

Spindle bearings Spring preloaded non-locating bearing unit

Spring preloaded non-locating bearing units SPP, “Spring Preloaded”, are standard spindle bearings in which the outer ring is twice the width of the standard outer ring, *Figure 1* and *Figure 2*, page 223. In addition, the bearing ring has holes for flat spiral springs and an anti-rotation device. This gives a ready-to-fit spring preloaded unit. The preload can be individually set by means of the adjustment and number of the springs.

The outer ring has a thin dense chromium coating. This ensures good, secure sliding function in the housing for the long term. The sliding function of the spring preloaded non-locating unit is also supported by the outer ring with twice the width of the bearing.

The tolerances of these bearings correspond to P4S.

All spindle bearing designs, such as contact angle, hybrid, Cronidur, steel, DLR, sealed and other application-specific product designs can be ordered under the designation SPP.

Ordering example **HCB7014-E-SPP-2RSD-T-P4S**

Figure 1
Spring preloaded
non-locating bearing unit

Figure 2
Sealed spring preloaded
non-locating bearing unit

Thin dense chromium coating on outside diameter

In order to prevent fretting corrosion on the outer ring, spindle bearings with the ordering designation J24J have a thin dense chromium coating on the outer ring, *Figure 3*.
Due to this thin dense chromium coating, the friction coefficient between the housing and outer ring remains consistently low during operation.

Since the thin dense chromium coating is taken into consideration in the manufacture of the outer rings, all tolerances conform to P4S.

The band width of the outside diameter sort is maintained.
As a result, coated bearings can be used on existing spindles without modification of the adjacent construction.

Ordering example **HCB7014-E-T-P4S-J24J-UL**

Figure 3
Thin dense chromium coating on outside diameter

Open spindle bearings supplied greased

Open spindle bearings supplied filled with the optimum grease quantity can be ordered using the designations GA21, L298 and L055.

The advantages of these designs are that greasing by the customer is not required and the correct grease in the correct quantity for the application is available at the correct position in the bearing without losing any time during mounting.

If the grease is not retained in the bearing by adjacent parts, it is recommended that sealed spindle bearings should be used. When selecting bearings, the Application Engineering facilities of Schaeffler Group Industrial should be contacted for assistance.

Ordering examples

HCB7014-E-T-P4S-UL-GA21

HCB7014-E-T-P4S-UL-L298

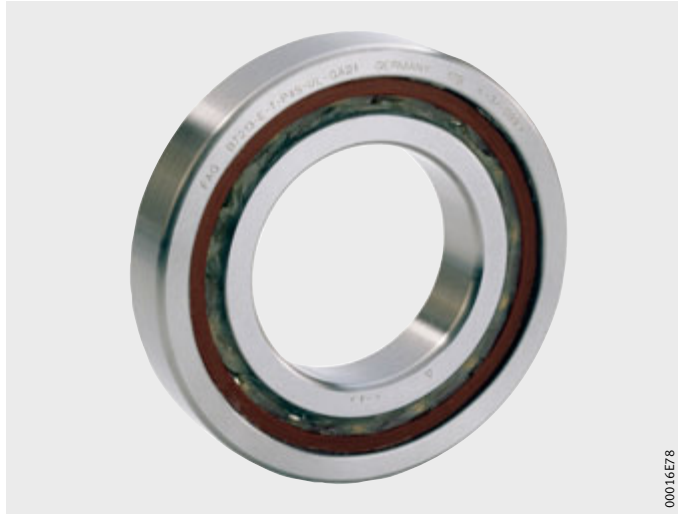

Greased with Arcanol GA21

Figure 4
Open spindle bearing

Greased with Arcanol L298

Figure 5
Open spindle bearing

Cylindrical roller bearings Cylindrical bore and special radial internal clearance

Cylindrical roller bearings are also available by agreement with a cylindrical bore.

In the case of these bearings, there is no “K” in the short designation, see examples in brackets:

- N10..K-M1-SP (N10..-M1-SP)
- N10..K-PVPA1-SP (N10..-PVPA1-SP)
- N10..K-HS-PVPA1-SP (N10..-HS-PVPA1-SP)
- HCN10..K-PVPA1-SP (HCN10..-PVPA1-SP)
- N19..K-M1-SP (N19..-M1-SP).

If these bearings are planned for use at high speeds, the Application Engineering facilities should be contacted for assistance in order to achieve the correct design.

The radial internal clearance tables for cylindrical roller bearings with a cylindrical bore contain standardised values. At high speeds, it may be the case that if the interference of the inner ring required to prevent the inner ring from lifting off the shaft is present, the cylindrical roller bearing with a cylindrical bore will run with preload after mounting. In this case, the radial clearance of the cylindrical roller bearing must be redefined with the assistance of Application Engineering.

Ordering example **HCN1014-PVPA1-SP-R15-30NA**

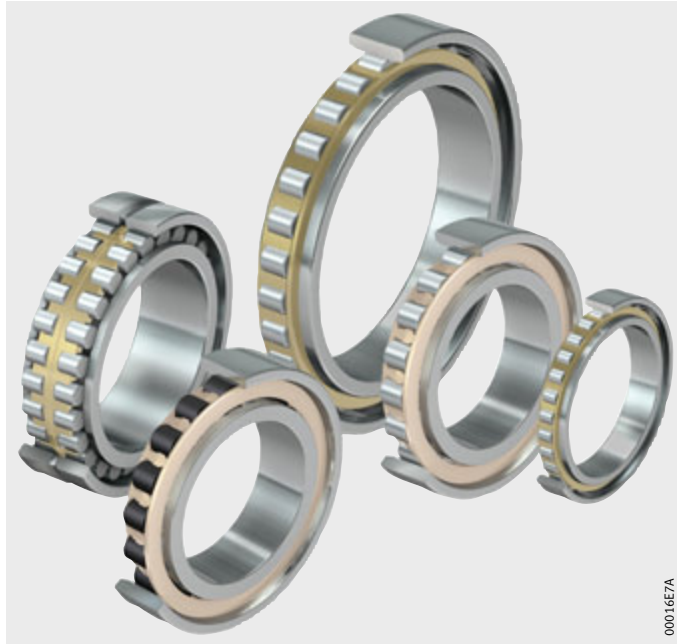

Cylindrical bore and special radial internal clearance

Figure 6
Super precision cylindrical roller bearings

Cylindrical roller bearings with reduced number of rollers

In order optimise speed suitability, rigidity and grease operating life, the number of rollers may be reduced accordingly in series of single row cylindrical roller bearings with a PVPA1 cage.

While fewer rollers will mean a reduction in rigidity and load carrying capacity, the temperature and friction will however also be reduced in the case of preloaded bearings.

Due to the larger time interval between two overrolling motions, an increase in speed is possible. In addition, the strain on the lubricant is reduced, leading to an extended grease operating life in the case of grease-lubricated bearings.

In the specific design of these cylindrical roller bearings, advice and calculation by Application Engineering is necessary.

In bearings of series N and HCN with a PVPA1 cage, the ordering designation H193 already includes a reduction by half in the number of rolling elements in the standard range, see dimension tables.

Ordering example **HCN1014-K-PVPA1-SP-H193**

Half the number of rollers

Figure 7
Hybrid cylindrical roller bearing

Addresses

Argentina

Schaeffler Argentina S.r.l.
Av. Alvarez Jonte 1938
C1416EXR Buenos Aires
Argentina
Tel. +54 11 40 16 15 00
Fax +54 11 45 82 33 20
info-ar@schaeffler.com

Australia

Schaeffler Australia Pty Ltd
Unit 3, 47 Steel Place
Morningside, QLD 4170
Australia
Tel. +61 7 3399 9161
Fax +61 7 3399 9351
martin.grosvenor@schaeffler.com

Schaeffler Australia Pty Ltd
Suite 14, Level 3
74 Doncaster Road
North Balwyn, VIC 3104
Australia
Tel. +61 3 9859 8020
Fax +61 3 9859 8767
Milos.Grujic@schaeffler.com

Schaeffler Australia Pty Ltd.
Level 1, Bldg 8,
Forest Central Business Park
49 Frenchs Forest Road
Frenchs Forest, NSW 2086
Australia
Tel. +61 2 8977 1000
Fax +61 2 9452 4242
info.au@schaeffler.com

Belgium

Schaeffler Belgium S.P.R.L./B.V.B.A.
Avenue du Commerce, 38
1420 Braine L'Alleud
Belgium
Tel. +32 2 3 89 13 89
Fax +32 2 3 89 13 99
info.be@schaeffler.com

Bosnia-Herzegovina

Schaeffler Hrvatska d.o.o.
Ogrizovićeva 28b
10000 Zagreb
Croatia
Tel. +385 1 37 01 943
Fax +385 1 37 64 473
info.hr@schaeffler.com

Brazil

Schaeffler Brasil Ltda.
Av. Independência, 3500-A
Bairro Éden
18087-101 Sorocaba, SP
Brazil
Tel. +55 15 33 35 15 00
Fax +55 15 33 35 19 60
sac.br@schaeffler.com

Bulgaria

Schaeffler Bulgaria OOD
Dondukov-Blvd. No 62
Eing. A, 6. Etage, App. 10
1504 Sofia
Bulgaria
Tel. +359 2 946 3900
+359 2 943 4008
Fax +359 2 943 4134
info.bg@schaeffler.com

Canada

Schaeffler Canada Inc.
Canada Montréal
100 Alexis Nihon Suite 390
Montréal, QC H4M 2NB
Canada
Tel. +1 514 748 5111
Tel. +1 800 361 5841 Toll Free
Fax +1 514 748 6111
info.ca@schaeffler.com

Schaeffler Canada Inc.
Canada Leduc
#106, 7611 Sparrow Drive
Leduc, AB T9E 0H3
Canada
Tel. +1 800 663 9006 Toll Free
Tel. +1 780 980 3016
Fax +1 780 980 3037
info.ca@schaeffler.com

Schaeffler Canada Inc.
Canada Oakville
2871 Plymouth Drive
Oakville, ON L6H 5S5
Canada
Tel. +1 905 8 29 27 50
Tel. +1 800 263 4397 Toll Free
Fax +1 905 8 29 25 63
info.ca@schaeffler.com

Chile

Schaeffler Chile Ltda.
Av. Hdo. de Aguirre No. 268 of. 201
Providencia
Santiago
Chile
Tel. +56 2 477 5000
Fax +56 2 435 9079
sabine.heijboer@schaeffler.com

China

Schaeffler Holding (China) Co., Ltd.
No. 1 Antuo Road
(west side of Anhong Road)
AnTing, JiaDing District
201804 Shanghai
China
Tel. +86 21 3957 6500
Fax +86 21 3957 6600
www.schaeffler.cn

Schaeffler Trading (Shanghai) Co., Ltd.
No. 1 Antuo Road
(west side of Anhong Road)
AnTing, JiaDing District
201804 Shanghai
China
Tel. +86 21 3957 6000
Fax +86 21 3957 6100
www.schaeffler-aftermarket.cn

Schaeffler Trading (Shanghai) Co., Ltd.
Shanghai Office
No. 1 Antuo Road
(west side of Anhong Road)
AnTing, JiaDing District
201804 Shanghai
China
Tel. +86 21 3957 6500
Fax +86 21 3959 3205
info.cn-shanghai@Schaeffler.com

Schaeffler Hong Kong Co., Ltd.
Unit 3404-5 34/Floor,
Tower One Lippo Center
89 Queensway
Hong Kong
China
Tel. +852 2371 2680
Fax +852 2371 2680
sales_hk@cn.fag.com

Schaeffler Trading (Shanghai) Co., Ltd.
Taiyuan Office
Room 1209, 12th Floor,
Shanxi International Trade Center
West Tower
No. 69 Fuxi Street
030002 Taiyuan, Shanxi
China
Tel. +86 351 8689260
Fax +86 351 8689261
info.cn-taiyuan@Schaeffler.com

Schaeffler Trading (Shanghai) Co., Ltd.
Beijing Branch
RM 2801, Nexus Center, No. 19 A
East 3rd Ring Road North,
Chaoyang District
100020 Beijing
China
Tel. +86 10 6515 0288
Fax +86 10 6512 3433
info.cn-beijing@Schaeffler.com

Schaeffler Trading (Shanghai) Co., Ltd.
Shenyang Office
Unit H/I 14 Floor,
Huaxin International Tower
No.219 Qingnian Avenue,
Shenhe District
110016 Shenyang, Liaoning
China
Tel. +86 24 23962633
Fax +86 24 23962533
info.cn-shenyang@Schaeffler.com

Schaeffler Trading (Shanghai) Co., Ltd.
Dalian Office
Room 0408, MORI Building
No.147 Zhongshan Road, Xigang District
116011 Dalian, Liaoning
China
Tel. +86 411 83681011
Fax +86 411 83681012
info.cn-dalian@Schaeffler.com

Schaeffler Trading (Shanghai) Co., Ltd.
Harbin Office
Unit G 21F, Always Development Plaza
No. 15 Hongjun Street, Nangang
150001 Harbin
China
Tel. +86 451 53009368
Fax +86 451 53009370
www.schaeffler.cn

Schaeffler Trading (Shanghai) Co., Ltd.
Nanjing Office
1208 Room, 12F
No.98 South Zhongshan Road
TianAn International Mansion
210008 Nanjing, Jiangsu
China
Tel. +86 25 8312 3070
Fax +86 25 8312 3072
info.cn-nanjing@Schaeffler.com

Schaeffler Trading (Shanghai) Co., Ltd.
Jinan Office
Room 430, CITIC Plaza
No. 150 Luoyuan Avenue
250011 Ji'nan, Shandong
China
Tel. +86 531 8518 0435
Fax +86 531 8518 0438
info.cn-jinan@Schaeffler.com

Schaeffler Trading (Shanghai) Co., Ltd.
Hangzhou Office
Room 1507, Jiahua International
Business Center
No. 15, Hangda Road
310007 Hangzhou, Zhejiang
China
Tel. +86 571 8717 4820/21/22/30
Fax +86 571 8717 4833
www.schaeffler.cn

Schaeffler Trading (Shanghai) Co., Ltd.
Chongqing Office
9-2 Future International Building, No. 6
1st Branch
Jianxin North Road, Jiangbei District
400200 Chongqing
China
Tel. +86 23 67755574
Fax +86 23 67755524
info.cn-chongqing@Schaeffler.com

Schaeffler Trading (Shanghai) Co., Ltd.
Changsha Office
Room 1602, Yunda International Square
No. 478 Rurong Mid.Rd
410001 Changsha, Hunan
China
Tel. +86 731 85139138
Fax +86 731 85467042
info.cn-changsha@Schaeffler.com

Schaeffler Trading (Shanghai) Co., Ltd.
Wuhan Office
Room 3015, New World International
Trade Center
No. 568 Jianshe Avenue,
Jianghan District
430022 Wuhan, Hubei
China
Tel. +86 27 8526 7335
Fax +86 27 8526 7339
info.cn-wuhan@Schaeffler.com

Schaeffler Trading (Shanghai) Co., Ltd.
Guangzhou Office
Room 1601-2,
Goldlion Digital Network Centre
No. 138 East Tiyu Road
510620 Guangzhou, Guangdong
China
Tel. +86 20 3878 1467
Fax +86 20 8761 0032
www.schaeffler.cn

Schaeffler Trading (Shanghai) Co., Ltd.
Chengdu Office
Room 2815, CCB Sichuan Building
No. 88 Tidu Street
610016 Chengdu, Sichuan
China
Tel. +86 28 8676 6718
Fax +86 28 8676 6728
info.cn-chengdu@Schaeffler.com

Schaeffler Trading (Shanghai) Co., Ltd.
Xi'an Office
Room 1202, HIBC
No. 33 Keji Road, Hi-tech Zone Xi'an City
710075 Xi'an, Shaanxi
China
Tel. +86 29 88337696 99
Fax +86 29 88337707
info.cn-xian@Schaeffler.com

Schaeffler (China) Co., Ltd.
18 Chaoyang Road, Taicang
Jiangsu Province
215400 Taicang , Jiangsu
China
Tel. +86 512 5395 7700
Fax +86 512 5357 4064
info-cn@schaeffler.com

Croatia

Schaeffler Hrvatska d.o.o.
Ogrizovićeva 28b
10000 Zagreb
Croatia
Tel. +385 1 37 01 943
Fax +385 1 37 64 473
info.hr@schaeffler.com

Czech Republic

Schaeffler CZ s r.o.
Průběžná 74a
100 00 Praha 10
Czech Republic
Tel. +420 267 298 111
Fax +420 267 298 110
info.cz@schaeffler.com

Denmark

Schaeffler Danmark ApS
Jens Baggesens Vej 90P
8200 Århus N
Denmark
Tel. +45 70 15 44 44
Fax +45 70 15 22 02
info.dk@schaeffler.com

Egypt

Delegation Office Schaeffler
Technologies
25, El Obour Buildings - Floor 18 - Flat 4
Salah Salem St.
11371 Cairo
Egypt
Tel. +20 2 24012432
Fax +20 2 22612637
schaeffleregypt@schaeffleregypt.com

Estonia

Schaeffler Technologies Repräsentanz
Baltikum
Duntes iela 23a
1005 Riga
Latvia
Tel. +371 7 06 37 95
Fax +371 7 06 37 96
info.lv@schaeffler.com

Finland

Schaeffler Finland Oy
Lautamiehentie 3
02770 Espoo
Finland
Tel. +358 207 36 6204
Fax +358 207 36 6205
info.fi@schaeffler.com

France

Schaeffler France SAS
93, route de Bitche, BP 30186
67506 Haguenau
France
Tel. +33 3 88 63 40 40
Fax +33 3 88 63 40 41
info.fr@schaeffler.com

Germany

Schaeffler Technologies GmbH & Co. KG
Industriestraße 1-3
91074 Herzogenaurach
Germany
Tel. +49 91 32 82 0
Fax +49 91 32 82 49 50
info.de@schaeffler.com

Schaeffler Technologies GmbH & Co. KG
Georg-Schäfer-Str. 30
97421 Schweinfurt
Germany
Tel. +49 9721 91 0
Fax +49 9721 91 3435
faginfo@schaeffler.com

Schaeffler Technologies GmbH & Co. KG
Geschäftsbereich Lineartechnik
Berliner Straße 134
66424 Homburg (Saar)
Germany
Tel. +49 68 41 7 01 0
Fax +49 68 41 7 01 2625
info.linear@schaeffler.com

FAG Aerospace GmbH & Co. KG
Georg-Schäfer-Str. 30
97421 Schweinfurt
Germany
Tel. +49 0 97 21 91 33 72
astrid.hofmann@schaeffler.com

Addresses

Great Britain

Schaeffler (UK) Ltd
Forge Lane, Minworth
Sutton Coldfield B76 1AP
West Midlands
Great Britain
Tel. +44 121 3 13 58 70
Fax +44 121 3 13 00 80
info.uk@schaeffler.com

The Barden Corporation (UK) Limited
Plymbridge Road, Estover
Plymouth, PL6 7LH
Great Britain
Tel. +44 1752 73 55 55
Fax +44 1752 73 34 81
sales@barden.co.uk

Hungary

Schaeffler Magyarország Ipari Kft.
Neuman János út 1/B fsz.
1117 Budapest
Hungary
Tel. +36 1 4 81 30 50
Fax +36 1 4 81 30 53
budapest@schaeffler.com

India

FAG Bearings India Limited
B-1504, Statesman House, 148,
Barakhamba Road
New Dehli, 110 001
India
Tel. +91 11 237382-77/-78/-76
Tel. +91 11 415214-76/-77
Fax +91 11 51521478
manoj.puri@schaeffler.com

INA Bearings India Pvt. Ltd.
Gahlot Farm House,
Opposite House
No. 525
Sector-47, Haryana
Gurgaon 122001
India
Tel. +91 124 4160600
narayansingh.bora@schaeffler.com

FAG Bearings India Limited
203, Riddhi Siddhi Complex
Madhban
Udaipur 313 001
India
Tel. +91 294 3205482
truptesh.chokshi@schaeffler.com

FAG Bearings India Limited
Maneja
Vadodara 390 013
India
Tel. +91 265 26426-51/-52
Fax +91 265 2 63 88-04/-10
ravinder.mathur@schaeffler.com

FAG Bearings India Limited
Nariman Bhavan, 8th Floor, 227, Back-
bay Reclamation Nariman Point
Mumbai, 400 021
India
Tel. +91 22 2022 144/ -166/ -362
Fax +91 22 2027022
muralik@fag.co.in

FAG Bearings India Limited
506-A, Surya Kiran Complex
5th Floor, Sarojini Devi Road
Secunderabad 500 003
India
Tel. +91 40 66325522
Fax +91 40 66325523
Mookambeeswaran.nagarajan
@schaeffler.com

FAG Bearings India Limited
18, Gr. Floor, Wst View 77,
R.V. Road, Basavanagudi
Bangalore, 560 004
India
Tel. +91 80 2657 5120/-4866
Fax +91 80 26574866
vernon.rego@schaeffler.com

INA Bearings India Pvt. Ltd.
Site No. 1, Sri Nrusimha Towers,
First Floor,
Amruthnagar Main Road
Next to Sub-registrar's Office,
Konanakunte
Bangalore, 560 062
India
Tel. +91 80 4260 6999
Fax +91 80 4260 6922
Sales.bangalore@schaeffler.com

FAG Bearings India Limited
710, 7th Floor, Phase II
Spencer Plaza
769 - Anna Salai
Chennai, 600 002
India
Tel. +91 44 28 4935-82/-83/-84/-85
Fax +91 44 28497577
gnanavel.ramalingam@schaeffler.com

FAG Bearings India Limited
Flat No.10, 3rd Floor,
Krishnakamalam Pride Complex
391/392, Bharathiar Road
Coimbatore 641 004
India
Tel. +91 422 2528220
Tel. +91 422 4210080
Fax +91 422 4210080
gopinathan.duraisamy@schaeffler.com

FAG Bearings India Limited
Jasmine Towers, 5th Floor
Room No. 502B, 31
Shakespeare Sarani
Kolkata, 700 017
India
Tel. +91 33 22 8900-26/-27/-96
Tel. +91 33 22 8332 27
Fax +91 33 22 89 00 97
janardhanan.nambiar@schaeffler.com

INA Bearings India Pvt. Ltd.
369, Block 'K' 2nd Floor
New Alipore
Kolkata, 700 053
India
Tel. +91 33 4060 8051
Fax +91 33 4060 8052
chanchal.khan@schaeffler.com

FAG Bearings India Limited
No. 308, 3rd Floor
Akashdeep Plaza, Golmuri
Jamshedpur 831 003
India
Tel. +91 657 2341186
sanjeev.kumar@schaeffler.com

INA Bearings India Pvt. Ltd.
Plot No. A-3 Talegaon Industrial &
Floriculture Park
Village Ambi, Navalakha Umbre,
Taluka Maval
Pune 410 507
India
Tel. +91 20 306104104
Fax +91 20 30614308
info.ina.in@schaeffler.com

Italy

Schaeffler Italia S.r.l.
Strada Provinciale 229 Km 17
28015 Momo
Italy
Tel. +39 3 21 92 92 11
Fax +39 3 21 92 93 00
info.it@schaeffler.com

Japan

Schaeffler Japan Co., Ltd.
New Stage Yokohama
1-132, Shinurashima-cho, Kanagawa-ku,
Yokohama, 221-0031,
Japan
Tel. +81 45 274 8211
Fax +81 45 274 8221
info-japan@schaeffler.com

Korea

Schaeffler Korea Corporation –
Seoul Office
Samsung Fire-Marine Insurance Bldg.,
11-12F#87, Euljiro-1ga
Jung-guSeoul, 100-191
Korea
Tel. +82 2 311 3000
Fax +82 2 311 3060
heonkyeong.lee@schaeffler.com

Schaeffler Korea Corporation –
Seoul Branch
A-501, 1258, Guro-dong, Guro-gu
Seoul, 152-050
Korea
Tel. +82 2 2619 0677
Fax +82 2 2611 6075

Schaeffler Korea Corporation –
Busan Branch
577-7, Gwaebeop-dong,
Sasang-gu
Busan, 617-809
Korea
Tel. +82 51 328 9386
Fax +82 51 324 0382

Schaeffler Korea Corporation –
Seobu Branch
402, Palbok-dong, Dukjin-Gu, Jeonju-si
Jeollabuk-do, 561-203
Korea
Tel. +82 63 211 5770
Fax +82 63 211 5791

Schaeffler Korea Corporation –
Busan Branch (Changwon Office)
452-9, Nae-dong, Changwon-si
Gyeongsangnam-do, 641-050
Korea
Tel. +82 55 280 8691
Fax +82 55 266 7055

Schaeffler Korea Corporation –
Daegu Branch
Shindongyeong Bldg., 17-1
Bukseongno 1-ga Jung-gu
Daegu, 700-824
Korea
Tel. +82 53 256 4066
Fax +82 53 253 5229

Mexico

INA Mexico, S.A. de C.V. - Rodamientos
FAG S.A. de C.V.
Henry Ford No. 141Col. Bondojito Del.
Gustavo A. Madero
Mexico D.F. 07850
Mexico
Tel. +52 55 50 62 60 85
Fax +52 55 5739 5850
mx@schaeffler.com

Netherlands

Schaeffler Nederland B.V.
Gildeweg 31
3771 NB Barneveld
Netherlands
Tel. +31 342 40 30 00
Fax +31 342 40 32 80
info.nl@schaeffler.com

Norway

Schaeffler Norge AS
Grenseveien 107B
0663 Oslo
Norway
Tel. +47 23 24 93 30
Fax +47 23 24 93 31
info.no@schaeffler.com

Poland

Schaeffler Polska Sp. z.o.o.
Budynek E
ul. Szyszkowa 35/37
02-285 Warszawa
Poland
Tel. +48 22 8 78 41 20
Fax +48 22 8 78 41 22
info.pl@schaeffler.com

Portugal

INA Rolamentos Lda.
Arrábida Lake Towers
Rua Daciano Baptista Marques Torre C,
181, 2º piso
4400-617 Vila Nova de Gaia
Portugal
Tel. +351 22 5 32 08 00
Fax +351 22 5 32 08 60
info.pt@schaeffler.com

Romania

S.C. Schaeffler Romania S.R.L.
Aleea Schaeffler Nr. 3
507055 Cristian/Brasov
Romania
Tel. +40 268 505808
Fax +40 268 505848
info.ro@schaeffler.com

Russia

Schaeffler Russland GmbH
Leningradsky Prospekt 47, Bau 3
Business-Center Avion
125167 Moscow
Russia
Tel. +7 495 7 37 76 60
Fax +7 495 7 37 76 61
info.ru@schaeffler.com

Schaeffler Russland GmbH
Sverdlovskaya Embankment 44,
Letter SH
BC "Benua", office 207
195027 St. Petersburg
Russia
Tel. +7 812 633 3644
Fax +7 812 633 3645
info.spb@schaeffler.com

Schaeffler Russland GmbH
ul. 1 Maya 91/1
350901 Krasnodar
Russia
Tel. +7 918 142 96 73
Fax +7 918 142 96 73

Schaeffler Russland GmbH
ul. Marshala Zhukova 35, Floor 4,
Office 5
445051 Togliatti
Russia
Tel. +7 8482 93 13 22
Fax +7 8482 93 13 22

Schaeffler Russland GmbH
ul. Yadrintseva 53/1, Office 909
630090 Novosibirsk
Russia
Tel. +7 383 218 83 60
Fax +7 383 218 83 59

Singapore

Schaeffler (Singapore) Pte. Ltd.
151 Lorong Chuan, #06-01
New Tech Park, Lobby A
556741 Singapore
Singapore
Tel. +65 6540 8600
Fax +65 6540 8668
info.sg@schaeffler.com

Slovak Republic

Schaeffler Slovensko, spol. s.r.o.
Ulica Dr. G. Schaefflera 1
02401 Kysucké Nové Mesto
Slovak Republic
Tel. +421 41 4 20 59 11
Fax +421 41 4 20 59 18
info.sk@schaeffler.com

Schaeffler Slovensko, spol.s.r.o.
Nevädzova 5
821 01 Bratislava
Slovak Republic
Tel. +421 2 43 294 260
Fax +421 2 48 287 820
fag@fag.sk

Addresses

Slovenia

Schaeffler Slovenija d.o.o.
Glavni trg 17/b
2000 Maribor
Slovenia
Tel. +386 2 22 82-070
Fax +386 2 22 82 075
info.si@schaeffler.com

South Africa

Schaeffler South Africa (Pty.) Ltd.
1 End Street Ext. Corner Heidelberg Road
2000 Johannesburg
South Africa
Tel. +27 11 225 3000
Fax +27 11 334 1755
info.co.za@schaeffler.com

Spain

Schaeffler Iberia, s.l.u.
Polígono Ind. Pont Reixat
08960 Sant Just Desvern
Spain
Tel. +34 93 4 80 34 10
Fax +34 93 3 72 92 50
info.es@schaeffler.com

Sweden

Schaeffler Sverige AB
Charles gata 10
195 61 Arlandastad
Sweden
Tel. +46 8 59 51 09 00
Fax +46 8 59 51 09 60
info.se@schaeffler.com

Taiwan

Schaeffler Taiwan Co
9F-6 No.188 Sec.5, Nanjing E. Road, 105
Taipei
Taiwan
Tel. +886 2 7707 9888
Fax +886 2 2747 9926
info.tw@schaeffler.com

M.Hsieh`s Industry Corp.
1 F, No. 121, Section 1
Heping East Road
Taipei 10644
Taiwan
Tel. +886 2 3322 5699
Fax +886 2 3322 5700
mhina@mhina.com.tw

Thailand

Schaeffler (Thailand) Co., Ltd.
388 Exchange Tower, 34th Floor
Sukhumvit Road, Klongtoey
Bangkok, 10110
Thailand
Tel. +66 2697 0000
Fax +66 2697 0001
info.th@schaeffler.com

Tunisia

FAG AFRIQUE DU NORD
66 Avenue de Carthage
1000 Tunis
Tunisia
Tel. +216 1 34 14 48
Fax +216 1 33 67 04
fagafriquedunord@socoopec.com.tn

Turkey

Schaeffler Rulmanlari Ticaret Limited Sirketi
Aydin Sokak Dagli Apt. 4/4
1. Levent
34340 Istanbul
Turkey
Tel. +90 212 2 79 27 41
Tel. +90 212 280 77 98
Fax +90 212 2 81 66 45
Fax +90 212 280 94 45
info.tr@schaeffler.com

Ukraine

Schaeffler Technologies
Representative Office Ukraine
Jilyanskayastr. 75, 5-er Stock
Business Center «Eurasia»
01032 Kiew
Ukraine
Tel. +380 44 593 02 81
Fax +380 44 593 02 83
info@schaeffler.kiev.ua

UAE United Arab Emirates

Schaeffler Middle East FZE
Road SE101, Schaeffler Building
Jebel Ali Free Zone - Southside
Dubai UAE
UAE United Arab Emirates
Tel. +971 4 81 44 500
Fax +971 4 81 44 601
ousama.abukhader@schaeffler.com

Samir Odeh & Sons
Airport Road
P.O. Box 12991
Dubai
UAE United Arab Emirates
Tel. +971 42 82 17 62
Fax +971 42 82 17 78
info@sosgroup.ae

USA

Schaeffler Group USA Inc.
200 Park Avenue - P.O. Box 1933
Danbury, CT 06813-1933
USA
Tel. +1 203 790 54 74
Fax +1 203 830 81 71
Diana.DiBartolomeo@schaeffler.com

The Barden Corporation
200 Park Avenue
P.O. Box 2449
Danbury, CT 06813-2449
USA
Tel. +1 0203 744 22 11
Fax +1 0203 744 37 56
Diana.DiBartolomeo@schaeffler.com

Schaeffler Group USA Inc.
308 Springhill Farm Road
Fort Mill, SC 29715
USA
Tel. +1 803 548 8500
Fax +1 803 548 8599
info.us@schaeffler.com

Schaeffler Group USA Inc.
5370 Wegman Drive
Valley City, OH 44280-9700
USA
Tel. +1 800 274 5001
Fax +1 330 273 3522
luk-ina-fag-as.us@schaeffler.com

Venezuela

Schaeffler Venezuela
Urbanización San José de Tarbes
Torre BOD, Piso 14, Oficina 14-1
Valencia
Venezuela
Tel. +58 58 241 825 4747
Fax +58 58 241 825 9705
christian.ommundsen@schaeffler.com

Vietnam

Schaeffler Vietnam Co., Ltd
TMS Building, 6th Floor
172 Hai Ba Trung street, District 1
Ho Chi Minh City
Vietnam
Tel. +84 8 22 20 2777
Fax +84 8 22 20 2776
marketing_vn@schaeffler.com

Schaeffler Vietnam Co., Ltd
VCCI building, 3th floor, unit 319
No.9 Dao Duy Anh street – Dong Da Dist
Ha Noi
Vietnam
Tel. +84 4 577 1790
Fax +84 4 577 1792

Request
for calculation of bearing arrangement

Schaeffler Technologies GmbH & Co. KG
Product Line Spindle Bearings

Design: _____

Drawing attached: ❑ yes ❑ no

Bearing arrangement (diagram, for example << >):

Customer: _____

Contact: _____

Application: _____

Drive: _____

rigid ❑
spring-adjusted ❑
spring _____

Shaft: vertical ❑
horizontal ❑
swivelling ❑

Bearing type(s) on working side (front): _____

Bearing type(s) on drive side (rear): _____

Max. speed : _____ min^{-1} Lubrication: _____ Nominal viscosity: _____ $mm^2 \cdot s^{-1}$

Load cycles							
Forces			Speed	Time proportion	Tool diameter	Overhang	Belt tension, drive
F_r kN	F_a kN	F_t kN	min^{-1}	%	mm	a mm	F_R kN

Special environmental influences/ operating conditions:

Assumptions:

Bearing operating temperature front/rear: T= _____ / _____ °C

ΔT (inner ring/outer ring) front/rear: _____ / _____ K

Interference (shaft/inner ring) front/rear: _____ / _____ µm

Bearing spacing l = _____ mm, drive spacing b = _____ mm, overhang a = _____ mm (see table)

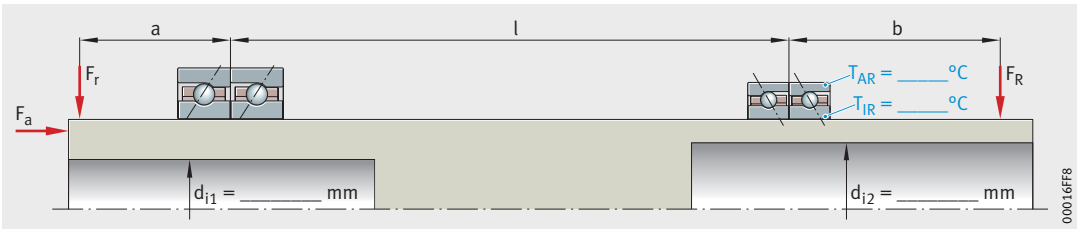

Questions (please attach drawing if possible):

Contact: _____ Date: _____

This form is also available in electronic form at www.fag.de

Checklist
for mounting of spindle bearings

Milling spindle (example)

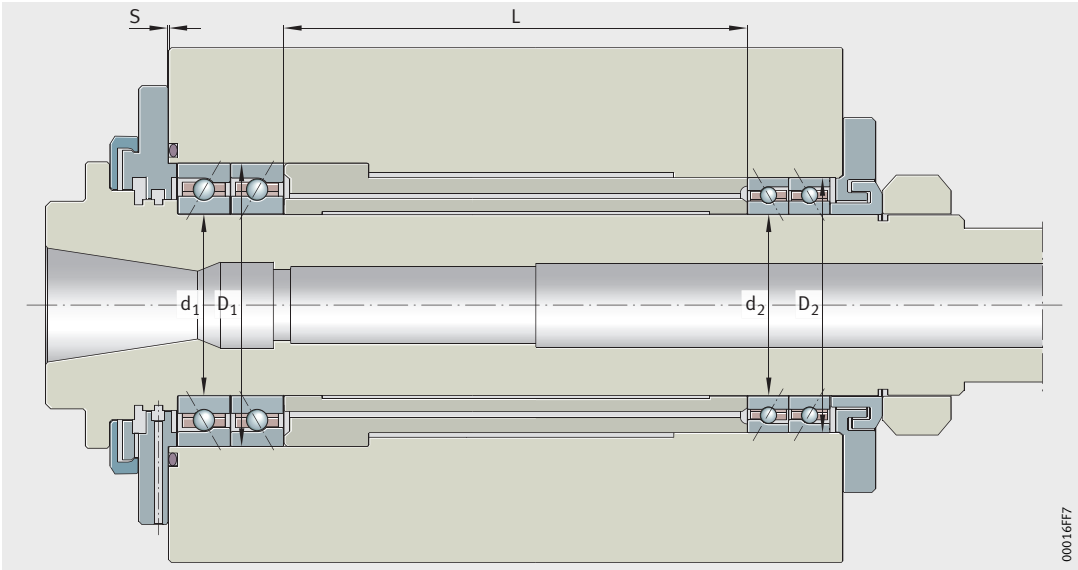

Bearing seat diameter d_1, D_1, d_2, D_2

Spindle	∅ 70 ± 0,004	front d_1 = + 0,002	rear d_2 = 0
Housing	∅ 110 – 0,004 / +0,006	front D_1 = + 0,003	rear D_2 = + 0,003

Difference in length L between intermediate sleeves max. ± 0,002 actual: 0

Gap S before screw tightening nominal 0,01 to 0,03 actual: 0,02

Balancing of rotational parts ❑ OK

Spindle bearing front Part designation: **HC7014-E-T-P4S-UL**

Spindle bearing rear Part designation: **HC7014-E-T-P4S-UL**

Correct designation ❑ OK ❑ Other: _____

Special notes _____

Grease quantity per bearing 9,2 cm^3 ❑ OK ❑ Other: _____

Nut tightening torque, three times nominal value initially 219 Nm ❑ OK, then loosen and tighten to

Nut tightening torque, nominal value permanently 73 Nm ❑ OK

Grease distribution cycle completed: ❑ OK

Continuous running completed, speed 10 000 min^{-1} ❑ OK

Equilibrium temperature +44 °C

Room temperature +24 °C

Note The difference should (without cooling) not exceed +30 K.

Radial runout Rmax 0,002 Actual: 0,001

Axial runout Amax 0,002 Actual: 0,001

Machine: Machining centre - customer **Spindel:** Drawing, serial number

Location: _____ Date: _____ Fitter: _____

Checklist
for mounting of spindle bearings

Spindle type and application: _____

Cross-section drawing of spindle
Diagram with dimensional data

00017157

Bearing seat diameter d_1, D_1, d_2, D_2

Spindle ∅ _____ front d_1 = _____ rear d_2 = _____

Housing ∅ _____ front D_1 = _____ rear D_2 = _____

Difference in length L between intermediate sleeves max. _____ actual: _____

Gap S before screw tightening nominal _____ to _____ actual: _____

Balancing of rotational parts ❑ OK

Spindle bearing front Part designation: _____

Spindle bearing rear Part designation: _____

Correct designation ❑ OK ❑ Other: _____

Special notes _____

Grease quantity per bearing _____ cm^3 ❑ OK ❑ Other: _____

Nut tightening torque, three times nominal value initially _____ Nm ❑ OK, then loosen and tighten to

Nut tightening torque, nominal value permanently _____ Nm ❑ OK

Grease distribution cycle completed ❑ OK

Continuous running cycle completed, speed _____ min^{-1} ❑ OK

Equilibrium temperature _____ °C

Room temperature _____ °C

Note _____

Radial runout Rmax _____ Actual: _____

Axial runout Amax _____ Actual: _____

Machine: _____ **Spindle:** _____

Location: _____ Date: _____ Fitter: _____

Notes

Notes

Notes

Schaeffler Technologies GmbH &. Co. KG

Industriestrasse 1 – 3
91074 Herzogenaurach
Germany
Internet www.ina.com
E-Mail info@schaeffler.com

In Germany:
Phone 0180 5003872
Fax 0180 5003873

From other countries:
Phone +49 9132 82-0
Fax +49 9132 82-4950

Schaeffler Technologies GmbH &. Co. KG

Georg-Schäfer-Strasse 30
97421 Schweinfurt
Germany
Internet www.fag.com
E-Mail FAGinfo@schaeffler.com

In Germany:
Phone 0180 5003872
Fax 0180 5003873

From other countries:
Phone +49 9721 91-0
Fax +49 9721 91-3435

MATNR 036884715-0000 / SP 1 / GB-D / 2010102 / Printed in Germany by stürtz