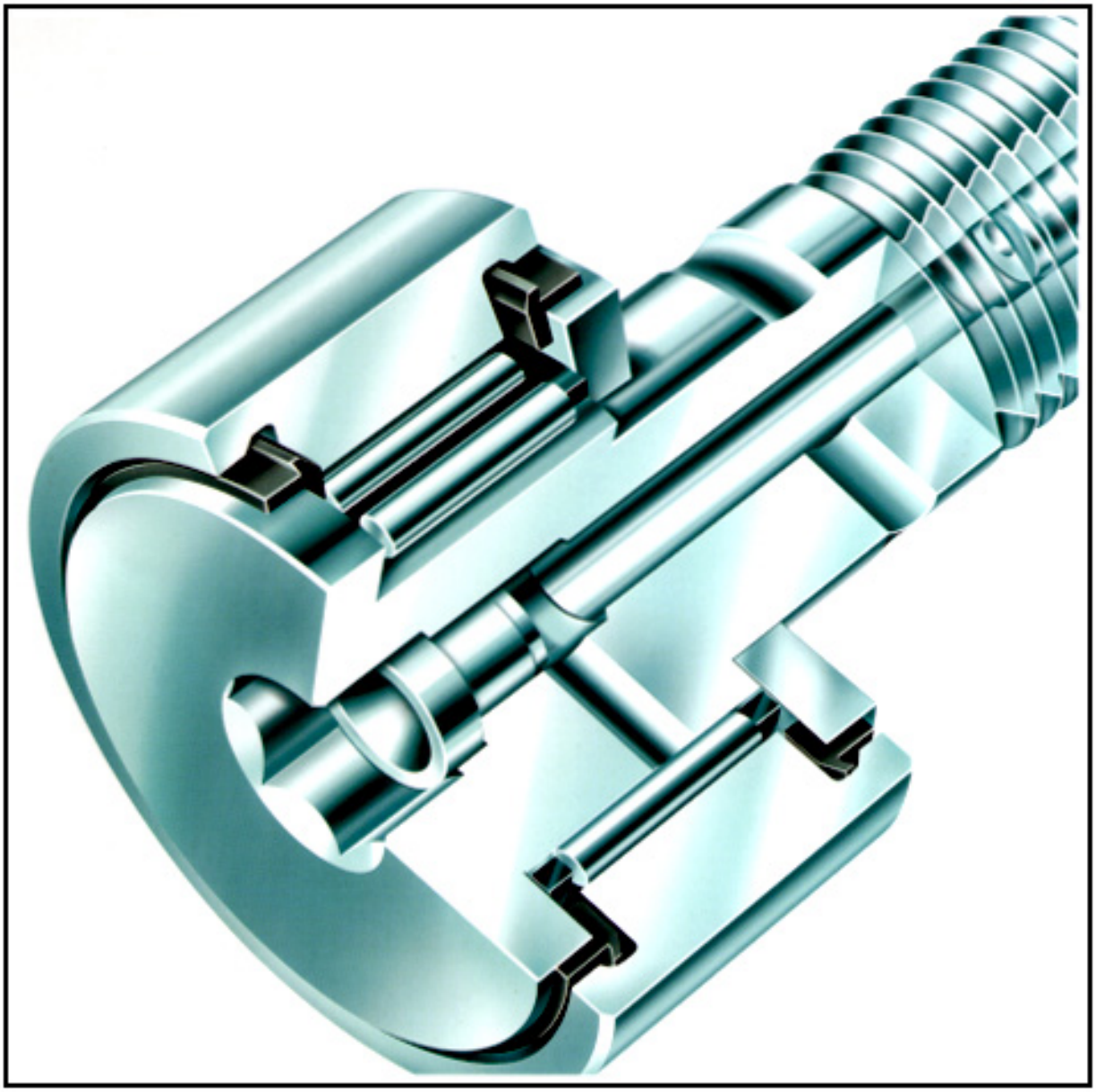

Needle track rollers

with axial guidance

Technical Product Information TPI 108

This technical product information has been produced with a great deal of care and attention and all data have been checked for their accuracy. However, no liability can be assumed for any incorrect or incomplete data.

⚠ Product pictures are for illustrative purposes only and must not be used for the design work.

Designs must only be prepared in accordance with the technical information, dimension tables and dimension drawings!

Due to constant development of the product range, we reserve the right to make modifications.

The sales and delivery conditions in the relevant valid price list and on order confirmations apply for deliveries and other commercial transactions.

Produced by:

INA Bearing Company Ltd
Forge Lane, Minworth
Sutton Coldfield
West Midlands · B76 1AP

www.ina.com

© by INA · 2000, September

All rights reserved.
Reproduction in whole or in part
without our authorization is prohibited.

Printed in Germany by
mandelkow GmbH, 91074 Herzogenaurach

TPI 108

Needle track rollers

with axial guidance

INA track rollers are rolling bearings with particularly thick-walled outer rings and crowned outer ring outside surfaces. These versatile machine elements are suitable for applications throughout all areas of machine construction, particularly for solutions in power transmission, linear drives and materials handling technology.

In order to further increase the customer benefits of these bearings, INA has now revised its range of needle yoke and needle stud type track rollers using its expertise and experience in the design and manufacture of track rollers. The modified series differ from their predecessors in terms of exceptional technical improvements.

They now have:

- the optimized INA profile –
  a patented form of the outer ring outside surface
  - which reduces Hertzian pressure between the outside surface and mating track
- a plastic axial plain washer with an integral lip seal between the outer ring and the axial washer or axial flange
  - which significantly improves running behaviour under misalignment and axial contact, as well as improving the sealing function
- a hexagonal socket with a relubrication facility on both ends of the roller stud
  - which greatly simplifies fitting and maintenance of the track rollers.

On the basis of the optimized needle track rollers and the numerous types of track roller, it is possible to achieve designs that are precisely oriented to the loading and operating conditions of the application. In this way, INA is making a further significant contribution to the operational safety, reliability and cost-efficiency of the machines and systems in which these products are used.

INA Bearing Company Ltd
Forge Lane, Minworth · Sutton Coldfield
West Midlands · B76 1AP
Telephone: 0121 351 3833
Fax: 0121 351 7686
Website: www.ina.co.uk
E-mail: ina.bearing@ina.co.uk

Needle track rollers

with axial guidance

Yoke type track rollers, stud type track rollers

INA track rollers are proven load-bearing machine elements that are particularly suitable for “guiding applications” in cam control and linear systems.

These robust, ready-to-fit yoke and stud type track rollers are extremely versatile due to their thick-walled outer rings and can support high radial forces as well as axial guide forces – due, for example, to alignment errors or angular misalignment.

In order to further increase the benefits to our customers, the following track rollers have been revised:

- needle yoke type track rollers of series NATR and NATV
- needle stud type track rollers of series KR, KRE and KRV.

Optimization measures

Needle track rollers with contact seals have: (Figure, page 3)

① an outer ring outside surface with the optimized INA profile (see page 4). This means that:
- the Hertzian pressure is lower
- wear between the outer ring outside surface and mating track is reduced
- the basic rating life of the outer ring and the mating track is higher
- the rigidity in the outer ring contact is increased.

② a plastic axial plain washer with an integral lip seal between the outer ring and the axial washer or axial flange (see page 5). This means that:
- the angular misalignment and axial contact running behaviour are improved
- effective sealing is ensured.

In addition, needle stud type track rollers have:

③ a hexagonal socket in both end faces of the roller stud with a relubrication facility and a radial lubrication hole with a lubrication groove in the shank of the roller stud (see page 6). This means that:
- fitting and maintenance of the stud type track rollers is significantly simpler.

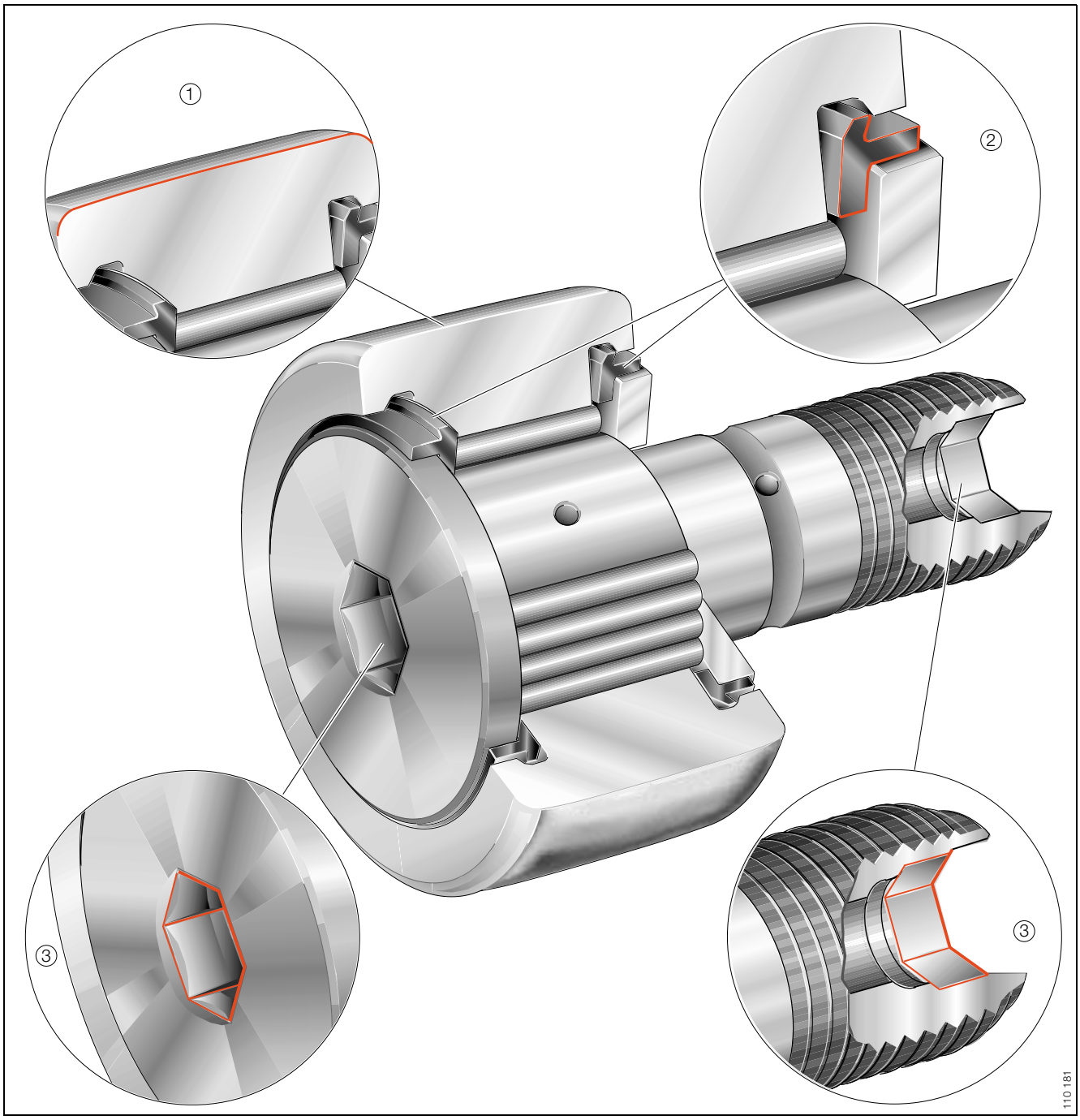
①
②
③
③
110 181

Optimized INA profile of the outer ring outside surface

Reduction in Hertzian pressure

Track rollers of series NATR, NATV, KR, KRE and KRV with contact seals on both sides (design code PP) now have:

- an outer ring outside surface with the optimized INA profile.

Needle yoke and stud type track rollers with gap seals (without design code PP) are supplied with a crowned radius of R = 500 mm.

Advantages of the optimized INA profile

In track rollers with the optimized INA profile of the outer ring outside surface, the Hertzian pressure is significantly lower than for yoke and stud type track rollers with a crowned radius of R = 500 mm (Figure 1).

This leads to:

- lower Hertzian pressure
- less wear between the outer ring outside surface and the mating track
- a longer basic rating life for the outer ring and the mating track
- increased rigidity in the outer ring contact.

Further information on the optimized INA profile:
INA special publication "OPS", Optimized INA profile for yoke and stud type track rollers.

Calculation of Hertzian pressure for track rollers with optimized INA profile

The Hertzian pressure must be taken into consideration when designing the mating track. This depends on:

- the load on the mating track
- the contact geometry (mating track/outside surface)
  - point or line contact
- the modulus of elasticity of the mating track materials.

For the optimized INA profile, the following calculation provides sufficiently precise values (for k_{pH} see Table 1):

- $p_{H\ opt.\ INA\ profile} \approx k_{pH} \cdot p_{H500}$.

The Hertzian pressure for p_{H500} can be read from the nomogram in *INA publication "LFR"*.

Table 1 · Pressure factor k_{pH} for needle track rollers with the optimized INA profile

Width of outer ring C	Pressure factor k_{pH}
10 to 15	1
over 15 incl. 20	0,85
over 20 incl. 30	0,83
over 30 incl. 35	0,8

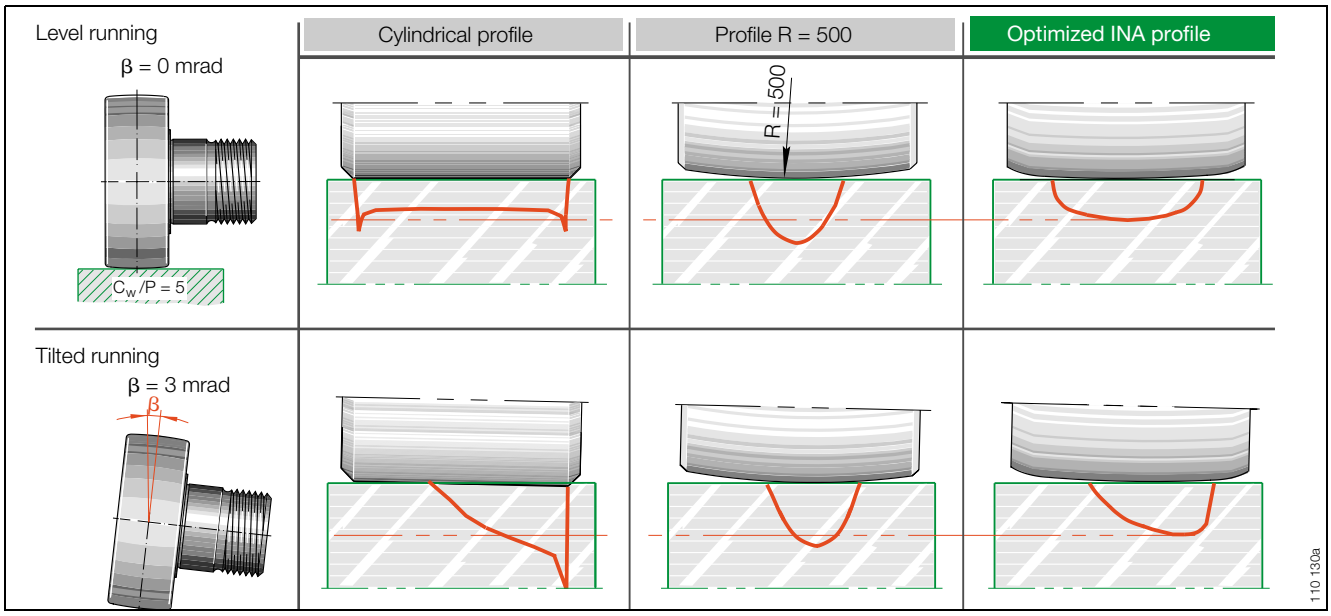

Figure 1 · Hertzian pressure curve – comparison of cylindrical profile, profile R = 500 mm and optimized INA profile

Plastic axial plain washer with integral lip seal

Angular misalignment and tilting

Angular misalignment and tilting – due to installation tolerances and eccentric loads – cannot be completely avoided. During rolling on the mating track, there are not only high radial forces but also in many cases an axial component due to angular misalignment and tilting, which is introduced through the outer ring of the track roller (Figure 2).

Function as axial plain washer

The radial force is transmitted through the rolling elements (needle rollers) and the inner ring to the adjacent construction, while the axial force is transmitted by means of sliding contact between the outer ring ① and axial washer ② (Figure 3).

In order to minimize the friction at the sliding contact point, the contact partner between the outer ring and axial washer is now:

- a plastic axial plain washer ③ with a favourable friction coefficient (Figure 3).

The reduced friction also has a beneficial effect on grease consumption.

Function as radial and axial seal

The washer is shaped such that, in addition to its sliding properties, it also fulfils the task of sealing the bearing (Figure 3):

- in a radial direction as a gap seal against coarse contaminants
- in an axial direction as a contact seal.

The axial sealing effect is achieved as a result of the disc spring shape of the plastic axial plain washer. As the displacement of the outer ring increases, the integral lip seal is subjected to preload.

Influence on the temperature of the roller stud under tilted running

Figure 4 shows the influence, as determined in tests, of the plastic axial plain washer on the temperature of a stud type track roller under extremely tilted running.

The reduced temperature of the bearing with a plastic axial plain washer indicates that the relubrication interval under tilted and/or misaligned running is extended or that the operating life of the bearing without relubrication is increased.

Influence on the load carrying capacity of track rollers

Due to the thickness of the washer, the raceway is somewhat narrower. The load carrying capacity of the track roller, however, is not affected.

In full complement series, the profiled shape of the needle rollers prevents edge stresses and a reduction in the load carrying capacity.

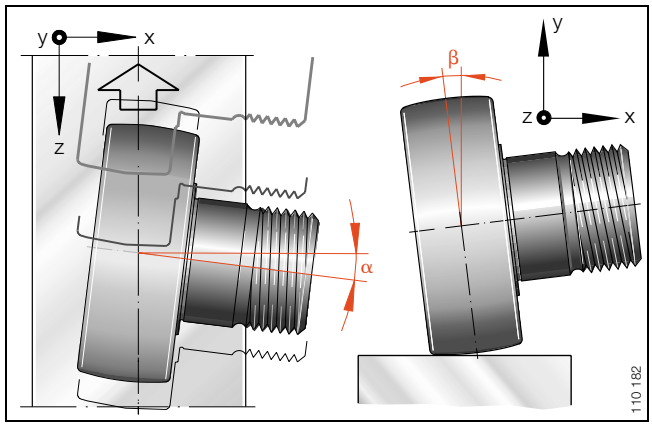

Figure 2 · Angle of misalignment α, tilting angle β

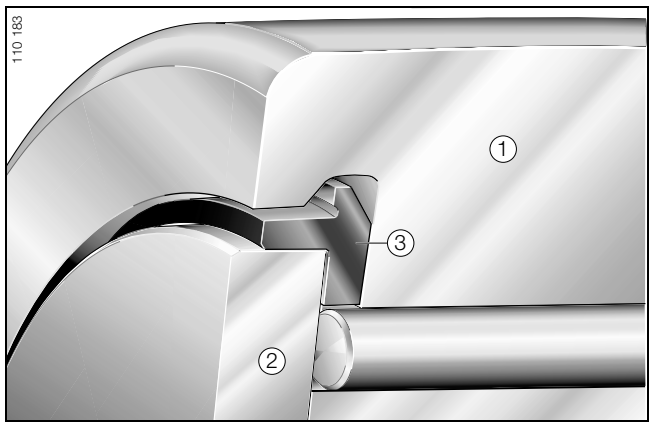

Figure 3 · Plastic axial plain washer with integral lip seal

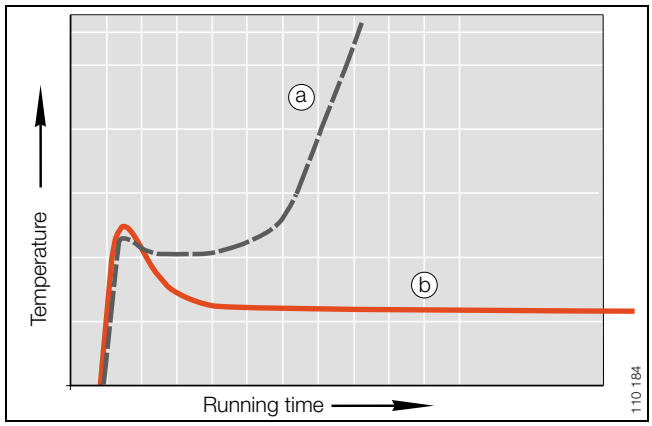

Figure 4 · Roller stud temperature under tilted running – ⓐ without/ ⓑ with plastic axial plain washer

Roller stud with hexagonal socket on both sides

Needle stud type track rollers

Hexagonal socket for easier fitting

Stud type track rollers with an outside diameter of 22 mm and above have:

- a hexagonal socket on both ends of the roller stud.

As a result, stud type track rollers:

- can be countertensioned more easily using a key while the fixing nut is being tightened (Figure 5)
- can be adjusted better to the mating track when they are fitted with an eccentric collar.

Stud type track rollers with an outside diameter of 16 mm or 19 mm have a slot on the flanged side of the roller stud for countertensioning while the fixing nut is being tightened.

Stud type track rollers of series KR 16 PP SK and KR 19 PP SK have a hexagonal socket W 4 on the flanged side.

Relubrication of stud type track rollers

Stud type track rollers KR 16 PP SK and KR 19 PP SK cannot be relubricated. All other stud type track rollers have a lubrication hole for relubrication:

- on the flanged side of the roller stud
- on the threaded side end face – for outside diameters of 22 mm and above
- on the shank of the roller stud with an additional lubrication groove – for outside diameters of 30 mm and above.

⚠ Stud type track rollers with an eccentric collar – series KRE – cannot be relubricated via the shank. This is because the eccentric ring covers the lubrication hole.

The holes on the flanged and threaded sides of the roller stud should be closed off using a drive-fit lubrication nipple (Figure 6).

⚠ Only the lubrication nipples supplied should be used! Lubrication nipples (see Figure 6, Table 2 and *dimension tables*)!

Guidance on relubrication provided in *INA publication "LFR"* should be observed.

Table 2 · Drive-fit lubrication nipples for stud type track rollers KR, KRE, KRV

Lubrication nipple	Dimensions in mm				Suitable for outside diameter
	D	d	L	h	
NIP A 1	6	4	6	5	16 and 19
NIP A 1×4,5	4,7	4	4,5	1	22 to 32
NIP A 2×7,5	7,5	6	7,5	2	35 to 52
NIP A 3×9,5	10	8	9,5	3	62 to 90

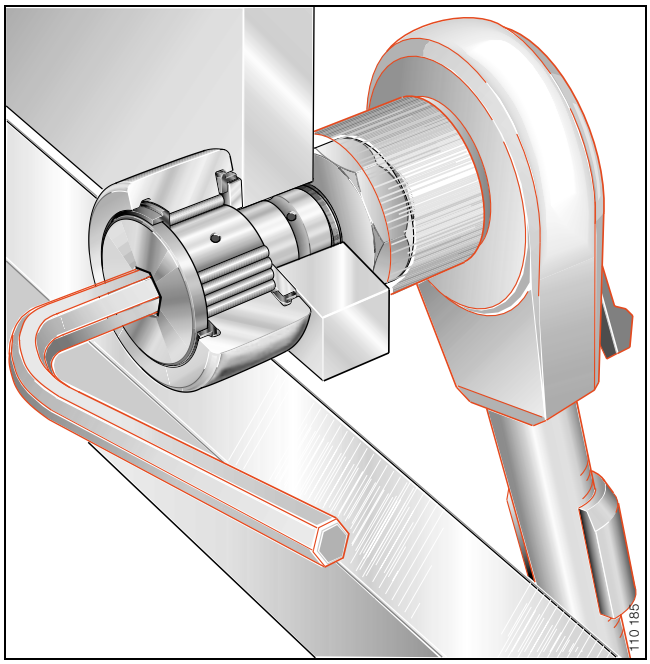

Figure 5 · Simplified fitting due to hexagonal sockets on both sides

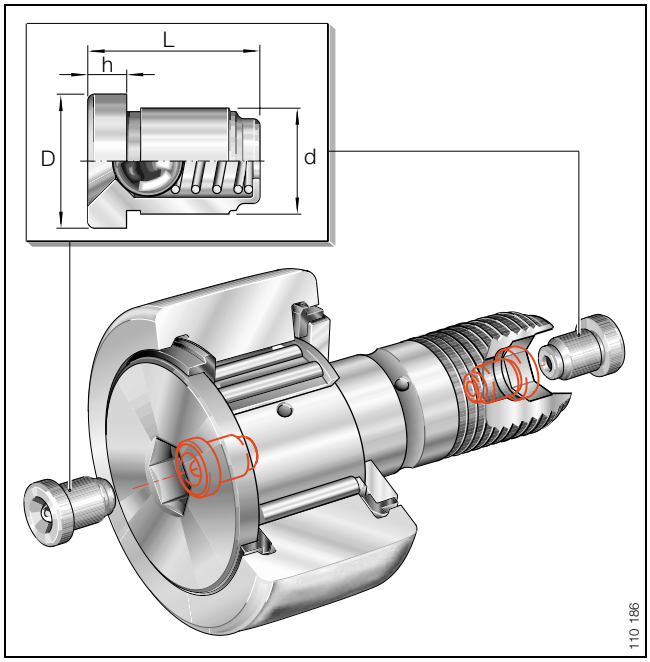

Figure 6 · Stud type track roller KR..PP with drive-fit lubrication nipple

Accessories and special designs

Accessories

The following must be ordered separately:

For stud type track rollers with an outside diameter of 35 mm and above, a central lubrication adapter (Figure 7) is available for connection to a central lubrication system.

For information on the central lubrication adapter, see *INA Technical Product Information TPI 101*.

Special design

Please contact INA for information on:

- yoke and stud type track rollers with a cylindrical outer ring outside surface
  – design code X.

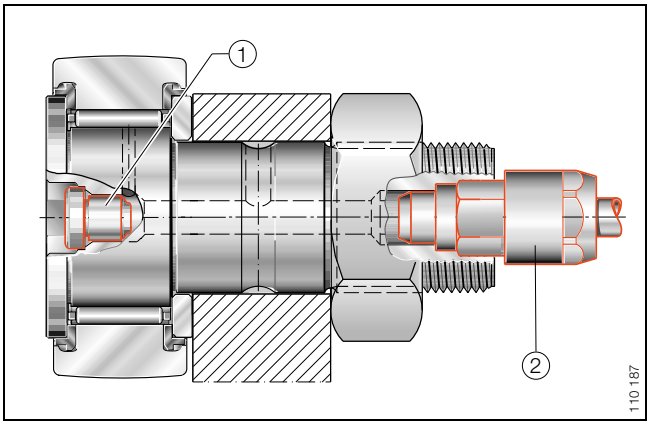

Figure 7 · Funnel type lubrication nipple ① and central lubrication adapter ② for stud type track rollers with hexagonal socket on both sides – outside diameter D = 35 mm and above

Needle yoke type track rollers

with axial guidance

Features

Needle yoke type track rollers

- are complete units consisting of thick-walled outer rings, axial washers and needle roller and cage assemblies or full complement needle roller sets and inner rings
- are mounted on a shaft or stud
- can support high radial forces
- are protected from contamination and water spray by lip seals or gap seals
- have, in the versions with contact seals, a plastic axial plain washer with an integral lip seal between the outer ring and axial washer on both sides. This means that:
  - running behaviour under angular misalignment and axial contact is improved
  - effective sealing is ensured.
- are lubricated with lithium complex soap grease in accordance with DIN 51 825–KP2N–25
- can be relubricated via the inner ring
- conform to the draft standard ISO/CD 7 063.

Profile of the outer ring outside surface

Yoke type track rollers NATR and NATV have a crowned radius of R = 500 mm.

Yoke type track rollers of series NATR..PP and NATV..PP have the optimized INA profile as standard.

With these yoke type track rollers:

- the Hertzian pressure is lower
- edge loading is reduced under tilted running
- wear of the mating track is reduced
- the operating life of the mating track is longer.

Needle yoke type track rollers

NATR
NATV

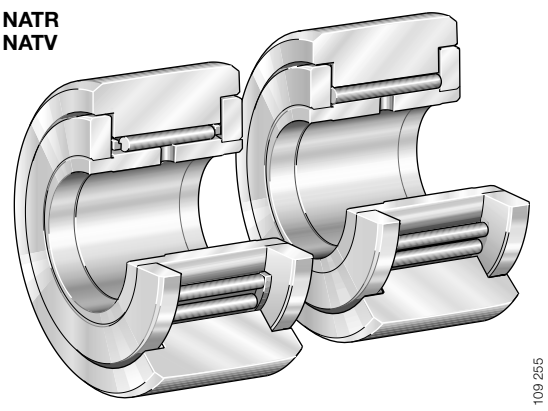

- NATR with cage, NATV full complement
- axial guidance of the outer ring by axial washers
- gap seals on both sides
- outside diameter from 16 mm to 62 mm

NATR..PP
NATV..PP

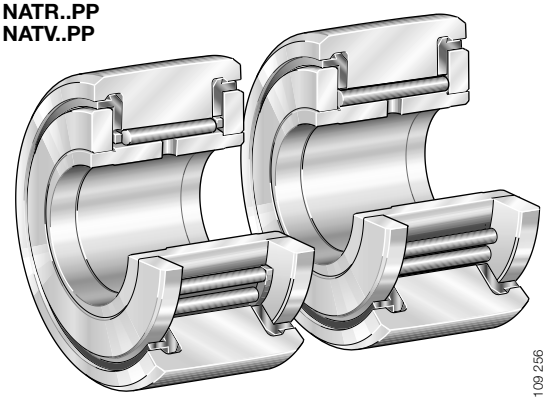

- NATR..PP with cage, NATV..PP full complement
- optimized INA profile
- axial guidance of the outer ring by axial contact washer and axial plain washer
- contact seals on both sides
- for operating temperatures from –30 °C to +100 °C, limited by the lubricating grease and sealing ring material

Needle yoke type track rollers

with axial guidance

Series NATR
NATR..PP
NATV
NATV..PP

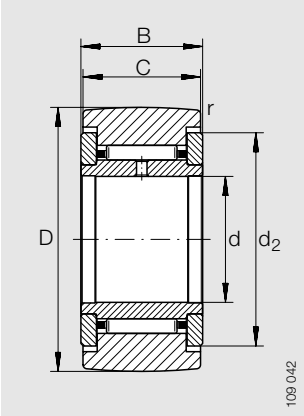

NATR
(R = 500 mm)

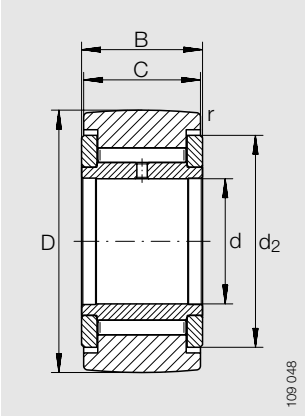

NATV
(R = 500 mm)

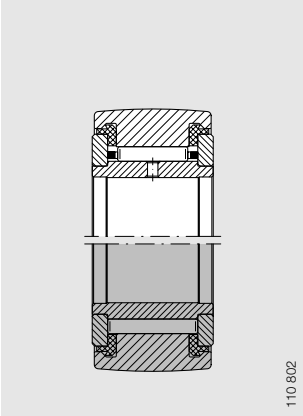

NATR..PP / NATV..PP (optimized INA profile)

Dimension table · Dimensions in mm

Outside diameter	Designation[1]	Mass	Designation[2]	Mass	Dimensions						Basic load ratings		Fatigue limit load	Speed[3]
					d	D	C	B	d_2	r	dyn.	stat.	$P_{uw\,r}$	$n_{D\,G}$
		≈ g		≈ g						min.	$C_{w\,r}$ kN	$C_{0w\,r}$ kN	kN	min^{-1}
16	**NATR 5**	14	**NATR 5 PP**	14	5	16	11	12	12,5	0,15	3,15	3,3	0,41	14 000
	NATV 5	15	**NATV 5 PP**	15	5	16	11	12	12,5	0,15	4,85	6,5	0,85	3 800
19	**NATR 6**	20	**NATR 6 PP**	19	6	19	11	12	15	0,15	3,5	3,9	0,485	11 000
	NATV 6	21	**NATV 6 PP**	21	6	19	11	12	15	0,15	5,5	7,9	1,03	3 100
24	**NATR 8**	41	**NATR 8 PP**	38	8	24	14	15	19	0,3	5,5	6,4	0,81	7 500
	NATV 8	42	**NATV 8 PP**	41	8	24	14	15	19	0,3	7,8	11,4	1,42	2 500
30	**NATR 10**	64	**NATR 10 PP**	61	10	30	14	15	23	0,6	6,8	8,4	1,07	5 500
	NATV 10	65	**NATV 10 PP**	64	10	30	14	15	23	0,6	9,5	14,6	1,82	2 100
32	**NATR 12**	71	**NATR 12 PP**	66	12	32	14	15	25	0,6	6,9	8,8	1,11	4 500
	NATR 12	72	**NATV 12 PP**	69	12	32	14	15	25	0,6	9,7	15,4	1,92	1 800
35	**NATR 15**	104	**NATR 15 PP**	95	15	35	18	19	27,6	0,6	9,7	14,1	1,68	3 600
	NATV 15	109	**NATV 15 PP**	101	15	35	18	19	27,6	0,6	12,8	23	2,9	1 600
40	**NATR 17**	144	**NATR 17 PP**	139	17	40	20	21	31,5	1	10,9	15,5	1,83	2 900
	NATV 17	152	**NATV 17 PP**	147	17	40	20	21	31,5	1	14,8	26,5	3	1 400
47	**NATR 20**	246	**NATR 20 PP**	236	20	47	24	25	36,5	1	15,5	25,5	3	2 400
	NATV 20	254	**NATV 20 PP**	245	20	47	24	25	36,5	1	20,6	42	5,2	1 300
52	**NATR 25**	275	**NATR 25 PP**	271	25	52	24	25	41,5	1	15,4	26,5	3,05	1 800
	NATV 25	285	**NATV 25 PP**	281	25	52	24	25	41,5	1	20,5	44	5,4	1 000
62	**NATR 30**	470	**NATR 30 PP**	444	30	62	28	29	51	1	23,6	38,5	4,55	1 300
	NATV 30	481	**NATV 30 PP**	468	30	62	28	29	51	1	30,5	62	7,7	850
72	**–**	–	**NATR 35 PP**	547	35	72	28	29	58	1,1	25,5	44,5	5,2	1 000
	–	–	**NATV 35 PP**	630	35	72	28	29	58	1,1	33	73	9	750
80	**–**	–	**NATR 40 PP**	795	40	80	30	32	66	1,1	33	59	6,9	850
	–	–	**NATV 40 PP**	832	40	80	30	32	66	1,1	41	90	11,2	650
90	**–**	–	**NATR 50 PP**	867	50	90	30	32	76	1,1	32	59	6,9	650
	–	–	**NATV 50 PP**	969	50	90	30	32	76	1,1	40,5	93	11,6	550

1) Bearing with gap seals and a crowned radius of R = 500 mm.

2) Bearing with contact seals and the optimized INA profile.
Permissible operating temperature: –30 °C to +100 °C (continuous operation).

3) Speed with continuous operation and grease lubrication (see also *INA publication "LFR"*).

Needle stud type track rollers

with axial guidance

Features

Needle stud type track rollers with and without eccentric collar

- are complete units consisting of machined roller studs, thick-walled outer rings, axial washers and needle roller and cage assemblies or full complement needle roller sets
- can support high radial forces
- are protected from contamination and water spray by lip seals or gap seals on both sides
- have, in the versions with contact seals, a plastic axial plain washer with an integral lip seal between the axial washer and axial flange on both sides. This means that:
  - running behaviour under angular misalignment and axial contact is improved
  - effective sealing is ensured.
- are lubricated with lithium complex soap grease in accordance with DIN 51 825–KP2N–25
- can be relubricated via the roller stud
  - with the exception of KR 16 PP SK and KR 19 PP SK
- are easy to fit due to a thread on the end of the roller stud and hexagonal socket on both sides
  - KR 16 PP SK and KR 19 PP SK have a hexagonal socket only on the flanged side of the roller stud
- conform to the draft standard ISO/CD 7 063.

Stud type track rollers with eccentric collar

- can be matched to the raceway of the adjacent construction by adjustment of the outer ring outside surface. This means that:
  - load distribution is improved when several stud type track rollers are used
  - preloaded linear systems are possible.

Profile of the outer ring outside surface

Stud type track rollers of series KR have a crowned radius of R = 500 mm.

Stud type track rollers of series KR..PP, KR..PP SK, KRE..PP and KRV..PP have the optimized INA profile as standard.

With these stud type track rollers:

- the Hertzian pressure is lower
- edge loading is reduced under tilted running
- wear of the mating track is reduced
- the operating life of the mating track is longer.

Needle stud type track rollers with/without eccentric collar

KR

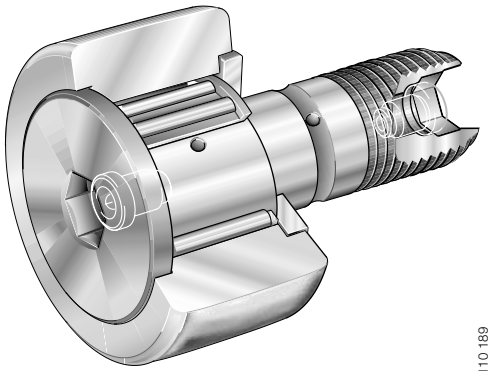

- with cage
- axial guidance of the outer ring by axial washer and axial flange
- gap seals on both sides
- outside diameter from 16 mm to 40 mm

KRV..PP

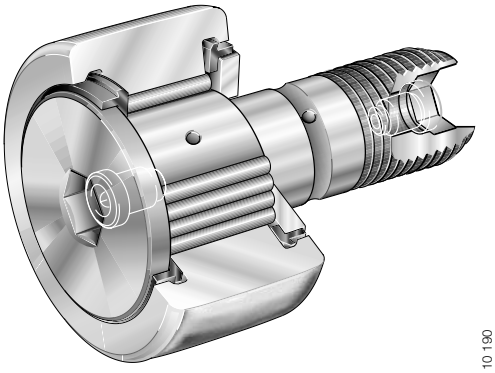

- full complement
- optimized INA profile
- axial guidance of the outer ring by axial washer, axial flange and axial plain washer
- contact seals on both sides
- for operating temperatures from –30 °C to +100 °C
- outside diameter from 16 mm to 90 mm

KR..PP

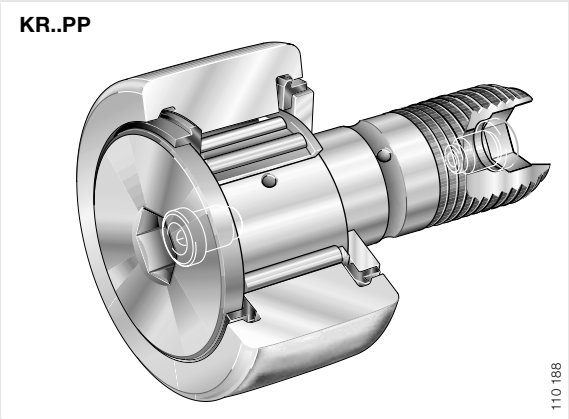

- with cage
- optimized INA profile
- axial guidance of the outer ring by axial washer, axial flange and axial plain washer
- contact seals on both sides
- for operating temperatures from –30 °C to +100 °C
- outside diameter from 16 mm to 90 mm

KRE..PP

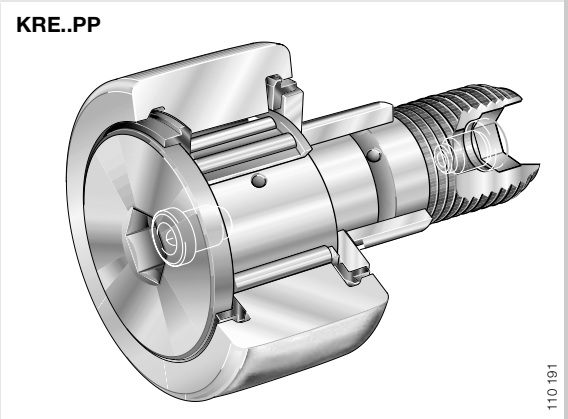

- with cage, roller stud with eccentric collar
- optimized INA profile
- axial guidance of the outer ring by axial washer, axial flange and axial plain washer
- contact seals on both sides
- for operating temperatures from –30 °C to +100 °C
- outside diameter from 16 mm to 90 mm

KR..PP SK

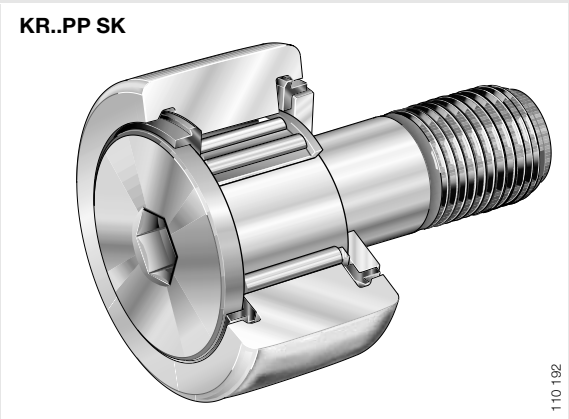

- with cage, hexagonal socket only on flanged side
- optimized INA profile
- axial guidance of the outer ring by axial washer, axial flange and axial plain washer, no relubrication facility
- contact seals on both sides
- for operating temperatures from –30 °C to +100 °C
- outside diameter 16 mm and 19 mm

Needle stud type track rollers

with axial guidance

Series KR
KR..PP
KR..PP SK
KRE..PP
KRV..PP

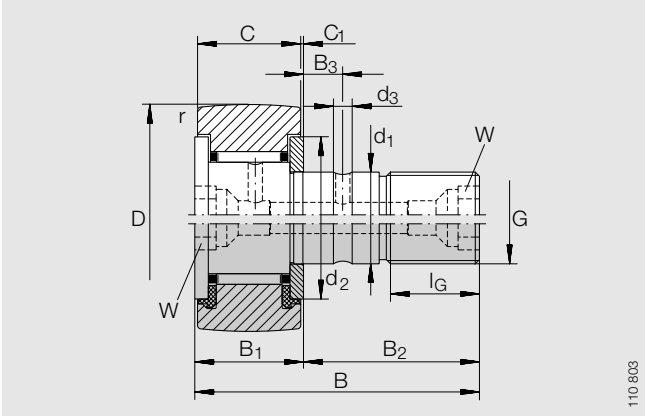

KR (R = 500 mm)
KR..PP (optimized INA profile) from D = 22 mm

Dimension table · Dimensions in mm

Outside diameter	Designation	Mass ≈ g	With eccentric collar Designation	Mass ≈ g	Dimensions D	d_1 h7	C	r min.	B	B_1 max.	B_2	B_3	C_1	d_2	d_3
16	**KR 16[4]**	19	**–**	–	16	6	11	0,15	28	12,2	16	–	0,6	12,5	–
	KR 16 PP[4]	18	**KRE 16 PP[4]**	20	16	6	11	0,15	28	12,2	16	–	0,6	12,5	–
	KR 16 PP SK[5]	19	**–**	–	16	6	11	0,15	28	12,2	16	–	0,6	12,5	–
	KRV 16 PP[4]	19	**–**	–	16	6	11	0,15	28	12,2	16	–	0,6	12,5	–
19	**KR 19[4]**	29	**–**	–	19	8	11	0,15	32	12,2	20	–	0,6	15	–
	KR 19 PP[4]	29	**KRE 19 PP[4]**	32	19	8	11	0,15	32	12,2	20	–	0,6	15	–
	KR 19 PP SK[5]	29	**–**	–	19	8	11	0,15	32	12,2	20	–	0,6	15	–
	KRV 19 PP[4]	31	**–**	–	19	8	11	0,15	32	12,2	20	–	0,6	15	–
22	**KR 22**	45	**–**	–	22	10	12	0,3	36	13,2	23	–	0,6	17,5	–
	KR 22 PP	43	**KRE 22 PP**	47	22	10	12	0,3	36	13,2	23	–	0,6	17,5	–
	KRV 22 PP	45	**–**	–	22	10	12	0,3	36	13,2	23	–	0,6	17,5	–
26	**KR 26**	59	**–**	–	26	10	12	0,3	36	13,2	23	–	0,6	17,5	–
	KR 26 PP	57	**KRE 26 PP**	62	26	10	12	0,3	36	13,2	23	–	0,6	17,5	–
	KRV 26 PP	59	**–**	–	26	10	12	0,3	36	13,2	23	–	0,6	17,5	–
30	**KR 30**	92	**–**	–	30	12	14	0,6	40	15,2	25	6	0,6	23	3
	KR 30 PP	88	**KRE 30 PP**	93	30	12	14	0,6	40	15,2	25	6	0,6	23	3
	KRV 30 PP	91	**–**	–	30	12	14	0,6	40	15,2	25	6	0,6	23	3
32	**KR 32**	103	**–**	–	32	12	14	0,6	40	15,2	25	6	0,6	23	3
	KR 32 PP	98	**KRE 32 PP**	104	32	12	14	0,6	40	15,2	25	6	0,6	23	3
	KRV 32 PP	101	**–**	–	32	12	14	0,6	40	15,2	25	6	0,6	23	3

Bearing with contact seals (design code PP): permissible operating temperature –30 °C to +100 °C (continuous operation).

1) Drive-fit lubrication nipples are supplied loose.

⚠ Only the lubrication nipples supplied should be used!

2) Nominal dimension for hexagonal socket.

3) Speed with continuous operation and grease lubrication (see *INA publication "LFR"*).

4) Relubrication hole only on the flange-side end face.

5) Hexagonal socket only on the flange-side end face. No relubrication facility.

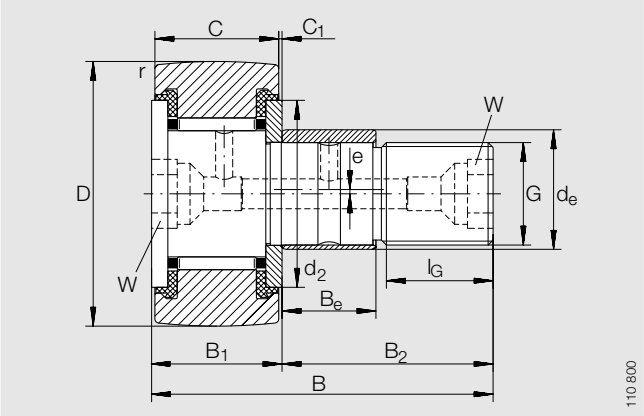

KRE..PP (optimized INA profile) from D = 22 mm

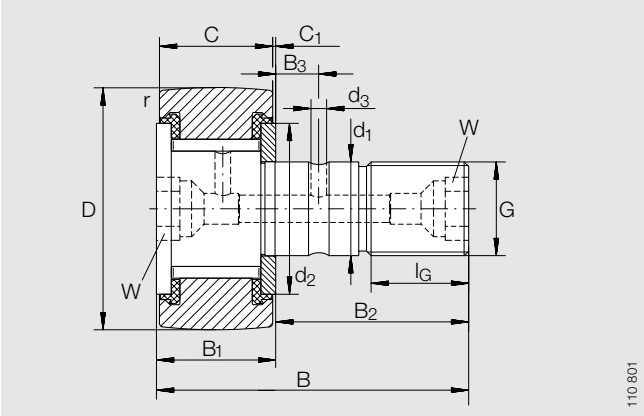

KRV..PP (optimized INA profile) from D = 22 mm

						Drive-fit lubrication nipple[1)]	Nut tightening torque	Basic load ratings		Fatigue limit load	Speed[3)]	Outside diameter
G	l_G	W[2)]	Eccentric collar				M_A	dyn.	stat.	$P_{uw\,r}$	$n_{D\,G}$	
			d_e h9	B_e	e		Nm	$C_{w\,r}$ kN	$C_{0w\,r}$ kN	kN	min^{-1}	
M6 (×1)	8	–	–	–	–	NIP A1	3	3,15	3,3	0,41	14 000	***16***
M6 (×1)	8	–	9	7	0,5	NIP A1	3	3,15	3,3	0,41	14 000	
M6 (×1)	8	4	–	–	–	–	3	3,15	3,3	0,41	14 000	
M6 (×1)	8	–	–	–	–	NIP A1	3	4,85	6,5	0,85	3 800	
M8 (×1,25)	10	–	–	–	–	NIP A1	8	3,5	3,9	0,485	11 000	***19***
M8 (×1,25)	10	–	11	9	0,5	NIP A1	8	3,5	3,9	0,485	11 000	
M8 (×1,25)	10	4	–	–	–	–	8	3,5	3,9	0,485	11 000	
M8 (×1,25)	10	–	–	–	–	NIP A1	8	5,5	7,9	1,03	3 100	
M10×1	12	5	–	–	–	NIP A1×4,5	15	4,45	5,2	0,65	8 000	***22***
M10×1	12	5	13	10	0,5	NIP A1×4,5	15	4,45	5,2	0,65	8 000	
M10×1	12	5	–	–	–	NIP A1×4,5	15	6,3	9,1	1,09	2 600	
M10×1	12	5	–	–	–	NIP A1×4,5	15	5,1	6,2	0,77	8 000	***26***
M10×1	12	5	13	10	0,5	NIP A1×4,5	15	5,1	6,2	0,77	8 000	
M10×1	12	5	–	–	–	NIP A1×4,5	15	7,3	11,3	1,36	2 600	
M12×1,5	13	6	–	–	–	NIP A1×4,5	22	6,8	8,4	1,07	5 500	***30***
M12×1,5	13	6	15	11	0,5	NIP A1×4,5	22	6,8	8,4	1,07	5 500	
M12×1,5	13	6	–	–	–	NIP A1×4,5	22	9,5	14,6	1,82	2 100	
M12×1,5	13	6	–	–	–	NIP A1×4,5	22	7,1	9	1,14	5 500	***32***
M12×1,5	13	6	15	11	0,5	NIP A1×4,5	22	7,1	9	1,14	5 500	
M12×1,5	13	6	–	–	–	NIP A1×4,5	22	10	15,8	1,97	2 100	

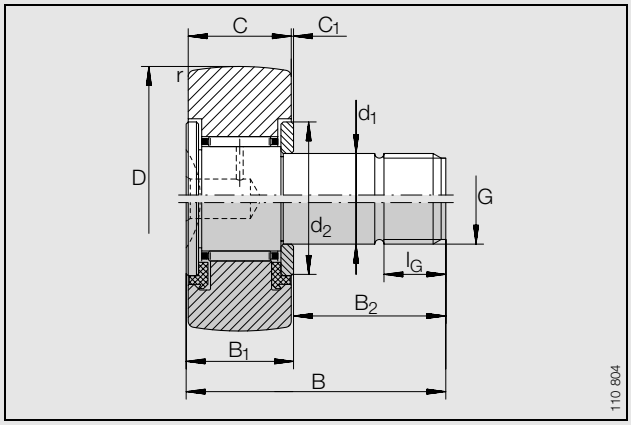

KR 16, KR 19
KR 16 PP, KR 19 PP

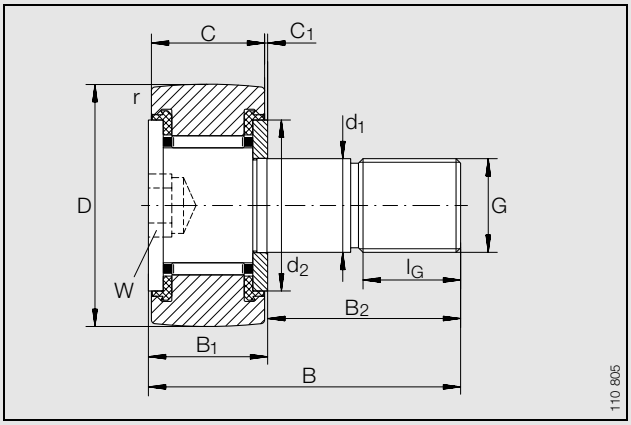

KR 16 PP SK, KR 19 PP SK

Needle stud type track rollers

with axial guidance

Series KR
KR..PP
KRE..PP
KRV..PP

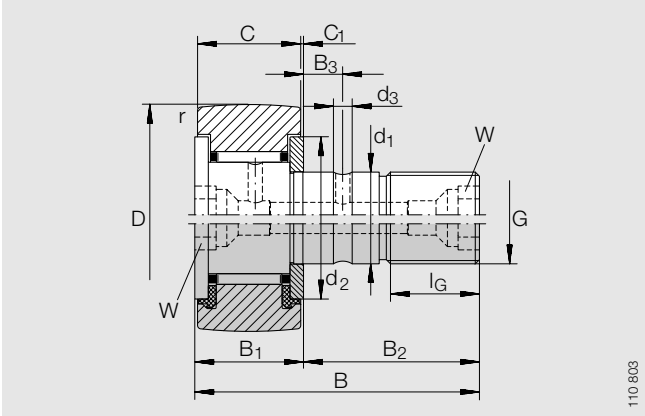

KR (R = 500 mm)
KR..PP (optimized INA profile)

Dimension table · Dimensions in mm

Outside diameter	Designation	Mass ≈ g	With eccentric collar Designation	Mass ≈ g	Dimensions D	d_1 h7	C	r min.	B	B_1 max.	B_2	B_3	C_1	d_2	d_3
35	**KR 35**	173	**–**	–	35	16	18	0,6	52	19,6	32,5	8	0,8	27,6	3
	KR 35 PP	164	**KRE 35 PP**	177	35	16	18	0,6	52	19,6	32,5	8	0,8	27,6	3
	KRV 35 PP	166	**–**	–	35	16	18	0,6	52	19,6	32,5	8	0,8	27,6	3
40	**KR 40**	247	**–**	–	40	18	20	1	58	21,6	36,5	8	0,8	31,5	3
	KR 40 PP	239	**KRE 40 PP**	255	40	18	20	1	58	21,6	36,5	8	0,8	31,5	3
	KRV 40 PP	247	**–**	–	40	18	20	1	58	21,6	36,5	8	0,8	31,5	3
47	**KR 47 PP**	381	**KRE 47 PP**	400	47	20	24	1	66	25,6	40,5	9	0,8	36,5	4
	KRV 47 PP	390	**–**	–	47	20	24	1	66	25,6	40,5	9	0,8	36,5	4
52	**KR 52 PP**	454	**KRE 52 PP**	473	52	20	24	1	66	25,6	40,5	9	0,8	36,5	4
	KRV 52 PP	463	**–**	–	52	20	24	1	66	25,6	40,5	9	0,8	36,5	4
62	**KR 62 PP**	770	**KRE 62 PP**	798	62	24	29	1	80	30,6	49,5	11	0,8	44	4
	KRV 62 PP	787	**–**	–	62	24	29	1	80	30,6	49,5	11	0,8	44	4
72	**KR 72 PP**	1010	**KRE 72 PP**	1 038	72	24	29	1,1	80	30,6	49,5	11	0,8	44	4
	KRV 72 PP	1027	**–**	–	72	24	29	1,1	80	30,6	49,5	11	0,8	44	4
80	**KR 80 PP**	1608	**KRE 80 PP**	1 665	80	30	35	1,1	100	37	63	15	1	53	4
	KRV 80 PP	1636	**–**	–	80	30	35	1,1	100	37	63	15	1	53	4
90	**KR 90 PP**	1975	**KRE 90 PP**	2 032	90	30	35	1,1	100	37	63	15	1	53	4
	KRV 90 PP	2003	**–**	–	90	30	35	1,1	100	37	63	15	1	53	4

Bearing with contact seals (design code PP): permissible operating temperature –30 °C to +100 °C (continuous operation).

1) Drive-fit lubrication nipples are supplied loose.

⚠ Only the lubrication nipples supplied should be used!

2) Special accessory: central lubrication adapter for connection to a central lubrication system.
Please note the information in *INA Technical Product Information TPI 101*!

3) Speed with continuous operation and grease lubrication (see *INA publication "LFR"*).

4) Nominal dimension for hexagonal socket.

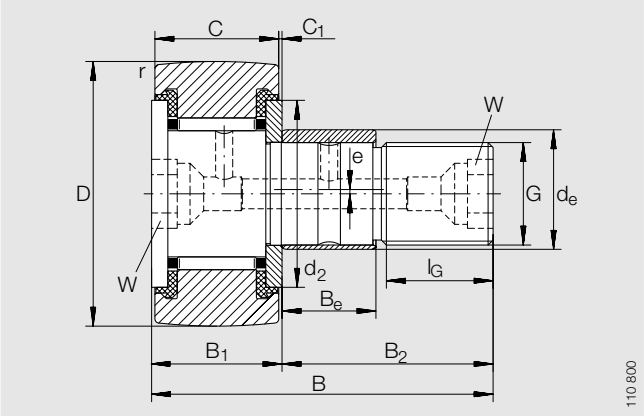

KRE..PP (optimized INA profile)

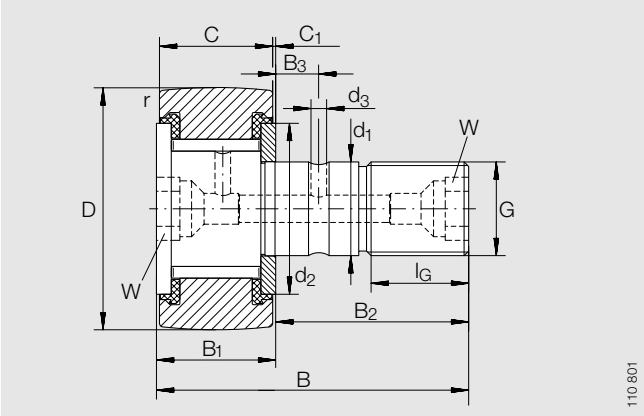

KRV..PP (optimized INA profile)

						Drive-fit lubrication nipple[1)]	Central lubrication adapter[2)]	Nut tightening torque	Basic load ratings		Fatigue limit load	Speed[3)]	Outside diameter
G	l_G	W[4)]	Eccentric collar					M_A	dyn.	stat.	$P_{uw\,r}$	$n_{D\,G}$	
			d_e h9	B_e	e			Nm	$C_{w\,r}$ kN	$C_{0w\,r}$ kN	kN	min^{-1}	
M16×1,5	17	8	–	–	–	NIP A2×7,5	AP 8	58	9,7	14,1	1,68	3 600	***35***
M16×1,5	17	8	20	14	1	NIP A2×7,5	AP 8	58	9,7	14,1	1,68	3 600	
M16×1,5	17	8	–	–	–	NIP A2×7,5	AP 8	58	12,8	23	2,9	1 600	
M18×1,5	19	8	–	–	–	NIP A2×7,5	AP 8	87	10,9	15,5	1,83	2 900	***40***
M18×1,5	19	8	22	16	1	NIP A2×7,5	AP 8	87	10,9	15,5	1,83	2 900	
M18×1,5	19	8	–	–	–	NIP A2×7,5	AP 8	87	14,8	26,5	3	1 400	
M20×1,5	21	10	24	18	1	NIP A2×7,5	AP 10	120	15,5	25,5	3	2 400	***47***
M20×1,5	21	10	–	–	–	NIP A2×7,5	AP 10	120	20,6	42	5,2	1 300	
M20×1,5	21	10	24	18	1	NIP A2×7,5	AP 10	120	16,8	29	3,4	2 400	***52***
M20×1,5	21	10	–	–	–	NIP A2×7,5	AP 10	120	22,5	48	5,9	1 300	
M24×1,5	25	14	28	22	1	NIP A3×9,5	AP 14	220	26,5	47,5	6,1	1 900	***62***
M24×1,5	25	14	–	–	–	NIP A3×9,5	AP 14	220	34	76	9,9	1 100	
M24×1,5	25	14	28	22	1	NIP A3×9,5	AP 14	220	28	53	6,7	1 900	***72***
M24×1,5	25	14	–	–	–	NIP A3×9,5	AP 14	220	37	85	11,1	1 100	
M30×1,5	32	14	35	29	1,5	NIP A3×9,5	AP 14	450	39,5	77	9,7	1 300	***80***
M30×1,5	32	14	–	–	–	NIP A3×9,5	AP 14	450	49,5	120	15,6	850	
M30×1,5	32	14	35	29	1,5	NIP A3×9,5	AP 14	450	41,5	83	10,5	1 300	***90***
M30×1,5	32	14	–	–	–	NIP A3×9,5	AP 14	450	53	130	16,9	850	

INA Bearing Company Ltd

Forge Lane, Minworth · Sutton Coldfield
West Midlands · B76 1AP
Telephone: 0121 351 3833
Fax: 0121 351 7686
Website: www.ina.co.uk
E-mail: ina.bearing@ina.co.uk

Sach-Nr. 004-228-189/TPI 108 GB-GB 09002 ○