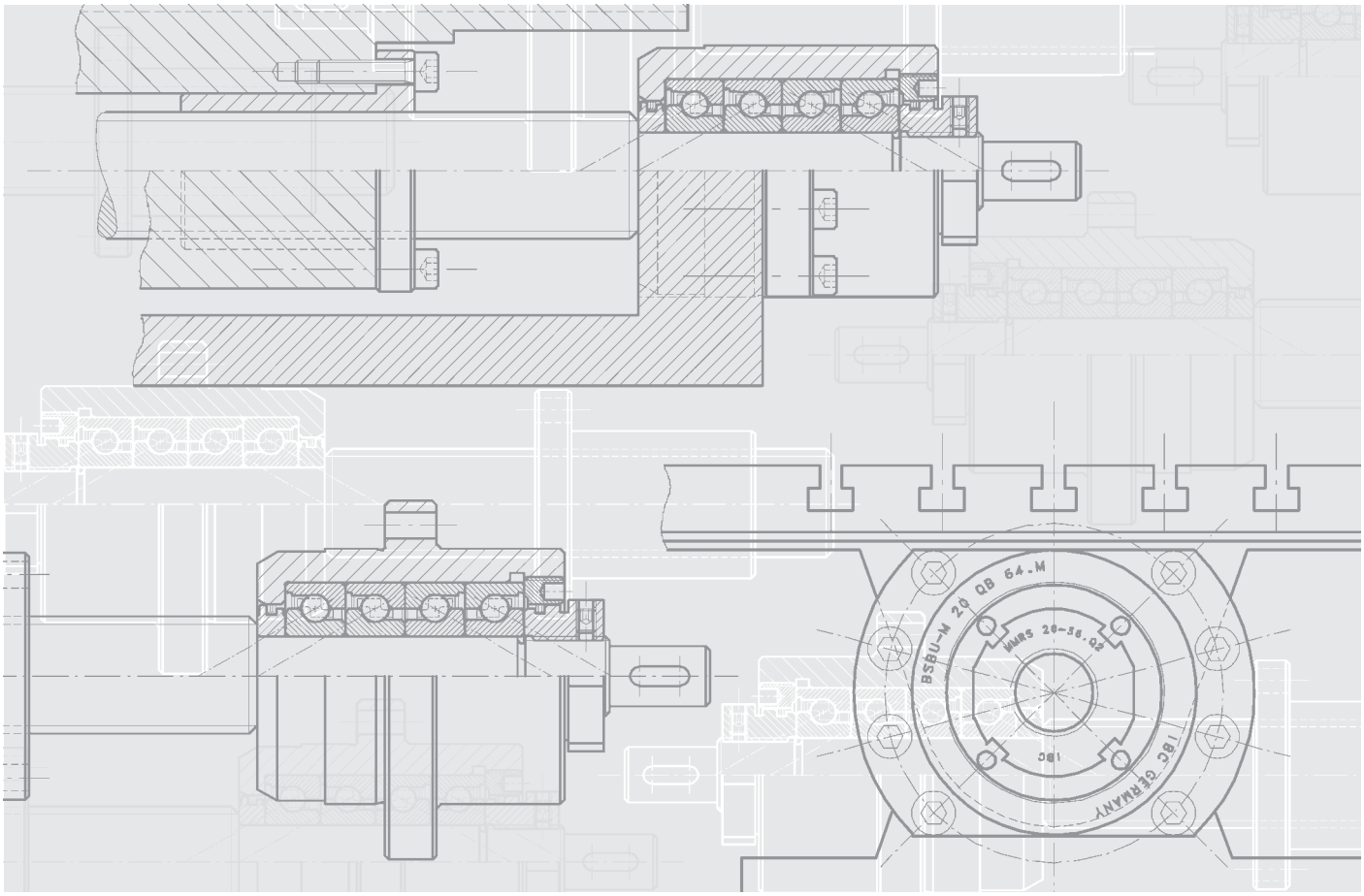

Ball Screw Support Bearings

60° Angular Contact Bearings

Precision Bearing Units · Precision Locknuts

TI-I-5010.2 / E

Headquarter of the IBC Wälzlager GmbH at the industrial area of Solms-Oberbiel

Location with Tradition

The headquarters in Solms-Oberbiel is centrally located in Germany close to the North/South and East/West highways which also provides fo a central location in Europe. The international Airport Frankfurt approx. 80 km away serves as a worldwide link.

Flexible and Reliable

In the middle of 1996 we opened the central computer controlled high shelf warehouse with more than 2.000 pallet places. It is used for finsihed and semi-finished products as well as for large bearings. This is in addition to our existing two-storage computer controlled service warehouse also with more than 2.500 storage places.

Both warehouse systems provide together with our distribution centre and communication network precise logistics and a worldwide unequaled reliability.

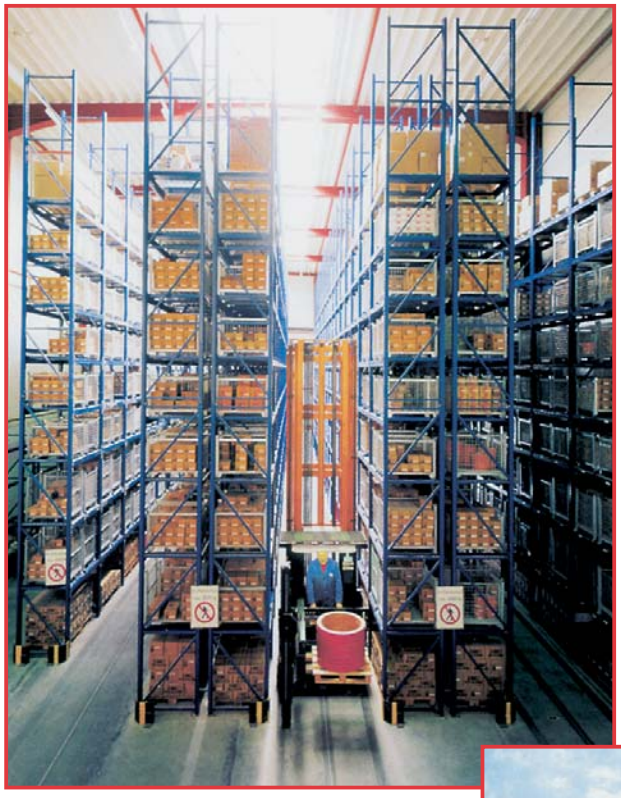

Central Computer Controlled High Shelf Warehouse – Middle 1996

Precise Logistics provide an unequaled worldwide reliability

Precision with Future

We are future orientated.
We have the creativity and vision to perform and provide.
This is our exact presentation to solutions with precision.

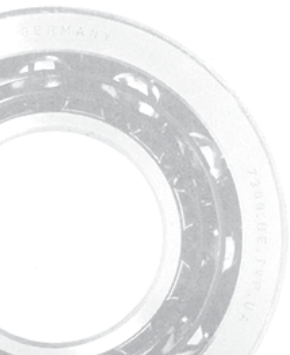

Table of Contents

			Page
1.	**Range of IBC Precision Products for Support of Ball Screws**		4
2.	**Definition of Bearing Size**		4
2.1	Capacity and Life Time		4
2.2	Selection of Preload, Axial Stiffness		6

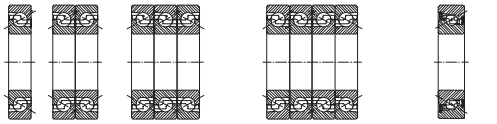

BS... BS...2RSZ...

3.	**Super Precision 60° - Angular Contact Thrust Ball Bearings**	BS	7
3.1	Designation		7
3.2	Dimensional Tables		8
3.3	Tolerances of Bearings		10
3.4	Recommended Fits		10
3.5	Tolerances of Adjacent Parts		11

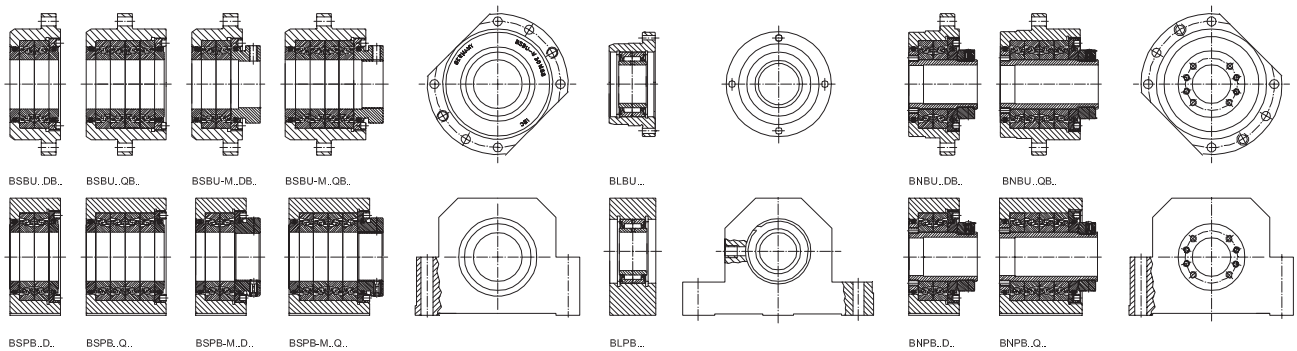

BSBU..DB.. BSBU..QB.. BSBU-M..DB.. BSBU-M..QB.. BLBU... BNBU..DB.. BNBU..QB..

BSPB..D.. BSPB..Q.. BSPB-M..D.. BSPB-M..Q.. BLPB... BNPB..D.. BNPB..Q..

4.	**High Precision Bearing Units, Criteria of Selection**		12
4.1	Designation		15
4.2	High Precision Flange Units	BSBU, BSBU-M	16
4.3	High Precision Pillow Block Units	BSPB, BSPB-M	18
4.4	High Precision Flange Units for Ball Screw Nuts	BNBU	20
4.5	High Precision Pillow Block Units for Ball Screw Nuts	BNPB	21
4.6	Technical Data Table		22
4.7	High Precision Floating End Units	BLPB, BLBU	23
4.8	Mounting dimensions for Ball Screw Spindles		24
4.9	Criteria for Arrangements of Bearings at Ball Screws		25

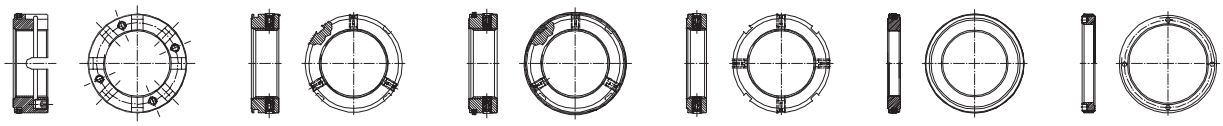

MBA MBAS MMRB MMRBS MMRS MMR MMR-Q S MD

5.	**Precision Accessories**		27
5.1	Precision Labyrinth Locknuts	MMRS	28
5.2	Labyrinth-Seals and Seal-Nuts	S, MD	29
5.3	Precision Locknuts	MBA, MBAS, MMA, MMR, MMRB, MMRBS	30
5.4	Pretension of Spindles with Precision Locknuts		32

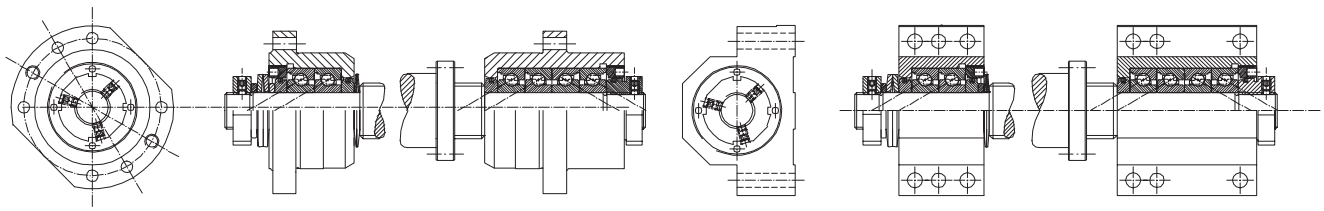

6.	**Drawings for Inquiries for Fixed End and Floating End Units**		33
7.	**Alpha-Numerical Product Directory**		34
8.	**Glossary (Materials)**		34
8.1	Material		34
8.2	Grease		34

1. Overview

Range of IBC Precision Products for Support of Ball Screws
Fields of application of 60° super precision angular contact ball bearings and units:
Rigid but fairly low-friction assembly of ball screws or satellite screws for conversion of rotary movement into linear movement (among others, also in worm gears for rotating tables or in tailstocks).
In particular 60° precision angular contact ball bearings are used for machine tools or machines and devices with similar high requirements regarding precision, speed but also rigidity and a lower friction behaviour and thus a less heating up of the bearings or components.

Advantages
Of course easy assembly, a long life time, the option of lifetime lubrication or circulating oil lubrication, as sometimes employed for driven ball screw nuts are other features which should be adjusted to match each other optimally. Next to the open 60° bearings, several sizes are manufactured with a non-contact rubber seal at both ends.

High axial loads
Whereas contact ball bearings with small contact angles of 15°, 25° mainly absorb radial loads and only qualified axial loads, the ratio is different in case of 60° super precision angular contact thrust ball bearings because the axial load is to be predominated here.

Different preloads
Depending on the required rotational speeds and rigidity, it is possible to choose between light, medium and heavy preload.

Rotational speeds
If required, the steel balls are replaced by ceramic balls to achieve a 35 % increase in rotational speed.

Precision bearing units
For 20 years IBC Wälzlager GmbH has been mounting open bearings into housings with labyrinth seals. Two series for driven spindles and driven nuts have turned out to be the most effective:
a) Cartridge Units with Flanged Housing
b) Pillow Block Units
The cartridge units with integrated labyrinth seal and lifetime lubrication have been revised and designed to allow for easier mounting. The seat diameter was enlarged to be able to slide a pre-assembled module (ball screw with it's nut + bearing unit, if applicable) through the attachment bore of the unit. This proved to be helpful for maintenance.

Standard models and options
The units are available as standard, duplex and quadruplex units with lifetime lubrication. The DB duplex units, which are flattened on both sides can also be provided as DT tandem unit for applications with longer spindles and a second bearing side (see page 33). The matching disc springs and spacers for preloading or a slight stretching of the spindle are part of the delivery.
Quadruplex units are mainly mounted in QBC tandem-O-tandem arrangements but can also be delivered in a QBT arrangement, i.e. 3:1 stacking of the bearings (of interest for vertical axes with a preferred direction of load). If required by the customer, additional attachment bores, e.g. for bellows of the ball screw or additional centring locations for direct flange mounted servo motor mounts can be integrated.

Securable precision locknuts and labyrinth seals for preloading of the bearings (units) complete the product range.

2. Designation of Bearing Size – Lifetime calculation

2.1 Load carrying capacity and lifetime

For calculation of lifetime according to DIN ISO 281, the shares of radial and axial load are summarized using the following equations for dynamic-equivalent (axial) load $P_{(a)}$ and static-equivalent (axial) load $P_{(ao)}$

$$P_a = X \cdot Fr + Y \cdot Fa \qquad [2.2]$$

$$P_{ao} = X_o \cdot Fr + Y_o \cdot Fa \qquad [2.3]$$

For individual bearings and tandem arrangement, ØØ or multiple arrangements in one direction.						Individual bearing in X or or O arrangements or double row bearings ⦶Ø or Ø⦶					
$\frac{Fa}{Fr} \leq 2{,}17$		$\frac{Fa}{Fr} > 2{,}17$				$\frac{Fa}{Fr} \leq 2{,}17$		$\frac{Fa}{Fr} > 2{,}17$			
X	Y	X	Y	X_o	Y_o	X	Y	X	Y	X_o	Y_o
not appropr.		0.92	1	4	1	1.9	0.55	0.92	1	1	0.58

Table 2.1: Radial and axial load factors X, Y, X_o, Y_o

Bearing combinations
The dynamic axial load rating of several similar single-row 60° super precision angular contact thrust ball bearings with load in the same direction is calculated as follows:

$$C_{aSet} = i^{0,7} \cdot C_{aSingle\ bearing} \qquad [2.4]$$

$$C_{aoSet} = i \cdot C_{aoSingle\ bearing} \qquad [2.5]$$

Static safety factor: $S_{ao}=C_{ao}/P_{ao}$ (chose $S_{ao} > 2{,}5$) [2.6]

P_a	[N]	Dynamic equivalent axial load (60° bearings)
$P_{(r)o}$	[N]	Static equivalent radial load
P_{ao}	[N]	Static equivalent axial load (60° bearings)
F_r	[N]	Radial component of load
F_a	[N]	Axial component of load
X, X_o		Radial factor of bearings, Table 2.1
Y, Y_o		Axial factor of bearings, Table 2.1

In case of bearing sets with a bearing number i which is larger than two and a rigid preload Fv, the life time per single bearing should be calculated as follows:

Life Time Calculation

Direction of load	Mounting arrangement		Direction of load	Unloading starting at Fae > X · Fv	Load distribution relative to single bearing (F_{aE}) Until unloading for Fae < X · Fv		After unloading for Fae > X · Fv	
	A	B		X	A	B	A	B
Fae -->	<	>		2.83	Fv + 0.67 Fae [2.8]	Fv – 0.33 Fae [2.9]	Fae	0
Fae -->	< <	>		5.66	0.84 Fv + 0.47 Fae [2.10]	1.36 Fv – 0.24 Fae [2.11]	0.617 Fae	0
	< <	>	<-- Fae	2.83	0.84 Fv – 0.30 Fae [2.12]	1.36 Fv + 0.52 Fae [2.13]	0	Fae
Fae -->	< < <	>		8.49	0.73 Fv + 0.38 Fae [2.14]	1.57 Fv – 0.18 Fae [2.15]	0.463 Fae	0
	< < <	>	<-- Fae	2.83	0.73 Fv – 0.26 Fae [2.16]	1.57 Fv + 0.45 Fae [2.17]	0	Fae
Fae -->	< < < <	>		11.30	0.65 Fv + 0.32 Fae [2.18]	1.71 Fv – 0.15 Fae [2.19]	0.379 Fae	0
	< < < <	>	<-- Fae	2.83	0.65 Fv – 0.23 Fae [2.20]	1.71 Fv + 0.45 Fae [2.21]	0	Fae
Fae -->	< <	> >		5.66	0.84 Fv + 0.40 Fae [2.22]	0.84 Fv – 0.22 Fae [2.23]	0.617 Fae	0
Fae -->	< < <	> >		8.49	1.12 Fv + 0.33 Fae [2.24]	1.49 Fv – 0.18 Fae [2.25]	0.463 Fae	0
	< < <	> >	<-- Fae	5.66	1.12 Fv – 0.20 Fae [2.26]	1.49 Fv + 0.35 Fae [2.27]	0	0.617 Fae
Fae -->	< < < <	> >		11.30	1.03 Fv + 0.29 Fae [2.28]	1.68 Fv – 0.15 Fae [2.29]	0.379 Fae	0
	< < < <	> >	<-- Fae	5.66	1.03 Fv – 0.18 Fae [2.30]	1.68 Fv + 0.33 Fae [2.31]	0	0.617 Fae

Table 2.2: Resulting axial load F_{aE} of the single bearing for different mounting arrangements as function of the applied preload Fv and the outer load Fae

a) Radial load is distributed among all bearings in the set. (Belt forces are mostly negligible).

$$F_{rE} = \frac{F_r}{i_{ges}^{0,7}}$$

iges Number of bearings per set [2.7]

i	2	3	4	5	6
$i^{0,7}$	1.62	2.12	2.64	3.09	3.51
$1/i^{0,7}$	0.617	0.463	0.379	0.324	0.285

b) The axial load in respect of a single bearing is obtained using the equations 2.8 to 2.31 according to table 2.2. Only the number of bearings in load direction can bear a specific share – in load counter-direction a different or no-share will be borne, having overcome preload X · Fv.

The equivalent load $P_{(a)}$ is determined according to the equation [2.2] using F_{rE} and F_{aE}

Regarding the axial bearing load, the outer load F_{aE} has to be taken into account in addition to the bearing preload Fv. As forces Fv and Fae are already provided for each single bearing in Table 2.2 and according to equation [2.8 through 2.31] the nominal life time is calculated using the basic load rating of the single bearing. In case of spindles, where different work may be performed in +/– axis direction it may be necessary to verify lifetime for both directions.

For spring preloaded bearings the following applies to the bearing (set) exposed to the larger load.

$$F_a = F_{Spring} + F_{ae} \qquad [2.32]$$

$$F_{a\ Single\ bearing} = \frac{1}{i^{0,7}} \cdot (F_{Spring} + F_{ae}) \qquad [2.33]$$

A load range consisting of different forces, rotational speeds and corresponding percentage of time results in a medium equivalent load P_{ma}:

$$P_{ma} = \sqrt[3]{\frac{P_1^3 \cdot t_1 \cdot n_1 + ... + P_n^3 \cdot t_n \cdot n_n}{n_m \cdot 100}} \qquad [2.34]$$

$$n_m = \frac{t_1 \cdot n_1 + ... + t_n \cdot n_n\ t_1}{100} \quad \text{bis } t_n \text{ in [\%]} \qquad [2.35]$$

P_1 .. P_n		equivalent load per load case
t_1 .. t_n	[%]	time component
n_1 .. n_n	[min^{-1}]	rotational speed
n_m	[min^{-1}]	medium rotational speed

Nominal life time L_{10}
For 90 % of the same type of bearings no fatique of material is appearing at that time.

$$L_{10} = \left(\frac{C_a}{P_{ma}}\right)^P \cdot \frac{1{,}000{,}000}{60 \cdot n} \text{ [h]} \qquad [2.37]$$

n	[min^{-1}]	rotational speed
C_a	[N]	dynamic load rating, axial, single bearing
P_{ma}	[N]	dynamic equivalent load, axial
p		life time exponential for ball bearings p = 3; for roller bearings p = 10/3

Modified lifetime L_{na} Special safety demands, alternative materials and operating conditions are taken into account in this context.

$$L_{na} = a_1 \cdot a_2 \cdot a_3 \cdot L_{10} \text{ [h]} \qquad [2.38]$$

a_1	life adjustment factor for reliability	
a_2	life adjustment factor for bearing material $a_2 = a_{2l} \cdot a_{2w}$	[2.39]
a_3	life adjustment factor for application conditions	

Reliability %	L_{na}	a_1
90	L_{10a}	1
95	L_{5a}	0,62
96	L_{4a}	0,53
97	L_{3a}	0,44
98	L_{2a}	0,33
99	L_{1a}	0,21

Raceway material	a_{21}	Rolling element material	a_{2w}
uncoated	1	100Cr6	1
IR & AR ATC	1,5	Si_3N_4 balls	2

a_2 life adjustment factor for special bearing material
When employing high-quality bearing steel such as 100Cr6 (1.3505) the a_2 life adjustment factor 1 for bearing material is commonly used. Surface coatings and using ceramic rolling elements (silicon nitride) are increasing the a_2 factor.

a_3 life adjustment factor for application conditions
Operating conditions such as adequateness of lubrication at operating speed and temperature, absolute cleanliness at the lubricating location or existing particles are influencing lifetime.

Life Time Calculation

The GH62 special grease with a basic oil viscosity of 150 mm^2/s at 40 °C and 18 mm^2/s at 100 °C has a good load behaviour and will always allow for an a_3 value >1 in case of clean conditions (see general catalogue). Having calculated the life of single bearings, that of sets, modules or units is calculated now.

Life time of modules:

$$L_{10\ unit} = \frac{1}{\left(\frac{i_{(A)}}{L_{10(A)}^{1.11}} + \frac{i_{(B)}}{L_{10(B)}^{1.11}}\right)^{0,9}} \text{ [h]} \qquad [2.39]$$

$i_{(A)}$: number of bearings in the same direction, mounting arrangement A
$i_{(B)}$: number of bearings in opposite direction, mounting arrangement B
$L_{10(A)}$: lifetime of bearings A
$L_{10(B)}$: lifetime of bearings B

Note:
The general reduction of the dynamic set load rating on page 22 according to [2.4] for the bearing units consisting of four bearings – two per direction – in accordance with DIN ISO 281 to the value $i^{0.7}$ x C_a, that is to $2^{0.7}$= 1.62 C_a in this case, is linked with the following assumption: bearings with normal tolerances have slightly deviating bore and outer diameters within a set and thus varying load shares.
The bearings shown in this catalogue, however, are manufactured to the stricter tolerances of P4A or P2H and thus provide a certain guarantee for an even load behaviour. (Since the forces have been multiplied by the value $1/i^{0.7}$ in accordance with the equations [2.7] and table 2.2, the load rating C_a of the single bearing according to p. 8 has to be used. If the type is not known, the load rating of the quadruplex set can be divided by 1.62 to obtain the C_a of the single bearing).

2.2 Selection of preloads – axial stiffness and unloading factors in comparison

Operating the rolling elements with at least a minimum preload prevents an uneven wear of the balls. This wear is caused by a partial sliding instead of rolling of the balls with clearance in the no-load range between the bearing rings and the balls. In case of the O-arrangement (DB), starting at an outer axial load larger than 3 times the preload, the bearing facing away from the load becomes gradually unloaded. The balls in this bearing will start to slide with increasing load. (In case of the less frequently used X arrangement (DF), the bearing facing the load would be unloaded as load is applied to the inner ring.)

Relatively to the more frequently employed types of O arrangement, the X*Fv characteristic values for unloading the bearings which are not positioned directly in the flow of force, the axial stiffness factors in both load directions and the K_{Fv} preload factor for determination of the tightening torque of the nut are given (see page 27). (K_{Fv} does not take into account possible press fittings.) Bearing arrangements with a different number of bearings per direction result in a differing axial stiffness corresponding to the number of bearings in the respective direction.
Preload values Fv see page 9.

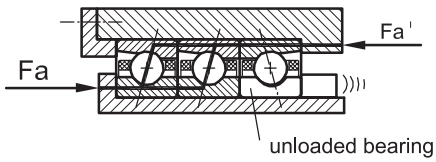

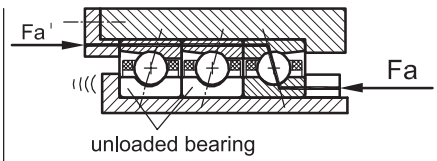

load in main direction Side A B	axial stiffness factor K_a	unloading from X·Fv	load in reverse order Side A B	axial stiffness factor K_a	unloading from X·Fv	pre-loading factor for fixing of lock-nuts K_{Fv}
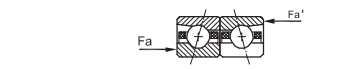	1	2,83	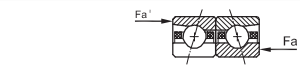	1	2,83	1
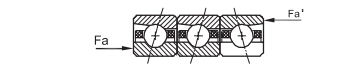	1,63	5,66	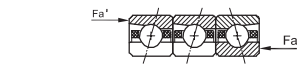	1,30	2,83	1,36
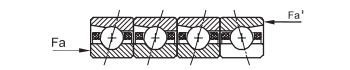	2,22	8,49	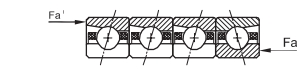	1,54	2,83	1,57
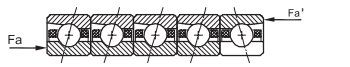	2,8	11,3	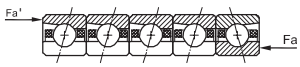	1,76	2,83	1,71
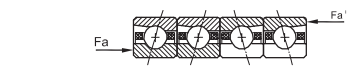	2	5,66	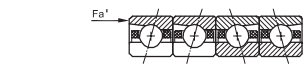	2	5,66	2
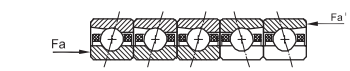	2,64	8,49	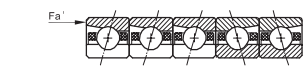	2,31	5,66	2,42
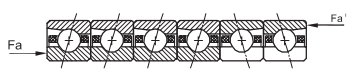	3,26	11,3	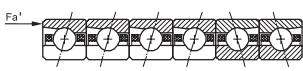	2,59	5,66	2,72

Picture 2.2: Comparison of axial stiffness of similar bearings, unloading factors and fixing factors of locknuts for different arrangements.

3. 60° Super Precision Angular Contact Thrust Ball Bearings

IBC angular contact thrust ball bearings have been developed to meet the demands of high thrust load for ball screw support application.
The large contact angle of 60° allows for high thrust load with high stiffness. The radial load should not extend 90 % of the preload.
As angular contact bearings can carry load only in one direction they therefore have to be adjusted to another bearing of the same kind.
The bearings are primarily supplied as single ones or in sets of 2 or 4 bearings to be mounted in back-to-back arrangements.
Angular contact thrust bearings are manufactured for universal matching, thus they can be rearranged and can be mounted in any arrangement.
As a standard single bearings have a medium or high preload, sets have a V-marking, single doesn't.

Precision grades: Bore and O.D. are manufactured to precision class P4A; axial run out S_d and S_{ia} are restricted to P2A (see page 10).

Preload
60°-Angular contact bearings are available with light, medium and high preload. They are apt for mounting in sets. For preloading we recommend the locknuts of series MMRB or MMRS (starting page 28). With tight fits the preload will be enhanced.

Material of rings and balls
Standard: bearing steel 100Cr6 (1.3505)

Options:
CB: ceramic Si_3N_4 with speed increase of 35 %
AC: rings thin dense chromium ATCoated (details to the option see page 34, glossary)

Cage: The one-piece glass fibre, reinforced polyamide cage is ball guided. As standard this is not designated. Themperature range –30 to 120 °C.

Lubrication:
The bearings are supplied with approved special greases as standard:
a) For lower and medium speed: with the high viscose BearLub GH62
b) For top speed range: with BearLub GN21. For this grease the speed limits are given in the data tables on page 9 and 22. For technical information on greases see page 34.
(Bearings with oil lubrication holes on request).

Sealing
Most of the bearings are supplied as open bearings and can be combined with labyrinth-seals of series S acc. to page 29.
The types on page 8 marked with + are also manufactured with non-touching seals .2RSZ.

3.1 Designation of IBC 60° Super Precision Angular Contact Ball Bearings

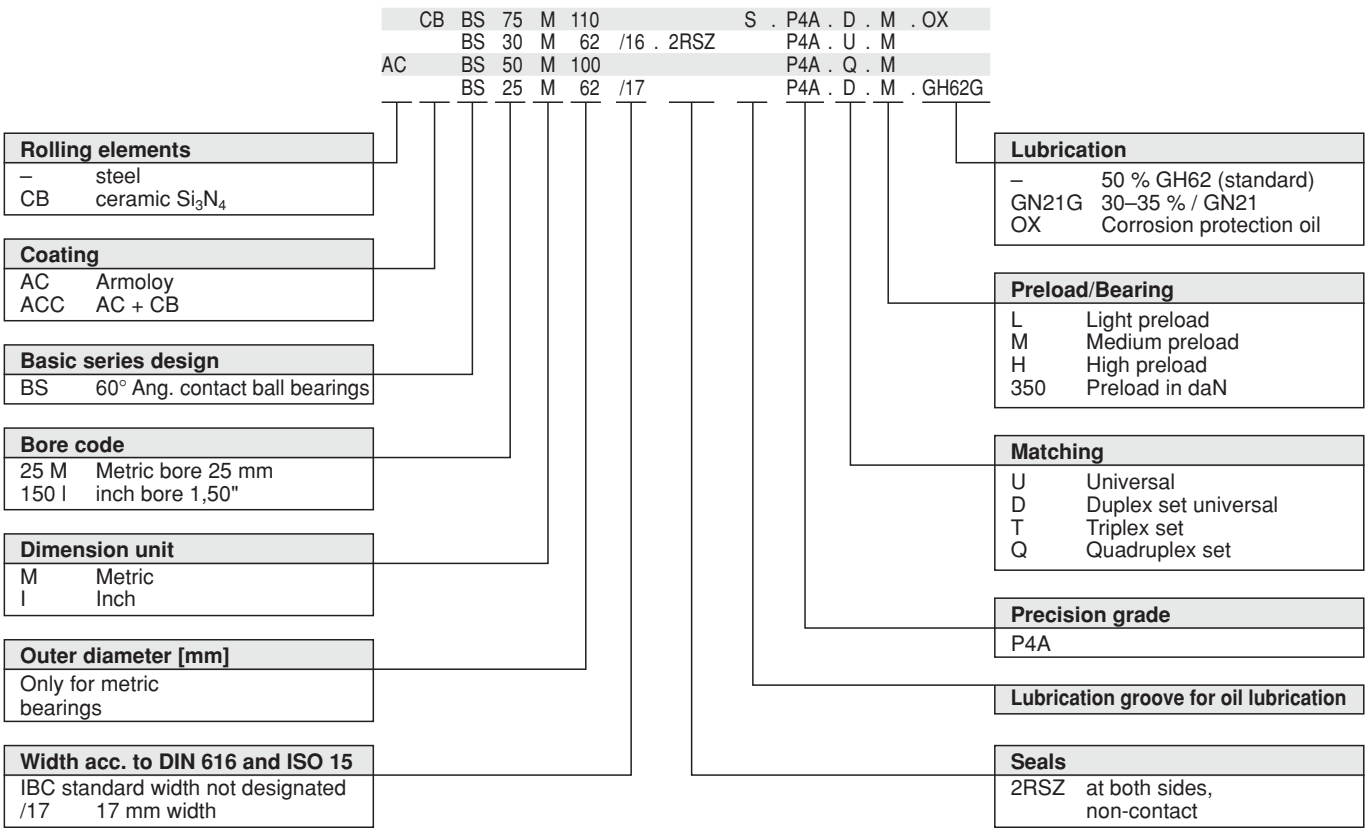

(not all combinations are possible)

54-901

3.2 Super Precision 60° Angular Contact Thrust Ball Bearings metric, inch

BS..

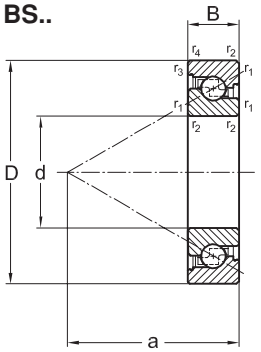

54-001 **BS..M..**

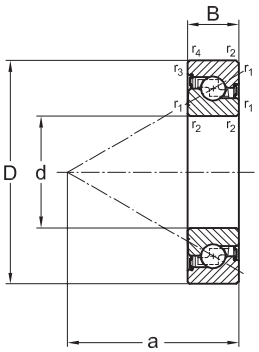

54-002 **BS..M...2RSZ**

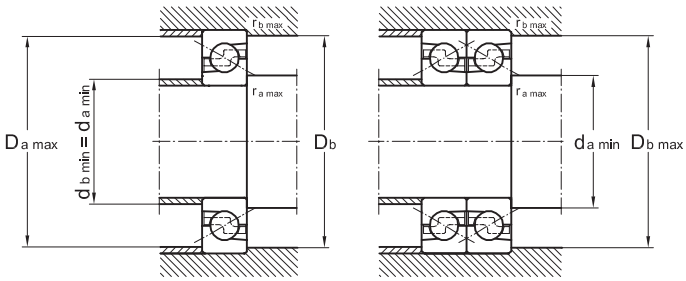

54-601

Dimensions d	D mm	B	$r_{1,2}$ min	r_{34} min	a ~	Basic bearing no.		Abutment and fillet dimensions r_{amax}	r_{bmax}	d_{amin} mm	D_{amax}	D_{bmax}	Basic load ratings C_a N	C_{oa}	Weight kg
17	47	15	0.6	0.6	36.5	**BS17M47**		1.0	0.6	26	38	40	25000	32100	0.13
20	47	14	0.6	0.6	36	**BS20M47/14***		1.0	0.6	28	38	40	25000	32100	0.14
20	47	15	0.6	0.6	36.5	**BS20M47**		1.0	0.6	28	38	40	25000	32100	0.14
25	52	15	1.0	0.6	39	**BS25M52**	+	1.0	0.6	34	44	45	26500	37000	0.22
25	62	15	1.0	0.6	46.5	**BS25M62**	+	1.0	0.6	34	52	54	29200	42800	0.27
25	62	17	1.0	0.6	47.5	**BS25M62/17***	+	1.0	0.6	34	52	54	29200	42800	0.27
30	62	15	1.0	0.6	46	**BS30M62**	+	1.0	0.6	38	52	54	29200	42800	0.25
30	62	16	1.0	0.6	47	**BS30M62/16***	+	1.0	0.6	38	52	54	29200	42800	0.25
30	72	15	1.0	0.6	56	**BS30M72**	+	1.0	0.6	39	63	64	35600	55000	0.32
30	72	19	1.0	0.6	58	**BS30M72/19***	+	1.0	0.6	39	63	64	35600	55000	0.32
35	72	15	1.0	0.6	56	**BS35M72**	+	1.0	0.6	43	63	64	35600	55000	0.29
35	72	17	1.0	0.6	57	**BS35M72/17***	+	1.0	0.6	43	63	64	35600	55000	0.34
35	100	20	1.0	0.6	75	**BS35M100**	+	1.0	0.6	47	86	89	70500	116000	1.05
40	72	15	1.0	0.6	56	**BS40M72**	+	1.0	0.6	48	63	64	35600	55000	0.28
40	90	20	1.0	0.6	71.5	**BS40M90**	+	1.0	0.6	49	80	82	59000	90000	0.64
40	90	23	1.0	0.6	73	**BS40M90/23***	+	1.0	0.6	49	80	82	59000	90000	0.72
40	100	20	1.0	0.6	75	**BS40M100**	+	1.0	0.6	49	86	89	70500	116000	1.00
45	75	15	1.0	0.6	60	**BS45M75**		1.0	0.6	53	65	67	37900	61400	0.29
45	100	20	1.0	0.6	75	**BS45M100**	+	1.0	0.6	54	86	89	70500	116000	0.95
50	90	20	1.0	0.6	71.5	**BS50M90**		1.0	0.6	59	80	82	59000	90000	0.60
50	100	20	1.0	0.6	75	**BS50M100**	+	1.0	0.6	59	86	89	70500	116000	0.89
55	90	15	1.0	0.6	73	**BS55M90**	+	1.0	0.6	64	78	81	40700	74400	0.42
55	100	20	1.0	0.6	75	**BS55M100**		1.0	0.6	65	86	89	70500	116000	0.71
55	120	20	1.0	0.6	88	**BS55M120**		1.0	0.6	65	106	108	80800	137000	1.43
60	120	20	1.0	0.6	88	**BS60M120**		1.0	0.6	70	100	108	80800	137000	1.36
75	110	15	1.0	0.6	89	**BS75M110**		1.0	0.6	85	98	100	44500	93800	0.48
100	150	22.5	1.0	0.6	118	**BS100M150**		1.0	0.6	114	135	137	86400	192000	1.00
127	180	22.225	1.0	0.6	143	**BS127M180**		1.0	0.6	140	165	168	85200	239300	1.24
20	47	15.875	1.0	0.6	38	**BS078 I**		1.0	0.6	28	38	40	25000	32100	0.14
23.838	62	15.875	1.0	0.6	50	**BS093 I**		1.0	0.6	32	52	54	29200	42800	0.25
38.100	72	15.875	1.0	0.6	56	**BS150 I**		1.0	0.6	46	62	64	35600	55000	0.28
44.475	76.2	15.875	1.0	0.6	60	**BS175 I**		1.0	0.6	52	66	68	37900	61400	0.30

* Should no more be used in new applications.

\+ with seals: suffix .2RSZ

Super Precision 60° Angular Contact Thrust Ball Bearings metric, inch

BS..

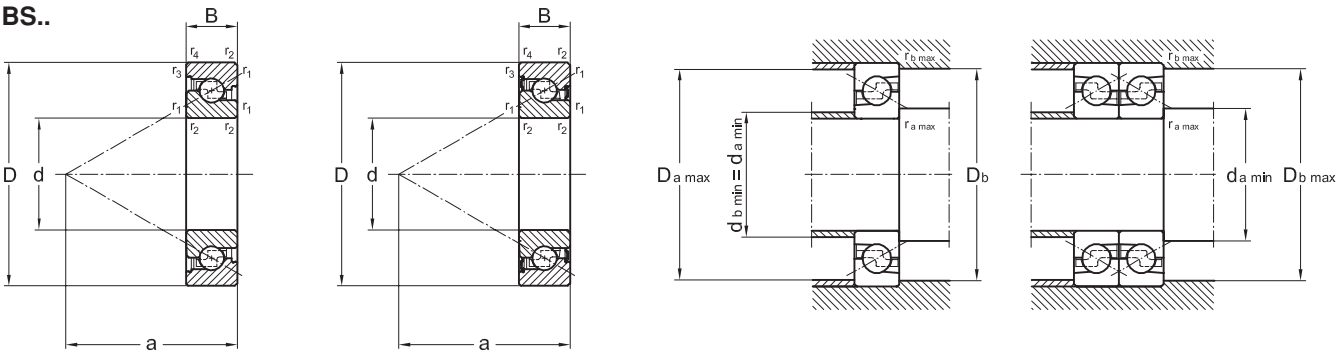

54-001 **BS..M..** 54-002 **BS..M...2RSZ** 54-601

d	Preload Fv			Axial stiffness S_{ax}*			Limiting speed (grease n_F**)			Drag torque M_r***		
	L	M	H	L	M	H	L	M	H	L	M	H
mm		N			N/µm			min^{-1}			Nm	
17	875	1750	3500	460	580	740	14300	12500	6200	0.04	0.08	0.16
20	875	1750	3500	460	580	740	14300	12500	6200	0.04	0.08	0.16
20	875	1750	3500	460	580	740	14300	12500	6200	0.04	0.08	0.16
25	1000	1900	3900	500	630	800	12500	10900	5400	0.05	0.07	0.18
25	1125	2250	4500	650	830	1050	10500	9100	4500	0.06	0.11	0.22
25	1125	2250	4500	650	830	1050	10500	9100	4500	0.06	0.11	0.22
30	1125	2250	4500	650	830	1050	10500	9100	4500	0.06	0.11	0.22
30	1125	2250	4500	650	830	1050	10500	9100	4500	0.06	0.11	0.22
30	1700	3400	6800	780	990	1260	8600	7500	3700	0.06	0.11	0.22
30	1700	3400	6800	780	990	1260	8600	7500	3700	0.06	0.11	0.22
35	1700	3400	6800	780	990	1260	8600	7500	3700	0.06	0.11	0.22
35	1700	3400	6800	780	990	1260	8600	7500	3700	0.06	0.11	0.22
35	3200	6400	12800	1090	1390	1760	6400	5600	2800	0.13	0.26	0.51
40	1700	3400	6800	780	990	1260	8600	7500	3700	0.06	0.11	0.22
40	2500	5000	10000	1035	1320	1680	6900	6000	3000	0.12	0.24	0.48
40	2500	5000	10000	1035	1320	1680	6900	6000	3000	0.12	0.24	0.48
40	3200	6400	12800	1090	1390	1760	6400	5600	2800	0.13	0.26	0.51
45	1700	3400	6800	890	1090	1390	8000	7000	3500	0.07	0.14	0.28
45	3200	6400	12800	1090	1390	1760	6400	5600	2800	0.13	0.26	0.51
50	2500	5000	10000	1035	1320	1680	6900	6000	3000	0.12	0.24	0.48
50	3200	6400	12800	1090	1390	1760	6400	5600	2800	0.13	0.26	0.51
55	1975	3950	7900	1030	1310	1660	6900	6000	3000	0.11	0.21	0.41
55	3200	6400	12800	1090	1390	1760	6400	5600	2800	0.13	0.26	0.51
55	3900	7800	15600	1340	1690	2150	5300	4600	2300	0.17	0.34	0.68
60	3900	7800	15600	1340	1690	2150	5300	4600	2300	0.17	0.34	0.68
75	2500	5000	10000	1280	1620	2060	5200	4500	2250	0.13	0.25	0.50
100	5250	10500	21000	1800	2280	2900	3800	3300	1650	0.27	0.54	1.09
127	4550	9100	18200	2100	2480	3160	3100	2700	1350	0.27	0.54	1.08
20			3500			750			4950			0.17
23.838			4500			1050			3450			0.23
38.100			7000			1300			3000			0.23
44.475			7000			1380			2850			0.28

* For multiple arrangement see picture 2.2: factors K_a
** Stated values are for Duplex sets in O-arrangement; for X-arrangement factor 0.6; for Quad sets QBT 0.75; QBC 0.7; max. rotational speed for L and M are valid for lubrication with GN21G
*** For multiple arrangement see picture 2.2: factor K_{Fv}

3.3 Tolerances of Super Precision 60° Angular Contact Thrust Bearings

Data table in µm

	Inner ring [mm]	Precision	Ø 0.6 to 10	10 18	18 30	30 50	50 80	80 120	120 150
Δd_{mp}	Max. deviation of the mean bore diameter from the nominal	P4A	–4	–4	–4	–5	–5	–6	–7.5
K_{ia}	Radial runout of assembled bearing inner ring	P4A	2.5	2.5	2.5	4	4	5	6
S_d	Side face runout referring to bore of inner ring	P2A	1.3	1.3	1.3	1.3	1.3	2.5	2.5
S_{ia}	Side face runout with reference to the raceway of the assembled bearing inner ring	P2A	1.3	1.3	2.5	2.5	2.5	2.5	2.5
ΔB_s	Deviation of single inner ring width	P4A, P2A	–200	–200	–200	–200	–250	–320	–370
V_{Bs}	Ring width variation	P4A	2.5	2.5	2.5	2.5	4	4	5

	Outer ring [mm]	Precision	Ø 18 to 30	30 50	50 80	80 120	120 150	150 180	180 250
ΔD_{mp}	Max. deviation of mean outside diameter to nominal	P4A, P2H	–5	–5	–5	–7.5	–9	–10	–10
K_{ea}	Radial runout of assembled bearing outer ring	P4A	4	5	5	5	7	7.5	10
S_D	Variation in inclination of outside cylindrical surface to outer ring side face	P2A	1.3	1.3	1.3	2.5	2.5	2.5	3.8
S_{ea}	Side face runout referring to raceway of assembled bearing outer ring	P2A	2.5	2.5	3.8	5	5	5	6.4

The width tolerances of the outer ring (ΔCs, Vc_s) correspond to those of inner ring (Δ_{Bs}; V_{Bs}).
The total width tolerance of a bearing set is the sum of the ones of the single bearings.

3.4 Proposed fits for Super Precision 60° Angular Contact Thrust Bearings

Nominal diameter d shaft [mm]	Precision	Ø incl.	– 10	10 18	18 30	30 50	50 80	80 120	120 180
Shaft tolerance Δd_1 fixed bearing	P4A	max.	–3	–3	–3	–4	–4	–5	–6
		min.	–7	–7	–7	–8	–9	–10	–12
Nominal diameter D housing [mm]	Precision	Ø incl.	18 30	30 50	50 80	80 120	120 150	150 180	180 250
Housing tolerance ΔD_G fixed bearing	P4A	max.	+5	+5	+5	+5	+7	+7	+7
		min.	0	0	0	–1	–1	–2	–2

Table 3.4: Summary of tolerances for adjacent parts for Super Precision 60° Angular Contact Thrust Bearings.

3.5 Tolerances of associated parts for Precision Angular Contact Thrust Bearings

Accuracy of form for shafts

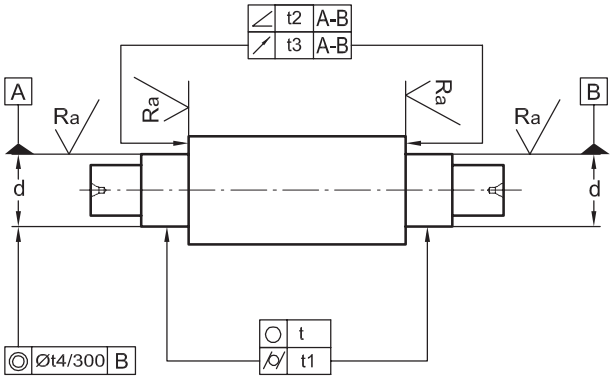

Accuracy of form for housings

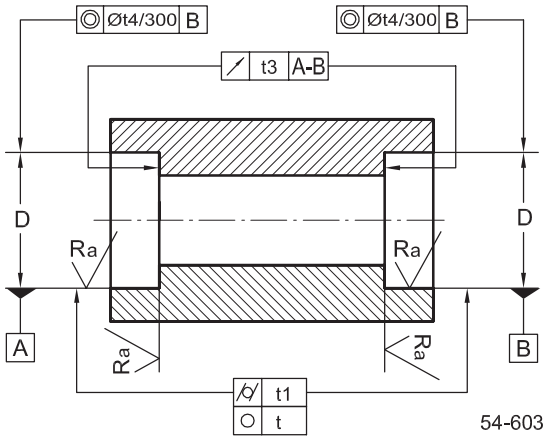

Characteristic	Tolerance Symbol	Tolerance Designation	Accuracy of form, Tolerance grade, Roughness class for Tolerance class of bearings		
			P5	P4A	P2A
Circularity	○	t	IT3/2	IT2/2	IT1/2
Cylindricity	⌭	t1	IT3/2	IT2/2	IT1/2
Angularity	∠	t2	–	IT3/2	IT2/2
Runout	↗	t3	IT3	IT3	IT2
Coaxiality	◎	t4	IT5	IT4	IT3
Roughness R_a					
d ≦ 80 mm		–	N4	N4	N3
d > 80 mm		–	N5	N5	N4

Table 3.5.1: Accuracy of form for shafts

Characteristic	Tolerance Symbol	Tolerance Designation	Accuracy of form, Tolerance grade, Roughness class for Tolerance class of bearings		
			P5	P4A	P2A
Circularity	○	t	IT3/2	IT2/2	IT1/2
Cylindricity	⌭	t1	IT3/2	IT2/2	IT1/2
Runout	↗	t3	IT3	IT3	IT2
Coaxiality	◎	t4	IT5	IT4	IT3
Roughness R_a					
D ≦ 80 mm		–	N5	N5	N4
80 < D ≦ 250		–	N6	N6	N5
D < 250 mm		–	N7	N7	N6

Table 3.5.2: Accuracy of form for housings

ISO Basic Tolerance Grades acc. to DIN 7151									
Nominal Diameter		Tolerance grades							
Over	incl.	IT0	IT1	IT2	IT3	IT4	IT5	IT6	IT7
mm		µm							
6	10	0.6	1	1.5	2.5	4	6	9	15
10	18	0.8	1.2	2	3	5	8	11	28
18	30	1	1.5	2.5	4	6	9	13	21
30	50	1	1.5	2.5	4	7	11	16	25
50	80	1.2	2	3	5	8	13	19	30
80	120	1.5	2.5	4	6	10	15	22	35
120	180	2	3.5	5	8	12	18	25	40
180	250	3	4.5	7	10	14	20	29	46
250	315	4	6	8	12	16	23	32	52
315	400	5	7	9	13	18	25	36	57
400	500	6	8	10	15	20	27	40	63

Table 3.5.1: Basic tolerance grades acc. to DIN 7151

Roughness R_a of the axial shoulder at shaft, housing or spacers:
N6 = 0,8 µm

Surface roughness Class	Roughness
	µm
N3	0.1
N4	0.2
N5	0.4
N6	0.8
N7	1.6

Table 3.5.4: Roughness

4. Precision Bearing Units with 60°-Angular Contact Thrust Bearings – Selection Criteria

Applications of units with labyrinth seals greased for life: Ball screws (bs), satellite roller screws, worm gear drives (e. g. for circular tables, index tables) special purposes.

Basically the units are used on ball screws in machine tool (boring-, milling-, turning-, grinding-, spark erosion machines, machining centers, endfacing machines, gear cutting and finishing machines), measuring machines, industrial robots, sheet metal cutting machines, (presses, levelling machines, bending centers, laser cutting machines, laser marking machines, forming machines), woodworking machines and special purpose machines.

The big amount of applications have created a unit assembly system with their different needs regarding
- axial stiffness and capacity
- reduced heat development by less friction (labyrinth seal)
- speed (also with ceramic balls available)
- running accuracy
- form (flange or pillow block)
- arrangement.

Great flexibility
Some precision bearing units can be supplied with the same outside dimensions but with different bore sizes. This has been very helpful in the design of machine families of different length and table stroke, where the ball screws of smaller dia. would have reached the critical speed and therefore a bigger one had to be used. (Bearings with same outside diameter and width but different bore allow a standardisation of adjacent parts at low cost).

Simply mounting
Whereas at the beginning (a) ball screw bearings had to be built in separately with other parts, now the ready-to-mount units are the state of art. The mounting of complete subassemblies eases and speeds up the mounting. The avoidance of an axial reference face in the housing bore simplifies surrounding parts.

For the flange housings only a hole with a machined wall square to the housing axes is needed. The unit can then radially still be adjusted (b).

Users who machine the centering hole for the flange into their supports on CNC machines with the needed accuracy mount as shown in (c).

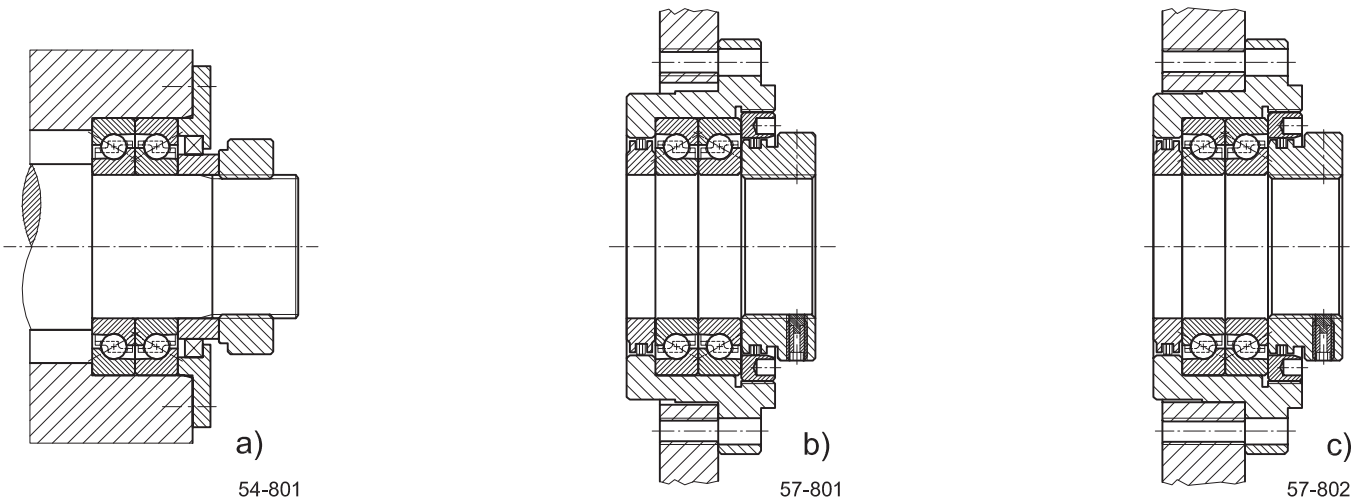

Figure 4.1: Development to easier to machine and to mount applications for ball screw supports.

Precision Bearing Units with 60°-Angular Contact Thrust Bearings – Selection Criteria

Easy-to-mount BSBU, BSBU-M Precision Cartridge Units

The cartridge units flattened on both sides are characterized by easy handling in the planning and mounting phase.

The fact that they are flattened on both sides results in a low height, corresponding to the cartridge diameter. It was chosen so that in case of usual grading of the shaft seat, the cartridge outside diameter of the nut is slightly smaller than the bearing unit seat diameter.

When service is necessary, in case of a machine tool crash, the mounting personnel on site will appreciate that the module is easy to change (ball screw + bearing unit).

Owing to the skilfully selected diameter ratio (see drawing 57-803 and 57-804), it is possible to pull out the entire module easily.

In the same manner, a pre-assembled module is built in again quickly, so that maintenance times and thus standstill times are reduced.

The locknut with matching labyrinth seal, which has already been integrated into the BSBU-M series, allows for simple and secure preloading of precision cartridge units.

In case the cartridge unit has to be mounted from inside against a wall the locknut MMRS and the sealing S can be exchanged vice versa. The same applies for the pillow block series BSPB-M… as well as for the adapter of the nut bearing units BNBU and BNPB.

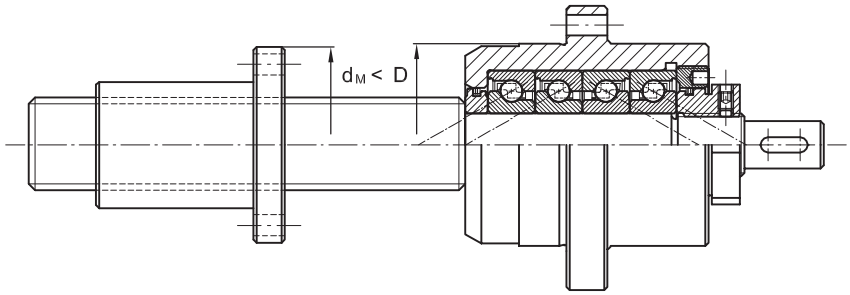

57-803

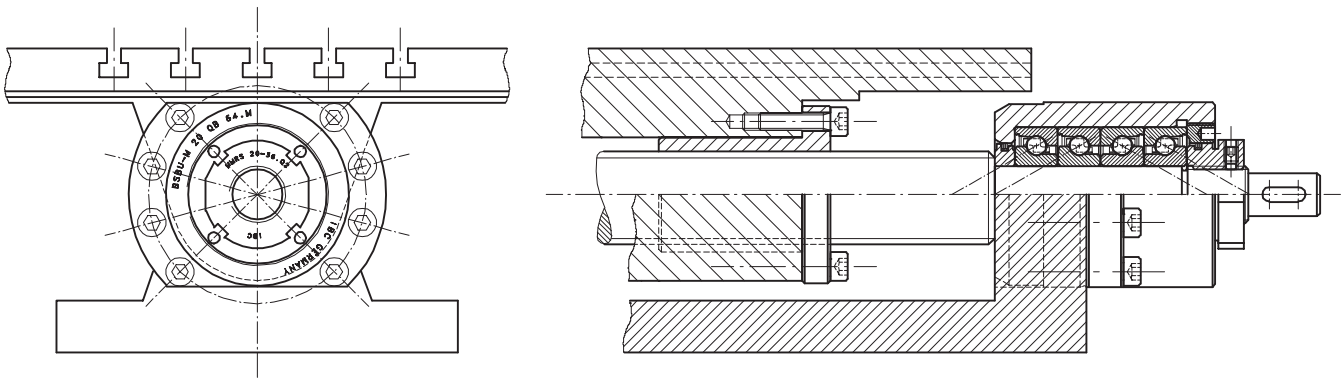

54-804

Advantages of pillow block units
Whereas cartridge units had to be placed on supports in the past, the pillow block units are saving construction space and mounting time.

The tight-tolerance bases of the fixed and floating end units with the same reference dimensions of the BSPB, BSPB-M and BLPB series have proven to be beneficial (see abutment dimensions on page 24). The contact edge for the units can thus be machined with those of the guides. Pre-drilled pin-holes allow accurate fixing.

Mounting of driven nuts
IBC precision bearing units of the series BNBU and BNPB with integrated adapter are available for mounting on ball screw nuts (according to DIN 69051). These are used in particular for long ball screws. It is an advantage to drive the nut for its less accelerated mass.

A further advantage of a driven spindle clamped between two fixed end bearings is the fact that in case of an alternative nut drive, the bearings do not need to accommodate stretching loads.

The stretching of the spindle to compensate elongation when it warms up can easily be carried out there at the clamping points.

Depending on the requirements regarding stiffness, limit rotational speed or drag torque, units can be chosen with light (L), medium (M) or heavy (H) preload. The order code consists of the basic type and a suffix for the preload. For adapter units, it is possible to choose the hole pattern and the way of mounting, the cartridge form can additionally be chosen.

For bearing units with an integrated lubrication system for the ball screw nut (BNBUS) separate data sheets are available.

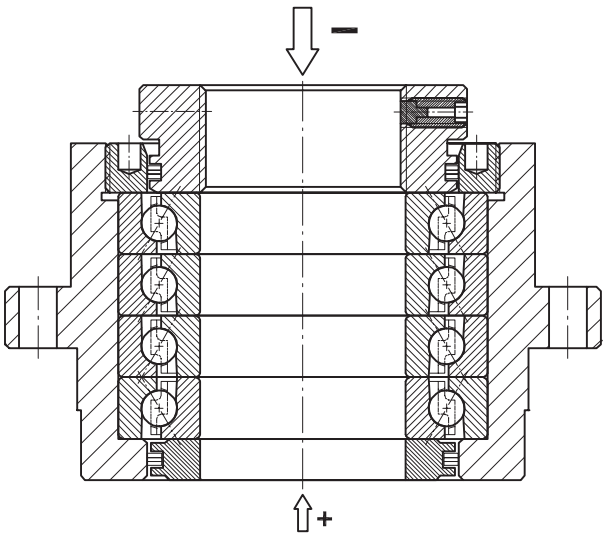

57-805

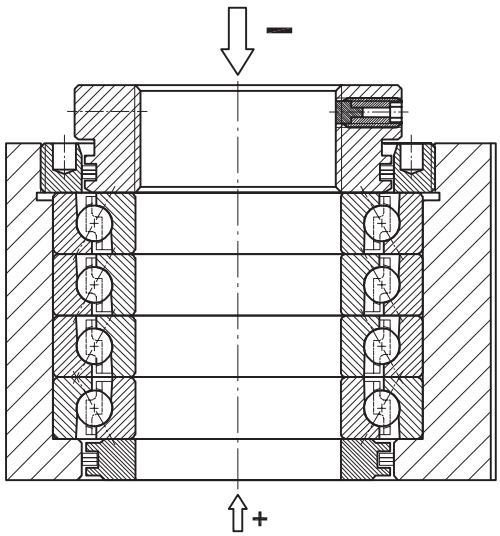

57-806

Figure 4.2: BSBU-M 40Q128 QBTM with arrangement Ø Ø Ø ⦸

BSPB.M 40Q65 QBTM with arrangement Ø Ø Ø ⦸

Units for predominating loads in one direction
Bearings of vertical or inclined spindles, which have to support a sometimes-considerable weight of the table, one direction may be predominant for all load cycles owing to inertia. In that case a unit with the bearing arrangement 3:1 (with the designation QBT before the preload) can be selected (see figure 4.2). The load shares of the single bearing result from the equations (page 5), stiffness, unloading values and tightening factors in figure 2.2, page 6 in connection with the specification for single bearings according to pages 8 and 9.

4.1 Designation of IBC Precision Bearing Units for Ball Screws

B	S	B	U	-M	2	5	D	B		8	8.				M	
B	S	B	U	-M	4	0	Q	B	1	2	8.			QBT	M	
B	S	P	B		3	0	Q				5	0.			L	
B	N	B	U		6	3	Q	B	1	3	8.		2		L	-M2
B	N	P	B		9	5	D		1	0	5.		2		M	-M2
B	L	P	B		2	0	N			3	2.	2RS				

Bearing Units for Ball Screws
- BS Fixed End Unit for Spindle Ends
- BN Bearing Unit for BS Nuts
- BL Floating End Unit

Execution
- BU Flange Unit
- PB Pillow Block

Integrated Locknut
- M integrated
- – order locknut separately (MMRB)

Inner Diameter [mm]

Design
- D Duplex-Set
- Q Quadruplex-Set
- N Needle Roller for Floating End Units

Form of Flange
- A round (at BLPB)
- B flattened on both sides
- C flattened on one side

Reference dimension
- flange seat diameter
- center height of the pillow block

Lubrication
- – 50 % GH62 (standard)
- GN21G 30–35 % / GN21

Mounting of adapter
- for BN units
- M2 as shown
- M1 mounted when twisted 180°

Preload/Bearing
- L Light preload
- M Medium preload
- H High preload

Bearing arrangement
- DB, QBC standard
- QBT see picture 4.2
- DT Tandem Bearings for spring preloaded units

Adapter sleeve (DIN 69051)
- 1 hole pattern 1
- 2 hole pattern 2

Sealing
- 2RS Sealing for floating end units
- – Labyrinth sealing

Options (prefixes)
- CB with ceramic balls Si_3N_4
- AC with ATCoating of bearings

Not all combinations are available

57-901

For fixed end bearing units for higher speed, also bearings with ceramic balls (CB) can be offered. On request also with ATCoat (AC) for bearings.

Bearing units with more bearings on request, as well as special housings with integrated coupling.

Lubrication
Bearings with standard lubrication GH 62; without suffix. Bearings with grease for higher speed: suffix GN21G (for more than 60 % of mentioned max. speed).
Grease details see page 34.

4.2 High Precision Flange Units for Spindle Ends of Ball Screws Support Bearings

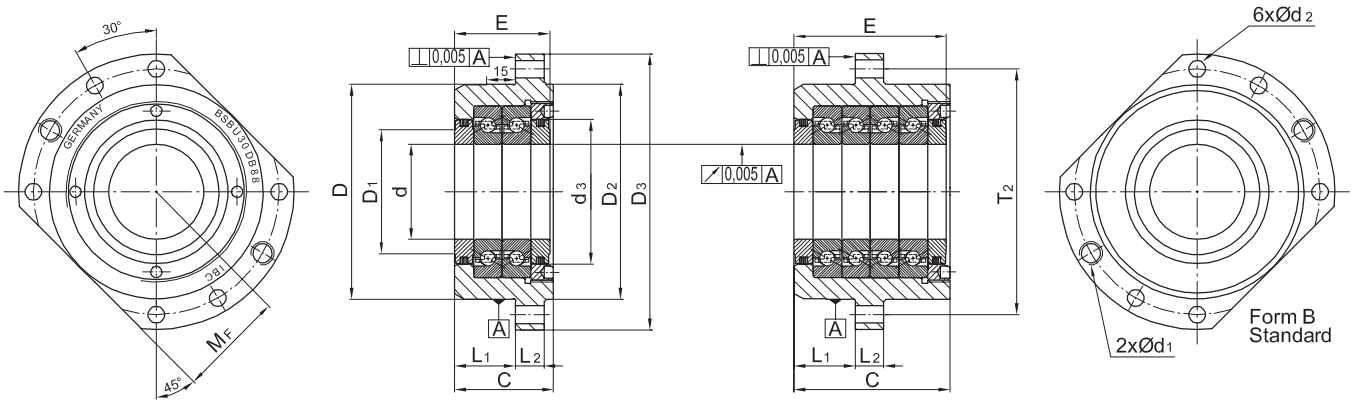

BSBU..DB.. **BSBU..QB..** 57-001

Shaft	Unit	d	D	M_F	C	E	d_1	d_2	d_3	D_1	D_2	D_3	Weight
mm		mm											kg
Medium Serie													
17	**BSBU 17 DB 64**	17	64	32	47	44	M8	6.6	36	26	64	90	1.1
	BSBU 17 QB 64				77	74							1.7
20	**BSBU 20 DB 64**	20			47	44							1.1
	BSBU 20 QB 64				77	74							1.7
25	**BSBU 25 DB 88**	25	88	44	52	50	M12	9.2	50	40	88	120	2.3
	BSBU 25 QB 88				82	80							3.5
30	**BSBU 30 DB 88**	30			52	50							2.2
	BSBU 30 QB 88				82	80							3.4
	BSBU 30 DB 98		98	49	52	50			60	46	98	130	3.3
	BSBU 30 QB 98				82	80							4.7
35	**BSBU 35 DB 98**	35			52	50							3.2
	BSBU 35 QB 98				82	80							4.6
40	**BSBU 40 DB 98**	40			52	50				50			3.1
	BSBU 40 QB 98				82	80							4.5
45	**BSBU 45 DB 98**	45			52	50			60	55			3.8
	BSBU 45 QB 98				82	80							4.6
55	**BSBU 55 DB 113**	55	113	56.5	52	50			76	68	113	145	3.4
	BSBU 55 QB 113				82	80							5.1
75	**BSBU 75 DB 138**	75	138	69	54	50			99	86	138	170	4.1
	BSBU 75 QB 138				84	80							6.3
Heavy Serie													
35	**BSBU 35 DB 128**	35	128	64	66	64	M14	11.4	76	66	128	165	6.3
	BSBU 35 QB 128				106	104							10.1
40	**BSBU 40 DB 128**	40			66	64							6.1
	BSBU 40 QB 128				106	104							9.7
45	**BSBU 45 DB 128**	45			66	64							6.0
	BSBU 45 QB 128				106	104							9.5
50	**BSBU 50 DB 128**	50			66	64							5.9
	BSBU 50 QB 128				106	104							9.3
55	**BSBU 55 DB 148**	55	148	74	66	64			99	86	148	185	8.2
	BSBU 55 QB 148				106	104							12.9
60	**BSBU 60 DB 148**	60			66	64							7.9
	BSBU 60 QB 148				106	104							12.5

Tolerances	d	D	E (Duplex)	E (Quad)
BSBU 17 DB/QB 64 – BSBU 30 DB/QB 88	0 / – 0.005	0 / – 0.013	0 / – 1.02	0 / – 1.52
BSBU 30 DB/QB 98 – BSBU 45 DB/QB 98	0 / – 0.005	0 / – 0.015	0 / – 1.02	0 / – 1.52
BSBU 55 DB/QB 113 – BSBU 60 DB/QB 148	0 / – 0.005	0 / – 0.018	0 / – 1.02	0 / – 1.52

Technical data see page 22. Recommended locknuts serie MMRB... starting on page 30.

. . . for Spindle Ends of Ball Screw Support Bearings with integrated lock nut

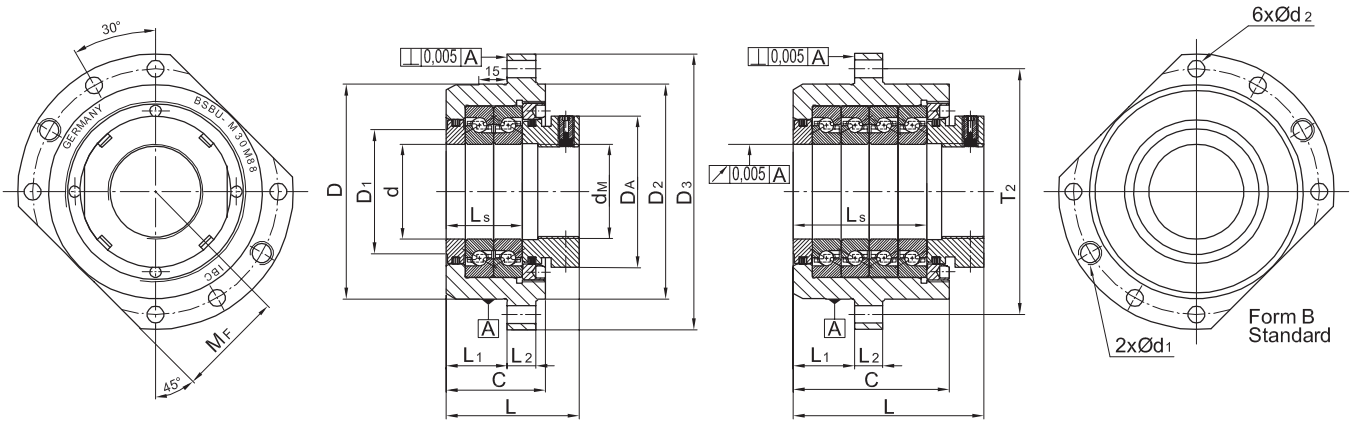

BSBU-M..DB.. **BSBU-M..QB..** 57-002

T_2	L_1	L_2	D_A	L_S	L	Integrated locknut see page 28	Unit	Shaft
mm								mm
Medium Serie								
76	32	13	38	37	57	MMRS 17-36	**BSBU-M 17 DB 64**	17
				64	87		**BSBU-M 17 QB 64**	
				37	57	MMRS 20-36	**BSBU-M 20 DB 64**	20
				67	87		**BSBU-M 20 QB 64**	
102		15	58	40	65	MMRS 25-50	**BSBU-M 25 DB 88**	25
				70	95		**BSBU-M 25 QB 88**	
				40	65	MMRS 30-50	**BSBU-M 30 DB 88**	30
				70	95		**BSBU-M 30 QB 88**	
113			70	40	68	MMRS 30-60	**BSBU-M 30 DB 98**	
				70	98		**BSBU-M 30 QB 98**	
				40	68	MMRS 35-60	**BSBU-M 35 DB 98**	35
				70	98		**BSBU-M 35 QB 98**	
				40	68	MMRS 40-60	**BSBU-M 40 DB 98**	40
				70	98		**BSBU-M 40 QB 98**	
				40	68	MMRS 45-60	**BSBU-M 45 DB 98**	45
				70	98		**BSBU-M 45 QB 98**	
129			80	40	70	MMRS 55-76	**BSBU-M 55 DB 113**	55
				70	100		**BSBU-M 55 QB 113**	
154			105	40	70	MMRS 75-99	**BSBU-M 75 DB 138**	75
				70	100		**BSBU-M 75 QB 138**	
Heavy Serie								
146	43.5	17	80	52	82	MMRS 35-76	**BSBU-M 35 DB 128**	35
				92	122		**BSBU-M 35 QB 128**	
				52	82	MMRS 40-76	**BSBU-M 40 DB 128**	40
				92	122		**BSBU-M 40 QB 128**	
				52	82	MMRS 45-76	**BSBU-M 45 DB 128**	45
				92	122		**BSBU-M 45 QB 128**	
				52	82	MMRS 50-76	**BSBU-M 50 DB 128**	50
				92	122		**BSBU-M 50 QB 128**	
166				52	82	MMRS 55-99	**BSBU-M 55 DB 148**	55
				92	122		**BSBU-M 55 QB 148**	
			105	52	82	MMRS 60-99	**BSBU-M 60 DB 148**	60
				92	122		**BSBU-M 60 QB 148**	

4.3 High Precision Pillow Block Units for Spindle Ends of Ball Screw Support Bearings

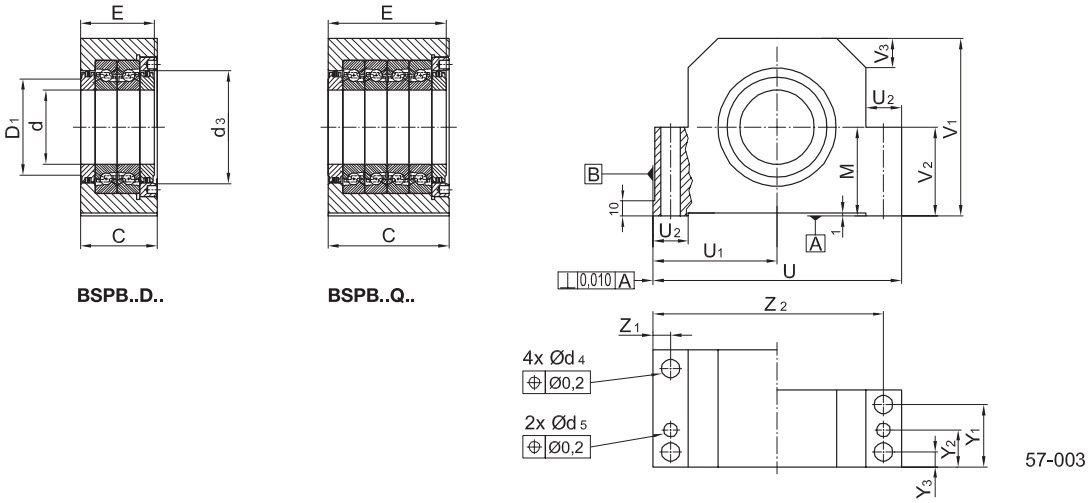

Shaft	Unit	d	M	C	E	d_3	D_1	U	U_1	U_2	V_1	V_2	V3	Weight
mm		mm												kg
Medium Serie														
17	**BSPB 17 D 32**	17	32	47	44	36	26	94	47	17	62	32	15	1.5
	BSPB 17 Q 32			77	74									2.6
20	**BSPB 20 D 32**	20		47	44									1.5
	BSPB 20 Q 32			77	74									2.6
25	**BSPB 25 D 42**	25	42	52	50	50	40	125	62.5	20	82	42		2.8
	BSPB 25 Q 42			82	80									4.6
30	**BSPB 30 D 42**	30		52	50									2.7
	BSPB 30 Q 42			82	80									4.5
	BSPB 30 D 50		50	52	50	60	46	136	68	20.5	95	50		3.9
	BSPB 30 Q 50			82	80									6.3
35	**BSPB 35 D 50**	35		52	50									3.8
	BSPB 35 Q 50			82	80									6.2
40	**BSPB 40 D 50**	40		52	50		50							3.7
	BSPB 40 Q 50			82	80									6.0
45	**BSPB 45 D 50**	45		52	50	60	55							3.6
	BSPB 45 Q 50			82	80									5.9
55	**BSPB 55 D 65**	55	65	52	50	76	68	154	77	23	118	65	30	4.5
	BSPB 55 Q 65			82	80									7.2
75	**BSPB 75 D 65**	75	65	54	50	99	86	174	87		129			5.0
	BSPB 75 Q 65			84	80									8.0
Heavy Serie														
35	**BSPB 35 D 65**	35	65	66	64	76	66	190	95	30	130	65	15	9.7
	BSPB 35 Q 65			106	104									15.9
40	**BSPS 40 D 65**	40		66	64									9.5
	BSPB 40 Q 65			106	104									15.7
45	**BSPB 45 D 65**	45		66	64									9.3
	BSPB 45 Q 65			106	104									15.4
50	**BSPB 50 D 65**	50		66	64									9.1
	BSPB 50 Q 65			106	104									15.1
55	**BSPB 55 D 85**	55	85	66	64	99	86	200	100		155	85		9.1
	BSPB 55 Q 85			106	104									15.1
60	**BSPB 60 D 85**	60		66	64									9.1
	BSPB 60 Q 85			106	104									15.1

Tolerances	d	M	U_1	E (Duplex)	E (Quad)
BSPB 17 D/Q 32 – BSPB 30 D/Q 42	0 / – 0.005	0 / – 0.013	0 / – 0.013	0 / – 1.02	0 / – 1.52
BSPB 30 D/Q 50 – BSPB 45 D/Q 50	0 / – 0.005	0 / – 0.015	0 / – 0.015	0 / – 1.02	0 / – 1.52
BSPB 55 D/Q 65 – BSPB 60 D/Q 85	0 / – 0.005	0 / – 0.018	0 / – 0.018	0 / – 1.02	0 / – 1.52

Technical data see page 22.

Recommended locknuts serie MMRB... starting on page 30.

. . . for Spindle Ends of Ball Screw Support Bearings with integrated lock nut

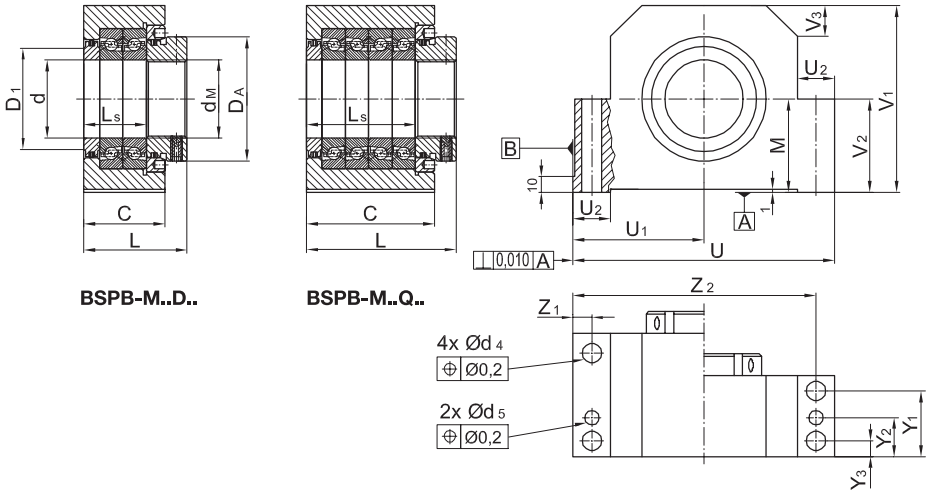

Y_1	Y_2	Y_3	Z_1	Z_2	d_4	d_5	D_A	L_S	L	Integrated locknut see page 28	Unit	Shaft
mm												mm
Medium Serie												
38	22.0	9	8.5	85.5	9	7.8	38	37	57	MMRS 17-36	**BSPB-M 17 D 32**	17
68								67	87		**BSPB-M 17 Q 32**	
38								37	57	MMRS 20-36	**BSPB-M 20 D 32**	20
68								67	87		**BSPB-M 20 Q 32**	
42	25.0	10	10	115.0	11	9.8	58	40	65	MMRS 25-50	**BSPB-M 25 D 42**	25
72								70	95		**BSPB-M 25 Q 42**	
42								40	65	MMRS 30-50	**BSPB-M 30 D 42**	30
72								70	95		**BSPB-M 30 Q 42**	
42				126.0	13		70	40	68	MMRS 30-60	**BSPB-M 30 D 50**	
72								70	98		**BSPB-M 30 Q 50**	
42								40	68	MMRS 35-60	**BSPB-M 35 D 50**	35
72								70	98		**BSPB-M 35 Q 50**	
42								40	68	MMRS 40-60	**BSPB-M 40 D 50**	40
72								70	98		**BSPB-M 40 Q 50**	
42								40	68	MMRS 45-60	**BSPB-M 45 D 50**	45
72								70	98		**BSPB-M 45 Q 50**	
40.5	26.0	11.5	11.5	142.5			80	40	70	MMRS 55-76	**BSPB-M 55 D 65**	55
70.5								70	100		**BSPB-M 55 Q 65**	
40.5				162.5			105	40	70	MMRS 75-99	**BSPB-M 75 D 65**	75
70.5								70	100		**BSPB-M 75 Q 65**	
Heavy Serie												
53	32.0	13	15	175.0	18	11.8	80	52	82	MMRS 35-76	**BSPB-M 35 D 65**	35
93								92	122		**BSPB-M 35 Q 65**	
53								52	82	MMRS 40-76	**BSPB-M 40 D 65**	40
93								92	122		**BSPB-M 40 Q 65**	
53								52	82	MMRS 45-76	**BSPB-M 45 D 65**	45
93								92	122		**BSPB-M 45 Q 65**	
53								52	82	MMRS 50-76	**BSPB-M 50 D 65**	50
93								92	122		**BSPB-M 50 Q 65**	
53				185.0				52	82	MMRS 55-99	**BSPB-M 55 D 85**	55
93								92	122		**BSPB-M 55 Q 85**	
53							105	52	82	MMRS 60-99	**BSPB-M 60 D 85**	60
93								92	122		**BSPB-M 60 Q 85**	

4.4 High Precision Flange Units for Ball Screw Nuts

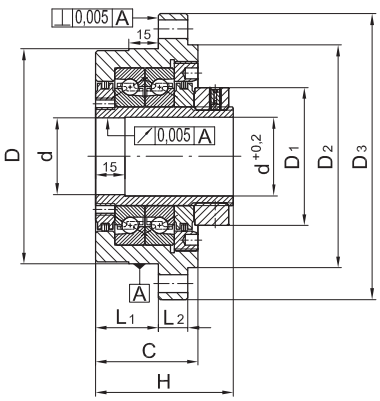

BNBU...DB...

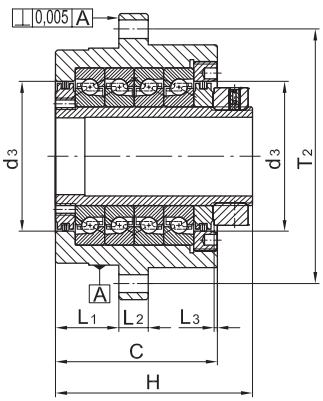

BNBU...QB...

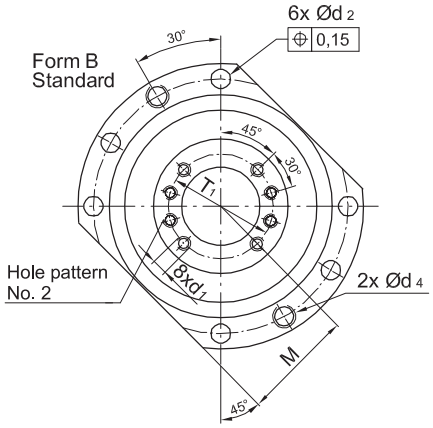

Hole pattern No. 1

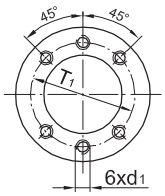

57-005

Hole pattern No. 1 and 2 for direct mounting on bs nuts according to DIN 69051 for ball screws (Adapter sleeves for other bs nuts on request)

KGT do x P	Unit	d	D	M	C	H	d_1	d_2	d_3	d_4	D_1	D_2	D_3	T_1	T_2	L_1	L_2	L_3	Hole pattern
		mm																	
16x 5	**BNBU 28 DB 98**	28	98	49	52	70	M5	9.2	60	M12	70	98	130	38	113	32	15	2	1
20x 5	**BNBU 36 DB 98**	36			52	70	M6							47					
25x 5	**BNBU 40 DB 113**	40	113	56.5	52	70			76		80	113	145	51	129				
25x10	**BNBU 40 QB 113**				82	100													
32x 5	**BNBU 50 DB 138**	50	138	69	54	70	M8		99		105	138	170	65	154			4	
32x10	**BNBU 50 QB 138**				84	100													
40x 5	**BNBU 63 DB 138**	63			54	70								78					2
40x10	**BNBU 63 QB 138**				84	100													
50x 5	**BNBU 75 DB 178**	75	178	89	77	101	M10	11.4	132	M14	140	178	215	93	197	50	20		
50x10	**BNBU 75 QB 178**				122	146													
63x 5	**BNBU 90 DB 210**	90	210	105	77	105			162		175	210	248	108	230				
63x10	**BNBU 90 QB 210**				122	150													
63x20	**BNBU 95 DB 210**	95			77	105	M12							115					
	BNBU 95 QB 210				122	150													
80x10	**BNBU 105 DB 210**	105			77	105								125					
	BNBU 105 QB 210				122	150													

Technical data see page 27

Tolerances Housing	d	D
BNBU 28 DB/QB 98 – BNBU 36 D/Q 98	+ 0.003 / – 0.010	0 / – 0.015
BNBU 40 DB/QB 113 – BNBU 105 D/Q 210	+ 0.003 / – 0.010	0 / – 0.018

Adapter sleeves for other bs nuts on request.

For bearing units with integrated lubrication of ball screw nuts, please ask for separate data sheets (Serie BNBUS).

Order example:
For a ballscrew Ø 63 x 10 with abutment dimension acc. to DIN 69051 a standard flange unit with hole pattern no. 2 and two bearings are needed as shown.
Medium preload is chosen: **BNBU 90DB210. 2.M.M2**

Mounting M1: connecting thread on right side, mounted opposite to mounting seat D.

4.5 High Precision Pillow Block Units for Ball Screw Nuts

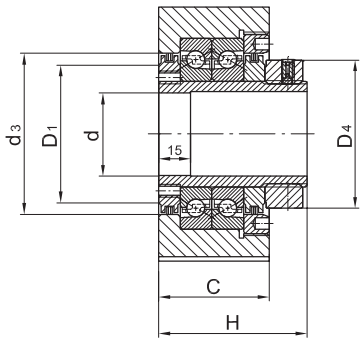

BNPB...D..

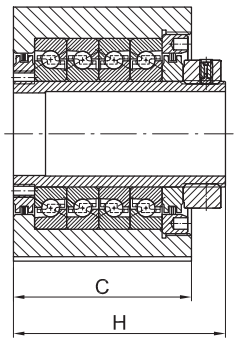

BNPB...Q..

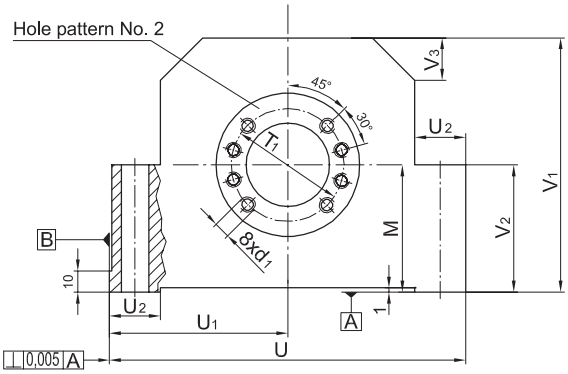

Hole pattern No. 1 and 2 for direct mounting on bs nuts according to DIN 69051 for ball screws (Adapter sleeves for other bs nuts on request)

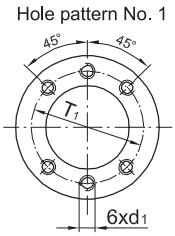

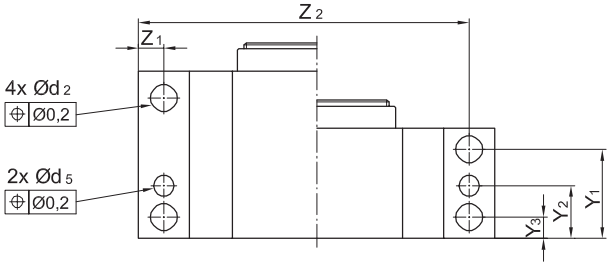

57-006

KGT do x P	Unit	d	M	C	H	d_1*	d_3	d_4	d_5	D_1	D_4	T_1	U	U_1	U_2	V_1	V_2	V_3	Y_1	Y_2	Y_3	Z_1	Z_2	B
		mm																						
16x 5	**BNPB 28 D 50**	28	50	52	70	M5	60	13	9.8	55	70	38	136	68	20.5	98	50	20	42	25.0	10	10	126.0	1
20x 5	**BNPB 36 D 50**	36		52	70	M6						47												
25x 5	**BNPB 40 D 65**	40	65	52	70		76			68	80	51	154	77	23	118	65		40.5	26.0	11.5	11.5	142.5	
25x10	**BNPB 40 Q 65**			82	100														70.5					
32x 5	**BNPB 50 D 65**	50		54	70	M8	99			89	105	65	174	87		129			40.5				162.5	
32x10	**BNPB 50 Q 65**			84	100														70.5					
40x 5	**BNPB 63 D 65**	63		54	70							78							40.5					2
40x10	**BNPB 63 Q 65**			84	100														70.5					
50x 5	**BNPB 75 D 85**	75	85	77	101	M10	132	18	11.8	114	140	93	230	115	30	170	85	30	57	37.0	17	15	215.0	
50x10	**BNPB 75 Q 85**			122	146														100					
63x 5	**BNPB 90 D 105**	90	105	77	105		162	21		140	175	108	280	140	35	207	105	50	57			17	263.0	
63x10	**BNPB 90 Q 105**			122	150														100					
63x20	**BNPB 95 D 105**	95		77	105	M12						115							57					
	BNPB 95 Q 105			122	150														100					
80x10	**BNPB 105 D 105**	105		77	105							125							57					
	BNPB 105 Q 105			122	150														100					

* preferable to be mounted with socket head cap screws to DIN 912, tensile strength class 8.8

Tolerances	Housing	d	M	U_1
BSPB 28 D/Q 50 –	BNPB 36 D/Q 50	+ 0.003 / 0.010	0 / – 0.015	0 / – 0.013
BSPB 40 D/Q 65 –	BNPB 63 D/Q 65	+ 0.003 / 0.010	0 / – 0.018	0 / – 0.015
BSPB 75 D/Q 85 –	BNPB 105 D/Q 105	+ 0.003 / 0.010	0 / – 0.018	0 / – 0.018

Adapter sleeves for other bs nuts on request.

Order example:
For a ballscrew Ø 80 x 10 heavy load with 4 bearings, adapter hole pattern No. 2 according to DIN 69051, light preload, mounted as shown above: **BNPB 105Q105 2.L.M2**

(Mounting M1: connecting thread on right side, mounted below outer locknut).

4.6 Technical Data Table of Flange and Pillow Block Units

BSBU..DB.. BSBU-M..DB.. BSPB..D.. BSPB-M..D..
BSBU..QB.. BSBU-M..QB.. BSPB..Q.. BSPB-M..Q..

Designation		Axial capacity		Preload F_v			Ax. stiffness S_{ax}			Speed grease n_F			Drag troque M_r		
BSBU	BSPB	Ca	Coa	L	M	H	L	M	H	L	M	H	L	M	H
BSBU-M	BSPB-M	N		N			N/µm			min^{-1}			Nm		
Duplex Serie															
BSBU 17 DB 64 **BSBU 20 DB 64**	**BSPB 17 D 32** **BSPB 20 D 32**	25000	32000	875	1750	3500	450	570	730	14300	12500	6200	0.08	0.16	0.32
BSBU 25 DB 88 **BSBU 30 DB 88**	**BSPB 25 D 42** **BSPB 30 D 42**	29200	43600	1125	2250	4500	640	810	1030	10500	9100	4500	0.11	0.22	0.43
BSBU 30 DB 98 **BSBU 35 DB 98** **BSBU 40 DB 98**	**BSPB 30 D 50** **BSPB 35 D 50** **BSPB 40 D 50**	35600	55000	1700	3400	6800	770	970	1240	8600	7500	3700	0.11	0.22	0.43
BSBU 45 DB 98	**BSPB 45 D 50**	37900	62000	1700	3400	6800	770	970	1240	8000	7000	3500	0.14	0.28	0.56
BSBU 55 DB 113	**BSPB 55 D 65**	40700	74000	1975	3950	7900	1020	1300	1640	6900	6000	3000	0.22	0.42	0.82
BSBU 75 DB 138	**BSPB 75 D 65**	44500	94000	2500	5000	10000	1320	1650	2120	5200	4500	2250	0.26	0.50	1.00
Heavy Serie															
BSBU 35 DB 128 **BSBU 40 DB 128** **BSBU 45 DB 128** **BSBU 50 DB 128**	**BSPB 35 D 65** **BSPB 40 D 65** **BSPB 45 D 65** **BSPB 50 D 65**	70500	116000	3200	6400	12800	1050	1360	1740	6400	5600	2800	0.26	0.51	1.07
BSBU 55 DB 148 **BSBU 60 DB 148**	**BSPB 55 D 85** **BSPB 60 D 85**	80800	137800	3900	7800	15600	1320	1650	2120	5300	4600	2300	0.34	0.68	1.36
Quadruplex Serie															
BSBU 17 QB 64 **BSBU 20 QB 64**	**BSPB 17 Q 32** **BSPB 20 Q 32**	40600	64000	1750	3500	7000	900	1040	1460	10000	8700	4300	0.16	0.32	0.64
BSBU 25 QB 88 **BSBU 30 QB 88**	**BSPB 25 Q 42** **BSPB 30 Q 42**	47500	86000	2250	4500	9000	1280	1620	2060	7300	6300	3100	0.22	0.43	0.86
BSBU 30 QB 98 **BSBU 35 QB 98** **BSBU 40 QB 98**	**BSPB 30 Q 50** **BSPB 35 Q 50** **BSPB 40 Q 50**	57800	110000	3400	6800	13600	1540	1940	2480	6000	5200	2600	0.22	0.43	0.86
BSBU 45 QB 98	**BSPB 45 Q 50**	61600	123000	3400	6800	13600	1540	1940	2480	5600	4900	2400	0.28	0.56	1.02
BSBU 55 QB 113	**BSPB 55 Q 65**	66100	178000	3950	7900	15800	2040	2600	3280	4800	4200	2100	0.44	0.84	1.64
BSBU 75 QB 138	**BSPB 75 Q 65**	72300	188000	5000	10000	20000	2640	3300	4240	3500	3100	1550	0.52	1.00	2.00
Heavy Serie															
BSBU 35 QB 128 **BSBU 40 QB 128** **BSBU 45 QB 128** **BSBU 50 QB 128**	**BSPB 35 Q 65** **BSPB 40 Q 65** **BSPB 45 Q 65** **BSPB 50 Q 65**	114500	232000	6400	12800	25600	2100	2720	3480	4450	3900	1950	0.52	1.02	2.04
BSBU 55 QB 148 **BSBU 60 QB 148**	**BSPB 55 Q 85** **BSPB 60 Q 85**	131000	274000	7800	15600	31200	2640	3300	4220	3700	3200	1600	0.68	1.36	2.72

with adapter sleeve for ball screw nuts acc. to DIN 69051 BNBU..DB.., BNBU..QB.., BNPB..D... BNPB..Q..

KGT	Designation		Axial capacity		Preload F_v			Ax. stiffness S_{ax}			Speed grease n_F			Drag troque M_r		
do x P	BNBU	BNPB	Ca	Coa	L	M	H	L	M	H	L	M	H	L	M	H
	BNBU-M	BNPB-M	N		N			N/µm			min^{-1}			Nm		
16x 5	**BNBU 28 DB 98**	**BNPB 28 D 50**	37900	62000	1700	3400	6800	840	1050	1330	8600	7500	3700	0.14	0.28	0.56
20x 5	**BNBU 36 DB 98**	**BNPB 36 D 50**	37900	62000	1700	3400	6800	840	1050	1330	8600	7500	3700	0.14	0.28	0.56
25x 5	**BNBU 40 DB 113**	**BNPB 40 D 65**	40700	74000	1975	3950	7900	1010	1260	1610	6900	6000	3000	0.22	0.42	0.32
25x10	**BNBU 40 QB 113**	**BNPB 40 Q 65**	66100	148000	3900	7800	15600	2050	2560	3250	4800	4200	2100	0.44	0.84	1.64
32x 5	**BNBU 50 DB 138**	**BNPB 50 D 65**	44500	94000	2500	5000	10000	1230	1570	2010	5200	4500	2250	0.26	0.50	1.00
32x10	**BNBU 50 QB 138**	**BNPB 50 Q 65**	72300	188000	5000	10000	20000	2500	3180	4100	3500	3100	1550	0.52	1.00	2.00
40x 5	**BNBU 63 DB 138**	**BNPB 63 D 65**	44500	94000	2500	5000	10000	1230	1570	2010	5200	4500	2250	0.26	0.50	1.00
40x10	**BNBU 63 QB 138**	**BNPB 63 Q 65**	72300	188000	5000	10000	20000	2500	3180	4100	3500	3100	1550	0.52	1.00	2.00
50x 5	**BNBU 75 DB 178**	**BNPB 75 D 65**	86400	192000	5200	10400	20800	1800	2280	2900	3800	3300	1650	0.27	0.53	1.06
50x10	**BNBU 75 QB 178**	**BNPB 75 Q 65**	140000	384000	10400	20800	41600	3600	4560	5800	2600	2300	1150	0.54	1.06	2.12
63x 5	**BNBU 90 DB 210**	**BNPB 90 D 105**	85200	240000	4550	9100	18200	1950	2500	3150	3100	2700	1350	0.27	0.54	1.08
63x10	**BNBU 90 QB 210**	**BNPB 90 Q 105**	138000	480000	9100	18200	36400	3900	5000	6300	2100	1900	950	0.54	1.08	2.16
63x20	**BNBU 95 DB 210**	**BNPB 95 D 105**	85200	240000	4550	9100	18200	1950	2500	3150	3100	2700	1350	0.27	0.54	1.08
	BNBU 95 QB 210	**BNPB 95 Q 105**	138000	480000	9100	18200	36400	3900	5000	6300	2100	1900	950	0.54	1.08	2.16
80x10	**BNBU 105 DB 210**	**BNPB 105 D 105**	85200	240000	4550	9100	18200	1950	2500	3150	3100	2700	1350	0.27	0.54	1.08
	BNBU 105 QB 210	**BNPB 105 Q 105**	138000	480000	9100	18200	36400	3900	5000	6300	2100	1900	950	0.54	1.08	2.16

On request a speed increase of 35 % is possible by use of ceramic balls. Then the static capacity Coa will be reduced to 70 %.

4.7 High Precision Floating End Units

Super Precision Pillow Block Bearing Units for Supporting Floating End of Shaft BLPB..N.. .2RS

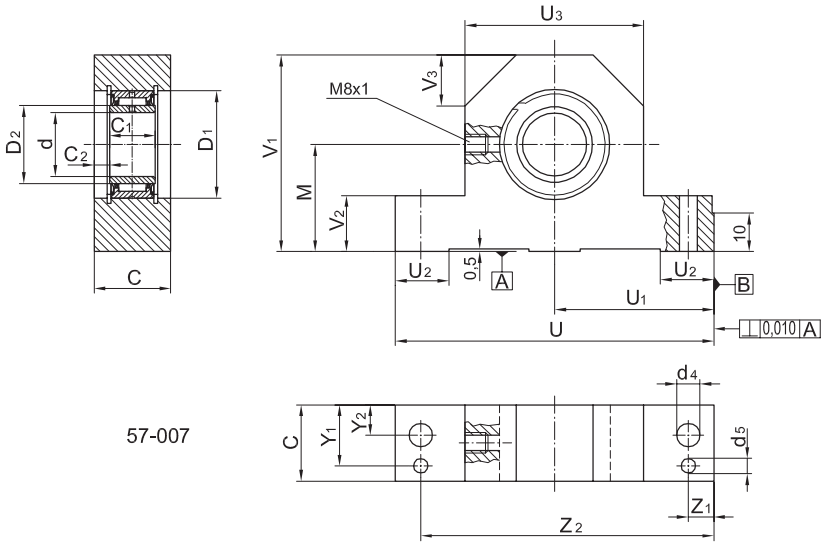

57-007

Tolerances	M	U_1
BLPB 20 N 32	0 / –0,013	0 / –0,013
BLPB 25 N 42	0 / –0,013	0 / –0,013
BLPB 30 N 50	0 / –0,015	0 / –0,015
BLPB 40 N 65	0 / –0,018	0 / –0,018
BLPB 50 N 85	0 / –0,018	0 / –0,018

d according PN DIN 620
Maximum speed see cartridge bearing unit

Shaft	Designation	d	M	C	C_1	C_2	D_1	D_2	U	U_1	U_2	U_3	V_1	V_2	V_3	Y_1	Y_2	Z_1	Z_2	d_4	d_5	C	Co
mm		mm																				N	
20	**BLPB 20 N 32**	20	32	30	18	6	37	25	94	47	16	56	59	15	15	24.0	12	8.5	85.5	9	5.8	17300	19900
25	**BLPB 25 N 42**	25	42	30	18	6	42	30	125	62.5	21	70	77	22	20	24.0	12	10	115	9	5.8	19300	24200
30	**BLPB 30 N 50**	30	50	30	18	6	47	35	136	68	21	80	88	28	20	24.0	12	10	126	9	5.8	21100	28500
40	**BLPB 40 N 65**	40	65	40	23	8.5	62	48	190	95	30	100	108	38	20	30.0	15	15	175	13	7.8	36000	53000
50	**BLPB 50 N 85**	50	85	40	23	8.5	72	58	200	100	30	110	138	48	30	30.0	15	15	185	13	7.8	40000	64000

Cartridge Bearing Units for Supporting Floating End of Shaft BLBU..N... 2RS

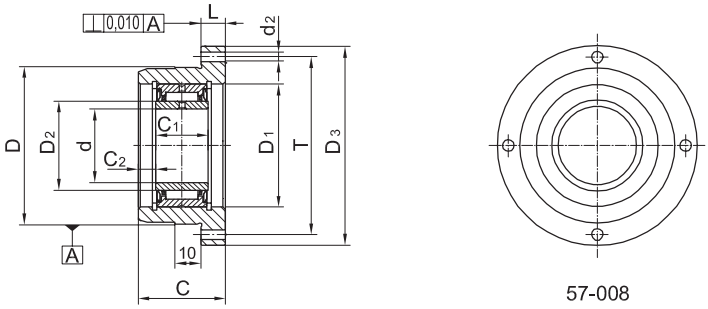

57-008

Shaft	Designation	d	D	C	C_1	C_2	D_1	D_2	D_3	L	T	d_2	n_{grease}	C	Co
mm		mm											min^{-1}	N	
10	**BLBU 10 N 32**	10	32	25	14	5.5	22	14	52	6	42	4.5	13000	6800	6900
12	**BLBU 12 N 35**	12	35	25	14	5.5	24	16	55	6	45	4.5	12000	7600	8300
17	**BLBU 17 N 40**	17	40	26	14	6	30	20	60	6	50	4.5	9000	8800	11000
20	**BLBU 20 N 50**	20	50	30	18	6	37	25	70	8	60	4.5	7500	17300	19900
25	**BLBU 25 N 55**	25	55	30	18	6	42	30	75	8	65	4.5	6500	19300	24200
30	**BLBU 30 N 60**	30	60	32	18	6	47	35	80	8	70	4.5	5500	21100	28500
35	**BLBU 35 N 70**	35	70	38	21	8.5	55	42	90	10	80	5.5	4800	26500	39500
40	**BLBU 40 N 80**	40	80	43	23	10	62	48	110	10	95	5.5	4200	36000	53000
45	**BLBU 45 N 85**	45	85	43	23	10	68	52	110	10	98	5.5	3900	38000	59000
50	**BLBU 50 N 90**	50	90	44	23	10.5	72	58	120	10	105	5.5	3500	40000	64000

Tolerances of Cartridge Bearing Units			
Inner Diameter	d		PN DIN 620
Cartridge Diameter	D	32 – 80	0 / –0.013
		85 – 90	0 / –0.015

4.8 Mounting Dimensions for Ball Screw Spindles

BSBU-M..DB..
BSPB-M..D..

BSBU-M..QB..
BSPB-M..Q..

BLBU..N..

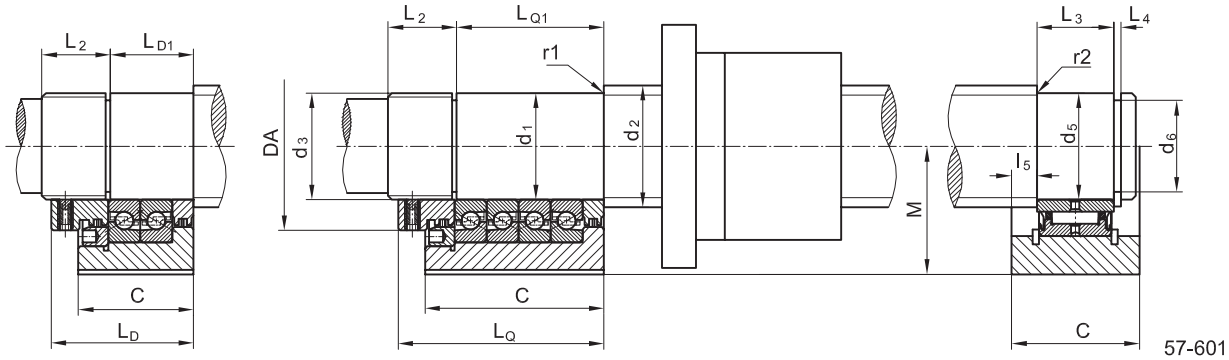

Designation	Fixed end d_1	d_2	d_3 4h/6h	D_A	L_D	L_{D1}	L_Q	L_{Q1}	L_2	r_{1max}	Centre height M	Floating end d_5 j5	d_6 h11	L_3	L_4	l_5	r_{2max}	Designation
	mm																	
Medium Serie																		
BSPB-M 17.32	17	23	M 17 x 1	38	57	36	87	65	24	0.5	32	20	19.2	18	1.2	6	0.3	**BLPB-20N32**
BSPB-M 20.32	20	26	M 20 x 1															
BSPB-M 25.42	25	35	M 25 x 1.5	58	65	39	95	68	29	0.8	42	25	24	18	1.2	6	0.3	**BLPB-25N42**
BSPB-M 30.42	30	37	M 30 x 1.5															
BSPB-M 30.50	30	37	M 30 x 1.5	70	68	39	98	68	32	0.8	50	30	29	18	1.5	6	0.3	**BLPB-30N50**
BSPB-M 35.50	35	42	M 35 x 1.5															
BSPB-M 40.50	40	47	M 40 x 1.5															
BSPB-M 45.50	45	53	M 45 x 1.5															
BSPB-M 55.65	55	63	M 55 x 2	80	70	39	100	68	34	0.8	65	50	48.5	23	1.5	8.5	0.6	**BLPB-50N85**
BSPB-M 75.65	75	84	M 75 x 2	105														
Heavy Serie																		
BSPB-M 35.65	35	43	M 35 x 1.5	80	82	51	122	90	34	0.8	65	40	38.5	23	1.5	8.5	0.6	**BLPB-40N65**
BSPB-M 40.65	40	48	M 40 x 1.5															
BSPB-M 45.65	45	54	M 45 x 1.5															
BSPB-M 50.65	50	59	M 50 x 1.5															
BSPB-M 55.85	55	65	M 55 x 2	105	82	51		90	34		85	50	48.5	23	1.5	8.5	0.6	**BLPB-50N85**
BSPB-M 60.85	60	70	M 60 x 2															

The following cartridge units have the same dimensions as pillow block units:

Medium Serie		Tolerance d_1 [µm]
BSBU-M 17.64	**BSPB-M 17.32**	– 3 / – 7
BSBU-M 20.64	**BSPB-M 20.32**	
BSBU-M 25.88	**BSPB-M 25.42**	– 3 / – 7
BSBU-M 30.88	**BSPB-M 30.42**	
BSBU-M 30.98	**BSPB-M 30.50**	– 4 / – 8
BSBU-M 35.98	**BSPB-M 35.50**	
BSBU-M 40.98	**BSPB-M 40.50**	
BSBU-M 45.98	**BSPB-M 45.50**	– 4 / – 8
BSBU-M 55.113	**BSPB-M 55.65**	– 4 / – 9
BSBU-M 75.138	**BSPB-M 75.65**	– 4 / – 9
Heavy Serie		
BSBU-M 35.128	**BSPB-M 35.65**	– 4 / – 8
BSBU-M 40.128	**BSPB-M 55.85**	
BSBU-M 45.128	**BSPB-M 45.65**	
BSBU-M 50.128	**BSPB-M 50.65**	
BSBU-M 55.148	**BSPB-M 55.85**	– 4 / – 9
BSBU-M 60.148	**BSPB-M 60.85**	

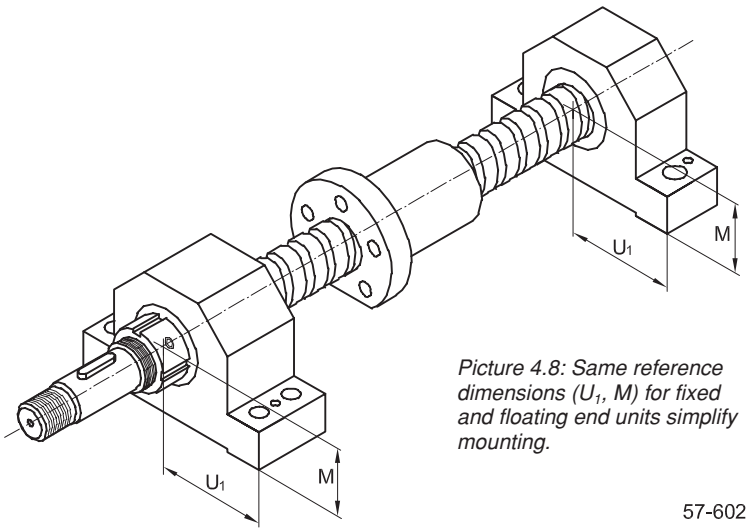

Picture 4.8: Same reference dimensions (U_1, M) for fixed and floating end units simplify mounting.

4.9 Criteria for Bearing Arrangements at Ball screws

Application examples – influence of bearing arrangement on critical speed, spindle buckling resistance and stiffness.

The mounting and bearing arrangement at a spindle influences the critical speed, the buckling behaviour and the total stiffness.

4.9.1 Critical Rotational Speed n_{kr}

The critical rotational speed (1st order) where the spindle starts to bulge depends on the spindle diameter d_o, the non-support spindle length l and the bearing arrangement. The permissible speed should be obtained using factor 0.8 of the diagram value.

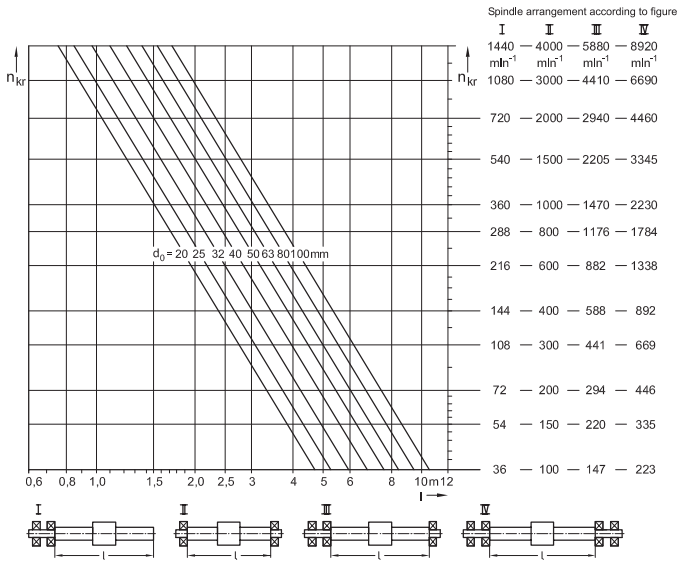

4.9.2 Buckling

Very long and thin spindles must be checked for buckling. An alternative bearing arrangement increases the permissible axial load.

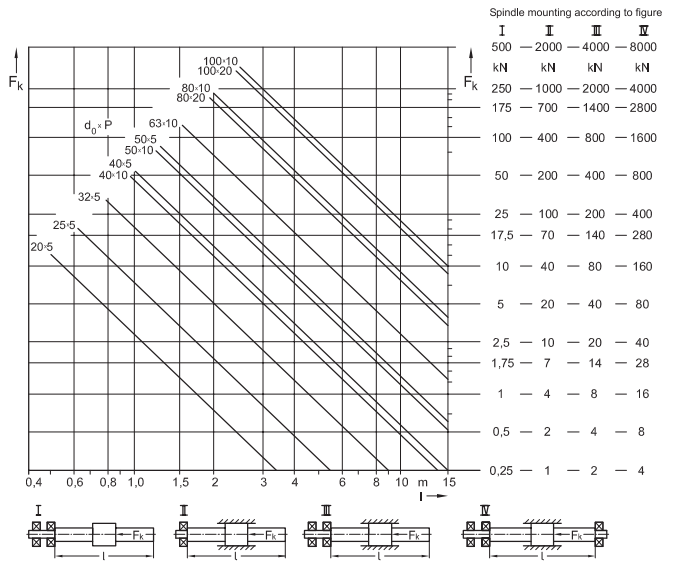

4.9.3 Stiffness

The axial stiffness of a ball screw Ka_{BS} is mainly dependant on (in precisely this order) the stiffness of the spindle as follows:

$$\frac{1}{Ka_{BS}} = \frac{1}{Ka_S} + \frac{1}{Ka_N} + \frac{1}{Ka_B} \qquad [4.9.3]$$

Ka_{BS}	[N/µm]	total stiffness
Ka_S	[N/µm]	stiffness of spindle
Ka_N	[N/µm]	stiffness of ball screw nut
Ka_B	[N/µm]	stiffness of bearings

The fundamentally different type of clamping (of the assembly) determines the stiffness of the spindle as follows:

1) Fixed clamping at one end

$$Ka_S = \frac{A \cdot E}{l \cdot 10^3} \left[\frac{N}{\mu m}\right] \qquad [4.9.4]$$

A	[mm²]	cross section of the spindle
E	[N/mm²]	Young's modulus
l	[mm]	distance ball screw nut/bearing

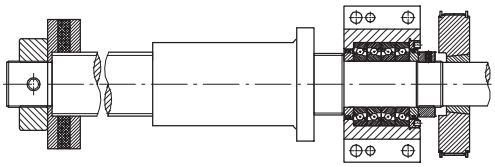

57-807

2) Fixed clamping at both ends

$$Ka_S = \frac{4 \cdot A \cdot E}{l \cdot 10^3} \left[\frac{N}{\mu m}\right] \qquad [4.9.5]$$

a) for driven spindle (see also page 19, 32)

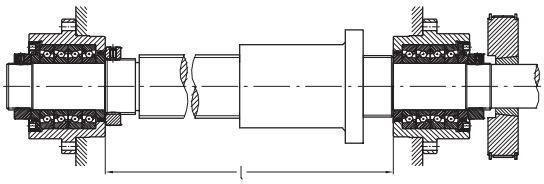

57-808

b) for driven nut (see page 20), e.g. assembled with BNBU 63QB130 2.M.M2 with integrated labyrinth seals, n = 1000 min⁻¹. Spindle Ø 40 x 10 fixed at ends.

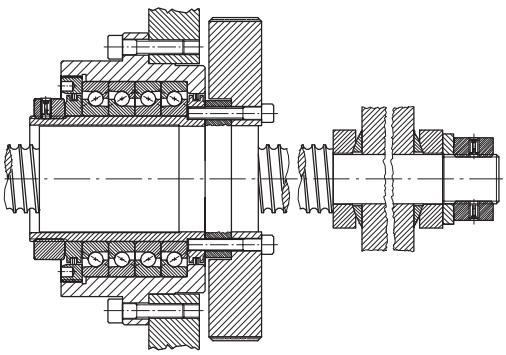

57-809

4.9 Criteria for Bearing Arrangements at Ball screws

3) Spring-preloaded Fixed End Floating End Combinations

Where a high operating speed leads to a high heat generation and expansion of the spindle, a fixed clamping at both ends is no longer useful. In this case it is better to clamp one end and to preload the other end by means of springs. The required preload can be set via the springs. By selecting an appropriate spring tension, the expansion due to heat is practically compensated without loss of preload and the stiffness of the spindle is kept on a constant level.

The two mounting examples with drawings for inquiry (see p. 33) are helpful in dealing with specific customer wishes.

The first example shows the combination of cartridge units, the second the combination of pillow block units. Of course, it is also easily possible to combine cartridge and pillow block units, because the final processing for the spindles is the same for both.

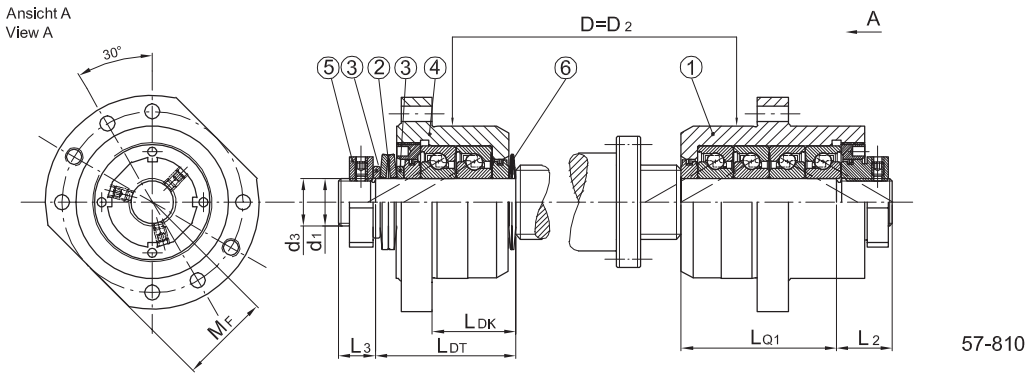

Ball screw supported at both ends with BSBU-M… QB + BSBU … DB … DT+PLS, can be stretched and preloaded via securable locknuts.

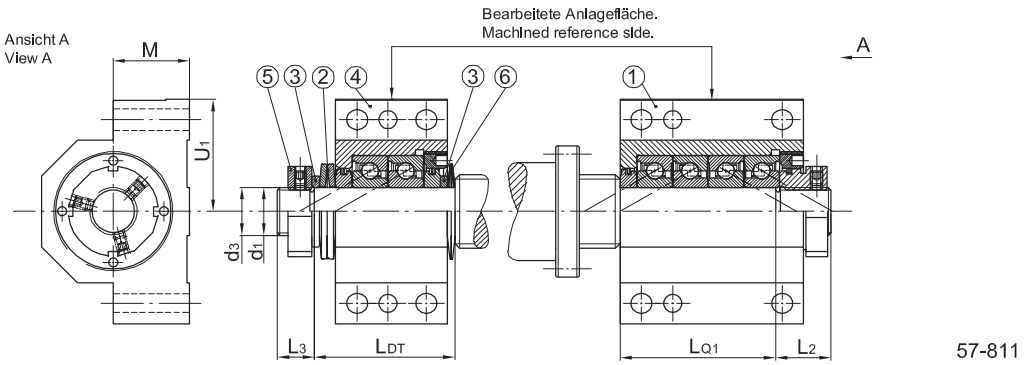

Ball screw supported at both ends with BSPB-M … QB + BSPB … D … DT+PLS,, can be stretched and preloaded via securable locknuts.

In addition to the arrangement with spring-preloaded end in DT arrangement, fixed end and if applicable, floating end QBT arrangements are possible, too (see p. 14).

4) Combinations of fixed end bearing units with floating end bearing units, series BLPB and BLBU

Whereas the stretching of the spindle and increasing the stiffness plays the most important role in case of fixed end bearing units and spring-preloaded units, preventing the spindle end from whirling around is the main objective here (see p. 23).

For combinations with series BSPB fixed end pillow block units, the pillow block units were designed with the same centre height and the same lateral stopping dimension. This permits the units to be adjoined to the same machined reference edge. The alignment is thus facilitated (see figure 57-601, 57-602, p. 24).

5. IBC Precision Locknuts and Labyrinth Seals

Applications
IBC Precision Locknuts are used for high-precision application owing to their high degree of accuracy. The no longer necessary retaining groove in the shafts (for the formerly used lock washers) facilitates production and assembly. The material cross section is maintained and the notch effect is not increased un-necessarily. Accuracy is increased by elimination of the imprecise lock washers (axial runout is reduced).

Tolerances
A high accuracy of the axial eccentricity according to IT3, ISO basic tolerances according to DIN 7151 (see p. 11), will be achieved by precision-machining the inner thread with its securing elements and the face in one operation. The face will be additionally compressed during machining. The securing elements, which are also profiled, bear on the thread flanks. The thread is manufactured with a tolerance of 4H according to DIN 13 T21-24. From M210x4 on, the tolerance is 6H.

Design
For compact applications (lightest weight), series MMR locknuts are used. The locknut in recessed locations which cannot be reached radially (housing bores) are secured using the axially accessible socket set screws on the MMA and MBA series nuts. This option requires a larger width because of the inner construction. From Ø 20 on, the MBA model is supplied. The permissible axial load corresponds to the MMR nut.
The same cross section as MBA is used for MMRB and thus permits larger loads and tightening torques. This is of interest in particular for preloading bearings supporting a high axial load (in ball screws, for instance).

Nuts with Labyrinth Seal
The MMRBS and MBAS series additionally have a set of laminar rings made out of spring steel, which may create a compact labyrinth seal in conjunction with the housing where limited space is available. The intermediate space of the labyrinth area must be filled with grease before and after mounting.
The cross section of the series MMRS nuts with similar properties as MMRBS nuts were designed to match the series BS 60° Super Precision Angular Contact Thrust Ball Bearings and the MD Seal Nuts (see page 24, 28 and 29). These are available in the standard sizes as well as in special sizes (different cross section) or made from stainless steel or with ATCoating.

Abutment and Fillet Dimensions
The recommended tolerance of the counter thread of the shaft is “medium” 6g, 6h or “fine” 4h for higher accuracy requirements (machine tools).

Strength of the Nut Threads
Threads up to M50: 1000 N/mm^2
Threads up to M55 – M85: 870 N/mm^2
Threads from M90 on: 700 N/mm^2

The permissible axial loads are applicable to bolt threads with a tensile strength of at least 700 N/mm^2. In case of dynamic load, 75 % of Fa is permissible.

Mounting
Nut to be screwed in with all locking devices in unchanged positions. Use spanners to tighten the locknuts with approx. double of the nominal torque (to avoid setting of the clamped parts), loosen and retighten them applying the nominal torque. The necessary tightening torque depends on the required preload F_v [N] and can be determined approximately using the following equation:

$$M_D = 3 \cdot d_{Thread} \cdot F_v \cdot K_{Fv} \cdot 10^{-4} \text{ [Nm]} \qquad [5.1]$$

K_{Fv}: bearing arrangement constant
For F_v of the single bearings: for bs bearings see p. 9:

<>	DB	1	<<>>	QBC	2
<<>	TBT	1,36	<<<<>	PBT	1,71
<<<>	QBT	1,57	<<<>>>	PBC	2,42

K_{Fv} = 1 for bearing units with F_v preload for the unit, see p. 22.

(A single tightening with M_D is sufficient for the heavily preloaded 60° super precision angular contact thrust ball bearings).

Securing against loosening
First tighten securing screw via hexagon socket set screw lightly until you notice resistance. Tighten second screw located opposite. If existing, tighten third screw (only in case of MMRB, MMRBS and MMRS) and fourth screw in model …Q. Retighten screws. For maximum tightening torques of the socket set screws, please refer to table.

Socket set screws	Key size S [mm]	Tightening torque Max. M_A [Nm]
M4	2	2
M5	2,5	4
M6	3	7
M8	4	18
M10	5	34
M12	6	60

Table 5.1: Maximum tightening torques of securing devices

This results in high loosening torques to prevent unintended loosening even for spindles running clockwise and counter-clockwise intermittently.

Disassembly
Loosen securing elements first for disassembly. Since clamping does not deform the profiled securing elements made from hard bronze, the nut can be used repeatedly after loosening.

Designations for IBC Precision Locknuts

MMR	narrow precision locknut with radial lock
MMRB	wide precision locknut with radial lock
MMA	precision locknut with axial lock via 2 cones meeting at an angle of 90°
MBA	precision locknut with axial lock via slotted segments, from Ø 20 on
MMRBS	the same as MMRB, but with laminar labyrinth seal
MBAS	the same as MBA, but with laminar labyrinth seal
MMRS	special locknut with radial lock, to match 60° Super Precision Angular Contact Thrust Ball Bearings BS and MD locknut
. . . . Q	4 securing elements, unless standard

5.1 Labyrinth Locknuts MMRS

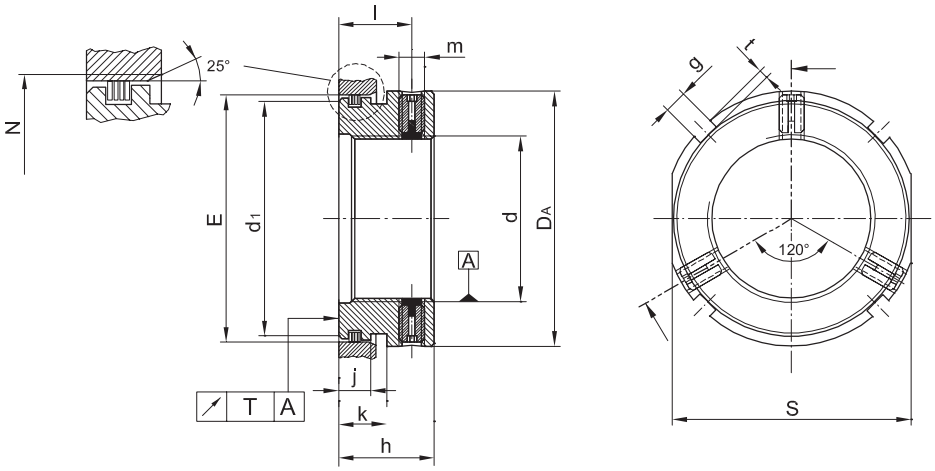

MMRS..-..Q2 58-001

Thread	Designation	Dimensions												Tightening torque set screws	Permissible axial load
		E	D_A	h	g	t	d_1	l	m	j	k	N	S	M_S	F_a
		mm												Nm	kN
M 17 x 1	**MMRS 17-36.Q2**	36	38	20	5	2	32	15.5	M 5	9	11	37.5	36	4	100
M 20 x 1	**MMRS 20-36.Q2**														110
M 22 x 1	**MMRS 22-36.Q2**														110
M 25 x 1.5	**MMRS 25-50.Q2**	50	58	25	6	2.5	46	19	M 6	10	13	52	55	7	150
M 27 x 1.5	**MMRS 27-50.Q2**														
M 30 x 1.5	**MMRS 30-50.Q2**														180
M 30 x 1.5	**MMRS 30-60.Q2**	60	70	28			56	21	M 8			63	65	18	180
M 35 x 1.5	**MMRS 35-60.Q2**														190
M 40 x 1.5	**MMRS 40-60.Q2**														210
M 45 x 1.5	**MMRS 45-60.Q2**														260
M 35 x 1.5	**MMRS 35-76.Q2**	76	80	30	7	3	72	23			15	79.5	75		290
M 40 x 1.5	**MMRS 40-76.Q2**														340
M 45 x 1.5	**MMRS 45-76.Q2**														400
M 50 x 1.5	**MMRS 50-76.Q2**														420
M 55 x 2	**MMRS 55-76.Q2**														450
M 55 x 2	**MMRS 55-99.Q2**	99	105		8	3.5	95					103	95		450
M 60 x 2	**MMRS 60-99.Q2**														480
M 65 x 2	**MMRS 65-99.Q2**														480
M 75 x 2	**MMRS 75-99.Q2**														510
M 100 x 2	**MMRS 100-132.Q2**	132	140	35	12	5	128	27	M 10	12	19	137.3	135	34	710
M 125 x 2	**MMRS 125-162.Q2**	162	175				158					165	165		800

Axial runout according to IT3, DIN 7151

The Labyrinth Locknut with the mounted laminar spring-steel rings and the matching housing or a seal nut is forming a non-contact seal (see p. 29).
Whereas the Labyrinth Locknut turns with the shaft, the spring-steel rings are standing still, being preloaded radially to the outside by the housing. The free space has to be filled with the same grease as used for the bearings. The sealing area of the Labyrinth Locknut is already lubricated with BearLub GH62 grease, which has proven its quality in the lubrication of Ball Screw Support Bearings. Two additional engineer's wrenches flats located opposite each other facilitate the assembly. This locknut is used in particular with 60° Super Precision Angular Contact Thrust Ball Bearings (and in bearing units).

5.2 Labyrinth Seals S

Seal Nuts MD

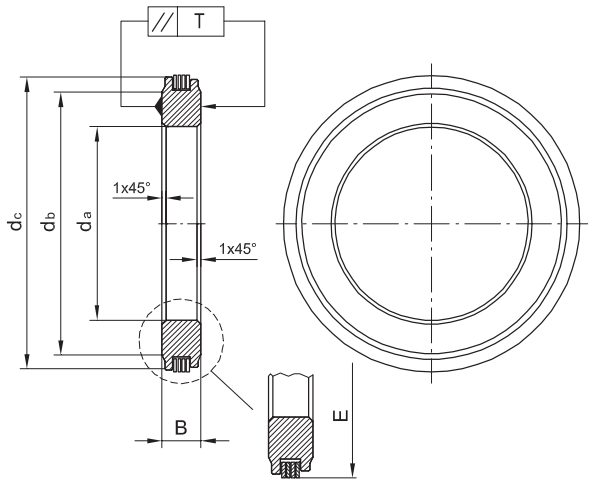

S..-...Q2 58-002

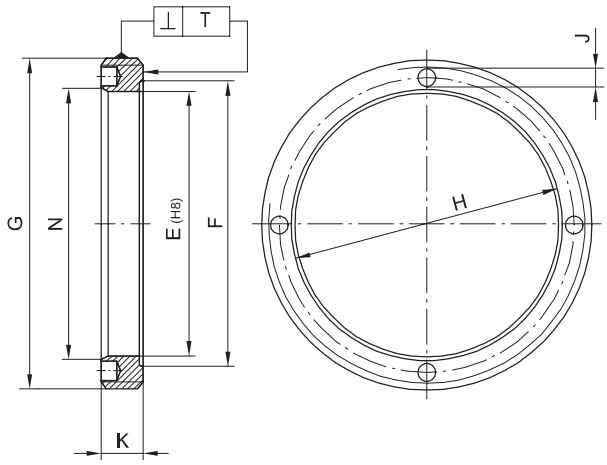

MD..-...Q5 58-003

Designation	Dimensions				Designation	Dimensions							Per-missible axial load
	d_a	d_b	d_c	B		E	F	G	H	J	K	N	F_a
	mm					mm							kN
S 12-26.Q2	12	21	25.6	7	**MD 40-26.Q5**	26	28	M 40 x 1.5	31	4.3	9	27	45
S 15-26.Q2	15												
S 17-36.Q2	17	26	35.6		**MD 50-36.Q5**	36	41	M 50 x 1.5	42.5		10	37.5	65
S 20-36.Q2	20												
S 25-40.Q2	25	32	39.7		**MD 55-40.Q5**	40	45	M 55 x 1.5	47			42	77
S 25-50.Q2		41	49.6	10	**MD 70-50.Q5**	50	56	M 70 x 1.5	59.5		12	52	100
S 30-50.Q2	30												
S 30-60.Q2		46	59.6		**MD 80-60.Q5**	60	65	M 80 x 1.5	72			63	130
S 35-60.Q2	35												
S 35-76.Q2		66	75.6	12	**MD 110-76.Q5**	76	92	M 110 x 2	90	6.3	14	79.5	190
S 40-60.Q2	40	50	59.6	10	**MD 80-60.Q5**	60	65	M 80 x 1.5	72	4.3	12	63	130
S 40-76-10.Q2		66	75.6		**MD 95-76.Q5**	76	82	M 95 x 2	84.5	6.3		79.5	150
S 40-76-12.Q2				12	**MD 110-76.Q5**		92	M 110 x 2	90		14		190
S 45-60.Q2	45	55	59.6	10	**MD 80-60.Q5**	60	65	M 80 x 1.5	72	4.3	12	63	130
S 45-66.Q2			65.6		**MD 85-66.Q5**	66	72	M 85 x 1.5	76			69	130
S 45-76.Q2		66	75.6	12	**MD 110-76.Q5**	76	92	M 110 x 2	90	6.3	14	79.5	190
S 50-76-10.Q2	50	68		10	**MD 95-76.Q5**		82	M 95 x 2	84.5		12		150
S 50-76-12.Q2				12	**MD 110-76.Q5**		92	M 110 x 2	90		14		190
S 55-76.Q2	55			10	**MD 95-76.Q5**		82	M 95 x 2	84.5		12		150
S 55-99.Q2		86	98.6	12	**MD 130-99.Q5**	99	110	M 130 x 2	110		14	103	220
S 60-99.Q2	60												
S 75-99.Q2	75			10	**MD 120-99.Q5**		101	M 120 x 2					210
S 100-132.Q2	100	114	131.6	14	**MD 160-132.Q5**	132	134	M 160 x 3	148		18	137.3	340
S 110-132.Q2	110	120	131.7										
S 127-162.Q2	127	144	161.6	14.5	**MD 190-162.Q5**	162	167	M 190 x 3	176			166	440

The non-contact series S sealing elements consist of a ground parallel steel ring with a radial outside groove. A set of laminar spring-steel rings is assembled into the groove, surrounded by a grease pack (GH62).
These are pressed into the bore of the matching series MD seal nut or into a housing bore via a chamfer and are thus fixed.
The spacer (support ring) of the labyrinth seal located on the shaft thus turns without touching the opposite lamella. A grease pack in the groove prevents the axial contact of the lamella with the walls. The Labyrinth Seals have proven to be of advantage adjoining bearings preloaded via these seals (Angular Contact Ball Bearings and 60° Super Precision Angular Contact Ball Bearings).
The Seal Nuts MD with outside thread can also be used separately to clamp outer bearing rings or other machine parts. They need to be secured by glue. An external radial lock is also possible.
Further sizes are available on inquiry.

5.3 Precision Locknuts MMR, MMRB, MMRBS, MBA, MBAS

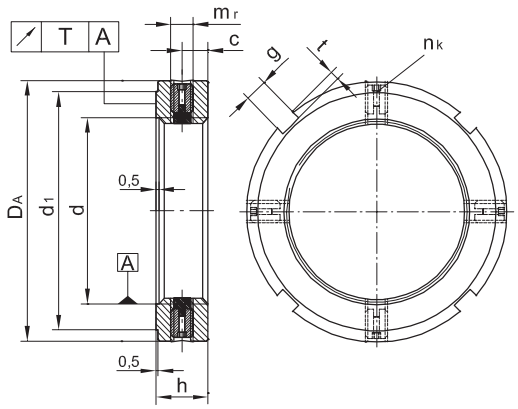

MMR.. 58-004

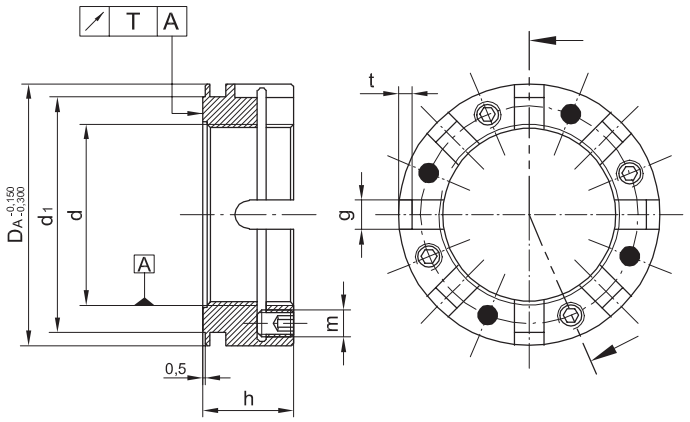

MBA.. 58-005

Thread	Designation		Dimensions											Max. tightening torque set screws		Permissible axial load MMR MMRB	MMA MBA
Tolerance 4H	Radial locking system	Axial locking system	D_A	h	g	t	d_1	c	m_a	m_r	h_1	h_2	E*	M_S rad.	M_S ax.	F_a	
			mm											Nm		kN	
M 6 x 0.5	**MMR 6**		16	8	3	2	12	4	–	M 4		–	–	2	–	16	
M 8 x 0.75	**MMR 8**															17	
M 10 x 0.75	**MMR 10**		18				14									22	
M 12 x 1	**MMR 12**		22				18									26	
M 15 x 1	**MMR 15**		25				21									33	
M 17 x 1	**MMR 17**		28	10	4		23	5		M 5				4		49	
		MMA 17 **		16					M 4						2	70	70
M 20 x 1	**MMR 20**		32	10			27									55	
	MMRB 20	**MBA 20**		16							4.4	2.9	32			110	110
M 20 x 1.5	**MMR 20 x 1.5**			10												70	
	MMRB 20 x 1.5	**MBA 20 x 1.5**		16									32			110	110
M 25 x 1.5	**MMR 25**		38	12	5		33	6		M 6				7		87	
	MMRB 25	**MBA 25**		18									38			130	130
M 30 x 1.5	**MMR 30**		45	12			40				5.2	3.2				110	
	MMRB 30	**MBA 30**		18					M 6				45		7	150	150
M 35 x 1.5	**MMR 35**		52	12			47									120	
	MMRB 35	**MBA 35**		18									52			170	120
M 40 x 1.5	**MMR 40**		58	14	6	2.5	52	7								150	
	MMRB 40	**MBA 40**		20									58			210	150
M 45 x 1.5	**MMR 45**		65	14			59				6	3.6				170	
	MMRB 45	**MBA 45**		20									65			240	170
M 50 x 1.5	**MMR 50**		70	14			64									180	
	MMRB 50	**MBA 50**		20									70			260	180
M 55 x 2	**MMR 55**		75	16	7	3	68	8		M 8				18	18	250	
	MMRB 55	**MBA 55**		22					M 8				75			340	250
M 60 x 2	**MMR 60**		80	16			73									270	
	MMRB 60	**MBA 60**		22									80			360	270
M 65 x 2	**MMR 65**		85	16			78									290	
	MMRB 65	**MBA 65**		22									85			400	290
M 70 x 2	**MMR 70**		92	18	8	3.5	85	9								350	
	MMRB 70	**MBA 70**		24									92			470	350
M 75 x 2	**MMR 75**		98	18			90									370	
	MMRB 75	**MBA 75**		24									98			500	370
M 80 x 2	**MMR 80**		105	18			95				7.3	4.3				390	
	MMRB 80	**MBA 80**		24									105			520	390
M 85 x 2	**MMR 85**		110	18			102			M 10				34	34	400	
	MMRB 85	**MBA 85**		24					M 10				110			540	400

E* see page 31 MMRBS ** Securing: 2 cones at 90°, different threads and pitch on request:
MMR 16 x 1,5 Q; MMR 33 x 1,5 Q; MMR 42 x 1,5 Q; MMR 60 x 1,5; MMR 65 x 1,5 Q; MMR 145 x 2 Q.

Precision Locknuts MMR, MMRB, MMRBS, MBA, MBAS

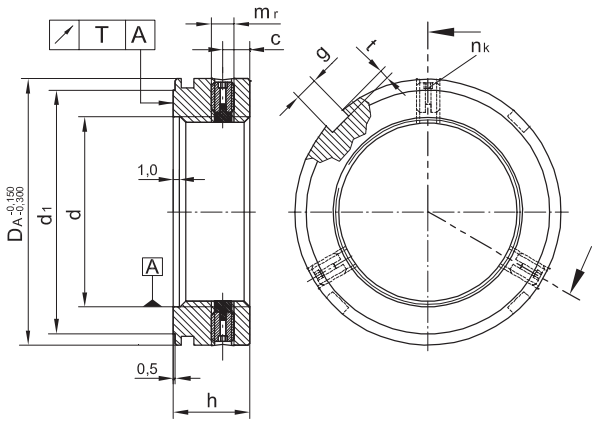

MMRB... 58-006

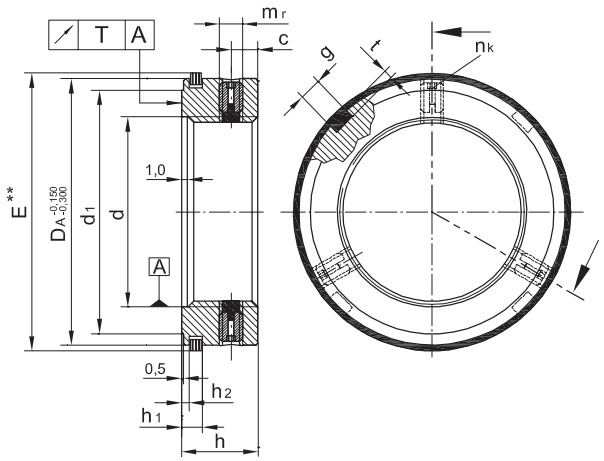

MMRBS... 58-007

Thread	Designation		Dimensions											Max. tightening torque set screws	Permissible axial load	
															MMR MMRB	MMA MBAS
Tolerance 4H	Radial locking system	Axial locking system	D_A	h	g	t	d_1	c	m_r m_a	n_K	h_1	h_2	E*	M_S	F_a	
			mm											Nm	kN	
M 90 x 2	**MMR 90**		120	20	10	4	108	9	M 10	4	7.3	4.3		34	470	
	MMRB 90	**MBA 90**		26									120		610	470
M 95 x 2	**MMR 95**		125	20			113								490	
	MMRB 95	**MBA 95**		26									125		640	490
M 100 x 2	**MMR 100**		130	20			120								510	
	MMRB 100	**MBA 100**		26									130		660	510
M 105 x 2	**MMR 105**		140	22	12	5	126								560	
	MMRB 105	**MBA 105**		28									140		700	560
M 110 x 2	**MMR 110**		145	22			133								600	
	MMRB 110	**MBA 110**		28									145		770	600
M 115 x 2	**MMR 115**		150	22			137				7.5	4.4			660	
	MMRB 115	**MBA 115**		28									150		820	660
M 120 x 2	**MMR 120**		155	24			138								710	
	MMRB 120	**MBA 120**		30									155		890	710
M 125 x 2	**MMR 125**		160	24			148								740	
	MMRB 125	**MBA 125**		30									160		920	740
M 130 x 2	**MMR 130**		165	24			149								760	
	MMRB 130	**MBA 130**		30									165		950	760
M 140 x 2	**MMR 140**		180	26	14	6	160	10	M 12					60	880	
	MMRB 140	**MBA 140**		32									180		1080	880
M 150 x 2	**MMR 150**		195	26			171								930	
	MMRB 150	**MBA 150**		32									195		1040	930
M 160 x 3	**MMRB 160**	**MBA 160**	205	34	16	7	182				8.3	5.3	205		1360	1020
M 170 x 3	**MMRB 170**	**MBA 170**	220				198						220		1430	1075
M 180 x 3	**MMRB 180**	**MBA 180**	230	36	18	8	203						230		1600	1200
M 190 x 3	**MMRB 190**	**MBA 190**	240				214						240		1670	1250
M 200 x 3	**MMRB 200**	**MBA 200**	250	38			226						250		1850	1390
M 210 x 4	**MMRB 210**		270	40	20	10	238	14	M 14		10	6.4	270	85	2000	
M 220 x 4	**MMRB 220**		280				250						280		2250	
M 240 x 4	**MMRB 240**		300	44			270						300		2300	
M 260 x 4	**MMRB 260**		310				290						310		2500	
M 280 x 4	**MMRB 280**		330	50	24		310				11	6.6	330		2850	
M 300 x 5	**MMRB 300**		360				336						360		3100	

Face runout T acc. to IT3, DIN 7151; *above Ø 200 : 6H

N_K: no. of socket set screws (locking system)

MBAS, MMRBS = MBA, MMRB + Laminar spring steel rings (labyrinth seal)

E* = Bore diameter of counterpart = $D_{AO}^{+0,1}$ … and a 25° chamfer for the sealing (see also MMRS), where the feeding diameter is 4 % larger than D_a.

5.4 Pretension of spindles with Precision Locknuts

5.4.1 Application with two Fixed End Bearings and Stretched Spindle

Two locknuts with integrated labyrinth seal are used at one end. The interior nut should have a 2–5 mm larger thread diameter, e.g. MMRS 30-60.Q2 + MMRS 35-60.Q2 with a bearing support series BSPB-M 30Q50 or BSBU-M30QB98.

Left-hand side of bearing (stretching side) **Right-hand side of bearing**

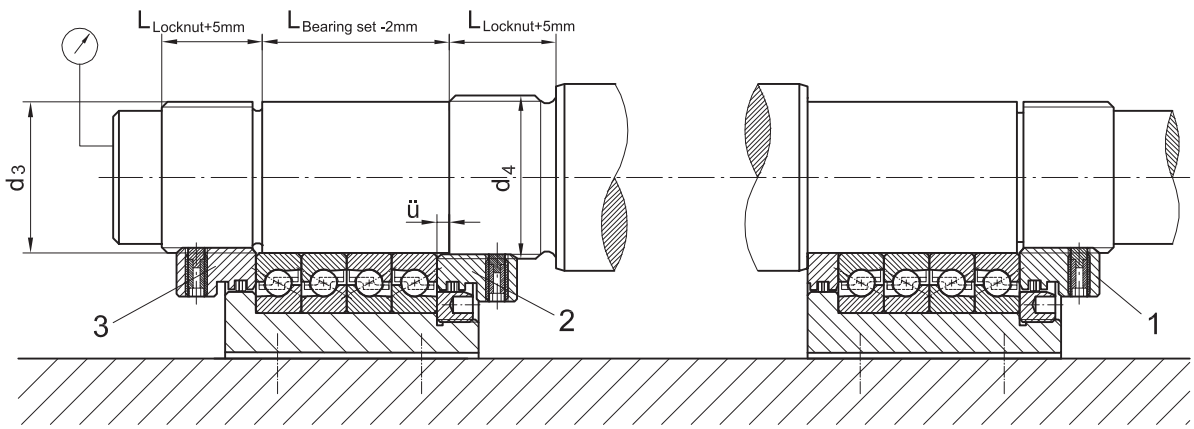

58-601

$d_4 > d_3$ by one thread size (see MMRS on page 28)

(MMRS 25-36.Q2, MMRS 35-50.Q2 and other intermediate sizes are manufactured upon demand.
As an alternative, the series MMRB locknuts can be used next to the labyrinth seal).

Spindle Stretching Procedure

1) The right-hand unit is screwed and pinned, locknut 1 is preloaded with tightening torque M_D acc. to page 27.
2) Tighten the base of the left-hand unit lightly.
3) Tighten locknuts 2 and 3 lightly first and then tighten them against each other and tighten locknut 3 with M_D.
4) Tighten screws in the base of the left-hand unit fully (ream and pin pre-drilled holes and pin).
5) Determine zero-value position at axial spindle reference surface via dial indicator. Then loosen locknut 2 a bit and carefully tighten locknut 3 until the dial of the indicator displays the setpoint stretching value. (For locknuts up to Ø 50, the pitch is 1.5 mm for 360° which corresponds e. g. to a stretch of 4.2 µm at an angle of rotation of 1°, from threat Ø 55 x 2 on, 5.6 µm correspond to 1° angle of rotation.)
6) Tighten locknut 2 with tightening torque M_D against the bearing package and lock.

5.4.2 Stretching and preloading spring-preloaded spindles and bearing units

If larger expansion of the spindles due to heat is expected, the spindles and bearings are preloaded using separate MMRB locknuts. On the following page, two drawings for inquiry show the basic structure of these cartridge or pillow block units. Of course, a combination of these designs is possible.

The preload and thus the required stiffness are set via the spring path of the disc springs. When the drawing for inquiry is processed, details are discussed with the customer. For this purpose, the drawings may be copied and the required bearing units entered in accordance with the present catalogue.
At the floating end, the shaft d_1 has to be executed with a g4 or g5 seat.

6. Inquiry drawings for fixed bearings + spring preloaded construction groups

Beidseitig gelagerter Kugelgewindetrieb, federvorgespannt, mit sicherbaren Spannmuttern.
Ball screw supported at both ends, spring preloaded, with securable locknuts.

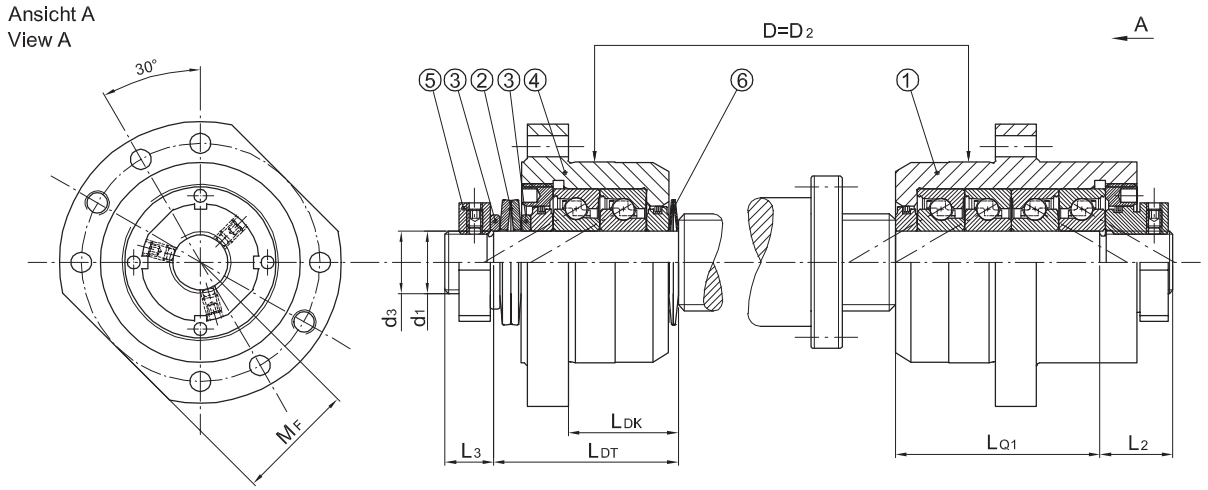

d1	d3	D=D2	L2	L3	LDT	LQ1	MF	LDK

6	Tellerfeder / Disc Spring	2 Stück / Pieces
5	sicherbare Spannmutter / securable Locknut	1 Stück / Piece
4	BSBU.....DB.....DT	1 Stück / Piece
3	Distanzring / Spacer DS .....x.....x 4	2 Stück / Pieces
2	Tellerfeder / Disc Spring	2 Stück / Pieces
1	BSBU-M.....QB.....	1 Stück / Piece
Pos.	Bezeichnung / Designation	Menge / Quantity

Techn. Daten siehe Katalog
Techn. data please see catalog

Schutzvermerk nach DIN 34 beachten
MAßSTAB/SCALE
Erstellt : Stendebach 03.03.05
Geprüft :
050303

IBC WÄLZLAGER GMBH
Wetzlar–Germany

Bezeichnung, Designation
BS–Lagerung (Schema) / BS–Support (Scheme)

BSBU-M..QB... + BSBU..DB...DT + PLS

Zeichnungsnr., Drawing no. 57-812

Beidseitig gelagerter Kugelgewindetrieb, federvorgespannt, mit sicherbaren Spannmuttern.
Ball screw supported at both ends, spring preloaded, with securable locknuts.

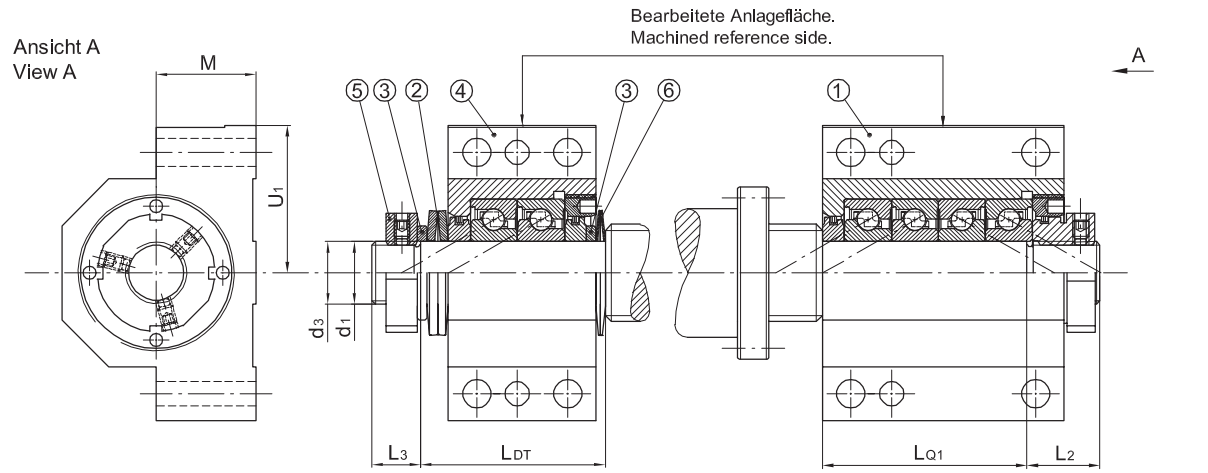

d1	d3	L2	L3	LDT	LQ1	M	U1

6	Tellerfeder / Disc Spring	2 Stück / Pieces
5	sicherbare Spannmutter / securable Locknut	1 Stück / Piece
4	BSPB.....D.....DT	1 Stück / Piece
3	Distanzring / Spacer DS .....x.....x 4	2 Stück / Pieces
2	Tellerfeder / Disc Spring	2 Stück / Pieces
1	BSPB-M.....Q.....	1 Stück / Piece
Pos.	Bezeichnung / Designation	Menge / Quantity

Techn. Daten siehe Katalog
Techn. data please see catalog

Schutzvermerk nach DIN 34 beachten
MAßSTAB/SCALE
Erstellt : Stendebach 03.03.05
Geprüft :
050303

IBC WÄLZLAGER GMBH
Wetzlar–Germany

Bezeichnung, Designation
BS–Lagerung (Schema) / BS–Support (Scheme)

BSPB-M..Q... + BSPB..D...DT + PLS

Zeichnungsnr., Drawing no. 57-813

7. Alphanumerical Product Table

Designation	Product	Page
AC	ATCoated bearings	7, 34
ACC	ATCoated bearings with ceramic balls	7
BLBU	Precision Cartridge Bearing Units for floating ends	23
BLPB	Precision Pillow Block Bearing Units for floating ends	23
BNBU	Precision Cartridge Bearing Units for ball screw nuts	20
BNPB	Precision Cartridge Bearing Units for ball screw nuts	21
BS	Precision Ball Screw Bearings	8
BS…2RSZ	Precision Ball Screw Bearings with seals	7, 8
BSBU	Precision Cartridge Bearing Units for ball screws	16
BSBU-M	Precision Cartridge Bearing Units with integrated locknut	17
BSPB	Precision Pillow Block Bearing Units for ball screws	18
BSPB-M	Precision Pillow Block Bearing Units with integrated locknut	19
CB	Hybrid Bearings with ceramic balls	6
MBA	Precision Locknut axially securable	30
MBAS	Precision Locknut, axially securable, labyrinth-sealed	30
MD	Precision Locknut with outer thread	29
MMA	Precision Locknut axially securable	30
MMR	Precision Locknut, radially securable	30
MMRB	Precision Locknut, broad, radially securable	30
MMRBS	Precision Locknut, broad, radially lysecurable, labyrinth-sealed	30
MMRS	Precision Labyrinth Locknut, radially securable, labyrinth-sealed	30
S	Precision Labyrinth Seals	29

8. Glossary

8.1 Material

Bearing Rings and Balls

Suffix	Material	Material-no.	(USA)	(JAPAN)	Hardness [HRC]
–	Bearing Steel 100Cr6	1.3505	SAE 52100	SUJ2	62±2

	Chemical Composition in percentage of weight-%							
	C	Si	Mn	P	S	Cr	Ni	Cu
	0.9-1.05	0.15-0.35	0.25-0.45	0.03	0.025	1.35-1.65	0.3	0.3

	Ceramic Balls (pressed isostaticly)	Hardness
CB	Si_3N_4	1600 [HV]

	Thin chromium coated bearing parts		
AC	Armoloy ATCoating	99	75[HRC]/1200 [HV]

8.2 Grease

Lubricant BearLub	Temperature range	Viscosity 40 °/100 °C
GH62:	– 30 °/160 °C	150/18 mm^2/s
GN21:	– 35 °/140 °C	85/12,5 mm^2/s

Additional Suffixed of ATCoated Bearings

A11	Inner and outer ring ATCoated
A15	Inner and outer ring ATCoated Rolling elements and cage as far as possible corrosion protected
A21, A26	Inner ring ATCoated

Function of the ATCoating

1) Reduction of friction, lower heat generation

Friction Partners	static friction coefficient (dry) [μo]	sliding friction coefficient (dry) [μ]
Stahl/Stahl	0.3	0.2
Stahl/ATC	0.17	0.16
ATC/ATC	0.14	0.12

2) Lubricant film bonds better.
3) Separation of parts of same material; avoiding of cold welding by adhesion, avoiding of fretting corrosion. Securing of sliding property of bearing ring against shaft or housing (important for floating bearings).
4) Outer corrosion protection, chemical resistance against aggressive materials, tribocorrosion.
5) Wear protection by higher hardness of the rim zone 1200HV, 0.003 (75 HRC).

02/05

More of IBC . . .

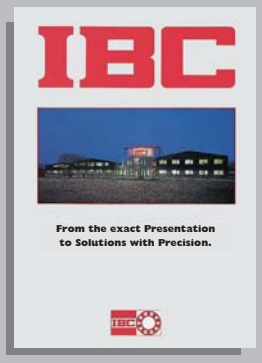

Company Profile

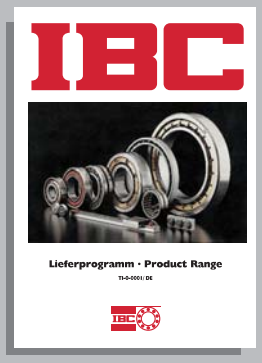

Product Range
T1-0-000 I / D (German)
T1-0-000 I / E (English)

Product Range
Pricelist

Angular Contact
Bearings 40°
T1-1-4044.0 / D (German)

Linear Bearings
T1-1-7001.2 / D (German)

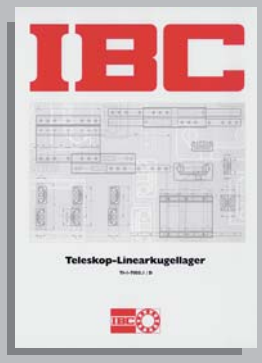

Telescopic Rails
T1-1-7005.1 / D (German)

High Precision
Bearings
T1-1-5001.1 / D (German)

Super Precision Bearings
Service Catalog
T1-1-5003.1 / D (German)
T1-1-5003.1 / E (English)

ATCoated bearings
TI-1-5010.2 / D (German)

Technical data in this catalogue has been carefully compiled. Every care has been taken to ensure the accuracy of the information contained in this catalogue but no liability can be accepted for any errors or omissions also pertaining to new developments, which occurred before printing of this catalogue.
Copyright 2005 IBC Wälzlager GmbH

IBC WÄLZLAGER GMBH

INDUSTRIAL BEARINGS AND COMPONENTS

Post box 1825 · 35528 WETZLAR (GERMANY)

Tel: +49/64 41/95 53-02
Fax: +49/64 41/5 30 15

Corporate office
Industriegebiet Oberbiel
D-35606 Solms-Oberbiel

e-mail: ibc@ibc-waelzlager.com

http://www.ibc-waelzlager.com

IBC INDUSTRIAL BEARINGS

AND COMPONENTS AG

Tel: +41/32/6 52 83 53
Fax: +41/32/6 52 83 58

Corporate office
Kapellstrasse 26
CH-2540 Grenchen

e-mail: ibc@ibcag.ch

http://www.ibc-waelzlager.com