High Precision Bearings for Printing Machinery

SCHAEFFLER GROUP
INDUSTRIAL

Foreword

High precision bearings for printing machinery

Printing machinery bearings are used in the bearing arrangements of the main cylinders in sheetfed and webfed printing machines. Due to their load carrying capacity, rigidity, accuracy and precise adjustability, they provide excellent support for the central requirement in printing machinery, namely the highest possible print quality.

The bearings are specially designed for each application in close partnership between printing machinery manufacturers and our Application Engineering functions. As a result, the bearings are precisely matched to the requirements of the customer.
This matching of design to the specific machine concept is particularly important, since exceeding requirements is a drain on resources and failing to meet requirements leads to impaired performance. Finding the optimum solution, however, is not always easy. Due to its considerable experience in the development, design and manufacture of bearings, the Schaeffler Group has the know-how necessary to always offer the best solution for an application in this complex bearing sector. Furthermore, it is able to do so in both technical and economic terms.

Extensive range for the highest print quality

Due to the wide range of requirements, standardisation of printing machinery bearings is only possible to a limited extent. The range therefore comprises a large number of types and sizes.

In addition to the classic multi-row, high precision cylindrical roller bearings NN, NNU, N4N, N4U, use is also made of non-locating bearing units with and without eccentric geometries, locating bearing units, polygon bearings, combined linear and rotary bearing units and tapered roller bearing units. The bearings are available with and without seals. The bearing seat for the cylinder journal can be of a cylindrical or tapered design.

Printing machinery bearings are cost-effective bearing arrangement systems that can be used to achieve the demands of the print industry for high productivity, low maintenance costs and excellent print quality.

Current level of technology

Technical Product Information TPI 222 replaces publication LFD from the Schaeffler Group. The data in the catalogue represent the current level of technology and manufacture as of September 2011.
They reflect not only progress in rolling bearing technology but also the experience gathered in practical use.

Any information in previous publications that does not concur with the data in this TPI is therefore invalid.

Contents

	Page
Product index	4
Technical principles	8
Radial bearings for printing machinery	58
Axial bearings for printing machinery	98
Other products	108
Appendix	
Addresses	120
Design brief for cylinder bearing arrangements in printing machinery	123

Product index

		Page
DMF	Printing machine bearing unit, locating bearing, radial cylindrical roller bearing with cage and rib-guided rolling elements, double row, axial bearing washers with axial needle roller and cage assemblies	61
DML	Printing machine bearing unit, non-locating bearing, radial cylindrical roller bearing with cage and rib-guided rolling elements, two, three or four rows of rolling elements	61
DML3D	Printing machine bearing unit, non-locating bearing, eccentric intermediate and outer ring, radial cylindrical roller bearing with cage and rib-guided rolling elements, two, three or four rows of rolling elements, swivel bearing with rib-guided rolling elements	63
DML3E	Printing machine bearing unit, non-locating bearing, eccentric intermediate ring, concentric outer ring, radial cylindrical roller bearing with cage and rib-guided rolling elements, two, three or four rows of rolling elements, swivel bearing with rib-guided rolling elements	62
DMLD	Printing machine bearing unit, non-locating bearing, two eccentric intermediate rings, concentric outer ring, radial cylindrical roller bearing with cage and rib-guided rolling elements, two, three or four rows of rolling elements, two swivel bearings with full complement roller sets	63
DMLE	Printing machine bearing unit, non-locating bearing, eccentric outer ring, radial cylindrical roller bearing with cage and rib-guided rolling elements, two, three or four rows of rolling elements	62
N4N	Radial cylindrical roller bearing with cage and rib-guided rolling elements, four rows of rolling elements, ribs on inner ring	61
N4U	Radial cylindrical roller bearing with cage and rib-guided rolling elements, four rows of rolling elements, ribs on outer ring	61
NN30	Radial cylindrical roller bearing with cage and rib-guided rolling elements, two rows of rolling elements, ribs on inner ring	61
NNU49	Radial cylindrical roller bearing with cage and rib-guided rolling elements, two rows of rolling elements, ribs on outer ring	61

Page

TBS Printing machine bearing unit, locating bearing, tapered roller bearing with single-piece, thick-walled outer ring, two rows of rolling elements 62

TR2 Printing machine bearing unit, locating bearing, matched single row tapered roller bearings in O arrangement with intermediate rings 62

ZARA Axial cylindrical roller bearing, double direction, externally centred 100

ZARI Axial cylindrical roller bearing, double direction, internally centred 100

ZAXA Axial needle roller bearing, double direction, externally centred 100

0001871E

0001871F

00018720

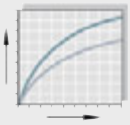

00015CE8

Technical principles

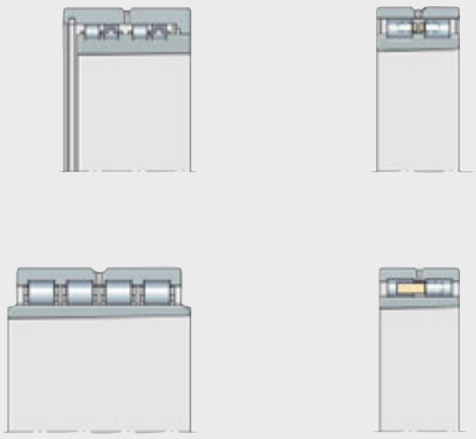

00018721

Radial bearings for printing machinery

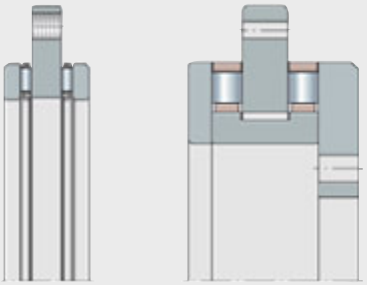

00018722

Axial bearings for printing machinery

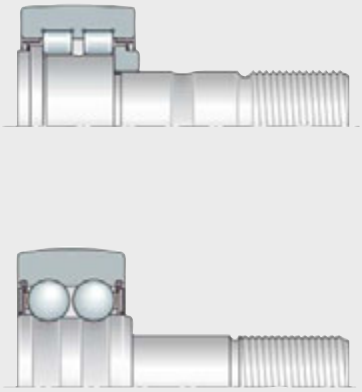

00018723

Other products

00018048

Appendix

Addresses

Design brief

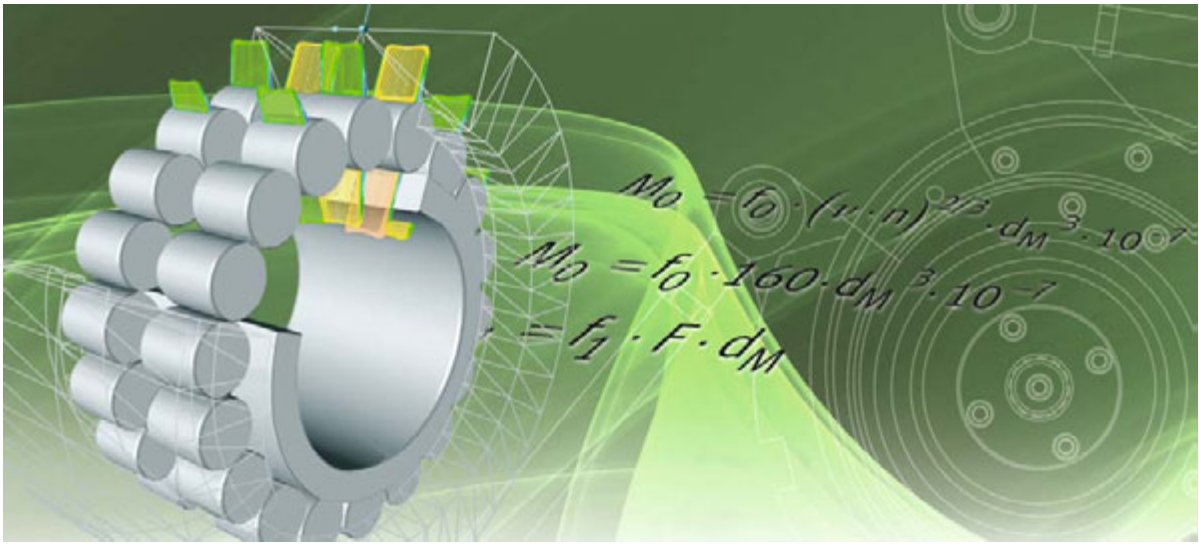

Technical principles

High precision bearings for printing machinery
Load carrying capacity and rating life
Rigidity
Friction and increases in temperature
Lubrication
Sealing
Bearing data
Design of bearing arrangements
Fitting and dismantling

Technical principles

Page

High precision bearings for printing machinery

Requirements 12
Changing the centre distances in the printing press 12
Advantages of printing machinery bearings 13

Load carrying capacity and rating life

Determining the bearing size 14
Design of the bearing arrangement using BEARINX® 14
Rating life of printing machinery bearings 15
Expanded adjusted rating life 15
Operating clearance 16

Rigidity

Influence on the bearing arrangement 17
Radial rigidity of three-ring and four-ring bearings 17
Radial rigidity of tapered roller bearings 18
Limits on preload 18

Friction and increases in temperature

Friction 19
Influence on friction 19
Determining the friction values 20
Printing machinery bearings with operating clearance 20
Printing machinery bearings with preload 21
Swivel bearings – three-ring and four-ring bearings 22

Lubrication

Principles 23
Oil lubrication 23
Grease lubrication 23
Arcanol rolling bearing greases 24
Graduated range 24
For automatic or manual grease lubrication 24
Selection of rolling bearing grease 24
Containers 25
Lubricators 25

Technical principles

Page

Sealing

Function of seals 26
Influence on operating life and wear 26

Non-contact and contact seals 26

Design of seals 27

Swivel bearings – three-ring and four-ring bearings 27

Bearing data

Geometrical tolerances 28
Tolerances for tapered bores 29
Radial bearings of tolerance class P5, excluding tapered roller bearings 30
Radial bearings of tolerance class P4, excluding tapered roller bearings 31
Radial bearings of tolerance class SP with tapered bore 32
Tapered roller bearings of tolerance class P5 34
Axial bearings 35

Radial internal clearance 36
Radial internal clearance of bearings with cylindrical bore 36

Design of bearing arrangements

Requirements for the adjacent construction 37
Axial location of printing machinery bearings 38

Shaft and housing tolerances 38
Tolerances of side wall bore 38
Tables of shaft and housing tolerances 39

Geometrical tolerances of bearing seating surfaces 41
Accuracy of bearing seating surfaces 42
Roughness of bearing seats 43

Values for IT grades 43

Fitting and dismantling

Page

Mounting guidelines 44

Delivered condition and storage 44

Removal from packaging 44

Mounting methods 44
- Supercooling of bearings 44
- Pressing into place at room temperature 44

Dismounting 45

Clearance adjustment of cylindrical roller bearings 45
- Mounting procedure for cylindrical roller bearings 45
- Setting the clearance without a gauge 47

Industrial mounting service 48
- Equipment rental 48

Measurement and inspection of high precision bearings 49
- Enveloping circle gauge MGI21 49
- Enveloping circle gauge MGA31 50
- Snap gauge SNAP-GAUGE 51
- Taper gauge MGK133 52
- Taper ring gauges KLR 53

Hydraulic mounting and dismounting of high precision bearings 54
- Hand pumps 54
- Hydraulic nuts 56

High precision bearings for printing machinery

Requirements

Printing machinery bearings are used to centre plate cylinders, blanket cylinders, impression cylinders and transfer cylinders in printing machinery. This is associated with a range of requirements that must be fulfilled to the optimum possible extent by the bearings.

The accuracy of the cylinder bearing arrangement has a decisive influence on the print quality output. Printing machinery bearings must ensure that the cylinders in the print process work together to the optimum degree. There must be no relative motion in a radial or axial direction. The bearings are therefore subject to high demands in terms of freedom from clearance, rigidity and runout quality. Furthermore, it must be possible to move the plate or form cylinders axially in a controlled manner and, depending on the machine type, to achieve oblique adjustment (diagonal register function).

Changing the centre distances in the printing press

In order to carry out printing machine functions such as on-pressure, off-pressure or compensating for different paper thicknesses, it must be possible to change the centre distances of the cylinders in the printing press.

To this end, the printing machinery bearings have eccentric rings that can be swivelled through a specific angle reliably and with low friction, *Figure 1* and *Figure 2*, page 13.

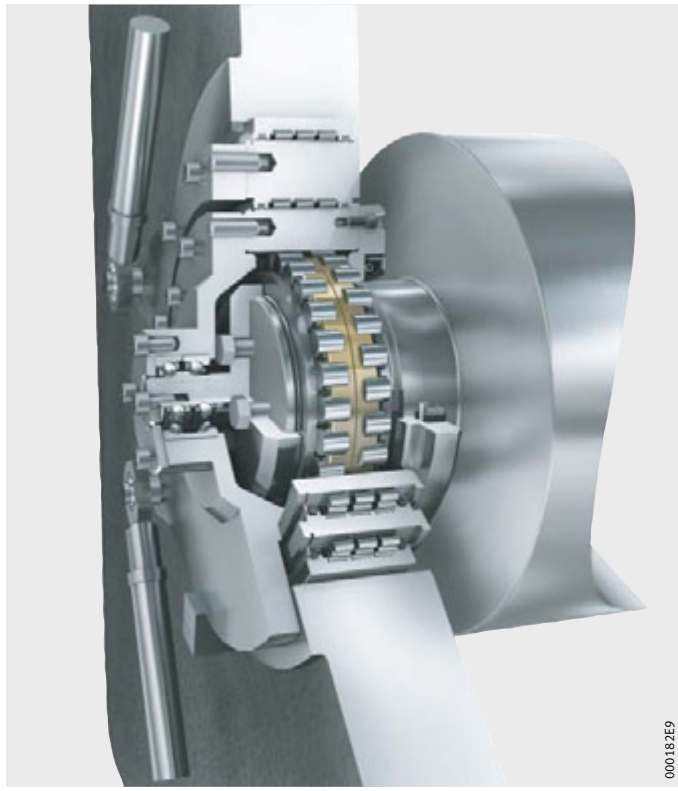

Figure 1
Positioning by means of eccentric bearing rings

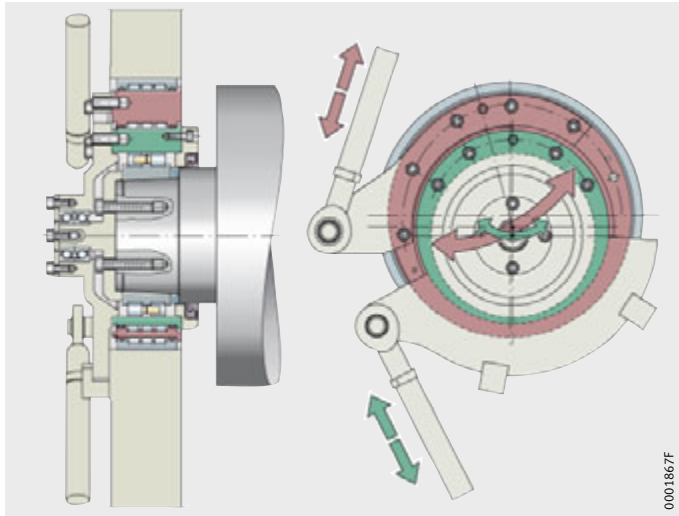

Figure 2
Positioning by means of eccentric bearing rings

Advantages of printing machinery bearings

Compared to standard solutions, printing machinery bearings from the Schaeffler Group have a series of advantages for the user, see table.

Advantages

Advantages	Description
High accuracy	This is achieved as a result of the bearing accuracy (tolerance classes P5 or P4) and the bearing preload. As a result, the bearing arrangement is clearance-free.
High rigidity	The accuracy and the combination of bearing parts, together with bearing preload, give high radial system rigidity.
Reliable eccentric adjustment	The rolling element-based swivel bearing allows reliable, low-friction eccentric adjustment and prevents the possibility of jamming and premature wear.
Low operating temperature	Due to their construction, the bearings run with low friction. As a result, there is little heating of the bearing position.
Compact construction	The units combine all the necessary functions in one bearing. This gives saving in terms of individual parts, simplified handling and more economical logistics.
Ease of mounting	The units are particularly advantageous in this respect. Since several functions are combined in one bearing, mounting is simple and secure.

Determining the bearing size

Where the necessary bearing size for a bearing arrangement is to be determined, this is based in the majority of cases on the requirements for load carrying capacity, rating life and operational reliability of the bearing arrangement. In addition to these criteria, bearings for printing machinery are subject to requirements for high rigidity and freedom from clearance. In order to determine the rating life, the influence of preload in the bearing must therefore also be taken into consideration.

However, the rating life can also be influenced to a considerable extent by possible misalignment of the bearing journal, the tolerances of the components and least but not least by lubrication and contamination.

Design of the bearing arrangement using BEARINX®

For optimum design of the bearing arrangement, the engineering service of the Schaeffler Group should be consulted and the calculation software BEARINX® should be used, *Figure 1* and *Figure 2*, page 15. This calculation software allows highly realistic analyses even of complex bearing systems for cylinders.

In the design of three-ring and four-ring bearings, only the rotating cylindrical roller bearing is generally taken into consideration. This is the bearing subjected to the most heaviest load. The swivel bearing, on the other hand, is subjected to predominantly static load.

Under the forces commonly occurring in printing machinery and while adhering to the recommended fits, the permissible static load safety factor is not achieved by a large margin. Even under high dynamic loads such as those occurring in printing machinery without bearer rings due to the so-called channel runout, the swivel bearing has demonstrated its high reliability in practice.

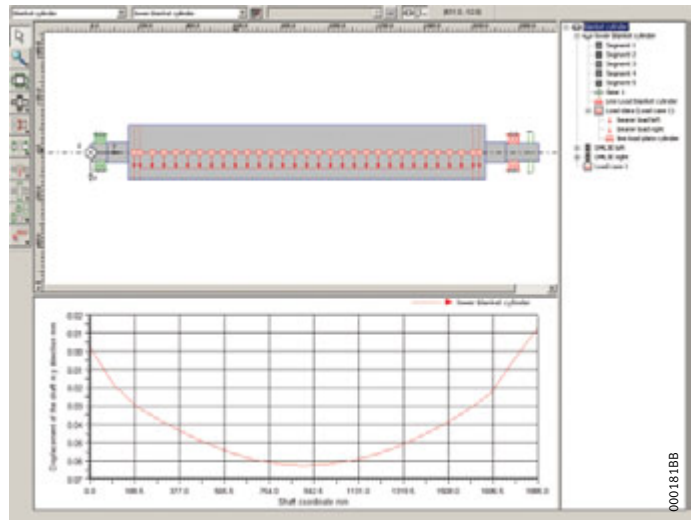

Figure 1
BEARINX® model
of a bearing system for a cylinder

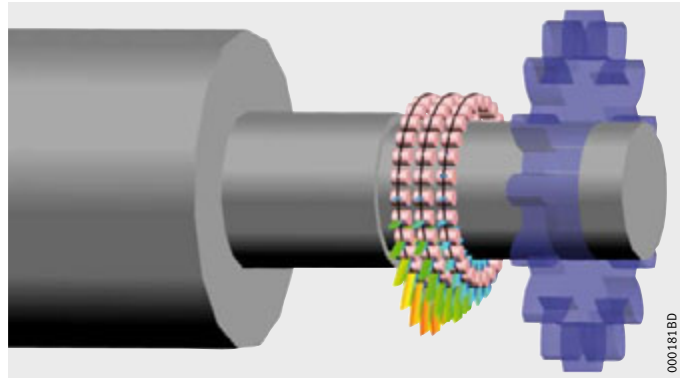

Figure 2
Determining
the Hertzian contact pressure

Rating life of printing machinery bearings

Printing machinery bearings are normally designed for a rating life of at least 10 years. Depending on the duration of machine usage, this means 40 000 h to 60 000 h for the bearing in a rotary printing machine. Bearings for sheetfed offset printing machines are normally designed for an operating life of at least 200 million printed paper sheets. Since these machines are used very flexibly, are often retooled to accommodate a new order and are therefore operated at a wide variety of speeds, it is more appropriate to state the life as a number of printed paper sheets than in hours.

Expanded adjusted rating life

The calculation of the expanded adjusted rating life L_{nm} is standardised in DIN ISO 281:2010.

The contact pressure has a decisive influence on the rating life of a printing machinery bearing.

Operating clearance

The operating clearance s is determined on a fitted bearing still warm from operation. It is derived from the radial internal clearance and the change in the radial internal clearance as a result of interference fit and thermal influences in the fitted condition.

The thermal influence on the bearing arrangement is dependent on the machine type, bearing size, load, speed and lubrication. In order to achieve the required rating life, it is necessary to carefully determine the minimum operating clearance occurring by means of validation as representative as possible of practical conditions, *Figure 3*. Guidelines on the setting of mounting clearance, see page 45.

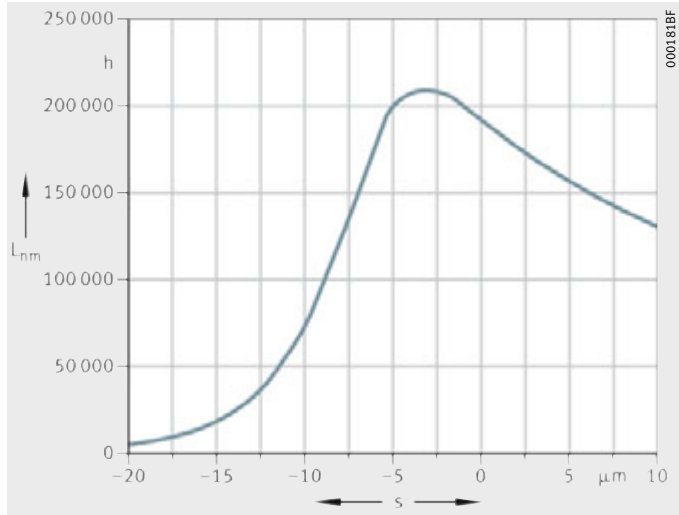

Cylindrical roller bearing
in printing machine bearing unit DML3E

Figure 3
Adjusted rating life
as a function
of operating clearance

Rigidity

Influence on the bearing arrangement

The rigidity of the complete system is influenced not only by the cylinder and the adjacent construction but also to a considerable extent by the bearing arrangement. Due to their larger contact surface, cylindrical roller bearings or tapered roller bearings have considerably higher rigidity than ball bearings. Furthermore, they can be preloaded without problems and thus operated with negative internal clearance. As a result, a further significant increase in rigidity can be achieved.

Freedom from clearance and high rigidity have a favourable influence on the vibration behaviour. This characteristic is particularly important in modern printing machinery without bearer rings. Complete freedom from clearance in the bearing position can be achieved in particular through the use of printing machine bearing units. They are therefore particularly suitable for the requirements of modern, high performance printing machinery.

Radial rigidity of three-ring and four-ring bearings

The radial rigidity of three-ring and four-ring bearings is primarily and decisively determined by the rotating cylindrical roller bearing. The rigidity of the swivel bearing is significantly higher by comparison. Since this is in mathemetical terms a set of springs connected in series, the swivel bearing contributes a comparatively low proportion of the total bearing deflection. A four-row, three-ring bearing DML3E, for example, has smaller radial displacement compared to a double row, three-ring bearing DML3E, *Figure 1*. The displacement can be reduced even further by preloading of the rotating bearing.

DML3E105×210×80

δ = radial displacement
F_r = radial bearing load

① Four-row bearing
② Double row bearing
③ Double row bearing, with clearance
④ Double row bearing, preloaded

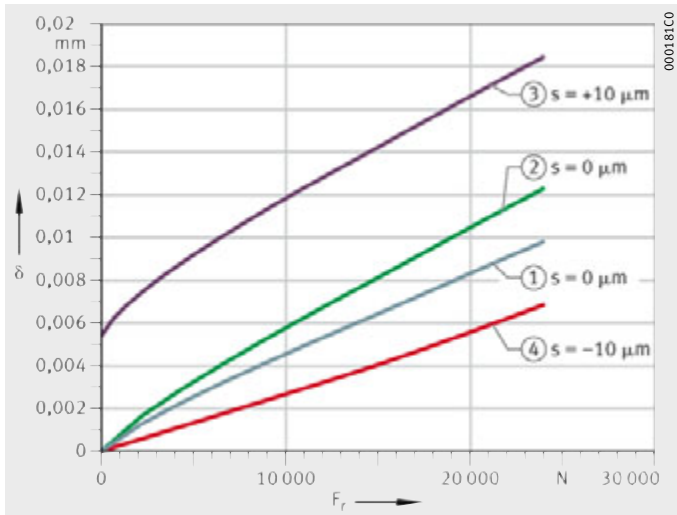

Figure 1
Radial displacement as a function of operating clearance and bearing type

Rigidity

Radial rigidity of tapered roller bearings

The radial rigidity of preloaded tapered roller bearings is slightly higher than that of preloaded cylindrical roller bearings. In practice, however, the differences are small and negligible. Furthermore, tapered roller bearings have a relatively high axial rigidity and can support tilting moments. Due to the high tilting rigidity, however, it must be noted that misalignment of the cylinder journal is only possible to a very limited extent.

Tapered roller bearings are highly suitable, for example, as locating bearings in sheetfed offset printing machines. The bearing unit DMF offers particularly high radial as well as axial rigidity. This is achieved by the combination of a radial cylindrical roller bearing and a double direction, clearance-free axial needle roller bearing. Due to its high axial rigidity in combination with its extremely low axial runout due to the design, this bearing unit is particularly suitable for the paper feed cylinders in sheetfed offset printing machines.

Limits on preload

Preloading of bearings increases the internal forces acting on the individual rolling elements. This increases the friction and bearing temperature. Slight preload not only has a positive effect on the rigidity, but the fatigue life is also increased slightly. Above this optimum preload value, however, the rating life decreases very rapidly and there is a disproportionately large increase in both friction and bearing temperature.

Friction and increases in temperature

Friction

An important characteristic of bearings for printing machinery is low frictional torque and therefore low bearing temperature. In general, the operating temperature of the bearing should not exceed +60 °C, in order to prevent any possible negative influences on the printing process.

Cylindrical roller bearings have particularly low friction and are therefore advantageous for printing machinery running at high speeds.

Influence on friction

The frictional torque and bearing temperature are dependent on the following significant influences:

- bearing type
- bearing size
- speed
- load
- bearing clearance
- lubrication
- mounting location
- sealing concept.

Lubrication has a considerable influence on the bearing temperature. With grease lubrication and in conjunction with a special smooth-running grease, significantly lower bearing temperatures can be achieved than with oil lubrication. Based on practical experience, guide values can be stated for the operating temperature of a main cylinder bearing arrangement, see table.

Operating temperature

Offset printing	Main bearing	Operating temperature with	
		Oil lubrication °C	Grease lubrication (optimised) °C
Web	Tapered roller bearing	55 – 70	45 – 60
	Cylindrical roller bearing	50 – 60	35 – 50
Sheet	Tapered roller bearing	45 – 55	35 – 50
	Cylindrical roller bearing	40 – 50	30 – 40

If grease lubrication is used, it must be ensured that there is not an excessive quantity of grease in the bearing, especially in the case of triple row and four-row cylindrical roller bearings. Otherwise, significantly higher bearing temperatures must be expected in printing machines running at high speeds in the first few hundred hours of operation, due to the increased amount of churning.

Care must therefore be taken in determining the quantity of grease used in initial greasing and relubrication of the specific bearing type. We recommend that the engineering service of the Schaeffler Group should be consulted on this matter.

Determining the friction values

In order to determine the friction values, the speed and load must be known. The type of lubrication, lubrication method and viscosity of the lubricant at operating temperature are other factors necessary for calculation.

Printing machinery bearings with operating clearance

The bearing friction and frictional power of printing machinery can be calculated in approximate terms.

Total frictional torque M_R:

$$M_R = M_0 + M_1$$

Frictional power N_R:

$$N_R = M_R \cdot \frac{n}{9\,550}$$

Frictional torque as a function of speed for $\nu \cdot n \geqq 2\,000$:

$$M_0 = f_0 \cdot (\nu \cdot n)^{2/3} \cdot d_M{}^3 \cdot 10^{-7}$$

Frictional torque as a function of speed for $\nu \cdot n < 2\,000$:

$$M_0 = f_0 \cdot 160 \cdot d_M{}^3 \cdot 10^{-7}$$

Frictional torque as a function of load for cylindrical roller bearings and double row tapered roller bearings (tapered roller bearings in printing machinery applications are predominantly under radial load):

$$M_1 = f_1 \cdot F \cdot d_M$$

M_R Nmm
Total frictional torque

M_0 Nmm
Frictional torque as a function of speed

M_1 Nmm
Frictional torque as a function of load

N_R W
Frictional power

n min^{-1}
Operating speed

f_0 –
Bearing factor for frictional torque as a function of speed, see tables, page 21

ν mm^2s^{-1}
Kinematic viscosity of lubricant at operating temperature. In the case of grease, the decisive factor is the viscosity of the base oil at operating temperature

d_M mm
Mean bearing diameter (d + D)/2

f_1 –
Bearing factor for frictional torque as a function of load, see tables, page 21

F N
Radial load for radial bearings, axial load for axial bearings.

Bearing factors

The bearing factors f_0 and f_1 are mean values derived from series of tests and correspond to the data given in ISO 15312, see tables.

In the case of grease lubrication, they are valid for bearings after running-in and with uniform distribution of lubricant. In the freshly greased state, the bearing factor f_0 can be two to five times higher.

If oil bath lubrication is used, the oil level must reach the centre of the lowest rolling element. If the oil level is higher, f_0 may be up to 3 times the value given in the table.

Bearing factors for cylindrical roller bearings with cage

Series	Bearing factor f_0		Bearing factor f_1
	Grease, oil mist	Oil bath, recirculating oil	
Double row	1,2	4,4	0,0002
Triple row	1,8	6,6	
Four-row	2,4	8,8	

Bearing factors for axial roller bearings

Series	Bearing factor f_0		Bearing factor f_1
	Grease, oil mist	Oil bath, recirculating oil	
AXK, AXW	3	4	0,0015
811, K811	2	3	
812, K812			
893, K893			
894, K894			

Bearing factors for tapered roller bearings

Series	Bearing factor f_0		Bearing factor f_1
	Grease, oil mist	Oil bath, recirculating oil	
Double row bearing (matched pair)	6	9	0,0004

Printing machinery bearings with preload

In preloaded bearings, the rolling elements are subjected to additional load. Depending on the preload level, this may lead to an increase in the frictional torque.

Swivel bearings Three-ring and four-ring bearings

Swivel bearings are generally sealed by means of special toroidal rings on both sides. These are contact type seals that induce a certain amount of friction. A further amount of friction is generated by the minimal radial bearing preload. A certain level of torque is required in order to rotate the swivel bearing and this must be taken into consideration in the dimensioning of the adjustment device in the printing machine.

In modern printing machinery bearings from the Schaeffler Group, the swivel bearing is supported by rib-guided cylindrical rollers. Investigations have shown that, in printing machinery with operating temperatures $\vartheta < 45$ °C, this concept gives a consistently low frictional torque compared with cage-guided needle roller bearings, see table.

The values stated in the table are valid for the bearing unit when fitted and operating temperatures $\vartheta < 45$ °C. During the initial period, the values can be approx. 1,5 times higher, since a certain running-in period must be anticipated.

Guide values for frictional torque

Series		Diameter range D mm	Frictional torque M_R Nm
DML3E, DML3D		< 200	< 25
		> 200	< 40
DMLD	Inner eccentric	< 200	< 25
		> 200	< 40
	Outer eccentric	< 200	< 50
		> 200	< 80

Higher operating temperatures

In applications with operating temperatures $\vartheta > 45$ °C and large bearing diameters, there may be a significant increase in frictional torque in the swivel bearing. For these applications, the Schaeffler Group offers not only rib-guided cylindrical rollers but also an additional cage in the swivel bearing.

Dimensioning of the adjustment device

When dimensioning the adjustment device, a possible increase in swivel torque during running-in or at higher operating temperatures must be taken into consideration and determined by means of tests.

Lubrication

Principles

Bearings for printing machinery can be lubricated with grease or oil.

In practice, the following arrangements are used:

- The drive side and tending side are lubricated using grease.
- The drive side is lubricated using oil, while the tending side is lubricated using grease.
- The drive side and tending side are lubricated using oil.

Oil lubrication

The advantage of oil lubrication is freedom from maintenance. The disadvantages are the higher friction and bearing temperature as well as more costly sealing.

In general, the oil used in the drive of the printing machine is also used for lubrication of the bearings. Normally, mineral-based or synthetic gearbox oils of viscosity classes ISO VG 68, 100 and 150 are used.

Cleanliness

The cleanliness of the oil has a considerable influence on the rating life of the bearings, see section Load carrying capacity and rating life, page 14.

The Schaeffler Group therefore recommends that an oil filter should be provided; attention must be paid to the filtration rate. The filter mesh should be $x < 25\ \mu m$.

Oil quantities

Large oil quantities have a considerable influence on the friction behaviour and thus on the temperature level in the bearing. In this case, we recommend consulting the engineering service of the Schaeffler Group.

Grease lubrication

The advantages of grease lubrication are as follows:

- particularly low friction and bearing temperature are possible
- simple sealing
- cost-effective
- low system costs.

The disadvantage of grease lubrication is:

- the risk of increased bearing temperatures if overgreasing is carried out.

Lubrication intervals

Bearings in printing machinery are often lubricated twice a year. This value is appropriate to practice, even for non-contact gap seals. In this case, the grease fulfils an additional protective function by preventing dust from entering the rolling contact zone.

Where gap seals are fitted, sealing by means of grease does not give adequate protection of the bearing against external liquid media.

Lubrication

Arcanol rolling bearing greases

Starting from a larger number of lubricants, Schaeffler Group Industrial developed the range of Arcanol rolling bearing greases. These greases offer very good preconditions for favourable running behaviour of bearings and a long operating life and high operational reliability of the bearing arrangement.

The area of application of Arcanol was determined under widely differing operating conditions and with rolling bearings of all types by means of modern testing methods and testing systems.

Graduated range

The range is graduated such that almost all areas of application can be covered to an optimum extent.

For automatic or manual grease lubrication

For grease lubrication, automatic lubricators are available in the designs COMPACT, CHAMPION and CONCEPT6, filled with Arcanol greases from FAG.

For manual lubrication, we supply a grease gun, comprising a manual grease gun ARCA-GREASE-GUN and the matching armoured hose ARCA-GREASE-GUN.HOSE.

Selection of rolling bearing grease

In printing machinery engineering, two greases are used in preference, see table. For bearings in main cylinders, very high quality requirements are fulfilled using the grease MULTITOP. The universal grease for ball and roller bearings is suitable for high speeds, high loads and both low and high temperatures.

It ensures full performance capability and is characterised in particular by:

- long operating life
- high operational reliability
- low friction behaviour.

For yoke and stud type track rollers, the grease LOAD150 is used in preference. The special grease for ball, roller and needle roller bearings is suitable for high loads, a wide speed range and swivel motion.

Arcanol rolling bearing greases

Designation	Thickener	Base oil viscosity at +40 °C mm^2/s	Consistency NLGI	Operating temperature °C		Continuous limit temperature °C
				from	to	
MULTITOP	Lithium soap	≧ ISO VG 68	2	–40	+140	+80
LOAD150	Lithium complex	≧ ISO VG 150	2	–20	+140	+90

Containers

Arcanol rolling bearing greases are available in tubes, cartridges, cans, buckets, hobbocks and drums, see table.

Grease container sizes

Arcanol grease[1]	Tube			Car-tridge	Can	Bucket		Hobbock		Drum
	20 g	70 g	250 g	400 g	1 kg	5 kg	10 kg	25 kg	50 kg	180 kg
MULTITOP	–	–	●	●	●	●	●	●	–	●
LOAD150	–	–	–	●	●	–	●	–	–	–

[1] Other containers are available by agreement.

Lubricators

Automatic lubricators convey fresh grease in the defined quantity at the correct time to the contact points of the rolling bearing, *Figure 1*.

The devices adhere to the lubrication and maintenance intervals and prevent undersupply or oversupply of grease. Plant downtime and maintenance costs are reduced as a result.

The lubricators are matched to the bearing position. They have a wide range of applications, for example on pumps, compressors and fans, in conveying equipment, machinery etc.

Lubricators have the following advantages:

- individually configured, precise supply to each bearing position
- fully automatic, maintenance-free operation
- reduced personnel costs compared to manual relubrication
- different dispensing times can be selected
- pressure buildup to max. 25 bar, thereby overcoming any obstructions.

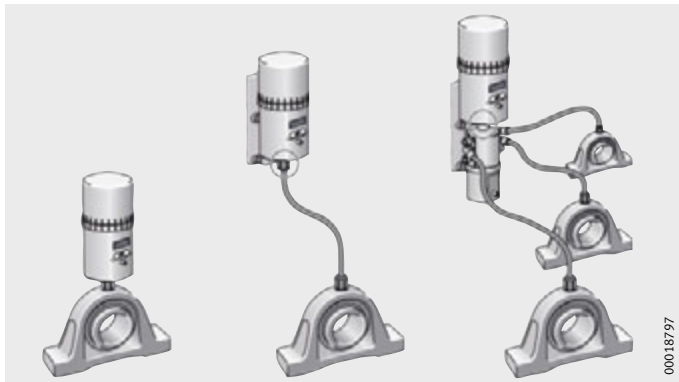

Figure 1
Lubricator Motion Guard

Further information

- Detailed information on automatic lubricators can be found in Catalogue IS 1, Mounting and Maintenance of Rolling Bearings.

Sealing

Function of seals

The sealing system is intended to retain the lubricant in the bearing and prevent the ingress of contaminants and moisture into the bearing.

In printing machinery, the risk of contamination by solid particles is comparatively low, so simple gap seals offer adequate protection.

These do not, however, offer adequate protection against liquids which may, for example, be present during washing of the printing machine. In this case, effective labyrinth seals or contact seals are necessary.

Influence on operating life and wear

Contaminants may have various effects:

- A large quantity of very small, abrasive particles causes wear in the bearing. The increasing operating clearance and noise level then bring the operating life of the bearing to an end.
- Larger, overrolled hard particles lead to indentations in the raceways. This reduces the fatigue life.
- Liquid contaminants such as water or cleaning agents destroy the lubricant film. This leads to wear and corrosion.

Non-contact and contact seals

With non-contact seals, there is no friction in the lubricant gap other than that due to lubricant friction itself. These seals are wear-free, generate no heat and can function for a long period, *Figure 1*.

Contact seals are in contact with the metallic running surface under a contact force that is normally a radial force, *Figure 2*, page 27. They allow simple and compact designs. The additional seal friction must be taken into consideration in design, especially in the case of printing machines running at high speeds.

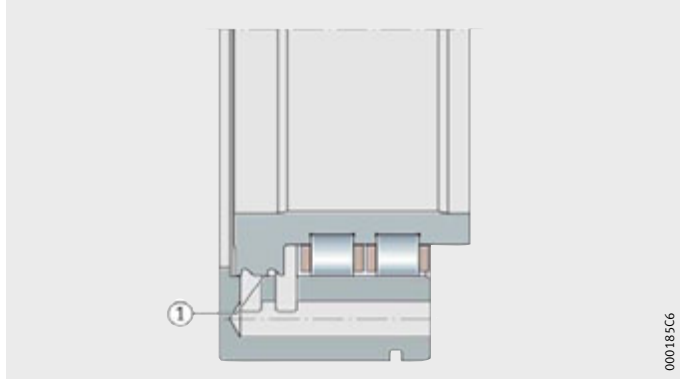

① Non-contact seal

Figure 1
Non-contact sealing of the bearing

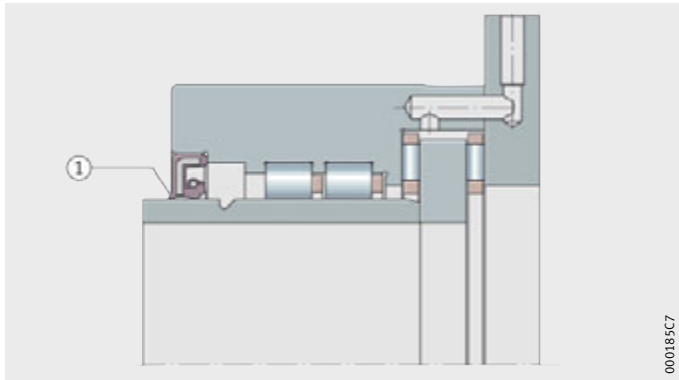

① Contact seal

Figure 2
Contact sealing of the bearing

Design of seals

Sealing of printing machinery bearings can be achieved in the adjacent construction or appropriate seals can be integrated in the bearing itself.

In seal selection, attention must be paid to:

- the type of lubrication and the lubricant
- the bearing environment
- the available design envelope
- the design work involved
- the circumferential speed at the sealing surface
- seal friction
- the temperature increase due to friction.

Swivel bearings Three-ring and four-ring bearings

In the case of printing machinery bearings, the environment must be expected to contain dust, ink, moist materials, cleaning agents and oil from the drive. For this reason, the swivel bearing must be effectively sealed as well.

With a few exceptions, toroidal contact rings are fitted on both sides that allow a particularly compact sealing arrangement. In order to achieve an optimum compromise between sealing action and frictional torque, specially treated O rings are used and close tolerances are selected.

Geometrical tolerances

Unless stated otherwise, the tolerances for radial rolling bearings in printing machinery correspond to DIN 620-2 (ISO 492), while the tolerances for axial rolling bearings correspond to DIN 620-3 (ISO 199).

The accuracy of printing machinery bearings corresponds in general to the more stringent accuracy classes P5 or P4. In some cases, functionally decisive parameters are produced to even narrower tolerances, see table, *Figure 1*, page 29 and table, page 30.

Dimensional and tolerance symbols

Dimensional and tolerance symbols	Toleranced characteristic to DIN ISO 1132 and DIN 620
d	Nominal bore diameter
Δ_{ds}	Deviation of a single bore diameter
Δ_{dmp}	Deviation of mean bore diameter in a single plane
Δ_{d1mp}	Deviation of mean large end diameter in tapered bores
V_{dsp}	Variation of single bore diameter in a single plane
V_{dmp}	Variation of mean bore diameter
D	Nominal outside diameter
Δ_{Ds}	Deviation of a single outside diameter
Δ_{Dmp}	Deviation of mean outside diameter in a single plane
V_{Dsp}	Variation of single outside diameter in a single plane
V_{Dmp}	Variation of mean outside diameter
B	Nominal inner ring width
Δ_{Bs}	Deviation of a single inner ring width
V_{Bs}	Variation of inner ring width
C	Nominal outer ring width
Δ_{Cs}	Deviation of a single outer ring width
V_{Cs}	Variation of outer ring width
K_{ia}	Radial runout of inner ring of assembled bearing
K_{ea}	Radial runout of outer ring of assembled bearing
S_d	Axial runout of inner ring face to the bore
S_D	Runout of outer ring outside surface generatrix to the face
S_{ia}	Axial runout of inner ring of assembled bearing
S_{ea}	Axial runout of outer ring of assembled bearing
S_i	Variation of washer thickness of shaft locating washer
S_e	Variation of washer thickness of housing locating washer
Δ_{Ts}, Δ_{T1s}, Δ_{T2s}	Deviation in total width from nominal dimension of tapered roller bearing measured at one point

Tolerances for tapered bores

Tolerances for tapered bores of high precision cylindrical roller bearings: see *Figure 1* and page 32.

α = inclination angle at end of taper = 2° 23′ 9,4″

2α = taper angle at end of taper = 4° 46′ 18,8″

B = width of inner ring

d = nominal bearing bore diameter

d_1 = bore diameter at large end of taper

Δ_{dmp} = deviation of bore diameter from nominal dimension in a single radial plane

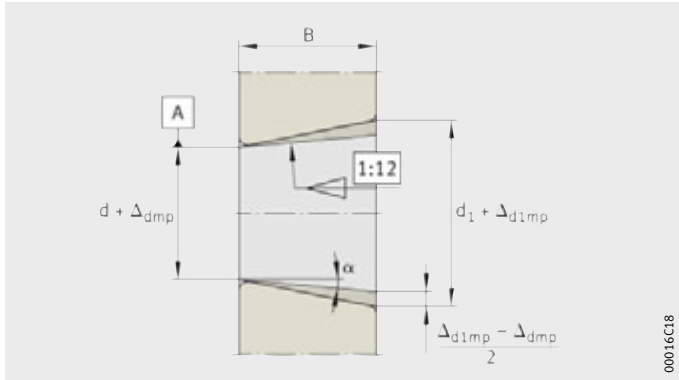

Figure 1
Tolerances for tapered bores

Radial bearings of tolerance class P5, excluding tapered roller bearings

The dimensional and geometrical tolerances of radial bearings of tolerance class P5 with a cylindrical bore are in accordance with DIN 620-2 (ISO 492), see tables. The tolerances for tapered roller bearings are presented separately, see page 34.

Tolerances P5 for inner ring

d mm		Δ_{dmp} Deviation		V_{dsp} Diameter series		V_{dmp}	K_{ia}	S_d
				9	0, 1, 2, 3, 4			
over	incl.	upper	lower	max.	max.	max.	max.	max.
50	80	0	–9	9	7	5	5	8
80	120	0	–10	10	8	5	6	9
120	180	0	–13	13	10	7	8	10
180	250	0	–15	15	12	8	10	11

Tolerances P5 for inner ring (continued)

d mm		Δ_{Bs} Deviation		V_{Bs}
over	incl.	upper	lower	max.
50	80	0	–150	6
80	120	0	–200	7
120	180	0	–250	8
180	250	0	–300	10

Tolerances P5 for outer ring

D mm		Δ_{Dmp} Deviation		V_{Dsp} Diameter series		V_{Dmp} [1]	K_{ea}	S_D	V_{Cs}
				9	0, 1, 2, 3, 4				
over	incl.	upper	lower	max.	max.	max.	max.	max.	max.
50	80	0	–9	9	7	5	8	8	6
80	120	0	–10	10	8	5	10	9	8
120	150	0	–11	11	8	6	11	10	8
150	180	0	–13	13	10	7	13	10	8
180	250	0	–15	15	11	8	15	11	10
250	315	0	–18	18	14	9	18	13	11
315	400	0	–20	20	15	10	20	13	13

Δ_{Cs} is identical to Δ_{Bs} for the inner ring of the corresponding bearing.

[1] Applies before assembly of the bearing and after removal of internal or external snap rings.

Radial bearings of tolerance class P4, excluding tapered roller bearings

The dimensional and geometrical tolerances of radial bearings of tolerance class P4 with a cylindrical bore are in accordance with DIN 620-2, see tables.

Tolerances P4 for inner ring

d mm		Δ_{dmp} Deviation		Δ_{ds} Diameter series 0, 1, 2, 3, 4 Deviation		V_{dsp} 9	V_{dsp} 0, 1, 2, 3, 4	V_{dmp}	K_{ia}
over	incl.	upper	lower	upper	lower	max.	max.	max.	max.
50	80	0	−7	0	−7	7	5	3,5	4
80	120	0	−8	0	−8	8	6	4	5
120	180	0	−10	0	−10	10	8	5	6
180	250	0	−12	0	−12	12	9	6	8

Tolerances P4 for inner ring (continued)

d mm		S_d	Δ_{Bs} Deviation		V_{Bs}
over	incl.	max.	upper	lower	max.
50	80	5	0	−150	4
80	120	5	0	−200	4
120	180	6	0	−250	5
180	250	7	0	−300	6

Tolerances P4 for outer ring

D mm		Δ_{Dmp} Deviation		Δ_{Ds} Diameter series 0, 1, 2, 3, 4 Deviation		V_{Dsp} 9	V_{Dsp} 0, 1, 2, 3, 4	V_{Dmp}	K_{ea}
over	incl.	upper	lower	upper	lower	max.	max.	max.	max.
50	80	0	−7	0	−7	7	5	3,5	5
80	120	0	−8	0	−8	8	6	4	6
120	150	0	−9	0	−9	9	7	5	7
150	180	0	−10	0	−10	10	8	5	8
180	250	0	−11	0	−11	11	8	6	10
250	315	0	−13	0	−13	13	10	7	11
315	400	0	−15	0	−15	15	11	8	13

Tolerances P4 for outer ring (continued)

D mm		S_D S_{D1}	Δ_{Cs}	V_{Cs}
over	incl.	max.		max.
50	80	4	Δ_{Cs} and V_{Cs} are identical to Δ_{Bs} and V_{Bs} for the inner ring of the corresponding bearing	3
80	120	5		4
120	150	5		5
150	180	5		5
180	250	7		7
250	315	8		7
315	400	10		8

Radial bearings of tolerance class SP with tapered bore

The dimensional and geometrical tolerances of radial bearings of tolerance class P5 with a tapered bore are valid for the series NN30 and NNU49, see tables and *Figure 1*, page 29.

Tolerances SP for inner ring

d mm		Δ_{ds}, Δ_{dmp} µm		Δ_{dmp} µm		V_{Bs} µm	Δ_{Bs} µm	
over	incl.							
18	30	0	−6	10	0	2,5	0	−120
30	50	0	−8	12	0	3	0	−120
50	80	0	−9	15	0	4	0	−150
80	120	0	−10	20	0	4	0	−200
120	180	0	−13	25	0	5	0	−250
180	250	0	−15	30	0	6	0	−300

Tolerances SP for inner ring (continued)

d mm		V_{dp} µm Bore		V_{dmp} µm	$\Delta_{d1mp} - \Delta_{dmp}$ µm		K_{ia} µm	S_d µm	S_{ia} µm
over	incl.	Cylindrical	Tapered						
18	30	3	3	3	4	0	3	4	4
30	50	4	4	4	4	0	4	4	4
50	80	5	5	5	5	0	4	5	5
80	120	5	5	5	6	0	5	5	5
120	180	7	7	7	8	0	6	6	7
180	250	8	8	8	9	0	8	7	8

Tolerances SP for outer ring

D mm		Δ_{Ds}, Δ_{Dmp} µm		V_{Dp} µm
over	incl.			
30	50	0	−7	4
50	80	0	−9	5
80	120	0	−10	5
120	150	0	−11	6
150	180	0	−13	7
180	250	0	−15	8
250	315	0	−18	9
315	400	0	−20	10

The width deviation Δ_{Cs} is identical to Δ_{Bs} of the corresponding inner ring.

Tolerances SP for outer ring (continued)

D mm		V_{Dmp} µm	V_{Cs} µm	K_{ea} µm	S_D µm	S_{ea} µm
over	incl.					
30	50	4	2,5	5	4	5
50	80	5	3	5	4	5
80	120	5	4	6	5	6
120	150	6	5	7	5	7
150	180	7	5	8	5	8
180	250	8	7	10	7	10
250	315	9	7	11	8	10
315	400	10	8	13	10	13

Tapered roller bearings of tolerance class P5

Tapered roller bearings with tolerances to tolerance class P5 correspond to DIN 620-2, see tables.

Tolerances P5 for inner ring

d mm		Δ_{dmp} µm Deviation		V_{dp} µm	V_{dmp}	K_{ia} µm
over	incl.	upper	lower	max.	max.	max.
10	18	0	−7	5	5	5
18	30	0	−8	6	5	5
30	50	0	−10	8	5	6
50	80	0	−12	9	6	7
80	120	0	−15	11	8	8
120	180	0	−18	14	9	11
180	250	0	−22	17	11	13

Tolerances P5 for inner ring (continued)

d mm		Δ_{Bs} µm Deviation		Δ_{Ts} µm	
over	incl.	upper	lower	max.	min.
10	18	0	−200	+200	−200
18	30	0	−200	+200	−200
30	50	0	−240	+200	−200
50	80	0	−300	+200	−200
80	120	0	−400	+200	−200
120	180	0	−500	+350	−250
180	250	0	−600	+350	−250

Tolerances P5 for outer ring

D mm		Δ_{Dmp} µm Deviation		V_{Dp} µm	V_{Dmp}	K_{ea} µm
over	incl.	lower	upper	max.	max.	max.
18	30	0	−8	6	5	6
30	50	0	−9	7	5	7
50	80	0	−11	8	6	8
80	120	0	−13	10	7	10
120	150	0	−15	11	8	11
150	180	0	−18	14	9	13
180	250	0	−20	15	10	15
250	315	0	−25	19	13	18
315	400	0	−28	22	14	20

Axial bearings

The dimensional and geometrical tolerances of axial bearings of tolerance class P5 or PN with a cylindrical bore are in accordance with DIN 620-3 (ISO 199), see tables.

Bore diameter tolerances for shaft locating washers

d mm		PN, P6 and P5		
		Δ_{dmp} µm Deviation		V_{dp} µm
over	incl.	upper	lower	max.
–	18	0	–8	6
18	30	0	–10	8
30	50	0	–12	9
50	80	0	–15	11
80	120	0	–20	15
120	180	0	–25	19
180	250	0	–30	23
250	315	0	–35	26
315	400	0	–40	30

Outside diameter tolerances for housing locating washers

D mm		PN, P6 and P5		
		Δ_{Dmp} µm Deviation		V_{Dp} µm
over	incl.	upper	lower	max.
10	18	0	–11	8
18	30	0	–13	10
30	50	0	–16	12
50	80	0	–19	14
80	120	0	–22	17
120	180	0	–25	19
180	250	0	–30	23
250	315	0	–35	26
315	400	0	–40	30

Variation of washer thickness for shaft and housing locating washers

d mm		S_i			S_e
		PN µm	P6 µm	P5 µm	PN,P6, P5
over	incl.	max.	max.	max.	
–	18	10	5	3	Identical to S_i for the shaft locating washer of the correspon-ding bearing
18	30	10	5	3	
30	50	10	6	3	
50	80	10	7	4	
80	120	15	8	4	
120	180	15	9	5	
180	250	20	10	5	
250	315	25	13	7	
315	400	30	15	7	

Radial internal clearance

Printing machinery bearings are designed with slight internal clearance. It is thus possible to achieve the required bearing clearance or bearing preload after mounting.

Printing machine bearing units with a tapered inner ring bore that are set to preload during mounting normally have the internal clearance C1, see table. The internal clearance C1 is smaller than C2 to DIN 620-4.

In bearing applications with a small bearing mounting clearance, a radial internal clearance that is different from and slightly larger than C1 may be necessary.

Radial internal clearance of bearings with tapered bore

Nominal diameter d mm		Radial internal clearance C1 µm	
over	incl.	min.	max.
40	50	17	30
50	65	20	35
65	80	25	40
80	100	35	55
100	120	40	60
120	140	45	70
140	160	50	75
160	180	55	85
180	200	60	90
200	225	60	95

Radial internal clearance of bearings with cylindrical bore

The radial internal clearance of printing machinery bearings with a cylindrical bore is specially determined for each application. The swivel bearing in three-ring and four-ring bearings is clearance-free or slightly preloaded and is already set when the bearing is supplied. Setting is not required.

For design work, the Schaeffler Group has high performance calculation software available. The tolerances must be determined with care in order to achieve optimum function. This requires a precise knowledge of the application and the available production facilities of the printing machinery manufacturer.

Requirements for the adjacent construction

Printing machinery bearings are robust machine elements that place requirements on the accuracy of the adjacent construction which can be achieved without problems by modern machine tools.

The essential demands on the adjacent construction are a shaft journal manufactured to high accuracy and a precision machined bore in the side wall. Normally, the bearing journal is ground and the side wall bore is finished and, where necessary, honed, *Figure 1*.

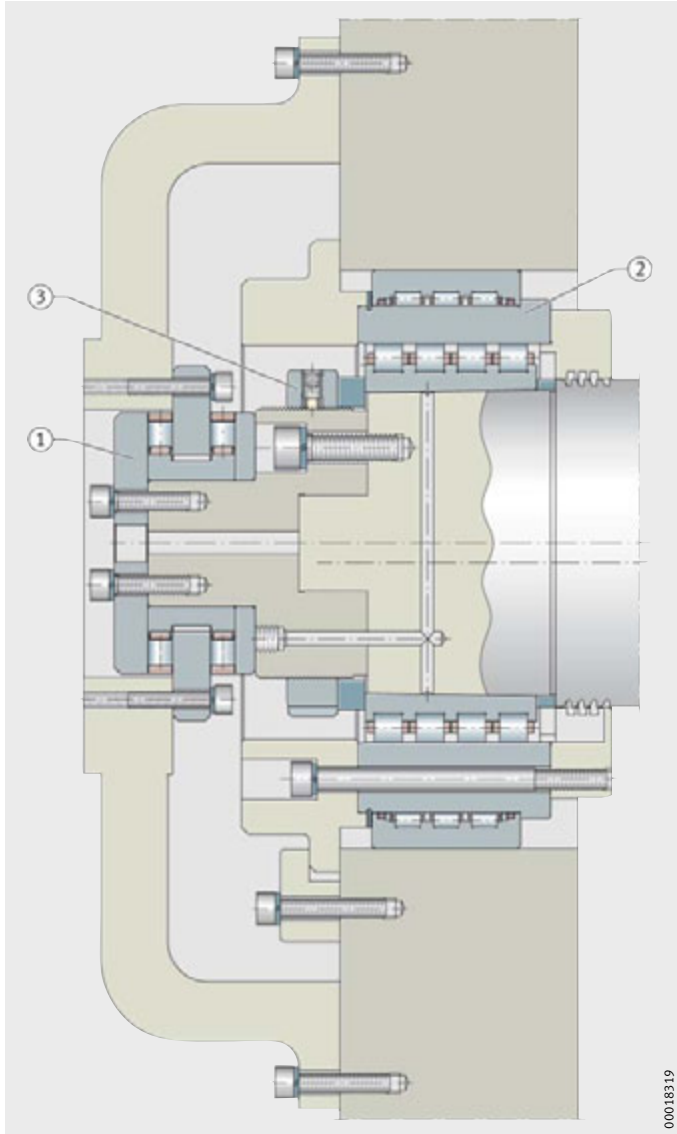

① Double direction axial cylindrical roller bearing
② Bearing unit DML3E with an eccentric intermediate ring
③ Precision locknut ZM

Figure 1
Application example Blanket cylinder bearing arrangement

Axial location of printing machinery bearings

The bearing outer ring of a printing machinery bearing DML can be located very simply, since practically no axial forces must be supported during operation. The eccentric intermediate and outer rings of three-ring and four-ring bearings are axially located by means of a rigid shoulder on the bearing and by retaining rings.

In the case of the bearing units DML3E, DML3D and DMLD, it is therefore not necessary to locate the outer ring axially via the adjacent construction. In general, it is sufficient to axially locate the adjacent part for eccentric motion on the side wall, *Figure 1*, page 37.

Axial bearing arrangement

If cylindrical roller bearings are used on both sides, an additional rolling bearing is necessary in order to support the axial forces. Since the forces are normally very low in printing machines, the requirements can generally be fulfilled by means of economical standard bearings. The types proven in practice include double row clearance-free angular contact ball bearings or double direction axial needle roller or cylindrical roller bearings, see page 98.

Shaft and housing tolerances

For a cylindrical seat, the tolerance for the cylinder journal should be as close as possible in order to minimise the tolerance for the bearing operating clearance. Optimum preconditions are achieved with a shaft tolerance corresponding to grade IT4.

However, all the requirements can generally be fulfilled with the frequently used shaft fit k5. With a conical journal, the tolerance can be somewhat larger, since the operating clearance can be individually adjusted. In practice, the shaft fit js6 is frequently used in this case.

Tolerances of side wall bore

For printing machinery bearings, a transition fit or a press fit between the side wall bore and bearing outside diameter is normally used.

If a bearing unit DMLE or DML3D is used, where the outer eccentric must be moved during operation, a certain fit clearance is necessary.

In order to minimise possible deformation of the components, the tolerance zones should preferably be narrow. This is achieved by appropriate allocation of the bearings to the side wall bore or by high precision manufacturing methods such as honing. In order to facilitate easier allocation, the printing machinery bearings can be supplied with measured and documented actual values for the bearing outside diameter.

For larger volumes, such as frequently occur in the case of sheetfed offset printing machines, it is economical to design printing machinery bearings with various dimension groups for the outside diameter. The diameter tolerance of the side wall bore can then be relatively large, which is highly advantageous for volume production.

Tables of shaft and housing tolerances

The tolerances for the shaft and housing correspond to ISO 286-2, see tables.

Tolerances for shafts

Shaft diameter d mm		Tolerance zone					
		js4		js5		js6	
		Deviation µm					
over	incl.	upper	lower	upper	lower	upper	lower
50	80	+4	–4	+6,5	–6,5	+9,5	–9,5
80	120	+5	–5	+7,5	–7,5	+11	–11
120	180	+6	–6	+9	–9	+12,5	–12,5
180	250	+7	–7	+10	–10	+14,5	–14,5
250	315	+8	–8	+11,5	–11,5	+16	–16

Tolerances for shafts (continued)

Shaft diameter d mm		Tolerance zone							
		k4		k5		m4		m5	
		Deviation µm							
over	incl.	upper	lower	upper	lower	upper	lower	upper	lower
50	80	+10	+2	+15	+2	+15	+2	+19	+11
80	120	+13	+3	+18	+3	+18	+3	+23	+13
120	180	+15	+3	+21	+3	+21	+3	+27	+15
180	250	+18	+4	+24	+4	+24	+4	+31	+17
250	315	+20	+4	+27	+4	+27	+4	+36	+20

Tolerances for housing bores

Tolerance zone	Bore diameter D mm				
	over 50 incl. 80	80 120	120 180	180 250	250 315
	Deviation µm				
H4	upper +8	+10	+12	+14	+16
	lower 0	0	0	0	0
H5	upper +13	+15	+18	+20	+23
	lower 0	0	0	0	0
H6	upper +19	+22	+25	+29	+32
	lower 0	0	0	0	0
H7	upper +30	+35	+40	+46	+52
	lower 0	0	0	0	0
JS4	upper +4	+5	+6	+7	+8
	lower −4	−5	−6	−7	−8
JS5	upper +6,5	+7,5	+9	+10	+11,5
	lower −6,5	−7,5	−9	−10	−11,5
JS6	upper +9,5	+11	+12,5	+14,5	+16
	lower −9,5	−11	−12,5	−14,5	−16
JS7	upper +15	+17,5	+20	+23	+26
	lower −15	−17,5	−20	−23	−26
K5	upper +3	+2	+3	+2	+3
	lower −10	−13	−15	−18	−20
K6	upper +4	+4	+4	+5	+5
	lower −15	−18	−21	−24	−27
K7	upper +9	+10	+12	+13	+16
	lower −21	−25	−28	−33	−36
M5	upper −6	−8	−9	−11	−13
	lower −19	−23	−27	−31	−36
M6	upper −5	−6	−8	−8	−9
	lower −24	−28	−33	−37	−41
M7	upper 0	0	0	0	0
	lower −30	−35	−40	−46	−52

Geometrical tolerances of bearing seating surfaces

If the bearing arrangement is to fulfil the relevant requirements for running accuracy, rigidity, freedom from clearance and operating temperature as well as provide excellent print quality, the accuracy of the adjacent construction must meet certain minimum requirements.

Deviations from the geometrical form of the adjacent parts must be kept to a minimum.

In order to achieve the required fit, the bearing seats and fit surfaces of the shaft and housing bore must conform to certain tolerances, *Figure 2*, *Figure 3* and tables, page 42. The roughness of the bearing seats must be observed, page 43.

t = roundness
t_1 = parallelism
t_2 = inclination
t_3 = axial runout
d_A, d_B = shaft diameter

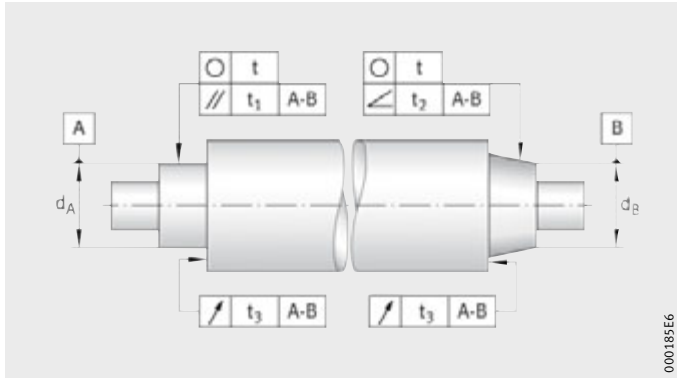

Figure 2
Geometrical tolerances for shafts

t = roundness
t_1 = parallelism
t_3 = perpendicularity
D_A = bore diameter

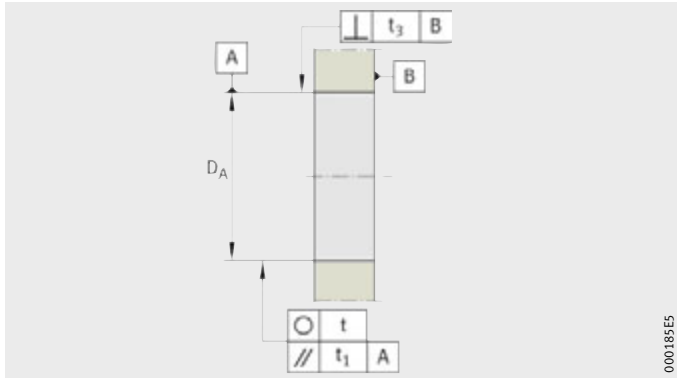

Figure 3
Geometrical tolerances for side wall bores

Accuracy of bearing seating surfaces

For the tolerances of bearing seats on the shaft and in the housing, a permissible geometrical deviation is stated, see tables.
This degree of accuracy can be resolved with the aid of the ISO fundamental tolerances to ISO 286, see page 43.

When determining the tolerance values for the permissible geometrical deviations, the relevant shaft diameter or bore diameter must be used.

Example: Shaft

Tolerance value for a bearing of tolerance class P5 with a shaft diameter of 90 mm, see table:

- roundness t = IT3 · 1/2 = 6 · 1/2 = 3 µm.

Geometrical tolerances for shafts

Characteristic	Tolerance value	Tolerance class Permissible geometrical deviation	
		P5	P4
Roundness	t	IT3 · 1/2	IT2 · 1/2
Parallelism	t_1	IT3 · 1/2	IT2 · 1/2
Inclination	t_2	IT3 · 1/2	IT3 · 1/2
Axial runout	t_3	IT3	IT3

Example: Bore

Tolerance value for a bearing of tolerance class P5 with a bore diameter of 80 mm, table:

- roundness t = IT3 · 1/2 = 5 · 1/2 = 2,5 µm.

Geometrical tolerances of housing bores

Characteristic	Tolerance value	Tolerance class Permissible geometrical deviation	
		P5	P4
Roundness	t	IT3 · 1/2	IT2 · 1/2
Parallelism	t_1	IT3 · 1/2	IT2 · 1/2
Perpendicularity	t_3	IT3 · 1/2	IT3 · 1/2

Roughness of bearing seats

The roughness of the bearing seats must be matched to the tolerance class of the bearings. The mean roughness value Ra must not be too high, in order to maintain the interference loss within limits, see tables. Shafts should be ground and bores should be precision turned.

The bore and shaft tolerances and permissible roughness values are also given in the design and safety guidelines in the product chapters.

Guide values for roughness of shafts

Tolerance class	Arithmetic mean value Ra µm	Maximum height of profile Rz µm
P5	0,5	4
P4	0,5	4

Guide values for roughness of housing bores

Tolerance class	Bearing outer ring with frequent swivel motion		Bearing outer ring, static	
	Arithmetic mean value Ra µm	Maximum height of profile Rz µm	Arithmetic mean value Ra µm	Maximum height of profile Rz µm
P5	0,4	2,5	1,6	10
P4	0,4	2,5	1,6	10

Values for IT grades

The ISO fundamental tolerances (IT grades) correspond to DIN ISO 286, see table.

IT grades and values

Grade	Nominal dimension in mm				
	over **50** incl. **80**	**80** **120**	**120** **180**	**180** **250**	**250** **315**
	Values in µm				
IT2	3	4	5	7	8
IT3	5	6	8	10	12
IT4	8	10	12	14	16
IT5	13	15	18	20	23

Fitting and dismantling

Mounting guidelines

Bearings for printing machinery are precision machine elements. These products must be handled very carefully both before and during fitting.

The function and operating life of the bearings are also dependent on the care taken in fitting.

Delivered condition and storage

Bearings for printing machinery are preserved using an anti-corrosion protection agent with a mineral oil base. The storage period for greased and sealed bearings is limited by the shelf life of the grease and the sealing ring material.

The bearings should be stored in dry, clean rooms with a temperature as constant as possible and at a relative humidity of max. 65%.

Removal from packaging

Perspiration causes corrosion:

- Hands must be kept clean and dry.
- Safety gloves must be worn.
- Bearings should not be removed from their original packaging until immediately before assembly.

Mounting method

Depending on the individual circumstances of printing machinery manufacturers, various methods can be used.

Supercooling of bearings

This method is frequently used for printing machinery bearings with a conical inner ring bore and a rigid fit in the side wall. The bearing unit, without the inner ring, is cooled and can then fitted by hand and without special fitting tools in the side wall bore. The bearing inner ring is then fitted with a suitable spacer ring.

Cooling of the bearing can lead to condensation on the bearing. In order to prevent corrosion, the bearing and side wall bore should first be sprayed with an effective preservative oil with a mineral oil base.

Pressing into place at room temperature

Alternatively, it is also possible to press the bearing units in without problems at room temperature. In order to overcome the press-in forces, appropriate fitting tools are required that are specially matched to the bearing and printing machine. In order to prevent damage to the bearings as a result of incorrect mounting, we recommend that the planned procedure and handling of the fitting tools is agreed with the engineering service of the Schaeffler Group. By this method, printing machinery bearings up to four-ring bearings with a cylindrical bearing journal and rigid fit can also be fitted securely and particularly economically in the side wall.

Dismounting

In the case of bearings with a conical inner ring bore, the inner ring is loosened from the shaft with the aid of the pressure oil process. The bearing outer ring or bearing outer ring assembly of three-ring and four-ring bearings is then removed from the side wall using suitable withdrawal tools. The retaining rings and shoulders on the eccentric rings are dimensioned such that the bearing is not damaged as a result.

Bearing units with a cylindrical seat are designed such that the inner ring is removed at the same time as dismounting is carried out. This is necessary because the bearings are often preloaded and the raceways could be damaged if dismounting was carried out in separate operations.

Clearance adjustment of cylindrical roller bearings

Cylindrical roller bearings with a tapered bore are mounted with clearance, clearance-free or with preload.

Specific steps and a device for measuring the enveloping circle of the rolling elements are required. The advantages of this method are that the operating clearance can be set to a very close tolerance of $\pm 1\ \mu m$.

Mounting procedure for cylindrical roller bearings

An example is given below of the mounting procedure for cylindrical roller bearings with a tapered bore and a separable outer ring, N10 and NN30, and the enveloping circle gauge MGA 31. The gauge is used to precisely set the radial internal clearance or preload of cylindrical roller bearings.

Step 1

- Measure the raceway diameter of the mounted outer ring using a conventional internal gauge, *Figure 1*.

Figure 1
Raceway diameter of the outer ring

Step 2

- Transfer this dimension to the two hardened and precision ground measuring surfaces of the enveloping circle gauge, *Figure 2*.

Figure 2
Transferring the raceway diameter to the enveloping circle gauge

Step 3

- Then position the gauge on the inner ring and roller and cage assembly premounted on the tapered shaft, *Figure 3*.

Figure 3
Positioning the enveloping circle gauge

Step 4

- Drive up the bearing axially until the precision indicator of the enveloping circle gauge shows the required radial internal clearance or preload.
- Then determine the distance between the bearing inner ring and the shaft shoulder using gauge blocks at four measurement points offset by 90°, *Figure 4*.
- After dismounting the bearing inner ring, grind the width of a gauge ring to match the determined distance and slide this over the cylindrical section of the shaft.
- Finally, mount the bearing inner ring again and secure using a nut.

Figure 4
Measuring the distance to the shaft shoulder

Setting the clearance without a gauge

If an enveloping circle gauge is not available, the clearance can be set to a fairly precise value by measuring the radial change in bearing clearance using a dial gauge. The method is not as precise as the use of an enveloping circle gauge but is generally adequate.

We recommend discussion with the engineering service of the Schaeffler Group in order to identify the most technically appropriate and cost-effective method for the specific application.

Industrial mounting service

The Schaeffler Group offers high quality products, services and training on all types of bearing arrangements.

The industrial mounting service includes:

- mounting and dismounting of rolling bearings of all types
- approval inspection of adjacent parts (shafts and housings)
- maintenance and inspection of bearing arrangements
- defect analysis on bearing arrangements not running satisfactorily
- advice on rationalisation of mounting operations
- design and manufacture of special tools.

Equipment rental

Customers who require special mounting and measuring equipment only infrequently, for example in order to carry out repairs, can rent these from the Schaeffler Group on a weekly basis. Where mounting of bearings is carried out only rarely, rental of taper and enveloping circle gauges and of heating devices may be an economical alternative to the purchase of the necessary equipment.

Further information

- Detailed information on the range available in the area of industrial service can be found in Catalogue IS 1, Mounting and Maintenance of Rolling Bearings.
- Enquiries: www.schaeffler-iam.de, +49 2407 9149-66.

Measurement and inspection of high precision bearings

Gauges and heating devices for mounting can be obtained via the Schaeffler Group. In some cases, these are also provided on a rental basis.

Enveloping circle gauge MGI21

The enveloping circle gauge is used to set the radial internal clearance of cylindrical roller bearings with a separable inner ring. It is suitable for cylindrical roller bearings NU4920-K to NNU4948-K and NNU4920 to NNU4948. Bearings with a bore diameter from 100 mm to 240 mm have separable inner rings.

In the FAG enveloping circle gauge MGI21, the internal enveloping circle of the roller and cage assembly is measured by two hardened and precision ground surfaces, one of which is movable, *Figure 5*.

After mounting of the outer ring, the gauge is set to the internal enveloping circle of the roller and cage assembly. This dimension is measured using a snap gauge, for example the SNAP-GAUGE. It is then possible to set the inner ring to the diameter that gives the required radial internal clearance.

Bearings with a tapered bore are slid onto the tapered seat of the shaft.

Ordering example: Enveloping circle gauge for cylindrical roller bearing NNU4920

Ordering designation: **MGI21-4920**

MGI 21

Figure 5
Gauge for cylindrical roller bearings with separable inner ring

Enveloping circle gauge MGA31

The MGA31 is used to set the radial internal clearance of cylindrical roller bearings with a tapered bore and separable outer ring, *Figure 6*. It is suitable for cylindrical roller bearings NN3006-K to NN3048-K and N1006-K to N1048-K. The gauge is used to precisely set the radial internal clearance or preload of cylindrical roller bearings.

The raceway diameter of the mounted outer ring is first measured using a conventional internal gauge. This dimension is transferred to the two hardened and precision ground measuring surfaces of the enveloping circle gauge. The gauge is then positioned on the premounted inner ring. The bearing is then driven up axially until the precision indicator of the enveloping circle gauge shows the required radial internal clearance or preload.

Ordering example: Enveloping circle gauge for cylindrical roller bearing NN3006-K

Ordering designation: **MGA31-NN3006**

MGA31

Figure 6
Gauge for cylindrical roller bearings with separable outer ring

Snap gauge SNAP-GAUGE

This gauge is used for inspecting the diameter of cylindrical shafts and workpieces of all types directly on the machine tool and for setting of the enveloping circle gauge MGI 21, *Figure 7*.

The actual dimension can be determined precisely. The snap gauge functions as a comparator gauge. Its setting is checked using master shims that can be obtained for each diameter.

Ordering example: Snap gauge for shaft diameter 120 mm

Ordering designation: **SNAP-GAUGE-100/150**, see table

Ordering example: Shim for shaft diameter 120 mm

Ordering designation: **SNAP-GAUGE.MASTER120**

Ordering designation for SNAP-GAUGE

Ordering designation	Measurement range mm
SNAP-GAUGE-30/60	30 – 60
SNAP-GAUGE-60/100	60 – 100
SNAP-GAUGE-100/150	100 – 150

SNAP-GAUGE

Figure 7
Snap gauge

Taper gauge MGK133

The taper gauge MGK 133 is suitable for outer tapers of 1:12 and 1:30 and taper diameters from 27 mm to 205 mm, *Figure 8*.

It rests on the taper with four hardened and polished support pins. The position of the gauge on the taper is defined by these pins and one stop. The stop can be attached to either the front or back of the gauge. The gauge contains two movable measuring brackets, one of which is in contact with the smaller taper diameter while the other, at a fixed distance, is in contact with the larger taper diameter. The deviation of the taper diameter from the nominal value is displayed in both measurement planes by a precision indicator.

The reproducibility of the measurement results is less than 1 μm. The gauge is set using a reference taper, which is available by agreement.

Ordering designation

Available by agreement.

MGK133

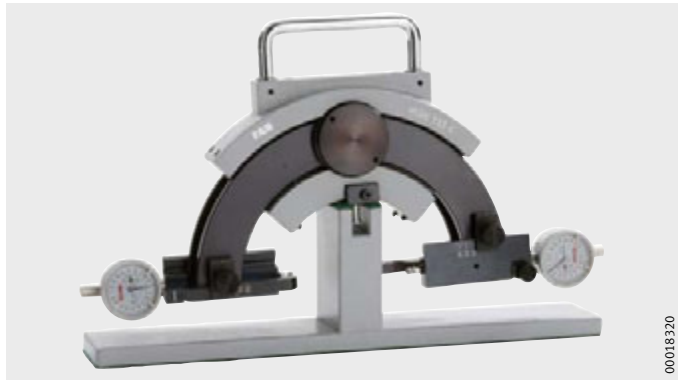

Figure 8
Taper gauge

Taper ring gauges KLR

Taper ring gauges KLR are the simplest option for inspecting the bearing seat on small bearings, *Figure 9*. Inking is used to determine the matching of the ring gauge and bearing seat. The bearing seat is machined until the ring gauge is supported over its whole width. The inner rings of bearings are not suitable, since they can be damaged during inking.

Taper ring gauges are available in designs for taper diameters from 30 mm to 240 mm.

Ordering example: Taper ring gauge for bearing with 100 mm bore, for example double row cylindrical roller bearing NN3020-AS-K

Ordering designation: **KLR-NN3020**

KLR

Figure 9
Taper ring gauges

Hydraulic mounting and dismounting of high precision bearings

Hydraulic tools can be used to apply large forces. These tools are therefore particularly suitable for the mounting and dismounting of large bearings or parts with a tapered bore.

Hydraulic nuts are used as a mounting tool. Pressure can be generated using oil injectors, hand pumps or hydraulic units.

Hand pumps

Hand pumps have a single stage or twin stage pump with a manometer.

Single stage pump

The hand pump PUMP1000-0,7L has an oil container with a volume of 0,7 l, *Figure 10*. The maximum pressure is 1000 bar, see table.

A digital manometer is available as an accessory.

PUMP1000-0,7L

① Pump body
② Manometer
③ Wear parts, set
④ Oil container
⑤ Push fit coupling nipple, including sealing ring
⑥ Collar, including sealing ring
⑦ High pressure hose
⑧ Transport case

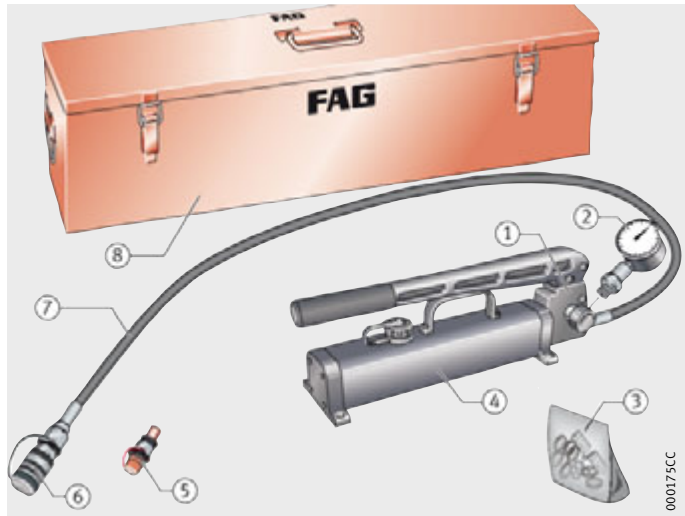

Figure 10
Single stage hand pump

Available single stage pump

Designation	Maximum oil pressure bar
PUMP1000-0,7L	1 000

Twin stage pump

The twin stage pumps, at pressures up to 50 bar, have a high delivery rate and then switch automatically to the high pressure stage, see *Figure 11* and table. This gives a high work rate.

Where there is an increased oil requirement, the twin stage pumps are available with an 8-l oil container (suffix 8L). In those cases where the type of installation of the adapter or withdrawal sleeve requires a separate oil supply, a two-way valve is available (suffix D).

For pumps with an oil pressure of 1000 bar and a connector, digital manometers are also available as accessories.

PUMP1600-4L

① Pump body
② Manometer
③ Adapter for manometer
④ Wear parts, set
⑤ Oil container
⑥ Push fit coupling nipple, including sealing ring
⑦ Collar, including sealing ring
⑧ High pressure hose
⑨ Two-way valve
⑩ Transport case

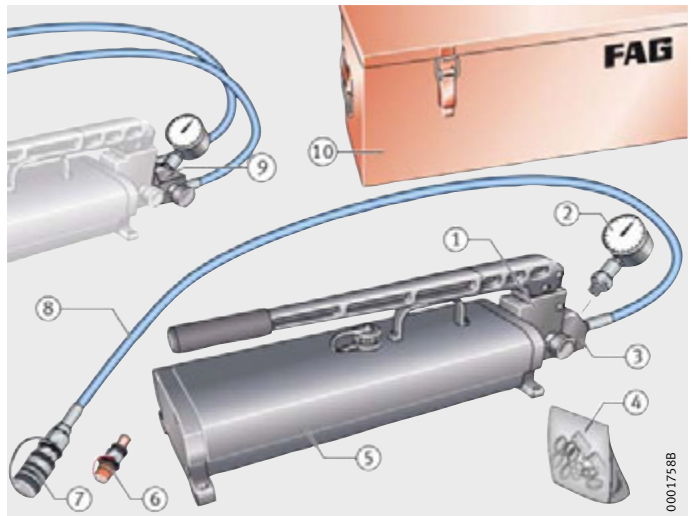

Figure 11
Twin stage hand pump

Available twin stage pumps

Designation	Maximum oil pressure bar
PUMP1000-4L	1 000
PUMP1600-4L	1 600
PUMP2500-4L	2 500

Hydraulic nuts

Hydraulic nuts HYDNUT are used to press components with a tapered bore onto their tapered seat, *Figure 12* and table. Presses are mainly used if the drive-up forces required cannot be applied using other accessories, e.g. shaft nuts or pressure screws.

The main applications are as follows:

- mounting and dismounting of rolling bearings with a tapered bore. The bearings can be seated directly on a tapered shaft, an adapter sleeve or a withdrawal sleeve. The hydraulic nut can also be used for the dismounting of adapter or withdrawal sleeves.
- mounting and dismounting of components such as couplings, gears and ships' propellers.

Figure 12
Hydraulic nuts

Available hydraulic nuts

Designation	Design	Application
HYDNUT50 to **HYDNUT200**	With metric fine pitch thread to DIN 13	Standardised adapter and withdrawal sleeves
HYDNUT205 to **HYDNUT1180**	With trapezoidal thread to DIN 103	With metric dimensions
HYDNUT90-INCH to **HYDNUT530-INCH**	With inch size thread to ABMA "Standards for Mounting Accessories, Section 8, Locknut Series N-00"	Sleeves with inch dimensions
HYDNUT100-HEAVY to **HYDNUT900-HEAVY**	Increased capacity design with smooth bore	For high mounting forces, for example in shipbuilding

Further information

- For detailed information, see TPI 196, FAG Hydraulic Nuts.
- Enquiries: info@schaeffler-iam.de, +49 2407 9149-66.

Radial bearings for printing machinery

Radial bearings for printing machinery

		Page
Product overview	Radial bearings for printing machinery	61
Features	High precision cylindrical roller bearings	65
	Bearing unit with concentric inner and outer ring	66
	Tapered roller bearings with heavy-section outer ring	68
	Matched tapered roller bearings	69
	Bearing unit with eccentric outer ring	70
	Bearing unit with eccentric intermediate ring	71
	Bearing unit with eccentric intermediate and outer ring	72
	Bearing unit with two eccentric intermediate rings	73
Design and safety guidelines	Permissible skewing	74
	Axial location	74
	Mounting of bearings	74
Accuracy		74

Radial bearings for printing machinery

Page

Dimension tables

High precision cylindrical roller bearings, double row, open 76

High precision cylindrical roller bearings, four-row, with tapered bore, open or sealed 80

Printing machine bearing units, concentric inner and outer ring, with cylindrical or tapered bore, open or sealed 82

Printing machine bearing units, locating bearings, concentric inner and outer rings, with cylindrical bore, open or sealed 84

Tapered roller bearings, matched pair, in O arrangement, with cylindrical bore, open or sealed 86

Printing machine bearing units, eccentric outer ring, with cylindrical or tapered bore, open or sealed 88

Printing machine bearing units, eccentric intermediate ring, with cylindrical or tapered bore, open or sealed 90

Printing machine bearing units, eccentric intermediate and outer ring, with cylindrical or tapered bore, open or sealed 94

Printing machine bearing units, two eccentric intermediate rings, with cylindrical or tapered bore, open or sealed 96

High precision cylindrical roller bearings

Double row or four-row

Non-locating bearing

NN30

NNU49

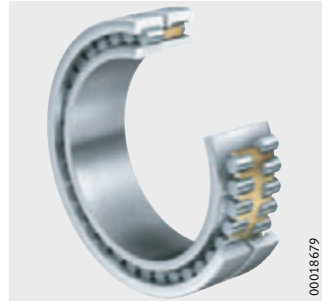

N4N

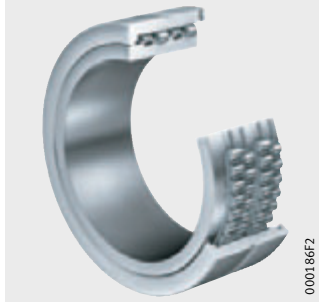

N4U

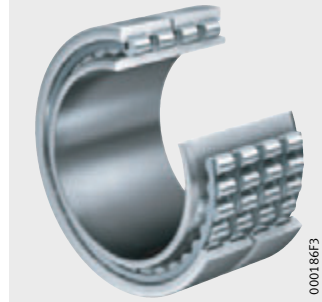

Bearing unit with concentric inner and outer ring

Non-locating bearing

DML

Locating bearing

DMF

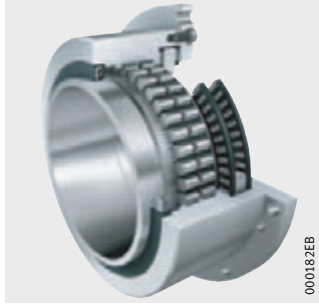

DMF

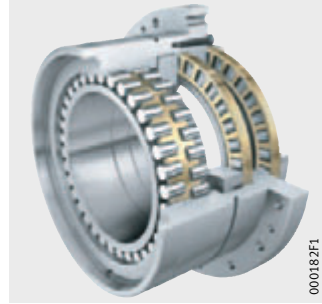

Tapered roller bearings

Locating bearing

TBS

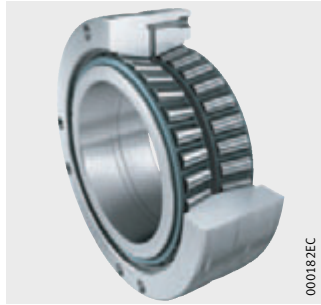

TBS

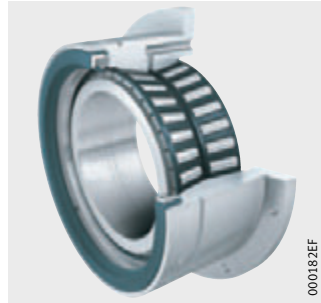

TR2

TR2

Bearing unit with eccentric outer ring

Non-locating bearing

DMLE

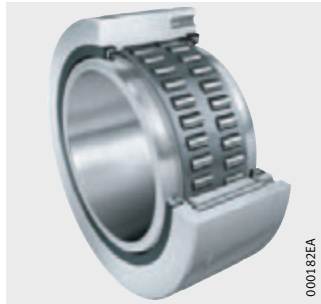

DMLE

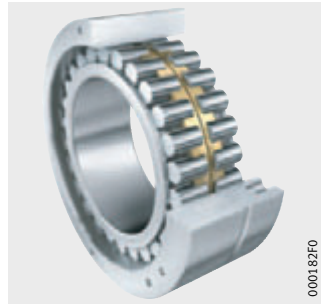

Bearing unit with eccentric intermediate ring

Non-locating bearing

DML3E

Bearing unit with eccentric intermediate and outer ring

Non-locating bearing

DML3D

DML3D

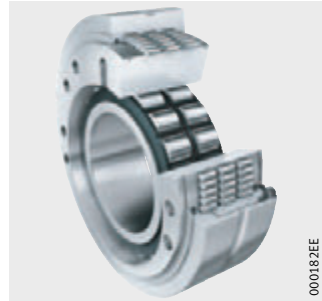

Bearing unit with two eccentric intermediate rings

Non-locating bearing

DMLD

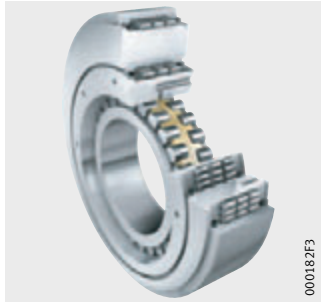

DMLD

Radial bearings for printing machinery

Features

Radial bearings for printing machinery allow radially rigid, high precision bearing arrangements and are principally used to give radial support for main cylinders.

Locating bearings of series DMF, TBS, TR2 additionally support radial forces.

The bearings comprise heavy-section bearing rings that are not interchangeable. Bearings with plastic cages, steel cages or brass cages are used.

The inner ring bores are available in a cylindrical or tapered design. In general, double row cylindrical roller bearings have a taper 1:12, while triple row and four-row cylindrical roller bearings have a taper 1:30.

High precision cylindrical roller bearings

These are double row or four-row high precision cylindrical roller bearings to accuracy Special Precision SP or to P5 with a small cross-section height and high radial rigidity, *Figure 1*. For bearing arrangements on printing machine cylinders, an additional bearing sleeve is generally required.

The bearings can only support radial forces. These non-locating bearings are particularly used on cylinders that are not moved, such as the paper feed cylinders in sheetfed offset printing machines or on the plate cylinder.

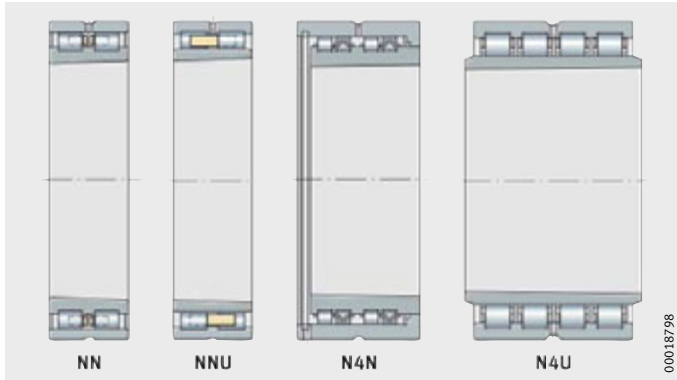

Figure 1
Double row and four-row cylindrical roller bearings

Design

These bearings generally have a tapered bore and can therefore be precisely set.

Double row cylindrical roller bearings NN and four-row cylindrical roller bearings N4N have rolling elements guided by ribs on the inner ring. In the series NNU and N4U, in contrast, the rolling elements are guided by ribs on the outer ring.

Internal clearance

The cylindrical roller bearings NN and NNU are produced as standard to the internal clearance class C1. Depending on the requirements of the printing machinery, bearings are also produced with special internal clearance values.

Preload

The bearings can be preloaded clearance-free.

Lubrication

The bearings are lubricated via a lubrication groove and lubrication holes in the outer ring.

Bearing unit with concentric inner and outer ring

This type is used for cylinders that do not require radial motion, such as the impression cylinder in sheetfed or newsprint rotary printing machines. In contrast to conventional cylindrical roller bearings, the outer ring is of a thick-walled design. As a result, the additional bearing sleeve normally fitted in the printing machine is no longer necessary. This allows a very cost-effective bearing arrangement and gives improved accuracy, since there is no bearing-to-sleeve fit.

Holes in the outer ring are used for location purposes or for the inlet and outlet of lubricant.

Since the bearing outer ring can be mounted with a tight fit in the side wall, a bearing position absolutely free from clearance can be achieved. Printing machinery bearings can thus be used to fulfil very high print quality requirements.

Non-locating bearing design

Depending on the requirements, the inner ring has either a tapered or cylindrical bore, *Figure 2*. The tapered design has the advantage of very precise setting of operating clearance, while the cylindrical design allows particularly economical mounting.

Depending on the load, printing machinery bearings have two, three or four rows of rolling elements. The bearings can only support radial forces.

DML

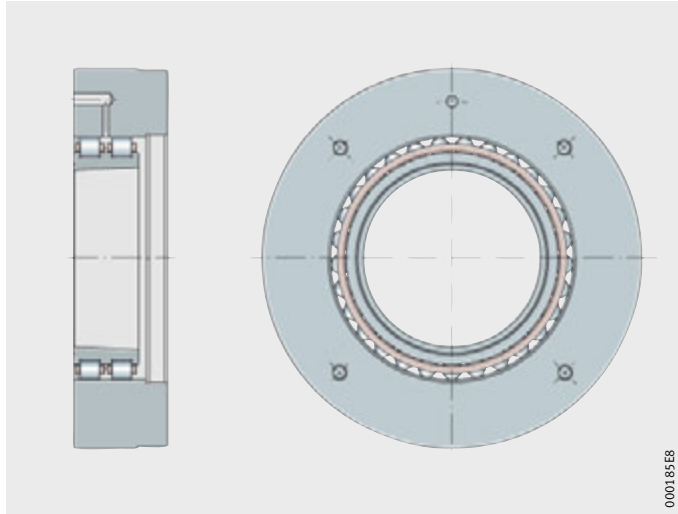

Figure 2
Bearing unit
Non-locating bearing DML

Locating bearing design

For paper feed cylinders in sheetfed offset printing machines, the locating bearing DMF is particularly suitable, *Figure 3*. It can support radial and axial forces and fulfils the very high demands for rigidity and freedom from clearance. The double direction axial needle roller bearing integrated in a ready-to-fit unit is set free from clearance, particularly rigid and has extremely low axial runout. This is particularly advantageous, in the case of two-stop cylinders, for excellent print quality.

The inner ring of the double row cylindrical roller bearing has a cylindrical bore. The bearing arrangement is therefore highly cost-effective and mounting is both simple and secure. It is fixed to the side wall by means of the integral flange cover. This eliminates the need for additional fitting parts.

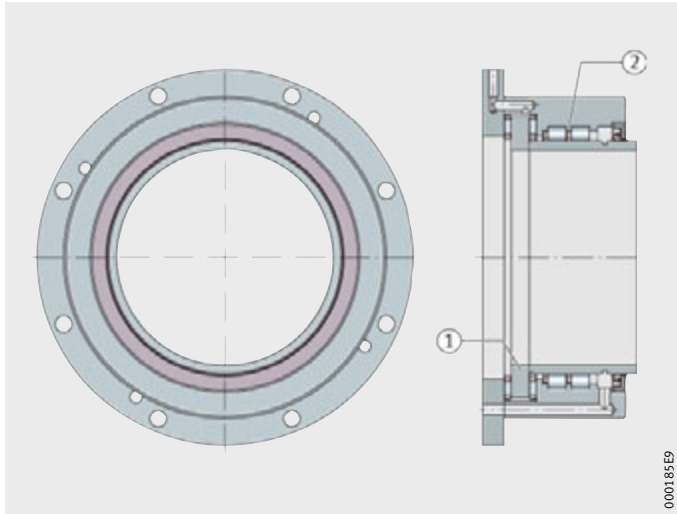

DMF

① Axial needle roller bearing
② Cylindrical roller bearing

Figure 3
Bearing unit
Locating bearing DMF

Internal clearance

This is defined specially by the Schaeffler Group.

Preload

The types DMF and DML normally run in operation with a small bearing preload. Depending on requirements, type DML can also have slight clearance. Even under bearing preload, the bearing unit DML allows reliable axial displacement of the rotating inner ring relative to the outer ring. Type DML is therefore particularly suitable for use in plate and form cylinders.

Sealing

The bearings are available in an open design or with integrated seals.

Lubrication

The bearings can be relubricated via holes in the outer ring and are suitable for oil or grease lubrication.

Cage

The printing machine bearing has rib-guided cylindrical rollers in modern plastic, steel or brass cages that have particularly low friction and allow high speeds while maintaining low bearing temperatures.

Tapered roller bearings with heavy-section outer ring

These are ready-to-fit double row bearing units that can support radial and axial forces, *Figure 4*.

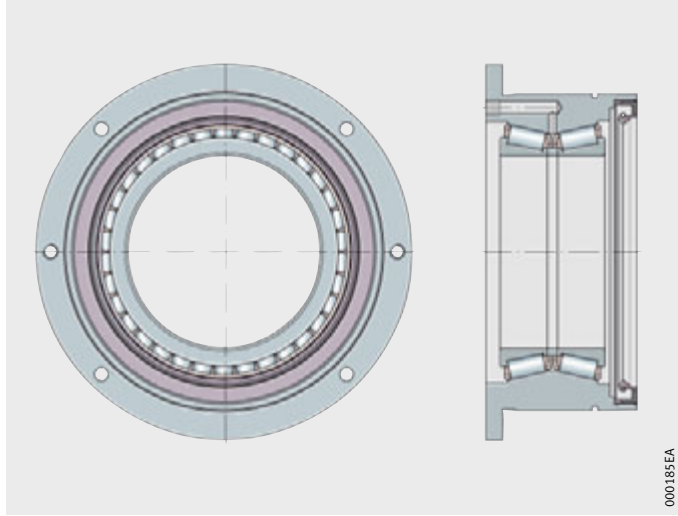

TBS

Figure 4
Bearing unit
Locating bearing TBS

Design

The single-piece, thick-walled outer ring has fixing holes.
Due to the heavy-section outer ring, the bearing can be mounted directly in the side wall. An additional bearing sleeve is not required.

Internal clearance

This is defined specially by the Schaeffler Group.

Preload

Tapered roller bearings TBS are clearance-free after fitting and have high radial and axial rigidity. As a result, they are particularly suitable as locating bearings on cylinders that are not moved, such as the paper feed cylinders in sheetfed offset printing machines.

Sealing

The bearings are available in an open design or with integrated seals.

Lubrication

The bearings are relubricated via holes in the outer ring.

Matched tapered roller bearings

The single row tapered roller bearings normally used in pairs in an O arrangement are precisely matched by means of intemediate rings, *Figure 5*. As a result, these bearings have axial clearance to tight tolerances. In general, an additional bearing sleeve is necessary.

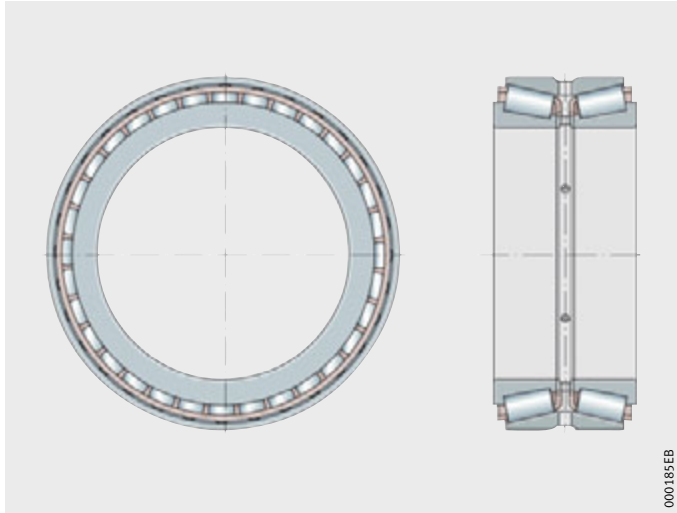

TR2

Figure 5
Bearing unit
Locating bearing TR2

Internal clearance

This is defined specially by the Schaeffler Group.

Preload

The bearing arrangement is clearance-free after mounting and can support radial and axial forces. These bearings are also suitable as locating bearings for cylinders that are not moved.

Sealing

The bearing unit is of an open design. The sealing arrangement can be designed anywhere within the adjacent construction.

Lubrication

Matched tapered roller bearings can be lubricated using oil or grease. They are relubricated via holes in the outer ring.

Bearing unit with eccentric outer ring

In contrast to the bearing unit DML, the bearing unit DMLE has a thick-walled eccentric outer ring, *Figure 6*. It can support radial forces only.

This printing machine bearing is normally used on cylinders that are positioned during mounting for adjustment purposes only.
The eccentric outer ring can be rotated to change the centre distance between the cylinders. In order to facilitate minute adjustment under a tight fit between the bearing outer ring and the side wall bore, the bearing unit DMLE can also be provided with a pressure oil connection in the outer ring.

The other features of the bearing unit correspond to those of the bearing unit DML.

DMLE

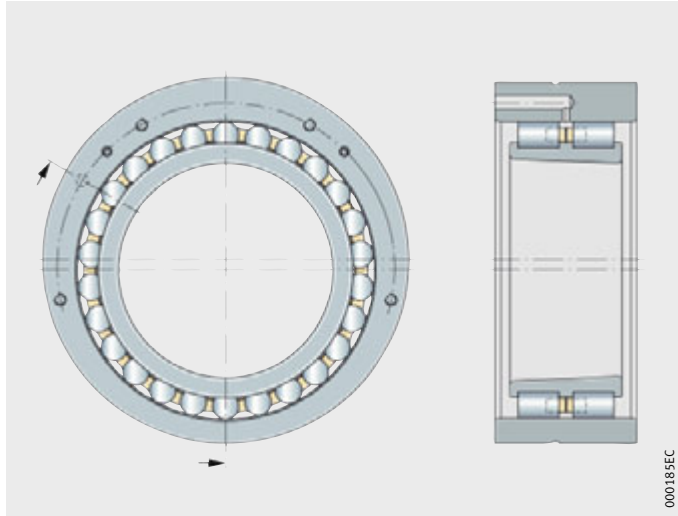

Figure 6
Bearing unit
Non-locating bearing DMLE

Design

The bearings have an inner ring with a tapered or cylindrical bore. In addition to the centring surfaces for the adjacent parts, the outer ring also has lubrication and fixing holes.

The bearing units are available with two, three or four rows of rolling elements.

Internal clearance

This is defined specially by the Schaeffler Group.

In operation, the bearings run with slight preload or even, depending on printing machine requirements, with slight bearing clearance. Even under bearing preload, reliable axial displacement of the inner ring in relation to the outer ring is possible (for example in plate cylinder applications).

Sealing

The bearings are available in an open design or with integrated seals.

Lubrication

The bearings can be relubricated via holes in the outer ring and are suitable for oil or grease lubrication.

Cage

The printing machine bearing has rib-guided cylindrical rollers in modern plastic, steel or brass cages.

Bearing unit with eccentric intermediate ring

This is a three-ring bearing. In contrast to the bearing unit DMLE, the eccentric is also supported by rolling elements, *Figure 7*.
As a result, this printing machine bearing is particularly suitable for frequently moved cylinders, for example for the on-off print function of blanket cylinders.

It is a swivel bearing with a swivel angle that is normally smaller than 35° and is subjected to predominantly static load.

In comparison with the conventional technology based on eccentric cast plain bearing bushes, this gives several advantages:

- no risk of jamming
- consistently low frictional torque
- no clearance
- no wear
- excellent reliability proven in practice
- freedom from maintenance.

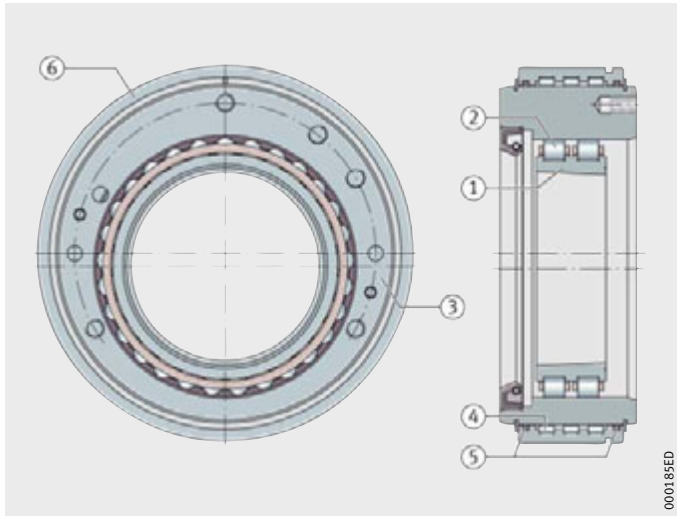

DML3E

① Inner ring with cylindrical or tapered bore
② Multi-row high precision cylindrical roller bearing, with cage
③ Eccentric intermediate ring
④ Eccentric bearing arrangement in full complement cylindrical roller bearings, greased for life
⑤ O ring seal
⑥ Cylindrical outer ring

Figure 7
Three-ring printing machine bearing

Design

The bearing unit DML3E is a ready-to-fit bearing unit that allows cost-effective solutions.

The bearing unit is available with two, three or four rows of rolling elements.

Sealing

The bearings are available in an open design or with integrated seals. The swivel bearing is generally sealed on both sides.

Lubrication

The swivel bearing is maintenance-free and is filled as standard with an optimum grease for the particular loads present. The inner cylindrical roller bearing can be relubricated via holes in the outer ring and is suitable for oil or grease lubrication.

Cage

The inner cylindrical roller bearing has rib-guided cylindrical rollers in modern plastic, steel or brass cages. The swivel bearing generally has a full complement roller set. For special requirements, it is also available with a cage.

Bearing unit with eccentric intermediate and outer ring

This type is identical, except for the design of the outer ring, to the printing machine bearing DML3E. The bearing unit DML3D has an eccentric outer ring, *Figure 8*. The inner eccentric profile normally fulfils the on-off print function, while the outer eccentric profile allows basic positioning of the cylinder during mounting or radial adjustment during operation. In order to facilitate minute adjustment under a tight fit between the bearing outer ring and the side wall bore, the bearing unit DMLE can also be provided with a pressure oil connection in the outer ring.

If a small fit clearance is permissible in the application, this eccentric arrangement can also fulfil other functions such as diagonal register of the plate cylinder (cocking).

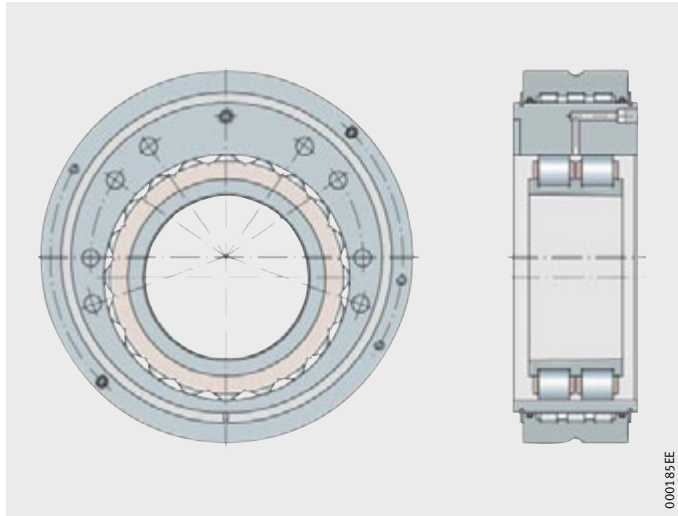

DML3D

Figure 8
Bearing unit
Non-locating bearing DML3D

Design

The bearing unit DML3D is a ready-to-fit bearing unit that allows cost-effective solutions.

The bearing unit is available with two, three or four rows of rolling elements.

Sealing

The bearings are available in an open design or with integrated seals. The swivel bearing is generally sealed on both sides.

Lubrication

The swivel bearing is maintenance-free and is filled as standard with an optimum grease for the particular loads present. The inner cylindrical roller bearing can be relubricated via holes in the outer ring and is suitable for oil or grease lubrication.

Cage

The inner cylindrical roller bearing has rib-guided cylindrical rollers in modern plastic, steel or brass cages that have particularly low friction and allow high speeds while maintaining low bearing temperatures. The swivel bearing generally has a full complement roller set. For special requirements, it is also available with a cage.

Bearing unit with two eccentric intermediate rings

In contrast to the bearing unit DML3D, the printing machine bearing DMLD has two eccentrics supported by rolling elements and thus one thin-walled outer ring more, *Figure 9*. This four-ring bearing allows eccentric adjustment characterised by low friction, freedom from clearance and extremely high reliability.

Even if the bearing unit is mounted with a tight fit in the side wall, a clearance-free bearing arrangement is possible. This bearing is normally used for the on-off print cylinder function and minute adjustment movements (diagonal register or paper thickness adjustment). The bearing design corresponds in principle to the types DML3E and DML with the features described above.

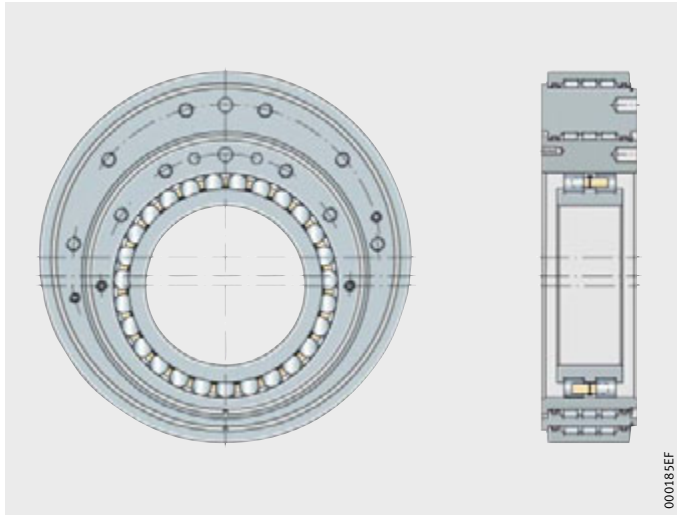

DMLD

Figure 9
Bearing unit
Non-locating bearing DMLD

Design

The bearings have a concentric inner ring, two eccentric intermediate rings and a concentric outer ring. The bearing units are available with two, three or four rows of rolling elements.

Sealing

The bearings are available in an open design or with integrated seals. The swivel bearings are generally sealed on both sides.

Lubrication

The swivel bearings are maintenance-free and are filled as standard with an optimum grease for the particular loads present. The inner cylindrical roller bearing can be relubricated via holes in the inner eccentric ring and is suitable for oil or grease lubrication.

Cage

The inner cylindrical roller bearing has rib-guided cylindrical rollers in modern plastic, steel or brass cages that have particularly low friction and allow high speeds while maintaining low bearing temperatures. The swivel bearings generally have a full complement roller set. For special requirements, they are also available with a cage.

Design and safety guidelines

Permissible skewing

In printing machinery applications, the inner ring generally undergoes skewing of less than 1′ relative to the outer ring. Within this range, there is no significant reduction in rating life.

Shaft and housing tolerances

Recommended shaft and housing tolerances with cylindrical bore, see tables, page 39.

Axial location

In order to prevent lateral creep of the bearing rings, they must be located by force or physical locking means. The abutment shoulders (shaft and housing) should be sufficiently high and perpendicular to the bearing axis. The transition from the bearing seat to the abutment shoulder must be designed with rounding to DIN 5418 or an undercut to DIN 509.

Mounting of bearings

In order to ensure functionally reliable operation of printing machinery bearings, mounting must be carried out correctly and with the appropriate care. In particular, the further guidelines on operating clearance must be observed, see page 16.

Accuracy

The geometrical tolerances of the radial bearings correspond to DIN 620-2 (ISO 492), see page 28.

High precision cylindrical roller bearings

Double row
Open

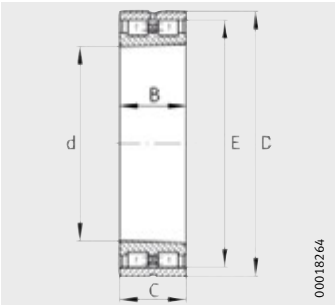

NN30

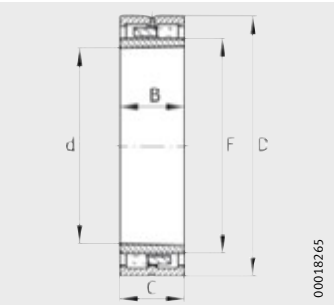

NNU49

Dimension table · Dimensions in mm

Designation		Mass	Dimensions			
		m	d	D	B	C
		≈kg				
NN3010-AS-K-M-SP	–	0,43	**50**	80	23	23
NN3011-AS-K-M-SP	–	0,63	**55**	90	26	26
NN3012-AS-K-M-SP	–	0,67	**60**	95	26	26
–	**NNU60X115X56**	2,6	**60**	115	56	56
NN3013-AS-K-M-SP	–	0,72	**65**	100	26	26
–	**NNU4914-S-K-M-SP**	0,73	**70**	100	30	30
NN3014-AS-K-M-SP	–	1,04	**70**	110	30	30
–	**NNU4915-S-K-M-SP**	0,77	**75**	105	30	30
–	**NNU75X115X30**	1,1	**75**	115	30	30
NN3015-AS-K-M-SP	–	1,09	**75**	115	30	30
–	**NNU4916-S-K-M-SP**	0,81	**80**	110	30	30
NN3016-AS-K-M-SP	–	1,51	**80**	125	34	34
NN80X140X43	–	3,7	**80**	140	43	43
–	**NNU4917-S-K-M-SP**	1,2	**85**	120	35	35
NN3017-AS-K-M-SP	–	1,58	**85**	130	34	34
–	**NNU4918-S-K-M-SP**	1,26	**90**	125	35	35
NN3018-AS-K-M-SP	–	2,05	**90**	140	37	37
–	**NNU4919-S-K-M-SP**	1,32	**95**	130	35	35
NN3019-AS-K-M-SP	–	2,14	**95**	145	37	37

		Basic load ratings		Fatigue limit load	Bearing seat
E	F	dyn. C_r N	stat. C_{0r} N	C_u N	
72,5	–	57 000	80 000	11 800	Taper 1:12
81	–	72 000	100 000	15 600	Taper 1:12
86,1	–	75 000	110 000	17 200	Taper 1:12
–	75	220 000	305 000	38 100	Taper 1:30
91	–	77 000	116 000	18 000	Taper 1:12
–	80	60 000	104 000	16 800	Taper 1:12
100	–	98 000	150 000	22 400	Taper 1:12
–	85	63 000	114 000	18 600	Taper 1:12
–	87	99 000	146 000	17 700	Taper 1:12
105	–	100 000	156 000	23 400	Taper 1:12
–	90	66 000	122 000	19 800	Taper 1:12
113	–	120 000	186 000	28 500	Taper 1:12
108	–	137 000	221 000	28 000	Cylindrical
–	96,5	90 000	166 000	27 000	Taper 1:12
118	–	125 000	200 000	30 500	Taper 1:12
–	101,5	93 000	176 000	28 500	Taper 1:12
127	–	140 000	224 000	36 000	Taper 1:12
–	106,5	95 000	186 000	30 000	Taper 1:12
132	–	143 000	236 000	37 000	Taper 1:12

High precision cylindrical roller bearings

Double row
Open

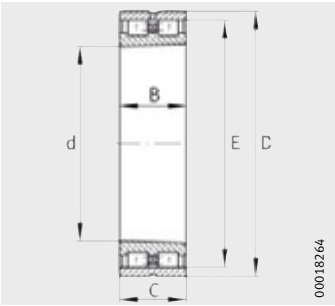

NN30

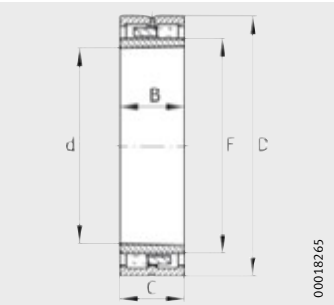

NNU49

Dimension table (continued) · Dimensions in mm

Designation		Mass	Dimensions			
		m	d	D	B	C
		≈kg				
–	**NNU4920-S-K-M-SP**	1,86	**100**	140	40	40
NN3020-AS-K-M-SP	–	2,23	**100**	150	37	37
–	**NNU4921-S-K-M-SP**	1,93	**105**	145	40	40
NN105X150X71	–	4	**105**	150	71	71
NN3021-AS-K-M-SP	–	2,84	**105**	160	41	41
NN105X160X60	–	3,84	**105**	160	58	60
–	**NNU4922-S-K-M-SP**	2,01	**110**	150	40	40
NN3022-AS-K-M-SP	–	3,61	**110**	170	45	45
–	**NNU4924-S-K-M-SP**	2,71	**120**	165	45	45
NN3024-AS-K-M-SP	–	3,94	**120**	180	46	46
NN120X180X58	–	5,28	**120**	180	58	58
–	**NNU4926-S-K-M-SP**	3,73	**130**	180	50	50
NN3026-AS-K-M-SP	–	5,79	**130**	200	52	52
–	**NNU4928-S-K-M-SP**	4,04	**140**	190	50	50
NN3028-AS-K-M-SP	–	6,22	**140**	210	53	53
–	**NNU4930-S-K-M-SP**	6,1	**150**	210	60	60
NN3030-AS-K-M-SP	–	7,58	**150**	225	56	56
–	**NNU4932-S-K-M-SP**	6,41	**160**	220	60	60
NN3032-AS-K-M-SP	–	9,23	**160**	240	60	60
–	**NNU4934-S-K-M-SP**	6,73	**170**	230	60	60
NN3034-AS-K-M-SP	–	12,5	**170**	260	67	67
–	**NNU4936-S-K-M-SP**	9,96	**180**	250	69	69
NN3036-AS-K-M-SP	–	16,4	**180**	280	74	74

		Basic load ratings		Fatigue limit load	Bearing seat
E	F	dyn. C_r N	stat. C_{0r} N	C_u N	
–	113	129 000	255 000	40 500	Taper 1:12
137	–	146 000	245 000	38 000	Taper 1:12
–	118	129 000	260 000	41 500	Taper 1:12
141	–	193 000	345 000	43 000	Taper 1:30
146	–	190 000	310 000	46 000	Taper 1:12
148	–	295 000	510 000	65 000	Taper 1:12
–	123	132 000	270 000	42 500	Taper 1:12
155	–	220 000	360 000	54 000	Taper 1:12
–	134,5	176 000	340 000	51 000	Taper 1:12
165	–	232 000	390 000	57 000	Taper 1:12
165	–	320 000	560 000	71 000	Taper 1:12
–	146	190 000	390 000	57 000	Taper 1:12
182	–	290 000	500 000	72 000	Taper 1:12
–	156	190 000	400 000	58 000	Taper 1:12
192	–	300 000	520 000	74 000	Taper 1:12
–	168,5	325 000	655 000	96 000	Taper 1:12
206	–	335 000	585 000	83 000	Taper 1:12
–	178,5	335 000	680 000	98 000	Taper 1:12
219	–	375 000	670 000	93 000	Taper 1:12
–	188,5	340 000	695 000	100 000	Taper 1:12
236	–	450 000	800 000	111 000	Taper 1:12
–	202	405 000	850 000	121 000	Taper 1:12
255	–	570 000	1 000 000	134 000	Taper 1:12

High precision cylindrical roller bearings

Four-row
With tapered bore
Open or sealed

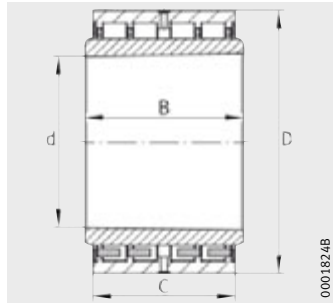

N4U
Taper 1:30

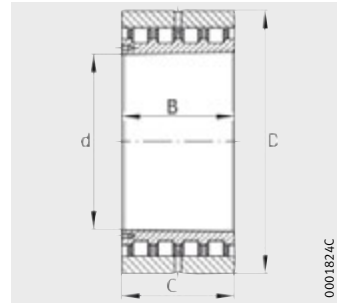

N4N
Taper 1:30

Dimension table · Dimensions in mm

Designation	Mass	Dimensions				Basic load ratings		Fatigue limit load	Sealing for
	m	d	D	B	C	dyn. C	stat. C_0	C_u	
	≈kg					N	N	N	
N4U65X100X60	1,8	**65**	100	60	54	125 000	250 000	31 000	–
N4U105X150X71	4	**105**	150	71	71	245 000	520 000	61 000	–
N4U110X150X71	3,5	**110**	150	71	71	245 000	520 000	61 000	–
N4U120X160X69	4,4	**120**	160	69	69	250 000	550 000	61 000	–
N4U125X180X100	17,5	**125**	180	100	90	405 000	800 000	96 000	–
N4N140X210X90	11	**140**	210	90	90	335 000	690 000	81 000	–
N4N170X235X88	11,2	**170**	235	78	88	290 000	735 000	92 000	grease

Printing machine bearing units

Concentric inner and outer ring
With cylindrical or tapered bore
Open or sealed

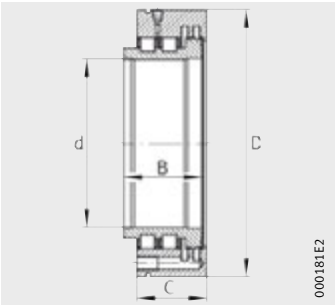

Double row
With labyrinth seals

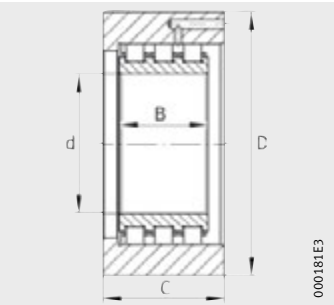

Triple row, open

Dimension table · Dimensions in mm

Designation	Mass	Dimensions			
	m	d	D	B	C
	≈kg				
DML55X120X55	3	**55**	120	40	55
DML60X150X66	6,7	**60**	150	61	66
DML65X125X65,1	3,7	**65**	125	53	65,1
DML65X145X55	3,02	**65**	145	40	55
DML75X180X52	8	**75**	180	36	52
DML80X140X57	4,1	**80**	140	43	57
DML100X160X74	5,3	**100**	160	45	74
DML100X175X65	6,8	**100**	175	44	65
DML99,942X215,015X53,5	10,3	**99,942**	215,015	37	53,5
DML105X150X71	4	**105**	150	71	71
DML105X180X70	6,4	**105**	180	55	70
DML105X200X80	10	**105**	200	60	80
DML120X180X40	4	**120**	180	40	40
DML120X190X80	8,56	**120**	190	65	80
DML120X210X50	8,13	**120**	210	50	49
DML120X200X79	8,4	**120**	200	55	74
DML120X200X79	10	**120**	200	72	79
DML130X230X92	15,4	**130**	230	78	92
DML140X190X65	5,3	**140**	190	60	65
DML140X230X90	15,4	**140**	230	90	90
DML145X230X71,1	9,2	**145**	230	66,8	60
DML155X200X66	5	**155**	200	66	65
DML180X280X80	18,52	**180**	280	65	80
DML200X310X59	19	**200**	310	54	59

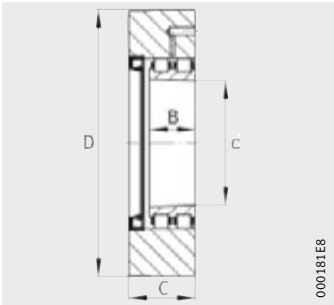

Double row
With lip seals

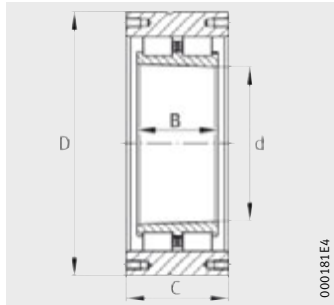

Tapered bore
Taper 1:12, Taper 1:30

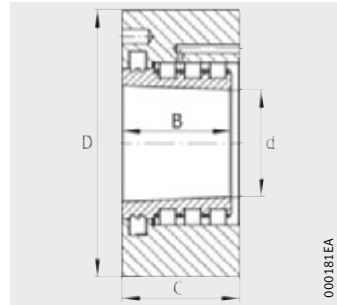

With labyrinth seals

Basic load ratings		Fatigue limit load	Design	Bearing seat	Sealing for
dyn. C	stat. C_0	C_u			
N	N	N			
103 000	158 000	22 400	Triple row	Cylindrical	–
120 000	177 000	20 800	Triple row	Taper 1:12	oil
131 000	238 000	30 000	Four-row	Taper 1:30	–
103 000	158 000	22 400	Triple row	Taper 1:30	–
99 000	146 000	17 700	Double row	Taper 1:12	grease
137 000	221 000	28 000	Double row	Cylindrical	–
156 000	280 000	36 500	Double row	Cylindrical	oil
156 000	280 000	36 500	Double row	Cylindrical	oil
147 000	229 000	27 000	Double row	Taper 1:12	oil
193 000	345 000	44 000	Double row	Taper 1:30	grease
275 000	495 000	64 000	Double row	Taper 1:12	–
390 000	540 000	71 000	Double row	Taper 1:30	–
139 000	280 000	30 500	Double row	Cylindrical	grease
162 000	315 000	38 000	Double row	Cylindrical	oil
162 000	315 000	38 000	Double row	Cylindrical	–
232 000	390 000	57 000	Double row	Taper 1:12	grease
320 000	560 000	71 000	Double row	Taper 1:12	grease
485 000	830 000	106 000	Double row	Taper 1:30	–
224 000	500 000	69 000	Double row	Cylindrical	–
224 000	500 000	69 000	Double row	Cylindrical	oil
191 000	335 000	39 000	Double row	Cylindrical	oil
234 000	540 000	59 000	Double row	Cylindrical	–
280 000	530 000	58 000	Double row	Cylindrical	oil
300 000	600 000	62 000	Double row	Cylindrical	oil

Printing machine bearing units

Locating bearings
Concentric inner and outer rings
With cylindrical bore
Sealed

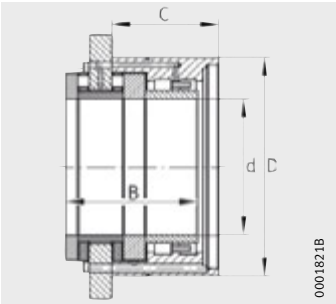

Double row

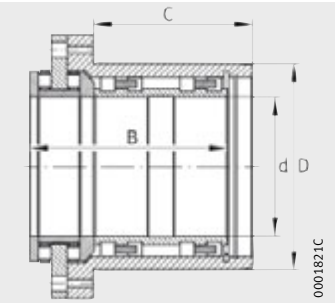

Four-row

Dimension table · Dimensions in mm

Designation	Mass	Dimensions				Basic load ratings	
						Radial bearing	
	m	d	D	B	C	dyn. C	stat. C_0
	≈kg					kN	kN
DMF80X145X90	8	**80**	145	69	80	137	221
DMF100X175X68	7	**100**	175	40	68	184	365
DMF120X180X86,2	7,9	**120**	180	70,2	68	139	280
DMF155X230X178	31,5	**155**	230	132	105	320	540
DMF155X230X248	42,4	**155**	230	220	177	550	1 080
DMF180X290X141	56,3	**180**	290	174	141	405	850
DMF180X290X286	81	**180**	290	265	225	720	1 700

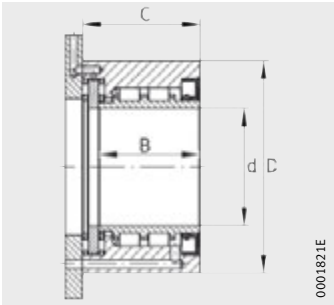

With lip seals

		Fatigue limit load		Design	Bearing seat	Sealing for
Axial bearing		Radial bearing	Axial bearing	Cylindrical roller bearing		
dyn. C N	stat. C_0 N	C_u N	C_u N			
73 000	405 000	28 000	50 000	Double row	Cylindrical	oil
56 000	225 000	47 000	22 000	Double row	Cylindrical	oil
71 000	430 000	30 500	47 000	Double row	Cylindrical	oil
360 000	1 380 000	63 000	124 000	Double row	Cylindrical	oil
360 000	1 380 000	126 000	124 000	Four-row	Cylindrical	oil
400 000	1 600 000	102 000	134 000	Double row	Cylindrical	oil
400 000	1 600 000	194 000	134 000	Four-row	Cylindrical	oil

Tapered roller bearings

Matched pair
O arrangement
With cylindrical bore
Open or sealed

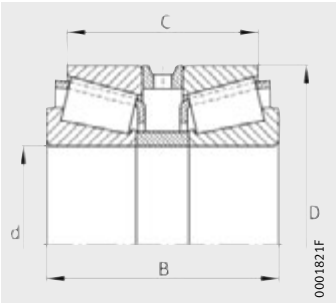

Double row, matched pair
With two spacer rings

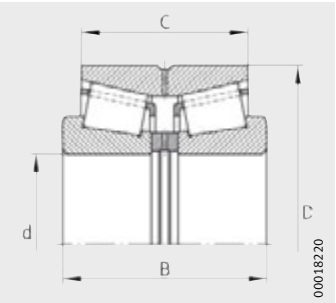

Single-piece outer ring,
matched pair of inner rings

Dimension table · Dimensions in mm

Designation	Mass	Dimensions				Basic load ratings	
	m	d	D	B	C	dyn. C	stat. C_0
	≈kg					N	N
TR250X80X46	1	**50**	80	46	37	109 000	187 000
TR255X90X52	1,8	**55**	90	52	41	139 800	236 000
TR255X100X64,6	2	**55**	100	64,6	53,1	188 700	274 000
TR260X95X71,3	1,6	**60**	95	71,3	60,3	142 000	250 000
TR265X100X71,3	1,7	**65**	100	71,3	60,3	140 000	250 000
TR270X110X56	2	**70**	110	56	44	178 000	315 000
TR270X110X60	2	**70**	110	60	48	178 000	315 000
TR275X115X60	2	**75**	115	60	48	180 000	325 000
TR275X115X107	2,3	**75**	115	107	95	180 000	325 000
TR280X110X46	1,3	**80**	110	46	38	131 000	265 000
TR280X125X66	2,8	**80**	125	66	52	235 000	420 000
TR285X130X66	3,1	**85**	130	66	52	243 000	450 000
TR290X140X72	4	**90**	140	72	56	280 000	510 000
TR295X145X72	4,2	**95**	145	72	56	290 000	550 000
TR2100X140X57	2,6	**100**	140	57	47	216 000	420 000
TR2100X150X72	4,5	**100**	150	72	56	295 000	570 000
TBS100X175X56	6	**100**	175	56	56	216 000	425 000
TBS100X210X56	10,1	**100**	210	56	56	216 000	425 000
TR2105X145X58	2,7	**105**	145	58	48	219 000	435 000
TR2105X160X80	5	**105**	160	80	62	345 000	660 000
TR2110X150X58	3	**110**	150	58	48	227 000	460 000
TR2110X170X86	7,5	**110**	170	86	68	415 000	790 000
TR2120X165X68	4,1	**120**	165	68	56	300 000	610 000
TR2120X180X86	7,5	**120**	180	86	68	430 000	840 000
TR2130X180X74	5,2	**130**	180	74	60	355 000	740 000
TBS130X180,01X140	8	**130**	180,01	140	126	355 000	740 000
TR2130X200X100	11	**130**	200	100	78	560 000	1 100 000
TBS130X215X103	15	**130**	215	71	103	355 000	740 000
TBS130X215,02X83	13,5	**130**	215,02	71	83	355 000	740 000
TR2140X190X74	6	**140**	190	74	60	365 000	790 000
TR2150X210X86	8,5	**150**	210	86	70	490 000	990 000

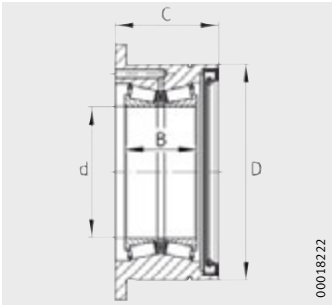

With flange, with lip seals

Fatigue limit load C_u N	Basic bearing	Design	Bearing seat	Sealing for
22 000	32010-X-P5	Double row	Cylindrical	–
29 000	32011-X-P5	Double row	Cylindrical	–
34 000	32211-X-P5	Double row	Cylindrical	–
31 000	32012-X-P5	Double row	Cylindrical	–
31 000	32013-X-P5	Double row	Cylindrical	–
40 000	32014-X-P5	Double row	Cylindrical	–
40 000	32014-X-P5	Double row	Cylindrical	–
42 000	32015-X-P5	Double row	Cylindrical	–
42 000	32015-X-P5	Double row	Cylindrical	–
32 000	32916-P5	Double row, single-piece outer ring	Cylindrical	–
52 000	32016-X-P5	Double row	Cylindrical	–
56 000	32017-X-P5	Double row	Cylindrical	–
61 000	32018-XA-P5	Double row	Cylindrical	–
65 000	32019-XA-P5	Double row	Cylindrical	–
50 000	32920-P5	Double row, single-piece outer ring	Cylindrical	–
67 000	32020-X-P5	Double row	Cylindrical	–
50 000	–	Double row, single-piece outer ring	Cylindrical	–
50 000	–	Double row, single-piece outer ring	Cylindrical	–
51 000	32921-P5	Double row	Cylindrical	–
76 000	32021-X-P5	Double row	Cylindrical	–
54 000	32922-P5	Double row	Cylindrical	–
90 000	32022-X-P5	Double row	Cylindrical	–
69 000	32924-P5	Double row, single-piece outer ring	Cylindrical	–
95 000	32024-X-P5	Double row	Cylindrical	–
83 000	32926-P5	Double row	Cylindrical	–
83 000	–	Double row	Cylindrical	–
122 000	32026-X-P5	Double row	Cylindrical	–
83 000	–	Double row, single-piece outer ring	Cylindrical	oil
83 000	–	Double row, single-piece outer ring	Cylindrical	–
86 000	32928-P5	Double row	Cylindrical	–
123 000	32930-P5	Double row	Cylindrical	–

Printing machine bearing units

Eccentric outer ring
With cylindrical or tapered bore
Open or sealed

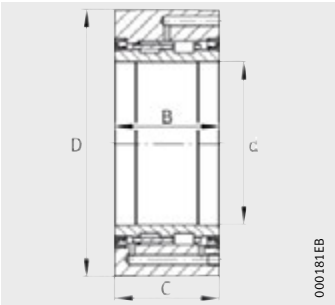

Double row
Sealed on both sides

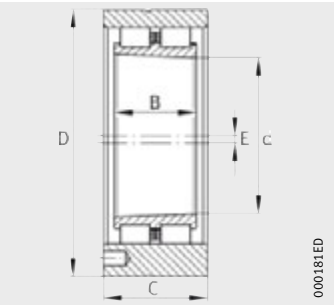

Tapered bore
Taper 1:12, Taper 1:30

Dimension table · Dimensions in mm

Designation	Mass	Dimensions				
	m	d	D	B	C	E
	≈kg					
DMLE60X170X65	9	**60**	170	45	65	15
DMLE65X160X52	5,8	**65**	160	36	52	16
DMLE75X180X52	7,8	**75**	180	36	52	5
DMLE99,942X180,02X73	6,6	**99,942**	180,02	37	73	3
DMLE105X180X70	7	**105**	180	55	70	5
DMLE120X260X74	21	**120**	260	60	74	5
DMLE120X200X74	8,4	**120**	200	55	74	5
DMLE120X285X74	25,5	**120**	285	60	74	25
DMLE120X200X79	9	**120**	200	60	79	5
DMLE120X200X79	9,7	**120**	200	72	79	5
DMLE140X220X80	11,5	**140**	220	70	80	5
DMLE140X230X90	16	**140**	230	90	90	5
DMLE140X230X90	15	**140**	230	90	90	3

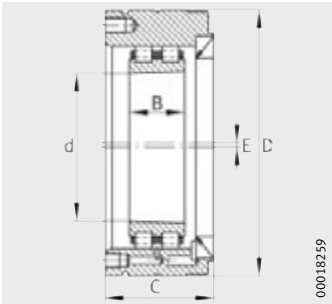

With lip seals

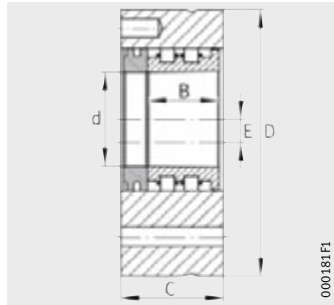

With labyrinth seals

Basic load ratings		Fatigue limit load	Design	Bearing seat	Sealing for
dyn. C	stat. C_0	C_u			
N	N	N			
90 000	121 000	15 000	Double row	Taper 1:30	grease
90 000	121 000	15 000	Double row	Taper 1:12	grease
99 000	146 000	17 700	Double row	Taper 1:12	grease
147 000	229 000	27 000	Double row	Taper 1:12	oil
275 000	495 000	64 000	Double row	Taper 1:12	–
320 000	560 000	71 000	Double row	Taper 1:12	grease
232 000	390 000	57 000	Double row	Taper 1:12	grease
320 000	560 000	71 000	Double row	Taper 1:12	grease
320 000	560 000	71 000	Double row	Taper 1:12	grease
320 000	560 000	71 000	Double row	Taper 1:12	–
196 000	345 000	40 500	Double row	Taper 1:12	oil
224 000	500 000	69 000	Double row	Cylindrical	oil
300 000	520 000	74 000	Double row	Cylindrical	oil

Printing machine bearing units

Eccentric intermediate ring
With cylindrical or tapered bore
Open or sealed

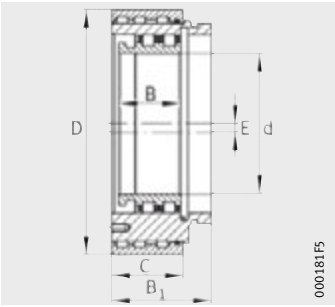

Double row

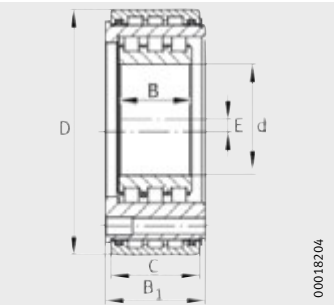

Triple row

Dimension table · Dimensions in mm

Designation	Mass	Dimensions					
	m	d	D	B	B_1	C	E
	≈kg						
DML3E55X130X47,3	4	**55**	130	33,5	47,3	43	5
DML3E55X135X55	3,6	**55**	135	40	55	49	7
DML3E60X150X66	6	**60**	150	61	66	49	10
DML3E60X170X65	8,6	**60**	170	45	65	47	15
DML3E65X142X65,1	4,9	**65**	142	53	65,1	52	3,5
DML3E65X150X65,1	5,7	**65**	150	53	65,1	52	7
DML3E65X145X55	4,5	**65**	145	40	55	49	7
DML3E65X145X55	4,5	**65**	145	40	55	49	4
DML3E65X160X56	6,2	**65**	160	36	56	52	16
DML3E70X147X68	5,2	**70**	147	54	68	59	4
DML3E70,007X200X68	12,1	**70,007**	200	46	68	60	5
DML3E75X155X55	4,9	**75**	155	44	55	49	3
DML3E75X180X56	7,86	**75**	180	36	56	52	16
DML3E75X175X50	4	**75**	175	45	50	40	10
DML3E90X160X60	5	**90**	160	50	60	46	7,8
DML3E100X175X71	5,8	**100**	175	44	71	51	6
DML3E100X200X70	10	**100**	200	37	70	60	10
DML3E100X200X70	9,3	**100**	200	37	70	56	12,7
DML3E99,942X200,025X73	9,2	**99,942**	200,025	37	73	56	7

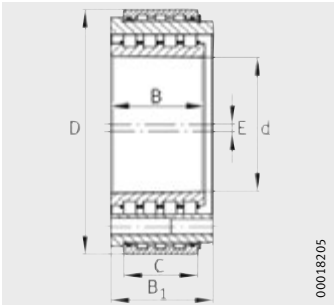

Four-row
Tapered bore

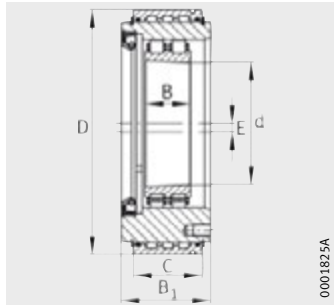

Tapered bore
With lip seals

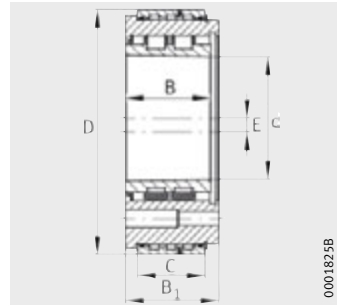

With labyrinth seals

Basic load ratings		Fatigue limit load	Design	Bearing seat	Sealing for
dyn. C N	stat. C_0 N	C_u N			
91 000	124 000	15 000	Double row	Taper 1:12	grease
103 000	158 000	22 400	Triple row	Cylindrical	–
120 000	177 000	20 800	Triple row	Taper 1:12	oil
90 000	121 000	15 000	Double row	Taper 1:30	grease
131 000	238 000	30 000	Four-row	Taper 1:30	–
131 000	238 000	30 000	Four-row	Taper 1:30	–
103 000	158 000	22 400	Triple row	Taper 1:30	–
103 000	158 000	22 400	Triple row	Taper 1:30	–
90 000	121 000	15 000	Double row	Taper 1:12	grease
126 000	195 000	25 000	Triple row	Taper 1:30	–
97 000	142 000	17 000	Double row	Cylindrical	oil
137 000	221 000	26 000	Triple row	Taper 1:30	–
99 000	146 000	17 700	Double row	Taper 1:12	grease
136 000	218 000	26 500	Triple row	Taper 1:12	–
140 000	255 000	30 000	Double row	Cylindrical	oil
86 000	143 000	19 200	Double row	Cylindrical	–
88 000	147 000	19 000	Double row	Taper 1:12	–
146 000	245 000	38 000	Double row	Taper 1:12	–
147 000	229 000	27 000	Double row	Taper 1:12	oil

Printing machine bearing units

Eccentric intermediate ring
With cylindrical or tapered bore
Open or sealed

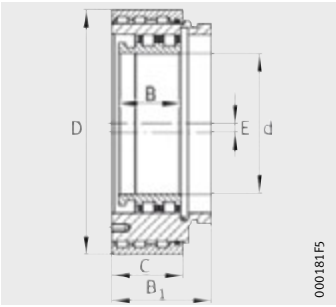

Double row

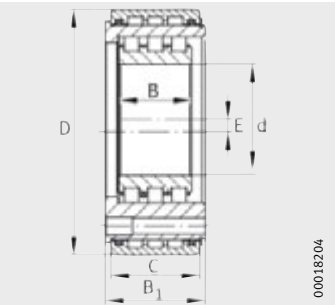

Triple row

Dimension table (continued) · Dimensions in mm

Designation	Mass	Dimensions					
	m	d	D	B	B_1	C	E
	≈kg						
DML3E105X192,025X80	10	**105**	192,025	73	80	58	6
DML3E105X210,025X73	12,3	**105**	210,025	73	70	58	15
DML3E105X210,025X80	13,2	**105**	210,025	73	80	58	12
DML3E105X210,025X80	12,9	**105**	210,025	73	80	58	12
DML3E105X210,025X95	15,2	**105**	210,025	73	95	58	3,5
DML3E105X230X70	14,5	**105**	230	55	70	60	20
DML3E110X210X75	12	**110**	210	71	75	58	7
DML3E110X225X75	15	**110**	225	71	75	58	10
DML3E120X260X74	19,2	**120**	260	55	74	60	20
DML3E120X260X79	20,5	**120**	260	60	79	60	20
DML3E120X260X79	21	**120**	260	72	79	60	20
DML3E120X285X74	25	**120**	285	60	74	60	25
DML3E125X258X91	21,7	**125**	258	68	91	66	17
DML3E125X258X94	22,4	**125**	258	68	94	66	15,25
DML3E130X270X56	15,9	**130**	270	52	56	52	16
DML3E130X290X56	19,6	**130**	290	52	56	52	24
DML3E140X240X80	14,5	**140**	240	70	80	60	7
DML3E140X250X80	16	**140**	250	70	80	60	10
DML3E140X260X83	20	**140**	260	74	83	64	7
DML3E170X310,025X88	30,1	**170**	310,025	78	88	66	5
DML3E170X310,025X88	29,8	**170**	310,025	78	88	66	12

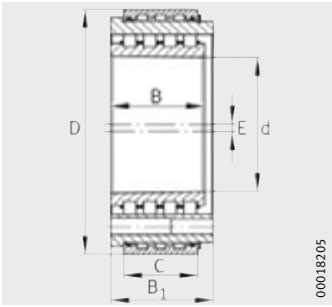

Four-row
Tapered bore

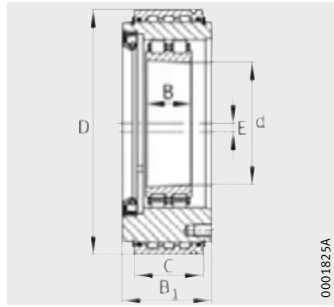

Tapered bore
With lip seals

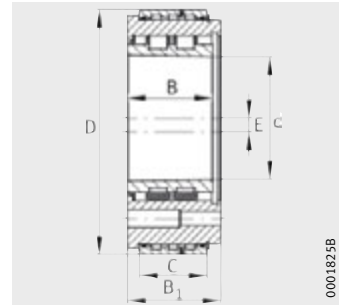

With labyrinth seals

Basic load ratings		Fatigue limit load	Design	Bearing seat	Sealing for
dyn. C	stat. C_0	C_u			
N	N	N			
236 000	460 000	51 000	Four-row	Taper 1:30	–
193 000	345 000	44 000	Double row	Taper 1:30	grease
219 000	415 000	51 000	Four-row	Taper 1:30	grease
193 000	345 000	44 000	Double row	Taper 1:30	grease
193 000	345 000	44 000	Double row	Taper 1:30	grease
275 000	495 000	64 000	Double row	Taper 1:12	–
136 000	218 000	59 000	Four-row	Taper 1:30	–
245 000	520 000	61 000	Four-row	Taper 1:30	–
232 000	390 000	57 000	Double row	Taper 1:12	grease
320 000	560 000	71 000	Double row	Taper 1:12	grease
320 000	560 000	71 000	Double row	Taper 1:12	grease
320 000	560 000	71 000	Double row	Taper 1:12	grease
320 000	560 000	68 000	Triple row	Taper 1:30	grease
320 000	560 000	68 000	Triple row	Taper 1:30	grease
290 000	50 000	72 000	Double row	Taper 1:12	–
290 000	500 000	72 000	Double row	Taper 1:12	–
199 000	355 000	40 500	Double row	Taper 1:12	oil
196 000	345 000	39 000	Double row	Taper 1:12	oil
335 000	690 000	78 000	Four-row	Taper 1:30	–
295 000	720 000	75 000	Four-row	Taper 1:30	grease
295 000	720 000	75 000	Four-row	Taper 1:30	grease

Printing machine bearing units

Eccentric intermediate and outer ring
With cylindrical or tapered bore
Open or sealed

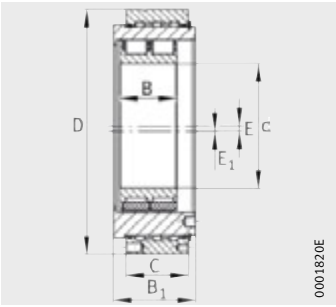

Double row
With labyrinth seals

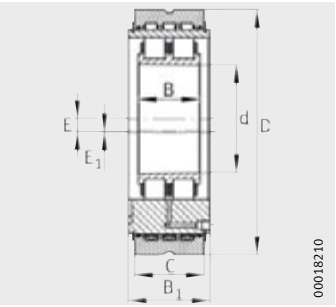

Double row
Tapered bore

Dimension table · Dimensions in mm

Designation	Mass	Dimensions						
	m	d	D	B	B_1	C	E	E_1
	≈kg							
DML3D65X160X49	5,5	**65**	160	36	49	45	16	2
DML3D80X170X54	7	**80**	170	34	54	46,5	5,5	6
DML3D80X180X68	7,5	**80**	180	43	68	50	2,8	8
DML3D105X240X80	21	**105**	240	60	80	68	12,7	0,5
DML3D105X240X80	17	**105**	240	60	80	68	12,7	0,5
DML3D120X235X79	21	**120**	235	55	79	60	5	0,5
DML3D120X260X79	20,5	**120**	260	60	79	60	20	3
DML3D120X260X79	21	**120**	260	72	79	60	20	3
DML3D120X285X74	25,2	**120**	285	60	74	60	25	5
DML3D130X290X97	30,2	**130**	290	78	97	64	20	1

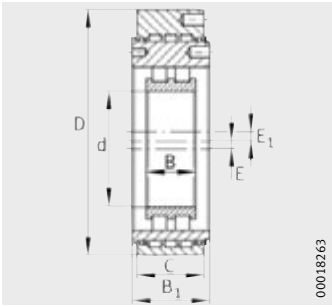

Double row

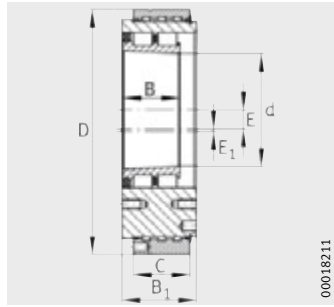

With labyrinth seals

Basic load ratings		Fatigue limit load	Design	Bearing seat	Sealing for
dyn. C N	stat. C_0 N	C_u N			
76 500	116 000	14 500	Double row	Taper 1:12	grease
120 000	186 000	28 500	Double row	Cylindrical	–
135 000	218 000	29 000	Double row	Cylindrical	–
260 000	465 000	54 000	Triple row	Taper 1:30	–
390 000	540 000	71 000	Double row	Taper 1:30	–
315 000	540 000	62 000	Double row	Cylindrical	–
320 000	560 000	71 000	Double row	Taper 1:12	grease
320 000	560 000	71 000	Double row	Taper 1:12	grease
320 000	560 000	71 000	Double row	Taper 1:12	grease
485 000	830 000	106 000	Double row	Taper 1:30	–

Printing machine bearing units

Two eccentric intermediate rings
With cylindrical or tapered bore
Open or sealed

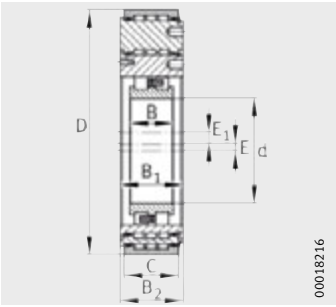

Double row

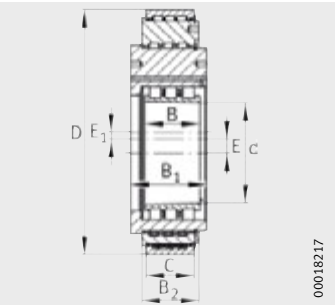

Triple row

Dimension table · Dimensions in mm

Designation	Mass	Dimensions							
	m	d	D	B	B_1	B_2	C	E	E_1
	≈kg								
DMLD60X170X70	8,6	**60**	170	45	70	64,5	47	12	3
DMLD65X160X48	5	**65**	160	31	48	48	40	4,5	6
DMLD65X170X70	8	**65**	170	36	70	64,5	52	12	3
DMLD65X205X65,1/E7	11,6	**65**	205	53	65,1	59,5	52	7	14
DMLD65X205X65,1/E3,5	11,6	**65**	205	53	65,1	59,5	52	3,5	14
DMLD70,007X200X68	12	**70,007**	200	43	68	68	60	5	5,519
DMLD80X190X54	9	**80**	190	34	54	54	46,5	5,5	6
DMLD90X210X54	10	**90**	210	37	54	54	46,5	6	10
DMLD100X240X70	15,5	**100**	240	37	70	60	50	10	3
DMLD120X300X80	29	**120**	300	46	80	72	64	2,8	13
DMLD125X305X94	32	**125**	305	68	94	71	60	17	9

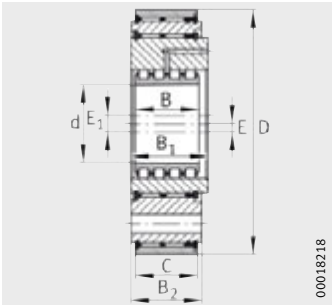

Four-row
Tapered bore

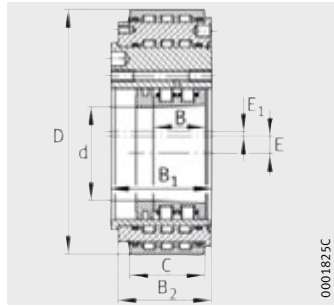

Double row
With labyrinth seals

Basic load ratings		Fatigue limit load	Design	Bearing seat	Sealing for
dyn. C	stat. C_0	C_u			
N	N	N			
90 000	121 000	15 000	Double row	Taper 1:30	grease
90 000	121 000	15 000	Double row	Taper 1:12	–
90 000	121 000	15 000	Double row	Taper 1:12	grease
131 000	238 000	30 000	Four-row	Taper 1:30	–
131 000	238 000	30 000	Four-row	Taper 1:30	–
97 000	142 000	17 000	Double row	Cylindrical	oil
120 000	186 000	28 500	Double row	Cylindrical	–
140 000	224 000	36 000	Double row	Cylindrical	–
88 000	147 000	19 000	Double row	Taper 1:12	–
232 000	390 000	57 000	Double row	Taper 1:12	–
320 000	560 000	68 000	Triple row	Taper 1:30	grease

Axial bearings for printing machinery

Axial bearings for printing machinery

		Page
Product overview	Axial bearings for printing machinery	100
Features	Axial cylindrical roller bearings, axial needle roller bearings	101
	Angular contact ball bearings	102
	Axial angular contact ball bearings	103
	Sealing	104
	Lubrication	104
	Suffixes	104
Design and safety guidelines	Design of adjacent parts	105
Accuracy		105
Dimension tables	Axial cylindrical roller bearings, axial needle roller bearings, double direction, externally or internally centred	106

Axial cylindrical roller bearings

ZARA

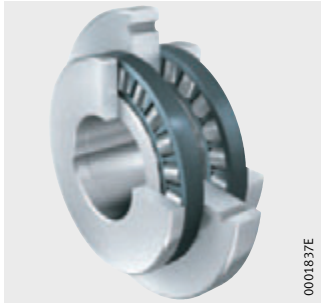

ZARI

Axial needle roller bearings

ZAXA

Angular contact ball bearings

Single row

72..-BE-2RS

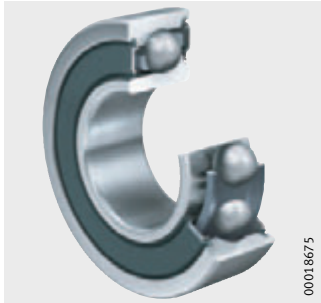

Axial angular contact ball bearings

ZKLF...-2RS

Axial bearings for printing machinery

Features

In conjunction with non-locating bearings, axial bearings are used to provide axial support for main cylinders. The bearings can support forces in both directions and are generally clearance-free.

Depending on the requirements of the printing machine, axial cylindrical roller bearings, axial needle roller bearings or angular contact ball bearings are used.

Further information

- Detailed information is given in Catalogue HR 1, Rolling Bearings.
- http://medias.schaeffler.de.

Axial cylindrical roller bearings, axial needle roller bearings

Axial cylindrical roller bearings comprise axial cages with needle or cylindrical rollers, housing locating washers GS, shaft locating washers WS and an intermediate washer for internal or external centring ZS, *Figure 1*.

The housing locating washers can be externally centred, the shaft locating washers can be internally centred. Depending on the design, they can be radially displaced relative to each other by the dimension s, see dimension table. The shaft and housing locating washer have a ground outside surface.

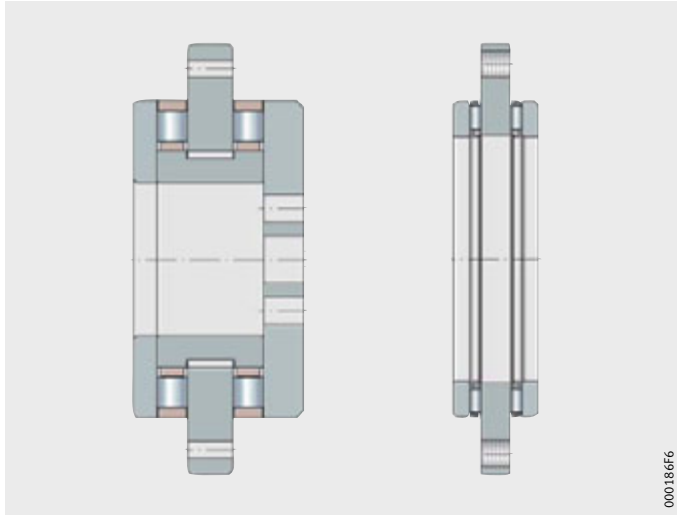

Figure 1
Axial cylindrical roller bearing, axial needle roller bearing

Preload

The ready-to-fit bearing units are supplied in some cases with an adjusted inner ring.

In the design with an adjusted inner ring, the bearing units are clearance-free.

Application

The axial bearings are particularly suitable for supporting axial forces in main cylinder bearing arrangements. They have very high axial rigidity and can support only axial forces in both directions.

Angular contact ball bearings

Single row angular contact ball bearings correspond to DIN 628-1 and are available in open or sealed designs, *Figure 2*. Bearings of the universal design have the suffix UL or UO and can be fitted in either an X or O arrangement, see table, page 104.

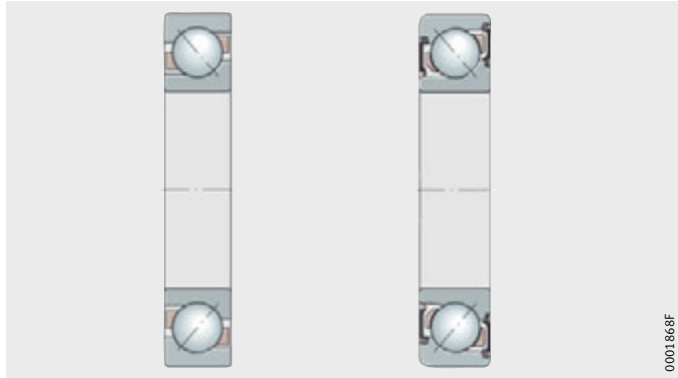

Figure 2
Single row angular contact ball bearings

Preload

In printing machinery, angular contact ball bearings are normally used in a clearance-free or lightly preloaded design, preferably angular contact ball bearings 72..-B.

Radial and axial load carrying capacity

Single row angular contact ball bearings can support axial forces in one direction and high radial forces. They must be axially adjusted against a second bearing fitted in a mirror image arrangement.

The axial load carrying capacity is dependent on the contact angle; i.e. the larger the angle, the higher the load to which the bearing can be subjected. Due to the contact angle of 40°, these bearings can support high axial loads.

Application

Single row angular contact ball bearings in matched pairs are particularly suitable, due to their low friction and high axial rigidity, as an axial bearing arrangement for main cylinders in printing machinery.

Axial angular contact ball bearings

Axial angular contact ball bearings ZKLF are self-retaining, double row angular contact ball bearings with a contact angle of 60° in an O arrangement, *Figure 3*.

The inner ring is adjusted so that it is clearance-free. The contact angle of 60° gives high axial rigidity.

The thick-walled outer ring allows direct screw mounting on the adjacent construction. This allows particularly simple mounting.

Axial angular contact ball bearings are high precision bearings:

- single-piece, thick-walled outer ring with lubrication and fixing holes
- two-piece inner ring with ball and cage assemblies
- either lip or gap seals.

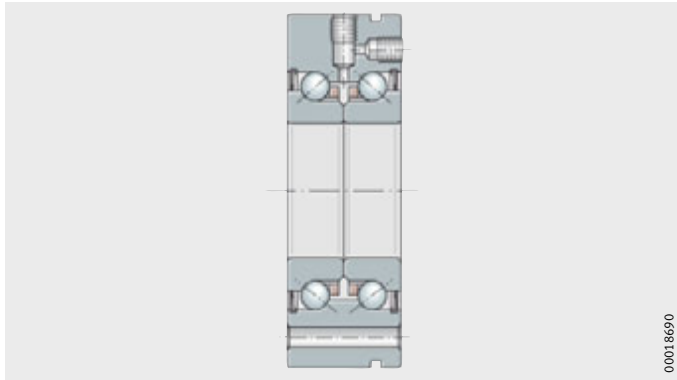

Figure 3
Axial angular contact ball bearing

Sealing

Axial bearings for printing machinery are sealed either by fitting seals in the adjacent construction or, in the case of angular contact ball bearings with the suffix 2RS, by lip seals on both sides. Contact RS seals are suitable for giving protection against dust, contamination and damp atmospheres.

Lubrication

Axial cylindrical roller bearings and axial needle roller bearings can be relubricated in some cases via the inner ring or the intermediate washer.

Angular contact ball bearings and axial angular contact ball bearings with lip seals on both sides are greased with a high quality grease and are lubricated for life. In certain applications, relubrication may be necessary. In this case, Arcanol MULTITOP is suitable.

Suffixes

Suffixes for available designs: see table.

Available designs

Suffix	Description	Design
UL	Universal design for fitting in pairs, bearing pair has slight preload in O and X arrangement	Standard
UO	Universal design for fitting in pairs, bearing pair is clearance-free in O and X arrangement	

Design and safety guidelines

Design of adjacent parts

Axial bearing washers must be fully supported over their entire surface. The abutment shoulders should be rigid, flat and perpendicular to the axis of rotation.

Accuracy

Geometrical tolerances of axial rolling bearings DIN 620-3 (ISO 199), see page 28.

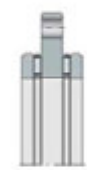

Axial cylindrical roller bearings
Axial needle roller bearings

Double direction
Externally centred or internally centred

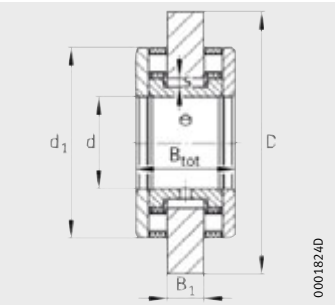

ZARA

Dimension table · Dimensions in mm

Designation			Mass	Dimensions		
Series ZARA	Series ZARI	Series ZAXA	m ≈kg	d	D	d_1
–	**ZARI20X47X24**	–	0,2	**20**	47	32
ZARA25X71,5X27	–	–	0,5	**25**	71,5	52
ZARA25X104X27	–	–	0,8	**25**	104	52
–	**ZARI26X52X25,5**	–	0,3	**26**	52	32
–	**ZARI31X52X25**	–	0,2	**31**	52	37
ZARA40X100X34,5	–	–	0,8	**40**	100	65
ZARA40X100X44	–	–	1,15	**40**	100	65
ZARA40X130X46	–	–	1,75	**40**	130	70
ZARA45X84X31,5	–	–	0,6	**45**	84	70
–	–	**ZAXA50X102X24,5**	0,8	**50**	102	70
ZARA60X104X37	–	–	0,96	**60**	104	90
ZARA60X120X39	–	–	1,2	**60**	120	90
ZARA60X165X48	–	–	3,4	**60**	165	95
ZARA60X165X56	–	–	3,5	**60**	165	95
ZARA60X170X67,5	–	–	5,9	**60**	170	125
ZARA60X230X40	–	–	4,3	**60**	230	90
–	**ZARI70X100X24**	–	0,45	**70**	100	82
–	**ZARI70X110X25**	–	0,7	**70**	110	80,1
–	–	**ZAXA70X119X40**	1,68	**70**	119	105
–	–	**ZAXA75X119X35,5**	1,2	**75**	119	100
–	–	**ZAXA75X145X30,5**	1,3	**75**	145	100
ZARA75X180X50	–	–	4,7	**75**	180	110
ZARA75X185X43	–	–	4,7	**75**	185	110
–	–	**ZAXA85X150X29,75**	1,3	**85**	150	110
–	**ZARI100X130X25**	–	0,6	**100**	130	110,5
–	–	**ZAXA100X154X44**	2,74	**100**	154	135
–	–	**ZAXA140X199X54**	4,84	**140**	199	178

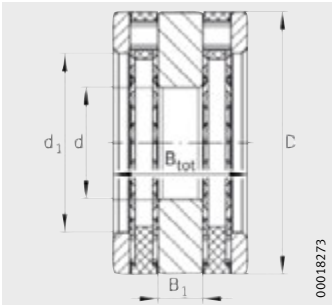

ZARI

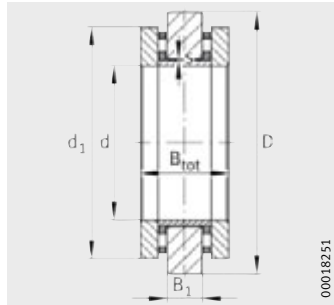

ZAXA

			Basic load ratings		Fatigue limit load
s	B_{tot}	B_1	dyn. C N	stat. C_0 N	C_u N
–	24	8	35 500	86 000	8 000
2,5	27	10	39 000	101 000	9 200
2,5	27	10	39 000	101 000	9 200
–	25,5	7	35 500	86 000	8 000
–	25	8	34 500	86 000	8 000
2	34,5	10,5	59 000	163 000	14 700
2,5	44	20	59 000	163 000	14 700
2	46	16	61 000	177 000	16 200
0,5	31,5	11,5	61 000	177 000	16 200
1	24,5	10,5	32 000	143 000	16 000
0,5	37	12,5	107 000	340 000	30 500
1	39	10	107 000	340 000	30 500
0,5	48	18	111 000	365 000	33 000
0,5	56	18	111 000	365 000	33 000
2,5	67,5	18	217 000	660 000	65 000
2	40	16	43 000	137 000	13 700
–	24	7	28 000	59 000	13 500
–	25	5	36 800	67 700	21 600
0,5	40	16	55 000	265 000	31 500
0,5	35,5	16	55 000	265 000	31 500
1,5	30,5	11	55 000	265 000	31 500
1	50	18	58 000	290 000	34 500
1	43	18	58 000	290 000	34 500
0,5	29,75	10,25	58 000	290 000	34 500
–	25	7	38 500	158 000	15 200
0,5	44	22	91 000	560 000	63 000
0,5	54	25	138 000	900 000	88 000

Other products

Other products

		Page
Product overview	Other products	110
Features	Track rollers	112
	Polygon bearings for printing machinery	113
	Precision locknuts	114
	Spherical roller bearings	114
	Crossed roller bearings	114
Dimension tables	Yoke type track rollers, with axial guidance, sealed	116
	Cylindrical roller stud type track rollers, with axial guidance	118

Yoke type track rollers

PWTR

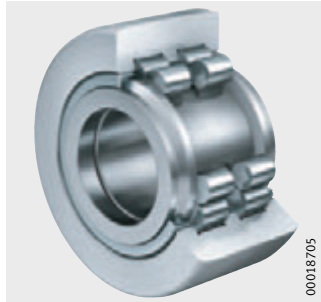

Stud type track rollers

PWKR

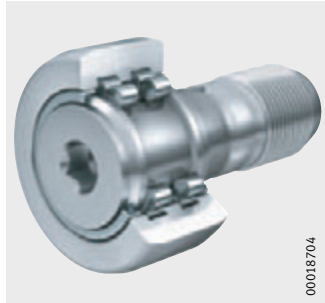

Ball bearing track rollers

LR50, LR52, LR53

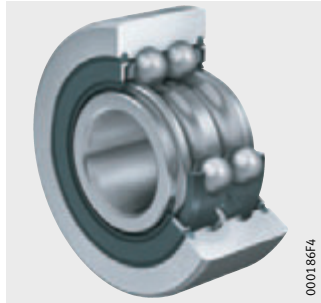

KR52..-2RS

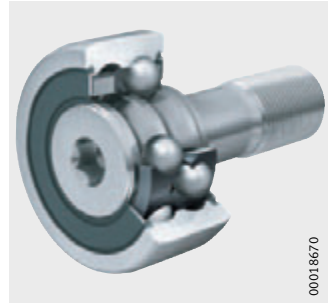

Printing machine bearing unit

Polygon bearings

Precision locknuts

ZM

Spherical roller bearings

222..-E1-K

Crossed roller bearings

XSU

Other products

Features

In addition to the special products, the Schaeffler Group offers an extensive range of standard products for printing machinery.

Further information

- Detailed information is given in Catalogue HR 1, Rolling Bearings.
- http://medias.schaeffler.de.

Ball bearing track rollers

Ball bearing track rollers correspond in their design to deep groove or angular contact ball bearings but have thick-walled outer rings with a crowned outside surface. They can support axial forces in both directions as well as high radial loads.

Ball bearing track rollers are available with and without a stud.

Ball bearing track rollers without a stud are mounted on a shaft or stud.

Coating with Triondur

In the case of many special stud type track rollers, the outside surface is coated, *Figure 1*.

This coating is particularly suitable for gripper shaft applications in sheetfed offset printing machines.

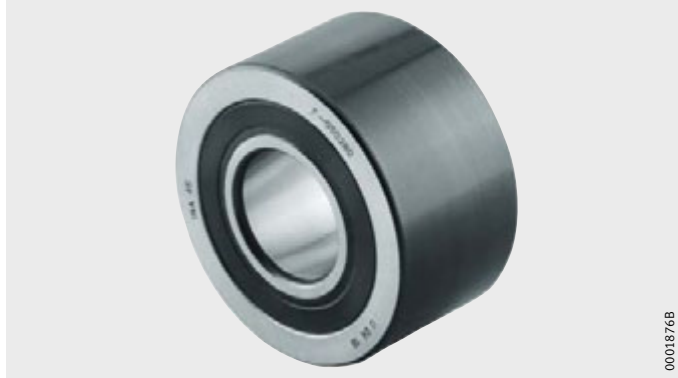

Figure 1
Ball bearing track roller LR, with Triondur coating

The features of Triondur are as follows:

- excellent anti-wear protection
- very low friction
- very high tribological and mechanical load carrying capacity
- good emergency running characteristics.

Sealing

The bearings are sealed by means of lip seals or gap seals.

Lubrication

Ball bearing track rollers are greased using a lithium soap grease. Double row ball bearing track rollers can be relubricated via the inner ring.

Polygon bearings for printing machinery

Polygon bearings are ready-to-fit bearing units, *Figure 2*:

- They are ready-to-fit bearing units. The assembly includes:
  - inner ring with cylindrical bore with rib-guided cylindrical rollers and double row cage (non-locating bearing). Alternatively, double row tapered roller bearings in O arrangement as locating bearing
  - thick-walled outer ring with lubrication and fixing holes as well as polygonal outside surface
- Polygon bearings are particularly suitable for the bearing arrangement of cylinders in printing machines with very large radial traverse distances
- They are clearance-free after mounting.

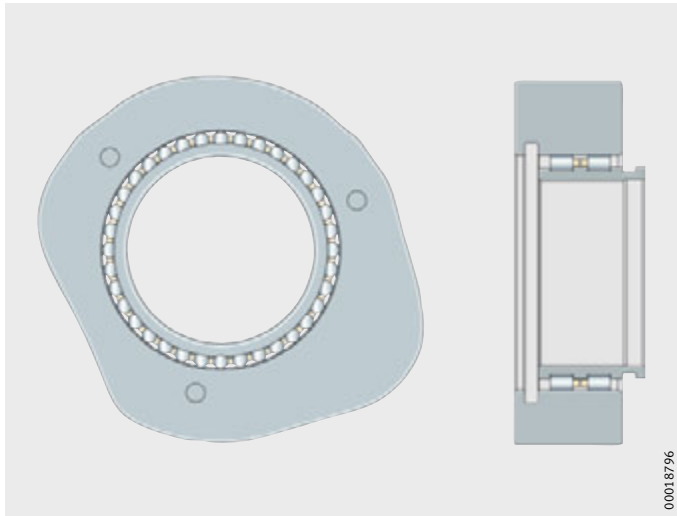

Figure 2
Polygon bearing

Other products

Precision locknuts

Precision locknuts are used where high axial forces must be supported and high runout accuracy and rigidity are required.

The thread and the axial face of the locknut in contact with the rolling bearing are produced in a single clamping operation. This allows very high runout accuracy to be achieved.

Locknuts ZM are secured against rotation by means of two radially acting locking pegs.

Spherical roller bearings

Spherical roller bearings are double row, self-retaining units comprising solid outer rings with a concave raceway, solid inner rings and barrel rollers with cages.

The designs normally fitted in printing machinery have the following characteristics:

- X-life grade
- inner ring with tapered bore
- increased accuracy to tolerance class P5
- reduced internal clearance.

Crossed roller bearings

Crossed roller bearings XSU are units comprising inner and outer rings, rolling elements and spacers. Due to the X arrangement of the rolling elements, they can support axial and radial loads as well as tilting moment loads.

The crossed roller bearings without teeth have very high rigidity and running accuracy. They are available preloaded or with clearance.

The bearing rings are screw mounted directly to the adjacent construction and are therefore very easy to fit.

Special geometries such as cams on the outer ring are possible by agreement.

Yoke type track rollers

With axial guidance
Sealed

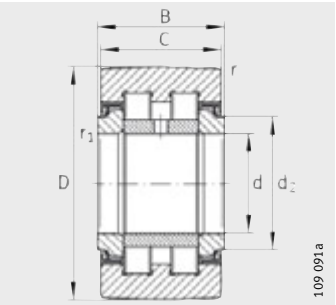

PWTR..-2RS
(optimised INA profile)

Dimension table · Dimensions in mm

Designation		Mass	Dimensions						
	X-life	m ≈kg	D	d	B	C	d_2	r	r_1
PWTR15-2RS	**XL**	99	**35**	15	19	18	20	0,6	0,3
PWTR17-2RS	**XL**	147	**40**	17	21	20	22	1	0,5
PWTR1542-2RS	**XL**	158	**42**	15	19	18	20	0,6	0,3
PWTR1747-2RS	**XL**	220	**47**	17	21	20	22	1	0,5
PWTR20-2RS	**XL**	245	**47**	20	25	24	27	1	0,5
PWTR2052-2RS	**XL**	321	**52**	20	25	24	27	1	0,5
PWTR25-2RS	**XL**	281	**52**	25	25	24	31	1	0,5
PWTR2562-2RS	**XL**	450	**62**	25	25	24	31	1	0,5
PWTR30-2RS	**XL**	465	**62**	30	29	28	38	1	0,5
PWTR3072-2RS	**XL**	697	**72**	30	29	28	38	1	0,5
PWTR35-2RS	**XL**	630	**72**	35	29	28	44	1,1	0,6
PWTR3580-2RS	**XL**	836	**80**	35	29	28	44	1,1	0,6
PWTR40-2RS	**XL**	816	**80**	40	32	30	51	1,1	0,6
PWTR45-2RS	**XL**	883	**85**	45	32	30	55	1,1	0,6
PWTR4090-2RS	**XL**	1 129	**90**	40	32	30	51	1,1	0,6
PWTR50-2RS	**XL**	950	**90**	50	32	30	60	1,1	0,6
PWTR45100-2RS	**XL**	1 396	**100**	45	32	30	55	1,1	0,6
PWTR50110-2RS	**XL**	1 690	**110**	50	32	30	60	1,1	0,6

Basic load ratings				Speed
dyn. C_{rw} N	stat. C_{0rw} N	dyn. $F_{r\,per}$ N	stat. $F_{0r\,per}$ N	$n_{D\,G}$ min^{-1}
12 600	14 600	10 700	14 600	6 000
14 300	17 900	16 500	17 900	5 000
14 700	16 200	16 200	16 200	6 000
15 900	18 400	18 400	18 400	5 000
24 500	30 500	20 700	30 500	3 800
27 000	35 000	31 000	35 000	3 800
25 000	33 000	21 800	33 000	3 800
30 000	42 500	42 500	42 500	3 800
35 000	45 500	29 000	45 500	2 200
41 000	56 000	54 000	56 000	2 200
38 500	54 000	39 000	54 000	1 800
43 500	63 000	59 000	63 000	1 800
45 000	61 000	39 500	61 000	1 500
45 500	63 000	41 000	63 000	1 300
52 000	75 000	67 000	75 000	1 500
46 000	66 000	42 000	66 000	1 100
56 000	85 000	85 000	85 000	1 300
59 000	94 000	94 000	94 000	1 100

Cylindrical roller stud type track rollers

With axial guidance

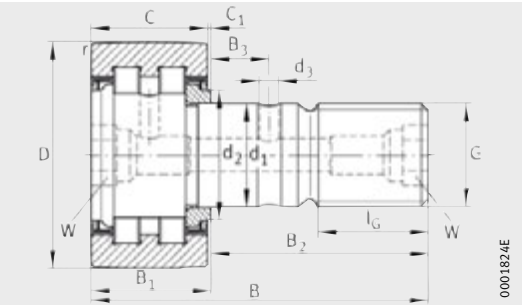

PWKR..-2RS (optimised INA profile)

Dimension table · Dimensions in mm

Without eccentric collar		With eccentric collar			Dimensions								
Designation	Mass m ≈g	Designation	Mass m ≈g	X-life	D	d_1	B	B_1	B_2	B_3	C	C_1	r
PWKR22X10X28,8	45	–	–	–	**22**	10	28,8	16	12,8	6	15	0,8	0,6
PWKR26X10X37,5	60	–	–	–	**26**	10	37,5	16	21,5	9,15	15	0,6	0,3
PWKR28X12X36,15	83	–	–	–	**28**	12	36,15	18,15	18	6,5	17	0,7	0,3
PWKR28X12X39,5	82	–	–	–	**28**	10	39,5	18,15	21,35	9	17	0,6	0,3
PWKR30X12X51	100	–	–	–	**30**	12	51	22	29	8	19	3	0,6
PWKR35-2RS	164	–	–	**XL**	**35**	16	52	19,6	32,5	7,8	18	0,8	0,6
PWKR35X16X39	145	–	–	–	**35**	16	39	19	20	10	18	1	0,6
PWKR35X16X42	160	–	–	–	**35**	16	42	22	20	10	21	1	0,6
PWKR35X16X43,5	153	–	–	–	**35**	16	43,5	19,63	23,87	7,82	18	0,9	0,6
PWKR35X16X63	160	–	–	–	**35**	16	63	19	44	7,5	18	1	0,6
–	–	**PWKRE35-2RS**	177	**XL**	**35**	16	52	22,6	29,5	–	18	3,8	0,6
PWKR40-2RS	242	–	–	**XL**	**40**	18	58	21,6	36,5	8	20	0,8	1
PWKR40X18X41,85	220	–	–	–	**40**	18	41,85	21,85	20	10	20	1	0,6
PWKR40X18X44,5	240	–	–	–	**40**	18	44,5	24,5	20	10	23,5	0,5	1
PWKR40X18X52,5	280	–	–	–	**40**	18	52,5	23,5	29	8	22	0,8	1,1
PWKR40X18X55,5	310	–	–	–	**40**	18	55,5	26,5	29	8	25	0,8	1,1
–	–	**PWKRE40-2RS**	258	**XL**	**40**	18	58	24,6	33,5	–	20	3,8	1
–	–	**PWKRE40X18X53**	236	–	**40**	18	53	21,65	31,35	8	20	0,8	1
–	–	**PWKRE40X18X55,5**	310	–	**40**	18	55,5	26,5	29	8	25	0,8	1,1
PWKR47-2RS	380	**PWKRE47-2RS**	400	**XL**	**47**	20	66	25,6	40,5	9	24	0,8	1
PWKR47X20X51	400	–	–	–	**47**	20	51	29,7	21,3	–	28	0,8	1
PWKR52-2RS	450	**PWKRE52-2RS**	470	**XL**	**52**	20	66	25,6	40,5	9	24	0,8	1
PWKR52X20X76,5	620	–	–	–	**52**	20	76,5	36	40,5	15	34,5	0,8	1
PWKR62-2RS	795	**PWKRE62-2RS**	824	**XL**	**62**	24	80	30,6	49,5	11	28	1,3	1
PWKR72-2RS	1 020	**PWKRE72-2RS**	1 050	**XL**	**72**	24	80	30,6	49,5	11	28	1,3	1,1
PWKR80-2RS	1 600	**PWKRE80-2RS**	1 670	**XL**	**80**	30	100	37	63	15	35	1	1,1
PWKR90-2RS	1 960	**PWKRE90-2RS**	2 020	**XL**	**90**	30	100	37	63	15	35	1	1,1

1) Design with gap seals or seal 2RS.
The outside surface can be crowned, cylindrical or can have the optimised INA profile.

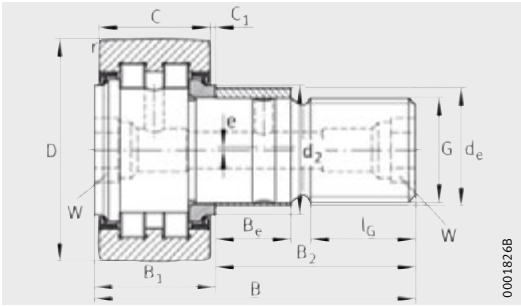

PWKRE..-2RS (optimised INA profile)

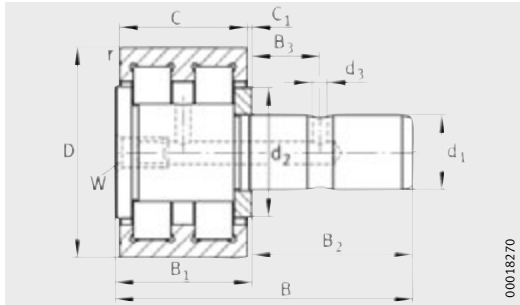

PWKR[1)]

								Basic load ratings				Drive fit lubrication nipple	Tight-ening torque	Speed
d_2	d_3	G	l_G	W	Eccentric collar			dyn.	stat.	dyn.	stat.		M_A	$n_{D\,G}$
					d_e	B_e	e	C_{rw}	C_{0rw}	$F_{r\,per}$	$F_{0r\,per}$			
								N	N	N	N		Nm	min^{-1}
12	2,5	–	–	–	–	–	–	8 400	7 000	4 500	7 000	–	–	–
17,46	2	–	–	–	–	–	–	9 500	8 200	4 750	8 200	–	–	–
17,5	2	–	–	4	–	–	–	12 600	10 900	5 200	10 900	–	–	–
17,5	2	–	–	–	–	–	–	12 600	10 900	5 200	10 900	–	–	–
18,3	3	M12X1,5	13	6	–	–	–	10 700	9 700	3 600	9 700	NIPA1X4,5	–	–
20	3	M16X1,5	17	8	–	–	–	12 600	14 600	10 700	14 600	NIPA2X7,5	58	6 000
24	2,5	–	–	–	–	–	–	16 300	15 300	8 400	15 300	–	–	–
24	2,5	–	–	–	–	–	–	18 100	17 500	8 800	17 500	–	–	–
20	3	M16X1,5	8,5	8	–	–	–	11 600	11 300	9 400	11 300	NIPA2X7,5	58	–
24	2,5	–	–	–	–	–	–	16 300	15 300	8 400	15 300	–	–	–
27,6	–	M16X1,5	17	8	20	12	1	12 600	14 600	10 700	14 600	NIPA2X7,5	58	6 000
22	3	M18X1,5	19	8	–	–	–	14 300	17 900	16 500	17 900	NIPA2X7,5	87	5 000
27	3	–	–	–	–	–	–	19 700	19 800	11 000	19 800	–	–	–
22	3	–	–	–	–	–	–	20 100	24 100	12 600	24 100	–	–	–
24,7	3	M18X1,5	11,5	8	–	–	–	19 700	22 800	15 000	22 800	–	–	–
24,7	3	M18X1,5	11,5	8	–	–	–	24 700	30 500	20 700	30 500	–	–	–
30	–	M18X1,5	19	8	22	14	1	14 300	17 900	16 500	17 900	NIPA2X7,5	87	5 000
27	3	M18X1,5	14	8	–	–	0,38	18 300	18 100	12 000	18 100	–	–	–
24,7	3	M18X1,5	11,5	8	–	–	0,35	24 700	30 500	20 700	30 500	–	–	–
27	4	M20X1,5	21	10	24	18	1	24 500	30 500	20 700	30 500	NIPA2X7,5	120	3 800
27	3	–	–	–	–	–	–	30 500	39 500	23 100	39 500	DIN 71412-C M6	–	–
31	4	M20X1,5	21	10	24	18	1	25 000	33 000	21 800	33 000	NIPA2X7,5	120	3 800
31	4	M20X1,5	16	10	–	–	–	38 000	54 000	26 000	54 000	NIPA2X7,5	120	–
38	4	M24X1,5	25	14	28	22	1	35 000	45 500	29 000	45 500	NIPA3X9,5	220	2 200
44	4	M24X1,5	25	14	28	22	1	38 500	54 000	39 000	54 000	NIPA3X9,5	220	2 200
47	4	M30X1,5	32	14	35	29	1,5	56 000	79 000	60 000	79 000	NIPA3X9,5	450	1 800
47	4	M30X1,5	32	14	35	29	1,5	62 000	92 000	92 000	92 000	NIPA3X9,5	450	1 800

Addresses

Germany

Schaeffler Technologies
GmbH & Co. KG
Industriestraße 1–3
91074 Herzogenaurach
Germany
Tel. +(49) 91 32 / 82-0
Fax +(49) 91 32 / 82-4950
info.machine-tools@schaeffler.com

Schaeffler Technologies
GmbH & Co. KG
Georg-Schäfer-Straße 30
97421 Schweinfurt
Germany
Tel. +(49) 97 21 / 91 0
Fax +(49) 97 21 / 91 34 35
info.machine-tools@schaeffler.com

Austria

Schaeffler Austria GmbH
Ferdinand-Pölzl-Straße 2
2560 Berndorf-St. Veit
Austria
Tel. +43 2672 202-0
Fax +43 2672 202-1003
info.at@schaeffler.com

Canada

Schaeffler Canada Inc.
Canada Oakville
2871 Plymouth Drive
Oakville, ON L6H 5S5
Canada
Tel. +(1) 905 / 8 29 27 50
Tel. +(1) 800-263-4397 Toll Free
Fax +(1) 905 / 8 29 25 63
info.ca@schaeffler.com

China

Schaeffler Holding (China) Co., Ltd.
No. 1 Antuo Road
(west side of Anhong Road)
Anting, Jiading District
201804 Shanghai
China
Tel. +86 21 3957 6500
Fax +86 21 3957 6600
www.schaeffler.cn

Schaeffler Trading (Shanghai) Co., Ltd.
Beijing Branch
RM 2801, Nexus Center, No. 19 A
East 3rd Ring Road North,
Chaoyang District
100020 Beijing
China
Tel. +86 10 6515 0288
Fax +86 10 6512 3433
info.cn-beijing@Schaeffler.com

Schaeffler (China) Co., Ltd.
18 Chaoyang Road, Taicang
Jiangsu Province
215400 Taicang , Jiangsu
China
Tel. +86 512 5395 7700
Fax +86 512 5357 4064
info-cn@schaeffler.com

Czech Republic

Schaeffler CZ s.r.o.
Průběžná 74a
100 00 Praha 10
Czech Republic
Tel. +420 267 298 111
Fax +420 267 298 110
info.cz@schaeffler.com

Denmark

Schaeffler Danmark ApS
Jens Baggesens Vej 90P
8200 Århus N
Denmark
Tel. +(45) 70 15 44 44
Fax +(45) 70 15 22 02
info.dk@schaeffler.com

France

Schaeffler France
93, route de Bitche, BP 30186
67506 Haguenau
France
Tel. +(33) 3 88 63 40 40
Fax +(33) 3 88 63 40 41
info.fr@schaeffler.com

Great Britain

Schaeffler (UK) Ltd
Forge Lane, Minworth
Sutton Coldfield
West Midlands B76 1AP
Great Britain
Tel. +(44) 121 3 13 58 70
Fax +(44) 121 3 13 00 80
info.uk@schaeffler.com

India

FAG Bearings India Limited
Maneja
Vadodara 390 013
India
Tel. +91 265 26426-51/-52
Fax +91 265 2 63 88-04/-10
ravinder.mathur@schaeffler.com

FAG Bearings India Limited
18, Gr. Floor, Wst View 77,
R.V. Road, Basavanagudi
Bangalore 560 004
India
Tel. +91 80 2657 5120/-4866
Fax +91 80 26574866
vernon.rego@schaeffler.com

INA Bearings India Pvt. Ltd.
Site No. 1, Sri Nrusimha Towers,
First Floor,
Amruthnagar Main Road
Next to Sub-registrar's Office,
Konanakunte
Bangalore, 560 062
India
Tel. +91 80 4260 6999
Fax +91 80 4260 6922
Sales.bangalore@schaeffler.com

INA Bearings India Pvt. Ltd.
Plot No. A-3 Talegaon Industrial &
Floriculture Park
Village Ambi, Navalakha Umbre,
Taluka Maval
Pune 410 507
India
Tel. +91 20 306104104
Fax +91 20 30614308
info.ina.in@schaeffler.com

Italy

Schaeffler Italia S.r.l.
Strada Provinciale 229 Km 17
28015 Momo
Italy
Tel. +(39) 3 21 / 92 92 11
Fax +(39) 3 21 / 92 93 00
info.it@schaeffler.com

Japan

Schaeffler Japan Co., Ltd.
New Stage Yokohama
1-132, Shinurashima-cho, Kanagawa-ku,
Yokohama, 221-0031,
Japan
Tel. +81 45 274 8211
Fax +81 45 274 8221
info-japan@schaeffler.com

Netherlands

Schaeffler Nederland B.V.
Gildeweg 31
3771 NB Barneveld
Netherlands
Tel. +(31) 342 / 40 30 00
Fax +(31) 342 / 40 32 80
info.nl@schaeffler.com

Russia

Schaeffler Russland GmbH
Leningradsky Prospekt 47, Bau 3
Business-Center Avion
125167 Moscow
Russia
Tel. +7 495 7 37 76 60
Fax +7 495 7 37 76 61
info.ru@schaeffler.com

Slovak Republic

Schaeffler Slovensko, spol. s.r.o.
Ulica Dr. G. Schaefflera 1
02401 Kysucké Nové Mesto
Slovak Republic
Tel. +(421) 41 / 4 20 59 11
Fax +(421) 41 / 4 20 59 18
info.sk@schaeffler.com

Spain

Schaeffler Iberia, s.l.u.
Polígono Ind. Pont Reixat
08960 Sant Just Desvern
Spain
Tel. +(34) 93 / 4 80 34 10
Fax +(34) 93 / 3 72 92 50
info.es@schaeffler.com

Sweden

Schaeffler Sverige AB
Charles gata 10
195 61 Arlandastad
Sweden
Tel. +(46) 8 / 59 51 09 00
Fax +(46) 8 / 59 51 09 60
info.se@schaeffler.com

Switzerland

HYDREL GmbH
Badstrasse 14
8590 Romanshorn
Switzerland
Tel. +(41) 71 / 4 66 66 66
Fax +(41) 71 / 4 66 63 33
info.ch@schaeffler.com

USA

Schaeffler Group USA Inc.
308 Springhill Farm Road
Fort Mill, SC 29715
USA
Tel. +1 803 548 8500
Fax +1 803 548 8599
info.us@schaeffler.com

Design brief for cylinder bearing arrangements in printing machinery

Contact information

Date _____

Company _____

Contact _____

Department _____

Street _____

Post code, _____

e-mail _____

Telephone _____

Machine designation

_____

_____

_____

Cylinder designation

_____

_____

_____

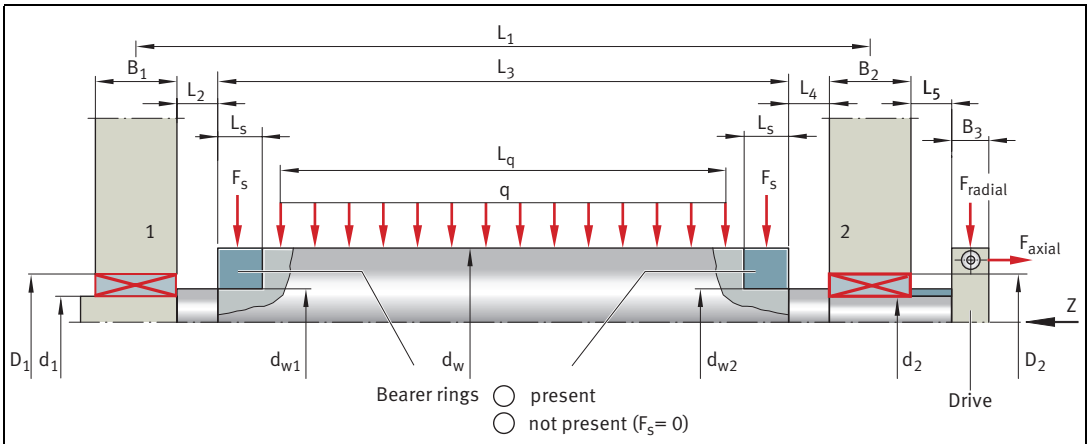

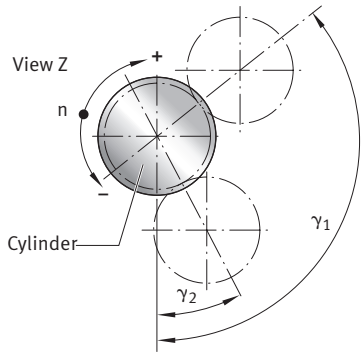

		B_1 = _____
	d_1 = _____	B_2 = _____
	D_1 = _____	B_3 = _____
	d_2 = _____	L_1 = _____
Drive 1: γ_1 = _____	D_2 = _____	L_2 = _____
Drive 2: γ_2 = _____	d_w = _____	L_3 = _____
	d_{w1} = _____	L_4 = _____
	d_{w2} = _____	L_5 = _____
		L_q = _____
		L_s = _____

000188DF

Geometrical data

Design brief for cylinder bearing arrangements in printing machinery

Machine designation _____ **Cylinder designation** _____

Bearing lubrication data

Lubrication Oil: _____ ❑ Bearing 1 ❑ Bearin

Greas _____ ❑ Bearing 1 ❑ Bearin

Identifying data of _____

(viscosity, designation, where defined)

Environmental data

Sealing against contamination ❑ in adjacent construction ❑ integrated in bearing

Sealing method _____

Bearing installation data

Shaft seat ❑ Cylindrical ❑ Tapered Taper angle 1: _____

Mounting ❑ Cold mounting or ❑ Housing bore heated, bearing cooled

❑ Bearing inner ring heated

Materials Shaft _____ ❑ Steel or ❑ _____

Housing _____ ❑ GG25 or ❑ _____

Surface quality Shaft seat _____

Housing bore _____

Diameter tolerance Shaft seat, housing bore _____

Operating clearance required _____

Machine designation

Please state duty cycle if available! Symbols, units and definitions, see figure for geometrical data.

Inherent mass of cylinder (including gear wheel) _____ kg

Cylinder speed n (plus or minus sign for direction of rotation) _____ min^{-1}

Drive 1

❑ Driven cylinder ❑ Driving cylinder

Power to be transmitted	_____	kW	
or torque to be transmitted	_____	Nm	
Pitch circle diameter	_____	mm	
Operating mesh angle α_n	_____	°	
Inclination angle β	_____	°	
Bearer ring load F_{S1}	_____	N	(if available)
Distributed load q_1	_____	N/mm	(if available)

Drive 2

❑ Driven cylinder ❑ Driving cylinder

Power to be transmitted	_____	kW	
or torque to be transmitted	_____	Nm	
Pitch circle diameter	_____	mm	
Operating mesh angle α_n	_____	°	
Inclination angle β	_____	°	
Bearer ring load F_{S2}	_____	N	(if available)
Distributed load q_2	_____	N/mm	(if available)

Cylinder adjustment (if available)

axial _____ mm

radial _____ mm

Bearing _____ Eccentric _____ mm

Bearing _____ Eccentric _____ mm

Requisite bearing life _____

_____

Notes

Notes

MATNR 036927651-0000 / TPI 222 / GB-D / 2011091 / Printed in Germany by hofmann

Schaeffler Technologies GmbH & Co. KG

Industriestraße 1 – 3
91074 Herzogenaurach
Germany
Internet www.ina.com
E-mail info@schaeffler.com

In Germany:
Phone 0180 5003872
Fax 0180 5003873

From other countries:
Phone +49 9132 82-0
Fax +49 9132 82-4950

Schaeffler Technologies GmbH & Co. KG

Georg-Schäfer-Straße 30
97421 Schweinfurt
Germany
Internet www.fag.com
E-mail FAGinfo@schaeffler.com

In Germany:
Phone 0180 5003872
Fax 0180 5003873

From other countries:
Phone +49 9721 91-0
Fax +49 9721 91-3435

Every care has been taken to ensure the correctness of the information contained in this publication but no liability can be accepted for any errors or omissions.
We reserve the right to make technical changes.

© Schaeffler Technologies GmbH & Co. KG
Issued: 2011, September

This publication or parts thereof may not be reproduced without our permission.
TPI 222 GB-D