Precision Rolling Bearings

NACHI

Precision Rolling Bearings

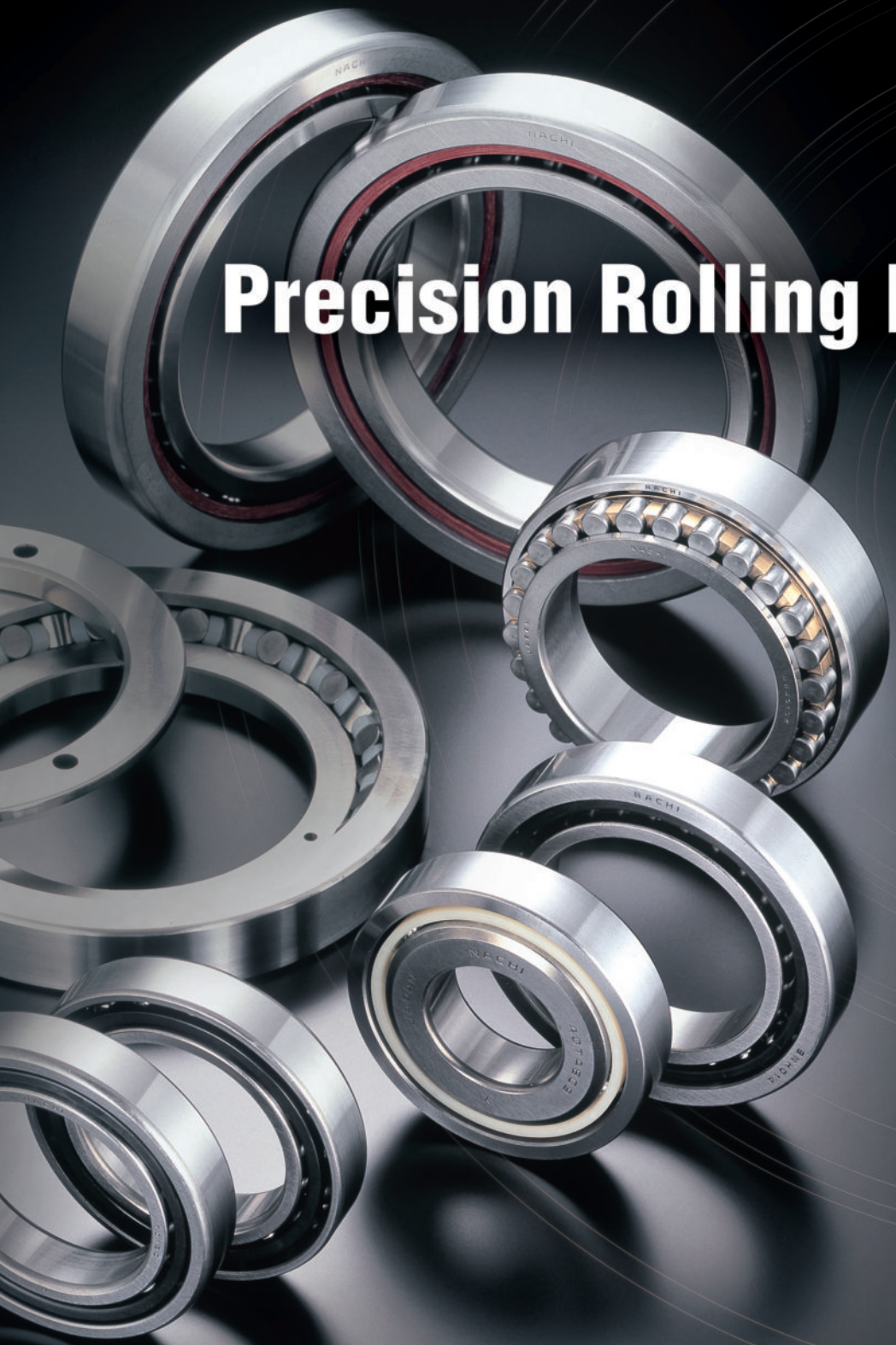

NACHI-FUJIKOSHI CORP.

Angular Contact Ball Bearings / Flush Ground Type

U and DU Series **2**
- Boundary Dimensions 5
- Preload 3
- Tolerance 23

Angular Contact Ball Bearings / High Speed Type

BNH Series **7**
- Boundary Dimensions 8
- Preload 7
- Tolerance 23

Angular Contact Ball Bearings / For Thrust Load

TAH and TBH Series **9**
- Boundary Dimensions 10
- Preload 9
- Tolerance 9, 23

Double Row Cylindrical Roller Bearings

NN and NNU Series **12**
- Boundary Dimensions 13
- Clearance 12
- Tolerance 23

Cross Tapered Roller Bearings

XRN Series **15**
- Boundary Dimensions 17
- Tolerance 16
- Displacement 16

Ball Screw Support Bearings

TAB Series **19**
- Boundary Dimensions 21
- Tolerance 20
- Preload 20
- Displacement 19

Tolerance Values for Radial Bearings **23**

Angular Contact Ball Bearings / Flush Ground Type

U and DU Series

Advantages

Any combination can be readily assembled; because these are universal type bearings, DB, DF and DT combinations as well as multi-combinations can be made.
Spacer combinations can be simplified; if the inner and outer ring spacer widths are the same, the bearing can be readily assembled with the desired preload.
Stocking bearings in various combinations is unnecessary; there is no need to keep DB, DF or DT combinations in inventory.
It is sufficient to stock the preloaded U or DU series. Overall inventory will be reduced and its control will be enhanced.

Features

"U" Series	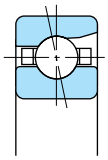	A "U" bearing can be purchased singularly.
"DU" Series	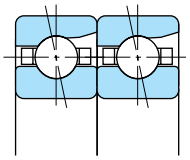	To manufacture a "DU" series set, select two "U" series bearings. These have been manufactured with the desired preload. They are purchasable with a small dimensional variation in bore diameter and outer diameter. As such they can be combined to make a DB, DF or DT set.

Symbols; U=Universal, DU=Duplex universal

Combinations

Any Combination of NACHI FLUSH GROUND Precision Beanings will provide the desired preload, obviously facilitating bearing handling.

There are three basic combinations:

* Back to back combination (DB)
* Face to face combination (DF)
* Tandem combination (DT)

which require no adjustment so the optimum combination for an application may be readily selected.

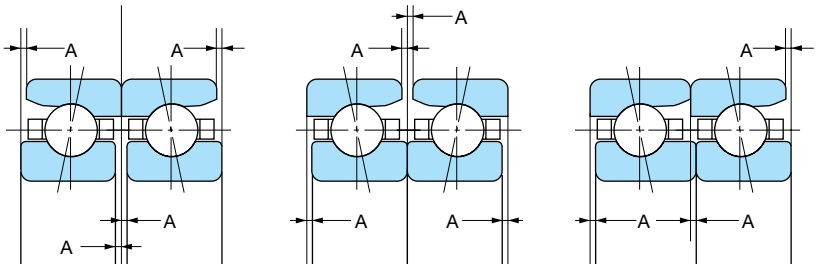

(DB) (DF) (DT)

Flush Ground Type

U and DU Series

Designation

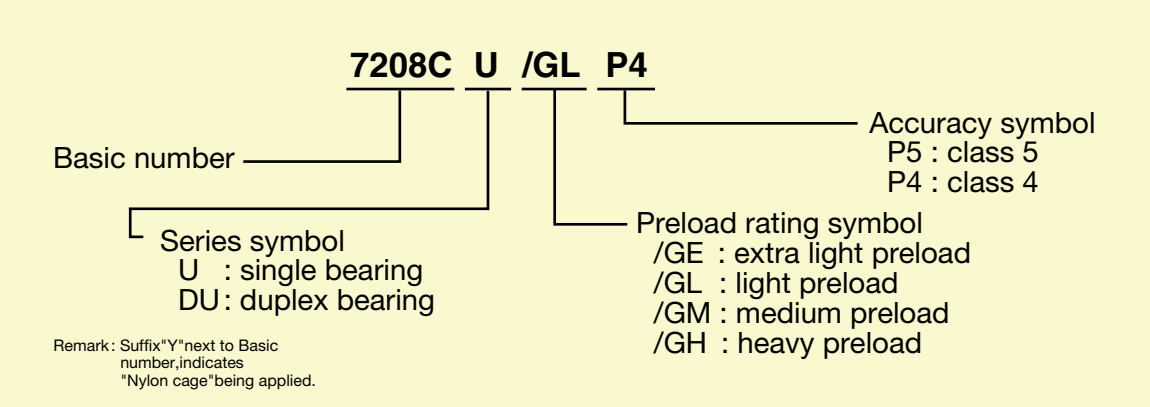

Preload

In ordinary operation, rolling bearings have clearance inside. Angular contact ball bearings may be assembled with a small amount of axial load, which is referred to as "preload". This preload, when properly applied can improve bearing performance. However, improperly applied, it can cause adverse effects, such as increased torque, temperature rise, noise and reduced service life. Generally the "preload" provides the following effects:

1 Since axial displacement due to external force is reduced, shaft rigidity increases, resulting in high rotational accuracy and reduced vibration, promoting noise-free operation.
2 Increased shaft rigidity improves high-speed performance.
3 The possibility of fretting corrosion caused by external vibration is reduced.
4 Minor wear will not result in an immediate reduction in accuracy.
5 Rolling elements rotate smoothly.
6 Thrust bearings are not adversely affected by gyromoment or centrifugal forces.
7 If the proper amount of preload is applied, maximum rolling element loads are reduced, and bearing life is extended.

Generally, preload is applied to angular contact ball bearings using springs or matched spacers. It is recommended that factory-combined and adjusted bearings be used. Our standard preloads for combined angular contact ball bearings are shown herein. Select the desired standard preload, according to the criteria given in the following table.

Selection criteria for preload

Preload symbol	Selection criteria
E	To prevent machine vibration and increase accuracy
L	To provide rigidity at high-speed($d_m n$500000) operation
M	To provide greater rigidity than the "L" preload at medium-speed operation
H	To provide maximum rigidity at low-speed operation

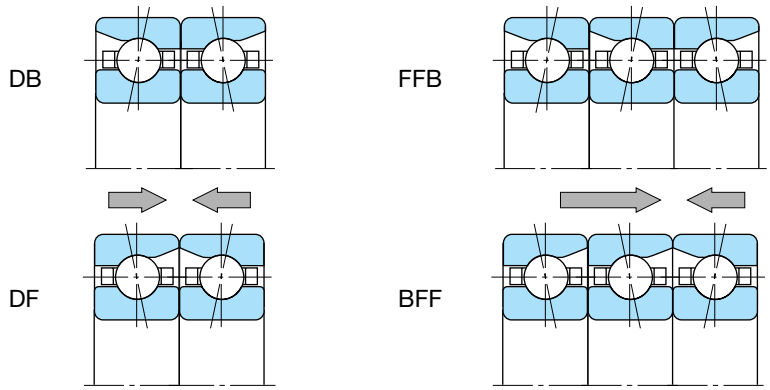

Recommended preload for 7000CU series

Unit : N

Bore dia. number \ Preload symbol	E		L		M		H	
	DB DF	FFB BFF	DB DF	FFB BFF	DB DF	FFB BFF	DB DF	FFB BFF
00								
01	20	25	50	70	100	135	145	195
02								
03								
04								
05	50	70	100	135	195	265	295	390
06								
07							390	540
08								
09	70	100	145	195	295	390	590	785
10								
11								
12	100	135	195	265	390	540	785	1080
13								
14								
15	145	195	295	390	590	785	1170	1570
16								
17								
18	195	265	390	540	785	1080	1470	1960
19								
20								

Recommended preload for 7200CU series

Unit : N

Bore dia. number \ Preload symbol	E		L		M		H	
	DB DF	FFB BFF	DB DF	FFB BFF	DB DF	FFB BFF	DB DF	FFB BFF
00								
01	30	40	70	100	145	195	195	265
02								
03								
04								
05	70	100	145	195	295	390	490	685
06								
07							590	785
08								
09	100	135	195	265	490	685	785	1080
10								
11								
12	145	195	295	390	590	785	980	1370
13								
14								
15	195	265	390	540	785	1080	1470	1960
16								
17								
18	295	390	490	685	980	1370	1960	2650
19								
20								

NACHI

Flush Ground Type

U and DU Series

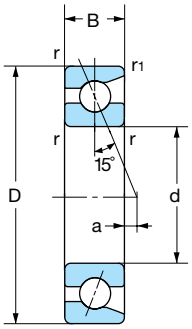

Single

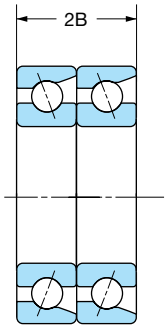

Duplex(DT-mounting)

Boundary dimensions(mm)					Load Center (mm)	Bearing number		Basic dynamic load ratings Cr (N)	
d	D	B	r min	r1min	a	Single	Duplex	Single	Duplex
10	26	8	0.3	0.15	-1.9	7000CU	7000CDU	5350	8700
	30	9	0.6	0.3	-2.2	7200CU	7200CDU	6950	11300
12	28	8	0.3	0.15	-1.7	7001CU	7001CDU	5800	9450
	32	10	0.6	0.3	-2.5	7201CU	7201CDU	7950	13000
15	32	9	0.3	0.15	-1.8	7002CU	7002CDU	6650	10800
	35	11	0.6	0.3	-2.6	7202CU	7202CDU	8700	14200
17	35	10	0.3	0.15	-2	7003CU	7003CDU	7000	11400
	40	12	0.6	0.3	-2.7	7203CU	7203CDU	10900	17800
20	42	12	0.6	0.3	-2.4	7004CU	7004CDU	11200	18200
	47	14	1	0.6	-3.1	7204CU	7204CDU	14700	23800
25	47	12	0.6	0.3	-1.8	7005CU	7005CDU	12900	21000
	52	15	1	0.6	-3.1	7205CU	7205CDU	16700	27100
30	55	13	1	0.6	-1.6	7006CU	7006CDU	16000	25900
	62	16	1	0.6	-2.7	7206CU	7206CDU	23200	37500
35	62	14	1	0.6	-1.4	7007CU	7007CDU	19300	31000
	72	17	1.1	0.6	-2.8	7207CU	7207CDU	30500	49500
40	68	15	1	0.6	-1.3	7008CU	7008CDU	20700	33500
	80	18	1.1	0.6	-2.1	7208CU	7208CDU	36500	59500
45	75	16	1	0.6	-1.1	7009CU	7009CDU	24600	40000
	85	19	1.1	0.6	-2	7209CU	7209CDU	41000	66500
50	80	16	1	0.6	-0.5	7010CU	7010CDU	26200	42500
	90	20	1.1	0.6	-1.9	7210CU	7210CDU	43000	70000
55	90	18	1.1	0.6	-0.6	7011CU	7011CDU	34500	56000
	100	21	1.5	1	-1.6	7211CU	7211CDU	53000	86500
60	95	18	1.1	0.6	-0.1	7012CU	7012CDU	35500	57500
	110	22	1.5	1	-1.2	7212CU	7212CDU	64500	105000
65	100	18	1.1	0.6	0.5	7013CU	7013CDU	37500	60500
	120	23	1.5	1	-0.8	7213CU	7213CDU	73500	120000
70	110	20	1.1	0.6	0.4	7014CU	7014CDU	47000	76500
	125	24	1.5	1	-0.7	7214CU	7214CDU	80000	130000
75	115	20	1.1	0.6	1	7015CU	7015CDU	48500	78500
	130	25	1.5	1	-0.7	7215CU	7215CDU	83500	135000
80	125	22	1.1	0.6	0.8	7016CU	7016CDU	59000	96000
	140	26	2	1	-0.3	7216CU	7216CDU	93500	152000
85	130	22	1.1	0.6	1.4	7017CU	7017CDU	60500	98500
	150	28	2	1	-0.4	7217CU	7217CDU	100000	163000
90	140	24	1.5	1	1.3	7018CU	7018CDU	72000	117000
	160	30	2	1	-0.6	7218CU	7218CDU	124000	201000
95	145	24	1.5	1	1.9	7019CU	7019CDU	74000	120000
	170	32	2.1	1.1	-0.7	7219CU	7219CDU	133000	217000
100	150	24	1.5	1	2.4	7020CU	7020CDU	76000	123000
	180	34	2.1	1.1	-0.8	7220CU	7220CDU	150000	244000

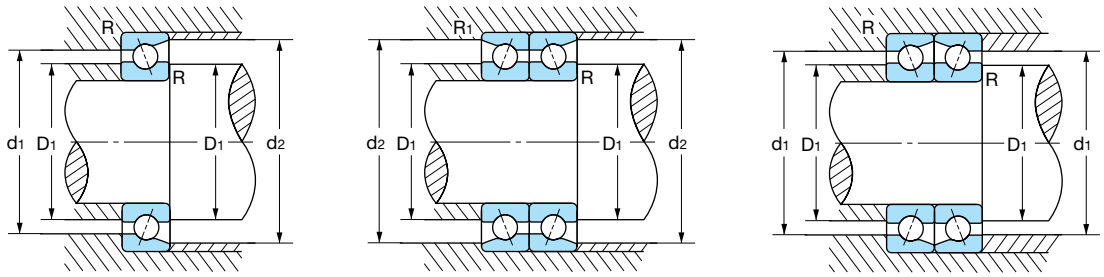

Single or DT-mounted bearing | DB-mounted bearing | DF-mounted bearing

Basic static load ratings Cor (N)		Speed ratings (r.p.m)				Abutment and fillet dimensions (mm)					Mass (kg)	Basic number
		Grease lubrication		Oil lubrication								
Single	Duplex	Single	Duplex	Single	Duplex	D_1 (min.)	d_1 (max.)	d_2 (max.)	R (max.)	R_1 (max.)	Single bearing	
2500	5000	44000	35000	61000	49000	12	24	25	0.3	0.15	0.022	7000C
3300	6650	40000	32000	55000	44000	15	25	27.4	0.6	0.3	0.034	7200C
2910	5800	40000	32000	55000	44000	14	26	27	0.3	0.15	0.024	7001C
3900	7750	36000	29000	50000	40000	17	27	29.4	0.6	0.3	0.040	7201C
3700	7450	34000	27000	47000	38000	17	30	31	0.3	0.15	0.035	7002C
4550	9150	32000	26000	44000	35000	20	30	32.4	0.6	0.3	0.048	7202C
4150	8300	31000	25000	42000	34000	19	33	34	0.3	0.15	0.045	7003C
5900	11800	28000	22000	39000	31000	22	35	37.4	0.6	0.3	0.070	7203C
6600	13200	26000	21000	35000	28000	24	38	40	0.6	0.3	0.079	7004C
8150	16300	24000	19000	33000	26000	26	41	43.4	1	0.6	0.110	7204C
8650	17300	22000	18000	31000	25000	29	43	45	0.6	0.3	0.091	7005C
10300	20700	21000	17000	29000	23000	31	46	48.4	1	0.6	0.135	7205C
11100	24000	19000	15000	26000	21000	35	50	52	1	0.6	0.135	7006C
14900	29700	18000	14000	24000	19000	36	56	58.4	1	0.6	0.210	7206C
13700	27500	16000	13000	23000	18000	40	57	59	1	0.6	0.170	7007C
20100	40000	15000	12000	21000	17000	42	65	67	1	0.6	0.295	7207C
16000	32000	15000	12000	20000	16000	45	63	65	1	0.6	0.210	7008C
25400	50500	13000	10000	18000	14000	47	73	75	1	0.6	0.380	7208C
19400	39000	13000	10000	18000	14000	50	70	72	1	0.6	0.265	7009C
29000	58000	12000	9600	17000	13000	52	78	80	1	0.6	0.430	7209C
22000	44000	12000	9600	17000	13000	55	75	77	1	0.6	0.285	7010C
32000	63500	11000	8800	16000	13000	57	83	85	1	0.6	0.485	7210C
28800	57500	11000	8800	15000	12000	61	84	86	1	0.6	0.420	7011C
40000	80000	10000	8000	14000	11000	64	91	94.6	1.5	1	0.635	7211C
30500	61500	10000	8000	14000	11000	66	89	91	1	0.6	0.450	7012C
49500	98500	9400	7500	13000	10000	69	101	104.6	1.5	1	0.820	7212C
34500	69000	9700	7800	13000	10000	71	94	96	1	0.6	0.470	7013C
59000	118000	8600	6900	12000	9600	74	111	114.6	1.5	1	1.02	7213C
43000	86500	8900	7100	12000	9600	76	104	106	1	0.6	0.660	7014C
65000	130000	8200	6600	11000	8800	79	116	119.6	1.5	0.8	1.12	7214C
46000	92000	8400	6700	12000	9600	81	109	111	1	0.6	0.695	7015C
70000	140000	7800	6200	11000	8800	84	121	124.6	1.5	1	1.23	7215C
55500	111000	7800	6200	11000	8800	86	119	121	1	0.6	0.925	7016C
78000	156000	7300	5800	10000	8000	90	130	134	2	1	1.50	7216C
59000	118000	7400	5900	10000	8000	91	124	126	1	0.6	0.960	7017C
85000	170000	6800	5400	9400	7500	95	140	144	2	1	1.87	7217C
69500	139000	7000	5600	9600	7800	97	133	135.6	1.5	1	1.26	7018C
105000	211000	6400	5100	8800	7000	100	150	154	2	1	2.30	7218C
73500	147000	6700	5400	9200	7400	102	138	140.6	1.5	1	1.36	7019C
115000	230000	6000	4800	8300	6600	107	158	163	2	1	2.78	7219C
77500	156000	6400	5100	8800	7000	107	143	145.6	1.5	1	1.37	7020C
128000	255000	5700	4600	7900	6300	112	168	173	2	1	3.32	7220C

Angular Contact Ball Bearings / High Speed Type

BNH Series

Feature design

Type BNH000 bearings are designed with smaller balls than Angular Contact Ball Bearings Type C. They are suitable for high-speed applications and lower heat generation and are typically used in high speed machining center spindles.
(Their tolerance class is JIS (ISO) class 4 normally.)

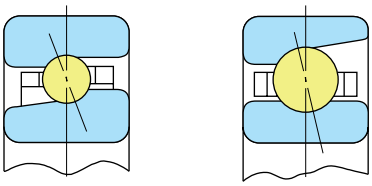

Standard preload

Standard preload of BNH type is designed with light preload.

Unit : N

Bore Diameter Number	BNH000
07	78.5
08 09 10	98.1
11 12 13	147
14 15	245
16 17	294
18 19 20	392
21	490
22 24	588
26	785
28	834
30	1080
32	1180
34	1370

Note: For DB or DF combination

Designation

BNH 0 10 T DB /GL P4

- P4 — Tolerance class
  - P4 : class 4 (standard)
  - P2 : class 2
- /GL — Preload
  - L : standard preload
- DB — Combination
  - DB : back-to-back
  - DF : face-to-face
  - DT : tandem
- T — Material of cage
  - T : phenolic resin
- 10 — Bore diameter number
- 0 — Dimension series number
  - 0 : dimension series 10
- BNH — Bearing type

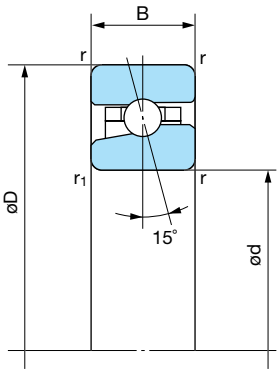

1N=0.102kgf

Bearing No.	Boundary dimensions (mm)					Basic dynamic load rating	Basic static load rating	Limiting speed (rpm)	
	d	D	B	r (min)	r_1 (min)	Cr(N)	Cor(N)	Grease lubrication	Oil lubrication
BNH 007	35	62	14	1	0.6	11600	9950	25000	35000
BNH 008	40	68	15	1	0.6	14800	12900	22000	32000
BNH 009	45	75	16	1	0.6	15500	14500	20000	28000
BNH 010	50	80	16	1	0.6	16100	15900	19000	26000
BNH 011	55	90	18	1	0.6	20000	20100	17000	24000
BNH 012	60	95	18	1.1	0.6	20800	21900	16000	22000
BNH 013	65	100	18	1.1	0.6	21500	23400	15000	21000
BNH 014	70	110	20	1.1	0.6	29400	31500	13000	19000
BNH 015	75	115	20	1.1	0.6	29800	32500	13000	18000
BNH 016	80	125	22	1.1	0.6	35000	39000	12000	17000
BNH 017	85	130	22	1.1	0.6	35500	40000	11000	16000
BNH 018	90	140	24	1.5	1	46500	53000	10000	15000
BNH 019	95	145	24	1.5	1	47000	55000	10000	14000
BNH 020	100	150	24	1.5	1	48000	56500	9600	14000
BNH 021	105	160	26	2	1	54500	65000	9100	13000
BNH 022	110	170	28	2	1	61000	74000	8600	12000
BNH 024	120	180	28	2	1	63000	79000	8000	11000
BNH 026	130	200	33	2	1	83500	105000	7300	10000
BNH 028	140	210	33	2	1	86000	112000	6900	9700
BNH 030	150	225	35	2.1	1	102000	132000	6400	9100
BNH 032	160	240	38	2.1	1	110000	145000	6000	8500
BNH 034	170	260	42	2.1	1	129000	173000	5600	7900

Angular Contact Ball Bearings / For Thrust Load

TAH and TBH Series

Feature design

The ball diameter and quantity are the same as Double-direction Thrust Angular Contact Ball Bearings type TAD20. The contact angle is 30° for TAH10 type and 40° for TBH10 type. They are suitable for high-speed.

Their Duplex Combination width 2B of type DB or DF is the same as width B1 of TAD20 type. TAD20 type are interchangeable to TAH10 type or TBH10 type by changing the method of setting to shaft.

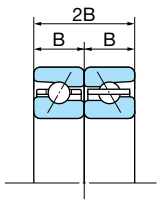

Type TAH (TBH)

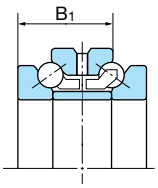

Type TAD

Tolerance of outside diameter

The outside diameter of the outer ring is made with a special tolerance for a clearance fit in the housing. This enables the associated radial bearing to carry a radial load, like as TAD20 type.

Tolerance of outside diameter

Unit : µm

Nominal bearing outside diameter D (mm)		Outside diameter deviation ΔD_S	
Over	Incl.	High	Low
30	50	−20	−41
50	80	−30	−49
80	120	−36	−58
120	180	−43	−68
180	250	−50	−79
250	315	−56	−88

JIS (ISO) class 4 for other tolerances

Standard preload

Unit : N

Bore Diameter Number	TAH	TBH
50	294	539
55 60 65	392	686
70 75	588	1080
80 85	686	1270
90 95 100	1080	1860
105	1180	2060
110	1370	2450
120	1470	2550
130	1860	3330
140	1960	3530
150	2450	4310
160	2650	4510
170	3040	5300

Note: For DB or DF combination

Designation

90 TBH 10 T DB P4

- 90: Bore diameter (mm)
- TBH: Bearing type
  - TAH : contact angle 30°
  - TBH : contact angle 40°
- 10: Dimension series number
- T: Matearial of cage
  - T : phenolic resin
- DB: Combination
  - DB : back-to-back (standard)
  - DF : face-to-face
- P4: Tolerance
  - P4 : class 4 (standard)
  - P5 : class 5

For Thrust Load

TAH Series

Contact angle : 30°

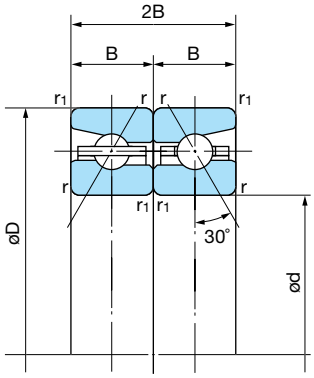

Type TAH

1N=0.102kgf

Bearing No.	Boundary dimensions (mm)					Basic dynamic load rating	Basic static load rating	Limiting speed (rpm)	
	d	D	2B	r (min)	r_1 (min)	Cr(N)	Cor(N)	Grease lubrication	Oil lubrication
50TAH10DB	50	80	28.5	1	0.6	19200	40500	9200	11000
55TAH10DB	55	90	33	1.1	0.6	23800	51000	8300	9700
60TAH10DB	60	95	33	1.1	0.6	24700	56000	7700	9000
65TAH10DB	65	100	33	1.1	0.6	25600	61000	7300	8500
70TAH10DB	70	110	36	1.1	0.6	35000	80000	6700	7800
75TAH10DB	75	115	36	1.1	0.6	35500	83500	6300	7400
80TAH10DB	80	125	40.5	1.1	0.6	41500	99500	5900	6800
85TAH10DB	85	130	40.5	1.1	0.6	42000	104000	5600	6500
90TAH10DB	90	140	45	1.5	1	55500	135000	5200	6100
95TAH10DB	95	145	45	1.5	1	56000	141000	5000	5800
100TAH10DB	100	150	45	1.5	1	57000	147000	4800	5600
105TAH10DB	105	160	49.5	2	1	64500	168000	4500	5300
110TAH10DB	110	170	54	2	1	73000	191000	4300	5000
120TAH10DB	120	180	54	2	1	75000	207000	4000	4700
130TAH10DB	130	200	63	2	1	99500	269000	3600	4200
140TAH10DB	140	210	63	2	1	103000	291000	3400	4000
150TAH10DB	150	225	67.5	2.1	1.1	121000	340000	3200	3700
160TAH10DB	160	240	72	2.1	1.1	131000	375000	3000	3500
170TAH10DB	170	260	61	2.1	1.1	154000	445000	2800	3300

NACHI

For Thrust Load

TBH Series

Contact angle : 40°

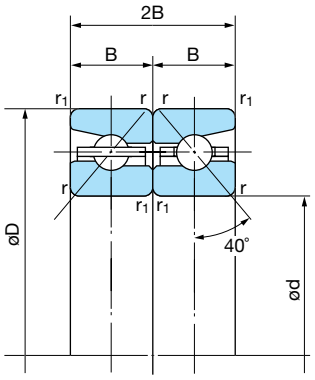

Type TBH

1N=0.102kgf

Bearing No.	Boundary dimensions (mm)					Basic dynamic load rating	Basic static load rating	Limiting speed (rpm)	
	d	D	2B	r (min)	r_1 (min)	Cr(N)	Cor(N)	Grease lubrication	Oil lubrication
50TBH10DB	50	80	28.5	1	0.6	22800	53000	7700	9200
55TBH10DB	55	90	33	1.1	0.6	28200	67000	6900	8300
60TBH10DB	60	95	33	1.1	0.6	29300	73000	6500	7700
65TBH10DB	65	100	33	1.1	0.6	30000	79500	6100	7300
70TBH10DB	70	110	36	1.1	0.6	41500	104000	5600	6700
75TBH10DB	75	115	36	1.1	0.6	42000	109000	5300	6300
80TBH10DB	80	125	40.5	1.1	0.6	49000	130000	4900	5900
85TBH10DB	85	130	40.5	1.1	0.6	50000	136000	4700	5600
90TBH10DB	90	140	45	1.5	1	65500	176000	4300	5200
95TBH10DB	95	145	45	1.5	1	66500	184000	4200	5000
100TBH10DB	100	150	45	1.5	1	67500	191000	4000	4800
105TBH10DB	105	160	49.5	2	1	76500	219000	3800	4500
110TBH10DB	110	170	54	2	1	86000	249000	3600	4300
120TBH10DB	120	180	54	2	1	88500	269000	3300	4000
130TBH10DB	130	200	63	2	1	118000	350000	3000	3600
140TBH10DB	140	210	63	2	1	121000	380000	2900	3400
150TBH10DB	150	225	67.5	2.1	1.1	143000	445000	2700	3200
160TBH10DB	160	240	72	2.1	1.1	155000	490000	2500	3000
170TBH10DB	170	260	61	2.1	1.1	182000	580000	2300	2800

Double Row Cylindrical Roller Bearings
NN and NNU Series

Clearance

Radial Internal Clearance of Cylindrical Roller Bearings with Cylindrical Bore (JIS)

Unit: µm

Bearing bore diameter Nominal d (mm)		Radial clearance									
		C2		CN (Normal)		C3		C4		C5	
Over	Incl.	min	max	min	max	min	max	min	max	min	max
—	10	0	25	20	45	35	60	50	75	—	—
10	24	0	25	20	45	35	60	50	75	65	90
24	30	0	25	20	45	35	60	50	75	70	95
30	40	5	30	25	50	45	70	60	85	80	105
40	50	5	35	30	60	50	80	70	100	95	125
50	65	10	40	40	70	60	90	80	110	110	140
65	80	10	45	40	75	65	100	90	125	130	165
80	100	15	50	50	85	75	110	105	140	155	190
100	120	15	55	50	90	85	125	125	165	180	220
120	140	15	60	60	105	100	145	145	190	200	245
140	160	20	70	70	120	115	165	165	215	225	275
160	180	25	75	75	125	120	170	170	220	250	300
180	200	35	90	90	145	140	195	195	250	275	330
200	225	45	105	105	165	160	220	220	280	305	365
225	250	45	110	110	175	170	235	235	300	330	395
250	280	55	125	125	195	190	260	260	330	370	440
280	315	55	130	130	205	200	275	275	350	410	485
315	355	65	145	145	225	225	305	305	385	455	535
355	400	100	190	190	280	280	370	370	460	510	600
400	450	110	210	210	310	310	410	410	510	565	665
450	500	110	220	220	330	330	440	440	550	625	735

Non-interchangeable Radial Internal Clearance of Cylindrical Roller Bearings with Tapered Bore (NACHI)

Unit: µm

Bearing bore diameter Nominal d (mm)		Radial clearance					
		C9na		C1na		C2na	
Over	Incl.	min	max	min	max	min	max
14	18	5	10	10	20	20	30
18	24	5	10	10	20	20	30
24	30	5	10	15	25	25	35
30	40	5	12	15	25	25	40
40	50	5	15	17	30	30	45
50	65	5	15	20	35	35	50
65	80	10	20	25	40	40	60
80	100	10	25	35	55	45	70
100	120	10	25	40	60	50	80
120	140	15	30	45	70	60	90
140	160	15	35	50	75	65	100
160	180	15	35	55	85	75	110
180	200	20	40	60	90	80	120
200	225	20	45	60	95	90	135
225	250	25	50	65	100	100	150
250	280	25	55	75	110	110	165
280	315	30	60	80	120	120	180
315	355	30	65	90	135	135	200
355	400	35	75	100	150	150	225
400	450	40	85	110	170	170	255
450	500	45	95	120	190	190	285

Remarks: JIS (ISO) has not standardized non-interchangeable radial clearance for tapered bore bearings.

NN and NNU Series

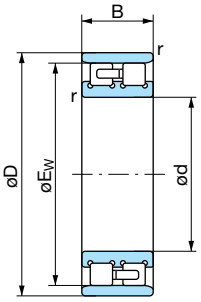

NN
Cylindrical bore

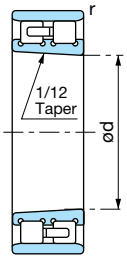

NN
Tapered bore (Taper:1/12)

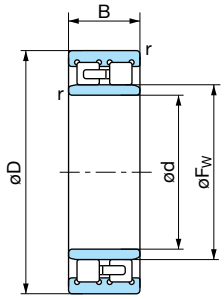

NNU
Cylindrical bore

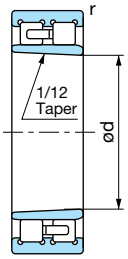

NNU
Tapered bore (Taper:1/12)

1N=0.102kgf

Boundary dimensions (mm)						Bearing No.		Basic dynamic load rating	Basic static load rating
d	D	B	E_W	F_W	r (min)	Cylindrical bore	Tapered bore	Cr(N)	Cor(N)
25	47	16	41.3	—	0.6	NN3005	NN3005K	25800	30000
30	55	19	48.5	—	1	NN3006	NN3006K	31000	37000
35	62	20	55	—	1	NN3007	NN3007K	39500	50000
40	68	21	61	—	1	NN3008	NN3008K	43500	55500
45	75	23	67.5	—	1	NN3009	NN3009K	52000	65500
50	80	23	72.5	—	1	NN3010	NN3010K	53000	72500
55	90	26	81	—	1.1	NN3011	NN3011K	69500	96500
60	95	26	86.1	—	1.1	NN3012	NN3012K	73500	106000
65	100	26	91	—	1.1	NN3013	NN3013K	77000	116000
70	110	30	100	—	1.1	NN3014	NN3014K	97500	148000
75	115	30	105	—	1.1	NN3015	NN3015K	96500	149000
80	125	34	113	—	1.1	NN3016	NN3016K	119000	186000
85	130	34	118	—	1.1	NN3017	NN3017K	125000	201000
90	140	37	127	—	1.5	NN3018	NN3018K	143000	228000
95	145	37	132	—	1.5	NN3019	NN3019K	150000	246000
100	140	40	—	113	1.1	NNU4920	NNU4920K	155000	305000
	150	37	137	—	1.5	NN3020	NN3020K	157000	265000
105	145	40	—	118	1.1	NNU4921	NNU4921K	161000	325000
	160	41	146	—	2	NN3021	NN3021K	198000	320000
110	150	40	—	123	1.1	NNU4922	NNU4922K	167000	335000
	170	45	155	—	2	NN3022	NN3022K	229000	375000
120	165	45	—	134.5	1.1	NNU4924	NNU4924K	183000	360000
	180	46	165	—	2	NN3024	NN3024K	239000	405000
130	180	50	—	146	1.5	NNU4926	NNU4926K	275000	565000
	200	52	182	—	2	NN3026	NN3026K	284000	475000
140	190	50	—	156	1.5	NNU4928	NNU4928K	283000	585000
	210	53	192	—	2	NN3028	NN3028K	298000	515000
150	210	60	—	168.5	2	NNU4930	NNU4930K	350000	715000
	225	56	206	—	2.1	NN3030	NN3030K	335000	585000
160	220	60	—	178.5	2	NNU4932	NNU4932K	365000	760000
	240	60	219	—	2.1	NN3032	NN3032K	375000	660000
170	230	60	—	188.5	2	NNU4934	NNU4934K	375000	805000
	260	67	236	—	2.1	NN3034	NN3034K	450000	805000
180	250	69	—	202	2	NNU4936	NNU4936K	480000	1020000
	280	74	255	—	2.1	NN3036	NN3036K	565000	995000
190	260	69	—	212	2	NNU4938	NNU4938K	485000	1060000
	290	75	265	—	2.1	NN3038	NN3038K	595000	1080000
200	280	80	—	225	2.1	NNU4940	NNU4940K	570000	1220000
	310	82	282	—	2.1	NN3040	NN3040K	655000	1170000
220	300	80	—	245	2.1	NNU4944	NNU4944K	600000	1330000
	340	90	310	—	3	NN3044	NN3044K	815000	1480000
240	320	80	—	265	2.1	NNU4948	NNU4948K	625000	1410000
	360	92	330	—	3	NN3048	NN3048K	855000	1600000
260	360	100	—	292	2.1	NNU4952	NNU4952K	935000	2100000
	400	104	364	—	4	NN3052	NN3052K	1080000	2070000
280	380	100	—	312	2.1	NNU4956	NNU4956K	960000	2230000
	420	106	384	—	4	NN3056	NN3056K	1080000	2080000
300	420	118	—	339	3	NNU4960	NNU4960K	1230000	2880000
	460	118	418	—	4	NN3060	NN3060K	1430000	2740000
320	440	118	—	359	3	NNU4964	NNU4964K	1270000	3050000
	480	121	438	—	4	NN3064	NN3064K	1430000	2750000

Note: Suffix K means with a tapered bore (1/12)

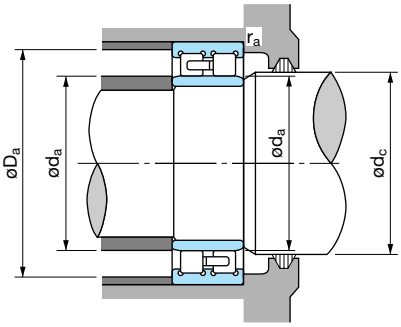

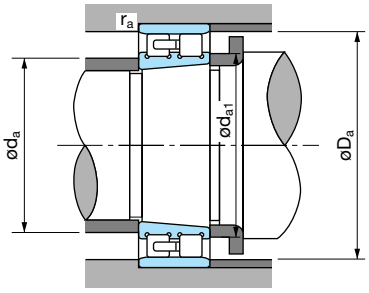

Limiting speed (rpm)		Abutment and fillet dimensions (mm)							Mass (kg)	Bearing No.
Grease lubrication	Oil lubrication	d_a (min)	d_a (max)	d_{a1} (min)	d_c (min)	D_a (max)	D_a (min)	r_a (max)	Reference Tapered bore	
15000	17000	30	—	30	—	42	41.8	0.6	0.123	NN3005K
12000	15000	36	—	37	—	49	49	1	0.199	NN3006K
11000	13000	41	—	42	—	56	56	1	0.258	NN3007K
9800	11000	46	—	48	—	62	62	1	0.312	NN3008K
8800	10000	51	—	52	—	69	69	1	0.405	NN3009K
8200	9600	56	—	58	—	74	74	1	0.454	NN3010K
7300	8600	62	—	64	—	83	82	1	0.651	NN3011K
6800	8000	67	—	68	—	88	87	1	0.704	NN3012K
6400	7600	72	—	74	—	93	92	1	0.758	NN3013K
5700	6800	77	—	78	—	103	101	1	1.04	NN3014K
5500	6400	82	—	84	—	108	106	1	1.14	NN3015K
5000	6000	87	—	90	—	118	114	1	1.52	NN3016K
4800	5600	92	—	96	—	123	119	1	1.61	NN3017K
4500	5200	98.5	—	100	—	131.5	129	1.5	2.07	NN3018K
4300	5000	103.5	—	106	—	136.5	134	1.5	2.17	NN3019K
4200	5000	106.5	111	110	115	133.5	—	1	1.77	NNU4920K
4000	4700	108.5	—	112	—	141.5	139	1.5	2.26	NN3020K
4000	4800	111.5	116	115	120	138.5	—	1	1.85	NNU4921K
3800	4400	115	—	116	—	150	148	2	2.89	NN3021K
3900	4600	116.5	121	120	125	143.5	—	1	1.93	NNU4922K
3600	4200	120	—	122	—	160	157	2	3.68	NN3022K
3500	4200	126.5	133	130	137	158.5	—	1	2.65	NNU4924K
3300	3900	130	—	132	—	170	167	2	3.98	NN3024K
3200	3800	138	144	142	148	172	—	1.5	3.55	NNU4926K
3000	3500	140	—	144	—	190	183	2	5.92	NN3026K
3000	3600	148	154	151	158	182	—	1.5	3.80	NNU4928K
2800	3300	150	—	154	—	200	194	2	6.44	NN3028K
2700	3300	159	166	162	171	201	—	2	5.95	NNU4930K
2600	3100	162	—	164	—	213	208	2	7.81	NN3030K
2600	3100	169	176	172	182	211	—	2	6.25	NNU4932K
2500	2900	172	—	174	—	228	221	2	8.92	NN3032K
2400	2900	179	186	182	192	221	—	2	6.60	NNU4934K
2300	2700	182	—	184	—	248	238	2	12.6	NN3034K
2200	2700	189	199	194	205	241	—	2	9.50	NNU4936K
2100	2500	192	—	196	—	268	257	2	16.6	NN3036K
2100	2600	199	209	204	215	251	—	2	10.0	NNU4938K
2000	2400	202	—	206	—	278	267	2	17.5	NN3038K
2000	2400	211	222	214	228	269	—	2	10.1	NNU4940K
1900	2200	212	—	216	—	298	285	2	21.6	NN3040K
1800	2200	231	242	234	248	289	—	2	15.5	NNU4944K
1700	2000	234	—	238	—	326	313	2.5	28.4	NN3044K
1700	2000	251	262	254	269	309	—	2	17.0	NNU4948K
1600	1900	254	—	256	—	346	333	2.5	31.8	NN3048K
1500	1800	271	288	276	296	349	—	2	28.3	NNU4952K
1400	1700	278	—	280	—	382	367	3	46.0	NN3052K
1400	1700	291	308	296	316	369	—	2	30.3	NNU4956K
1300	1600	298	—	300	—	402	387	3	49.6	NN3056K
1300	1500	313	335	320	343	407	—	2.5	46.7	NNU4960K
1200	1400	318	—	325	—	442	421	3	68.7	NN3060K
1200	1400	333	335	340	363	427	—	2.5	49.6	NNU4964
1200	1400	338	—	345	—	462	442	3	74.0	NN3064K

Cross Tapered Roller Bearings
XRN Series

This bearing type is designed with two inner rings and one outer ring. The rolling elements (Tapered rollers) are arranged with their surfaces contact the ring raceways in an alternating pattern.

Feature design

- This type can sustain radial, overturning moment and bi-directional axial loads.
- Change in size due to thermal growth does not affect this type of bearing. Preload is stable over the entire temperature operating range.
- Light weight, compact, easy to assemble.

Applications

- Worktable of machining centers or vertical grinding machines
- Work-spindle of lathes or grinding machines
- The indexing mechanisms of large milling machines or drilling machines
- Turntable mechanism of parabolic antenna

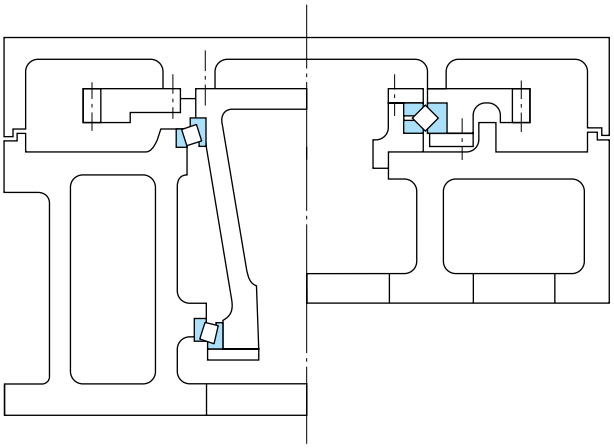

Example of mounting of Tapered Roller Bearings and Cross Tapered Roller Bearing

Tolerances

Unit : µm

Bearing No.	Single plane mean bore diameter variation Δ_{dmp}		Single plane mean outside diameter variation of outer ring Δ_{Dmp}		Variation of assembled height T		Outer ring runout Max	
	High	Low	High	Low	High	Low	Radial runout	Sideface runout
200XRN28	0	−15	0	−18	+350	−250	7	7
250XRN35	0	−10	0	−13	+350	−250	9	9
300XRN40	0	−13	0	−15	+350	−250	7	7
350XRN47	0	−13	0	−15	+350	−250	9	9
400XRN55	0	−13	0	−18	+350	−250	9	9
0457XRN060	+25	0	+25	0	+380	−380	9	9
580XRN76	+25	0	+38	0	+406	−406	10	10
600XRN83	+38	0	+38	0	+406	−406	12	12
0685XRN091	+38	0	+38	0	+508	−508	12	12
0901XRN112	+51	0	+51	0	+508	−508	14	14
1028XRN132	+76	0	+76	0	+760	−760	16	16

Axial Load and Axial Displacement

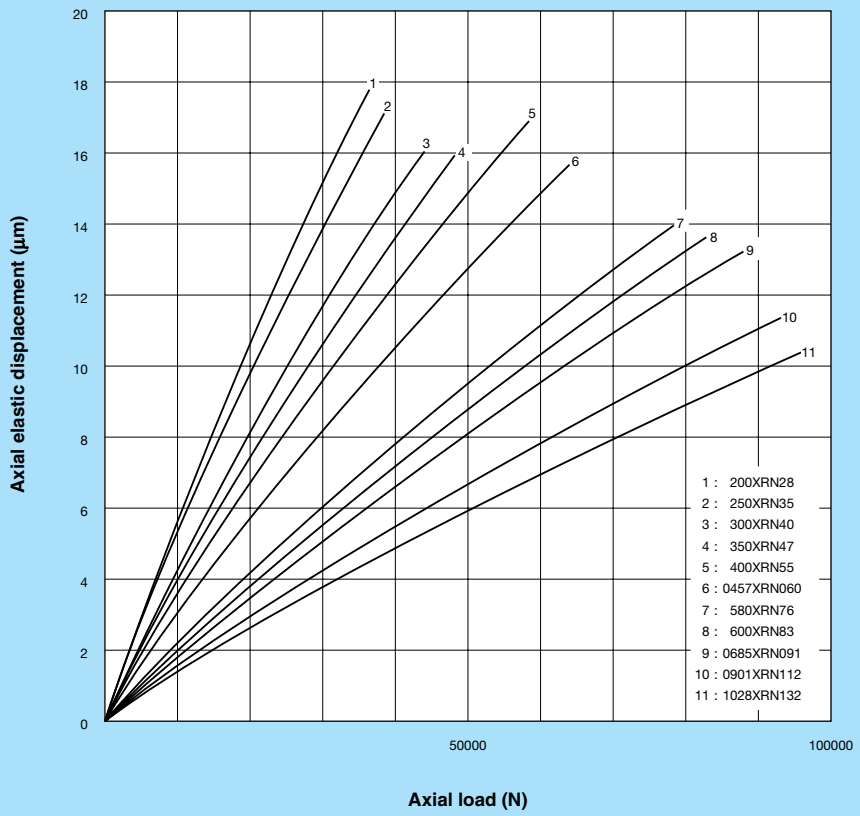

XRN Series

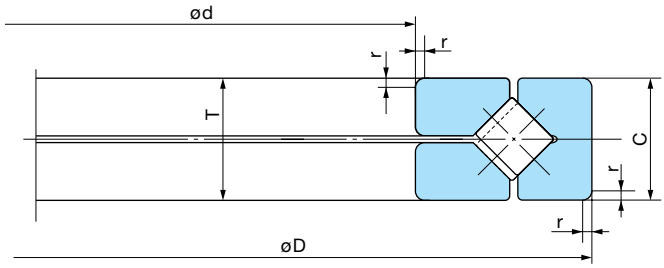

1N=0.102kgf

Bearing No. (1)	Boundary dimensions (mm)				Basic dynamic load rating	Basic static load rating
	d	D	T(C)	r	Ca(N)	Coa(N)
*200XRN28	200	280	30	1.5	144000	520000
*250XRN35	250	350	40	3	170000	680000
*300XRN40	300	400	38	3	268000	985000
*350XRN47	350	470	50	3	284000	1230000
*400XRN55	400	550	60	3.5	365000	1900000
0457XRN060	457.2	609.6	63.5	3.3	370000	1670000
580XRN76	580	760	80	6.4	830000	3800000
600XRN83	600	830	80	3.3	1030000	4600000
0685XRN091	685.8	914.4	79.375	3.3	1090000	5000000
0901XRN112	901.7	1117.6	82.55	3.3	1090000	5650000
1028XRN132	1028.7	1327.15	114.3	3.3	1830000	9300000

Note: (1) Inner and outer diameters for bearings marked with * have minus (-) deviation.
Remark: This table is for bearings used in longitudinal rotating applications (such as tables).

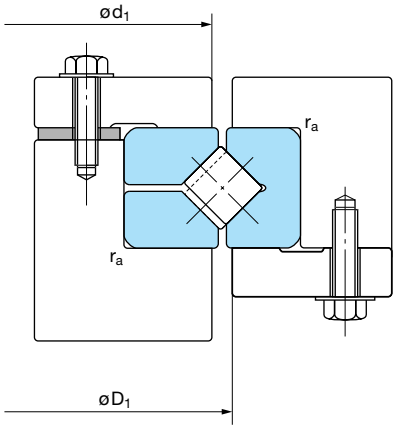

Limiting speed (rpm)		Abutment and fillet dimensions (mm)			Bearing No.
Grease lubrication	Oil lubrication	d_1 (min)	D_1 (max)	r_a (max)	(1)
480	950	235	249	1	*200XRN28
400	800	302	312	1.5	*250XRN35
330	650	345	369	2.5	*300XRN40
280	560	410	424	1.5	*350XRN47
250	500	475	492	1.5	*400XRN55
220	440	535	554	2	0457XRN060
170	340	667	691	4	580XRN76
160	320	708	738	2	600XRN83
140	280	807	834	2	0685XRN091
110	220	1013	1037	2	0901XRN112
90	180	1184	1221	2	1028XRN132

Ball Screw Support Bearings
TAB Series

This type is used for supporting the ball screws that are used as actuators of high precision and high speed machines, precision measurement equipment, robots, etc.
This is a precision and high ability bearing.

Feature design

- High stiffness
  These bearings are designed with polyamide cages and a greater number of balls than coventional angular contact ball bearings. For these reasons, bearing stiffness is greater than conventional bearings.
- Easy fitting and adjustment
  These bearings are supplied with a pre-set preload so difficult adjustment and torque measurement is eliminated.
- Simplified bearing mounting structure
  These bearings are supplied with a 60° contact angle so radial and thrust load combinations can be sustained. This results in a simplified and compact shaft and housing design.

Axial Load and Axial Displacement

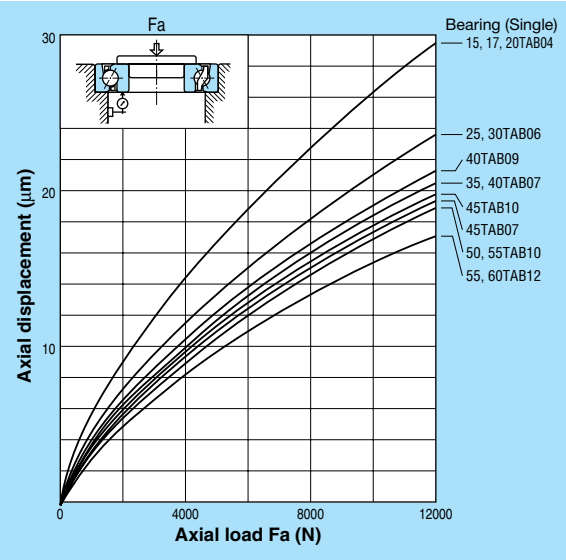

Flush ground set combinations (Universal matching)

Flush ground set combination bearings are also available with a suffix U. This permits the use of random combinations where two or more bearings are mounted.

30 TAB 06 U / GM P4

Flush ground

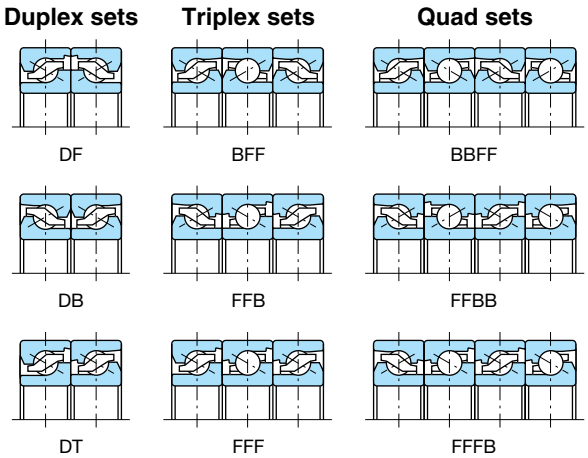

Tolerances for inner ring

Unit : μm

Nominal bearing bore diameter (mm)		Single plane mean bore diameter variation Δ_{dmp} Δ_{ds}				Bore diameter variation in a single radial plane V_{dp} (Max)		Mean bore diameter variation V_{dmp} (Max)		Deviation of a single inner ring width (or a single outer ring width) Δ_{Bs} (Δ_{Cs}) (1)				Width deviation V_{BS} of inner ring (Max)		Radial runout of assembled bearing inner ring K_{ia} (Max)		Side face runout S_d with referrence to bore (Max)		Side face runout with reference to raceway of assembled bearing inner ring S_{ia} and of assembled bearing outer ring S_{ea} (Max)	
		P5		P4						P5		P4									
Over	Incl.	High	Low	High	Low	P5	P4	P5	P4	High	Low	High	Low	P5	P4	P5	P4	P5	P4	P5	P4
10	18	0	−5	0	−4	4	3	4	3	0	− 80	0	− 80	5	2.5	4	2.5	7	3	4	2
18	30	0	−6	0	−5	5	4	5	4	0	−120	0	−120	5	2.5	4	3	8	4	5	2.5
30	50	0	−8	0	−6	6	5	6	5	0	−120	0	−120	5	3	5	4	8	4	6	2.5
50	60	0	−9	0	−7	7	6	7	6	0	−150	0	−150	6	4	5	4	8	5	7	2.5

Note: (1) These deviations are for single bearing. For combination bearings, multiply these values by row number.

Tolerances for outer ring

Unit : μm

Nominal bearing outside diameter (mm)		Single plane mean outside diameter variation of outer ring Δ_{Dmp} Δ_{Ds}				Outside diameter variation in a single radial plane V_{Dp} (Max)		Mean outside diameter variation V_{Dmp} (Max)		Width deviation V_{Cs} of outer ring (Max)		Radial runout of assembled bearing outer ring K_{ia} (Max)		Outside inclination of outer ring S_D (Max)	
		P5		P4											
Over	Incl.	High	Low	High	Low	P5	P4	P5	P4	P5	P4	P5	P4	P5	P4
30	50	0	− 7	0	−6	5	5	4	3	5	2.5	7	5	8	4
50	80	0	− 9	0	−7	7	5	5	3.5	6	3	8	5	8	4
80	120	0	−10	0	−8	8	6	5	4	8	4	10	6	9	5

Shaft and housing tolerance:

① For the fit, refer to the following table.

Shaft fit	h5
Housing fit	H6

② For the squareness of a shoulder, refer to the following table.

Dimensions of shaft diameter and housing bore diameter (mm)		Squareness (μm)
Over	Incl.	
—	80	4
80	120	5

Preload and Axial Spring Constant

Bearing No.	Preload M (N)				Axial Spring Constant (N/μm)			
	DF DB	BFF FFB	BBFF FFBB	BFFF FFFB	DF DB	BFF FFB	BBFF FFBB	BFFF FFFB
15TAB04	2160	2940	4310	3430	735	1080	1470	1320
17TAB04	2160	2940	4310	3430	735	1080	1470	1320
20TAB04	2160	2940	4310	3430	735	1080	1470	1320
25TAB06	3330	4510	6670	5200	981	1470	1960	1910
30TAB06	3330	4510	6670	5200	981	1470	1960	1910
35TAB07	3920	5300	7840	6180	1230	1770	2350	2300
40TAB07	3920	5300	7840	6180	1230	1770	2350	2300
40TAB09	5200	7060	10400	8140	1320	1910	2550	2500
45TAB07	4120	5590	8240	6470	1270	1910	2550	2500
45TAB10	5980	8140	12000	9410	1470	2160	2890	2790
50TAB10	6280	8530	12600	9810	1520	2260	3040	2940
55TAB10	6280	8530	12600	9810	1520	2260	3040	2940
55TAB12	7060	9610	14100	11100	1770	2550	3480	3380
60TAB12	7060	9610	14100	11100	1770	2550	3480	3380

TAB Series

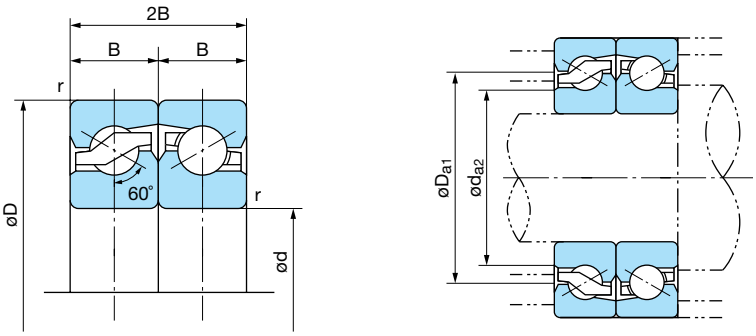

DF

1N=0.102kgf

Bearing No.	Boundary dimensions (mm)					Basic dynamic load rating (2)	Axial limiting load (3)
	d	D	B	r (min)	r_1 (min)	Ca(N)	Coa(N)
15TAB04DF(DB)	15	47	15	1(1)	0.6	25900	32000
15TAB04DF(DB)-2NK		47	15	1(1)	0.6	25900	32000
15TAB04DF(DB)-2LR		47	15	1(1)	0.6	25900	32000
17TAB04DF(DB)	17	47	15	1	0.6	25900	32000
17TAB04DF(DB)-2NK		47	15	1	0.6	25900	32000
17TAB04DF(DB)-2LR		47	15	1	0.6	25900	32000
20TAB04DF(DB)	20	47	15	1	0.6	25900	32000
20TAB04DF(DB)-2NK		47	15	1	0.6	25900	32000
20TAB04DF(DB)-2LR		47	15	1	0.6	25900	32000
25TAB06DF(DB)	25	62	15	1	0.6	29900	46400
25TAB06DF(DB)-2NK		62	15	1	0.6	29900	46400
25TAB06DF(DB)-2LR		62	15	1	0.6	29900	46400
30TAB06DF(DB)	30	62	15	1	0.6	29900	46400
30TAB06DF(DB)-2NK		62	15	1	0.6	29900	46400
30TAB06DF(DB)-2LR		62	15	1	0.6	29900	46400
35TAB07DF(DB)	35	72	15	1	0.6	32500	54300
35TAB07DF(DB)-2NK		72	15	1	0.6	32500	54300
35TAB07DF(DB)-2LR		72	15	1	0.6	32500	54300
40TAB07DF(DB)	40	72	15	1	0.6	32500	54300
40TAB07DF(DB)-2NK		72	15	1	0.6	32500	54300
40TAB07DF(DB)-2LR		72	15	1	0.6	32500	54300
40TAB09DF(DB)		90	20	1	0.6	65000	101000
40TAB09DF(DB)-2NK		90	20	1	0.6	65000	101000
40TAB09DF(DB)-2LR		90	20	1	0.6	65000	101000
45TAB07DF(DB)	45	75	15	1	0.6	33500	59500
45TAB10DF(DB)		100	20	1	0.6	68000	113000
50TAB10DF(DB)	50	100	20	1	0.6	69500	119000
55TAB10DF(DB)	55	100	20	1	0.6	69500	119000
55TAB12DF(DB)	55	120	20	1	0.6	73000	137000
60TAB12DF(DB)	60	120	20	1	0.6	73000	137000

Note: (1) r (min) = 0.6 for inner ring
(2) When bearing sets carry axial load with two or three rows, the numbers should be multiplied by 1.64 or 2.16.
(3) When bearing sets carry axial load with two or three rows, the numbers should be multiplied by 2 or 3.

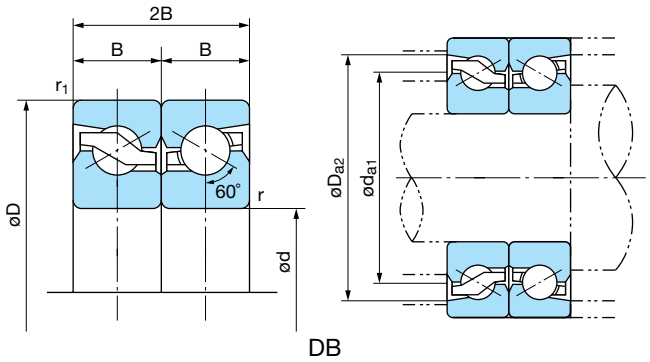

Dynamic equivalent axial load

• Pa = XFr + YFa

No. of Bearing in set		2		3			4			
Brgs loaded axial load		1	2	1	2	3	1	2	3	4
Fa/Fr≦2.17	X	1.9	—	1.43	2.33	—	1.17	2.33	2.53	—
	Y	0.54	—	0.77	0.35	—	0.89	0.35	0.26	—
Fa/Fr>2.17	X	0.92	0.92	0.92	0.92	0.92	0.92	0.92	0.92	0.92
	Y	1	1	1	1	1	1	1	1	1

Limiting speed (min^{-1})	Starting torque (N·cm) Grease lubrication	Reference Dimensions (mm) d_{a1}	d_{a2}	D_{a1}	D_{a2}	Mass (kg) (Reference)	Bearing No.
6300	15	33.7	26.8	33.5	41	0.14	15TAB04DF(DB)
6300	—	33.7	26.8	35	41.9	0.14	15TAB04DF(DB)-2NK
4400	—	33.7	26.8	35	41.9	0.14	15TAB04DF(DB)-2LR
6300	15	33.7	26.8	33.5	41	0.13	17TAB04DF(DB)
6300	—	33.7	26.8	35	41.9	0.13	17TAB04DF(DB)-2NK
4400	—	33.7	26.8	35	41.9	0.13	17TAB04DF(DB)-2LR
6300	15	33.7	26.8	33.5	41	0.12	20TAB04DF(DB)
6300	—	33.7	26.8	35	41.9	0.12	20TAB04DF(DB)-2NK
4400	—	33.7	26.8	35	41.9	0.12	20TAB04DF(DB)-2LR
4650	20	46.2	39.7	46	53.4	0.24	25TAB06DF(DB)
4650	—	46.2	39.7	47.5	54.9	0.24	25TAB06DF(DB)-2NK
3250	—	46.2	39.7	47.5	54.9	0.24	25TAB06DF(DB)-2LR
4650	20	46.2	39.7	46	53.4	0.21	30TAB06DF(DB)
4650	—	46.2	39.7	47.5	54.9	0.21	30TAB06DF(DB)-2NK
3250	—	46.2	39.7	47.5	54.9	0.21	30TAB06DF(DB)-2LR
3750	25	56.2	49.7	56	63.4	0.29	35TAB07DF(DB)
3750	—	56.2	49.7	57.5	64.9	0.29	35TAB07DF(DB)-2NK
2600	—	56.2	49.7	57.5	64.9	0.29	35TAB07DF(DB)-2LR
3750	25	56.2	49.7	56	63.4	0.26	40TAB07DF(DB)
3750	—	56.2	49.7	57.5	64.9	0.26	40TAB07DF(DB)-2NK
2600	—	56.2	49.7	57.5	64.9	0.26	40TAB07DF(DB)-2LR
3150	30	67.2	57.2	67	78.4	0.62	40TAB09DF(DB)
3150	—	67.2	57.2	68.5	79.9	0.62	40TAB09DF(DB)-2NK
2200	—	67.2	57.2	68.5	79.9	0.62	40TAB09DF(DB)-2LR
3400	50	61.7	55.2	61.5	68.9	0.25	45TAB07DF(DB)
2850	60	74.2	64.2	74	85.4	0.79	45TAB10DF(DB)
2700	65	78.2	68.2	78	89.4	0.72	50TAB10DF(DB)
2700	65	78.2	68.2	78	89.4	0.95	55TAB10DF(DB)
2300	70	92.2	92.2	92	103.4	1.15	55TAB12DF(DB)
2300	70	92.2	92.2	92	103.4	1.08	60TAB12DF(DB)

Tolerance Values for Radial Bearings

Tolerances of inner ring

Nominal bore diameter d(mm)		Tolerance of bore									
		Single plane mean bore diameter deviation Δd_{mp}				Deviation of a single bore diameter from the nominal Δd_s		Bore diameter variation in a single radial plane V_{dp}		Mean bore diameter variation V_{dmp}	
		Class-5		Class-4		Class-4		Class-5	Class-4	Class-5	Class-4
Over	Incl.	High	Low	High	Low	High	Low	max.	max.	max.	max.
2.5	10	0	-5	0	-4	0	-4	4	3	3	2
10	18	0	-5	0	-4	0	-4	4	3	3	2
18	30	0	-6	0	-5	0	-5	5	4	3	2.5
30	50	0	-8	0	-6	0	-6	6	5	4	3
50	80	0	-9	0	-7	0	-7	7	5	5	3.5
80	120	0	-10	0	-8	0	-8	8	6	5	4

Tolerances of outer ring

Nominal outside diameter D(mm)		Tolerance of outside diameter									
		Single plane mean outside diameter deviation ΔD_{mp}				Deviation of a single outside diameter from the nominal ΔD_s		Outside diameter variation in a single radial plane V_{Dp}		Mean outside diameter variation V_{Dmp}	
		Class-5		Class-4		Class-4		Class-5	Class-4	Class-5	Class-4
Over	Incl.	High	Low	High	Low	High	Low	max.	max.	max.	max.
18	30	0	-6	0	-5	0	-5	5	4	3	2.5
30	50	0	-7	0	-6	0	-6	5	5	4	3
50	80	0	-9	0	-7	0	-7	7	5	5	3.5
80	120	0	-10	0	-8	0	-8	8	6	5	4
120	150	0	-11	0	-9	0	-9	8	7	6	5
150	180	0	-13	0	-10	0	-10	10	8	7	5

Unit:μm

Inner ring radial runout of assembled bearing K_{ia}		Inner ring reference face runout with bore S_d		Assembled bearing inner ring reference face runout with raceway S_{ia}		Tolerance of the inner ring width			
						Deviation of a single ring width ΔB_s		Ring width variation V_{Bs}	
Class-5	Class-4	Class-5	Class-4	Class-5	Class-4	Class-5 & Class-4		Class-5	Class-4
max.	max.	max.	max.	max.	max.	High	Low	max.	max.
4	2.5	7	3	7	3	0	-250	5	2.5
4	2.5	7	3	7	3	0	-250	5	2.5
4	3	8	4	8	4	0	-250	5	2.5
5	4	8	4	8	4	0	-250	5	3
5	4	8	5	8	5	0	-250	6	4
6	5	9	5	9	5	0	-380	7	4

Unit:μm

Outer ring radial runout of assembled bearing K_{ea}		Variation of outside surface generatrix inclination with outer ring reference face S_D		Assembled bearing outer ring reference face runout with raceway S_{ea}		Tolerance of the outer ring width			
						Deviation of a single ring width ΔC_s		Ring width variation V_{Cs}	
Class-5	Class-4	Class-5	Class-4	Class-5	Class-4	Class-5 & Class-4		Class-5	Class-4
max.	max.	max.	max.	max.	max.	High	Low	max.	max.
6	4	8	4	8	5			5	2.5
7	5	8	4	8	5	ΔC_s of the outer ring corresponds to the values of ΔB_s of the inner ring being matched with it.		5	2.5
8	5	8	4	10	5			6	3
10	6	9	5	11	6			8	4
11	7	10	5	13	7			8	5
13	8	10	5	14	8			8	5

NACHI-FUJIKOSHI CORP.

URL:http://www.nachi-fujikoshi.co.jp
E-mail:webmaster@nachi-fujikoshi.co.jp

Tokyo Head Office : Shiodome Sumitomo Bldg. 17F 1-9-2 Higashi-shinbashi, Minato-ku, Tokyo 105-0021, Japan
Phone: +81-(0)3-5568-5111 Fax. +81-(0)3-5568-5206

Toyama Head Office : 1-1-1 Fujikoshi-Honmachi, Toyama, Japan 930-8511 Phone: +81-(0)76-423-5111 Fax. +81-(0)76-493-5211

Overseas Sales Companies

AMERICA

● NACHI AMERICA INC.HEADQUARTERS
17500 Twenty-Three Mile Road, Macomb, Michigan, 48044, U.S.A.
Phone: +1-586-226-5151 Fax. +1-888-383-8665
URL: http://www.nachi.com/

INDIANA BRANCH
715 Pushville Road, Greenwood, Indiana, 46143, U.S.A.
Phone: +1-317-535-5527 Fax. +1-317-535-3659

WEST COAST BRANCH
12652 E. Alondra Blvd. Cerritos, California, 90703, U.S.A.
Phone: +1-562-802-0055 Fax. +1-562-802-2455

MIAMI BRANCH - LATIN AMERICA DIV.
2315 N.W. 107th Ave., Doral, Florida, 33172, U.S.A.
Phone: +1-305-591-0054/0059/2604
Fax. +1-305-591-3110

ATLANTA SALES OFFICE
Six Concourse Parkway, Suite 2995 Atlanta, GA 30328, U.S.A.
Phone: +1-770-393-0270 Fax. +1-770-393-0271

● NACHI ROBOTIC SYSTEMS INC.
22285 Roethel Drive, Novi, Michigan, 48375, U.S.A.
Phone: +1-248-305-6545 Fax. +1-248-305-6542
URL: http://www.nachirobotics.com/

KENTUCKY SERVICE CENTER
116 Collision Center Drive, Suite-1, Frankfort, KY 40601, U.S.A.
Phone: +1-502-695-4816 Fax. +1-502-695-4818

● NACHI CANADA INC.
89 Courtland Ave., Unit No.2, Concord, Ontario, L4K 3T4, CANADA
Phone: +1-905-660-0088 Fax. +1-905-660-1146
URL:http://www.nachicanada.com/

● NACHI MEXICANA, S.A. DE C.V.
Gral. Mariano Arista No.54, Local 5, Col. Argentina C.P. 11230, Mexico D.F. MEXICO
Phone: +52-55-5386-1396 Fax. +52-55-5386-1336

EUROPE

● NACHI EUROPE GmbH
Bischofstrasse 99, 47809, Krefeld, GERMANY
Phone: +49-(0)2151-65046-0
Fax. +49-(0)2151-65046-90
URL: http://www.nachi.de/

SPAIN BRANCH
Av.Alberto Alcocer 28, 1-A, 28036, Madrid, SPAIN
Phone: +34-(0)91-302-6440 Fax. +34-(0)91-383-9486

BARCELONA OFFICE
Josep Tarradellas, 58, 1-5, 08029 Barcerona, SPAIN
Phone: +34-(0)93-430-6247
Fax. +34-(0)93-419-0897

BILBAO OFFICE
Gran Via 44, 7-D, 48011 Bilbao, SPAIN
Phone: +34-(0)94-443-7319
Fax. +34-(0)94-410-5263

CZECH BRANCH
Mostni 73, Kolin 4, 28002, CZECH
Phone: +420-321-710-200
Fax. +420-321-710-200

U.K. BRANCH
Unit 7, Junction Six Industrial Estate, Electric Avenue, Birmingham B6 7JJ, U.K.
Phone: +44-(0)121-250-1890
Fax. +44-(0)121-250-1899
URL: http://www.nachi.co.uk/

● NACHI-FUJIKOSHI CORP. ITALY REPRESENTATIVE OFFICE
Via delle Lame 75, 3 piano-interno 8
40122, Bologna, ITALY
Phone: +39-051-649-4808
Fax. +39-051-528-2149

ASIA and OCEANIA

● NACHI-FUJIKOSHI CORP. THAILAND REPRESENTATIVE OFFICE
Chai-ho Wongwaiwat Bldg. 889 Srinakarin Road, Samutprakarn, THAILAND 10270
Phone: +66-2-748-7322~4
Fax. +66-2-748-7325

● NACHI SINGAPORE PTE. LTD.
No.2 Joo Koon Way, Jurong Town, Singapore 628943, SINGAPORE
Phone: +65-65587393 Fax. +65-65587371

VIETNAM OFFICE
Room 1608, 16/F Saigon Tower 29 Le Duan Street, District 1, Ho Chi Minh City, VIETNAM
Phone: +84-8-823-6299
Fax. +84-8-823-6288

● FUJIKOSHI-NACHI (MALAYSIA) SDN. BHD.
No.17, Jalan USJ 21/3, 47630 UEP Subang Jaya, Selangor Darul Ehsan, MALAYSIA
Phone: +60-(0)3-80247900
Fax. +60-(0)3-80235884

● P.T.NACHI INDONESIA
Jl.H.R.Rasuna Said Kav.X-O
Kuningan, Jakarta 12950, INDONESIA
Phone: +62-012-527-2841 Fax. +62-021-527-3029

● NACHI PILIPINAS INDUSTRIES, INC.
1st Avenue, Manalac Compound, Sta. Maria Industrial Estate, Bagumbayan, Taguig, Metro Manila, PHILIPPINES
Phone: +63-(0)2-838-3620 Fax. +63-(0)2-838-3623

MANILA OFFICE
Km23 East Service Road, Capang Muntinlupa, City Metro Manila, PHILIPPINES
Phone: +63-(0)2-850-0864 Fax. +63-(0)2-850-0864

● 那智不二越（上海）贸易有限公司 NACHI (Shanghai) CO.,LTD.
Rm No.1602, Ocean Towers No. 550, Yanan Road .E. Huangpu District, Shanghai, CHINA
Post Code 200001
Phone: +86-(0)21-6360-3680
Fax. +86-(0)21-6360-3682

● NACHI-FUJIKOSHI CORP. TAIPEI REPRESENTATIVE OFFICE
3F No.276, Sec3, Chung Ching N.Road, Taipei, TAIWAN
Phone: +886-(0)2-2596-0118
Fax. +886-(0)2-2596-5346

● NACHI-FUJIKOSHI CORP. KOREA REPRESENTATIVE OFFICE
2F Dongsan Bldg. 276-4, Sungsu 2GA-3DONG Sungdong-Ku. Seoul 133-123, KOREA
Phone: +82-(0)2-469-2254
Fax. +82-(0)2-469-2264

● NACHI (AUSTRALIA) PTY. LTD.
Unit 1, 23-29 South Street, Rydalmere, N.S.W, 2116, AUSTRALIA
Phone: +61-(0)2-9898-1511
Fax. +61-(0)2-9898-1678
URL: http://www.nachi.com.au/

Overseas Manufacturing Companies

AMERICA

● NACHI TECHNOLOGY INC.
713 Pushville Road, Greenwood, Indiana, 37008, U.S.A.
Phone: +1-317-535-5000
Fax. +1-317-535-8484
URL: http://nachitech.com/

● NACHI MACHINING TECHNOLOGY CO.
17500 Twenty-three Mile Road, Macomb, Michigan, 48044, U.S.A.
Phone: +1-586-263-0100
Fax. +1-586-263-4571
URL: http://www.nachimtc.com/

● NACHI BRASIL LTDA.
Avenida João XX III, No.2330, Jardim São Pedro, Mogi das Cruzes, S.P., BRAZIL, CEP 08830-000
Phone: +55-11-4793-8800
Fax. +55-11-4793-8870
URL: http://www.nachi.com.br/

EUROPE

● NACHI INDUSTRIAL, S.A.
Pol. Industrial, El Montalvo, Parc. 74 37008, Salamanca, SPAIN
Phone: +34-(0)923-190516
Fax. +34-(0)923-194320

● NACHI CZECH S.R.O
Prumyslova 2732, 44001 Louny, CZECH
Phone: +420-415-930-630
Fax. +420-415-930-940

ASIA and OCEANIA

● NACHI INDUSTRIES PTE. LTD.
No.2 Joo Koon Way, Jurong Town, Singapore 628943, SINGAPORE
Phone: +65-68613944
Fax. +65-68611153
URL: http://www.nachinip.com.sg/

● NACHI TECHNOLOGY (THAILAND) CO., LTD.
3/16 M, 2, Rojana Industrial Estate
Nongbua, Ban Khai, Rayong, 21120, THAILAND
Phone: +66-38-961-682
Fax. +66-38-961-683

● 建越工業股份有限公司 NACHI C.Y. CORP.
No.109, Kao Young North Rd, Lung-Tan Hsin, Tao-Yuan Hsien, TAIWAN
Phone: +886-(0)3-471-7651
Fax. +886-(0)3-471-8402

● 东莞建越精密轴承有限公司 DONGGUAN NACHI C.Y. CORP.
Dangyong Village, Hongmei Town Dongguan City, Guangdong, CHINA
Phone: +86-(0)769-8843-1300
Fax. +86-(0)769-8843-1330

● 대성나찌 유압공업(주) DAESUNG-NACHI HYDRAULICS CO., LTD.
289-22, Yousan-Dong, Yangsan-Si Kyungnam 626-800, KOREA
Phone: +82-(0)55-385-7891~3
Fax. +82-(0)55-384-3270

● 上海不二越精密轴承有限公司 SHANGHAI NACHI BEARINGS CO.,LTD.
258, Fengmao Rd. Malu Town, Jiading, Shanghai, CHINA
Phone: +86-(0)21-6915-6200
Fax. +86-(0)21-6915-6202

CATALOG NO.	B1031E-3

2006.03.V-ABE-ABE
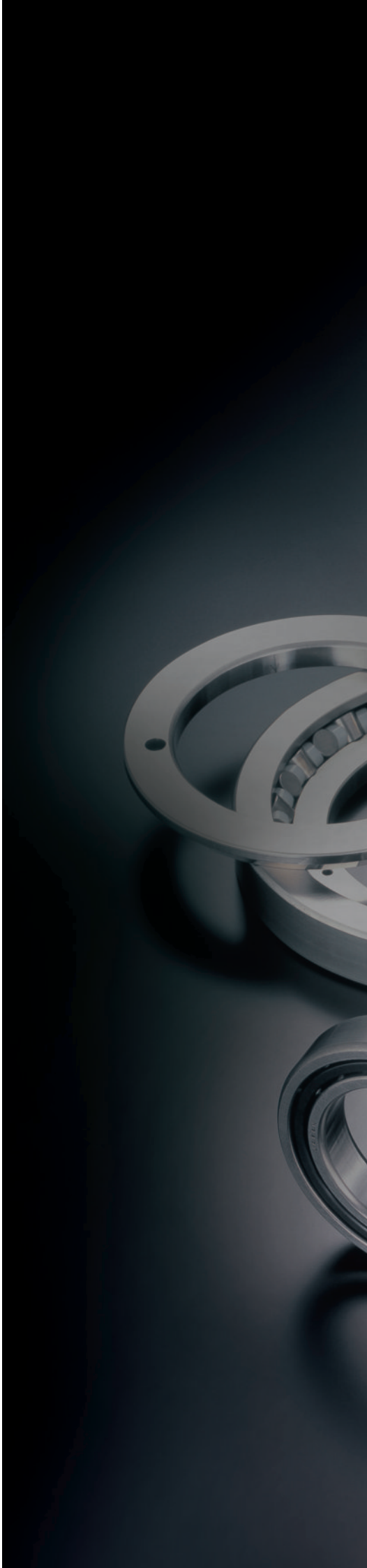
NACHI