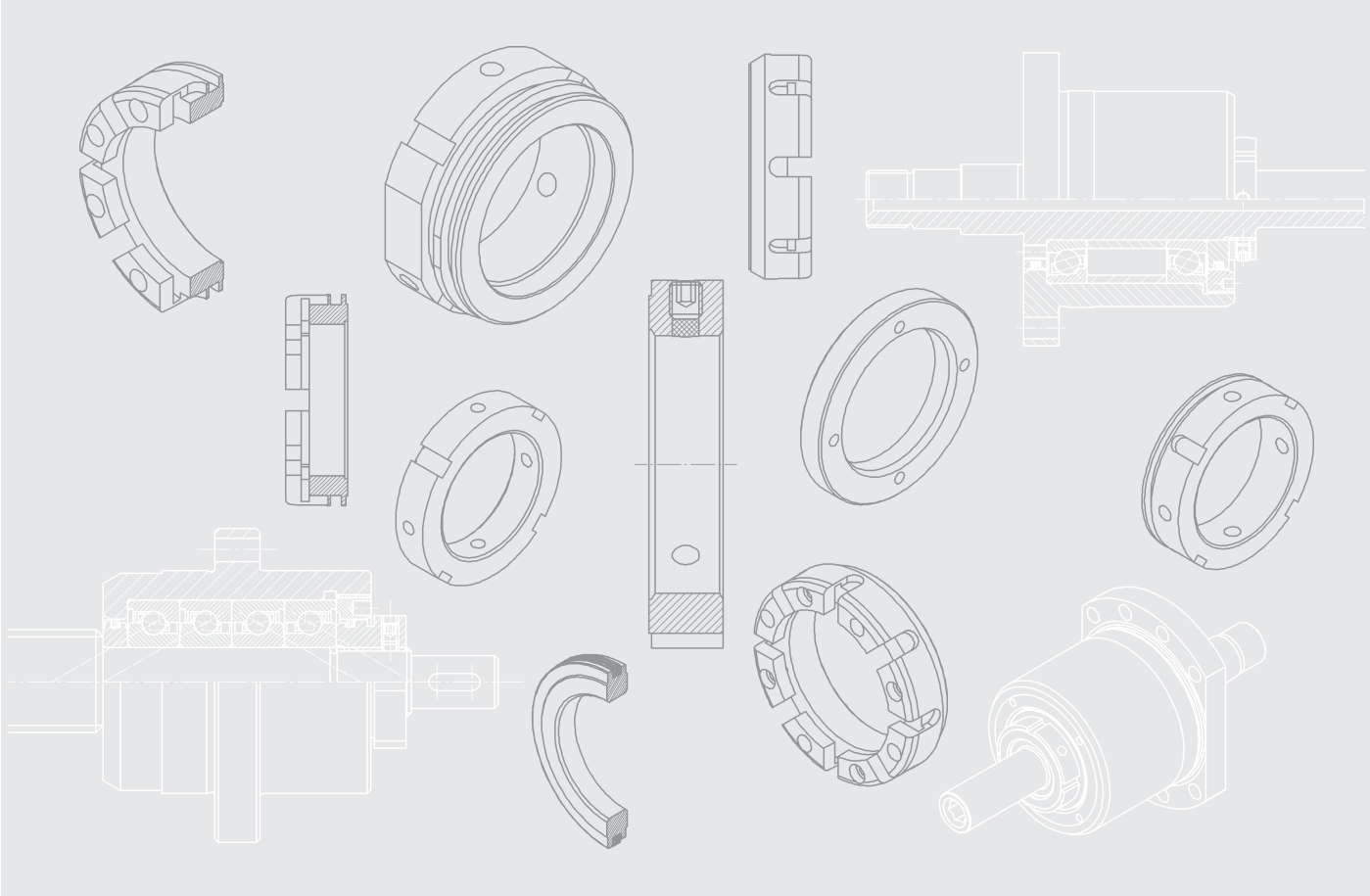

Precision Locknuts

Labyrinth Locknuts

Labyrinth Seals

TI-I-5020.0 / E

Headquarter of the IBC Wälzlager GmbH at the industrial area of Solms-Oberbiel

Location with Tradition

The headquarters in Solms-Oberbiel is centrally located in Germany close to the North/South and East/West highways which also provides for a central location in Europe. The international Airport Frankfurt approx. 80 km away serves as a worldwide link.

Flexible and Reliable

In the middle of 1996 we opened the central computer controlled high shelf warehouse with more than 2.000 pallet places. It is used for finsihed and semi-finished products as well as for large bearings. This is in addition to our existing two-storage computer controlled service warehouse also with more than 2.500 storage places.

Both warehouse systems provide together with our distribution centre and communication network precise logistics and a worldwide unequaled reliability.

Central Computer Controlled High Shelf Warehouse – Middle 1996

Precise Logistics provide an unequaled worldwide reliability

Precision with Future…

We are future orientated.
We have the creativity and vision to perform and provide.
This is our exact presentation to solutions with preci-

Introduction IBC Precision Locknuts and Labyrinth Seals

Fields of application
IBC Precisions Locknuts with fine thread are used for high-precision application. Due to integrated safety systems in the various locknuts, an easy and precise mounting, as well as safeguarding of locknuts is guaranteed.
Installation of lockwashers within an axial groove is no longer necessary. The material cross section is maintained and the notch effect is not increased. Additionally axial precision is enhanced.

Tolerances
A high accuracy of the axial eccentricity according to IT3, ISO basic tolerances according to DIN 7151, will be achieved by precision-machining the inner thread with its locking device and the face in one operation.
These locking devices, which are also profiled, bear on the thread flanks. The thread is manufactured with a tolerance of 4H according to DIN 13 T21-24 and from M210x4 on the tolerance is 6H.

Design
For compact applications (lightest weight), series MMR Precision Locknuts are used. The Precision Locknuts in recessed locations which cannot be reached radially (housing bores) are secured using the axially accessible socket set screws on the MMA, MBA and MBC series. This option requires a larger width because of the inner construction. From Ø 20 on, the MBA model is supplied. The permissible axial load corresponds to the MMR Precision Locknut. In the range of Ø 45 ... 200 mm also the Precision Locknut MBC with four axial securable socket head cap screws at its end are produced.
The same cross section as for the MBA and MBC is used for the MMRB with radial securing system. The later permits larger loads and tightening torques. This is favorable in particular for preloading bearings supporting a high axial load (in ball screws, for instance).

Precision Locknuts with Labyrinth Seal
The MMRBS and MBAS series additionally have a set of laminar rings made out of spring steel, which may create a compact labyrinth seal in conjunction with the housing where limited space is available. The intermediate space of the labyrinth area must be filled with grease before and after mounting.
The cross section of the series MMRS Precision Locknuts with similar properties as MMRBS Precision Locknuts were designed to match the series BS 60° Super Precision Angular Contact Thrust Ball Bearings and the MD Seal Nuts (see page 6, 7). These are available in the standard sizes as well as in special sizes (different cross section) or made of stainless steel or with ATCoat.

Abutment and Fillet Dimensions
The recommended tolerance of the counter thread of the shaft is “medium” 6g, 6h or “fine” 4h for higher accuracy requirements (machine tools).

Strength of the Precision Locknut Threads
Threads up to M50: 1000 N/mm^2
Threads M50 and larger: 650 N/mm^2

The permissible axial loads are applicable to bolt threads with a tensile strength of at least 700 N/mm^2. In case of dynamic load, 75 % of axial load Fa is permissible.

Mounting
Precision Locknut should be screwed on the shaft with all locking devices in unchanged position. Use spanners to tighten the locknuts with approximately triple of the nominal torque (to avoid setting of the clamped parts, loosen and retighten them applying the nominal torque).
Tightening of the locking devices lightly increases the axial forces of precision locknuts of MBA design. The effect of the MBC designed Precision Locknut is contrary and must not be used for bearings with grounded preload. The necessary tightening torque depends on the required preload of the bearings and the required pressfit between the inner rings and the shaft. Additional information see page 8 and 9.

Securing against loosening
Lightly tighten the first socket set screw until you notice resistance. Tighten second screw located opposite.
If existing, tighten third screw (only in case of MMRB, MMRBS and MMRS) as well as fourth screw in case of version …Q. Retighten the screws. For maximum tightening torques of the socket set screws and socket head cap screws, please refer to the following table.

Securing thread	Spanner size [mm] S	S_{MBC}	Max tightening torque M_A [Nm] socket set screws	socket head cap screws
M4	2	3	2	4.5
M5	2.5	4	4	8.5
M6	3	5	7	15
M8	4	6	18	36
M10	5	–	34	–
M12	6	–	60	–

Table 58-704: Maximum tightening torques of securing devices in Precision Locknuts

This results in high loosening torques to prevent unintended loosening even for spindles running clockwise and counter-clockwise intermittently as well as for high speed acceleration of spindle.

Disassembly
Loosen locking devices first for disassembly. As clamping does not deform the profiled securing elements made from hard bronze, the nut can be used repeatedly after loosening.

Designation for IBC Precision Locknuts and Labyrinth Seals

MMR	narrow Precision Locknut with radial lock
MMRB	wide Precision Locknut with radial lock
MMRBS	the same as MMRB, but with laminar Labyrinth Seal
MBA	Precision Locknut with axial lock via slotted segments
MBAS	the same as MBA, but with laminar Labyrinth Seal
MBC	Precision Locknut with axial lock via slotted segments and four screws
MMA	Precision Locknut with axial lock via 2 cones
MMRS	special locknut with radial lock, to match 60° super precision angular contact thrust ball bearings BS and MD Locknut
MD	Seal Nut with fine outer thread, fits to Labyrinth Seals S and MMRS nut
S	Precision Labyrinth Seal with laminar rings made of spring steel
. . . . Q	4 securing elements, unless standard

IBC Precision Locknuts MMR, MMRB, MMRBS, MMA, MBA, MBAS, MBC

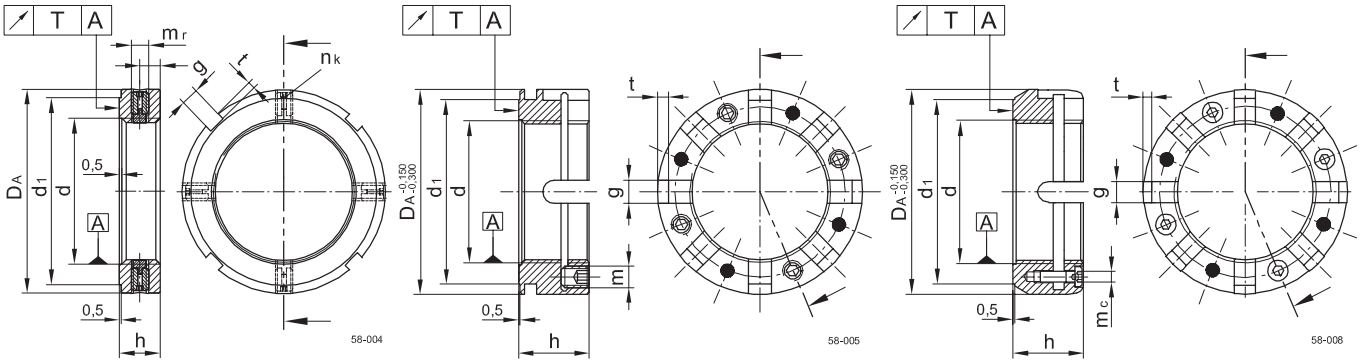

MMR.. MBA.. MBC..

Thread	Designation		Dimensions												Max. tightening torque set screws M_S			Permissible axial load MMR MMRB	MMA MBA MBC
Tolerance 4H	**Radial locking system MMR, MMRB/ MMRBS**	**Axial locking system MBA/MBAS MBC**	D_A	h	g	t	d_1	c	m_a	m_r	m_c	h_1	h_2	E**	MMR MMRB	MBA	MBC	F_a	
			mm												rad.	ax.		kN	
															Nm				
M 6 x 0.5	**MMR 6**		16	8	3	2	12	4	–	M 4			–	–	2	–		16	
M 8 x 0.75	**MMR 8**																	17	
M 10 x 0.75	**MMR 10**		18				14											22	
M 12 x 1	**MMR 12**		22				18											26	
M 15 x 1	**MMR 15**		25				21											33	
M 17 x 1	**MMR 17**		28	10	4		23	5		M 5					4			49	
		MMA 17 *		16					M 4							2		70	70
M 20 x 1	**MMR 20**		32	10			27											55	
	MMRB 20	**20**		16								4.4	2.9	32				110	110
M 20 x 1.5	**MMR 20 x 1.5**			10														70	
	MMRB 20 x 1.5	**20 x 1.5**		16										32				110	110
M 25 x 1.5	**MMR 25**		38	12	5		33	6		M 6					7			87	
	MMRB 25	**25**		18										38				130	130
M 30 x 1.5	**MMR 30**		45	12			40					5.2	3.2					110	
	MMRB 30	**30**		18					M 6					45		7		150	150
M 35 x 1.5	**MMR 35**		52	12			47											120	
	MMRB 35	**35**		18										52				170	120
M 40 x 1.5	**MMR 40**		58	14	6	2.5	52	7										150	
	MMRB 40	**40**		20										58				210	150
M 45 x 1.5	**MMR 45**		65	14			59					6	3.6					170	
	MMRB 45	**45**		20							M 4			65			4.5	240	170
M 50 x 1.5	**MMR 50**		70	14			64											180	
	MMRB 50	**50**		20										70				260	180
M 55 x 2	**MMR 55**		75	16	7	3	68	8		M 8					18	18		250	
	MMRB 55	**55**		22					M 8					75				340	250
M 60 x 2	**MMR 60**		80	16			73											270	
	MMRB 60	**60**		22										80				360	270
M 65 x 2	**MMR 65**		85	16			78											290	
	MMRB 65	**65**		22										85				400	290
M 70 x 2	**MMR 70**		92	18	8	3.5	85	9										350	
	MMRB 70	**70**		24										92				470	350
M 75 x 2	**MMR 75**		98	18			90											370	
	MMRB 75	**75**		24							M 5			98			8.5	500	370
M 80 x 2	**MMR 80**		105	18			95					7.3	4.3					390	
	MMRB 80	**80**		24										105				520	390
M 85 x 2	**MMR 85**		110	18			102			M 10					34	34		400	
	MMRB 85	**85**		24					M 10					110				540	400

Table 58-700: IBC Precision Locknuts MMR, MMRB, MMRBS, MMA, MBA, MBAS, MBC *Further sizes are available on inquiry.*

* Securing: 2 cones at 90°
E** see page 5 MMRBS. Special sizes available: MMR 16 x 1.5 Q; MMR 33 x 1.5 Q; MMR 42 x 1.5 Q; MMR 60 x 1.5 Q; MMR 65 x 1.5 Q; MMR 145 x 2 Q.

IBC Precision Locknuts MMR, MMRB, MMRBS, MMA, MBA, MBAS, MBC

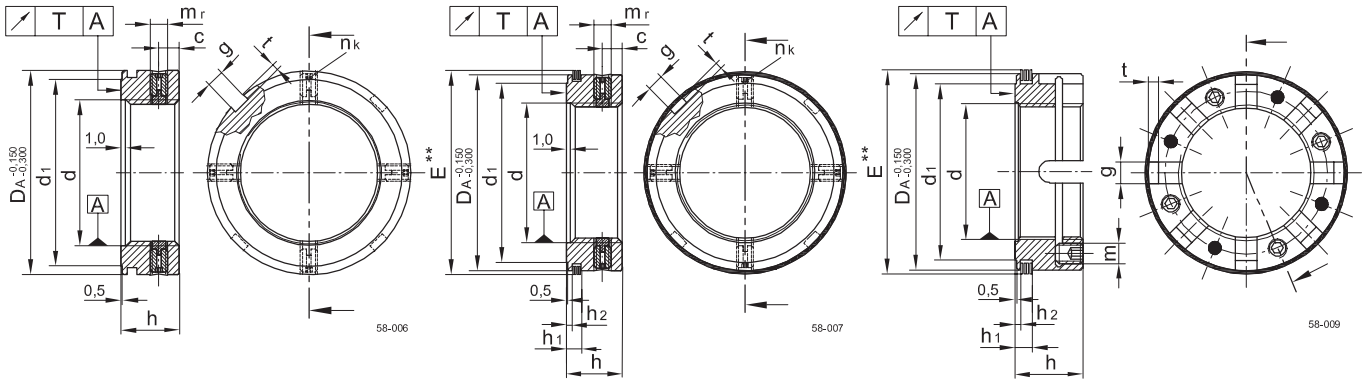

MMRB... MMRBS... MBAS..

Thread	Designation		Dimensions											Max. tightening torque socket screws M_S		Permissible axial load MMR MMRB	MMA MBA MBC
Tolerance* 4H	Radial locking system MMR, MMRB/ MMRBS	Axial locking system MBA/MBAS MBC	D_A	h	g	t	d_1	c	m_r m_a	m_c	h_1	h_2	E**	MMR MMRB MBA	MBC	F_a	
			mm											Nm		kN	
M 90 x 2	MMR 90		120	20	10	4	108	9	M 10		7.3	4.3		34		470	
	MMRB 90	90		26						M 6			120		15	610	470
M 95 x 2	MMR 95		125	20			113									490	
	MMRB 95	95		26									125			640	490
M 100 x 2	MMR 100		130	20			120									510	
	MMRB 100	100		26									130			660	510
M 105 x 2	MMR 105		140	22	12	5	126									560	
	MMRB 105	105		28									140			700	560
M 110 x 2	MMR 110		145	22			133									600	
	MMRB 110	110		28									145			770	600
M 115 x 2	MMR 115		150	22			137				7.5	4.4				660	
	MMRB 115	115		28									150			820	660
M 120 x 2	MMR 120		155	24			138									710	
	MMRB 120	120		30									155			890	710
M 125 x 2	MMR 125		160	24			148									740	
	MMRB 125	125		30									160			920	740
M 130 x 2	MMR 130		165	24			149									760	
	MMRB 130	130		30						M 8			165		36	950	760
M 140 x 2	MMR 140		180	26	14	6	160	10	M 12					60		880	
	MMRB 140	140		32									180			1080	880
M 150 x 2	MMR 150		195	26			171									930	
	MMRB 150	150		32									195			1040	930
M 160 x 3	MMRB 160	160	205	34	16	7	182				8.3	5.3	205			1360	1020
M 170 x 3	MMRB 170	170	220				198						220			1430	1075
M 180 x 3	MMRB 180	180	230	36	18	8	203						230			1600	1200
M 190 x 3	MMRB 190	190	240				214						240			1670	1250
M 200 x 3	MMRB 200	200	250	38			226						250			1850	1390
M 210 x 4	MMRB 210		270	40	20	10	238	14	M 14		10	6.4	270	85		2000	
M 220 x 4	MMRB 220		280				250						280			2250	
M 240 x 4	MMRB 240		300	44			270						300			2300	
M 260 x 4	MMRB 260		310				290						310			2500	
M 280 x 4	MMRB 280		330	50	24		310				11	6.6	330			2850	
M 300 x 5	MMRB 300		360				336						360			3100	

Table 58-701: IBC Precision Locknuts MMR, MMRB, MMRBS, MMA, MBA, MBAS, MBC

Further sizes are available on inquiry.

Face runout T acc. to IT3, DIN 7151; *above Ø 200 : 6H

n_K: no. of securing devices = 4

MBAS, MMRBS = MBA, MMRB + Laminar spring steel rings (labyrinth seal)

E** = Bore diameter of counterpart = $D_{A+0}^{+0.1}$ … and a 25° chamfer for the sealing (see also MMRS), where the feeding diameter is 4 % larger than D_A.

IBC Precision Labyrinth Locknuts MMRS

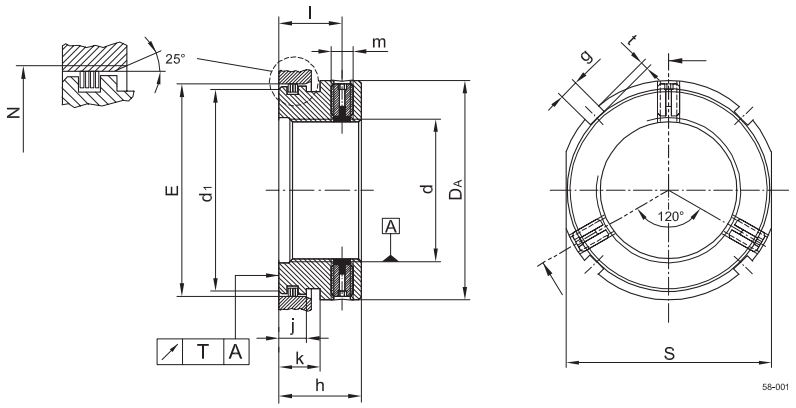

MMRS..-..Q2

Thread	Designation	Dimensions												Tightening torque set screws	Per-missible axial load
		E	D_A	h	g	t	d_1	l	m	j	k	N	S	M_S	F_a
		mm												Nm	kN
M 17 x 1	**MMRS 17-36.Q2**	36	38	20	5	2	32	15.5	M 5	9	11	37.5	36	4	100
M 20 x 1	**MMRS 20-36.Q2**														110
M 22 x 1	**MMRS 22-36.Q2**														110
M 25 x 1.5	**MMRS 25-50.Q2**	50	58	25	6	2.5	46	19	M 6	10	13	52	55	7	150
M 27 x 1.5	**MMRS 27-50.Q2**														
M 30 x 1.5	**MMRS 30-50.Q2**														180
M 30 x 1.5	**MMRS 30-60.Q2**	60	70	28			56	21	M 8			63	65	18	180
M 35 x 1.5	**MMRS 35-60.Q2**														190
M 40 x 1.5	**MMRS 40-60.Q2**														210
M 45 x 1.5	**MMRS 45-60.Q2**														260
M 35 x 1.5	**MMRS 35-76.Q2**	76	80	30	7	3	72	23			15	79.5	75		290
M 40 x 1.5	**MMRS 40-76.Q2**														340
M 45 x 1.5	**MMRS 45-76.Q2**														400
M 50 x 1.5	**MMRS 50-76.Q2**														420
M 55 x 2	**MMRS 55-76.Q2**														450
M 55 x 2	**MMRS 55-99.Q2**	99	105		8	3.5	95					103	95		450
M 60 x 2	**MMRS 60-99.Q2**														480
M 65 x 2	**MMRS 65-99.Q2**														480
M 75 x 2	**MMRS 75-99.Q2**														510
M 100 x 2	**MMRS 100-132.Q2**	132	140	35	12	5	128	27	M 10	12	19	137.3	135	34	710
M 125 x 2	**MMRS 125-162.Q2**	162	175				158					165	165		800

Table 58-702: IBC Precision Labyrinth Locknuts MMRS *Further sizes are available on inquiry.*

Axial runout T according to IT3, DIN 7151

The Precision Labyrinth Locknut with the mounted laminar spring-steel rings are forming a non-contact seal with an adjusted housing or with a MD series Seal Nut (see page 7 and 10).
Whereas the Labyrinth Locknut is rotating with the shaft, the spring steel rings are not rotating. They are preloaded radially by the internal diameter of the housing or by the MD Seal Nut. The free space has to be filled with the same grease as used for the bearings. The sealing area of the Precision Labyrinth Locknut is already lubricated with BearLub GH62 grease, which has proven its quality in the lubrication of Ball Screw Support Bearings.
Two parallel wrench surfaces located opposite each other facilitate the assembly. This Precision Locknut is used in particular with 60° Super Precision Angular Contact Thrust Ball Bearings* and in bearing units.

*See hereto also the catalogue TI-1-5010.2/E.

IBC Precision Labyrinth Seals S

IBC Precision Seal Nuts MD

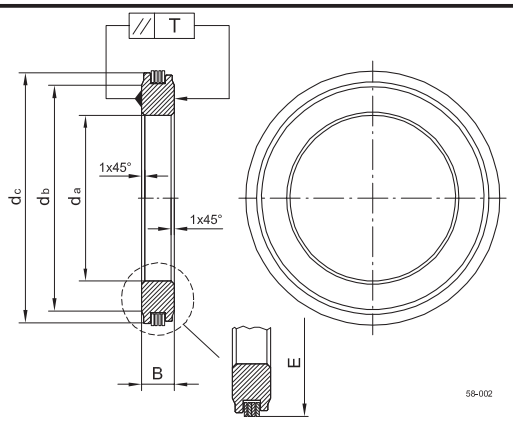

S..-...Q2

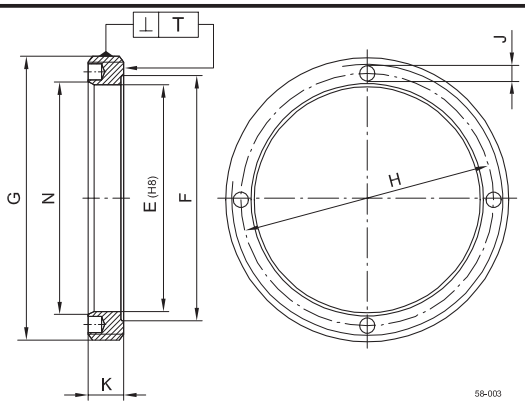

MD..-...Q5

Designation	Dimensions				Designation	Dimensions							Per-missible axial load
	d_a	d_b	d_c	B		E	F	G	H	J	K	N	F_a
	mm					mm							kN
S 12-26.Q2	12	21	25.6	7	**MD 40-26.Q5**	26	28	M 40 x 1.5	31	4.3	9	27	45
S 15-26.Q2	15												
S 17-36.Q2	17	26	35.6		**MD 50-36.Q5**	36	41	M 50 x 1.5	42.5		10	37.5	65
S 20-36.Q2	20												
S 25-40.Q2	25	32	39.7		**MD 55-40.Q5**	40	45	M 55 x 1.5	47			42	77
S 25-50.Q2		41	49.6	10	**MD 70-50.Q5**	50	56	M 70 x 1.5	59.5		12	52	100
S 30-50.Q2	30												
S 30-60.Q2		46	59.6		**MD 80-60.Q5**	60	65	M 80 x 1.5	72			63	130
S 35-60.Q2	35												
S 35-76.Q2		66	75.6	12	**MD 110-76.Q5**	76	92	M 110 x 2	90	6.3	14	79.5	190
S 40-60.Q2	40	50	59.6	10	**MD 80-60.Q5**	60	65	M 80 x 1.5	72	4.3	12	63	130
S 40-76-10.Q2		66	75.6		**MD 95-76.Q5**	76	82	M 95 x 2	84.5	6.3		79.5	150
S 40-76-12.Q2				12	**MD 110-76.Q5**		92	M 110 x 2	90		14		190
S 45-60.Q2	45	55	59.6	10	**MD 80-60.Q5**	60	65	M 80 x 1.5	72	4.3	12	63	130
S 45-66.Q2			65.6		**MD 85-66.Q5**	66	72	M 85 x 1.5	76			69	130
S 45-76.Q2		66	75.6	12	**MD 110-76.Q5**	76	92	M 110 x 2	90	6.3	14	79.5	190
S 50-76-10.Q2	50	68		10	**MD 95-76.Q5**		82	M 95 x 2	84.5		12		150
S 50-76-12.Q2				12	**MD 110-76.Q5**		92	M 110 x 2	90		14		190
S 55-76.Q2	55			10	**MD 95-76.Q5**		82	M 95 x 2	84.5		12		150
S 55-99.Q2		86	98.6	12	**MD 130-99.Q5**	99	110	M 130 x 2	110		14	103	220
S 60-99.Q2	60												
S 75-99.Q2	75			10	**MD 120-99.Q5**		101	M 120 x 2					210
S 100-132.Q2	100	114	131.6	14	**MD 160-132.Q5**	132	134	M 160 x 3	148		18	137.3	340
S 110-132.Q2	110	120	131.7										
S 127-162.Q2	127	144	161.6	14.5	**MD 190-162.Q5**	162	167	M 190 x 3	176			166	440

Table 58-703: IBC Precision Labyrinth Seals S and IBC Seal Nuts MD

Further sizes are available on inquiry.

The non-contact series S sealing elements consist of a parallel ground steel ring with a radial outside groove.
A set of laminar spring-steel rings is assembled into the groove, surrounded by a grease pack (GH62).
They could be pressed into the bore of the matching series MD Seal Nut or into the internal diameter of the housing or are radially preloaded by the outer diameter of the spring steel rings.
The support ring of the Labyrinth Seal located on the shaft does not touch the spring rings, which are fixed on the outside diameter.

A grease pack in the groove prevents the axial contact of the lamella with the side faces of the support ring.
The parallelism of the support rings T ≤2 µm used for the Labyrinth Seals are an excellent element between precision locknuts and bearings (Angular Contact Ball Bearings and 60° Super Precision Angular Contact Thrust Ball Bearings) in order to preload them.
The Seal Nuts MD with outside thread can also be used separately to clamp the outer rings of bearings or other machine parts. They need to be secured by glue. An external radial lock can be applied via a pin or a screw through the housing.

Mounting of IBC Precision Locknuts for Preloading of Precision Bearings

As the main usage is within the field of precise applications like machine tools and other accurate machines we like to emphasize on aspects of handling and the evaluation of the tightening torque of the nut.
Basically the nuts are used to preload angular contact ball bearings, taper roller bearings and to adjust the radial play of cylindrical roller bearings with tapered bore.

1. Preparation
It is essential to have clean mounting surroundings as well as clean parts to be mounted as bearings, spacers, shaft and housing. Also the nut should be free of dirt, chips, burrs and indentations.

2. Check of adjacent parts
Obtaining the value for the interference fit.
Check that the seating dimensions and the accuracy of form corresponds to the specification in the drawing. Make sure that the angularity of the bord and roughness of the shaft are within the required limits. Check spacers for parallelism to be preferably below 2 µm. Make sure that the threads are cut long enough at the shaft and that the nut can be screwed on to the desired position.

3. Mounting
The rotating inner ring of a spindle bearing normally has an interference fit (press fit).
A press fit for cold mounting is used for smaller bearings, where the press-fitting forces are not so high. For reducing of friction the surface of the parts should be oiled or greased. To make mounting easier, either the bearing inner ring (of a cylindrical roller bearing) or the complete bearing can be heated less 80°C.

3.1 Mounting after heating the bearing
Bearings can be heated by several means. The linear expansion coefficient α for bearing steel 100Cr6 is $12 \cdot 10^{-6}$/K.

Thermal elongation $\delta = 12 \cdot 10^{-6} \cdot d \cdot \Delta T$ [1]

ΔT: temperature difference [K]

For instance heating of ΔT = 30 K is sufficient for a spindle bearing 7020 with a 2 µm interference fit. But depending on how quickly the mounting can be executed an additional ΔT may be necessary.
It is absolutely essential to avoid heating over 80°C.

After mounting of bearings with a relatively high temperature it has to be verified that the bearings are strongly pressed against the shoulder as the bearing rings will also axially shrink after cooling down. Keep the bearings forced at the shaft's shoulder until the temperature has dropped. After cooling down check that the bearings are in their correct position.

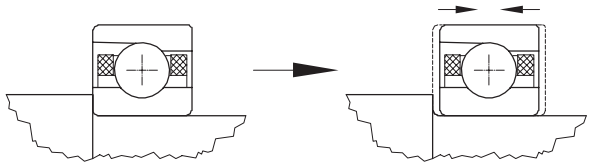

Axial shrinkage after cooling

58-300

4. Securing of bearings

4.1 Bearing press fitting forces
The forces for press fitting or retracting bearing rings with a tight fit to or from a shaft can be calculated as follows:

$$F_{mont} = \mu \cdot p_{surf} \cdot \pi \cdot d \cdot B \text{ [N]} \quad [2]$$

µ: friction coefficient = 0.16
p_{surf}: surface pressure [MPa = N/mm²]
d: shaft diameter [mm]
B: bearing width [mm]

The surface pressure on the fitting surface p_{surf} is obtained by this formula:

$$p_{surf} = \frac{E}{2} \cdot \frac{\Delta d}{d} \cdot \frac{(1-k^2)\,(1-k_o^2)}{1-(d_o/D_i)^2} \quad [3]$$

Δd: effective interference [mm]
d: shaft diameter [mm]
E: Young's modulus [MPa = N/mm²]
k: ratio thickness of inner ring $k = d/D_i$
D_i: mean inner ring diameter [mm]
k_0: ratio thickness of hollow shaft $k_0 = d_o/d$
d_o: bore hollow shaft [mm]

For solid shafts the formula is:

$$p_{surf} = \frac{E}{2} \cdot \frac{\Delta d}{d} \cdot (1-k^2) \quad [4]$$

The theoretical mean diameter of the inner ring groove is:

$$D_i = 0.21\,(4d + D) \quad [5]$$

D: bearing outer diameter [mm]

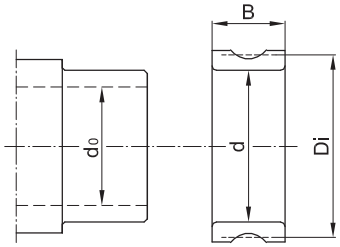

Inner ring average raceway groove diameter D_i

58-301

Example: Press-fitting force for 7020.E.T.P2H.UL (ø 100 x 150 x 24) with 2 µm interference fit, hollow shaft diameter d_o = 80 mm.

$$D_i = 0.21 \cdot (4 \cdot 100 + 150) = 115.5 \text{ mm}$$

$$p_{surf} = \frac{210\,000}{2} \cdot \frac{0.002}{100} \cdot \frac{\left[1-\left(\frac{100}{115.5}\right)^2\right] \cdot \left[1-\left(\frac{80}{100}\right)^2\right]}{1-}$$

$$= 0.36 \text{ M Pa or N/mm}^2$$

Press fitting force $F_{mont} = \mu \cdot p_{surf} \cdot \pi \cdot d \cdot B =$
$0.16 \cdot 0.36 \cdot \pi \cdot 100 \cdot 24 = 434$ N

(For comparison for solid shaft p_{surf} = 0.53 N/mm² and press fitting force F_{mont} = 639 N)

Mounting of IBC Precision Locknuts for Preloading of Precision Bearings

As the friction conditions might differ an appropriate security factor of 3 should be used in the further calculation, resulting in a press fitting force Fp of 1300 N for the hollow shaft and of 1917 N for the solid shaft.

4.2 Calculation of the nut tightening moment

The nut tightening moment T is obtained by the sum of the necessary moment to press on the bearing T_a and of the one for preloading the bearings M_D.

$$T = T_a + M_D \qquad [6]$$

$$T_a = F_p \left[\tan(\phi + \psi) \frac{d_2}{2} + \mu_A \frac{D_m}{2} \right] \text{[Nmm]} \qquad [7]$$

$$F_p = 3 \cdot F_{mont} \qquad [8]$$

ϕ: lead angle = $\frac{p}{\pi \cdot d_2}$ ψ: friction angle

d_2: pitch diameter of the thread = d – 0.6495 · p [mm]
d: thread diameter [mm]
μ_A: friction coefficient at axial nut surface
D_m: mean nut axial surface diameter [mm]
p: pitch [mm]
μ: friction coefficient nut/bearing ($\approx$ 0.14)

The required preloading moment depends on the used preload F_v [N] and is approximately calculated with the following formula:

$$M_D = 3 \cdot d_{thread} \cdot F_v \cdot K_{Fv} \cdot 10^{-4} \text{ [Nm]} \qquad [9]$$

K_{Fv}: bearing arrangement constant for F_v of the single bearings

<>	DB	1	<<>>	QBC	2
<<>	TBT	1.36	<<<<>	PBT	1.71
<<<>	QBT	1.57	<<<>>	PBC	2.42

K_{Fv} = 1 for bearing units with F_v preload for the unit

4.3 Example

A bearing set 7020.E.T.P2H.DBL with a preload of 630 N has to be mounted and preloaded at a hollow shaft with a precision locknut MMR 100. Inner diameter of shaft is 80 mm. Mean interference is 2 µm.
For the locknut MMR 100 the preliminary values are resulting as follows:

$$\tan \psi = \frac{\mu}{\cos \alpha} = \frac{0.14}{\cos 30°} = 0.162 \Rightarrow \psi = 9.18°$$

$$\tan \phi = \frac{2}{\pi \cdot 98.7}; \ \phi = 0.3696°$$

D_m of the locknut = 110 mm

$$T_a = F_p \left[\tan(0.3696 + 9.18) \frac{98.7}{2} + 0.14 \frac{110}{2} \right]$$
$$= 16.0 \cdot F_p \text{ [Nmm] or } 0.016 \cdot F_p \text{ [Nm]}$$
$$= 0.016 \cdot 3 \cdot 434 = 20.8 \text{ Nm}$$

$$M_D = 3 \cdot 100 \cdot 630 \cdot 1 \cdot 10^{-4} = 18.9 \text{ Nm}$$

$$T = T_a + M_D = 20.8 + 18.9 = 39.7 \text{ Nm}$$

To avoid high press fitting forces, bearings should be heated before mounting. This is especially recommended if a set of bearings is preloaded by a precision locknut. With the following diagram the required temperature difference ΔT can be deducted for a given diameter and certain fits.

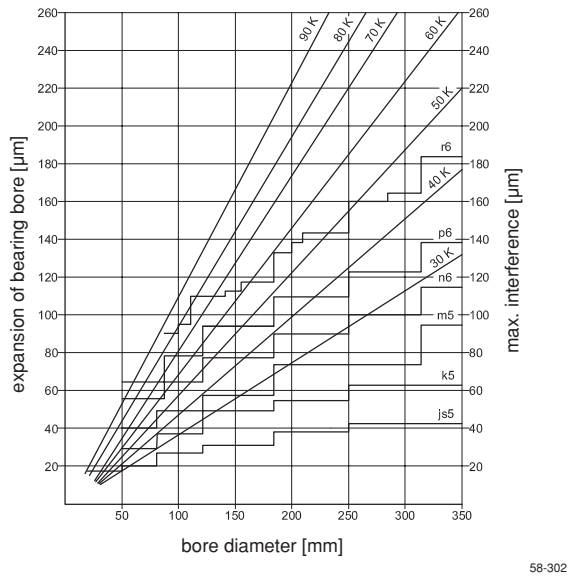

Required temperature difference [K] for mounting of inner rings

4.4 Tightening moment via axial surface pressure

Another possibility to obtain values for the pretension of bearings is to look at the allowed axial surface pressure introduced by the locknut at the side of the bearing. This pressure should not exceed 10 N/mm². No compression of the raceway occurs at this value.
For the locknuts represented in this catalogue and for the shown example there would be 119 Nm allowed.
To avoid or to reduce settlement after cooling of mounted parts of the axial touching surfaces tightening with three times of the calculated moment is recommended followed by loosening and re-tightening with the nominal moment.
In cases of relatively high interference fit the first calculation method has to be applied.

5. Setting the radial clearance of cylindrical roller bearings with tapered bore with a cone 1:12:

An axial drive-up distance is approximately 15 times larger than the radial expansion of the inner ring has to be realized due to surface smoothing and elastic behaviour of hollow spindles. Values for the settings of radial clearance or preload are speed orientated.

Applications of IBC Precision Locknuts and Labyrinth Seals

1. Preloading of a cutting spindle

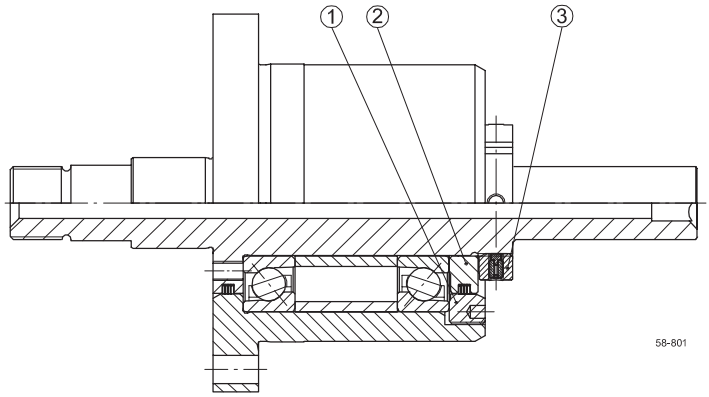

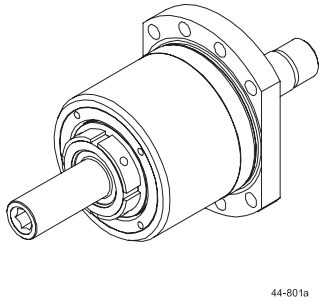

① Seal Nut MD 80-60.Q5
② Labyrinth Seal S 35-60.Q2
③ Precision Locknut MMR 35

2. Ball screw supported at both ends, spring preloaded with Labyrinth Seals and securable Precision Locknuts

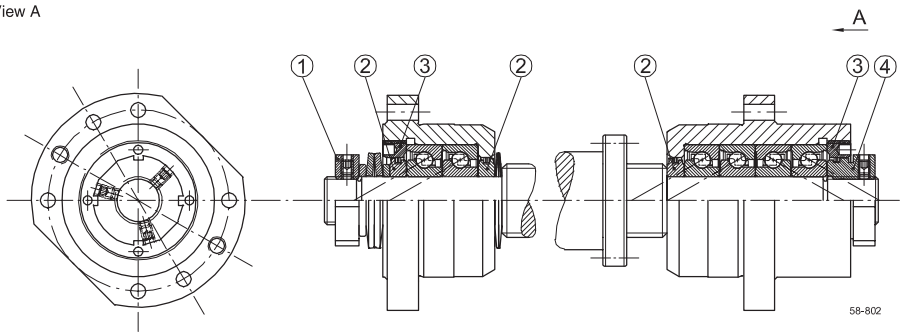

① Precision Locknut MMR 40
② Labyrinth Seal S 40-60.Q2
③ Seal Nut MD 80-60.Q5
④ Labyrinth Locknut MMRS 40-60.Q2

3. Preloading bearings at a spindle in pumps

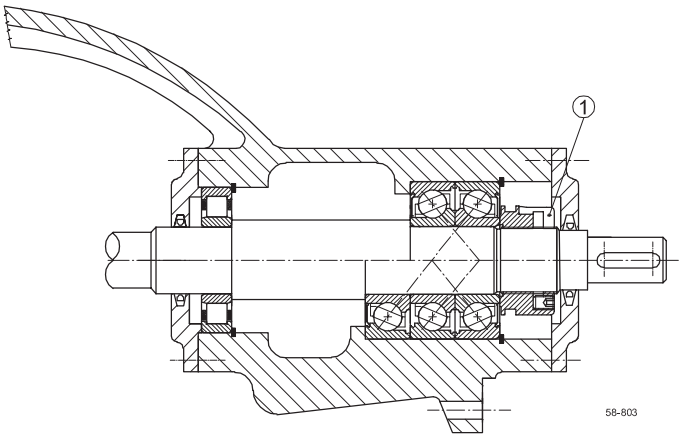

① Precision Locknut MBA 30

4. Adjustment of the radial play of a cylindrical roller bearing with a tapered bore via spacers

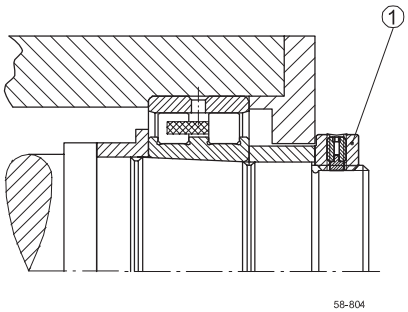

① Precision Locknut MMR 100

More of IBC …

Company Profile

Product Range
Super Precision Bearings
T1-I-5000.0 / D (German)
T1-I-5000.0 / E (English)

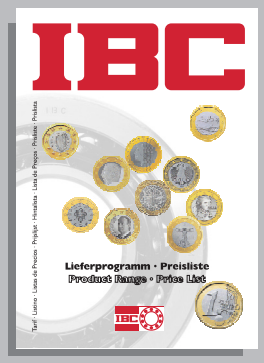

Product Range
Price List

Angular Contact
Bearings 40°
T1-I-4044.0 / D (German)

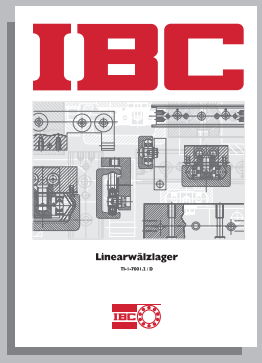

Linear Bearings
T1-I-7001.2 / D (German)

Telescopic Rails
T1-I-7005.1 / D (German)

Ball Screw Support Bearings
TI-I-5010.2 / D (German)
TI-I-5010.2 / E (English)

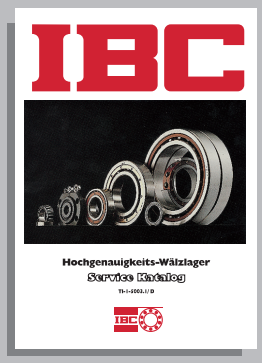

Super Precision Bearings
Service Catalog
T1-I-5003.1 / D (German)
T1-I-5003.1 / E (English)

ATCoated Bearings
TI-I-5010.2 / D (German)

© Copyright 2005 IBC Wälzlager GmbH

The contents of this publication are the copyright of the publisher and may not be reproduced (even extracts) unless permission is granted. Every care has been taken to ensure the accuracy of the information contained in this publication but no liability can be accepted for any loss or damage whether direct, indirect or consequential arising out of the use of the information contained here in.

IBC WÄLZLAGER GMBH

INDUSTRIAL BEARINGS AND COMPONENTS

Post box 1825 · 35528 WETZLAR (GERMANY)

Tel: +49/64 41/95 53-02
Fax: +49/64 41/5 30 15

Corporate office
Industriegebiet Oberbiel
D-35606 Solms-Oberbiel

e-mail: ibc@ibc-waelzlager.com

http://www.ibc-waelzlager.com

IBC INDUSTRIAL BEARINGS

AND COMPONENTS AG

Tel: +41/32/6 52 83 53
Fax: +41/32/6 52 83 58

Corporate office
Kapellstrasse 26
CH-2540 Grenchen

e-mail: ibc@ibcag.ch

http://www.ibc-waelzlager.com