TIMKEN

Where You Turn

Timken® Super Precision Bearings for Machine Tool Applications

TIMKEN
Where You Turn

INDEX

A ENGINEERING

Bearing Selection Process 13
Determination of Applied Loads and Bearing Analysis 36
Bearing Reactions, Load Ratings and Life 42
Permissible Operating Speed 53
Lubrication 56
Run-In Procedures 61
Heat Generation and Dissipation 64
Tolerances 67
Fitting Practices 80
Shaft and Housing Considerations 88
Mounting Designs 92
Setting and Preloading Guidelines 101

B PRECISION TAPERED ROLLER BEARINGS

Part Numbering Systems 107
Introduction 110
TS Style – Metric, Inch 112
TSF Style – Metric, Inch 116
TXR Style – Metric, Inch 120
TSHR Style – Metric, Inch 122

C SUPER PRECISION BALL BEARINGS

Introduction 134
Optimized Grades of Precision 134
Bearing Types 134
Applications 137
Spindle Bearings 142
Ball Screw Support Bearings 200
Ex-Cell-O Spindle Bearings 214

D APPENDIX

Frequency Coefficients 218
- Tapered Roller Bearings 218
- Ball Bearings 222
- Ball Screw Support Series 236

Precision Tag Deviation and Runout Charts 237
Geometry Factors 239
Radial Internal Clearance 241
Bearing Locknuts 242
Locknut Torque 242
Lubrication Specifications 243
Operating Temperatures for Bearing Component Materials 245
Conversion Tables 246
Forms 247

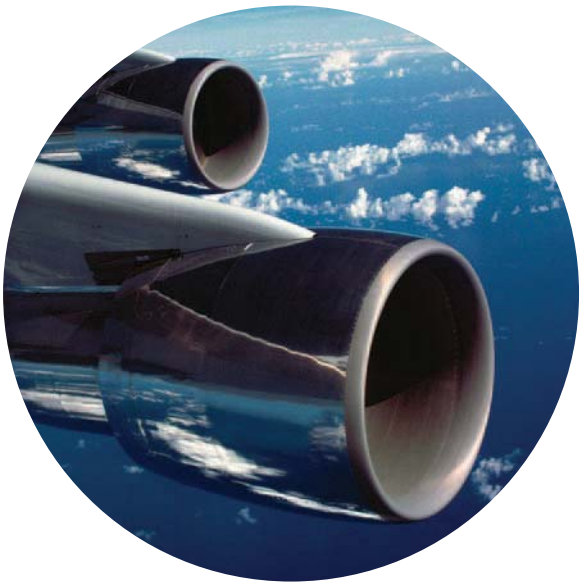

TIMKEN. WHERE YOU TURN.

The world turns to Timken for innovation to move ahead of the competition. Our contributions to advancing work and living standards – through innovations surrounding friction management and power transmission – are invaluable. We have played a role in virtually all major technologies that have shaped our age, from automobile travel to artificial hearts. You'll find our products wherever you turn – on land, sea and in space.

When customers turn to us, they are turning to a worldwide team of highly trained and experienced associates. Because of our ability to help their products perform better, customers honor us with more than 300 awards each year. Whether it is a wheel assembly for a family vehicle, bearings for a roller coaster, repair services for rail bearings or steel for an aircraft engine shaft, we supply the products and services that help keep the world turning.

FRICTION MANAGEMENT SOLUTIONS – A TOTAL SYSTEM APPROACH

As needs change and advanced motion control systems evolve, Timken is leveraging its knowledge of friction management to offer a broader array of bearings, related products and integrated services to the marketplace. We supply quality products and services that extend beyond bearings to help all systems run smoothly.

We are committed to providing a wide array of friction management solutions. Customers can benefit by having Timken, a trusted name for more than 100 years, evaluate entire systems, not just individual components. This approach provides cost-effective solutions, while also helping to achieve application-specific objectives.

TECHNOLOGY THAT MOVES YOU

Today, major industries turn to Timken for our ability to influence the fundamentals of motion through the creation, transfer, and control of power. We invest in people, attracting scholars, engineers and specialists from around the world. We invest in tools – computers, manufacturing equipment and state-of-the-art laboratories. We invest in the future by identifying new concepts that will help Timken and its customers make their mark for years to come. Innovation is one of our core values.

The return on our technology investment has grown exponentially. Our associates increase the reliability of Timken® products and create designs that can set new performance standards. We help customers solve their immediate system issues, while developing the systems of tomorrow.

Our teams of engineers and scientists are dedicated to using everything they know about friction management and power transmission. They translate the scientific aspects of metallurgy, bearing operating characteristics, lubrication, torque, noise, heat treatment, advanced processing concepts and application development into friction management solutions.

Because our teams are located at technology centers in North America, Europe and Asia – as well as in our manufacturing facilities and field offices on six continents – customers have access to ideas and resources to transform concepts into reality. Our technology focuses on products, materials, processes and emerging technology to create new solutions.

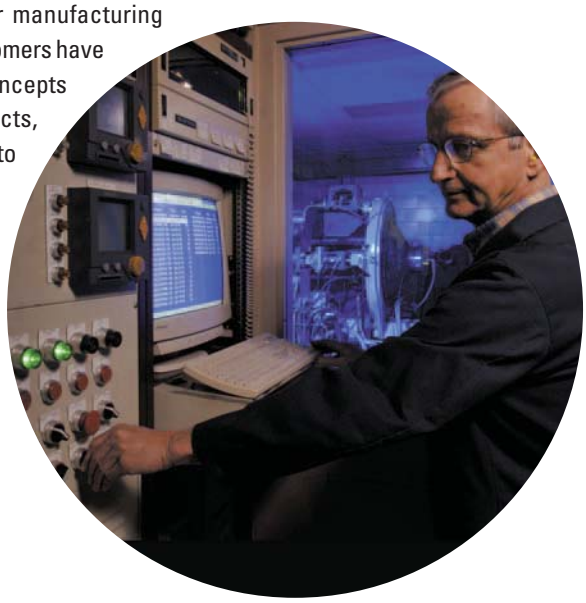

BRANDS YOU CAN TRUST

Timken has built a strong tradition of quality, technology and innovation. A long list of customer certifications provides solid evidence that our products have earned customer trust. As our founder, Henry Timken, said, "Don't set your name to anything you will ever have cause to be ashamed of."

From design to distribution, Timken gives customers expanded options and the security of knowing that each box contains an industry-trusted product.

ABOUT THE TIMKEN COMPANY

The Timken Company is a diversified industrial manufacturer of innovative, highly engineered materials, products and power transmission systems. Timken's proprietary technologies reduce friction and enable machinery to operate more efficiently, powerfully and reliably, using less energy. With operations throughout the world, the company serves a wide range of mobile, industrial and aerospace customers

Timken has technical centers in North America, Europe and Asia and more than 100 years of engineering experience. Recognized by Forbes magazine in 2009 as one of the "100 Most Trustworthy Companies in America," Timken has been listed on the New York Stock Exchange since 1922.

TIMKEN MACHINE TOOL SOLUTIONS

When it comes to improving machine tool performance, Timken leads the industry with an unmatched offering of friction management solutions. Our roller bearings and related products and services set the standard in high-speed spindles, ball screws, rotary tables and other demanding applications. This wide variety means that we can offer the right bearing for almost any machine position.

Backed by global Timken innovation and a long machine tool heritage, we focus on enhancing customer performance and productivity through our product technology and application experience. With renowned Timken quality and a commitment to precision that exceeds industry standards, we continue to develop bearings that support the drive for higher speeds, maximum resolution, accuracy and repeatability. Longer bearing service life translates to more machine uptime and production throughput.

PRODUCT BREADTH

Timken offers a broad range of rolling bearings and related products and services to meet worldwide machine tool needs. Our portfolio includes specialized tapered roller and ball bearings, produced to the precision classes that deliver the operating characteristics necessary for the highest performance. Timken® bearings meet or exceed application needs for rotational accuracy, consistency and rigidity. Our total friction management approach also includes lubrication, condition monitors and other products "around the bearing."

Timken® tapered roller bearing types available in precision classes include the single-row TS and TSF styles, as well as the variable-preload Hydra-Rib™ bearing, the high-speed TSMA bearing and the compact TXR crossed roller bearing. Timken® precision tapered roller bearings range from less than 20.000 mm (0.7874 in.) bore to more than 2000.000 mm (78.7402 in.) outside diameter, depending upon bearing type.

Timken® Fafnir® angular contact ball bearings are manufactured to ABEC 7 (ISO P4) and ABEC 9 (ISO P2) precision classes. They are available in 15 degree and 25 degree contact angles, as well as custom configurations. Different ring designs (WI, WO, WN and K) meet specific application requirements with either steel or ceramic balls. The HX and sealed HXVV bearings deliver high-speed benefits with unique ball complements and raceway geometries. Sizes range from 10.000 mm (0.3937 in.) bore to 400.000 mm (15.7480 in.) outside diameter.

Ball screw support bearings with steep contact angles, available singly, or in housed units, provide high levels of stiffness for the demands of servo-controlled machinery. Sealed double-row flanged (or cartridge) units simplify installation.

The Quick Change Program can perform cost-effective modifications and minor rework procedures to your machine tool bearings to extend operational and application flexibility.

Engineered Surfaces improve wear and fatigue resistance for bearings and other components through a variety of applied treatments and finishes.

Condition Monitoring Products and Services are available in an expanding offering that enables you to stay on top of machine performance, and quickly detect potential problems.

As a Timken customer, you receive an uncompromising standard of quality across the broadest range of bearings and related products. Brands like Timken and Fafnir reflect an extensive line of tapered, spherical, cylindrical, ball bearings and mounted units ideal for virtually every machine tool and industrial application. Our core products are complemented by an ever-growing line of friction management solutions including lubricants, single-point lubricators, maintenance tools, safety equipment, condition monitoring systems and repair services that help keep operations running smoothly.

Ultra-High Speed Spindle Grease, part of Timken's broad lubricant line, is specifically designed for the precision and high-speed bearings typically used in machine tools.

ABOUT THIS CATALOG

Timken offers an extensive range of bearings and accessories in both imperial and metric sizes. For your convenience, size ranges are indicated both in millimeters and inches. Contact your Timken sales representative to learn more about our complete line for the special needs of your application.

USING THIS CATALOG

We are committed to providing our customers with maximum service and quality. This catalog contains dimensions, tolerances and load ratings, as well as an engineering section describing fitting practices for shafts and housings, internal clearances, materials, and other bearing features. It can provide valuable assistance in the initial consideration of the type and characteristics of the bearing that may best suit your particular needs.

CATALOG FEATURES

Dimension and load rating data within the various types and styles of bearings is organized by size.

ISO, DIN, and ABMA, as used in this catalog, refer to the International Organization for Standardization, Deutsches Institut für Normung EV and the American Bearing Manufacturers Association.

SPECIAL APPLICATIONS

Some products, such as for aerospace applications, are made to special standards, and only the original equipment manufacturer can determine if a particular bearing is suitable for use in their equipment.

NOTE

Product performance is affected by many factors beyond the control of Timken. Therefore, the suitability and feasibility of all designs and product selection should be validated by you. This catalog is provided solely to give you, a customer of Timken or its parent or affiliates, analysis tools and data to assist you in your design. No warranty, expressed or implied, including any warranty of merchantability or fitness for a particular purpose, is made by Timken. Timken products are sold subject to a Limited Warranty.

PURCHASER'S EXCLUSIVE REMEDY/ SELLER'S EXPRESS LIMIT OF LIABILITY

Purchaser's exclusive remedy for any warranty claim, or for any claim arising out of the purchase or use of our products, shall be the replacement of said products. We will replace our products, without charge to the purchaser, f.o.b. our point of shipment. We will not be liable for any consequential, incidental, or other damages sustained by purchaser, including but not limited to, loss of profits or revenue, loss of use of product, cost of capital, cost of substituted product, facilities, services, or claims of purchaser's customers for any damages. Any warranty claim of purchaser must be made within one year of the date of shipment of the product. This exclusive remedy applies regardless of the nature of purchaser's claim, whether in contract, tort, express or implied warranty, negligence or strict liability, upon which damages are claimed and regardless of whether the same is due to our negligence or any defect in our product.

LIMITED WARRANTY

We warrant for a period of one year (unless a shorter period applies to a particular product) from the date of shipment that our products shall be free of defects in material and workmanship, as shall be determined by our manufacturing standards, and shall conform to the description on the face of our quotation or this acknowledgment. THE WARRANTY DESCRIBED HEREIN SHALL BE IN LIEU OF ANY OTHER WARRANTY, EXPRESS OR IMPLIED, INCLUDING BUT NOT LIMITED TO ANY IMPLIED WARRANTY OF MERCHANTABILITY OR FITNESS FOR A PARTICULAR PURPOSE. The terms contained herein constitute the entire agreement of the parties and the warranty representations of the seller. There are no other representations, warranties, or guarantees applicable to the sale of our products unless otherwise expressly agreed to by us in writing.

TERMS AND CONDITIONS OF SALE

All products described in this catalog are sold subject to Timken's Terms and Conditions of Sale.

It is understood that the buyer, in selecting and ordering from this catalog, which supersedes all previous editions, accepts all Terms and Conditions of Sale, a copy of which may be obtained from your Timken sales office. Timken objects to any additional or different terms.

⚠ WARNING
Failure to observe the following warnings could create a risk of serious injury.

Proper maintenance and handling practices are critical. Always follow installation instructions and maintain proper lubrication.

Never spin a bearing with compressed air. The rolling elements may be forcefully expelled.

NOTE

Every reasonable effort has been made to ensure the accuracy of the information contained in this catalog, but no liability is accepted for errors, omissions or for any other reason.

SHELF LIFE AND STORAGE OF GREASE-LUBRICATED BEARINGS AND COMPONENTS

Timken guidelines for the shelf life of grease-lubricated rolling bearings, components and assemblies are set forth below. Shelf life information is based on test data and experience. Shelf life should be distinguished from lubricated bearing/component service life as follows:

SHELF LIFE

Shelf life of the grease-lubricated bearing/component represents the period of time prior to use or installation. The shelf life is a portion of the anticipated aggregate service life.

It is impossible to accurately predict service life due to variations in lubricant bleed rates, oil migration, operating conditions, installation conditions, temperature, humidity and extended storage. Timken cannot anticipate the performance of the grease lubricant after the bearing or component is installed or placed in service.

The bearing shelf life is related primarily to the lubricant's ability to maintain the bearing's original manufactured radial internal clearance and freedom to rotate.

The component shelf life is related to the ability of the component to function as originally intended.

Shelf life values, available from Timken, represent a maximum limit and assume adherence to the Timken suggested storage and handling guidelines. Deviations from Timken's storage and handling guidelines may reduce shelf life. Any specification or operating practice that defines a shorter shelf life should be used.

TIMKEN DISCLAIMS RESPONSIBILITY FOR THE SHELF LIFE OF ANY BEARING/COMPONENT LUBRICATED BY ANOTHER PARTY.

STORAGE

Timken suggests the following storage guidelines for its finished products (bearings, components, and assemblies, hereinafter referred to as "Products"):

- Unless directed otherwise by Timken, Products should be kept in their original packaging until they are ready to be placed into service.
- Do not remove or alter any labels or stencil markings on the packaging.
- Products should be stored in such a way that the packaging is not pierced, crushed or otherwise damaged.
- After a Product is removed from its packaging, it should be placed into service as soon as possible.
- When removing a Product that is not individually packaged from a bulk pack container, the container should be resealed immediately after the Product is removed.
- Do not use Product that has exceeded its shelf life as defined in Timken's shelf life guidelines statement.
- The storage area temperature should be maintained between 0° C (32° F) and 40° C (104° F); temperature fluctuations should be minimized.
- The relative humidity should be maintained below 60 percent.
- The storage area should be kept free from airborne contaminants such as, but not limited to: dust, dirt, harmful vapors, etc.
- The storage area should be isolated from undue vibration.
- Extreme conditions of any kind should be avoided.

Inasmuch as Timken is not familiar with a customer's particular storage conditions, these guidelines are strongly suggested. However, the customer may very well be required by circumstance or applicable government requirements to adhere to stricter storage requirements.

Most bearing types are typically shipped protected with a corrosion-preventive compound that is not a lubricant. Such bearings may be used in oil-lubricated applications without removal of the corrosion-preventive compound. When using some specialized grease lubrication it is advisable to remove the corrosion-preventive compound before packing the bearings with suitable grease.

Some bearing types in this catalog are pre-packed with general-purpose grease suitable for their normal application. Frequent replenishment of the grease may be necessary for optimum performance. Care must be exercised in lubricant selection, however, since different lubricants are often incompatible.

When specified by the customer, bearings may be ordered pre-lubricated with suitable greases and oils.

Upon receipt of a bearing shipment, it should be ensured that the bearings are not removed from their packaging until they are ready for mounting so that they do not become corroded or contaminated. Bearings should be stored in an appropriate atmosphere in order that they remain protected for the intended period.

Any questions concerning the shelf life or storage policy should be directed to your local sales office.

ENGINEERING

A

A ENGINEERING

Bearing Selection Process 13
Determination of Applied Loads and Bearing Analysis 36
Bearing Reactions, Load Ratings and Life 42
Permissible Operating Speed 53
Lubrication 56
Run-In Procedures 61
Heat Generation and Dissipation 64
Tolerances 67
Fitting Practices 80
Shaft and Housing Considerations 88
Mounting Designs 92
Setting and Preloading Guidelines 101

A

ENGINEERING

A

THE BEARING SELECTION PROCESS

TIMKEN® BEARINGS

Timken provides an extensive variety of rolling bearing types and sizes – to the extent that customers need not look elsewhere. Knowing that the bearing is often the most critical component within a moving assembly, Timken engineers take great care to ensure the customer is receiving maximum value when a Timken® bearing is selected to perform a given function. With the acquisition of the Fafnir® brand, Timken can provide the proper bearing for virtually any motion-control application. With more than a century of proven experience in bearing technology, Timken is truly a world leader in the rolling bearing industry.

The Timken Company has an experienced, highly skilled staff of trained engineers located around the world to assist the customer in bringing new, mechanized products to market. Timken engineers are a powerful resource for customers to turn to for assistance in the appropriate selection of bearings to meet any of the following considerations:

- Higher technical demands or higher levels of application requirements.
- Higher levels of machine complexity.
- Critical applications where system damage must be avoided for all modes of operation.
- Potential exposure to personal injury.
- Costly damage or downtime resulting from the use of an inappropriate bearing for a given task.

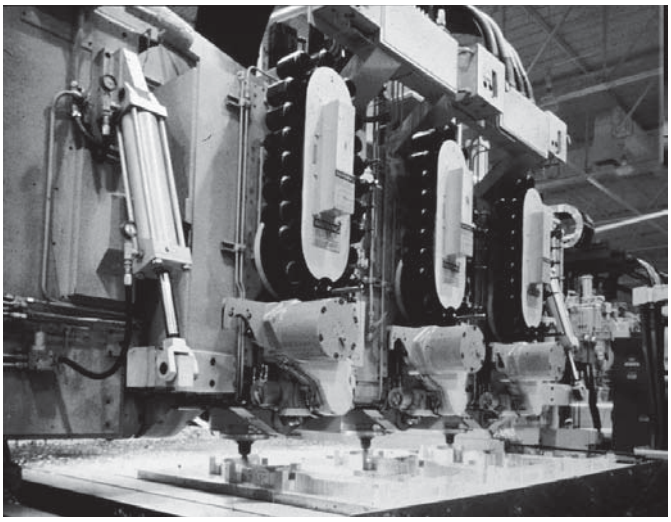

Because Timken offers so many bearing configurations to serve a wide variety of situations, a suggested starting point in the selection process should focus on the assessment of two basic categories: the first being boundary (or fixed) conditions and the second being performance expectations (or desired results). Depending on your application, the boundary conditions and performance expectations will vary. Trade-offs or compromises must often be addressed so that the final bearing type and size selected are a reasonable balance of all factors. It is a wise practice to examine factors critical to the success of the device and prioritize them.

Boundary (or fixed) conditions that should be taken into consideration include:

- External loads, including radial, thrust, moment, shock and combination loads.
- Acceleration and deceleration levels.
- Operating temperature range (including extreme limits and thermal cycling).
- Other environmental factors, such as humidity, fluids, vibration, debris, magnetic fields.
- Spatial constraints.

Performance expectations (or desired results) to consider include:

- Rotational accuracy and repeatability (e.g., service precision level).
- System rigidity (axial or radial stiffness).
- Application service life.
- Speed.

Since the rolling bearing is an integral part of the machine, looking at the key operating parameters of the system also will help focus on the most viable bearing solution.

Typical considerations in machine design also include optimization of controllable variables affecting application performance:

- Bearing design.
- Bearing shaft and housing arrangement; shaft and housing material.
- Installation and handling requirements of the bearing, as well as shaft and housing preparation.
- Presence of adequate sealing for the exclusion of contaminants; types of foreign materials possible.
- Lubricating method (lubrication type and delivery system).
- Maintenance procedures and intervals.

Once these conditions and expectations have been identified and prioritized, the most appropriate bearing type(s), size(s), and part number(s) that meet the basic application requirements can be selected.

BEARING PERFORMANCE CHARACTERISTICS

The following matrix should be viewed only as a general overview of bearings available from Timken and their general performance characteristics. Bearing selection is not a clear-cut, simplistic procedure, but rather a sequence of interdependent tasks that must take into consideration customer goals, manufacturing economics, design expectations and, above all, human safety.

Most machine tool applications require bearings with extreme precision, designed specifically to meet the boundary conditions and performance requirements. Timken® super precision bearings offer quality and precision tolerances to help customers achieve target job requirements and production throughput. It is always prudent to enlist the assistance of your Timken representative to achieve optimum results.

Tapered roller bearing

Thrust tapered roller bearing

Cylindrical roller bearing

Thrust cylindrical roller bearing

Spherical roller bearing

Thrust spherical roller bearing

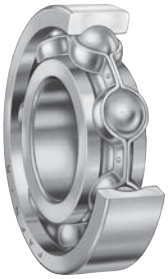

Ball bearing

Thrust ball bearing

Needle roller bearing

Thrust needle roller bearing

Characteristic	Tapered roller bearing	Thrust tapered roller bearing	Cylindrical roller bearing	Thrust cylindrical roller bearing	Spherical roller bearing	Thrust spherical roller bearing	Ball bearing	Thrust ball bearing	Needle roller bearing	Thrust needle roller bearing
Pure radial load	Excellent	Unsuitable	Excellent	Unsuitable	Excellent	Unsuitable	Good	Poor	Excellent	Unsuitable
Pure axial load	Good	Excellent	Unsuitable	Good	Fair	Excellent	Fair	Excellent	Unsuitable	Excellent
Combined load	Excellent	Fair	Fair	Unsuitable	Excellent	Fair	Good	Poor	Unsuitable	Unsuitable
Moment load	Fair	Poor	Unsuitable	Unsuitable	Unsuitable	Unsuitable	Good	Poor	Fair	Unsuitable
High stiffness	Excellent	Excellent	Good	Excellent	Good	Good	Fair	Good	Good	Excellent
Quiet running	Fair	Fair	Good	Poor	Fair	Poor	Excellent	Good	Good	Fair
Low friction	Fair	Fair	Good	Poor	Fair	Fair	Excellent	Excellent	Good	Good
Misalignment	Poor	Poor	Poor	Unsuitable	Excellent	Excellent	Good	Poor	Poor	Poor
Locating position (fixed)	Excellent	Good	Fair	Fair	Good	Good	Good	Excellent	Unsuitable	Excellent
Non-locating position (floating)	Good	Unsuitable	Excellent	Unsuitable	Fair	Unsuitable	Good	Unsuitable	Good	Unsuitable
Speed	Good	Good	Good	Poor	Fair	Fair	Excellent	Excellent	Good	Poor

Table 1. Relative operating characteristics of various bearing types.

A

TIMKEN® SUPER PRECISION BEARINGS

Manufacturers require machine tools that are extremely accurate, reliable and capable of high levels of productivity. A major contribution to the performance of any machine tool is supplied by the rolling bearings used to support the spindles, rotating tables, ball screws and other critical precision positions. A manufactured bearing's precision level has a major influence on the ability to perform in high-speed applications commonly seen in factory machining environments.

WHICH TYPE OF TIMKEN BEARING IS MOST APPROPRIATE FOR YOUR MACHINE TOOL APPLICATION?

To achieve the highest possible performance precision level, the majority of machine tool-related bearing applications must address four primary requirements: speed, stiffness, accuracy and load capacity.

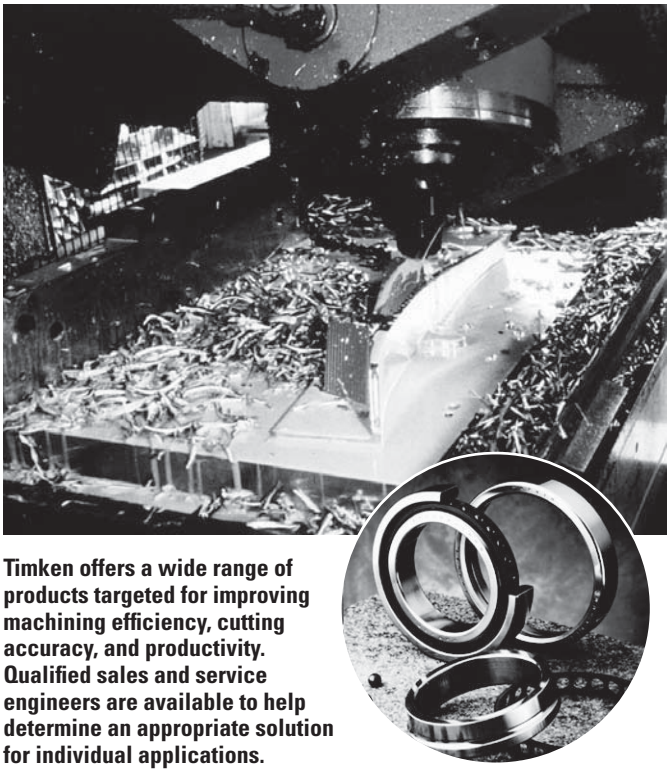

Timken offers a wide range of products targeted for improving machining efficiency, cutting accuracy, and productivity. Qualified sales and service engineers are available to help determine an appropriate solution for individual applications.

Speed

Today's industrial machining environments stress maximum production rates. To reach these high metal-removal goals, machines are operating at maximum speeds with working spindles tuned to provide premium running accuracy.

Achievable spindle rotating speeds require management of heat generation within the bearing assembly. The bearing's ability to not only minimize heat buildup, but also expel excess heat, is a crucial consideration in the bearing selection process. Because of the differences in rolling element contact geometry, ball bearings are superior in minimizing heat generation, especially where higher speeds are desired.

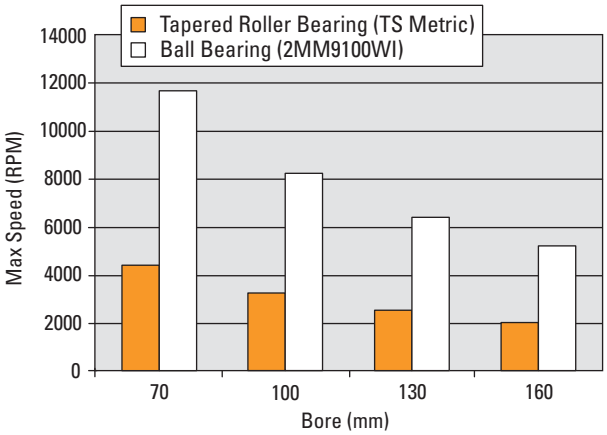

Fig. 1. Tapered roller bearing vs. ball bearing maximum permissible speed (with synthetic high-speed grease).

Figure 1 compares the relative maximum speed of similar cross section ball and tapered roller bearings (both using synthetic grease as a baseline lubricant). Therefore, in applications where higher RPM levels are the primary concern, ball bearings have a distinct advantage.

Bearings must be carefully designed to minimize heat generation and vibration to enable high speeds. Specific strategies include overall bearing configuration, precision internal geometry and material selection. Optimizing bearing ring and shoulder construction with the ball complement supports higher speed performance. Engineering raceway and ball geometry helps to minimize friction, while ceramic rolling elements generate less heat with reduced skidding.

To prevent vibration at high speeds, close bearing tolerances are required. Timken® machine tool bearings are designed to meet or exceed industry tolerance standards and deliver smooth running performance.

In addition to the use of hybrid ceramic technology, further enhancements in speed, as well as control of bearing noise and temperature, can be achieved through cage design or material, and choice of lubrication.

Many of the factors that allow for maximum speed have been designed into Timken's HX series of super precision ball bearings. Engineered for the reduction of friction and minimum heat buildup, this series features unique ball complements and precision-engineered surface geometries. Options for further enhancing speed include the use of low weight ceramic rolling elements, lubrication designed for high speed, and lighter preload levels. These are discussed in further detail later in this catalog.

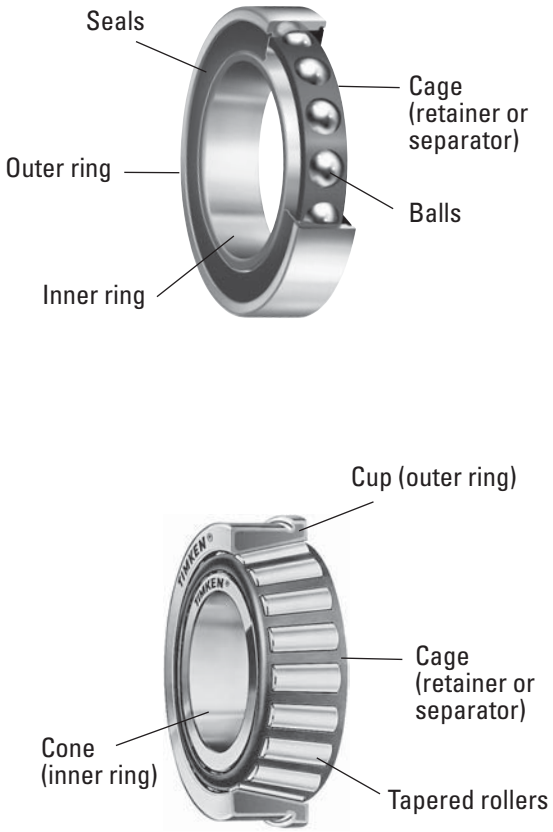

Fig. 2. Bearing components.

Stiffness

The ability to minimize tool deflection experienced under cutting loads is vital to achieving the accuracy needed to produce finished parts within specified tolerances. Less variance produces better quality and helps keep product scrap levels at a minimum. Bearings have a significant effect on spindle stiffness, due to their deflection under applied load. Because of their internal geometry and rolling element type, tapered roller bearings provide considerably higher stiffness levels as shown in Figure 3 and 4.

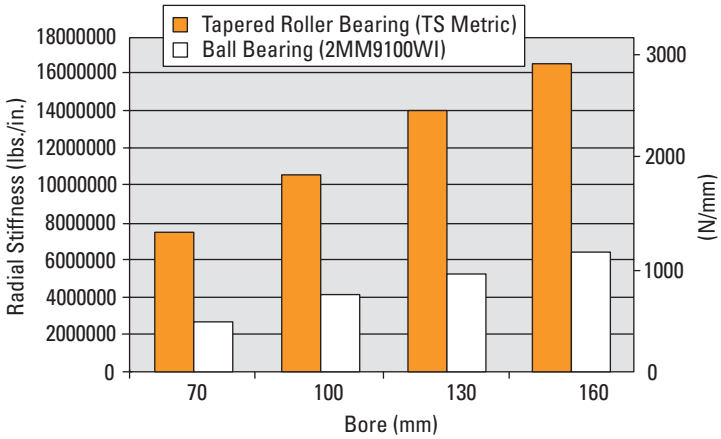

Fig. 3. Tapered roller bearing vs. ball bearing radial stiffness.

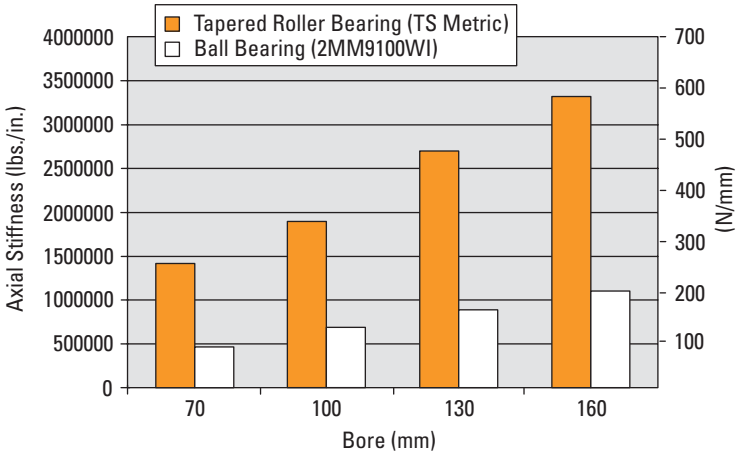

Fig. 4. Tapered roller bearing vs. ball bearing axial stiffness.

Bearing stiffness also depends on design load zone, which is directly related to bearing setting, clearances and applied loads. (Setting is defined as a specific amount of either end play or preload.)[1] A bearing under radial load with zero end play/zero preload has a load zone close to 180 degrees, while a bearing with preload can reach 360 degrees load zone. Figure 5 shows the effect of load zone on tapered roller bearing stiffness. The curves demonstrate that while the effect of external loads on stiffness is important, the impact from setting is more significant.

[1]For additional information, see guidelines on page 101.

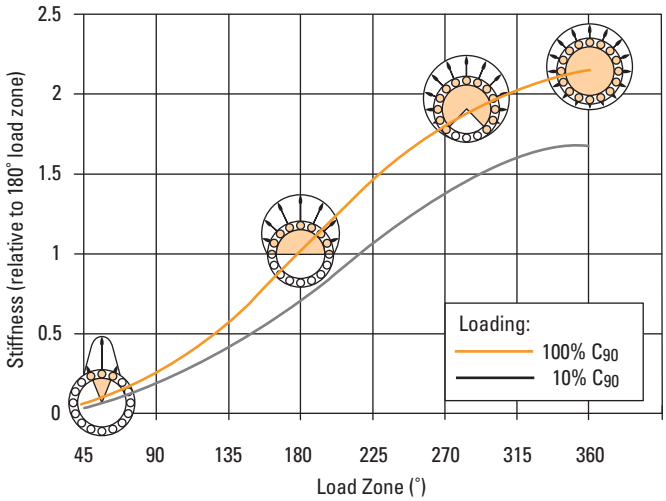

Fig. 5. Effect of load zone on bearing stiffness.

Since thermal expansion can dramatically affect preload or setting, it can also play a very important role in the resulting static and dynamic stiffness of a spindle system. This applies to ball bearings as well.

An inherent advantage of the tapered roller bearing is that it can be adjusted after mounting. This means that the optimum stiffness can be obtained either by determining the proper setting during the mounting phase for a simple bearing arrangement, or during running by the use of a "variable preload" bearing design such as Timken® Hydra-Rib™ and Spring-Rib™ bearings.

To better manage the load sharing of the set of rolling elements, Timken offers a variety of designed-in preload levels for ball bearings. Be conservative with the addition of preloading as these forces will contribute to heat generation, reducing the maximum permissible speed of either ball or tapered roller bearing designs.

Accuracy

Another key factor in the machine's precision is the runout (rotational accuracy) of the bearing. This affects the geometry and surface finish of the target workpiece. For the ultimate accuracy and repeatability of machine tool motion, Timken® super precision ball bearings offer the best control, with quietness of operation and reduced vibration. To achieve the highest level of precision with increased stiffness and load capacity, multiple ball bearings may be used in sets specifically designed for this purpose.

The most widely recognized definition of quality is contained within the ABEC/ISO classes; however some factors affecting performance of a bearing are not completely defined within these standards. This allows for a significant range of variability in product performance among bearing manufacturers. To provide premium performance, all Timken ball bearing MM, MMV and MMX precision grades comply with strict controls over these non-specified parameters – all of which can have a direct impact on the service life and performance of a bearing.

System bearing type			Precision bearing class			
Metric	Timken	Tapered roller bearings	C	B	A	AA
		Crossed roller bearings	S	P	–	–
	ISO/DIN	All bearing types	P5	P4	P2	–
	ABMA	Non-tapered roller bearings	RBEC 5	RBEC 7	RBEC 9	–
		Ball bearings	ABEC 5	ABEC 7	ABEC 9	–
		Tapered roller bearings	C	B	A	–
Inch	Timken	Tapered roller bearings	3	0	00	000
		Crossed roller bearings	3	0	–	–
	ABMA	Ball bearings	ABEC 5	ABEC 7	ABEC 9	–
		Tapered roller bearings	3	0	00	–

Table 2. Precision bearing classes.

Super Precision Ball Bearings, Super High Precision (ABEC 7/9; ISO P4/P2)

Timken super precision ball bearings manufactured to the MM/MMV tolerance class operate with running accuracy and performance levels meeting ABEC 9 (ISO P2) standards yet maintain other features at ABEC 7 (ISO P4) level for cost-effectiveness. Bore and O.D. surfaces are coded in micron units for the convenience of the discriminating machine tool builder striving for optimum fitting of crucial spindle components.

Ultra-Precision Ball Bearings (ABEC 9, ISO P2)

Timken MMX super precision ball bearings, with closer tolerances and running accuracies than ABEC 7 (ISO P4) bearings, are made to ABEC 9 (ISO P2) tolerances. Bearings produced to these tolerances are generally used on ultra-high-speed grinding spindles designed for tight dimensional tolerances and superfine surface finishes. Contact your Timken representative for availability of product range.

Precision Tapered Roller Bearings (Class C/S/3, B/P/0 and A/00)

The more demanding the precision objective, the more accurate the bearing must be. Timken provides three tapered roller bearing classes, in both metric and inch systems, that cover the full range of precision application requirements. In ascending order of accuracy, they are identified in the metric system as Class C/S, B/P, and A, while in the inch system as Class 3, 0, and 00.

Precision Plus™ Tapered Roller Bearings (Class 000/AA)

To further minimize the influence of variations, Timken offers a fourth level of precision tapered roller bearing manufacture so tightly controlled that it goes beyond the grade levels of both ISO and ABMA standards. Timken's Precision Plus™ line offers (metric-nominal) AA level and (inch-nominal) 000 tapered roller bearings in various sizes and styles.

• High-speed motorized routers. • Precision milling/boring machines. • Super precision lathes. • Precision surface grinding machines.	Class MM/MMV	• Ultra-precision grinding machines. • Ball screws.	Class MMX
• Low precision machines. • Drilling machines. • Conventional lathes. • Milling machines. • Precision gear drives.	Class C or 3	• Grinding machines. • Jig boring machines. • Workpiece spindles (of cylindrical grinders).	Class A or 00
• NC lathes. • Milling/boring machines. • Machining centers.	Class B or 0	• High accuracy machines. • Precision measuring instruments. • Special applications.	Class AA or 000

Table 3. Typical precision classes for common machine tool bearing applications.

Timken engineers have at their disposal vast resources of engineering data and application information to select the right bearing class and tune the critical components so that the machine tool achieves its performance objectives. The adjacent table can be considered as a general guideline for common machine tool bearing applications.

A

Load Capacity

Some machining centers, such as rough grinding operations, are strategically designed for higher material removal rates. The need for aggressive feed rates requires higher load-carrying capacities. These loads can be properly distributed among the rolling elements by providing a permanent force called "preload" or "setting." Preload is the strategic removal of radial play within the bearing to ensure proper rolling element contact on both the inner and outer race. While Timken posts its load capacities in the product tables within this catalog, many applications often approach only a fraction of those limits. For example, workpiece finish may determine the feed rates needed in an application, thereby decreasing the importance of bearing capacity.

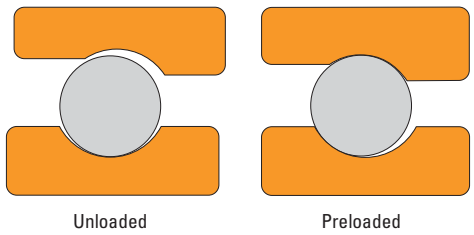

Fig. 6. Effect of preloading on ball bearing raceway contact.

Figure 7 compares the levels of static capacity of ball vs. tapered roller bearings for the benefit of contrasting basic load capability of both bearing types.

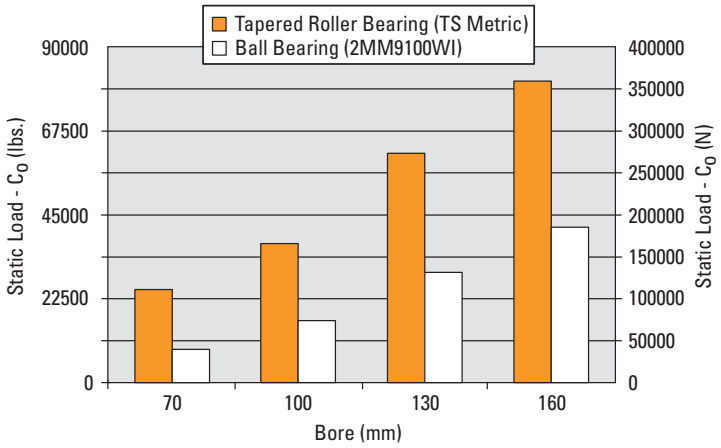

Fig. 7. Tapered roller bearing vs. ball bearing static capacities.

Consult the topics in this section addressing static and dynamic load capacity for more detailed information regarding ball bearings and tapered roller bearings to refine your choice.

Timken can assist in the final bearing selection to help you achieve your precision machining production goals. Timken's staff of application engineers is ready to put its vast experience to any test for assisting our customers with the challenging bearing applications commonly found in the machine tool industry. To refine your search, please turn to the sections covering tapered roller bearings (Sec. B) or ball bearings (Sec. C) for more information needed to obtain a complete Timken part number specification.

TIMKEN® MACHINE TOOL BEARING DESIGN

From this introductory discussion and the additional technical content within this catalog, one can obtain an indication of which rolling bearing type should be further investigated to meet the given set of boundary conditions and performance expectations.

TIMKEN® PRECISION TAPERED ROLLER BEARINGS

The fundamental design principles of the tapered roller bearing make it an ideal solution for low-speed/high-load or low-speed/high-stiffness requirements of machine tool applications.

True Rolling Motion

The angled raceways of a tapered roller bearing enable it to carry combinations of radial and axial loads. True rolling motion of the rollers and line contact on the race allow the bearing to run cooler and improve spindle stiffness and accuracy as compared to other roller bearing types. The true rolling motion is the result of two design features: the taper of the roller and the contact between the spherical surface ground on the large end of the rollers and the race rib. The rollers are designed so extensions of the lines along the roller body converge toward the centerline of the bearing and meet at an apex on this centerline (Figure 8). As a result, there is no relative slip between the rollers and races.

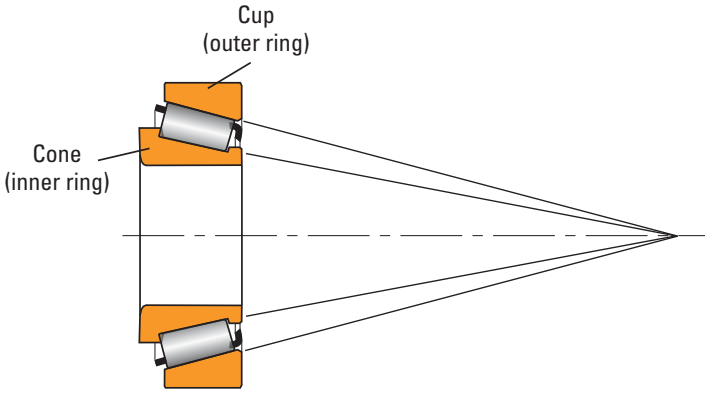

Fig. 8. On-apex design results in true rolling motion at all points along the roller body.

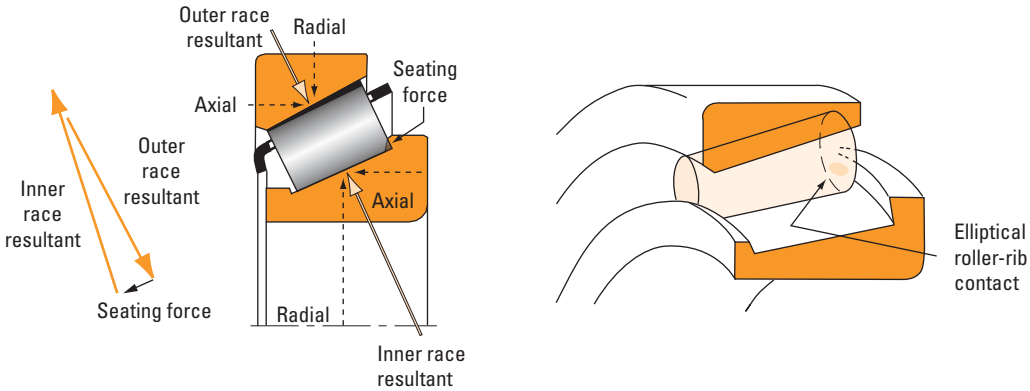

Fig. 9. Small seating force from the inner race rib keeps rollers aligned on the raceway.

The tapered configuration of the roller not only ensures that the surface speeds of the rollers and races match at every point along the roller body, but also generates a seating force that pushes the rollers' spherical ends against the race rib. This desirable seating force is a function of the different angles of the outer and inner races (Figure 9) and prevents rollers from skewing off apex. No skew means positive roller alignment, thereby enhancing bearing life, stiffness and accuracy.

Some applications require a level of precision that cannot be achieved with standard tapered roller bearings. Timken® precision tapered roller bearings promote and maintain the operating accuracy required of today's machine tool industry and various related, specialized markets. Precision class tapered roller bearings offer machine tool builders an economical design solution that exceeds most application needs for rotational accuracy and rigidity.

PRECISION CLASSES

Timken's high-precision tapered roller bearings consist of carefully matched components that offer an added degree of fine-tuning in the bearing setting and adjustment procedure to maximize customer machine productivity. Timken manufactures high-speed designs with a variable preload capability for optimum machining and Precision Plus bearings – having an overall radial runout less than a single micron.

The application of precision tapered roller bearings is not limited to machine tools. Wherever spindles turn and rotational accuracy is essential to the machine's performance, precision tapered roller bearings can be an excellent choice. Other typical applications are printing presses, optical grinders, profile cutters, indexing tables, precision drives, measuring gauges and ball screw drive applications.

To better serve the global machine tool market, Timken has manufacturing resources around the world focused exclusively on premium precision bearings. With these dedicated resources, precision quality is built into the bearing during manufacturing. To further increase service reliability, Timken precision tapered roller bearings are manufactured from high-quality steel alloys.

A

Precision Tapered Roller Bearing Types

The size range of Timken precision tapered roller bearings starts from less than 20.000 mm (0.7874 in.) bore and extends to more than 2000.000 mm (78.7402 in.) O.D., depending on bearing type. The most popular types made in precision classes are the single-row TS and flanged TSF as shown in Sec. B. Comprised of two main separable parts, they are usually fitted as one of an opposing pair. These bearing types are supported by a range of special bearings which have been designed for machine tool applications, such as the variable preload Hydra-Rib bearing, the high-speed TSMA bearing, and the compact TXR crossed roller bearing, which is available only in precision classes. Timken also offers a selection of two-row precision tapered roller bearings types such as the double outer ring type TDO.

Crossed Roller Bearings

A crossed roller (TXR) bearing is comprised of two sets of bearing races and rollers brought together at right angles to each other, with alternate rollers facing opposite directions, within a section height not much greater than that of a single-row bearing. Also, the steep-angle, tapered geometry of the bearing causes the load-carrying center of each of the races to be projected along the axis, resulting in a total effective bearing spread many times greater than the width of the bearing itself.

Because of the ability of the crossed roller bearing to withstand high overturning moments, it is ideal for the table bearing of machine tools such as vertical boring and grinding machines. This bearing also is well-suited for other pivot and pedestal applications where space is limited or the lowest possible center of gravity of a rotating mass is required.

Crossed roller bearings are available in two precision classes:

- Metric system Class S and P.
- Inch system Class 3 and 0.

The most common form of the bearing is type TXRDO, which has a double outer race and two inner races, with rollers spaced by separators.

Other mounting configurations and sizes of crossed roller bearings can be supplied to meet particular assembly or setting requirements. Please contact your Timken representative for further information. Also, refer to Section B for more details.

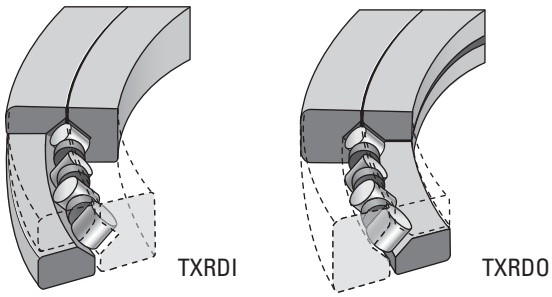

Fig. 10. TXRDI and TXRDO.

Hydra-Rib™ Bearings

Experience has demonstrated that by optimizing the design parameters of bearing geometry, spindle diameter, bearing spread, lubrication system and mounting, the two single-row bearing layout provides good results over a range of speeds and power. However, for very wide variations of speed and load, the variable preload Timken Hydra-Rib bearing concept is an excellent solution.

The Hydra-Rib bearing (Figure 11) has a floating outer ring rib in contact with the large roller ends instead of the usual fixed inner ring rib. This floating rib operates within a sealed cavity at a given pressure controlled by an appropriate hydraulic or pneumatic pressure system. Changing the pressure consequently changes the preload in the bearing system.

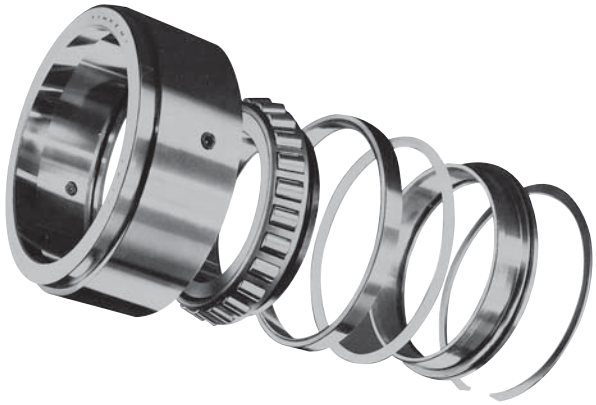

Fig. 11. Exploded view of a typical Hydra-Rib™ bearing.

The controlled pressure enables the floating rib to maintain constant spindle preload even though differential thermal expansion occurs in the spindle system during the working cycle. By changing the pressure, a variable preload setting can readily be achieved. This unique bearing concept allows the operator to control any machining condition by simply changing the pressure to optimize the dynamic stiffness and damping characteristics of the spindle. Furthermore, the hydraulic or pneumatic pressure control system can easily be monitored by the numerical control of the machine. In the case of oil pressure control, the hydraulic circuit of the machine can be used.

Your Timken representative should be consulted to determine the optimum bearing selection as well as the pressure figures, as a function of the given running conditions.

TIMKEN® SUPER PRECISION BALL BEARINGS

The Timken line of super precision machine tool ball bearings is designed to meet ABEC 7/9 (ISO P4/P2) tolerance levels. However, Timken manufactures all super precision ball bearings to surpass ISO/ABMA criteria to ensure that the end users receive only the highest quality product to maximize machine performance.

Spindle bearings are the most popular type of super precision ball bearing used within the machine tool industry. These angular contact bearings are used primarily in precision, high-speed machine tool spindles. Timken manufactures super precision machine tool bearings in four metric ISO dimensional series. In addition, because of specialized variations of bearing design and geometry, Timken offers a total of seven angular contact bearing types within these four basic series:

- ISO 19 (9300WI, 9300HX series).
- ISO 10 (9100WI, 9100HX, 99100WN series).
- ISO 02 (200WI series).
- ISO 03 (300WI series).

Multiple internal geometries are available to optimize either load-carrying capacity or speed capability: WI, WN, HX or K. WI-type bearings are designed to maximize capacity of the various bearing cross sections and are used in low to moderate speeds. The HX is Timken's proven high-speed design. It has a significant advantage at higher speeds, generating less heat and less centrifugal loading forces. The WN-type is generally a compromise between the WI and HX as it offers higher speed capability than the WI, but lower capacity and higher stiffness than the HX design, with lower speed capability.

Most of the bearing types are available in either 15 degree (2MM) or 25 degree (3MM) contact angles. In addition, Timken now stocks more ceramic ball sizes than ever for the highest speed requirements.

The K-type deep-groove (Conrad) super precision radial bearing is generally used in applications where capacity and stiffness do not require sets containing multiple bearings. By virtue of the single-row, radial deep-groove construction, and super precision level tolerances, these are capable of carrying thrust loads in either direction, and have a relatively high-speed capability – especially if a light axial preload is applied. Timken offers deep-groove super precision radial machine tool bearings in the following ISO dimensional series:

- ISO 10 (9100K series).
- ISO 02 (200K series).
- ISO 03 (300K series).

Ball Screw Support Bearings

To meet the demands of the servo-controlled machinery field, Timken® ball screw support bearings are specially designed with steep contact angles and provide high levels of stiffness for ball screw application requirements. Timken's series of double-row, sealed, flanged (or cartridge) units use an integral double-row outer ring to help simplify installation procedures. Timken offers the following ball screw support bearing products:

- Inch series bearings (MM9300).
- Metric series bearings (MMBS).
- Flanged cylindrical cartridge housings (BSBU).
- Pillow block housings (BSPB).
- Integral double-row units (MMN, MMF).

A

SELECTING THE APPROPRIATE MACHINE TOOL BEARING

PRECISION TAPERED ROLLER BEARINGS

Angularity (K-factor)

The angled raceways allow the tapered roller bearing to carry combinations of radial and axial loads. Since load capacities are intrinsically linked to the bearing stiffness, the selection of the most appropriate tapered roller bearing cup angle can help optimize the bearing selection for a given application.

The angularity of the bearing is often described by a factor called "K." This factor is the ratio of basic dynamic radial load rating (C_{90}) to basic dynamic axial load rating (C_{a90}) in a single-row bearing. For a bearing with a ribbed cone (the most common design), it is a function of the half-included cup angle (α) and can be found listed with the geometry factors in the catalog appendix. The smaller the K factor, the steeper the bearing angle. (See Figure 12).

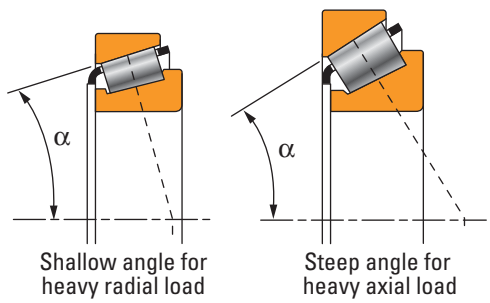

$$K = \frac{C_{90}}{C_{a90}} = \frac{0.39}{\tan(\alpha)}$$

Fig. 12. Designs to support radial and axial loads in any combination.

Size

Optimizing stiffness is often a customer's primary design goal when choosing a tapered roller bearing. This usually results in the determination of a desired spindle diameter. Therefore, meeting a given envelope narrows the choices for the tapered roller bearing size selection.

Speed

The next most common criteria are the speed capability/limitations of the remaining potential candidates. This can be challenging, since the speed rating of a tapered roller bearing is a function of its internal geometry, the axial setting under operation conditions, the lubricant used and method of delivery. There is a speed guideline matrix on page 54 that will aid in determining the speed rating and suggested lubricant/delivery method for your tapered roller bearing application. Included in the appendix is a table listing the G_1 and G_2 factors that can be utilized to compare the relative speed capability and heat generation between the various tapered roller bearing selections. Please refer to the topics on permissible operating speeds and heat generation for further discussion.

Construction

Tapered bearings are uniquely designed to manage both axial and radial loads on rotating shafts and in housings. The steeper the cup angle, the greater the ability of the bearing to handle axial loads. Customized geometries and engineered surfaces can be applied to these bearings to further enhance performance in demanding applications.

Timken has designed a variety of tapered roller bearing types to specifically address various machine tool requirements. Each of these designs is best suited to a specific set of application needs. The key features of each type are highlighted below:

TS or TSF Bearing

- Most widely used type of tapered roller bearing.
- Minimum precision grade Level 3 or C (ISO P5).
- TSF has a flanged outer ring to facilitate axial location.
- Available in most bearing series.
- Used in rotating shaft applications.

TSMA Bearing

- Axial oil manifold with axial holes through rib.
- Suitable with circulating oil or oil mist lubrication.
- Centrifugal force distributes oil to critical rib/roller end contact.
- Available in most precision grades.
- Available in most bearing series.
- Used in rotating shaft applications.

Hydra-Rib Bearing

- Designed to maintain optimum spindle system preload.
- Floating outer ring rib is positioned by a "pressure" system.
- Rib in contact with the large roller ends instead of the usual fixed inner ring rib.
- Variable preload setting adaptable to manual, tape, or computer control.
- Wide speed range with optimum preload setting.
- Improved spindle accuracy.
- Improved static and dynamic stiffness.
- Lower operating temperatures.
- Heavier cuts with better tool life.

Spring-Rib Bearing

- Designed to maintain optimum spindle system preload.
- Floating outer ring rib is positioned by a "spring" system – pressurizing system not required.
- Rib in contact with the large roller ends instead of the usual fixed inner ring rib.
- Improved spindle accuracy.
- Improved static and dynamic stiffness.
- Heavier cuts with better tool life.

Crossed Roller Bearing

- Designed to resist overturning loads.
- Steep-angled geometry provides wider effective spread.
- High tilting stiffness.
- Adjustable design for optimum preload.
- Compact design reduces space requirement.
- Reduced application machining costs.

End Play (Preload)

The end play of a tapered roller bearing during installation affects:

- Load zone control, impacting bearing life.
- System rigidity, impacting deflection.
- Housing and shaft diameter tolerances.

End play/preload setting is determined based on desired stiffness, reduction in heat generation, and optimal rated life. For information on setting, please see page 101.

Precision Class

Typically, once the most appropriate bearing part number is identified for a particular application, the final parameter is the desired precision level. Standard class tapered roller bearings have crowned or enhanced profiles for races and rollers. Timken precision tapered roller bearings have straight profiles with running accuracy and performance meeting ABEC 5/ISO P5, ABEC 7/ISO P4, and ABEC 9/ISO P2 levels. The Precision Plus series offers total radial runout of less than a single micron, exceeding the ABEC 9/ISO P2 precision level and allowing for improved accuracy. The suggested assembly and/or inspection code (precision class and performance code) can be applied to the chosen part number to obtain the necessary precision level.

Other

Consult Timken for suggestions related to appropriate bearing enhancements that can improve the performance of your application.

Such enhancements might include unique precision levels, conversion of a TS-style design to a (flanged) TSF or (multi-row) TDO, or possibly ceramic rolling elements for better stiffness and speedability.

A

SUPER PRECISION BALL BEARINGS

As previously noted, optimizing speed, stiffness, accuracy and load capacity is often a customer's primary design goal. This usually results in the identification of several characteristics that will determine the final bearing selection. The following design variables influence bearing performance as noted.

Contact Angle

A contact angle is created between the rolling element and raceway to support a combination of radial and axial (thrust) loads. Deep-groove (Conrad) bearings designed with 0-degree contact angle are best for supporting radial loads or small axial loads in two directions. To support high axial or combination loads, angular contact bearings are often preferred. For additional support of radial and axial load in either direction, sets of bearings in opposing directions are utilized.

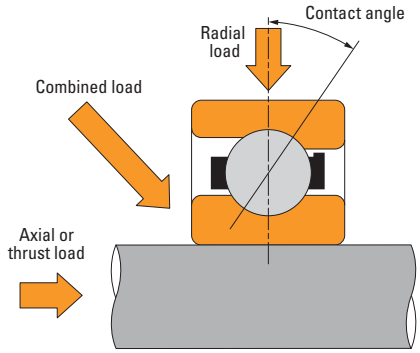

Fig 13. Example of ball bearing loading.

The majority of Timken angular contact super precision ball bearings are available with standard high (25 degree) and low (15 degree) contact angles, with additional options upon request. Each type has inherent characteristics that are desirable for machine tool spindles. Contact angle is chosen primarily based on the predominant load direction.

- 15º - used when loading is primarily radial; for very high speed applications.
- 25º - used when loading is primarily axial.
- 60º - highest axial stiffness; used in ball screw support bearings.

High speeds cause centrifugal forces on the ball. A lower contact angle handles the centrifugal force more favorably as higher speeds lead to higher internal radial loads.

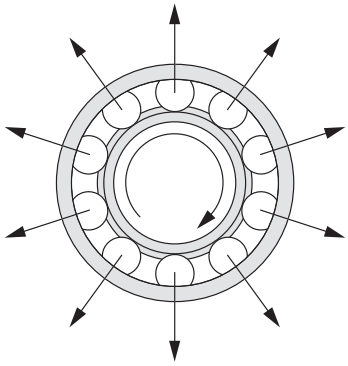

Fig 14. Centrifugal forces of a rotating ball bearing.

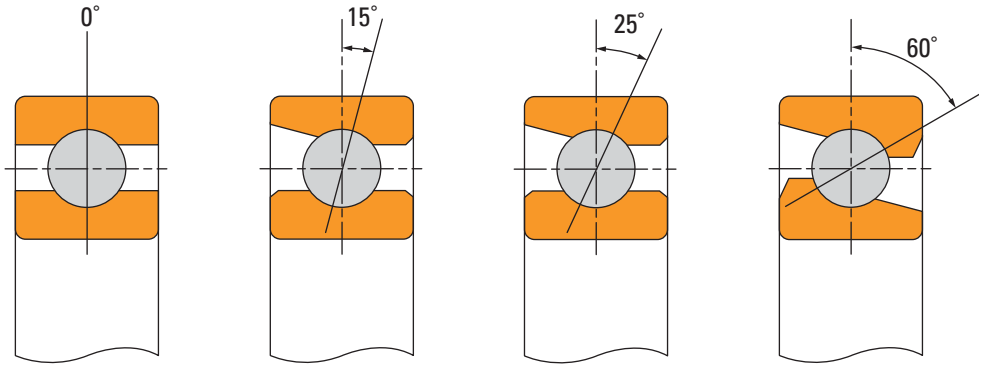

Fig 15. Examples of common machine tool ball bearing contact angles.

Spindle rotating speeds are limited by heat generated within the bearing assembly. As viewed in Figure 16, a lower contact angle minimizes heat buildup yielding lower operating temperatures at higher speeds.

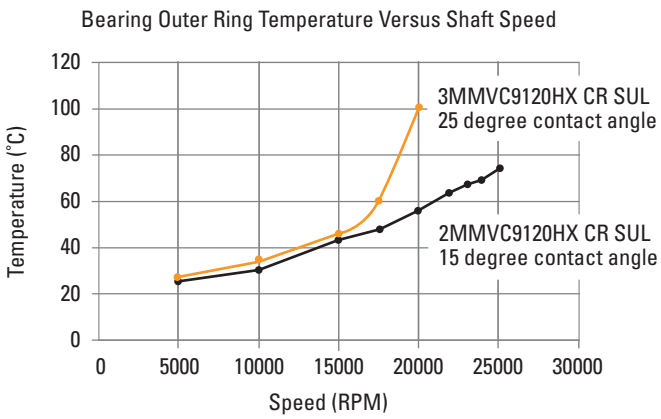

Fig 16. Effect of contact angle on temperature.

Axial deflection curves for two like-series, equal bore-sized bearings with standard preloads and contact angles are shown below.

A comparison of the curves in Figure 17 shows the 25-degree contact angle bearing to be more rigid axially under axial loads than the 15-degree contact angle bearing. Similar comparisons of the radial deflection characteristics of the same two types of angular contact ball bearings can be made from the two graphs shown in Figure 18. These curves show that decreased radial deflections result when bearings having a lower, 15-degree angle are used.

Generally, the force for the equivalent preload level for a 15-degree contact angle bearing is about one-half that of the preload level for a 25-degree contact angle bearing. Preload values for all Timken machine tool grade angular contact bearings are calculated to give optimum performance over a wide range of applications.

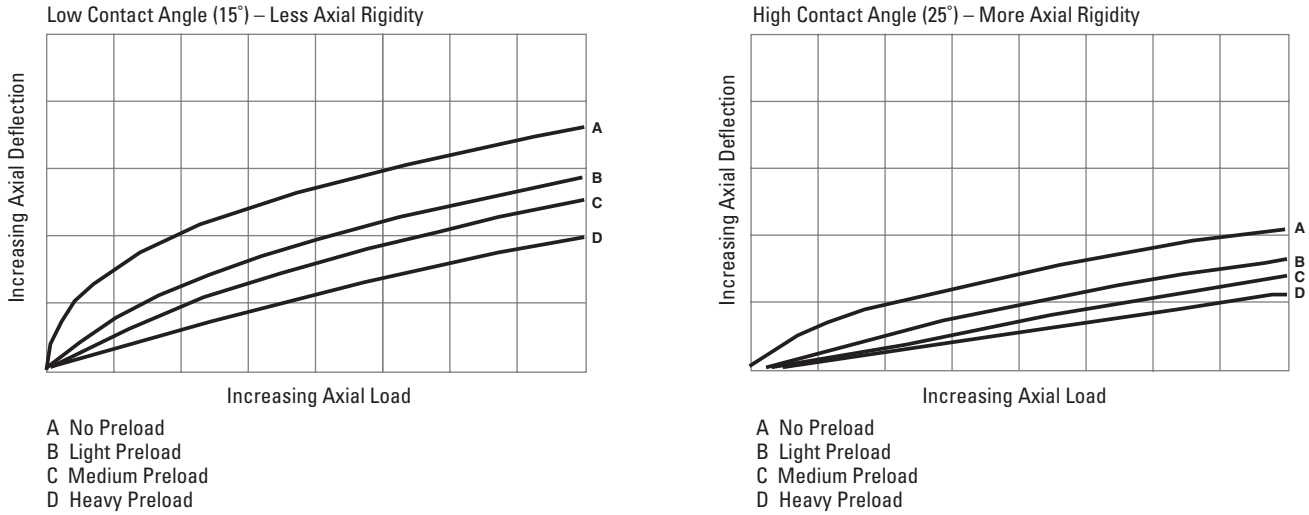

Fig. 17. Effect of contact angle on axial deflection.

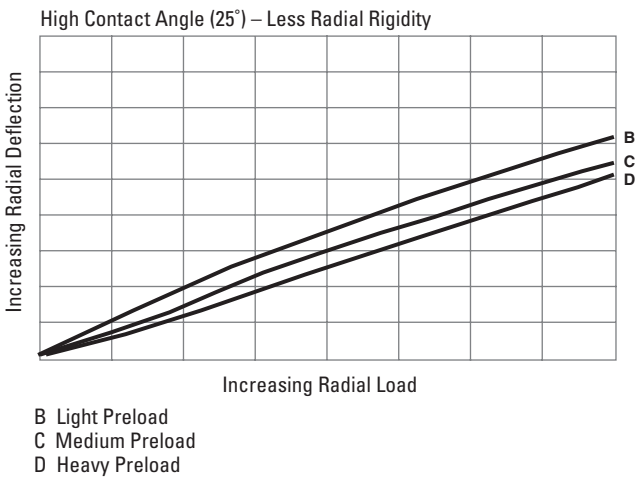

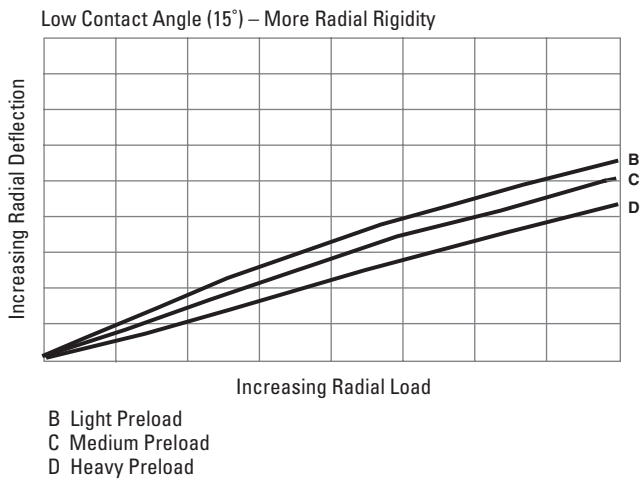

Fig. 18. Effect of contact angle on radial deflection.

Timken ball screw support bearings are designed with a 60-degree contact angle. They are used for low-speed operations and offer the highest axial stiffness in the standard super precision ball bearing machine tool line. As contact angle increases, axial stiffness increases, radial stiffness decreases, and maximum operating speed decreases.

Precision Class

Super high precision MM/MMV bearings are manufactured with running accuracy and performance meeting ABEC 9/ISO P2 while maintaining other features at ABEC 7/ISO P4 levels for cost-effectiveness.

Ultraprecision MMX ABEC 9/ISO P2 have closer tolerances on bore and O.D. Bearings produced to these tolerances are used on ultra-high-speed grinding spindles designed for tight dimensional tolerances and superfine surface finishes.

Hybrid Ceramic

Timken has designed an advanced bearing that combines ceramic rolling elements with premium steel rings and state-of-the-art bearing technology to achieve maximum speed capability and greater stiffness. Compared with an all-steel bearing, the hybrid ceramic bearing's lower friction characteristics, even under marginal lubrication, result in less ball skidding, lower heat generation, higher speeds and greater overall system reliability.

Ceramic balls are 60 percent lighter than steel with extremely fine surface finishes equal to or less than 0.5 micro-inch Ra. This helps to reduce centrifugal forces and allows for a 20 percent higher speed factor than steel balls. Oil-lubricated ceramic hybrid bearings can operate up to three million dN, while grease-lubricated ceramic hybrids can run up to one million dN.

dN = bore size (mm) x speed (RPM)

The ceramic material has a modulus of elasticity 50 percent greater than steel, increasing bearing rigidity. This higher stiffness may result in higher contact stress levels in the bearings. Ceramics are generally not appropriate for higher loads and/or low speeds. As seen in Figure 19, below 750,000 dN, ceramic balls experience a reduction in overall rated bearing life.

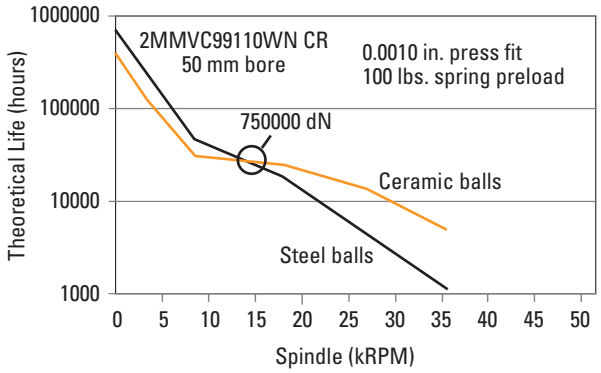

Fig. 19. L_{10} life vs. speed comparison of steel and ceramic balls.

Size/Series

Increasing bearing size causes an increase in centrifugal forces which, as discussed earlier, reduces the speedability of the bearing. An increase in ISO cross-section series improves the ability of a bearing to carry higher loads as shown in Figure 20.

- 9300 series: ultra-light loads, high speed.
- 9100 series: extra-light loads, high speed.
- 200 series: light loads.
- 300 series: medium loads.

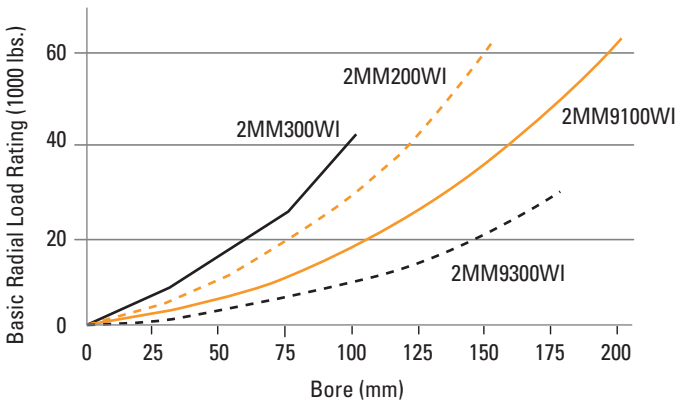

Fig 20. Angular contact ball bearing load ratings.

When stiffness is a factor of the design, this usually results in the determination of a desired spindle diameter and corresponding bearing bore size. Speedability and load capacity then determine the series selected.

Construction

WI is the standard construction for an angular contact ball bearing. The WI-type has full shoulders on both sides of the inner ring and a low shoulder on the outer ring. This simplifies bearing assembly during manufacturing.

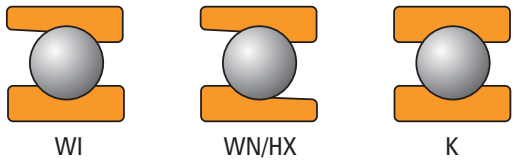

Fig. 21. Angular contact spindle bearing types.

Timken has developed an HX bearing design to enhance two key factors contributing to metalworking throughput: spindle speed and radial stiffness. This design enables spindle heads to remove more material in less time while maintaining superior finished product tolerances by minimizing tool "wander." This efficient combination translates into faster turnaround of finished product. These improvements are imparted by subtle changes to ball complements and internal geometries. The Timken HX Series is dimensionally interchangeable with the 9300 and 9100 series ball bearings.

The HX and WN-types also are designed to meet the needs of machine manufacturers who require optimum lubrication through the bearings. These designs incorporate a low shoulder on the non-thrust side of both the inner and outer rings to facilitate oil flow.

K-type, deep groove (Conrad), 0-degree radial ball bearings are generally chosen in applications where capacity and stiffness do not require a duplex set of bearings. Axial load applied to the bearing will increase the contact angle.

Cage (Retainer or Separator)

A cage's function is to separate the rolling elements within the bearing. It first affects bearing performance by adding weight, which will increase the centrifugal forces and resulting radial load at high speeds. This limits the ability of the bearing to perform at high temperatures. Timken's range of cage types includes:

CR	Phenolic (composition) - standard
PRC	Molded reinforced nylon - former standard
MBR	Machined bronze
PRJ	High-performance polymer
SR	Silver-plated machined steel

Timken's phenolic composition cage is standard for high-speed applications up to 93°C (200°F). For high-heat applications, machined bronze is often used. However, the increase in weight reduces the speedability of the bearing assembly.

Seals

Seals are used to exclude contaminants and retain lubricant for reliable bearing operation and extended service life. The HX bearing has an optional non-contacting seal, available as single or pair (V, VV). The WI 9100 and 9300 series have an optional light-drag contacting seal (P, PP). Ball screw support bearing cartridges (MMN/MMF) include integral, low-torque contact seals.

Bearing Set Quantity

Timken super precision ball bearings are available as single, duplex, triplex, and quadruplex matched sets:

SU	(X, L, M, H) - single bearing/preload level
DU	(X, L, M, H) - duplex pairs/preload level
TU	(X, L, M, H) - triplex set/preload level
QU	(X, L, M, H) - quadruplex set/preload level

Each additional bearing increases system rigidity and load-carrying capabilities. The quantity of bearings in a set is specified in the part number as shown.

A

Timken super precision ball bearings are universal flush ground, which allows for DB (back-to-back), DF (face-to-face), or DT (tandem) mounting of all matched duplex sets. This does not need to be specified during order.

Preload Level

The internal condition of a preloaded ball bearing is similar to that of one in operation under axial load. This initial axial load serves to decrease markedly the axial and radial deflections when subsequent operational loads are imposed on the bearing assembly. Preload levels limit change in contact angle at very high speeds, and prevent ball skidding under very high acceleration and speed.

In many cases, the amount of bearing preload is a trade-off between having the desired degree of rigidity and reducing any adverse effect preloading has on the equipment. If the operating speed is high, a heavy preload can lead to excessively high operating temperatures, which may result in bearing damage. To match general performance requirements, four classes of ball bearing preloads are used – extra-light, light, medium and heavy. To maximize performance, Timken can design specially preloaded super precision ball bearings.

Sealed Ball Screw Support Bearings

Available in flanged (MMF) and non-flanged (MMN) series, these designs simplify installation for both standard and rotating nut mountings. The flanged version eliminates the need for external clamping of the outer ring. The standard version is the sealed duplex configuration, but both series may be ordered with seals or shields in either a duplex or quad set arrangement.

Wear/Debris-Resistant Material

Advanced bearings can resist debris wear for improved machine tool performance and service life. Timken super precision bearings with WearEver technology combine a special high-alloy steel with ceramic balls to provide superior performance and cutting quality for high-speed applications. Extended capabilities help improve machine efficiency and utilization while reducing secondary finishing operations and downtime.

This unique, wear/debris-resistant steel was specifically incorporated into the bearing design to withstand damage from hard contaminants, a primary cause for shortened bearing life. Studies have shown that bearings with this advanced material can deliver up to ten times the standard service life in the presence of hard contamination. This represents a significant advancement in high-speed machining productivity and improved product quality. Consult your Timken representative for availability.

Other

Bearings may be customized to specify lubrication type, special coding, special part marking, etc. Contact your Timken representative for more information.

2 MM C 91 04 WI CR DUL A4437
FS637

A4437 = Special coding requirement
FS637 = Kluber isoflex NBU 15 Grease

Fig. 22. Examples of non-standard specification numbers.

SPINDLE SYSTEM CHARACTERISTICS

A machine tool designer's goal is to build a precise spindle with the least possible vibration and with the optimum heat generation and dissipation characteristics. This will then produce the best surface finish, dimensional accuracy and optimum production rates.

Due to increasing cutting speeds and forces, machine tool builders are developing spindle designs to improve dynamic stiffness.

Dynamic stiffness depends upon:

- Static stiffness.
- Damping.
- Mass.

From a design standpoint, the bearing selection has little effect on mass, but static stiffness and damping can be altered by bearing and application design criteria. The natural frequency of a system can be radically altered by any change in the static stiffness. On the other hand, damping will determine the magnitude of displacement of a system in the chatter mode. Tests have shown that the damping varies with the type of rolling bearing used.

SPINDLE SYSTEM STATIC STIFFNESS

The static stiffness, or "spring rate," of a system is defined as the ratio of the amount of load to the deflection of the spindle at the point of load, and is expressed in N/mm (lbs./in.).

In conventional spindle designs, the load is usually applied at the end of the spindle nose.

In a spindle system, a few factors contribute to the total static stiffness:

- Bare spindle stiffness.
- Bearing stiffness.
- Housing stiffness.

Bare Spindle Stiffness

Figure 23 illustrates the important elements that need to be considered to determine the bare spindle stiffness:

- Diameter of the spindle.
- Overhung distance from the nose bearing to the load.
- Bearing spread.

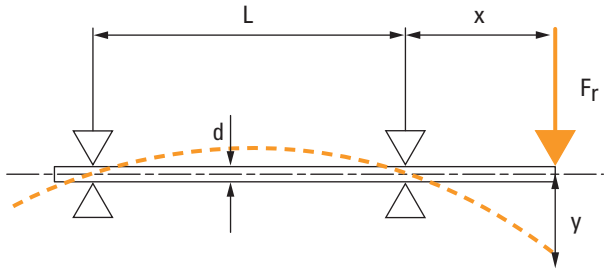

Fig. 23. Deflection of the bare spindle on two supports.

The maximum value of the spindle deflection at the point of load is:

$$y = \frac{F_r x^2 (x + L)}{3EI} \text{ (mm)} \qquad \text{with } I = \frac{\pi x d^4}{64} \text{ (mm}^4\text{)}$$

Where:

F_r	=	radial load applied at spindle nose	(N)
L	=	bearing spread	(mm)
x	=	overhung distance	(mm)
I	=	moment of inertia	(mm^4)
y	=	deflection at point of load	(mm)
d	=	diameter of spindle	(mm)
E	=	modulus of elasticity	(N/mm^2)

Therefore, the static stiffness of the bare spindle at this point is:

$$K = \frac{F_r}{y} = \frac{3EI}{x^2(x + L)} = \frac{3E\pi d^4}{64x^2(x + L)}$$

The previous formula shows that the diameter of a shaft is considered to the fourth power. Thus, any increase in spindle diameter will significantly increase stiffness. From a design standpoint, this means that the selected bearings should have as large a bore diameter as practical for a given outside diameter (Figure 24).

The overhung distance from the nose bearing to the applied loads is generally fixed by design constraints (or load cycles). However, the stiffness of the bare spindle can be increased by determining the optimum spread between the two supports. For a given overhung distance "x," the bearing spread has an optimum value for minimum deflection at the cutting point (Figure 25).

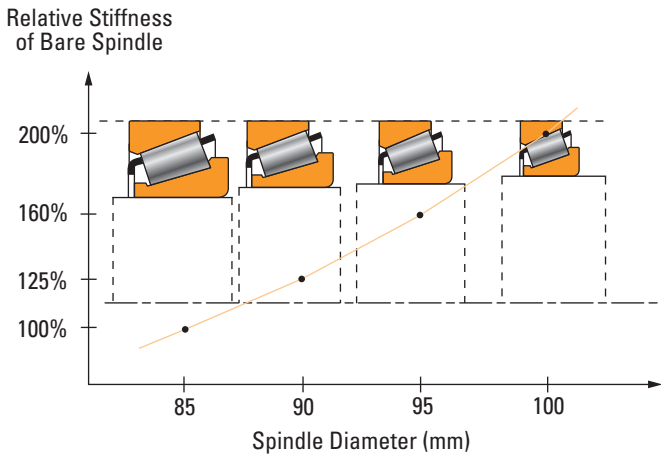

Fig. 24. Influence of spindle diameter on its stiffness for different tapered roller bearings sections within same envelope (85 mm bore taken as reference).

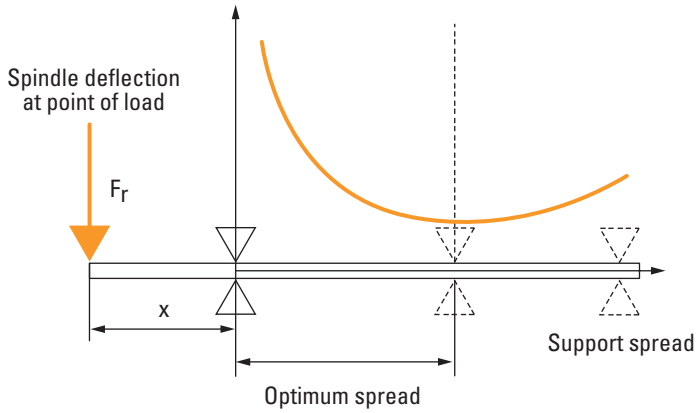

Fig. 25. Influence of spread on bare spindle deflection at point of load.

Bearing Stiffness

Stiffness is significant in precision machining applications. This impacts machine repeatability and running accuracy. Bearing stiffness is determined by movement or microscopic deflection under load within the bearing assembly.

Because of the contribution of bearing stiffness to the global system, it is of prime importance to consider the effect of the selection of the bearing and its geometrical characteristics. A tapered roller bearing is a line contact bearing with a high number of rolling elements. Compared to other popular bearings in spindle applications, such as angular contact ball bearings (point contact) or cylindrical roller bearings (line contact), the preloaded tapered roller bearing (line contact) has a significantly higher radial stiffness in the same given envelope.

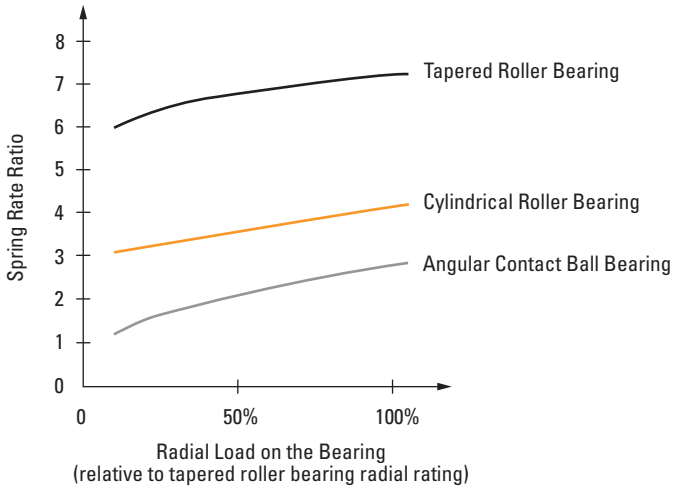

Fig. 26. Radial spring rate comparison between popular machine tool bearings of a comparable size under zero internal clearance.

Comparisons (Figure 26) show that a tapered roller bearing has as much as six times more radial stiffness than a comparable size angular contact ball bearing, and twice as much as a comparable size cylindrical roller bearing, for a zero clearance condition. Therefore, for most spindle applications only two tapered roller bearings are required, which can result in a more economical solution.

Housing Stiffness

Experience and basic calculations show that good axial and radial housing stiffness are required to support the loads that are transmitted through the bearings. In most machine tool designs, the housing is normally adequate. However, when light sections or nonferrous housings are used, the axial and radial housing stiffness should be verified.

SPINDLE SYSTEM DYNAMIC STIFFNESS

Dynamic stiffness is influenced to a large degree by the damping characteristics and the static stiffness of the system.

Figure 27 demonstrates that bearing setting plays a major role in the static stiffness of a spindle-bearing-housing system. As the preload is increased, the static stiffness increases.

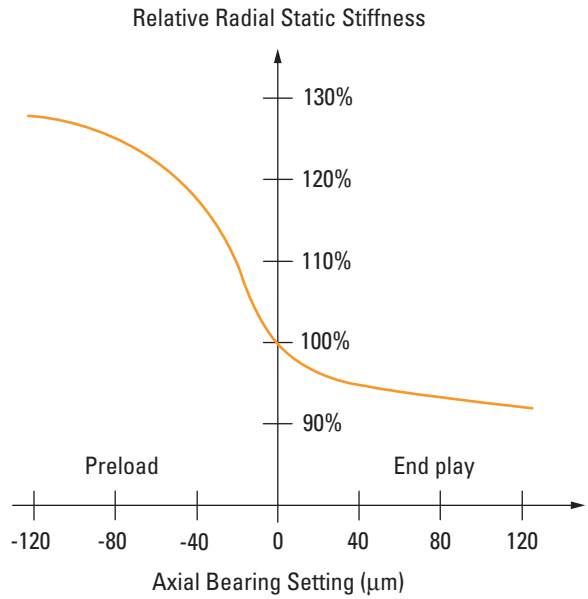

Fig. 27. Effect of bearing setting on spindle system static stiffness.

A load that would cause very little static deflection can cause very high dynamic deflections if the frequency of the dynamic load is the same as the natural frequency of the spindle. To control the dynamic stiffness, the damping characteristics of the system are very important.

Damping can be visualized as resistance to vibration. It can be seen in Figure 28 that the damping ratio of a spindle system is higher when bearings are preloaded. The optimum value is, however, obtained around the zero clearance condition.

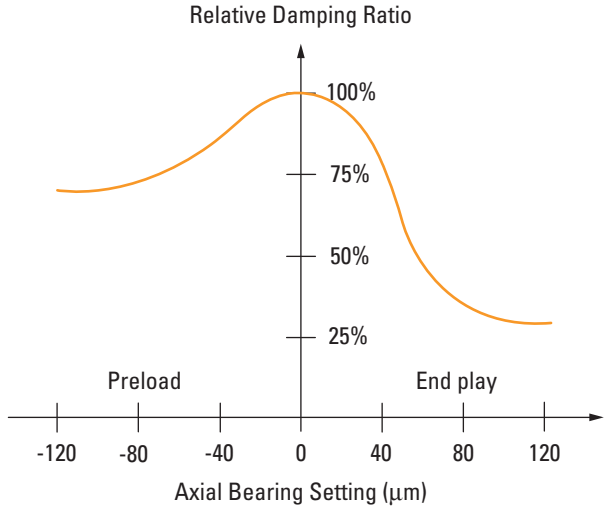

Fig. 28. Effect of bearing setting on spindle system damping ratio.

Finally, the resulting dynamic stiffness characteristics of a spindle system are directly affected by the bearing setting. The curve plotted in Figure 29 shows an optimum setting slightly in the preload region. This gives the least compliance, or maximum dynamic stiffness, of a spindle system since the damping decreases as preload increases. As previously explained, any preload increase beyond the optimum setting will reduce the dynamic spindle characteristics.

Extensive research by Timken has resulted in a better knowledge of machine tool spindle behavior. It was identified that higher accuracy and improved surface finish can be achieved at an optimum preload setting (Figure 30).

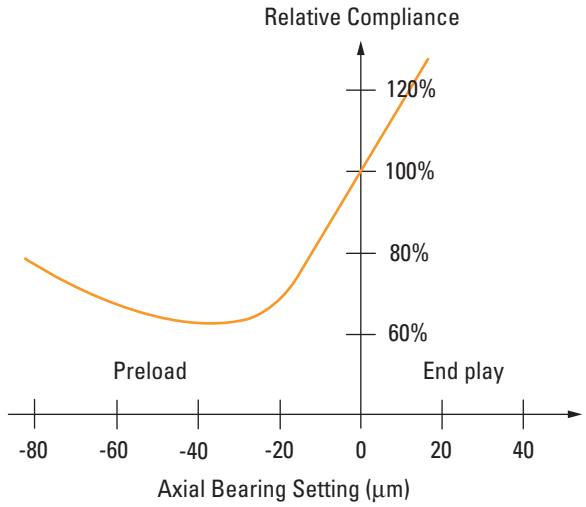

Fig. 29. Effect of bearing setting on spindle system dynamic stiffness.

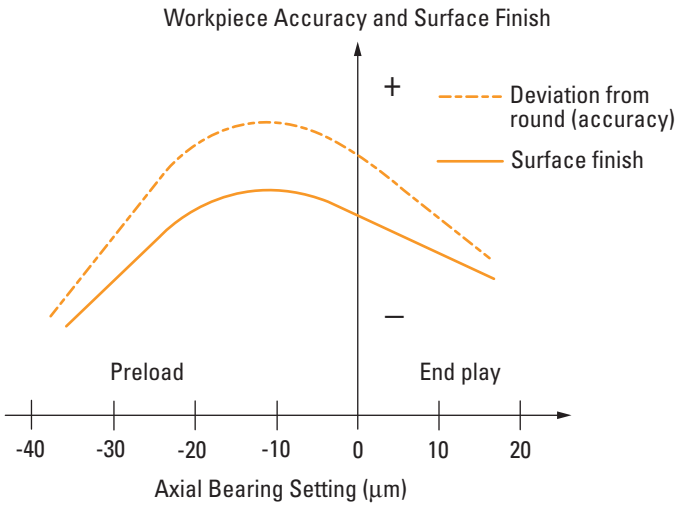

Fig. 30. Effect of bearing setting on surface finish and accuracy of the workpieces.

The unique design of a tapered roller bearing with its line contact produces a damping characteristic that is not necessarily inherent to other bearing designs (Figure 31). This is due to the bending mode of the spindle and bearing centerline caused by dynamic deflection which is resisted inside the bearing through a shearing action of the viscous lubricant between the rollers and the cup and cone races.

It is the combination of the tapered roller bearing construction and proper bearing setting that results in improved damping characteristics.

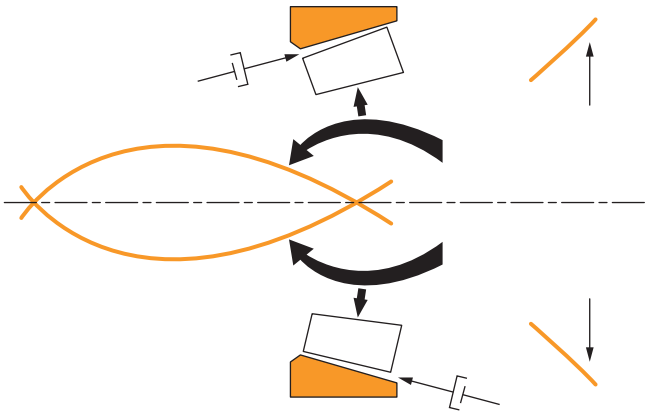

Fig. 31. Damping in a tapered roller bearing.

An extension of this insight culminated in the development of a bearing system called the Hydra-Rib. It is, specifically designed to provide the optimum bearing preload and thus the ultimate dynamic stability for the spindle system under any operating conditions.

Proper selection of the preload for a given application must not focus only on stiffness and damping characteristics. Also, the lubrication method, operating speeds and loads must be reviewed to determine the optimum setting/preload to maximize performance. Consult the appropriate topic in this engineering section for more details.

OTHER FACTORS AFFECTING BEARING SELECTION

Some additional controllable factors having a significant impact on bearing performance include mounting fits, internal clearances, lubricant type and integrity. For example, when using radial ball bearings, appropriate internal clearance is needed to ensure proper operation.

THERMAL EXPANSION

Issues such as axial displacement must be addressed where shaft length differentials must be tolerated when thermal expansion occurs. For these situations, the rotating component supports include a fixed (locating) and floating (non-locating) bearing arrangement.

The fixed bearing is subject to combination loads and is usually placed nearest the working end of the shaft to minimize motion and thereby maintain workpiece accuracy. Installation considerations for the typical fixed bearing positions should note the fitting suggestions listed in this catalog. These are compiled from a wealth of experience in a wide range of operating conditions.

Where floating bearings are necessary, the design must allow for axial displacement of the shaft. This can be accomplished by allowing the bearing to “slide” laterally along the shaft or housing respectively. A looser fit during the machining of the shaft or housing cavity is required. This not only alleviates the axial stresses on this end of the assembly, but will also facilitate bearing and shaft installation.

MISALIGNMENT

When the size of the machine increases, so do concerns about alignment. Shaft bending or additional loading can impart moment loads that need to be considered. Bearing selection must further consider installation practices with distant machined bearing housing cavities. Manufacturing limitations to position housing bores might encourage the choice of a self-aligning bearing mounting (DF, face-to-face).

This can help compensate for machining variations and assist in managing dynamic forces by featuring a spherical outside diameter or thrust face.

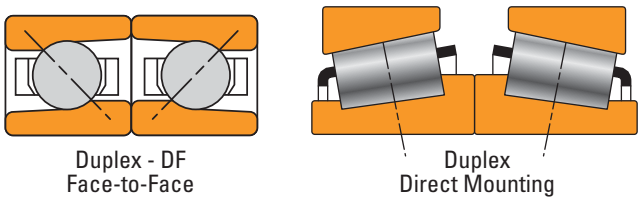

Fig. 32. Self-aligning bearing mountings.

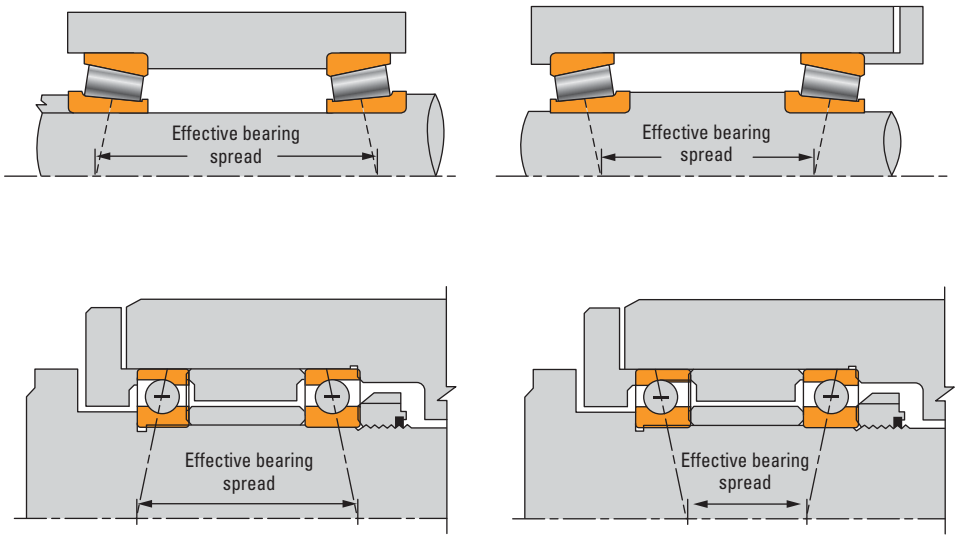

Indirect Mounting – Tapered Roller Bearings
Back-to-Back/DB – Angular Contact Ball Bearings

Direct Mounting – Tapered Roller Bearings
Face-to-Face/DF – Angular Contact Ball Bearings

Fig. 33. Choice of mounting configuration for single-row bearings, showing position of effective load-carrying centers.

EFFECTIVE SPREAD

When a load is applied to a tapered roller or angular contact ball bearing, the internal forces at each rolling element-to-outer raceway contact act normal to the raceway. These forces have radial and axial components. With the exception of the special case of pure axial loads, the inner ring and the shaft will experience moments imposed by the asymmetrical axial components of the forces on the rolling elements.

It can be demonstrated mathematically that, if the shaft is modeled as being supported at its effective bearing center rather than at its geometric bearing center, the bearing moment may be ignored when calculating radial loads on the bearing. Only externally applied loads need to be considered, and moments are taken about the effective centers of the bearings to determine loads or reactions. Figure 33 shows single-row bearings in a direct and indirect mounting configuration. The choice of whether to use direct or indirect mounting depends upon the application.

With so many factors to consider for the successful operation of any device incorporating rolling bearings, Timken brings to its customers more than a century of talent and experience to assist with these choices. Though the content in this catalog is an excellent start in the rolling bearing selection process, it should not be considered the final word. Timken bearing expertise is only a phone call away.

A

DETERMINATION OF APPLIED LOADS AND BEARING ANALYSIS

This key is not intended to be comprehensive, but serves as a useful reference for symbols found in this catalog.

SUMMARY OF SYMBOLS USED IN THIS CATALOG

Symbol	Description	Units
a_1	Reliability Life Factor	
a_2	Material Life Factor	
a_3	Operating Condition Life Factor	
a_{3d}	Debris Life Factor	
a_{3h}	Hardness Life Factor	
a_{3k}	Load Zone Life Factor	
a_{3l}	Lubrication Life Factor	
a_{3m}	Misalignment Life Factor	
a_{3p}	Low Load Life Factor	
a_e	Effective Bearing Spread	mm, in.
b	Tooth Length	mm, in.
c_1, c_2	Linear Distance (positive or negative)	mm, in.
C	Dynamic Radial Load Rating	N, lbf
C_0	Static Load Rating	N, lbf
C_{90}	Single-Row Basic Dynamic Load Rating	N, lbf
C_e	Extended Dynamic Capacity	N, lbf
C_p	Specific Heat of Lubricant	J/(kg -˚C), BTU/(lb x ˚F)
d	Bearing Bore Diameter	mm, in.
d_c	Distance Between Gear Centers	mm, in.
d_m	Mean Bearing Diameter	mm, in.
dN	Bore in mm • RPM	
D	Bearing Outside Diameter	mm, in.
D_m	Mean Diameter or Effective Working Diameter of a Sprocket, Pulley, Wheel or Tire Also, Tapered Roller Bearing Mean Large Rib Diameter	mm, in.
D_{mG}	Mean or Effective Working Diameter of the Gear	mm, in.
D_{mP}	Effective Working Diameter of the Pinion	mm, in.
D_{mW}	Effective Working Diameter of the Worm	mm, in.
D_{pG}	Pitch Diameter of the Gear	mm, in.
D_{pP}	Pitch Diameter of the Pinion	mm, in.
D_{pW}	Pitch Diameter of the Worm	mm, in.
e	Life Exponent	
f	Lubricant Flow Rate	L/min, U.S. pt/min
f_B	Belt or Chain Pull Factor	
F	General Term for Force	N, lbf
F_a	Applied Axial Load	N, lbf
F_{ae}	External Axial Load	N, lbf
F_{aG}	Axial Force on Gear	N, lbf
F_{aP}	Axial Force on Pinion	N, lbf
F_{aW}	Axial Force on Worm	N, lbf
F_c	Centrifugal Force	N, lbf
F_r	Applied Radial Load	N, lbf
F_{sG}	Separating Force on Gear	N, lbf
F_{sP}	Separating Force on Pinion	N, lbf
F_{sW}	Separating Force on Worm	N, lbf
F_{tG}	Tangential Force on Gear	N, lbf
F_{tP}	Tangential Force on Pinion	N, lbf
F_{tW}	Tangential Force on Worm	N, lbf
F_W	Force of Unbalance	N, lbf
$F_{\Phi P}$	Axial Force on Pinion	N, lbf
H	Power	kW, HP
HF_s	Static Load Rating Adjustment Factor for Raceway Hardness	
k	Centrifugal Force Constant	lbf/RPM^2
k_1	Bearing Torque Constant	N-m, lbf-in.
k_4, k_5, k_6	Dimensional Factor to Calculate Heat Generation	
K	Tapered Roller Bearing Radial-to-Axial Dynamic Load Rating Factor	
K_T	Relative Axial Load Factor (Ball Bearings)	
L_H	Lead Axial Advance of a Helix for One Complete Revolution	mm, in.
L	Distance Between Bearing Geometric Center Lines	mm, in.
m	Gearing Ratio	
M	Bearing Operating Torque or Moment	N-m, N-mm, lbf-in.
n	Bearing Operating Speed or General Term for Speed	rot/min, RPM
n_G	Gear Operating Speed (RPM)	rot/min, RPM
n_P	Pinion Operating Speed (RPM)	rot/min, RPM
n_W	Worm Operating Speed (RPM)	rot/min, RPM
N_G	Number of Teeth in the Gear	
N_P	Number of Teeth in the Pinion	
N_S	Number of Teeth in the Sprocket	
P_a	Dynamic Equivalent Axial Load	N, lbf
P_0	Static Equivalent Load	N, lbf
P_{0a}	Static Equivalent Axial Load	N, lbf
P_{0r}	Static Equivalent Radial Load	N, lbf
P_r	Dynamic Equivalent Radial Load	N, lbf
Q	Generated Heat or Heat Dissipation Rate	W, BTU/min
r	Radius	
R	Percent Reliability Used in the Calculation of the a_1 Factor	
T	Torque	N-m, lbf-in.
v	Vertical (used as subscript)	
V	Linear Velocity or Speed	km/h, mph
V_r	Rubbing, Surface or Tapered Roller Bearing Rib Velocity	m/s, fpm
X	Dynamic Radial Load Factor	
Y	Dynamic Axial Load Factor	
Y_1, Y_2, Y_3	Axial Load Factors	
Υ_G	Bevel Gearing – Gear Pitch Angle	deg.
	Hypoid Gearing – Gear Root Angle	deg.
Υ_P	Bevel Gearing – Pinion Pitch Angle	deg.
	Hypoid Gearing – Pinion Face Angle	deg.
α	Half Included Cup Angle	deg.
A, B...	Bearing Position (used as a subscript)	cSt
η	Efficiency, Decimal Fraction	
θ_{ambt}	Ambient Temperature	˚C, ˚F
θ_1, θ_2, θ_3	Gear Mesh Angles Relative to the Reference Plane	deg.
θi, θo	Oil Inlet or Outlet Temperature	˚C, ˚F
λ	Worm Gear Lead Angle	deg.
μ	Coefficient of Friction	
ν	Lubricant Kinematic Viscosity	cSt
σ_0	Approximate Maximum Contact Stress	MPa, psi
Φ	Normal Tooth Pressure for the Worm (Gearing)	deg.
Φ_G	Normal Tooth Pressure Angle for the Gear	deg.
Φ_P	Normal Tooth Pressure Angle for the Pinion	deg.
Ψ_G	Helix (Helical) or Spiral Angle for the Gear	deg.
Ψ_P	Helix (Helical) or Spiral Angle for the Pinion	deg.
ρ	Lubricant Density	kg/m^3, lb/ft^3
1, 2, ...n	Conditions (used as subscript)	

The following equations are used to determine the forces developed by machine elements commonly encountered in bearing applications.

Spur Gearing

Tangential force

$$F_{tG} = \frac{(1.91 \times 10^7)\ H}{D_{pG}\ n_G} \quad \text{(newtons)}$$

$$= \frac{(1.26 \times 10^5)\ H}{D_{pG}\ n_G} \quad \text{(pounds-force)}$$

Separating force

$F_{sG} = F_{tG} \tan \phi_G$

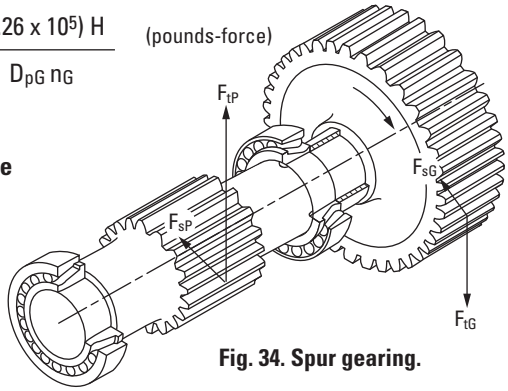

Fig. 34. Spur gearing.

Single Helical Gearing

Tangential force

$$F_{tG} = \frac{(1.91 \times 10^7)\ H}{D_{pG}\ n_G} \quad \text{(newtons)}$$

$$= \frac{(1.26 \times 10^5)\ H}{D_{pG}\ n_G} \quad \text{(pounds-force)}$$

Thrust force

$F_{aG} = F_{tG} \tan \psi_G$

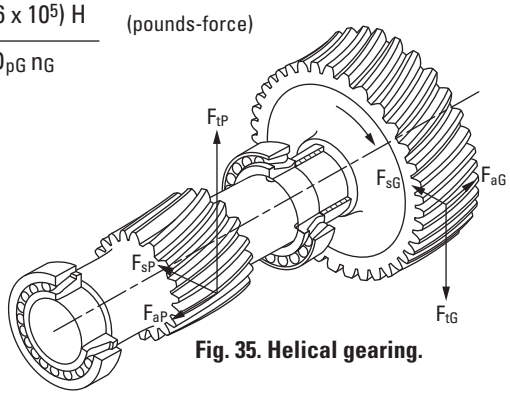

Fig. 35. Helical gearing.

Separating force

$$F_{sG} = \frac{F_{tG} \tan\phi_G}{\cos \psi_G}$$

Straight Bevel and Zerol Gearing with Zero Degrees Spiral

In straight bevel and zerol gearing, the gear forces tend to push the pinion and gear out of mesh, such that the direction of the thrust and separating forces is always the same regardless of direction of rotation (Figure 36). In calculating the tangential force (F_{tP} or F_{tG}) for bevel gearing, the pinion or gear mean diameter (D_{mP} or D_{mG}) is used instead of the pitch diameter (D_{pP} or D_{pG}). The mean diameter is calculated as follows:

$$D_{mG} = D_{pG} - b \sin \Upsilon_G \qquad \text{or} \qquad D_{mP} = D_{pP} - b \sin \Upsilon_P$$

In straight bevel and zerol gearing:

$F_{tP} = F_{tG}$

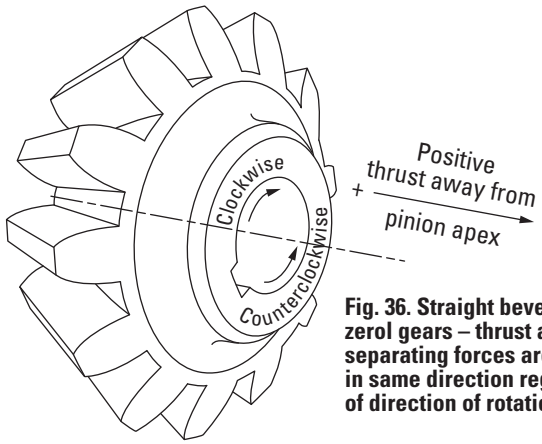

Fig. 36. Straight bevel and zerol gears – thrust and separating forces are always in same direction regardless of direction of rotation.

Pinion

Tangential force

$$F_{tP} = \frac{(1.91 \times 10^7)\ H}{D_{mP}\ n_P} \quad \text{(newtons)}$$

$$= \frac{(1.26 \times 10^5)\ H}{D_{mP}\ n_P} \quad \text{(pounds-force)}$$

Thrust force

$F_{aP} = F_{tP} \tan \phi_P \sin \Upsilon_P$

Separating force

$F_{sP} = F_{tP} \tan \phi_P \cos \Upsilon_P$

A

Straight Bevel Gear

Tangential force

$$F_{tG} = \frac{(1.91 \times 10^7)\ H}{D_{mG}\ n_G} \quad \text{(newtons)}$$

$$= \frac{(1.26 \times 10^5)\ H}{D_{mG}\ n_G} \quad \text{(pounds-force)}$$

Thrust force

$F_{aG} = F_{tG} \tan \phi_G \sin \Upsilon_G$

Separating force

$F_{sG} = F_{tG} \tan \phi_G \cos \Upsilon_G$

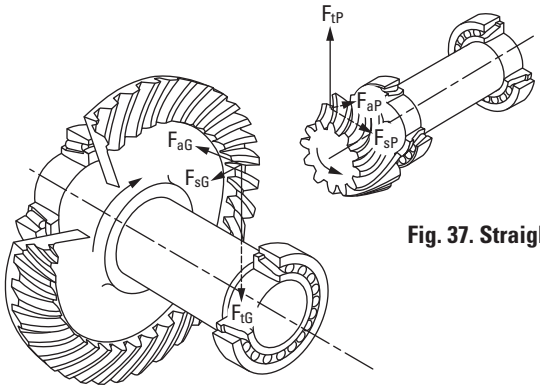

Fig. 37. Straight bevel gearing.

Spiral Bevel and Hypoid Gearing

In spiral bevel and hypoid gearing, the direction of the thrust and separating forces depends upon spiral angle, hand of spiral, direction of rotation, and whether the gear is driving or driven (see 4). The hand of the spiral is determined by noting whether the tooth curvature on the near face of the gear (Figure 38) inclines to the left or right from the shaft axis. Direction of rotation is determined by viewing toward the gear or pinion apex.

In spiral bevel gearing:

$F_{tP} = F_{tG}$

In hypoid gearing:

$$F_{tP} = \frac{F_{tG} \cos \psi_P}{\cos \psi_G}$$

Hypoid pinion effective working diameter:

$$D_{mP} = D_{mG} \left(\frac{N_p}{N_G} \right) \left(\frac{\cos \psi_G}{\cos \psi_P} \right)$$

Tangential force

$$F_{tG} = \frac{(1.91 \times 10^7)\ H}{D_{mG}\ n_G} \quad \text{(newtons)}$$

$$= \frac{(1.26 \times 10^5)\ H}{D_{mG}\ n_G} \quad \text{(pounds-force)}$$

Hypoid gear effective working diameter:

$D_{mG} = D_{pG} - b \sin \Upsilon_G$

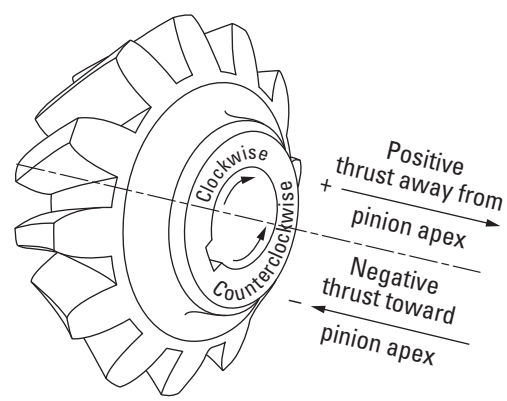

Fig. 38. Spiral bevel and hypoid gears – the direction of thrust and separating forces depends upon spiral angle, hand of spiral, direction of rotation, and whether the gear is driving or driven.

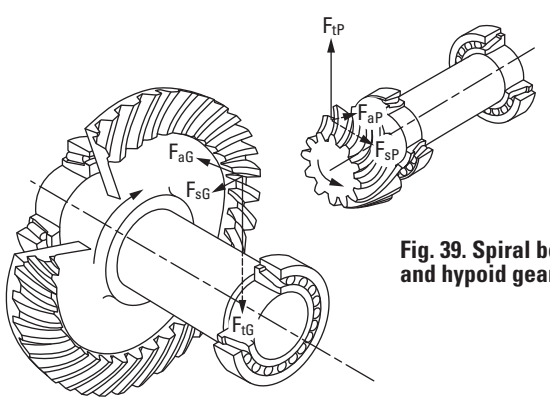

Fig. 39. Spiral bevel and hypoid gearing.

Driving member rotation	Thrust force	Separating force
Right hand spiral clockwise or Left hand spiral counterclockwise	Driving member $F_{aP} = \frac{F_{tP}}{\cos \psi_P} (\tan \phi_P \sin \gamma_P - \sin \psi_P \cos \gamma_P)$	Driving member $F_{sP} = \frac{F_{tP}}{\cos \psi_P} (\tan \phi_P \cos \gamma_P + \sin \psi_P \sin \gamma_P)$
	Driven member $F_{aG} = \frac{F_{tG}}{\cos \psi_G} (\tan \phi_G \sin \gamma_G + \sin \psi_G \cos \gamma_G)$	Driven member $F_{sG} = \frac{F_{tG}}{\cos \psi_G} (\tan \phi_G \cos \gamma_G - \sin \psi_G \sin \gamma_G)$
Right hand spiral counterclockwise or Left hand spiral clockwise	Driving member $F_{aP} = \frac{F_{tP}}{\cos \psi_P} (\tan \phi_P \sin \gamma_P + \sin \psi_P \cos \gamma_P)$	Driving member $F_{sP} = \frac{F_{tP}}{\cos \psi_P} (\tan \phi_P \cos \gamma_P - \sin \psi_P \sin \gamma_P)$
	Driven member $F_{aG} = \frac{F_{tG}}{\cos \psi_G} (\tan \phi_G \sin \gamma_G - \sin \psi_G \cos \gamma_G)$	Driven member $F_{sG} = \frac{F_{tG}}{\cos \psi_G} (\tan \phi_G \cos \gamma_G + \sin \psi_G \sin \gamma_G)$

Table 4. Spiral bevel and hypoid bearing equations.

Straight Worm Gearing

Worm

Tangential force

$$F_{tW} = \frac{(1.91 \times 10^7)\, H}{D_{PW}\, n_W} \quad \text{(newtons)}$$

$$= \frac{(1.26 \times 10^5)\, H}{D_{pW}\, n_W} \quad \text{(pounds-force)}$$

Thrust force

$$F_{aW} = \frac{(1.91 \times 10^7)\, H\, \eta}{D_{pG}\, n_G} \quad \text{(newtons)}$$

$$= \frac{(1.26 \times 10^5)\, H\, \eta}{D_{pG}\, n_G} \quad \text{(pounds-force)}$$

or

$$F_{aW} = \frac{F_{tW}\, \eta}{\tan \lambda}$$

Separating force

$$F_{sW} = \frac{F_{tW} \sin \Phi}{\cos \Phi \sin \lambda + \mu \cos \lambda}$$

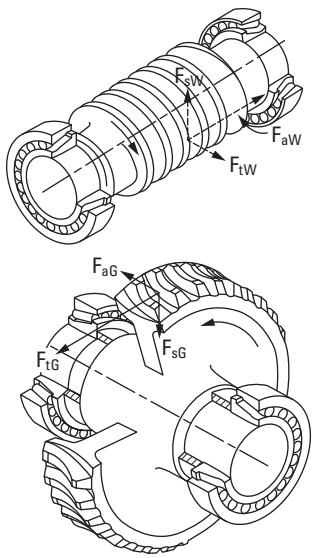

Fig. 40. Straight worm gearing.

A

Worm Gear

Tangential force

$$F_{tG} = \frac{(1.91 \times 10^7)\, H\, \eta}{D_{pG}\, n_G} \quad \text{(newtons)}$$

$$= \frac{(1.26 \times 10^5)\, H\, \eta}{D_{pG}\, n_G} \quad \text{(pounds-force)}$$

or

$$F_{tG} = \frac{F_{tW}\, \eta}{\tan \lambda}$$

Thrust force

$$F_{aG} = \frac{(1.91 \times 10^7)\, H}{D_{pW}\, n_W} \quad \text{(newtons)}$$

$$= \frac{(1.26 \times 10^5)\, H}{D_{pW}\, n_W} \quad \text{(pounds-force)}$$

Separating force

$$F_{sG} = \frac{F_{tW} \sin \Phi}{\cos \Phi \sin \lambda + \mu \cos \lambda}$$

Where:

$$\lambda = \tan^{-1} \left(\frac{D_{pG}}{m\, D_{pW}} \right)$$

or

$$\lambda = \tan^{-1} \left(\frac{L_H}{\pi\, D_{pW}} \right)$$

and

$$\eta = \frac{\cos \Phi - \mu \tan \lambda}{\cos \Phi + \mu \cot \lambda}$$

Metric system

$$\mu^{(1)} = (5.34 \times 10^{-7})\, V_r^3 + \frac{0.146}{V_r^{0.09}} - 0.103$$

$$V_r = \frac{D_{pW}\, n_W}{(1.91 \times 10^4) \cos \lambda} \quad \text{(meters per second)}$$

Inch system

$$\mu^{(1)} = (7 \times 10^{-14})\, V_r^3 + \frac{0.235}{V_r^{0.09}} - 0.103$$

$$V_r = \frac{D_{pW}\, n_W}{3.82 \cos \lambda} \quad \text{(feet per minute)}$$

(1) Approximate coefficient of friction for the 0.015 to 15 m/s (3 to 3000 ft/min) rubbing velocity range.

Double Enveloping Worm Gearing

Worm

Tangential force

$$F_{tW} = \frac{(1.91 \times 10^7)\, H}{D_{mW}\, n_W} \quad \text{(newtons)}$$

$$= \frac{(1.26 \times 10^5)\, H}{D_{mW}\, n_W} \quad \text{(pounds-force)}$$

Thrust force

$$F_{aW} = 0.98\, F_{tG}$$

Use this value for F_{tG} for bearing loading calculations on worm gear shaft. For torque calculations, use the following F_{tG} equations.

Separating force

$$F_{sW} = \frac{0.98\, F_{tG} \tan \Phi}{\cos \lambda}$$

Worm Gear

Tangential force

$$F_{tG} = \frac{(1.91 \times 10^7)\, H\, m\, \eta}{D_{pG}\, n_W} \quad \text{(newtons)}$$

$$= \frac{(1.26 \times 10^5)\, H\, m\, \eta}{D_{pG}\, n_W} \quad \text{(pounds-force)}$$

Use this value for calculating torque in subsequent gears and shafts. For bearing loading calculations, use the equation for F_{aW}.

or

$$F_{tG} = \frac{(1.91 \times 10^7)\, H\, \eta}{D_{pG}\, n_G} \quad \text{(newtons)}$$

$$= \frac{(1.26 \times 10^5)\, H\, \eta}{D_{pG}\, n_G} \quad \text{(pounds-force)}$$

Thrust force

$$F_{aG} = \frac{(1.91 \times 10^7)\, H}{D_{mW}\, n_W} \quad \text{(newtons)}$$

$$= \frac{(1.26 \times 10^5)\, H}{D_{mW}\, n_W} \quad \text{(pounds-force)}$$

Separating force

$$F_{sG} = \frac{0.98\, F_{tG} \tan \Phi}{\cos \lambda}$$

Where:

η = efficiency (refer to manufacturer's catalog)

$D_{mW} = 2d_c - 0.98\, D_{pG}$

Lead angle at center of worm:

$$\lambda = \tan^{-1} \left(\frac{D_{pG}}{m\, D_{pW}} \right) = \tan^{-1} \left(\frac{L}{\pi\, D_{pW}} \right)$$

Belt and Chain Drive Factors

Due to the variations of belt tightness as set by various operators, an exact equation relating total belt pull to tension F_1 on the tight side and tension F_2 on the slack side (Figure 41) is difficult to establish. The following equation and Table 5 may be used to estimate the total pull from various types of belt and pulley, and chain and sprocket designs:

$$F_b = \frac{(1.91 \times 10^7)\, H\, f_B}{D_m\, n} \quad \text{(newtons)}$$

$$= \frac{(1.26 \times 10^5)\, H\, f_B}{D_m\, n} \quad \text{(pounds-force)}$$

Standard roller chain sprocket mean diameter.

$$D_m = \frac{P}{\sin\left(\frac{180}{N_s}\right)}$$

Where:

P = chain pitch

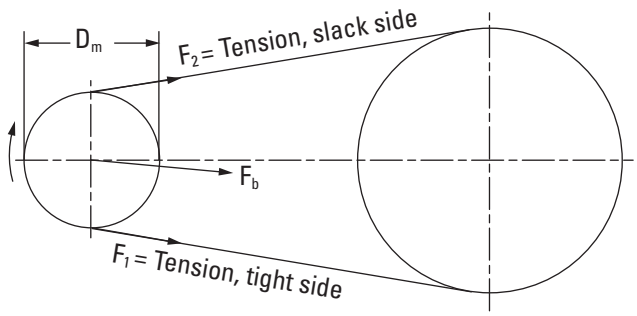

Fig. 41. Belt or chain drive.

Type	f_B
Chains, single	1.00
Chains, double	1.25
"V" belts	1.50

Table 5. Belt or chain pull factor based on 180 degrees angle of wrap.

Shaft on Two Supports

Simple beam equations are used to translate the externally applied forces on a shaft into bearing reactions acting at the bearing effective centers.

With two-row tapered roller and angular contact ball bearings, the geometric center of the bearing is considered to be the support point except where the thrust force is large enough to unload one row. Then the effective center of the loaded row is used as the point from which bearing load reactions are calculated. These approaches approximate the load distribution within a two-row bearing, assuming rigid shaft and housing. These are statically indeterminate problems in which shaft and support rigidity can significantly influence bearing loading and require the use of computer programs to solve.

Shaft on Three or More Supports

The equations of static equilibrium are insufficient to solve bearing reactions on a shaft having more than two supports. Such cases can be solved using computer programs if adequate information is available.

In such problems, the deflections of the shaft, bearings and housings affect the distribution of loads. Any variance in these parameters can significantly affect bearing reactions.

Bearing radial loads are determined by:

- Resolving forces applied to the shaft into horizontal and vertical components, relative to a convenient reference plane.
- Taking moments about the opposite support.
- Combining the horizontal and vertical reactions at each support into one resultant load.

Shown (on the next page) are equations for the case of a shaft on two supports with gear forces F_t (tangential), F_s (separating), and F_a (thrust), an external radial load F, and an external moment M. The loads are applied at arbitrary angles (θ_1, θ_2, and θ_3) relative to the reference plane indicated in Figure 42. Using the principle of superposition, the equations for vertical and horizontal reactions (F_{rv} and F_{rh}) can be expanded to include any number of gears, external forces or moments. Use signs as determined from gear force equation.

Care should be used when doing this to ensure proper supporting degrees of freedom are used. That is, tapered roller bearings and ball bearings support radial loads, moment loads and axial loads in both directions.

A

BEARING REACTIONS

Calculation equations		
Symbols used		
a_e	Effective bearing spread	mm, in.
A, B, ...	Bearing position, used as subscripts	
c_1, c_2, ...	Linear distance (positive or negative)	mm, in.
D_{pG}	Pitch diameter of the gear	mm, in.
F	Applied force	N, lbf
F_r	Radial bearing load	N, lbf
h	Horizontal (used as subscript)	
M	Moment	N-mm, lbf-in.
v	Vertical (used as subscript)	
θ_1	Gear mesh angle relative to plane of reference defined in the figure below	deg, rad
θ_2	Angle of applied force relative to plane of reference defined in the figure below	deg, rad
θ_3	Angle of applied moment relative to plane of reference defined in the figure below	deg, rad

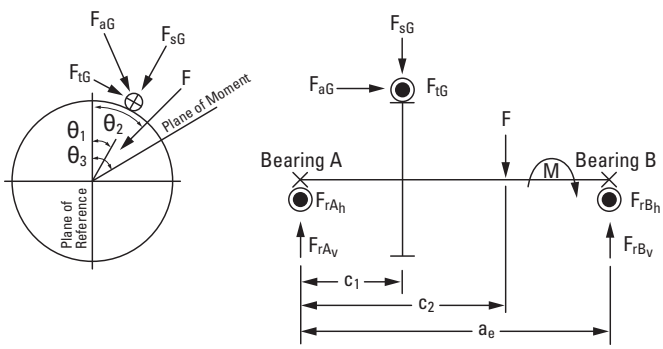

Fig. 42. Bearing radial reactions.

Centrifugal force

Centrifugal force resulting from imbalance in a rotating member:

$$F_c = \frac{F_w\, r\, n^2}{8.94 \times 10^5} \quad \text{(newtons)}$$

$$= \frac{F_w\, r\, n^2}{3.52 \times 10^4} \quad \text{(pounds-force)}$$

Shock loads

It is difficult to determine the exact effect that shock loading has on bearing life. The magnitude of the shock load depends on the masses of the colliding bodies, their velocities, and deformations at impact.

The effect on the bearing depends on how much of the shock is absorbed between the point of impact and the bearings, as well as whether the shock load is great enough to cause bearing damage. It also is dependent on frequency and duration of shock loads.

At a minimum, a suddenly applied load is equivalent to twice its static value. It may be considerably more than this, depending on the velocity of impact.

Shock involves a number of variables that generally are not known or easily determined. Therefore, it is good practice to rely on experience. The Timken Company has years of experience with many types of equipment under the most severe loading conditions. Your Timken representative should be consulted on any application involving unusual loading or service requirements.

Vertical reaction component at bearing position B:

$$F_{rB_v} = \frac{1}{a_e}\left(c_1 (F_{sG} \cos\theta_1 + F_{tG} \sin\theta_1) + \frac{1}{2}(D_{pG} - b \sin\gamma_G) F_{aG} \cos\theta_1 + c_2 F \cos\theta_2 + M \cos\theta_3\right)$$

Horizontal reaction component at bearing position B:

$$F_{rB_h} = \frac{1}{a_e}\left(c_1 (F_{sG} \sin\theta_1 - F_{tG} \cos\theta_1) + \frac{1}{2}(D_{pG} - b \sin\gamma_G) F_{aG} \sin\theta_1 + c_2 F \sin\theta_2 + M \sin\theta_3\right)$$

Vertical reaction component at bearing position A:

$$F_{rA_v} = F_{sG} \cos\theta_1 + F_{tG} \sin\theta_1 + F \cos\theta_2 - F_{rB_v}$$

Horizontal reaction component at bearing position A:

$$F_{rA_h} = F_{sG} \sin\theta_1 - F_{tG} \cos\theta_1 + F \sin\theta_2 - F_{rB_h}$$

Resultant radial reaction: $F_{rA} = \left[(F_{rA_v})^2 + (F_{rA_h})^2\right]^{1/2}$ $\quad F_{rB} = \left[(F_{rB_v})^2 + (F_{rB_h})^2\right]^{1/2}$

Resultant axial reaction: $F_{aA} = F_{aG}$ (fixed position) $\quad F_{aB} = 0$ (float position)

LOAD RATINGS

The basic dynamic load rating and the static load rating are commonly used for bearing selection. The basic dynamic load rating is used to estimate life of a rotating bearing. Static load ratings are used to determine the maximum permissible load that can be applied to a non-rotating bearing.

The basic philosophy of The Timken Company is to provide the most realistic bearing rating to assist our customers in the bearing selection process. Published ratings for Timken bearings include the basic dynamic radial load ratings, C_1, for tapered roller bearings, and C_e for ball bearings. These values are based on a basic rating life of one million revolutions. Timken tapered roller bearings also include the basic dynamic load rating C_{90}, which is based on a basic rating life of ninety million revolutions. The basic static radial load rating is C_o.

STATIC LOAD RATING

The basic static radial load ratings for Timken bearings are based on a maximum contact stress within a non-rotating bearing of 4000 MPa (580 ksi) for roller bearings and 4200 MPa (609 ksi) for ball bearings, at the center of contact on the most heavily loaded rolling element.

The 4000 MPa (580 ksi) or 4200 MPa (609 ksi) stress levels may cause visible light Brinell marks on the bearing raceways. This degree of marking will not have a measurable effect on fatigue life when the bearing is subsequently rotating under a lower-application load. If sound, vibration or torque are critical, or if a pronounced shock load is present, a lower load limit should be applied.

Raceway hardness HRC	Hardness factor HF_s
58	1.00
57	1.06
56	1.13
55	1.21
54	1.29
53	1.37
52	1.46
51	1.55
50	1.65
49	1.76
48	1.88
47	2.00
46	2.13
45	2.27
44	2.41
43	2.57
42	2.74
41	2.92
40	3.10

Table 6. Hardness factors to modify basic static load rating.

When the loading is static, it is usually suggested that the applied load be no greater than the basic static load rating divided by the appropriate hardness factor (HF_s) as shown in Table 6.

For more information on selecting a bearing for static load conditions, consult your Timken representative.

STATIC RADIAL AND/OR AXIAL EQUIVALENT LOADS

The static equivalent radial and/or axial loading is dependent on the bearing type selected. For bearings designed to accommodate only radial or axial loading, the static equivalent load is equivalent to the applied load.

For all bearings, the maximum contact stress can be approximated using the static equivalent load and the static rating.

For roller bearings:

$$\sigma_0 = 4000 \times \left(\frac{P_0}{C_0}\right)^{1/2} \text{ MPa}$$

$$\sigma_0 = 580 \times \left(\frac{P_0}{C_0}\right)^{1/2} \text{ ksi}$$

For ball bearings:

$$\sigma_0 = 4200 \times \left(\frac{P_0}{C_0}\right)^{1/3} \text{ MPa}$$

$$\sigma_0 = 609 \times \left(\frac{P_0}{C_0}\right)^{1/3} \text{ ksi}$$

Radial ball bearings

The dynamic equivalent radial load is used for comparison with the static load rating.

$$P_{0r} = 1/2\ C_0$$

Thrust ball bearings

Similar to radial ball bearings, thrust ball bearings use the same equation for equivalent static and dynamic loading.

$$P_{0a} = XF_r + YF_a$$

The X and Y factors are listed later in this section along with the minimum required axial load-to-radial load ratio for maintaining proper operation.

Tapered roller bearings

To determine the static equivalent radial load for a single-row mounting, first determine the axial load (F_a), then use the following equations, depending on the appropriate axial load condition.

A

Design	Thrust condition	Axial load	Static equivalent radial load
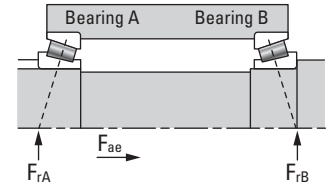	$\frac{0.47\,F_{rA}}{K_A} \le \frac{0.47\,F_{rB}}{K_B} + F_{ae}$	$F_{aA} = \frac{0.47\,F_{rB}}{K_B} + F_{ae}$ $F_{aB} = \frac{0.47\,F_{rB}}{K_B}$	$P_{0B} = F_{rB}$ for $F_{aA} < 0.6\,F_{rA} / K_A$ $P_{0A} = 1.6\,F_{rA} - 1.269\,K_A\,F_{aA}$ for $F_{aA} < 0.6\,F_{rA} / K_A$ $P_{0A} = 0.5\,F_{rA} + 0.564\,K_A\,F_{aA}$
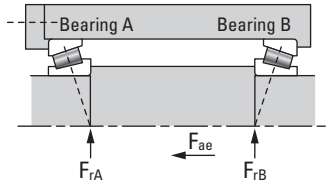 Design (external axial load, F_{ae}, onto bearing A)	$\frac{0.47\,F_{rA}}{K_A} > \frac{0.47\,F_{rB}}{K_B} + F_{ae}$	$F_{aA} = \frac{0.47\,F_{rA}}{K_A}$ $F_{aB} = \frac{0.47\,F_{rA}}{K_A} - F_{ae}$	for $F_{aB} < 0.6\,F_{rB} / K_B$ $P_{0B} = 0.5\,F_{rB} + 0.564\,K_B\,F_{aB}$ for $F_{aB} < 0.6\,F_{rB} / K_B$ $P_{0B} = 1.6\,F_{rB} - 1.269\,K_B\,F_{aB}$ $P_{0A} = F_{rA}$

Use the values of P_0 calculated for comparison with the static rating (C_0), even if P_0 is less than the radial applied F_r.

Where: F_r = applied radial load
F_a = net bearing axial load. F_{aA} and F_{aB} calculated from equations

Fig. 43. Static equivalent load equations, single-row tapered roller bearing.

Static Equivalent Radial Load (Two-Row Bearings)

The bearing data tables do not include static rating for two-row bearings. The two-row static radial rating can be estimated as:

$$C_{o(2)} = 2C_o$$

Where:

$C_{o(2)}$ = two-row static radial rating
C_o = static radial load rating of a single-row bearing, type TS, from the same series.

Dynamic Equivalent Radial Bearing Loads (P_r)

To calculate the L_{10} life, it is necessary to calculate a dynamic equivalent radial load, designated by P_r. The dynamic equivalent radial load is defined as a single radial load that, if applied to the bearing, will result in the same life as the combined loading under which the bearing operates.

$$P_r = XF_r + YF_a$$

Where:

P_r = dynamic equivalent radial load
F_r = applied radial load
F_a = applied axial load
X = radial load factor
Y = axial load factor

Tapered roller bearings use the equations based on the number of rows and type of mounting utilized. For single-row bearings in direct or indirect mounting, the figure on page 46 can be used based on the direction of the externally applied axial load. Once the appropriate design is chosen, review the table and check the thrust condition to determine which axial load and dynamic equivalent radial load calculations apply.

For ball bearings, the dynamic equivalent radial load can be found in the table below.

Bearing description (ref.)	Contact angle	Single-row and tandem mountings	Double-row and preload pair mountings
Bearing type and or series		$K_T = \frac{F_a}{(\#\text{ of bearings}) \times C_o}$	$K_T = \frac{F_a}{C_o}$
Radial type ball bearings – use larger of resulting "P_r" value[1]			
MM9300K MM9100K MM200K MM300K	0°	$P_r = F_r$ or $P_r = 0.56F_r + Y_1F_a$	$P_r = F_r + 1.20Y_1F_a$ or $P_r = 0.78F_r + 1.625Y_1F_a$
Angular contact ball bearings – use larger of resulting "P_r" value			
2MMV9300WI 2MMV9300HX 2MM9300WI 2MV9300WI 2MMV9100WI 2MMV9100HX 2MM99100WI 2MM9100WI 2MV9100WI 2MV200WI 2MMV200WI 2MMV300WI 2MM200WI 2MM300WI 2MV300WI	15°	$P_r = F_r$ or $P_r = 0.44F_r + Y_2F_a$	$P_r = F_r + 1.124Y_2F_a$ or $P_r = 0.72F_r + 1.625Y_2F_a$
2MM9100WO	15°	$P_r = F_r$ or $P_r = 0.44F_r + Y_3F_a$	$P_r = F_r + 1.124Y_3F_a$ or $P_r = 0.72F_r + 1.625Y_3F_a$
3MMV9300WI 3MMV9300HX 3MM9300WI 3MV9300WI 3MMV9100WI 3MMV9100HX 3MM9100WI 3MV9100WI 3MM99100WI 3MMV200WI 3MV200WI 3MM200WI 3MM300WI 3MV300WI 3MV300WI	25°	$P_r = F_r$ or $P_r = 0.41F_r + 0.87F_a$	$P_r = F_r + 0.92F_a$ or $P_r = 0.67F_r + 1.41F_a$

[1] If Pr > Co or Pr > 1/2 Ce consult with your Timken representative on Life Calculations.

Table 7. Dynamic equivalent load equations.

K_T	Y_1	Y_2	Y_3
0.015	2.30	1.47	1.60
0.020	2.22	1.44	1.59
0.025	2.10	1.41	1.57
0.030	2.00	1.39	1.56
0.040	1.86	1.35	1.55
0.050	1.76	1.32	1.53
0.060	1.68	1.29	1.51
0.080	1.57	1.25	1.49
0.100	1.48	1.21	1.47
0.120	1.42	1.19	1.45
0.150	1.34	1.14	1.42
0.200	1.25	1.09	1.39
0.250	1.18	1.05	1.35
0.300	1.13	1.02	1.33
0.400	1.05	1.00	1.29
0.500	1.00	1.00	1.25
0.600	—	—	1.22
0.800	—	—	1.17
1.000	—	—	1.13
1.200	—	—	1.10

Table 8. The required Y factors for ball bearings are found in the table above.

Dynamic Equivalent Axial Bearing Loads (P_a)

For thrust ball and thrust tapered roller bearings, the existence of radial loads introduces complex load calculations that must be carefully considered. If radial load is zero, the dynamic equivalent axial load (P_a) will be equal to the applied axial load (F_a). If any radial load is expected in the application, consult your Timken representative for advice on bearing selection.

For thrust angular contact ball bearings, the dynamic equivalent axial load is determined by:

$$P_a = XF_r + YF_a$$

When: $\frac{F_a}{F_r} < 2.17$ $\quad X = 1.90 \quad Y = 0.54$

When: $\frac{F_a}{F_r} > 2.17$ $\quad X = 0.92 \quad Y = 1.00$

If: $\frac{F_a}{F_r} \leq 2.17$ then bearings with a contact angle $< 60^\circ$ should be considered.

BEARING EQUIVALENT LOADS AND REQUIRED RATINGS FOR TAPERED ROLLER BEARINGS

Tapered roller bearings are ideally suited to carry all types of loads – radial, axial, and any combination of both. Due to the tapered design of the bearing, a radial load will induce an axial reaction within the bearing that must be opposed by an equal or greater axial load to keep the bearing cone and cup from separating. The ratio of the radial to the axial load and the bearing included cup angle determine the load zone in a given bearing. The number of rollers in contact as a result of this ratio determines the load zone in the bearing. If all the rollers are in contact, the load zone is referred to as being 360 degrees.

When only radial load is applied to a tapered roller bearing, for convenience it is assumed in using the traditional calculation method that half the rollers support the load – the load zone is 180 degrees. In this case, induced bearing axial load is:

$$F_{a(180)} = \frac{0.47}{K}$$

The equations for determining bearing axial reactions and equivalent radial loads in a system of two single-row bearings are based on the assumption of a 180-degree load zone in one of the bearings and 180 degrees or more in the opposite bearing.

Dynamic Equivalent Radial Load

The basic dynamic radial load rating, C_{90}, is assumed to be the radial load-carrying capacity with a 180-degree load zone in the bearing. When the axial load on a bearing exceeds the induced thrust, $F_{a(180)}$, a dynamic equivalent radial load must be used to calculate bearing life.

The dynamic equivalent radial load is that radial load which, if applied to a bearing, will give the same life as the bearing will attain under the actual loading.

The equations presented give close approximations of the dynamic equivalent radial load assuming a 180-degree load zone in one bearing and 180 degrees or more in the opposite bearing.

Tapered roller bearings use the equations based on the number of rows and type of mounting utilized. For single-row bearings in direct or indirect mounting, the following table can be used based on the direction of the externally applied axial load. Once the appropriate design is chosen, review the table and check the thrust condition to determine which axial load and dynamic equivalent radial load calculations apply.

A

ALTERNATE APPROACH FOR DETERMINING DYNAMIC EQUIVALENT RADIAL LOADS

The following is a general approach to determining the dynamic equivalent radial loads. Here, a factor "m" has to be defined as +1 for direct-mounted single-row or two-row bearings, or -1 for indirect mounted bearings. Also, a sign convention is necessary for the external axial load F_{ae} as follows:

- In case of external axial load applied to the shaft (typical rotating cone application), F_{ae} to the right is positive; to the left is negative.
- When external axial load is applied to the housing (typical rotating cup application), F_{ae} to the right is negative; to the left is positive.

Design	Thrust condition	Axial load	Dynamic equivalent radial load
Indirect Mounting (m=-1) 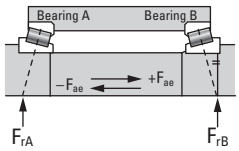 	$\frac{0.47 \times F_{rA}}{K_A} \leq \frac{0.47 \times F_{rB}}{K_B} - m\ F_{ae}$	$F_{aA} = \frac{0.47 \times F_{rB}}{K_B} - m\ F_{ae}$ $F_{aB} = \frac{0.47 \times F_{rB}}{K_B}$	$P_A = 0.4\ F_{rA} + K_A\ F_{aA}$ $P_B = F_{rB}$
Direct Mounting (m=+1) 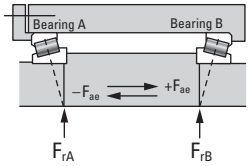 	$\frac{0.47 \times F_{rA}}{K_A} > \frac{0.47 \times F_{rB}}{K_B} - m\ F_{ae}$	$F_{aA} = \frac{0.47 \times F_{rA}}{K_A}$ $F_{aB} = \frac{0.47 \times F_{rA}}{K_A} + m\ F_{ae}$	$P_A = F_{rA}$ $P_B = 0.4\ F_{rB} + K_B\ F_{aB}$

If $P_A < F_{rA}$, use $P_A = F_{rA}$ or if $P_B < F_{rB}$, use $P_B = F_{rB}$.

Fig. 44. Dynamic equivalent radial load equations, single-row tapered roller bearing mounting.

Design	Thrust condition	Dynamic equivalent radial load
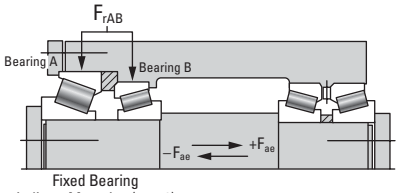 Fixed Bearing Indirect Mounting (m=-1)	$F_{ae} \leq \frac{0.6 \times F_{rAB}}{K^{(1)}}$	$P_A = \frac{K_A}{K_A + K_B}(F_{rAB} - 1.67\ m\ K_B\ F_{ae})$ $P_B = \frac{K_B}{K_A + K_B}(F_{rAB} + 1.67\ m\ K_A\ F_{ae})$
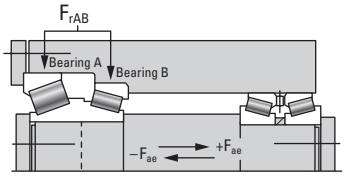 Fixed Bearing Direct Mounting (m=+1)	$F_{ae} > \frac{0.6 \times F_{rAB}}{K^{(1)}}$	$P_A = 0.4\ F_{rAB} - m\ K_A\ F_{ae}$ $P_B = 0.4\ F_{rAB} + m\ K_B\ F_{ae}$

(1) If "m F_{ae}" is positive, $K = K_A$; If "m F_{ae}" is negative, $K = K_B$.

F_{rAB} is the radial load on the two-row assembly. The single-row basic dynamic radial load rating, C_{90}, is to be applied when calculating life based on the above equations.

Fig. 45. Dynamic equivalent radial load equations, two-row tapered roller bearing mounting – fixed bearing with external axial load, F_{ae} (similar or dissimilar series).

BEARING LIFE

Many different performance criteria exist that dictate how a bearing should be selected. These include bearing fatigue life, rotational precision, power requirements, temperature limits, speed capabilities, sound, etc. This publication deals primarily with bearing life as related to material-associated fatigue. Bearing life is defined here as the length of time, or number of revolutions, until a fatigue spall of 6.0 mm^2 (0.01 $in.^2$) develops. Since metal fatigue is a statistical phenomenon, the life of an individual bearing is impossible to predetermine precisely. Bearings that may appear to be identical can exhibit considerable life scatter when tested under identical conditions. Thus it is necessary to base life predictions on a statistical evaluation of a large number of bearings operating under similar conditions. The Weibull distribution function is commonly used to predict the life of a population of bearings at any given reliability level.

RATING LIFE

Rating life, (L_{10}), is the life that 90 percent of a group of apparently identical bearings will complete or exceed before a fatigue spall develops. The L_{10} life also is associated with 90 percent reliability for a single bearing under a certain load.

BEARING LIFE EQUATIONS

Traditionally, the L_{10} life has been calculated as follows for bearings under radial or combined loading where the dynamic equivalent radial load, (P_r), has been determined:

$$L_{10} = \left(\frac{C}{P_r}\right)^e \times (1\text{x}10^6) \qquad \text{revolutions}$$

or,

$$L_{10} = \left(\frac{C}{P_r}\right)^e \times \left(\frac{1\text{x}10^6}{60n}\right) \qquad \text{hours}$$

For thrust bearings, the above equations change to the following.

$$L_{10} = \left(\frac{C_a}{P_a}\right)^e \times (1\text{x}10^6) \qquad \text{revolutions}$$

or,

$$L_{10} = \left(\frac{C_a}{P_a}\right)^e \times \left(\frac{1\text{x}10^6}{60n}\right) \qquad \text{hours}$$

e = 3 for ball bearings
= $^{10}/_3$ for roller bearings

Tapered roller bearings often use a dynamic load rating based on ninety million cycles, as opposed to one million cycles, changing the equations as follows.

$$L_{10} = \left(\frac{C_{90}}{P_r}\right)^{10/3} \times (90\text{x}10^6) \qquad \text{revolutions}$$

or,

$$L_{10} = \left(\frac{C_{90}}{P_r}\right)^{10/3} \times \left(\frac{90\text{x}10^6}{60n}\right) \qquad \text{hours}$$

and

$$L_{10} = \left(\frac{C_{a90}}{P_a}\right)^{10/3} \times (90\text{x}10^6) \qquad \text{revolutions}$$

or,

$$L_{10} = \left(\frac{C_{a90}}{P_a}\right)^{10/3} \times \left(\frac{90\text{x}10^6}{60n}\right) \qquad \text{hours}$$

As the first set of equations for radial bearings with dynamic ratings based on one million revolutions is the most common form of the equations, this will be used through the rest of this section. The dynamic equivalent load equations and the life adjustment factors are applicable to all forms of the life equation.

With increased emphasis on the relationship between the reference conditions and the actual environment in which the bearing operates in the machine, the traditional life equations have been expanded to include certain additional variables that affect bearing performance. The approach whereby these factors, including a factor for useful life, are considered in the bearing analysis and selection has been termed Bearing Systems Analysis (BSA).

The ISO/ABMA adjusted bearing life equation is:

$$L_{na} = a_1 a_2 a_3 L_{10}$$

Where:

a_1 = reliability life factor
a_2 = material life factor
a_3 = operating condition life factor
(to be specified by the manufacturer)

The Timken adjusted bearing life equation is:

$$L_{na} = a_1 a_2 a_{3d} a_{3h} a_{3k} a_{3l} a_{3m} a_{3p} \left(\frac{C}{P_r}\right)^e (1\text{x}10^6) \qquad \text{revolutions}$$

Where:

a_1 = reliability life factor
a_2 = material life factor
a_{3d} = debris life factor
a_{3h} = hardness life factor
a_{3k} = load zone life factor
a_{3l} = lubrication life factor
a_{3m} = misalignment life factor
a_{3p} = low load life factor
C = dynamic radial load rating
P_r = dynamic equivalent radial load
e = 3 for ball bearings
= $^{10}/_3$ for roller bearings

A

Reliability Life Factor (a_1)

The equation for the life adjustment factor for reliability is:

$$a_1 = 4.26 \times \left(\ln \frac{100}{R} \right)^{2/3} + 0.05$$

ln = natural logarithm (base e)

To adjust the calculated L_{10} life for reliability, multiply by the a_1 factor. If 90 (90 percent reliability) is substituted for R in the above equation, $a_1 = 1$. For R = 99 (99 percent reliability), $a_1 = 0.25$. The following table lists the reliability factor for commonly used reliability values.

R (percent)	L_n	a_1
90	L_{10}	1.00
95	L_5	0.64
96	L_4	0.55
97	L_3	0.47
98	L_2	0.37
99	L_1	0.25
99.5	$L_{0.5}$	0.175
99.9	$L_{0.1}$	0.093

Table 9. Reliability factors.

Note that the equation for reliability adjustment assumes there is a short minimum life below which the probability of bearing damage is minimal (e.g., zero probability of bearing damage producing a short life). Extensive bearing fatigue life testing has shown the minimum life, below which the probability of bearing damage is negligible, to be larger than shown above. For a more accurate prediction of bearing lives at high levels of reliability, consult your Timken representative.

Material Life Factor (a_2)

The life adjustment factor for bearing material (a_2) for standard Timken bearings manufactured from bearing-quality steel is 1.0. Bearings also are manufactured from premium steels, containing fewer and smaller inclusion impurities than standard steels and providing the benefit of extending bearing fatigue life (e.g., DuraSpexx™). Application of the material life factor requires that fatigue life is limited by nonmetallic inclusions, that contact stresses are approximately less than 2400 MPa (350 ksi), and adequate lubrication is provided. It is important to note that improvements in material cannot offset poor lubrication in an operating bearing system. Consult your Timken representative for applicability of the material factor.

Debris Life Factor (a_{3d})

Debris within a lubrication system reduces the life of a rolling bearing by creating indentations on the contacting surfaces, leading to stress risers. The Timken life rating equations were developed based on test data obtained with 0.040 mm (0.00157 in.) oil filtration and measured ISO cleanness levels of approximately 15/12, which is typical of cleanness levels found in normal industrial machinery. When more or less debris is present within the system, the fatigue life predictions can be adjusted according to the measured or expected ISO lubricant cleanness level to more accurately reflect the expected bearing performance.

As opposed to determining the debris life factor based on filtration and ISO cleanness levels, a Debris Signature Analysis™ can be performed for more accurate bearing performance predictions. The Debris Signature Analysis is a process for determining the effects of the actual debris present in your system on the bearing performance. The typical way in which this occurs is through measurements of dented/bruised surfaces on actual bearings run in a given application. This type of analysis can be beneficial because different types of debris cause differing levels of performance, even when they are of the same size and amount in the lubricant. Soft, ductile particles can cause less performance degradation than hard, brittle particles. Hard, ductile particles are typically most detrimental to bearing life. Brittle particles can break down, thus not affecting performance to as large a degree as hard ductile particles. For more information on Debris Signature Analysis or the availability of Debris Resistant bearings for your application, consult your Timken representative.

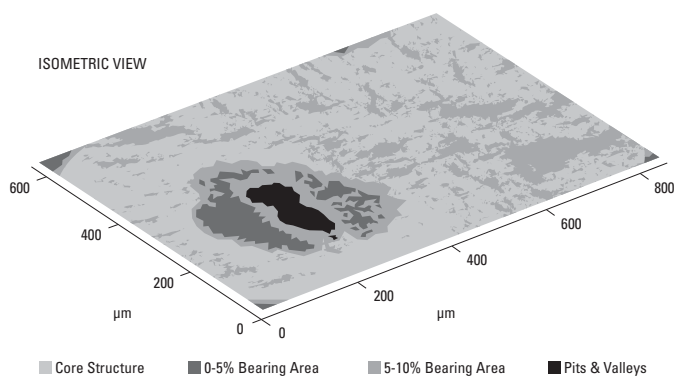

Fig. 46. Surface map of a bearing raceway with debris denting.

Hardness Life Factor (a_{3h})

For Timken bearings in this catalog, supplied as a full assembly, the hardness life factor will be one (1).

Load Zone Life Factor (a_{3k})

The fatigue life of a bearing is a function of the stresses in rolling elements and raceways and the number of stress cycles that the loaded bearing surfaces experience in one bearing revolution. The stresses depend on applied load and on how many rolling elements support that load. The number of stress cycles depends on bearing geometry and, again, on how many rolling elements support the load. Therefore, life for a given external load is related to the loaded arc or load zone of the bearing.

The load zone in a bearing is dominated by the internal clearance, either radial or axial depending on the bearing type. Without considering preload, less clearance in a bearing results in a larger load zone and subsequently longer bearing life.

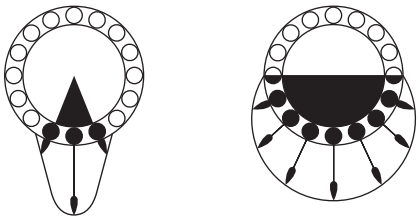

Fig. 47. Bearing load zones and rolling element-raceway contact loading.

Using the dynamic equivalent load (P_r) instead of the applied radial load (F_r) in the equation for L_{10a} roughly approximates the load zone factor for combined loading only. If a more accurate assessment of the load zone adjusted life is necessary (e.g., including the effects of internal clearance or fitting practice), consult your Timken representative.

Lubrication Life Factor (a_{3l})

The influence of lubrication film due to elastohydrodynamic (EHL) lubrication on bearing performance is related to the reduction or prevention of asperity (metal-metal) contact between the bearing surfaces. Extensive testing was done at the Timken Technology Center to quantify the effects of the lubrication-related parameters on bearing life. It was found that the rolling element and raceway surface finish, relative to lubricant film thickness, has the most notable effect on improving bearing performance. Factors such as bearing geometry, material, loads and load zones also play an important role in bearing performance.

The following equation provides a method to calculate the lubrication factor for a more accurate prediction of the influence of lubrication on tapered roller bearing life (L_{10a}). For more information on calculating this factor for ball bearings, consult your Timken representative.

$$a_{3l} = C_g \times C_l \times C_j \times C_s \times C_v \times C_{gr}$$

Where:

C_g = geometry factor
C_l = load factor
C_j = load zone factor
C_s = speed factor
C_v = viscosity factor
C_{gr} = grease lubrication factor

The a_{3l} maximum is 2.88 for all bearings. The a_{3l} minimum is 0.200 for case-hardened bearings and 0.126 for through-hardened bearings.

A lubricant contamination factor is not included in the lubrication factor because Timken endurance tests are typically run with a 0.040 mm (0.00157 in.) filter to provide a realistic level of lubricant cleanness for most applications.

Geometry Factor (C_g)

C_g is given for most tapered roller bearing part numbers in the appendix. The geometry factor also includes the material effects and load zone considerations. It should be noted that the primary effect of the load zone is on rolling element load distributions and contact stresses within the bearing, which are not quantified within the lubrication factor. Refer to the previous section, Load Zone Life Factor (a_{3k}), for more information.

A

Load Factor (C_l)

The C_l factor is obtained from the following figure. Note that the factor is different based on the type of bearing utilized. P_r is the equivalent load applied to the bearing in Newtons and is determined in the Equivalent Bearing Loads (P_r) section.

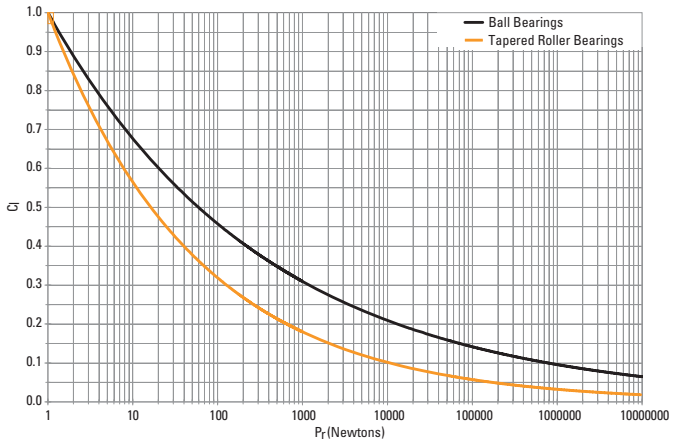

Fig. 48. Load factor (C_l) vs. equivalent bearing load (P_r).

Load Zone Factor (C_j)

As mentioned previously, for all non-tapered roller bearings the load zone factor is one (1). For tapered roller bearings, the load zone factor can be taken from the graph based on the axial load applied to that bearing.

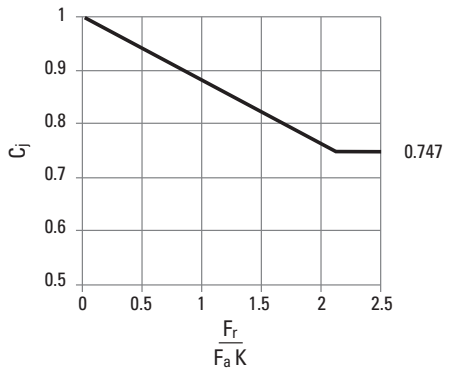

Fig. 49. Load factor (C_j) vs. tapered bearing axial load (F_a).

Speed Factor (C_s)

C_s is determined from the following figure, where rev/min (RPM) is the rotational speed of the inner ring relative to the outer ring.

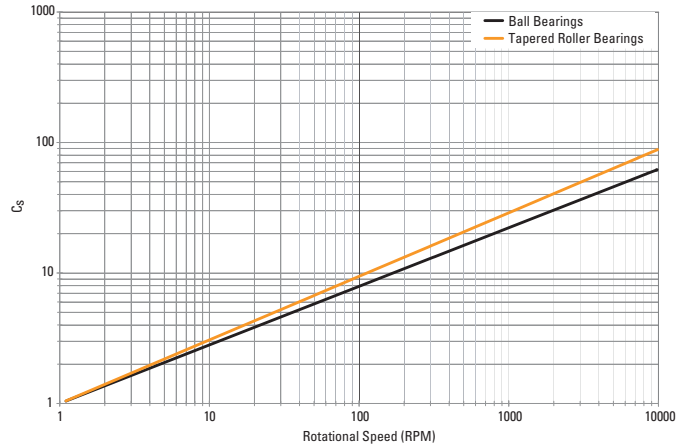

Fig. 50. Speed factor (C_s) vs. rotational speed.

Viscosity Factor (C_v)

The lubricant kinematic viscosity (centistokes [cSt]) is taken at the operating temperature of the bearing. The operating viscosity can be estimated by Figure 51. The viscosity factor (C_v) can then be determined from Figure 52 below.

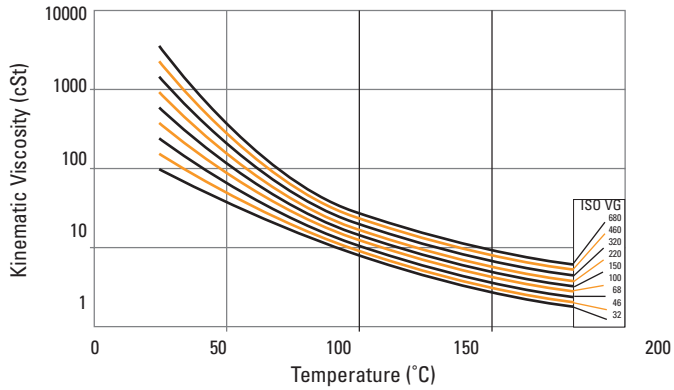

Fig. 51. Temperature vs. kinematic viscosity.

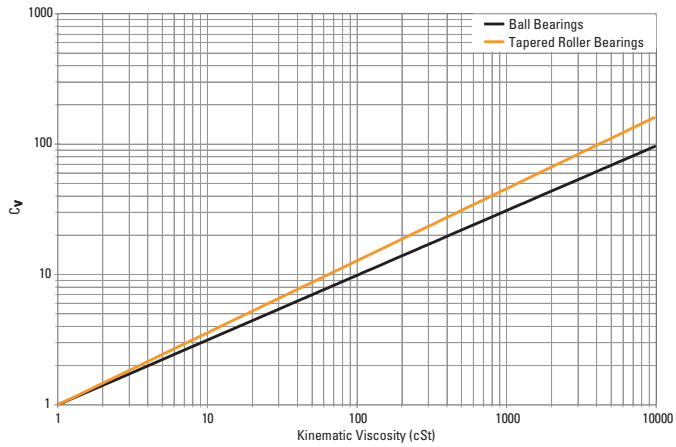

Fig. 52. Viscosity factor (C_v) vs. kinematic viscosity.

Grease Lubrication Factor (C_{gr})

For grease lubrication, the EHL lubrication film becomes depleted of oil over time and is reduced in thickness. Consequently, a reduction factor (C_{gr}) should be used to adjust for this effect.

$$C_{gr} = 0.79$$

Misalignment Life Factor (a_{3m})

The life of the bearing depends on the magnitude of the angle of misalignment, on the internal bearing geometry, and on the applied loads.

Accurate alignment of the shaft relative to the housing is critical for best performance. The life prediction using the method defined in this publication is relatively accurate up to the limits listed within, based on bearing type. The base condition, for which the load rating of the roller bearing is defined, is 0.0005 radians misalignment.

Performance of all Timken bearings under various levels of misalignment and radial and axial load can be predicted using sophisticated computer programs. Using these programs, Timken engineers can design special bearing-contact profiles to accommodate the conditions of radial load, axial load and/or bearing misalignment in your application. Consult your Timken representative for more information.

Low Load Life Factor (a_{3p})

Bearing life tests at the Timken Technology Center have shown greatly extended bearing fatigue life performance is achievable when the bearing contact stresses are low and the lubricant film is sufficient to fully separate the micro-scale textures of the contacting surfaces. Mating the test data with sophisticated computer programs for predicting bearing performance, Timken engineers developed a low-load factor for use in the catalog to predict the life increase expected when operating under low-bearing loads. The following figure shows the low-load factor (a_{3p}) as a function of the lubricant life factor (a_{3l}) and the ratio of bearing dynamic rating to the bearing equivalent load.

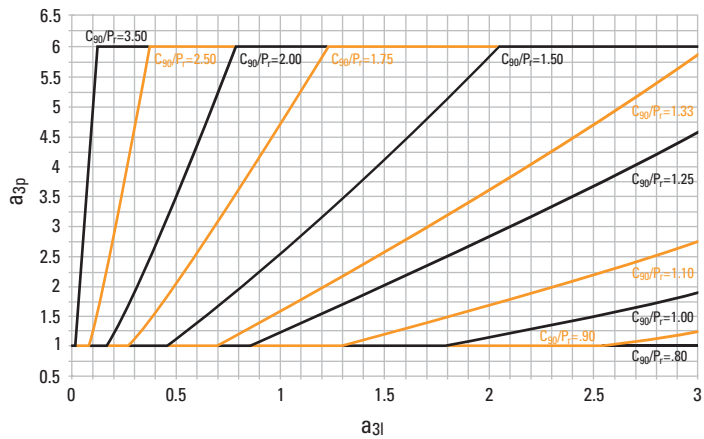

Fig. 53. Low load factor (a_{3P}) vs. lubricant life factor (a_{3l}) and C_{90}/P_r ratio.

A

SYSTEM LIFE AND WEIGHTED AVERAGE LOAD AND LIFE

SYSTEM LIFE

System reliability is the probability that all of the given bearings in a system will attain or exceed some required life. System reliability is the product of the individual bearing reliabilities in the system:

$$R_{(system)} = R_A R_B R_C \ldots R_n$$

In the application, the L_{10} system life for a number of bearings each having different L_{10} life is:

$$L_{10}\,(system) = [(1/L_{10A})^{3/2} + (1/L_{10B})^{3/2} + \ldots (1/L_{10n})^{3/2}]^{-2/3}$$

WEIGHTED AVERAGE LIFE AND LOAD EQUATIONS

In many applications, bearings are subjected to various conditions of loading and bearing selection is often made on the basis of maximum load and speed. However, under these conditions a more meaningful analysis may be made examining the loading cycle to determine the weighted average load.

Bearing selection based on weighted average loading will take into account variations in speed, load, and proportion of time during which the variable loads and speed occur. However, it is still necessary to consider extreme loading conditions to evaluate bearing contact stresses and alignment.

Weighted Average Load

Variable speed, load and proportion time:

$$F_{wt} = [(n_1 T_1 F_1^{10/3} + \ldots n_n T_n F_n^{10/3}) / n_a]^{0.3}$$

Where during each condition in a load cycle:

- T = proportion of total time
- F = load applied
- n = RPM
- n_a = reference speed of rotation for use in bearing life equations. For convenience, 500 RPM is normally used by Timken.

Uniformly increasing load, constant speed:

$$F_w = [(3/13)\,(F_{max}^{13/3} - F_{min}^{13/3}) / (F_{max} - F_{min})]^{0.3}$$

Where, during a load cycle:

- F_{max} = maximum applied load
- F_{min} = minimum applied load

The above formulae do not allow the use of the life-modifying factor for lubrication a_{3l}, except in the case of constant speed. Therefore, when these equations are used in the bearing selection process, the design L_{10} bearing life should be based on a similar successful machine that operates in the same environment. Life calculations for both machines must be performing on the same basis. To allow for varying lubrication conditions in a load cycle, it is necessary to perform the weighted average life calculation.

Weighted Average Life

$$L_{nwt} = 1/\{[T_1 / (L_n)_1] + [T_2 / (L_n)_2] + \ldots [T_n / (L_n)_n]\}$$

Where, during a load cycle:

- T = proportion of total time
- L_n = calculated rating life for each condition

RATIOS OF BEARING LIFE TO LOADS, POWER AND SPEEDS

In applications subjected to variable conditions of loading, bearing life is calculated for one condition. Life for any other condition can easily be calculated by taking the ratio of certain variables. To use these ratios, the bearing load must vary proportionally with power, speed, or both. Nevertheless, this applies only to "catalog" lives or adjusted lives by any life adjustment factor(s). The following relationships hold under stated specific conditions:

Condition	Equation
Variable load Variable speed	$(L_{10})_2 = (L_{10})_1 (P_1 / P_2)^{10/3} (n_1 / n_2)$
Variable power Variable speed	$(L_{10})_2 = (L_{10})_1 (H_1 / H_2)^{10/3} (n_2 / n_1)^{7/3}$
Constant load Variable speed	$(L_{10})_2 = (L_{10})_1 (n_1 / n_2)$
Constant power Variable speed	$(L_{10})_2 = (L_{10})_1 (n_2 / n_1)^{7/3}$
Variable load Constant speed	$(L_{10})_2 = (L_{10})_1 (P_1 / P_2)^{10/3}$
Variable power Constant speed	$(L_{10})_2 = (L_{10})_1 (H_1 / H_2)^{10/3}$

[P = Load, torque or tangential gear force]

Table 10. Life ratio equations.

To calculate system weighted life Timken determines the weighted life for each bearing separately and then calculates a system weighted life.

PERMISSIBLE OPERATING SPEED

When determining the permissible operating speeds corresponding to the bearing preloads used in machine tool spindles, many influencing factors are involved. Among those considered are spindle mass and construction, type of mounting, spindle rigidity and accuracy requirements, spindle loads, service life, type of service (intermittent or continuous), and method of lubrication.

Bearing temperatures, generally, vary directly with both speed and load. However, high-speed applications must have sufficient axial loading on the bearings to prevent heat generation due to rolling element skidding. The amount of bearing preload is determined primarily from these operating conditions. At lower speeds, the operating loads are heavier and the bearing deflections are greater. Therefore, the bearing preload must be high enough to provide adequate bearing rigidity under the heaviest loads and still maintain reasonable temperatures when the spindle is operated at high speeds.

TAPERED ROLLER BEARINGS

Measuring Rib Speed

The usual measure of the speed of a tapered roller bearing is the rib speed, which is the circumferential velocity at the midpoint of the inner ring large end rib (Figure 54). This may be calculated as:

Rib speed:

$$V_r = \frac{\pi D_m n}{60000} \text{ (m/s)}$$

$$= \frac{\pi D_m n}{12} \text{ (ft/min)}$$

Where:

D_m	=	mean inner ring large rib diameter	mm, in.
n	=	bearing speed	rev/min

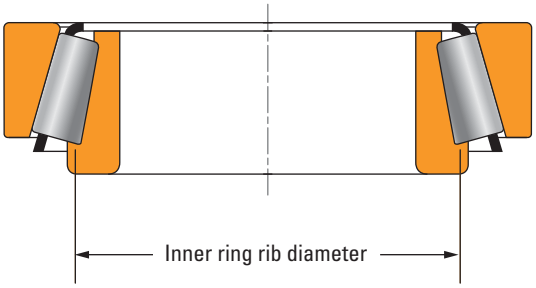

Fig. 54. Cone rib diameter. The inner ring rib diameter may be scaled from a print.

Effect of Lubrication on Speed Capability

The design of the tapered roller bearing results in a natural pumping effect on the lubricant, where the lubricant is forced from the small end of the roller end, heading toward the wider end. As speed increases, the lubricant begins to move outward due to centrifugal effects. At excessive speed, the contact between the roller large ends and the cone's rib face can become a concern. This is the primary reason for suggestions on the use of oil jets at this large end, ribbed-cup designs, or high-speed TSMA designs as operating speeds increase. Refer to the following speed guidelines for more details.

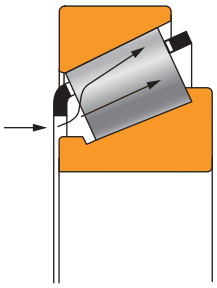

Fig. 55. Pumping effect of a tapered roller bearing

There are no clear-cut speed limitations for tapered roller bearings since performance depends on the bearing design and lubrication system. The guidelines given in the table on page 54 are based on typical industrial experiences relating to speed and temperature for various types of lubrication systems, with bearings having low G_1 factor.

Timken suggests that testing be performed for all new high-speed applications.

A

SPEED GUIDELINES FOR TAPERED ROLLER BEARINGS IN MACHINE TOOL SPINDLES

Bearing type and position	Cone rib speed (feet/minute)					
	0 - 2500	2500 - 4000	4000 - 6000	6000 - 8000	8000 - 10000	10000 - 20000
TS bearing at nose position						
With standard stamped cage	Yes	Yes	Yes	No	No	No
With thermal compensating device	N/R [10]	N/R	Consider [1]	Yes [1]	No	No
With internal geometry modifications	N/R	N/R	Consider	Yes	No	No
With cage modifications	N/R	N/R	N/R	Yes	No	No
With silver-plated cage	N/R	N/R	N/R	Consider	No	No
With machined cage	N/R	N/R	N/R	N/R	No	No
With improved finish	N/R	N/R	N/R	Consider	No	No
TSMA bearing at nose position						
TSMA	N/R	N/R	N/R	Consider [1]	Yes [1]	Yes [1]
With internal geometry modifications	N/R	N/R	N/R	Yes	Yes	Yes
With cage modifications	N/R	N/R	N/R	Yes	Yes	Yes
With silver-plated cage	N/R	N/R	N/R	Consider	Yes	Yes
With machined cage	N/R	N/R	N/R	N/R	Consider	Yes
With improved finish	N/R	N/R	N/R	Consider	Consider	Yes
Ribbed cup bearing at nose position						
Ribbed cup	N/R	N/R	N/R	N/R	Yes	Yes
With internal geometry modifications	N/R	N/R	N/R	N/R	Yes	Yes
With silver-plated cage	N/R	N/R	N/R	N/R	Yes	Yes
With machined cage	N/R	N/R	N/R	N/R	Consider	Yes
With oil drainage holes in cup	N/R	N/R	N/R	N/R	Consider	Yes
With improved finish	N/R	N/R	N/R	N/R	Consider	Yes
Hydra-Rib bearing at rear position						
Standard Hydra-Rib	Consider	Consider	Consider	Yes	No	No
Modified Hydra-Rib	N/R	N/R	N/R	N/R	Yes	Yes
With internal geometry modifications	N/R	N/R	N/R	Yes	Yes	Yes
With silver-plated cage	N/R	N/R	N/R	Consider	Yes	Yes
With machined cage	N/R	N/R	N/R	N/R	Consider	Yes
With oil drainage holes in cup	N/R	N/R	N/R	N/R	Consider	Yes
With improved finish	N/R	N/R	N/R	Consider	Consider	Yes
Lubrication system						
Standard spindle grease	Yes	No	No	No	No	No
Special high-speed grease	N/R	Yes [2]	No	No	No	No
Oil level	Yes [4]	Yes [4]	No	No	No	No
Air/oil or mist	N/R	Consider	Yes [1]	Yes [1][8]	No	No
Circulating oil	N/R	N/R	Yes [5]	Yes [5]	Yes [6]	Yes [6]
Oil jets required under cage	N/R	N/R	N/R	Yes [7]	Yes [7]	Yes [7]
Oil jets required to backface rib	N/R	N/R	N/R	Yes [4][7]	Yes [3][7]	Yes [3][7]

[1] Requires use of Hydra-Rib, Spring-Rib, or spring loaded design at rear position.
[2] Kluber NBU15, Mobil 28, or equivalent.
[3] Only for TSMA bearings.
[4] Use ISO VG32 or equivalent for oil level.
[5] Do not use greater than ISO VG32 or equivalent for circulating oil. Preferred is ISO VG22 or equivalent.
[6] Same as (9) except water jackets in housing would also be required.
[7] 3 Jets at 120 degrees.
[8] Not to be used with TSMA design.
[9] Normally used for operating speeds less than 12.7 m/s (2500 fpm).
[10] Not required (N/R).

Tapered roller bearing designs

2TS mounting (standard design)
2TS + TDO at rear (box mounting) [9]
2TS mounting w/spring mounting
TS mounting + Hydra-Rib
2 TSMA mounting front and rear
TSMA mounting + Hydra-Rib
2 TS ribbed cup mounting
Ribbed cup mounting + Hydra-Rib

Spindle bearing design factors

K-Factor of 1.00 to 1.80 preferred.

Look at G_1 Factor for indication of heat generation characteristics.

Thin section L and LL type bearings should be given primary consideration.

Consult with your Timken representative to ensure bearings selected have good high-speed characteristics.

Lubrication Guidelines for Higher Speed Bearings

A precision tapered roller bearing can meet almost any level of speed required by the machine tool industry with the TSMA and Hydra-Rib high-speed bearing designs, providing circulating oil lubrication can be accommodated.

Both the lubricant and lubrication system have an effect on heat-generation and heat-dissipation rates and thus are important to the speed capabilities of a bearing.

The choice of lubrication will depend on:

- Maximum speed requirement.
- Heat dissipation rate of the system.
- Spindle layout.
- Orientation of the spindle.

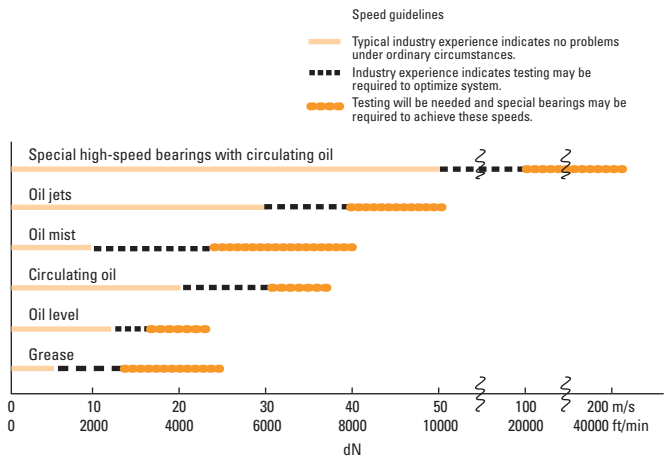

Fig. 56. Speed capability guidelines for various types of lubrication systems.

Internal Bearing Design – G_1 Factor

Internal bearing geometry has a direct influence on torque and, therefore heat generation. In order to rate the torque/heat generation characteristics of its bearings and to assist designers in selecting appropriate bearings, Timken developed a factor called G_1: the lower the G_1 factor, the lower the heat generation. The G_1 factors are published in Timken catalogs and are listed in the appendix of this catalog for the precision tapered roller bearing part numbers listed in the tapered roller bearing section.

This G_1 factor is of prime importance to a designer because of the influence of operating temperature on spindle accuracy.

A

LUBRICATION

TAPERED ROLLER BEARINGS

The selection of the lubricant and lubricant delivery method is directly linked with the speedability of a bearing. It is strongly suggested that the section on permissible operating speed be reviewed by the customer in addition to this section on lubrication.

Fig. 57. Filling a bearing with synthetic grease.

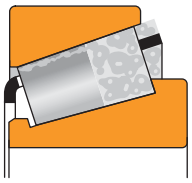

Fig. 58. Simple radial oil inlet hole with oil collector.

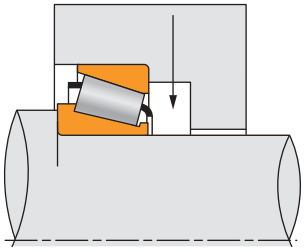

Fig. 59. Axial oil jet to direct oil at small end of the rollers.

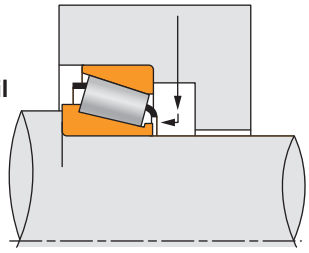

GREASE

Grease lubrication speed limits are lower than limits for oil lubrication because all the heat must be carried away by conduction through the shaft and housing.

Mineral Grease

When conventional (mineral) greases are used, the rib speed should be limited to 5 m/s (985 fpm). This limit can be increased under pure radial loads up to 13 m/s (2560 fpm) provided that the bearings remain in end play under all operating conditions. Generally, No. 2 consistency greases are used with medium- to low-viscosity base oils.

Lubricant quantity (V_{mg}) may be approximated by using the following equation:

$$V_{mg} = f_{mg} \times V = f_{mg} \times \left[\frac{\pi}{4} \times T \times (D^2 - d^2) \times 10^{-3} - \frac{M}{7.8 \times 10^{-3}} \right] \text{ (cm}^3\text{)}$$

Where:

f_{mg}	=	factor depending on speed: $0.3 < f_{mg} < 0.5$	
V	=	free volume of the bearing	(cm^3)
T	=	overall bearing width	(mm)
D	=	cup outer diameter	(mm)
d	=	cone bore	(mm)
M	=	bearing weight	(kg)
π	=	3.1416	

Synthetic Grease

The use of "low-torque" greases (or synthetic greases) can be considered for rib speeds over 13 m/s (2560 fpm), up to maximum of 25 m/s (4920 fpm). Experience has shown that stabilized temperatures, around 15° C to 20° C (27° F to 36° F) above ambient, can be obtained at the maximum permissible speed.

It is important to follow these procedures to help achieve the above performance:

- All corrosion protection is removed from the bearing surfaces by using an organic solvent.
- Very small initial quantity of grease is applied to prevent excessive churning.
- Initial run-in period to evacuate unnecessary grease from the bearing.
- Good spindle design to retain grease around the bearings.
- Efficient sealing to protect against external contamination.

Lubricant quantity (V_{sg}) may be approximated by using the following equation:

$$V_{sg} = f_{sg} \times V = f_{sg} \times \left[\frac{\pi}{4} \times T \times (D^2 - d^2) \times 10^{-3} - \frac{M}{7.8 \times 10^{-3}} \right] \text{ (cm}^3\text{)}$$

Where:

f_{sg}	=	factor depending on speed: $0.15 < fsg < 0.3$
π	=	3.1416

When using synthetic greases, the limiting factor is the "lubrication for life" concept (without re-greasing). Depending on load and speed conditions, the grease life will typically be limited to 5000 to 8000 hours.

The Timken Company's suggestions for the use and run-in of synthetic greases are illustrated later in this section.

A normal way to fill the bearing with grease is to do it by hand before heating and fitting the components. For the cone, the free volume corresponding to the first third of the rollers, starting from their large end, is filled with grease; an additional quantity is provided below the cage. For the cup, a thin film of grease is spread all around the race as shown in Figure 57.

OIL

Grease lubrication of spindle bearings is generally preferred by machine tool builders over oil circulation lubrication due to its simplicity and low heat generation. For high loads or high speeds, however, circulating oil is probably the most widely used method because of its capability to remove heat from the spindle.

Oil Circulation

Many parameters have to be considered in designing an efficient oil circulation lubrication system:

- Oil characteristics.
- Oil flow rates.
- Oil feed and drain systems.
- Heat dissipation rate of the bearing system.

The latter is affected by factors such as conduction through the housing walls and convection by the circulating lubricant.

Oil Characteristics

A low-viscosity mineral oil in the range of ISO VG10 to ISO VG22 is generally specified for the bearings. This choice will minimize heat generation, particularly at high speeds, where the lowest practical viscosity is required. Care must be taken, however, if gears are used for the power transmission because the choice of the common lubricant will be systematically dictated by the needs of the gears. High-quality mineral oils having suitable additives for lubricating both the gears and bearings are available with a relatively low viscosity.

Oil Feed System

Forced-feed oil systems are generally used in the machine tool industry. In a typical system, oil is pumped from a central reservoir to each bearing separately. Oil is introduced at the small end of the rollers and drained away at the large end to take advantage of the natural pumping action of tapered roller bearings.

Circulating oil allows a continuous regulated oil flow. Apart from providing the advantages of maximum heat dissipation, it also has the added benefit of removing any contamination or debris that could possibly cause bearing wear.

Heat exchangers can be included in a circulating system to reduce oil inlet temperature and better regulate the running temperature of the system. Filters of 0.040 mm (0.00157 in.) size also are generally provided to remove debris.

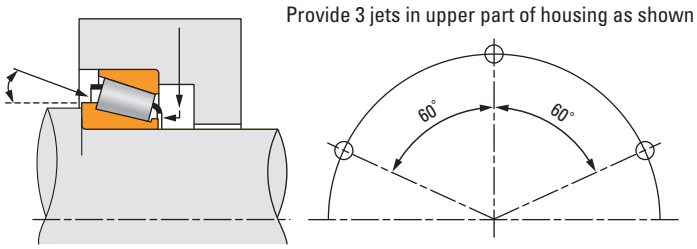

Fig. 60. Cooling jets in top part of the housing for speed above 25 m/s (4920 fpm).

Experience has shown that for speeds up to 20 m/s (3940 fpm), a simple radial oil inlet hole in the top part of the housing in conjunction with an oil collector is sufficient (Figure 58). For speeds over 20 m/s (3940 fpm), an axial oil jet should be positioned to direct oil at the small end of the roller at the gap between the cage and the inner ring (Figure 59). For high speeds or in case of large size bearings, additional oil jets can be arranged about the circumference to better distribute the oil within the bearings.

With increasing speeds (approximately 25 m/s [4920 fpm] and above), the effect of centrifugal force will throw the oil to the outside along the cup race. To prevent lubricant starvation at the inner ring rib, and consequent bearing burnup, additional oil jets have to be provided in the top part of the housing (Figure 60).

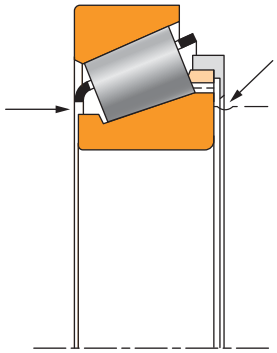

Fig. 61. The TSMA bearing.

For rib speeds over 40 m/s (7874 fpm), special high-speed TSMA bearings have been developed. A special provision for lubrication of the roller-rib contact area is provided to ensure adequate lubrication. The concept works by capturing oil in a manifold attached to the inner ring and directing it to the roller-rib contact area through holes drilled axially in the inner ring (Figure 61).

Oil Drainage System

An effective circulating oil system requires adequate drainage to prevent an oil buildup that would cause excessive churning and unnecessary heat generation. Oil passing through a high-speed bearing will exit the bearing at a high velocity and also will swirl around the housing in the direction of rotation of the bearing. To effectively drain the oil away, the high velocity must be slowed and the swirling action stopped so that the oil will fall down into the drain area. A drain catch basin is required to break up the flow of oil and direct the oil to the drain hole (Figure 62). Oil drain sections must be adequately dimensioned to ease the rapid evacuation of the oil.

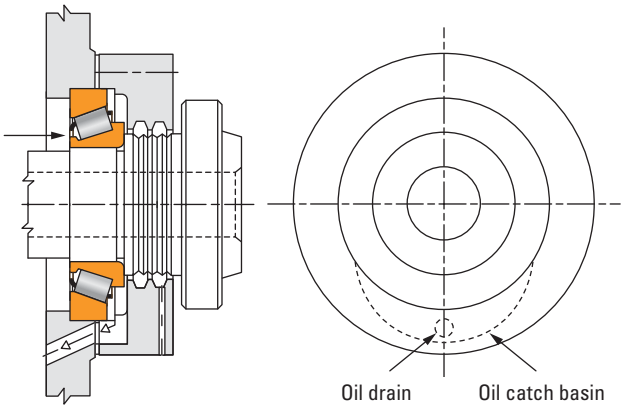

Fig. 62. Oil drain design.

A

BALL BEARINGS

Even though ball bearings have the least amount of friction of any of the common rolling bearings, lubrication is required to minimize rolling resistance due to deformation of the balls in the raceways under load, and to minimize any sliding friction that occurs between the balls, the raceway and the cage. Lubrication also serves to protect the accurately ground and polished surfaces from corrosion. In addition, lubrication in general dissipates generated heat and can help protect the bearing from the entry of foreign matter.

Regardless of the method of lubrication or type of lubricant, it is important that quality lubricants be used to minimize oxidation, gumming or sludging and that the lubricant be clean and free of moisture to minimize wear.

Only enough lubrication to accomplish these purposes should be used since another source of heat may become present, namely friction between the lubricant and the moving parts, in the form of churning or internal shear of the lubricant itself.

In the lubrication of ball bearings it is important to realize that a small quantity of oil or grease will, if constantly present in the bearing, suffice for its requirements. It should be noted that trouble can result from too much lubrication just as it can from too little. Both conditions should be avoided. Excessive oil or grease will result in high temperature and possible damage. When grease is used, it is necessary to take into consideration the maximum operating temperature. Particular attention must be given to the housing design relating to the proximity of the grease to the bearing, to assure adequate purge room and grease retention.

Depending upon operating speeds, loads and temperatures, machine tool ball bearings are lubricated with grease, oil or oil mist. In general, oils are required when bearings operate at high speeds as they provide greater cooling than is possible with grease.

The following relationship may be used to estimate the effect of preload and lubrication method on the Permissible Operating Speed (S_P).

$$S_P = F_L \times F_P \times F_B \times N_G$$

Where:

F_L = lubrication factor
F_P = preload factor
F_B = ball material factor

N_G is Permissible Speed for a single, grease-lubricated bearing with inner ring rotation. This value is found with the part number tables.

Factors are as follows:

Lubrication factor (F_L)	
Grease	F_L = 1.00
Oil bath	F_L = 1.50
Oil mist	F_L = 1.70
Oil jet or metered oil	F_L = 2.00

Table 11. Lubrication factor = (F_L).

Bearing mounting arrangement	Bearing preload L	M	H
	0.85	0.70	0.50
	0.80	0.60	0.40
	0.65	0.50	0.30
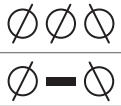	0.65	0.50	0.30
	0.70	0.60	0.35
	0.60	0.40	0.20
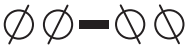	0.65	0.45	0.25

Table 12. Bearing preload factor = (F_p).

Ball material factor (F_B)	
Steel balls	F_B = 1.00
Ceramic balls[1]	F_B = 1.20

[1]Ceramic balls allow 20 percent increase to speed factor.

Table 13. Ball material factor (F_B).

GREASE

The use of grease as a lubricant for Timken super precision ball bearings on various spindle applications is becoming more popular, due to the development of better ball bearing greases, simplification of design and elimination of the "human maintenance factor," which is frequently responsible for too much lubrication, not enough lubrication, or the wrong kind of lubrication. Prelubricating the bearings at assembly with the correct amount of the correct grease, thus eliminating all grease fittings, has increased bearing life in many instances.

For successful lubrication, grease for ball bearings should have good mechanical and chemical stability with low-torque characteristics. Two different types of grease, one soft and the other firmer, have proved to be suitable lubricants for machine tool spindle bearings. The "soft" greases have a worked penetration factor corresponding to NLGI of two or less. The firmer grease has a worked penetration factor of three or more and is of the channeling type. All greases show a very slight change in consistency after operation in a bearing. As the softer grease has a tendency to churn, particular attention should be given to the quantity packed into the bearing. Because the firmer grease is of the channeling type, the amount used is not as critical.

For super precision ball bearings below a 500000 dN value, which is equivalent to a 50.000 mm (1.9685 in.) bore bearing rotating at 10000 RPM, either a light-consistency grease or the channeling grease may be used.

At continuous speeds above a dN value of 500000, the operating temperature is generally lower when the bearings are lubricated with a lower-consistency grease and after sufficient break-in.

However, the grease quantity in each bearing must be limited. At these higher speeds, an excessive amount of grease in the bearing may result in greatly increased operating temperatures due to churning action. This condition, if uncontrolled, may lead to premature bearing damage.

Grease and Speed Capability

Before selecting a grease, it is important to define a relative speed capability of the application. There is no precise method that can be applied to determine the operating speed of a bearing. Over the years, designers of machine tool systems have been guided by their own experiences from which many basic "rules of thumb" have been established. One such rule is the dN speed value.

dN = Bore in millimeters x RPM

The most common spindle greases that Timken suggests for Timken spindle ball bearings are:

Unirex N3	Vertical applications < 500000 dN
Mobil 28	Light loads < 600000 dN
Chevron SRI	Medium to heavy loads < 350000 dN
Kluber Isoflex NBU 15/ NCA 15	Light loads, vertical or horizontal applications > 500000 dN
Timken Ultra-High Speed Spindle Grease/ Kluber BF-7222	Light loads, vertical or horizontal applications at higher speeds > 750000 dN

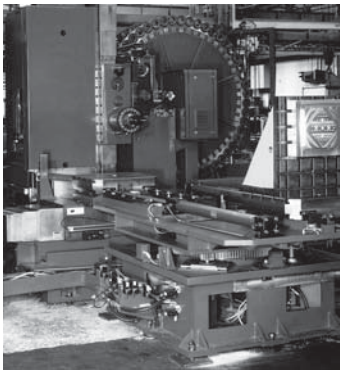

A

OIL

Although several grease products have been successful at dN values as high as one million, oils are generally suggested for bearings operating at high speeds or to provide more cooling and dissipation of heat than is possible with grease. High-grade spindle oil having a viscosity of 100 seconds Saybolt at 37° C (100° F) is suggested for use in drip-feed oilers, oil bath lubrication arrangements and oil mist systems. In heavily loaded applications, oil in relatively large quantities must be supplied, and where temperatures run higher than normal, oil coolers will be suggested. Churning of a large pool of oil is to be avoided if speed is significant.

Oil Bath

The conventional oil-bath system for lubricating the bearings is satisfactory for low and moderate speeds. The static oil level must never be higher than the center of the lowermost ball. When the shaft is rotating, the running level may drop considerably below the standstill level, depending on the speed of the revolving parts. A sight gauge or other suitable method should be provided to permit an easy check.

Drip-Feed Oil

Where the speeds are considered high for oil bath and the bearings are moderately loaded, oil introduced through a filter-type, sight-feed oiler is suggested. This assures a constant supply of lubricant. The feed in drops-per-minute is determined by closely observing the operating temperatures.

Oil Jet

In applications where the ball bearing is heavily loaded and operating at high speed and high temperatures, or where the operating conditions are severe with high ambient temperatures, oil jet lubrication may be required. In such cases, it is necessary to lubricate each bearing location individually and to provide adequately large drain openings to prevent excessive accumulation of oil after it has passed through the bearings.[1]

Oil Mist

Oil mist lubrication is often used for spindles running continuously at high speeds. With this method of lubrication, oil of the proper viscosity is atomized into finely divided particles, mixed with clean, filtered, dry compressed air and directed to pass through the bearings in a constant stream. This oil is metered into the air under pressure. This system not only lubricates the bearings, it affords some cooling due to the air flow. This continuous passage of air and oil through the bearings and the labyrinth seals also serves to prevent the entrance of contaminants into the bearings.

To ensure the "wetting" of the bearings and to prevent possible damage to the balls and raceways, it is imperative that the oil mist system be turned on for several minutes before the spindle is started. The importance of wetting the bearings before starting cannot be overstated and has particular significance for spindles that have been idle for extended periods of time. To avoid such effects, most oil mist systems have interlocks that make it impossible to start the spindle until the lubricating system is working properly and the bearings are thoroughly wetted.[1]

Metered Air/Oil

This method is similar to the oil mist; however, the oil is fed by periodic pulses to the lubrication line providing a higher air-to-oil ratio. Therefore, this method lowers the operating bearing temperature and lubricant shear effects, enabling higher operating speeds. [1]

	System cost	Typical speed (dN)[2]
Grease	Low	500000
High-speed grease	Low	750000
Oil bath	Low	400000
Oil drip	Low	600000
Oil mist	Medium	1000000
Metered air/oil	High	>1000000
Oil jet	High	>1000000

[2]Speed value is an approximation and assumes proper mounting and preload techniques along with average loading conditions. For more specific guidance contact your Timken representative.

The speed, "dN," value is obtained by multiplying the bearing bore size in millimeters by the shaft RPM.

Table 14. Lubrication system comparison.

[1]For further information, refer to the lubrication specification tables found on pages 243-244.

RUN-IN PROCEDURES

TAPERED ROLLER BEARINGS WITH SYNTHETIC GREASE

The aim of run-in cycles is to correctly spread the grease inside the bearing, to avoid churning of the grease and excessive bearing temperature.

During run-in operations, the bearing temperature must be constantly monitored and immediately plotted on a graph so that any tendency of the curve toward a vertical asymptote can be averted. Temperature probes, placed closest to the bearings, will provide better control of the run-in operations.

The other advantage of the graph is to help determine the run-in time at a given speed. When the curve becomes horizontal, it shows that the temperature has stabilized. It is then possible to proceed to the next speed.

The indicated times may vary depending on the speeds and heat dissipation capacity of the spindles.

According to the results obtained on the prototype, it may be possible to reduce either the number or the length (or both) of the run-in steps for production spindles. In any event, temperature control should be retained for safety reasons.

When running-in multi-speed spindles, reduced speeds must be chosen at start-up of the cycles. The speed can be progressively increased until the bearings evacuate any excessive quantities of grease.

Time	Action
10 sec	Run
1 min	Stop
20 sec	Run
1 min	Stop
30 sec	Run
1 min	Stop
40 sec	Run
1 min	Stop
50 sec	Run
1 min	Stop
1 min	Run
1 min	Stop
90 sec	Run
1 min	Stop
2 min	Run
1 min	Stop
3 min	Run*
1 min	Stop
4 min	Run*
1 min	Stop
6 min	Run*
1 min	Stop
10 min	Run*
20 min	Stop

⟹ Then run until temperature stabilizes. At this step of the cycle, as well as at the other steps marked *, closely watch the curve's shape. If it tends to be vertical, stop 15 minutes and run again at 75 percent of max. speed until the temperature stabilizes again. Then restart the cycle from the beginning at max. speed.

Table 15. Run-in suggestions for synthetic grease-lubricated tapered roller bearings with single-speed spindles.

25% Max. speed		50% Max. speed		75% Max speed		Max. speed	
Time	Action	Time	Action	Time	Action	Time	Action
1 min	Run	1 min	Run	1 min	Run	1 min	Run
1 min	Stop	1 min	Stop	1 min	Stop	1 min	Stop
1 min	Run	1 min	Run	1 min	Run	1 min	Run
1 min	Stop	1 min	Stop	1 min	Stop	1 min	Stop
2 min	Run	2 min	Run	2 min	Run	2 min	Run
1 min	Stop	1 min	Stop	1 min	Stop	1 min	Stop
3 min	Run	3 min	Run	3 min	Run	3 min	Run
5 min	Stop	5 min	Stop	5 min	Stop	5 min	Stop
⟹ Then run until temperature stabilizes.		⟹ Then run until temperature stabilizes.		⟹ Then run and closely watch the curve's shape during running, until stabilization. If it tends to be vertical, stop 15 minutes and run again at same speed.		⟹ Then run until temperature stabilizes. At this step of the cycle, closely watch the curve's shape. If it tends to be vertical, stop 15 minutes and run again at 75 percent of max. speed until the temperature stabilizes again. Then restart the cycle from the beginning at max. speed.	

Table 16. Run-in suggestions for synthetic grease-lubricated tapered roller bearings with multi-speed spindles.

A

BALL BEARINGS WITH GREASE LUBRICATION

Figure 63 shows bearing temperature increase due to run-in procedure. The peaking temperature followed by the leveling off is a result of the new grease being worked and then stabilized for a particular condition of load and speed.

It is important that the peak temperature not exceed 55° C (100° F) above room temperature since the chemical consistency and characteristics of the grease can be permanently altered. Thus, the proper run-in procedure is to run the machine until the spindle temperature rises to 65° C (150° F) and then turn it off to allow the grease to cool. Repeat until the spindle temperature stabilizes at a temperature below 54° C (130° F).

Figure 64 shows the typical temperature rise of the bearing once the grease has been worked in for the specific speed and load.

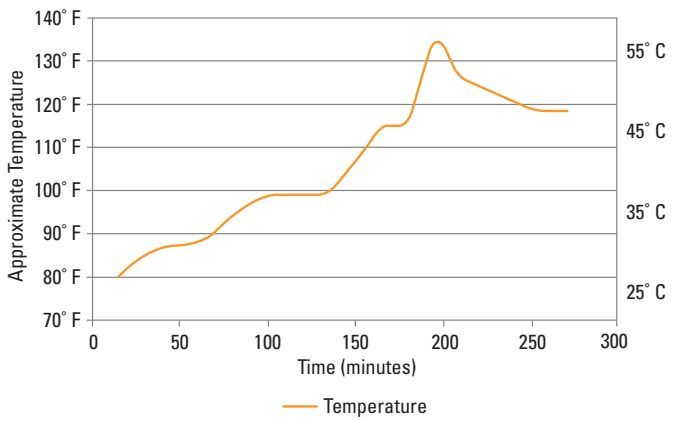

Fig. 63. Typical temperature profile during break-in (4 speed increments from 200000 dN start to 800000 dN finish).

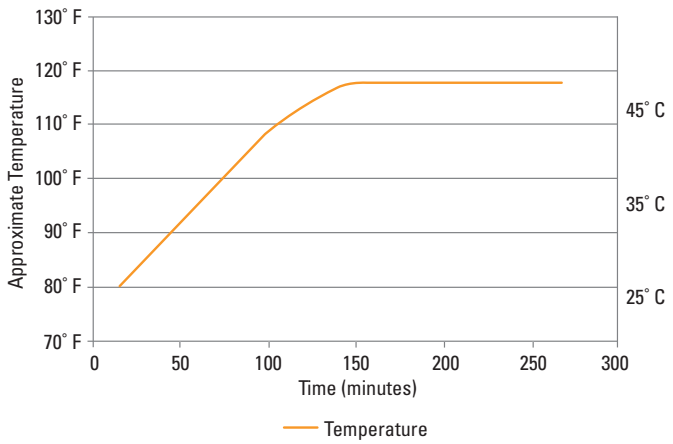

Fig. 64. Typical temperature after break-in procedure.

BALL BEARINGS WITH GREASE (FOR SPEEDS > 500000 dN)

A proper run-in procedure will provide the following results:

- Expel the excess grease from the bearings.
- Orient the lubricating film on each contact surface.
- Establish a low-equilibrium operating temperature.

Run-In Procedure

1) Install proper quantity of grease.
2) Start at a reasonable low speed, typically 10 percent of the maximum operating speed.
3) Increase speed with small, reasonable increments when a stable temperature is reached.
4) Continue incremental increase in speed as described. If a rapid temperature increase occurs (temperature exceeds 70° C [170° F]), stop the run-in process.

   Maximum bearing temperatures should not exceed 70° C (170° F). Temperatures in excess of 70° C (170° F) may cause excessive bearing preloads and possible permanent grease or bearing damage.
5) Allow the system to cool to room temperature.
6) Restart procedure at the last speed prior to the temperature spike.
7) Continue repeating the above cycle until an equilibrium temperature is reached at the maximum operating speed of the application. *The ideal equilibrium operating temperature is 35° C to 46° C (95° F to 115° F).*

Alternative Run-In Procedure (When Unable to Control Incremental Speeds)

Run-in at constant speed also is possible. In this operation, the bearing should run at full speed for about 30 seconds. After stopping, the heat in the bearing dissipates. In this way, a dangerous temperature rise is prevented. The non-running time depends on the various design factors, but it should be at least five times greater than the running time. This process is repeated until the bearing temperature becomes constant.

VERTICAL SPINDLES

For vertical axis spindles, special attention must be paid to the lubrication and sealing. Modified sealing is required to prevent the coolant from contaminating the lubricant when the spindle nose bearing is at the upper position (Figure 65).

In the case of grease lubrication, deflectors have to be installed to prevent grease migration away from the bearing cavity. Alternatively, when oil lubrication is adopted and the nose bearing is at the lower position, a system to collect and extract the oil has to be provided to prevent leakage (Figure 66).

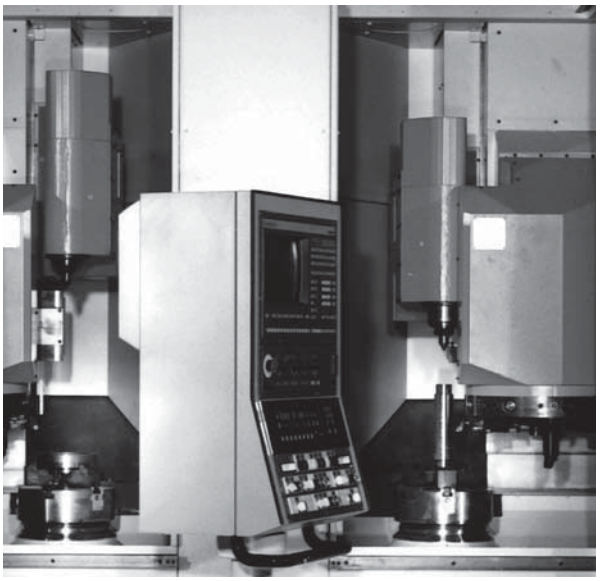

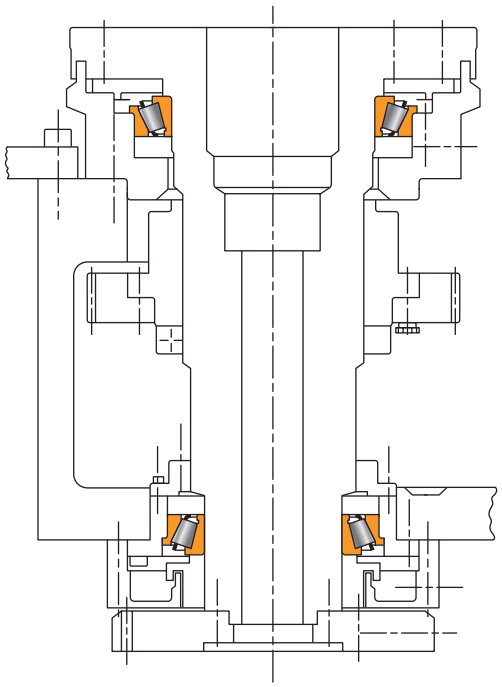

Fig. 65. Vertical axis spindle.

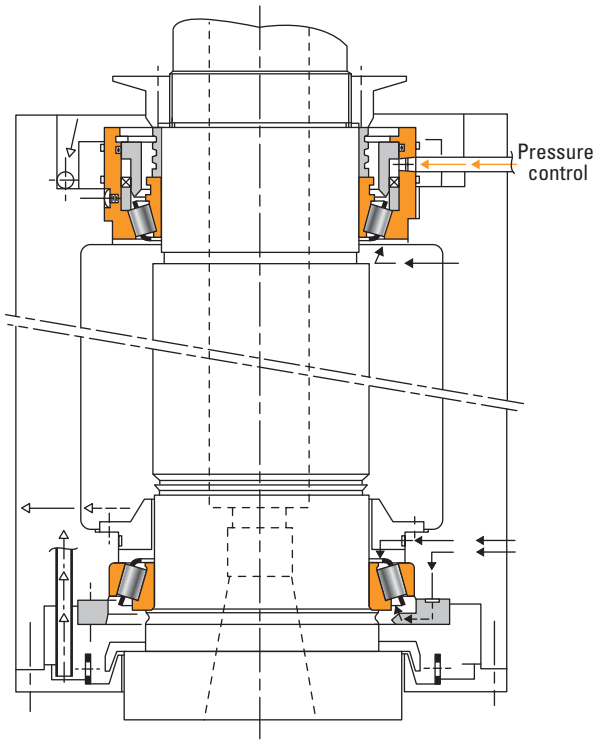

Fig. 66. Typical example of proper use of an oil-lubricated vertical axis spindle with pressure control for the oil and a means to collect and extract the oil.

A

HEAT GENERATION AND DISSIPATION

TAPERED ROLLER BEARINGS

Heat Generation

Under normal operating conditions, most of the torque and heat generated by the bearing is due to the elastohydrodynamic losses at the contact area between rollers and races.

The following equation is used to calculate the heat generated by the bearing:

$$Q_{gen} = k_4 n M$$
$$M = k_1 G_1 (n\mu)^{0.62} (P_{eq})^{0.3}$$

Where:

- Q_{gen} = generated heat (W or Btu/min)
- M = running torque N.m or lbf-in.
- n = rotational speed (RPM)
- G_1 = geometry factor from bearing data tables
- μ = viscosity at operating temperature (cP)
- P_{eq} = dynamic equivalent load (N or lbf)
- k_1 = bearing torque constant
  - = 2.56×10^{-6} for M in N-m
  - = 3.54×10^{-5} for M in lbf-in.
- k_4 = dimensional factor to calculate heat generation rate
  - = 0.105 for Qgen in W when M in N-m
  - = 6.73×10^{-4} for Qgen in Btu/min when M in lbf-in.

The generated heat will be underestimated if operating speed:

$$n \leq \frac{k_2}{G_2 \times \mu} \left(\frac{f_2 \times F_r}{K} \right)^{0.66} \text{RPM}$$

Where:

- G_2 = geometry factor (from bearing data tables)
- k_2 = 625 (metric) or 1700 (inch)
- K = K factor of the bearing (from bearing data tables)
- f_2 = combined load factor (Figure 67)

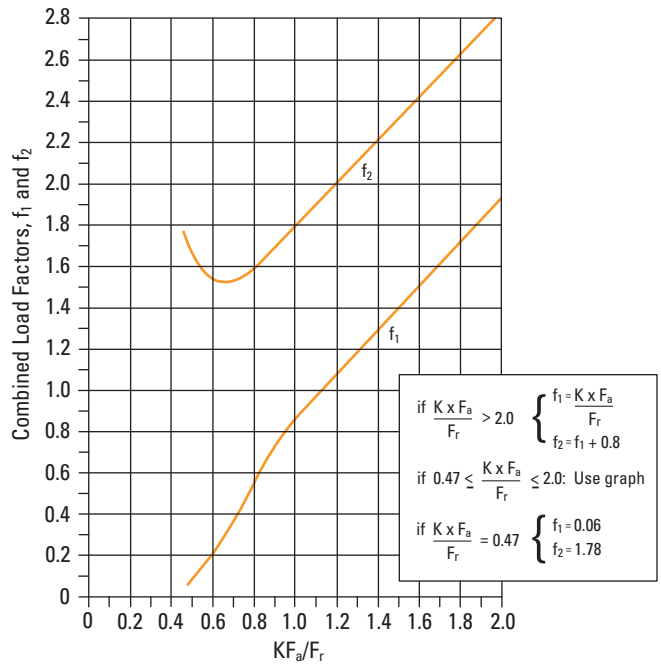

Fig. 67. Determination of combined load factors f_1 and f_2.

Design (thrust f_{ae} onto A)	Thrust condition	Net axial load	Dynamic equivalent load P_{eq}
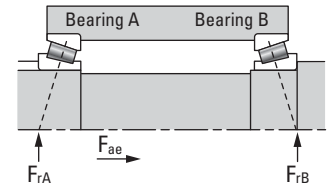	$\frac{0.47 \times F_{rA}}{K_A} \leq \frac{0.47 \times F_{rB}}{K_B} + F_{ae}$	$F_{aA} = \frac{0.47 \times F_{rB}}{K_B} + F_{ae}$ $F_{aB} = \frac{0.47 \times F_{rB}}{K_B}$	$P_{eq} = \left(\frac{f_1 \times F_r}{K} \right)$ f_1 = combined load factor (see Figure 67)
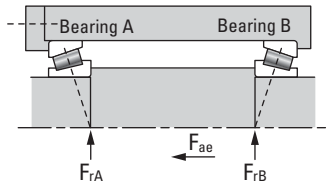	$\frac{0.47 \times F_{rA}}{K_A} > \frac{0.47 \times F_{rB}}{K_B} + F_{ae}$	$F_{aA} = \frac{0.47 \times F_{rA}}{K_A}$ $F_{aB} = \frac{0.47 \times F_{rA}}{K_A} - F_{ae}$	

Fig. 68. Determination of dynamic equivalent load P_{eq}.

Heat Dissipation

The heat dissipation rate of a bearing system is affected by many factors, and the modes of heat transfer need to be considered. Major heat transfer modes in most systems are conduction through the housing walls, convection at the inside and outside surfaces of the housing, and convection by the circulating lubricant. In many applications, overall heat dissipation can be divided into two categories:

- Heat removed by circulating oil.
- Heat removed through the housing.

Heat Dissipation by Circulating Oil

Heat dissipated by a circulating oil system is:

$$Q_{oil} = k_5 \times f \times (\theta_o - \theta_i)$$

If a circulating lubricant other than petroleum oil is used, the heat carried away by that lubricant will be:

$$Q_{oil} = k_6 \times C_p \times \rho \times f \times (\theta_o - \theta_i)$$

Where:

k_5 = dimensional factor to calculate heat carried away by a petroleum oil
- k_5 = 28 for Q_{oil} in W when f in L/min and θ in ˚C
- k_5 = 0.42 for Q_{oil} in Btu/min when f in U.S. pt/min and θ in ˚F

k_6 = dimensional factor to calculate heat carried away by a circulating fluid
- $k_6 = 1.67 \times 10^{-5}$ for Q_{oil} in W
- $k_6 = 1.67 \times 10^{-2}$ for Q_{oil} in Btu/min

Q_{oil}	= heat dissipation rate of circulating oil	W, Btu/min
θ_i	= oil inlet temperature	˚C, ˚F
θ_o	= oil outlet temperature	˚C, ˚F
C_p	= specific heat of lubricant	J/(kg x ˚C), Btu/(lb x ˚F)
f	= lubricant flow rate	L/min, U.S. pt/min
ρ	= lubricant density	kg/m^3, lb/ft^3

If lubricant flow is unrestricted on the outlet side of a bearing, the flow rate that can freely pass through the bearing depends on bearing size and internal geometry, direction of oil flow, bearing speed and lubricant properties.

A tapered roller bearing has a natural tendency to pump oil from the small end to the large end of the rollers. For maximum oil flow and heat dissipation, the oil inlet should be adjacent to the small end of the rollers.

In a splash or oil level lubrication system, heat will be carried by convection to the inner walls of the housing. The heat dissipation rate with this lubrication method can be enhanced by using cooling coils in the housing sump.

Heat Dissipation Through Housing

Heat removed through the housing is, in most cases, difficult to determine analytically. If the steady-state bearing temperature is known for one operating condition, the following method can be used to estimate the housing heat dissipation rate.

At the steady-state temperature, the total heat dissipation rate from the bearing must equal the heat generation rate of the bearing. The difference between the heat generation rate and heat dissipation rate of the oil is the heat dissipation rate of the housing at the known temperature.

Heat losses from housings are primarily by conduction and convection and are therefore nearly linearly related to temperature difference. Thus, the housing heat dissipation rate is:

$$Q_{hsg} = C\,(\theta_o - \theta_{ambt})$$

At the operating condition where the steady-state temperature is known, the housing heat dissipation factor can be estimated as:

$$C = \frac{Q_{gen} - Q_{oil}}{\theta_o - \theta_{ambt}}$$

A

BALL BEARINGS

Heat Generation

Low operating temperatures, combined with adequate spindle rigidity, are important and highly desirable for precision machine tools. This is particularly true for high-speed grinding spindles where the preload of the bearings is the principal load imposed upon them. Some of the benefits derived from low operating temperatures are better dimensional stability of the processed work, less need for bearing lubrication, prevention of objectionable heat at the external surfaces of the spindle housing, and elimination of troubles due to thermal effects on mounting fits and preloads.

Preload and Heat Generation

The heat developed at the bearings under load is a function of the operating speed and the bearing preload. Preloading is necessary for maximum axial and radial rigidity. Unfortunately, if speeds are increased, the bearing preload may have to be lessened to maintain proper operating temperatures at the bearing.

For high-speed operation, the bearing preload should be sufficient to maintain proper rolling friction for the balls, but not so high as to generate excessive heat. In cases where lower operating speeds are desired, bearing preloads may be increased to obtain additional bearing rigidity, provided the proper operating temperatures are maintained. Thus, a balance between heat generation and spindle rigidity dictates the amount of bearing preload that is used, commensurate with the operational speed and the bearing life required.

How bearing preload affects the operating temperature is illustrated in Figure 69. This graph applies to 207-size, angular contact, duplexed super precision ball bearings, mounted back-to-back. Curve A is a plot of operating temperature at the bearing outside diameter for the speeds indicated, using bearings with a high built-in preload. Curve B is for bearings having a low preload. The slope of Curve A is much steeper than that of Curve B. Using bearings with a high preload, the temperature rise at the bearing outside diameter is 34° C (60° F) when operating at 3600 RPM. For the same temperature rise using bearings with low preload, an operating speed of 15300 RPM is indicated. Therefore, it is evident that for higher-speed operation, the bearing preload should be kept to the minimum necessary to ensure sufficient bearing rigidity.

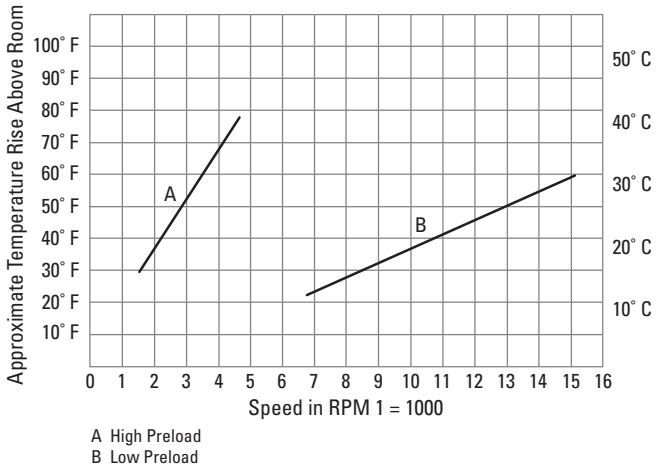

Fig. 69. Effect of preload on temperature rise.

For workhead spindles, the operating speeds are generally low and the loading conditions heavy. Maximum radial and axial spindle rigidity is required under these loads, making increased bearing preload mandatory.

Bearing Geometry and Heat Generation

It should be noted that a bearing's internal geometry has a major impact on heat generation. High-speed designs, such as the Timken HX Series, incorporate "optimized" internal geometries that balance load-carrying capacity, stiffness and heat generation.

Heat Dissipation

When ball bearing spindles are grease lubricated, the heat generated is removed only by conduction through the surrounding parts. With jet or circulating oil lubrication, generated heat is dissipated by the oil passing through the bearings as well as by conduction through the shaft and housing. Both means of removing heat from the bearings are important, but generally, dissipation through conduction is less obvious.

As an example, in an oil mist-lubricated grinding spindle, the nose or wheel-end bearings are fixed and close to the grinding coolant. The pulley-end or rear bearings are secured axially on the shaft, but permitted to float laterally in the housing to compensate for size variations due to thermal changes. Heat is conducted away from the front bearings at a faster rate because of the thermal mass of the spindle nose and the intimate contact of the outer rings with the housing shoulder, the end cover and the housing bore. This condition, coupled with oil mist lubrication and the proximity of the grinding coolant, takes away generated heat efficiently.

The rear or floating pair of bearings is not so favored. Usually, the thermal mass of the shaft at the drive-end is not so great. The drive-end possesses some heat-conduction ability, but also receives heat generated by belt friction. The absence of grinding coolant and the reduced area of conduction usually results in a slightly higher operating temperature.

TOLERANCES

TAPERED ROLLER BEARINGS

Tapered roller bearings are manufactured to a number of specifications or "classes" that define tolerances on dimensions such as bore, O.D., width and runout. The Timken Company produces bearings in both inch and metric systems. The boundary dimension tolerances applicable to these two categories of bearings differ.

System bearing type			Precision bearing class			
Metric	Timken	Tapered roller bearings	C	B	A	AA
		Crossed roller bearings	S	P	-	-
	ISO/DIN	Tapered roller bearings	P5	P4	P2	-
	ABMA	Tapered roller bearings	C	B	A	-
Inch	Timken	Tapered roller bearings	3	0	00	000
		Crossed roller bearings	3	0	-	-
	ABMA	Tapered roller bearings	3	0	00	-

Table 17. Tapered roller bearing precision classes.

The major difference between the two tolerance systems is that inch bearings have historically been manufactured to positive bore and O.D. tolerances, whereas metric bearings have been manufactured to negative tolerances.

METRIC SYSTEM BEARINGS (ISO AND "J" PREFIX PARTS)

Timken manufactures metric system bearings to four tolerance classes. Classes C, B, A and AA are "precision" classes. These tolerances lie within those currently specified in ISO 492 with the exception of a small number of dimensions indicated in the tables. The differences normally have an insignificant effect on the mounting and performance of tapered roller bearings.

The adjacent table illustrates the current ISO bearing class that corresponds approximately to each of The Timken Company metric bearing classes.

Metric bearing tolerances										
Cone bore			Precision bearing class							
Bearing types[1]	Bore		C		B		A		AA	
	Over	Incl.	Max.	Min.	Max.	Min.	Max.	Min.	Max.	Min.
	mm in.	mm in.	mm in.	mm in.	mm in.	mm in.	mm in.	mm in.	mm in.	mm in.
TS TSF	**10.000**	**18.000**	**0.000**	**-0.007**	**0.000**	**-0.005**	**0.000**	**-0.005**	**0.000**	**-0.005**
	0.3937	0.7087	0.0000	-0.0002	0.0000	-0.0001	0.0000	-0.0001	0.0000	-0.0001
	18.000	**30.000**	**0.000**	**-0.008**	**0.000**	**-0.006**	**0.000**	**-0.006**	**0.000**	**-0.006**
	0.7087	1.1811	0.0000	-0.0003	0.0000	-0.0002	0.0000	-0.0002	0.0000	-0.0002
	30.000	**50.000**	**0.000**	**-0.010**	**0.000**	**-0.008**	**0.000**	**-0.008**	**0.000**	**-0.008**
	1.1811	1.9685	0.0000	-0.0004	0.0000	-0.0003	0.0000	-0.0003	0.0000	-0.0003
	50.000	**80.000**	**0.000**	**-0.012**	**0.000**	**-0.009**	**0.000**	**-0.008**	**0.000**	**-0.008**
	1.9685	3.1496	0.0000	-0.0005	0.0000	-0.0004	0.0000	-0.0003	0.0000	-0.0003
	80.000	**120.000**	**0.000**	**-0.015**	**0.000**	**-0.010**	**0.000**	**-0.008**	**0.000**	**-0.008**
	3.1496	4.7244	0.0000	-0.0006	0.0000	-0.0004	0.0000	-0.0003	0.0000	-0.0003
	120.000	**180.000**	**0.000**	**-0.018**	**0.000**	**-0.013**	**0.000**	**-0.008**	**0.000**	**-0.008**
	4.7244	7.0866	0.0000	-0.0007	0.0000	-0.0005	0.0000	-0.0003	0.0000	-0.0003
	180.000	**250.000**	**0.000**	**-0.022**	**0.000**	**-0.015**	**0.000**	**-0.008**	**0.000**	**-0.008**
	7.0866	9.8425	0.0000	-0.0009	0.0000	-0.0006	0.0000	-0.0003	0.0000	-0.0003
	250.000	**265.000**	**0.000**	**-0.022**	**0.000**	**-0.015**	**0.000**	**-0.008**	**0.000**	**-0.008**
	9.8425	10.4331	0.0000	-0.0009	0.0000	-0.0006	0.0000	-0.0003	0.0000	-0.0003
	265.000	**315.000**	**0.000**	**-0.022**	**0.000**	**-0.015**	**0.000**	**-0.008**	**0.000**	**-0.008**
	10.4331	12.4016	0.0000	-0.0009	0.0000	-0.0006	0.0000	-0.0003	0.0000	-0.0003
	315.000	**400.000**	**0.000**	**-0.025**	–	–	–	–	–	–
	12.4016	15.7480	0.0000	-0.0010	–	–	–	–	–	–
	400.000	**500.000**	**0.000**	**-0.025**	–	–	–	–	–	–
	15.7480	19.6850	0.0000	-0.0010	–	–	–	–	–	–
	500.000	**630.000**	**0.000**	**-0.030**	–	–	–	–	–	–
	19.6850	24.8031	0.0000	-0.0012	–	–	–	–	–	–
	630.000	**800.000**	**0.000**	**-0.040**	–	–	–	–	–	–
	24.8031	31.4961	0.0000	-0.0014	–	–	–	–	–	–
	800.000	**1000.000**	**0.000**	**-0.050**	–	–	–	–	–	–
	31.4961	39.3701	0.0000	-0.0020	–	–	–	–	–	–
	1000.000	**1200.000**	**0.000**	**-0.060**	–	–	–	–	–	–
	39.3701	47.2441	0.0000	-0.0024	–	–	–	–	–	–
	1200.000	**1600.000**	**0.000**	**-0.080**	–	–	–	–	–	–
	47.2441	62.9921	0.0000	-0.0031	–	–	–	–	–	–

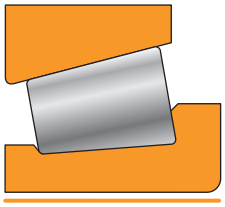

[1]Not all types and sizes are listed in this catalog. Contact your Timken representative for further information.

METRIC SYSTEM BEARINGS (ISO AND "J" PREFIX PARTS) - *continued*

Metric bearing tolerances										
Cup O.D.			Precision bearing class							
Bearing types[1]	Bore Over	Bore Incl.	C		B		A		AA	
			Max.	Min.	Max.	Min.	Max.	Min.	Max.	Min.
	mm in.	mm in.	mm in.	mm in.	mm in.	mm in.	mm in.	mm in.	mm in.	mm in.
TS TSF	**10.000**	**18.000**	–	–	–	–	**0.000**	**-0.008**	**0.000**	**-0.008**
	0.3937	0.7087	–	–	–	–	0.0000	-0.0003	0.0000	-0.0003
	18.000	**30.000**	**0.000**	**-0.008**	**0.000**	**-0.006**	**0.000**	**-0.008**	**0.000**	**-0.008**
	0.7087	1.1811	0.0000	-0.0003	0.0000	-0.0002	0.0000	-0.0003	0.0000	-0.0003
	30.000	**50.000**	**0.000**	**-0.009**	**0.000**	**-0.007**	**0.000**	**-0.008**	**0.000**	**-0.008**
	1.1811	1.9685	0.0000	-0.0004	0.0000	-0.0003	0.0000	-0.0003	0.0000	-0.0003
	50.000	**80.000**	**0.000**	**-0.011**	**0.000**	**-0.009**	**0.000**	**-0.008**	**0.000**	**-0.008**
	1.9685	3.1496	0.0000	-0.0004	0.0000	-0.0004	0.0000	-0.0003	0.0000	-0.0003
	80.000	**120.000**	**0.000**	**-0.013**	**0.000**	**-0.010**	**0.000**	**-0.008**	**0.000**	**-0.008**
	3.1496	4.7244	0.0000	-0.0005	0.0000	-0.0004	0.0000	-0.0003	0.0000	-0.0003
	120.000	**150.000**	**0.000**	**-0.015**	**0.000**	**-0.011**	**0.000**	**-0.008**	**0.000**	**-0.008**
	4.7244	5.9055	0.0000	-0.0006	0.0000	-0.0004	0.0000	-0.0003	0.0000	-0.0003
	150.000	**180.000**	**0.000**	**-0.018**	**0.000**	**-0.013**	**0.000**	**-0.008**	**0.000**	**-0.008**
	5.9055	7.0866	0.0000	-0.0007	0.0000	-0.0005	0.0000	-0.0003	0.0000	-0.0003
	180.000	**250.000**	**0.000**	**-0.020**	**0.000**	**-0.015**	**0.000**	**-0.008**	**0.000**	**-0.008**
	7.0866	9.8425	0.0000	-0.0008	0.0000	-0.0006	0.0000	-0.0003	0.0000	-0.0003
	250.000	**265.000**	**0.000**	**-0.025**	**0.000**	**-0.018**	**0.000**	**-0.008**	**0.000**	**-0.008**
	9.8425	10.4331	0.0000	-0.0010	0.0000	-0.0007	0.0000	-0.0003	0.0000	-0.0003
	265.000	**315.000**	**0.000**	**-0.025**	**0.000**	**-0.018**	**0.000**	**-0.008**	**0.000**	**-0.008**
	10.4331	12.4016	0.0000	-0.0010	0.0000	-0.0007	0.0000	-0.0003	0.0000	-0.0003
	315.000	**400.000**	**0.000**	**-0.028**	**0.000**	**-0.018**	–	–	–	–
	12.4016	15.7480	0.0000	-0.0011	0.0000	-0.0007	–	–	–	–
	400.000	**500.000**	**0.000**	**-0.030**	–	–	–	–	–	–
	15.7480	19.6850	0.0000	-0.0012	–	–	–	–	–	–
	500.000	**630.000**	**0.000**	**-0.035**	–	–	–	–	–	–
	19.6850	24.8031	0.0000	-0.0014	–	–	–	–	–	–
	630.000	**800.000**	**0.000**	**-0.040**	–	–	–	–	–	–
	24.8031	31.4961	0.0000	-0.0016	–	–	–	–	–	–
	800.000	**1000.000**	**0.000**	**-0.050**	–	–	–	–	–	–
	31.4961	39.3701	0.0000	-0.0020	–	–	–	–	–	–
	1000.000	**1200.000**	**0.000**	**-0.060**	–	–	–	–	–	–
	39.3701	47.2441	0.0000	-0.0024	–	–	–	–	–	–
	1200.000	**1600.000**	**0.000**	**-0.080**	–	–	–	–	–	–
	47.2441	62.9921	0.0000	-0.0031	–	–	–	–	–	–

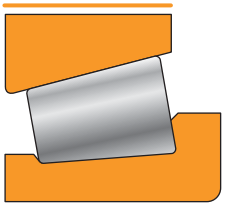

Metric bearing tolerances										
Cone width			Precision bearing class							
Bearing types[1]	Bore Over	Bore Incl.	C		B		A		AA	
			Max.	Min.	Max.	Min.	Max.	Min.	Max.	Min.
	mm in.	mm in.	mm in.	mm in.	mm in.	mm in.	mm in.	mm in.	mm in.	mm in.
TS TSF	**10.000**	**50.000**	**0.000**	**-0.200**	**0.000**	**-0.200**	**0.000**	**-0.200**	**0.000**	**-0.200**
	0.3937	1.9685	0.0000	-0.0079	0.0000	-0.0079	0.0000	-0.0079	0.0000	-0.0079
	50.000	**120.000**	**0.000**	**-0.300**	**0.000**	**-0.300**	**0.000**	**-0.300**	**0.000**	**-0.300**
	1.9685	4.7244	0.0000	-0.0118	0.0000	-0.0118	0.0000	-0.0118	0.0000	-0.0118
	120.000	**180.000**	**0.000**	**-0.300**	**0.000**	**-0.300**	**0.000**	**-0.300**	**0.000**	**-0.300**
	4.7244	7.0866	0.0000	-0.0118	0.0000	-0.0118	0.0000	-0.0118	0.0000	-0.0118
	180.000	**250.000**	**0.000**	**-0.350**	**0.000**	**-0.350**	**0.000**	**-0.350**	**0.000**	**-0.350**
	7.0866	9.8425	0.0000	-0.0138	0.0000	-0.0138	0.0000	-0.0138	0.0000	-0.0138
	250.000	**265.000**	**0.000**	**-0.350**	**0.000**	**-0.350**	**0.000**	**-0.350**	**0.000**	**-0.350**
	9.8425	10.4331	0.0000	-0.0138	0.0000	-0.0138	0.0000	-0.0138	0.0000	-0.0138
	265.000	**315.000**	**0.000**	**-0.350**	**0.000**	**-0.350**	**0.000**	**-0.350**	**0.000**	**-0.350**
	10.4331	12.4016	0.0000	-0.0138	0.0000	-0.0138	0.0000	-0.0138	0.0000	-0.0138
	315.000	**500.000**	**0.000**	**-0.350**	–	–	–	–	–	–
	12.4016	19.6850	0.0000	-0.0138	–	–	–	–	–	–
	500.000	**630.000**	**0.000**	**-0.350**	–	–	–	–	–	–
	19.6850	24.8031	0.0000	-0.0138	–	–	–	–	–	–
	630.000	**1200.000**	**0.000**	**-0.350**	–	–	–	–	–	–
	24.8031	47.2441	0.0000	-0.0138	–	–	–	–	–	–
	1200.000	**1600.000**	**0.000**	**-0.350**	–	–	–	–	–	–
	47.2441	62.9921	0.0000	-0.0138	–	–	–	–	–	–

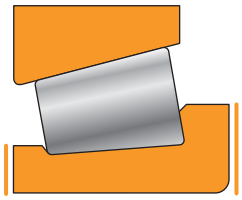

[1]Not all types and sizes are listed in this catalog. Contact your Timken representative for further information.

Metric bearing tolerances										
Cup width			Precision bearing class							
Bearing types[1]	Bore		C		B		A		AA	
	Over	Incl.	Max.	Min.	Max.	Min.	Max.	Min.	Max.	Min.
	mm in.	mm in.	mm in.	mm in.	mm in.	mm in.	mm in.	mm in.	mm in.	mm in.
TS TSF	**10.000** 0.3937	**80.000** 3.1496	**0.000** 0.0000	**-0.150** -0.0059	**0.000** 0.0000	**-0.150** -0.0059	**0.000** 0.0000	**-0.150** -0.0059	**0.000** 0.0000	**-0.150** -0.0059
	80.000 3.1496	**150.000** 5.9055	**0.000** 0.0000	**-0.200** -0.0079	**0.000** 0.0000	**-0.200** -0.0079	**0.000** 0.0000	**-0.200** -0.0079	**0.000** 0.0000	**-0.200** -0.0079
	150.000 5.9055	**180.000** 7.0866	**0.000** 0.0000	**-0.250** -0.0098	**0.000** 0.0000	**-0.250** -0.0098	**0.000** 0.0000	**-0.250** -0.0098	**0.000** 0.0000	**-0.250** -0.0098
	180.000 7.0866	**250.000** 9.8425	**0.000** 0.0000	**-0.250** -0.0098	**0.000** 0.0000	**-0.250** -0.0098	**0.000** 0.0000	**-0.250** -0.0098	**0.000** 0.0000	**-0.250** -0.0098
	250.000 9.8425	**265.000** 10.4331	**0.000** 0.0000	**-0.300** -0.0118	**0.000** 0.0000	**-0.300** -0.0118	**0.000** 0.0000	**-0.300** -0.0118	**0.000** 0.0000	**-0.300** -0.0118
	265.000 10.4331	**315.000** 12.4016	**0.000** 0.0000	**-0.300** -0.0118	**0.000** 0.0000	**-0.300** -0.0118	**0.000** 0.0000	**-0.300** -0.0118	**0.000** 0.0000	**-0.300** -0.0118
	315.000 12.4016	**400.000** 15.7480	**0.000** 0.0000	**-0.300** -0.0118	**0.000** 0.0000	**-0.300** -0.0118	– –	– –	– –	– –
	400.000 15.7480	**500.000** 19.6850	**0.000** 0.0000	**-0.350** -0.0138	– –	– –	– –	– –	– –	– –
	500.000 19.6850	**800.000** 31.4961	**0.000** 0.0000	**-0.350** -0.0138	– –	– –	– –	– –	– –	– –
	800.000 31.4961	**1200.000** 47.2441	**0.000** 0.0000	**-0.400** -0.0157	– –	– –	– –	– –	– –	– –
	1200.000 47.2441	**1600.000** 62.9921	**0.000** 0.0000	**-0.400** -0.0157	– –	– –	– –	– –	– –	– –

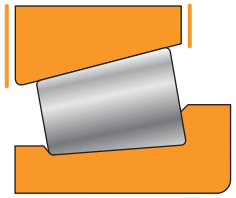

Metric bearing tolerances										
Cone stand			Precision bearing class							
Bearing types[1]	Bore		C		B		A		AA	
	Over	Incl.	Max.	Min.	Max.	Min.	Max.	Min.	Max.	Min.
	mm in.	mm in.	mm in.	mm in.	mm in.	mm in.	mm in.	mm in.	mm in.	mm in.
TS TSF	**10.000** 0.3937	**80.000** 3.1496	**+0.100** +0.0039	**-0.100** -0.0039	(2)	(2)	(2)	(2)	(2)	(2)
	80.000 3.1496	**120.000** 4.7244	**+0.100** +0.0039	**-0.100** -0.0039						
	120.000 4.7244	**180.000** 7.0866	**+0.100** +0.0039	**-0.100** -0.0039						
	180.000 7.0866	**250.000** 9.8425	**+0.100** +0.0039	**-0.150** -0.0059						
	250.000 9.8425	**265.000** 10.4331	**+0.100** +0.0039	**-0.150** -0.0059						
	265.000 10.4331	**315.000** 12.4016	**+0.100** +0.0039	**-0.150** -0.0059			– –	– –	– –	– –
	315.000 12.4016	**400.000** 15.7480	**+0.150** +0.0059	**-0.150** -0.0059	– –	– –	– –	– –	– –	– –
	400.000 15.7480	– –	(2)	(2)	– –	– –	– –	– –	– –	– –

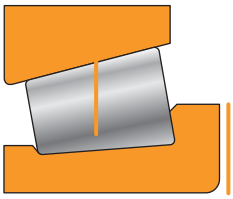

Cone Stand. Cone stand is a measure of the variation in cone raceway size, taper and roller diameter. This is checked by measuring the axial location of the reference surface of a master cup or other type gage with respect to the reference cone face.

Metric bearing tolerances										
Cup stand			Precision bearing class							
Bearing types[1]	Bore		C		B		A		AA	
	Over	Incl.	Max.	Min.	Max.	Min.	Max.	Min.	Max.	Min.
	mm in.	mm in.	mm in.	mm in.	mm in.	mm in.	mm in.	mm in.	mm in.	mm in.
TS TSF[3]	**10.000** 0.3937	**18.000** 0.7087	**+0.100** +0.0039	**-0.100** -0.0039	(2)	(2)	(2)	(2)	(2)	(2)
	18.000 0.7087	**80.000** 3.1496	**+0.100** +0.0039	**-0.100** -0.0039						
	80.000 3.1496	**120.000** 4.7244	**+0.100** +0.0039	**-0.100** -0.0039						
	120.000 4.7244	**265.000** 10.4331	**+0.100** +0.0039	**-0.150** -0.0059						
	265.000 10.4331	**315.000** 12.4016	**+0.100** +0.0039	**-0.150** -0.0059			– –	– –	– –	– –
	315.000 12.4016	**400.000** 15.7480	**+0.100** +0.0039	**-0.150** -0.0059	– –	– –	– –	– –	– –	– –
	400.000 15.7480	– –	(2)	(2)	– –	– –	– –	– –	– –	– –

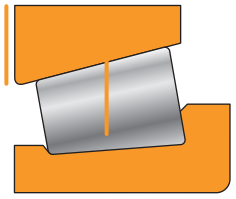

Cup Stand. Cup stand is a measure of the variation in cup I.D. size and taper. This is checked by measuring the axial location of the reference surface of a master plug or other type gage with respect to the reference face of the cup.

[1]Not all types and sizes are listed in this catalog. Contact your Timken representative for further information.
[2]These sizes manufactured as matched assemblies only.
[3]Stand for flanged cup is measured from flange backface (seating face).

METRIC SYSTEM BEARINGS (ISO AND "J" PREFIX PARTS) - *continued*

Metric bearing tolerances										
Overall bearing width			Precision bearing class							
Bearing types[1]	Bore Over	Bore Incl.	C		B		A		AA	
			Max.	Min.	Max.	Min.	Max.	Min.	Max.	Min.
	mm in.	mm in.	mm in.	mm in.	mm in.	mm in.	mm in.	mm in.	mm in.	mm in.
TS TSF[2]	**10.000**	**80.000**	**+0.200**	**-0.200**	**+0.200**	**-0.200**	**+0.200**	**-0.200**	**+0.200**	**-0.200**
	0.3937	3.1496	+0.0079	-0.0079	+0.0079	-0.0079	+0.0079	-0.0079	+0.0079	-0.0079
	80.000	**120.000**	**+0.200**	**-0.200**	**+0.200**	**-0.200**	**+0.200**	**-0.200**	**+0.200**	**-0.200**
	3.1496	4.7244	+0.0079	-0.0079	+0.0079	-0.0079	+0.0079	-0.0079	+0.0079	-0.0079
	120.000	**180.000**	**+0.350**	**-0.250**	**+0.200**	**-0.250**	**+0.200**	**-0.250**	**+0.200**	**-0.250**
	4.7244	7.0866	+0.0138	-0.0098	+0.0079	-0.0098	+0.0079	-0.0098	+0.0079	-0.0098
	180.000	**250.000**	**+0.350**	**-0.250**	**+0.200**	**-0.300**	**+0.200**	**-0.300**	**+0.200**	**-0.300**
	7.0866	9.8425	+0.0138	-0.0098	+0.0079	-0.0118	+0.0079	-0.0118	+0.0079	-0.0118
	250.000	**265.000**	**+0.350**	**-0.300**	**+0.200**	**-0.300**	**+0.200**	**-0.300**	**+0.200**	**-0.300**
	9.8425	10.4331	+0.0138	-0.0118	+0.0079	-0.0118	+0.0079	-0.0118	+0.0079	-0.0118
	265.000	**315.000**	**+0.350**	**-0.300**	**+0.200**	**-0.300**	**+0.200**	**-0.300**	**+0.200**	**-0.300**
	10.4331	12.4016	+0.0138	-0.0118	+0.0079	-0.0118	+0.0079	-0.0118	+0.0079	-0.0118
	315.000	**500.000**	**+0.350**	**-0.300**	–	–	–	–	–	–
	12.4016	19.6850	+0.0138	-0.0118	–	–	–	–	–	–
	500.000	**800.000**	**+0.350**	**-0.400**	–	–	–	–	–	–
	19.6850	31.4961	+0.0138	-0.0157	–	–	–	–	–	–
	800.000	**1000.000**	**+0.350**	**-0.400**	–	–	–	–	–	–
	31.4961	39.3701	+0.0138	-0.0157	–	–	–	–	–	–
	1000.000	**1200.000**	**+0.350**	**-0.450**	–	–	–	–	–	–
	39.3701	47.2441	+0.0138	-0.0177	–	–	–	–	–	–
	1200.000	**1600.000**	**+0.350**	**-0.500**	–	–	–	–	–	–
	47.2441	62.9921	+0.0138	-0.0197	–	–	–	–	–	–

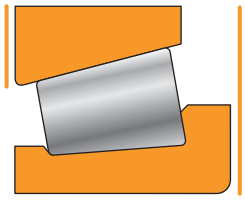

Metric bearing tolerances						
Assembled bearing maximum radial runout			Precision bearing class			
Bearing types[1]	Bore Over	Bore Incl.	C	B	A	AA
	mm in.	mm in.	mm in.	mm in.	mm in.	mm in.
TS TSF	**10.000**	**18.000**	–	–	**0.002**	**0.001**
	0.3937	0.7087	–	–	0.00008	0.00004
	18.000	**30.000**	**0.005**	**0.003**	**0.002**	**0.001**
	0.7087	1.1811	0.0002	0.0001	0.00008	0.00004
	30.000	**50.000**	**0.006**	**0.003**	**0.002**	**0.001**
	1.1811	1.9685	0.0002	0.0001	0.00008	0.00004
	50.000	**80.000**	**0.006**	**0.004**	**0.002**	**0.001**
	1.9685	3.1496	0.0002	0.0002	0.00008	0.00004
	80.000	**120.000**	**0.006**	**0.004**	**0.002**	**0.001**
	3.1496	4.7244	0.0002	0.0002	0.00008	0.00004
	120.000	**150.000**	**0.007**	**0.004**	**0.002**	**0.001**
	4.7244	5.9055	0.0003	0.0002	0.00008	0.00004
	150.000	**180.000**	**0.008**	**0.004**	**0.002**	**0.001**
	5.9055	7.0866	0.0003	0.0002	0.00008	0.00004
	180.000	**250.000**	**0.010**	**0.005**	**0.002**	**0.001**
	7.0866	9.8425	0.0004	0.0002	0.00008	0.00004
	250.000	**265.000**	**0.011**	**0.005**	**0.002**	**0.001**
	9.8425	10.4331	0.0004	0.0002	0.00008	0.00004
	265.000	**315.000**	**0.011**	**0.005**	**0.002**	**0.001**
	10.4331	12.4016	0.0004	0.0002	0.00008	0.00004
	315.000	**400.000**	**0.013**	**0.005**	–	–
	12.4016	15.7480	0.0005	0.0002	–	–
	400.000	**500.000**	**0.018**	–	–	–
	15.7480	19.6850	0.0007	–	–	–
	500.000	**630.000**	**0.025**	–	–	–
	19.6850	24.8031	0.0010	–	–	–
	630.000	**800.000**	**0.035**	–	–	–
	24.8031	31.4961	0.0014	–	–	–
	800.000	**1000.000**	**0.050**	–	–	–
	31.4961	39.3701	0.0020	–	–	–
	1000.000	**1200.000**	**0.060**	–	–	–
	39.3701	47.2441	0.0024	–	–	–
	1200.000	**1600.000**	**0.080**	–	–	–
	47.2441	62.9921	0.0031	–	–	–

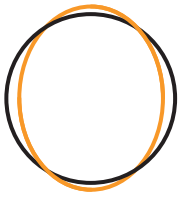

Runout. Runout is a measure of rotational accuracy expressed by Total Indicator Reading (T.I.R.). Total displacement is measured by an instrument sensing against a moving surface, or moved with respect to a fixed surface. A radial runout measurement includes both roundness errors and the centering error of the surface that the instrument head senses against.

[1]Not all types and sizes are listed in this catalog. Contact your Timken representative for further information.
[2]For bearing type TSF, the tolerance applies to the dimension T_1.

METRIC SYSTEM BEARINGS (TXR PREFIX PARTS)

Metric bearing tolerances						
Outer race			Precision bearing class			
Bearing types	O.D.		S		P	
	Over	Incl.	Max.	Min.	Max.	Min.
	mm in.	mm in.	mm in.	mm in.	mm in.	mm in.
TXR	**18.000**	**30.000**	**0.000**	**-0.010**	**0.000**	**-0.008**
	0.7087	1.1811	0.0000	-0.0004	0.0000	-0.0003
	30.000	**50.000**	**0.000**	**-0.013**	**0.000**	**-0.010**
	1.1811	1.9685	0.0000	-0.0005	0.0000	-0.0004
	50.000	**80.000**	**0.000**	**-0.015**	**0.000**	**-0.010**
	1.9685	3.1496	0.0000	-0.0006	0.0000	-0.0004
	80.000	**120.000**	**0.000**	**-0.020**	**0.000**	**-0.013**
	3.1496	4.7244	0.0000	-0.0008	0.0000	-0.0005
	120.000	**180.000**	**0.000**	**-0.025**	**0.000**	**-0.013**
	4.7244	7.0866	0.0000	-0.0010	0.0000	-0.0005
	180.000	**250.000**	**0.000**	**-0.030**	**0.000**	**-0.015**
	7.0866	9.8425	0.0000	-0.0012	0.0000	-0.0006
	250.000	**400.000**	**0.000**	**-0.040**	**0.000**	**-0.020**
	9.8425	15.7480	0.0000	-0.0016	0.0000	-0.0008
	400.000	**630.000**	**0.000**	**-0.050**	**0.000**	**-0.025**
	15.7480	24.8031	0.0000	-0.0020	0.0000	-0.0010
	630.000	**800.000**	**0.000**	**-0.060**	**–**	**–**
	24.8031	31.4961	0.0000	-0.0024	–	–
	800.000	**1000.000**	**0.000**	**-0.080**	**–**	**–**
	31.4961	39.3701	0.0000	-0.0031	–	–
	1000.000	**1200.000**	**0.000**	**-0.100**	**–**	**–**
	39.3701	47.2441	0.0000	-0.0039	–	–
	1200.000	**1600.000**	**0.000**	**-0.120**	**–**	**–**
	47.2441	62.9921	0.0000	-0.0047	–	–
	1600.000	**2000.000**	**0.000**	**-0.140**	**–**	**–**
	62.9921	78.7402	0.0000	-0.0055	–	–
	2000.000	**–**	**0.000**	**-0.140**	**–**	**–**
	78.7402	–	0.0000	-0.0055	–	–

Metric bearing tolerances						
Inner race			Precision bearing class			
Bearing types	Bore		S		P	
	Over	Incl.	Max.	Min.	Max.	Min.
	mm in.	mm in.	mm in.	mm in.	mm in.	mm in.
TXR	**10.000**	**50.000**	**0.000**	**-0.013**	**0.000**	**-0.010**
	0.3937	1.9685	0.0000	-0.0005	0.0000	-0.0004
	50.000	**80.000**	**0.000**	**-0.015**	**0.000**	**-0.013**
	1.9685	3.1496	0.0000	-0.0006	0.0000	-0.0005
	80.000	**120.000**	**0.000**	**-0.020**	**0.000**	**-0.013**
	3.1496	4.7244	0.0000	-0.0008	0.0000	-0.0005
	120.000	**180.000**	**0.000**	**-0.025**	**0.000**	**-0.013**
	4.7244	7.0866	0.0000	-0.0010	0.0000	-0.0005
	180.000	**250.000**	**0.000**	**-0.030**	**0.000**	**-0.015**
	7.0866	9.8425	0.0000	-0.0012	0.0000	-0.0006
	250.000	**315.000**	**0.000**	**-0.035**	**0.000**	**-0.018**
	9.8425	12.4016	0.0000	-0.0014	0.0000	-0.0007
	315.000	**400.000**	**0.000**	**-0.040**	**0.000**	**-0.020**
	12.4016	15.7480	0.0000	-0.0016	0.0000	-0.0008
	400.000	**500.000**	**0.000**	**-0.045**	**0.000**	**-0.025**
	15.7480	19.6850	0.0000	-0.0018	0.0000	-0.0010
	500.000	**630.000**	**0.000**	**-0.050**	**0.000**	**-0.030**
	19.6850	24.8031	0.0000	-0.0020	0.0000	-0.0012
	630.000	**800.000**	**0.000**	**-0.060**	**–**	**–**
	24.8031	31.4961	0.0000	-0.0024	–	–
	800.000	**1000.000**	**0.000**	**-0.080**	**–**	**–**
	31.4961	39.3701	0.0000	-0.0031	–	–
	1000.000	**1200.000**	**0.000**	**-0.100**	**–**	**–**
	39.3701	47.2441	0.0000	-0.0039	–	–
	1200.000	**1600.000**	**0.000**	**-0.120**	**–**	**–**
	47.2441	62.9921	0.0000	-0.0047	–	–
	1600.000	**2000.000**	**0.000**	**-0.140**	**–**	**–**
	62.9921	78.7402	0.0000	-0.0055	–	–
	2000.000	**–**	**0.000**	**-0.140**	**–**	**–**
	78.7402	–	0.0000	-0.0055	–	–

A

TOLERANCES – *continued*

INCH SYSTEM BEARINGS

Inch system bearings are manufactured to a number of tolerance classes. Classes 3, 0, 00 and 000 are "precision" classes.

Inch bearing tolerances										
Cone bore			Precision bearing class							
Bearing types[1]	Bore Over	Bore Incl.	3		0		00		000	
			Max.	Min.	Max.	Min.	Max.	Min.	Max.	Min.
	mm in.	mm in.	mm in.	mm in.	mm in.	mm in.	mm in.	mm in.	mm in.	mm in.
TS TSF TSL[2] TDI TDIT TDO TNA	**0.000**	**76.200**	**+0.013**	**0.000**	**+0.013**	**0.000**	**+0.008**	**0.000**	**+0.008**	**0.000**
	0.0000	3.0000	+0.0005	0.0000	+0.0005	0.0000	+0.0003	0.0000	+0.0003	0.0000
	76.200	**304.800**	**+0.013**	**0.000**	**+0.013**	**0.000**	**+0.008**	**0.000**	**+0.008**	**0.000**
	3.0000	12.0000	+0.0005	0.0000	+0.0005	0.0000	+0.0003	0.0000	+0.0003	0.0000
	304.800	**609.600**	**+0.025**	**0.000**	–	–	–	–	–	–
	12.0000	24.0000	+0.0010	0.0000	–	–	–	–	–	–
	609.600	**914.400**	**+0.038**	**0.000**	–	–	–	–	–	–
	24.0000	36.0000	+0.0015	0.0000	–	–	–	–	–	–
	914.400	**1219.200**	**+0.051**	**0.000**	–	–	–	–	–	–
	36.0000	48.0000	+0.0020	0.0000	–	–	–	–	–	–
	1219.200		**+0.076**	**0.000**	–	–	–	–	–	–
	48.0000		+0.0030	0.0000	–	–	–	–	–	–

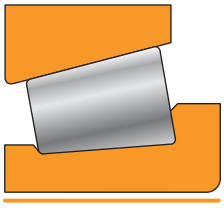

Inch bearing tolerances										
Cup O.D.			Precision bearing class							
Bearing types[1]	Bore Over	Bore Incl.	3		0		00		000	
			Max.	Min.	Max.	Min.	Max.	Min.	Max.	Min.
	mm in.	mm in.	mm in.	mm in.	mm in.	mm in.	mm in.	mm in.	mm in.	mm in.
TS TSF TSL TDI TDIT TDO TNA TNASW TNASWE	**0.000**	**304.800**	**+0.013**	**0.000**	**+0.013**	**0.000**	**+0.008**	**0.000**	**+0.008**	**0.000**
	0.0000	12.0000	+0.0005	0.0000	+0.0005	0.0000	+0.0003	0.0000	+0.0003	0.0000
	304.800	**609.600**	**+0.025**	**0.000**	–	–	–	–	–	–
	12.0000	24.0000	+0.0010	0.0000	–	–	–	–	–	–
	609.600	**914.400**	**+0.038**	**0.000**	–	–	–	–	–	–
	24.0000	36.0000	+0.0015	0.0000	–	–	–	–	–	–
	914.400	**1219.200**	**+0.051**	**0.000**	–	–	–	–	–	–
	36.0000	48.0000	+0.0020	0.0000	–	–	–	–	–	–
	1219.200		**+0.076**	**0.000**	–	–	–	–	–	–
	48.0000		+0.0030	0.0000	–	–	–	–	–	–

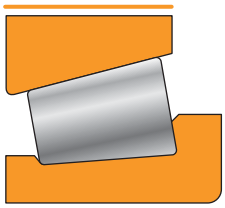

[1]Not all types and sizes are listed in this catalog. Contact your Timken representative for further information.
[2]For TSL bearings these are the normal tolerances of cone bore. However, bore size can be slightly reduced at large end due to tight fit assembly of the seal on the rib. This should not have any effect on the performance of the bearing.

Inch bearing tolerances										
Cup flange O.D.			Precision bearing class							
Bearing types[1]	Bore		3		0		00		000	
	Over	Incl.	Max.	Min.	Max.	Min.	Max.	Min.	Max.	Min.
	mm in.	mm in.	mm in.	mm in.	mm in.	mm in.	mm in.	mm in.	mm in.	mm in.
TSF	**0.000** 0.0000	**304.800** 12.0000	**+0.051** +0.0020	**0.000** 0.0000	**+0.051** +0.0020	**0.000** 0.0000	**+0.051** +0.0020	**0.000** 0.0000	**+0.051** +0.0020	**0.000** 0.0000
	304.800 12.0000	**609.600** 24.0000	**+0.076** +0.0030	**0.000** 0.0000	– –	– –	– –	– –	– –	– –
	609.600 24.0000	**914.400** 36.0000	**+0.102** +0.0040	**0.000** 0.0000	– –	– –	– –	– –	– –	– –
	914.400 36.0000		**+0.127** +0.0050	**0.000** 0.0000	– –	– –	– –	– –	– –	– –

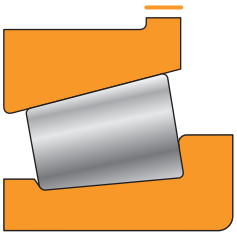

Inch bearing tolerances										
Cone width			Precision bearing class							
Bearing types[1]	Bore		3		0		00		000	
	Over	Incl.	Max.	Min.	Max.	Min.	Max.	Min.	Max.	Min.
	mm in.	mm in.	mm in.	mm in.	mm in.	mm in.	mm in.	mm in.	mm in.	mm in.
TS TSF TSL TDI TDIT TDO	All sizes		**+0.076** +0.0030	**-0.254** -0.0100	**+0.076** +0.0030	**-0.254** -0.0100	**+0.076** +0.0030	**-0.254** -0.0100	**+0.076** +0.0030	**-0.254** -0.0100

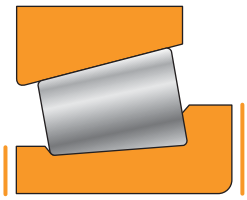

Inch bearing tolerances										
Cup width			Precision bearing class							
Bearing types[1]	Bore		3		0		00		000	
	Over	Incl.	Max.	Min.	Max.	Min.	Max.	Min.	Max.	Min.
	mm in.	mm in.	mm in.	mm in.	mm in.	mm in.	mm in.	mm in.	mm in.	mm in.
All types	All sizes		**+0.051** +0.0020	**-0.254** -0.0100	**+0.051** +0.0020	**-0.254** -0.0100	**+0.051** +0.0020	**-0.254** -0.0100	**+0.051** +0.0020	**-0.254** -0.0100

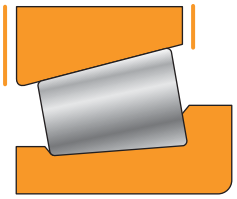

[1]Not all types and sizes are listed in this catalog. Contact your Timken representative for further information.

INCH SYSTEM BEARINGS - *continued*

Inch bearing tolerances										
Cone stand			Precision bearing class							
Bearing types[1]	Bore Over	Bore Incl.	3		0		00		000	
			Max.	Min.	Max.	Min.	Max.	Min.	Max.	Min.
	mm in.	**mm** in.	**mm** in.	**mm** in.	**mm** in.	**mm** in.	**mm** in.	**mm** in.	**mm** in.	**mm** in.
TS TSF TSL TDI TDIT TDO	**0.000** 0.0000	**101.600** 4.0000	**+0.102** +0.0040	**-0.102** -0.0040	(2)	(2)	(2)	(2)	(2)	(2)
	101.600 4.0000	**266.700** 10.5000	**+0.102** +0.0040	**-0.102** -0.0040						
	266.700 10.5000	**304.800** 12.0000	**+0.102** +0.0040	**-0.102** -0.0040			– –	– –	– –	– –
	304.800 12.0000	**406.400** 16.0000	**+0.102** +0.0040	**-0.102** -0.0040	– –	– –	– –	– –	– –	– –
	406.400 16.0000		(2)	(2)	– –	– –	– –	– –	– –	– –

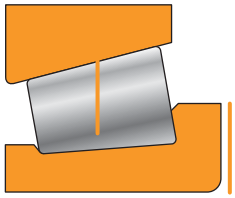

Cone Stand. Cone stand is a measure of the variation in cone raceway size, taper and roller diameter. This is checked by measuring the axial location of the reference surface of a master cup or other type gage with respect to the reference cone face.

Inch bearing tolerances										
Cup stand			Precision bearing class							
Bearing types[1]	Bore Over	Bore Incl.	3		0		00		000	
			Max.	Min.	Max.	Min.	Max.	Min.	Max.	Min.
	mm in.	**mm** in.	**mm** in.	**mm** in.	**mm** in.	**mm** in.	**mm** in.	**mm** in.	**mm** in.	**mm** in.
TS TSF[3] TSL TDI TDIT	**0.000** 0.0000	**101.600** 4.0000	**+0.102** +0.0040	**-0.102** -0.0040	(2)	(2)	(2)	(2)	(2)	(2)
	101.600 4.0000	**266.700** 10.5000	**+0.102** +0.0040	**-0.102** -0.0040						
	266.700 10.5000	**304.800** 12.0000	**+0.102** +0.0040	**-0.102** -0.0040			– –	– –	– –	– –
	304.800 12.0000	**406.400** 16.0000	**+0.102** +0.0040	**-0.102** -0.0040	– –	– –	– –	– –	– –	– –
	406.400 16.0000		(2)	(2)	– –	– –	– –	– –	– –	– –

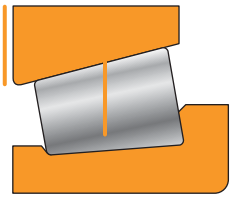

Cup Stand. Cup stand is a measure of the variation in cup I.D. size and taper. This is checked by measuring the axial location of the reference surface of a master plug or other type gage with respect to the reference face of the cup.

[1]Not all types and sizes are listed in this catalog. Please contact your Timken representative for further information.
[2]These sizes manufactured as matched assemblies only.
[3]Stand for flanged cup is measured from flange backface (seating face).

Inch bearing tolerances												
Overall bearing width					Bearing class							
Bearing types[1]	Bore Over	Bore Incl.	O.D. Over	O.D. Incl.	3		0		00		000	
					Max.	Min.	Max.	Min.	Max.	Min.	Max.	Min.
	mm in.	mm in.	mm in.	mm in.	mm in.	mm in.	mm in.	mm in.	mm in.	mm in.	mm in.	mm in.
TS TSF[2] TSL	**0.000**	**101.600**	–	–	**+0.203**	**-0.203**	**+0.203**	**-0.203**	**+0.203**	**-0.203**	**+0.203**	**-0.203**
	0.0000	4.0000	–	–	+0.0080	-0.0080	+0.0080	-0.0080	+0.0080	-0.0080	+0.0080	-0.0080
	101.600	**304.800**	–	–	**+0.203**	**-0.203**	**+0.203**	**-0.203**	**+0.203**	**-0.203**	**+0.203**	**-0.203**
	4.0000	12.0000	–	–	+0.0080	-0.0080	+0.0080	-0.0080	+0.0080	-0.0080	+0.0080	-0.0080
	304.800	**609.600**	**0.000**	**508.000**	**+0.203**	**-0.203**	–	–	–	–	–	–
	12.0000	24.0000	0.0000	20.0000	+0.0080	-0.0080	–	–	–	–	–	–
	304.800	**609.600**	**508.000**		**+0.381**	**-0.381**	–	–	–	–	–	–
	12.0000	24.0000	20.0000		+0.0150	-0.0150	–	–	–	–	–	–
	609.600		–	–	**+0.381**	**-0.381**	–	–	–	–	–	–
	24.0000		–	–	+0.0150	-0.0150	–	–	–	–	–	–
TNA TNASW TNASWE	**0.000**	**127.000**	–	–	**+0.254**	**0.000**	–	–	–	–	–	–
	0.0000	5.0000	–	–	+0.0100	0.0000	–	–	–	–	–	–
	127.000		–	–	**+0.762**	**0.000**	–	–	–	–	–	–
	5.0000		–	–	+0.0300	0.0000	–	–	–	–	–	–
TDI TDIT TDO	**0.000**	**101.600**	–	–	**+0.406**	**-0.406**	**+0.406**	**-0.406**	**+0.406**	**-0.406**	**+0.406**	**-0.406**
	0.0000	4.0000	–	–	+0.0160	-0.0160	+0.0160	-0.0160	+0.0160	-0.0160	+0.0160	-0.0160
	101.600	**304.800**	–	–	**+0.406**	**-0.406**	**+0.406**	**-0.406**	**+0.406**	**-0.406**	**+0.406**	**-0.406**
	4.0000	12.0000	–	–	+0.0160	-0.0160	+0.0160	-0.0160	+0.0160	-0.0160	+0.0160	-0.0160
	304.800	**609.600**	**0.000**	**508.000**	**+0.406**	**-0.406**	–	–	–	–	–	–
	12.0000	24.0000	0.0000	20.0000	+0.0160	-0.0160	–	–	–	–	–	–
	304.800	**609.600**	**508.000**		**+0.762**	**-0.762**	–	–	–	–	–	–
	12.0000	24.0000	20.0000		+0.0300	-0.0300	–	–	–	–	–	–
	609.600	–	–	–	**+0.762**	**-0.762**	–	–	–	–	–	–
	24.0000	–	–	–	+0.0300	-0.0300	–	–	–	–	–	–

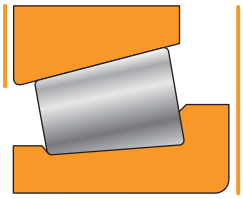

Inch bearing tolerances						
Assembled bearing maximum radial runout			Bearing class			
Bearing types[1]	Bore Over	Bore Incl.	3	0	00	000
	mm in.	mm in.	mm in.	mm in.	mm in.	mm in.
TS TSF TSL TDI TDIT TDO TNA TNASW TNASWE	**0.000**	**266.700**	**0.008**	**0.004**	**0.002**	**0.001**
	0.0000	10.5000	0.0003	0.00015	0.00075	0.00040
	266.700	**304.800**	**0.008**	**0.004**	**0.002**	**0.001**
	10.5000	12.0000	0.0003	0.00015	0200075	0.00040
	304.800	**609.600**	**0.018**	–	–	–
	12.0000	24.0000	0.0007	–	–	–
	609.600	**914.400**	**0.051**	–	–	–
	24.0000	36.0000	0.0020	–	–	–
	914.400		**0.076**	–	–	–
	36.0000		0.0030	–	–	–

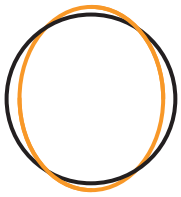

Runout. Runout is a measure of rotational accuracy expressed by Total Indicator Reading (T.I.R.). Total displacement is measured by an instrument sensing against a moving surface, or moved with respect to a fixed surface. A radial runout measurement includes both roundness errors and the centering error of the surface that the instrument head senses against.

[1]Not all types and sizes are listed in this catalog. Please contact your Timken representative for further information.
[2]For bearing type TSF, the tolerance applies to the dimension T_1.

A

INCH SYSTEM BEARINGS - *continued*

Inch bearing tolerances						
Outer race			Precision bearing class			
Bearing types	O.D.		3		0	
	Over	Incl.	Max.	Min.	Max.	Min.
	mm in.	mm in.	mm in.	mm in.	mm in.	mm in.
TXR	–	**304.800**	**0.025**	**0.000**	**0.127**	**0.000**
	–	12.0000	0.0010	0.0000	0.0005	0.0000
	304.800	**609.600**	**0.051**	**0.000**	**0.025**	**0.000**
	12.0000	24.0000	0.0020	0.0000	0.0010	0.0000
	609.600	**914.400**	**0.076**	**0.000**	–	–
	24.0000	36.000	0.0030	0.0000	–	–
	914.400	**1219.200**	**0.102**	**0.000**	–	–
	36.0000	48.0000	0.0040	0.0000	–	–
	1219.200	**1524.000**	**0.127**	**0.000**	–	–
	48.0000	60.0000	0.0050	0.0000	–	–
	1524.000	–	**0.127**	**0.000**	–	–
	60.0000	–	0.0050	0.0000	–	–

Inch bearing tolerances						
Inner race			Precision bearing class			
Bearing types	Bore		3		0	
	Over	Incl.	Max.	Min.	Max.	Min.
	mm in.	mm in.	mm in.	mm in.	mm in.	mm in.
TXR	–	**76.200**	**0.013**	**0.000**	**0.013**	**0.000**
	–	3.0000	0.0005	0.0000	0.0005	0.0000
	76.200	**304.800**	**0.025**	**0.000**	**0.013**	**0.000**
	3.0000	12.0000	0.0010	0.0000	0.0005	0.0000
	304.800	**609.600**	**0.051**	**0.000**	**0.025**	**0.000**
	12.0000	24.0000	0.0020	0.0000	0.0010	0.0000
	609.600	**914.400**	**0.076**	**0.000**	–	–
	24.0000	36.0000	0.0030	0.0000	–	–
	914.400	**1219.200**	**0.102**	**0.000**	–	–
	36.0000	48.0000	0.0040	0.0000	–	–
	1219.200	–	**0.127**	**0.000**	–	–
	48.0000	–	0.0050	0.0000	–	–

BALL BEARINGS

The Annular Bearing Engineers' Committee has established five classes of tolerances for ball bearings, known as ABEC 1, ABEC 3, ABEC 5, ABEC 7 and ABEC 9. The highest number indicates the class with the most exacting tolerances. Every ball bearing manufactured by Timken is made to close tolerances, adhering to the established ABEC standards.

In general, these standards are equivalent to the comparable classes of tolerance established by the International Organization for Standardization, known as ISO P0 (ABEC 1), ISO P5 (ABEC 5), ISO P4 (ABEC 7) and ISO P2 (ABEC 9).

Timken manufactures a complete line of super precision ball bearings made to ABEC 7 and 9/ISO P4 and P2 tolerances for applications involving high speeds, extreme accuracy and rigidity. The range of such equipment includes high-grade machine tools, jet engines, computer hardware, robotics and space exploration vehicles. Machine tool bearings, basically single-row construction, are available in four series, named ultra-light (9300/ISO 19), extra-light (9100/ISO 10), light (200/ISO 02) and medium (300/ISO 03), providing a considerable range in external dimension relationships.

The chart below shows the various classes of tolerances for 35.000 mm (1.3779 in.) bore size, light-series bearings (207). To meet the exacting requirements of the machine tool industry, even ABEC 9/ISO P2 tolerances do not represent the ultimate, since some special applications require even higher precision.

SYSTEM TOLERANCES

Before determining which type and classification of Timken super precision ball bearing is best suited for a particular application, it is important to explore all relevant details of the bearing characteristics, tolerances and mounting, as listed in the catalog data tables. Although cost is another factor, it is not economical to attempt the use of low-precision bearings on an application where extra-high speeds and ultra-precision bearings are required.

Timken precision bearings are manufactured to close tolerances to help assure consistent performance and interchangeability. To take full advantage of this precision product, it is expected that equally close tolerances be used in the production of mounting components (housings, shafts, spacers, etc.). Therefore, special consideration must be given to the particular details relating to proper shaft and housing fits and the housing design.

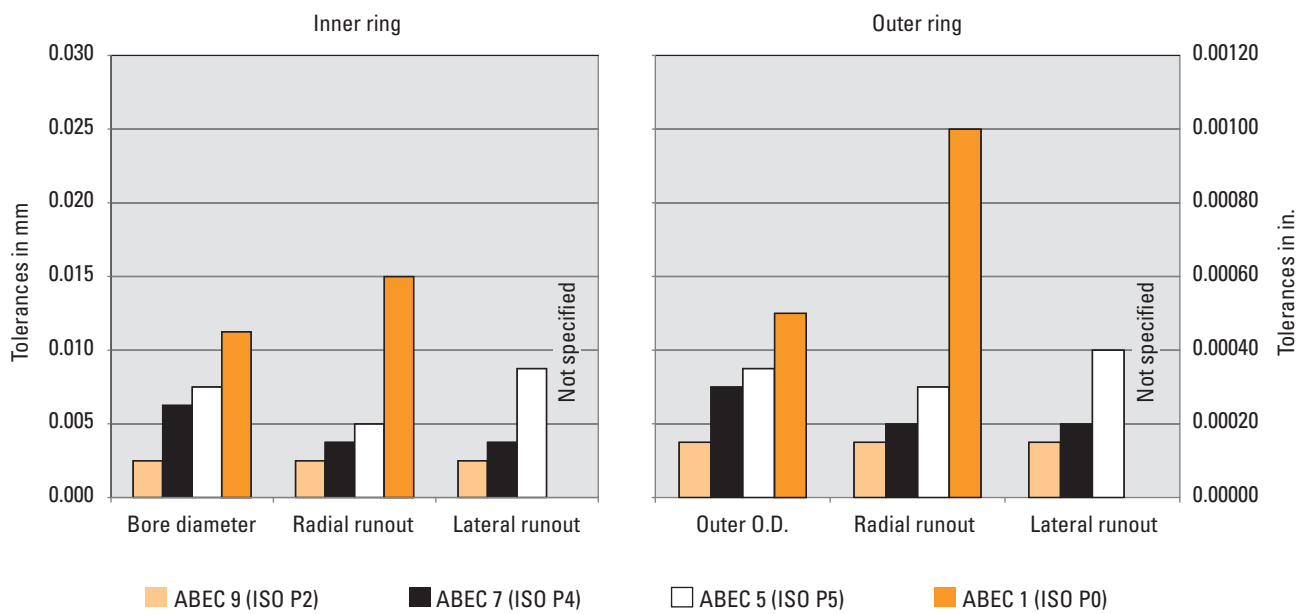

Fig. 70. Comparison of tolerances among ABEC/ISO classes (light series, 35.000 mm bore [1.3779 in.] type).

A

BALL BEARINGS

Outer, Inner Rings ABEC 5, 7, 9 – ISO P5, P4, P2

Values of tolerances for super precision ball bearings are shown below.
All Timken sizes in this catalog are manufactured to MM and MMV levels.

Standard ABEC/ISO tolerances – inner ring All tolerances in number of **millimeters (mm)** and inches (in.)																	
Bearing bore		Δ_{dmp} Bore diameter[1] **+0.000 mm**, +0.0000 in.			V_{Bs} Width variation			K_{ia} Raceway radial runout			S_{ia} Raceway axial runout			S_d Face runout with bore			Δ_{Bs} Width inner rings **+0.000 mm**, +0.0000 in.
		ABEC/ISO			ABEC/ISO			ABEC/ISO			ABEC/ISO			ABEC/ISO			ABEC/ISO
Over	Incl.	5/P5	7/P4	9/P2	5/P5	7/P4	9/P2	5/P5	7/P4	9/P2	5/P5	7/P4	9/P2	5/P5	7/P4	9/P2	5/P5, 7/P4, 9/P2
mm in.	**mm** in.	**mm** in.	**mm** in.	**mm** in.	**mm** in.	**mm** in.	**mm** in.	**mm** in.	**mm** in.	**mm** in.	**mm** in.	**mm** in.	**mm** in.	**mm** in.	**mm** in.	**mm** in.	**mm** in.
2.500	**10.000**	**-0.005**	**-0.004**	**-0.0025**	**0.005**	**0.0025**	**0.0015**	**0.004**	**0.0025**	**0.0015**	**0.007**	**0.003**	**0.0015**	**0.007**	**0.003**	**0.0015**	**-0.040**
0.0984	0.3937	-0.0002	-0.0002	-0.0001	0.0002	0.0001	0.0001	0.0002	0.0001	0.0001	0.0003	0.0001	0.00005	0.0003	0.0001	0.00005	-0.0015
10.000	**18.000**	**-0.005**	**-0.004**	**-0.0025**	**0.005**	**0.0025**	**0.0015**	**0.004**	**0.0025**	**0.0015**	**0.007**	**0.003**	**0.0015**	**0.007**	**0.003**	**0.0015**	**-0.080**
0.3937	0.7087	-0.0002	-0.0002	-0.0001	0.0002	0.0001	0.0001	0.0002	0.0001	0.0001	0.0003	0.0001	0.00005	0.0003	0.0001	0.00005	-0.0030
18.000	**30.000**	**-0.006**	**-0.005**	**-0.0025**	**0.005**	**0.0025**	**0.0015**	**0.004**	**0.003**	**0.0025**	**0.008**	**0.004**	**0.0025**	**0.008**	**0.004**	**0.0015**	**-0.120**
0.7087	1.1811	-0.0002	-0.0002	-0.0001	0.0002	0.0001	0.0001	0.0002	0.0001	0.0001	0.0003	0.0002	0.0001	0.0003	0.0002	0.00005	-0.0050
30.000	**50.000**	**-0.008**	**-0.006**	**-0.004**	**0.005**	**0.003**	**0.0015**	**0.005**	**0.004**	**0.0025**	**0.008**	**0.004**	**0.0025**	**0.008**	**0.004**	**0.0015**	**-0.120**
1.1811	1.9685	-0.0003	-0.0002	-0.00015	0.0002	0.0001	0.0001	0.0002	0.00015	0.0001	0.0003	0.0002	0.0001	0.0003	0.0002	0.00005	-0.0050
50.000	**80.000**	**-0.009**	**-0.007**	**-0.0025**	**0.006**	**0.004**	**0.0015**	**0.005**	**0.004**	**0.0025**	**0.008**	**0.005**	**0.0025**	**0.008**	**0.005**	**0.0015**	**-0.150**
1.9685	3.1496	-0.0004	-0.0003	-0.0001	0.0002	0.00015	0.0001	0.0002	0.00015	0.0001	0.0003	0.0002	0.0001	0.0003	0.0002	0.00005	-0.0060
80.000	**120.000**	**-0.010**	**-0.008**	**-0.005**	**0.007**	**0.004**	**0.0025**	**0.006**	**0.005**	**0.0025**	**0.009**	**0.005**	**0.0025**	**0.009**	**0.005**	**0.0025**	**-0.200**
3.1496	4.7244	-0.0004	-0.0003	-0.0002	0.0003	0.00015	0.0001	0.0002	0.0002	0.0001	0.00035	0.0002	0.0001	0.00035	0.0002	0.0001	-0.0080
120.000	**150.000**	**-0.013**	**-0.010**	**-0.007**	**0.008**	**0.005**	**0.0025**	**0.008**	**0.006**	**0.0025**	**0.010**	**0.007**	**0.0025**	**0.010**	**0.006**	**0.0025**	**-0.250**
4.7244	5.9055	-0.0005	-0.0004	-0.0003	0.0003	0.0002	0.0001	0.0003	0.00025	0.0001	0.0004	0.0003	0.0001	0.0004	0.00025	0.0001	-0.0100
150.000	**180.000**	**-0.013**	**-0.010**	**-0.008**	**0.008**	**0.005**	**0.004**	**0.008**	**0.006**	**0.005**	**0.010**	**0.007**	**0.005**	**0.010**	**0.006**	**0.004**	**-0.250**
5.9055	7.0866	-0.0005	-0.0004	-0.0003	0.0003	0.0002	0.00015	0.0003	0.00025	0.0002	0.0004	0.0003	0.0002	0.0004	0.00025	0.00015	-0.0100
180.000	**250.000**	**-0.015**	**-0.012**	**-0.008**	**0.010**	**0.006**	**0.005**	**0.010**	**0.008**	**0.005**	**0.013**	**0.008**	**0.005**	**0.011**	**0.007**	**0.005**	**-0.300**
7.0866	9.8425	-0.0006	-0.0004	-0.0003	0.0004	0.00025	0.0002	0.0004	0.0003	0.0002	0.0005	0.0003	0.0002	0.00045	0.0003	0.0002	-0.0120

The tolerances in this table are in conformance with ANSI ABMA Standard 20 - 1996.
[1] d_{min} (the smallest single diameter of a bore) and d_{max} (the largest single diameter of a bore) may fall outside limits shown. $\frac{d_{min} + d_{max}}{2}$ must be within bore diameter tabulated.

ABMA / ISO Symbols - Inner Ring

Δ_{dmp}	Single plane mean bore diameter deviation from basic bore diameter, e.g., bore tolerance for a basically tapered bore, Δ_{dmp} refers only to the theoretical small bore end of the bore
K_{ia}	Radial runout of assembled bearing inner ring, e.g., radial runout of raceway
V_{Bs}	Inner ring width variation, e.g., parallelism
S_d	Inner ring reference face runout with bore, e.g., squareness - bore to face
S_{ia}	Axial runout of assembled bearing inner ring, e.g., lateral (axial) runout of raceway
Δ_{Bs}	Inner ring width deviation from basic, e.g., width tolerance

Width Tolerances

The width tolerances for individual inner and outer rings are shown in the tables below. To allow for the preload grinding on bearings for various preloads, the total width tolerances of duplex sets are as shown in the table to the right. The total width tolerance is proportional to the number of bearings. Note the Timken values are significantly tighter than ABMA/ISO requirements.

Nominal bore		Width tolerance (duplex set)			
		ABMA/ISO		Timken	
Over	Incl.	Max.	Min.	Max.	Min.
mm in.	**mm** in.	**mm** in.	**mm** in.	**mm** in.	**mm** in.
0.000	**80.000**	**0.000**	**-0.500**	**0.000**	**-0.250**
0.0000	3.1496	0.0000	-0.0196	0.0000	-0.0100
80.000	**180.000**	**0.000**	**-0.760**	**0.000**	**-0.250**
3.1496	7.0866	0.0000	-0.0300	0.0000	-0.0100
180.000	**250.000**	**0.000**	**-1.000**	**0.000**	**-0.250**
7.0866	9.8425	0.0000	-0.0394	0.0000	-0.0100

Table 18. Preloaded duplex set width tolerance.

Standard ABEC/ISO tolerances – outer ring All tolerances in number of **millimeters (mm)** and inches (in.)																	
Bearing O.D.		Δ_{Dmp} Outside diameter(1) **+0.000 mm**, +0.0000 in.			V_{Cs} Width variation			K_{ea} Raceway radial runout			S_{ea} Raceway axial runout			S_D Face runout with O.D.			Δ_{Cs} Width outer rings **+0.000 mm**, +0.0000 in.
		ABEC/ISO			ABEC/ISO			ABEC/ISO			ABEC/ISO			ABEC/ISO			ABEC/ISO
Over	Incl.	5/P5	7/P4	9/P2	5/P5	7/P4	9/P2	5/P5	7/P4	9/P2	5/P5	7/P4	9/P2	5/P5	7/P4	9/P2	5/P5, 7/P4, 9/P2
mm in.	**mm** in.	**mm** in.	**mm** in.	**mm** in.	**mm** in.	**mm** in.	**mm** in.	**mm** in.	**mm** in.	**mm** in.	**mm** in.	**mm** in.	**mm** in.	**mm** in.	**mm** in.	**mm** in.	**mm** in.
6.000	**18.000**	**-0.005**	**-0.004**	**-0.0025**	**0.005**	**0.0025**	**0.015**	**0.005**	**0.003**	**0.0015**	**0.008**	**0.005**	**0.0015**	**0.008**	**0.004**	**0.0015**	
0.2362	0.7087	-0.0002	-0.00015	-0.0001	0.0002	0.0001	0.00005	0.0002	0.0001	0.00005	0.0003	0.0002	0.00005	0.0003	0.00015	0.00005	
18.000	**30.000**	**-0.006**	**-0.005**	**-0.004**	**0.005**	**0.0025**	**0.015**	**0.006**	**0.004**	**0.0025**	**0.008**	**0.005**	**0.0025**	**0.008**	**0.004**	**0.0015**	
0.7087	1.1811	-0.00025	-0.0002	-0.00015	0.0002	0.0001	0.00005	0.00025	0.00015	0.0001	0.0003	0.0002	0.0001	0.0003	0.00015	0.00005	
30.000	**50.000**	**-0.007**	**-0.006**	**-0.004**	**0.005**	**0.0025**	**0.015**	**0.007**	**0.005**	**0.0025**	**0.008**	**0.005**	**0.0025**	**0.008**	**0.004**	**0.0015**	
1.1811	1.9685	-0.0003	-0.0002	-0.00015	0.0002	0.0001	0.00005	0.0003	0.0002	0.0001	0.0003	0.0002	0.0001	0.0003	0.00015	0.00005	
50.000	**80.000**	**-0.009**	**-0.007**	**-0.004**	**0.006**	**0.003**	**0.015**	**0.008**	**0.005**	**0.004**	**0.010**	**0.005**	**0.004**	**0.008**	**0.004**	**0.0015**	
1.9685	3.1496	-0.00035	-0.0003	-0.00015	0.00025	0.0001	0.00005	0.0003	0.0002	0.00015	0.0004	0.0002	0.00015	0.0003	0.00015	0.00005	
80.000	**120.000**	**-0.010**	**-0.008**	**-0.005**	**0.008**	**0.004**	**0.0025**	**0.010**	**0.006**	**0.005**	**0.011**	**0.006**	**0.005**	**0.009**	**0.005**	**0.0025**	(2)
3.1496	4.7244	-0.0004	-0.0003	-0.0002	0.0003	0.00015	0.0001	0.0004	0.00025	0.0002	0.00045	0.00025	0.0002	0.00035	0.0002	0.0001	
120.000	**150.000**	**-0.011**	**-0.009**	**-0.005**	**0.008**	**0.005**	**0.0025**	**0.011**	**0.007**	**0.005**	**0.013**	**0.007**	**0.005**	**0.010**	**0.005**	**0.0025**	
4.7244	5.9055	-0.00045	-0.00035	-0.0002	0.0003	0.0002	0.0001	0.00045	0.0003	0.0002	0.0005	0.0003	0.0002	0.0004	0.0002	0.0001	
150.000	**180.000**	**-0.013**	**-0.010**	**-0.007**	**0.008**	**0.005**	**0.0025**	**0.013**	**0.008**	**0.005**	**0.014**	**0.008**	**0.005**	**0.010**	**0.005**	**0.0025**	
5.9055	7.0866	-0.0005	-0.0004	-0.0003	0.0003	0.0002	0.0001	0.0005	0.0003	0.0002	0.00055	0.0003	0.0002	0.0004	0.0002	0.0001	
180.000	**250.000**	**-0.015**	**-0.011**	**-0.008**	**0.010**	**0.007**	**0.004**	**0.015**	**0.010**	**0.007**	**0.015**	**0.010**	**0.007**	**0.011**	**0.007**	**0.004**	
7.0866	9.8425	-0.0006	-0.00045	-0.0003	0.0004	0.0003	0.00015	0.0006	0.0004	0.0003	0.0006	0.0004	0.0003	0.00045	0.0003	0.00015	
250.000	**315.000**	**-0.018**	**-0.013**	**-0.008**	**0.011**	**0.007**	**0.005**	**0.018**	**0.011**	**0.007**	**0.018**	**0.010**	**0.007**	**0.013**	**0.008**	**0.005**	
9.8425	12.4016	-0.0007	-0.0005	-0.0003	0.00045	0.0003	0.0002	0.0007	0.00045	0.0003	0.0007	0.0004	0.0003	0.0005	0.0003	0.0002	
315.000	**400.000**	**-0.020**	**-0.015**	**-0.010**	**0.013**	**0.008**	**0.007**	**0.020**	**0.013**	**0.008**	**0.020**	**0.013**	**0.008**	**0.013**	**0.010**	**0.007**	
12.4016	15.7480	-0.0008	-0.0006	-0.0004	0.0005	0.0003	0.0003	0.0008	0.0005	0.0003	0.0008	0.0005	0.0003	0.0005	0.0004	0.0003	

The tolerances in this table are in conformance with ANSI ABMA Standard 20 - 1996.

(1) D_{min} (the smallest single diameter of an O.D.) and D_{max} (the largest single diameter of an O.D.) may fall outside limits shown. $\frac{D_{min} + D_{max}}{2}$ must be within outside diameter tabulated.

(2) Identical to Δ_{Bs} of inner ring of same bearing.

ABMA / ISO Symbols - Outer Ring

Δ_{Dmp}	Single plane mean outside diameter deviation from basic outside diameter, e.g., O.D. tolerance
K_{ea}	Radial runout of assembled bearing outer ring, e.g., radial runout of raceway
V_{Cs}	Outer ring width variation, e.g., parallelism
S_D	Outer ring reference face runout with O.D., e.g., squareness O.D. to face
S_{ea}	Axial runout of assembled bearing outer ring, e.g., lateral (axial) runout of raceway
Δ_{Cs}	Outer ring width deviation from basic, e.g., width tolerance

A

FITTING PRACTICES

GENERAL GUIDELINES FOR TAPERED ROLLER BEARINGS

The design of a tapered roller bearing permits the setting to be achieved during installation (or during running when using a Hydra-Rib), irrespective of the inner and outer ring fits on shaft and housing. This allows the use of the widest possible machining tolerances for shaft and housing and the use of the best possible fits for the inner and outer rings to match the duty of the bearing.

The fitting practice will depend upon the following parameters:

- Precision class of the bearing.
- Type of layout.
- Type and direction of loads.
- Running conditions (vibrations, high speeds).
- Shaft and housing sections and materials.
- Mounting and setting conditions.

Certain table fits may not be adequate for light shaft and housing sections, shafts other than steel, nonferrous housings, critical operation conditions such as high speed, unusual thermal or loading conditions or a combination thereof. Also assembly procedures and the means and ease of obtaining the bearing setting may require special fits. In these cases, experience should be used as a guideline or your Timken representative should be consulted for review and suggestions.

Precision class bearings should be mounted on shafts and in housings which are similarly finished to at least the same precision limits as the bearing bore and O.D. High-quality surface finishes should also be provided.

In the machine tool industry, where almost 100 percent of cases are rotating shaft applications, the general rule is to tight-fit both the inner and outer rings for simple layouts to eliminate any undesirable radial clearance.

Tapered roller bearing envelope tolerances can be adjusted to the needs of a specific application.

NON-FERROUS HOUSINGS

Care should be taken when pressing cups into aluminum or magnesium housings to avoid metal pick up. This may result in unsatisfactory fits, backing, and alignment from debris trapped between the cup and backing shoulder. Preferably, the cup should be frozen or the housing heated, or both, during assembly. Also, a special lubricant may be used to ease assembly. In some cases, cups are mounted in steel inserts which are attached to the aluminum or magnesium housings. Table fits may then be used. Where the cup is fitted directly into an aluminum housing, it is suggested that a minimum tight fit of 1.0 µm per mm (0.0010 in. per in.) of cup outside diameter be used. For a magnesium housing, a minimum tight fit of 1.5 µm per mm (0.0015 in. per in.) of cup outside diameter is suggested.

PRECISION CLASS TAPERED ROLLER BEARINGS – HYDRA-RIB

The Hydra-Rib cup is designed to be mounted either as a flanged cup or shouldered against the cup backface. The 50.000 mm (1.968 in.) bore assembly does not have a flanged cup and the cup backface must be mounted against the housing shoulder.

SUGGESTED FITTING GUIDELINES FOR FERROUS SHAFT AND HOUSING

For heavy loads, high speed or shock, contact your Timken representative for further information.

SHAFT O.D.

Deviation from nominal (maximum) bearing bore and resultant fit.

T= Tight
L = Loose

Bearing bore		Class C				Class B			
Range		Bearing bore tolerance	Symbol	Shaft O.D. deviation	Resultant fit	Bearing bore tolerance	Symbol	Shaft O.D. deviation	Resultant fit
Over	Incl.								
mm in.	mm in.	mm in.		mm in.	mm in.	mm in.		mm in.	mm in.
30.000	**50.000**	**-0.010**	k5	**+0.013**	**0.023T**	**-0.010**	k5	**+0.013**	**0.023T**
		0.000		**+0.002**	**0.002T**	**0.000**		**+0.002**	**0.002T**
1.1811	1.9685	-0.0004		+0.0005	0.0009T	-0.0004		+0.0005	0.0009T
		0.0000		+0.0001	0.0001T	0.0000		+0.0001	0.0001T
50.000	**80.000**	**-0.013**	k5	**+0.015**	**0.028T**	**-0.010**	k5	**+0.015**	**0.025T**
		0.000		**+0.002**	**0.002T**	**0.000**		**+0.002**	**0.002T**
1.9685	3.1496	-0.0005		+0.0006	0.0011T	-0.0004		+0.0006	0.0010T
		0.0000		+0.0001	0.0001T	0.0000		+0.0001	0.0001T
80.000	**120.000**	**-0.013**	k5	**+0.018**	**0.031T**	**-0.010**	k5	**+0.018**	**0.028T**
		0.000		**+0.003**	**0.003T**	**0.000**		**+0.003**	**0.003T**
3.1496	4.7244	-0.0005		+0.0007	0.0012T	-0.0004		+0.0007	0.0011T
		0.0000		+0.0001	0.0001T	0.0000		+0.0001	0.0001T
120.000	**180.000**	**-0.013**	k5	**+0.021**	**0.034T**	**-0.010**	k5	**+0.021**	**0.031T**
		0.000		**+0.003**	**0.003T**	**0.000**		**+0.003**	**0.003T**
4.7244	7.0866	-0.0005		+0.0008	0.0013T	-0.0004		+0.0008	0.0012T
		0.0000		+0.0001	0.0001T	0.0000		+0.0001	0.0001T
180.000	**250.000**	**-0.015**	k5	**+0.024**	**0.039T**	**-0.013**	k5	**+0.024**	**0.037T**
		0.000		**+0.004**	**0.004T**	**0.000**		**+0.004**	**0.004T**
7.0866	9.8425	-0.0006		+0.0010	0.0016T	-0.0005		+0.0010	0.0015T
		0.0000		+0.0002	0.0002T	0.0000		+0.0002	0.0002T

HOUSING BORE

Deviation from nominal (maximum) bearing O.D. and resultant fit.

T= Tight
L = Loose

Bearing O.D.		Class C				Class B			
Range		Bearing O.D. tolerance	Symbol	Housing bore deviation	Resultant fit	Bearing O.D. tolerance	Symbol	Housing bore deviation	Resultant fit
Over	Incl.								
mm in.	mm in.	mm in.		mm in.	mm in.	mm in.		mm in.	mm in.
80.000	**120.000**	**0.000**	M5	**-0.023**	**0.023T**	**0.000**	M5	**-0.023**	**0.023T**
		-0.013		**-0.008**	**0.005L**	**-0.010**		**-0.008**	**0.002L**
3.1496	4.7244	0.0000		-0.0009	0.0009T	0.0000		-0.0009	0.0009T
		-0.0005		-0.0003	0.0002L	-0.0004		-0.0003	0.0001L
120.000	**180.000**	**0.000**	M5	**-0.027**	**0.027T**	**0.000**	M5	**-0.027**	**0.027T**
		-0.013		**-0.009**	**0.004L**	**-0.010**		**-0.009**	**0.001L**
4.7244	7.0866	0.0000		-0.0011	0.0011T	0.0000		-0.0011	0.0011T
		-0.0005		-0.0004	0.0001L	-0.0004		-0.0004	0.0000
180.000	**250.000**	**0.000**	M5	**-0.031**	**0.031T**	**0.000**	M5	**-0.031**	**0.031T**
		-0.015		**-0.011**	**0.004L**	**-0.013**		**-0.011**	**0.002L**
7.0866	9.8425	0.0000		-0.0012	0.0012T	0.0000		-0.0012	0.0012T
		-0.0006		-0.0004	0.0002L	-0.0005		-0.0004	0.0001L
250.000	**315.000**	**0.000**	M5	**-0.036**	**0.036T**	**0.000**	M5	**-0.036**	**0.036T**
		-0.020		**-0.013**	**0.007L**	**-0.015**		**-0.013**	**0.002L**
9.8425	12.4016	0.0000		-0.0014	0.0014T	0.0000		-0.0014	0.0014T
		-0.0008		-0.0005	0.0003L	-0.0006		-0.0005	0.0001L
315.000	**400.000**	**0.000**	M5	**-0.039**	**0.039T**	–	–	–	–
		-0.020		**-0.014**	**0.006L**	–	–	–	–
12.4016	15.7480	0.0000		-0.0015	0.0015T	–	–	–	–
		-0.0008		-0.0006	0.0002L	–	–	–	–

A

PRECISION CLASS TAPERED ROLLER BEARINGS (EXCEPT HYDRA-RIB AND TXR BEARINGS)

SUGGESTED FITTING GUIDELINES FOR FERROUS SHAFT AND HOUSING

For heavy loads, high speed or shock, contact your Timken representative for further information.

HOUSING BORE METRIC BEARINGS
ISO + J Prefix

Deviation from nominal (maximum) bearing O.D. and resultant fit

T= Tight
L = Loose

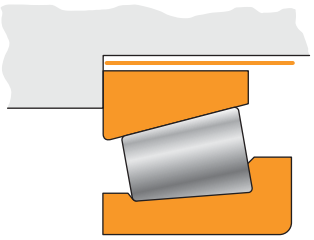

Bearing O.D.			Class C								
Range		Tolerance	Non-adjustable or in carrier			Floating			Adjustable		
Over	Incl.		Symbol	Housing bore deviation	Resultant fit	Symbol	Housing bore deviation	Resultant fit	Symbol	Housing bore deviation	Resultant fit
mm in.	mm in.	mm in.		mm in.	mm in.		mm in.	mm in.		mm in.	mm in.
18.000	**30.000**	**0.000**	N5	**-0.021**	**0.021T**	G5	**+0.007**	**0.007L**	K5	**-0.008**	**0.008T**
		-0.008		**-0.012**	**0.004T**		**+0.016**	**0.024L**		**+0.001**	**0.009L**
0.7087	1.1811	0.0000		-0.0008	0.0008T		+0.0003	0.0003L		-0.0003	0.0003T
		-0.0003		-0.0004	0.0002T		+0.0006	0.0009L		+0.00004	0.0004L
30.000	**50.000**	**0.000**	N5	**-0.024**	**0.024T**	G5	**+0.009**	**0.009L**	K5	**-0.009**	**0.009T**
		-0.009		**-0.013**	**0.004T**		**+0.020**	**0.029L**		**+0.002**	**0.011L**
1.1811	1.9685	0.0000		-0.0009	0.0009T		+0.00035	0.0004L		-0.0004	0.0003T
		-0.0004		-0.0005	0.0002T		+0.0008	0.0011L		+0.0001	0.0004L
50.000	**80.000**	**0.000**	N5	**-0.028**	**0.028T**	G5	**+0.010**	**0.010L**	K5	**-0.010**	**0.010T**
		-0.011		**-0.015**	**0.004T**		**+0.023**	**0.034L**		**+0.003**	**0.014L**
1.9685	3.1496	0.0000		-0.0011	0.0011T		+0.0004	0.0004L		-0.0004	0.0004T
		-0.00045		-0.0006	0.0002T		+0.0009	0.0013L		+0.0001	0.0006L
80.000	**120.000**	**0.000**	N5	**-0.033**	**0.033T**	G5	**+0.012**	**0.012L**	K5	**-0.013**	**0.013T**
		-0.013		**-0.018**	**0.005T**		**+0.027**	**0.040L**		**+0.002**	**0.015L**
3.1496	4.7244	0.0000		-0.0013	0.0013T		+0.0005	0.0008L		-0.0005	0.0005T
		-0.0005		-0.0007	0.0002T		+0.0011	0.0016L		+0.0001	0.0006L
120.000	**150.000**	**0.000**	N5	**-0.039**	**0.039T**	G5	**+0.014**	**0.014L**	K5	**-0.015**	**0.015T**
		-0.015		**-0.021**	**0.006T**		**+0.032**	**0.047L**		**+0.003**	**0.018L**
4.7244	5.9055	0.0000		-0.0015	0.0015T		+0.0006	0.0006L		-0.0006	0.0006T
		-0.0006		-0.0008	0.0002T		+0.0013	0.0019L		+0.0001	0.0007L
150.000	**180.000**	**0.000**	N5	**-0.039**	**0.039T**	G5	**+0.014**	**0.014L**	K5	**-0.015**	**0.015T**
		-0.018		**-0.021**	**0.003T**		**+0.032**	**0.050L**		**+0.003**	**0.021L**
5.9055	7.0866	0.0000		-0.0015	0.0015T		+0.0006	0.0006L		-0.0006	0.0006T
		-0.0007		-0.0008	0.0001T		+0.0013	0.0020T		+0.0001	0.0008L
180.000	**250.000**	**0.000**	N5	**-0.045**	**0.045T**	G5	**+0.015**	**0.015L**	K5	**-0.018**	**0.018T**
		-0.020		**-0.025**	**0.005T**		**+0.035**	**0.055L**		**+0.002**	**0.027L**
7.0866	9.8425	0.0000		-0.0018	0.0018T		+0.0006	0.0006L		-0.0007	0.0007T
		-0.0008		-0.0010	0.0002T		+0.0014	0.0022L		+0.0001	0.0011L
250.000	**315.000**	**0.000**	N5	**-0.050**	**0.050T**	G5	**+0.017**	**0.017L**	K5	**-0.020**	**0.020T**
		-0.025		**-0.027**	**0.002T**		**+0.040**	**0.065L**		**+0.003**	**0.028L**
9.8425	12.4016	0.0000		-0.0020	0.0020T		+0.0007	0.0007L		-0.0008	0.0008T
		-0.0010		-0.0011	0.0001T		+0.0016	0.0023L		+0.0001	0.0011L

HOUSING BORE INCH BEARINGS

Deviation from nominal (minimum) bearing O.D. and resultant fit

T= Tight
L = Loose

Bearing O.D.			Class 3 and 0[1]					
Range		Tolerance	Non-adjustable or in carrier		Floating		Adjustable	
Over	Incl.		Housing bore deviation	Resultant fit	Housing bore deviation	Resultant fit	Housing bore deviation	Resultant fit
mm in.	mm in.	mm in.	mm in.	mm in.	mm in.	mm in.	mm in.	mm in.
–	**152.400**	**+0.013**	**-0.013**	**0.026T**	**+0.025**	**0.012L**	**0.000**	**0.013T**
		0.000	**0.000**	**0.000**	**+0.038**	**0.038L**	**+0.013**	**0.013L**
–	6.0000	+0.0005	-0.0005	0.0010T	+0.0010	0.0005L	0.000	0.0005T
		0.0000	0.0000	0.0000	+0.0015	0.0015L	+0.0005	0.0005L
152.400	**304.800**	**+0.013**	**-0.025**	**0.038T**	**+0.025**	**0.012L**	**0.000**	**0.013T**
		0.000	**0.000**	**0.000**	**+0.038**	**0.038L**	**+0.025**	**0.025L**
6.0000	12.0000	+0.0005	-0.0010	0.0015T	+0.0010	0.0005L	0.0000	0.0005T
		0.0000	0.0000	0.0000	+0.0015	0.0015L	+0.0010	0.0010L
304.800	**609.600**	**+0.025**	**-0.025**	**0.050T**	**+0.038**	**0.013L**	**0.000**	**0.025T**
		0.000	**0.000**	**0.000**	**+0.064**	**0.064L**	**+0.025**	**0.025L**
12.0000	24.0000	+0.0010	-0.0010	0.0020T	+0.0015	0.0005L	0.0000	0.0010T
		0.0000	0.0000	0.0000	+0.0025	0.0025L	+0.0010	0.0010L
609.600	**914.400**	**+0.038**	**-0.038**	**0.076T**	**+0.051**	**0.013L**	**.0000**	**0.038T**
		0.000	**0.000**	**0.000**	**+0.089**	**0.089L**	**+0.038**	**0.038L**
24.0000	36.0000	+0.0015	-0.0015	0.0030T	+0.0020	0.0005L	0.0000	0.0015T
		0.0000	0.0000	0.0000	+0.0035	0.0035L	+0.0015	0.0015L

[1]Class 0 made only to 304.800 mm (12.0000 in.) O.D.

Bearing O.D.			Class B								
Range		Tolerance	Non-adjustable or in carrier			Floating			Adjustable		
Over	Incl.		Symbol	Housing bore deviation	Resul-tant fit	Symbol	Housing bore deviation	Resultant fit	Symbol	Housing bore deviation	Resultant fit
mm in.	**mm** in.	**mm** in.		**mm** in.	**mm** in.		**mm** in.	**mm** in.		**mm** in.	**mm** in.
18.000	**30.000**	**0.000**	M5	**-0.014**	**0.014T**	G5	**+0.007**	**0.007L**	K5	**-0.008**	**0.008T**
		-0.006		**-0.005**	**0.001L**		**+0.016**	**0.022L**		**+0.001**	**0.007L**
0.7087	1.1811	0.0000		-0.0006	0.0006T		+0.0003	0.0003L		-0.0003	0.0003T
		0.0002		-0.0002	0.00004L		+0.0006	0.0009L		+0.00004	0.0003L
30.000	**50.000**	**0.000**	M5	**-0.016**	**0.016T**	G5	**+0.009**	**0.009L**	K5	**-0.009**	**0.009T**
		-0.007		**-0.005**	**0.002L**		**+0.020**	**0.027L**		**+0.002**	**0.009L**
1.1811	1.9685	0.0000		-0.0006	0.0006T		+0.0004	0.0004L		-0.0004	0.0004T
		-0.0003		-0.0002	0.0001L		+0.0008	0.0011L		+0.0001	0.0004L
50.000	**80.000**	**0.000**	M5	**-0.019**	**0.019T**	G5	**+0.010**	**0.010L**	K5	**-0.010**	**0.010T**
		-0.009		**-0.006**	**0.003L**		**+0.023**	**0.032L**		**+0.003**	**0.012L**
1.9685	3.1496	0.000		-0.0008	0.0008T		+0.0004	0.0004L		-0.0004	0.0004T
		-0.0004		-0.0002	0.0001L		+0.0009	0.0013L		+0.0001	0.0005L
80.000	**120.000**	**0.000**	M5	**-0.023**	**0.023T**	G5	**+0.012**	**0.012L**	K5	**-0.013**	**0.013T**
		-0.010		**-0.008**	**0.002L**		**+0.027**	**0.037L**		**+0.002**	**0.012L**
3.1496	4.7244	0.000		0.0009	0.0009T		+0.0005	0.0004L		-0.0005	0.0005T
		-0.0004		0.0003	0.0001L		+0.0011	0.0015L		+0.0001	0.0005L
120.000	**150.000**	**0.000**	M5	**-0.027**	**0.027T**	G5	**+0.014**	**0.014L**	K5	**-0.015**	**0.015T**
		-0.011		**-0.009**	**0.002L**		**+0.032**	**0.043L**		**+0.003**	**0.012L**
4.7244	5.9055	0.000		-0.0011	0.0011T		+0.0006	0.0006L		-0.0006	0.0006T
		-0.0004		-0.0004	0.0001L		+0.0013	0.0017L		+0.0001	0.0005L
150.000	**180.000**	**0.000**	M5	**-0.027**	**0.027T**	G5	**+0.014**	**0.014L**	K5	**-0.015**	**0.015T**
		-0.013		**-0.009**	**0.004L**		**+0.032**	**0.045L**		**+0.003**	**0.016L**
5.9055	7.0866	0.000		-0.0011	0.0011T		+0.0006	0.0006L		-0.0006	0.0006T
		-0.0005		-0.0004	0.0002L		+0.0013	0.0018L		+0.0001	0.0006L
180.000	**250.000**	**0.000**	M5	**-0.031**	**0.031T**	G5	**+0.015**	**0.015L**	K5	**-0.018**	**0.018T**
		-0.015		**-0.011**	**0.004L**		**+0.035**	**0.050L**		**+0.002**	**0.017L**
7.0866	9.8425	0.000		-0.0012	0.0012T		+0.0006	0.0006L		-0.0007	0.0007T
		0.0006		-0.0004	0.0002L		+0.0014	0.0020L		+0.0001	0.0007L
250.000	**315.000**	**0.000**	M5	**-0.036**	**0.036T**	G5	**+0.017**	**0.017L**	K5	**-0.020**	**0.020T**
		-0.018		**-0.013**	**0.005L**		**+0.040**	**0.058L**		**+0.003**	**0.021L**
9.8425	12.4016	0.000		-0.0014	0.0014T		+0.0007	0.0007L		-0.0008	0.0008T
		-0.0007		-0.0005	0.0002L		+0.0016	0.0023L		+0.0001	0.0008L

Bearing O.D.			Class A and AA					
Range		Tolerance	Non-adjustable or in carrier		Floating		Adjustable	
Over	Incl.		Housing bore deviation	Resultant fit	Housing bore deviation	Resultant fit	Housing bore deviation	Resultant fit
mm in.	**mm** in.	**mm** in.	**mm** in.	**mm** in.	**mm** in.	**mm** in.	**mm** in.	**mm** in.
0.000	**315.000**	**-0.000**	**-0.016**	**0.016T**	**+0.008**	**0.008L**	**-0.008**	**0.008T**
		-0.008	**-0.008**	**0.000**	**+0.016**	**0.024L**	**-0.000**	**0.008L**
0.0000	12.4016	-0.0000	-0.0006	0.0006T	+0.0003	0.0003L	-0.0003	0.0003T
		-0.0003	-0.0003	0.0000	+0.0006	0.0009L	-0.0000	0.0003L

Bearing O.D.			Class 00 and 000					
Range		Tolerance	Non-adjustable or in carrier		Floating		Adjustable	
Over	Incl.		Housing bore deviation	Resultant fit	Housing bore deviation	Resultant fit	Housing bore deviation	Resultant fit
mm in.	**mm** in.	**mm** in.	**mm** in.	**mm** in.	**mm** in.	**mm** in.	**mm** in.	**mm** in.
0.000	**304.800**	**+0.008**	**-0.008**	**0.016T**	**+0.015**	**0.007L**	**0.000**	**0.008T**
		0.000	**0.000**	**0.000**	**+0.023**	**0.023L**	**+0.008**	**0.008L**
0.0000	12.0000	+0.0003	-0.0003	0.0006T	+0.0006	0.0003L	0.0000	0.0003T
		0.0000	0.0000	0.0000	+0.0009	0.0009L	+0.0003	0.0003L

A

PRECISION CLASS TAPERED ROLLER BEARINGS (EXCEPT HYDRA-RIB AND TXR BEARINGS)

SUGGESTED FITTING GUIDELINES FOR FERROUS SHAFT AND HOUSING

For heavy loads, high speed or shock, contact your Timken representative for further information.

SHAFT O.D. METRIC BEARINGS (ISO and J Prefix)

Deviation from nominal (maximum) bearing bore and resultant fit

T= Tight
L = Loose

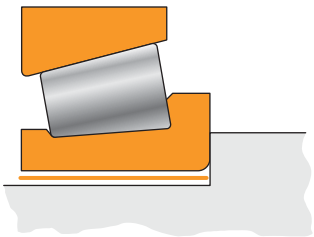

Bearing bore Range Over	Incl.	Class C Bearing bore tolerance	Symbol	Shaft O.D. deviation	Resultant fit
mm in.	**mm** in.	**mm** in.		**mm** in.	**mm** in.
10.000	**18.000**	**-0.007**	k5	**+0.009**	**0.016T**
		0.000		**+0.001**	**0.001T**
0.3937	0.7087	-0.0003		+0.0004	0.0006T
		0.0000		+0.00004	0.00004T
18.000	**30.000**	**-0.008**	k5	**+0.011**	**0.019T**
		0.000		**+0.002**	**0.002T**
0.7087	1.1811	-0.0003		+0.0005	0.0007T
		0.0000		+0.0001	0.0001T
30.000	**50.000**	**-0.010**	k5	**+0.013**	**0.023T**
		0.000		**+0.002**	**0.002T**
1.1811	1.9685	-0.0004		+0.0005	0.0009T
		0.0000		+0.0001	0.0001T
50.000	**80.000**	**-0.012**	k5	**+0.015**	**0.027T**
		0.000		**+0.003**	**0.002T**
1.9685	3.1496	-0.0005		+0.0006	0.0011T
		0.0000		+0.0001	0.0001T
80.000	**120.000**	**-0.015**	k5	**+0.018**	**0.033T**
		0.000		**+0.003**	**0.003T**
3.1496	4.7244	-0.0006		+0.0007	0.0013T
		0.0000		+0.0001	0.0001T
120.000	**180.000**	**-0.018**	k5	**+0.021**	**0.039T**
		0.000		**+0.003**	**0.003T**
4.7244	7.0866	-0.0007		+0.0008	0.0015T
		0.0000		+0.0001	0.0001T
180.000	**250.000**	**-0.022**	k5	**+0.024**	**0.046T**
		0.000		**+0.004**	**0.004T**
7.0866	9.8425	-0.0009		+0.0009	0.0018T
		0.0000		+0.0002	0.0002T
250.000	**315.000**	**-0.022**	k5	**+0.027**	**0.049T**
		0.000		**+0.004**	**0.004T**
9.8425	12.4016	-0.0009		+0.0011	0.0019T
		0.0000		+0.0002	0.0002T

SHAFT O.D. INCH BEARINGS

Deviation from nominal (minimum) bearing bore and resultant fit

T= Tight
L = Loose

Bearing bore Range Over	Incl.	Class 3 and 0[1] Bearing bore tolerance	Shaft O.D. deviation	Resultant fit	Class 00 and 000 Bearing bore tolerance µm (0.0001 in.)	Shaft O.D. deviation	Resultant fit
mm in.	**mm** in.	**mm** in.	**mm** in.		**mm** in.	**mm** in.	
–	**304.800**	**0.000**	**+0.030**	**0.030T**	**0.000**	**+0.020**	**0.020T**
		+0.013	**+0.018**	**0.005T**	**+0.008**	**+0.013**	**0.005T**
–	12.0000	0.0000	+0.0012	0.0012T	0.0000	+0.0008	0.0008T
		+0.0005	+0.0007	0.0002T	+0.0003	+0.0005	0.0002T
304.800	**609.600**	**0.000**	**+0.064**	**0.064T**	**–**	**–**	**–**
		+0.025	**+0.038**	**0.013T**			
12.0000	24.0000	0.0000	+0.0025	0.0025T	–	–	–
		+0.0010	+0.0015	0.0005T			
609.600	**914.400**	**0.000**	**+0.102**	**0.102T**	**–**	**–**	**–**
		+0.038	**+0.064**	**0.026T**			
24.0000	36.0000	0.0000	+0.0040	0.0040T	–	–	–
		+0.0015	+0.0025	0.0010T			

[1] Class O made only to 304.800 mm (12.0000 in.) O.D.

Class B				Bearing bore		Class A and AA			
Bearing bore tolerance	Symbol	Shaft O.D. deviation	Resultant fit	Range Over	Range Incl.	Bearing bore tolerance	Symbol	Shaft O.D. deviation	Resultant fit
mm in.		**mm** in.	**mm** in.	**mm** in.	**mm** in.	**mm** in.		**mm** in.	**mm** in.
-0.005	k5	**+0.009**	**0.014T**	**10.000**	**18.000**	**-0.005**	k4	**+0.006**	**0.011T**
0.000		**+0.001**	**0.001T**			**0.000**		**+0.001**	**0.001T**
-0.0002		+0.0004	0.0006T	0.3937	0.7087	-0.0002		+0.0002	0.0004T
0.0000		+0.00004	0.00004T			0.0000		+0.00004	0.00004T
-0.006	k5	**+0.011**	**0.017T**	**18.000**	**30.000**	**-0.006**	k4	**+0.008**	**0.014T**
0.000		**+0.002**	**0.002T**			**0.000**		**+0.002**	**0.002T**
-0.0002		+0.0004	0.0007T	0.7087	1.1811	-0.0002		+0.0003	0.0006T
0.0000		+0.0001	0.0001T			0.0000		+0.0001	0.0001T
-0.008	k5	**+0.013**	**0.021T**	**30.000**	**315.000**	**-0.008**		**+0.013**	**0.021T**
0.000		**+0.002**	**0.002T**			**0.000**		**+0.005**	**0.005T**
-0.0003		+0.0005	0.0008T	1.1811	12.4016	-0.0003		+0.0005	0.0008T
0.0000		+0.0001	0.0001T			0.0000		+0.0002	0.0002T
-0.009	k5	**+0.015**	**0.024T**						
0.000		**+0.002**	**0.002T**						
-0.0004		+0.0006	0.0009T						
0.0000		+0.0001	0.0001T						
-0.010	k5	**+0.018**	**0.028T**						
0.000		**+0.003**	**0.003T**						
-0.0004		+0.0007	0.0011T						
0.0000		+0.0001	0.0001T						
-0.013	k5	**+0.021**	**0.034T**						
0.000		**+0.003**	**0.003T**						
-0.0005		+0.0008	0.0013T						
0.0000		+0.0001	0.0001T						
-0.015	k5	**+0.024**	**0.039T**						
0.000		**+0.004**	**0.004T**						
-0.0006		+0.0009	0.0015T						
0.0000		+0.0002	0.0002T						
-0.015	k5	**+0.027**	**0.042T**						
0.000		**+0.004**	**0.004T**						
-0.0006		+0.0011	0.0017T						
0.0000		+0.0002	0.0002T						

A

PRECISION CLASS TAPERED ROLLER BEARINGS – TXR

SUGGESTED FITTING GUIDELINES FOR FERROUS SHAFT AND HOUSING

For heavy loads, high speed or shock, contact your Timken representative for further information.

SHAFT O.D. METRIC BEARINGS

Deviation from nominal (maximum) bearing bore and resultant fit

T= Tight
L = Loose

Bearing bore		Class S		Class P	
Range					
Over	Incl.	Max.	Min.	Max.	Min.
mm in.	mm in.	mm in.	mm in.	mm in.	mm in.
–	**50.000**	**0.020T**	**0.007T**	**0.014T**	**0.004T**
–	1.9685	0.0008T	0.0003T	0.0006T	0.0002T
50.000	**80.000**	**0.025T**	**0.010T**	**0.017T**	**0.004T**
1.9685	3.1496	0.0010T	0.0004T	0.0007T	0.0002T
80.000	**120.000**	**0.033T**	**0.013T**	**0.017T**	**0.004T**
3.1496	4.7244	0.0013T	0.0005T	0.0007T	0.0002T
120.000	**180.000**	**0.052T**	**0.027T**	**0.017T**	**0.004T**
4.7244	7.0866	0.0021T	0.0011T	0.0007T	0.0002T
180.000	**250.000**	**0.060T**	**0.030T**	**0.020T**	**0.004T**
7.0866	9.8425	0.0024T	0.0012T	0.0008T	0.0002T
250.000	**315.000**	**0.070T**	**0.035T**	**0.022T**	**0.004T**
9.8425	12.4016	0.0028T	0.0014T	0.0009T	0.0002T
315.000	**400.000**	**0.077T**	**0.037T**	**0.024T**	**0.004T**
12.4016	15.7480	0.0030T	0.0015T	0.0009T	0.0002T
400.000	**500.000**	**0.085T**	**0.040T**	**0.030T**	**0.004T**
15.7480	19.6850	0.0034T	0.0016T	0.0012T	0.0002T

HOUSING BORE METRIC BEARINGS

Deviation from nominal (maximum) bearing O.D. and resultant fit

T= Tight
L = Loose

Bearing O.D.		Class S		Class P	
Range					
Over	Incl.	Max.	Min.	Max.	Min.
mm in.	mm in.	mm in.	mm in.	mm in.	mm in.
–	**50.000**	**0.020T**	**0.007T**	**0.014T**	**0.004T**
–	1.9685	0.0008T	0.0003T	0.0006T	0.0002T
50.000	**80.000**	**0.025T**	**0.010T**	**0.017T**	**0.004T**
1.9685	3.1496	0.0010T	0.0004T	0.0007T	0.0002T
80.000	**120.000**	**0.033T**	**0.013T**	**0.017T**	**0.004T**
3.1496	4.7244	0.0013T	0.0005T	0.0007T	0.0002T
120.000	**180.000**	**0.052T**	**0.027T**	**0.017T**	**0.004T**
4.7244	7.0866	0.0021T	0.0011T	0.0007T	0.0002T
180.000	**250.000**	**0.060T**	**0.030T**	**0.020T**	**0.004T**
7.0866	9.8425	0.0024T	0.0012T	0.0008T	0.0002T
250.000	**315.000**	**0.070T**	**0.035T**	**0.022T**	**0.004T**
9.8425	12.4016	0.0028T	0.0014T	0.0009T	0.0002T
315.000	**400.000**	**0.077T**	**0.037T**	**0.024T**	**0.004T**
12.4016	15.7480	0.0030T	0.0015T	0.0009T	0.0002T
400.000	**500.000**	**0.085T**	**0.040T**	**0.030T**	**0.004T**
15.7480	19.6850	0.0034T	0.0016T	0.0012T	0.0002T

SHAFT O.D. INCH BEARINGS

Deviation from nominal (maximum) bearing bore and resultant fit

T= Tight
L = Loose

Bearing bore		Class 3		Class 0	
Range		Max.	Min.	Max.	Min.
Over	Incl.				
mm in.	**mm** in.	**mm** in.	**mm** in.	**mm** in.	**mm** in.
–	**304.800**	**0.037T**	**0.013T**	**0.020T**	**0.007T**
–	12.0000	0.0015T	0.0005T	0.0008T	0.0003T
304.800	**609.600**	**0.077T**	**0.025T**	**0.037T**	**0.013T**
12.0000	24.0000	0.0030T	0.0010T	0.0015T	0.0005T
609.600	**914.400**	**0.114T**	**0.037T**	–	–
24.0000	36.0000	0.0045T	0.0015T	–	–
914.400	**1219.200**	**0.152T**	**0.051T**	–	–
36.0000	48.0000	0.0060T	0.0020T	–	–
1219.200	–	**0.191T**	**0.064T**	–	–
48.0000	–	0.0075T	0.0025T	–	–

HOUSING BORE INCH BEARINGS

Deviation from nominal (maximum) bearing O.D. and resultant fit

T= Tight
L = Loose

Bearing O.D.		Class 3		Class 0	
Range		Max.	Min.	Max.	Min.
Over	Incl.				
mm in.	**mm** in.	**mm** in.	**mm** in.	**mm** in.	**mm** in.
–	**304.800**	**0.037T**	**0.013T**	**0.020T**	**0.007T**
–	12.0000	0.0015T	0.0005T	0.0008T	0.0003T
304.800	**609.600**	**0.077T**	**0.025T**	**0.037T**	**0.013T**
12.0000	24.0000	0.0030T	0.0010T	0.0015T	0.0005T
609.600	**914.400**	**0.114T**	**0.037T**	–	–
24.0000	36.0000	0.0045T	0.0015T	–	–
914.400	**1219.200**	**0.152T**	**0.051T**	–	–
36.0000	48.0000	0.0060T	0.0020T	–	–
1219.200	–	**0.191T**	**0.064T**	–	–
48.0000	–	0.0075T	0.0025T	–	–

A

SHAFT AND HOUSING CONSIDERATIONS

TAPERED ROLLER BEARINGS

In general, machining bearing seats and shoulders in spindles and housings requires careful consideration of the following form and orientation characteristics. The first four characteristics apply to the seats of bearing rings.

- **Circularity** (roundness) of each seat at every cross section.
- **Cylindricity** of each seat. Cylindricity includes the taper, roundness and other form characteristics of the seat.
- **Coaxiality** of the inner ring seats on the spindle and coaxiality of the outer ring seats in the housing. Coaxiality includes offset misalignment and angular misalignment between seats.
- **Angularity** of each bearing ring seat. This is a consideration when an inner ring seat is tapered.

The following two characteristics apply to the shoulders corresponding to each bearing seat.

- **Perpendicularity** (squareness) of each shoulder to its corresponding bearing seat, or as a more practical measure, perpendicularity of each shoulder to the spindle or housing centerline established from the two bearing seats.
- **Flatness** of each shoulder. A practical way of assessing the combined perpendicularity and flatness of each shoulder is to measure the total runout of the shoulder relative to the spindle or housing centerline. The runout of the face of the adjusting nuts, if used, should also be measured.

The tolerances to which these characteristics should be held are dependent upon the class, size and application of the bearing. *In general, these tolerances should be no greater than the total indicator reading (T.I.R.) of the assembled bearing.*

Some of the characteristics can be difficult to measure precisely. The individual user may elect to measure a subset of these characteristics (roundness and taper as an alternative to cylindricity). The individual user must determine the degree of effort and expense to be invested in the measurements. That determination should be based on the intended application of the bearing and the level of confidence in the machining process employed to manufacture the spindle and housing.

Surface Finishes – Precision Bearings

Precision class bearings should be mounted on shafts and in housings that are finished to at least the same precision limits as the bearing bore or outside diameter.

Furthermore, high-quality surface finishes together with close machining tolerances of bearing seats also must be provided. The following tabulations give some guidelines for all these criteria.

All sizes	Bearing class			
	C	B	A	AA
	3	0	00	000
	µm µin	**µm** µin	**µm** µin	**µm** µin
Shaft - Ra	**0.8**	**0.6**	**0.4**	**0.2**
	32	24	16	8
Housing - Ra	**1.6**	**0.8**	**0.6**	**0.4**
	63	32	24	16

Table 19. Suggested tapered roller bearing shaft and housing finishes.

BALL BEARINGS

Shaft Fits

The main purpose of the shaft fit is to assure a proper attachment of the inner ring to the shaft. Under normal conditions of shaft rotation, a loosely fitted inner ring will creep on the shaft, leading to wear and fretting. This condition will be further aggravated by increase of load or speed. To prevent creeping or slipping, the inner ring should be mounted firmly in place and held securely against the shaft shoulder. However, it is important that the shaft fit should not result in any undue tightening of the bearing. An excessive interference fit of the bearing bore with the shaft could result in a proportionate expansion of the bearing inner ring which could disturb the internal fit of the bearing and lead to heating and increased power consumption.

As a general rule, it is suggested that the shaft size and tolerance for seating super precision ball bearings (ABEC 7/ISO P4 and ABEC 9/ISO P2) be the same as the bearing bore. In the case of preloaded bearings, the suggested shaft fit is line-to-line, since an excessively tight fit expands the bearing inner ring and increases the bearing preload, which can lead to overheating. For example, a duplex pair of 2MM9111WI DUL bearings with 16 kg (35 lbs.) built-in preload, when mounted on a shaft that provides an interference fit of 0.010 mm (0.0004 in.), will increase the preload to approximately 86 kg (180 lbs.), which could result in elevated operating temperatures.

Bore size		Shaft diameter		Resulting mounting fit	
Max	Min.	Max.	Min.	Loose	Tight
mm in.	mm in.	mm in.	mm in.	mm in.	mm in.
55.000 2.1654	**54.994** 2.1651	**55.000** 2.1654	**54.994** 2.1651	**0.004** 0.0002	**0.006** 0.0003

Table 20. Shaft fit example: MMV (ABEC 7/ISO P4).

Housing Fits

Under normal conditions of rotating shaft, the outer ring is stationary and should be mounted with a hand push to a light tapping fit. Should the housing be the rotating member, the same fundamental considerations apply in mounting the outer ring as in the case of an inner ring mounted on a rotating shaft. Contact your Timken representative for outer ring rotation requirements.

As a general rule, the minimum housing bore dimension for super precision ball bearings may be established as the same as the maximum bearing outside diameter. If the bearing O.D. tolerance is 0.008 mm (0.0003 in.), the maximum housing bore should be established as 0.008 mm (0.0003 in.) larger than the minimum housing bore dimensions.

Outside diameter		Housing bore		Resulting mounting fit		Average fit	
Max	Min.	Max.	Min.	Loose	Tight	Loose	Loose
mm in.	mm in.	mm in.	mm in.	mm in.	mm in.	mm in.	mm in.
90.000 3.5433	**89.992** 3.5430	**90.007** 3.5436	**90.000** 3.5433	**0.015** 0.0006	**0.000** 0.0000	**0.006** 0.0003	**0.006** 0.0003

Table 21. Housing bore fit example: MMV (ABEC 7/ISO P4).

Tables covering suggested shaft and housing seat dimensions for super precision (ABEC 7/ISO P4) ball bearings are shown with part numbers in the product pages.

To accomplish the optimum mounting condition, it is important to follow the tabulated tolerances, except when deviations are suggested by your Timken representative. It is equally important that all shaft and housing shoulders be square and properly relieved to assure accurate seating and positioning of the bearings in the mounting.

On high-speed applications where nearby heat input is along the shaft, it is extremely important that the floating bearings can move axially to compensate for thermal changes. Ball bearings cannot float axially if they are restricted by tight housing bores or by the radial expansion of the bearing itself due to temperature differentials. Therefore, in such cases, the suggested housing mounting fit for the floating bearings is slightly looser than the tabulated average fit.

Likewise, in spring-loaded ball bearing applications, the housing mounting fit must be free enough to permit axial movement of the bearings under the spring pressure during all conditions of operation. The suggested housing dimensions to ensure proper "float" of the bearings under average conditions are listed in the product pages.

A

SHAFT AND HOUSING TOLERANCES

Shaft Geometry Requirements

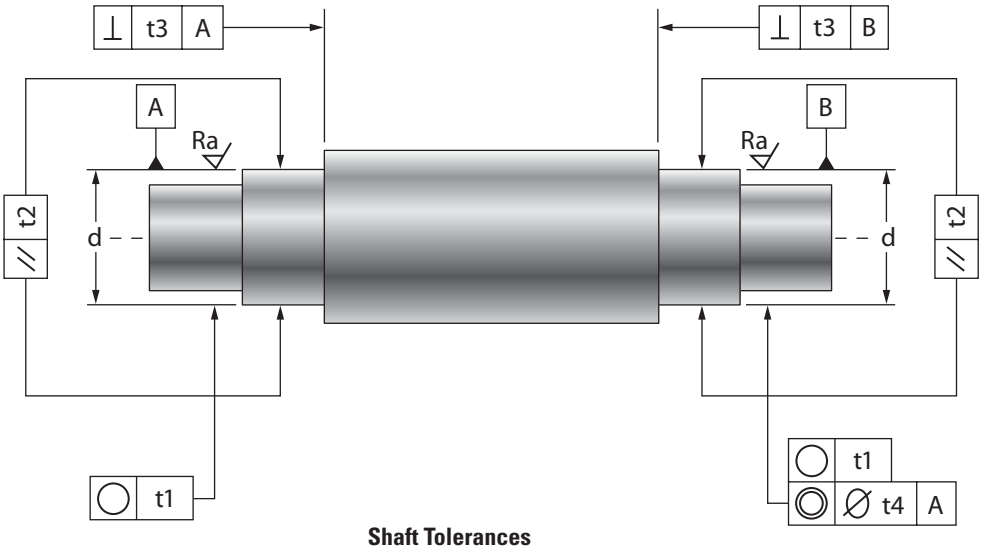

Shaft Tolerances

Description	Symbol	Tolerance value	MV ABEC 7 (ISO P4)	MMV/MM ABEC 7/9 (ISO P4S)	MMX ABEC 9 (ISO P2)
Roundness	○	t1	IT2	IT1	IT0
Parallelism	//	t2	IT2	IT1	IT0
Squareness	⊥	t3	IT2	IT1	IT0
Concentricity	◎	t4	IT3	IT2	IT2
Surface Finish	Ra		16 (µin.)	or	0.4 µm

Shaft journal diameter (d) **mm**		Units – micrometer (µm)			
>	≤	IT0	IT1	IT2	IT3
—	**10**	0.6	1.0	1.5	2.5
10	**18**	0.8	1.2	2.0	3.0
18	**30**	1.0	1.5	2.5	4.0
30	**50**	1.0	1.5	2.5	4.0
50	**80**	1.2	2.0	3.0	5.0
80	**120**	1.5	2.5	4.0	6.0
120	**180**	2.0	3.5	5.0	8.0
180	**250**	3.0	4.5	7.0	10.0
250	**315**	—	6.0	8.0	12.0

Shaft journal diameter (d) **mm**		Units – microinches (µin.)			
>	≤	IT0	IT1	IT2	IT3
—	**10**	20	40	60	100
10	**18**	30	50	80	120
18	**30**	40	60	100	160
30	**50**	40	60	100	160
50	**80**	50	80	120	200
80	**120**	60	100	160	240
120	**180**	80	140	200	310
180	**250**	120	180	280	390
250	**315**	—	240	310	470

Reference ISO 286.

Housing Geometry Requirements

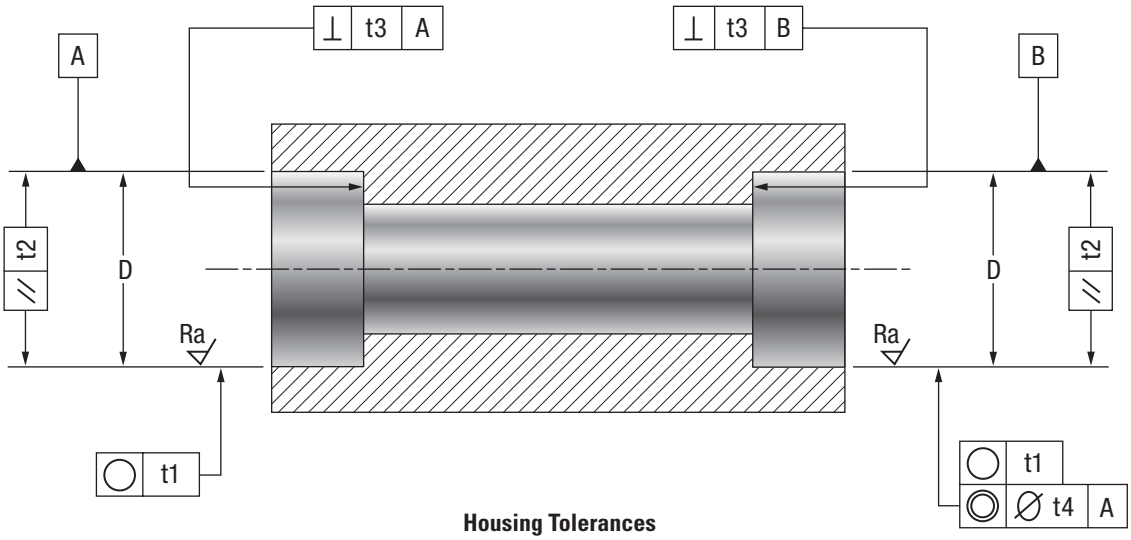

Housing Tolerances

Description	Symbol	Tolerance value	MV ABEC 7 (ISO P4)	MMV/MM ABEC 7/9 (ISO P4S)	MMX ABEC 9 (ISOP2)
Roundness	○	t1	IT2	IT1	IT0
Parallelism	//	t2	IT2	IT1	IT0
Squareness	⊥	t3	IT2	IT1	IT0
Concentricity	◎	t4	IT3	IT2	IT2
Surface Finish	Ra		16 (µin.)	or	0.4 µm

Housing journal diameter (D) mm		Units – micrometer (µm)			
>	≤	IT0	IT1	IT2	IT3
10	**18**	0.8	1.2	2.0	3.0
18	**30**	1.0	1.5	2.5	4.0
30	**50**	1.0	1.5	2.5	4.0
50	**80**	1.2	2.0	3.0	5.0
80	**120**	1.5	2.5	4.0	6.0
120	**180**	2.0	3.5	5.0	8.0
180	**250**	3.0	4.5	7.0	10.0
250	**315**	3.5	6.0	8.0	12.0
315	**400**	4.5	6.0	8.0	12.0

Housing journal diameter (D) mm		Units – microinches (µin.)			
>	≤	IT0	IT1	IT2	IT3
10	**18**	30	50	80	120
18	**30**	40	60	100	160
30	**50**	40	60	100	160
50	**80**	50	80	120	200
80	**120**	60	100	160	240
120	**180**	80	140	200	310
180	**250**	120	180	280	390
250	**315**	140	240	310	470
315	**400**	180	240	310	470

Reference ISO 286.

A

MOUNTING DESIGNS

Obtaining good spindle accuracy depends not only on selecting the proper precision bearings but also on the following factors:

- Good design and machining of the components that support the bearing (roundness and alignment of the seats, squareness of backing shoulders of both the spindle and the housing, and surface finish).
- Correct use of information given on bearings.
- Correct fitting practices.
- Appropriate bearing setting.

Selection of the most appropriate mounting design is largely dictated by optimizing the stiffness, speedability and ease of assembly.

DESIGN AND ACCURACY OF MOUNTING SURFACES

The total runout of a spindle-bearing-housing system is a combination of the runout of each component. A precision bearing will assume the shape of the spindle and perpetuate whatever runout is present. If the runout is caused by a defective housing, the spindle and bearing will simply transmit the error to the workpiece. Therefore, particular attention needs to be paid to the design and accuracy of the mounting surfaces.

The primary function of the inner or outer ring seat and abutment is to positively establish the location and alignment of the bearing under all loading and operating conditions. To achieve optimum bearing performance, it is essential to design housing seats and abutments that are round and square in alignment with the spindle axis. Shoulders must be of sufficient section and design to resist axial deflection under load. The shoulder diameters should be respected to help obtain optimum bearing performance.

HOUSING DESIGN

Housings are usually made of cast iron or steel and are generally heat-treated to lessen possible distortion. For smaller high-speed applications, steel housings are preferred.

The bore of the housing should be ground or bored and checked at a number of points throughout its length and diameter to ensure that it is round and does not taper.

It is preferable to mount the bearings in one casting; this permits machining the two housing bores in one setting, as well as accurate alignment of the bearings.

In many cases of machine design, it is advantageous to employ a subhousing or a steel sleeve between the outer ring of the bearing and the machine frame, thus allowing assembly of the bearings on the shaft and insertion of the entire unit into the machine frame. This method also provides a surface of proper hardness where machine frames are made of a material that has a low Brinell value, such as aluminum and other soft metals.

Shaft shoulders and housing shoulders should be square and true, and should be of such diameters as to meet the suggestions shown with the part numbers given. The choice between fillets and undercut reliefs rests with the individual shaft design and conditions surrounding its normal use. Suggested housing geometry requirements are discussed on pages 89 and 91.

Where screws are used to fasten end caps into the main housing, adequate section should be left between the screw hole and the housing bore. This is required to prevent distortion of the housing bore when the screws are tightened and the covers or others parts are pulled tightly into place.

Prior to assembly, shafts and housings, as well as all lubricant holes and channels, should be cleaned thoroughly to remove all chips and particles that may be carried by the lubricant into the bearings and cause bearing damage.

HOUSING SEALS

A labyrinth combination of slinger and end cover provides a highly effective seal against the intrusion of foreign matter. This seal is suggested for use over a wide range of speeds. For slower-speed applications, a combination of slinger and a commercial contact-type seal is usually employed.

Slingers should be machined all over to assure true-running. Their diameters should be concentric with the bore. The outside diameter of the slinger is often tapered to throw off cutting compounds, coolants, etc., from the point at which such liquids may enter the spindle. A drip or run-off groove adjacent to the open lip of the end cover is highly desirable and practical.

The axial clearances of the internal faces between slinger and end cover should be about 1.600 mm (0.0629 in.). The first radial clearance opening on any design through which liquid may pass should be made very close, about 0.089 mm (0.0035 in.) on a side. The inner radial clearances should be between 0.380 mm (0.0149 in.) and 0.190 mm (0.0075 in.).

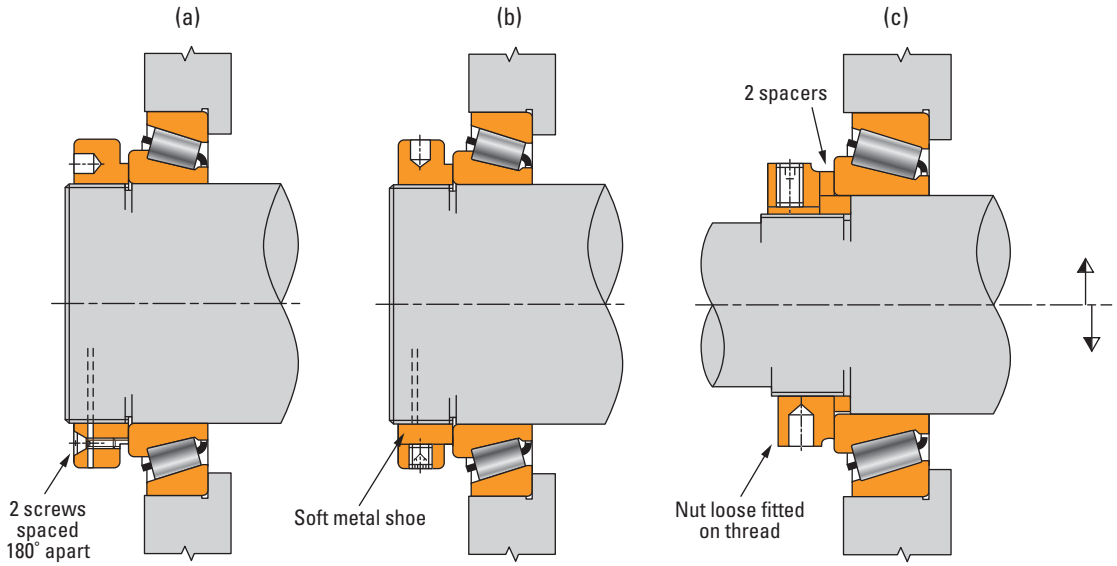

Fig. 71. Locking devices.

SHAFTS

Shafts are preferably made from hardened and ground steel; and, where suitable, a hardness of 45-50 HRC has been successful. When designing a spindle or shaft, it is highly desirable to plan so that it can be ground all over in one setting as a final operation. This promotes true balance and running accuracy, which are critical in high-speed applications. Suggested shaft geometry can be found on pages 89 and 90.

LOCKING DEVICES

In most cases, simple 2TS(F) spindle layouts are adjusted by correct positioning of the tail bearing cone. A commonly used device is a precision adjusting nut. A locking device must be provided to properly maintain the nut after setting: either axially by means of two screws 180 degrees opposite pinching the threads (Figure 71a), or radially by pressure of a screw on a soft metal shoe (Figure 71b).

For improved accuracy, a ground spacer in conjunction with a square-ground spindle shoulder and a locking precision nut also can be used (Figure 72). Good parallelism of the ground spacer faces as well as the squareness of the spindle shoulder will ensure a perfect positioning of the cone backface. This mounting configuration also offers assurance that the initially defined setting cannot be interfered with by the final user. Figure 71c shows two different solutions with ground spacers. Note the practicality of the above centerline solution, which allows the spacer to both increase or decrease the initial setting.

A well-known method of providing good spindle alignment, roundness and backing squareness is to grind the cone seats and the backing shoulders during the same operation (Figure 73). In this method, the grinding of the square backing of the adjusting nut (if any) also can be achieved by locking the nut on its thread. This eliminates any possible default of the nut due to internal thread clearance.

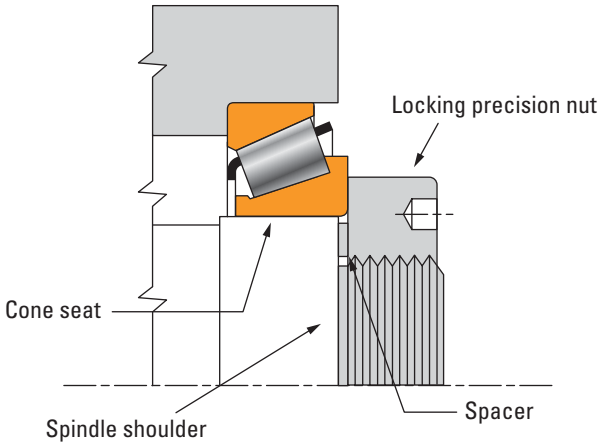

Fig. 72. Using ground spacer and spindle shoulder together with a precision nut for improved accuracy.

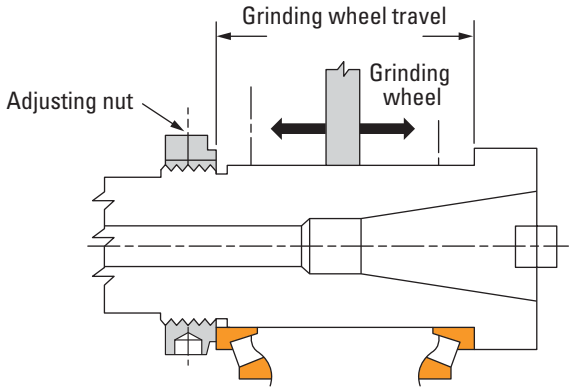

Fig. 73. Grinding of cone shaft and backing shoulders.

A

TAPERED ROLLER BEARINGS

Tapered roller bearings are generally used in two fundamental spindle design configurations:

- Three-support mountings for heavily loaded or long spindles.
- Simple mounting of two single-row bearings.

Three-Support Mounting

Figure 74 shows the "box type" mounting using three bearings. The two nose bearings are located axially (fixed position) and accept axial forces in both directions, while the tail bearing is fitted as a floating position to accommodate the thermal expansion of the spindle. The floating position can be supported either by a tapered roller bearing or a cylindrical roller bearing.

This kind of arrangement is mainly used for special heavy machines running at low or medium speeds, or for long spindle designs.

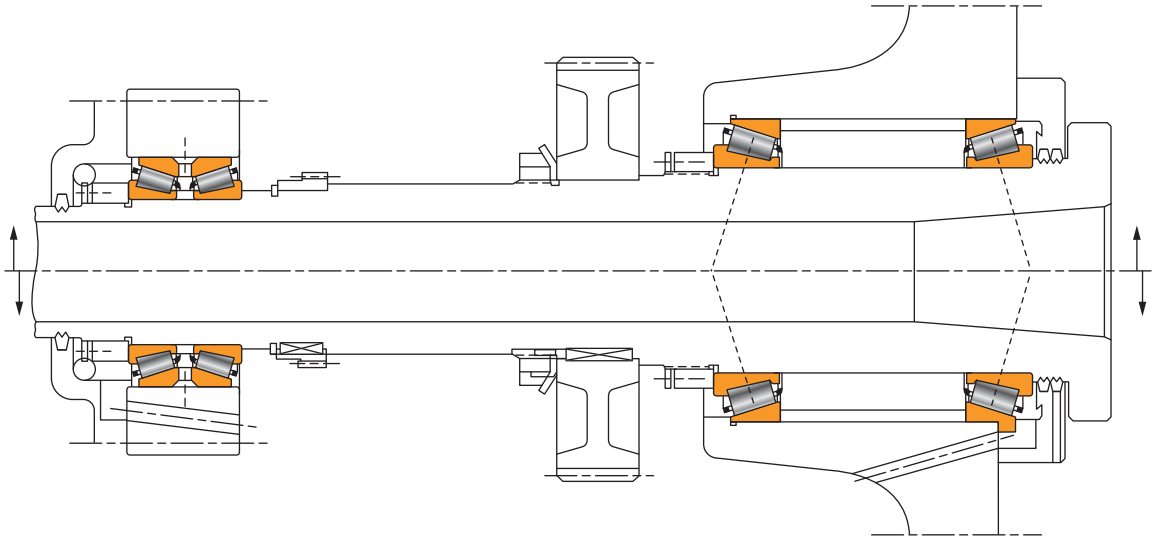

Fig. 74. "Box-type" mounting with a TDO at the floating position.

Simple Mounting

The evolution of two single-row bearing arrangements for spindles, discussed below, is directly related to the speed requirements and, consequently, the lubrication modes (see page 56).

TS and TSF Arrangement

The spindle is supported by one bearing at the nose position and a second one at the tail position. This layout offers the advantage of being a simple isostatic design that allows easy machining of adjacent parts. The mounting and setting procedures can be achieved without any specific tooling.

Static stiffness calculations of the spindle-bearing system allow the optimum bearing spread to be determined precisely for each mounting, as a function of the overhung value of the spindle nose. A good approximation, however, is to consider that the distance between bearing centers should be of two and a half to three times the spindle nose diameter. This represents an optimum value not only for stiffness, but also for thermal equilibrium.

Figure 75 represents the simplest layout of a two single-row bearing concept. The view above the centerline shows flanged cups (Type TSF) allowing a through-bore machining concept for the housing, which offers increased accuracy with no need for cup backing shoulders. The arrangement shown below the centerline uses two single-row bearings (Type TS).

The bearings are adjusted by means of a ground spacer locked by a precision nut. Lubrication is often achieved by oil circulation, which enters through radial oil inlets or special high-speed grease.

As shown below, the next evolution of this arrangement consists of improving the lubrication system by using appropriate jets for oil inlets and cooling (Figure 76 and Figure 77).

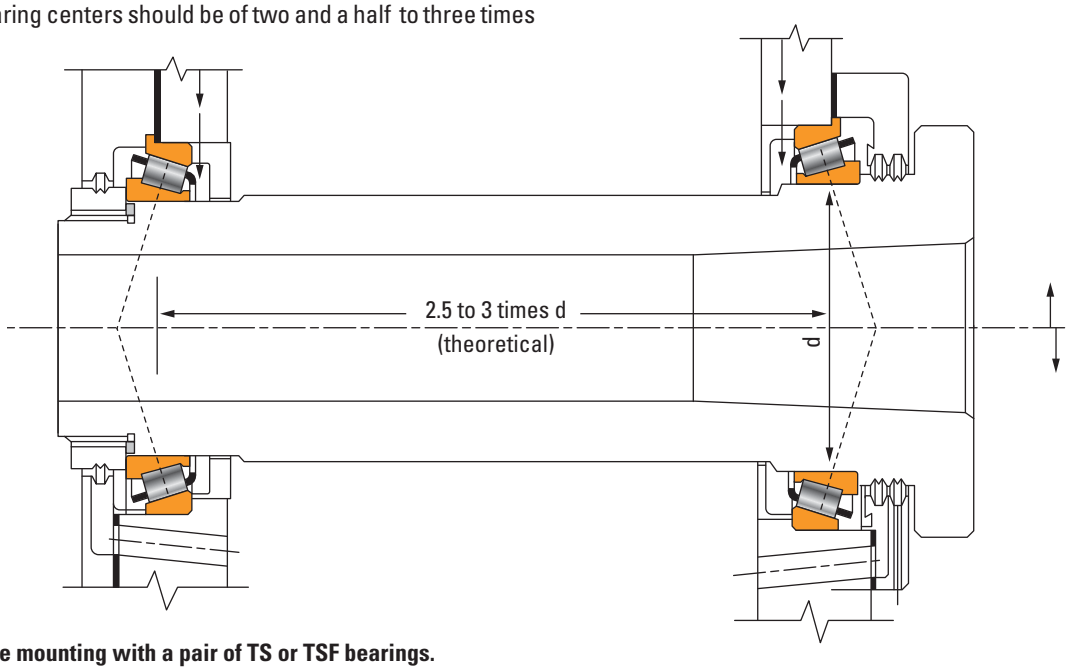

Fig. 75. Simple mounting with a pair of TS or TSF bearings.

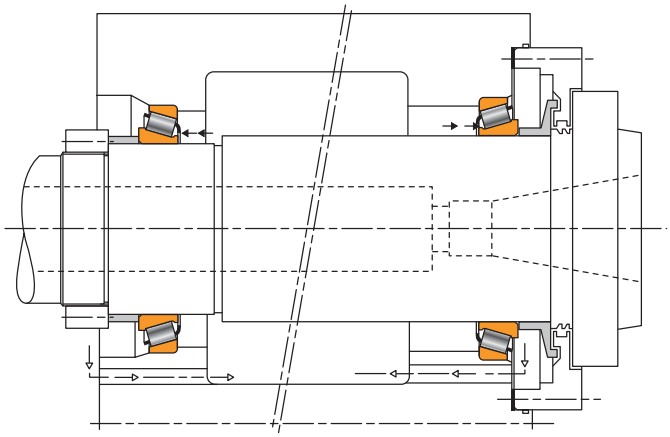

Fig. 76. Simple paired TS mounting with oil inlet at the small end of the rollers.

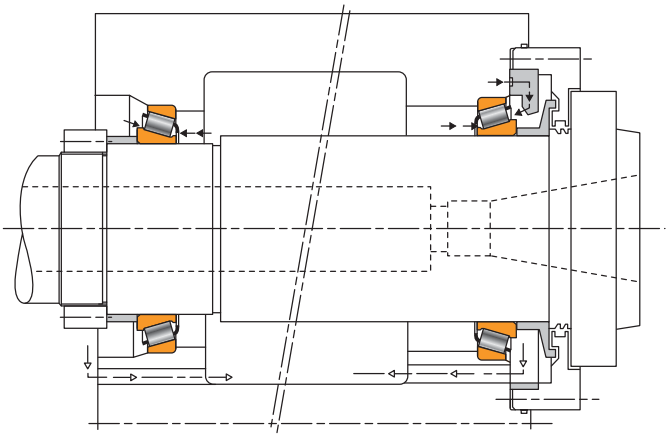

Fig. 77. Simple paired TS mounting with oil jets at both ends of the rollers for inlet and cooling.

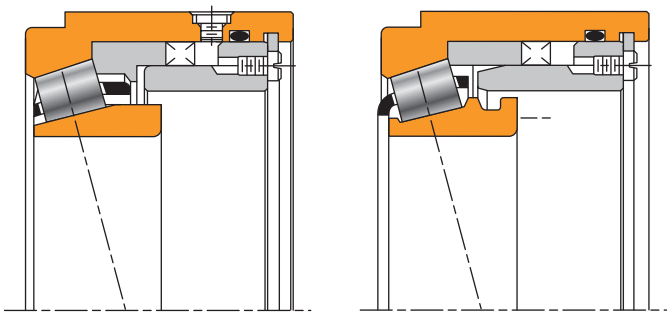

Fig. 78. Two designs of the Hydra-Rib bearing.

TS(F) and Hydra-Rib

A typical spindle arrangement is the combination of a Hydra-Rib bearing with a single-row TS bearing (Figure 79). The Hydra-Rib bearing is fitted at the tail position and the TS bearing at the nose position of the spindle. The outer ring rib simplifies the lubrication at high speed since the natural flow of the oil under centrifugal effect feeds the oil to the rib. A simple axial oil inlet above the cage on the small roller end is therefore sufficient for lubricating the Hydra-Rib bearing.

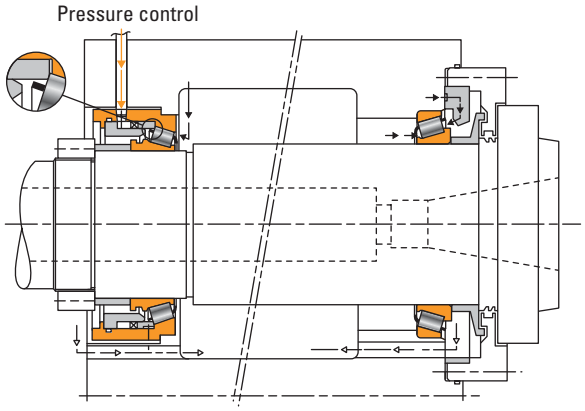

Fig. 79. Simple mounting with a Hydra-Rib cooled by an axial oil inlet and a TS bearing with oil jets at both end of the rollers for inlet and cooling.

TSMA and Hydra-Rib

Figure 80 shows the same arrangement with a TSMA bearing. This arrangement allows the widest range of operating speeds, under optimum preload.

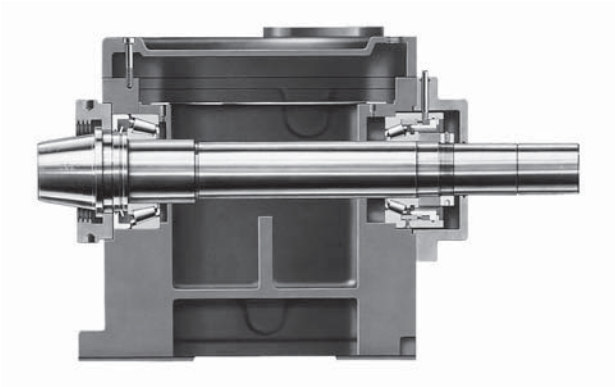

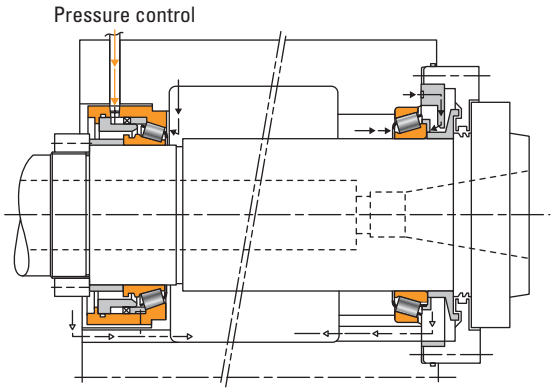

Fig. 80. Simple mounting with a Hydra-Rib bearing cooled by an axial oil inlet and a TSMA bearing with oil jets at both ends of the rollers for inlet and cooling.

TXR(DO)

A typical mounting arrangement for the type TXRDO crossed roller bearing is shown in Figure 81.

The arrangement shown is for lubrication by oil circulation in conjunction with an oil level. It can, however, be designed for grease lubrication with appropriate sealing arrangements.

The bore of the housing (DH) and the diameter of the spigot (DS) (Figure 82) should be machined to give a mean of the suggested interference fits (pages 86-87).

The bearing is adjusted externally by segments beneath the top inner ring clamping plate (Figure 82) to get the required preload.

Your Timken representative should be consulted for more details about the use of crossed roller bearings.

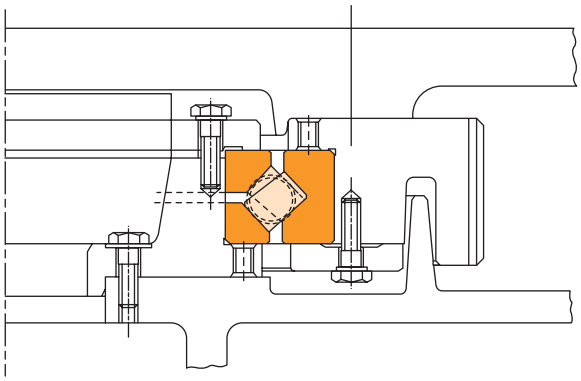

Fig. 81. Typical mounting arrangement of a TXRDO bearing.

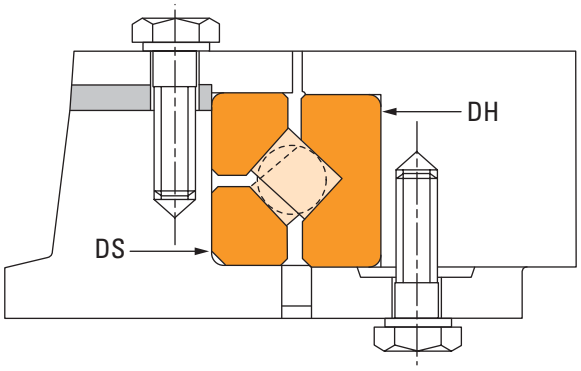

Fig. 82. Fitting and setting of TXR bearings.

A

DUPLEX BALL BEARINGS

Back-to-Back Mounting, DB or ("O") (Contact angles diverging toward shaft centerline)

Before mounting, there is clearance between the two adjacent inner ring faces. After mounting, these faces are clamped together to provide an internal preload on each bearing. This arrangement is well-suited for pulleys, sheaves and other applications where there are overturning loads and also all floating positions where thermal expansion of the shaft occurs. It also provides axial and radial rigidity and equal axial capacity in either direction when used in a fixed location. Back-to-back is the most commonly used of all duplex arrangements. Timken pairs for back-to-back mounting should be ordered as DU. Example: 2MM207WI-DU. Also available as two single flush-ground bearings, e.g., -SU (two bearings).

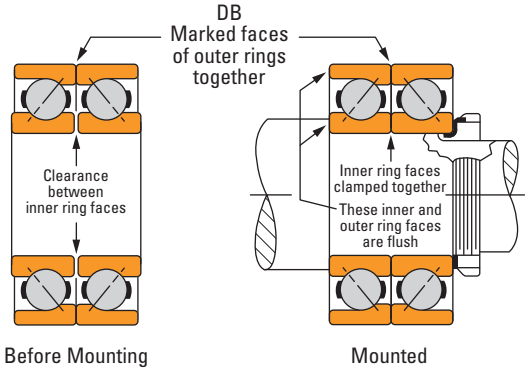

Fig. 83. Back-to-back bearing assemblies before and after mounting.

Face-to-Face Mounting, DF or ("X") (Contact angles converging toward shaft centerline)

Before mounting, there is clearance between the two adjacent outer ring faces. After mounting, these faces are clamped together between the housing shoulder and cover plate shoulder, providing an internal preload on each bearing. This arrangement provides equal axial capacity in either direction as well as radial and axial rigidity. Since the face-to-face mounting has inherent disadvantages of low resistance to moment loading and thermal instability, it should not be considered unless a significantly more convenient method of assembly or disassembly occurs from its use. Timken pairs for face-to-face mounting should be ordered as DU. Example: 2MM212WI-DU. Also available as two single flush-ground bearings, e.g., -SU (two bearings).

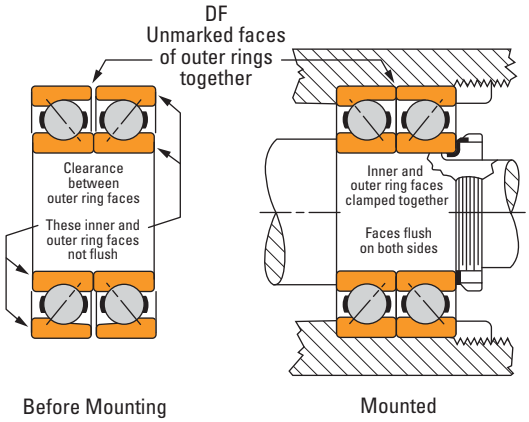

Fig. 84. Face-to-face bearing assemblies before and after mounting.

Tandem Mounting, DT

Before mounting, the inner ring faces of each bearing are offset from the outer ring faces. After mounting, when an axial load is applied equal to that of twice the normal preload, the inner and outer ring faces are brought into alignment on both sides. This arrangement provides double axial capacity in one direction only. More than two bearings can be used in tandem if additional axial capacity is required. Timken pairs for tandem mounting should be specified as DU. Example: 2MM205WI-DU. Also available as two single flush-ground bearings, e.g., -SU (two bearings).

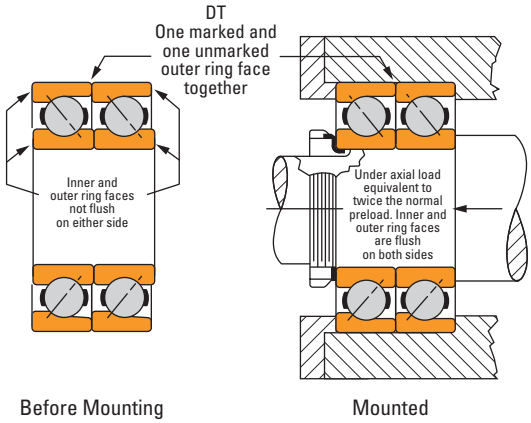

Fig. 85. Tandem bearing assemblies before and after mounting.

Other Mountings

Flush-ground (DU) pairs may be mounted in combination with a single flush-ground bearing as a "triplex" (TU) set shown below. Also shown below is a "quadruplex" (QU) set where three bearings in tandem are mounted back-to-back with a single bearing. These arrangements provide high capacity in one direction and also a positively rigid mounting capable of carrying a moderate amount of reverse thrust.

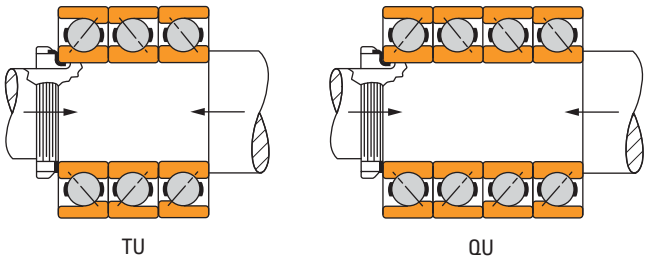

Fig. 86. Typical triplex and quadruplex bearing mountings.

Back-To-Back Versus Face-To-Face Mountings

Mountings having bearings applied in any of the face-to-face (DF) arrangements are objectionable because they provide the least rigidity. Furthermore, when the operating speeds are comparatively high, such mountings may buildup bearing preload excessively because of the temperature gradient between the housings, bearings and shafts. As this gradient increases, the bearing preload builds up, starting a detrimental cycle that may lead to premature spindle damage.

In spindle mountings, the shaft temperature usually changes at a faster rate than the housing, creating temperature differentials between the two members. These are due to their difference in mass and their respective abilities to act as heat sinks. Thus, the shaft and the inner-ring spacer expand at a faster rate than the housing and the outer-ring spacer. As the shaft expands longitudinally and the inner-ring spacer lengthens, an axial load builds up on each bearing and continues to increase until the equilibrium temperature is reached. This occurs when the temperature at the housing levels off and the heat transferred from the bearings balances the heat generated within the system. Therefore, if the housing attains an excessively high temperature, the initial bearing temperature is built up considerably.

In a face-to-face mounting, Figure 87, the shaft expands radially and longitudinally and the inner-ring spacer lengthens, but at a faster rate than the outer-ring spacer. This thermal expansion causes an additional axial load to be imposed on both inner rings, increasing the preload of the bearings. Conversely, in back-to-back mounting, Figure 88, the longitudinal expansion of the inner-ring spacer tends to relieve, rather than build up, the bearing preload.

The two back-to-back pairs, shown in Figure 89, are mounted so that the two middle bearings are face-to-face. As previously observed, temperature differentials cause the preload of these inner bearings to increase during operation. This mounting operation is not suggested. In bearing mountings of the system seen in Figure 90, undue axial loads are put on the two outer bearings as the temperature along the shaft becomes higher than at the housing. The two inner bearings unload, starting a vicious cycle of increasing temperature, preload buildup and lubricant breakdown. This also is an unacceptable mounting arrangement and is not suggested. The same bearings are shown correctly mounted in tandem and arranged back-to-back in Figure 91. Lateral expansion of the shaft and inner-ring spacer of such mountings increases neither axial loading nor bearing preload.

Therefore, to prevent increases in preload due to the thermal expansion, back-to-back mountings are preferred for bearings on machine tool spindles. When two pairs are used, each pair should be mounted in tandem, but the combination should be arranged back-to-back as in Figure 91.

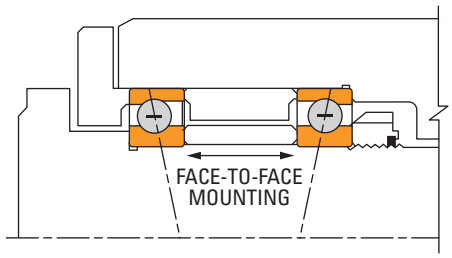

Fig. 87. DF Mounting, fixed (not suggested).

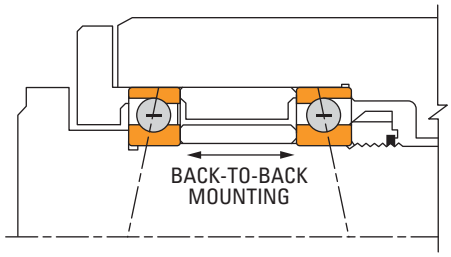

Fig. 88. DB Mounting, fixed (suggested).

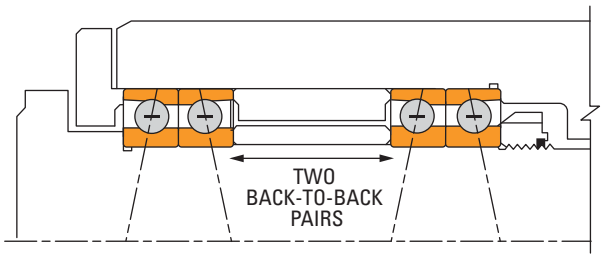

Fig. 89. DB-DB Mounting, fixed (not suggested).

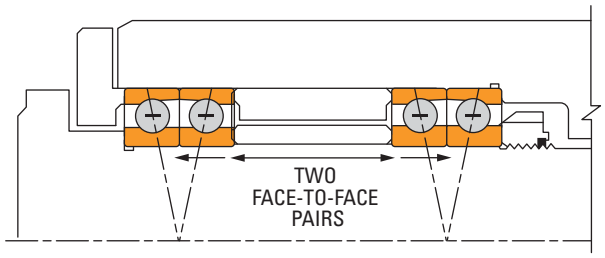

Fig. 90. DF-DF Mounting, fixed (not suggested).

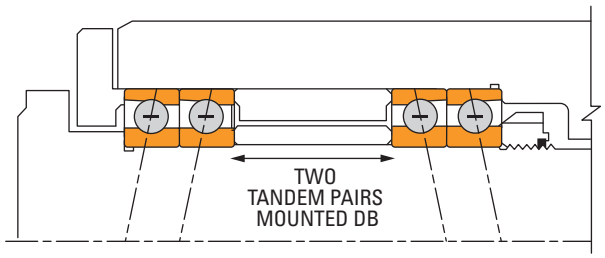

Fig. 91. DT-DB Mounting, fixed (suggested)

A

Spring-Loaded Mountings

For high-speed applications, radial and axial rigidity and smooth spindle performance may be obtained by spring-loading the ball bearings with a predetermined axial load. Spring-loading allows the spindle to float laterally during temperature changes without appreciably increasing or decreasing the original spring axial load.

As the inner ring heats up during operation, it expands radially. This radial expansion applies an increasing load through the ball and outer ring and finally to the preload springs. The preload springs deflect slightly to compensate for the loads due to thermal expansion and maintain a consistent load on the spindle system.

In some applications, single, spring-loaded bearings are employed at the front and rear locations, mounted in back-to-back arrangement. Other mountings, similarly spring-loaded, have a pair of bearings installed in tandem at each end of the spindle in back-to-back arrangement (DT-DB). In either case, the spring pressure is applied to the pulley-end or rear bearing position, placing the shaft in tension between the two bearing locations.

High Points of Runout

The correct use of the high point of runout etched on the bearing components allows the accuracy of the spindle to be optimized. The components should be mounted in the housing and on the spindle so that the high points are aligned with each other. In other words, the inner ring is fitted on the spindle so the high point of the rear ring is aligned with the high point of the nose bearing. Similarly, the high points of the outer ring are aligned in the housing.

To obtain maximum precision, and when the high points of runout of both the spindle and the housing are known, the respective high points of the bearing components should be 180 degrees opposite to those of the spindle and the housing. This will tend to neutralize the eccentricity and minimize the effect of the high spots of all components. The figures to the right show typical examples of the correct and incorrect use of the high point of runout of bearings.

The greatest accuracy can be provided by grinding the spindle nose after the bearings are installed. This procedure will produce spindle runout considerably smaller than the bearing runout.

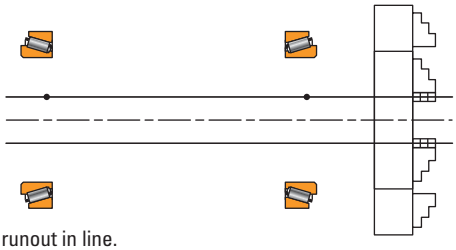

Correct: high points of runout in line.

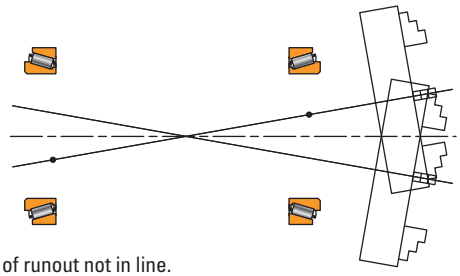

Incorrect: high points of runout not in line.

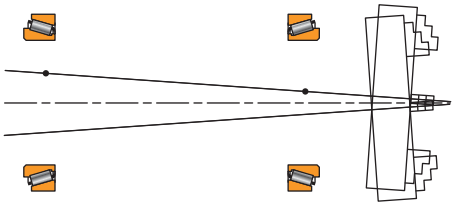

Correct: bearing having largest runout at rear.
High points of runout in line.

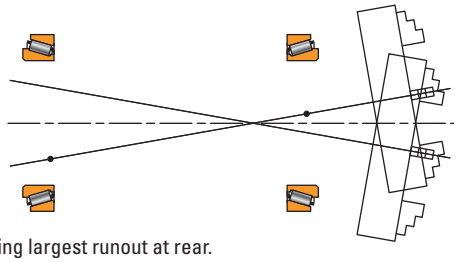

Incorrect: bearing having largest runout at rear.
High points of runout not in line.

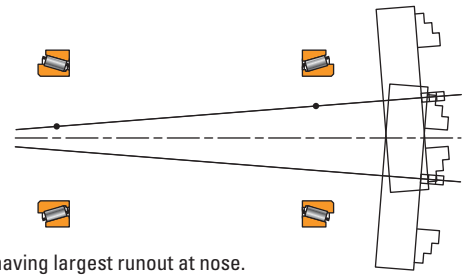

Incorrect: bearing having largest runout at nose.
High points of runout in line.

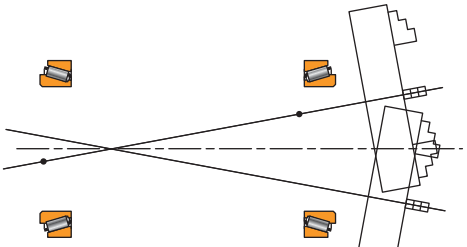

Incorrect: bearing having largest runout at nose.
High points of runout not in line.

Fig. 92. The effect of bearing runout high point locations on spindle accuracy.

SETTING AND PRELOADING GUIDELINES

TAPERED ROLLER BEARINGS

The optimum operating setting of a bearing system has a direct influence on the spindle performance as far as accuracy, dynamic stiffness, operating temperature and cutting capabilities are concerned.

An operating setting range between zero and light preload is generally the optimum value for simple dual TS or TSF layouts.

To reach this range, it is important to evaluate the different parameters that will directly influence the operating setting in order to determine the cold-mounted setting:

- Rotating speed.
- Applied loads.
- Spindle layout.
- Lubrication system.
- External sources of heat.

This evaluation occurs generally during the testing phase of the spindle because of the complexity of each individual parameter and the interaction of all of them during running conditions. At the same time, it also is important to consider the bearing layout and particularly the bearing spread to evaluate their effect on bearing setting.

It has been demonstrated that an optimum bearing spread for stiffness exists. In the same way, an optimum spread for thermal stability can be determined should this be the overriding factor.

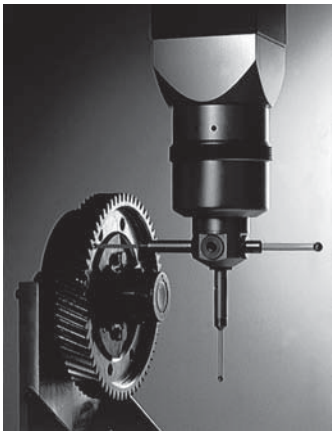

Under steady-state temperature conditions, the spindle and housing temperature is not uniformly distributed. Generally, a temperature gradient of 2° C to 5° C (4° F to 9° F) exists between the spindle and housing. This phenomenon is valid for any type of bearing and has a direct influence on the bearing setting. In the case of pure radial bearings, such as cylindrical roller bearings, the radial setting will vary proportionally to the radial temperature gradient without any possibility for correction. The use of tapered roller bearings allows the radial loss of end play due to the gradient between the spindle and the housing to be compensated by the axial expansion of the spindle with respect to the housing through optimization of the bearing spread.

Figure 93 shows a graphical way to determine this optimum spread. To define the optimum spread for thermal compensation or to calculate the effect on setting for a given spread in a simple 2TS(F) bearing system, the designer can use the formula below for ferrous housings and spindles.

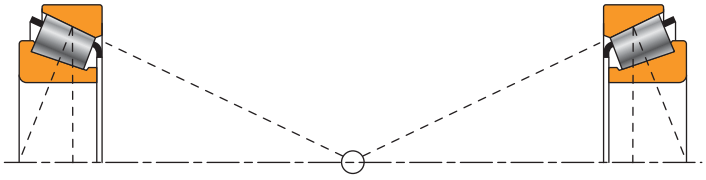

Fig. 93. Graphical determination of optimum thermal spread.

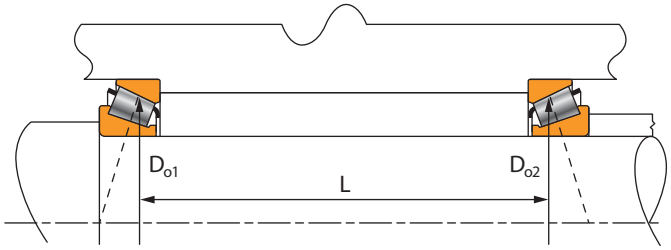

Fig. 94. Resulting distance between bearing geometric centerlines.

$$\text{Loss of end play} = 12 \times 10^{-6} \times t \times \left[\left(\frac{K_1}{0.39} \times \frac{D_{o1}}{2} \right) + \left(\frac{K_2}{0.39} \times \frac{D_{o2}}{2} \right) - L \right]$$

Where:

t	= temperature difference between shaft / inner ring rollers and housing / outer ring ($\theta_s - \theta_h$)	(°C)
K_1 and K_2	= respective K factor of bearings 1 and 2 from bearing tables	
D_{o1} and D_{o2}	= respective outer race mean diameter	(mm)
L	= distance between bearings geometric centerlines	(mm)

During the starting period, care must be taken because the radial thermal expansion is not immediately compensated by the axial expansion of the spindle. That occurs later. During this "transient period," a decrease of the axial end play or an increase of preload is generally recorded (Figure 95). The loss of end play can be calculated by using the same formula, but ignoring the parameter "L." For this reason, it is generally recommended to initially set the bearings with a light, cold end play to avoid any bearing burn-up, due to excessive preload during the transient temperature rise. During the testing phase, it will be possible to modify this initial end play to obtain the optimum setting for the application.

Figure 95 shows also that a three-support layout is more sensitive to thermal effects, leading to a higher temperature rise and loss of end play, than a simple arrangement because of the short bearing geometric spread at the fixed position.

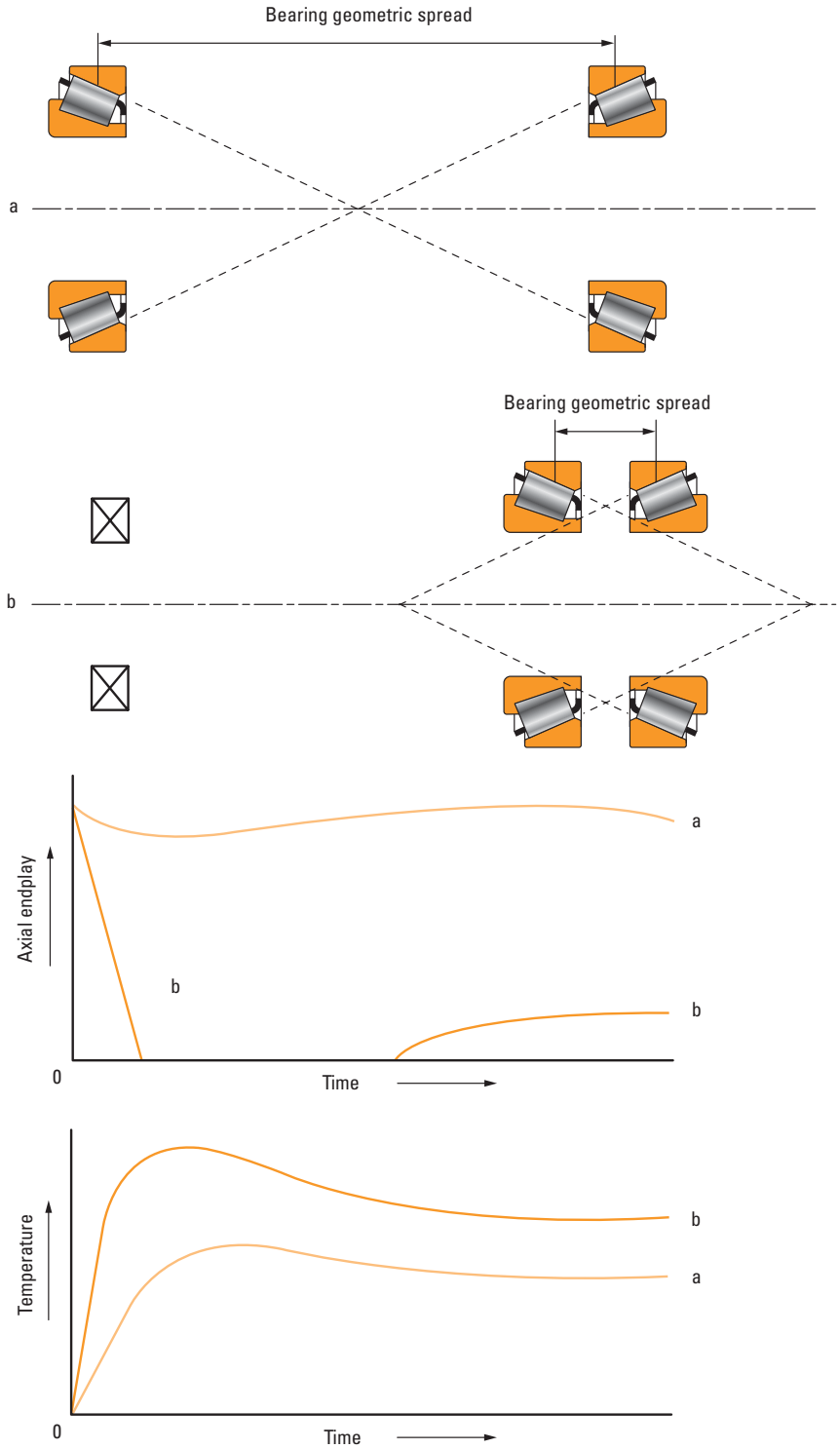

Fig. 95. Evolution of the spindle system setting and temperature during the transient period:
a) Simple mounting
b) Three-support mounting.

BALL BEARINGS

Preloading of precision ball bearings to a predetermined axial load for "universal" mounting is accomplished by grinding a certain amount of stock off faces of the inner and outer rings so that before mounting the bearing, faces on the abutting side are offset an amount equal to the deflection under "preload." When mounted, these faces are clamped together, the opposite bearing faces become flush and the bearing parts are subjected to compressive forces, bringing the balls into contact with their respective raceways to take up the initial clearances of the bearings. Thus, the preload built into the bearings is automatically obtained. The condition of a preloaded ball bearing is similar to that of one in operation under axial load. This initial axial load serves to decrease the axial and radial deflections when subsequent operational loads are imposed on the bearing assembly.

Bearings are preloaded no more than necessary. Excessive preload adds little to the rigidity of the spindle, but appreciably reduces the range of operating speeds by causing bearings to run hot at higher speeds. To meet conditions of speed, mounting arrangement and maximum rigidity consistent with low operating temperatures, Timken precision ball bearings are designed and produced with preloads varying from light to heavy and, in some instances, with negative preload.

In many cases, the amount of bearing preload is a trade-off between having the desired degree of rigidity and reducing any adverse effect preloading has on the equipment. If the operating speed is high, a heavy preload can lead to excessively high operating temperatures, resulting in shortened bearing life. For these reasons, three classes of ball bearing preloads are most commonly used – light, medium and heavy. In certain applications, such as high-speed motorized router spindles, specially preloaded, super precision ball bearings are required. Such bearings are "zero" preloaded – that is, the faces of the inner and outer rings are ground flush under negligible load.

The light, medium and heavy standard preload values for Timken super precision angular contact ball bearings and for both high and low contact angles are located with the dimension tables in Section C.

Axial deflection curves of various preload conditions for duplex pairs of 15 degree contact angle super precision ball bearings are shown in Figure 96 and the radial deflection curves for the same bearings are shown in Figure 97.

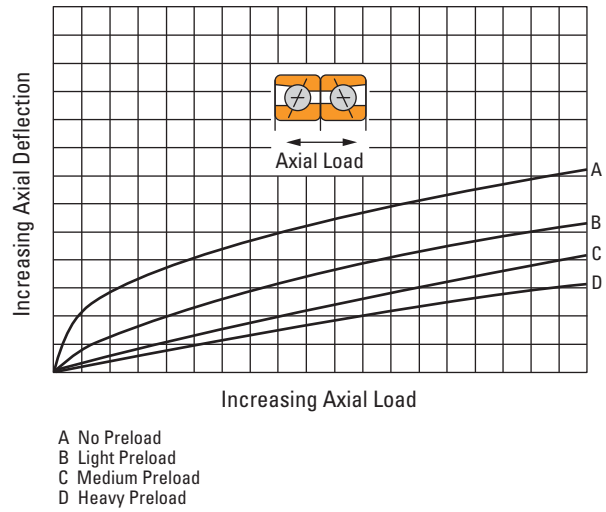

Fig. 96. Effect of most commonly used preloads on axial deflection.

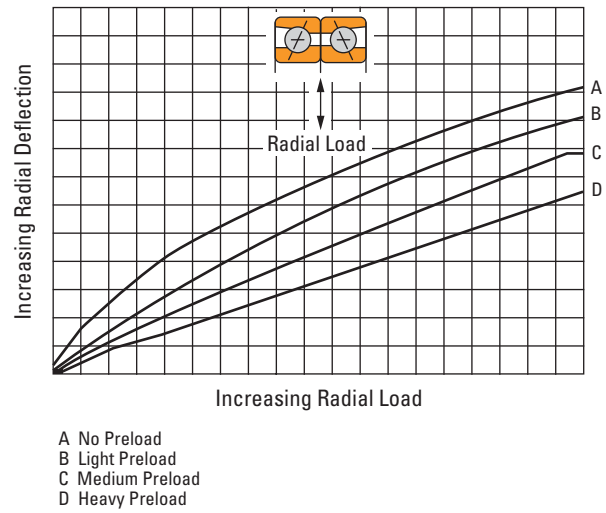

Fig. 97. Effect of most commonly used preloads on radial deflection.

Timken application engineering expertise is only a phone call away. Highly skilled technical assistance can be reached by calling (US and Canada): 1-800-223-1954. Outside this region, call 330-438-3000 or visit our website at:

www.timken.com

A

NOTES

TAPERED ROLLER BEARINGS

B

B

B PRECISION TAPERED ROLLER BEARINGS

Part Numbering Systems 107

Introduction 110

TS Style – Metric, Inch 112

TSF Style – Metric, Inch 116

TXR Style – Metric, Inch 120

TSHR Style – Metric, Inch 122

B

Precision Tapered Roller Bearings Timken System

399A - 394 A

- **Cone** (Inner Ring)
- **Cup** (Outer Ring)
- **Component and Suffix Fields**

Precision Tapered Roller Bearings ISO 355 Numbering System

JP10049 - J P 100 10-B

- **Cone** (Inner Ring)
- **Cup** (Outer Ring)
- **J Prefix** Metric Nominal
- **Duty (alpha) Field**
- **Cone Bore** (in mm)
- **Component and Suffix Fields**

Precision Tapered Roller Bearings ABMA Numbering System

JLM722948 - J LM 7 229 12

- **Cone** (Inner Ring)
- **Cup** (Outer Ring)
- **J Prefix** Metric Nominal
- **Duty Code Field**
- **Angularity Code Field**
- **Series Code Field**
- **Component and Suffix Fields**

For more information about numbering systems, see the following pages, or contact your Timken representative.

TIMKEN® PRECISION TAPERED ROLLER BEARINGS

The Timken bearing part numbering system has evolved over the years to accommodate various international standards put forth by both the ISO and ABMA organizations. To retain the integrity of Timken's proven initial designs and to support its extensive customer base, Timken recognizes the key numbering schemes as they have developed in the tapered roller bearing industry and as indicated here.

ORIGINAL TIMKEN SYSTEM

(cone) - (cup)

Ex: 399A-394A (see common component/suffix)

- Family-design bearing group around a common roller (quantity and angle CAN vary).
- Unique component part numbers.

	Ex. I	Ex. II
Series	395	52000
Cup	399	52618
Cone	394	52387

- Numerical portion of part number has no significance in describing bearing size or type.

ISO 355 NUMBERING SYSTEM (application-oriented)

(cone) - (cup)

Ex: JP10049-JP10010-B

see common component and suffix fields

"J" Prefix
metric nominal bearings

Duty class
[C/D/F]: general purpose
[N]: general purpose+pinion
[P]: high speed, machine tool
[S/T]: pinions
[W]: high thrust loading

Cone bore (in mm)

Component field (final two digits of PN)		
Series	00 (indicated by zeroes)	Ex: 87000 or 36600
Cups	10 through 19 (thinnest cup section is #10)	
Cones	30 through 49 (thinnest cone section is #49)	

(Overflow numbers : 20 through 29 as needed; 50 through 99 as needed)

Suffix code fields (one to three letters max.)	
B:	Flanged cup
HR(A):	Hydra-Rib™ design (modified cup from standard)
P(H):	Customized for performance (non-interchangeable component)
E:	(Exclusive) non-interchangeable component

All components and variations in a given series are interchangeable.

ABMA NUMBERING SYSTEM (for inch and metric radial bearings)

(cone) - (cup)

Ex: JLM722948-JLM722912

see common component and suffix fields

"J" prefix
metric nominal bearings

Duty code field
EL: Extra light
LL: Lighter than light
L: Light
LM: Light-medium
M: Medium
HM: Heavy medium
H: Heavy
HH: Heavier than heavy
EH: Extra heavy
T: Thrust ONLY

Angularity code field

1	0 < 24°
2	24° < 25.5°
3	25.5° < 27°
4	27° < 28.5°
5	28.5° < 30.5°
6	30.5° < 32.5°
7	32.5° < 36°
8	36° < 45°
9	45°+ (excluding pure thrust)
0	(thrust only)

Series code field

(Cone bore) over/incl.

in.	mm	Code
<1	**<25.4**	00 to 19
1-2	**25.4-50.8**	20 to 99;000 to 029
2-3	**50.8-76.2**	030 to 129
3-4	**76.2-101.6**	130 to 189
4-5	**101.6-127.0**	190 to 239
5-6	**127.0-152.4**	240 to 289
6-7	**152.4-177.8**	290 to 339
7-8	**177.8-203.2**	340 to 389
8-9	**203.2-228.6**	390 to 429
9-10	**228.6-254.0**	430 to 469
10-11	**254.0-279.4**	470 to 509
11-12	**279.4-304.8**	510 to 549
12-13	**304.8-330.2**	550 to 570
13-14	**330.2-355.6**	580 to 609
14-15	**355.6-381.0**	610 to 639
15-16	**381.0-406.4**	640 to 659
16-17	**406.4-431.8**	660 to 679
17-18	**431.8-457.2**	680 to 694
18-19	**457.2-482.6**	695 to 709
19-20	**482.6-508.0**	710 to 724
20-21	**508.0-534.4**	725 to 739
21-22	**534.4-558.8**	740 to 754
22-23	**558.8-584.2**	755 to 769
23-24	**584.2-609.6**	770 to 784
24-25	**609.6-635.0**	785 to 799
25-30	**635.0-762.0**	800 to 829
30-35	**762.0-889.0**	830 to 859
35-40	**889.0-1016.0**	860 to 879
40-50	**1016.0-1270.0**	880 to 889
50-72.5	**1270.0-1841.0**	890 to 899
>72.5	**>1841.0**	900 to 999

B

ASSEMBLY CODES

- Five digit code:

  [Assy. No.]+[Timken code]+ [Bill of material code (first field is bearing precision class)]

  Ex: 90B01 [Timken (internal) numbering system]

- Code is created at entry of initial custom order.
- For matched bearing assemblies: [cone PN]-[5-digit code] Ex: JP13049-90B01.
- For interchangeable components: [cone PN]-[cup PN] Ex: 29585-29520.

INSPECTION CODES

- Five characters (as 3 fields).

  Component: [Precision class]+[Timken code]+[Performance code]

  Ex: C0030

SPECIAL PACKAGING

Timken® precision tapered roller bearings are shipped in boxes which employ a white colored box flap (vs. orange for standard bearings).

IDENTIFICATION TAGS

See the following page for a detailed description of the use and purpose of component or assembly attached identification tags.

BEARING PRECISION CLASS

- Indicated in inspection code.
- Each component is made to a precision class (tolerance and runout values are given in the Engineering Section).
- Tolerance structure differences within nominal inch and metric bearings.

PERFORMANCE CODES

- Printed on bearing box.
- Three digit alpha-numeric code; 900+ variations (contact your Timken representative).
- Specifies non-standard requirements of the given precision class.
- Assigned to individual components.

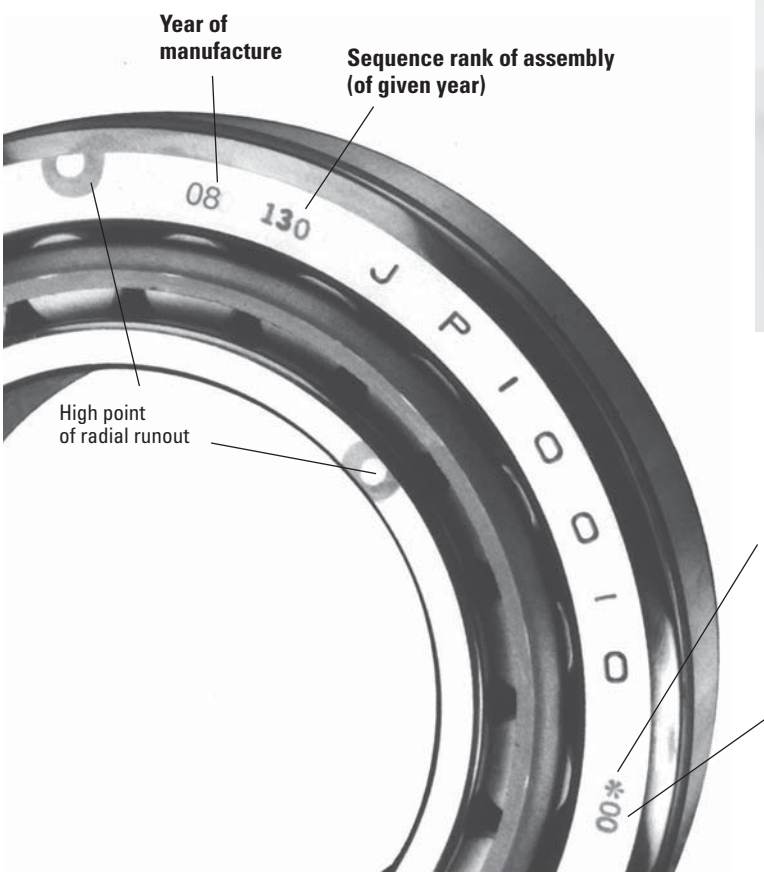

[For non-tagged products]
Nominal (Bore or O.D.) deviation indicator:

	mm	in.
Symbol	(Over/Incl.)	(Over/Incl.)
*	**0.000/-0.0025**	0.0000/+0.0001
**	**-0.0025/0.0050**	+0.0001/+0.0002

Fig. 98. Other markings.

B

TAG MARKINGS

Bearing tag markings are a device to indicate accuracy of bearings and facilitate selective assembly.

The information given on the tag varies by metric and inch systems, bearing class and type.

All components more precise than Class C or 3 cones and cups are supplied as matched assemblies and are shipped as complete bearings.

1. METRIC SYSTEM PRECISION BEARING TAG MARKINGS

Tags shown below are supplied with all Class A single row matched assemblies. Class B cups and cones are tagged if indicated on the performance code.

Tag markings on class A only

– 8 – 8 2 2 08 1 TIMKEN®

TS-TSF

FIRST NUMBER	SECOND NUMBER	THIRD NUMBER	FOURTH NUMBER	FIFTH NUMBER	SIXTH NUMBER
Indicates average deviation in cone bore from nominal dimension. *Use pages 237-238.*	Indicates average deviation in cup O.D. from nominal dimension. *Use pages 237-238.*	Indicates runout (total indicator reading) of cone assembly. *Use pages 237-238.*	Indicates runout (total indicator reading) of cup. *Use pages 237-238.*	Indicates year of manufacture: 07 … 2007 08 … 2008 etc. *Found only on matched assemblies.*	Indicates numerical number of bearing in yearly manufacture. *Found only on matched assemblies.*

2. INCH SYSTEM PRECISION BEARING TAG MARKINGS

Tags shown below are supplied with all Class 00 cups and cones. Class 0 cups and cones are tagged if indicated on the performance code.

Tag markings on class 00 only

+ 5 + 5 1 1 08 1 TIMKEN®

TS-TSF

FIRST NUMBER	SECOND NUMBER[1]	THIRD NUMBER	FOURTH NUMBER	FIFTH NUMBER	SIXTH NUMBER
Indicates average deviation in cone bore from nominal dimension. *Use pages 237-238.*	Indicates average deviation in cup O.D. from nominal dimension. *Use pages 237-238.*	Indicates runout (total indicator reading) of cone assembly. *Use pages 237-238.*	Indicates runout (total indicator reading) of cup. *Use pages 237-238.*	Indicates year of manufacture: 07 … 2007 08 … 2008 etc. *Found only on matched assemblies.*	Indicates numerical number of bearing in yearly manufacture. *Found only on matched assemblies.*

[1] Second number marked only on Class 3 product over 304.800 mm (12.0000 in.) cup O.D.

B

INTRODUCTION

Timken® tapered roller bearings have been used for many years in machine tool applications due to their widely recognized advantages in stiffness, load-carrying capacity, precision and reliability over other bearing designs.

The use of new ceramic and CBN cutting tools, together with increased spindle motor powers, has allowed much higher cutting speeds to be achieved in many applications. To maintain the same global accuracy level at these higher cutting speeds poses a challenge to develop optimum spindle designs. Timken has met this challenge by developing:

- Special internal bearing geometry.
- Innovative bearing designs.

Technical information is provided in the Engineering Section of this catalog to assist the designer in selecting the right bearing arrangement for a given application.

Because of their high capability to carry loads together with a relatively low level of applied loads in the machine tool industry, precision tapered roller bearings are seldom replaced for fatigue damage. The bearings are mainly replaced when a global loss of precision of the machine is observed leading to a complete refurbishment of the machine. At this stage, it is advisable to replace the bearings, even if they may appear to be in good condition; they may be worn to a point where the accuracy is no longer effective.

BEARING REPLACEMENT

Even if a machine is considered old after several years of service, it is not recommended to fit standard class bearings in place of the original precision ones. This practice would most likely result in uncontrolled movements of the spindle due to the higher runout of standard bearings. This can lead to poor accuracy of machined pieces and premature tool wear.

The best practice is to install a bearing of an equivalent precision class to the original equipment recommended by the builder.

Both inner and outer rings have to be replaced to achieve the same accuracy level as the original equipment.

INSPECTION

The replacement of the bearings on any precision equipment is not necessarily sufficient to restore the original accuracy. If the surrounding components (spindle, housing, nut, spacer) show considerable defects in size or form, the bearing will simply transmit the consecutive default to the workpiece. The total runout of the system is the combination of the runout of each component. A precision bearing will add no more runout than is specified by the bearing class, but it will not reduce any runout already present from the spindle and housing.

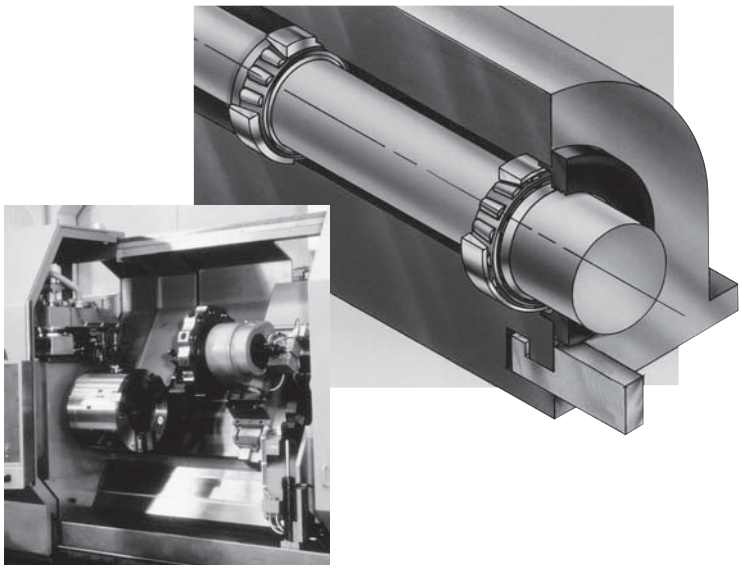

Careful inspection of the adjacent components followed by an appropriate refurbishment, if needed, must be made before remounting the bearings. Particular points to be checked are geometry (roundness, cylindricity, concentricity), surface conditions (nicks, burrs), sizes (bore, O.D. and width) and resultant fitting practice (see Engineering Section).

REMOUNTING

The guidelines described in the Engineering Section apply exactly in the same way for replacement purposes as for original equipment.

PRECISION BEARING TYPES

The most popular tapered roller bearing types made in precision classes are the single-row bearings, types TS and TSF, and the two-row bearing, type TDO.

These bearing types are supported by a range of special bearings that have been designed for machine tool applications, such as the variable preload Hydra-Rib™ bearing, the high-speed TSMA bearing and the compact TXR crossed roller bearing, which are available only in precision classes.

The size range of Timken precision bearings starts from less than 20.000 mm (0.7874 in.) bore and extends to over 2000.000 mm (78.7402 in.) outside diameter, depending upon bearing type.

The importance of this market segment is demonstrated by Timken's commitment to having a plant dedicated to producing precision-class tapered roller bearings. This simply means that the precision quality is built into the bearing during manufacturing and is not achieved by selecting from standard bearings. For increased reliability, Timken bearings are manufactured from high-quality alloy steels.

The application of precision tapered roller bearings is not just limited to machine tools. Wherever spindles turn and rotational accuracy is essential to the machine's performance, precision tapered roller bearings are encountered. Other typical applications are printing presses, optical grinders, profile cutters, indexing tables, precision drives and measuring gauges.

SINGLE-ROW BEARINGS

TS – single row[1]

This is the basic and the most widely used type of tapered roller bearing. It consists of two main, separable parts: the inner ring (cone) assembly and the outer ring (cup). It is usually fitted as one of an opposing pair. During equipment assembly, single-row bearings can be "set" to the required clearance (endplay) or preload condition to optimize performance.

TSF – single-row, with flanged outer ring[1]

This variation on the basic single-row bearing, type TSF has a flanged outer ring to facilitate axial location and accurately aligned seats in a through-bored housing.

TWO-ROW BEARINGS

TDO – double outer race

This has a one-piece (double) outer race and two single inner races and is usually supplied complete with an inner ring spacer as a pre-set assembly. This configuration gives a wide effective bearing spread and is frequently chosen for applications where overturning moments are a significant load component. TDO bearings can be used in fixed (locating) positions or allowed to float in the housing bore, for example, to compensate for shaft expansion.

TXR – crossed roller bearing[1]

A crossed roller bearing is two sets of bearing races and rollers brought together at right angles – with alternate rollers facing opposite directions – within a section height not much greater than that of a single bearing. The steep angle, tapered geometry of the bearing causes the load-carrying center of each of the races to be projected along the axis, resulting in a total effective bearing spread many times greater than the width of the bearing itself. This type of bearing offers a high resistance to overturning moments.

The normal design of the bearing is type TXRDO, which has a double outer race and two inner races, with rollers spaced by polymer separators.

HIGH-SPEED BEARINGS

For many applications, notably in the machine tool industry, bearings are required to run at speeds in excess of those for which standard bearings are designed.

TSMA – single-row, with axial oil holes

The TSMA type is a single-row bearing with axial oil holes for lubrication of the critical roller-rib contact area to ensure adequate lubrication at high speeds. The concept works by capturing oil in a manifold (attached to the inner ring), which is then directed to the rib-roller contact area through holes drilled axially through the large rib.

TSHR – Hydra-Rib bearing with preload adjustment device[1]

The Hydra-Rib bearing has a "floating" outer ring rib controlled by hydraulic or pneumatic pressure, which ensures that the required preload is maintained irrespective of the differential expansions or changes in loading taking place within the system.

The list of part numbers in the TS and TSF design styles tables is not exhaustive. These represent most of the common selections for the precision machine tool industry. Many tapered roller bearings currently are manufactured to "standard" precision classes (Class 3 or 0/ C or B) but can be readily produced to higher precision levels. Bearing modifications such as conversion to a two row design, a high speed TSMA, or use of ceramic rolling elements to meet specific application demands can usually be accommodated. Please contact your Timken representative for more information.

[1] These bearing types are described in detail in the bearing data tables at the end of this publication.

B

TS STYLE
PRECISION LEVEL C[1]

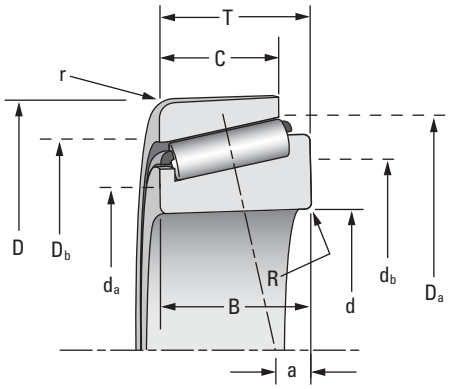

Dimensional Sizes – METRIC

- Features to enhance spindle operation:
  - Matched components.
  - Runout high points marked.
  - Bearing setting adjustment.
- Performance options:
  - High-speed version (TSMA).

d Bore	D O.D.	T Width	Load Ratings C_o Static	C_1 Dynamic[3]	C_{90} Dynamic[4]	C_{a90} Dynamic[4]	B Cone Width	C Cup Width	a Eff. Center[2]	Inner-Outer Part Number
mm in.	mm in.	mm in.	kN lbs.	kN lbs.	kN lbs.	kN lbs.	mm in.	mm in.	mm in.	
60.000	**100.000**	**21.000**	**101.0**	**80.9**	**21.0**	**17.0**	**20.000**	**15.500**	**1.3**	JP6049-JP6010
2.3622	3.9370	0.8268	22700	18200	4720	3820	0.7874	0.6102	0.05	
65.000	**105.000**	**24.000**	**139.0**	**100.0**	**26.0**	**20.2**	**23.000**	**18.500**	**-0.3**	JLM710949C-JLM710910
2.5591	4.1339	0.9449	31200	22500	5850	4540	0.9055	0.7283	-0.01	
70.000	**110.000**	**21.000**	**112.0**	**84.8**	**22.0**	**17.4**	**20.000**	**15.500**	**2.5**	JP7049-JP7010
2.7559	4.3307	0.8268	25200	19100	4950	3910	0.7874	0.6102	0.10	
80.000	**125.000**	**24.000**	**141.0**	**105.0**	**27.2**	**21.0**	**22.500**	**17.500**	**2.3**	JP8049-JP8010
3.1496	4.9213	0.9449	31700	23600	6120	4720	0.8858	0.6890	0.09	
85.000	**130.000**	**30.000**	**245.0**	**149.0**	**38.7**	**29.4**	**29.000**	**24.000**	**-0.3**	JM716649-JM716610
3.3465	5.1181	1.1811	55100	33500	8700	6610	1.1417	0.9449	-0.01	
90.000	**135.000**	**24.000**	**155.0**	**110.0**	**28.4**	**24.0**	**22.500**	**17.500**	**5.6**	JP9049-JP9010
3.5433	5.3150	0.9449	34800	24700	6390	5400	0.8858	0.6890	0.22	
95.000	**145.000**	**24.000**	**172.0**	**116.0**	**30.1**	**24.4**	**22.500**	**17.500**	**6.1**	JP10044-JP10010
3.7402	5.7087	0.9449	38700	26100	6770	5490	0.8858	0.6890	0.24	
95.000	**150.000**	**35.000**	**317.0**	**199.0**	**51.5**	**39.0**	**34.000**	**27.000**	**-1.5**	JM719149-JM719113
3.7402	5.9055	1.3780	71300	44700	11600	8770	1.3386	1.0630	-0.06	
100.000	**145.000**	**24.000**	**172.0**	**116.0**	**30.1**	**24.4**	**22.500**	**17.500**	**6.1**	JP10049-JP10010
3.9370	5.7087	0.9449	38700	26100	6770	5490	0.8858	0.6890	0.24	
110.000	**165.000**	**35.000**	**357.0**	**210.0**	**54.5**	**46.4**	**35.000**	**26.500**	**3.0**	JM822049-JM822010
4.3307	6.4961	1.3780	80300	47200	12300	10400	1.3780	1.0433	0.12	
115.000	**165.000**	**28.000**	**245.0**	**148.0**	**38.3**	**30.1**	**27.000**	**21.000**	**5.6**	JLM722948-JLM722912
4.5276	6.4961	1.1024	55100	33300	8610	6770	1.0630	0.8268	0.22	
120.000	**170.000**	**25.400**	**231.0**	**134.0**	**34.8**	**27.3**	**25.400**	**19.050**	**7.9**	JL724348-JL724314
4.7244	6.6929	1.0000	51900	30100	7820	6140	1.0000	0.7500	0.31	
125.000	**175.000**	**25.400**	**246.0**	**139.0**	**36.0**	**29.4**	**25.400**	**18.288**	**9.1**	JL725346-JL725316
4.9213	6.8898	1.0000	55300	31200	8090	6610	1.0000	0.7200	0.36	
130.000	**185.000**	**29.000**	**283.0**	**181.0**	**47.0**	**38.1**	**27.000**	**21.000**	**8.9**	JP13049-JP13010
5.1181	7.2835	1.1417	63600	40700	10600	8570	1.0630	0.8268	0.35	
140.000	**195.000**	**29.000**	**304.0**	**188.0**	**48.8**	**42.0**	**27.000**	**21.000**	**11.9**	JP14049-JP14010
5.5118	7.6772	1.1417	68300	42300	11000	9440	1.0630	0.8268	0.47	
150.000	**205.000**	**28.575**	**339.0**	**179.0**	**46.5**	**36.5**	**28.575**	**21.438**	**11.4**	JL730646-JL730612
5.9055	8.0709	1.1250	76200	40200	10500	8210	1.1250	0.8440	0.45	
160.000	**220.000**	**32.000**	**372.0**	**224.0**	**58.1**	**48.4**	**30.000**	**23.000**	**13.0**	JP16049-JP16010
6.2992	8.6614	1.2598	83600	50400	13100	10900	1.1811	0.9055	0.51	
170.000	**230.000**	**32.000**	**398.0**	**232.0**	**60.1**	**47.5**	**30.000**	**23.000**	**13.0**	JP17049-JP17010
6.6929	9.0551	1.2598	89500	52200	13500	10700	1.1811	0.9055	0.51	
180.000	**240.000**	**32.000**	**490.0**	**234.0**	**60.6**	**50.3**	**30.000**	**23.000**	**16.0**	JP18049-JP18010
7.0866	9.4488	1.2598	91900	52600	13600	11300	1.1811	0.9055	0.63	
180.000	**250.000**	**47.000**	**786.0**	**401.0**	**104.0**	**85.5**	**45.000**	**37.000**	**8.9**	JM736149-JM736110
7.0866	9.8425	1.8504	177000	90200	23400	19200	1.7717	1.4567	0.35	

(1) Tighter tolerances are possible on any of the part numbers shown for higher precision requirements.
(2) Negative value indicates effective center within the backface of the cone.
(3) The Timken Company calculation based on one million revolutions for L_{10} life.
(4) The Timken Company life calculations based on 90 million revolutions for L_{10} life. C_{90} is radial load component force; C_{a90} is axial component.
(5) For synthetic high-speed grease in appropriate fill quantities with service interval and appropriate setting. Other methods may further improve speed by as much as 60 percent or more.
(6) For explanation of spindle system characteristics, please refer to pages 31-34 of the Engineering Section.

B

Mounting Dimensions						Stiffness(6)					
R Max. Shaft Fillet Rad. at Cone Backface	d_a Shaft Backing Diameter	d_b Shaft Backing Diameter	r Max Housing Fillet Rad. at Cup Backface	D_a Housing Backing Diameter	D_b Housing Backing Diameter	$K_r(10^6)$	F_r	$K_a(10^6)$	F_a	Speed Rating(5)	Wt.
mm in.	**mm** in.	**mm** in.	**mm** in.	**mm** in.	**mm** in.	**N/mm** lbs./in.	**kN** lbs.	**N/mm** lbs./in.	**kN** lbs.	RPM	**kg** lbs.
2.0	**66.0**	**69.1**	**2.0**	**95.5**	**91.0**	**1.22**	**2.1**	**0.231**	**1.7**	**5100**	**0.59**
0.08	2.60	2.72	0.08	3.76	3.58	6.97	472	1.32	382	5100	1.31
3.0	**71.0**	**78.0**	**1.0**	**101.0**	**96.0**	**1.70**	**2.6**	**0.297**	**2.0**	**4800**	**0.75**
0.12	2.80	3.07	0.04	3.98	3.78	9.71	585	1.70	450	4800	1.65
2.0	**76.0**	**80.0**	**2.0**	**105.0**	**101.0**	**1.33**	**2.2**	**0.239**	**1.7**	**4500**	**0.68**
0.08	2.99	3.15	0.08	4.13	3.98	7.59	495	1.36	382	4500	1.50
2.0	**86.0**	**88.9**	**2.0**	**120.0**	**115.0**	**1.53**	**2.7**	**0.264**	**2.1**	**3900**	**0.95**
0.08	3.39	3.50	0.08	4.72	4.53	8.74	607	1.51	472	3900	2.10
3.0	**92.0**	**98.0**	**2.5**	**125.0**	**117.0**	**2.82**	**3.8**	**0.472**	**2.9**	**3700**	**1.36**
0.12	3.62	3.86	0.10	4.92	4.61	16.10	854	2.70	652	3700	3.00
2.0	**97.0**	**100.1**	**2.0**	**130.0**	**125.0**	**1.64**	**2.8**	**0.338**	**2.4**	**3600**	**1.09**
0.08	3.82	3.94	0.08	5.12	4.92	9.36	629	1.93	540	3600	2.41
3.0	**102.0**	**108.0**	**3.0**	**140.0**	**134.0**	**1.80**	**3.0**	**0.341**	**2.4**	**3300**	**1.27**
0.12	4.02	4.25	0.12	5.51	5.28	10.30	674	1.95	540	3300	2.79
3.0	**104.0**	**109.0**	**2.5**	**143.0**	**135.0**	**3.11**	**5.1**	**0.513**	**3.9**	**3300**	**2.17**
0.12	4.09	4.29	0.10	5.63	5.31	17.80	1150	2.93	877	3300	4.78
3.0	**106.0**	**112.0**	**3.0**	**140.0**	**134.0**	**1.80**	**3.0**	**0.341**	**2.4**	**3300**	**1.13**
0.12	4.17	4.41	0.12	5.51	5.28	10.30	674	1.95	540	3300	2.49
3.0	**119.0**	**125.0**	**2.5**	**159.0**	**149.0**	**3.39**	**5.4**	**0.710**	**4.6**	**2900**	**2.45**
0.12	4.69	4.92	0.10	6.26	5.87	19.40	1210	4.05	1030	2900	5.39
3.3	**121.0**	**127.0**	**3.0**	**158.0**	**151.0**	**2.53**	**3.8**	**0.450**	**3.0**	**2900**	**1.75**
0.13	4.76	5.00	0.12	6.22	5.94	14.40	854	2.57	674	2900	3.86
3.3	**127.0**	**132.1**	**3.3**	**163.0**	**156.0**	**2.47**	**3.5**	**0.440**	**2.7**	**2800**	**1.62**
0.13	5.00	5.20	0.13	6.42	6.14	14.10	787	2.51	607	2800	3.56
3.3	**133.0**	**137.9**	**3.3**	**168.0**	**161.0**	**2.60**	**3.6**	**0.499**	**2.9**	**2700**	**1.69**
0.13	5.24	5.43	0.13	6.61	6.34	14.90	809	2.85	652	2700	3.72
3.0	**137.0**	**143.0**	**3.0**	**179.0**	**172.0**	**2.45**	**4.7**	**0.464**	**3.8**	**2600**	**2.16**
0.12	5.39	5.63	0.12	7.05	6.77	14.00	1060	2.65	854	2600	4.76
3.0	**148.0**	**152.9**	**3.0**	**189.0**	**182.0**	**2.60**	**4.9**	**0.556**	**4.2**	**2400**	**2.29**
0.12	5.83	6.02	0.12	7.44	7.17	14.90	1100	3.17	944	2400	5.06
3.3	**158.0**	**164.1**	**3.3**	**198.0**	**190.0**	**3.30**	**4.6**	**0.588**	**3.6**	**2200**	**2.61**
0.13	6.22	6.46	0.13	7.8	7.48	18.80	1030	3.36	809	2200	5.76
3.0	**169.0**	**174.0**	**3.0**	**213.1**	**206.0**	**2.94**	**5.8**	**0.589**	**4.8**	**2100**	**3.11**
0.12	6.65	6.85	0.12	8.39	8.11	16.80	1300	3.36	1080	2100	6.86
3.0	**179.0**	**183.9**	**3.0**	**223.0**	**217.0**	**3.15**	**6.0**	**0.568**	**4.7**	**2000**	**3.43**
0.12	7.05	7.24	0.12	8.78	8.54	18.00	1350	3.24	1060	2000	7.56
3.0	**189.0**	**194.1**	**3.0**	**233.0**	**227.0**	**3.21**	**6.0**	**0.638**	**5.0**	**1900**	**3.59**
0.12	7.44	7.64	0.12	9.17	8.94	18.30	1350	3.64	1120	1900	7.91
3.0	**190.0**	**196.1**	**2.5**	**243.0**	**232.0**	**5.90**	**10.4**	**1.150**	**8.5**	**1800**	**6.67**
0.12	7.48	7.72	0.10	9.57	9.13	33.70	2340	6.57	1910	1800	14.70

B

TS STYLE
PRECISION LEVEL 3[1]

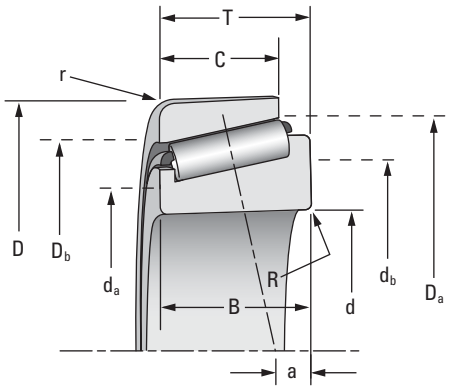

Dimensional Sizes – INCH

- Features to enhance spindle operation:
  - Matched components.
  - Runout high points marked.
  - Bearing setting adjustment.
- Performance options:
  - High-speed version (TSMA).

d Bore	D O.D.	T Width	Load Ratings C_o Static	C_1 Dynamic[3]	C_{90} Dynamic[4]	C_{a90} Dynamic[4]	B Cone Width	C Cup Width	a Eff. Center[2]	Inner-Outer Part Number
mm in.	**mm** in.	**mm** in.	**kN** lbs.	**kN** lbs.	**kN** lbs.	**kN** lbs.	**mm** in.	**mm** in.	**mm** in.	
63.500	**107.950**	**25.400**	**158.0**	**102.0**	**26.5**	**20.8**	**25.400**	**19.050**	**-0.8**	29585-29520
2.5000	4.2500	1.0000	35500	22900	5950	4670	1.0000	0.7500	-0.03	
68.263	**110.000**	**21.999**	**126.0**	**91.6**	**23.8**	**16.3**	**21.996**	**18.821**	**-0.8**	399A-394A
2.6875	4.3307	0.8661	28300	20600	5340	3670	0.8660	0.7410	-0.03	
73.025	**112.713**	**25.400**	**166.0**	**102.0**	**26.5**	**22.2**	**25.400**	**19.050**	**1.0**	29685-29620
2.8750	4.4375	1.0000	37300	23000	5960	4980	1.0000	0.7500	0.04	
76.200	**121.442**	**24.608**	**137.0**	**94.7**	**24.5**	**18.9**	**23.012**	**17.625**	**1.5**	34301-34478
3.0000	4.7812	0.9688	30800	21300	5510	4260	0.9060	0.6875	0.06	
85.725	**136.525**	**30.163**	**216.0**	**143.0**	**37.1**	**28.2**	**29.769**	**22.225**	**-0.8**	497-493
3.3750	5.3750	1.1875	48500	32100	8330	6340	1.1720	0.8750	-0.03	
91.973	**142.875**	**30.000**	**240.0**	**152.0**	**39.3**	**32.2**	**30.000**	**21.996**	**1.8**	LM718947-LM718910
3.6210	5.6250	1.1811	54000	34100	8830	7230	1.1811	0.8660	0.07	
101.600	**157.163**	**36.513**	**343.0**	**207.0**	**53.8**	**43.6**	**36.116**	**26.187**	**-0.5**	52400-52618
4.0000	6.1875	1.4375	77100	46500	12100	9800	1.4219	1.0310	-0.02	
117.475	**180.975**	**34.925**	**271.0**	**181.0**	**47.2**	**39.9**	**31.750**	**25.400**	**5.3**	68462-68712
4.6250	7.1250	1.3750	60900	40700	10600	8980	1.2500	1.0000	0.21	
146.050	**193.675**	**28.575**	**407.0**	**182.0**	**47.2**	**29.8**	**28.575**	**23.012**	**4.8**	36690-36620
5.7500	7.6250	1.1250	91500	40900	10600	6690	1.1250	0.9060	0.19	
177.800	**227.013**	**30.163**	**470.0**	**194.0**	**50.3**	**37.9**	**30.163**	**23.012**	**12.7**	36990-36920
7.0000	8.9375	1.1875	105600	43500	11300	8510	1.1875	0.9060	0.50	
190.500	**282.575**	**50.800**	**690.0**	**398.0**	**103.0**	**73.4**	**47.625**	**36.500**	**3.8**	87750-87111
7.5000	11.1250	2.0000	155100	89400	23200	16500	1.8750	1.4370	0.15	
206.375	**282.575**	**46.038**	**881.0**	**393.0**	**102.0**	**88.5**	**46.038**	**36.500**	**16.0**	67985-67920
8.1250	11.1250	1.8125	198000	88300	22900	19900	1.8125	1.4370	0.63	
215.900	**290.010**	**31.750**	**457.0**	**222.0**	**57.4**	**37.9**	**31.750**	**22.225**	**13.0**	543085-543114
8.5000	11.4177	1.2500	102700	49800	12900	8510	1.2500	0.8750	0.51	

(1) Tighter tolerances are possible on any of the part numbers shown for higher precision requirements.
(2) Negative value indicates effective center within the backface of the cone.
(3) The Timken Company calculation based on one million revolutions for L_{10} life.
(4) The Timken Company life calculations based on 90 million revolutions for L_{10} life. C_{90} is radial load component force; C_{a90} is axial component.
(5) For synthetic high-speed grease in appropriate fill quantities with service interval and appropriate setting. Other methods may further improve speed by as much as 60 percent or more.
(6) For explanation of spindle system characteristics, please refer to pages 31-34 of the Engineering Section.

B

Mounting Dimensions						Stiffness(6)					
R Max. Shaft Fillet Rad. at Cone Backface	d_a Shaft Backing Diameter	d_b	r Max Housing Fillet Rad. at Cup Backface	D_a Housing Backing Diameter	D_b	$K_r(10^6)$	F_r	$K_a(10^6)$	F_a	Speed Rating(5)	Wt.
mm in.	**mm** in.	**mm** in.	**mm** in.	**mm** in.	**mm** in.	**N/mm** lbs./in.	**kN** lbs.	**N/mm** lbs./in.	**kN** lbs.	RPM	**kg** lbs.
3.6	**71.1**	**77.0**	**3.3**	**103.1**	**96.0**	**2.15**	**2.65**	**0.385**	**2.07**	**4500**	**0.91**
0.14	2.80	3.03	0.13	4.06	3.78	12.30	595	2.20	466	4500	2.01
2.3	**73.9**	**78.0**	**1.3**	**103.9**	**101.1**	**1.53**	**2.38**	**0.208**	**1.63**	**4600**	**0.75**
0.09	2.91	3.07	0.05	4.09	3.98	8.73	534	1.19	367	4600	1.65
3.6	**80.0**	**86.1**	**3.3**	**109.0**	**101.1**	**2.19**	**2.65**	**0.440**	**2.21**	**4200**	**0.88**
0.14	3.15	3.39	0.13	4.29	3.98	12.50	596	2.51	497	4200	1.95
3.6	**83.1**	**88.9**	**2.0**	**116.1**	**110.0**	**1.62**	**2.45**	**0.278**	**1.89**	**4100**	**0.95**
0.14	3.27	3.50	0.08	4.57	4.33	9.25	551	1.59	425	4100	2.09
3.6	**93.0**	**99.1**	**3.3**	**130.0**	**121.9**	**2.31**	**3.71**	**0.387**	**2.82**	**3700**	**1.52**
0.14	3.66	3.90	0.13	5.12	4.80	13.20	834	2.21	633	3700	3.34
3.6	**100.1**	**105.9**	**3.3**	**137.9**	**129.0**	**2.52**	**3.93**	**0.489**	**3.21**	**3400**	**1.63**
0.14	3.94	4.17	0.13	5.43	5.08	14.40	883	2.79	722	3400	3.60
3.6	**111.0**	**117.1**	**3.3**	**151.9**	**142.0**	**3.31**	**5.36**	**0.630**	**4.35**	**3100**	**2.39**
0.14	4.37	4.61	0.13	5.98	5.59	18.90	1206	3.60	979	3100	5.28
3.6	**125.0**	**132.1**	**3.3**	**172.0**	**163.1**	**2.31**	**4.69**	**0.485**	**3.99**	**2800**	**2.75**
0.14	4.92	5.20	0.13	6.77	6.42	13.20	1055	2.77	897	2800	6.06
1.5	**152.9**	**154.9**	**1.5**	**188.0**	**182.1**	**4.55**	**4.72**	**0.524**	**2.97**	**2300**	**2.25**
0.06	6.02	6.10	0.06	7.40	7.17	26.00	1060	2.99	667	2300	4.96
1.5	**185.9**	**188.0**	**1.5**	**221.0**	**214.1**	**5.13**	**5.02**	**0.842**	**3.78**	**1900**	**2.88**
0.06	7.32	7.40	0.06	8.70	8.43	29.30	1128	4.81	850	1900	6.35
3.6	**202.9**	**209.0**	**3.3**	**267.0**	**261.1**	**4.52**	**10.31**	**0.660**	**7.32**	**1700**	**9.48**
0.14	7.99	8.23	0.13	10.51	10.28	25.80	2318	3.77	1646	1700	20.91
3.6	**218.9**	**224.0**	**3.3**	**275.1**	**260.1**	**6.92**	**10.18**	**1.520**	**8.86**	**1600**	**8.29**
0.14	8.62	8.82	0.13	10.83	10.24	39.50	2288	8.68	1992	1600	18.28
3.6	**226.1**	**231.9**	**3.3**	**276.1**	**272.0**	**3.92**	**5.74**	**0.494**	**3.78**	**1600**	**5.41**
0.14	8.90	9.13	0.13	10.87	10.71	22.40	1291	2.82	850	1600	11.92

B

TSF STYLE
PRECISION LEVEL C(1)

Dimensional Sizes – METRIC

- Flanged outer ring facilitates axial location.
- Features to enhance spindle operation:
  - Matched components.
  - Runout high point markings.
  - Bearing setting adjustment.

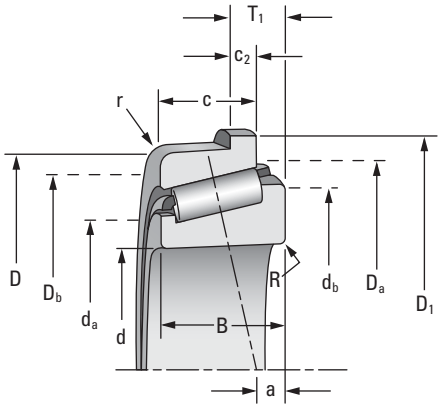

d Bore	D O.D.	T_1 Offset	Load Ratings C_o Static	C_1 Dynamic(3)	C_{90} Dynamic(4)	C_{a90} Dynamic(4)	D_1 Flange Dia.	C_2 Flange Width	B Cone Width	C Cup Width	a Eff. Center(2)	Inner-Outer Part Number
mm in.	**mm** in.	**mm** in.	**kN** lbs.	**kN** lbs.	**kN** lbs.	**kN** lbs.	**mm** in.	**mm** in.	**mm** in.	**mm** in.	**mm** in.	
60.000	**100.000**	**8.500**	**101.0**	**80.9**	**21.0**	**17.0**	**105.0**	**3.0**	**20.000**	**15.500**	**1.3**	JP6049-JP6010-B
2.3622	3.9370	0.3346	22700	18200	4720	3820	4.13	0.12	0.7874	0.6102	0.05	
70.000	**110.000**	**8.500**	**112.0**	**84.8**	**22.0**	**17.4**	**116.0**	**3.0**	**20.000**	**15.500**	**2.5**	JP7049-JP7010-B
2.7559	4.3307	0.3346	25200	19100	4950	3910	4.57	0.12	0.7874	0.6102	0.10	
80.000	**125.000**	**10.500**	**141.0**	**105.0**	**27.2**	**21.0**	**132.0**	**4.0**	**22.500**	**17.500**	**2.3**	JP8049-JP8010-B
3.1496	4.9213	0.4134	31700	23600	6120	4720	5.20	0.16	0.8858	0.6890	0.09	
90.000	**135.000**	**10.500**	**155.0**	**110.0**	**28.4**	**24.0**	**142.0**	**4.0**	**22.500**	**17.500**	**5.6**	JP9049-JP9010-B
3.5433	5.3150	0.4134	34800	24700	6390	5400	5.60	0.16	0.8858	0.6890	0.22	
95.000	**145.000**	**10.500**	**172.0**	**116.0**	**30.1**	**24.4**	**152.0**	**4.0**	**22.500**	**17.500**	**6.1**	JP10044-JP10010-B
3.7402	5.7087	0.4134	38700	26100	6770	5490	5.98	0.16	0.8858	0.6890	0.24	
100.000	**145.000**	**10.500**	**172.0**	**116.0**	**30.1**	**24.4**	**152.0**	**4.0**	**22.500**	**17.500**	**6.1**	JP10049-JP10010-B
3.9370	5.7087	0.4134	38700	26100	6770	5490	5.98	0.16	0.8858	0.6890	0.24	
130.000	**185.000**	**13.000**	**283.0**	**181.0**	**47.0**	**38.1**	**192.0**	**5.0**	**27.000**	**21.000**	**8.9**	JP13049-JP13010-B
5.1181	7.2835	0.5118	63600	40700	10600	8570	7.56	0.20	1.0630	0.8268	0.35	
140.000	**195.000**	**13.000**	**304.0**	**188.0**	**48.8**	**42.0**	**202.0**	**5.0**	**27.000**	**21.000**	**11.9**	JP14049-JP14010-B
5.5118	7.6772	0.5118	68300	42300	11000	9440	7.95	0.20	1.0630	0.8268	0.47	
150.000	**205.000**	**12.000**	**339.0**	**179.0**	**46.5**	**36.5**	**210.0**	**4.86**	**28.575**	**21.438**	**11.4**	JL730646-JL730612-B
5.9055	8.0709	0.4724	76200	40200	10500	8210	8.27	0.19	1.1250	0.8440	0.45	

(1) Tighter tolerances are possible on any of the part numbers shown for higher precision requirements.
(2) Negative value indicates effective center within the backface of the cone.
(3) The Timken Company calculation based on one million revolutions for L_{10} life.
(4) The Timken Company life calculations based on 90 million revolutions for L_{10} life. C_{90} is radial load component force; C_{a90} is axial component.
(5) For synthetic high-speed grease in appropriate fill quantities with service interval and appropriate setting. Other methods may further improve speed by as much as 60 percent or more.
(6) For explanation of spindle system characteristics, please refer to pages 31-34 of the Engineering Section.

B

Mounting Dimensions						Stiffness [6]					
R Max Shaft Fillet Rad. at Cone Backface	d_a Shaft Backing Diameter	d_b	r Max Housing Fillet Rad. at Cup Backface	D_a Housing Backing Diameter	D_b	$K_r(10^6)$	F_r	$K_a(10^6)$	F_a	Speed Rating[5]	Wt.
mm in.	**mm** in.	**mm** in.	**mm** in.	**mm** in.	**mm** in.	**N/mm** lbs./in.	**kN** lbs.	**N/mm** lbs./in.	**kN** lbs.	RPM	**kg** lbs.
2.0	**66.0**	**69.0**	**2.0**	**98.0**	**91.0**	**1.22**	**2.1**	**0.231**	**1.7**	**5100**	**0.61**
0.08	2.60	2.72	0.08	3.86	3.58	6.97	472	1.32	382	5100	1.34
2.0	**76.0**	**80.0**	**2.0**	**105.5**	**101.0**	**1.33**	**2.2**	**0.239**	**1.7**	**4500**	**0.69**
0.08	2.99	3.15	0.08	4.15	3.98	7.59	495	1.36	382	4500	1.52
2.0	**86.0**	**89.0**	**2.0**	**129.0**	**115.0**	**1.53**	**2.7**	**0.264**	**2.1**	**3900**	**0.95**
0.08	3.39	3.50	0.08	5.08	4.53	8.74	607	1.51	472	3900	2.09
2.0	**97.0**	**100.0**	**2.0**	**133.0**	**125.0**	**1.64**	**2.8**	**0.338**	**2.4**	**3600**	**1.09**
0.08	3.82	3.94	0.08	5.24	4.92	9.36	629	1.93	540	3600	2.40
3.0	**102.0**	**108.0**	**3.0**	**142.0**	**134.0**	**1.80**	**3.0**	**0.341**	**2.4**	**3300**	**1.32**
0.12	4.02	4.25	0.12	5.59	5.28	10.28	674	1.95	540	3300	2.91
3.0	**106.0**	**112.0**	**3.0**	**142.0**	**134.0**	**1.80**	**3.0**	**0.341**	**2.4**	**3300**	**1.13**
0.12	4.17	4.41	0.12	5.59	5.28	10.28	674	1.95	540	3300	2.49
3.0	**137.0**	**143.0**	**3.0**	**188.0**	**172.0**	**2.45**	**4.7**	**0.464**	**3.8**	**2600**	**2.20**
0.12	5.39	5.63	0.12	7.40	6.77	13.99	1057	2.65	854	2600	4.85
3.0	**148.0**	**153.0**	**3.0**	**198.0**	**182.0**	**2.60**	**4.9**	**0.556**	**4.2**	**2400**	**2.31**
0.12	5.83	6.02	0.12	7.80	7.17	14.85	1102	3.17	944	2400	5.09
3.3	**158.0**	**164.0**	**3.3**	**200.0**	**190.0**	**3.30**	**4.6**	**0.588**	**3.6**	**2200**	**2.69**
0.13	6.22	6.46	0.13	7.87	7.48	18.84	1034	3.36	809	2200	5.93

B

TSF STYLE
PRECISION LEVEL 3[1]

Dimensional Sizes – INCH

- Flanged outer ring facilitates axial location.
- Features to enhance spindle operation:
  - Matched components.
  - Runout high point markings.
  - Bearing setting adjustment.

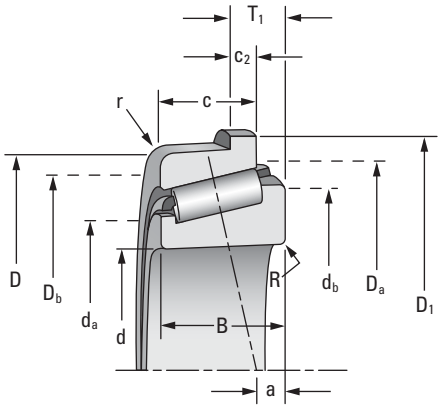

d Bore	D O.D.	T_1 Offset	Load Ratings C_o Static	C_1 Dynamic[3]	C_{90} Dynamic[4]	C_{a90} Dynamic[4]	D_1 Flange Dia.	C_2 Flange Width	B Cone Width	C Cup Width	a Eff. Center[2]	Inner-Outer Part Number
mm in.	**mm** in.	**mm** in.	**kN** lbs.	**kN** lbs.	**kN** lbs.	**kN** lbs.	**mm** in.	**mm** in.	**mm** in.	**mm** in.	**mm** in.	
46.038	**85.000**	**9.525**	**117.0**	**86.4**	**22.4**	**13.3**	**89.8**	**4.8**	**25.608**	**20.638**	**-6.4**	2984 - 2924-B
1.8125	3.3465	0.3750	26200	19400	5040	2980	3.53	0.19	1.0082	0.8125	-0.25	
66.675	**112.712**	**11.112**	**191.0**	**129.0**	**33.3**	**22.9**	**117.4**	**4.8**	**30.048**	**23.812**	**-4.6**	3984 - 3920-B
2.6250	4.4375	0.4375	43000	28900	7490	5160	4.62	0.19	1.1830	0.9375	-0.18	
69.850	**120.000**	**11.095**	**186.0**	**133.0**	**34.4**	**22.7**	**125.4**	**5.5**	**29.007**	**24.237**	**-4.1**	482 - 472-B
2.7500	4.7244	0.4368	41900	29900	7740	5100	4.94	0.22	1.1420	0.9542	-0.16	
69.850	**127.000**	**14.288**	**262.0**	**182.0**	**47.1**	**29.4**	**133.2**	**6.4**	**36.170**	**28.575**	**-8.1**	566 - 563-B
2.7500	5.0000	0.5625	58900	40900	10600	6600	5.25	0.25	1.4240	1.1250	-0.32	
73.025	**117.475**	**11.112**	**197.0**	**128.0**	**33.2**	**24.8**	**122.1**	**4.8**	**30.162**	**23.812**	**-2.8**	33287 - 33462-B
2.8750	4.6250	0.4375	44300	28800	7470	5570	4.81	0.19	1.1875	0.9375	-0.11	
83.345	**125.412**	**10.317**	**178.0**	**109.0**	**28.1**	**20.0**	**130.1**	**4.8**	**25.400**	**19.845**	**0.5**	27690 - 27620-B
3.2813	4.9375	0.4062	39900	24400	6320	4500	5.12	0.19	1.0000	0.7813	0.02	
88.900	**149.225**	**12.700**	**241.0**	**151.0**	**39.1**	**33.0**	**154.7**	**5.6**	**28.971**	**24.608**	**3.0**	42350 - 42587-B
3.5000	5.8750	0.5000	54300	33900	8790	7410	6.09	0.22	1.1406	0.9688	0.12	
95.250	**168.275**	**18.255**	**386.0**	**245.0**	**63.5**	**51.2**	**175.3**	**7.1**	**41.275**	**30.162**	**-2.8**	683 - 672-B
3.7500	6.6250	0.7187	86700	55100	14300	11500	6.90	0.28	1.6250	1.1875	-0.11	
101.600	**168.275**	**18.255**	**386.0**	**245.0**	**63.5**	**51.2**	**175.3**	**7.1**	**41.275**	**30.162**	**-2.8**	687 - 672-B
4.0000	6.6250	0.7187	86700	55100	14300	11500	6.90	0.28	1.6250	1.1875	-0.11	
114.300	**190.500**	**20.638**	**543.0**	**337.0**	**87.3**	**62.2**	**198.3**	**7.9**	**49.212**	**34.925**	**-6.6**	71450 - 71750-B
4.5000	7.5000	0.8125	122000	75700	19600	14000	7.81	0.31	1.9375	1.3750	-0.26	

(1) Tighter tolerances are possible on any of the part numbers shown for higher precision requirements.
(2) Negative value indicates effective center within the backface of the cone.
(3) The Timken Company calculation based on one million revolutions for L_{10} life.
(4) The Timken Company life calculations based on 90 million revolutions for L_{10} life. C_{90} is radial load component force; C_{a90} is axial component.
(5) For synthetic high-speed grease in appropriate fill quantities with service interval and appropriate setting. Other methods may further improve speed by as much as 60 percent or more.
(6) For explanation of spindle system characteristics, please refer to pages 31-34 of the Engineering Section.

B

Mounting Dimensions						Stiffness [6]					
R Max. Shaft Fillet Rad. at Cone Backface	d_a Shaft Backing Diameter	d_b Shaft Backing Diameter	r Max Housing Fillet Rad. at Cup Backface	D_a Housing Backing Diameter	D_b Housing Backing Diameter	$K_r(10^6)$	F_r	$K_a(10^6)$	F_a	Speed Rating[5]	Wt.
mm in.	**mm** in.	**mm** in.	**mm** in.	**mm** in.	**mm** in.	**N/mm** lbs./in.	**kN** lbs.	**N/mm** lbs./in.	**kN** lbs.	RPM	**kg** lbs.
3.5	**52.0**	**58.0**	**1.3**	**82.0**	**76.0**	**1.68**	**2.2**	**0.170**	**1.3**	**6200**	**0.65**
0.14	2.05	2.28	0.05	3.23	2.99	9.60	504	0.97	298	6200	1.43
3.5	**74.0**	**80.0**	**3.3**	**108.0**	**99.0**	**2.33**	**3.3**	**0.318**	**2.3**	**4600**	**1.18**
0.14	2.91	3.15	0.13	4.25	3.90	13.30	749	1.82	516	4600	2.61
3.5	**77.0**	**83.0**	**0.8**	**115.0**	**108.0**	**2.08**	**3.4**	**0.261**	**2.3**	**4300**	**1.36**
0.14	3.03	3.27	0.03	4.53	4.25	11.90	774	1.49	510	4300	2.99
3.5	**78.0**	**85.0**	**3.3**	**121.0**	**112.0**	**2.71**	**4.7**	**0.303**	**2.9**	**4100**	**1.97**
0.14	3.07	3.35	0.13	4.76	4.41	15.50	1060	1.73	660	4100	4.34
3.5	**80.0**	**87.0**	**3.3**	**114.0**	**104.0**	**2.38**	**3.3**	**0.383**	**2.5**	**4300**	**1.25**
0.14	3.15	3.43	0.13	4.49	4.09	13.60	747	2.19	557	4300	2.75
3.5	**90.0**	**96.0**	**1.5**	**123.0**	**115.0**	**2.27**	**2.8**	**0.332**	**2.0**	**3800**	**1.08**
0.14	3.54	3.78	0.06	4.84	4.53	12.90	632	1.90	450	3800	2.37
3.0	**98.0**	**104.0**	**3.3**	**152.0**	**134.0**	**2.52**	**3.9**	**0.518**	**3.3**	**3300**	**2.13**
0.12	3.86	4.09	0.13	5.98	5.28	14.40	879	2.96	741	3300	4.70
3.5	**106.0**	**113.0**	**3.3**	**160.0**	**149.0**	**3.39**	**6.4**	**0.635**	**5.1**	**3000**	**3.79**
0.14	4.17	4.45	0.13	6.30	5.87	19.30	1430	3.62	1150	3000	8.36
3.5	**112.0**	**118.0**	**3.3**	**160.0**	**149.0**	**3.39**	**6.4**	**0.635**	**5.1**	**3000**	**3.47**
0.14	4.41	4.65	0.13	6.30	5.87	19.30	1430	3.62	1150	3000	7.66
3.5	**125.0**	**132.0**	**3.3**	**181.0**	**171.0**	**4.28**	**8.7**	**0.627**	**6.2**	**2700**	**5.31**
0.14	4.92	5.20	0.13	7.13	6.73	24.50	1960	3.58	1400	2700	11.70

TXR STYLE

METRIC PRECISION LEVEL S,P
INCH PRECISION LEVEL 3,0

B

Timken® Crossed Roller Bearing

- Compact design offers lowest possible center of gravity in precision rotational applications.
- Stability of bearing greatly enhanced by effective spread and high stiffness of double roller set.
- Ideal choice for table bearing for vertical machining operations.
- Provides low starting torque.
- Simplified construction facilitates installation and adjustments.
- Additional sizes and tolerances available upon special request.

Precision Level S

Config.	D O.D.	d Bore	T Width	R Radius	Load Ratings(4) Radial(1)	Load Ratings(4) Axial	K(2)	Preload(5,3)	Part Number(6)
	mm in.	**mm** in.	**mm** in.	**mm** in.	**kN** lbs.	**kN** lbs.		**mm** in.	
2	**400.000**	**300.000**	**37.000**	**1.5**	**63.0**	**80.1**	0.45	**0.025 to 0.040**	JXR637050
	15.7480	11.8110	1.4567	0.06	14200	18000		0.001 to 0.0015	
2	**425.000**	**310.000**	**45.000**	**2.5**	**82.2**	**102.0**	0.46	**0.025 to 0.040**	JXR652050
	16.7323	12.2047	1.7717	0.10	18500	22900		0.001 to 0.0015	
2	**495.000**	**370.000**	**50.000**	**3.0**	**93.6**	**119.0**	0.45	**0.040 to 0.050**	JXR699050
	19.4882	14.5669	1.9685	0.12	21000	26800		0.0015 to 0.002	

Precision Level P

2	**400.000**	**300.000**	**37.000**	**1.5**	**63.0**	**80.1**	0.45	**0.025 to 0.040**	JXR637050
	15.7480	11.8110	1.4567	0.06	14200	18000		0.001 to 0.0015	
2	**425.000**	**310.000**	**45.000**	**2.5**	**82.2**	**102.0**	0.46	**0.025 to 0.040**	JXR652050
	16.7323	12.2047	1.7717	0.10	18500	22900		0.001 to 0.0015	
2	**495.000**	**370.000**	**50.000**	**3.0**	**93.6**	**119.0**	0.45	**0.040 to 0.050**	JXR699050
	19.4882	14.5669	1.9685	0.12	21000	26800		0.0015 to 0.002	

(1) Two-row radial load rating shown.
(2) K-factor is a ratio of radial load rating to axial load rating – see Engineering Section for usage.
(3) Preload set by adjustments to top inner ring clamping spacer plate.
(4) Load calculations based on 500 RPM for 3000 hours.
(5) Values listed apply to lower speed applications. Other preload values are available on request. Contact your Timken representative.
(6) Not all types and sizes are listed in this catalog. Contact your Timken representative for further information.
NOTE: Application of these preload values assumes suggested fitting practice in Engineering Section is used.

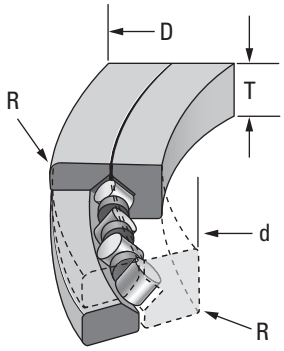

Config. 1

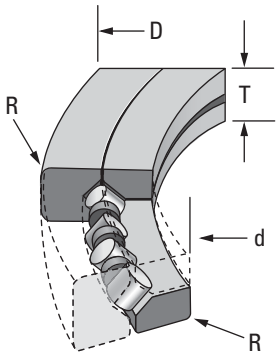

Config. 2

Precision Level 3

Config.	D O.D.	d Bore	T Width	R Radius	Load Ratings[4] Radial[1]	Load Ratings[4] Axial	K[2]	Preload[5,3]	Part Number[6]
	mm in.	**mm** in.	**mm** in.	**mm** in.	**kN** lbs.	**kN** lbs.		**mm** in.	
2	**279.400**	**203.200**	**31.750**	**1.5**	**51.2**	**61.4**	0.48	**0.025 to 0.040**	XR496051
	11.0000	8.0000	1.2500	0.06	11500	13800		0.001 to 0.0015	
2	**457.200**	**330.200**	**63.500**	**3.3**	**100.0**	**123.0**	0.47	**0.040 to 0.050**	XR678052
	18.0000	13.0000	2.5000	0.13	22500	27600		0.0015 to 0.002	
2	**609.600**	**457.200**	**63.500**	**3.3**	**141.0**	**178.0**	0.45	**0.040 to 0.050**	XR766051
	24.0000	18.0000	2.5000	0.13	31600	40100		0.0015 to 0.002	
2	**760.000**	**580.000**	**80.000**	**6.4**	**215.0**	**234.0**	0.46	**0.075 to 0.100**	XR820060
	29.9213	22.8346	3.1500	0.25	48400	52500		0.003 to 0.004	
2	**914.400**	**685.800**	**79.375**	**3.3**	**270.0**	**343.0**	0.45	**0.075 to 0.100**	XR855053
	36.0000	27.0000	3.1250	0.13	60700	77200		0.003 to 0.004	
2	**1117.600**	**901.700**	**82.550**	**3.3**	**300.0**	**395.0**	0.44	**0.100 to 0.150**	XR882055
	44.0000	35.5000	3.2500	0.13	67400	88900		0.004 to 0.006	
2	**1327.150**	**1028.700**	**114.300**	**3.3**	**405.0**	**534.0**	0.44	**0.125 to 0.180**	XR889058
	52.2500	40.5000	4.5000	0.13	91000	120000		0.005 to 0.007	
2	**1828.800**	**1549.400**	**101.600**	**3.3**	**516.0**	**698.0**	0.43	**0.150 to 0.200**	XR897051
	72.0000	61.0000	4.0000	0.13	116000	157000		0.006 to 0.008	

Precision Level 0

2	**279.400**	**203.200**	**31.750**	**1.5**	**51.2**	**61.4**	0.48	**0.025 to 0.040**	XR496051
	11.0000	8.0000	1.2500	0.06	11500	13800		0.001 to 0.0015	
2	**457.200**	**330.200**	**63.500**	**3.3**	**100.0**	**123.0**	0.47	**0.040 to 0.050**	XR678052
	18.0000	13.0000	2.5000	0.13	22500	27600		0.0015 to 0.002	
2	**609.600**	**457.200**	**63.500**	**3.3**	**141.0**	**178.0**	0.45	**0.040 to 0.050**	XR766051
	24.0000	18.0000	2.5000	0.13	31600	40100		0.0015 to 0.002	

B

TSHR STYLE

HYDRA-RIB™ AND SPRING-RIB™

Timken® Hydra-Rib Bearing

- Precision metric bearing available in any precision class.
- Floating outer ring rib maintains preload using fluid pressure.
- Unique design allows for thermal expansion of spindle while maintaining desired preload.
- Ideal choice for floating position bearing set.
- Only minor modifications needed on existing spindles to install.
- Speed ratings for Hydra-Rib and Spring-Rib bearings are significantly higher than standard ribbed-cone designs. Consult the Engineering Section for greater detail, or contact your Timken representative.

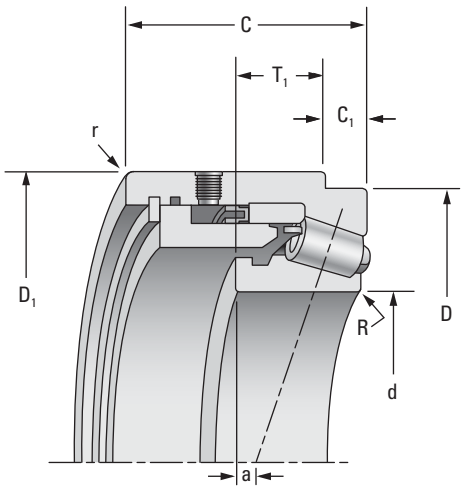

d Bore	D_1 Flange Dia.	D Seat Dia.	T_1 Width	C_{90} Load Ratings [2]	C Cup Width	C_1 Seat Width	a Eff. Center [1]
mm in.	**mm** in.	**mm** in.	**mm** in.	**kN** lbs.	**mm** in.	**mm** in.	**mm** in.
50.000	**103.175**	**104.000**	**31.000**	**20.6**	**66.000**	**15.000**	**-13.0**
1.9685	4.0620	4.0945	1.2205	4630	2.5984	0.5906	-0.51
50.000	**103.175**	**104.000**	**31.000**	**20.6**	**66.000**	**15.000**	**-13.0**
1.9685	4.0620	4.0945	1.2205	4630	2.5984	0.5906	-0.51
50.000	**103.500**	**104.000**	**31.000**	**20.6**	**66.000**	**15.000**	**-13.0**
1.9685	4.0748	4.0945	1.2205	4630	2.5984	0.5906	-0.51
50.000	**103.175**	**104.000**	**31.000**	**20.6**	**66.000**	**15.000**	**-13.0**
1.9685	4.0620	4.0945	1.2205	4630	2.5984	0.5906	-0.51
75.000	**130.000**	**122.000**	**22.000**	**23.1**	**65.000**	**10.000**	**-10.2**
2.9528	5.1181	4.8031	0.8661	5190	2.5591	0.3937	-0.40
75.000	**130.000**	**122.000**	**22.000**	**23.1**	**65.000**	**10.000**	**-10.2**
2.9528	5.1181	4.8031	0.8661	5190	2.5591	0.3937	-0.40
85.000	**148.000**	**140.000**	**23.500**	**30.1**	**66.000**	**10.000**	**-9.1**
3.3465	5.8268	5.5118	0.9252	6760	2.5984	0.3937	-0.36
85.000	**148.000**	**140.000**	**23.500**	**30.1**	**66.000**	**10.000**	**-9.1**
3.3465	5.8268	5.5118	0.9252	6760	2.5984	0.3937	-0.36
95.000	**158.000**	**145.000**	**21.000**	**29.5**	**70.000**	**10.000**	**4.3**
3.7402	6.2205	5.7087	0.8268	6640	2.7559	0.3937	0.17
95.000	**158.000**	**145.000**	**21.000**	**29.5**	**70.000**	**10.000**	**4.3**
3.7402	6.2205	5.7087	0.8268	6640	2.7559	0.3937	0.17
100.000	**178.000**	**170.000**	**27.000**	**34.1**	**70.000**	**12.000**	**10.4**
3.9370	7.0079	6.6929	1.0630	7660	2.7559	0.4724	0.41
110.000	**178.000**	**170.000**	**27.000**	**34.1**	**70.000**	**12.000**	**10.4**
4.3307	7.0079	6.6929	1.0630	7660	2.7559	0.4724	0.41
115.000	**190.000**	**180.000**	**26.000**	**42.0**	**70.000**	**12.000**	**-7.1**
4.5276	7.4803	7.0866	1.0236	9440	2.7559	0.4724	-0.28
120.000	**190.000**	**180.000**	**26.000**	**42.0**	**70.000**	**12.000**	**-7.1**
4.7244	7.4803	7.0866	1.0236	9440	2.7559	0.4724	-0.28
125.000	**200.000**	**190.000**	**29.000**	**49.9**	**72.000**	**12.000**	**-7.6**
4.9213	7.8740	7.4803	1.1417	11200	2.8346	0.4724	-0.30

[1] Negative value indicates effective center within the width of the inner ring.
[2] The Timken Company life calculations based on 90 million revolutions for L_{10} life.

B

Timken® Spring-Rib Bearing *(not included in chart below)*

- Bearing preload maintained using spring pressure.
- Available in JP5000, JP8500, JP11000 and JP17000 series.
- Ideal choice for applications with relatively constant load and speed.
- Choices of light, medium or heavy preload settings (medium is standard).
- Call for available sizes.

Hydra-Rib Part Number	Mounting Dimensions R Shaft Radius	Shaft Shoulder Dia.	r Housing Radius	Stiffness K_r (10^6)	F_r	K_a (10^6)	F_a
	mm in.	**mm** in.	**mm** in.	**N/mm** lbs./in.	**kN** lbs.	**N/mm** lbs./in.	**kN** lbs.
JP5049PH-JP5017HR	**3.0**	**61.0**	**1.0**	**1.18**	**2.06**	**0.126**	**1.25**
	0.12	2.40	0.04	6.77	463	0.721	282
JP5049PH-JP5020HR	**3.0**	**61.0**	**1.0**	**1.18**	**2.06**	**0.126**	**1.25**
	0.12	2.40	0.04	6.77	463	0.721	282
JP5049P-JP5019HR	**3.0**	**61.0**	**1.0**	**1.18**	**2.06**	**0.126**	**1.25**
	0.12	2.40	0.04	6.77	463	0.721	282
JP5049P-JP5020HR	**3.0**	**61.0**	**1.0**	**1.18**	**2.06**	**0.126**	**1.25**
	0.12	2.40	0.04	6.77	463	0.721	282
JP7548P-JP7520HR	**3.0**	**85.0**	**2.0**	**1.43**	**2.31**	**0.177**	**1.52**
	0.12	3.35	0.08	8.14	519	1.01	341
JP7549P-JP7519HR	**3.0**	**85.0**	**2.0**	**1.43**	**2.31**	**0.177**	**1.52**
	0.12	3.35	0.08	8.14	519	1.01	341
JP8548-JP8518HR	**3.0**	**96.0**	**2.0**	**1.77**	**3.01**	**0.212**	**1.93**
	0.12	3.78	0.08	10.1	676	1.21	435
JP8549P-JP8519HR	**3.0**	**96.0**	**2.0**	**1.77**	**3.01**	**0.212**	**1.93**
	0.12	3.78	0.08	10.1	676	1.21	435
JP10048-JP10019HR	**3.0**	**107.0**	**1.5**	**1.76**	**2.95**	**0.222**	**1.95**
	0.12	4.21	0.06	10.0	664	1.27	439
JP10048-JP10019HRA	**3.0**	**107.0**	**1.5**	**1.76**	**2.95**	**0.222**	**1.95**
	0.12	4.21	0.06	10.0	664	1.27	439
JP11035-JP11019HR	**3.0**	**114.0**	**1.0**	**2.05**	**3.41**	**0.224**	**2.10**
	0.12	4.49	0.04	11.7	766	1.28	471
JP11048-JP11019HR	**3.0**	**122.0**	**1.0**	**2.05**	**3.41**	**0.224**	**2.10**
	0.12	4.80	0.04	11.7	766	1.28	471
JP12043P-JP12019HR	**3.0**	**128.0**	**1.0**	**2.41**	**4.20**	**0.310**	**2.80**
	0.12	5.04	0.04	13.8	944	1.77	630
JP12049P-JP12019HR	**3.0**	**132.0**	**1.0**	**2.41**	**4.20**	**0.310**	**2.80**
	0.12	5.20	0.04	13.8	944	1.77	630
JP13043P-JP13016HR	**3.0**	**138.0**	**1.0**	**2.78**	**4.99**	**0.200**	**2.50**
	0.12	5.43	0.04	15.9	1120	1.14	561

Continued on next page.

TSHR STYLE – *continued*

HYDRA-RIB AND SPRING-RIB

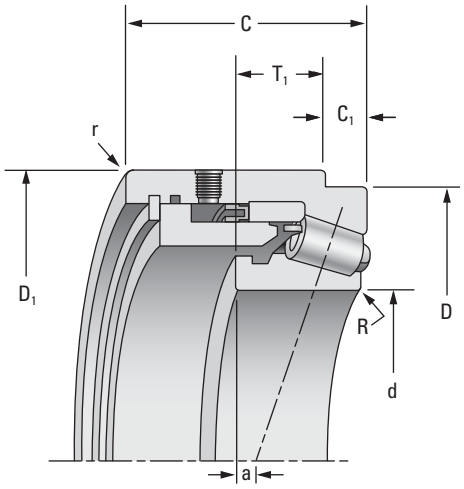

Timken Hydra-Rib Bearing

- Precision metric bearing available in any precision class.
- Floating outer ring rib maintains preload using fluid pressure.
- Unique design allows for thermal expansion of spindle while maintaining desired preload.
- Ideal choice for floating position bearing set.
- Only minor modifications needed on existing spindles to install.
- Speed ratings for Hydra-Rib and Spring-Rib bearings are significantly higher than standard ribbed-cone designs. Consult the Engineering Section for greater detail, or contact your Timken representative.

d Bore	D_1 Flange Dia.	D Seat Dia.	T_1 Width	C_{90} Load Ratings [2]	C Cup Width	C_1 Seat Width	a Eff. Center[1]
mm in.	**mm** in.	**mm** in.	**mm** in.	**kN** lbs.	**mm** in.	**mm** in.	**mm** in.
130.000	**200.000**	**190.000**	**29.000**	**49.9**	**72.000**	**12.000**	**-7.6**
5.1181	7.8740	7.4803	1.1417	11200	2.8346	0.4724	-0.30
135.000	**213.000**	**205.000**	**27.000**	**50.6**	**72.000**	**13.000**	**-15.8**
5.3150	8.3858	8.0709	1.0630	11400	2.8346	0.5118	-0.62
140.000	**213.000**	**205.000**	**27.000**	**50.6**	**72.000**	**13.000**	**-3.8**
5.5118	8.3858	8.0709	1.0630	11400	2.8346	0.5118	-0.15
155.000	**235.000**	**227.000**	**30.000**	**60.9**	**76.000**	**15.000**	**-5.1**
6.1024	9.2520	8.9370	1.1811	13700	2.9921	0.5906	-0.20
160.000	**235.000**	**227.000**	**30.000**	**60.9**	**79.000**	**15.000**	**-5.1**
6.2992	9.2520	8.9370	1.1811	13700	3.1102	0.5906	-0.20
170.000	**248.000**	**240.000**	**30.000**	**62.9**	**79.000**	**15.000**	**-4.8**
6.6929	9.7638	9.4488	1.1811	14100	3.1102	0.5906	-0.19
180.000	**268.000**	**260.000**	**30.000**	**63.6**	**84.000**	**15.000**	**-1.8**
7.0866	10.5512	10.2362	1.1811	14300	3.3071	0.5906	-0.07
200.000	**290.000**	**282.000**	**32.000**	**74.6**	**83.000**	**17.000**	**-0.8**
7.8740	11.4173	11.1024	1.2598	16800	3.2677	0.6693	-0.03
220.000	**316.000**	**308.000**	**32.000**	**80.8**	**83.000**	**17.000**	**-5.3**
8.6614	12.4409	12.1260	1.2598	18200	3.2677	0.6693	-0.21
270.000	**385.000**	**375.000**	**40.000**	**114.0**	**105.000**	**20.000**	**0.0**
10.6299	15.1575	14.7638	1.5748	25700	4.1339	0.7874	0.00
285.750	**385.000**	**375.000**	**40.000**	**114.0**	**105.000**	**20.000**	**0.0**
11.2500	15.1575	14.7638	1.5748	25700	4.1339	0.7874	0.00

[1] Negative value indicates effective center within the width of the inner ring.
[2] The Timken Company life calculations based on 90 million revolutions for L_{10} life.

B

Timken Spring-Rib Bearing *(not included in chart below)*

- Bearing preload maintained using spring pressure.
- Available in JP5000, JP8500, JP11000 and JP17000 series.
- Ideal choice for applications with relatively constant load and speed.
- Choices of light, medium or heavy preload settings (medium is standard).
- Call for available sizes.

Hydra-Rib Part Number	Mounting Dimensions			Stiffness			
	R Shaft Radius	Shaft Shoulder Dia.	r Housing Radius	K_r (10^6)	F_r	K_a (10^6)	F_a
	mm in.	**mm** in.	**mm** in.	**N/mm** lbs./in.	**kN** lbs.	**N/mm** lbs./in.	**kN** lbs.
JP13049P-JP13016HR	**3.0**	**138.0**	**1.0**	**2.78**	**4.99**	**0.200**	**2.50**
	0.12	5.43	0.04	15.9	1120	1.14	561
JP14043P-JP14019HR	**3.0**	**148.0**	**1.0**	**2.75**	**5.06**	**0.406**	**3.62**
	0.12	5.83	0.04	15.7	1140	2.32	813
JP14049P-JP14019HR	**3.0**	**152.0**	**1.0**	**2.75**	**5.06**	**0.406**	**3.62**
	0.12	5.98	0.04	15.7	1140	2.32	813
JP16043P-JP16019HR	**3.0**	**169.0**	**1.0**	**3.16**	**6.09**	**0.441**	**4.24**
	0.12	6.65	0.04	18.0	1370	2.52	953
JP16049P-JP16019HR	**3.0**	**172.0**	**1.0**	**3.16**	**6.09**	**0.441**	**4.24**
	0.12	6.77	0.04	18.0	1370	2.52	953
JP17049P-JP17019HR	**3.0**	**182.0**	**1.0**	**3.36**	**6.29**	**0.432**	**4.19**
	0.12	7.17	0.04	19.2	1410	2.47	943
JP18049P-JP18019HR	**3.0**	**193.0**	**1.0**	**3.44**	**6.36**	**0.495**	**4.49**
	0.12	7.60	0.04	19.6	1430	2.83	1010
JP20049P-JP20019HR	**3.0**	**213.0**	**1.0**	**3.47**	**7.46**	**0.471**	**5.12**
	0.12	8.39	0.04	19.8	1680	2.69	1150
JP22049E-JP22019HR	**3.0**	**233.0**	**1.0**	**3.93**	**8.08**	**0.644**	**6.09**
	0.12	9.17	0.04	22.4	1820	3.68	1370
JL555235-JL55512HR	**4.0**	**293.0**	**4.0**	**6.19**	**11.40**	**0.666**	**6.98**
	0.16	11.54	0.16	35.4	2570	3.81	1570
JL555239-JL55512HR	**4.0**	**293.0**	**4.0**	**6.19**	**11.40**	**0.666**	**6.98**
	0.16	11.54	0.16	35.4	2570	3.81	1570

B

TAPERED ROLLER BEARING BORE DIAMETERS FOUND IN THIS CATALOG

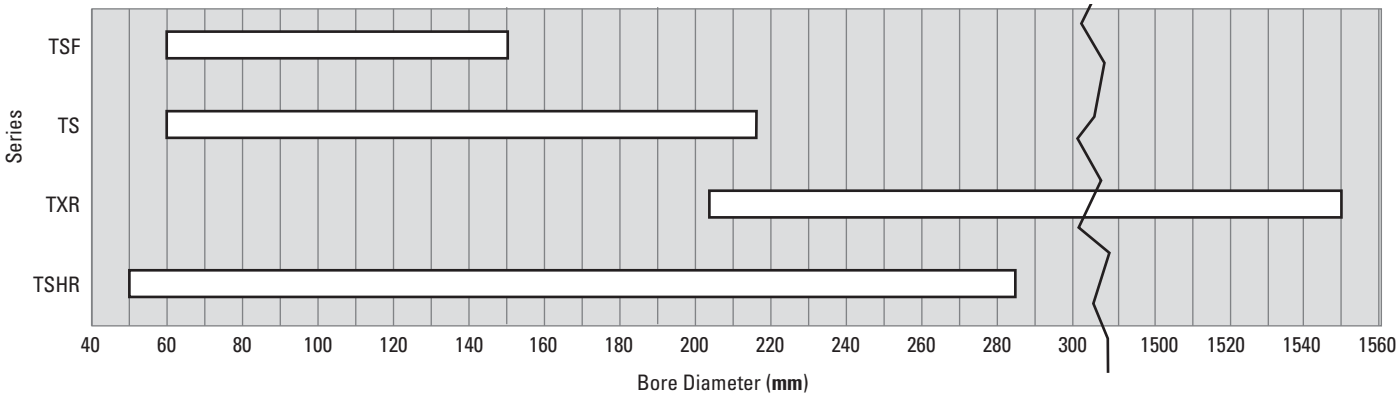

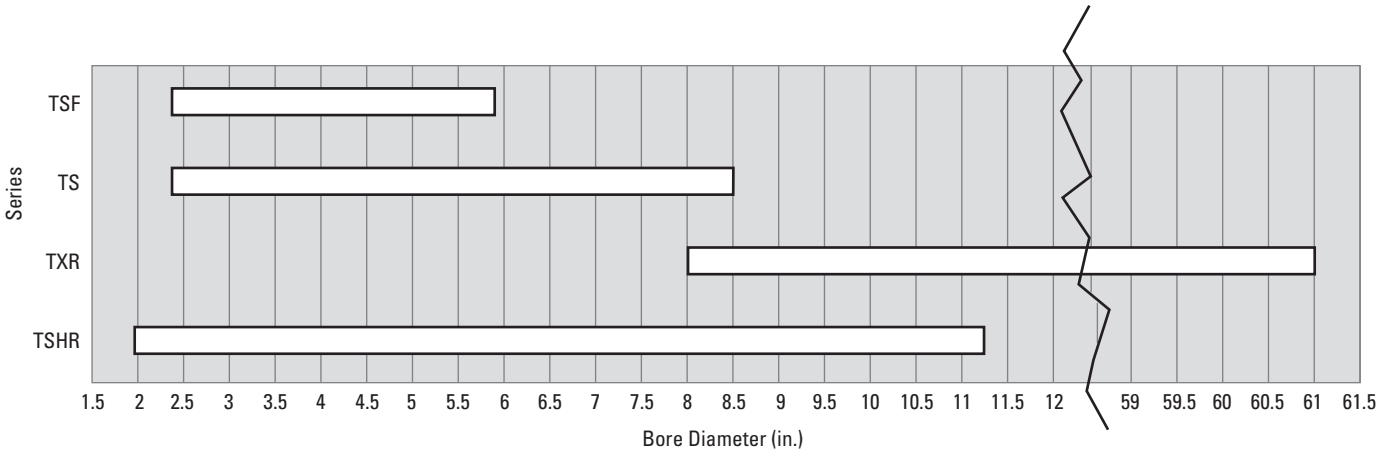

BALL BEARINGS

C

C BALL BEARINGS

Introduction 134
Optimized Grades of Precision 134
Bearing Types 134
Applications 137
Spindle Bearings 142
Ball Screw Support Bearings 200
Ex-Cell-O Spindle Bearings 214

C

BALL BEARINGS

C

Super Precision Ball Bearings

C

Page

SPINDLE BEARINGS

Ultra-Light 2(3)MM9300WI 142
Ultra-Light 2(3)MMV9300HX 150
Extra-Light 2(3)MM9100WI 158
Extra-Light 2(3)MMV9100HX 166
Extra-Light 2(3)MMV99100WN 174
Ultra-Light MM9100K 182
Light 2(3)MM200WI 184
Light MM200K 192
Medium 2(3)MM300WI 194
Medium MM300K 198

Page

BALL SCREW SUPPORT BEARINGS

Ball Screw Support Series 200
BSBU D 206
BSBU Q 207
BSPB D 208
BSPB Q 209
MMF Series 210
MMN Series 212
Ex-Cell-O Spindle Bearings 214

C

Super Precision Ball Bearings
Angular Contact

Contact Angle:
2 = 15°
3 = 25°
No number denotes 0° (deep-groove)
Other number denotes non-standard

Construction:
K deep-groove; high shoulder on both rings
WI angular contact; low shoulder on outer ring
WO angular contact; low shoulder on inner ring
WN angular contact; low shoulder on both rings
HX angular contact; low shoulder on both rings

Precision Class:
MM/MMV super high precision between ABEC 7 (ISO P4) and ABEC 9 (ISO P2)
MMX ultra-precision • ABEC 9 (ISO P2)

Cage: No cage callout implies Timken® PRC
PRB molded nylon cage
PRC molded reinforced nylon cage
CR phenolic (composition) –Timken standard
MBR machined bronze

VV — high-speed seals

2 MM C 91 04 WI CR DUL A3188

Ball Material:
No material callout implies steel
C ceramic

Series:
9300 ultra-light
9100 extra-light
99100 extra-light
200 light
300 medium

Bore Size:
00 10 mm
01 12 mm
02 15 mm
03 17 mm
04 20 mm
(04 and up, multiply these last two numbers by 5 to get bore in millimeters)

Preload: Universal Flush Ground
SU single bearing
DU duplex pairs of bearings
TU triplex set of bearings
QU quadruplex set of bearings
X extra-light
L light
M medium
H heavy

An example of a specification number for other than standard.

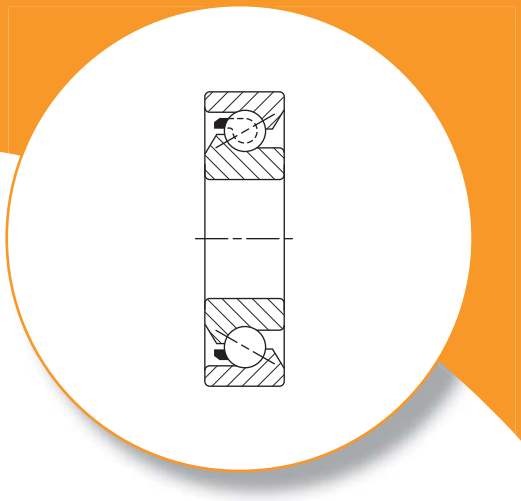

Super Precision Ball Bearings
Ball Screw Support – Single Row

METRIC

Bore Size:
mm

O.D. Size:
mm

Preload Level:
L light
M medium
H heavy (standard)

MM **25** **BS** **62** **DU** **H**

ABEC 7 (ISO P4):
with tighter lateral eccentricity

Ball Screw Support Series Designation for Metric Number

Number of bearings in set:
DU duplex (2)
TU triplex (3)
QU quadruplex (4)

INCH

Ball Screw Support Series Designation for Inch Number

Preload Level:
L light
M medium
H heavy (standard)

MM **93** **10 WI** **2** **H** **DU** **H**

ABEC 7 (ISO P4):
with tighter lateral eccentricity

Relative Size of Bore:
Larger number larger bore

Design:
Timken (vs. ABMA) specifications

Series:
No callout denotes standard capacity
H high capacity

Number of bearings in set:
DU duplex (2)
TU triplex (3)
QU quadruplex (4)

C

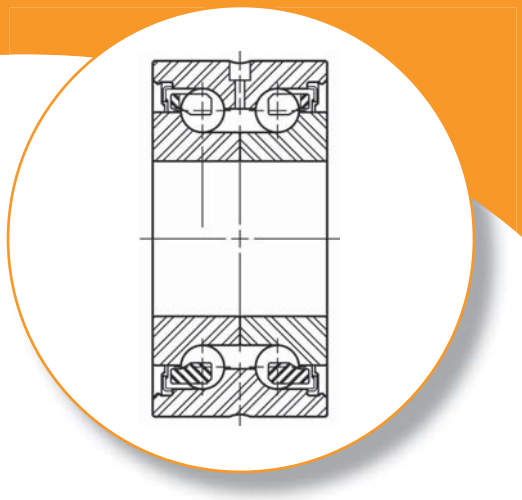

Super Precision Ball Bearings
Ball Screw Support – Double Row

METRIC

ABEC-7 (ISO P4):
with tighter lateral eccentricity

Bore Size:
mm

O.D. Size:
mm

Preload Level:
L light
M medium
H heavy (standard)

MM N 5 25 BS 57 PP D M

N non-flanged
F flanged

5 double row

Ball Screw Support Series Designation for Metric Number

Double Seals

Number of bearings in set:
D duplex (2)
Q quadruplex (4)

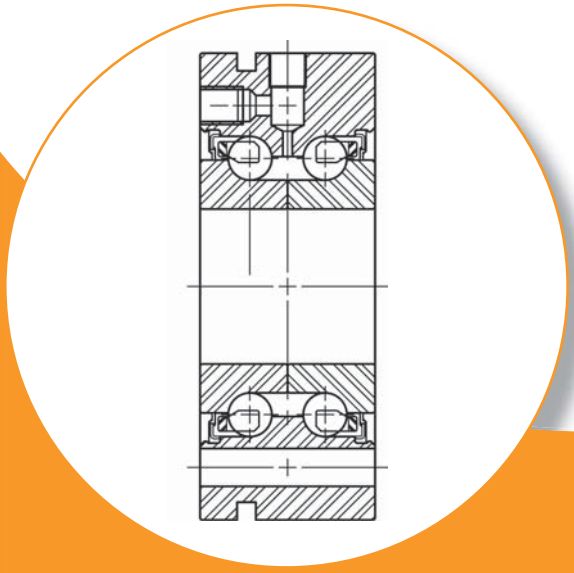

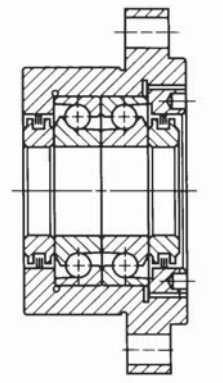

Super Precision Ball Bearings
Ball Screw Cartridge Units

METRIC

BU bolt-on flanged unit
PB pillow block

Bore Size:
mm

For BU Style outer diameter for housing insertion
For PB Style center height (both in millimeters)

BS **BU** **35** **D** **50** **H**

Ball Screw Support Series Designation for Metric Number

Number of bearings in set:
D duplex (2)
Q quadruplex (4)

H heavy preload

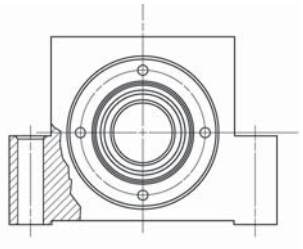

C

INTRODUCTION

MEANINGS OF PREFIXES AND SUFFIXES

In the Timken numbering system, the basic number, which denotes the size and series, is always retained. When special variations are made, as in the case of precision bearings, prefixes and suffixes are added, which have definite meanings as follows:

Prefixes

- **MM** • Super Precision • ABEC 7/ABEC 9 (ISO P4/P2)
- **2MM/2MMV** • Super Precision between ABEC 7 and ABEC 9 (ISO P4/P2) • Low contact angle - 15 degree
- **3MM/3MMV** • Super Precision between ABEC 7 and ABEC 9 (ISO P4/P2) • High contact angle - 25 degree
- **MMX** • Ultra-precision • ABEC 9 • (ISO P2)

Suffixes

- **K** • Deep-groove high shoulder on both inner and outer ring
- **WI** • Angular contact low shoulder on outer ring
- **WO** • Angular contact low shoulder on inner ring
- **WN** • Angular contact low shoulder on both inner and outer ring
- **HX** • Angular contact low shoulder on both inner and outer ring
- **CR** • Composition cage (non-metallic)
- **MBR** • Machined bronze cage
- **SR** • Machined steel cage
- **PRB** • Molded nylon cage
- **PRC** • Molded nylon cage (reinforced)
- **PRF, PRG** • Special high-performance material
- **SUL** • Universally ground single bearing • Light preload
- **SUM** • Universally ground single bearing • Medium preload
- **SUH** • Universally ground single bearing • Heavy preload
- **DUL** • Universally ground duplex bearings • Light preload
- **DUM** • Universally ground duplex bearings • Medium preload
- **DUH** • Universally ground duplex bearings • Heavy preload
- **TUL** • Universally ground triplex bearings • Light preload
- **TUM** • Universally ground triplex bearings • Medium preload
- **TUH** • Universally ground triplex bearings • Heavy preload
- **QUL** • Universally ground quadruplex bearings • Light preload
- **QUM** • Universally ground quadruplex bearings • Medium preload
- **QUH** • Universally ground quadruplex bearings • Heavy preload

PERFORMANCE

The most widely recognized definition of quality is contained within the ABEC/ISO classes; however some factors affecting performance of a bearing are not completely defined within these standards. This allows for a significant range of variability in product performance among bearing manufacturers. To provide premium performance, all Timken ball bearing MM, MMV and MMX precision grades comply with strict controls over these non-specified parameters – all of which can have a direct impact on the service life and performance of a bearing.

OPTIMIZED GRADES OF PRECISION

MM, MMV – SUPER PRECISION, SUPER HIGH PRECISION (ABEC 7/9, ISO P4/P2)

Super precision bearings manufactured to the MM(V) tolerance class operate with running accuracy and performance levels meeting ABEC 9 (ISO P2) and remaining features at ABEC 7 (ISO P4) levels. Bore and O.D. surfaces are coded in micron units for the convenience of the discriminating machine tool builder striving for optimum fitting of crucial spindle components.

MMX – ULTRA-PRECISION (ABEC 9, ISO P2)

Super precision bearings with closer tolerances and running accuracies than ABEC 7 (ISO P4) bearings are made to ABEC 9 (ISO P2) tolerances. Bearings produced to these tolerances are generally used on ultra-high-speed grinding spindles designed for tight dimensional tolerances and superfine surface finishes. Contact your Timken representative for availability of product range.

BEARING TYPES

ANGULAR-CONTACT BEARINGS

2MM-WI types with 15 degree initial contact angle are designed to meet the needs of machine builders for precision bearings that will operate at as low a temperature as possible for a wide range of speeds and operating loads. In order for machines to produce more accurate work at a higher production rate, the bearings must provide a high degree of rigidity in both axial and radial directions while operating at minimum temperatures. For example, precision machining or cutting tools impose heavier loads on bearings than those encountered in precision grinding. In the former, speeds are slower and loads heavier than the latter, where speeds are high and loads light. The 2MM-WI Type gives the machine builder the flexibility required to meet such variations in applications.

3MM-WI, manufactured with 25 degree initial contact angle, are for use on applications where the loading on the initial bearings is predominately axial and a high degree of axial rigidity is required. Typical applications for these are large vertical rotary surface grinders, horizontal and vertical disc grinders, and thrust bearing applications for heavy-duty lathes where the bearings must directly carry extremely high tail stock or chucking pressure.

2MM-WO with 15 degree initial contact angle are designed for extremely high-speed applications where centrifugal force of the balls is the principal load on the bearing. Unlike the MM-WI type, which has a low shoulder outer ring, the 2MM-WO type has full shoulders on both sides of the outer ring and a low shoulder on one side of the inner ring. This design permits assembly with a maximum complement of balls and a one-piece cage that pilots against the precision-ground lands of the outer ring. This bearing series is generally supplied with a separable inner ring and ball-retaining cage along with special race geometry allowing extremely high-speed operation.

2MMV and 3MMV-HX are dimensionally interchangeable with equivalent 9100, 99100, 9300 and ISO Series 10 and 19 bearings. These designs enable spindle heads to remove more material in less time while maintaining superior machining tolerances. This is achieved through a proven combination of unique ball complements with precision engineering of raceway geometries.

2MMV and 3MMV-HX VV possess all of the high-speed advantages of the HX but add pre-lubrication and true-high-speed seals. These bearing seals help protect the lubricant from outside contaminants while ensuring internal lubricant retention.

2MMV and 3MMV 99100WN are available with 15 degree or 25 degree initial contact angle and have been developed to operate under the demanding requirements of high-speed machine tools. They incorporate design features that permit operation at higher speeds than standard angular contact ball bearings. The bore, outside diameter and width are the same as the MM9100 Series.

BALL SCREW SUPPORT BEARINGS

To meet the demands of the servo-controlled machinery field, the Timken® ball screw support bearings (BSSB) are specially designed with steep contact angles and offer high levels of stiffness for ball screw application requirements. Timken's most recent product offering in this area is a series of double-row, sealed, flanged (or cartridge) units that use an integral double-row outer ring to help simplify installation procedures. Timken offers the following ball screw support bearing products:

- Inch Series BSSB (MM9300).
- Metric Series BSSB (MMBS).
- Flanged cylindrical cartridge housed units (BSBU).
- Pillow block housed units (BSPB).
- Integral double-row units (MMN, MMF).

Fig. 99.
2MM-WI and 3MM-WI Types

Fig. 100.
2MMV-HXVV and 3MMV-HXVV Types

Fig. 101.
2MMV99100WN and 3MMV99100WN Types

Fig. 102.
MM9300WI DUH (Inch)
MM-BS-DUH (Metric)

MICRON BORE AND O.D. CODING FOR BALL BEARINGS

To better match machine tool bearings to spindles, Timken offers micron coding for its super precision ball bearing line. (Micron coding is standard on all products except ball screw support bearings and Ex-Cell-O bearings.)

Micron coding is based on average bore and O.D. diameters. This type of coding indicates the deviation from the nominal size in microns.

Multiple bearing set coding will reflect maximum O.D. and minimum bore diameters found within the set.

The coding is marked on the inner and outer rings and on the box label.

Micron coding	Micron		Inch	
	Over	Incl.	Over	Incl.
1	**0**	**-1**	0.000000	-0.000039
2	**-1**	**-2**	-0.000039	-0.000079
3	**-2**	**-3**	-0.000079	-0.000118
4	**-3**	**-4**	-0.000118	-0.000157
5	**-4**	**-5**	-0.000157	-0.000197
6	**-5**	**-6**	-0.000197	-0.000236
7	**-6**	**-7**	-0.000236	-0.000276
8	**-7**	**-8**	-0.000276	-0.000315
9	**-8**	**-9**	-0.000315	-0.000354
10	**-9**	**-10**	-0.000354	-0.000394
11	**-10**	**-11**	-0.000394	-0.000433
12	**-11**	**-12**	-0.000433	-0.000472
13	**-12**	**-13**	-0.000472	-0.000512

Table 22. Deviation from nominal.

BALL SCREW SUPPORT BEARING MOUNTING ARRANGEMENTS

An alignment mark is placed on the outer rings of bearing sets as shown. This mark is in the form of a "V" when bearings are in the "O" arrangement (triplex and quadruplex sets only).

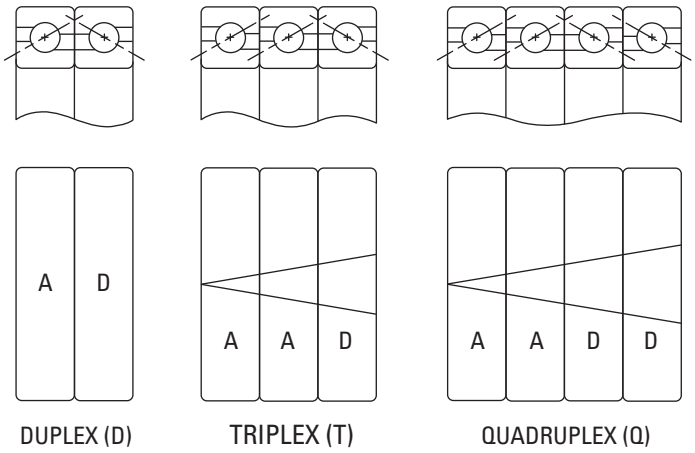

Fig. 103. Ball screw support bearing mounting configurations.

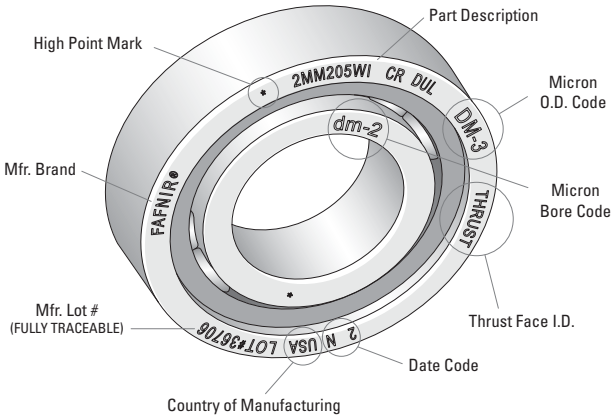

Fig. 104. Super precision markings.

APPLICATIONS

Workhead and tool spindles are often the most important components of machine tools. Consequently, to reach the requirements for spindle speed, work accuracy and finish, selection of the proper size and type of ball bearings to support these spindles is critical.

Of all the rolling bearing types, super precision ball bearings have proved to be the best value for the wide variety of machine tool bearing applications, which cover broad ranges of operating loads, speeds and lubrication conditions. Duplexed, preloaded, angular contact bearings with one-piece composition cages have excellent capacity and provide maximum spindle rigidity. These bearings are widely used to help machines achieve faster speeds, greater accuracy, smoother finishes and higher production rates.

Many considerations are involved in the choice of bearings for precision applications. Among those that influence the performance of machine tool spindles are the internal geometry of the bearings, the mounting arrangement, the shaft and housing mounting fits, the balance and alignment of the rotating parts, and last, but equally important, the lubrication. While many of these factors are significant in slow-speed applications, all of them must be considered for high-speed spindles.

To minimize deflection under load, shafts for machine tool spindles are designed to have a minimum unsupported length and maximum cross section. For the same reason, spindle housings are designed heavy enough to carry the work load. Their cross sections are made as uniform as possible to reduce stress concentration during uneven deflection of the frame due to thermal changes. In addition, heavy, well-proportioned housings can function as sinks to conduct heat away from ball bearings.

SELECTIVE ASSEMBLY

Under certain conditions, it may be desirable to control fits more accurately without the added expense of using tighter tolerance bearings and assembly parts. This can be accomplished by selective assembly of the bearings, shafts and housings after they are sized and sorted according to bores and outside diameters. Timken provides bore and O.D. micron coding as standard practice for super precision angular contact radial ball bearings. This improved fit-up at assembly helps to maximize spindle precision.

APPLICATION EXAMPLES

Detailed assembly drawings on the following pages are representative of successful applications of Timken® super precision ball bearings; high-cycle wheel heads; high-speed internal grinding spindles; super precision workheads; and high-speed router spindles. Contact your Timken representative regarding any of your application problems.

SPECIAL REQUIREMENTS

High-speed, grease-lubricated spindles and heavy-precision workheads requiring unusual rigidity and running accuracy are a few of the many special problems involving super precision bearings. These and many other applications generally require design features that can be reviewed by your Timken representative.

High-Speed Internal-Grinding Spindle

Designed for internal precision grinding, this spindle incorporates 2MM9106WI-CR super precision ball bearings, preloaded by a coiled helical spring cartridge. Thrust load exerted by the springs ensures close contact of the balls with the bearing raceways under all operating conditions. The sealed construction provides highly effective protection against intrusion of coolant and foreign matter. Grease is packed and sealed in each bearing prior to assembly. Operating speed of this spindle is 25000 RPM.

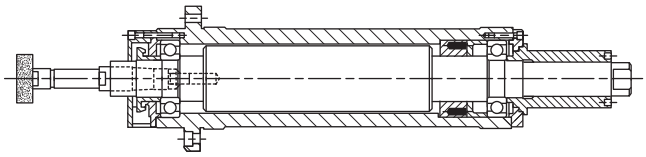

Fig. 105. High-speed internal-grinding spindle.

Ultra-Precision Surface-Grinding Spindle

2MMX9122WI-DUM super precision bearings, produced to ABEC 9 (ISO P2) tolerances, are employed in this horizontal surface-grinding spindle for maximum rigidity and accuracy. A back-to-back pair of 2MM312WI-CR-DUL super precision bearings is used at the floating location. This spindle grinds surfaces that are accurate within 0.0006 mm (0.000025 in.), flat and parallel, square within 0.0003 mm (0.000010 in.), to a surface finish of 5 rms, or better. The spindle, driven by a 30 hp motor, operates at 900 RPM. Bearings are packed with grease prior to assembly.

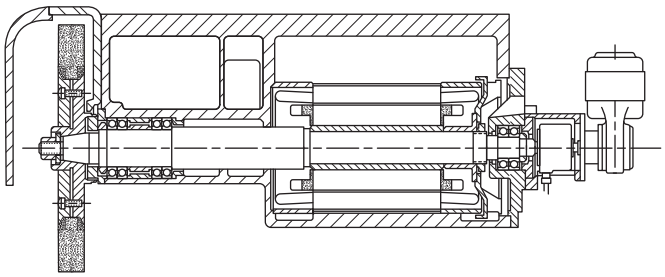

Fig. 106. Ultra-precision surface-grinding spindle.

Precision Surface-Grinding Spindle

This motorized surface-grinding spindle, operating at 3600 RPM, uses 2MM9107WI-DUM duplex super precision preloaded bearings at both locations, mounted back-to-back, with one pair floating. Labyrinth slinger-type sealing prevents entry of contaminants and seals in the grease lubrication.

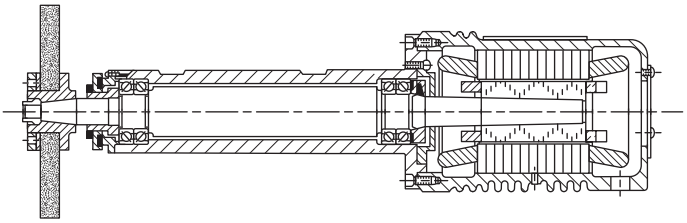

Fig. 107. Precision surface-grinding spindle.

Heavy-Duty Precision-Boring Spindle

Super precision, duplexed, preloaded bearings mounted back-to-back are used at each location in this boring spindle to help ensure smooth performance and a high degree of radial and axial rigidity. Operating speeds vary between 200 and 3000 RPM. Equal-length spacers between the bearings at the workend increase spindle rigidity. When the bearings are properly positioned on the shaft and the respective rings securely clamped, the preload is reproduced and no subsequent adjustment is required. Just prior to assembly, each bearing is packed with grease.

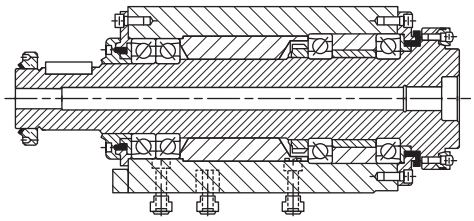

Fig. 108. Heavy-duty precision-boring spindle.

Six-Spindle Automatic-Screw Machine

This bearing arrangement meets the demand for a high-speed, heavy-duty, multiple-spindle screw machine to operate with constant accuracy at maximum production. Because of the hollow shaft construction and the short distance between bearings, extra-light series duplex pairs are used at each location. This affords a high degree of radial rigidity and adds stiffness to the shaft. By mounting a duplex pair of flanged (3MMF) bearings back-to-back with a duplexed pair of 2MM super precision bearings, accuracy and rigidity of the spindle are ensured and permit a straight housing bore. The rear pair of back-to-back bearings is allowed to float in the housing. Lubrication is by pressure-feed oil circulation.

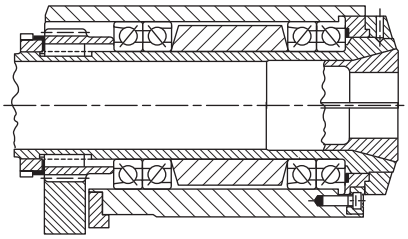

Fig. 109. Six-spindle automatic-screw machine.

High-Speed Precision-Boring Head

This high-speed boring head operates at 2500 to 3000 RPM, employing angular contact super precision bearings. The front bearings are of different sizes. The outer ring of the larger bearing abuts and is clamped against the housing shoulder. The inboard bearing is permitted to move axially in its housing under spring load. At the rear location, two spring-loaded bearings of the same size are allowed to float in the housing as temperature differentials occur in the operation spindle. With this head, interference shaft fits may be permitted without affecting bearing preload. Excessive heat generation is prevented, resulting in lower operating temperatures. Bearings are grease lubricated.

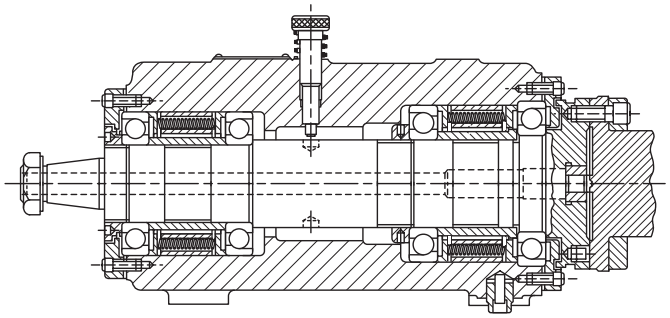

Fig. 110. High-speed precision-boring head.

Ultra-Precision Grinding Workhead

This workhead must maintain straightness and roundness accuracy within 0.00025 mm (0.000010 in.). To meet such rigid requirements for extremely close dimensional control, ultra-precision ball bearings and a shaft of extra stiffness are used. The bearings for such applications are manufactured to tolerances closer than those for ABEC 9 (ISO P2) specifications. Equally important is the high degree of workmanship and accuracy in which the shaft, housing and component parts of the workhead must be made. The upper section shows a four-bearing arrangement for heavy work. The lower half shows a two-bearing mounting for lighter work. Bearings are packed with grease prior to mounting.

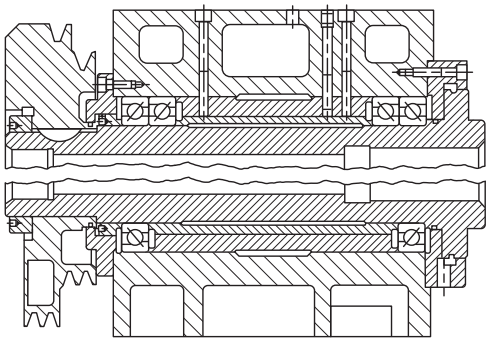

Fig. 111. Ultra-precision grinding workhead.

Precision Toolroom Surface Grinder Spindle

Timken duplexed, super precision, preloaded bearings used in this spindle provide a high degree of rigidity in both radial directions that is necessary to meet modern surface grinding requirements. This design provides more efficient performance at a lower operating temperature. The housing is bored straight through to assure true alignment; the housing shoulders are eliminated. The precision-ground outer sleeve is doweled to the housing to provide the means for stabilizing the spindle axially at the workend bearing location. The rear pair of bearings floats to compensate for thermal changes. Bearings are grease lubricated prior to assembly.

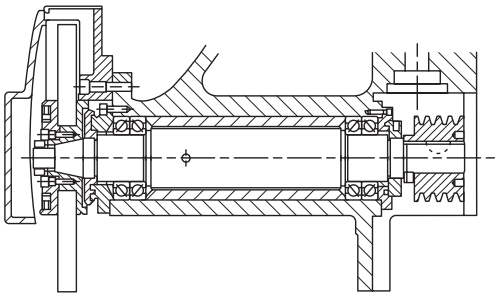

Fig. 112. Precision toolroom surface grinder spindle.

Single-Bar Machine

This spindle is supported by two pairs of 2MM9124WI-DUM super precision bearings mounted back-to-back in tandem pairs. Operating speeds vary from 78 to 1500 RPM. A pair of 2MM9122WI-DUM bearings mounted in tandem carries a 11340 kg (25000 lb.) thrust load during the unchucking operation. The bearings are grease packed prior to assembly.

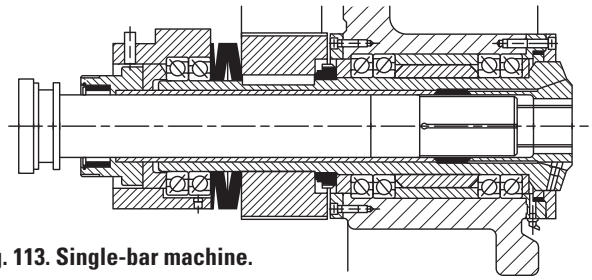

Fig. 113. Single-bar machine.

100000 RPM High-Cycle Wheelhead

Super precision 2MMX9101WO-CR bearings produced to ABEC 9 (ISO P2) tolerances are spring-loaded in this wheelhead, which operates at 100000 RPM. Oil-mist lubrication is employed and the motor is water cooled.

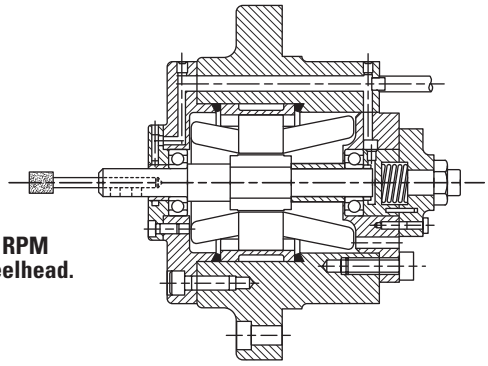

Fig. 114. 100000 RPM high-cycle wheelhead.

Precision Jig-Boring Spindle

This jig-boring spindle delivers extreme accuracy over a wide range of speeds. It is supported with 2MM210WI-DUM grease-lubricated super precision bearings. With this spindle, holes located to an accuracy of 0.0025 mm (0.0001 in.) are bore-ground straight and to size limits of better than 0.005 mm (0.0002 in.).

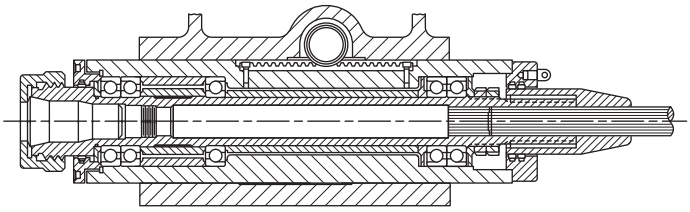

Fig. 115. Precision jig-boring spindle.

Super Precision Lathe Headstock

This lathe spindle produces work held to a roundness of 0.0009 mm (0.000035 in.). Maximum operating speed is 4800 RPM. A tandem pair of 3MM9114WI-DUL bearings is opposed by a spring-loaded 3MM9113WI bearing, resulting in excellent spindle rigidity. Bearings are prelubricated with grease.

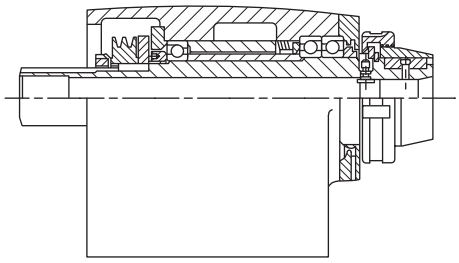

Fig. 116. Super precision lathe headstock.

High-Speed Motorized Router

A specially matched duplex pair of Timken 2MM210WI-DU-FS223 super precision ball bearings, mounted back-to-back at the workend, affords the necessary bearing rigidity to permit routing through aluminum plate 25.400 mm (1.0000 in.) thick with a single pass. The upper bearing is spring-loaded and permitted to float. The router is driven by a 30 hp motor at speeds up to 15000 RPM and uses oil-mist lubrication.

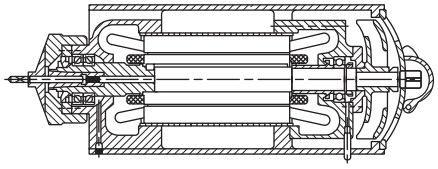

Fig. 117. High-speed motorized router.

Precision Vertical Milling Spindle

This spindle operates at 12 different speeds ranging from 260 to 6200 RPM under a wide variety of conditions. At the workend, two duplex pairs of Timken 2MM212WI-DUL preloaded bearings are mounted in tandem in a back-to-back arrangement, separated by spacers of equal length. This affords extremely high radial and axial rigidity. At the center, a pair of 2MM210WI-DUL bearings mounted back-to-back permits axial float of the spindle to compensate for thermal changes.

The driving pulley shaft is rigidly supported by a widely spaced duplex pair of 2MM212WI-DUL preloaded bearings. All bearings are grease packed.

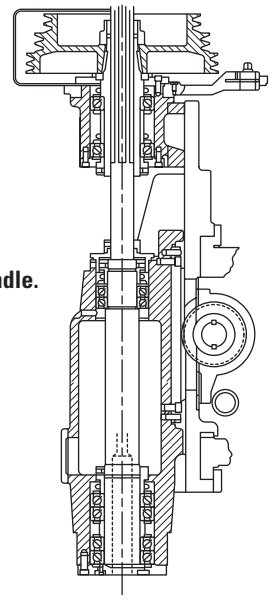

Fig. 118. Precision vertical milling spindle.

ULTRA-LIGHT ISO 19 SERIES 2(3)MM9300WI

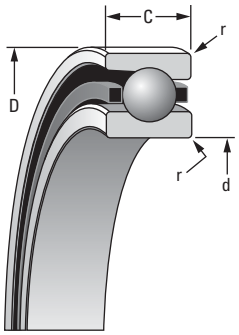

SUPER PRECISION MM

Running accuracy and performance meet ABEC 9 (ISO P2) levels.
Other features conform to ABEC 7 (ISO P4) requirements.

Bearing Number 2MM or 3MM	d Bore	D O.D.	C Width(1)	Ball Qty. x Dia.	Bearing Wt.	(2MM) LOAD RATINGS Steel Ball C_o Static	Steel Ball C_e Dynamic	Steel Ball Speed Rating(Ng)	Ceramic Ball C_o Static	Ceramic Ball C_e Dynamic	Ceramic Ball Speed Rating(Ng)	(3MM) LOAD RATINGS Steel Ball C_o Static	Steel Ball C_e Dynamic	Steel Ball Speed Rating(Ng)	Ceramic Ball C_o Static	Ceramic Ball C_e Dynamic	Ceramic Ball Speed Rating(Ng)
	mm/in.			mm/in.	kg/lbs.	N/lbs.		RPM	N/lbs.		RPM	N/lbs.		RPM	N/lbs.		RPM
9300WI	10	22	6	12 x 3.2	0.010	1640	3510	77500	1460	3510	93000	1580	3380	69800	1410	3380	83760
	0.3937	0.8661	0.2362	12 x 1/8	0.02	370	790	77500	330	790	93000	360	760	69800	320	760	83760
9301WI	12	24	6	13 x 3.2	0.010	1840	3690	67200	1640	3690	80640	1770	3550	66500	1580	3550	79800
	0.4724	0.9449	0.2362	13 x 1/8	0.03	410	830	67200	370	830	80640	400	800	60500	350	800	79800
9302WI	15	28	7	13 x 3.6	0.020	2370	4560	55600	2110	4560	66720	2280	4360	50000	2030	4360	60000
	0.5906	1.1024	0.2756	13 x 9/64	0.04	530	1030	55600	470	1030	66720	510	980	50000	460	980	60000
9303WI	17	30	7	14 x 3.6	0.020	2800	4970	50100	2500	4970	60120	2680	4740	45100	2380	4740	5120
	0.6693	1.1811	0.2756	14 x 9/64	0.04	630	1120	50100	560	1120	60120	600	1070	45100	540	1070	54120
9304WI	20	37	9	14 x 4.8	0.040	4560	8080	42100	4050	8080	50520	4360	7700	41600	3880	7700	49920
	0.7874	1.4567	0.3543	14 x 3/16	0.08	1020	1820	42100	910	1820	50520	920	1730	37900	870	1730	49920
9305WI	25	42	9	17 x 4.8	0.040	5750	9040	34800	5120	9040	41760	5470	8590	31300	4860	8590	37500
	0.9843	1.6535	0.3543	17 x 3/16	0.10	1290	2030	34800	1150	2030	41760	1230	1930	31300	1090	1930	37560
9306WI	30	47	9	19 x 4.8	0.050	6610	9540	29700	5890	9540	35640	6270	9040	26700	5580	9040	32000
	1.1811	1.8504	0.3543	19 x 3/16	0.11	1490	2150	29700	1320	2150	35640	1410	2030	26700	1260	2030	32040
9307WI	35	55	10	19 x 5.6	0.080	9020	12600	25400	8020	12600	30480	8530	11600	22900	7590	11600	27500
	1.3780	2.1654	0.3937	19 x 7/32	0.17	2030	2830	25400	1800	2830	30480	1920	2680	22900	1710	2680	27480
9308WI	40	62	12	19 x 6.4	0.110	11700	16000	22400	10400	16000	26880	11100	15100	20200	9890	15100	2250
	1.5748	2.4409	0.4724	19 x 1/4	0.25	2640	3600	22400	2350	3600	26880	2500	3400	20200	2220	3400	24240
9309WI	45	68	12	21 x 6.4	0.130	13200	16800	20000	11700	16800	24000	12500	15900	18000	11100	15900	21600
	1.7717	2.6772	0.4724	21 x 1/4	0.29	2960	3785	20000	2640	3785	24000	2810	3560	18000	2500	3560	21600
9310WI	50	72	12	23 x 6.4	0.140	14600	17600	18300	13000	17600	21960	13800	16600	16500	12300	16600	14800
	1.9685	2.8346	0.4724	23 x 1/4	0.30	3290	3950	18300	2930	3950	21960	3100	3730	16500	2760	3730	19800
9311WI	55	80	13	23 x 7.1	0.190	18500	21800	16600	16400	21800	19920	17400	20600	14900	15500	20600	17900
	2.1654	3.1496	0.5118	23 x 9/32	0.41	4150	4900	16600	3700	4900	19920	3920	4620	14900	3490	4620	17880
9312WI	60	85	13	25 x 7.1	0.200	20200	22700	15300	18000	22700	18360	19000	21400	13800	16900	21400	16500
	2.3622	3.3465	0.5118	25 x 9/32	0.44	4540	5100	15300	4040	5100	18360	4270	4820	13800	3800	4820	16560
9313WI	65	90	13	27 x 7.1	0.220	21900	23600	14200	19500	23600	17040	20400	22200	12800	18100	22200	15300
	2.5591	3.5433	0.5118	27 x 9/32	0.47	4910	5290	14200	4370	5290	17040	4580	4990	12800	4080	4990	15360
9314WI	70	100	16	24 x 8.7	0.340	29000	32000	13100	25800	32000	15720	27300	30200	11800	24300	30200	14100
	2.7559	3.9370	0.6299	24 x 11/32	0.76	6510	7200	13100	5800	7200	15720	6130	6790	11800	5450	6790	14160
9315WI	75	105	16	25 x 8.7	0.360	30300	32500	12300	26900	32500	14760	28400	30600	11100	25200	30600	13300
	2.9528	4.1339	0.6299	25 x 11/32	0.80	6810	7310	12300	6060	7310	14760	6380	6890	11100	5670	6890	13320
9316WI	80	110	16	27 x 8.7	0.390	32700	33800	11600	29100	33800	13920	30500	31900	10400	27100	31900	12500
	3.1496	4.3307	0.6299	27 x 11/32	0.85	7350	7600	11600	6540	7600	13920	6860	7170	10400	6100	7170	12480
9317WI	85	120	18	26 x 9.5	0.560	37500	38700	10800	33400	38700	12960	35000	36500	9700	31200	36500	11600
	3.3465	4.7244	0.7087	26 x 3/8	1.23	8440	8700	10800	7510	8700	12960	7880	8200	9700	7010	8200	11640
9318WI	90	125	18	26 x 10.3	0.570	44000	45000	10300	39200	45000	12360	41200	42400	9300	36700	42400	11100
	3.5433	4.9213	0.7087	26 x 13/32	1.26	9900	10100	10300	8810	10100	12360	9270	9540	9300	8250	9540	11160

(Ng) For a single, grease-lubricated, spring-preloaded bearing. This value to be used in permissible operating speed (Sp) calculation.
(1) Width tolerance of preloaded bearing set +0.000/-0.254 mm (+0.0000/-0.0100 in.).
(2) ABMA STD 20 (r_{as} max).

WI CONSTRUCTION

- Incorporates low shoulder on non-thrust side of outer rings.
- Balls separated by one-piece cage piloted against a ground thrust shoulder land of the outer ring.

r Rad.(2)	Suggested Shoulder Diameters Shaft Max.	Suggested Shoulder Diameters Shaft Min.	Suggested Shoulder Diameters Housing Max.	Suggested Shoulder Diameters Housing Min.	Shaft Diameter Max.	Shaft Diameter Min.	Mounting Fits Loose	Mounting Fits Tight	FIXED Housing Bore (Stationary) Max.	FIXED Housing Bore (Stationary) Min.	FIXED Mounting Fits Tight	FIXED Mounting Fits Loose	FLOATING Housing Bore (Stationary) Max.	FLOATING Housing Bore (Stationary) Min.	FLOATING Mounting Fits Loose	FLOATING Mounting Fits Loose
mm/in.	mm/in.		mm/in.		mm/in.		mm/in.		mm/in.		mm/in.		mm/in.		mm/in.	
0.3	**13.2**	**13.0**	**19.6**	**19.3**	**10.000**	**9.995**	**0.005**	**0.004**	**22.005**	**22.000**	**0.000**	**0.010**	**22.010**	**22.005**	**0.015**	**0.005**
0.012	0.52	0.51	0.77	0.76	0.39370	0.39350	0.00020	0.00015	0.86630	0.86610	0.00000	0.00040	0.86650	0.86630	0.00060	0.00020
0.3	**15.2**	**14.9**	**21.6**	**21.3**	**12.000**	**11.995**	**0.005**	**0.004**	**24.005**	**24.000**	**0.000**	**0.010**	**24.010**	**24.005**	**0.015**	**0.005**
0.012	0.60	0.59	0.85	0.84	0.47240	0.47220	0.00020	0.00015	0.94510	0.94490	0.00000	0.00040	0.94530	0.94510	0.00060	0.00020
0.3	**18.3**	**18.1**	**25.5**	**25.2**	**15.000**	**14.995**	**0.005**	**0.004**	**28.005**	**28.000**	**0.000**	**0.010**	**28.010**	**28.005**	**0.015**	**0.005**
0.012	0.72	0.71	1.00	0.99	0.59060	0.59040	0.00020	0.00015	1.02380	1.02360	0.00000	0.00040	1.02400	1.02380	0.00060	0.00020
0.3	**20.3**	**20.0**	**27.5**	**27.2**	**17.000**	**16.995**	**0.005**	**0.004**	**30.005**	**30.000**	**0.000**	**0.010**	**30.010**	**30.005**	**0.015**	**0.005**
0.012	0.80	0.79	1.08	1.07	0.66930	0.66910	0.00020	0.00015	1.18130	1.18110	0.00000	0.00040	1.18150	1.18130	0.00060	0.00020
0.3	**24.1**	**23.9**	**33.7**	**33.4**	**20.000**	**19.995**	**0.005**	**0.005**	**37.006**	**37.000**	**0.000**	**0.012**	**37.010**	**37.005**	**0.016**	**0.005**
0.012	0.95	0.94	1.33	1.32	0.78740	0.78720	0.00020	0.00020	1.45700	1.45670	0.00000	0.00050	1.45710	1.45690	0.00070	0.00020
0.3	**29.1**	**28.9**	**38.7**	**38.4**	**25.000**	**24.995**	**0.005**	**0.005**	**42.006**	**42.000**	**0.000**	**0.012**	**42.010**	**42.005**	**0.016**	**0.005**
0.012	1.15	1.14	1.52	1.51	0.98430	0.98410	0.00020	0.00020	1.65380	1.65350	0.00000	0.00050	1.65390	1.65370	0.00070	0.00020
0.3	**34.1**	**33.9**	**43.7**	**43.4**	**30.000**	**29.995**	**0.005**	**0.005**	**47.006**	**47.000**	**0.000**	**0.012**	**47.012**	**47.007**	**0.018**	**0.007**
0.012	1.34	1.33	1.72	1.71	1.18110	1.18090	0.00020	0.00020	1.85070	1.85040	0.00000	0.00050	1.85090	1.85070	0.00080	0.00030
0.6	**40.0**	**39.5**	**51.1**	**50.6**	**35.000**	**34.995**	**0.005**	**0.006**	**55.008**	**55.000**	**0.000**	**0.015**	**55.012**	**55.007**	**0.019**	**0.007**
0.024	1.57	1.55	2.01	1.99	1.37800	1.37780	0.00020	0.00025	2.16570	2.16540	0.00000	0.00060	2.16590	2.16570	0.00080	0.00030
0.6	**45.1**	**44.6**	**57.9**	**57.4**	**40.000**	**39.995**	**0.005**	**0.006**	**62.008**	**62.000**	**0.000**	**0.015**	**62.012**	**62.007**	**0.019**	**0.007**
0.024	1.78	1.76	2.28	2.26	1.57480	1.57460	0.00020	0.00025	2.44120	2.44090	0.00000	0.00060	2.44140	2.44120	0.00080	0.00030
0.6	**50.7**	**50.1**	**63.4**	**62.9**	**45.000**	**44.995**	**0.005**	**0.006**	**68.008**	**68.000**	**0.000**	**0.015**	**68.012**	**68.007**	**0.019**	**0.007**
0.024	1.99	1.97	2.50	2.48	1.77170	1.77150	0.00020	0.00025	2.67750	2.67720	0.00000	0.00060	2.67770	2.67750	0.00080	0.00030
0.6	**55.1**	**54.6**	**67.9**	**67.4**	**50.000**	**49.995**	**0.005**	**0.006**	**72.008**	**72.000**	**0.000**	**0.015**	**72.011**	**72.007**	**0.019**	**0.007**
0.024	2.17	2.15	2.67	2.65	1.96850	1.96830	0.00020	0.00025	2.83490	2.83460	0.00000	0.00060	2.83510	2.83490	0.00080	0.00030
1.0	**60.9**	**60.4**	**75.2**	**74.7**	**55.000**	**54.995**	**0.005**	**0.007**	**80.008**	**80.000**	**0.000**	**0.015**	**80.012**	**80.008**	**0.020**	**0.008**
0.039	2.40	2.38	2.96	2.94	2.16540	2.16520	0.00020	0.00030	3.14990	3.14960	0.00000	0.00060	3.15010	3.14990	0.00080	0.00030
1.0	**65.8**	**65.3**	**80.2**	**79.7**	**60.000**	**59.995**	**0.005**	**0.007**	**85.008**	**85.000**	**0.000**	**0.016**	**85.016**	**85.009**	**0.024**	**0.009**
0.039	2.59	2.57	3.16	3.14	2.36220	2.36200	0.00020	0.00030	3.34680	3.34650	0.00000	0.00060	3.34710	3.34680	0.00090	0.00030
1.0	**70.8**	**70.3**	**85.2**	**84.7**	**65.000**	**64.995**	**0.005**	**0.007**	**90.008**	**90.000**	**0.000**	**0.016**	**90.015**	**90.007**	**0.023**	**0.007**
0.039	2.79	2.77	3.35	3.33	2.55910	2.55890	0.00020	0.00030	3.54360	3.54330	0.00000	0.00060	3.54390	3.54360	0.00090	0.00030
1.0	**76.8**	**76.3**	**94.3**	**93.8**	**70.000**	**69.995**	**0.005**	**0.007**	**100.008**	**100.000**	**0.000**	**0.016**	**100.018**	**100.010**	**0.025**	**0.010**
0.039	3.02	3.00	3.71	3.69	2.75590	2.75570	0.00020	0.00030	3.93730	3.93700	0.00000	0.00060	3.93770	3.93740	0.00100	0.00040
1.0	**81.9**	**81.1**	**99.4**	**98.6**	**75.005**	**74.995**	**0.005**	**0.012**	**105.008**	**105.000**	**0.000**	**0.016**	**105.019**	**105.011**	**0.026**	**0.011**
0.039	3.22	3.19	3.91	3.88	2.95300	2.95260	0.00020	0.00050	4.13420	4.13390	0.00000	0.00060	4.13460	4.13430	0.00100	0.00040
1.0	**86.9**	**86.1**	**104.4**	**103.6**	**80.005**	**79.995**	**0.005**	**0.012**	**110.008**	**110.000**	**0.000**	**0.016**	**110.018**	**110.010**	**0.025**	**0.010**
0.039	3.42	3.39	4.11	4.08	3.14980	3.14940	0.00020	0.00050	4.33100	4.33070	0.00000	0.00060	4.33140	4.33110	0.00100	0.00040
1.0	**93.6**	**92.8**	**112.7**	**111.9**	**85.005**	**84.995**	**0.005**	**0.012**	**120.008**	**120.000**	**0.000**	**0.016**	**120.018**	**120.010**	**0.025**	**0.010**
0.039	3.69	3.66	4.44	4.41	3.34670	3.34630	0.00020	0.00050	4.72470	4.72440	0.00000	0.00060	4.72510	4.72480	0.00100	0.00040
1.0	**97.8**	**97.0**	**118.5**	**117.7**	**90.005**	**89.995**	**0.005**	**0.013**	**125.008**	**125.000**	**0.000**	**0.017**	**125.021**	**125.011**	**0.030**	**0.011**
0.039	3.85	3.82	4.66	4.63	3.54350	3.54310	0.00020	0.00050	4.92160	4.92130	0.00000	0.00070	4.92210	4.92170	0.00120	0.00040

Continued on next page.

ULTRA-LIGHT ISO 19 SERIES
2(3)MM9300WI – *continued*

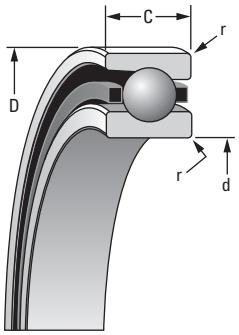

SUPER PRECISION MM

Running accuracy and performance meet ABEC 9 (ISO P2) levels.
Other features conform to ABEC 7 (ISO P4) requirements.

Bearing Number 2MM or 3MM	d Bore	D O.D.	C Width(1)	Ball Qty. x Dia.	Bearing Wt.	(2MM) LOAD RATINGS						(3MM) LOAD RATINGS					
						Steel Ball			Ceramic Ball			Steel Ball			Ceramic Ball		
						C_o Static	C_e Dynamic	Speed Rating(Ng)	C_o Static	C_e Dynamic	Speed Rating(Ng)	C_o Static	C_e Dynamic	Speed Rating(Ng)	C_o Static	C_e Dynamic	Speed Rating(Ng)
	mm/in.			**mm**/in.	**kg**/lbs.	**N**/lbs.		RPM	**N**/lbs.		RPM	**N**/lbs.		RPM	**N**/lbs.		RPM
9319WI	**95**	**130**	**18**	**28 x 10.3**	**0.600**	**47400**	**46800**	**9800**	**42200**	**46800**	**11760**	**44200**	**44100**	**8800**	**39300**	**44100**	**10500**
	3.7402	5.1181	0.7087	28 x 13/32	1.33	10700	10500	9800	9480	10500	11760	9930	9910	8800	8840	9910	10560
9320WI	**100**	**140**	**20**	**29 x 10.3**	**0.850**	**48800**	**47200**	**9100**	**43400**	**47200**	**10920**	**45500**	**44400**	**8200**	**40500**	**44400**	**9800**
	3.9370	5.5118	0.7874	29 x 13/32	1.87	11000	10600	9100	9760	10600	10920	10200	9900	8200	9100	9900	9840
9322WI	**110**	**150**	**20**	**31 x 10.3**	**0.920**	**51700**	**48400**	**8400**	**46000**	**48400**	**10080**	**48200**	**45600**	**7600**	**42900**	**45600**	**9100**
	4.3307	5.9055	0.7874	31 x 13/32	2.02	11600	10900	8400	10300	10900	10080	10800	10200	7600	9650	10200	9120
9324WI	**120**	**165**	**22**	**30 x 11.9**	**1.240**	**66900**	**62000**	**7700**	**59500**	**62000**	**9240**	**62300**	**58300**	**6900**	**55500**	**58300**	**8300**
	4.7244	6.4961	0.8661	30 x 15/32	2.74	15000	13900	7700	13400	13900	9240	14000	13100	6900	12500	13100	8280
9326WI	**130**	**180**	**24**	**30 x 13.5**	**1.650**	**86400**	**78500**	**7100**	**76900**	**78500**	**8520**	**80500**	**73900**	**6400**	**71700**	**73900**	**7700**
	5.1181	7.0866	0.9449	30 x 17/32	3.63	19400	17600	7100	17300	17600	8520	18100	16600	6400	16100	16600	7680
9328WI	**140**	**190**	**24**	**32 x 13.5**	**1.750**	**91600**	**80700**	**6600**	**81500**	**80700**	**7920**	**85400**	**76000**	**5900**	**76000**	**76000**	**7000**
	5.5118	7.4803	0.9449	32 x 17/32	3.85	20600	18200	6600	18300	18200	7920	19200	17100	5900	17100	17100	7080
9330WI	**150**	**210**	**28**	**27 x 17.5**	**2.610**	**130800**	**119200**	**6200**	**116400**	**119200**	**7440**	**122700**	**112400**	**5600**	**109200**	**112400**	**6700**
	5.9055	8.2677	1.1024	27 x 11/16	5.75	29400	26800	6200	26200	26800	7440	27600	25300	5600	24500	25300	6720
9332WI	**160**	**220**	**28**	**27 x 18.3**	**2.750**	**143100**	**128900**	**5800**	**127300**	**128900**	**6960**	**134100**	**121600**	**5800**	**119300**	**121600**	**6690**
	6.2992	8.6614	1.1024	27 x 23/32	6.06	32200	29000	5800	28600	29000	6960	30100	27300	5800	26800	27300	6960
9334WI	**170**	**230**	**28**	**29 x 18.3**	**2.880**	**153600**	**133700**	**5500**	**136700**	**133700**	**6600**	**143200**	**126000**	**5000**	**127500**	**126000**	**6000**
	6.6929	9.0551	1.1024	29 x 23/32	6.34	34500	30100	5500	30700	30100	6600	32200	28300	5000	28700	28300	6000
9340WI	**200**	**280**	**38**	**27 x 23.8**	**6.290**	**243300**	**209400**	**4600**	**216300**	**209400**	**5520**	**228800**	**197500**	**4100**	**203600**	**197700**	**4900**
	7.8740	11.0236	1.4961	27 x 15/16	13.87	54600	47100	4600	48600	47100	5520	51400	44400	4100	45800	44400	4920

(Ng) For a single, grease-lubricated, spring-preloaded bearing. This value to be used in permissible operating speed (Sp) calculation.
(1) Width tolerance of preloaded bearing set +0.000/-0.254 mm (+0.0000/-0.0100 in.).
(2) ABMA STD 20 (r_{as} max).

WI CONSTRUCTION

- Incorporates low shoulder on non-thrust side of outer rings.
- Balls separated by one-piece cage piloted against a ground thrust shoulder land of the outer ring.

r Rad.(2)	Suggested Shoulder Diameters				Shaft Diameter		Mounting Fits		FIXED				FLOATING			
	Shaft		Housing						Housing Bore (Stationary)		Mounting Fits		Housing Bore (Stationary)		Mounting Fits	
	Max.	Min.	Max.	Min.	Max.	Min.	Loose	Tight	Max.	Min.	Tight	Loose	Max.	Min.	Loose	Loose
mm/in.	mm/in.		mm/in.		mm/in.		mm/in.		mm/in.		mm/in.		mm/in.		mm/in.	
1.0	**102.8**	**102.0**	**123.5**	**122.7**	**95.005**	**94.995**	**0.005**	**0.013**	**130.009**	**130.000**	**0.000**	**0.018**	**130.020**	**130.010**	**0.029**	**0.010**
0.039	4.05	4.02	4.86	4.83	3.74040	3.74000	0.00020	0.00050	5.11850	5.11810	0.00000	0.00070	5.11890	5.11850	0.00110	0.00040
1.0	**110.3**	**109.5**	**131.0**	**130.2**	**100.005**	**99.995**	**0.005**	**0.013**	**140.009**	**140.000**	**0.000**	**0.018**	**140.020**	**140.010**	**0.029**	**0.010**
0.039	4.34	4.31	5.16	5.13	3.93720	3.93680	0.00020	0.00050	5.51220	5.51180	0.00000	0.00070	5.51260	5.51220	0.00110	0.00040
1.0	**120.3**	**119.5**	**141.0**	**140.2**	**110.005**	**109.995**	**0.005**	**0.013**	**150.009**	**150.000**	**0.000**	**0.018**	**150.023**	**150.012**	**0.032**	**0.012**
0.039	4.74	4.71	5.55	5.52	4.33090	4.33050	0.00020	0.00050	5.90590	5.90550	0.00000	0.00070	5.90640	5.90600	0.00120	0.00050
1.0	**131.2**	**130.4**	**155.0**	**154.3**	**120.005**	**119.995**	**0.005**	**0.013**	**165.010**	**165.000**	**0.000**	**0.020**	**165.022**	**165.012**	**0.032**	**0.012**
0.039	5.16	5.13	6.10	6.07	4.72460	4.72420	0.00020	0.00050	6.49650	6.49610	0.00000	0.00080	6.49700	6.49660	0.00130	0.00050
1.5	**142.1**	**141.4**	**169.2**	**168.4**	**130.005**	**129.995**	**0.005**	**0.015**	**180.010**	**180.000**	**0.000**	**0.020**	**180.022**	**180.012**	**0.032**	**0.012**
0.059	5.60	5.57	6.66	6.63	5.11830	5.11790	0.00020	0.00060	7.08700	7.08660	0.00000	0.00080	7.08750	7.08710	0.00130	0.00050
1.5	**152.1**	**151.4**	**179.2**	**178.4**	**140.005**	**139.995**	**0.005**	**0.015**	**190.010**	**190.000**	**0.000**	**0.021**	**190.022**	**190.012**	**0.033**	**0.012**
0.059	5.99	5.96	7.05	7.02	5.51200	5.51160	0.00020	0.00060	7.48070	7.48030	0.00000	0.00080	7.48120	7.48080	0.00140	0.00050
2.0	**163.1**	**162.4**	**198.2**	**197.4**	**150.005**	**149.995**	**0.005**	**0.015**	**210.011**	**210.000**	**0.000**	**0.022**	**210.025**	**210.015**	**0.036**	**0.015**
0.079	6.42	6.39	7.80	7.77	5.90570	5.90530	0.00020	0.00060	8.26820	8.26770	0.00000	0.00090	8.26870	8.26830	0.00150	0.00060
2.0	**173.2**	**172.4**	**208.2**	**207.4**	**160.005**	**159.995**	**0.005**	**0.015**	**220.011**	**220.000**	**0.000**	**0.022**	**220.025**	**220.015**	**0.036**	**0.015**
0.079	6.82	6.79	8.20	8.17	6.29940	6.29900	0.00020	0.00060	8.66190	8.66140	0.00000	0.00090	8.66240	8.66200	0.00150	0.00060
2.0	**185.4**	**184.7**	**216.1**	**215.4**	**170.005**	**169.995**	**0.005**	**0.015**	**230.011**	**230.000**	**0.000**	**0.022**	**230.025**	**230.015**	**0.036**	**0.015**
0.079	7.30	7.27	8.51	8.48	6.69310	6.69270	0.00020	0.00060	9.05560	9.05510	0.00000	0.00090	9.05610	9.05570	0.00150	0.00060
2.1	**216.8**	**216.0**	**264.5**	**263.7**	**200.008**	**199.993**	**0.007**	**0.019**	**280.013**	**280.000**	**0.000**	**0.026**	**280.031**	**280.018**	**0.044**	**0.018**
0.083	8.54	8.51	10.41	10.38	7.87430	7.87370	0.00030	0.00080	11.02410	11.02360	0.00000	0.00100	11.02490	11.02440	0.00180	0.00080

ULTRA-LIGHT 2MM9300WI ISO 19 SERIES

DUPLEX PERFORMANCE DATA

MOUNTING ARRANGEMENTS

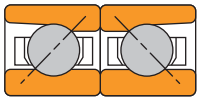

Back-to-Back DB

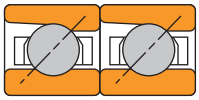

Tandem DT

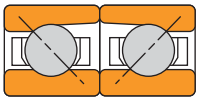

Face-to-Face DF

Bearing Number	Preload DUX X-light	Preload DUL Light	Preload DUM Med.	Preload DUH Heavy	Axial Stiffness[1] X-light	Axial Stiffness[1] Light	Axial Stiffness[1] Med.	Axial Stiffness[1] Heavy	Radial Stiffness[1] X-light	Radial Stiffness[1] Light	Radial Stiffness[1] Med.	Radial Stiffness[1] Heavy	Spacer Offsets[1] X-light to Light	Spacer Offsets[1] Light to Med.	Spacer Offsets[1] Med. to Heavy
	N lbs.				N/µm 10^6 lbs./in.				N/µm 10^6 lbs./in.				µm in.		
2MM9300WI	—	15	25	55	14.17	16.44	21.69	29.21	—	73.11	92.17	115.43	1.30	2.80	4.10
	—	3	6	12	0.081	0.094	0.124	0.167	—	0.418	0.527	0.660	0.00005	0.00011	0.00016
2MM9301WI	—	15	25	55	14.87	17.32	22.74	30.61	—	76.96	97.42	121.91	1.00	2.50	4.10
	—	3	6	12	0.085	0.099	0.130	0.175	—	0.440	0.557	0.697	0.00004	0.00010	0.00016
2MM9302WI	—	20	45	90	16.44	20.11	26.76	36.55	—	98.12	123.30	153.91	2.00	3.80	5.60
	—	5	10	20	0.094	0.115	0.153	0.209	—	0.561	0.705	0.880	0.00008	0.00015	0.00022
2MM9303WI	—	20	65	130	17.84	21.86	34.63	47.75	—	107.91	154.96	192.74	1.80	6.40	6.40
	—	5	15	30	0.102	0.125	0.198	0.273	—	0.617	0.886	1.102	0.00007	0.00025	0.00025
2MM9304WI	—	45	90	160	18.19	26.41	35.68	46.17	—	148.32	186.09	222.47	4.80	5.80	6.60
	—	10	20	35	0.104	0.151	0.204	0.264	—	0.848	1.064	1.272	0.00019	0.00023	0.00026
2MM9305WI	—	45	110	180	20.64	29.56	43.90	54.57	—	168.78	228.24	265.15	4.30	7.40	5.30
	—	10	25	40	0.118	0.169	0.251	0.312	—	0.965	1.305	1.516	0.00017	0.00029	0.00021
2MM9306WI	—	45	110	180	22.04	31.48	46.52	57.89	—	181.55	246.08	286.14	4.10	6.90	5.10
	—	10	25	40	0.126	0.180	0.266	0.331	—	1.038	1.407	1.636	0.00016	0.00027	0.00020
2MM9307WI	—	45	110	240	25.36	33.06	48.27	68.74	—	189.42	258.68	333.53	3.00	6.60	9.10
	—	10	25	55	0.145	0.189	0.276	0.393	—	1.083	1.479	1.907	0.00012	0.00026	0.00036
2MM9308WI	30	65	160	310	27.28	39.00	55.44	76.08	146.16	229.12	304.68	380.76	4.80	7.60	9.40
	5	15	35	70	0.156	0.223	0.317	0.435	0.835	1.310	1.742	2.177	0.00019	0.00030	0.00037
2MM9309WI	30	90	180	360	36.53	46.35	62.26	85.35	208.32	270.22	340.18	425.53	5.80	6.60	9.70
	10	20	40	80	0.209	0.265	0.356	0.488	1.190	1.545	1.945	2.433	0.00023	0.00026	0.00038
2MM9310WI	40	90	200	400	34.28	48.97	68.91	94.80	219.83	286.84	376.21	469.96	5.10	7.60	9.70
	10	20	45	90	0.196	0.280	0.394	0.542	1.255	1.640	2.151	2.687	0.0002	0.00030	0.00038
2MM9311WI	40	110	240	490	38.83	55.27	76.96	105.46	222.62	320.24	416.96	521.03	5.60	8.10	10.70
	10	25	55	110	0.222	0.316	0.440	0.603	1.271	1.831	2.384	2.979	0.00022	0.00032	0.00042
2MM9312WI	40	110	240	510	43.73	58.24	80.63	112.64	233.31	338.08	441.10	559.51	4.60	7.60	10.90
	10	25	55	115	0.250	0.333	0.461	0.644	1.332	1.933	2.522	3.199	0.00018	0.00030	0.00043
2MM9313WI	70	130	270	530	50.02	65.59	87.62	119.63	290.72	378.83	478.00	597.63	4.60	6.90	10.40
	15	30	60	120	0.286	0.375	0.501	0.684	1.660	2.166	2.733	3.417	0.00018	0.00027	0.00041
2MM9314WI	70	180	360	710	49.67	69.44	93.05	127.50	283.26	416.61	525.40	656.75	6.90	8.60	13.00
	15	40	80	160	0.284	0.397	0.532	0.729	1.618	2.382	3.004	3.755	0.00027	0.00034	0.00051
2MM9315WI	90	180	380	760	53.17	71.18	97.77	134.15	328.58	427.81	550.94	688.58	6.10	9.40	13.00
	20	40	85	170	0.304	0.407	0.559	0.767	1.876	2.446	3.150	3.937	0.00024	0.00037	0.00051
2MM9316WI	90	200	400	800	57.89	78.18	104.59	143.59	340.07	468.73	591.16	738.95	6.40	8.60	13.00
	20	45	90	180	0.331	0.447	0.598	0.821	1.942	2.680	3.380	4.225	0.00042	0.00034	0.00051
2MM9317WI	110	270	530	1070	61.39	85.88	115.78	160.03	373.23	521.20	655.00	817.48	8.10	10.70	15.50
	25	60	120	240	0.351	0.491	0.662	0.915	2.131	2.980	3.745	4.674	0.00032	0.00042	0.00061
2MM9318WI	110	270	530	1070	65.06	90.25	120.51	164.93	379.27	528.37	666.72	833.75	7.90	10.20	15.00
	25	60	120	240	0.372	0.516	0.689	0.943	2.166	3.021	3.812	4.767	0.00031	0.00040	0.00059
2MM9319WI	130	290	580	1160	70.13	97.42	130.13	178.05	428.12	570.17	719.36	899.51	7.90	10.20	15.00
	30	65	130	260	0.401	0.557	0.744	1.018	2.445	3.260	4.113	5.143	0.00031	0.00040	0.00059
2MM9320WI	130	360	710	1470	75.38	108.26	145.52	203.23	436.73	626.49	788.27	993.43	9.10	11.20	17.30
	30	80	160	330	0.431	0.619	0.832	1.162	2.494	3.582	4.507	5.680	0.00036	0.00044	0.00068
2MM9322WI	180	400	800	1600	88.15	125.75	169.48	234.19	511.47	681.41	856.84	1068.81	9.10	11.40	17.00
	40	90	180	360	0.504	0.719	0.969	1.339	2.921	3.896	4.899	6.111	0.00036	0.00045	0.00067
2MM9324WI	200	490	980	1960	91.81	130.59	175.36	241.16	537.94	752.94	947.08	1181.97	10.70	13.20	19.30
	45	110	220	440	0.524	0.746	1.001	1.377	3.072	4.305	5.415	6.758	0.00042	0.00052	0.00076
2MM9326WI	220	620	1220	2450	106.69	150.06	201.48	280.36	577.30	846.52	1058.84	1322.07	13.00	14.20	21.30
	50	140	275	550	0.610	0.858	1.152	1.603	3.297	4.840	6.054	7.559	0.00051	0.00056	0.00084
2MM9328WI	270	620	1250	2560	105.11	159.68	214.43	297.33	648.08	883.59	1112.54	1401.30	11.20	14.20	21.80
	60	140	280	575	0.601	0.913	1.226	1.700	3.701	5.052	6.361	8.012	0.00044	0.00056	0.00086
2MM9330WI	290	850	1690	3450	107.62	163.29	218.65	302.49	626.95	954.95	1203.31	1512.71	16.80	18.00	27.40
	65	190	380	775	0.615	0.932	1.249	1.727	3.580	5.460	6.880	8.649	0.00066	0.00071	0.00108
2MM9332WI	489	980	1980	3960	131.90	173.60	234.10	322.10	791.24	1013.50	1281.00	1600.00	12.70	19.80	28.45
	110	220	445	890	0.753	0.991	1.337	1.839	4.518	5.787	7.315	9.135	0.0005	0.00078	0.00112
2MM9334WI	360	1020	2050	4000	122.06	184.37	247.29	336.09	720.86	1085.95	1367.72	1696.36	17.50	19.30	27.20
	80	230	460	900	0.697	1.053	1.412	1.919	4.116	6.209	7.820	9.699	0.00069	0.00076	0.00107
2MM9340WI	778	1560	3110	6230	164.93	217.05	291.03	399.82	1006.20	1296.71	1634.27	2042.83	16.30	24.40	36.10
	175	350	700	1400	0.943	1.241	1.664	2.286	5.746	7.414	9.344	11.680	0.00064	0.00096	0.00142

[1] For DB or DF arrangements only. For other mounting arrangements, contact your Timken representative.

ULTRA-LIGHT 3MM9300WI ISO 19 SERIES

DUPLEX PERFORMANCE DATA

MOUNTING ARRANGEMENTS

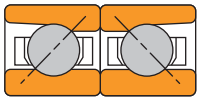

Back-to-Back DB

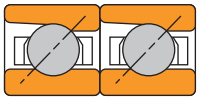

Tandem DT

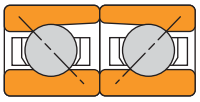

Face-to-Face DF

Bearing Number	Preload DUX X-light	Preload DUL Light	Preload DUM Med.	Preload DUH Heavy	Axial Stiffness[1] X-light	Axial Stiffness[1] Light	Axial Stiffness[1] Med.	Axial Stiffness[1] Heavy	Radial Stiffness[1] X-light	Radial Stiffness[1] Light	Radial Stiffness[1] Med.	Radial Stiffness[1] Heavy	Spacer Offsets[1] X-light to Light	Spacer Offsets[1] Light to Med.	Spacer Offsets[1] Med. to Heavy
	N / lbs.				N/µm / 10^6 lbs./in.				N/µm / 10^6 lbs./in.				µm / in.		
3MM9300WI	—	20	45	90	—	32.70	42.30	55.30	—	70.50	88.70	110.90	—	2.54	3.81
	—	5	10	20	—	0.187	0.242	0.316	—	0.403	0.507	0.634	—	0.00010	0.00015
3MM9301WI	—	20	45	90	—	34.50	44.50	58.140	—	74.40	93.70	117.30	—	2.030	3.81
	—	5	10	20	—	0.197	0.254	0.332	—	0.425	0.535	0.670	—	0.00008	0.00015
3MM9302WI	—	45	90	160	—	46.40	60.20	75.20	—	96.90	121.60	145.20	—	3.30	4.06
	—	10	20	35	—	0.265	0.344	0.430	—	0.554	0.695	0.830	—	0.00013	0.00016
3MM9303WI	—	45	130	240	—	50.70	77.00	98.60	—	106.50	152.50	184.50	—	5.59	5.08
	—	10	30	55	—	0.290	0.440	0.564	—	0.609	0.872	1.055	—	0.00022	0.00020
3MM9304WI	—	45	155	265	—	51.80	82.70	102.40	—	112.40	170.60	202.60	—	6.60	5.08
	—	10	35	60	—	0.296	0.472	0.585	—	0.642	0.974	1.157	—	0.00026	0.00020
3MM9305WI	—	65	180	310	—	67.90	97.90	122.40	—	146.70	202.90	242.80	—	5.33	4.83
	—	15	40	70	—	0.388	0.560	0.700	—	0.839	1.160	1.388	—	0.00021	0.00019
3MM9306WI	—	70	180	310	—	72.90	105.30	130.70	—	157.80	218.80	262.00	—	5.08	4.57
	—	15	40	70	—	0.417	0.602	0.747	—	0.902	1.251	1.498	—	0.00020	0.00018
3MM9307WI	45	90	240	420	67.10	84.60	123.30	152.50	141.29	182.80	255.70	304.90	2.32	5.84	5.08
	10	20	55	95	0.383	0.484	0.705	0.872	0.807	1.045	1.462	1.743	0.00009	0.00023	0.00020
3MM9308WI	65	130	310	560	81.41	101.80	139.40	174.90	169.34	218.80	289.80	349.30	2.87	5.84	6.10
	15	30	70	125	0.465	0.582	0.797	1.000	0.967	1.251	1.657	1.997	0.00011	0.00023	0.00024
3MM9309WI	90	160	360	670	96.15	114.70	156.20	199.70	200.56	246.30	323.90	396.30	2.49	5.84	6.86
	20	35	80	150	0.549	0.656	0.893	1.142	1.145	1.408	1.852	2.266	0.00010	0.00023	0.00027
3MM9310WI	90	160	400	670	101.98	121.50	174.60	210.90	212.51	261.50	357.80	419.60	2.35	6.60	5.59
	20	35	90	150	0.582	0.695	0.998	1.206	1.214	1.495	2.046	2.399	0.00009	0.00026	0.00022
3MM9311WI	90	200	490	850	105.30	138.70	193.80	239.80	218.94	294.50	396.30	472.60	3.60	6.86	6.60
	20	45	110	190	0.601	0.793	1.108	1.371	1.250	1.684	2.266	2.702	0.00014	0.00027	0.00026
3MM9312WI	90	200	510	890	111.17	146.70	207.60	257.50	230.00	311.10	425.40	508.40	3.41	6.86	6.60
	20	45	115	200	0.635	0.839	1.187	1.472	1.313	1.779	2.432	2.907	0.00013	0.00027	0.00026
3MM9313WI	110	220	530	1070	126.38	159.70	221.20	290.00	263.42	339.30	454.40	599.20	3.08	6.60	8.38
	25	50	120	240	0.722	0.913	1.265	1.658	1.504	1.940	2.598	3.426	0.00012	0.00026	0.00033
3MM9314WI	130	290	710	1290	131.95	171.60	239.40	301.70	275.56	366.40	494.80	599.20	4.06	8.13	8.64
	30	65	160	290	0.753	0.981	1.369	1.725	1.574	2.095	2.829	3.426	0.00016	0.00032	0.00034
3MM9315WI	155	310	760	1330	143.02	180.80	251.30	313.40	300.14	385.70	518.80	622.80	3.81	8.13	8.13
	35	70	170	300	0.817	1.034	1.437	1.792	1.714	2.205	2.966	3.561	0.00015	0.00032	0.00032
3MM9316WI	180	330	800	1380	156.07	194.80	269.30	332.70	332.81	415.70	556.70	663.40	3.53	7.87	7.62
	40	75	180	310	0.891	1.114	1.540	1.902	1.901	2.377	3.183	3.793	0.00014	0.00031	0.00030
3MM9317WI	220	470	1160	2000	167.43	235.80	329.90	408.00	362.86	504.10	682.10	814.20	4.64	9.65	9.14
	50	100	240	420	0.956	1.229	1.705	2.126	2.072	2.642	3.528	4.221	0.00018	0.00038	0.00038
3MM9318WI	220	400	930	1670	166.56	212.70	290.50	363.10	353.59	455.30	605.20	730.20	4.20	8.38	8.89
	50	90	210	375	0.951	1.216	1.661	2.076	2.019	2.603	3.460	4.175	0.00017	0.00033	0.00035
3MM9319WI	220	470	1160	2000	181.36	235.80	329.90	408.00	385.62	504.10	682.10	814.20	4.67	9.65	9.14
	50	105	260	450	1.036	1.348	1.886	2.333	2.202	2.882	3.900	4.655	0.00018	0.00038	0.00036
3MM9320WI	310	600	1470	2560	208.89	264.30	369.20	459.80	447.55	562.00	754.70	901.40	4.87	10.92	10.41
	70	135	330	575	1.193	1.511	2.111	2.629	2.556	3.213	4.315	5.154	0.00019	0.00043	0.00041
3MM9322WI	330	670	1600	2780	223.48	286.50	397.90	494.80	478.83	608.70	812.10	968.60	5.21	10.92	10.41
	75	150	360	625	1.276	1.638	2.275	2.829	2.734	3.480	4.643	5.538	0.00021	0.00043	0.00041
3MM9324WI	400	800	1960	3450	246.50	311.70	421.30	543.90	517.55	663.70	891.80	1069.20	5.68	12.19	12.19
	90	180	440	775	1.408	1.782	2.409	3.110	2.955	3.795	5.099	6.113	0.00022	0.00048	0.00048
3MM9326WI	510	1020	2450	4340	274.75	352.60	488.30	611.50	589.82	751.20	1002.20	1198.90	6.50	13.46	13.72
	115	230	550	975	1.569	2.016	2.792	3.496	3.368	4.295	5.730	6.855	0.00026	0.00053	0.00054
3MM9328WI	530	1070	2560	4450	290.81	373.10	516.80	642.10	624.06	795.40	1062.20	1268.50	6.41	13.21	13.21
	120	240	575	1000	1.661	2.130	2.950	3.660	3.564	4.548	6.073	7.253	0.00025	0.00052	0.00052
3MM9330WI	710	1450	3450	6000	312.13	401.10	551.10	688.20	665.61	854.60	1144.00	1363.00	8.19	16.76	16.26
	160	325	775	1350	1.782	2.296	3.172	3.939	3.801	4.886	6.519	7.793	0.00032	0.00066	0.00064
3MM9332WI	800	1580	3950	6940	328.01	418.20	588.90	734.10	705.23	876.50	1215.90	1455.70	8.32	18.80	17.78
	180	355	890	1560	1.873	2.388	3.363	4.192	4.027	5.119	6.943	8.312	0.00033	0.00074	0.00070
3MM9334WI	800	1600	4000	6940	329.63	440.00	618.20	760.40	704.23	944.30	1280.70	1519.00	9.20	18.29	16.26
	180	360	900	1560	1.882	2.512	3.530	4.342	4.021	5.392	7.313	8.674	0.00036	0.00072	0.00064
3MM9340WI	1250	3110	6230	12460	415.57	580.10	751.00	985.00	888.10	1222.00	1537.00	1920.40	14.97	18.80	28.70
	280	700	1400	2800	2.373	3.317	4.294	5.632	5.071	6.987	8.788	10.980	0.00059	0.00074	0.00113

[1] For DB or DF arrangements only. For other mounting arrangements, contact your Timken representative.

C

ULTRA-LIGHT 2MM9300WI ISO 19 SERIES

SPEED CAPABILITY DATA

Bearing Number	Grease Capacity(1)				Operating Speeds(4) (DB Mounting)(5)					
	Low Speed(2)		High Speed(3)		Grease			Oil		
	25%	40%	15%	20%	DUL	DUM	DUH	DUL	DUM	DUH
	grams		grams		RPM			RPM		
2MM9300WI	0.09	0.15	0.06	0.08	62000	46500	31000	105400	79100	52700
2MM9301WI	0.11	0.17	0.07	0.10	53800	40300	26900	91500	68500	45700
2MM9302WI	0.17	0.28	0.12	0.15	44500	33400	22200	75700	56800	37700
2MM9303WI	0.19	0.30	0.12	0.16	40100	30100	20000	68200	51200	34000
2MM9304WI	0.40	0.60	0.25	0.34	33700	25300	16800	57300	43000	28600
2MM9305WI	0.40	0.70	0.29	0.39	27800	20900	13900	47300	35500	23600
2MM9306WI	0.50	0.80	0.34	0.45	23800	17800	11900	40500	30300	20200
2MM9307WI	0.80	1.20	0.51	0.68	20300	15200	10200	34500	25800	17300
2MM9308WI	1.20	1.90	0.80	1.07	17900	13400	9000	30400	22800	15300
2MM9309WI	1.30	2.10	0.88	1.18	16000	12000	8000	27200	20400	13600
2MM9310WI	1.40	2.30	0.95	1.27	14600	11000	7300	24800	18700	12400
2MM9311WI	1.90	3.00	1.30	1.70	13300	10000	6600	22600	17000	11200
2MM9312WI	2.00	3.20	1.40	1.80	12200	9200	6100	20700	15600	10400
2MM9313WI	2.10	3.40	1.40	1.90	11400	8500	5700	19400	14500	9700
2MM9314WI	3.60	5.70	2.40	3.20	10500	7900	5200	17900	13400	8800
2MM9315WI	3.80	6.10	2.50	3.40	9800	7400	4900	16700	12600	8300
2MM9316WI	4.00	6.40	2.70	3.50	9300	7000	4600	15800	11900	7800
2MM9317WI	5.30	8.60	3.60	4.80	8600	6500	4300	14600	11100	7300
2MM9318WI	5.90	9.40	3.90	5.20	8200	6200	4100	13900	10500	7000
2MM9319WI	6.10	9.70	4.10	5.40	7800	5900	3900	13300	10000	6600
2MM9320WI	7.50	12.00	5.00	6.70	7300	5500	3600	12400	9400	6100
2MM9322WI	8.10	13.00	5.40	7.30	6700	5000	3400	11400	8500	5800
2MM9324WI	11.10	17.80	7.40	9.90	6200	4600	3100	10500	7800	5300
2MM9326WI	14.60	23.30	9.70	13.00	5700	4300	2800	9700	7300	4800
2MM9328WI	15.50	24.80	10.40	13.80	5300	4000	2600	9000	6800	4400
2MM9330WI	24.80	39.70	16.60	22.10	5000	3700	2500	8500	6300	4300
2MM9332WI	26.20	41.90	17.50	23.30	4600	3500	2300	7900	5900	3900
2MM9334WI	28.20	45.20	18.90	25.10	4400	3300	2200	7500	5600	3700
2MM9340WI	56.80	90.90	37.90	50.60	3700	2800	1800	6300	4700	3100

(1) Fill weights based on specific gravity of 0.99.
(2) Low speed <500000 dN.
(3) High speed ≥ 500000 dN.
(4) For ceramic ball complements, use 120 percent of speeds shown.
(5) For other mounting arrangement configurations, refer to the engineering section on permissible speed calculation methods.

ULTRA-LIGHT 3MM9300WI ISO 19 SERIES

SPEED CAPABILITY DATA

Bearing Number	Grease Capacity[1]				Operating Speeds[4] (DB Mounting)[5]					
	Low Speed[2]		High Speed[3]		Grease			Oil		
	25%	40%	15%	20%	DUL	DUM	DUH	DUL	DUM	DUH
	grams		grams		RPM			RPM		
3MM9300WI	0.09	0.15	0.06	0.08	55800	41850	27900	94860	71190	47430
3MM9301WI	0.11	0.17	0.07	0.10	48420	36270	24210	82350	61650	41130
3MM9302WI	0.17	0.28	0.12	0.15	40050	30060	19980	68130	51120	33930
3MM9303WI	0.19	0.30	0.12	0.16	36090	27090	18000	61380	46080	30600
3MM9304WI	0.40	0.60	0.25	0.34	30330	22770	15120	51570	38700	25740
3MM9305WI	0.40	0.70	0.29	0.39	25020	18810	12510	42570	31950	21240
3MM9306WI	0.50	0.80	0.34	0.45	21420	16020	10710	36450	27270	18180
3MM9307WI	0.80	1.20	0.51	0.68	18270	13680	9180	31050	23220	15570
3MM9308WI	1.20	1.90	0.80	1.07	16110	12060	8100	27360	20520	3770
3MM9309WI	1.30	2.10	0.88	1.18	14400	10800	7200	24480	18360	12240
3MM9310WI	1.40	2.30	0.95	1.27	13140	9900	6570	22320	16830	11160
3MM9311WI	1.90	3.00	1.30	1.70	11970	9000	5940	20340	15300	10080
3MM9312WI	2.00	3.20	1.40	1.80	10980	8280	5490	18630	14040	9360
3MM9313WI	2.10	3.40	1.40	1.90	10260	7650	5130	17460	13050	8730
3MM9314WI	3.60	5.70	2.40	3.20	9450	7110	4680	16110	12060	7920
3MM9315WI	3.80	6.10	2.50	3.40	8820	6660	4410	15030	11340	7470
3MM9316WI	4.00	6.40	2.70	3.50	8370	6300	4140	14220	10710	7020
3MM9317WI	5.30	8.60	3.60	4.80	7740	5850	3870	13140	9990	6570
3MM9318WI	5.90	9.40	3.90	5.20	7380	5580	3690	12510	9450	6300
3MM9319WI	6.10	9.70	4.10	5.40	7020	5310	3510	11970	9000	5940
3MM9320WI	7.50	12.00	5.00	6.70	6570	4950	3240	11160	8460	5490
3MM9322WI	8.10	13.00	5.40	7.30	6030	4500	3060	10260	7650	5220
3MM9324WI	11.10	17.80	7.40	9.90	5580	4140	2790	9450	7020	4770
3MM9326WI	14.60	23.30	9.70	13.00	5130	3870	2520	8730	6570	4320
3MM9328WI	15.50	24.80	10.40	13.80	4770	3600	2340	8100	6120	3960
3MM9330WI	24.80	39.70	16.60	22.10	4500	3330	2250	7650	5670	3870
3MM9332WI	26.20	41.90	17.50	23.30	4140	3150	2070	7110	5310	3510
3MM9334WI	28.20	45.20	18.90	25.10	3960	2970	1980	6750	5040	3330
3MM9340WI	56.80	90.90	37.90	50.60	3330	2520	1620	5670	4230	2790

(1) Fill weights based on specific gravity of 0.99.
(2) Low speed <500000 dN.
(3) High speed ≥ 500000 dN.
(4) For ceramic ball complements, use 120 percent of speeds shown.
(5) For other mounting arrangement configurations, refer to the engineering section on permissible speed calculation methods.

ULTRA-LIGHT ISO 19 SERIES 2(3)MMV9300HX

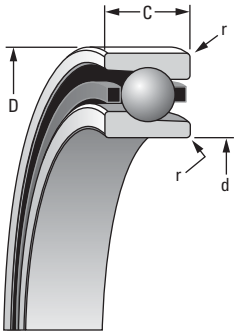

SUPER PRECISION MM

Running accuracy and performance meet ABEC 9 (ISO P2) levels.
Other features conform to ABEC 7 (ISO P4) requirements.

Bearing Number 2MM or 3MM	d Bore	D O.D.	C Width[1]	Ball Qty. x Dia.	Bearing Wt.	(2MM) LOAD RATINGS						(3MM) LOAD RATINGS					
						Steel Ball			Ceramic Ball			Steel Ball			Ceramic Ball		
						C_o Static	C_e Dynamic	Speed Rating[Ng]	C_o Static	C_e Dynamic	Speed Rating[Ng]	C_o Static	C_e Dynamic	Speed Rating[Ng]	C_o Static	C_e Dynamic	Speed Rating[Ng]
	mm/in.			mm/in.	kg/lbs.	N/lbs.		RPM	N/lbs.		RPM	N/lbs.		RPM	N/lbs.		RPM
9300HX	10	22	6	13 x 3.2	0.010	534	1468	91700	489	1468	110040	534	1379	82500	489	1379	99000
	0.3937	0.8661	0.2362	13 x 3/32	0.02	120	330	91700	110	330	110040	120	310	82500	110	310	99000
9301HX	12	24	6	14 x 3.2	0.010	610	1500	80000	540	1500	96000	580	1420	72000	520	1420	86400
	0.4724	0.9449	0.2362	14 x 3/32	0.03	140	340	80000	120	340	96000	130	320	72000	120	320	86400
9302HX	15	28	7	16 x 3.6	0.020	979	2091	66800	890	2091	80160	890	2046	60100	801	2046	72120
	0.5906	1.1024	0.2756	16 x 7/64	0.04	220	470	66800	200	470	80160	200	460	60100	180	460	72120
9303HX	17	30	7	17 x 3.6	0.020	1023	2224	60400	934	2224	72480	979	2091	54400	890	2091	65280
	0.6693	1.1811	0.2756	17 x 7/64	0.04	230	500	60400	210	500	72480	220	470	54400	200	470	65280
9304HX	20	37	9	17 x 4.8	0.040	1690	3514	50200	1512	3514	60240	1601	3336	45200	1423	3336	54240
	0.7874	1.4567	0.3543	17 x 9/64	0.08	380	790	50200	340	790	60240	360	750	45200	320	750	54240
9305HX	25	42	9	20 x 4.8	0.040	2020	3460	41800	1800	3460	50160	1913	3603	37600	1735	3603	45120
	0.9843	1.6535	0.3543	20 x 9/64	0.10	450	780	41800	400	780	50160	430	810	37600	390	810	45120
9306HX	30	47	9	23 x 4.8	0.050	2402	4048	35900	2135	4048	43080	2224	3825	32300	1957	3825	38760
	1.1811	1.8504	0.3543	23 x 9/64	0.11	540	910	35900	480	910	43080	500	860	32300	440	860	38760
9307HX	35	55	10	25 x 5.6	0.080	3158	5115	30500	2847	5115	36600	2980	4804	27500	2624	4804	33000
	1.3780	2.1654	0.3937	25 x 5/32	0.18	710	1150	30500	640	1150	36600	670	1080	27500	590	1080	33000
9308HX	40	62	12	19 x 6.4	0.110	6005	10675	28000	5338	10675	33600	5693	10097	25200	5071	10097	30240
	1.5748	2.4409	0.4724	19 x 1/4	0.25	1350	2400	28000	1200	2400	33600	1280	2270	25200	1140	2270	30240
9309HX	45	68	12	21 x 6.4	0.130	6716	11164	25000	6005	11164	30000	6405	10586	22500	5693	10586	27000
	1.7717	2.6772	0.4724	21 x 1/4	0.29	1510	2510	25000	1350	2510	30000	1440	2380	22500	1280	2380	27000
9310HX	50	72	12	23 x 6.4	0.140	7473	11698	22900	6672	11698	27480	7072	11031	20600	6405	11031	24720
	1.9685	2.8346	0.4724	23 x 1/4	0.30	1680	2630	22900	1500	2630	27480	1590	2480	20600	1440	2480	24720
9311HX	55	80	13	23 x 7.1	0.190	9430	14500	20700	8407	14500	24840	8896	13700	18600	7917	13700	22320
	2.1654	3.1496	0.5118	23 x 9/32	0.39	2120	3260	20700	1890	3260	24840	2000	3080	18600	1780	3080	22320
9312HX	60	85	13	25 x 7.1	0.200	10319	15123	19200	9207	15123	23040	9697	14278	17300	8629	14278	20760
	2.3622	3.3465	0.5118	25 x 9/32	0.43	2320	3400	19200	2070	3400	23040	2180	3210	17300	1940	3210	20760
9313HX	65	90	13	27 x 7.1	0.220	11164	15701	17800	9919	15701	21360	10400	14800	16000	9250	14800	19200
	2.5591	3.5433	0.5118	27 x 9/32	0.45	2510	3530	17800	2230	3530	21360	2340	3320	16000	2080	3320	19200
9314HX	70	100	16	24 x 8.7	0.340	14767	21306	16400	13166	21306	19680	13922	20105	14800	12365	20105	17760
	2.7559	3.9370	0.6299	24 x 11/32	0.75	3320	4790	16400	2960	4790	19680	3130	4520	14800	2780	4520	17760
9315HX	75	105	16	25 x 8.7	0.360	14300	15100	15400	12700	15100	18480	14500	20416	13900	12899	20416	16680
	2.9528	4.1339	0.6299	25 x 11/32	0.80	3210	3400	15400	2860	3400	18480	3260	4590	13900	2900	4590	16680
9316HX	80	110	16	27 x 8.7	0.390	16680	22507	14500	14856	22507	17400	15568	21217	13100	13833	21217	15720
	3.1496	4.3307	0.6299	27 x 11/32	0.80	3750	5060	14500	3340	5060	17400	3500	4770	13100	3110	4770	15720
9317HX	85	120	18	26 x 9.5	0.560	19171	25754	13500	17036	25754	16200	17836	24242	12200	15879	24242	14640
	3.3465	4.7244	0.7087	26 x 3/8	1.16	4310	5790	13500	3830	5790	16200	4010	5450	12200	3570	5450	14640
9318HX	90	125	18	26 x 10.3	0.570	22462	29935	12900	19972	29935	15480	20995	28200	11600	18682	28200	13920
	3.5433	4.9213	0.7087	26 x 13/32	1.20	5050	6730	12900	4490	6730	15480	4720	6340	11600	4200	6340	13920

[Ng] For a single, grease-lubricated, spring-preloaded bearing. This value to be used in permissible operating speed (Sp) calculation.
[1] Width tolerance of preloaded bearing set +0.000/-0.254 mm (+0.0000/-0.0100 in.).
[2] ABMA STD 20 (r_{as} max).

WN CONSTRUCTION

- Incorporates low shoulder on non-thrust side of both inner and outer rings.
- Balls separated by one-piece cage piloted against a ground thrust shoulder land of the outer ring.

HIGH-SPEED SEAL OPTION

Available with non-contact seals. Add VV suffix to part number (in place of CR cage designation). Ex: 2MMV9106HXVV SUL.

r Rad.(2)	Suggested Shoulder Diameters				Shaft Diameter		Mounting Fits		FIXED				FLOATING			
	Shaft		Housing						Housing Bore (Stationary)		Mounting Fits		Housing Bore (Stationary)		Mounting Fits	
	Max.	Min.	Max.	Min.	Max.	Min.	Loose	Tight	Max.	Min.	Tight	Loose	Max.	Min.	Loose	Loose
mm/in.	mm/in.		mm/in.		mm/in.		mm/in.		mm/in.		mm/in.		mm/in.		mm/in.	
0.3	13.2	13.0	19.6	19.3	10.000	9.995	0.005	0.004	22.005	22.000	0.000	0.010	22.010	22.005	0.015	0.005
0.012	0.52	0.51	0.77	0.76	0.39370	0.39350	0.00020	0.00015	0.86630	0.86610	0.00000	0.00040	0.86650	0.86630	0.00060	0.00020
0.3	15.2	14.9	21.6	21.3	12.000	11.995	0.005	0.004	24.005	24.000	0.000	0.010	24.010	24.005	0.015	0.005
0.012	0.60	0.59	0.85	0.84	0.47240	0.47220	0.00020	0.00015	0.94510	0.94490	0.00000	0.00040	0.94530	0.94510	0.00060	0.00020
0.3	18.3	18.1	25.5	25.2	15.000	14.995	0.005	0.004	28.005	28.000	0.000	0.010	28.010	28.005	0.015	0.005
0.012	0.72	0.71	1.00	0.99	0.59060	0.59040	0.00020	0.00015	1.02380	1.02360	0.00000	0.00040	1.02400	1.02380	0.00060	0.00020
0.3	20.3	20.0	27.5	27.2	17.000	16.995	0.005	0.004	30.005	30.000	0.000	0.010	30.010	30.005	0.015	0.005
0.012	0.80	0.79	1.08	1.07	0.66930	0.66910	0.00020	0.00015	1.18130	1.18110	0.00000	0.00040	1.18150	1.18130	0.00060	0.00020
0.3	24.1	23.9	33.7	33.4	20.000	19.995	0.005	0.005	37.006	37.000	0.000	0.012	37.010	37.005	0.016	0.005
0.012	0.95	0.94	1.33	1.32	0.78740	0.78720	0.00020	0.00020	1.45700	1.45670	0.00000	0.00050	1.45710	1.45690	0.00070	0.00020
0.3	29.1	28.9	38.7	38.4	25.000	24.995	0.005	0.005	42.006	42.000	0.000	0.012	42.010	42.005	0.016	0.005
0.012	1.15	1.14	1.52	1.51	0.98430	0.98410	0.00020	0.00020	1.65380	1.65350	0.00000	0.00050	1.65390	1.65370	0.00070	0.00020
0.3	34.1	33.9	43.7	43.4	30.000	29.995	0.005	0.005	47.006	47.000	0.000	0.012	47.012	47.007	0.018	0.007
0.012	1.34	1.33	1.72	1.71	1.18110	1.18090	0.00020	0.00020	1.85070	1.85040	0.00000	0.00050	1.85090	1.85070	0.00080	0.00030
0.6	40.0	39.5	51.1	50.6	35.000	34.995	0.005	0.006	55.008	55.000	0.000	0.015	55.012	55.007	0.019	0.007
0.024	1.57	1.55	2.01	1.99	1.37800	1.37780	0.00020	0.00025	2.16570	2.16540	0.00000	0.00060	2.16590	2.16570	0.00080	0.00030
0.6	45.1	44.6	57.9	57.4	40.000	39.995	0.005	0.006	62.008	62.000	0.000	0.015	62.012	62.007	0.019	0.007
0.024	1.78	1.76	2.28	2.26	1.57480	1.57460	0.00020	0.00025	2.44120	2.44090	0.00000	0.00060	2.44140	2.44120	0.00080	0.00030
0.6	50.7	50.1	63.4	62.9	45.000	44.995	0.005	0.006	68.008	68.000	0.000	0.015	68.012	68.007	0.019	0.007
0.024	1.99	1.97	2.50	2.48	1.77170	1.77150	0.00020	0.00025	2.67750	2.67720	0.00000	0.00060	2.67770	2.67750	0.00080	0.00030
0.6	55.1	54.6	67.9	67.4	50.000	49.995	0.005	0.006	72.008	72.000	0.000	0.015	72.011	72.007	0.019	0.007
0.024	2.17	2.15	2.67	2.65	1.96850	1.96830	0.00020	0.00025	2.83490	2.83460	0.00000	0.00060	2.83510	2.83490	0.00080	0.00030
1.0	60.9	60.4	75.2	74.7	55.000	54.995	0.005	0.007	80.008	80.000	0.000	0.015	80.012	80.008	0.020	0.008
0.039	2.40	2.38	2.96	2.94	2.16540	2.16520	0.00020	0.00030	3.14990	3.14960	0.00000	0.00060	3.15010	3.14990	0.00080	0.00030
1.0	65.8	65.3	80.2	79.7	60.000	59.995	0.005	0.007	85.008	85.000	0.000	0.016	85.016	85.009	0.024	0.009
0.039	2.59	2.57	3.16	3.14	2.36220	2.36200	0.00020	0.00030	3.34680	3.34650	0.00000	0.00060	3.34710	3.34680	0.00090	0.00030
1.0	70.8	70.3	85.2	84.7	65.000	64.995	0.005	0.007	90.008	90.000	0.000	0.016	90.015	90.007	0.023	0.007
0.039	2.79	2.77	3.35	3.33	2.55910	2.55890	0.00020	0.00030	3.54360	3.54330	0.00000	0.00060	3.54390	3.54360	0.00090	0.00030
1.0	76.8	76.3	94.3	93.8	70.000	69.995	0.005	0.007	100.008	100.000	0.000	0.016	100.018	100.010	0.025	0.010
0.039	3.02	3.00	3.71	3.69	2.75590	2.75570	0.00020	0.00030	3.93730	3.93700	0.00000	0.00060	3.93770	3.93740	0.00100	0.00040
1.0	81.9	81.1	99.4	98.6	75.005	74.995	0.005	0.012	105.008	105.000	0.000	0.016	105.019	105.011	0.026	0.011
0.039	3.22	3.19	3.91	3.88	2.95300	2.95260	0.00020	0.00050	4.13420	4.13390	0.00000	0.00060	4.13460	4.13430	0.00100	0.00040
1.0	86.9	86.1	104.4	103.6	80.005	79.995	0.005	0.012	110.008	110.000	0.000	0.016	110.018	110.010	0.025	0.010
0.039	3.42	3.39	4.11	4.08	3.14980	3.14940	0.00020	0.00050	4.33100	4.33070	0.00000	0.00060	4.33140	4.33110	0.00100	0.00040
1.0	93.6	92.8	112.7	111.9	85.005	84.995	0.005	0.012	120.008	120.000	0.000	0.016	120.018	120.010	0.025	0.010
0.039	3.69	3.66	4.44	4.41	3.34670	3.34630	0.00020	0.00050	4.72470	4.72440	0.00000	0.00060	4.72510	4.72480	0.00100	0.00040
1.0	97.8	97.0	118.5	117.7	90.005	89.995	0.005	0.013	125.008	125.000	0.000	0.017	125.021	125.011	0.030	0.011
0.039	3.85	3.82	4.66	4.63	3.54350	3.54310	0.00020	0.00050	4.92160	4.92130	0.00000	0.00070	4.92210	4.92170	0.00120	0.00040

Continued on next page.

ULTRA-LIGHT ISO 19 SERIES
2(3)MMV9300HX – *continued*

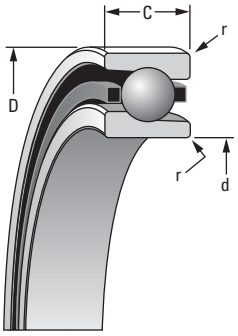

SUPER PRECISION MM

Running accuracy and performance meet ABEC 9 (ISO P2) levels.
Other features conform to ABEC 7 (ISO P4) requirements.

Bearing Number 2MM or 3MM	d Bore	D O.D.	C Width[1]	Ball Qty. x Dia.	Bearing Wt.	(2MM) LOAD RATINGS						(3MM) LOAD RATINGS					
						Steel Ball			Ceramic Ball			Steel Ball			Ceramic Ball		
						C_o Static	C_e Dynamic	Speed Rating[Ng]	C_o Static	C_e Dynamic	Speed Rating[Ng]	C_o Static	C_e Dynamic	Speed Rating[Ng]	C_o Static	C_e Dynamic	Speed Rating[Ng]
	mm/in.			**mm**/in.	**kg**/lbs.	**N**/lbs.		RPM	**N**/lbs.		RPM	**N**/lbs.		RPM	**N**/lbs.		RPM
9319HX	**95**	**130**	**18**	**28 x 10.3**	**0.600**	**24197**	**31136**	**12300**	**21528**	**31136**	**14760**	**22507**	**29312**	**10300**	**20060**	**29312**	**12360**
	3.7402	5.1181	0.7087	28 x 13/32	1.26	5440	7000	12300	4840	7000	14760	5060	6590	10300	4510	6590	12360
9320HX	**100**	**140**	**20**	**29 x 10.3**	**0.850**	**24864**	**31403**	**11400**	**22151**	**31403**	**13680**	**23174**	**29535**	**9900**	**20639**	**29535**	**11800**
	3.9370	5.5118	0.7874	29 x 13/32	1.80	5590	7060	11400	4980	7060	13680	5210	6640	10000	4640	6640	12000
9322HX	**110**	**150**	**20**	**31 x 10.3**	**0.920**	**26377**	**32204**	**10500**	**23485**	**32204**	**12600**	**24597**	**30291**	**9500**	**21884**	**30291**	**11400**
	4.3307	5.9055	0.7874	31 x 13/32	1.92	5930	7240	10500	5280	7240	12600	5530	6810	9500	4920	6810	11400
9324HX	**120**	**165**	**22**	**30 x 11.9**	**1.240**	**34161**	**41277**	**9600**	**30424**	**41277**	**11520**	**31803**	**38831**	**8600**	**28334**	**38831**	**10320**
	4.7244	6.4961	0.8661	30 x 15/32	2.60	7680	9280	9600	6840	9280	11520	7150	8730	8600	6370	8730	10320
9326HX	**130**	**180**	**24**	**30 x 13.5**	**1.650**	**44035**	**52042**	**8900**	**39187**	**52042**	**10680**	**41055**	**48928**	**8000**	**36518**	**48928**	**9600**
	5.1181	7.0866	0.9449	30 x 17/32	3.63	9900	11700	8900	8810	11700	10680	9230	11000	8000	8210	11000	9600
9328HX	**140**	**190**	**24**	**32 x 13.5**	**1.750**	**46704**	**53821**	**8300**	**41544**	**53821**	**9960**	**43501**	**50707**	**7500**	**38742**	**50707**	**9000**
	5.5118	7.4803	0.9449	32 x 17/32	3.85	10500	12100	8300	9340	12100	9960	9780	11400	7500	8710	11400	9000
9330HX	**150**	**210**	**28**	**27 x 17.5**	**2.610**	**66720**	**79174**	**7700**	**59603**	**79174**	**9240**	**62717**	**74726**	**6900**	**55600**	**74726**	**8280**
	5.9055	8.2677	1.1024	27 x 11/16	5.75	15000	17800	7700	13400	17800	9240	14100	16800	6900	12500	16800	8200

[Ng] For a single, grease-lubricated, spring-preloaded bearing. This value to be used in permissible operating speed (Sp) calculation.
[1] Width tolerance of preloaded bearing set +0.000/-0.254 mm (+0.0000/-0.0100 in.).
[2] ABMA STD 20 (r_{as} max).

WN CONSTRUCTION

- Incorporates low shoulder on non-thrust side of both inner and outer rings.
- Balls separated by one-piece cage piloted against a ground thrust shoulder land of the outer ring.

HIGH-SPEED SEAL OPTION

Available with non-contact seals. Add VV suffix to part number (in place of CR cage designation). Ex: 2MMV9106HXVV SUL.

r Rad.(2)	Suggested Shoulder Diameters				Shaft Diameter		Mounting Fits		FIXED				FLOATING			
	Shaft		Housing						Housing Bore (Stationary)		Mounting Fits		Housing Bore (Stationary)		Mounting Fits	
	Max.	Min.	Max.	Min.	Max.	Min.	Loose	Tight	Max.	Min.	Tight	Loose	Max.	Min.	Loose	Loose
mm/in.	mm/in.		mm/in.		mm/in.		mm/in.		mm/in.		mm/in.		mm/in.		mm/in.	
1.0	**102.8**	**102.0**	**123.5**	**122.7**	**95.005**	**94.995**	**0.005**	**0.013**	**130.009**	**130.000**	**0.000**	**0.018**	**130.020**	**130.010**	**0.029**	**0.010**
0.039	4.05	4.02	4.86	4.83	3.74040	3.74000	0.00020	0.00050	5.11850	5.11810	0.00000	0.00070	5.11890	5.11850	0.00110	0.00040
1.0	**110.3**	**109.5**	**131.0**	**130.2**	**100.005**	**99.995**	**0.005**	**0.013**	**140.009**	**140.000**	**0.000**	**0.018**	**140.020**	**140.010**	**0.029**	**0.010**
0.039	4.34	4.31	5.16	5.13	3.93720	3.93680	0.00020	0.00050	5.51220	5.51180	0.00000	0.00070	5.51260	5.51220	0.00110	0.00040
1.0	**120.3**	**119.5**	**141.0**	**140.2**	**110.005**	**109.995**	**0.005**	**0.013**	**150.009**	**150.000**	**0.000**	**0.018**	**150.023**	**150.012**	**0.032**	**0.012**
0.039	4.74	4.71	5.55	5.52	4.33090	4.33050	0.00020	0.00050	5.90590	5.90550	0.00000	0.00070	5.90640	5.90600	0.00120	0.00050
1.0	**131.2**	**130.4**	**155.0**	**154.3**	**120.005**	**119.995**	**0.005**	**0.013**	**165.010**	**165.000**	**0.000**	**0.020**	**165.022**	**165.012**	**0.032**	**0.012**
0.039	5.16	5.13	6.10	6.07	4.72460	4.72420	0.00020	0.00050	6.49650	6.49610	0.00000	0.00080	6.49700	6.49660	0.00130	0.00050
1.5	**142.1**	**141.4**	**169.2**	**168.4**	**130.005**	**129.995**	**0.005**	**0.015**	**180.010**	**180.000**	**0.000**	**0.020**	**180.022**	**180.012**	**0.032**	**0.012**
0.059	5.60	5.57	6.66	6.63	5.11830	5.11790	0.00020	0.00060	7.08700	7.08660	0.00000	0.00080	7.08750	7.08710	0.00130	0.00050
1.5	**152.1**	**151.4**	**179.2**	**178.4**	**140.005**	**139.995**	**0.005**	**0.015**	**190.010**	**190.000**	**0.000**	**0.021**	**190.022**	**190.012**	**0.033**	**0.012**
0.059	5.99	5.96	7.05	7.02	5.51200	5.51160	0.00020	0.00060	7.48070	7.48030	0.00000	0.00080	7.48120	7.48080	0.00140	0.00050
2.0	**163.1**	**162.4**	**198.2**	**197.4**	**150.005**	**149.995**	**0.005**	**0.015**	**210.011**	**210.000**	**0.000**	**0.022**	**210.025**	**210.015**	**0.036**	**0.015**
0.079	6.42	6.39	7.80	7.77	5.90570	5.90530	0.00020	0.00060	8.26820	8.26770	0.00000	0.00090	8.26870	8.26830	0.00150	0.00060

ULTRA-LIGHT 2MMV9300HX ISO 19 SERIES

DUPLEX PERFORMANCE DATA

Bearing Number	Preload DUX Light	Preload DUL Medium	Preload DUM Heavy	Axial Stiffness[1] Light	Axial Stiffness[1] Medium	Axial Stiffness[1] Heavy	Radial Stiffness[1] Light	Radial Stiffness[1] Medium	Radial Stiffness[1] Heavy	Spacer Offsets[1] Light to Med.	Spacer Offsets[1] Med. to Heavy
	N lbs.			N/µm 10^6 lbs./in.			N/µm 10^6 lbs./in.			µm in.	
2MMV9300HX	**9**	**25**	**55**	**10.20**	**15.60**	**21.00**	**61.00**	**88.50**	**110.80**	**5.60**	**5.60**
	2	6	12	0.058	0.089	0.120	0.349	0.506	0.634	0.00022	0.00022
2MMV9301HX	**9**	**25**	**55**	**10.70**	**16.70**	**22.80**	**61.30**	**88.20**	**110.20**	**5.10**	**5.60**
	2	6	12	0.061	0.096	0.130	0.351	0.504	0.630	0.00020	0.00022
2MMV9302HX	**20**	**45**	**85**	**17.00**	**22.70**	**31.00**	**96.40**	**120.90**	**150.90**	**4.60**	**6.60**
	5	10	20	0.097	0.130	0.177	0.551	0.691	0.863	0.00018	0.00026
2MMV9303HX	**20**	**45**	**85**	**16.90**	**22.30**	**30.00**	**100.90**	**127.10**	**159.10**	**4.60**	**6.60**
	5	10	20	0.097	0.128	0.172	0.577	0.727	0.910	0.00018	0.00026
2MMV9304HX	**20**	**65**	**135**	**18.20**	**28.50**	**38.70**	**109.60**	**157.90**	**197.30**	**7.60**	**8.10**
	5	15	30	0.104	0.163	0.221	0.627	0.903	1.128	0.00030	0.00032
2MMV9305HX	**20**	**65**	**135**	**20.20**	**31.30**	**42.30**	**122.00**	**176.30**	**220.50**	**7.10**	**7.10**
	5	15	30	0.115	0.179	0.242	0.698	1.008	1.261	0.00028	0.00028
2MMV9306HX	**20**	**65**	**135**	**22.00**	**33.90**	**45.70**	**133.70**	**193.60**	**242.60**	**6.10**	**6.60**
	5	15	30	0.126	0.194	0.261	0.764	1.107	1.387	0.00024	0.00026
2MMV9307HX	**45**	**110**	**225**	**30.80**	**44.60**	**60.50**	**185.70**	**251.70**	**314.60**	**7.10**	**8.60**
	10	25	50	0.176	0.255	0.346	1.062	1.439	1.799	0.00028	0.00034
2MMV9308HX	**45**	**135**	**265**	**29.50**	**45.10**	**60.10**	**177.90**	**259.60**	**325.70**	**9.70**	**10.20**
	10	30	60	0.169	0.258	0.344	1.017	1.484	1.862	0.00038	0.00040
2MMV9309HX	**45**	**155**	**310**	**31.50**	**50.90**	**68.00**	**189.40**	**292.10**	**366.40**	**10.70**	**10.70**
	10	35	70	0.180	0.291	0.389	1.083	1.670	2.095	0.00042	0.00042
2MMV9310HX	**65**	**175**	**355**	**38.70**	**56.70**	**75.90**	**232.60**	**324.60**	**407.00**	**9.10**	**10.70**
	15	40	80	0.221	0.324	0.434	1.330	1.856	2.327	0.00036	0.00042
2MMV9311HX	**65**	**200**	**400**	**39.50**	**60.30**	**80.50**	**241.20**	**352.20**	**442.00**	**10.70**	**11.20**
	15	45	90	0.226	0.345	0.460	1.379	2.014	2.527	0.00042	0.00044
2MMV9312HX	**65**	**225**	**445**	**41.70**	**66.20**	**88.30**	**254.10**	**385.70**	**483.90**	**11.70**	**11.70**
	15	50	100	0.238	0.378	0.505	1.453	2.205	2.767	0.00046	0.00046
2MMV9313HX	**65**	**225**	**445**	**43.70**	**69.30**	**92.30**	**266.70**	**406.10**	**509.80**	**11.20**	**11.20**
	15	50	100	0.250	0.396	0.528	1.525	2.322	2.915	0.00044	0.00044
2MMV9314HX	**110**	**335**	**665**	**51.00**	**78.10**	**104.50**	**316.60**	**461.20**	**578.40**	**13.70**	**14.70**
	25	75	150	0.292	0.447	0.598	1.810	2.637	3.307	0.00054	0.00058
2MMV9315HX	**110**	**335**	**665**	**52.30**	**80.00**	**107.00**	**325.00**	**474.00**	**594.70**	**13.20**	**14.20**
	25	75	150	0.299	0.458	0.612	1.858	2.710	3.400	0.00052	0.00056
2MMV9316HX	**110**	**335**	**665**	**54.90**	**83.80**	**111.80**	**341.20**	**499.00**	**626.50**	**12.70**	**13.70**
	25	75	150	0.314	0.479	0.639	1.951	2.853	3.582	0.00050	0.00054
2MMV9317HX	**135**	**400**	**800**	**62.20**	**94.50**	**125.50**	**390.60**	**575.90**	**724.30**	**13.70**	**14.70**
	30	90	180	0.334	0.510	0.682	2.088	3.048	3.826	0.00056	0.00060
2MMV9318HX	**135**	**400**	**800**	**59.40**	**90.40**	**120.20**	**373.10**	**548.10**	**688.90**	**14.20**	**15.20**
	30	90	180	0.340	0.517	0.687	2.133	3.134	3.939	0.00056	0.00060
2MMV9319HX	**135**	**400**	**800**	**62.20**	**94.50**	**125.50**	**390.60**	**575.90**	**724.30**	**13.70**	**14.70**
	30	90	180	0.356	0.540	0.717	2.233	3.293	4.141	0.00054	0.00058
2MMV9320HX	**155**	**490**	**975**	**67.40**	**104.60**	**139.50**	**423.40**	**630.50**	**791.80**	**15.20**	**15.70**
	35	110	220	0.385	0.598	0.798	2.421	3.605	4.527	0.00060	0.00062
2MMV9322HX	**175**	**535**	**1065**	**73.80**	**112.70**	**150.40**	**464.00**	**678.60**	**851.90**	**15.20**	**16.30**
	40	120	240	0.422	0.644	0.860	2.653	3.880	4.871	0.00060	0.00064
2MMV9324HX	**225**	**665**	**1335**	**80.90**	**123.40**	**164.70**	**513.70**	**752.10**	**944.30**	**17.30**	**18.30**
	50	150	300	0.462	0.706	0.942	2.937	4.300	5.399	0.00068	0.00072
2MMV9326HX	**245**	**735**	**1465**	**87.90**	**133.40**	**177.00**	**545.90**	**805.20**	**1012.70**	**17.80**	**18.80**
	55	165	330	0.503	0.763	1.012	3.121	4.604	5.790	0.00070	0.00074
2MMV9328HX	**265**	**800**	**1600**	**94.60**	**143.60**	**190.60**	**587.50**	**865.40**	**1088.20**	**17.80**	**19.30**
	60	180	360	0.541	0.821	1.090	3.359	4.948	6.222	0.00070	0.00076
2MMV9330HX	**355**	**1065**	**2135**	**99.60**	**151.10**	**200.60**	**630.00**	**930.80**	**1170.80**	**22.40**	**24.40**
	80	240	480	0.569	0.864	1.147	3.602	5.322	6.694	0.00088	0.00096

[1] For DB or DF arrangements only. For other mounting arrangements, contact your Timken representative.

MOUNTING ARRANGEMENTS

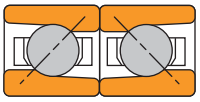

Back-to-Back DB

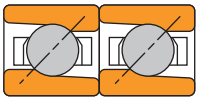

Tandem DT

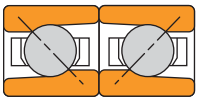

Face-to-Face DF

ULTRA-LIGHT 3MMV9300HX ISO 19 SERIES

DUPLEX PERFORMANCE DATA

MOUNTING ARRANGEMENTS

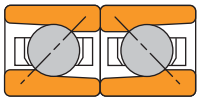

Back-to-Back DB

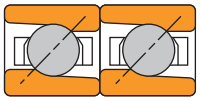

Tandem DT

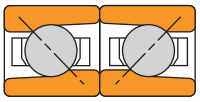

Face-to-Face DF

Bearing Number	Preload DU Light	Preload DUL Medium	Preload DUH Heavy	Axial Stiffness[1] Light	Axial Stiffness[1] Medium	Axial Stiffness[1] Heavy	Radial Stiffness[1] Light	Radial Stiffness[1] Medium	Radial Stiffness[1] Heavy	Spacer Offsets[1] Light to Med.	Spacer Offsets[1] Med. to Heavy
	N lbs.			N/µm 10^6 lbs./in.			N/µm 10^6 lbs./in.			µm in.	
3MMV9300HX	22	45	90	28.53	36.82	48.06	60.22	75.61	94.48	2.79	4.06
	5	10	20	0.163	0.211	0.275	0.344	0.432	0.540	0.00011	0.00016
3MMV9301HX	22	45	90	29.93	38.58	50.28	63.30	79.51	99.41	2.54	4.06
	5	10	20	0.171	0.221	0.288	0.362	0.455	0.568	0.00010	0.00016
3MMV9302HX	22	65	135	34.07	50.72	66.06	72.78	104.78	131.04	4.06	4.57
	5	15	30	0.195	0.290	0.378	0.416	0.599	0.749	0.00016	0.00018
3MMV9303HX	22	65	135	35.45	52.71	68.60	75.75	109.14	136.54	4.06	4.32
	5	15	30	0.203	0.301	0.392	0.433	0.624	0.781	0.00016	0.00017
3MMV9304HX	45	110	225	48.76	67.98	88.46	103.86	140.69	175.95	4.57	5.59
	10	25	50	0.279	0.389	0.506	0.594	0.804	1.006	0.00018	0.00022
3MMV9305HX	45	110	225	54.17	75.33	97.75	115.68	156.99	196.59	4.06	5.08
	10	25	50	0.310	0.431	0.559	0.661	0.898	1.124	0.00016	0.00020
3MMV9306HX	45	110	225	59.33	82.33	106.58	126.87	172.47	216.18	3.56	4.57
	10	25	50	0.339	0.471	0.609	0.725	0.986	1.236	0.00014	0.00018
3MMV9307HX	65	175	355	74.51	106.06	137.72	159.18	220.72	276.34	5.08	5.59
	15	40	80	0.426	0.606	0.787	0.910	1.262	1.580	0.00020	0.00022
3MMV9308HX	65	225	445	70.62	108.04	139.41	154.45	233.67	293.31	7.11	7.11
	15	50	100	0.404	0.618	0.797	0.883	1.336	1.677	0.00028	0.00028
3MMV9309HX	90	245	490	83.32	119.21	153.84	182.60	257.80	323.74	6.10	7.11
	20	55	110	0.476	0.682	0.880	1.044	1.474	1.851	0.00024	0.00028
3MMV9310HX	90	265	535	88.43	130.41	168.25	193.61	282.11	354.17	6.60	7.11
	20	60	120	0.506	0.746	0.962	1.107	1.613	2.025	0.00026	0.00028
3MMV9311HX	110	335	665	99.24	146.29	188.72	216.70	315.69	396.50	7.11	8.13
	25	75	150	0.567	0.836	1.079	1.239	1.805	2.267	0.00028	0.00032
3MMV9312HX	110	335	665	104.80	154.33	198.86	228.59	333.88	419.41	6.60	7.62
	25	75	150	0.599	0.882	1.137	1.307	1.909	2.398	0.00026	0.00030
3MMV9313HX	110	335	665	110.22	162.15	208.66	239.96	351.37	441.80	6.60	7.11
	25	75	150	0.630	0.927	1.193	1.372	2.009	2.526	0.00026	0.00028
3MMV9314HX	155	490	980	122.31	183.12	235.94	265.50	394.05	495.14	8.64	9.14
	35	110	220	0.699	1.047	1.349	1.518	2.253	2.831	0.00034	0.00036
3MMV9315HX	155	490	980	125.63	187.84	242.06	272.49	404.89	508.96	8.64	9.14
	35	110	220	0.718	1.074	1.384	1.558	2.315	2.910	0.00034	0.00036
3MMV9316HX	155	490	980	132.14	197.46	254.13	285.96	426.23	536.07	8.13	8.64
	35	110	220	0.756	1.129	1.453	1.635	2.437	3.065	0.00032	0.00034
3MMV9317HX	200	625	1245	155.70	231.57	297.33	334.58	499.86	629.12	8.64	9.14
	45	140	280	0.826	1.232	1.588	1.792	2.651	3.331	0.00036	0.00040
3MMV9318HX	200	625	1245	148.32	220.72	283.69	319.72	475.73	598.51	9.14	9.65
	45	140	280	0.848	1.262	1.622	1.828	2.720	3.422	0.00036	0.00038
3MMV9319HX	200	625	1245	155.70	231.57	297.33	334.58	499.86	629.12	8.64	9.14
	45	140	280	0.890	1.324	1.700	1.913	2.858	3.597	0.00034	0.00036
3MMV9320HX	245	735	1465	170.75	251.16	323.04	369.04	540.62	679.84	9.14	10.16
	55	165	330	0.976	1.436	1.847	2.110	3.091	3.887	0.00036	0.00040
3MMV9322HX	265	800	1600	183.82	270.40	348.05	397.55	581.89	731.61	9.14	10.16
	60	180	360	1.051	1.546	1.990	2.273	3.327	4.183	0.00036	0.00040
3MMV9324HX	310	935	1870	198.51	291.73	374.99	427.46	628.07	790.37	10.16	11.18
	70	210	420	1.135	1.668	2.144	2.444	3.591	4.519	0.00040	0.00044
3MMV9326HX	355	1065	2135	216.35	317.27	407.34	462.79	684.21	861.73	10.67	11.68
	80	240	480	1.237	1.814	2.329	2.646	3.912	4.927	0.00042	0.00046
3MMV9328HX	400	1200	2400	235.07	344.90	443.02	504.06	743.15	935.54	10.67	12.19
	90	270	540	1.344	1.972	2.533	2.882	4.249	5.349	0.00042	0.00048
3MMV9330HX	535	1600	3200	249.06	365.54	469.26	540.62	799.12	1006.55	13.72	15.24
	120	360	720	1.424	2.090	2.683	3.091	4.569	5.755	0.00054	0.00060

[1] For DB or DF arrangements only. For other mounting arrangements, contact your Timken representative.

ULTRA-LIGHT 2MMV9300HX ISO 19 SERIES

SPEED CAPABILITY DATA

Bearing Number	Grease Capacity[1]				Operating Speeds[4] (DB Mounting)[5]					
	Low Speed[2]		High Speed[3]		Grease			Oil		
	25%	40%	15%	20%	DUL	DUM	DUH	DUL	DUM	DUH
	grams		grams		RPM			RPM		
2MMV9300HX	**0.11**	**0.18**	**0.06**	**0.09**	73360	55020	36680	123795	93534	62310
2MMV9301HX	**0.13**	**0.20**	**0.07**	**0.11**	64000	48000	32000	108000	81600	54360
2MMV9302HX	**0.20**	**0.33**	**0.12**	**0.17**	53440	40080	26720	90180	68136	45391
2MMV9303HX	**0.23**	**0.36**	**0.12**	**0.18**	48320	36240	24160	81540	61608	41042
2MMV9304HX	**0.48**	**0.71**	**0.25**	**0.39**	40160	30120	20080	67770	51204	34111
2MMV9305HX	**0.48**	**0.83**	**0.29**	**0.44**	33440	25080	16720	56430	42636	28403
2MMV9306HX	**0.60**	**0.95**	**0.34**	**0.51**	28720	21540	14360	48465	36618	24394
2MMV9307HX	**0.95**	**1.43**	**0.51**	**0.77**	24400	18300	12200	41175	31110	20725
2MMV9308HX	**1.43**	**2.26**	**0.80**	**1.22**	22400	16800	11200	37800	28560	19026
2MMV9309HX	**1.55**	**2.50**	**0.88**	**1.34**	20000	15000	10000	33750	25500	16988
2MMV9310HX	**1.67**	**2.74**	**0.95**	**1.44**	18320	13740	9160	30915	23358	15561
2MMV9311HX	**2.26**	**3.57**	**1.30**	**1.93**	16560	12420	8280	27945	21114	14066
2MMV9312HX	**2.38**	**3.81**	**1.40**	**2.05**	15360	11520	7680	25920	19584	13046
2MMV9313HX	**2.50**	**4.05**	**1.40**	**2.16**	14240	10680	7120	24030	18156	12095
2MMV9314HX	**4.29**	**6.79**	**2.40**	**3.64**	13120	9840	6560	22140	16728	11144
2MMV9315HX	**4.52**	**7.26**	**2.50**	**3.86**	12320	9240	6160	20790	15708	10464
2MMV9316HX	**4.76**	**7.62**	**2.70**	**3.98**	11600	8700	5800	19575	14790	9853
2MMV9317HX	**6.31**	**10.24**	**3.60**	**5.45**	10800	8100	5400	18225	13770	9173
2MMV9318HX	**7.02**	**11.19**	**3.90**	**5.91**	10320	7740	5160	17415	13158	8766
2MMV9319HX	**7.26**	**11.55**	**4.10**	**6.14**	9840	7380	4920	16605	12546	8358
2MMV9320HX	**8.93**	**14.29**	**5.00**	**7.61**	9120	6840	4560	15390	11628	7746
2MMV9322HX	**9.64**	**15.48**	**5.40**	**8.30**	8,400	6300	4200	14175	10710	7135
2MMV9324HX	**13.21**	**21.19**	**7.40**	**11.25**	7680	5760	3840	12960	9792	6523
2MMV9326HX	**17.38**	**27.74**	**9.70**	**14.77**	7088	5316	3540	11960	9037	6020
2MMV9328HX	**18.45**	**29.52**	**10.40**	**15.68**	6616	4962	3300	11165	8435	5619
2MMV9330HX	**29.52**	**47.26**	**16.60**	**25.11**	6168	4626	3080	10410	7864	5239

(1) Fill weights based on specific gravity of 0.99.
(2) Low speed <500000 dN.
(3) High speed ≥ 500000 dN.
(4) For ceramic ball complements, use 120 percent of speeds shown.
(5) For other mounting arrangement configurations, refer to the engineering section on permissible speed calculation methods.

ULTRA-LIGHT 3MMV9300HX ISO 19 SERIES

SPEED CAPABILITY DATA

Bearing Number	Grease Capacity[1]				Operating Speeds[4] (DB Mounting)[5]					
	Low Speed[2]		High Speed[3]		Grease			Oil		
	25%	40%	15%	20%	DUL	DUM	DUH	DUL	DUM	DUH
	grams		grams		RPM			RPM		
3MMV9300HX	0.11	0.18	0.06	0.08	66080	49560	33040	111510	84250	56125
3MMV9301HX	0.13	0.20	0.07	0.10	57600	43200	28800	97200	73440	48900
3MMV9302HX	0.20	0.33	0.12	0.15	48080	36060	24040	81135	61300	40850
3MMV9303HX	0.23	0.36	0.12	0.16	43440	32580	21720	73305	55390	36900
3MMV9304HX	0.48	0.71	0.25	0.34	36160	27120	18080	61020	46100	30700
3MMV9305HX	0.48	0.83	0.29	0.39	30080	22560	15040	50760	38350	25550
3MMV9306HX	0.60	0.95	0.34	0.45	25840	19380	12920	43605	32950	21950
3MMV9307HX	0.95	1.43	0.51	0.69	22000	16500	11000	37125	28050	18690
3MMV9308HX	1.43	2.26	0.80	1.08	20160	15120	10080	34020	25700	17125
3MMV9309HX	1.55	2.50	0.88	1.19	18000	13500	9000	30375	22950	15290
3MMV9310HX	1.67	2.74	0.95	1.28	16480	12360	8240	27810	21000	14000
3MMV9311HX	2.26	3.57	1.30	1.72	14960	11220	7480	25245	19075	12700
3MMV9312HX	2.38	3.81	1.40	1.82	13760	10320	6880	23220	17500	11690
3MMV9313HX	2.50	4.05	1.40	1.92	12800	9600	6400	21600	16320	10875
3MMV9314HX	4.29	6.79	2.40	3.23	11840	8880	5920	19980	15100	10060
3MMV9315HX	4.52	7.26	2.50	3.43	11120	8340	5560	18765	14175	9450
3MMV9316HX	4.76	7.62	2.70	3.54	10480	7860	5240	17685	13360	8900
3MMV9317HX	6.31	10.24	3.60	4.85	9680	7260	4840	16335	12350	8225
3MMV9318HX	7.02	11.19	3.90	5.25	9280	6960	4640	15660	11825	7880
3MMV9319HX	7.26	11.55	4.10	5.45	8800	6600	4400	14850	11220	7475
3MMV9320HX	8.93	14.29	5.00	6.77	8240	6180	4120	13905	10500	7000
3MMV9322HX	9.64	15.48	5.40	7.37	7544	5658	3772	12731	9620	6400
3MMV9324HX	13.21	21.19	7.40	10.00	6912	5184	3456	11664	8810	5875
3MMV9326HX	17.38	27.74	9.70	13.13	6376	4782	3188	10760	8130	5415
3MMV9328HX	18.45	29.52	10.40	13.94	5960	4470	2980	10058	7600	5050
3MMV9330HX	29.52	47.26	16.60	22.32	5552	4164	2776	9369	7080	4710

(1) Fill weights based on specific gravity of 0.99.
(2) Low speed <500000 dN.
(3) High speed ≥ 500000 dN.
(4) For ceramic ball complements, use 120 percent of speeds shown.
(5) For other mounting arrangement configurations, refer to the engineering section on permissible speed calculation methods.

EXTRA-LIGHT ISO 10 SERIES 2(3)MM9100WI

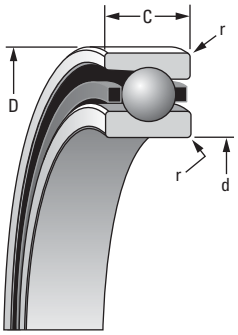

SUPER PRECISION MM

Running accuracy and performance meet ABEC 9 (ISO P2) levels.
Other features conform to ABEC 7 (ISO P4) requirements.

Bearing Number 2MM or 3MM	d Bore	D O.D.	C Width(1)	Ball Qty. x Dia.	Bearing Wt.	(2MM) LOAD RATINGS						(3MM) LOAD RATINGS					
						Steel Ball			Ceramic Ball			Steel Ball			Ceramic Ball		
						C_o Static	C_e Dynamic	Speed Rating(Ng)	C_o Static	C_e Dynamic	Speed Rating(Ng)	C_o Static	C_e Dynamic	Speed Rating(Ng)	C_o Static	C_e Dynamic	Speed Rating(Ng)
	mm/in.			mm/in.	kg/lbs.	N/lbs.		RPM	N/lbs.		RPM	N/lbs.		RPM	N/lbs.		RPM
9100WI	**10**	**26**	**8**	**8 x 4.8**	**0.018**	**2200**	**5400**	**68500**	**1958**	**5400**	**82200**	**2100**	**5300**	**61700**	**1869**	**5300**	**74040**
	0.3937	1.0236	0.3150	8 x 3/16	0.04	490	1210	68500	436	1210	82200	480	1190	61700	427	1190	74040
9101WI	**12**	**28**	**8**	**10 x 4.8**	**0.020**	**2900**	**6400**	**57300**	**2581**	**6400**	**68760**	**2800**	**6200**	**51600**	**2492**	**6200**	**61920**
	0.4724	1.1024	0.3150	10 x 3/16	0.04	650	1430	57300	579	1430	68760	630	1390	51600	561	1390	61920
9102WI	**15**	**32**	**9**	**12 x 4.8**	**0.030**	**3600**	**7300**	**48600**	**3204**	**7300**	**58320**	**3530**	**7020**	**43700**	**3142**	**7020**	**52440**
	0.5906	1.2598	0.3543	12 x 3/16	0.07	820	1630	48600	730	1630	58320	790	1580	43700	703	1580	52440
9103WI	**17**	**35**	**10**	**11 x 4.8**	**0.038**	**3400**	**6800**	**43100**	**3026**	**6800**	**51720**	**3300**	**6600**	**38800**	**2937**	**6600**	**46560**
	0.6693	1.3780	0.3937	11 x 3/16	0.08	770	1530	43100	685	1530	51720	750	1480	38800	668	1480	46560
9104WI	**20**	**42**	**12**	**11 x 6.4**	**0.067**	**6000**	**11600**	**37100**	**5340**	**11600**	**44520**	**5700**	**11100**	**33400**	**5073**	**11100**	**40080**
	0.7874	1.6535	0.4724	11 x 1/4	0.15	1350	2600	37100	1202	2600	44520	1290	2500	33400	1148	2500	40080
9105WI	**25**	**47**	**12**	**13 x 6.4**	**0.077**	**7400**	**12900**	**30900**	**6586**	**12900**	**37080**	**7100**	**12300**	**27800**	**6319**	**12300**	**33360**
	0.9843	1.8504	0.4724	13 x 1/4	0.17	1660	2900	30900	1477	2900	37080	1590	2770	27800	1415	2770	33360
9106WI	**30**	**55**	**13**	**14 x 7.1**	**0.113**	**10300**	**16800**	**25500**	**9167**	**16800**	**30600**	**9900**	**16000**	**23000**	**8811**	**16000**	**27600**
	1.1811	2.1654	0.5118	14 x 9/32	0.25	2310	3770	25500	2056	3770	30600	2200	3600	23000	1958	3600	27600
9107WI	**35**	**62**	**14**	**15 x 7.9**	**0.151**	**13700**	**21200**	**22600**	**12193**	**21200**	**27120**	**13000**	**20200**	**20300**	**11570**	**20200**	**24360**
	1.3780	2.4409	0.5512	15 x 5/16	0.33	3070	4760	22600	2732	4760	27120	2930	4540	20300	2608	4540	24360
9108WI	**40**	**68**	**15**	**16 x 7.9**	**0.187**	**14900**	**21900**	**19900**	**13261**	**21900**	**23880**	**14200**	**20800**	**17900**	**12638**	**20800**	**21480**
	1.5748	2.6772	0.5906	16 x 5/16	0.41	3360	4920	19900	2990	4920	23880	3190	4670	17900	2839	4670	21480
9109WI	**45**	**75**	**16**	**17 x 8.7**	**0.240**	**19300**	**27000**	**17900**	**17177**	**27000**	**21480**	**18300**	**25600**	**16100**	**16287**	**25600**	**19320**
	1.7717	2.9528	0.6299	17 x 11/32	0.53	4330	6080	17900	3854	6080	21480	4110	5760	16100	3658	5760	19320
9110WI	**50**	**80**	**16**	**18 x 8.7**	**0.258**	**20800**	**27900**	**16300**	**18512**	**27900**	**19560**	**19700**	**26300**	**14700**	**17533**	**26300**	**17640**
	1.9685	3.1496	0.6299	18 x 11/32	0.57	4670	6270	16300	4156	6270	19560	4430	5910	14700	3943	5910	17640
9111WI	**55**	**90**	**18**	**18 x 10.3**	**0.383**	**28600**	**37800**	**14700**	**25454**	**37800**	**17640**	**27200**	**35900**	**13200**	**24208**	**35900**	**15840**
	2.1654	3.5433	0.7087	18 x 13/32	0.84	6420	8500	14700	5714	8500	17640	6110	8080	13200	5438	8080	15840
9112WI	**60**	**95**	**18**	**19 x 10.3**	**0.409**	**30500**	**38800**	**13600**	**27145**	**38800**	**16320**	**33200**	**36900**	**12200**	**29548**	**36900**	**14640**
	2.3622	3.7402	0.7087	19 x 13/32	0.90	6860	8730	13600	6105	8730	16320	7470	8290	12200	6648	8290	14640
9113WI	**65**	**100**	**18**	**20 x 10.3**	**0.435**	**32600**	**39800**	**12700**	**29014**	**39800**	**15240**	**31000**	**37700**	**11400**	**27590**	**37700**	**13680**
	2.5591	3.9370	0.7087	20 x 13/32	0.96	7330	8950	12700	6524	8950	15240	6970	8480	11400	6203	8480	13680
9114WI	**70**	**110**	**20**	**19 x 11.9**	**0.604**	**40700**	**50300**	**11700**	**36223**	**50300**	**14040**	**38800**	**47600**	**10500**	**34532**	**47600**	**12600**
	2.7559	4.3307	0.7874	19 x 15/32	1.33	9150	11300	11700	8144	11300	14040	8730	10700	10500	7770	10700	12600
9115WI	**75**	**115**	**20**	**20 x 11.9**	**0.638**	**43500**	**51600**	**11000**	**38715**	**51600**	**13200**	**41200**	**48900**	**9900**	**36668**	**48900**	**11880**
	2.9528	4.5276	0.7874	20 x 15/32	1.41	9790	11600	11000	8713	11600	13200	9260	11000	9900	8241	11000	11880
9116WI	**80**	**125**	**22**	**20 x 13.5**	**0.859**	**55200**	**64900**	**10300**	**49128**	**64900**	**12360**	**52500**	**61400**	**9300**	**46725**	**61400**	**11160**
	3.1496	4.9213	0.8661	20 x 17/32	1.89	12400	14600	10300	11036	14600	12360	11800	13800	9300	10502	13800	11160
9117WI	**85**	**130**	**22**	**21 x 13.5**	**0.901**	**58700**	**66700**	**9700**	**52243**	**66700**	**11640**	**55600**	**63200**	**8700**	**49484**	**63200**	**10440**
	3.3465	5.1181	0.8661	21 x 17/32	1.99	13200	15000	9700	11748	15000	11640	12500	14200	8700	11125	14200	10440
9118WI	**90**	**140**	**24**	**20 x 15.1**	**1.170**	**68900**	**79600**	**9200**	**61321**	**79600**	**11040**	**65800**	**75200**	**8300**	**58562**	**75200**	**9960**
	3.5433	5.5118	0.9449	20 x 19/32	2.58	15500	17900	9200	13795	17900	11040	14800	16900	8300	13172	16900	9960
9119WI	**95**	**145**	**24**	**21 x 15.1**	**1.222**	**73400**	**81400**	**8700**	**65326**	**81400**	**10440**	**69400**	**77400**	**7800**	**61766**	**77400**	**9360**
	3.7402	5.7087	0.9449	21 x 19/32	2.69	16500	18300	8700	14685	18300	10440	15600	17400	7800	13884	17400	9360
9120WI	**100**	**150**	**24**	**22 x 15.1**	**1.299**	**77400**	**83600**	**8300**	**68886**	**83600**	**9960**	**73400**	**79200**	**7500**	**65326**	**79200**	**9000**
	3.9370	5.9055	0.9449	22 x 19/32	2.86	17400	18800	8300	15486	18800	9960	16500	17800	7500	14685	17800	9000

(Ng) For a single, grease-lubricated, spring-preloaded bearing. This value to be used in permissible operating speed (Sp) calculation.
(1) Width tolerance of preloaded bearing set +0.000/-0.254 mm (+0.0000/-0.0100 in.).
(2) ABMA STD 20 (r_{as} max).

WI CONSTRUCTION

- Incorporates low shoulder on non-thrust side of outer rings.
- Balls separated by one-piece cage piloted against a ground thrust shoulder land of the outer ring.

r Rad.(2)	Suggested Shoulder Diameters Shaft Max.	Suggested Shoulder Diameters Shaft Min.	Suggested Shoulder Diameters Housing Max.	Suggested Shoulder Diameters Housing Min.	Shaft Diameter Max.	Shaft Diameter Min.	Mounting Fits Loose	Mounting Fits Tight	FIXED Housing Bore (Stationary) Max.	FIXED Housing Bore (Stationary) Min.	FIXED Mounting Fits Tight	FIXED Mounting Fits Loose	FLOATING Housing Bore (Stationary) Max.	FLOATING Housing Bore (Stationary) Min.	FLOATING Mounting Fits Loose	FLOATING Mounting Fits Loose
mm/in.	mm/in.		mm/in.		mm/in.		mm/in.		mm/in.		mm/in.		mm/in.		mm/in.	
0.3	**13.6**	**13.3**	**23.2**	**23.0**	**10.000**	**9.995**	**0.005**	**0.004**	**26.005**	**26.000**	**0.000**	**0.010**	**26.010**	**26.005**	**0.015**	**0.005**
0.012	0.54	0.53	0.92	0.91	0.39370	0.39350	0.00020	0.00015	1.02380	1.02360	0.00000	0.00040	1.02400	1.02380	0.00060	0.00020
0.3	**16.1**	**15.9**	**25.5**	**25.3**	**12.000**	**11.995**	**0.005**	**0.004**	**28.005**	**28.000**	**0.000**	**0.010**	**28.010**	**28.005**	**0.015**	**0.005**
0.012	0.64	0.63	1.01	1.00	0.47240	0.47220	0.00020	0.00015	1.10260	1.10240	0.00000	0.00040	1.10280	1.10260	0.00060	0.00020
0.3	**19.2**	**18.9**	**28.6**	**28.3**	**15.000**	**14.995**	**0.005**	**0.004**	**32.005**	**32.000**	**0.000**	**0.011**	**32.010**	**32.005**	**0.016**	**0.005**
0.012	0.76	0.75	1.13	1.12	0.59060	0.59040	0.00020	0.00015	1.26000	1.25980	0.00000	0.00045	1.26020	1.26000	0.00070	0.00020
0.3	**21.7**	**21.5**	**31.1**	**30.9**	**17.000**	**16.995**	**0.005**	**0.004**	**35.006**	**35.000**	**0.000**	**0.012**	**35.010**	**35.005**	**0.016**	**0.005**
0.012	0.86	0.85	1.23	1.22	0.66930	0.66910	0.00020	0.00015	1.37830	1.37800	0.00000	0.00050	1.37840	1.37820	0.00070	0.00020
0.6	**25.0**	**24.8**	**37.7**	**37.5**	**20.000**	**19.995**	**0.005**	**0.005**	**42.006**	**42.000**	**0.000**	**0.012**	**42.010**	**42.005**	**0.016**	**0.005**
0.024	0.99	0.98	1.49	1.48	0.78740	0.78720	0.00020	0.00020	1.65380	1.65350	0.00000	0.00050	1.65390	1.65370	0.00070	0.00020
0.6	**30.1**	**29.9**	**42.6**	**42.3**	**25.000**	**24.995**	**0.005**	**0.005**	**47.006**	**47.000**	**0.000**	**0.012**	**47.012**	**47.007**	**0.018**	**0.007**
0.024	1.19	1.18	1.68	1.67	0.98430	0.98410	0.00020	0.00020	1.85070	1.85040	0.00000	0.00050	1.85090	1.85070	0.00080	0.00030
1.0	**36.2**	**35.9**	**50.7**	**50.4**	**30.000**	**29.995**	**0.005**	**0.005**	**55.008**	**55.000**	**0.000**	**0.015**	**55.012**	**55.007**	**0.019**	**0.007**
0.039	1.43	1.42	2.00	1.99	1.18110	1.18090	0.00020	0.00020	2.16570	2.16540	0.00000	0.00060	2.16590	2.16570	0.00080	0.00030
1.0	**41.2**	**40.6**	**56.6**	**56.1**	**35.000**	**34.995**	**0.005**	**0.006**	**62.008**	**62.000**	**0.000**	**0.015**	**62.012**	**62.007**	**0.019**	**0.007**
0.039	1.62	1.60	2.23	2.21	1.37800	1.37780	0.00020	0.00025	2.44120	2.44090	0.00000	0.00060	2.44140	2.44120	0.00080	0.00030
1.0	**46.2**	**45.7**	**62.2**	**61.7**	**40.000**	**39.995**	**0.005**	**0.006**	**68.008**	**68.000**	**0.000**	**0.015**	**68.012**	**68.007**	**0.019**	**0.007**
0.039	1.82	1.80	2.45	2.43	1.57480	1.57460	0.00020	0.00025	2.67750	2.67720	0.00000	0.00060	2.67770	2.67750	0.00080	0.00030
1.0	**51.8**	**51.3**	**69.3**	**68.8**	**45.000**	**44.995**	**0.005**	**0.006**	**75.008**	**75.000**	**0.000**	**0.015**	**75.014**	**75.009**	**0.022**	**0.009**
0.039	2.04	2.02	2.73	2.71	1.77170	1.77150	0.00020	0.00025	2.95310	2.95280	0.00000	0.00060	2.95330	2.95310	0.00080	0.00030
1.0	**56.6**	**56.1**	**74.2**	**73.7**	**50.000**	**49.995**	**0.005**	**0.006**	**80.008**	**80.000**	**0.000**	**0.015**	**80.012**	**80.008**	**0.020**	**0.008**
0.039	2.23	2.21	2.92	2.90	1.96850	1.96830	0.00020	0.00025	3.14990	3.14960	0.00000	0.00060	3.15010	3.14990	0.00080	0.00030
1.0	**62.7**	**62.2**	**83.3**	**82.8**	**55.000**	**54.995**	**0.005**	**0.007**	**90.008**	**90.000**	**0.000**	**0.016**	**90.015**	**90.007**	**0.023**	**0.007**
0.039	2.47	2.45	3.28	3.26	2.16540	2.16520	0.00020	0.00030	3.54360	3.54330	0.00000	0.00060	3.54390	3.54360	0.00090	0.00030
1.0	**67.8**	**67.3**	**88.1**	**87.6**	**60.000**	**59.995**	**0.005**	**0.007**	**95.008**	**95.000**	**0.000**	**0.016**	**95.016**	**95.009**	**0.024**	**0.009**
0.039	2.67	2.65	3.47	3.45	2.36220	2.36200	0.00020	0.00030	3.74050	3.74020	0.00000	0.00060	3.74080	3.74050	0.00090	0.00030
1.0	**72.6**	**72.1**	**93.2**	**92.7**	**65.000**	**64.995**	**0.005**	**0.007**	**100.008**	**100.000**	**0.000**	**0.016**	**100.018**	**100.010**	**0.025**	**0.010**
0.039	2.86	2.84	3.67	3.65	2.55910	2.55890	0.00020	0.00030	3.93730	3.93700	0.00000	0.00060	3.93770	3.93740	0.00100	0.00040
1.0	**78.2**	**77.7**	**102.4**	**101.9**	**70.000**	**69.995**	**0.005**	**0.007**	**110.008**	**110.000**	**0.000**	**0.016**	**110.018**	**110.010**	**0.025**	**0.010**
0.039	3.08	3.06	4.03	4.01	2.75590	2.75570	0.00020	0.00030	4.33100	4.33070	0.00000	0.00060	4.33140	4.33110	0.00100	0.00040
1.0	**83.4**	**82.7**	**107.3**	**106.6**	**75.005**	**74.995**	**0.005**	**0.012**	**115.008**	**115.000**	**0.000**	**0.016**	**115.019**	**115.011**	**0.026**	**0.010**
0.039	3.29	3.26	4.23	4.20	2.95300	2.95260	0.00020	0.00050	4.52790	4.52760	0.00000	0.00060	4.52830	4.52800	0.00100	0.00040
1.0	**89.3**	**88.5**	**116.5**	**115.7**	**80.005**	**79.995**	**0.005**	**0.012**	**125.008**	**125.000**	**0.000**	**0.017**	**125.021**	**125.011**	**0.030**	**0.011**
0.039	3.52	3.49	4.59	4.56	3.14980	3.14940	0.00020	0.00050	4.92160	4.92130	0.00000	0.00070	4.92210	4.92170	0.00120	0.00040
1.0	**94.9**	**94.1**	**122.1**	**121.3**	**85.005**	**84.995**	**0.005**	**0.012**	**130.009**	**130.000**	**0.000**	**0.018**	**130.020**	**130.010**	**0.029**	**0.010**
0.039	3.74	3.71	4.81	4.78	3.34670	3.34630	0.00020	0.00050	5.11850	5.11810	0.00000	0.00070	5.11890	5.11850	0.00110	0.00040
1.5	**100.5**	**99.7**	**130.9**	**130.2**	**90.005**	**89.995**	**0.005**	**0.013**	**140.009**	**140.000**	**0.000**	**0.018**	**140.020**	**140.010**	**0.029**	**0.010**
0.059	3.96	3.93	5.16	5.13	3.54350	3.54310	0.00020	0.00050	5.51220	5.51180	0.00000	0.00070	5.51260	5.51220	0.00110	0.00040
1.5	**105.5**	**104.8**	**135.8**	**135.0**	**95.005**	**94.995**	**0.005**	**0.013**	**145.009**	**145.000**	**0.000**	**0.018**	**145.021**	**145.011**	**0.030**	**0.011**
0.059	4.16	4.13	5.35	5.32	3.74040	3.74000	0.00020	0.00050	5.70910	5.70870	0.00000	0.00070	5.70950	5.70910	0.00110	0.00040
1.5	**110.6**	**109.9**	**140.8**	**140.1**	**100.005**	**99.995**	**0.005**	**0.013**	**150.009**	**150.000**	**0.000**	**0.018**	**150.023**	**150.012**	**0.032**	**0.012**
0.059	4.36	4.33	5.55	5.52	3.93720	3.93680	0.00020	0.00050	5.90590	5.90550	0.00000	0.00070	5.90640	5.90600	0.00120	0.00050

Continued on next page.

EXTRA-LIGHT ISO 10 SERIES
2(3)MM9100WI – *continued*

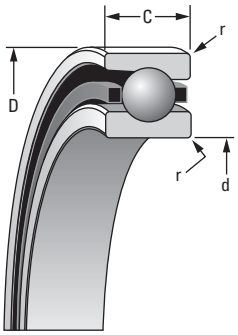

SUPER PRECISION MM

Running accuracy and performance meet ABEC 9 (ISO P2) levels.
Other features conform to ABEC 7 (ISO P4) requirements.

Bearing Number 2MM or 3MM	d Bore	D O.D.	C Width[1]	Ball Qty. x Dia.	Bearing Wt.	(2MM) LOAD RATINGS						(3MM) LOAD RATINGS					
						Steel Ball			Ceramic Ball			Steel Ball			Ceramic Ball		
						C_o Static	C_e Dynamic	Speed Rating[Ng]	C_o Static	C_e Dynamic	Speed Rating[Ng]	C_o Static	C_e Dynamic	Speed Rating[Ng]	C_o Static	C_e Dynamic	Speed Rating[Ng]
	mm/in.			**mm**/in.	**kg**/lbs.	**N**/lbs.		RPM	**N**/lbs.		RPM	**N**/lbs.		RPM	**N**/lbs.		RPM
9121WI	**105**	**160**	**26**	**21 x 16.7**	**1.617**	**89400**	**97900**	**7900**	**79566**	**97900**	**9480**	**84500**	**92100**	**7100**	**75205**	**92100**	**8520**
	4.1339	6.2992	1.0236	21 x 21/32	3.57	20100	22000	7900	17889	22000	9480	19000	20700	7100	16910	20700	8520
9122WI	**110**	**170**	**28**	**22 x 17.5**	**2.043**	**102700**	**109400**	**7500**	**91403**	**109400**	**9000**	**97400**	**103200**	**6800**	**86686**	**103200**	**8160**
	4.3307	6.6929	1.1024	22 x 11/16	4.50	23100	24600	7500	20559	24600	9000	21900	23200	6800	19491	23200	8160
9124WI	**120**	**180**	**28**	**23 x 17.5**	**2.180**	**108500**	**111200**	**6900**	**96565**	**111200**	**8280**	**103200**	**105000**	**6200**	**91848**	**105000**	**7440**
	4.7244	7.0866	1.1024	23 x 11/16	4.81	24400	25000	6900	21716	25000	8280	23200	23600	6200	20648	23600	7440
9126WI	**130**	**200**	**33**	**21 x 20.6**	**3.273**	**137000**	**143200**	**6400**	**121930**	**143200**	**7680**	**129900**	**135700**	**5800**	**115611**	**135700**	**6960**
	5.1181	7.8740	1.2992	21 x 13/16	7.21	30800	32200	6400	27412	32200	7680	29200	30500	5800	2988	30500	6960
9128WI	**140**	**210**	**33**	**22 x 20.6**	**3.454**	**145000**	**146300**	**5900**	**129050**	**146300**	**7080**	**137400**	**138300**	**5300**	**122286**	**138300**	**6360**
	5.5118	8.2677	1.2992	22 x 13/16	7.62	32600	32900	5900	29014	32900	7080	30900	31100	5300	27501	31100	6360
9130WI	**150**	**225**	**35**	**22 x 22.2**	**4.200**	**168100**	**167200**	**5600**	**149609**	**167200**	**6720**	**159200**	**157900**	**5000**	**141688**	**157900**	**6000**
	5.9055	8.8583	1.3780	22 x 7/8	9.26	37800	37600	5600	33642	37600	6720	35800	35500	5000	31862	35500	6000
9132WI	**160**	**240**	**38**	**22 x 23.8**	**5.188**	**192600**	**189500**	**5200**	**171414**	**189500**	**6240**	**182800**	**179300**	**4700**	**162692**	**179300**	**5640**
	6.2992	9.4488	1.4961	22 x 15/16	11.44	43300	42600	5200	38537	42600	6240	41100	40300	4700	36579	40300	5640
9134WI	**170**	**260**	**42**	**22 x 27.0**	**6.999**	**245500**	**234000**	**4900**	**218495**	**234000**	**5880**	**232600**	**221100**	**4400**	**207014**	**221100**	**5280**
	6.6929	10.2362	1.6535	22 x 1 1/16	15.43	55200	52600	4900	49128	52600	5880	52300	49700	4400	46547	49700	5280
9136WI	**180**	**280**	**46**	**20 x 27.0**	**9.250**	**276200**	**258400**	**4600**	**245818**	**258400**	**5520**	**262400**	**244400**	**4200**	**233536**	**244400**	**5040**
	7.0866	11.0236	1.8110	20 x 1 3/16	20.40	62100	58100	4600	55269	58100	5520	59000	55000	4200	52510	55000	5040
9140WI	**200**	**310**	**51**	**20 x 33.3**	**12.148**	**337200**	**296700**	**4100**	**300108**	**296700**	**4920**	**321100**	**281100**	**3700**	**285779**	**281100**	**4440**
	7.8740	12.2047	2.0079	20 x 1 5/16	26.78	75800	66700	4100	67462	66700	4920	72200	63200	3700	64258	63200	4440

[Ng] For a single, grease-lubricated, spring-preloaded bearing. This value to be used in permissible operating speed (Sp) calculation.
[1] Width tolerance of preloaded bearing set +0.000/-0.254 mm (+0.0000/-0.0100 in.).
[2] ABMA STD 20 (r_{as} max).

WI CONSTRUCTION

- Incorporates low shoulder on non-thrust side of outer rings.
- Balls separated by one-piece cage piloted against a ground thrust shoulder land of the outer ring.

r Rad.(2)	Suggested Shoulder Diameters				Shaft Diameter		Mounting Fits		FIXED				FLOATING			
	Shaft		Housing						Housing Bore (Stationary)		Mounting Fits		Housing Bore (Stationary)		Mounting Fits	
	Max.	Min.	Max.	Min.	Max.	Min.	Loose	Tight	Max.	Min.	Tight	Loose	Max.	Min.	Loose	Loose
mm/in.	mm/in.		mm/in.		mm/in.		mm/in.		mm/in.		mm/in.		mm/in.		mm/in.	
2.0	**116.5**	**115.7**	**150.0**	**149.2**	**105.005**	**104.995**	**0.005**	**0.013**	**160.009**	**160.000**	**0.000**	**0.022**	**160.022**	**160.012**	**0.033**	**0.012**
0.079	4.59	4.56	5.91	5.88	4.13410	4.13370	0.00020	0.00050	6.29960	6.29920	0.00000	0.00080	6.30010	6.29970	0.00130	0.00050
2.0	**123.1**	**122.3**	**158.4**	**157.6**	**110.005**	**109.995**	**0.005**	**0.013**	**170.010**	**170.000**	**0.000**	**0.020**	**170.022**	**170.012**	**0.032**	**0.012**
0.079	4.85	4.82	6.24	6.21	4.33090	4.33050	0.00020	0.00050	6.69330	6.69290	0.00000	0.00080	6.69380	6.69340	0.00130	0.00050
2.0	**133.2**	**132.5**	**168.3**	**167.5**	**120.005**	**119.995**	**0.005**	**0.013**	**180.010**	**180.000**	**0.000**	**0.020**	**180.022**	**180.012**	**0.032**	**0.012**
0.079	5.25	5.22	6.63	6.60	4.72460	4.72420	0.00020	0.00050	7.08700	7.08660	0.00000	0.00080	7.08750	7.08710	0.00130	0.00050
2.0	**144.9**	**144.2**	**186.6**	**185.8**	**130.005**	**129.995**	**0.005**	**0.015**	**200.011**	**200.000**	**0.000**	**0.022**	**200.025**	**200.015**	**0.036**	**0.015**
0.079	5.71	5.68	7.35	7.32	5.11830	5.11790	0.00020	0.00060	7.87450	7.87400	0.00000	0.00090	7.87500	7.87460	0.00150	0.00060
2.0	**155.1**	**154.3**	**196.5**	**195.7**	**140.005**	**139.995**	**0.005**	**0.015**	**210.011**	**210.000**	**0.000**	**0.022**	**210.025**	**210.015**	**0.036**	**0.015**
0.079	6.11	6.08	7.74	7.71	5.51200	5.51160	0.00020	0.00060	8.26820	8.26770	0.00000	0.00090	8.26870	8.26830	0.00150	0.00060
2.0	**166.0**	**165.2**	**210.7**	**209.9**	**150.005**	**149.995**	**0.005**	**0.015**	**225.011**	**225.000**	**0.000**	**0.022**	**225.025**	**225.015**	**0.036**	**0.015**
0.079	6.54	6.51	8.30	8.27	5.90570	5.90530	0.00020	0.00060	8.85880	8.85830	0.00000	0.00090	8.85930	8.85890	0.00150	0.00060
2.0	**176.9**	**176.2**	**224.7**	**223.9**	**160.005**	**159.995**	**0.005**	**0.015**	**240.011**	**240.000**	**0.000**	**0.022**	**240.025**	**240.015**	**0.041**	**0.018**
0.079	6.97	6.94	8.85	8.82	6.29940	6.29900	0.00020	0.00060	9.44930	9.44880	0.00000	0.00090	9.45000	9.44940	0.00160	0.00060
2.0	**188.6**	**187.8**	**242.7**	**241.9**	**170.005**	**169.995**	**0.005**	**0.015**	**260.011**	**260.000**	**0.000**	**0.024**	**260.030**	**260.015**	**0.044**	**0.018**
0.079	7.43	7.40	9.56	9.53	6.69310	6.69270	0.00020	0.00060	10.23670	10.23620	0.00000	0.00100	10.23750	10.23700	0.00180	0.00080
2.0	**200.5**	**199.8**	**261.0**	**260.2**	**180.008**	**179.993**	**0.007**	**0.018**	**280.013**	**280.000**	**0.000**	**0.026**	**280.031**	**280.018**	**0.044**	**0.018**
0.079	7.90	7.87	10.28	10.25	7.08690	7.08630	0.00030	0.00070	11.02410	11.02360	0.00000	0.00100	11.02490	11.02440	0.00180	0.00080
2.0	**222.4**	**221.6**	**289.2**	**288.4**	**200.008**	**199.993**	**0.007**	**0.019**	**310.013**	**310.000**	**0.000**	**0.026**	**310.031**	**310.018**	**0.044**	**0.018**
0.079	8.76	8.73	11.39	11.36	7.87430	7.87370	0.00030	0.00080	12.20520	12.20470	0.00000	0.00100	12.20600	12.20550	0.00180	0.00080

EXTRA-LIGHT 2MM9100WI ISO 10 SERIES

DUPLEX PERFORMANCE DATA

MOUNTING ARRANGEMENTS

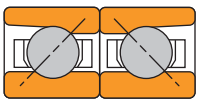

Back-to-Back DB

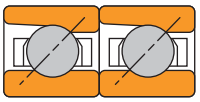

Tandem DT

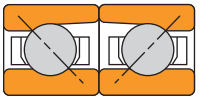

Face-to-Face DF

Bearing Number	Preload DUX X-light	Preload DUL Light	Preload DUM Med.	Preload DUH Heavy	Axial Stiffness[1] X-light	Axial Stiffness[1] Light	Axial Stiffness[1] Med.	Axial Stiffness[1] Heavy	Radial Stiffness[1] X-light	Radial Stiffness[1] Light	Radial Stiffness[1] Med.	Radial Stiffness[1] Heavy	Spacer Offsets[1] X-light to Light	Spacer Offsets[1] Light to Med.	Spacer Offsets[1] Med. to Heavy
	N lbs.				N/µm 10^6 lbs./in.				N/µm 10^6 lbs./in.				µm in.		
2MM9100WI	—	13	25	55	14.13	16.42	21.51	28.51	—	65.66	83.78	105.29	1.27	2.79	4.32
	—	3	6	12	0.081	0.094	0.123	0.163	—	0.375	0.479	0.602	0.00005	0.00011	0.00017
2MM9101WI	—	20	45	90	18.89	22.91	30.08	40.23	—	91.11	115.29	144.38	1.78	3.30	5.08
	—	5	10	20	0.108	0.131	0.172	0.230	—	0.521	0.659	0.826	0.00007	0.00013	0.00020
2MM9102WI	—	20	65	130	20.11	24.31	37.60	50.72	—	96.88	140.41	175.20	1.52	5.84	6.10
	—	5	15	30	0.115	0.139	0.215	0.290	—	0.554	0.803	1.002	0.00006	0.00023	0.00024
2MM9103WI	—	20	90	160	20.11	24.31	42.50	54.39	—	96.89	154.07	183.85	1.52	7.87	5.59
	—	5	20	35	0.115	0.139	0.243	0.311	—	0.554	0.881	1.051	0.00006	0.00031	0.00022
2MM9104WI	—	45	90	180	21.00	27.81	37.25	50.72	—	144.78	182.61	228.09	3.56	5.33	8.13
	—	10	20	40	0.120	0.159	0.213	0.290	—	0.828	1.044	1.304	0.00014	0.00021	0.00032
2MM9105WI	—	45	110	270	28.16	30.78	45.12	67.16	—	161.42	219.81	290.47	1.27	7.11	11.18
	—	10	25	60	0.161	0.176	0.258	0.384	—	0.923	1.257	1.661	0.00005	0.00028	0.00044
2MM9106WI	—	65	130	330	30.26	35.68	47.92	73.46	—	202.87	256.21	343.52	2.79	6.35	13.21
	—	15	30	75	0.173	0.204	0.274	0.420	—	1.160	1.465	1.964	0.00011	0.00025	0.00052
2MM9107WI	—	90	220	400	33.93	43.03	63.66	83.78	—	242.71	329.53	397.44	4.06	9.91	9.65
	—	20	50	90	0.194	0.246	0.364	0.479	—	1.388	1.884	2.272	0.00016	0.00039	0.00038
2MM9108WI	—	90	220	440	38.65	44.60	65.94	91.12	—	253.13	344.22	429.40	2.54	9.65	11.43
	—	20	50	100	0.221	0.255	0.377	0.521	—	1.447	1.968	2.455	0.00010	0.00038	0.00045
2MM9109WI	—	130	270	560	41.98	54.22	73.11	103.19	—	312.77	394.21	498.45	5.08	8.38	13.21
	—	30	60	125	0.240	0.310	0.418	0.590	—	1.788	2.254	2.850	0.00020	0.00033	0.00052
2MM9110WI	89	130	270	670	45.65	55.97	75.38	116.13	281.29	324.72	409.67	548.84	4.32	8.13	16.76
	20	30	60	150	0.261	0.320	0.431	0.664	1.606	1.857	2.342	3.138	0.00017	0.00032	0.00066
2MM9111WI	110	160	330	670	52.99	62.61	86.23	118.23	316.97	358.41	464.50	581.11	3.81	9.65	12.95
	25	35	75	150	0.303	0.358	0.493	0.676	1.810	2.049	2.656	3.323	0.00015	0.00038	0.00051
2MM9112WI	110	180	330	890	56.49	68.21	88.85	139.75	327.57	389.08	481.62	660.30	4.32	7.87	19.56
	25	40	75	200	0.323	0.390	0.508	0.799	1.871	2.225	2.754	3.775	0.00017	0.00031	0.00077
2MM9113WI	110	220	440	890	60.17	77.13	103.89	143.42	337.69	434.73	547.87	683.95	5.84	9.91	14.48
	25	50	100	200	0.344	0.441	0.594	0.820	1.928	2.486	3.133	3.911	0.00023	0.00039	0.00057
2MM9114WI	130	270	560	1110	62.44	83.43	114.03	157.24	363.37	469.41	600.03	749.06	7.62	11.68	16.51
	30	60	125	250	0.357	0.477	0.652	0.899	2.075	2.684	3.431	4.283	0.00030	0.00046	0.00065
2MM9115WI	130	270	560	1220	66.81	85.88	117.36	169.13	374.14	485.42	621.10	799.47	6.60	11.43	18.54
	30	60	125	275	0.382	0.491	0.671	0.967	2.136	2.775	3.551	4.571	0.00026	0.00045	0.00073
2MM9116WI	160	310	670	1560	71.36	92.87	128.03	189.59	404.91	529.96	685.98	900.40	7.37	12.95	22.35
	35	70	150	350	0.408	0.531	0.732	1.084	2.312	3.030	3.922	5.148	0.00029	0.00051	0.00088
2MM9117WI	180	360	780	1670	75.03	100.92	140.97	201.14	441.21	573.22	745.56	951.44	8.38	13.97	20.83
	40	80	175	375	0.429	0.577	0.806	1.150	2.519	3.277	4.263	5.440	0.00033	0.00055	0.00082
2MM9118WI	180	440	890	1780	74.16	105.99	142.89	197.64	436.76	622.45	785.34	981.05	11.68	14.22	20.83
	40	100	200	400	0.424	0.606	0.817	1.130	2.494	3.559	4.490	5.609	0.00046	0.00056	0.00082
2MM9119WI	200	490	980	1980	79.23	113.34	153.21	213.55	472.40	664.15	837.23	1049.03	11.94	14.73	21.84
	45	110	220	445	0.453	0.648	0.876	1.221	2.698	3.797	4.787	5.998	0.00047	0.00058	0.00086
2MM9120WI	220	560	1110	2000	84.83	122.95	166.50	219.85	507.88	715.43	900.60	1086.81	12.70	15.24	18.29
	50	125	250	450	0.485	0.703	0.952	1.257	2.900	4.091	5.149	6.214	0.00050	0.00060	0.00072
2MM9121WI	240	600	1220	2450	89.20	127.68	173.68	240.49	523.56	736.82	934.23	1166.02	12.95	16.51	23.62
	55	135	275	550	0.510	0.730	0.993	1.375	2.990	4.213	5.342	6.667	0.00051	0.00065	0.00093
2MM9122WI	270	670	1330	2670	95.32	138.17	186.27	257.28	555.90	792.09	999.34	1248.44	13.72	16.51	24.13
	60	150	300	600	0.545	0.790	1.065	1.471	3.174	4.529	5.714	7.138	0.00054	0.00065	0.00095
2MM9124WI	290	780	1560	2890	102.84	151.29	204.63	273.72	590.28	859.91	1082.79	1319.88	14.99	17.53	22.35
	65	175	350	650	0.588	0.865	1.170	1.565	3.371	4.917	6.191	7.547	0.00059	0.00069	0.00088
2MM9126WI	330	890	1780	3670	105.11	154.61	208.48	292.78	613.01	897.71	1132.37	1428.16	17.02	19.56	30.23
	75	200	400	825	0.601	0.884	1.192	1.674	3.501	5.133	6.474	8.166	0.00067	0.00077	0.00119
2MM9128WI	380	1000	2000	3890	112.99	166.85	225.62	308.52	664.59	963.80	1214.17	1501.97	17.78	20.32	28.19
	85	225	450	875	0.646	0.954	1.290	1.764	3.795	5.511	6.942	8.588	0.00070	0.00080	0.00111
2MM9130WI	440	1110	2450	4450	122.95	177.87	250.63	331.96	721.78	1024.34	1332.00	1612.33	17.78	24.89	27.43
	100	250	550	1000	0.703	1.017	1.433	1.898	4.122	5.857	7.616	9.219	0.00070	0.00098	0.00108
2MM9132WI	490	1330	2670	5340	130.13	194.31	262.35	363.44	760.23	1116.05	1405.76	1754.23	20.83	23.37	34.04
	110	300	600	1200	0.744	1.111	1.500	2.078	4.341	6.381	8.038	10.030	0.00082	0.00092	0.00134
2MM9134WI	580	1670	3340	6670	141.49	215.83	291.56	403.84	839.57	1264.35	1592.71	1987.51	24.38	26.16	38.35
	130	375	750	1500	0.809	1.234	1.667	2.309	4.794	7.229	9.106	11.364	0.00096	0.00103	0.00151
2MM9136WI	670	1730	3470	6940	143.24	209.53	282.64	390.55	854.72	1240.93	1566.02	1956.50	24.13	28.19	41.15
	150	390	780	1560	0.819	1.198	1.616	2.233	4.881	7.095	8.954	11.186	0.00095	0.00111	0.00162
2MM9140WI	930	2220	4450	8900	170.00	240.49	324.09	447.92	1004.58	1396.79	1760.98	2198.74	25.15	31.50	45.97
	210	500	1000	2000	0.972	1.375	1.853	2.561	5.737	7.986	10.069	12.571	0.00099	0.00124	0.00181

[1] For DB or DF arrangements only. For other mounting arrangements, contact your Timken representative.

EXTRA-LIGHT 3MM9100WI ISO 10 SERIES

DUPLEX PERFORMANCE DATA

MOUNTING ARRANGEMENTS

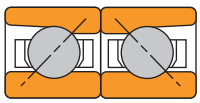

Back-to-Back DB

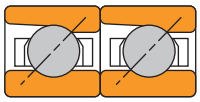

Tandem DT

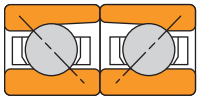

Face-to-Face DF

Bearing Number	Preload				Axial Stiffness[1]				Radial Stiffness[1]				Spacer Offsets[1]		
	DUX X-light	DUL Light	DUM Med.	DUH Heavy	X-light	Light	Med.	Heavy	X-light	Light	Med.	Heavy	X-light to Light	Light to Med.	Med. to Heavy
	N lbs.				N/µm 10^6 lbs./in.				N/µm 10^6 lbs./in.				µm in.		
3MM9100WI	—	20	45	90	21.51	30.44	39.23	51.11	—	63.42	80.40	100.86	0.76	1.78	2.79
	—	5	10	20	0.123	0.174	0.224	0.292	—	0.363	0.460	0.577	0.00003	0.00007	0.00011
3MM9101WI	—	45	90	180	28.68	45.15	58.59	77.10	—	93.27	117.34	146.46	1.02	2.29	3.56
	—	10	20	40	0.164	0.258	0.335	0.440	—	0.533	0.671	0.837	0.00004	0.00009	0.00014
3MM9102WI	—	45	90	180	30.61	50.68	65.58	85.94	—	99.34	125.12	156.34	1.02	3.81	4.32
	—	10	20	40	0.175	0.289	0.374	0.491	—	0.568	0.715	0.894	0.00004	0.00015	0.00017
3MM9103WI	—	65	160	220	30.61	55.73	77.33	89.38	—	113.84	149.87	167.71	1.02	5.33	3.81
	—	15	35	50	0.175	0.318	0.442	0.510	—	0.651	0.857	0.959	0.00004	0.00021	0.00015
3MM9104WI	—	90	180	330	40.4	66.77	86.69	111.16	—	137.86	173.36	212.00	2.03	3.05	4.57
	—	20	40	75	0.231	0.381	0.495	0.635	—	0.788	0.991	1.212	0.00008	0.00012	0.00018
3MM9105WI	—	90	220	400	52.99	74.23	104.70	132.20	—	153.93	208.66	251.77	0.76	3.81	6.35
	—	20	50	90	0.303	0.424	0.598	0.755	—	0.880	1.193	1.440	0.00003	0.00015	0.00025
3MM9106WI	—	130	290	530	60.52	90.66	121.43	155.04	—	195.36	252.33	306.97	1.27	3.3	7.37
	—	30	65	120	0.346	0.518	0.693	0.885	—	1.117	1.443	1.755	0.00005	0.00013	0.00029
3MM9107WI	—	160	360	710	68.74	103.35	140.95	185.62	—	222.51	293.03	365.86	2.03	5.33	5.33
	—	35	80	160	0.393	0.590	0.805	1.060	—	1.272	1.675	2.092	0.00008	0.00021	0.00021
3MM9108WI	—	180	440	760	78.01	113.06	159.90	197.67	—	243.01	329.06	389.76	1.27	5.08	6.35
	—	40	100	170	0.446	0.646	0.913	1.129	—	1.389	1.881	2.229	0.00005	0.0002	0.00025
3MM9109WI	—	220	560	980	87.97	131.08	185.23	232.10	—	280.98	380.67	455.96	2.54	4.32	7.11
	—	50	125	220	0.503	0.749	1.058	1.325	—	1.607	2.176	2.607	0.0001	0.00017	0.00028
3MM9110WI	110	240	670	1070	109.84	142.02	207.61	250.63	227.34	301.39	419.66	487.34	3.81	9.65	6.86
	25	55	150	240	0.628	0.812	1.187	1.433	1.298	1.723	2.399	2.786	0.00015	0.00038	0.00027
3MM9111WI	130	330	780	1330	120.33	163.53	225.1	278.97	253.11	354.42	469.41	557.84	5.33	9.14	8.89
	30	75	175	300	0.688	0.935	1.287	1.595	1.445	2.026	2.684	3.190	0.00021	0.00036	0.00035
3MM9112WI	160	360	890	1450	129.95	173.33	245.21	297.68	278.69	375.44	508.40	593.68	5.33	10.16	8.13
	35	80	200	325	0.743	0.991	1.402	1.702	1.591	2.147	2.907	3.394	0.00021	0.0004	0.00032
3MM9113WI	180	360	890	1560	140.62	178.92	252.91	316.22	303.09	388.33	526.36	629.45	4.32	9.91	9.4
	40	80	200	350	0.804	1.023	1.446	1.808	1.731	2.220	3.010	3.599	0.00017	0.00039	0.00037
3MM9114WI	200	440	1110	2000	148.32	197.64	278.97	352.42	316.28	423.12	573.64	692.20	5.59	11.18	11.18
	45	100	250	450	0.848	1.13	1.595	2.015	1.806	2.419	3.280	3.958	0.00022	0.00044	0.00044
3MM9115WI	220	490	1220	2110	159.16	211.45	298.73	371.31	340.43	452.13	612.48	729.26	5.84	11.43	10.67
	50	110	275	475	0.91	1.209	1.708	2.123	1.944	2.585	3.502	4.170	0.00023	0.00045	0.00042
3MM9116WI	240	620	1560	2670	170.53	240.14	339.13	420.11	359.22	508.19	688.62	818.08	7.37	12.7	11.68
	55	140	350	600	0.975	1.373	1.939	2.402	2.051	2.906	3.937	4.677	0.00029	0.0005	0.00046
3MM9117WI	270	670	1670	2890	181.72	253.95	358.89	446.69	383.57	537.29	727.78	867.49	7.37	12.95	12.19
	60	150	375	650	1.039	1.452	2.052	2.554	2.190	3.072	4.161	4.960	0.00029	0.00051	0.00048
3MM9118WI	270	760	1780	3340	183.99	262.7	362.22	465.06	394.38	565.75	751.98	919.61	8.38	12.95	14.99
	65	170	400	750	1.052	1.502	2.071	2.659	2.252	3.235	4.300	5.258	0.00033	0.00051	0.00059
3MM9119WI	290	820	1980	3450	193.96	279.32	388.98	485.17	405.28	601.34	804.52	960.71	8.89	13.72	13.46
	65	185	445	775	1.109	1.597	2.224	2.774	2.314	3.438	4.600	5.493	0.00035	0.00054	0.00053
3MM9120WI	330	850	2000	3560	207.08	290.51	401.92	505.11	442.97	625.70	833.21	1001.76	8.13	13.21	13.72
	75	190	450	800	1.184	1.661	2.298	2.888	2.530	3.578	4.764	5.728	0.00032	0.00052	0.00054
3MM9121WI	360	960	2050	4090	217.4	308.35	409.62	537.82	448.80	652.64	841.25	1051.10	8.89	12.19	17.27
	80	215	460	920	1.243	1.763	2.342	3.075	2.563	3.732	4.810	6.010	0.00035	0.00048	0.00068
3MM9122WI	400	1110	2670	4890	232.62	337.91	469.43	596.76	487.78	718.63	961.43	1167.28	9.91	15.24	16.76
	90	250	600	1100	1.33	1.932	2.684	3.412	2.785	4.109	5.497	6.674	0.00039	0.0006	0.00066
3MM9124WI	440	1220	2890	5120	251.33	359.94	497.59	624.04	523.58	764.45	1016.78	1220.33	10.16	15.49	15.75
	100	275	650	1150	1.437	2.058	2.845	3.568	2.990	4.371	5.814	6.977	0.0004	0.00061	0.00062
3MM9126WI	510	1510	3670	6670	259.03	381.81	533.1	676.16	538.89	814.82	1093.67	1324.03	12.45	18.8	19.81
	115	340	825	1500	1.481	2.183	3.048	3.866	3.077	4.659	6.253	7.570	0.00049	0.00074	0.00078
3MM9128WI	580	1560	3890	6890	277.22	397.55	561.08	704.5	583.89	848.49	1150.30	1381.06	11.68	19.3	19.05
	130	350	875	1550	1.585	2.273	3.208	4.028	3.334	4.851	6.577	7.896	0.00046	0.00076	0.00075
3MM9130WI	640	1780	4450	8010	297.16	428.16	604.1	762.74	617.68	908.66	1232.22	1487.09	12.45	20.57	20.83
	145	400	1000	1800	1.699	2.448	3.454	4.361	3.527	5.195	7.045	8.503	0.00049	0.00081	0.00082
3MM9132WI	760	2220	5340	8900	319.54	470.66	655	802.44	667.54	1001.74	1338.58	1576.11	14.73	22.1	19.56
	170	500	1200	2000	1.827	2.691	3.745	4.588	3.812	5.728	7.653	9.012	0.00058	0.00087	0.00077
3MM9134WI	930	2780	5780	11560	359.42	531	698.73	918.4	742.80	1123.56	1433.83	1791.10	16.51	19.56	28.45
	210	625	1300	2600	2.055	3.036	3.995	5.251	4.242	6.424	8.198	10.241	0.00065	0.00077	0.00112
3MM9136WI	1020	3110	6230	12460	358.55	533.79	691.9	908.78	742.40	1135.57	1431.01	1788.58	18.54	20.32	30.9
	230	700	1400	2800	2.05	3.052	3.956	5.196	4.239	6.493	8.182	10.226	0.00073	0.0008	0.00122
3MM9140WI	1250	3780	8900	16010	395.62	588.71	812.24	1025.61	818.74	1251.44	1662.98	2007.43	20.32	28.96	30.99
	280	850	2000	3600	2.262	3.366	4.644	5.864	4.675	7.155	9.508	11.478	0.0008	0.00114	0.00122

[1] For DB or DF arrangements only. For other mounting arrangements, contact your Timken representative.

C

EXTRA-LIGHT 2MM9100WI ISO 10 SERIES

SPEED CAPABILITY DATA

Bearing Number	Grease Capacity[1]				Operating Speeds[4] (DB Mounting)[5]					
	Low Speed[2]		High Speed[3]		Grease			Oil		
	25%	40%	15%	20%	DUL	DUM	DUH	DUL	DUM	DUH
	grams		grams		RPM			RPM		
2MM9100WI	0.20	0.40	0.20	0.20	54800	41100	27400	93200	69900	46600
2MM9101WI	0.30	0.40	0.20	0.20	45800	34400	22900	77900	58500	38900
2MM9102WI	0.30	0.50	0.20	0.30	38900	29200	19400	66100	49600	33000
2MM9103WI	0.40	0.70	0.30	0.40	34500	25900	17200	58700	44000	29200
2MM9104WI	0.70	1.20	0.50	0.70	29700	22300	14800	50500	37900	25200
2MM9105WI	0.90	1.40	0.60	0.80	24700	18500	12400	42000	31500	21100
2MM9106WI	1.30	2.00	0.80	1.10	20400	15300	10200	34700	26000	17300
2MM9107WI	1.60	2.60	1.10	1.50	18100	13600	9000	30800	23100	15300
2MM9108WI	2.00	3.20	1.40	1.80	15900	11900	8000	27000	20200	13600
2MM9109WI	2.50	4.00	1.70	2.20	14300	10000	7200	24300	18200	12200
2MM9110WI	2.80	4.40	1.90	2.50	13000	9800	6500	22100	16700	11100
2MM9111WI	4.00	6.40	2.70	3.50	11800	8800	5900	20100	15000	10000
2MM9112WI	4.20	6.80	2.80	3.80	10900	8200	5400	18500	13900	9200
2MM9113WI	4.50	7.20	3.00	4.00	10200	7600	5100	17300	12900	8700
2MM9114WI	6.30	10.00	4.20	5.60	9400	7000	4700	16000	11900	8000
2MM9115WI	6.60	10.60	4.40	5.90	8800	6600	4400	15000	11200	7500
2MM9116WI	8.60	13.80	5.80	7.70	8200	6200	4100	13900	10500	7000
2MM9117WI	9.10	14.50	6.00	8.10	7800	5800	3900	13300	9900	6600
2MM9118WI	11.70	18.80	7.80	10.40	7400	5500	3700	12600	9400	6300
2MM9119WI	12.20	19.50	8.10	10.90	7000	5200	3500	11900	8800	6000
2MM9120WI	12.10	19.40	8.10	10.80	6600	5000	3300	11200	8500	5600
2MM9121WI	15.90	25.40	10.60	14.10	6300	4700	3200	10700	8000	5400
2MM9122WI	18.90	30.20	12.60	16.80	6000	4500	3000	10200	7700	5100
2MM9124WI	20.50	32.80	13.70	18.20	5500	4100	2800	9400	7000	4800
2MM9126WI	31.70	50.70	21.10	28.20	5100	3800	2600	8700	6500	4400
2MM9128WI	33.80	54.00	22.50	30.10	4700	3500	2400	8000	6000	4100
2MM9130WI	41.10	65.70	27.40	36.50	4500	3400	2200	7700	5800	3700
2MM9132WI	51.00	81.60	34.10	45.40	4200	3100	2100	7100	5300	3600
2MM9134WI	66.30	106.00	44.20	59.00	3900	2900	2000	6600	4900	3400
2MM9136WI	88.40	141.50	59.00	78.70	3700	2800	1800	6200	4700	3100
2MM9140WI	121.00	193.50	80.70	107.60	3300	2500	1600	5600	4300	2700

(1) Fill weights based on specific gravity of 0.99.
(2) Low speed <500000 dN.
(3) High speed ≥ 500000 dN.
(4) For ceramic ball complements, use 120 percent of speeds shown.
(5) For other mounting arrangement configurations, refer to the engineering section on permissible speed calculation methods.

EXTRA-LIGHT 3MM9100WI ISO 10 SERIES

SPEED CAPABILITY DATA

Bearing Number	Grease Capacity[1]				Operating Speeds[4] (DB Mounting)[5]					
	Low Speed[2]		High Speed[3]		Grease			Oil		
	25%	40%	15%	20%	DUL	DUM	DUH	DUL	DUM	DUH
	grams		grams		RPM			RPM		
3MM9100WI	0.20	0.40	0.20	0.20	49320	36990	24660	83880	62910	41940
3MM9101WI	0.30	0.40	0.20	0.20	41220	30960	20610	70110	52650	35010
3MM9102WI	0.30	0.50	0.20	0.30	35010	26280	17460	59490	44640	29700
3MM9103WI	0.40	0.70	0.30	0.40	31050	23310	15480	52830	39600	26280
3MM9104WI	0.70	1.20	0.50	0.70	26730	20070	13320	45450	34110	22680
3MM9105WI	0.90	1.40	0.60	0.80	22230	16650	11160	37800	28350	18990
3MM9106WI	1.30	2.00	0.80	1.10	18360	13770	9180	31230	23400	15570
3MM9107WI	1.60	2.60	1.10	1.50	16290	12240	8100	27720	20790	13770
3MM9108WI	2.00	3.20	1.40	1.80	14310	10710	7200	24300	18180	12240
3MM9109WI	2.50	4.00	1.70	2.20	12870	9000	6480	21870	16380	10980
3MM9110WI	2.80	4.40	1.90	2.50	11700	8820	5850	19890	15030	9990
3MM9111WI	4.00	6.40	2.70	3.50	10620	7920	5310	18090	13500	9000
3MM9112WI	4.20	6.80	2.80	3.80	9810	7380	4860	16650	12510	8280
3MM9113WI	4.50	7.20	3.00	4.00	9180	6840	4590	15570	11610	7830
3MM9114WI	6.30	10.00	4.20	5.60	8460	6300	4230	14400	10710	7200
3MM9115WI	6.60	10.60	4.40	5.90	7920	5940	3960	13500	10080	6750
3MM9116WI	8.60	13.80	5.80	7.70	7380	5580	3690	12510	9450	6300
3MM9117WI	9.10	14.50	6.00	8.10	7020	5220	3510	11970	8910	5940
3MM9118WI	11.70	18.80	7.80	10.40	6660	4950	3330	11340	8460	5670
3MM9119WI	12.20	19.50	8.10	10.90	6300	4680	3150	10710	7920	5400
3MM9120WI	12.10	19.40	8.10	10.80	5940	4500	2970	10080	7650	5040
3MM9121WI	15.90	25.40	10.60	14.10	5670	4230	2880	9630	7200	4860
3MM9122WI	18.90	30.20	12.60	16.80	5400	4050	2700	9180	6930	4590
3MM9124WI	20.50	32.80	13.70	18.20	4950	3690	2520	8460	6300	4320
3MM9126WI	31.70	50.70	21.10	28.20	4590	3420	2340	7830	5850	3960
3MM9128WI	33.80	54.00	22.50	30.10	4230	3150	2160	7200	5400	3690
3MM9130WI	41.10	65.70	27.40	36.50	4050	3060	1980	6930	5220	3330
3MM9132WI	51.00	81.60	34.10	45.40	3780	2790	1890	6390	4770	3240
3MM9134WI	66.30	106.00	44.20	59.00	3510	2610	1800	5940	4410	3060
3MM9136WI	88.40	141.50	59.00	78.70	3330	2520	1620	5580	4230	2790
3MM9140WI	121.00	193.50	80.70	107.60	2970	2250	1440	5040	3870	2430

(1) Fill weights based on specific gravity of 0.99.
(2) Low speed <500000 dN.
(3) High speed ≥ 500000 dN.
(4) For ceramic ball complements, use 120 percent of speeds shown.
(5) For other mounting arrangement configurations, refer to the engineering section on permissible speed calculation methods.

EXTRA-LIGHT ISO 10 SERIES
2(3)MMV9100HX

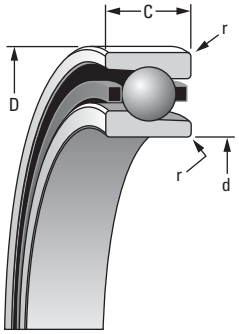

SUPER PRECISION MM

Running accuracy and performance meet ABEC 9 (ISO P2) levels.
Other features conform to ABEC 7 (ISO P4) requirements.

Bearing Number 2MM or 3MM	d Bore	D O.D.	C Width[1]	Ball Qty. x Dia.	Bearing Wt.	(2MM) LOAD RATINGS Steel Ball C_o Static	C_e Dynamic	Speed Rating[Ng]	Ceramic Ball C_o Static	C_e Dynamic	Speed Rating[Ng]	(3MM) LOAD RATINGS Steel Ball C_o Static	C_e Dynamic	Speed Rating[Ng]	Ceramic Ball C_o Static	C_e Dynamic	Speed Rating[Ng]
	mm/in.			mm/in.	kg/lbs.	N/lbs.		RPM	N/lbs.		RPM	N/lbs.		RPM	N/lbs.		RPM
9100HX	**10**	**26**	**8**	**10 x 4.0**	**0.018**	**1180**	**3310**	**85800**	**1050**	**3310**	**102960**	**1140**	**3170**	**77200**	**1010**	**3170**	**92640**
	0.3937	1.0236	0.3150	10 x 5/32	0.04	270	740	85800	240	740	102960	260	710	77200	230	710	92640
9101HX	**12**	**28**	**8**	**10 x 4.8**	**0.020**	**1650**	**4560**	**78900**	**1470**	**4560**	**94680**	**1590**	**4390**	**71000**	**1420**	**4390**	**85200**
	0.4724	1.1024	0.3150	10 x 3/16	0.04	370	1030	78900	330	1030	94680	360	990	71000	320	990	85200
9102HX	**15**	**32**	**9**	**12 x 4.8**	**0.027**	**2110**	**5210**	**64300**	**1880**	**5210**	**77160**	**2010**	**4980**	**57900**	**1790**	**4980**	**69480**
	0.5906	1.2598	0.3543	12 x 3/16	0.06	470	1170	64300	420	1170	77160	450	1120	57900	400	1120	69480
9103HX	**17**	**35**	**10**	**12 x 5.6**	**0.038**	**2810**	**6860**	**58900**	**2500**	**6860**	**70680**	**2700**	**6580**	**53000**	**2410**	**6580**	**63600**
	0.6693	1.378	0.3937	12 x 7/32	0.08	630	1540	58900	560	1540	70680	610	1480	53000	540	1480	63600
9104HX	**20**	**42**	**12**	**12 x 6.4**	**0.064**	**3740**	**8730**	**48900**	**3330**	**8730**	**58680**	**3570**	**8370**	**44000**	**3180**	**8370**	**52800**
	0.7874	1.6535	0.4724	12 x 1/4	0.14	840	1960	48900	750	1960	58680	800	1880	44000	710	1880	52800
9105HX	**25**	**47**	**12**	**13 x 6.4**	**0.073**	**4240**	**9190**	**40700**	**3770**	**9190**	**48840**	**4030**	**8760**	**36600**	**3590**	**8760**	**43920**
	0.9843	1.8504	0.4724	13 x 1/4	0.16	950	2070	40700	850	2070	48840	910	1970	36600	810	1970	43920
9106HX	**30**	**55**	**13**	**14 x 7.1**	**0.104**	**5850**	**11900**	**33600**	**5210**	**11900**	**40320**	**5600**	**11300**	**30200**	**4990**	**11300**	**36240**
	1.1811	2.1654	0.5118	14 x 9/32	0.23	1320	2680	33600	1170	2680	40320	1260	2550	30200	1120	2550	36240
9107HX	**35**	**62**	**14**	**15 x 7.9**	**0.145**	**7770**	**15000**	**29800**	**6920**	**15000**	**35760**	**7430**	**14300**	**26800**	**6620**	**14300**	**32160**
	1.378	2.4409	0.5512	15 x 5/16	0.32	1750	3380	29800	1560	3380	35760	1670	3220	26800	1490	3220	32160
9108HX	**40**	**68**	**15**	**16 x 7.9**	**0.181**	**8510**	**15500**	**26200**	**7580**	**15500**	**31440**	**8090**	**14700**	**23600**	**7200**	**14700**	**28320**
	1.5748	2.6772	0.5906	16 x 5/16	0.40	1910	3490	26200	1700	3490	31440	1820	3310	23600	1620	3310	28320
9109HX	**45**	**75**	**16**	**15 x 9.5**	**0.218**	**11300**	**20800**	**23900**	**10100**	**20800**	**28680**	**10800**	**19800**	**21500**	**9590**	**19800**	**25800**
	1.7717	2.9528	0.6299	15 x 3/8	0.48	2540	4690	23900	2260	4690	28680	2420	4460	21500	2160	4460	25800
9110HX	**50**	**80**	**16**	**16 x 9.5**	**0.236**	**12300**	**21600**	**21800**	**10900**	**21600**	**26160**	**11700**	**20500**	**19600**	**10400**	**20500**	**23500**
	1.9685	3.1496	0.6299	16 x 3/8	0.52	2760	4850	21800	2450	4850	26160	2620	4600	19600	2330	4600	23500
9111HX	**55**	**90**	**18**	**24 x 7.9**	**0.399**	**13500**	**19400**	**18700**	**12000**	**19400**	**22440**	**12800**	**18300**	**16900**	**11400**	**18300**	**20280**
	2.1654	3.5433	0.7087	24 x 5/16	0.88	3030	4360	18700	2700	4360	22400	2880	4120	16900	2560	4120	20280
9112HX	**60**	**95**	**18**	**25 x 7.9**	**0.426**	**14200**	**19700**	**17400**	**12600**	**19700**	**20880**	**13400**	**18600**	**15700**	**11900**	**18600**	**18840**
	2.3622	3.7402	0.7087	25 x 5/16	0.94	3190	4420	17400	2840	4420	20880	3010	4180	15700	2680	4180	18840
9113HX	**65**	**100**	**18**	**25 x 8.7**	**0.445**	**17100**	**23500**	**16400**	**15200**	**23500**	**19680**	**16200**	**22200**	**14800**	**14400**	**22200**	**17760**
	2.5591	3.9370	0.7087	25 x 11/32	0.98	3850	5280	16400	3430	5280	19680	3640	4990	14800	3240	4990	17760
9114HX	**70**	**110**	**20**	**25 x 9.5**	**0.626**	**20400**	**27500**	**15000**	**18100**	**27500**	**18000**	**19200**	**85900**	**13500**	**17100**	**85900**	**16200**
	2.7559	4.3307	0.7874	25 x 3/8	1.38	4580	6180	15000	4080	6180	18000	4330	5830	13500	3850	5830	16200
9115HX	**75**	**115**	**20**	**26 x 9.5**	**0.658**	**21300**	**27900**	**14200**	**19000**	**27900**	**17040**	**20100**	**26408**	**12700**	**17900**	**26408**	**15240**
	2.9528	4.5276	0.7874	26 x 3/8	1.45	4790	6270	14200	4260	6270	17040	4520	5930	12700	4020	5930	15240
9116HX	**80**	**125**	**22**	**25 x 11.1**	**0.875**	**27600**	**36500**	**13200**	**24600**	**36500**	**15840**	**26200**	**34400**	**11900**	**23300**	**34400**	**14280**
	3.1496	4.9213	0.8661	25 x 7/16	1.93	6210	8210	13200	5530	8210	15840	5880	7740	11900	5240	7740	14280
9117HX	**85**	**130**	**22**	**26 x 11.1**	**0.916**	**29000**	**37100**	**12600**	**25800**	**37100**	**15120**	**27300**	**35000**	**11300**	**24300**	**35000**	**13560**
	3.3465	5.1181	0.8610	26 x 7/16	2.02	6510	8330	12600	5790	8330	15120	6140	7870	11300	5460	7870	13560
9118HX	**90**	**140**	**24**	**28 x 11.1**	**1.229**	**31300**	**38400**	**11700**	**27900**	**38400**	**14040**	**29400**	**36200**	**10500**	**26100**	**36200**	**12600**
	3.5433	5.5118	0.9449	28 x 7/16	2.71	7040	8630	11700	6260	8630	14040	6600	8150	10500	5880	8150	12600

[Ng] For a single, grease-lubricated, spring-preloaded bearing. This value to be used in permissible operating speed (Sp) calculation.
[1] Width tolerance of preloaded bearing set +0.000/-0.254 mm (+0.0000/-0.0100 in.).
[2] ABMA STD 20 (r_{as} max).

WN CONSTRUCTION

- Incorporates low shoulder on non-thrust side of both inner and outer rings.
- Balls separated by one-piece cage piloted against a ground thrust shoulder land of the outer ring.

HIGH-SPEED SEAL OPTION

Available with non-contact seals. Add VV suffix to part number (in place of CR cage designation). Ex: 2MMV9106HXVV SUL.

r Rad.(2)	Suggested Shoulder Diameters Shaft Max.	Suggested Shoulder Diameters Shaft Min.	Suggested Shoulder Diameters Housing Max.	Suggested Shoulder Diameters Housing Min.	Shaft Diameter Max.	Shaft Diameter Min.	Mounting Fits Loose	Mounting Fits Tight	FIXED Housing Bore (Stationary) Max.	FIXED Housing Bore (Stationary) Min.	FIXED Mounting Fits Tight	FIXED Mounting Fits Loose	FLOATING Housing Bore (Stationary) Max.	FLOATING Housing Bore (Stationary) Min.	FLOATING Mounting Fits Loose	FLOATING Mounting Fits Loose
mm/in.	mm/in.		mm/in.		mm/in.		mm/in.		mm/in.		mm/in.		mm/in.		mm/in.	
0.3	**13.6**	**13.3**	**23.2**	**23**	**10.000**	**9.995**	**0.005**	**0.004**	**26.005**	**26.000**	**0.000**	**0.010**	**26.010**	**26.005**	**0.015**	**0.005**
0.012	0.54	0.53	0.92	0.91	0.39370	0.39350	0.00020	0.00015	1.02380	1.02360	0.00000	0.00040	1.02400	1.02380	0.00060	0.00020
0.3	**16.1**	**15.9**	**25.5**	**25.3**	**12.000**	**11.995**	**0.005**	**0.004**	**28.005**	**28.000**	**0.000**	**0.010**	**28.010**	**28.005**	**0.015**	**0.005**
0.012	0.64	0.63	1.01	1.00	0.47240	0.47220	0.00020	0.00015	1.10260	1.10240	0.00000	0.00040	1.10280	1.10260	0.00060	0.00020
0.3	**19.2**	**18.9**	**28.6**	**28.3**	**15.000**	**14.995**	**0.005**	**0.004**	**32.005**	**32.000**	**0.000**	**0.011**	**32.010**	**32.005**	**0.016**	**0.005**
0.012	0.76	0.75	1.13	1.12	0.59060	0.59040	0.00020	0.00015	1.26000	1.25980	0.00000	0.00045	1.26020	1.26000	0.00070	0.00020
0.3	**21.7**	**21.5**	**31.1**	**30.9**	**17.000**	**16.995**	**0.005**	**0.004**	**35.006**	**35.000**	**0.000**	**0.012**	**35.010**	**35.005**	**0.016**	**0.005**
0.012	0.86	0.85	1.23	1.22	0.66930	0.66910	0.00020	0.00015	1.37830	1.37800	0.00000	0.00050	1.37840	1.37820	0.00070	0.00020
0.6	**25.0**	**24.8**	**37.7**	**37.5**	**20.000**	**19.995**	**0.005**	**0.005**	**42.006**	**42.000**	**0.000**	**0.012**	**42.010**	**42.005**	**0.016**	**0.005**
0.024	0.99	0.98	1.49	1.48	0.78740	0.78720	0.00020	0.00020	1.65380	1.65350	0.00000	0.00050	1.65390	1.65370	0.00070	0.00020
0.6	**30.1**	**29.9**	**42.6**	**42.3**	**25.000**	**24.995**	**0.005**	**0.005**	**47.006**	**47.000**	**0.000**	**0.012**	**47.012**	**47.007**	**0.018**	**0.007**
0.024	1.19	1.18	1.68	1.67	0.98430	0.98410	0.00020	0.00020	1.85070	1.85040	0.00000	0.00050	1.85090	1.85070	0.00080	0.00030
1.0	**36.20**	**35.90**	**50.7**	**50.4**	**30.000**	**29.995**	**0.005**	**0.005**	**55.008**	**55.000**	**0.000**	**0.015**	**55.012**	**55.007**	**0.019**	**0.007**
0.039	1.43	1.42	2.00	1.99	1.18110	1.18090	0.00020	0.00020	2.16570	2.16540	0.00000	0.00060	2.16590	2.16570	0.00080	0.00030
1.0	**41.2**	**40.6**	**56.6**	**56.1**	**35.000**	**34.995**	**0.005**	**0.006**	**62.008**	**62.000**	**0.000**	**0.015**	**62.012**	**62.007**	**0.019**	**0.007**
0.039	1.62	1.60	2.23	2.21	1.37800	1.37780	0.00020	0.00025	2.44120	2.44090	0.00000	0.00060	2.44140	2.44120	0.00080	0.00030
1.0	**46.2**	**45.7**	**62.2**	**61.7**	**40.000**	**39.995**	**0.005**	**0.006**	**68.008**	**68.000**	**0.000**	**0.015**	**68.012**	**68.007**	**0.019**	**0.007**
0.039	1.82	1.80	2.45	2.43	1.57480	1.57460	0.00020	0.00025	2.67750	2.67720	0.00000	0.00060	2.67770	2.67750	0.00080	0.00030
1.0	**51.8**	**51.3**	**69.3**	**68.8**	**45.000**	**44.995**	**0.005**	**0.006**	**75.008**	**75.000**	**0.000**	**0.015**	**75.014**	**75.009**	**0.022**	**0.009**
0.039	2.04	2.02	2.73	2.71	1.7717	1.77150	0.00020	0.00025	2.95310	2.95280	0.00000	0.00060	2.95330	2.95310	0.00080	0.00030
1.0	**56.6**	**56.1**	**74.2**	**73.7**	**50.000**	**49.995**	**0.005**	**0.006**	**80.008**	**80.000**	**0.000**	**0.015**	**80.012**	**80.008**	**0.020**	**0.008**
0.039	2.23	2.21	2.92	2.90	1.96850	1.96830	0.00020	0.00025	3.14990	3.14960	0.00000	0.00060	3.15010	3.14990	0.00080	0.00030
1.0	**62.7**	**62.2**	**83.3**	**82.8**	**55.000**	**54.995**	**0.005**	**0.007**	**90.008**	**90.000**	**0.000**	**0.016**	**90.015**	**90.007**	**0.023**	**0.007**
0.039	2.47	2.45	3.28	3.26	2.16540	2.16520	0.00020	0.00030	3.54360	3.54330	0.00000	0.00060	3.54390	3.54360	0.00090	0.00030
1.0	**67.8**	**67.3**	**88.1**	**87.6**	**60.000**	**59.995**	**0.005**	**0.007**	**95.008**	**95.000**	**0.000**	**0.016**	**95.016**	**95.009**	**0.024**	**0.009**
0.039	2.67	2.65	3.47	3.45	2.36220	2.36200	0.00020	0.00030	3.74050	3.74020	0.00000	0.00060	3.74080	3.74050	0.00090	0.00030
1.0	**72.6**	**72.1**	**93.2**	**92.7**	**65.000**	**64.995**	**0.005**	**0.007**	**100.008**	**100.000**	**0.000**	**0.016**	**100.018**	**100.010**	**0.025**	**0.010**
0.039	2.86	2.84	3.67	3.65	2.55910	2.55890	0.00020	0.00030	3.93730	3.93700	0.00000	0.00060	3.93770	3.93740	0.00100	0.00040
1.0	**78.2**	**77.7**	**102.4**	**101.9**	**70.000**	**69.995**	**0.005**	**0.007**	**110.008**	**110.000**	**0.000**	**0.016**	**110.018**	**110.010**	**0.025**	**0.010**
0.039	3.08	3.06	4.03	4.01	2.75590	2.75570	0.00020	0.00030	4.33100	4.33070	0.00000	0.000600	4.33140	4.33110	0.00100	0.00040
1.0	**83.4**	**82.7**	**107.3**	**106.6**	**75.005**	**74.995**	**0.005**	**0.012**	**115.008**	**115.000**	**0.000**	**0.016**	**115.019**	**115.011**	**0.026**	**0.010**
0.039	3.29	3.26	4.23	4.20	2.95300	2.95260	0.00020	0.00050	4.52790	4.52760	0.00000	0.00060	4.52830	4.52800	0.00100	0.00040
1.0	**89.3**	**88.5**	**116.5**	**115.7**	**80.005**	**79.995**	**0.005**	**0.012**	**125.008**	**125.000**	**0.000**	**0.017**	**125.021**	**125.011**	**0.030**	**0.011**
0.039	3.52	3.49	4.59	4.56	3.14980	3.14940	0.00020	0.00050	4.92160	4.92130	0.00000	0.00070	4.92210	4.92170	0.00120	0.00040
1.0	**94.9**	**94.1**	**122.1**	**121.3**	**85.005**	**84.995**	**0.005**	**0.012**	**130.009**	**130.000**	**0.000**	**0.018**	**130.020**	**130.010**	**0.029**	**0.010**
0.039	3.74	3.71	4.81	4.78	3.34670	3.34630	0.00020	0.00050	5.11850	5.11810	0.00000	0.00070	5.11890	5.11850	0.00110	0.00040
1.5	**100.5**	**99.7**	**130.9**	**130.2**	**90.005**	**89.995**	**0.005**	**0.013**	**140.009**	**140.000**	**0.000**	**0.018**	**140.020**	**140.010**	**0.029**	**0.010**
0.059	3.96	3.93	5.16	5.13	3.54350	3.54310	0.00020	0.00050	5.51220	5.51180	0.00000	0.00070	5.51260	5.51220	0.00110	0.00040

Continued on next page.

EXTRA-LIGHT ISO 10 SERIES
2(3)MMV9100HX – *continued*

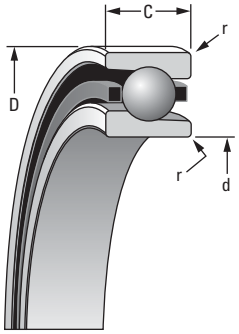

SUPER PRECISION MM

Running accuracy and performance meet ABEC 9 (ISO P2) levels.
Other features conform to ABEC 7 (ISO P4) requirements.

Bearing Number 2MM or 3MM	d Bore	D O.D.	C Width(1)	Ball Qty. x Dia.	Bearing Wt.	(2MM) LOAD RATINGS						(3MM) LOAD RATINGS					
						Steel Ball			Ceramic Ball			Steel Ball			Ceramic Ball		
						C_o Static	C_e Dynamic	Speed Rating(Ng)	C_o Static	C_e Dynamic	Speed Rating(Ng)	C_o Static	C_e Dynamic	Speed Rating(Ng)	C_o Static	C_e Dynamic	Speed Rating(Ng)
	mm/in.			**mm**/in.	**kg**/lbs.	**N**/lbs.		RPM	**N**/lbs.		RPM	**N**/lbs.		RPM	**N**/lbs.		RPM
9119HX	**95**	**145**	**24**	**26 x 12.7**	**1.238**	**37700**	**47400**	**11300**	**33500**	**47400**	**13560**	**35600**	**44700**	**10200**	**31700**	**44700**	**12240**
	3.7402	5.7087	0.9449	26 x 1/2	2.73	8470	10600	11300	7540	10600	13560	8000	10100	10200	7120	10100	12240
9120HX	**100**	**150**	**24**	**27 x 12.7**	**1.288**	**39300**	**48200**	**10800**	**35000**	**48200**	**12960**	**37000**	**45500**	**9700**	**33000**	**45500**	**11640**
	3.9370	5.9055	0.9449	27 x 1/2	2.84	8840	10800	10800	7870	10800	12960	8330	10200	9700	7410	10200	11640
9121HX	**105**	**160**	**26**	**28 x 12.7**	**1.674**	**40900**	**48700**	**10100**	**36400**	**48700**	**12120**	**38300**	**46000**	**9100**	**34100**	**46000**	**10920**
	4.1339	6.2992	1.0236	28 x 1/2	3.69	9200	110000	10100	8180	110000	12120	8610	10300	9100	7670	10300	10920
9122HX	**110**	**170**	**28**	**30 x 12.7**	**2.132**	**43800**	**50400**	**9500**	**38900**	**50400**	**11400**	**40800**	**47500**	**8560**	**36300**	**47500**	**10270**
	4.3307	6.6929	1.1024	30 x 1/2	4.70	9840	113000	9500	8760	113000	11400	9180	10700	8560	8170	10700	10270
9124HX	**120**	**180**	**28**	**29 x 14.3**	**2.218**	**53700**	**61700**	**8900**	**47800**	**61700**	**10680**	**50200**	**58100**	**8030**	**44700**	**58100**	**9640**
	4.7244	7.0866	1.1024	29 x 9/16	4.89	12100	139000	8900	10700	139000	10680	11300	13100	8030	10000	13100	9640

(Ng) For a single, grease-lubricated, spring-preloaded bearing. This value to be used in permissible operating speed (Sp) calculation.
(1) Width tolerance of preloaded bearing set +0.000/-0.254 mm (+0.0000/-0.0100 in.).
(2) ABMA STD 20 (r_{as} max).

WN CONSTRUCTION

- Incorporates low shoulder on non-thrust side of both inner and outer rings.
- Balls separated by one-piece cage piloted against a ground thrust shoulder land of the outer ring.

HIGH-SPEED SEAL OPTION

Available with non-contact seals. Add VV suffix to part number (in place of CR cage designation). Ex: 2MMV9106HXVV SUL.

r Rad.(2)	Suggested Shoulder Diameters				Shaft Diameter		Mounting Fits		FIXED				FLOATING			
	Shaft		Housing						Housing Bore (Stationary)		Mounting Fits		Housing Bore (Stationary)		Mounting Fits	
	Max.	Min.	Max.	Min.	Max.	Min.	Loose	Tight	Max.	Min.	Tight	Loose	Max.	Min.	Loose	Loose
mm/in.	mm/in.		mm/in.		mm/in.		mm/in.		mm/in.		mm/in.		mm/in.		mm/in.	
1.5	**105.5**	**104.8**	**135.8**	**135.0**	**95.005**	**94.995**	**0.005**	**0.013**	**145.009**	**145.000**	**0.000**	**0.018**	**145.021**	**145.011**	**0.030**	**0.011**
0.059	4.16	4.13	5.35	5.32	3.74040	3.74000	0.00020	0.00050	5.70910	5.70870	0.00000	0.00070	5.70950	5.70910	0.00110	0.00040
1.5	**110.6**	**109.9**	**140.8**	**140.1**	**100.005**	**99.995**	**0.005**	**0.013**	**150.009**	**150.000**	**0.000**	**0.018**	**150.023**	**150.012**	**0.032**	**0.012**
0.059	4.36	4.33	5.55	5.52	3.93720	3.93680	0.00020	0.00050	5.90590	5.90550	0.00000	0.00070	5.90640	5.90600	0.00120	0.00050
2.0	**116.5**	**115.7**	**150.0**	**149.2**	**105.005**	**104.995**	**0.005**	**0.013**	**160.009**	**160.000**	**0.000**	**0.022**	**160.022**	**160.012**	**0.033**	**0.012**
0.079	4.59	4.56	5.91	5.88	4.13410	4.13370	0.00020	0.00050	6.29960	6.29920	0.00000	0.00080	6.30010	6.29970	0.00130	0.00050
2.0	**123.1**	**122.3**	**158.4**	**157.6**	**110.005**	**109.995**	**0.005**	**0.013**	**170.010**	**170.000**	**0.000**	**0.020**	**170.022**	**170.012**	**0.032**	**0.012**
0.079	4.85	4.82	6.24	6.21	4.33090	4.33050	0.00020	0.00050	6.69330	6.69290	0.00000	0.00080	6.69380	6.69340	0.00130	0.00050
2.0	**133.2**	**132.5**	**168.3**	**167.5**	**120.005**	**119.995**	**0.005**	**0.013**	**180.010**	**180.000**	**0.000**	**0.020**	**180.022**	**180.012**	**0.032**	**0.012**
0.079	5.25	5.22	6.63	6.60	4.72460	4.72420	0.00020	0.00050	7.08700	7.08660	0.00000	0.00080	7.08750	7.08710	0.00130	0.00050

EXTRA-LIGHT 2MMV9100HX ISO 10 SERIES

DUPLEX PERFORMANCE DATA

MOUNTING ARRANGEMENTS

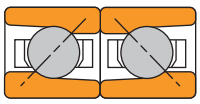

Back-to-Back DB

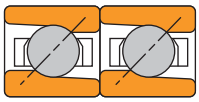

Tandem DT

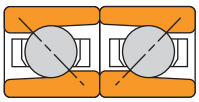

Face-to-Face DF

Bearing Number	Preload				Axial Stiffness[1]				Radial Stiffness[1]				Spacer Offsets[1]		
	DUX X-light	DUL Light	DUM Med.	DUH Heavy	X-light	Light	Med.	Heavy	X-light	Light	Med.	Heavy	X-light to Light	Light to Med.	Med. to Heavy
	N lbs.				N/µm 10^6 lbs./in.				N/µm 10^6 lbs./in.				µm in.		
2MMV9100HX	—	20	70	130	—	15.04	23.52	32.08	—	82.03	117.94	147.16	—	9.60	10.16
	—	5	15	30	—	0.086	0.135	0.183	—	0.469	0.674	0.841	—	0.00038	0.00040
2MMV9101HX	—	20	70	130	—	14.41	22.56	30.78	—	86.12	124.07	154.96	—	9.60	10.16
	—	5	15	30	—	0.082	0.129	0.176	—	0.492	0.709	0.886	—	0.00038	0.00040
2MMV9102HX	—	20	70	130	—	16.14	25.08	33.98	—	97.10	140.43	175.63	—	8.64	9.15
	—	5	15	30	—	0.092	0.143	0.194	—	0.555	0.803	1.004	—	0.00034	0.00036
2MMV9103HX	—	20	70	130	—	16.76	25.73	34.53	—	101.49	148.00	185.57	—	8.13	8.64
	—	5	15	30	—	0.096	0.147	0.197	—	0.580	0.846	1.061	—	0.00032	0.00034
2MMV9104HX	20	40	133	270	17.37	22.51	35.15	47.84	105.04	134.87	194.56	243.11	4.57	12.28	12.90
	5	10	30	60	0.099	0.129	0.201	0.274	0.600	0.771	1.112	1.390	0.00018	0.00048	0.00051
2MMV9105HX	20	40	130	270	18.28	24.47	37.67	50.65	110.25	148.16	215.62	270.22	4.06	11.68	12.19
	5	10	30	60	0.104	0.140	0.215	0.290	0.630	0.847	1.233	1.545	0.00016	0.00046	0.00048
2MMV9106HX	40	70	200	400	25.54	29.12	45.23	61.28	154.58	175.20	253.36	316.90	3.21	14.22	14.99
	10	15	45	90	0.146	0.167	0.259	0.350	0.883	1.002	1.449	1.812	0.00013	0.00056	0.00059
2MMV9107HX	40	70	200	400	27.40	31.83	49.16	66.32	165.77	192.30	279.07	349.45	3.00	13.21	13.97
	10	15	45	90	0.156	0.182	0.281	0.379	0.947	1.100	1.596	1.998	0.00012	0.00052	0.00055
2MMV9108HX	40	70	200	400	28.55	33.14	51.07	68.74	172.41	200.51	291.49	365.23	2.88	14.22	13.21
	10	15	45	90	0.163	0.190	0.292	0.393	0.985	1.146	1.667	2.088	0.00011	0.00056	0.00052
2MMV9109HX	40	90	270	530	28.79	37.11	57.16	76.89	170.49	224.52	326.52	409.16	5.33	14.99	16.00
	10	20	60	120	0.164	0.212	0.327	0.440	0.974	1.284	1.867	2.339	0.00021	0.00059	0.00063
2MMV9110HX	40	90	270	530	30.00	38.64	59.38	79.72	176.71	234.02	341.02	427.54	5.08	14.22	15.24
	10	20	60	120	0.171	0.221	0.340	0.456	1.009	1.338	1.950	2.445	0.00020	0.00056	0.00060
2MMV9111HX	75	110	330	670	42.85	51.77	80.07	108.14	258.75	312.41	452.90	566.97	3.75	13.46	14.22
	15	25	75	150	0.245	0.296	0.458	0.618	1.478	1.786	2.590	3.242	0.00015	0.00053	0.00056
2MMV9112HX	75	110	330	670	43.97	53.10	82.01	110.61	265.08	320.78	465.55	582.98	3.66	13.21	13.97
	15	25	75	150	0.251	0.304	0.469	0.632	1.514	1.834	2.662	3.333	0.00014	0.00052	0.00055
2MMV9113HX	75	130	400	800	45.12	58.22	89.90	121.21	268.46	351.81	510.67	639.54	5.08	14.22	15.24
	15	30	90	180	0.258	0.333	0.514	0.693	1.533	2.012	2.920	3.657	0.00020	0.00056	0.00060
2MMV9114HX	90	160	470	930	51.30	63.03	97.26	131.05	307.82	381.09	553.47	693.25	4.66	15.49	16.26
	20	35	105	210	0.293	0.360	0.556	0.749	1.758	2.179	3.165	3.964	0.00018	0.00061	0.00064
2MMV9115HX	90	160	470	930	52.60	64.61	99.54	133.94	314.73	390.85	568.27	712.02	4.54	14.99	16.00
	20	35	105	210	0.300	0.369	0.569	0.766	1.797	2.235	3.249	4.071	0.00018	0.00059	0.00063
2MMV9116HX	110	200	600	1200	56.45	70.15	108.30	146.02	349.49	439.38	638.84	800.38	5.61	17.78	18.80
	25	45	135	270	0.322	0.401	0.619	0.835	1.996	2.512	3.653	4.576	0.00022	0.00070	0.00074
2MMV9117HX	110	220	670	1330	59.49	76.75	118.46	159.68	353.68	463.90	673.59	843.65	6.60	18.03	19.05
	25	50	150	300	0.340	0.439	0.677	0.913	2.020	2.652	3.851	4.824	0.00026	0.00071	0.00075
2MMV9118HX	110	220	670	1330	62.38	80.38	123.74	166.38	368.73	486.55	707.98	887.25	6.35	17.27	18.29
	25	50	150	300	0.356	0.460	0.708	0.951	2.106	2.782	4.048	5.073	0.00025	0.00068	0.00072
2MMV9119HX	130	270	800	1600	65.94	84.95	130.72	175.72	389.41	514.31	748.61	938.25	7.11	19.56	20.83
	30	60	180	360	0.377	0.486	0.747	1.005	2.224	2.941	4.280	5.365	0.00028	0.00077	0.00082
2MMV9120HX	130	270	800	1600	67.55	87.00	133.68	179.46	397.75	526.89	767.79	962.61	6.86	19.30	20.32
	30	60	180	360	0.386	0.497	0.764	1.026	2.271	3.013	4.390	5.504	0.00027	0.00076	0.00080
2MMV9121HX	130	270	800	1600	69.14	88.99	136.58	183.17	406.10	539.23	786.77	986.72	6.60	18.80	20.07
	30	60	180	360	0.395	0.509	0.781	1.047	2.319	3.083	4.498	5.642	0.00026	0.00074	0.00079
2MMV9122HX	160	290	870	1730	76.40	95.76	147.00	197.22	451.65	580.13	846.11	1061.03	6.86	19.05	20.07
	35	65	195	390	0.436	0.548	0.841	1.128	2.579	3.317	4.838	6.067	0.00027	0.00075	0.00079
2MMV9124HX	180	360	1070	2140	79.34	108.67	166.21	222.25	480.39	623.59	910.14	1141.66	7.37	20.57	21.84
	40	80	240	480	0.453	0.621	0.950	1.271	2.743	3.565	5.204	6.528	0.00029	0.00081	0.00086

[1] For DB or DF arrangements only. For other mounting arrangements, contact your Timken representative.

EXTRA-LIGHT 3MMV9100HX ISO 10 SERIES

DUPLEX PERFORMANCE DATA

MOUNTING ARRANGEMENTS

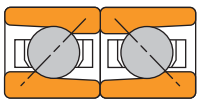

Back-to-Back DB

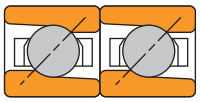

Tandem DT

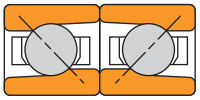

Face-to-Face DF

Bearing Number	Preload				Axial Stiffness[1]				Radial Stiffness[1]				Spacer Offsets[1]		
	DUX X-light	DUL Light	DUM Med.	DUH Heavy	X-light	Light	Med.	Heavy	X-Light	Light	Med.	Heavy	X-light to Light	Light to Med.	Med. to Heavy
	N lbs.				N/µm 10^6 lbs./in.				N/µm 10^6 lbs./in.				µm in.		
3MMV9100HX	**20**	**45**	**135**	**265**	**28.53**	**36.54**	**55.09**	**72.65**	**60.85**	**76.89**	**110.03**	**137.02**	**2.54**	**7.62**	**8.13**
	5	10	30	60	0.163	0.209	0.315	0.415	0.348	0.440	0.629	0.783	0.00010	0.00030	0.00032
3MMV9101HX	**20**	**45**	**135**	**265**	**29.84**	**38.09**	**56.98**	**74.58**	**64.50**	**82.01**	**117.87**	**147.20**	**2.54**	**7.62**	**8.13**
	5	10	30	60	0.171	0.218	0.326	0.426	0.369	0.469	0.674	0.842	0.00010	0.00030	0.00032
3MMV9102HX	**20**	**45**	**135**	**265**	**33.62**	**42.87**	**63.87**	**83.30**	**72.48**	**92.56**	**133.40**	**166.80**	**2.54**	**6.60**	**7.11**
	5	10	30	60	0.192	0.245	0.365	0.476	0.414	0.529	0.763	0.954	0.00010	0.00026	0.00028
3MMV9103HX	**20**	**45**	**135**	**265**	**35.01**	**44.56**	**66.06**	**85.70**	**75.19**	**97.38**	**141.07**	**176.82**	**2.03**	**6.60**	**7.11**
	5	10	30	60	0.200	0.255	0.378	0.490	0.430	0.557	0.807	1.011	0.00008	0.00026	0.00028
3MMV9104HX	**45**	**90**	**265**	**535**	**46.14**	**58.91**	**88.06**	**115.19**	**101.49**	**129.20**	**185.92**	**232.09**	**3.56**	**9.65**	**10.67**
	10	20	60	120	0.264	0.337	0.504	0.659	0.580	0.739	1.063	1.327	0.00014	0.00038	0.00042
3MMV9105HX	**45**	**90**	**265**	**535**	**49.51**	**63.14**	**94.13**	**122.81**	**105.90**	**135.11**	**194.66**	**243.29**	**3.05**	**9.14**	**9.65**
	10	20	60	120	0.283	0.361	0.538	0.702	0.606	0.773	1.113	1.391	0.00012	0.00036	0.00038
3MMV9106HX	**65**	**135**	**400**	**800**	**60.38**	**76.97**	**114.73**	**149.66**	**131.07**	**167.38**	**241.19**	**301.70**	**4.06**	**11.18**	**12.19**
	15	30	90	180	0.345	0.440	0.656	0.856	0.749	0.957	1.379	1.725	0.00016	0.00044	0.00048
3MMV9107HX	**65**	**135**	**400**	**800**	**66.30**	**84.46**	**125.56**	**163.34**	**143.33**	**183.99**	**265.67**	**332.66**	**3.56**	**10.16**	**11.18**
	15	30	90	180	0.379	0.483	0.718	0.934	0.820	1.052	1.519	1.902	0.00014	0.00040	0.00044
3MMV9108HX	**65**	**135**	**400**	**800**	**69.19**	**88.08**	**130.79**	**169.95**	**149.12**	**191.87**	**277.57**	**347.53**	**3.56**	**9.65**	**10.67**
	15	30	90	180	0.396	0.504	0.748	0.972	0.853	1.097	1.587	1.987	0.00014	0.00038	0.00042
3MMV9109HX	**90**	**175**	**535**	**1065**	**76.94**	**97.94**	**145.46**	**189.07**	**167.50**	**215.65**	**312.02**	**390.73**	**4.06**	**11.68**	**12.70**
	20	40	120	240	0.440	0.560	0.832	1.081	0.958	1.233	1.784	2.234	0.00016	0.00046	0.00050
3MMV9110HX	**90**	**175**	**535**	**1065**	**80.28**	**102.16**	**151.53**	**196.76**	**174.06**	**225.10**	**325.84**	**408.22**	**4.06**	**11.18**	**12.19**
	20	40	120	240	0.459	0.584	0.866	1.125	0.995	1.287	1.863	2.334	0.00016	0.00044	0.00048
3MMV9111HX	**110**	**225**	**665**	**1335**	**107.69**	**137.19**	**204.11**	**265.67**	**233.14**	**298.73**	**431.13**	**539.57**	**3.56**	**10.16**	**11.18**
	25	50	150	300	0.616	0.784	1.167	1.519	1.333	1.708	2.465	3.085	0.00014	0.00040	0.00044
3MMV9112HX	**110**	**225**	**665**	**1335**	**110.61**	**140.88**	**209.36**	**272.49**	**239.09**	**306.77**	**443.20**	**554.78**	**3.56**	**10.16**	**11.18**
	25	50	150	300	0.632	0.806	1.197	1.558	1.367	1.754	2.534	3.172	0.00014	0.00040	0.00044
3MMV9113HX	**135**	**265**	**800**	**1600**	**120.89**	**153.96**	**228.94**	**297.68**	**262.52**	**337.21**	**487.10**	**609.70**	**4.06**	**11.18**	**12.19**
	30	60	180	360	0.691	0.880	1.309	1.702	1.501	1.928	2.785	3.486	0.00016	0.00044	0.00048
3MMV9114HX	**155**	**310**	**935**	**1870**	**132.07**	**168.17**	**249.76**	**324.79**	**282.99**	**363.79**	**525.75**	**658.32**	**4.06**	**11.68**	**13.21**
	35	70	210	420	0.755	0.962	1.428	1.857	1.618	2.080	3.006	3.764	0.00016	0.00046	0.00052
3MMV9115HX	**155**	**310**	**935**	**1870**	**133.90**	**170.48**	**253.26**	**329.16**	**291.73**	**375.51**	**542.89**	**679.84**	**4.06**	**11.68**	**12.70**
	35	70	210	420	0.766	0.975	1.448	1.882	1.668	2.147	3.104	3.887	0.00016	0.00046	0.00050
3MMV9116HX	**200**	**400**	**1200**	**2400**	**150.08**	**190.99**	**283.69**	**368.34**	**323.91**	**417.49**	**603.93**	**756.44**	**4.57**	**13.21**	**14.73**
	45	90	270	540	0.858	1.092	1.622	2.106	1.852	2.387	3.453	4.325	0.00018	0.00052	0.00058
3MMV9117HX	**225**	**445**	**1335**	**2670**	**159.70**	**203.41**	**302.23**	**393.18**	**345.78**	**444.25**	**641.88**	**803.49**	**5.08**	**13.72**	**15.24**
	50	100	300	600	0.913	1.163	1.728	2.248	1.977	2.540	3.670	4.594	0.00020	0.00054	0.00060
3MMV9118HX	**225**	**445**	**1335**	**2670**	**167.66**	**213.38**	**316.74**	**411.36**	**361.69**	**466.28**	**674.76**	**845.12**	**4.57**	**13.21**	**14.73**
	50	100	300	600	0.959	1.220	1.811	2.352	2.068	2.666	3.858	4.832	0.00018	0.00052	0.00058
3MMV9119HX	**265**	**535**	**1600**	**3200**	**177.87**	**226.32**	**335.98**	**436.20**	**381.46**	**492.17**	**712.19**	**892.16**	**5.08**	**15.24**	**16.76**
	60	120	360	720	1.017	1.294	1.921	2.494	2.181	2.814	4.072	5.101	0.00020	0.00060	0.00066
3MMV9120HX	**265**	**535**	**1600**	**3200**	**182.42**	**232.09**	**344.03**	**446.34**	**390.03**	**504.41**	**730.56**	**915.43**	**5.08**	**14.73**	**16.26**
	60	120	360	720	1.043	1.327	1.967	2.552	2.230	2.884	4.177	5.234	0.00020	0.00058	0.00064
3MMV9121HX	**265**	**535**	**1600**	**3200**	**186.79**	**237.51**	**352.07**	**456.49**	**398.25**	**516.48**	**748.57**	**938.34**	**5.08**	**14.22**	**15.75**
	60	120	360	720	1.068	1.358	2.013	2.610	2.277	2.953	4.280	5.365	0.00020	0.00056	0.00062
3MMV9122HX	**290**	**575**	**1735**	**3470**	**200.96**	**255.53**	**378.83**	**491.29**	**428.85**	**555.48**	**805.06**	**1009.00**	**5.08**	**14.22**	**15.75**
	65	130	390	780	1.149	1.461	2.166	2.809	2.452	3.176	4.603	5.769	0.00020	0.00056	0.00062
3MMV9124HX	**355**	**710**	**2135**	**4270**	**217.93**	**277.22**	**411.02**	**533.10**	**468.56**	**606.90**	**879.22**	**1101.70**	**5.59**	**16.26**	**17.78**
	80	160	480	960	1.246	1.585	2.350	3.048	2.679	3.470	5.027	6.299	0.00022	0.00064	0.00070

[1] For DB or DF arrangements only. For other mounting arrangements, contact your Timken representative.

C

EXTRA-LIGHT 2MMV9100HX ISO 10 SERIES

SPEED CAPABILITY DATA

Bearing Number	Grease Capacity[1]				Operating Speeds[4] (DB Mounting)[5]					
	Low Speed[2]		High Speed[3]		Grease			Oil		
	25%	40%	15%	20%	DUL	DUM	DUH	DUL	DUM	DUH
	grams		grams		RPM			RPM		
2MMV9100HX	0.30	0.40	0.20	0.20	70400	52800	35200	119700	89800	59800
2MMV9101HX	0.30	0.50	0.20	0.20	63100	47300	31600	107300	80400	53700
2MMV9102HX	0.40	0.70	0.30	0.30	51400	38600	25700	87400	65600	43700
2MMV9103HX	0.60	0.90	0.30	0.40	47100	35300	23600	80100	60000	40100
2MMV9104HX	1.00	1.60	0.60	0.80	39100	29300	19600	66500	49800	33300
2MMV9105HX	1.20	1.90	0.70	0.90	33400	25100	16700	56800	42700	28400
2MMV9106HX	1.70	2.70	1.00	1.30	27900	20900	14000	47400	35500	23800
2MMV9107HX	2.10	3.40	1.30	1.70	23800	17900	11900	40500	30400	20200
2MMV9108HX	2.70	4.30	1.50	2.10	21000	15700	10500	35700	26700	17900
2MMV9109HX	3.50	5.60	2.10	2.80	19100	14300	9600	32500	24300	16300
2MMV9110HX	3.90	6.20	2.30	3.10	17400	13100	8700	29600	22300	14800
2MMV9111HX	4.60	7.30	2.50	3.30	15000	11200	7500	25500	19000	12800
2MMV9112HX	4.90	7.90	2.70	3.60	13900	10400	7000	23600	17700	11900
2MMV9113HX	5.50	8.80	3.10	4.10	13100	9800	6600	22300	16700	11200
2MMV9114HX	7.30	11.70	4.10	5.40	12000	9000	6000	20400	15300	10200
2MMV9115HX	7.70	12.40	4.30	5.70	11400	8500	5700	19400	14500	9700
2MMV9116HX	10.30	16.50	5.80	7.70	10600	7900	5300	18000	13400	9000
2MMV9117HX	10.80	17.30	6.10	8.10	10100	7600	5000	17200	12900	8500
2MMV9118HX	13.20	21.00	7.20	9.70	9400	7000	4700	16000	11900	8000
2MMV9119HX	14.60	23.40	8.30	11.10	9000	6800	4500	15300	11600	7700
2MMV9120HX	15.20	24.40	8.60	11.50	8600	6500	4300	14600	11100	7300
2MMV9121HX	18.30	29.30	10.20	13.60	8100	6100	4000	13800	10400	6800
2MMV9122HX	21.50	34.30	11.80	15.70	7600	5700	3800	12900	9700	6500
2MMV9124HX	24.40	39.10	13.70	18.30	7100	5300	3600	12100	9000	6100

(1) Fill weights based on specific gravity of 0.99.
(2) Low speed <500000 dN.
(3) High speed ≥ 500000 dN.
(4) For ceramic ball complements, use 120 percent of speeds shown.
(5) For other mounting arrangement configurations, refer to the engineering section on permissible speed calculation methods.

EXTRA-LIGHT 3MMV9100HX ISO 10 SERIES

SPEED CAPABILITY DATA

Bearing Number	Grease Capacity[1]				Operating Speeds[4] (DB Mounting)[5]					
	Low Speed[2]		High Speed[3]		Grease			Oil		
	25%	40%	15%	20%	DUL	DUM	DUH	DUL	DUM	DUH
	grams		grams		RPM			RPM		
3MMV9100HX	0.30	0.40	0.20	0.20	61760	46320	30880	104220	81060	53850
3MMV9101HX	0.30	0.50	0.20	0.20	56800	42600	28400	95850	74550	49525
3MMV9102HX	0.40	0.70	0.30	0.30	46320	34740	23160	78165	60795	40385
3MMV9103HX	0.60	0.90	0.30	0.40	42400	31800	21200	71550	55650	36970
3MMV9104HX	1.00	1.60	0.60	0.80	35200	26400	17600	59400	46200	30690
3MMV9105HX	1.20	1.90	0.70	0.90	29280	21960	14640	49410	38430	25530
3MMV9106HX	1.70	2.70	1.00	1.30	24160	18120	12080	40770	31710	21065
3MMV9107HX	2.10	3.40	1.30	1.70	21440	16080	10720	36180	28140	18690
3MMV9108HX	2.70	4.30	1.50	2.10	18880	14160	9440	31860	24780	16460
3MMV9109HX	3.50	5.60	2.10	2.80	17200	12900	8600	29025	22575	15000
3MMV9110HX	3.90	6.20	2.30	3.10	15680	11760	7840	26460	20580	13675
3MMV9111HX	4.60	7.30	2.50	3.30	13520	10140	6760	22815	17745	11788
3MMV9112HX	4.90	7.90	2.70	3.60	12560	9420	6280	21195	16485	10950
3MMV9113HX	5.50	8.80	3.10	4.10	11840	8880	5920	19980	15540	10325
3MMV9114HX	7.30	11.70	4.10	5.40	10800	8100	5400	18225	14175	9415
3MMV9115HX	7.70	12.40	4.30	5.70	10160	7620	5080	17145	13335	8860
3MMV9116HX	10.30	16.50	5.80	7.70	9520	7140	4760	16065	12495	8300
3MMV9117HX	10.80	17.30	6.10	8.10	9040	6780	4520	15255	11865	7880
3MMV9118HX	13.20	21.00	7.20	9.70	8400	6300	4200	14175	11025	7325
3MMV9119HX	14.60	23.40	8.30	11.10	8160	6120	4080	13770	10710	7115
3MMV9120HX	15.20	24.40	8.60	11.50	7760	5820	3880	13095	10185	6770
3MMV9121HX	18.30	29.30	10.20	13.60	7280	5460	3640	12285	9555	6350
3MMV9122HX	21.50	34.30	11.80	15.70	6850	5135	3425	11560	8990	5970
3MMV9124HX	24.40	39.10	13.70	18.30	6425	4820	3210	10840	8430	5600

(1) Fill weights based on specific gravity of 0.99.
(2) Low speed <500000 dN.
(3) High speed ≥ 500000 dN.
(4) For ceramic ball complements, use 120 percent of speeds shown.
(5) For other mounting arrangement configurations, refer to the engineering section on permissible speed calculation methods.

EXTRA-LIGHT ISO 10 SERIES
2(3)MMV99100WN

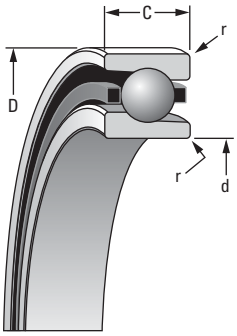

SUPER PRECISION MM

Running accuracy and performance meet ABEC 9 (ISO P2) levels.
Other features conform to ABEC 7 (ISO P4) requirements.

Bearing Number 2MM or 3MM	d Bore	D O.D.	C Width(1)	Ball Qty. x Dia.	Bearing Wt.	(2MM) LOAD RATINGS Steel Ball C_o Static	C_e Dynamic	Speed Rating(Ng)	Ceramic Ball C_o Static	C_e Dynamic	Speed Rating(Ng)	(3MM) LOAD RATINGS Steel Ball C_o Static	C_e Dynamic	Speed Rating(Ng)	Ceramic Ball C_o Static	C_e Dynamic	Speed Rating(Ng)
	mm/in.			mm/in.	kg/lbs.	N/lbs.		RPM	N/lbs.		RPM	N/lbs.		RPM	N/lbs.		RPM
99101WN	**12**	**28**	**8**	**9 x 4.76**	**0.019**	**1740**	**4540**	**75800**	**1550**	**4540**	**90960**	**1670**	**4360**	**68200**	**1490**	**4360**	**81840**
	0.4724	1.1024	0.3150	9 x 3/16	0.04	390	1020	75800	360	1020	90960	380	980	68200	340	980	81840
99102WN	**15**	**32**	**9**	**11 x 4.76**	**0.028**	**2240**	**5220**	**64300**	**1990**	**5220**	**77160**	**2140**	**5000**	**57900**	**1900**	**5000**	**69480**
	0.5906	1.2598	0.3543	11 x 3/16	0.06	500	1170	64300	450	1170	77160	480	1120	57900	430	1120	69480
99103WN	**17**	**35**	**10**	**13 x 4.76**	**0.038**	**2510**	**5530**	**56900**	**2230**	**5530**	**68280**	**2400**	**5280**	**51200**	**2140**	**5280**	**61440**
	0.6693	1.3780	0.3937	13 x 3/16	0.08	560	1240	56900	500	1240	68280	540	1190	51200	480	1190	61440
99104WN	**20**	**42**	**12**	**11 x 6.35**	**0.064**	**4690**	**9760**	**43800**	**4180**	**9760**	**52560**	**4470**	**9310**	**39400**	**3980**	**9310**	**47280**
	0.7874	1.6535	0.4724	11 x 1/4	0.14	1050	2190	43800	940	2190	52560	1000	2090	39400	890	2090	47280
99105WN	**25**	**47**	**12**	**13 x 6.35**	**0.074**	**5800**	**10900**	**36500**	**5160**	**10900**	**43800**	**5510**	**10300**	**32900**	**4900**	**10300**	**39480**
	0.9843	1.8504	0.4724	13 x 1/4	0.16	1300	2450	36500	1160	2450	43800	1240	2330	32900	1100	2330	39480
99106WN	**30**	**55**	**13**	**16 x 6.35**	**0.116**	**7460**	**12300**	**29500**	**6640**	**12300**	**35400**	**7060**	**11600**	**26600**	**6280**	**11600**	**31920**
	1.1811	2.1654	0.5118	16 x 1/4	0.25	1680	2770	29500	1490	2770	35400	1590	2620	26600	1410	2620	31920
99107WN	**35**	**62**	**14**	**21 x 5.56**	**0.167**	**7840**	**11100**	**25300**	**6980**	**11100**	**30360**	**7440**	**10500**	**22800**	**6620**	**10500**	**27360**
	1.3780	2.4409	0.5512	21 x 7/32	0.37	1760	2510	25300	1570	2510	30360	1670	2360	22800	1490	2360	27360
99108WN	**40**	**68**	**15**	**24 x 5.56**	**0.207**	**9150**	**11900**	**22000**	**8140**	**11900**	**26400**	**8590**	**11200**	**19800**	**7650**	**11200**	**23760**
	1.5748	2.6772	0.5906	24 x 7/32	0.46	2060	2670	22000	1830	2670	26400	1930	2510	19800	1720	2510	23760
99109WN	**45**	**75**	**16**	**23 x 6.35**	**0.259**	**11400**	**14800**	**20200**	**10200**	**14800**	**24240**	**10700**	**14000**	**18200**	**9560**	**14000**	**21840**
	1.7717	2.9528	0.6299	23 x 1/4	0.57	2570	3340	20200	2280	3340	24240	2410	3140	18200	2150	3140	21840
99110WN	**50**	**80**	**16**	**25 x 6.35**	**0.281**	**12500**	**15400**	**18500**	**11100**	**15400**	**22200**	**11700**	**14500**	**16700**	**10400**	**14500**	**20040**
	1.9685	3.1496	0.6299	25 x 1/4	0.62	2810	3470	18500	2500	3470	22200	2630	3260	16700	2340	3260	20040
99111WN	**55**	**90**	**18**	**25 x 7.14**	**0.417**	**15800**	**19100**	**16600**	**14100**	**19100**	**19920**	**14800**	**18000**	**14900**	**13200**	**18000**	**17880**
	2.1654	3.5433	0.7087	25 x 9/32	0.92	3550	4290	16600	3160	4290	19920	3330	4040	14900	2960	4040	17880
99112WN	**60**	**95**	**18**	**26 x 7.14**	**0.445**	**16400**	**19300**	**15400**	**14600**	**19300**	**18480**	**15300**	**18200**	**13900**	**13600**	**18200**	**16680**
	2.3622	3.7402	0.7087	26 x 9/32	0.98	3700	4340	15400	3290	4340	18480	3440	4080	13900	3060	4080	16680
99113WN	**65**	**100**	**18**	**28 x 7.14**	**0.474**	**17600**	**20000**	**14400**	**15700**	**20000**	**17280**	**16400**	**18800**	**13000**	**14600**	**18800**	**15600**
	2.5591	3.9370	0.7087	28 x 9/32	1.05	3960	4500	14400	3520	4500	17280	3680	4230	13000	3280	4230	15600
99114WN	**70**	**110**	**20**	**28 x 7.94**	**0.665**	**21700**	**24300**	**13200**	**19300**	**24300**	**15840**	**20300**	**22900**	**11900**	**18000**	**22900**	**14280**
	2.7559	4.3307	0.7874	28 x 5/16	1.47	4890	5450	13200	4350	5540	15840	4569	5140	11900	4060	5140	14280
99115WN	**75**	**115**	**20**	**30 x 7.94**	**0.699**	**23100**	**25000**	**12300**	**20600**	**25000**	**14760**	**21600**	**23500**	**11100**	**19200**	**23500**	**13320**
	2.9528	4.5276	0.7874	30 x 5/16	1.54	5200	5620	12300	4630	5620	14760	4850	5290	11100	4320	5290	13320
99116WN	**80**	**125**	**22**	**29 x 8.73**	**0.944**	**27200**	**29300**	**11600**	**24200**	**29300**	**13920**	**25300**	**27500**	**10400**	**22500**	**27500**	**12480**
	3.1496	4.9213	0.8661	29 x 11/32	2.08	6110	6580	11600	5440	6580	13920	5690	6190	10400	5070	6190	12480
99117WN	**85**	**130**	**22**	**31 x 8.73**	**0.991**	**28900**	**30200**	**11000**	**25700**	**30200**	**13200**	**26900**	**28400**	**9900**	**23900**	**28400**	**11880**
	3.3465	5.1181	0.8661	31 x 11/32	2.18	6490	6780	11000	5770	6780	13200	6040	6380	9900	5380	6380	11880
99118WN	**90**	**140**	**24**	**28 x 10.32**	**1.266**	**36100**	**39000**	**10400**	**32700**	**39000**	**12480**	**34400**	**36800**	**9400**	**30600**	**36800**	**11280**
	3.5433	5.5118	0.9449	28 x 13/32	2.79	8270	8780	10400	7360	8780	13480	7720	8280	9400	6870	8280	11280
99119WN	**95**	**145**	**24**	**29 x 10.32**	**1.303**	**37900**	**39600**	**9900**	**33800**	**39600**	**11880**	**35400**	**37300**	**8900**	**31500**	**37300**	**10680**
	3.7402	5.7087	0.9449	29 x 13/32	2.87	8530	8890	9900	7590	8890	11880	7970	8390	8900	7090	8390	10680

(Ng) For a single, grease-lubricated, spring-preloaded bearing. This value to be used in permissible operating speed (Sp) calculation.
(1) Width tolerance of preloaded bearing set +0.000/-0.254 mm (+0.0000/-0.0100 in.).
(2) ABMA STD 20 (r_{as} max).

WN CONSTRUCTION

- Incorporates low shoulder on non-thrust side of both inner and outer rings.
- Balls separated by one-piece cage piloted against a ground thrust shoulder land of the outer ring.

r Rad.(2)	Suggested Shoulder Diameters: Shaft Max.	Shaft Min.	Housing Max.	Housing Min.	Shaft Diameter Max.	Shaft Diameter Min.	Mounting Fits Loose	Mounting Fits Tight	FIXED: Housing Bore (Stationary) Max.	Housing Bore (Stationary) Min.	Mounting Fits Tight	Mounting Fits Loose	FLOATING: Housing Bore (Stationary) Max.	Housing Bore (Stationary) Min.	Mounting Fits Loose	Mounting Fits Loose
mm/in.	mm/in.		mm/in.		mm/in.		mm/in.		mm/in.		mm/in.		mm/in.		mm/in.	
0.3	**15.6**	**15.4**	**24.6**	**24.4**	**12.000**	**11.995**	**0.005**	**0.004**	**28.005**	**28.000**	**0.000**	**0.010**	**28.010**	**28.005**	**0.015**	**0.005**
0.012	0.62	0.61	0.99	0.98	0.47240	0.47220	0.00020	0.00015	1.10260	1.10240	0.00000	0.00040	1.10280	1.10260	0.00060	0.00020
0.3	**19.1**	**18.9**	**28.1**	**27.9**	**15.000**	**14.995**	**0.005**	**0.004**	**32.005**	**32.000**	**0.000**	**0.011**	**32.010**	**32.005**	**0.016**	**0.005**
0.012	0.76	0.75	1.13	1.12	0.59060	0.59040	0.00020	0.00015	1.26000	1.25980	0.00000	0.00045	1.26020	1.26000	0.00070	0.00020
0.3	**21.6**	**21.4**	**30.6**	**30.4**	**17.000**	**16.995**	**0.005**	**0.004**	**35.006**	**35.000**	**0.000**	**0.012**	**35.010**	**35.005**	**0.016**	**0.005**
0.012	0.86	0.85	1.23	1.22	0.66930	0.66910	0.00020	0.00015	1.37830	1.37800	0.00000	0.00050	1.37840	1.37820	0.00070	0.00020
0.6	**25.1**	**24.9**	**37.2**	**37.0**	**20.000**	**19.995**	**0.005**	**0.005**	**42.006**	**42.000**	**0.000**	**0.012**	**42.010**	**42.005**	**0.016**	**0.005**
0.024	0.99	0.98	1.49	1.48	0.78740	0.78720	0.00020	0.00020	1.65380	1.65350	0.00000	0.00050	1.65390	1.65370	0.00070	0.00020
0.6	**30.1**	**29.9**	**42.2**	**42.0**	**25.000**	**24.995**	**0.005**	**0.005**	**47.006**	**47.000**	**0.000**	**0.012**	**47.012**	**47.007**	**0.018**	**0.007**
0.024	1.19	1.18	1.69	1.68	0.98430	0.98410	0.00020	0.00020	1.85070	1.85040	0.00000	0.00050	1.85090	1.85070	0.00080	0.00030
1.0	**36.6**	**36.4**	**48.7**	**48.5**	**30.000**	**29.995**	**0.005**	**0.005**	**55.008**	**55.000**	**0.000**	**0.015**	**55.012**	**55.007**	**0.019**	**0.007**
0.039	1.44	1.43	1.94	1.93	1.18110	1.18090	0.00020	0.00020	2.16570	2.16540	0.00000	0.00060	2.16590	2.16570	0.00080	0.00030
1.0	**43.3**	**43.1**	**53.9**	**53.7**	**35.000**	**34.995**	**0.005**	**0.006**	**62.008**	**62.000**	**0.000**	**0.015**	**62.012**	**62.007**	**0.019**	**0.007**
0.039	1.71	1.70	2.15	2.14	1.37800	1.37780	0.00020	0.00025	2.44120	2.44090	0.00000	0.00060	2.44140	2.44120	0.00080	0.00030
1.0	**48.8**	**48.6**	**59.4**	**59.2**	**40.000**	**39.995**	**0.005**	**0.006**	**68.008**	**68.000**	**0.000**	**0.015**	**68.012**	**68.007**	**0.019**	**0.007**
0.039	1.93	1.92	2.36	2.35	1.57480	1.57460	0.00020	0.00025	2.67750	2.67720	0.00000	0.00060	2.67770	2.67750	0.00080	0.00030
1.0	**54.1**	**53.9**	**66.2**	**66.0**	**45.000**	**44.995**	**0.005**	**0.006**	**75.008**	**75.000**	**0.000**	**0.015**	**75.014**	**75.009**	**0.022**	**0.009**
0.039	2.13	2.12	2.63	2.62	1.77170	1.77150	0.00020	0.00025	2.95310	2.95280	0.00000	0.00060	2.95330	2.95310	0.00080	0.00030
1.0	**59.1**	**58.9**	**71.2**	**71.0**	**50.000**	**49.995**	**0.005**	**0.006**	**80.008**	**80.000**	**0.000**	**0.015**	**80.012**	**80.008**	**0.020**	**0.008**
0.039	2.33	2.32	2.83	2.82	1.96850	1.96830	0.00020	0.00025	3.14990	3.14960	0.00000	0.00060	3.15010	3.14990	0.00080	0.00030
1.0	**65.8**	**65.6**	**79.4**	**79.2**	**55.000**	**54.995**	**0.005**	**0.007**	**90.008**	**90.000**	**0.000**	**0.016**	**90.015**	**90.007**	**0.023**	**0.007**
0.039	2.59	2.58	3.16	3.15	2.16540	2.16520	0.00020	0.00030	3.54360	3.54330	0.00000	0.00060	3.54390	3.54360	0.00090	0.00030
1.0	**70.8**	**70.6**	**84.4**	**84.2**	**60.000**	**59.995**	**0.005**	**0.007**	**95.008**	**95.000**	**0.000**	**0.016**	**95.016**	**95.009**	**0.024**	**0.009**
0.039	2.79	2.78	3.35	3.34	2.36220	2.36200	0.00020	0.00030	3.74050	3.74020	0.00000	0.00060	3.74080	3.74050	0.00090	0.00030
1.0	**75.8**	**75.6**	**89.4**	**89.2**	**65.000**	**64.995**	**0.005**	**0.007**	**100.008**	**100.000**	**0.000**	**0.016**	**100.016**	**100.009**	**0.024**	**0.009**
0.039	2.99	2.98	3.55	3.54	2.55910	2.55890	0.00020	0.00030	3.93730	3.93700	0.00000	0.00060	3.93770	3.93740	0.00100	0.00040
1.0	**82.5**	**82.3**	**97.7**	**97.5**	**70.000**	**69.995**	**0.005**	**0.007**	**110.008**	**110.000**	**0.000**	**0.016**	**110.018**	**110.010**	**0.025**	**0.010**
0.039	3.25	3.24	3.88	3.87	2.75590	2.75570	0.00020	0.00030	4.33100	4.33070	0.00000	0.00060	4.33140	4.33110	0.00100	0.00040
1.0	**87.5**	**87.3**	**102.7**	**102.5**	**75.005**	**74.995**	**0.005**	**0.012**	**115.008**	**115.000**	**0.000**	**0.016**	**115.019**	**115.011**	**0.026**	**0.010**
0.039	3.45	3.44	4.07	4.06	2.95300	2.95260	0.00020	0.00050	4.52790	4.52760	0.00000	0.00060	4.52830	4.52800	0.00100	0.00040
1.0	**94.2**	**94.0**	**111.0**	**110.8**	**80.005**	**79.995**	**0.005**	**0.012**	**125.008**	**125.000**	**0.000**	**0.017**	**125.021**	**125.011**	**0.030**	**0.011**
0.039	3.71	3.70	4.40	4.39	3.14980	3.14940	0.00020	0.00050	4.92160	4.92130	0.00000	0.00070	4.92210	4.92170	0.00120	0.00040
1.0	**99.2**	**99.0**	**116.0**	**115.8**	**85.005**	**84.995**	**0.005**	**0.012**	**130.009**	**130.000**	**0.000**	**0.018**	**130.020**	**130.010**	**0.029**	**0.010**
0.039	3.91	3.90	4.60	4.59	3.34670	3.34630	0.00020	0.00050	5.11850	5.11810	0.00000	0.00070	5.11890	5.11850	0.00110	0.00040
1.5	**105.1**	**104.9**	**125.1**	**124.9**	**90.005**	**89.995**	**0.005**	**0.013**	**140.009**	**140.000**	**0.000**	**0.018**	**140.020**	**140.010**	**0.029**	**0.010**
0.059	4.14	4.13	4.95	4.94	3.54350	3.54310	0.00020	0.00050	5.51220	5.51180	0.00000	0.00070	5.51260	5.51220	0.00110	0.00040
1.5	**110.1**	**109.9**	**130.1**	**129.9**	**95.005**	**94.995**	**0.005**	**0.013**	**145.009**	**145.000**	**0.000**	**0.018**	**145.021**	**145.011**	**0.030**	**0.011**
0.059	4.34	4.33	5.15	5.14	3.74040	3.74000	0.00020	0.00050	5.70910	5.70870	0.00000	0.00070	5.70950	5.70910	0.00110	0.00040

Continued on next page.

EXTRA-LIGHT ISO 10 SERIES
2(3)MMV99100WN – *continued*

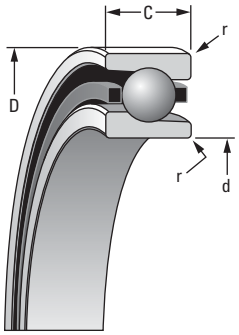

SUPER PRECISION MM

Running accuracy and performance meet ABEC 9 (ISO P2) levels.
Other features conform to ABEC 7 (ISO P4) requirements.

Bearing Number 2MM or 3MM	d Bore	D O.D.	C Width(1)	Ball Qty. x Dia.	Bearing Wt.	(2MM) LOAD RATINGS						(3MM) LOAD RATINGS					
						Steel Ball			Ceramic Ball			Steel Ball			Ceramic Ball		
						C_o Static	C_e Dynamic	Speed Rating(Ng)	C_o Static	C_e Dynamic	Speed Rating(Ng)	C_o Static	C_e Dynamic	Speed Rating(Ng)	C_o Static	C_e Dynamic	Speed Rating(Ng)
	mm/in.			**mm**/in.	**kg**/lbs.	**N**/lbs.		RPM	**N**/lbs.		RPM	**N**/lbs.		RPM	**N**/lbs.		RPM
99120WN	**100**	**150**	**24**	**31 x 10.32**	**1.374**	**40400**	**40900**	**9400**	**35900**	**40900**	**11280**	**37700**	**38500**	**8500**	**33600**	**38500**	**10200**
	3.9370	5.9055	0.9449	31 x 13/32	3.03	9070	9190	9400	8080	9190	11280	8480	8660	8500	7540	8660	10200
99121WN	**105**	**160**	**26**	**30 x 11.11**	**1.729**	**45400**	**45900**	**8900**	**40400**	**45900**	**10680**	**42400**	**43400**	**8000**	**37800**	**43400**	**9600**
	4.1339	6.2992	1.0236	30 x 7/16	3.81	10200	10300	8900	9080	10300	10680	9540	9750	8000	8490	9750	9600
99122WN	**110**	**170**	**28**	**30 x 11.91**	**2.188**	**52100**	**52200**	**8500**	**46400**	**52200**	**10200**	**48800**	**49300**	**7700**	**43400**	**49300**	**8880**
	4.3307	6.6929	1.1024	30 x 15/32	4.82	11700	11700	8500	10400	11700	10200	11000	11100	7700	9760	11100	8880
99124WN	**120**	**180**	**28**	**32 x 11.91**	**2.343**	**55200**	**53500**	**7900**	**49200**	**53500**	**9480**	**51700**	**50600**	**7100**	**46000**	**50600**	**8520**
	4.7244	7.0866	1.1024	32 x 15/32	5.17	12400	12000	7900	11100	12000	9480	11600	11400	7100	10300	11400	8520
99126WN	**130**	**200**	**33**	**32 x 13.49**	**3.563**	**71200**	**67500**	**7100**	**63400**	**67500**	**8520**	**66600**	**63700**	**6400**	**59200**	**63700**	**7680**
	5.1181	7.8740	1.2992	32 x 17/32	7.85	16000	15200	7100	14300	15200	8520	15000	14300	6400	13300	14300	7680
99128WN	**140**	**210**	**33**	**34 x 13.49**	**3.776**	**75200**	**69300**	**6600**	**67000**	**69300**	**7920**	**70300**	**65300**	**5900**	**62600**	**65300**	**7080**
	5.5118	8.2677	1.2992	34 x 17/32	8.32	16900	15600	6600	15100	15600	7920	15800	14700	5900	14100	14700	7080
99130WN	**150**	**225**	**35**	**34 x 15.08**	**4.509**	**91500**	**83800**	**6200**	**81400**	**83800**	**7440**	**85600**	**79100**	**5600**	**76200**	**79100**	**6720**
	5.9055	8.8583	1.3780	34 x 19/32	9.94	20600	18800	6200	18300	18800	7440	19300	17800	5600	17100	17800	6720

(Ng) For a single, grease-lubricated, spring-preloaded bearing. This value to be used in permissible operating speed (Sp) calculation.
(1) Width tolerance of preloaded bearing set +0.000/-0.254 mm (+0.0000/-0.0100 in.).
(2) ABMA STD 20 (r_{as} max).

WN CONSTRUCTION

- Incorporates low shoulder on non-thrust side of both inner and outer rings.
- Balls separated by one-piece cage piloted against a ground thrust shoulder land of the outer ring.

r Rad.(2)	Suggested Shoulder Diameters				Shaft Diameter		Mounting Fits		FIXED				FLOATING			
	Shaft		Housing						Housing Bore (Stationary)		Mounting Fits		Housing Bore (Stationary)		Mounting Fits	
	Max.	Min.	Max.	Min.	Max.	Min.	Loose	Tight	Max.	Min.	Tight	Loose	Max.	Min.	Loose	Loose
mm/in.	mm/in.		mm/in.		mm/in.		mm/in.		mm/in.		mm/in.		mm/in.		mm/in.	
1.5	**115.1**	**114.9**	**135.1**	**134.9**	**100.005**	**99.995**	**0.005**	**0.013**	**150.009**	**150.000**	**0.000**	**0.018**	**150.023**	**150.012**	**0.032**	**0.012**
0.059	4.54	4.53	5.35	5.34	3.93720	3.93680	0.00020	0.00050	5.90590	5.90550	0.00000	0.00070	5.90640	5.90600	0.00120	0.00050
2.0	**121.8**	**121.6**	**143.4**	**143.2**	**105.005**	**104.995**	**0.005**	**0.013**	**160.009**	**160.000**	**0.000**	**0.022**	**160.022**	**160.012**	**0.033**	**0.012**
0.079	4.80	4.79	5.67	5.66	4.13410	4.13370	0.00020	0.00050	6.29960	6.29920	0.00000	0.00080	6.30010	6.29970	0.00130	0.00050
2.0	**128.5**	**128.3**	**151.7**	**151.5**	**110.005**	**109.995**	**0.005**	**0.013**	**170.010**	**170.000**	**0.000**	**0.020**	**170.022**	**170.012**	**0.032**	**0.012**
0.079	5.06	5.05	6.00	5.99	4.33090	4.33050	0.00020	0.00050	6.69330	6.69290	0.00000	0.00080	6.69380	6.69340	0.00130	0.00050
2.0	**138.5**	**138.3**	**161.7**	**161.5**	**120.005**	**119.995**	**0.005**	**0.013**	**180.010**	**180.000**	**0.000**	**0.020**	**180.022**	**180.012**	**0.032**	**0.012**
0.079	5.46	5.45	6.39	6.38	4.72460	4.72420	0.00020	0.00050	7.08700	7.08660	0.00000	0.00080	7.08750	7.08710	0.00130	0.00050
2.0	**151.9**	**151.7**	**178.3**	**178.1**	**130.005**	**129.995**	**0.005**	**0.015**	**200.011**	**200.000**	**0.000**	**0.022**	**200.025**	**200.015**	**0.036**	**0.015**
0.079	5.98	5.97	7.05	7.04	5.11830	5.11790	0.00020	0.00060	7.87450	7.87400	0.00000	0.00090	7.87500	7.87460	0.00150	0.00060
2.0	**161.9**	**161.7**	**188.3**	**188.1**	**140.005**	**139.995**	**0.005**	**0.015**	**210.011**	**210.000**	**0.000**	**0.022**	**210.025**	**210.015**	**0.036**	**0.015**
0.079	6.38	6.37	7.44	7.43	5.51200	5.51160	0.00020	0.00060	8.26820	8.26770	0.00000	0.00090	8.26870	8.26830	0.00150	0.00060
2.0	**172.8**	**172.6**	**202.4**	**202.2**	**150.005**	**149.995**	**0.005**	**0.015**	**225.011**	**225.000**	**0.000**	**0.022**	**225.025**	**225.015**	**0.036**	**0.015**
0.079	6.81	6.80	8.00	7.99	5.90570	5.90530	0.00020	0.00060	8.85880	8.85830	0.00000	0.00090	8.85930	8.85890	0.00150	0.00060

EXTRA-LIGHT 2MMV99100WN ISO 10 SERIES

DUPLEX PERFORMANCE DATA

MOUNTING ARRANGEMENTS

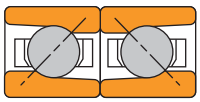

Back-to-Back DB

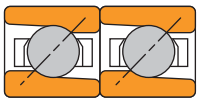

Tandem DT

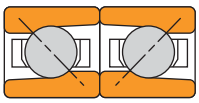

Face-to-Face DF

Bearing Number	Preload DUX X-light	Preload DUL Light	Preload DUM Med.	Preload DUH Heavy	Axial Stiffness[1] X-light	Axial Stiffness[1] Light	Axial Stiffness[1] Med.	Axial Stiffness[1] Heavy	Radial Stiffness[1] X-light	Radial Stiffness[1] Light	Radial Stiffness[1] Med.	Radial Stiffness[1] Heavy	Spacer Offsets[1] X-light to Light	Spacer Offsets[1] Light to Med.	Spacer Offsets[1] Med. to Heavy
	N lbs.				N/µm 10^6 lbs./in.				N/µm 10^6 lbs./in.				µm in.		
2MMV99101WN	—	20	40	90	—	13.47	17.84	24.14	—	85.08	107.19	134.02	—	5.59	8.38
	—	5	10	20	—	0.077	0.102	0.138	—	0.486	0.612	0.765	—	0.00022	0.00033
2MMV99102WN	—	20	40	90	—	15.22	20.11	27.11	—	89.72	113.86	139.92	—	5.08	7.62
	—	5	10	20	—	0.087	0.115	0.155	—	0.513	0.651	0.800	—	0.00020	0.00030
2MMV99103WN	—	20	40	90	—	16.97	22.21	29.73	—	99.69	127.15	156.71	—	4.57	6.86
	—	5	10	20	—	0.097	0.127	0.170	—	0.570	0.727	0.896	—	0.00018	0.00027
2MMV99104WN	20	40	90	180	17.14	22.39	29.91	40.75	105.95	135.97	171.45	214.48	4.57	6.86	10.16
	5	10	20	40	0.098	0.128	0.171	0.233	0.605	0.776	0.979	1.225	0.00018	0.00027	0.00040
2MMV99105WN	20	70	130	270	21.51	29.21	39.18	53.87	116.89	174.26	219.05	273.41	7.32	7.87	11.43
	5	15	30	60	0.123	0.167	0.224	0.308	0.667	0.995	1.251	1.561	0.00029	0.00031	0.00045
2MMV99106WN	20	70	130	270	24.49	33.06	44.07	60.17	131.40	199.92	251.98	315.13	6.44	6.86	10.16
	5	15	30	60	0.140	0.189	0.252	0.344	0.750	1.142	1.439	1.800	0.00025	0.00027	0.00040
2MMV99107WN	40	90	180	360	33.41	44.07	59.12	81.15	196.70	249.95	314.01	391.80	4.57	6.86	10.16
	10	20	40	80	0.191	0.252	0.338	0.464	1.123	1.427	1.793	2.237	0.00018	0.00027	0.00040
2MMV99108WN	70	110	220	440	39.00	52.12	70.13	96.72	214.10	294.35	369.42	460.55	6.00	7.37	10.67
	15	25	50	100	0.223	0.298	0.401	0.553	1.223	1.681	2.110	2.630	0.00024	0.00029	0.00042
2MMV99109WN	70	130	270	530	41.45	54.74	73.81	101.79	253.28	321.31	403.31	502.83	5.59	8.38	12.19
	15	30	60	120	0.237	0.313	0.422	0.582	1.446	1.835	2.303	2.871	0.00022	0.00033	0.00048
2MMV99110WN	70	130	270	530	43.55	57.54	77.31	106.34	267.19	339.63	426.72	532.43	5.33	7.87	11.68
	15	30	60	120	0.249	0.329	0.442	0.608	1.526	1.939	2.437	3.040	0.00021	0.00031	0.00046
2MMV99111WN	90	180	360	710	51.07	67.16	90.25	124.35	303.58	385.56	484.27	604.09	6.10	9.14	13.21
	20	40	80	160	0.292	0.384	0.516	0.711	1.734	2.202	2.765	3.450	0.00024	0.00036	0.00052
2MMV99112WN	90	180	360	710	52.30	68.74	92.35	126.80	311.29	395.75	497.28	620.55	5.84	8.89	12.95
	20	40	80	160	0.299	0.393	0.528	0.725	1.778	2.260	2.840	3.544	0.00023	0.00035	0.00051
2MMV99113WN	110	220	440	890	59.64	78.71	106.16	146.74	353.56	447.95	561.95	700.29	6.35	9.65	13.97
	25	50	100	200	0.341	0.450	0.607	0.839	2.019	2.558	3.209	3.999	0.00025	0.00038	0.00055
2MMV99114WN	110	220	440	890	62.26	81.68	109.14	149.36	361.67	460.75	579.51	723.72	6.10	9.40	13.72
	25	50	100	200	0.356	0.467	0.624	0.854	2.065	2.631	3.309	4.133	0.00024	0.00037	0.00054
2MMV99115WN	130	270	530	1070	69.61	91.65	122.95	168.95	403.77	512.83	644.16	803.61	6.60	9.91	14.73
	30	60	120	240	0.398	0.524	0.703	0.966	2.306	2.928	3.678	4.589	0.00026	0.00039	0.00058
2MMV99116WN	160	310	620	1250	0.17	95.67	128.55	177.00	432.62	549.28	689.78	860.34	7.37	11.18	11.18
	35	70	140	280	0.001	0.547	0.735	1.012	2.470	3.137	3.939	4.913	0.00029	0.00044	0.00044
2MMV99117WN	180	360	710	1420	79.58	105.11	141.67	195.36	467.02	592.44	743.74	927.44	7.62	11.43	16.76
	40	80	160	320	0.455	0.601	0.810	1.117	2.667	3.383	4.247	5.296	0.00030	0.00045	0.00066
2MMV99118WN	200	400	800	1600	80.63	106.16	142.54	196.06	479.96	610.45	767.27	957.71	8.64	12.95	18.80
	45	90	180	360	0.461	0.607	0.815	1.121	2.741	3.486	4.381	5.469	0.00034	0.00051	0.00074
2MMV99119WN	200	400	800	1600	82.38	108.44	145.34	199.74	490.79	624.83	785.67	980.99	8.38	12.70	12.70
	45	90	180	360	0.471	0.620	0.831	1.142	2.803	3.568	4.487	5.602	0.00033	0.00050	0.00050
2MMV99120WN	220	440	890	1780	89.37	117.71	158.11	217.58	532.07	676.67	850.46	1061.51	8.64	12.95	19.05
	50	100	200	400	0.511	0.673	0.904	1.244	3.038	3.864	4.856	6.062	0.00034	0.00051	0.00075
2MMV99121WN	240	490	980	1960	94.10	123.83	165.81	229.99	548.16	697.66	877.16	1102.96	8.89	13.46	20.57
	55	110	220	440	0.538	0.708	0.948	1.315	3.130	3.984	5.009	6.298	0.00035	0.00053	0.00081
2MMV99122WN	270	530	1070	2140	99.87	131.00	175.07	244.34	574.35	732.23	921.28	1165.87	9.14	13.97	22.10
	60	120	240	480	0.571	0.749	1.001	1.397	3.280	4.181	5.261	6.658	0.00036	0.00055	0.00087
2MMV99124WN	310	620	1250	2490	110.19	144.99	194.31	264.45	633.03	804.99	1011.74	1255.72	9.65	14.73	20.83
	70	140	280	560	0.630	0.829	1.111	1.512	3.615	4.597	5.777	7.171	0.00038	0.00058	0.00082
2MMV99126WN	400	800	1600	3200	121.56	160.21	215.30	292.43	726.36	923.10	1159.78	1434.38	11.43	17.02	23.88
	90	180	360	720	0.695	0.916	1.231	1.672	4.148	5.271	6.623	8.191	0.00045	0.00067	0.00094
2MMV99128WN	420	850	1690	3380	128.73	169.65	228.07	311.85	769.93	978.63	1229.64	1528.04	11.18	17.02	24.38
	95	190	380	760	0.736	0.970	1.304	1.783	4.397	5.588	7.022	8.726	0.00044	0.00067	0.00096
2MMV99130WN	440	890	1780	3560	135.20	177.35	236.99	323.74	787.69	1005.74	1266.14	1582.33	11.43	17.02	25.40
	100	200	400	800	0.773	1.014	1.355	1.851	4.498	5.743	7.230	9.036	0.00045	0.00067	0.00100

[1] For DB or DF arrangements only. For other mounting arrangements, contact your Timken representative.

EXTRA-LIGHT 3MMV99100WN ISO 10 SERIES

DUPLEX PERFORMANCE DATA

MOUNTING ARRANGEMENTS

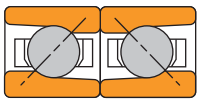

Back-to-Back DB

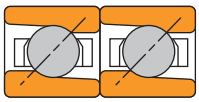

Tandem DT

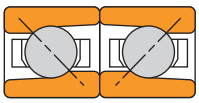

Face-to-Face DF

Bearing Number	Preload				Axial Stiffness[1]				Radial Stiffness[1]				Spacer Offsets[1]		
	DUX X-light	DUL Light	DUM Med.	DUH Heavy	X-light	Light	Med.	Heavy	X-light	Light	Med.	Heavy	X-light to Light	Light to Med.	Med. to Heavy
	N lbs.				N/µm 10^6 lbs./in.				N/µm 10^6 lbs./in.				µm in.		
3MMV99101WN	—	40	90	180	—	35.85	46.00	59.99	63.81	81.02	101.87	127.31	—	4.32	6.60
	—	10	20	40	—	0.205	0.263	0.343	0.364	0.463	0.582	0.727	—	0.00017	0.00026
3MMV99102WN	—	40	90	180	—	40.75	52.30	67.86	72.53	92.55	116.62	145.99	—	3.81	5.84
	—	10	20	40	—	0.233	0.299	0.388	0.414	0.529	0.666	0.834	—	0.00015	0.00023
3MMV99103WN	—	40	90	180	—	45.30	58.07	75.21	76.60	98.03	123.65	154.90	—	3.30	5.33
	—	10	20	40	—	0.259	0.332	0.430	0.437	0.560	0.706	0.885	—	0.00013	0.00021
3MMV99104WN	40	90	180	360	47.92	61.39	79.23	103.37	100.04	127.28	160.19	200.35	3.30	5.08	7.87
	10	20	40	80	0.274	0.351	0.453	0.591	0.571	0.727	0.915	1.144	0.00013	0.00020	0.00031
3MMV99105WN	70	130	270	530	61.74	79.05	102.49	134.32	128.71	162.96	204.62	255.42	3.81	5.84	8.89
	15	30	60	120	0.353	0.452	0.586	0.768	0.735	0.931	1.168	1.459	0.00015	0.00023	0.00035
3MMV99106WN	70	130	270	530	70.48	90.25	116.66	152.16	147.17	187.11	235.41	294.36	3.30	5.08	7.87
	15	30	60	120	0.403	0.516	0.667	0.870	0.840	1.068	1.344	1.681	0.00013	0.00020	0.00031
3MMV99107WN	90	180	360	710	90.07	115.61	149.89	196.76	186.19	235.47	295.48	368.61	3.56	5.33	8.13
	20	40	80	160	0.515	0.661	0.857	1.125	1.063	1.345	1.687	2.105	0.00014	0.00021	0.00032
3MMV99108WN	110	220	440	890	106.34	136.60	177.17	233.14	219.49	277.23	347.59	433.29	3.56	5.59	8.64
	25	50	100	200	0.608	0.781	1.013	1.333	1.253	1.583	1.985	2.474	0.00014	0.00022	0.00034
3MMV99109WN	130	270	530	1070	114.03	146.39	189.94	249.76	237.67	300.35	376.71	469.74	4.06	6.35	9.65
	30	60	120	240	0.652	0.837	1.086	1.428	1.357	1.715	2.151	2.682	0.00016	0.00025	0.00038
3MMV99110WN	130	270	530	1070	120.33	154.44	200.09	262.52	250.96	317.55	398.58	497.37	3.81	6.10	9.14
	30	60	120	240	0.688	0.883	1.144	1.501	1.433	1.813	2.276	2.840	0.00015	0.00024	0.00036
3MMV99111WN	180	360	710	1420	137.12	176.12	228.42	300.13	288.20	364.36	457.11	570.13	4.57	7.11	10.67
	40	80	160	320	0.784	1.007	1.306	1.716	1.646	2.081	2.610	3.256	0.00018	0.00028	0.00042
3MMV99112WN	180	360	710	1420	140.62	180.50	234.02	307.30	295.67	374.03	469.41	585.66	4.32	6.86	10.41
	40	80	160	320	0.804	1.032	1.338	1.757	1.688	2.136	2.681	3.344	0.00017	0.00027	0.00041
3MMV99113WN	220	440	890	1780	159.68	205.33	266.72	351.55	335.25	423.19	530.40	660.91	4.83	7.62	11.43
	50	100	200	400	0.913	1.174	1.525	2.010	1.914	2.417	3.029	3.774	0.00019	0.00030	0.00045
3MMV99114WN	220	440	890	1780	163.53	210.05	271.97	356.80	346.94	439.31	551.63	688.59	4.83	7.37	11.18
	50	100	200	400	0.935	1.201	1.555	2.040	1.981	2.509	3.150	3.932	0.00019	0.00029	0.00044
3MMV99115WN	270	530	1070	2220	182.42	234.54	304.33	406.99	386.68	488.76	613.09	774.44	5.08	7.87	12.95
	60	120	240	500	1.043	1.341	1.740	2.327	2.208	2.791	3.501	4.422	0.00020	0.00031	0.00051
3MMV99116WN	310	620	1250	2450	193.96	249.23	323.22	422.03	411.47	520.10	652.41	809.01	5.59	8.64	12.95
	70	140	280	550	1.109	1.425	1.848	2.413	2.350	2.970	3.726	4.620	0.00022	0.00034	0.00051
3MMV99117WN	360	710	1420	2670	212.33	273.02	354.52	454.91	446.52	563.93	707.04	863.65	5.84	9.14	12.19
	80	160	320	600	1.214	1.561	2.027	2.601	2.550	3.220	4.038	4.932	0.00023	0.00036	0.00048
3MMV99118WN	400	800	1600	3110	216.18	277.74	360.29	468.21	462.96	585.58	734.84	908.65	6.35	9.91	14.48
	90	180	360	700	1.236	1.588	2.060	2.677	2.644	3.344	4.196	5.189	0.00025	0.00039	0.00057
3MMV99119WN	400	800	1600	3110	221.25	284.04	368.16	478.00	473.66	599.46	752.49	930.74	6.35	9.91	14.22
	90	180	360	700	1.265	1.624	2.105	2.733	2.705	3.423	4.297	5.315	0.00025	0.00039	0.00056
3MMV99120WN	440	890	1780	3560	239.79	308.00	399.47	525.05	513.19	649.09	814.50	1016.10	6.35	9.91	15.24
	100	200	400	800	1.371	1.761	2.284	3.002	2.931	3.707	4.651	5.802	0.00025	0.00039	0.00060
3MMV99121WN	490	980	2000	4000	246.61	316.74	414.34	544.99	531.63	672.61	850.32	1060.75	6.86	11.18	16.51
	110	220	450	900	1.410	1.811	2.369	3.116	3.036	3.841	4.856	6.057	0.00027	0.00044	0.00065
3MMV99122WN	530	1070	2220	4450	259.55	333.18	438.47	576.30	560.03	709.13	902.24	1125.82	7.11	11.94	17.53
	120	240	500	1000	1.484	1.905	2.507	3.295	3.198	4.049	5.152	6.429	0.00028	0.00047	0.00069
3MMV99124WN	620	1250	2450	4890	285.79	367.29	473.28	622.47	616.32	779.28	972.01	1212.56	7.62	11.43	17.78
	140	280	550	1100	1.634	2.100	2.706	3.559	3.519	4.450	5.551	6.924	0.00030	0.00045	0.00070
3MMV99126WN	800	1600	3110	6230	323.91	416.44	534.49	702.75	699.72	884.69	1099.85	1372.12	8.64	12.70	20.07
	180	360	700	1400	1.852	2.381	3.056	4.018	3.996	5.052	6.281	7.835	0.00034	0.00050	0.00079
3MMV99128WN	850	1690	3340	6670	343.33	441.27	569.82	749.27	741.75	937.93	1171.75	1461.71	8.64	12.95	20.07
	190	380	750	1500	1.963	2.523	3.258	4.284	4.236	5.356	6.691	8.347	0.00034	0.00051	0.00079
3MMV99130WN	890	1780	3560	7120	352.25	451.94	585.39	767.81	766.68	971.75	1220.76	1524.48	8.89	13.72	21.08
	200	400	800	1600	2.014	2.584	3.347	4.390	4.378	5.549	6.971	8.705	0.00035	0.00054	0.00083

[1] For DB or DF arrangements only. For other mounting arrangements, contact your Timken representative.

EXTRA-LIGHT 2MMV99100WN ISO 10 SERIES

SPEED CAPABILITY DATA

Bearing Number	Grease Capacity[1]				Operating Speeds[4] (DB Mounting)[5]					
	Low Speed[2]		High Speed[3]		Grease			Oil		
	25%	40%	15%	20%	DUL	DUM	DUH	DUL	DUM	DUH
	grams		grams		RPM			RPM		
2MMV99101WN	0.30	0.50	0.20	0.27	68200	60600	45500	116000	103000	77400
2MMV99102WN	0.40	0.60	0.24	0.32	57900	51400	38600	98400	98400	65600
2MMV99103WN	0.50	0.70	0.31	0.41	51200	45500	34100	87100	87100	58000
2MMV99104WN	0.90	1.40	0.58	0.77	39400	35000	26300	67000	67000	44700
2MMV99105WN	1.00	1.60	0.67	0.9	32900	29200	21900	55800	55800	37200
2MMV99106WN	1.30	2.10	0.87	1.17	26600	23600	17700	45100	45100	30100
2MMV99107WN	1.40	2.20	0.91	1.22	22800	20200	15200	38700	38700	25800
2MMV99108WN	1.70	2.70	1.14	1.52	19800	17600	13200	33700	33700	22400
2MMV99109WN	2.20	3.50	1.47	1.96	18200	16200	12100	30900	30900	20600
2MMV99110WN	2.40	3.80	1.58	2.11	16700	14800	11100	28300	28300	18900
2MMV99111WN	3.40	5.40	2.20	3.00	14900	13300	10000	25400	25400	17000
2MMV99112WN	3.60	5.80	2.40	3.20	13900	12300	9200	23600	23600	15600
2MMV99113WN	3.80	6.10	2.60	3.40	13000	11500	8600	22000	22000	14600
2MMV99114WN	5.10	8.20	3.40	4.60	11900	10600	7900	20200	20200	13400
2MMV99115WN	5.50	8.80	3.70	4.90	11100	9800	7400	18800	18800	12600
2MMV99116WN	7.10	11.30	4.70	6.30	10400	9300	7000	17700	17700	11900
2MMV99117WN	7.40	11.80	4.90	6.60	9900	8800	6600	16800	16800	11200
2MMV99118WN	9.70	15.60	6.50	8.70	9400	8300	6200	15900	15900	10500
2MMV99119WN	13.30	21.30	7.10	9.50	8900	7900	5900	15100	15100	10000
2MMV99120WN	10.60	17.00	7.40	9.90	8500	7500	5600	14400	14400	9500
2MMV99121WN	17.10	27.40	9.10	12.20	8000	7100	5300	13600	13600	9000
2MMV99122WN	16.00	25.60	10.70	14.20	7700	6800	5100	13000	13000	8700
2MMV99124WN	17.10	27.40	11.40	15.30	7100	6300	4700	12100	12100	8000
2MMV99126WN	25.80	41.30	17.20	23.00	6400	5700	4300	10900	10900	7300
2MMV99128WN	27.50	43.90	18.30	24.40	5900	5300	4000	10100	10100	6800
2MMV99130WN	43.90	70.30	29.30	39.10	5600	5000	3700	9500	9500	6300

(1) Fill weights based on specific gravity of 0.99.
(2) Low speed <500000 dN.
(3) High speed ≥ 500000 dN.
(4) For ceramic ball complements, use 120 percent of speeds shown.
(5) For other mounting arrangement configurations, refer to the engineering section on permissible speed calculation methods.

EXTRA-LIGHT 3MMV99100WN ISO 10 SERIES

SPEED CAPABILITY DATA

Bearing Number	Grease Capacity[1]				Operating Speeds[4] (DB Mounting)[5]					
	Low Speed[2]		High Speed[3]		Grease			Oil		
	25%	40%	15%	20%	DUL	DUM	DUH	DUL	DUM	DUH
	grams		grams		RPM			RPM		
3MMV99101WN	0.30	0.50	0.20	0.30	58000	47700	34100	86900	71600	51100
3MMV99102WN	0.40	0.60	0.20	0.30	49000	40500	28900	73800	60800	43400
3MMV99103WN	0.50	0.70	0.30	0.40	43500	35800	25600	65300	53800	38400
3MMV99104WN	0.90	1.40	0.60	0.80	33500	27600	19700	50200	41400	29500
3MMV99105WN	1.00	1.60	0.70	0.90	27900	23000	16400	41800	34400	24600
3MMV99106WN	1.30	2.10	0.90	1.20	22500	18500	13200	33800	27800	19900
3MMV99107WN	1.40	2.20	0.90	1.20	19300	15900	11300	28900	23800	17000
3MMV99108WN	1.70	2.70	1.10	1.50	16800	13900	9900	25200	20800	14800
3MMV99109WN	2.20	3.50	1.50	2.00	15500	12700	9100	23200	19100	13600
3MMV99110WN	2.40	3.80	1.60	2.10	14200	11700	8300	21300	17500	12500
3MMV99111WN	3.40	5.40	2.20	3.00	12700	10400	7400	19000	15600	11200
3MMV99112WN	3.60	5.80	2.40	3.20	11800	9700	6900	17700	14600	10400
3MMV99113WN	3.80	6.10	2.60	3.40	11000	9100	6500	16600	13600	9700
3MMV99114WN	5.10	8.20	3.40	4.60	10100	8300	5900	15200	12500	8900
3MMV99115WN	5.50	8.80	3.70	4.90	9400	7800	5500	14100	11700	8300
3MMV99116WN	7.10	11.30	4.70	6.30	8800	7300	5200	13300	10900	7800
3MMV99117WN	7.40	11.80	4.90	6.60	8400	6900	4900	12600	10400	7400
3MMV99118WN	9.70	15.60	6.50	8.70	7900	6500	4700	11900	9800	7000
3MMV99119WN	13.30	21.30	7.10	9.50	7600	6200	4500	11400	9400	6700
3MMV99120WN	10.60	17.00	7.40	9.90	7200	5900	4200	10800	8900	6300
3MMV99121WN	17.10	27.40	9.10	12.20	6800	5600	4000	10300	8500	6000
3MMV99122WN	16.00	25.60	10.70	14.20	6500	5300	3800	9700	8000	5700
3MMV99124WN	17.10	27.40	11.40	15.30	6000	4900	3500	9000	7400	5300
3MMV99126WN	25.80	41.30	17.20	23.00	5400	4500	3200	8100	6700	4800
3MMV99128WN	27.50	43.90	18.30	24.40	5100	4200	3000	7600	6300	4500
3MMV99130WN	43.90	70.30	29.30	39.10	4800	3900	2800	7200	5900	4200

(1) Fill weights based on specific gravity of 0.99.
(2) Low speed <500000 dN.
(3) High speed ≥ 500000 dN.
(4) For ceramic ball complements, use 120 percent of speeds shown.
(5) For other mounting arrangement configurations, refer to the engineering section on permissible speed calculation methods.

ULTRA-LIGHT ISO 10 SERIES MM9100K

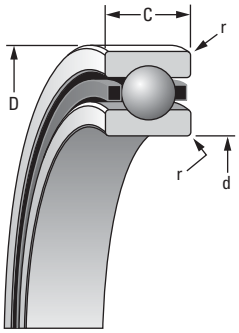

SUPER PRECISION MM

Running accuracy and performance meet ABEC 9 (ISO P2) levels.
Other features conform to ABEC 7 (ISO P4) requirements.

Bearing Number	d Bore	D O.D.	C Width(1)	Ball Qty. x Dia.	Bearing Wt.	LOAD RATINGS Steel Ball C_o Static	Steel Ball C_e Dynamic	Steel Ball Speed Rating(Ng)	Ceramic Ball C_o Static	Ceramic Ball C_e Dynamic	Ceramic Ball Speed Rating(Ng)	r Rad.(2)
	mm/in.			mm/in.	kg/lbs.	N/lbs.		RPM	N/lbs.		RPM	mm/in.
MM9101K	12	28	8	8 x 4.76	0.020	2400	5670	52800	2130	5670	63400	0.3
	0.4724	1.1024	0.3150	8 x 3/16	0.04	540	1280	52800	480	1280	63400	0.012
MM9103K	17	35	10	10 x 4.76	0.038	3300	6660	39600	2890	6660	47500	0.3
	0.6693	1.3780	0.3937	10 x 3/16	0.08	735	1500	39600	650	1500	47500	0.012
MM9104K	20	42	12	8 x 6.35	0.064	4400	9620	34000	3980	9620	40800	0.6
	0.7874	1.6535	0.4724	8 x 1/4	0.14	1000	2160	34000	890	2160	40800	0.024
MM9105K	25	47	12	10 x 6.35	0.074	5900	11200	28300	5210	11200	34000	0.6
	0.9843	1.8504	0.4724	10 x 1/4	0.16	1320	2510	28300	1170	2510	34000	0.024
MM9106K	30	55	13	11 x 7.14	0.109	8300	14700	23300	7390	14700	28000	1.0
	1.1811	2.1654	0.5118	11 x 9/32	0.24	1860	3300	23300	1660	3300	28000	0.039
MM9107K	35	62	14	11 x 7.94	0.144	10300	17700	20700	9150	17700	24800	1.0
	1.3780	2.4409	0.5512	11 x 5/16	0.32	2320	3980	20700	2060	3980	24800	0.039
MM9108K	40	68	15	12 x 7.94	0.180	11600	18600	18200	10300	18600	21800	1.0
	1.5748	2.6772	0.5906	12 x 5/16	0.40	2600	4180	18200	2310	4180	21800	0.039
MM9109K	45	75	16	13 x 8.73	0.230	15100	23300	16300	13500	23300	19600	1.0
	1.7717	2.9528	0.6299	13 x 11/32	0.51	3400	5230	16300	3030	5230	19600	0.039
MM9110K	50	80	16	14 x 8.73	0.248	16700	24200	14900	14700	24200	17900	1.0
	1.9685	3.1496	0.6299	14 x 11/32	0.55	3750	5440	14900	3310	5440	17900	0.039
MM9111K	55	90	18	13 x 10.32	0.362	21400	31400	13500	18900	31400	16200	1.0
	2.1654	3.5433	0.7087	13 x 13/32	0.80	4800	7050	13500	4250	7050	16200	0.039
MM9112K	60	95	18	14 x 10.32	0.430	23200	32600	12500	20600	32600	15000	1.0
	2.3622	3.7402	0.7087	14 x 13/32	0.95	5210	7340	12500	4630	7340	15000	0.039
MM9113K	65	100	18	15 x 10.32	0.450	25200	33900	11600	22400	33900	13900	1.0
	2.5591	3.9370	0.7087	15 x 13/32	0.99	5650	7610	11600	5030	7610	13900	0.039
MM9114K	70	110	20	14 x 11.91	0.620	30900	42200	10700	27500	42200	12800	1.0
	2.7559	4.3307	0.7874	14 x 15/32	1.37	6940	9490	10700	6180	9490	12800	0.039
MM9115K	75	115	20	15 x 11.91	0.606	33400	43800	10100	29800	43800	12100	1.0
	2.9528	4.5276	0.7874	15 x 15/32	1.34	7500	9850	10100	6700	9850	12100	0.039
MM9116K	80	125	22	14 x 13.49	0.804	40000	52800	9420	35300	52800	11300	1.0
	3.1496	4.9213	0.8661	14 x 17/32	1.77	9000	11900	9420	7940	11900	11300	0.039
MM9117K	85	130	22	15 x 13.49	0.845	42900	54900	8900	38300	54900	10700	1.0
	3.3465	5.1181	0.8661	15 x 17/32	1.86	9650	12300	8900	8600	12300	10700	0.039
MM9118K	90	140	24	14 x 15.08	1.092	49800	64500	8390	44100	64500	10100	1.5
	3.5433	5.5118	0.9449	14 x 19/32	2.41	11200	14500	8390	9920	14500	10100	0.059
MM9120K	100	150	24	15 x 15.08	1.208	54300	66700	7630	48200	66700	9160	1.5
	3.9370	5.9055	0.9449	15 x 19/32	2.66	12200	15000	7630	10800	15000	9160	0.059
MM9122K	110	170	28	14 x 17.46	1.882	66700	83400	6840	59900	83400	8210	2.0
	4.3307	6.6929	1.1024	14 x 11/16	4.15	15000	18700	6840	13500	18700	8210	0.079
MM9124K	120	180	28	15 x 17.46	2.019	72500	86300	6320	65000	86300	7580	2.0
	4.7244	7.0866	1.1024	15 x 11/16	4.45	16300	19400	6320	14600	19400	7580	0.079
MM9126K	130	200	33	14 x 20.64	3.041	94300	112600	5810	83600	112600	6975	2.0
	5.1181	7.8740	1.2992	14 x 13/16	6.70	21200	25300	5810	18800	25300	6975	0.079

(Ng) For a single, grease-lubricated, spring-preloaded bearing. This value to be used in permissible operating speed (Sp) calculation.
(1) Width tolerance of preloaded bearing set +0.000/-0.254 mm (+0.0000/-0.0100 in.).
(2) ABMA STD 20 (r_{as} max).

DEEP-GROOVE (CONRAD) CONSTRUCTION

- Incorporates high shoulder on both inner and outer rings.
- Balls separated by two-piece and piloted cage.

Suggested Shoulder Diameters				Shaft Diameter		Mounting Fits		FIXED				FLOATING			
Shaft		Housing						Housing Bore (Stationary)		Mounting Fits		Housing Bore (Stationary)		Mounting Fits	
Max.	Min.	Max.	Min.	Max.	Min.	Loose	Tight	Max.	Min.	Tight	Loose	Max.	Min.	Loose	Loose
mm/in.		**mm**/in.		**mm**/in.		**mm**/in.		**mm**/in.		**mm**/in.		**mm**/in.		**mm**/in.	
16.1	**15.9**	**25.5**	**25.3**	**12.000**	**11.995**	**0.005**	**0.004**	**28.005**	**28.000**	**0.000**	**0.010**	**28.010**	**28.005**	**0.015**	**0.005**
0.64	0.63	1.01	1.00	0.47240	0.47220	0.00020	0.00015	1.10260	1.10240	0.00000	0.00040	1.10280	1.10260	0.00060	0.00020
21.7	**21.5**	**31.1**	**30.9**	**17.000**	**16.995**	**0.005**	**0.004**	**35.006**	**35.000**	**0.000**	**0.012**	**35.010**	**35.005**	**0.016**	**0.005**
0.86	0.85	1.23	1.22	0.66930	0.66910	0.00020	0.00015	1.37830	1.37800	0.00000	0.00050	1.37840	1.37820	0.00070	0.00020
25.0	**24.8**	**37.7**	**37.5**	**20.000**	**19.995**	**0.005**	**0.005**	**42.006**	**42.000**	**0.000**	**0.012**	**42.010**	**42.005**	**0.016**	**0.005**
0.99	0.98	1.49	1.48	0.78740	0.78720	0.00020	0.00020	1.65380	1.65350	0.00000	0.00050	1.65390	1.65370	0.00070	0.00020
30.1	**29.9**	**42.6**	**42.3**	**25.000**	**24.995**	**0.005**	**0.005**	**47.006**	**47.000**	**0.000**	**0.012**	**47.012**	**47.007**	**0.018**	**0.007**
1.19	1.18	1.68	1.67	0.98430	0.98410	0.00020	0.00020	1.85070	1.85040	0.00000	0.00050	1.85090	1.85070	0.00080	0.00030
36.2	**35.9**	**50.7**	**50.4**	**30.000**	**29.995**	**0.005**	**0.005**	**55.008**	**55.000**	**0.000**	**0.015**	**55.012**	**55.007**	**0.019**	**0.007**
1.43	1.42	2.00	1.99	1.18110	1.18090	0.00020	0.00020	2.16570	2.16540	0.00000	0.00060	2.16590	2.16570	0.00080	0.00030
41.2	**40.6**	**56.6**	**56.1**	**35.000**	**34.995**	**0.005**	**0.006**	**62.008**	**62.000**	**0.000**	**0.015**	**62.012**	**62.007**	**0.019**	**0.007**
1.62	1.60	2.23	2.21	1.37800	1.37780	0.00020	0.00025	2.44120	2.44090	0.00000	0.00060	2.44140	2.44120	0.00080	0.00030
46.2	**45.7**	**62.2**	**61.7**	**40.000**	**39.995**	**0.005**	**0.006**	**68.008**	**68.000**	**0.000**	**0.015**	**68.012**	**68.007**	**0.019**	**0.007**
1.82	1.80	2.45	2.43	1.57480	1.57460	0.00020	0.00025	2.67750	2.67720	0.00000	0.00060	2.67770	2.67750	0.00080	0.00030
51.8	**51.3**	**69.3**	**68.8**	**45.000**	**44.995**	**0.005**	**0.006**	**75.008**	**75.000**	**0.000**	**0.015**	**75.014**	**75.009**	**0.022**	**0.009**
2.04	2.02	2.73	2.71	1.77170	1.77150	0.00020	0.00025	2.95310	2.95280	0.00000	0.00060	2.95330	2.95310	0.00080	0.00030
56.6	**56.1**	**74.2**	**73.7**	**50.000**	**49.995**	**0.005**	**0.006**	**80.008**	**80.000**	**0.000**	**0.015**	**80.012**	**80.008**	**0.020**	**0.008**
2.23	2.21	2.92	2.90	1.96850	1.96830	0.00020	0.00025	3.14990	3.14960	0.00000	0.00060	3.15010	3.14990	0.00080	0.00030
62.7	**62.2**	**83.3**	**82.8**	**55.000**	**54.995**	**0.005**	**0.007**	**90.008**	**90.000**	**0.000**	**0.016**	**90.015**	**90.007**	**0.023**	**0.007**
2.47	2.45	3.28	3.26	2.16540	2.16520	0.00020	0.00030	3.54360	3.54330	0.00000	0.00060	3.54390	3.54360	0.00090	0.00030
67.8	**67.3**	**88.1**	**87.6**	**60.000**	**59.995**	**0.005**	**0.007**	**95.008**	**95.000**	**0.000**	**0.016**	**95.016**	**95.009**	**0.024**	**0.009**
2.67	2.65	3.47	3.45	2.36220	2.36200	0.00020	0.00030	3.74050	3.74020	0.00000	0.00060	3.74080	3.74050	0.00090	0.00030
72.6	**72.1**	**93.2**	**92.7**	**65.000**	**64.995**	**0.005**	**0.007**	**100.008**	**100.000**	**0.000**	**0.016**	**100.018**	**100.010**	**0.025**	**0.010**
2.86	2.84	3.67	3.65	2.55910	2.55890	0.00020	0.00030	3.93730	3.93700	0.00000	0.00060	3.93770	3.93740	0.00100	0.00040
78.2	**77.7**	**102.4**	**101.9**	**70.000**	**69.995**	**0.005**	**0.007**	**110.008**	**110.000**	**0.000**	**0.016**	**110.018**	**110.010**	**0.025**	**0.010**
3.08	3.06	4.03	4.01	2.75590	2.75570	0.00020	0.00030	4.33100	4.33070	0.00000	0.00060	4.33140	4.33110	0.00100	0.00040
83.4	**82.7**	**107.3**	**106.6**	**75.005**	**74.995**	**0.005**	**0.012**	**115.008**	**115.000**	**0.000**	**0.016**	**115.019**	**115.011**	**0.026**	**0.010**
3.29	3.26	4.23	4.20	2.95300	2.95260	0.00020	0.00050	4.52790	4.52760	0.00000	0.00060	4.52830	4.52800	0.00100	0.00040
89.3	**88.5**	**116.5**	**115.7**	**80.005**	**79.995**	**0.005**	**0.012**	**125.008**	**125.000**	**0.000**	**0.017**	**125.021**	**125.011**	**0.030**	**0.011**
3.52	3.49	4.59	4.56	3.14980	3.14940	0.00020	0.00050	4.92160	4.92130	0.00000	0.00070	4.92210	4.92170	0.00120	0.00040
94.9	**94.1**	**122.1**	**121.3**	**85.005**	**84.995**	**0.005**	**0.012**	**130.009**	**130.000**	**0.000**	**0.018**	**130.020**	**130.010**	**0.029**	**0.010**
3.74	3.71	4.81	4.78	3.34670	3.34630	0.00020	0.00050	5.11850	5.11810	0.00000	0.00070	5.11890	5.11850	0.00110	0.00040
100.5	**99.7**	**130.9**	**130.2**	**90.005**	**89.995**	**0.005**	**0.013**	**140.009**	**140.000**	**0.000**	**0.018**	**140.020**	**140.010**	**0.029**	**0.010**
3.96	3.93	5.16	5.13	3.54350	3.54310	0.00020	0.00050	5.51220	5.51180	0.00000	0.00070	5.51260	5.51220	0.00110	0.00040
110.6	**109.9**	**140.8**	**140.1**	**100.005**	**99.995**	**0.005**	**0.013**	**150.009**	**150.000**	**0.000**	**0.018**	**150.023**	**150.012**	**0.032**	**0.012**
4.36	4.33	5.55	5.52	3.93720	3.93680	0.00020	0.00050	5.90590	5.90550	0.00000	0.00070	5.90640	5.90600	0.00120	0.00050
123.1	**122.3**	**158.4**	**157.6**	**110.005**	**109.995**	**0.005**	**0.013**	**170.010**	**170.000**	**0.000**	**0.020**	**170.022**	**170.012**	**0.032**	**0.012**
4.85	4.82	6.24	6.21	4.33090	4.33050	0.00020	0.00050	6.69330	6.69290	0.00000	0.00080	6.69380	6.69340	0.00130	0.00050
133.2	**132.5**	**168.3**	**167.5**	**120.005**	**119.995**	**0.005**	**0.013**	**180.010**	**180.000**	**0.000**	**0.020**	**180.022**	**180.012**	**0.032**	**0.012**
5.25	5.22	6.63	6.60	4.72460	4.72420	0.00020	0.00050	7.08700	7.08660	0.00000	0.00080	7.08750	7.08710	0.00130	0.00050
144.9	**144.2**	**186.6**	**185.8**	**130.005**	**129.995**	**0.005**	**0.015**	**200.011**	**200.000**	**0.000**	**0.022**	**200.025**	**200.015**	**0.036**	**0.015**
5.71	5.68	7.35	7.32	5.11830	5.11790	0.00020	0.00060	7.87450	7.87400	0.00000	0.00090	7.87500	7.87460	0.00150	0.00060

LIGHT ISO 02 SERIES
2(3)MM200WI

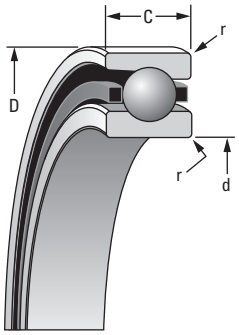

SUPER PRECISION MM

Running accuracy and performance meet ABEC 9 (ISO P2) levels.
Other features conform to ABEC 7 (ISO P4) requirements.

Bearing Number 2MM or 3MM	d Bore	D O.D.	C Width(1)	Ball Qty. x Dia.	Bearing Wt.	(2MM) LOAD RATINGS						(3MM) LOAD RATINGS					
						Steel Ball			Ceramic Ball			Steel Ball			Ceramic Ball		
						C_o Static	C_e Dynamic	Speed Rating(Ng)	C_o Static	C_e Dynamic	Speed Rating(Ng)	C_o Static	C_e Dynamic	Speed Rating(Ng)	C_o Static	C_e Dynamic	Speed Rating(Ng)
	mm/in.			mm/in.	kg/lbs.	N/lbs.		RPM	N/lbs.		RPM	N/lbs.		RPM	N/lbs.		RPM
200WI	**10**	**30**	**9**	**8 x 5.56**	**0.030**	**2900**	**7100**	**62800**	**2610**	**7100**	**75400**	**2800**	**6900**	**56500**	**2540**	**6900**	**67800**
	0.3937	1.1811	0.3543	8 x 7/32	0.07	660	1600	62800	590	1600	75400	640	1550	56500	570	1550	67800
201WI	**12**	**32**	**10**	**9 x 5.95**	**0.036**	**3800**	**8760**	**56700**	**3410**	**8760**	**68000**	**3700**	**8500**	**51000**	**3320**	**8500**	**61200**
	0.4724	1.2598	0.3937	9 x 15/64	0.08	860	1970	56700	770	1970	68000	830	1910	51000	750	1910	61200
202WI	**15**	**35**	**11**	**10 x 5.95**	**0.044**	**4500**	**9580**	**47800**	**4010**	**9580**	**57400**	**4400**	**9250**	**43000**	**3880**	**9250**	**51600**
	0.5906	1.3780	0.4331	10 x 15/64	0.10	1010	2200	47800	900	2200	57400	980	2080	43000	870	2080	51600
203WI	**17**	**40**	**12**	**10 x 6.75**	**0.064**	**5900**	**12000**	**41900**	**5170**	**12000**	**50300**	**5600**	**11600**	**37700**	**5000**	**11600**	**45200**
	0.6693	1.5748	0.4724	10 x 17/64	0.14	1320	2750	41900	1160	2750	50300	1270	2600	37700	1120	2600	45200
204WI	**20**	**47**	**14**	**10 x 7.94**	**0.103**	**8100**	**16100**	**35700**	**7160**	**16100**	**42800**	**7700**	**15500**	**32100**	**6900**	**15500**	**38500**
	0.7874	1.8504	0.5512	10 x 5/16	0.23	1810	3620	35700	1610	3620	42800	1730	3490	32100	1550	3490	38500
205WI	**25**	**52**	**15**	**12 x 7.94**	**0.127**	**10200**	**18400**	**29800**	**9110**	**18400**	**35800**	**9800**	**17600**	**26800**	**8690**	**17600**	**32200**
	0.9843	2.0472	0.5906	12 x 5/16	0.28	2320	4130	29800	2050	4130	35800	2200	3950	26800	1950	3950	32100
206WI	**30**	**62**	**16**	**12 x 9.53**	**0.195**	**14700**	**25500**	**25100**	**13100**	**25500**	**30100**	**14000**	**24400**	**22600**	**12500**	**24400**	**27100**
	1.1811	2.4409	0.6299	12 x 3/8	0.43	3310	5740	25100	2940	5740	30100	3150	5490	22600	2810	5490	27100
207WI	**35**	**72**	**17**	**12 x 11.11**	**0.282**	**20000**	**33700**	**21600**	**17800**	**33700**	**25900**	**19100**	**32200**	**19400**	**17100**	**32200**	**23300**
	1.3780	2.8346	0.6693	12 x 7/16	0.62	4490	7580	21600	4000	7580	25900	4300	7240	19400	3820	7240	23300
208WI	**40**	**80**	**18**	**11 x 12.70**	**0.352**	**23800**	**40400**	**19300**	**21100**	**40400**	**23100**	**22700**	**38700**	**17400**	**20200**	**38700**	**20900**
	1.5748	3.1496	0.7087	11 x 1/2	0.78	5340	9070	19300	4750	9070	23200	5100	8690	17400	4550	8690	20900
209WI	**45**	**85**	**19**	**13 x 12.70**	**0.408**	**28800**	**45200**	**17500**	**25600**	**45200**	**21000**	**27600**	**43100**	**15800**	**24500**	**43100**	**19000**
	1.7717	3.3465	0.7480	13 x 1/2	0.90	6470	10200	17500	5760	10200	21000	6200	9700	15800	5500	9700	19000
210WI	**50**	**90**	**20**	**14 x 12.70**	**0.457**	**31700**	**47400**	**16000**	**28200**	**47400**	**19200**	**30200**	**45200**	**14400**	**26900**	**45200**	**17300**
	1.9685	3.5433	0.7874	14 x 1/2	1.01	7130	10700	16000	6340	10700	19200	6800	10200	14400	6050	10200	17300
211WI	**55**	**100**	**21**	**14 x 14.29**	**0.608**	**40000**	**58700**	**14500**	**35500**	**58700**	**17400**	**38500**	**55900**	**13100**	**34000**	**55900**	**15700**
	2.1654	3.9370	0.8268	14 x 9/16	1.34	9000	13200	14500	7980	13200	17400	8650	12600	13100	7640	12600	15700
212WI	**60**	**110**	**22**	**14 x 15.88**	**0.787**	**48900**	**71000**	**13200**	**43600**	**71000**	**15800**	**47100**	**67700**	**11900**	**41800**	**67700**	**14300**
	2.3622	4.3307	0.8661	14 x 5/8	1.74	11000	16000	13200	9810	16000	15800	10600	15200	11900	9400	15200	14300
213WI	**65**	**120**	**23**	**14 x 16.67**	**0.998**	**54700**	**77400**	**12100**	**48700**	**77400**	**14300**	**52500**	**73700**	**10900**	**46500**	**73700**	**13100**
	2.5591	4.7244	0.9055	14 x 21/32	2.20	12300	17400	12100	11000	17400	14500	11800	16600	10900	10400	16600	13100
214WI	**70**	**125**	**24**	**14 x 17.46**	**1.074**	**60000**	**84200**	**11400**	**53600**	**84200**	**13700**	**57400**	**80200**	**10300**	**51100**	**80200**	**12400**
	2.7559	4.9213	0.9449	14 x 11/16	2.37	13400	18900	11400	12100	18900	13700	12900	18000	10300	11500	18000	12400
215WI	**75**	**130**	**25**	**15 x 17.46**	**1.174**	**64900**	**87900**	**10800**	**58200**	**87900**	**13000**	**62300**	**83700**	**9700**	**55600**	**83700**	**11600**
	2.9528	5.1181	0.9843	15 x 11/16	2.59	14600	19800	10800	13100	19800	13000	14000	18800	9700	12500	18800	11600
216WI	**80**	**140**	**26**	**15 x 19.05**	**1.448**	**77000**	**102900**	**10100**	**69000**	**102900**	**12100**	**73800**	**98000**	**9100**	**65800**	**98000**	**10900**
	3.1496	5.5118	1.0236	15 x 3/4	3.19	17300	23100	10100	15500	23100	12100	16600	22000	9100	14800	22000	10900

(Ng) For a single, grease-lubricated, spring-preloaded bearing. This value to be used in permissible operating speed (Sp) calculation.
(1) Width tolerance of preloaded bearing set +0.000/-0.254 mm (+0.0000/-0.0100 in.).
(2) ABMA STD 20 (r_{as} max).

WI CONSTRUCTION

- Incorporates low shoulder on non-thrust side of outer rings.
- Balls separated by one-piece cage piloted against a ground thrust shoulder land of the outer ring.

r Rad.(2)	Suggested Shoulder Diameters Shaft Max.	Suggested Shoulder Diameters Shaft Min.	Suggested Shoulder Diameters Housing Max.	Suggested Shoulder Diameters Housing Min.	Shaft Diameter Max.	Shaft Diameter Min.	Mounting Fits Loose	Mounting Fits Tight	FIXED Housing Bore (Stationary) Max.	FIXED Housing Bore (Stationary) Min.	FIXED Mounting Fits Tight	FIXED Mounting Fits Loose	FLOATING Housing Bore (Stationary) Max.	FLOATING Housing Bore (Stationary) Min.	FLOATING Mounting Fits Loose	FLOATING Mounting Fits Loose
mm/in.	mm/in.		mm/in.		mm/in.		mm/in.		mm/in.		mm/in.		mm/in.		mm/in.	
0.6	**15.1**	**14.9**	**26.0**	**25.8**	**10.000**	**9.995**	**0.005**	**0.004**	**30.005**	**30.000**	**0.000**	**0.010**	**30.010**	**30.005**	**0.015**	**0.005**
0.024	0.60	0.59	1.03	1.02	0.39370	0.39350	0.00020	0.00015	1.18130	1.18110	0.00000	0.00040	1.18150	1.18130	0.00060	0.00020
0.6	**16.6**	**16.4**	**28.1**	**27.8**	**12.000**	**11.995**	**0.005**	**0.004**	**32.005**	**32.000**	**0.000**	**0.011**	**32.010**	**32.005**	**0.016**	**0.005**
0.024	0.66	0.65	1.11	1.10	0.47240	0.47220	0.00020	0.00015	1.26000	1.25980	0.00000	0.00045	1.26020	1.26000	0.00070	0.00020
0.6	**19.2**	**18.9**	**31.1**	**30.9**	**15.000**	**14.995**	**0.005**	**0.004**	**35.006**	**35.000**	**0.000**	**0.012**	**35.010**	**35.005**	**0.016**	**0.005**
0.024	0.76	0.75	1.23	1.22	0.59060	0.59040	0.00020	0.00015	1.37830	1.37800	0.00000	0.00050	1.37840	1.37820	0.00070	0.00020
0.6	**21.7**	**21.5**	**35.7**	**35.4**	**17.000**	**16.995**	**0.005**	**0.004**	**40.006**	**40.000**	**0.000**	**0.012**	**40.010**	**40.005**	**0.016**	**0.005**
0.024	0.86	0.85	1.41	1.40	0.66930	0.66910	0.00020	0.00015	1.57510	1.57480	0.00000	0.00050	1.57520	1.57500	0.00070	0.00020
1.0	**26.0**	**25.8**	**41.5**	**41.3**	**20.000**	**19.995**	**0.005**	**0.005**	**47.006**	**47.000**	**0.000**	**0.012**	**47.012**	**47.007**	**0.018**	**0.007**
0.039	1.03	1.02	1.64	1.63	0.78740	0.78720	0.00020	0.00020	1.85070	1.85040	0.00000	0.00050	1.85090	1.85070	0.00080	0.00030
1.0	**31.1**	**30.9**	**47.1**	**46.9**	**25.000**	**24.995**	**0.005**	**0.005**	**52.006**	**52.000**	**0.000**	**0.013**	**52.012**	**52.007**	**0.019**	**0.007**
0.039	1.23	1.22	1.86	1.85	0.98430	0.98410	0.00020	0.00020	2.04750	2.04720	0.00000	0.00055	2.04770	2.04750	0.00080	0.00030
1.0	**36.7**	**36.5**	**56.0**	**55.8**	**30.000**	**29.995**	**0.005**	**0.005**	**62.008**	**62.000**	**0.000**	**0.015**	**62.012**	**62.007**	**0.019**	**0.007**
0.039	1.45	1.44	2.21	2.20	1.18110	1.18090	0.00020	0.00020	2.44120	2.44090	0.00000	0.00060	2.44140	2.44120	0.00080	0.00030
1.0	**42.7**	**42.2**	**65.3**	**64.8**	**35.000**	**34.995**	**0.005**	**0.006**	**72.008**	**72.000**	**0.000**	**0.015**	**72.011**	**72.007**	**0.019**	**0.007**
0.039	1.68	1.66	2.57	2.55	1.37800	1.37780	0.00020	0.00025	2.83490	2.83460	0.00000	0.00060	2.83510	2.83490	0.00080	0.00030
1.0	**47.8**	**47.2**	**73.2**	**72.6**	**40.000**	**39.995**	**0.005**	**0.006**	**80.008**	**80.000**	**0.000**	**0.015**	**80.012**	**80.008**	**0.020**	**0.008**
0.039	1.88	1.86	2.88	2.86	1.57480	1.57460	0.00020	0.00025	3.14990	3.14960	0.00000	0.00060	3.15010	3.14990	0.00080	0.00030
1.0	**52.8**	**52.3**	**78.2**	**77.7**	**45.000**	**44.995**	**0.005**	**0.006**	**85.008**	**85.000**	**0.000**	**0.016**	**85.016**	**85.009**	**0.024**	**0.009**
0.039	2.08	2.06	3.08	3.06	1.77170	1.77150	0.00020	0.00025	3.34680	3.34650	0.00000	0.00060	3.34710	3.34680	0.00090	0.00030
1.0	**57.9**	**57.4**	**83.3**	**82.8**	**50.000**	**49.995**	**0.005**	**0.006**	**90.008**	**90.000**	**0.000**	**0.016**	**90.015**	**90.007**	**0.023**	**0.007**
0.039	2.28	2.26	3.28	3.26	1.96850	1.96830	0.00020	0.00025	3.54360	3.54330	0.00000	0.00060	3.54390	3.54360	0.00090	0.00030
1.5	**63.8**	**63.3**	**92.2**	**91.7**	**55.000**	**54.995**	**0.005**	**0.007**	**100.008**	**100.000**	**0.000**	**0.016**	**100.018**	**100.010**	**0.025**	**0.010**
0.059	2.51	2.49	3.63	3.61	2.16540	2.16520	0.00020	0.00030	3.93730	3.93700	0.00000	0.00060	3.93770	3.93740	0.00100	0.00040
1.5	**69.9**	**69.3**	**101.4**	**100.8**	**60.000**	**59.995**	**0.005**	**0.007**	**110.008**	**110.000**	**0.000**	**0.016**	**110.018**	**110.010**	**0.025**	**0.010**
0.059	2.75	2.73	3.99	3.97	2.36220	2.36200	0.00020	0.00030	4.33100	4.33070	0.00000	0.00060	4.33140	4.33110	0.00100	0.00040
1.5	**76.2**	**75.7**	**109.7**	**109.2**	**65.000**	**64.995**	**0.005**	**0.007**	**120.008**	**120.000**	**0.000**	**0.016**	**120.018**	**120.010**	**0.025**	**0.010**
0.059	3.00	2.98	4.32	4.30	2.55910	2.55890	0.00020	0.00030	4.72470	4.72440	0.00000	0.00060	4.72510	4.72480	0.00100	0.00040
1.5	**80.8**	**80.3**	**115.8**	**115.3**	**70.000**	**69.995**	**0.005**	**0.007**	**125.008**	**125.000**	**0.000**	**0.017**	**125.021**	**125.011**	**0.030**	**0.011**
0.059	3.18	3.16	4.56	4.54	2.75590	2.75570	0.00020	0.00030	4.92160	4.92130	0.00000	0.00070	4.92210	4.92170	0.00120	0.00040
1.5	**86.0**	**85.2**	**120.8**	**120.0**	**75.005**	**74.995**	**0.005**	**0.012**	**130.009**	**130.000**	**0.000**	**0.018**	**130.020**	**130.010**	**0.029**	**0.010**
0.059	3.39	3.36	4.76	4.73	2.95300	2.95260	0.00020	0.00050	5.11850	5.11810	0.00000	0.00070	5.11890	5.11850	0.00110	0.00040
2.0	**91.3**	**90.6**	**129.9**	**129.2**	**80.005**	**79.995**	**0.005**	**0.012**	**140.009**	**140.000**	**0.000**	**0.018**	**140.020**	**140.010**	**0.029**	**0.010**
0.079	3.60	3.57	5.12	5.09	3.14980	3.14940	0.00020	0.00050	5.51220	5.51180	0.00000	0.00070	5.51260	5.51220	0.00110	0.00040

Continued on next page.

LIGHT ISO 02 SERIES
2(3)MM200WI – *continued*

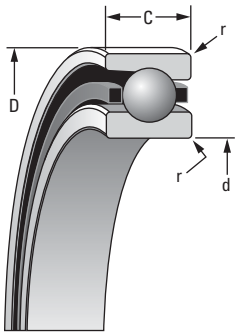

SUPER PRECISION MM

Running accuracy and performance meet ABEC 9 (ISO P2) levels.
Other features conform to ABEC 7 (ISO P4) requirements.

Bearing Number 2MM or 3MM	d Bore	D O.D.	C Width(1)	Ball Qty. x Dia.	Bearing Wt.	(2MM) LOAD RATINGS						(3MM) LOAD RATINGS					
						Steel Ball			Ceramic Ball			Steel Ball			Ceramic Ball		
						C_o Static	C_e Dynamic	Speed Rating(Ng)	C_o Static	C_e Dynamic	Speed Rating(Ng)	C_o Static	C_e Dynamic	Speed Rating(Ng)	C_o Static	C_e Dynamic	Speed Rating(Ng)
	mm/in.			mm/in.	kg/lbs.	N/lbs.		RPM	N/lbs.		RPM	N/lbs.		RPM	N/lbs.		RPM
217WI	**85**	**150**	**28**	**15 x 20.64**	**1.817**	**90700**	**118900**	**9400**	**80700**	**118900**	**11300**	**85800**	**113300**	**8500**	**76800**	**113300**	**10200**
	3.3465	5.9055	1.1024	15 x 13/16	4.01	20400	26700	9400	18200	26700	11300	19300	25500	8500	17300	25500	10200
218WI	**90**	**160**	**30**	**14 x 22.23**	**2.196**	**97900**	**129900**	**8900**	**87100**	**129900**	**10700**	**92500**	**123700**	**8000**	**82900**	**123700**	**9600**
	3.5433	6.2992	1.1811	14 x 7/8	4.84	22000	29200	8900	19600	29200	10700	20800	27800	8000	18600	27800	9600
219WI	**95**	**170**	**32**	**14 x 23.81**	**2.669**	**111200**	**147100**	**8400**	**99600**	**147100**	**10100**	**106800**	**140100**	**7600**	**94900**	**140100**	**9100**
	3.7402	6.6929	1.2598	14 x 15/16	5.88	25000	33100	8400	22400	33100	10100	24000	31500	7600	21300	31500	9100
220WI	**100**	**180**	**34**	**14 x 25.40**	**3.209**	**126800**	**165200**	**8000**	**112900**	**165200**	**9600**	**120100**	**15500**	**7200**	**107800**	**157500**	**8600**
	3.9370	7.0866	1.3386	14 x 1	7.07	28500	37100	8000	25400	37100	9600	27000	35400	7200	24200	35400	8600
222WI	**110**	**200**	**38**	**14 x 28.58**	**4.486**	**160100**	**194900**	**7200**	**142000**	**194900**	**8600**	**153500**	**185800**	**6500**	**135900**	**185800**	**7800**
	4.3307	7.8740	1.4961	14 x 1 1/8	9.89	36000	43800	7200	31900	43800	8600	34500	41800	6500	30600	41800	7800
224WI	**120**	**215**	**40**	**14 x 30.16**	**5.358**	**180100**	**210100**	**6700**	**159600**	**210100**	**8000**	**173500**	**200500**	**6000**	**152400**	**200500**	**7200**
	4.7244	8.4646	1.5748	14 x 1 3/16	11.81	40500	47200	6700	35900	47200	8000	39000	45100	6000	34300	45100	7200
226WI	**130**	**230**	**40**	**17 x 30.16**	**6.468**	**222400**	**238200**	**6100**	**197400**	**238200**	**7300**	**211300**	**226800**	**5500**	**188800**	**226800**	**6600**
	5.1181	9.0551	1.5748	17 x 1 3/16	14.26	50000	53500	6100	44400	53500	7300	47500	51000	5500	42500	51000	6600
230WI	**150**	**270**	**45**	**15 x 38.10**	**9.980**	**302500**	**305200**	**5300**	**272100**	**305200**	**6400**	**291300**	**290900**	**4800**	**259900**	**290900**	**5800**
	5.9055	10.6299	1.7717	15 x 1 1/2	22.00	68000	68600	5300	61200	68600	6400	65500	65400	4800	58400	65400	5800

(Ng) For a single, grease-lubricated, spring-preloaded bearing. This value to be used in permissible operating speed (Sp) calculation.
(1) Width tolerance of preloaded bearing set +0.000/-0.254 mm (+0.0000/-0.0100 in.).
(2) ABMA STD 20 (r_{as} max).

WI CONSTRUCTION

- Incorporates low shoulder on non-thrust side of outer rings.
- Balls separated by one-piece cage piloted against a ground thrust shoulder land of the outer ring.

r Rad.(2)	Suggested Shoulder Diameters				Shaft Diameter		Mounting Fits		FIXED				FLOATING			
	Shaft		Housing						Housing Bore (Stationary)		Mounting Fits		Housing Bore (Stationary)		Mounting Fits	
	Max.	Min.	Max.	Min.	Max.	Min.	Loose	Tight	Max.	Min.	Tight	Loose	Max.	Min.	Loose	Loose
mm/in.	mm/in.		mm/in.		mm/in.		mm/in.		mm/in.		mm/in.		mm/in.		mm/in.	
2.0	**97.4**	**96.7**	**138.8**	**138.1**	**85.005**	**84.995**	**0.005**	**0.012**	**150.009**	**150.000**	**0.000**	**0.018**	**150.023**	**150.012**	**0.032**	**0.012**
0.079	3.84	3.81	5.47	5.44	3.34670	3.34630	0.00020	0.00050	5.90590	5.90550	0.00000	0.00070	5.90640	5.90600	0.00120	0.00050
2.0	**103.5**	**102.7**	**148.0**	**147.2**	**90.005**	**89.995**	**0.005**	**0.013**	**160.009**	**160.000**	**0.000**	**0.022**	**160.022**	**160.012**	**0.033**	**0.012**
0.079	4.08	4.05	5.83	5.80	3.54350	3.54310	0.00020	0.00050	6.29960	6.29920	0.00000	0.00080	6.30010	6.29970	0.00130	0.00050
2.1	**109.4**	**108.6**	**157.1**	**153.3**	**95.005**	**94.995**	**0.005**	**0.013**	**170.010**	**170.000**	**0.000**	**0.020**	**170.022**	**170.012**	**0.032**	**0.012**
0.079	4.31	4.28	6.19	6.16	3.74040	3.74000	0.00020	0.00050	6.69330	6.69290	0.00000	0.00080	6.69380	6.69340	0.00130	0.00050
2.1	**115.2**	**114.4**	**166.0**	**165.2**	**100.005**	**99.995**	**0.005**	**0.013**	**180.010**	**180.000**	**0.000**	**0.020**	**180.022**	**180.012**	**0.032**	**0.012**
0.079	4.54	4.51	6.54	6.51	3.93720	3.93680	0.00020	0.00050	7.08700	7.08660	0.00000	0.00080	7.08750	7.08710	0.00130	0.00050
2.1	**127.1**	**126.4**	**184.3**	**183.5**	**110.005**	**109.995**	**0.005**	**0.013**	**200.011**	**200.000**	**0.000**	**0.022**	**200.025**	**200.015**	**0.036**	**0.015**
0.079	5.01	4.98	7.26	7.23	4.33090	4.33050	0.00020	0.00050	7.87450	7.87400	0.00000	0.00090	7.87500	7.87460	0.00150	0.00060
2.1	**138.1**	**137.3**	**198.5**	**197.7**	**120.005**	**119.995**	**0.005**	**0.013**	**215.011**	**215.000**	**0.000**	**0.022**	**215.025**	**215.015**	**0.036**	**0.015**
0.079	5.44	5.41	7.82	7.79	4.72460	4.72420	0.00020	0.00050	8.46510	8.46460	0.00000	0.00090	8.46560	8.46520	0.00150	0.00060
2.5	**150.5**	**149.7**	**211.0**	**210.2**	**130.005**	**129.995**	**0.005**	**0.015**	**230.011**	**230.000**	**0.000**	**0.022**	**230.025**	**230.015**	**0.036**	**0.015**
0.098	5.93	5.90	8.31	8.28	5.11830	5.11790	0.00020	0.00060	9.05560	9.05510	0.00000	0.00090	9.05610	9.05570	0.00150	0.00060
2.5	**172.6**	**171.8**	**248.8**	**248.0**	**150.005**	**149.995**	**0.005**	**0.015**	**270.013**	**270.000**	**0.000**	**0.026**	**270.031**	**270.018**	**0.044**	**0.018**
0.098	6.80	6.77	9.80	9.77	5.90570	5.90530	0.00020	0.00060	10.63040	10.62990	0.00000	0.00100	10.63120	10.63070	0.00180	0.00080

LIGHT 2MM200WI ISO 02 SERIES

DUPLEX PERFORMANCE DATA

MOUNTING ARRANGEMENTS

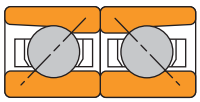

Back-to-Back DB

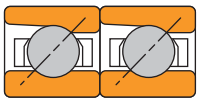

Tandem DT

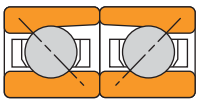

Face-to-Face DF

Bearing Number	Preload DUX X-light	Preload DUL Light	Preload DUM Med.	Preload DUH Heavy	Axial Stiffness[1] X-light	Axial Stiffness[1] Light	Axial Stiffness[1] Med.	Axial Stiffness[1] Heavy	Radial Stiffness[1] X-light	Radial Stiffness[1] Light	Radial Stiffness[1] Med.	Radial Stiffness[1] Heavy	Spacer Offsets[1] X-light to Light	Spacer Offsets[1] Light to Med.	Spacer Offsets[1] Med. to Heavy
	N / lbs.				N/µm / 10^6 lbs./in.				N/µm / 10^6 lbs./in.				µm / in.		
2MM200WI	—	20	90	160	—	18.54	33.06	42.85	—	85.88	136.07	162.13	—	10.41	7.11
	—	5	20	35	—	0.106	0.189	0.245	—	0.491	0.778	0.927	—	0.00041	0.00028
2MM201WI	—	20	90	160	—	19.24	34.11	44.07	—	96.02	153.56	183.30	—	9.91	6.86
	—	5	20	35	—	0.110	0.195	0.252	—	0.549	0.878	1.048	—	0.00039	0.00027
2MM202WI	—	20	90	180	—	20.64	36.20	49.67	—	102.67	164.93	205.51	—	9.40	8.38
	—	5	20	40	—	0.118	0.207	0.284	—	0.587	0.943	1.175	—	0.00037	0.00033
2MM203WI	—	40	130	330	—	25.54	41.10	63.84	—	137.12	197.46	263.05	—	10.67	15.24
	—	10	30	75	—	0.146	0.235	0.365	—	0.784	1.129	1.504	—	0.00042	0.00060
2MM204WI	—	70	180	360	—	30.08	46.17	64.36	—	168.43	232.97	289.81	—	11.68	12.95
	—	15	40	80	—	0.172	0.264	0.368	—	0.963	1.332	1.657	—	0.00046	0.00051
2MM205WI	—	90	220	400	—	37.60	56.49	74.86	—	209.53	283.16	340.88	—	11.43	10.92
	—	20	50	90	—	0.215	0.323	0.428	—	1.198	1.619	1.949	—	0.00045	0.00043
2MM206WI	—	90	220	560	—	38.30	56.49	87.10	—	222.47	303.10	405.77	—	11.18	18.54
	—	20	50	125	—	0.219	0.323	0.498	—	1.272	1.733	2.320	—	0.00044	0.00073
2MM207WI	—	130	400	780	—	47.22	75.91	104.42	—	269.35	388.10	478.70	—	17.27	16.76
	—	30	90	175	—	0.270	0.434	0.597	—	1.540	2.219	2.737	—	0.00068	0.00066
2MM208WI	—	130	440	890	—	45.30	75.73	105.46	—	261.65	392.65	489.20	—	20.57	19.56
	—	30	100	200	—	0.259	0.433	0.603	—	1.496	2.245	2.797	—	0.00081	0.00077
2MM209WI	110	180	560	1110	46.52	56.14	91.82	128.20	271.28	322.87	472.58	588.36	5.08	20.32	20.32
	25	40	125	250	0.266	0.321	0.525	0.733	1.549	1.846	2.702	3.364	0.00020	0.00080	0.00080
2MM210WI	130	220	560	1220	51.60	64.19	95.67	139.57	304.91	366.24	496.89	637.86	6.35	16.76	22.61
	30	50	125	275	0.295	0.367	0.547	0.798	1.741	2.094	2.841	3.647	0.00025	0.00066	0.00089
2MM211WI	160	220	780	1560	54.22	63.31	109.49	153.74	335.53	382.86	582.42	724.61	4.83	25.65	23.62
	35	50	175	350	0.310	0.362	0.626	0.879	1.916	2.189	3.330	4.143	0.00019	0.00101	0.00093
2MM212WI	180	330	890	1890	59.12	77.66	119.11	171.40	361.94	456.31	632.26	802.44	9.65	22.61	27.69
	40	75	200	425	0.338	0.444	0.681	0.980	2.067	2.609	3.615	4.588	0.00038	0.00089	0.00109
2MM213WI	200	440	1000	2110	62.61	88.32	126.28	181.20	383.60	511.76	668.64	846.52	13.46	20.83	28.96
	45	100	225	475	0.358	0.505	0.722	1.036	2.191	2.926	3.823	4.840	0.00053	0.00082	0.00114
2MM214WI	220	440	1110	2220	67.86	89.72	133.97	186.97	404.25	519.80	703.80	876.25	11.18	23.88	27.69
	50	100	250	500	0.388	0.513	0.766	1.069	2.308	2.972	4.024	5.010	0.00044	0.00094	0.00109
2MM215WI	240	560	1220	2450	72.93	102.49	145.34	203.06	437.79	586.96	760.64	946.38	14.48	21.59	28.19
	55	125	275	550	0.417	0.586	0.831	1.161	2.500	3.356	4.349	5.411	0.00057	0.00085	0.00111
2MM216WI	270	670	1450	2780	77.66	113.16	159.16	217.75	458.80	639.96	825.18	1014.59	17.02	22.86	28.45
	60	150	325	625	0.444	0.647	0.910	1.245	2.620	3.659	4.718	5.801	0.00067	0.00090	0.00112
2MM217WI	360	890	2000	4000	86.75	126.10	179.97	250.98	480.97	693.68	891.34	1109.60	20.07	28.96	37.08
	65	175	375	750	0.461	0.682	0.957	1.339	2.747	3.961	5.090	6.336	0.00075	0.00098	0.00131
2MM218WI	330	780	1780	3560	82.55	116.83	168.25	235.07	497.82	678.61	891.47	1109.92	18.03	27.94	35.31
	75	175	400	800	0.472	0.668	0.962	1.344	2.843	3.880	5.097	6.346	0.00071	0.00110	0.00139
2MM219WI	360	890	2000	4000	86.75	126.10	179.97	250.98	517.46	726.88	932.74	1183.02	20.07	28.96	37.08
	80	200	450	900	0.496	0.721	1.029	1.435	2.955	4.156	5.333	6.764	0.00079	0.00114	0.00146
2MM220WI	380	1110	2220	4450	88.85	137.65	187.14	261.30	531.57	795.80	1000.08	1245.99	25.91	27.43	39.62
	85	250	500	1000	0.508	0.787	1.070	1.494	3.036	4.550	5.718	7.124	0.00102	0.00108	0.00156
2MM222WI	440	1330	2670	5340	98.64	153.91	208.48	289.81	580.64	881.32	1108.17	1381.36	28.19	29.46	42.93
	100	300	600	1200	0.564	0.880	1.192	1.657	3.316	5.039	6.336	7.898	0.00111	0.00116	0.00169
2MM224WI	490	1470	2940	5870	102.84	158.81	215.65	300.13	610.16	926.97	1166.06	1453.59	29.46	31.24	45.47
	110	330	660	1320	0.588	0.908	1.233	1.716	3.484	5.300	6.667	8.311	0.00116	0.00123	0.00179
2MM226WI	560	1650	3290	6580	121.21	186.44	252.38	350.32	715.23	1089.45	1372.44	1712.80	27.94	29.97	43.69
	125	370	740	1480	0.693	1.066	1.443	2.003	4.084	6.229	7.847	9.793	0.00110	0.00118	0.00172
2MM230WI	690	1890	3780	7560	130.3	192.74	258.85	356.10	758.85	1136.85	1437.33	1797.97	29.46	33.53	49.28
	155	425	850	1700	0.745	1.102	1.480	2.036	4.333	6.500	8.218	10.280	0.00116	0.00132	0.00194

[1] For DB or DF arrangements only. For other mounting arrangements, contact your Timken representative.

LIGHT 3MM200WI ISO 02 SERIES

DUPLEX PERFORMANCE DATA

MOUNTING ARRANGEMENTS

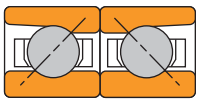

Back-to-Back DB

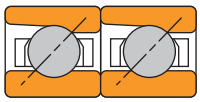

Tandem DT

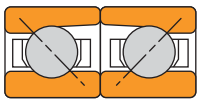

Face-to-Face DF

Bearing Number	Preload DUX X-light	Preload DUL Light	Preload DUM Med.	Preload DUH Heavy	Axial Stiffness[1] Light	Axial Stiffness[1] Med.	Axial Stiffness[1] Heavy	Radial Stiffness[1] Light	Radial Stiffness[1] Med.	Radial Stiffness[1] Heavy	Spacer Offsets[1] X-light to Light	Spacer Offsets[1] Light to Med.	Spacer Offsets[1] Med. to Heavy
	N lbs.				N/µm 10^6 lbs./in.			N/µm 10^6 lbs./in.			µm in.		
3MM200WI	—	40	130	270	39.35	59.99	79.75	84.65	121.38	150.94	—	7.11	7.62
	—	10	30	60	0.225	0.343	0.456	0.484	0.694	0.863	—	0.00028	0.00030
3MM201WI	—	40	130	270	44.77	67.51	88.85	94.10	135.90	169.48	—	6.35	6.86
	—	10	30	60	0.256	0.386	0.508	0.538	0.777	0.969	—	0.00025	0.00027
3MM202WI	—	70	180	360	55.44	80.45	106.51	115.96	160.21	199.39	—	6.60	6.60
	—	15	40	80	0.317	0.460	0.609	0.663	0.916	1.140	—	0.00026	0.00026
3MM203WI	—	90	330	440	63.84	105.99	119.28	132.92	204.46	223.87	—	11.43	4.06
	—	20	75	100	0.365	0.606	0.682	0.760	1.169	1.280	—	0.00045	0.00016
3MM204WI	—	130	360	560	75.21	109.66	131.35	159.51	220.02	253.26	—	9.65	6.60
	—	30	80	125	0.430	0.627	0.751	0.912	1.258	1.448	—	0.00038	0.00026
3MM205WI	—	160	400	670	89.20	128.20	157.76	189.59	258.50	303.98	—	8.89	7.37
	—	35	90	150	0.510	0.733	0.902	1.084	1.478	1.738	—	0.00035	0.00029
3MM206WI	—	220	560	890	106.16	150.76	182.42	227.02	306.77	356.10	—	10.41	7.87
	—	50	125	200	0.607	0.862	1.043	1.298	1.754	2.036	—	0.00041	0.00031
3MM207WI	130	310	780	1330	126.45	179.62	223.52	267.42	360.99	428.33	6.86	12.19	12.19
	30	70	175	300	0.723	1.027	1.278	1.529	2.064	2.449	0.00027	0.00048	0.00048
3MM208WI	160	360	890	1330	132.57	187.84	220.90	275.64	372.71	423.96	7.11	13.21	8.64
	35	80	200	300	0.758	1.074	1.263	1.576	2.131	2.424	0.00028	0.00052	0.00034
3MM209WI	180	440	1110	1780	159.86	226.85	274.24	332.14	448.44	520.50	7.87	13.72	10.67
	40	100	250	400	0.914	1.297	1.568	1.899	2.564	2.976	0.00031	0.00054	0.00042
3MM210WI	200	490	1220	2000	173.68	246.43	300.65	360.12	486.22	568.25	7.62	13.97	11.43
	45	110	275	450	0.993	1.409	1.719	2.059	2.780	3.249	0.00030	0.00055	0.00045
3MM211WI	220	620	1560	2450	193.61	274.94	330.21	407.34	549.71	634.36	9.65	15.75	11.68
	50	140	350	550	1.107	1.572	1.888	2.329	3.143	3.627	0.00038	0.00062	0.00046
3MM212WI	240	760	1890	2890	213.73	303.63	360.47	450.02	607.43	695.05	11.18	17.53	11.94
	55	170	425	650	1.222	1.736	2.061	2.573	3.473	3.974	0.00044	0.00069	0.00047
3MM213WI	270	850	2110	3340	225.62	320.42	385.65	474.50	640.48	740.18	11.94	18.54	13.72
	60	190	475	750	1.290	1.832	2.205	2.713	3.662	4.232	0.00047	0.00073	0.00054
3MM214WI	290	890	2220	3560	231.39	328.46	397.37	492.87	665.67	772.53	12.19	19.05	14.73
	65	200	500	800	1.323	1.878	2.272	2.818	3.806	4.417	0.00048	0.00075	0.00058
3MM215WI	360	980	2450	3780	250.28	355.75	424.13	532.75	719.19	825.53	11.68	19.30	13.72
	80	220	550	850	1.431	2.034	2.425	3.046	4.112	4.720	0.00046	0.00076	0.00054
3MM216WI	400	1110	2780	4450	269.87	383.03	462.79	570.35	770.61	894.61	12.45	20.32	15.75
	90	250	625	1000	1.543	2.190	2.646	3.261	4.406	5.115	0.00049	0.00080	0.00062
3MM217WI	440	1200	3000	4890	280.36	397.37	483.42	600.43	812.41	949.18	12.45	21.08	17.02
	100	270	675	1100	1.603	2.272	2.764	3.433	4.645	5.427	0.00049	0.00083	0.00067
3MM218WI	490	1330	3110	5560	286.14	394.75	498.12	608.83	805.06	968.42	13.72	20.83	21.84
	110	300	700	1250	1.636	2.257	2.848	3.481	4.603	5.537	0.00054	0.00082	0.00086
3MM219WI	560	1560	3110	6230	310.27	402.97	531.00	655.70	824.65	1029.29	15.24	17.27	26.67
	125	350	700	1400	1.774	2.304	3.036	3.749	4.715	5.885	0.00060	0.00068	0.00105
3MM220WI	600	1730	3470	6940	328.29	426.41	561.60	694.18	873.45	1090.50	16.26	18.29	27.94
	135	390	780	1560	1.877	2.438	3.211	3.969	4.994	6.235	0.00064	0.00072	0.00110
3MM222WI	690	2050	4082	8180	359.94	466.81	613.90	762.39	960.03	1199.46	17.78	19.81	30.23
	155	460	920	1840	2.058	2.669	3.510	4.359	5.489	6.858	0.00070	0.00078	0.00119
3MM224WI	820	2250	4480	8980	377.78	490.07	643.98	805.76	1014.77	1267.85	17.53	20.57	31.50
	185	505	1010	2020	2.160	2.802	3.682	4.607	5.802	7.249	0.00069	0.00081	0.00124
3MM226WI	980	2560	5120	10230	448.09	580.49	761.86	954.08	1190.72	1503.97	16.51	19.81	30.48
	220	575	1150	2300	2.562	3.319	4.356	5.455	6.808	8.599	0.00065	0.00078	0.00120
3MM230WI	1290	3110	6230	12450	473.63	612.32	801.04	1009.87	1276.25	1598.24	17.53	22.86	35.05
	290	700	1400	2800	2.708	3.501	4.580	5.774	7.297	9.138	0.00069	0.0009	0.00138

[1] For DB or DF arrangements only. For other mounting arrangements, contact your Timken representative.

LIGHT 2MM200WI ISO 02 SERIES

SPEED CAPABILITY DATA

Bearing Number	Grease Capacity[1]				Operating Speeds[4] (DB Mounting)[5]					
	Low Speed[2]		High Speed[3]		Grease			Oil		
	25%	40%	15%	20%	DUL	DUM	DUH	DUL	DUM	DUH
	grams		grams		RPM			RPM		
2MM200WI	**0.30**	**0.50**	**0.20**	**0.27**	50200	37700	25100	85300	64100	42700
2MM201WI	**0.40**	**0.60**	**0.25**	**0.33**	45400	34000	22200	79100	57800	39400
2MM202WI	**0.50**	**0.80**	**0.32**	**0.43**	38200	28700	19100	66300	48800	33200
2MM203WI	**0.70**	**1.10**	**0.45**	**0.59**	33500	25100	16500	58100	42700	29100
2MM204WI	**1.10**	**1.70**	**0.72**	**0.96**	28600	21400	14300	48600	36400	24300
2MM205WI	**1.30**	**2.10**	**0.88**	**1.18**	23800	17900	11900	40500	30400	20200
2MM206WI	**2.00**	**3.10**	**1.31**	**1.74**	20000	15100	10000	34200	25600	17000
2MM207WI	**2.70**	**4.40**	**1.82**	**2.43**	17300	13,000	8600	29400	22000	14600
2MM208WI	**3.70**	**6.00**	**2.49**	**3.32**	15400	11600	7700	26200	19700	13100
2MM209WI	**4.20**	**6.60**	**2.77**	**3.70**	14000	10500	7000	22800	17900	11900
2MM210WI	**4.80**	**7.60**	**3.20**	**4.30**	12500	9600	6400	21800	16300	10900
2MM211WI	**6.10**	**9.70**	**4.10**	**5.40**	11600	8700	5800	19700	14800	9900
2MM212WI	**7.50**	**12.00**	**5.00**	**6.70**	10600	7920	5300	18000	13500	9000
2MM213WI	**9.20**	**14.60**	**6.10**	**8.10**	9700	7260	4800	16500	12300	8200
2MM214WI	**10.60**	**16.90**	**7.00**	**9.40**	9100	6840	4600	15500	11600	7800
2MM215WI	**11.60**	**18.60**	**7.80**	**10.30**	8600	6480	4300	14600	11020	7300
2MM216WI	**13.70**	**22.00**	**9.20**	**12.20**	8100	6060	4000	13800	10300	6800
2MM217WI	**16.90**	**27.10**	**11.30**	**15.10**	7500	5640	3800	12800	9590	6500
2MM218WI	**21.50**	**34.40**	**14.40**	**19.10**	7100	5340	3600	12100	9080	6100
2MM219WI	**25.80**	**41.40**	**17.30**	**23.00**	6700	5040	3400	11400	8570	5800
2MM220WI	**30.70**	**49.10**	**20.50**	**27.30**	6400	4800	3200	10900	8160	5400
2MM222WI	**42.30**	**67.60**	**28.20**	**37.60**	5800	4320	2900	9900	7340	4900
2MM224WI	**51.40**	**82.30**	**34.30**	**45.80**	5400	4020	2700	9200	6830	4600
2MM226WI	**50.80**	**81.30**	**33.90**	**45.20**	4900	3660	2400	8300	6220	4100
2MM230WI	**82.40**	**131.90**	**55.00**	**73.40**	4200	3180	2160	7100	5410	3600

[1] Fill weights based on specific gravity of 0.99.
[2] Low speed <500000 dN.
[3] High speed ≥ 500000 dN.
[4] For ceramic ball complements, use 120 percent of speeds shown.
[5] For other mounting arrangement configurations, refer to the engineering section on permissible speed calculation methods.

LIGHT 3MM200WI ISO 02 SERIES

SPEED CAPABILITY DATA

Bearing Number	Grease Capacity[1]				Operating Speeds[4] (DB Mounting)[5]					
	Low Speed[2]		High Speed[3]		Grease			Oil		
	25%	40%	15%	20%	DUL	DUM	DUH	DUL	DUM	DUH
	grams		grams		RPM			RPM		
3MM200WI	**0.30**	**0.50**	**0.20**	**0.27**	45180	33930	22590	76770	57690	38430
3MM201WI	**0.40**	**0.60**	**0.25**	**0.33**	40860	30600	19980	71190	52020	35460
3MM202WI	**0.50**	**0.80**	**0.32**	**0.43**	34380	25830	17190	59670	43920	29880
3MM203WI	**0.70**	**1.10**	**0.45**	**0.59**	30150	22590	14850	52290	38430	26190
3MM204WI	**1.10**	**1.70**	**0.72**	**0.96**	25740	19260	12870	43740	32760	21870
3MM205WI	**1.30**	**2.10**	**0.88**	**1.18**	21420	16110	10710	36450	27360	18180
3MM206WI	**2.00**	**3.10**	**1.31**	**1.74**	18000	13590	9000	30780	23040	15300
3MM207WI	**2.70**	**4.40**	**1.82**	**2.43**	15570	11700	7740	26460	19800	13140
3MM208WI	**3.70**	**6.00**	**2.49**	**3.32**	13860	10440	6930	23580	17730	11790
3MM209WI	**4.20**	**6.60**	**2.77**	**3.70**	12600	9450	6300	20520	16110	10710
3MM210WI	**4.80**	**7.60**	**3.20**	**4.30**	11250	8640	5760	19620	14670	9810
3MM211WI	**6.10**	**9.70**	**4.10**	**5.40**	10440	7830	5220	17730	13320	8910
3MM212WI	**7.50**	**12.00**	**5.00**	**6.70**	9540	7128	4770	16200	12150	8100
3MM213WI	**9.20**	**14.60**	**6.10**	**8.10**	8730	6534	4320	14850	11070	7380
3MM214WI	**10.60**	**16.90**	**7.00**	**9.40**	8190	6156	4140	13950	10440	7020
3MM215WI	**11.60**	**18.60**	**7.80**	**10.30**	7740	5832	3870	13140	9918	6570
3MM216WI	**13.70**	**22.00**	**9.20**	**12.20**	7290	5454	3600	12420	9270	6120
3MM217WI	**16.90**	**27.10**	**11.30**	**15.10**	6750	5076	3420	11520	8631	5850
3MM218WI	**21.50**	**34.40**	**14.40**	**19.10**	6390	4806	3240	10890	8172	5490
3MM219WI	**25.80**	**41.40**	**17.30**	**23.00**	6030	4536	3060	10260	7713	5220
3MM220WI	**30.70**	**49.10**	**20.50**	**27.30**	5760	4320	2880	9810	7344	4860
3MM222WI	**42.30**	**67.60**	**28.20**	**37.60**	5220	3888	2610	8910	6606	4410
3MM224WI	**51.40**	**82.30**	**34.30**	**45.80**	4860	3618	2430	8280	6147	4140
3MM226WI	**50.80**	**81.30**	**33.90**	**45.20**	4410	3294	2160	7470	5598	3690
3MM230WI	**82.40**	**131.90**	**55.00**	**73.40**	3780	2862	1944	6390	4869	3240

(1) Fill weights based on specific gravity of 0.99.
(2) Low speed <500000 dN.
(3) High speed ≥ 500000 dN.
(4) For ceramic ball complements, use 120 percent of speeds shown.
(5) For other mounting arrangement configurations, refer to the engineering section on permissible speed calculation methods.

LIGHT ISO 02 SERIES MM200K

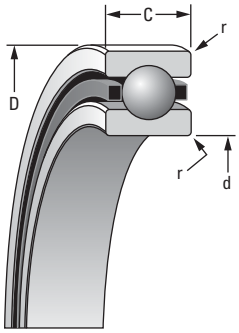

SUPER PRECISION MM

Running accuracy and performance meet ABEC 9 (ISO P2) levels.
Other features conform to ABEC 7 (ISO P4) requirements.

Bearing Number	d Bore	D O.D.	C Width(1)	Ball Qty. x Dia.	Bearing Wt.	LOAD RATINGS Steel Ball C_o Static	Steel Ball C_e Dynamic	Steel Ball Speed Rating(Ng)	Ceramic Ball C_o Static	Ceramic Ball C_e Dynamic	Ceramic Ball Speed Rating(Ng)	r Rad.(2)
	mm/in.			mm/in.	kg/lbs.	N/lbs.		RPM	N/lbs.		RPM	mm/in.
MM201K	12	32	10	7 x 5.95	0.035	3000	7550	52200	2710	7550	62600	0.6
	0.4724	1.2598	0.3940	7 x 15/64	0.08	680	1700	52200	610	1700	62600	0.024
MM202K	15	35	11	8 x 5.95	0.043	3700	8450	44000	3290	8450	52800	0.6
	0.5906	1.3780	0.4331	8 x 15/64	0.09	830	1900	44000	740	1900	52800	0.024
MM203K	17	40	12	8 x 6.75	0.062	4700	10600	38500	4230	10600	46200	0.6
	0.6693	1.5748	0.4724	8 x 17/64	0.14	1060	2380	38500	950	2380	46200	0.024
MM204K	20	47	14	8 x 7.94	0.100	6500	14200	32800	5860	14200	39400	1.0
	0.7874	1.8504	0.5512	8 x 5/16	0.22	1460	3190	32800	1320	3190	39400	0.039
MM205K	25	52	15	9 x 7.94	0.122	7800	15500	27400	6980	15500	32900	1.0
	0.9843	2.0472	0.5906	9 x 5/16	0.27	1760	3490	27400	1570	3490	32900	0.039
MM206K	30	62	16	9 x 9.53	0.185	11300	21600	23000	10000	21600	27600	1.0
	1.1811	2.4409	0.6299	9 x 3/8	0.41	2550	4850	23000	2.25	4850	27600	0.039
MM207K	35	72	17	9 x 11.11	0.267	15300	28500	19800	13600	28500	23800	1.0
	1.3780	2.8346	0.6693	9 x 7/16	0.59	3450	6400	19800	3060	6400	23800	0.039
MM208K	40	80	18	9 x 12.70	0.337	20000	36200	17700	17700	36200	21200	1.0
	1.5748	3.1496	0.7087	9 x 1/2	0.74	4500	8130	17700	3970	8130	21200	0.039
MM209K	45	85	19	9 x 12.70	0.377	20200	36300	16000	18200	36300	19200	1.0
	1.7717	3.3465	0.7480	9 x 1/2	0.83	4550	8160	16000	4090	8160	19200	0.039
MM210K	50	90	20	10 x 12.70	0.425	23100	38900	14600	20600	38900	17500	1.0
	1.9685	3.5433	0.7874	10 x 1/2	0.94	5200	8740	14600	4640	8740	17500	0.039
MM211K	55	100	21	10 x 14.29	0.564	29100	48100	13300	26000	48100	16000	1.5
	2.1654	3.9370	0.8268	10 x 9/16	1.24	6550	10800	13300	5850	10800	16000	0.059
MM212K	60	110	22	10 x 15.88	0.727	36300	58200	12100	32000	58200	14500	1.5
	2.3622	4.3307	0.8661	10 x 5/8	1.60	8150	13100	12100	7190	13100	14500	0.059
MM213K	65	120	23	10 x 16.67	0.928	40000	63400	11100	35600	63400	13300	1.5
	2.5591	4.7244	0.9055	10 x 21/32	2.05	9000	14300	11100	8000	14300	13300	0.059
MM214K	70	125	24	10 x 17.46	0.994	43600	69000	10500	39200	69000	12600	1.5
	2.7559	4.9213	0.9449	10 x 11/16	2.19	9800	15500	10500	8800	15500	12600	0.059
MM215K	75	130	25	10 x 17.46	1.074	44500	68900	9900	39900	68900	11900	1.5
	2.9528	5.1181	0.9843	10 x 11/16	2.37	10000	15500	9900	8960	15500	11900	0.059
MM216K	80	140	26	10 x 19.05	1.317	53400	80600	9200	47200	80600	11000	2.0
	3.1496	5.5118	1.0236	10 x 3/4	2.90	12000	18100	9200	10600	18100	11000	0.079

(Ng) For a single, grease-lubricated, spring-preloaded bearing. This value to be used in permissible operating speed (Sp) calculation.
(1) Width tolerance of preloaded bearing set +0.000/-0.254 mm (+0.0000/-0.0100 in.).
(2) ABMA STD 20 (r_{as} max).

DEEP-GROOVE (CONRAD) CONSTRUCTION

- Incorporates high shoulder on both inner and outer rings.
- Balls separated by two-piece and piloted cage.

Suggested Shoulder Diameters				Shaft Diameter		Mounting Fits		FIXED				FLOATING			
Shaft		Housing						Housing Bore (Stationary)		Mounting Fits		Housing Bore (Stationary)		Mounting Fits	
Max.	Min.	Max.	Min.	Max.	Min.	Loose	Tight	Max.	Min.	Tight	Loose	Max.	Min.	Loose	Loose
mm/in.		**mm**/in.		**mm**/in.		**mm**/in.		**mm**/in.		**mm**/in.		**mm**/in.		**mm**/in.	
16.6	**16.4**	**28.1**	**27.8**	**12.000**	**11.995**	**0.005**	**0.004**	**32.005**	**32.000**	**0.000**	**0.011**	**32.010**	**32.005**	**0.016**	**0.005**
0.66	0.65	1.11	1.10	0.47240	0.47220	0.00020	0.00015	1.26000	1.25980	0.00000	0.00045	1.26020	1.26000	0.00070	0.00020
19.2	**18.9**	**31.1**	**30.9**	**15.000**	**14.995**	**0.005**	**0.004**	**35.006**	**35.000**	**0.000**	**0.012**	**35.010**	**35.005**	**0.016**	**0.005**
0.76	0.75	1.23	1.22	0.59060	0.59040	0.00020	0.00015	1.37830	1.37800	0.00000	0.00050	1.37840	1.37820	0.00070	0.00020
21.7	**21.5**	**35.7**	**35.4**	**17.000**	**16.995**	**0.005**	**0.004**	**40.006**	**40.000**	**0.000**	**0.012**	**40.010**	**40.005**	**0.016**	**0.005**
0.86	0.85	1.41	1.40	0.66930	0.66910	0.00020	0.00015	1.57510	1.57480	0.00000	0.00050	1.57520	1.57500	0.00070	0.00020
26.0	**25.8**	**41.5**	**41.3**	**20.000**	**19.995**	**0.005**	**0.005**	**47.006**	**47.000**	**0.000**	**0.012**	**47.012**	**47.007**	**0.018**	**0.007**
1.03	1.02	1.64	1.63	0.78740	0.78720	0.00020	0.00020	1.85070	1.85040	0.00000	0.00050	1.85090	1.85070	0.00080	0.00030
31.1	**30.9**	**47.1**	**46.9**	**25.000**	**24.995**	**0.005**	**0.005**	**52.006**	**52.000**	**0.000**	**0.013**	**52.012**	**52.007**	**0.019**	**0.007**
1.23	1.22	1.86	1.85	0.98430	0.98410	0.00020	0.00020	2.04750	2.04720	0.00000	0.00055	2.04770	2.04750	0.00080	0.00030
36.7	**36.5**	**56.0**	**55.8**	**30.000**	**29.995**	**0.005**	**0.005**	**62.008**	**62.000**	**0.000**	**0.015**	**62.012**	**62.007**	**0.019**	**0.007**
1.45	1.44	2.21	2.20	1.18110	1.18090	0.00020	0.00020	2.44120	2.44090	0.00000	0.00060	2.44140	2.44120	0.00080	0.00030
42.7	**42.2**	**65.3**	**64.8**	**35.000**	**34.995**	**0.005**	**0.006**	**72.008**	**72.000**	**0.000**	**0.015**	**72.011**	**72.007**	**0.019**	**0.007**
1.68	1.66	2.57	2.55	1.37800	1.37780	0.00020	0.00025	2.83490	2.83460	0.00000	0.00060	2.83510	2.83490	0.00080	0.00030
47.8	**47.2**	**73.2**	**72.6**	**40.000**	**39.995**	**0.005**	**0.006**	**80.008**	**80.000**	**0.000**	**0.015**	**80.012**	**80.008**	**0.020**	**0.008**
1.88	1.86	2.88	2.86	1.57480	1.57460	0.00020	0.00025	3.14990	3.14960	0.00000	0.00060	3.15010	3.14990	0.00080	0.00030
52.8	**52.3**	**78.2**	**77.7**	**45.000**	**44.995**	**0.005**	**0.006**	**85.008**	**85.000**	**0.000**	**0.016**	**85.016**	**85.009**	**0.024**	**0.009**
2.08	2.06	3.08	3.06	1.77170	1.77150	0.00020	0.00025	3.34680	3.34650	0.00000	0.00060	3.34710	3.34680	0.00090	0.00030
57.9	**57.4**	**83.3**	**82.8**	**50.000**	**49.995**	**0.005**	**0.006**	**90.008**	**90.000**	**0.000**	**0.016**	**90.015**	**90.007**	**0.023**	**0.007**
2.28	2.26	3.28	3.26	1.96850	1.96830	0.00020	0.00025	3.54360	3.54330	0.00000	0.00060	3.54390	3.54360	0.00090	0.00030
63.8	**63.3**	**92.2**	**91.7**	**55.000**	**54.995**	**0.005**	**0.007**	**100.008**	**100.000**	**0.000**	**0.016**	**100.018**	**100.010**	**0.025**	**0.010**
2.51	2.49	3.63	3.61	2.16540	2.16520	0.00020	0.00030	3.93730	3.93700	0.00000	0.00060	3.93770	3.93740	0.00100	0.00040
69.9	**69.3**	**101.4**	**100.8**	**60.000**	**59.995**	**0.005**	**0.007**	**110.008**	**110.000**	**0.000**	**0.016**	**110.018**	**110.010**	**0.025**	**0.010**
2.75	2.73	3.99	3.97	2.36220	2.36200	0.00020	0.00030	4.33100	4.33070	0.00000	0.00060	4.33140	4.33110	0.00100	0.00040
76.2	**75.7**	**109.7**	**109.2**	**65.000**	**64.995**	**0.005**	**0.007**	**120.008**	**120.000**	**0.000**	**0.016**	**120.018**	**120.010**	**0.025**	**0.010**
3.00	2.98	4.32	4.30	2.55910	2.55890	0.00020	0.00030	4.72470	4.72440	0.00000	0.00060	4.72510	4.72480	0.00100	0.00040
80.8	**80.3**	**115.8**	**115.3**	**70.000**	**69.995**	**0.005**	**0.007**	**125.008**	**125.000**	**0.000**	**0.017**	**125.021**	**125.011**	**0.030**	**0.011**
3.18	3.16	4.56	4.54	2.75590	2.75570	0.00020	0.00030	4.92160	4.92130	0.00000	0.00070	4.92210	4.92170	0.00120	0.00040
86.0	**85.2**	**120.8**	**120.0**	**75.005**	**74.995**	**0.005**	**0.012**	**130.009**	**130.000**	**0.000**	**0.018**	**130.020**	**130.010**	**0.029**	**0.010**
3.39	3.36	4.76	4.73	2.95300	2.95260	0.00020	0.00050	5.11850	5.11810	0.00000	0.00070	5.11890	5.11850	0.00110	0.00040
91.3	**90.6**	**129.9**	**129.2**	**80.005**	**79.995**	**0.005**	**0.012**	**140.009**	**140.000**	**0.000**	**0.018**	**140.020**	**140.010**	**0.029**	**0.010**
3.60	3.57	5.12	5.09	3.14980	3.14940	0.00020	0.00050	5.51220	5.51180	0.00000	0.00070	5.51260	5.51220	0.00110	0.00040

MEDIUM ISO 03 SERIES
2(3)MM300WI

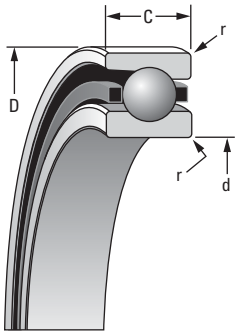

SUPER PRECISION MM

Running accuracy and performance meet ABEC 9 (ISO P2) levels.
Other features conform to ABEC 7 (ISO P4) requirements.

Bearing Number 2MM or 3MM	d Bore	D O.D.	C Width(1)	Ball Qty. x Dia.	Bearing Wt.	(2MM) LOAD RATINGS						(3MM) LOAD RATINGS					
						Steel Ball			Ceramic Ball			Steel Ball			Ceramic Ball		
						C_o Static	C_e Dynamic	Speed Rating(Ng)	C_o Static	C_e Dynamic	Speed Rating(Ng)	C_o Static	C_e Dynamic	Speed Rating(Ng)	C_o Static	C_e Dynamic	Speed Rating(Ng)
	mm/in.			**mm**/in.	**kg**/lbs.	**N**/lbs.		RPM	**N**/lbs.		RPM	**N**/lbs.		RPM	**N**/lbs.		RPM
301WI	**12**	**37**	**12**	**8 x 7.14**	**0.061**	**4700**	**11000**	**47600**	**4230**	**11000**	**57100**	**4600**	**10900**	**42800**	**4060**	**10900**	**51400**
	0.4724	1.4567	0.4724	8 x 9/32	0.13	1060	2450	47600	950	2450	57100	1040	2450	42800	920	2450	51400
302WI	**15**	**42**	**13**	**10 x 6.75**	**0.087**	**5810**	**12000**	**38100**	**5170**	**12900**	**45700**	**5600**	**11600**	**34300**	**5000**	**11600**	**41200**
	0.5906	1.6535	0.5118	10 x 17/64	0.19	1320	2700	38100	1160	2700	45700	1270	2600	34300	1120	2600	41200
303WI	**17**	**47**	**14**	**7 x 9.53**	**0.104**	**7280**	**16900**	**36800**	**6480**	**16900**	**44200**	**7100**	**16400**	**33100**	**6300**	**16400**	**39700**
	0.6693	1.8504	0.5512	7 x 3/8	0.23	1630	3790	36800	1460	3790	44100	1600	3690	33100	1420	3690	39700
304WI	**20**	**52**	**15**	**8 x 10.32**	**0.137**	**10000**	**21500**	**32200**	**8900**	**21500**	**38600**	**9650**	**20900**	**29000**	**8590**	**20900**	**34800**
	0.7874	2.0472	0.5906	8 x 13/32	0.30	2200	4840	32200	2000	4840	38600	2160	4700	29000	1930	4700	34800
305WI	**25**	**62**	**17**	**9 x 11.91**	**0.221**	**15300**	**30500**	**26200**	**13600**	**30500**	**31400**	**14800**	**29500**	**23600**	**13200**	**29500**	**28300**
	0.9843	2.4409	0.6693	9 x 15/32	0.49	3450	6850	26200	3060	6850	31400	3350	6630	23600	2970	6630	28300
306WI	**30**	**72**	**19**	**10 x 13.49**	**0.328**	**22200**	**34120**	**22100**	**19800**	**34120**	**26500**	**21500**	**39900**	**19900**	**19100**	**39900**	**23900**
	1.1811	2.8346	0.7480	10 x 17/32	0.72	4990	9270	22100	4440	9270	26500	4820	8960	19900	4290	8960	23900
307WI	**35**	**80**	**21**	**10 x 14.29**	**0.443**	**25600**	**46200**	**19200**	**22800**	**46200**	**23000**	**24700**	**44500**	**17300**	**22000**	**44500**	**20800**
	1.3780	3.1496	0.8268	10 x 9/16	0.98	5700	10400	19200	5130	10400	23000	5600	10000	17300	4940	10000	20800
308WI	**40**	**90**	**23**	**11 x 15.88**	**0.608**	**35000**	**59700**	**16900**	**31200**	**59700**	**20300**	**33800**	**57500**	**15200**	**30100**	**57500**	**18200**
	1.5748	3.5433	0.9055	11 x 5/8	1.34	7800	13400	16900	7010	13400	20300	7600	12900	15200	6770	12900	18200
309WI	**45**	**100**	**25**	**10 x 17.46**	**0.809**	**38700**	**66500**	**15100**	**34500**	**66500**	**18100**	**37400**	**64100**	**13600**	**33300**	**64100**	**16300**
	1.7717	3.9370	0.9843	10 x 11/16	1.78	8650	15000	15100	7750	15000	18100	8500	14400	13600	7480	14400	16300
310WI	**50**	**110**	**27**	**10 x 19.05**	**1.046**	**46200**	**77900**	**13600**	**41200**	**77900**	**16300**	**44700**	**75100**	**12200**	**39800**	**75100**	**14600**
	1.9685	4.3307	1.0630	10 x 3/4	2.31	10400	17500	13600	9250	17500	16300	10000	16900	12200	8940	16900	14600
311WI	**55**	**120**	**29**	**10 x 20.64**	**1.332**	**54600**	**90200**	**12400**	**48600**	**90200**	**14900**	**52600**	**86700**	**11200**	**46800**	**86700**	**13400**
	2.1654	4.7244	1.1417	10 x 13/16	2.94	12200	20300	12400	10900	20300	14900	11800	19500	11200	10500	19500	13400
312WI	**60**	**130**	**31**	**10 x 22.23**	**1.665**	**63500**	**103100**	**11400**	**56600**	**103100**	**13700**	**61000**	**99100**	**10300**	**54400**	**99100**	**12400**
	2.3622	5.1181	1.2205	10 x 7/8	3.67	14300	23200	11400	12700	23200	13700	13700	22300	10300	12200	22300	12400
313WI	**65**	**140**	**33**	**11 x 23.81**	**2.101**	**80500**	**124400**	**10500**	**71700**	**124400**	**12600**	**77400**	**119700**	**9500**	**68900**	**119700**	**11400**
	2.5591	5.5118	1.2992	11 x 15/16	4.63	18000	28000	10500	16100	28000	12600	17300	26900	9500	15500	26900	11400
314WI	**70**	**150**	**35**	**11 x 25.40**	**2.548**	**91900**	**139900**	**9800**	**81800**	**139900**	**11800**	**88300**	**134500**	**8800**	**78500**	**134500**	**10600**
	2.7559	5.9055	1.3780	11 x 1	5.62	20800	31500	9800	18400	31500	11800	20000	30200	8800	17700	30200	10600
319WI	**95**	**200**	**45**	**10 x 34.93**	**5.587**	**155900**	**204400**	**7400**	**138800**	**204400**	**8900**	**150400**	**196800**	**6700**	**133900**	**196800**	**8000**
	3.7402	7.8740	1.7717	10 x 1 3/8	12.32	35100	46000	7400	31200	46000	8900	33800	44200	6700	30100	44200	8000

(Ng) For a single, grease-lubricated, spring-preloaded bearing. This value to be used in permissible operating speed (Sp) calculation.
(1) Width tolerance of preloaded bearing set +0.000/-0.254 mm (+0.0000/-0.0100 in.).
(2) ABMA STD 20 (r_{as} max).

WI CONSTRUCTION

- Incorporates low shoulder on non-thrust side of outer rings.
- Balls separated by one-piece cage piloted against a ground thrust shoulder land of the outer ring.

r Rad.(2)	Suggested Shoulder Diameters				Shaft Diameter		Mounting Fits		FIXED				FLOATING			
	Shaft		Housing						Housing Bore (Stationary)		Mounting Fits		Housing Bore (Stationary)		Mounting Fits	
	Max.	Min.	Max.	Min.	Max.	Min.	Loose	Tight	Max.	Min.	Tight	Loose	Max.	Min.	Loose	Loose
mm/in.	mm/in.		mm/in.		mm/in.		mm/in.		mm/in.		mm/in.		mm/in.		mm/in.	
1.0	**17.7**	**17.4**	**32.1**	**31.9**	**12.000**	**11.995**	**0.005**	**0.004**	**37.006**	**37.000**	**0.000**	**0.012**	**37.010**	**37.005**	**0.016**	**0.005**
0.039	0.70	0.69	1.27	1.26	0.47240	0.47220	0.00020	0.00015	1.45700	1.45670	0.00000	0.00050	1.45710	1.45690	0.00070	0.00020
1.0	**22.2**	**22.0**	**35.7**	**35.4**	**15.000**	**14.995**	**0.005**	**0.004**	**42.006**	**42.000**	**0.000**	**0.012**	**42.010**	**42.005**	**0.016**	**0.005**
0.039	0.88	0.87	1.41	1.40	0.59060	0.59040	0.00020	0.00015	1.65380	1.65350	0.00000	0.00050	1.65390	1.65370	0.00070	0.00020
1.0	**22.7**	**22.5**	**42.0**	**41.8**	**17.000**	**16.995**	**0.005**	**0.004**	**47.006**	**47.000**	**0.000**	**0.012**	**47.012**	**47.007**	**0.018**	**0.007**
0.039	0.90	0.89	1.66	1.65	0.66930	0.66910	0.00020	0.00015	1.85070	1.85040	0.00000	0.00050	1.85090	1.85070	0.00080	0.00030
1.0	**30.1**	**29.9**	**46.6**	**46.4**	**20.000**	**19.995**	**0.005**	**0.005**	**52.006**	**52.000**	**0.000**	**0.013**	**52.012**	**52.007**	**0.019**	**0.007**
0.039	1.19	1.18	1.84	1.83	0.78740	0.78720	0.00020	0.00020	2.04750	2.04720	0.00000	0.00055	2.04770	2.04750	0.00080	0.00030
1.0	**32.1**	**31.9**	**55.8**	**55.5**	**25.000**	**24.995**	**0.005**	**0.005**	**62.008**	**62.000**	**0.000**	**0.015**	**62.012**	**62.007**	**0.019**	**0.007**
0.039	1.27	1.26	2.20	2.19	0.98430	0.98410	0.00020	0.00020	2.44120	2.44090	0.00000	0.00060	2.44140	2.44120	0.00080	0.00030
1.0	**37.7**	**37.5**	**65.2**	**64.9**	**30.000**	**29.995**	**0.005**	**0.005**	**72.008**	**72.000**	**0.000**	**0.015**	**72.011**	**72.007**	**0.019**	**0.007**
0.039	1.49	1.48	2.57	2.56	1.18110	1.18090	0.00020	0.00020	2.83490	2.83460	0.00000	0.00060	2.83510	2.83490	0.00080	0.00030
1.5	**43.7**	**43.2**	**72.1**	**71.6**	**35.000**	**34.995**	**0.005**	**0.006**	**80.008**	**80.000**	**0.000**	**0.015**	**80.012**	**80.008**	**0.020**	**0.008**
0.059	1.72	1.70	2.84	2.82	1.37800	1.37780	0.00020	0.00025	3.14990	3.14960	0.00000	0.00060	3.15010	3.14990	0.00080	0.00030
1.5	**49.8**	**49.3**	**81.3**	**80.8**	**40.000**	**39.995**	**0.005**	**0.006**	**90.008**	**90.000**	**0.000**	**0.016**	**90.015**	**90.007**	**0.023**	**0.007**
0.059	1.96	1.94	3.20	3.18	1.57480	1.57460	0.00020	0.00025	3.54360	3.54330	0.00000	0.00060	3.54390	3.54360	0.00090	0.00030
1.5	**55.9**	**55.4**	**90.2**	**89.7**	**45.000**	**44.995**	**0.005**	**0.006**	**100.008**	**100.000**	**0.000**	**0.016**	**100.018**	**100.010**	**0.025**	**0.010**
0.059	2.20	2.18	3.55	3.53	1.77170	1.77150	0.00020	0.00025	3.93730	3.93700	0.00000	0.00060	3.93770	3.93740	0.00100	0.00040
2.0	**61.2**	**60.7**	**99.8**	**99.3**	**50.000**	**49.995**	**0.005**	**0.006**	**110.008**	**110.000**	**0.000**	**0.016**	**110.018**	**110.010**	**0.025**	**0.010**
0.079	2.41	2.39	3.93	3.91	1.96850	1.96830	0.00020	0.00025	4.33100	4.33070	0.00000	0.00060	4.33140	4.33110	0.00100	0.00040
2.0	**67.3**	**66.8**	**108.7**	**108.2**	**55.000**	**54.995**	**0.005**	**0.007**	**120.008**	**120.000**	**0.000**	**0.016**	**120.018**	**120.010**	**0.025**	**0.010**
0.079	2.65	2.63	4.28	4.26	2.16540	2.16520	0.00020	0.00030	4.72470	4.72440	0.00000	0.00060	4.72510	4.72480	0.00100	0.00040
2.0	**73.1**	**72.6**	**117.9**	**117.3**	**60.000**	**59.995**	**0.005**	**0.007**	**130.009**	**130.000**	**0.000**	**0.018**	**130.020**	**130.010**	**0.029**	**0.010**
0.079	2.88	2.86	4.64	4.62	2.36220	2.36200	0.00020	0.00030	5.11850	5.11810	0.00000	0.00070	5.11890	5.11850	0.00110	0.00040
2.0	**80.3**	**79.8**	**126.8**	**126.2**	**65.000**	**64.995**	**0.005**	**0.007**	**140.009**	**140.000**	**0.000**	**0.018**	**140.020**	**140.010**	**0.029**	**0.010**
0.079	3.16	3.14	4.99	4.97	2.55910	2.55890	0.00020	0.00030	5.51220	5.51180	0.00000	0.00070	5.51260	5.51220	0.00110	0.00040
2.0	**85.3**	**84.8**	**135.6**	**135.1**	**70.000**	**69.995**	**0.005**	**0.007**	**150.009**	**150.000**	**0.000**	**0.018**	**150.023**	**150.012**	**0.032**	**0.012**
0.079	3.36	3.34	5.34	5.32	2.75590	2.75570	0.00020	0.00030	5.90590	5.90550	0.000	0.00070	5.90640	5.90600	0.00120	0.00050
3.0	**113.2**	**112.4**	**183.3**	**182.5**	**95.000**	**94.995**	**0.005**	**0.013**	**200.011**	**200.000**	**0.000**	**0.022**	**200.025**	**200.015**	**0.036**	**0.015**
0.118	4.46	4.43	7.22	7.19	3.74016	3.73996	0.00020	0.00051	7.87402	7.87445	0.00000	0.00087	7.87500	7.87461	0.00142	0.00059

MEDIUM 2(3)MM300WI ISO 03 SERIES

DUPLEX PERFORMANCE DATA

MOUNTING ARRANGEMENTS

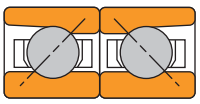

Back-to-Back DB

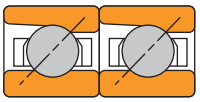

Tandem DT

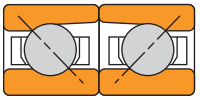

Face-to-Face DF

Bearing Number	Preload DUX X-light	Preload DUL Light	Preload DUM Med.	Preload DUH Heavy	Axial Stiffness[1] X-light	Axial Stiffness[1] Light	Axial Stiffness[1] Med.	Axial Stiffness[1] Heavy	Radial Stiffness[1] X-light	Radial Stiffness[1] Light	Radial Stiffness[1] Med.	Radial Stiffness[1] Heavy	Spacer Offsets[1] X-light to Light	Spacer Offsets[1] Light to Med.	Spacer Offsets[1] Med. to Heavy
	N lbs.				N/µm 10^6 lbs./in.				N/µm 10^6 lbs./in.				µm in.		
2MM301WI	—	20	70	180	—	17.49	27.81	44.25	—	98.82	153.56	183.30	—	7.87	12.45
	—	5	15	40	—	0.100	0.159	0.253	—	0.565	0.878	1.048	—	0.00031	0.00049
2MM302WI	20	40	110	220	—	27.46	40.93	57.19	109.97	143.24	164.93	205.51	3.70	7.87	9.14
	5	10	25	50	—	0.157	0.234	0.327	0.628	0.819	0.943	1.175	0.00015	0.00031	0.00036
2MM303WI	40	70	160	310	—	26.58	38.83	54.57	127.92	147.44	197.46	263.05	3.63	10.92	13.46
	10	15	35	70	—	0.152	0.222	0.312	0.730	0.843	1.129	1.504	0.00014	0.00043	0.00053
2MM304WI	40	90	220	400	—	33.06	49.85	66.46	140.53	181.72	232.97	289.81	6.14	12.95	12.92
	10	20	50	90	—	0.189	0.285	0.380	0.803	1.039	1.332	1.657	0.00024	0.00051	0.00051
2MM305WI	90	160	330	620	—	46.17	65.24	88.50	203.85	247.83	318.78	387.86	6.42	12.70	14.99
	20	35	75	140	—	0.264	0.373	0.506	1.164	1.417	1.820	2.215	0.00025	0.00050	0.00059
2MM306WI	90	180	440	780	—	49.50	74.68	98.47	223.77	271.27	394.56	470.83	7.73	17.27	15.49
	20	40	100	175	—	0.283	0.427	0.563	1.278	1.551	2.253	2.689	0.00030	0.00068	0.00061
2MM307WI	110	220	560	1000	—	55.97	85.18	114.38	251.87	323.91	438.09	526.52	9.05	18.80	17.78
	25	50	125	225	—	0.320	0.487	0.654	1.438	1.852	2.502	3.007	0.00036	0.00074	0.00070
2MM308WI	130	290	670	1220	—	64.71	94.62	127.85	290.33	364.67	512.52	620.41	10.56	19.05	20.07
	30	65	150	275	—	0.370	0.541	0.731	1.658	2.085	2.927	3.543	0.00042	0.00075	0.00079
2MM309WI	180	330	780	1560	—	70.13	103.02	145.17	313.69	393.18	520.48	646.82	10.00	20.57	25.15
	40	75	175	350	—	0.401	0.589	0.830	1.791	2.248	2.972	3.694	0.00039	0.00081	0.00099
2MM310WI	220	440	1000	1780	—	81.15	117.36	156.01	347.72	445.06	580.34	694.99	12.52	22.35	22.86
	50	100	225	400	—	0.464	0.671	0.892	1.986	2.541	3.314	3.969	0.00049	0.00088	0.00090
2MM311WI	270	560	1110	2110	—	88.15	121.38	167.20	383.15	496.30	622.37	761.00	15.05	21.34	27.69
	60	125	250	475	—	0.504	0.694	0.956	2.188	2.834	3.554	4.346	0.00059	0.00084	0.00109
2MM312WI	270	560	1330	2450	—	89.72	133.80	180.85	387.61	506.89	675.70	816.95	14.75	27.94	28.19
	60	125	300	550	—	0.513	0.765	1.034	2.213	2.895	3.859	4.665	0.00058	0.00110	0.00111
2MM313WI	330	670	1670	3000	—	104.24	157.93	211.28	453.84	585.60	791.90	952.23	14.55	30.48	28.96
	75	150	375	675	—	0.596	0.903	1.208	2.592	3.344	4.522	5.438	0.00057	0.00120	0.00114
2MM314WI	400	780	1890	3450	—	110.89	166.33	224.22	498.33	633.95	848.58	1024.31	15.49	32.26	32.00
	90	175	425	775	—	0.634	0.951	1.282	2.846	3.620	4.846	5.849	0.00061	0.00127	0.00126
2MM319WI	670	1330	3110	6230	—	140.44	206.03	290.33	611.00	787.43	1041.02	1293.71	21.67	41.05	50.24
	150	300	700	1400	—	0.803	1.178	1.660	3.489	4.497	5.945	7.388	0.00085	0.00162	0.00198
3MM301WI	40	90	180	310	—	58.59	76.61	96.37	96.32	122.54	153.78	183.56	3.42	5.33	6.10
	10	20	40	70	—	0.335	0.438	0.551	0.550	0.700	0.878	1.048	0.00013	0.00021	0.00024
3MM302WI	40	90	180	360	—	66.46	86.75	115.08	108.95	139.15	174.90	217.90	2.99	4.57	7.11
	10	20	40	80	—	0.380	0.496	0.658	0.622	0.795	0.999	1.244	0.00012	0.00018	0.00028
3MM303WI	40	110	270	440	—	63.66	89.02	109.49	93.69	132.92	176.19	207.22	4.85	8.13	7.11
	10	25	60	100	—	0.364	0.509	0.626	0.535	0.760	1.006	1.183	0.00019	0.00032	0.00028
3MM304WI	90	160	360	620	—	79.23	108.96	136.77	136.71	159.51	220.02	261.18	3.70	8.38	8.64
	20	35	80	140	—	0.453	0.623	0.782	0.781	0.912	1.258	1.491	0.00015	0.00033	0.00034
3MM305WI	110	220	530	890	—	101.62	142.19	174.90	165.18	212.03	283.21	333.10	4.90	10.16	8.89
	25	50	120	200	—	0.581	0.813	1.000	0.943	1.211	1.617	1.902	0.00019	0.00040	0.00035
3MM306WI	135	270	670	1110	—	112.29	159.33	196.06	193.95	252.07	342.44	403.21	4.99	11.68	9.91
	30	60	150	250	—	0.642	0.911	1.121	1.108	1.439	1.955	2.303	0.00020	0.00046	0.00039
3MM307WI	180	360	850	1560	—	134.85	187.84	241.01	221.46	284.26	378.37	459.17	5.93	12.19	13.21
	40	80	190	350	—	0.771	1.074	1.378	1.265	1.623	2.161	2.622	0.00023	0.00048	0.00052
3MM308WI	220	440	1110	1780	—	150.41	214.08	259.20	261.11	336.84	456.64	530.40	6.22	14.48	11.18
	50	100	250	400	—	0.860	1.224	1.482	1.491	1.923	2.608	3.029	0.00025	0.00057	0.00044
3MM309WI	270	530	1330	2220	—	165.98	235.94	290.51	269.80	332.14	468.66	551.00	7.20	15.75	13.46
	60	120	300	500	—	0.949	1.349	1.661	1.541	1.899	2.676	3.146	0.00028	0.00062	0.00053
3MM310WI	310	620	1560	2670	—	178.75	254.13	316.57	293.47	360.12	510.36	605.40	7.83	17.27	15.49
	70	140	350	600	—	1.022	1.453	1.810	1.676	2.059	2.914	3.457	0.00031	0.00068	0.00061
3MM311WI	400	780	1780	3110	—	198.16	272.32	342.10	328.74	407.34	547.14	653.40	8.51	17.02	17.27
	90	175	400	700	—	1.133	1.557	1.956	1.877	2.329	3.124	3.731	0.00034	0.00067	0.00068
3MM312WI	450	890	2000	3560	—	213.38	291.21	367.81	347.62	450.02	582.53	699.31	9.35	17.53	18.80
	100	200	450	800	—	1.220	1.665	2.103	1.985	2.573	3.326	3.993	0.00037	0.00069	0.00074
3MM313WI	560	1110	2670	4450	—	249.23	348.93	429.55	409.70	525.26	701.21	824.51	10.03	20.83	18.29
	125	250	600	1000	—	1.425	1.995	2.456	2.340	2.999	4.004	4.708	0.00039	0.00082	0.00072
3MM314WI	620	1220	2890	5120	—	262.52	365.02	460.34	433.61	552.97	735.10	881.07	10.22	21.08	21.59
	140	275	650	1150	—	1.501	2.087	2.632	2.476	3.158	4.198	5.031	0.00040	0.00083	0.00085
3MM319WI	1070	2110	4890	8900	—	328.81	453.52	578.22	541.62	692.64	914.62	1105.79	14.24	28.19	30.99
	240	475	1100	2000	—	1.880	2.593	3.306	3.093	3.955	5.223	6.315	0.00056	0.00111	0.00122

[1] For DB or DF arrangements only. For other mounting arrangements, contact your Timken representative.

MEDIUM 2(3)MM300WI ISO 03 SERIES

SPEED CAPABILITY DATA

Bearing Number	Grease Capacity[1]				Operating Speeds[4] (DB Mounting)[5]					
	Low Speed[2]		High Speed[3]		Grease			Oil		
	25%	40%	15%	20%	DUL	DUM	DUH	DUL	DUM	DUH
	grams		grams		RPM			RPM		
2MM301WI	0.60	1.00	0.40	0.53	35700	28600	19000	60700	48600	32400
2MM302WI	0.70	1.20	0.49	0.65	28600	22900	15200	48600	38900	25900
2MM303WI	1.20	2.00	0.83	1.10	27600	22100	14700	46900	37500	25000
2MM304WI	1.50	2.50	1.03	1.38	24200	19300	12900	41100	32800	21900
2MM305WI	2.30	3.80	1.57	2.09	19700	15700	10500	33400	26700	17800
2MM306WI	3.50	5.60	2.35	3.14	16600	13300	8800	28200	22500	15000
2MM307WI	4.60	7.40	3.07	4.10	14400	11500	7700	24500	19600	13100
2MM308WI	6.40	10.20	4.25	5.66	12700	10100	6800	21500	17200	11500
2MM309WI	8.50	13.60	5.68	7.58	11300	9100	6000	19300	15400	10300
2MM310WI	11.10	17.80	7.40	9.90	10200	8200	5400	17300	13900	9200
2MM311WI	14.20	22.70	9.50	12.60	9300	7400	5000	15800	12600	8400
2MM312WI	17.70	28.30	11.80	15.80	8600	6800	4600	14500	11600	7800
2MM313WI	20.70	33.20	13.80	18.50	7900	6300	4200	13400	10700	7100
2MM314WI	25.20	40.30	16.80	22.40	7400	5900	3900	12500	10000	6700
2MM319WI	60.90	97.40	40.60	54.10	5600	4400	3000	9400	7500	5000
3MM301WI	0.60	1.00	0.40	0.53	32130	25740	17100	54630	43740	29160
3MM302WI	0.70	1.20	0.49	0.65	25740	20610	13680	43740	35010	23310
3MM303WI	1.20	2.00	0.83	1.10	24840	19890	13230	42210	33750	22500
3MM304WI	1.50	2.50	1.03	1.38	21780	17370	11610	36990	29520	19710
3MM305WI	2.30	3.80	1.57	2.09	17730	14130	9450	30060	24030	16020
3MM306WI	3.50	5.60	2.35	3.14	14940	11970	7920	25380	20250	13500
3MM307WI	4.60	7.40	3.07	4.10	12960	10350	6930	22050	17640	11790
3MM308WI	6.40	10.20	4.25	5.66	11430	9090	6120	19350	15480	10350
3MM309WI	8.50	13.60	5.68	7.58	10170	8190	5400	17370	13860	9270
3MM310WI	11.10	17.80	7.40	9.90	9180	7380	4860	15570	12510	8280
3MM311WI	14.20	22.70	9.50	12.60	8370	6660	4500	14220	11340	7560
3MM312WI	17.70	28.30	11.80	15.80	7740	6120	4140	13050	10440	7020
3MM313WI	20.70	33.20	13.80	18.50	7110	5670	3780	12060	9630	6390
3MM314WI	25.20	40.30	16.80	22.40	6660	5310	3510	11250	9000	6030
3MM319WI	60.90	97.40	40.60	54.10	5040	3960	2700	8460	6750	4500

[1] Fill weights based on specific gravity of 0.99.
[2] Low speed <500000 dN.
[3] High speed ≥ 500000 dN.
[4] For ceramic ball complements, use 120 percent of speeds shown.
[5] For other mounting arrangement configurations, refer to the engineering section on permissible speed calculation methods.

MEDIUM ISO 03 SERIES
MM300K

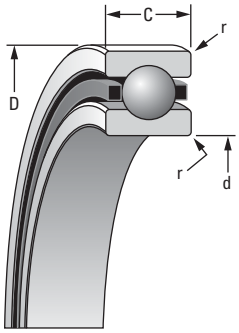

SUPER PRECISION MM

Running accuracy and performance meet ABEC 9 (ISO P2) levels.
Other features conform to ABEC 7 (ISO P4) requirements.

Bearing Number	d Bore	D O.D.	C Width(1)	Ball Qty. x Dia.	Bearing Wt.	LOAD RATINGS Steel Ball C_o Static	Steel Ball C_e Dynamic	Steel Ball Speed Rating(Ng)	Ceramic Ball C_o Static	Ceramic Ball C_e Dynamic	Ceramic Ball Speed Rating(Ng)	r Rad.(2)
	mm/in.			mm/in.	kg/lbs.	N/lbs.		RPM	N/lbs.		RPM	mm/in.
MM305K	**25**	**62**	**17**	**7 x 11.9**	**0.222**	**12100**	**26200**	**26500**	**10800**	**26200**	**31800**	**1.0**
	0.9843	2.4409	0.6693	7 x 15/32	0.49	2730	5890	26500	2430	5890	31800	0.039
MM306K	**30**	**72**	**19**	**7 x 13.5**	**0.327**	**15800**	**33100**	**22300**	**14100**	**33100**	**26760**	**1.0**
	1.1811	2.8346	0.7480	7 x 17/32	0.72	3560	7440	22300	3160	7440	26760	0.039
MM307K	**35**	**80**	**21**	**7 x 14.3**	**0.431**	**18300**	**37100**	**19400**	**16300**	**37100**	**23280**	**1.5**
	1.3780	3.1496	0.8268	7 x 9/16	0.95	4120	8340	19400	3670	8340	23280	0.059
MM308K	**40**	**90**	**23**	**7 x 15.9**	**0.594**	**22800**	**45000**	**17100**	**20300**	**45000**	**20520**	**1.5**
	1.5748	3.5433	0.9055	7 x 5/8	1.31	5120	10100	17100	4560	10100	20520	0.059
MM309K	**45**	**100**	**25**	**8 x 17.5**	**0.807**	**31700**	**58500**	**15200**	**28200**	**58500**	**18240**	**1.5**
	1.7717	3.9370	0.9843	8 x 11/16	1.78	7120	13200	15200	6340	13200	18240	0.059
MM310K	**50**	**110**	**27**	**8 x 19.1**	**1.052**	**37900**	**68600**	**13800**	**33700**	**68600**	**16560**	**1.5**
	1.9685	4.3307	1.0630	8 x 3/4	2.32	8510	15400	13800	7570	15400	16560	0.059
MM311K	**55**	**120**	**29**	**8 x 20.6**	**1.329**	**44600**	**79300**	**12500**	**39700**	**79300**	**15000**	**2.0**
	2.1654	4.7244	1.1417	8 x 13/16	2.93	10000	17800	12500	8920	17800	15000	0.079
MM312K	**60**	**130**	**31**	**8 x 22.2**	**1.665**	**51800**	**90700**	11500	**46100**	**90700**	13800	**2.0**
	2.3622	5.1181	1.2205	8 x 7/8	3.67	11700	20400	11500	10400	20400	13800	0.079
MM313K	**65**	**140**	**33**	**8 x 23.8**	**2.046**	**59700**	**102700**	**10700**	**53100**	**102700**	**12840**	**2.0**
	2.5591	5.5118	1.2992	8 x 15/16	4.51	13400	23100	10700	11900	23100	12840	0.079
MM314K	**70**	**150**	**35**	**8 x 25.4**	**2.486**	**68000**	**115500**	**9900**	**60600**	**115500**	**11880**	**2.0**
	2.7559	5.9055	1.3780	8 x 1	5.48	15300	26000	9900	13600	26000	11880	0.079

(Ng) For a single, grease-lubricated, spring-preloaded bearing. This value to be used in permissible operating speed (Sp) calculation.
(1) Width tolerance of preloaded bearing set +0.000/-0.254 mm (+0.0000/-0.0100 in.).
(2) ABMA STD 20 (r_{as} max).

DEEP-GROOVE (CONRAD) CONSTRUCTION

- Incorporates high shoulder on both inner and outer rings.
- Balls separated by two-piece and piloted cage.

Suggested Shoulder Diameters				Shaft Diameter		Mounting Fits		FIXED				FLOATING			
Shaft		Housing						Housing Bore (Stationary)		Mounting Fits		Housing Bore (Stationary)		Mounting Fits	
Max.	Min.	Max.	Min.	Max.	Min.	Loose	Tight	Max.	Min.	Tight	Loose	Max.	Min.	Loose	Loose
mm/in.		**mm**/in.		**mm**/in.		**mm**/in.		**mm**/in.		**mm**/in.		**mm**/in.		**mm**/in.	
32.1	**31.9**	**55.8**	**55.5**	**25.000**	**24.995**	**0.005**	**0.005**	**62.008**	**62.000**	**0.000**	**0.015**	**62.012**	**62.007**	**0.019**	**0.007**
1.27	1.26	2.20	2.19	0.98430	0.98410	0.00020	0.00020	2.44120	2.44090	0.00000	0.00060	2.44140	2.44120	0.00080	0.00030
37.7	**37.5**	**65.2**	**64.9**	**30.000**	**29.995**	**0.005**	**0.005**	**72.008**	**72.000**	**0.000**	**0.015**	**72.011**	**72.007**	**0.019**	**0.007**
1.49	1.48	2.57	2.56	1.18110	1.18090	0.00020	0.00020	2.83490	2.83460	0.00000	0.00060	2.83510	2.83490	0.00080	0.00030
43.7	**43.2**	**72.1**	**71.6**	**35.000**	**34.995**	**0.005**	**0.006**	**80.008**	**80.000**	**0.000**	**0.015**	**80.012**	**80.008**	**0.020**	**0.008**
1.72	1.70	2.84	2.82	1.37800	1.37780	0.00020	0.00025	3.14990	3.14960	0.00000	0.00060	3.15010	3.14990	0.00080	0.00030
49.8	**49.3**	**81.3**	**80.8**	**40.000**	**39.995**	**0.005**	**0.006**	**90.008**	**90.000**	**0.000**	**0.016**	**90.015**	**90.007**	**0.023**	**0.007**
1.96	1.94	3.20	3.18	1.57480	1.57460	0.00020	0.00025	3.54360	3.54330	0.00000	0.00060	3.54390	3.54360	0.00090	0.00030
55.9	**55.4**	**90.2**	**89.7**	**45.000**	**44.995**	**0.005**	**0.006**	**100.008**	**100.000**	**0.000**	**0.016**	**100.018**	**100.010**	**0.025**	**0.010**
2.20	2.18	3.55	3.53	1.77170	1.77150	0.00020	0.00025	3.93730	3.93700	0.00000	0.00060	3.93770	3.93740	0.00100	0.00040
61.2	**60.7**	**99.8**	**99.3**	**50.000**	**49.995**	**0.005**	**0.006**	**110.008**	**110.000**	**0.000**	**0.016**	**110.018**	**110.010**	**0.025**	**0.010**
2.41	2.39	3.93	3.91	1.96850	1.96830	0.00020	0.00025	4.33100	4.33070	0.00000	0.00060	4.33140	4.33110	0.00100	0.00040
67.3	**66.8**	**108.7**	**108.2**	**55.000**	**54.995**	**0.005**	**0.007**	**120.008**	**120.000**	**0.000**	**0.016**	**120.018**	**120.010**	**0.025**	**0.010**
2.65	2.63	4.28	4.26	2.16540	2.16520	0.00020	0.00030	4.72470	4.72440	0.00000	0.00060	4.72510	4.72480	0.00100	0.00040
43.2	**72.6**	**117.9**	**117.3**	**60.000**	**59.995**	**0.005**	**0.007**	**130.009**	**130.000**	**0.000**	**0.018**	**130.020**	**130.010**	**0.029**	**0.010**
2.88	2.86	4.64	4.62	2.36220	2.36200	0.00020	0.00030	5.11850	5.11810	0.00000	0.00070	5.11890	5.11850	0.00110	0.00040
80.3	**79.8**	**126.8**	**126.2**	**65.000**	**64.995**	**0.005**	**0.007**	**140.009**	**140.000**	**0.000**	**0.018**	**140.020**	**140.010**	**0.029**	**0.010**
3.16	3.14	4.99	4.97	2.55910	2.55890	0.00020	0.00030	5.51220	5.51180	0.00000	0.00070	5.51260	5.51220	0.00110	0.00040
85.3	**84.8**	**135.6**	**135.1**	**70.000**	**69.995**	**0.005**	**0.007**	**150.009**	**150.000**	**0.000**	**0.018**	**150.023**	**150.012**	**0.032**	**0.012**
3.36	3.34	5.34	5.32	2.75590	2.75570	0.00020	0.00030	5.90590	5.90550	0.00000	0.00070	5.90640	5.90600	0.00120	0.00050

BALL SCREW SUPPORT SERIES

METRIC SERIES

- Designed for maximum axial rigidity, low drag torque and extreme control of lateral eccentricity.
- Manufactured to ABEC 9/ISO P2 axial tolerances.
- Non-separable angular-contact type design (60 degree contact angle).
- Manufactured to ABEC 7/ISO P4 radial and envelope tolerances.
- Maximum complement of balls.
- Supplied prelubricated with heavy-duty grease NLGI #2.
- Packaged in DB arrangement [can be mounted in duplexed pairs and in multiplexed sets in either Back-to-Back (DB), Face-to-Face (DF) or Tandem (DT) arrangements].

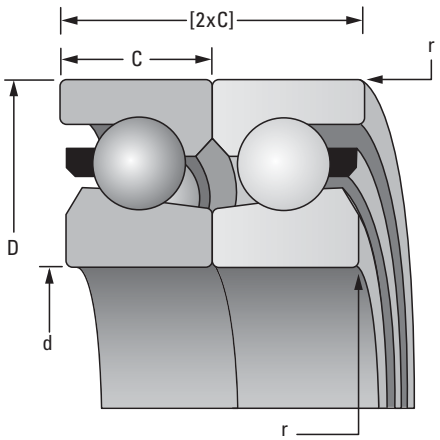

Bearing Number	d Bore	D O.D.	C Width(1)	Ball Qty. x Dia.	Wt.(2)	r Rad.(3)	Suggested Shoulder Diameters: Shaft Max.	Shaft Min.	Housing Max.	Housing Min.	Shaft Dia. Max.	Shaft Dia. Min.	Housing Dia. Max.	Housing Dia. Min.
	mm/in.			mm/in.	kg/lbs	mm/in.	mm/in.		mm/in.		mm/in.		mm/in.	
MM12BS32	**12**	**32**	**10**	**11 x 4.8**	**0.040**	**0.8**	**17.630**	**17.370**	**26.630**	**26.370**	**11.996**	**11.992**	**32.006**	**32.000**
	0.4724	1.2598	0.3937	11 x 3/16	0.09	0.031	0.6941	0.6839	1.0484	1.0382	0.4723	0.4721	1.2601	1.2598
MM15BS35	**15**	**35**	**11**	**13 x 4.8**	**0.050**	**0.8**	**20.630**	**20.370**	**29.630**	**29.370**	**14.996**	**14.992**	**35.006**	**35.000**
	0.5906	1.3780	0.4331	13 x 3/16	0.11	0.031	0.8122	0.8020	1.1665	1.1563	0.5904	0.5902	1.3782	1.3780
MM17BS47	**17**	**47**	**15**	**12 x 7.9**	**0.130**	**0.8**	**23.130**	**22.870**	**41.630**	**41.370**	**16.996**	**16.992**	**47.006**	**47.000**
	0.6693	1.8504	0.5906	12 x 5/32	0.29	0.031	0.9106	0.9004	1.6390	1.6287	0.6691	0.6690	1.8506	1.8504
MM20BS47	**20**	**47**	**15**	**12 x 7.9**	**0.120**	**0.8**	**26.130**	**25.870**	**41.630**	**41.370**	**19.995**	**19.990**	**47.006**	**47.000**
	0.7874	1.8504	0.5906	12 x 5/32	0.26	0.031	1.0287	1.0185	1.6390	1.6287	0.7872	0.7870	1.8506	1.8504
MM25BS52	**25**	**52**	**15**	**13 x 7.9**	**0.140**	**0.8**	**31.630**	**31.370**	**43.630**	**43.370**	**24.995**	**24.990**	**52.007**	**52.000**
	0.9843	2.0472	0.5906	13 x 5/32	0.37	0.031	1.2453	1.2350	1.7177	1.7075	0.9841	0.9839	2.0475	2.0472
MM25BS62	**25**	**62**	**15**	**17 x 7.9**	**0.230**	**0.8**	**35.130**	**34.870**	**56.130**	**55.870**	**24.995**	**24.990**	**62.007**	**62.000**
	0.9843	2.4409	0.5906	17 x 5/32	0.51	0.031	1.3831	1.3728	2.2098	2.1996	0.9841	0.9839	2.4412	2.4409
MM30BS62	**30**	**62**	**15**	**17 x 7.9**	**0.210**	**0.8**	**40.130**	**39.870**	**56.130**	**55.870**	**29.995**	**29.990**	**62.007**	**62.000**
	1.1811	2.4409	0.5906	17 x 5/32	0.46	0.031	1.5799	1.5697	2.2098	2.1996	1.1809	1.1807	2.4412	2.4409
MM30BS72	**30**	**72**	**15**	**18 x 8.7**	**0.320**	**0.8**	**40.130**	**39.870**	**56.130**	**55.870**	**29.995**	**29.990**	**72.007**	**72.000**
	1.1811	2.8346	0.5906	18 x 11/32	0.71	0.031	1.5799	1.5697	2.2098	2.1996	1.1809	1.1807	2.8349	2.8346
MM35BS72	**35**	**72**	**15**	**18 x 8.7**	**0.290**	**0.8**	**42.130**	**41.870**	**64.130**	**63.870**	**34.994**	**34.988**	**72.007**	**72.000**
	1.3780	2.8346	0.5906	18 x 11/32	0.64	0.031	1.6587	1.6484	2.5248	2.5146	1.3777	1.3775	2.8349	2.8346
MM35BS100	**35**	**100**	**20**	**18 x 12.7**	**0.860**	**0.8**	**42.130**	**41.870**	**90.130**	**89.870**	**34.994**	**34.998**	**100.007**	**100.000**
	1.3780	3.9370	0.7874	18 x 1/2	1.90	0.031	1.6587	1.6484	3.5484	3.5382	1.3777	1.3775	3.9373	3.9370
MM40BS72	**40**	**72**	**15**	**18 x 8.7**	**0.250**	**0.8**	**47.130**	**46.870**	**64.130**	**63.870**	**39.994**	**39.998**	**72.007**	**72.000**
	1.5748	2.8346	0.5906	18 x 11/32	0.55	0.031	1.8555	1.8453	2.5248	2.5146	1.5746	1.5743	2.8349	2.8346
MM40BS90	**40**	**90**	**15**	**24 x 8.7**	**0.490**	**0.8**	**47.130**	**46.870**	**82.130**	**81.870**	**39.994**	**39.988**	**90.008**	**90.000**
	1.5748	3.5433	0.5906	24 x 11/32	1.08	0.031	1.8555	1.8453	3.2335	3.2232	1.5746	1.5743	3.5436	3.5433
MM40BS90-20	**40**	**90**	**20**	**24 x 8.7**	**0.660**	**0.8**	**47.130**	**46.870**	**82.130**	**81.870**	**39.994**	**39.998**	**90.008**	**90.000**
	1.5748	3.5433	0.7874	24 x 11/32	1.46	0.031	1.8555	1.8453	3.2335	3.2232	1.5746	1.5743	3.5436	3.5433
MM40BS90-23	**40**	**90**	**23**	**24 x 8.7**	**0.750**	**0.8**	**47.130**	**46.870**	**82.130**	**81.870**	**39.994**	**39.988**	**90.008**	**90.000**
	1.5748	3.5433	0.9055	24 x 11/32	1.65	0.031	1.8555	1.8453	3.2335	3.2232	1.5746	1.5743	3.5436	3.5433

(1) Width tolerance of preloaded bearing set +0.000/-0.254 mm (+0.0000/-0.0100 in.).
(2) Single bearing.
(3) ABMA STD 20 (r_{as} max).

Continued on next page.

C

Bearing Number	d Bore	D O.D.	C Width[1]	Ball Qty. x Dia.	Wt.[2]	r Rad.[3]	Suggested Shoulder Diameters Shaft Max.	Shaft Min.	Housing Max.	Housing Min.	Shaft Dia. Max.	Shaft Dia. Min.	Housing Dia. Max.	Housing Dia. Min.
	mm/in.			mm/in.	kg/lbs	mm/in.	mm/in.		mm/in.		mm/in.		mm/in.	
MM40BS100	40	100	20	18 x 12.7	0.820	0.8	47.130	46.870	90.130	89.870	39.994	39.988	100.007	100.000
	1.5748	3.9370	0.7874	18 x 1/2	1.81	0.031	1.8555	1.8453	3.5484	3.5382	1.5746	1.5743	3.9373	3.9370
MM45BS75	45	75	15	20 x 8.7	0.250	0.8	52.130	51.870	69.130	68.870	44.994	44.988	75.007	75.000
	1.7717	2.9528	0.5906	20 x 11/32	0.55	0.031	2.0524	2.0421	2.7217	2.7114	1.7714	1.7712	2.9530	2.9528
MM45BS100	45	100	20	18 x 12.7	0.760	0.8	54.130	53.870	90.130	89.870	44.994	44.988	100.008	100.000
	1.7717	3.9370	0.7874	18 x1/2	1.68	0.031	2.1311	2.1209	3.5484	3.5382	1.7714	1.7712	3.9373	3.9370
MM50BS90	50	90	15	24 x 8.7	0.410	0.8	59.130	58.870	82.130	81.870	49.994	49.988	90.008	90.000
	1.9685	3.5433	0.5906	24 x 11/32	0.90	0.031	2.3280	2.3177	3.2335	3.2232	1.9683	1.9680	3.5436	3.5433
MM50BS100	50	100	20	18 x 12.7	0.710	0.8	59.130	58.870	90.130	89.870	49.994	49.988	100.008	100.000
	1.9685	3.9370	0.7874	18 x1/2	1.57	0.031	2.3280	2.3177	3.5484	3.5382	1.9683	1.9680	3.9373	3.9370
MM55BS90	55	90	15	24 x 8.7	0.360	0.8	63.130	62.870	82.130	81.870	54.993	54.986	90.008	90.000
	2.1654	3.5433	0.5906	24 x 11/32	0.79	0.031	2.4854	2.4752	3.2335	3.2232	2.1651	2.1648	3.5436	3.5433
MM55BS120	55	120	20	21 x 12.7	1.140	1.0	65.130	64.870	110.130	109.870	54.993	54.986	120.008	120.000
	2.1654	4.7244	0.7874	21 x 1/2	2.51	0.039	2.5642	2.5539	4.3358	4.3256	2.1651	2.1648	4.7247	4.7244
MM60BS120	60	120	20	21 x 12.7	1.060	1.0	70.130	69.870	110.130	109.870	59.993	59.986	120.008	120.000
	2.3622	4.7244	0.7874	21 x 1/2	2.34	0.039	2.7610	2.7508	4.3358	4.3256	2.3619	2.3617	4.7247	4.7244
MM75BS110	75	110	15	30 x 8.7	0.460	0.8	84.130	83.870	102.130	101.870	74.993	74.986	110.008	110.000
	2.9528	4.3307	0.5906	30 x 11/32	1.01	0.031	3.3122	3.3020	4.0209	4.0106	2.9525	2.9522	4.3310	4.3307
MM100BS150	100	150	20	26 x 12.7	1.280	1.0	110.130	109.870	138.130	137.870	99.992	99.984	150.009	150.000
	3.9370	5.9055	0.7874	26 x 1/2	2.82	0.039	4.3358	4.3256	5.4382	5.4280	3.9367	3.9364	5.9059	5.9055

[1] Width tolerance of preloaded bearing set +0.000/-0.254 mm (+0.0000/-0.0100 in.).
[2] Single bearing.
[3] ABMA STD 20 (r_{as} max).

BALL SCREW SUPPORT SERIES

INCH SERIES

- Designed for maximum axial rigidity, low drag torque, and extreme control of lateral eccentricity.
- Manufactured to ABEC 9/ISO P2 axial tolerances.
- Nonseparable angular-contact type design (60˚ contact angle).
- Manufactured to ABEC 7/ISO P4 radial and envelope tolerances.
- Maximum complement of balls.
- Supplied prelubricated with heavy-duty grease NLGI #2.
- Packaged in DB arrangement [can be mounted in duplexed pairs and in multiplexed sets in either Back-to-Back (DB), Face-to-Face (DF) or Tandem (DT) arrangements].

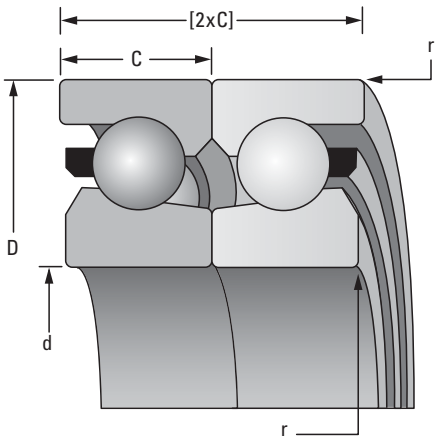

C

Bearing Number	d Bore	D O.D.	C Width(1)	Ball Qty. x Dia.	Wt.(2)	r Rad.(3)	Suggested Shoulder Diameters: Shaft Max.	Shaft Min.	Housing Max.	Housing Min.	Shaft Dia. Max.	Shaft Dia. Min.	Housing Dia. Max.	Housing Dia. Min.
	mm/in.			mm/in.	kg/lbs	mm/in.	mm/in.		mm/in.		mm/in.		mm/in.	
MM9306WI2H	**20**	**47**	**15.88**	**12 x 7.9**	**0.130**	**0.8**	**27.508**	**27.254**	**41.681**	**41.427**	**19.995**	**19.990**	**47.008**	**47.000**
	0.7874	1.8504	0.6250	12 x 5/16	0.28	0.031	1.0830	1.0730	1.6410	1.6310	0.7872	0.7870	1.8507	1.8504
MM9308WI2H	**23.8**	**62**	**15.88**	**17 x 7.9**	**0.250**	**0.8**	**33.553**	**33.299**	**55.347**	**55.093**	**23.833**	**23.828**	**62.006**	**61.999**
	0.9385	2.4409	0.6250	17 x 5/16	0.56	0.031	1.3210	1.3110	2.1790	2.1690	0.9383	0.9381	2.4412	2.4409
MM9310WI2H	**38.1**	**72**	**15.88**	**18 x 8.7**	**0.280**	**0.8**	**47.371**	**47.117**	**62.967**	**62.713**	**38.092**	**38.085**	**72.006**	**71.999**
	1.5000	2.8346	0.6250	18 x 11/32	0.62	0.031	1.8650	1.8550	2.4790	2.4690	1.4997	1.4994	2.8349	2.8346
MM9311WI3H	**44.5**	**76.2**	**15.88**	**20 x 8.7**	**0.290**	**0.8**	**52.248**	**51.994**	**67.869**	**67.615**	**44.468**	**44.460**	**76.208**	**76.200**
	1.7510	3.0000	0.6250	20 x 11/32	0.63	0.031	2.0570	2.0470	2.6720	2.6620	1.7507	1.7504	3.0003	3.0000
MM9313WI5H	**57.2**	**90**	**15.88**	**24 x 8.7**	**0.360**	**0.8**	**65.456**	**65.202**	**81.178**	**80.924**	**57.142**	**57.135**	**90.007**	**90.000**
	2.2500	3.5433	0.6250	24 x 11/32	0.80	0.031	2.5770	2.5670	3.1960	3.1860	2.2497	2.2494	3.5436	3.5433
MM9316WI3H	**76.2**	**110**	**15.88**	**30 x 8.7**	**0.470**	**0.8**	**85.852**	**85.598**	**101.600**	**101.346**	**76.192**	**76.185**	**110.007**	**110.000**
	3.0000	4.3307	0.6250	30 x 11/32	1.04	0.031	3.3800	3.3700	4.0000	3.9900	2.9997	2.9994	4.3310	4.3307
MM9321WI3H	**101.6**	**145**	**22.23**	**37 x 9.5**	**1.180**	**1.0**	**112.217**	**111.963**	**134.645**	**134.391**	**101.592**	**101.585**	**145.011**	**145.001**
	4.0000	5.7087	0.8750	37 x 3/8	2.60	0.039	4.4180	4.4080	5.3010	5.2910	3.9997	3.9994	5.7091	5.7087
MM9326WI6H	**127**	**180**	**22.23**	**35 x 12.7**	**1.750**	**1.0**	**143.993**	**143.739**	**167.919**	**167.665**	**126.992**	**126.985**	**180.010**	**180.000**
	5.0000	7.0866	0.8750	35 x 1/2	3.85	0.039	5.6690	5.6590	6.6110	6.6010	4.9997	4.9994	7.0870	7.0866

(1) Width tolerance of preloaded bearing set +0.000/-0.254 mm (+0.0000/-0.0100 in.).
(2) Single bearing.
(3) ABMA STD 20 (r_{as} max).

BALL SCREW SUPPORT SERIES

PERFORMANCE DATA
METRIC SERIES
DUH

Bearing Number	T_L Static Limiting Thrust Capacity[3]	C_{ae} Dynamic Axial Load Rating[1][3]	Speed Rating	Axial Spring Constant[3]	Drag Torque (Preloaded Set)	Preload[2][3] (Heavy)
	N lbs.	**N** lbs.	RPM	**N/µm** 10^6 lbs./in	**N-m** lbs.-in.	**N** lbs.
MM12BS32DUH	**11400**	**9500**	**7300**	**425**	**0.28**	**1000**
	2600	2140	7300	2.4	2.48	200
MM15BS35DUH	**13700**	**10400**	**6400**	**490**	**0.30**	**1200**
	3100	2340	6400	2.8	2.65	300
MM17BS47DUH	**24900**	**24900**	**4700**	**750**	**0.32**	**3110**
	5600	5600	4700	4.3	2.83	700
MM20BS47DUH	**24900**	**24900**	**4700**	**750**	**0.32**	**3110**
	5600	5600	4700	4.3	2.83	700
MM25BS52DUH	**27100**	**26000**	**4300**	**780**	**0.39**	**2700**
	6100	5850	4300	4.5	3.45	600
MM25BS62DUH	**35600**	**29800**	**3300**	**1050**	**0.44**	**4450**
	8000	6700	3300	6.0	3.88	1000
MM30BS62DUH	**35600**	**29800**	**3300**	**1050**	**0.44**	**4450**
	8000	6700	3300	6.0	3.88	1000
MM30BS72DUH	**45400**	**36300**	**2900**	**1260**	**0.44**	**6230**
	10200	8160	2900	7.2	3.88	1400
MM35BS72DUH	**45400**	**36300**	**2900**	**1260**	**0.44**	**6230**
	10200	8160	2900	7.2	3.88	1400
MM40BS72DUH	**45400**	**36300**	**2900**	**1260**	**0.44**	**6230**
	10200	8160	2900	7.2	3.88	1400
MM45BS75DUH	**50700**	**38500**	**2700**	**1380**	**0.56**	**6670**
	11400	8660	2700	7.9	4.96	1500
MM40BS90DUH	**60900**	**41400**	**2200**	**1660**	**0.82**	**8010**
	13700	9310	2200	9.5	7.26	1800
MM40BS90-20DUH	**60900**	**41400**	**2200**	**1660**	**0.82**	**8010**
	13700	9310	2200	9.5	7.26	1800
MM40BS90-23DUH	**60900**	**41400**	**2200**	**1660**	**0.82**	**8010**
	13700	9310	2200	9.5	7.26	1800
MM50BS90DUH	**60900**	**41400**	**2200**	**1660**	**0.82**	**8010**
	13700	9310	2200	9.5	7.26	1800
MM55BS90DUH	**60900**	**41400**	**2200**	**1660**	**0.82**	**8010**
	13700	9310	2200	9.5	7.26	1800
MM35BS100DUH	**93400**	**71200**	**2000**	**1750**	**1.02**	**12900**
	21000	16010	2000	10.0	9.03	2900
MM40BS100DUH	**93400**	**71200**	**2000**	**1750**	**1.02**	**12900**
	21000	16010	2000	10.0	9.03	2900
MM45BS100DUH	**93400**	**71200**	**2000**	**1750**	**1.02**	**12900**
	21000	16010	2000	10.0	9.03	2900
MM50BS100DUH	**93400**	**71200**	**2000**	**1750**	**1.02**	**12900**
	21000	16010	2000	10.0	9.03	2900
MM75BS110DUH	**77000**	**44500**	**1700**	**2080**	**1.00**	**9790**
	17300	10000	1700	11.9	8.85	2200
MM55BS120DUH	**133400**	**75600**	**1700**	**2150**	**1.36**	**15570**
	30000	17000	1700	12.3	12.04	3500
MM60BS120DUH	**133400**	**75600**	**1700**	**2150**	**1.36**	**15570**
	30000	17000	1700	12.3	12.04	3500
MM100BS150DUH	**200500**	**80900**	**1300**	**3400**	**2.18**	**21350**
	45100	18200	1300	19.4	19.29	4800

(1) Based on 1500 hours L_{10} life and permissible speed.
(2) Heavy preload is standard.
(3) Data presented is for a single bearing in a DUH set.

C

BALL SCREW SUPPORT SERIES

PERFORMANCE DATA
METRIC SERIES
QUH

Bearing Number	T_L Static Limiting Thrust Capacity[3]	C_{ae} Dynamic Axial Load Rating[1][3]	Speed Rating	Axial Spring Constant[3]	Drag Torque (Preloaded Set)	Preload[2][3] (Heavy)
	N lbs.	**N** lbs.	RPM	**N/µm** 10^6 lbs./in	**N-m** lbs.-in.	**N** lbs.
MM12BS32QUH	**22800**	**15400**	**5100**	**850**	**0.56**	**2000**
	5100	3500	5100	4.9	4.96	400
MM15BS35QUH	**27400**	**16850**	**4500**	**980**	**0.60**	**2400**
	6200	3800	4500	5.6	5.31	500
MM17BS47QUH	**49800**	**40500**	**3700**	**1510**	**0.64**	**6230**
	11200	9100	3700	8.6	5.65	1400
MM20BS47QUH	**49800**	**40500**	**3700**	**1510**	**0.64**	**6230**
	11200	9100	3700	8.6	5.65	1400
MM25BS52QUH	**54300**	**42300**	**3700**	**1560**	**0.49**	**5400**
	12200	9500	3700	8.9	6.90	1200
MM25BS62QUH	**71200**	**48500**	**2700**	**2100**	**0.88**	**8900**
	16000	10900	2700	12.0	7.78	2000
MM30BS62QUH	**71200**	**48500**	**2700**	**2100**	**0.88**	**8900**
	16000	10900	2700	12.0	7.78	2000
MM30BS72QUH	**90700**	**58700**	**2100**	**2520**	**0.88**	**12450**
	20400	13200	2100	14.4	7.78	2800
MM35BS72QUH	**90700**	**58700**	**2100**	**2520**	**0.88**	**12450**
	20400	13200	2100	14.4	7.78	2800
MM40BS72QUH	**90700**	**58700**	**2100**	**2520**	**0.88**	**12450**
	20400	13200	2100	14.4	7.78	2800
MM45BS75QUH	**101400**	**62700**	**1800**	**2770**	**1.12**	**13340**
	22800	14100	1800	15.8	9.92	3000
MM40BS90QUH	**121900**	**67200**	**1700**	**3330**	**1.64**	**16010**
	27400	15100	1700	19.0	14.51	3600
MM50BS90QUH	**121900**	**67200**	**1700**	**3330**	**1.64**	**16010**
	27400	15100	1700	19.0	14.51	3600
MM55BS90QUH	**121900**	**67200**	**1700**	**3330**	**1.64**	**16010**
	27400	15100	1700	19.0	14.51	3600
MM35BS100QUH	**186800**	**115600**	**1400**	**3500**	**2.04**	**25800**
	42000	26000	1400	20.0	18.05	5800
MM40BS100QUH	**186800**	**115600**	**1400**	**3500**	**2.04**	**25800**
	42000	26000	1400	20.0	18.05	5800
MM45BS100QUH	**186800**	**115600**	**1400**	**3500**	**2.04**	**25800**
	42000	26000	1400	20.0	18.05	5800
MM50BS100QUH	**186800**	**115600**	**1400**	**3500**	**2.04**	**25800**
	42000	26000	1400	20.0	18.05	5800
MM75BS110QUH	**153900**	**72100**	**1200**	**4170**	**2.00**	**19570**
	34600	16200	1200	23.8	17.70	4400
MM55BS120QUH	**266900**	**122800**	**1200**	**4310**	**2.72**	**31140**
	60000	27600	1200	24.6	24.08	7000
MM60BS120QUH	**266900**	**122800**	**1200**	**4310**	**2.72**	**31140**
	60000	27600	1200	24.6	24.08	7000
MM100BS150QUH	**401000**	**131500**	**900**	**6790**	**4.36**	**42700**
	90100	29500	900	38.8	38.59	9600

(1) Based on 1500 hours L_{10} life and permissible speed.
(2) Heavy preload is standard.
(3) Data presented is for two bearings in a QUH set mounted DB or DF.

BALL SCREW SUPPORT SERIES

PERFORMANCE DATA
INCH SERIES
DUH/QUH

Bearing Number	T_L Static Limiting Thrust Capacity[3]	C_{ae} Dynamic Axial Load Rating[1][3]	Speed Rating	Axial Spring Constant[3]	Drag Torque (Preloaded Set)	Preload[2][3] (Heavy)
	N lbs.	**N** lbs.	RPM	**N/µm** 10 lbs./in	**N-m** lbs.-in.	**N** **lbs.**
MM9306WI2HDUH	**24900**	**24900**	**4400**	**750**	**0.32**	**3110**
	5600	5600	4400	4.3	2.83	700
MM9308WI2HDUH	**35600**	**29800**	**3200**	**1050**	**0.44**	**4450**
	8000	6700	3200	6.0	3.89	1000
MM9310WI2HDUH	**45400**	**36300**	**2500**	**1260**	**0.44**	**6230**
	10200	8150	2500	7.2	3.89	1400
MM9311WI3HDUH	**50700**	**38500**	**2100**	**1380**	**0.56**	**6670**
	11400	8650	2100	7.9	4.96	1500
MM9313WI5HDUH	**60900**	**41400**	**2000**	**1660**	**0.82**	**8010**
	13700	9300	2000	9.5	7.26	1800
MM9316WI3HDUH	**77000**	**44500**	**1400**	**2080**	**1.00**	**9790**
	17300	10000	1400	11.9	8.85	2200
MM9321WI3DUH	**115700**	**57400**	**1000**	**3400**	**1.02**	**21350**
	26000	12900	1000	19.4	9.01	4800
MM9326WI6HDUH	**186800**	**94300**	**750**	**3630**	**1.26**	**26690**
	42000	21200	750	20.7	11.10	6000
MM9306WI2HQUH	**49800**	**40500**	**3700**	**1510**	**0.64**	**6230**
	11200	9100	3700	8.6	5.66	1400
MM9308WI2HQUH	**71200**	**48500**	**2700**	**2100**	**0.88**	**8900**
	16000	10900	2700	12.0	7.78	2000
MM9310WI2HQUH	**90700**	**58700**	**2100**	**2520**	**0.88**	**12450**
	20400	13200	2100	14.4	7.78	2800
MM9311WI3HQUH	**101400**	**62700**	**1800**	**2770**	**1.12**	**13340**
	22800	14100	1800	15.8	9.92	3000
MM9313WI5HQUH	**121900**	**67200**	**1700**	**3330**	**1.64**	**16010**
	27400	15100	1700	19.0	14.52	3600
MM9316WI3HQUH	**153900**	**72100**	**1200**	**4170**	**2.00**	**19570**
	34600	16200	1200	23.8	17.70	4400
MM9321WI3QUH	**231300**	**93400**	**900**	**6800**	**2.04**	**42700**
	52000	21000	900	38.8	18.02	9600
MM9326WI6HQUH	**373600**	**153000**	**600**	**7250**	**2.51**	**53380**
	84000	34400	600	41.4	22.22	12000

(1) Based on 1500 hours L_{10} life and permissible speed.
(2) Heavy preload is standard.
(3) Data presented is for a single bearing in a DUH set and for two bearings in a QUH set mounted DB or DF.

C

BALL SCREW SUPPORT BEARING CARTRIDGE UNITS

BSBU D – STANDARD AND HEAVY-DUTY BEARINGS

- Designed and developed to give the machine manufacturer a ready-made unit providing excellent stiffness and accuracy in ball screw applications.
- Units combine the features of MM-BS-DU (Duplex) ball screw support bearings with an accurately manufactured housing and laminar ring seals.
- Each unit is prepacked with a measured quantity of high quality bearing grease and requires no further lubrication.
- Units are supplied with the bearings in pairs mounted in the "DB" ("O") arrangement.
- Other bearing arrangements can be accommodated if required. Please consult your Timken representative with details of your requirements or for suggested shaft and housing fits.
- For load and speed ratings, refer to bearing data on page 203.

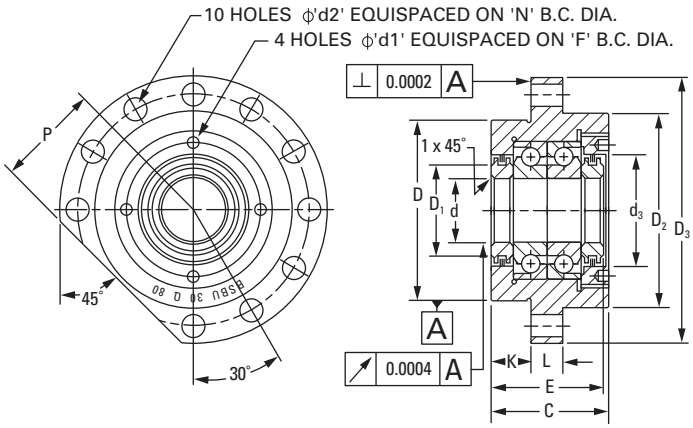

C

STANDARD SERIES – DIMENSIONAL TOLERANCES ±0.13 mm (± 0.005 in.) UNLESS OTHERWISE STATED.

Shaft Dia.	Unit Number (Bearing Set)	C	d	d_1	d_2	d_3	D	D_1	D_2	D_3	E	F	K	L	N	P	Wt.
mm		mm in.	mm in.	mm in.	mm in.	mm in.	mm in.	mm in.	mm in.	mm in.	mm in.	mm in.	mm in.	mm in.	mm in.	mm in.	kg lbs.
17	BSBU17D60	**47.0**	**17.000**	**4.3**	**6.6**	**36.0**	**60.000**	**26.0**	**64.0**	**90.0**	**44.26**	**42.5**	**32.0**	**13.0**	**76.0**	**32**	**1.1**
			16.996				**59.987**				**43.24**						
	(MM17BS47DUH)	1.85	0.6693	0.17	0.26	1.42	2.3622	1.02	2.52	3.54	1.742	1.67	1.26	0.51	2.99	1.26	2.42
			0.6691				2.3617				1.702						
20	BSBU20D60	**47.0**	**20.000**	**4.3**	**6.6**	**36.0**	**60.000**	**26.0**	**64.0**	**90.0**	**44.26**	**42.5**	**32.0**	**13.0**	**76.0**	**32**	**1.1**
			19.996				**59.987**				**43.24**						
	(MM20BS47DUH)	1.85	0.7874	0.17	0.26	1.42	2.3622	1.02	2.52	3.54	1.742	1.67	1.26	0.51	2.99	1.26	2.42
			0.7872				2.3617				1.702						
25	BSBU25D80	**52.0**	**25.000**	**4.3**	**9.2**	**50.0**	**80.000**	**40.0**	**88.0**	**120.0**	**50.26**	**59.5**	**32.0**	**15.0**	**102.0**	**44**	**2.3**
			24.996				**79.987**				**49.24**						
	(MM25BS62DUH)	2.05	0.9842	0.17	0.36	1.97	3.1496	1.57	3.46	4.72	1.979	2.34	1.26	0.59	4.02	1.73	5.06
			0.9841				3.1491				1.938						
30	BSBU30D80	**52.0**	**30.000**	**4.3**	**9.2**	**50.0**	**80.000**	**40.0**	**88.0**	**120.0**	**50.26**	**59.5**	**32.0**	**15.0**	**102.0**	**44**	**2.2**
			29.996				**79.987**				**49.24**						
	(MM30BS62DUH)	2.05	1.1811	0.17	0.36	1.97	3.1496	1.57	3.46	4.72	1.979	2.34	1.26	0.59	4.02	1.73	4.84
			1.1809				3.1491				1.938						
35	BSBU35D90	**52.0**	**35.000**	**4.3**	**9.2**	**60.0**	**90.000**	**46.0**	**98.0**	**130.0**	**50.26**	**66.5**	**32.0**	**15.0**	**113.0**	**49**	**3.2**
			34.995				**89.985**				**49.24**						
	(MM35BS72DUH)	2.05	1.378	0.17	0.36	2.36	3.5433	1.81	3.86	5.12	1.979	2.62	1.26	0.59	4.45	1.93	7.04
			1.3778				3.5427				1.938						
40	BSBU40D90	**52.0**	**40.000**	**4.3**	**9.2**	**60.0**	**90.000**	**46.0**	**98.0**	**130.0**	**50.26**	**66.5**	**32.0**	**15.0**	**113.0**	**49**	**3.1**
			39.995				**89.985**				**49.24**						
	(MM40BS72DUH)	2.05	1.5748	0.17	0.36	2.36	3.5433	1.81	3.86	5.12	1.979	2.62	1.26	0.59	4.45	1.93	6.82
			1.5746				3.5427				1.938						
HEAVY-DUTY SERIES																	
35	BSBU35D124	**66.0**	**35.000**	**5.3**	**11.4**	**76.0**	**124.000**	**66.0**	**128.0**	**165.0**	**64.26**	**90.0**	**43.5**	**17.0**	**146.0**	**64**	**6.3**
			34.995				**123.982**				**63.24**						
	(MM35BS100DUH)	2.60	1.3780	0.21	0.45	2.99	4.8819	2.60	5.04	6.50	2.530	3.54	1.71	0.67	5.75	2.52	13.86
			1.3778				4.8812				2.490						
40	BSBU40D124	**66.0**	**40.000**	**5.3**	**11.4**	**76.0**	**124.000**	**66.0**	**128.0**	**165.0**	**64.26**	**90.0**	**43.5**	**17.0**	**146.0**	**64**	**6.1**
			39.995				**123.982**				**63.24**						
	(MM40BS100DUH)	2.60	1.5748	0.21	0.45	2.99	4.8819	2.60	5.04	6.50	2.530	3.54	1.71	0.67	5.75	2.52	13.42
			1.5746				4.8812				2.490						
45	BSBU45D124	**66.0**	**45.000**	**5.3**	**11.4**	**76.0**	**124.000**	**66.0**	**128.0**	**165.0**	**64.26**	**90.0**	**43.5**	**17.0**	**146.0**	**64**	**6.0**
			44.995				**123.982**				**63.24**						
	(MM45BS100DUH)	2.60	1.7716	0.21	0.45	2.99	4.8819	2.60	5.04	6.50	2.530	3.54	1.71	0.67	5.75	2.52	13.20
			1.7714				4.8812				2.490						
50	BSBU50D124	**66.0**	**50.000**	**5.3**	**11.4**	**76.0**	**124.000**	**66.0**	**128.0**	**165.0**	**64.26**	**90.0**	**43.5**	**17.0**	**146.0**	**64**	**5.9**
			49.995				**123.982**				**63.24**						
	(MM50BS100DUH)	2.60	1.9685	0.21	0.45	2.99	4.8819	2.60	5.04	6.50	2.530	3.54	1.71	0.67	5.75	2.52	12.89
			1.9683				4.8812				2.490						

BALL SCREW SUPPORT BEARING CARTRIDGE UNITS

BSBU Q – STANDARD AND HEAVY-DUTY BEARINGS

- Similar in design and features to the series BSBU D except MM-BS-QU Quadruplex bearings are used.
- Units are supplied with the bearings in quad sets mounted in the "DB" ("O") arrangement.
- Consult your Timken representative for suggested shaft fits.
- For load and speed ratings, refer to bearing data on page 204.

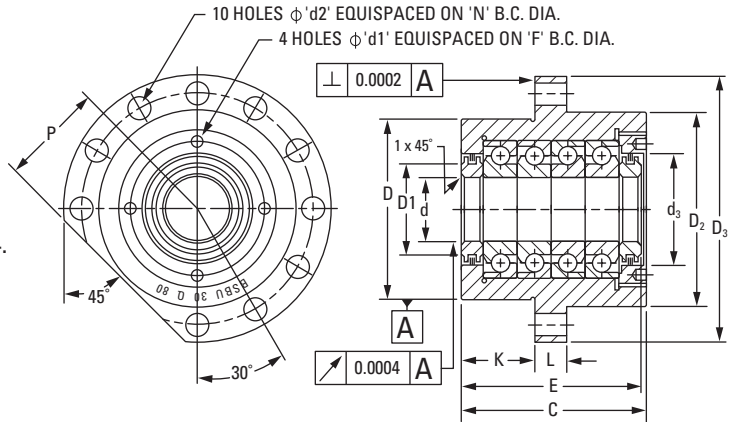

C

STANDARD SERIES – DIMENSIONAL TOLERANCES ±0.13 mm (± 0.005 in.) UNLESS OTHERWISE STATED.

Shaft Dia.	Unit Number (Bearing Set)	C	d	d_1	d_2	d_3	D	D_1	D_2	D_3	E	F	K	L	N	P	Wt.
mm		mm in.	mm in.	mm in.	mm in.	mm in.	mm in.	mm in.	mm in.	mm in.	mm in.	mm in.	mm in.	mm in.	mm in.	mm in.	kg lbs.
17	BSBU17Q60	**77.0**	**17.000**	**4.3**	**6.6**	**36.0**	**60.000**	**26.0**	**64.0**	**90.0**	**74.26**	**42.5**	**32.0**	**13.0**	**76.0**	**32.0**	**1.7**
			16.996				**59.987**				**72.74**						
	(MM17BS47QUH)	3.03	0.6693	0.17	0.26	1.42	2.3622	1.02	2.52	3.54	2.924	1.67	1.26	0.51	2.99	1.26	3.74
			0.6690				2.3617				2.864						
20	BSBU20Q60	**77.0**	**20.000**	**4.3**	**6.6**	**36.0**	**60.000**	**26.0**	**64.0**	**90.0**	**74.26**	**42.5**	**32.0**	**13.0**	**76.0**	**32.0**	**1.7**
			19.996				**59.987**				**72.74**						
	(MM20BS47QUH)	3.03	0.7874	0.17	0.26	1.42	2.3622	1.02	2.52	3.54	2.924	1.67	1.26	0.51	2.99	1.26	3.74
			0.7872				2.3617				2.864						
25	BSBU25Q80	**82.0**	**25.000**	**4.3**	**9.2**	**50.0**	**80.000**	**40.0**	**88.0**	**120.0**	**80.26**	**59.5**	**32.0**	**15.0**	**102.0**	**44.0**	**3.5**
			24.996				**79.987**				**78.74**						
	(MM25BS62QUH)	3.23	0.9842	0.17	0.36	1.97	3.1496	1.57	3.46	4.72	3.160	2.34	1.26	0.59	4.02	1.73	7.70
			0.9841				3.1491				3.100						
30	BSBU30Q80	**82.0**	**30.000**	**4.3**	**9.2**	**50.0**	**80.000**	**40.0**	**88.0**	**120.0**	**80.26**	**59.5**	**32.0**	**15.0**	**102.0**	**44.0**	**3.4**
			29.996				**79.987**				**78.74**						
	(MM30BS62QUH)	3.23	1.1811	0.17	0.36	1.97	3.1496	1.57	3.46	4.72	3.160	2.34	1.26	0.59	4.02	1.73	7.48
			1.1809				3.1491				3.100						
35	BSBU35Q90	**82.0**	**35.000**	**4.3**	**9.2**	**60.0**	**90.000**	**46.0**	**98.0**	**130.0**	**80.26**	**66.5**	**32.0**	**15.0**	**113.0**	**49.0**	**4.6**
			34.995				**89.985**				**78.74**						
	(MM35BS72QUH	3.23	1.3780	0.17	0.36	2.36	3.5433	1.81	3.86	5.12	3.160	2.62	1.26	0.59	4.45	1.93	10.12
			1.3778				3.5427				3.100						
40	BSBU40Q90	**82.0**	**40.000**	**4.3**	**9.2**	**60.0**	**90.000**	**46.0**	**98.0**	**130.0**	**80.26**	**66.5**	**32.0**	**15.0**	**113.0**	**49.0**	**4.5**
			39.995				**89.985**				**78.74**						
	(MM40BS72QUH)	3.23	1.5748	0.17	0.36	2.36	3.5433	1.81	3.86	5.12	3.160	2.62	1.26	0.59	4.45	1.93	9.90
			1.5746				3.5427				3.100						
HEAVY-DUTY SERIES																	
35	BSBU35Q124	**106.0**	**35.000**	**5.3**	**11.4**	**76.0**	**124.000**	**66.0**	**128.0**	**165.0**	**104.26**	**90.0**	**43.5**	**17.0**	**146.0**	**64.0**	**10.1**
			34.995				**123.982**				**102.74**						
	(MM35BS100QUH)	4.17	1.3780	0.21	0.45	2.99	4.8819	2.60	5.04	6.50	4.105	3.54	1.71	0.67	5.75	2.52	22.22
			1.3778				4.8812				4.045						
40	BSBU40Q124	**106.0**	**40.000**	**5.3**	**11.4**	**76.0**	**124.000**	**66.0**	**128.0**	**165.0**	**104.26**	**90.0**	**43.5**	**17.0**	**146.0**	**64.0**	**9.7**
			39.995				**123.982**				**102.74**						
	(MM40BS100QUH)	4.17	1.5748	0.21	0.45	2.99	4.8819	2.60	5.04	6.50	4.105	3.54	1.71	0.67	5.75	2.52	21.34
			1.5746				4.8812				4.045						
45	BSBU45Q124	**106.0**	**45.000**	**5.3**	**11.4**	**76.0**	**124.000**	**66.0**	**128.0**	**165.0**	**104.26**	**90.0**	**43.5**	**17.0**	**146.0**	**64.0**	**9.5**
			44.995				**123.982**				**102.74**						
	(MM45BS100QUH)	4.17	1.7716	0.21	0.45	2.99	4.8819	2.60	5.04	6.50	4.105	3.54	1.71	0.67	5.75	2.52	20.90
			1.7714				4.8812				4.045						
50	BSBU50Q124	**106.0**	**50.000**	**5.3**	**11.4**	**76.0**	**124.000**	**66.0**	**128.0**	**165.0**	**104.26**	**90.0**	**43.5**	**17.0**	**146.0**	**64.0**	**9.3**
			49.995				**123.982**				**102.74**						
	(MM50BS100QUH)	4.17	1.9685	0.21	0.45	2.99	4.8819	2.60	5.04	6.50	4.105	3.54	1.71	0.67	5.75	2.52	20.46
			1.9683				4.8812				4.045						

BALL SCREW SUPPORT BEARING PILLOW BLOCK UNITS

BSPB D – STANDARD AND HEAVY-DUTY BEARINGS

- Designed for ball screw applications.
- Incorporates similar features to the series BSBU D but is designed to bolt down onto a flat surface, parallel to the ball screw axis.
- In the standard unit, pilot holes for dowels are provided.
- Units are supplied with the bearings in duplex sets mounted in the "DB" ("O") arrangement.
- Units with finished holes for dowels can be supplied by special order if required.
- Consult your Timken representative for suggested shaft fits.
- For load and speed ratings, refer to bearing data on page 203.

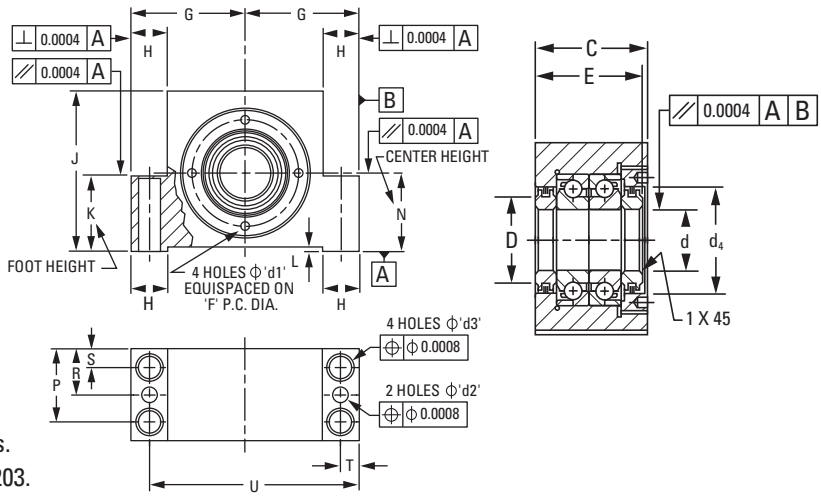

C

STANDARD SERIES – DIMENSIONAL TOLERANCES ±0.13 mm (± 0.005 in.) UNLESS OTHERWISE STATED.

Shaft Dia.	Unit Number (Bearing Set)	C	d	d_1	d_2	d_3	d_4	D	E	F	G	H	J	K	L	N	P	R	S	T	U	Wt.
mm		mm in.	mm in.	mm in.	mm in.	mm in.	mm in.	mm in.	mm in.	mm in.	mm in.	mm in.	mm in.	mm in.	mm in.	mm in.	mm in.	mm in.	mm in.	mm in.	mm in.	kg lbs.
17	BSPB17D32	**47.000**	**17.000**	**4.3**	**7.8**	**9.0**	**36.0**	**26.0**	**44.26**	**42.5**	**47.000**	**17**	**62**	**32.0**	**1.0**	**32.000**	**38.0**	**22.0**	**9.0**	**8.5**	**85.5**	**1.5**
		46.950	**16.996**						**43.24**		**46.987**					**31.987**						
	(MM17BS47DUH)	1.850	0.6693	0.17	0.31	0.35	1.42	1.02	1.742	1.67	1.8504	0.67	2.44	1.26	0.04	1.2598	1.50	0.87	0.35	0.33	3.37	3.30
		1.848	0.6691						1.702		1.8499					1.2593						
20	BSPB20D32	**47.000**	**20.000**	**4.3**	**7.8**	**9.0**	**36.0**	**26.0**	**44.26**	**42.5**	**47.000**	**17**	**62**	**32.0**	**1.0**	**32.000**	**38.0**	**22.0**	**9.0**	**8.5**	**85.5**	**1.5**
		46.950	**19.996**						**43.24**		**46.987**					**31.987**						
	(MM20BS47DUH)	1.850	0.7874	0.17	0.31	0.35	1.42	1.02	1.742	1.67	1.8504	0.67	2.44	1.26	0.04	1.2598	1.50	0.87	0.35	0.33	3.37	3.30
		1.848	0.7872						1.702		1.8499					1.2593						
25	BSPB25D42	**52.000**	**25.000**	**4.3**	**9.8**	**11.0**	**50.0**	**40.0**	**50.26**	**59.5**	**62.500**	**20**	**85**	**42.0**	**1.0**	**42.000**	**42.0**	**25.0**	**10.0**	**10.0**	**115.0**	**2.8**
		51.950	**24.996**						**49.24**		**62.487**					**41.987**						
	(MM25BS62DUH)	2.047	0.9842	0.17	0.39	0.43	1.97	1.57	1.979	2.34	2.4606	0.79	3.35	1.65	0.04	1.6535	1.65	0.98	0.39	0.39	4.53	6.16
		2.045	0.9841						1.938		2.4601					1.6530						
30	BSPB30D42	**52.000**	**30.000**	**4.3**	**9.8**	**11.0**	**50.0**	**40.0**	**50.26**	**59.5**	**62.500**	**20**	**85**	**42.0**	**1.0**	**42.000**	**42.0**	**25.0**	**10.0**	**10.0**	**115.0**	**2.7**
		51.920	**29.996**						**49.24**		**62.487**					**41.987**						
	(MM30BS62DUH)	2.047	1.1811	0.17	0.39	0.43	1.97	1.57	1.979	2.34	2.4606	0.79	3.35	1.65	0.04	1.6535	1.65	0.98	0.39	0.39	4.53	5.94
		2.045	1.1809						1.938		2.4601					1.6530						
35	BSPB35D50	**52.000**	**35.000**	**4.3**	**13.0**	**13.0**	**60.0**	**46.0**	**50.26**	**66.5**	**68.000**	**20.5**	**95**	**50**	**1.0**	**50.000**	**42.0**	**25.0**	**10.0**	**10.0**	**126.0**	**3.8**
		51.950	**34.995**						**49.24**		**67.987**					**49.987**						
	(MM35BS72DUH)	2.047	1.3780	0.17	0.51	0.51	2.36	1.81	1.979	2.62	2.6772	0.81	3.74	1.97	0.04	1.9685	1.65	0.98	0.39	0.39	4.96	8.36
		2.045	1.3778						1.938		2.6767					1.9680						
40	BSPB40D50	**52.000**	**40.000**	**4.3**	**13.0**	**13.0**	**60.0**	**46.0**	**50.26**	**66.5**	**68.000**	**20.5**	**95**	**50.0**	**1.0**	**50.000**	**42.0**	**25.0**	**10.0**	**10.0**	**126.0**	**3.7**
		51.950	**39.995**						**49.24**		**67.987**					**49.987**						
	(MM40BS72DUH)	2.047	1.5748	0.17	0.51	0.51	2.36	1.81	1.979	2.62	2.6772	0.81	3.74	1.97	0.04	1.9685	1.65	0.98	0.39	0.39	4.96	8.14
		2.045	1.5746						1.938		2.6767					1.9680						
HEAVY-DUTY SERIES																						
35	BSPB35D65	**66.000**	**35.000**	**5.3**	**11.8**	**18.0**	**76.0**	**66.0**	**64.26**	**90.0**	**95.000**	**30.0**	**130.0**	**65.0**	**1.0**	**65.000**	**53.0**	**32.0**	**13.0**	**15.0**	**175.0**	**9.7**
		65.950	**34.995**						**63.24**		**94.987**					**64.987**						
	(MM35BS100DUH)	2.598	1.3780	0.21	0.46	0.71	2.99	2.60	2.530	3.54	3.7402	1.18	5.12	2.56	0.04	2.5590	2.09	1.26	0.51	0.59	6.89	21.34
		2.596	1.3778						2.490		3.7396					2.5585						
40	BSPB40D65	**66.000**	**40.000**	**5.3**	**11.8**	**18.0**	**76.0**	**66.0**	**64.26**	**90.0**	**95.000**	**30.0**	**130.0**	**65.0**	**1.0**	**65.000**	**53.0**	**32.0**	**13.0**	**15.0**	**175.0**	**9.5**
		65.950	**39.995**						**63.24**		**94.987**					**64.987**						
	(MM40BS100DUH)	2.598	1.5748	0.21	0.46	0.71	2.99	2.60	2.530	3.54	3.7402	1.18	5.12	2.56	0.04	2.5590	2.09	1.26	0.51	0.59	6.89	20.90
		2.596	1.5746						2.490		3.7396					2.5585						
45	BSPB45D65	**66.000**	**45.000**	**5.3**	**11.8**	**18.0**	**76.0**	**66.0**	**64.26**	**90.0**	**95.000**	**30.0**	**130.0**	**65.0**	**1.0**	**65.000**	**53.0**	**32.0**	**13.0**	**15.0**	**175.0**	**9.3**
		65.950	**44.995**						**63.24**		**94.987**					**64.987**						
	(MM45BS100DUH)	2.598	1.7716	0.21	0.46	0.71	2.99	2.60	2.530	3.54	3.7402	1.18	5.12	2.56	0.04	2.5590	2.09	1.26	0.51	0.59	6.89	20.46
		2.596	1.7714						2.490		3.7396					2.5585						
50	BSPB50D65	**66.000**	**50.000**	**5.3**	**11.8**	**18.0**	**76.0**	**66.0**	**64.26**	**90.0**	**95.000**	**30.0**	**130.0**	**65.0**	**1.0**	**65.000**	**53.0**	**32.0**	**13.0**	**15.0**	**175.0**	**9.1**
		65.950	**49.995**						**63.24**		**94.987**					**64.987**						
	(MM50BS100DUH)	2.598	1.9685	0.21	0.46	0.71	2.99	2.60	2.530	3.54	3.7402	1.18	5.12	2.56	0.04	2.5590	2.09	1.26	0.51	0.59	6.89	20.02
		2.596	1.9683						2.490		3.7396					2.5585						

BALL SCREW SUPPORT BEARING PILLOW BLOCK UNITS

BSPB Q – STANDARD AND HEAVY-DUTY BEARINGS

- Similar in design and features to the Series BSPB D, except MM-BS-QU Quadruplex bearings are used.
- Units are supplied with the bearings in quad sets mounted in the "DB" ("O") arrangement.
- Consult your Timken representative for suggested shaft fits.
- For load and speed ratings, refer to bearing data on page 204.

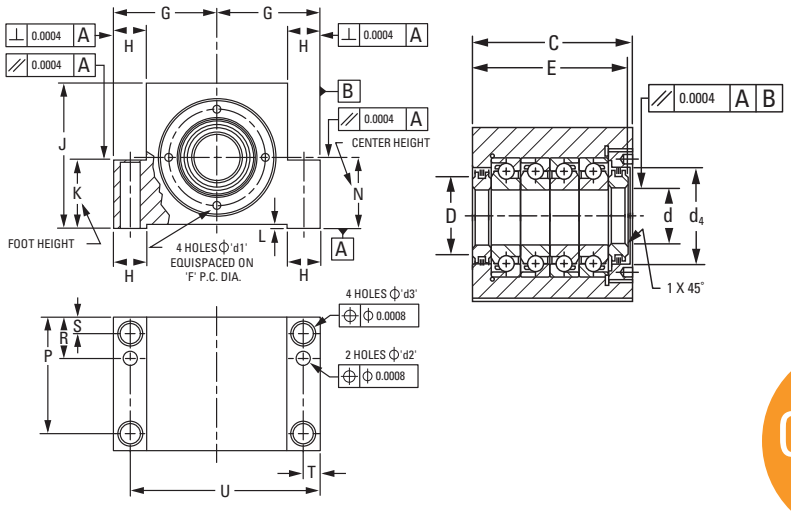

STANDARD SERIES – DIMENSIONAL TOLERANCES ±0.13 mm (± 0.005 in.) UNLESS OTHERWISE STATED.

Shaft Dia.	Unit Number (Bearing Set)	C	d	d_1	d_2	d_3	d_4	D	E	F	G	H	J	K	L	N	P	R	S	T	U	Wt.
mm		mm in.	mm in.	mm in.	mm in.	mm in.	mm in.	mm in.	mm in.	mm in.	mm in.	mm in.	mm in.	mm in.	mm in.	mm in.	mm in.	mm in.	mm in.	mm in.	mm in.	kg lbs.
17	BSPB17Q32	**77.00**	**17.000**	**4.3**	**7.8**	**9.0**	**36.0**	**26.0**	**74.26**	**42.5**	**47.000**	**17**	**62**	**32.0**	**1.0**	**32.000**	**68.0**	**22.0**	**9.0**	**8.5**	**85.5**	**2.6**
		76.95	**16.996**						**72.74**		**46.987**					**31.987**						
	(MM17BS47QUH)	3.031	0.6693	0.17	0.31	0.35	1.42	1.02	2.924	1.67	1.8504	0.67	2.44	1.26	0.04	1.2598	2.68	0.87	0.35	0.33	3.37	5.72
		3.03	0.6691						2.864		1.8499					1.2593						
20	BSPB20Q32	**77.00**	**20.000**	**4.3**	**7.8**	**9.0**	**36.0**	**26.0**	**74.26**	**42.5**	**47.000**	**17**	**62**	**32.0**	**1.0**	**32.000**	**68.0**	**22.0**	**9.0**	**8.5**	**85.5**	**2.5**
		76.95	**19.996**						**72.74**		**46.987**					**31.987**						
	(MM20BS47QUH)	3.031	0.7874	0.17	0.31	0.35	1.42	1.02	2.924	1.67	1.8504	0.67	2.44	1.26	0.04	1.2598	2.68	0.87	0.35	0.33	3.37	5.50
		3.03	0.7872						2.864		1.8499					1.2593						
25	BSPB25Q42	**82.00**	**25.000**	**4.3**	**9.8**	**11.0**	**50.0**	**40.0**	**80.26**	**59.5**	**62.500**	**20**	**85**	**42.0**	**1.0**	**42.000**	**72.0**	**25.0**	**10.0**	**10.0**	**115.0**	**4.6**
		81.95	**24.996**						**78.74**		**62.487**					**41.987**						
	(MM25BS62QUH)	3.228	0.9842	0.17	0.39	0.43	1.97	1.57	3.160	2.34	2.4606	0.79	3.35	1.65	0.04	1.6535	2.83	0.98	0.39	0.39	4.53	10.12
		3.226	0.9841						3.100		2.4601					1.6530						
30	BSPB30Q42	**82.00**	**30.000**	**4.3**	**9.8**	**11.0**	**50.0**	**40.0**	**80.26**	**59.5**	**62.500**	**20**	**85**	**42.0**	**1.0**	**42.000**	**72.0**	**25.0**	**10.0**	**10.0**	**115.0**	**4.5**
		81.95	**29.996**						**78.74**		**62.487**					**41.987**						
	(MM30BS62QUH)	3.228	1.1811	0.17	0.39	0.43	1.97	1.57	3.160	2.34	2.4606	0.79	3.35	1.65	0.04	1.6535	2.83	0.98	0.39	0.39	4.53	9.90
		3.226	1.1809						3.100		2.4601					1.6530						
35	BSPB35Q50	**82.00**	**35.000**	**4.3**	**13.0**	**13.0**	**60.0**	**46.0**	**80.26**	**66.5**	**68.000**	**20.5**	**95**	**50**	**1.0**	**50.000**	**72.0**	**25.0**	**10.0**	**10.0**	**126.0**	**6.2**
		81.95	**34.995**						**78.74**		**67.987**					**49.987**						
	(MM35BS72QUH)	3.228	1.3780	0.17	0.51	0.51	2.36	1.81	3.160	2.62	2.6772	0.81	3.74	1.97	0.04	1.9685	2.83	0.98	0.39	0.39	4.96	13.64
		3.226	1.3778						3.100		2.6767					1.9680						
40	BSPB40Q50	**82.00**	**40.000**	**4.3**	**13.0**	**13.0**	**60.0**	**46.0**	**80.26**	**66.5**	**68.000**	**20.5**	**95**	**50.0**	**1.0**	**50.000**	**72.0**	**25.0**	**10.0**	**10.0**	**126.0**	**6.0**
		81.95	**39.995**						**78.74**		**67.987**					**49.987**						
	(MM40BS72QUH)	3.228	1.5748	0.17	0.51	0.51	2.36	1.81	4.105	2.62	2.6772	0.81	3.74	1.97	0.04	1.9685	2.83	0.98	0.39	0.39	4.96	13.20
		3.226	1.5746						4.045		2.6767					1.9680						
HEAVY-DUTY SERIES																						
35	BSPB35D65	**106.00**	**35.000**	**5.3**	**11.8**	**18.0**	**76.0**	**66.0**	**104.26**	**90.0**	**95.000**	**30.0**	**130.0**	**65.0**	**1.0**	**65.000**	**93.0**	**32.0**	**13.0**	**15.0**	**175.0**	**15.9**
		105.95	**34.995**						**102.74**		**94.987**					**64.987**						
	(MM35BS100QUH)	4.173	1.3780	0.21	0.46	0.71	2.99	2.60	3.160	3.54	3.7402	1.18	5.12	2.56	0.04	2.5590	3.66	1.26	0.51	0.59	6.89	34.98
		4.171	1.3778						3.100		3.7396					2.5585						
40	BSPB40Q65	**106.00**	**40.000**	**5.3**	**11.8**	**18.0**	**76.0**	**66.0**	**104.26**	**90.0**	**95.000**	**30.0**	**130.0**	**65.0**	**1.0**	**65.000**	**93.0**	**32.0**	**13.0**	**15.0**	**175.0**	**15.7**
		105.95	**39.995**						**102.74**		**94.987**					**64.987**						
	(MM40BS100QUH)	4.173	1.5748	0.21	0.46	0.71	2.99	2.60	4.105	3.54	3.7402	1.18	5.12	2.56	0.04	2.5590	3.66	1.26	0.51	0.59	6.89	34.54
		4.171	1.5746						4.045		3.7396					2.5585						
45	BSPB45Q65	**106.00**	**45.000**	**5.3**	**11.8**	**18.0**	**76.0**	**66.0**	**104.26**	**90.0**	**95.000**	**30.0**	**130.0**	**65.0**	**1.0**	**65.000**	**93.0**	**32.0**	**13.0**	**15.0**	**175.0**	**15.4**
		105.95	**44.995**						**102.74**		**94.987**					**64.987**						
	(MM45BS100QUH)	4.173	1.7716	0.21	0.46	0.71	2.99	2.60	4.105	3.54	3.7402	1.18	5.12	2.56	0.04	2.5590	3.66	1.26	0.51	0.59	6.89	33.88
		4.171	1.7714						4.045		3.7396					2.5585						
50	BSPB50Q65	**106.00**	**50.000**	**5.3**	**11.8**	**18.0**	**76.0**	**66.0**	**104.26**	**90.0**	**95.000**	**30.0**	**130.0**	**65.0**	**1.0**	**65.000**	**93.0**	**32.0**	**13.0**	**15.0**	**175.0**	**15.1**
		105.95	**49.995**						**102.74**		**94.987**					**64.987**						
	(MM50BS100QUH)	4.173	1.9685	0.21	0.46	0.71	2.99	2.60	4.105	3.54	3.7402	1.18	5.12	2.56	0.04	2.5590	3.66	1.26	0.51	0.59	6.89	33.22
		4.171	1.9683						4.045		3.7396					2.5585						

BALL SCREW SUPPORT BEARINGS SEALED, DOUBLE-ROW FLANGED STYLE

MMF SERIES

- Specifically designed for ball screw applications.
- Integral double-row design supports axial and combined loads.
- Nominal contact angle 60 degrees for superior axial rigidity and accuracy.
- Low torque, integral contact seals.
- Easy and flexible installation without external clamping.
- Sealed duplex configuration standard with optional seals, shields, ceramic balls and quadruplex sets available.

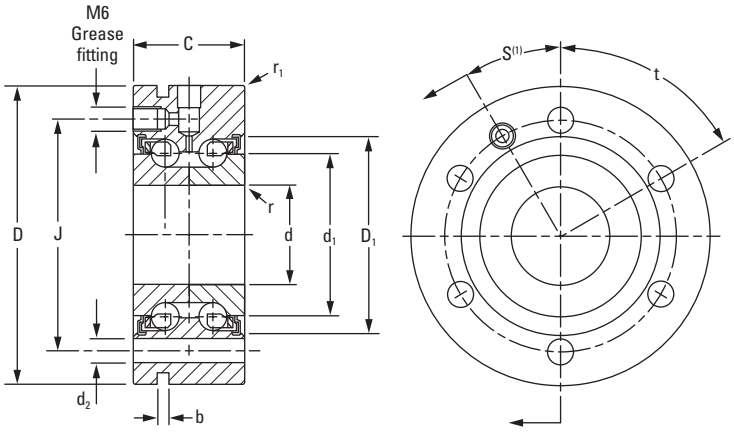

MMF Series Flanged

Bearing Number	d Bore	D O.D.	C Width	Wt.	Capacity C Dynamic	Capacity C0a Static	Speed Rating	Radius r1 Outer	Radius r Inner	D1 Min.	d1 Max.
METRIC	mm +0/ -(µm)			kg	mm		mm	mm	mm	mm	mm
MMF512BS55PP DM	12 (3.8)	55 (7.6)	25 (254)	0.40	15300	18000	4700	0.6	0.3	33.1	25.0
MMF515BS60PP DM	15 (3.8)	60 (7.6)	25 (254)	0.47	16100	20200	4290	0.6	0.3	37.0	27.6
MMF517BS62PP DM	17 (3.8)	62 (7.6)	25 (254)	0.49	16800	22200	4000	0.6	0.3	37.8	28.4
MMF520BS68PP DM	20 (5.1)	68 (7.6)	28 (254)	0.64	21800	30600	3400	0.6	0.3	43.2	34.5
MMF525BS75PP DM	25 (5.1)	75 (7.6)	28 (254)	0.76	23200	36200	2900	0.6	0.3	49.5	40.6
MMF530BS80PP DM	30 (5.1)	80 (7.6)	28 (254)	0.84	24500	41500	2600	0.6	0.3	54.3	45.6
MMF540BS100PP DM	40 (6.4)	100 (7.6)	34 (254)	1.50	36300	65800	2070	0.6	0.3	68.7	57.5
MMF550BS115PP DM	50 (6.4)	115 (7.6)	34 (254)	1.37	40500	85900	1670	0.6	0.3	82.6	71.5
MMF550BS140PP DM	50 (6.4)	140 (8.9)	54 (254)	4.89	95400	164300	1460	0.6	0.6	99.6	81.1
MMF560BS145PP DM	60 (7.6)	145 (8.9)	45 (254)	4.28	71200	139700	1400	0.6	0.6	100.0	89.0

INCH	in. +0/-(x)			lbs.	in.		in.	in.	in.	in.	in.
MMF512BS55PP DM	0.4724 (0.00015)	2.1654 (0.0003)	0.9843 (0.0100)	0.88	3450	4050	4700	0.024	0.012	1.304	0.905
MMF515BS60PP DM	0.5906 (0.00015)	2.3622 (0.0003)	0.9843 (0.0100)	1.04	3600	4550	4290	0.024	0.012	1.456	1.088
MMF517BS62PP DM	0.6693 (0.00015)	2.4409 (0.0003)	0.9843 (0.0100)	1.08	3775	5000	4000	0.024	0.012	1.49	1.117
MMF520BS68PP DM	0.7874 (0.0002)	2.6772 (0.0003)	1.1024 (0.0100)	1.42	4900	6875	3400	0.024	0.012	1.700	1.357
MMF525BS75PP DM	0.9843 (0.0002)	2.9528 (0.0003)	1.1024 (0.0100)	1.68	5200	8150	2900	0.024	0.012	1.943	1.599
MMF530BS80PP DM	1.1811 (0.0002)	3.1496 (0.0003)	1.1024 (0.0100)	1.86	5500	9350	2600	0.024	0.012	2.138	1.795
MMF540BS100PP DM	1.5748 (0.00025)	3.937 (0.0003)	1.3386 (0.0100)	3.41	8150	14800	2070	0.024	0.012	2.704	2.264
MMF550BS115PP DM	1.9685 (0.00025)	4.5276 (0.0003)	1.3386 (0.0100)	4.37	9100	19300	1670	0.024	0.012	3.25	2.815
MMF550BS140PP DM	1.9685 (0.00025)	5.5118 (0.00035)	2.126 (0.0100)	10.78	21500	36900	1460	0.024	0.024	3.919	3.192
MMF560BS145PP DM	2.3622 (0.0003)	5.7087 (0.00035)	1.7717 (0.0100)	9.43	16000	31400	1400	0.024	0.024	3.938	3.308

(1) Grease fitting spacing (S) is conditional to the quantity of bolt holes: 3 holes, S = 60˚; 4 holes, S = 45˚; 6 holes, S = 30˚; 8 holes, S = 22.5˚; 12 holes, S = 15˚.

C

Suggested Shoulder Dia.		d_2 Bolt Dia.	Holes	b Groove Width	J Bolt Circle Diameter	t Hole Spacing	Stiffness		Inertia Moment	Preload
Housing	Shaft						Axial	Radial		
mm	**mm**	**mm**	Qty.	**mm**	**mm**	Degrees	**N/µm**	**N/µm**	**kg cm²**	**N**
32.0	**19.0**	**6.5**	3	**3**	**42**	120	**380**	**60**	**0.062**	**645**
34.5	**21.5**	**6.5**	3	**3**	**46**	120	**400**	**65**	**0.076**	**670**
36.5	**23.5**	**6.5**	3	**3**	**48**	120	**450**	**72**	**0.097**	**780**
42.5	**27.5**	**6.5**	4	**3**	**53**	90	**650**	**103**	**0.212**	**1780**
48.0	**33.5**	**6.5**	4	**3**	**58**	90	**750**	**118**	**0.415**	**2000**
53.5	**38.5**	**6.5**	6	**3**	**63**	60	**860**	**135**	**0.6**	**2335**
67.0	**49.0**	**8.5**	4	**3**	**80**	90	**1000**	**160**	**1.728**	**2780**
81.0	**63.0**	**8.5**	6	**3**	**94**	60	**1250**	**200**	**4.288**	**3335**
98.5	**66.0**	**10.5**	12	**3**	**113**	30	**1400**	**220**	**20.94**	**6784**
98.0	**72.0**	**8.5**	8	**3**	**120**	45	**1300**	**210**	**10.184**	**4225**
in.	in.	in.	Qty.	in.	in.	Degrees	10^6 lb/in.	10^6 lb/in.	lb in.^{2}	lbs.
1.26	0.748	0.256	3	0.118	1.654	120	2.17132	0.34284	0.021186466	145
1.358	0.846	0.256	3	0.118	1.811	120	2.2856	0.37141	0.025970506	150
1.437	0.925	0.256	3	0.118	1.89	120	2.5713	0.411408	0.033146567	175
1.673	1.083	0.256	4	0.118	2.087	90	3.7141	0.588542	0.072444044	400
1.890	1.319	0.256	4	0.118	2.283	90	4.2855	0.674252	0.141812634	450
2.106	1.516	0.256	6	0.118	2.48	60	4.91404	0.77139	0.205030314	525
2.638	1.929	0.335	4	0.118	3.15	90	5.714	0.91424	0.590487304	625
3.189	2.408	0.335	6	0.118	3.701	60	7.1425	1.1428	1.465283311	750
3.878	2.598	0.413	12	0.118	4.449	30	7.9996	1.25708	7.155557959	1525
3.858	2.835	0.335	8	0.118	4.724	45	7.4282	1.19994	3.480047863	950

BALL SCREW SUPPORT BEARINGS SEALED, DOUBLE-ROW CARTRIDGE STYLE

MMN SERIES

- Specifically designed for ball screw applications.
- Integral double-row design supports axial and combined loads.
- Nominal contact angle 60 degrees for superior axial rigidity and accuracy.
- Low torque, integral contact seals.
- Easy and flexible installation for both fixed and rotating nut designs.
- Sealed duplex configuration standard with optional seals, shields, ceramic balls and quadruplex sets available.

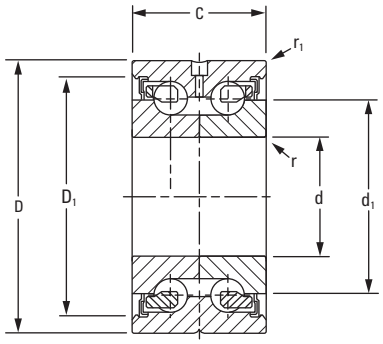

MMN Series

Bearing Number	d Bore	D O.D.	C Width	Wt.	Capacity C Dynamic	Capacity C_{0a} Static	Speed Rating	Radius r_1 Outer	Radius r Inner	D_1 Max.	d_1 Min.	Suggested Shoulder Dia. Housing	Suggested Shoulder Dia. Shaft	Stiffness Axial	Stiffness Radial	Inertia Moment	Preload
METRIC	mm +0/ -(µm)			kg	N		RPM	mm		mm	mm	mm	mm	N/µm	N/µm	kg cm²	N
MMN512BS42PP DM	12 (3.8)	42 (6.4)	25 (254)	0.20	15300	18000	4700	0.6	0.3	25.0	33.1	32.0	19.0	380	60	0.062	645
MMN515BS45PP DM	15 (3.8)	45 (6.4)	25 (254)	0.23	16100	20200	4290	0.6	0.3	27.6	37.0	34.5	21.5	400	65	0.076	670
MMN517BS47PP DM	17 (3.8)	47 (6.4)	25 (254)	0.24	16800	22200	4000	0.6	0.3	28.4	37.8	36.5	23.5	450	72	0.097	780
MMN520BS52PP DM	20 (5.1)	52 (7.6)	28 (254)	0.32	21800	30600	3400	0.6	0.3	34.5	43.2	42.5	27.5	650	103	0.212	1780
MMN525BS57PP DM	25 (5.1)	57 (7.6)	28 (254)	0.35	23200	36200	2900	0.6	0.3	40.6	49.3	48.0	33.5	750	118	0.415	2000
MMN530BS62PP DM	30 (5.1)	62 (7.6)	28 (254)	0.40	24500	41500	2600	0.6	0.3	45.6	54.3	53.5	38.5	860	135	0.6	2335
MMN540BS75PPDM	40 (6.4)	75 (7.6)	34 (254)	0.64	36300	65800	2070	0.6	0.3	57.5	68.7	67.0	49.0	1000	160	1.728	2780
MMN550BS90PP DM	50 (6.4)	90 (7.6)	34 (254)	0.91	40500	85900	1670	0.6	0.3	71.5	82.6	81.0	63.0	1250	200	4.288	3335
MMN550BS110PP DM	50 (6.4)	110 (8.9)	54 (254)	2.42	95400	164300	1460	0.6	0.6	81.1	99.6	98.5	66.0	1400	220	20.94	6784
MMN560BS110PP DM	60 (7.6)	110 (8.9)	45 (254)	1.82	71200	139700	1400	0.6	0.6	84.0	100.0	98.0	72.0	1300	210	10.184	4225

C

Bearing Number	d Bore	D O.D.	C Width	Wt.	Capacity C Dynamic	Capacity C_{0a} Static	Speed Rating	Radius r_1 Outer	Radius r Inner	D_1 Min.	d_1 Max.	Suggested Shoulder Dia. Housing	Suggested Shoulder Dia. Shaft	Stiffness Axial	Stiffness Radial	Inertia Moment	Preload
INCH	in. +0/-(x)			lbs.	lbs.		RPM	in.	in.	in.	in.	in.	in.	10^6 lb/in.	10^6 lb/in.	lb in.^{2}	lbs.
MMN512BS42PP DM	0.4724 (0.00015)	1.6535 (0.00025)	0.9843 (0.0100)	0.44	3450	4050	4700	0.024	0.012	1.304	0.985	1.259	0.748	2.17132	0.34284	0.021186466	145
MMN515BS45PP DM	0.5906 (0.00015)	1.7717 (0.00025)	0.9843 (0.0100)	0.5	3600	4550	4290	0.024	0.012	1.456	1.088	1.358	0.846	2.2856	0.37141	0.025970506	150
MMN517BS47PP DM	0.6693 (0.00015)	1.8504 (0.00025)	0.9843 (0.0100)	0.54	3775	5000	4000	0.024	0.012	1.49	1.117	1.437	0.925	2.5713	0.411408	0.033146567	175
MMN520BS52PP DM	0.7874 (0.0002)	2.0472 (0.0003)	1.1024 (0.0100)	0.70	4900	6875	3400	0.024	0.012	1.700	1.357	1.673	1.083	3.7141	0.588542	0.072444044	400
MMN525BS57PP DM	0.9843 (0.0002)	2.2441 (0.0003)	1.1024 (0.0100)	0.78	5200	8150	2900	0.024	0.012	1.943	1.599	1.890	1.319	4.2855	0.674252	0.141812634	450
MMN530BS62PP DM	1.1811 (0.0002)	2.4409 (0.0003)	1.1024 (0.0100)	0.88	5500	9350	2600	0.024	0.012	2.138	1.795	2.106	1.516	4.91404	0.77139	0.205030314	525
MMN540BS75PPDM	1.5748 (0.00025)	2.9528 (0.0003)	1.3386 (0.0100)	1.42	8150	14800	2070	0.024	0.012	2.704	2.264	2.638	1.929	5.714	0.91424	0.590487304	625
MMN550BS90PP DM	1.9685 (0.00025)	3.5433 (0.0003)	1.3386 (0.0100)	2.02	9100	19300	1670	0.024	0.012	3.250	2.815	3.189	2.408	7.1425	1.1428	1.465283311	750
MMN550BS110PP DM	1.9685 (0.00025)	4.3307 (0.00035)	2.126 (0.0100)	5.34	21500	36900	1460	0.024	0.024	3.919	3.192	3.878	2.598	7.9996	1.25708	7.155557959	1525
MMN560BS110PP DM	2.3622 (0.0003)	4.3307 (0.00035)	1.7717 (0.0100)	4.02	16000	31400	1400	0.024	0.024	3.938	3.308	3.858	2.835	7.4282	1.19994	3.480047863	950

EX-CELL-O SPINDLE BEARINGS

- "EX" Series (Timken WI construction) designed to meet Ex-Cell-O replacement requirements for inch nominal spindles with bore and O.D. tolerances nominal to plus.
- "XWO" Series (Timken WO separable construction) designed to meet Ex-Cell-O replacement requirements for inch nominal spindles with bore and O.D. tolerances nominal to minus.
- Measurement of shafts and housings (or reconditioning of parts) should determine replacement bearing style.
- Shafts and housings should be checked (and reworked) to avoid improper shaft and housing fits.
- Preload selection should be based on operating speed and lubrication system of spindle.

MM-EX

REPLACEMENT BEARINGS FOR EX-CELL-O SPINDLES

Bearing Number	Ex-Cell-O Part No.	Preload	Bore		O.D.		Width - Pair		Speed Rating Grease
			Max.	Min.	Max.	Min.	Max.	Min.	
		lbs.	in.		in.		in.		RPM
MM20EXCR DU FS223	20	0	0.3752	0.3750	1.1252	1.1250	0.6875	0.6775	65000
MM30EXCR DU FS223	30	0	0.6252	0.6250	1.5002	1.5000	1.0000	0.9900	35000
MM30EXCR DU 5	30	5	0.6252	0.6250	1.5002	1.5000	1.0000	0.9900	25000
MM50EXCR DU FS223	50	0	0.8127	0.8125	2.0002	2.0000	1.0000	0.9900	30000
(1) MM50EXCR DU 10	50	10	0.8127	0.8125	2.0002	2.0000	1.0000	0.9900	18000
MM50EXCR DU 50	50	50	0.8127	0.8125	2.0002	2.0000	1.0000	0.9900	5000
MM55EXCR DU 10	55	10	0.8127	0.8125	2.0002	2.0000	1.0000	0.9900	22000
MM57EXCR DU FS223	57	0	1.0627	1.0625	2.2502	2.2500	1.0000	0.9900	30000
MM57EXCR DU 10	57	10	1.0627	1.0625	2.2502	2.2500	1.0000	0.9900	15000
MM57EXCR DU 50	57	50	1.0627	1.0625	2.2502	2.2500	1.0000	0.9900	5000
MM67EXCR DU FS223	67	0	1.2502	1.2500	2.4377	2.4375	1.2500	1.2400	30000
MM67EXCR DU 10	67	10	1.2502	1.2500	2.4377	2.4375	1.2500	1.2400	12500
MM67EXCR DU 30	67	30	1.2502	1.2500	2.4377	2.4375	1.2500	1.2400	7500
MM67EXCR DU 75	67	75	1.2502	1.2500	2.4377	2.4375	1.2500	1.2400	4500
MM90EXCR DU 20	90	20	1.6252	1.6250	3.4377	3.4375	1.6250	1.6150	10000
MM90EXCR DU 100	90	100	1.6252	1.6250	3.4377	3.4375	1.6250	1.6150	4500
MM90EXCR DU 150	90	150	1.6252	1.6250	3.4377	3.4375	1.6250	1.6150	2700
MM90EXCR DU 250	90	250	1.6252	1.6250	3.4377	3.4375	1.6250	1.6150	900
(2) MM92EXCR DU 20	92	20	1.7502	1.7500	3.4377	3.4375	1.6250	1.6150	12000
(2) MM92EXCR DU 100	92	100	1.7502	1.7500	3.4377	3.4375	1.6250	1.6150	4500
(2) MM92EXCR DU 150	92	150	1.7502	1.7500	3.4377	3.4375	1.6250	1.6150	2700
(2) MM92EXCR DU 250	92	250	1.7502	1.7500	3.4377	3.4375	1.6250	1.6150	900
MM115EXCR DU 30	115	30	2.2502	2.2500	4.7502	4.7500	2.2500	2.2400	5000
MM115EXCR DU 250	115	250	2.2502	2.2500	4.7502	4.7500	2.2500	2.2400	3600
MM115EXCR DU 350	115	350	2.2502	2.2500	4.7502	4.7500	2.2500	2.2400	1800
MM135EXCR DU 20	135	20	1.2502	1.2500	2.6877	2.6875	1.2500	1.2400	8000
MM135EXCR DU 75	135	75	1.2502	1.2500	2.6877	2.6875	1.2500	1.2400	4000
MM155EXCR DU 150	155	150	2.7502	2.7500	4.7502	4.7500	2.2500	2.2400	4000
MM155EXCR DU 300	155	300	2.7502	2.7500	4.7502	4.7500	2.2500	2.2400	1800
MM165EXCR DU 200	165	200	3.5002	3.5000	6.3127	6.3125	3.0000	2.9900	2800
MM165EXCR DU 400	165	400	3.5002	3.5000	6.3127	6.3125	3.0000	2.9900	1200

Do not interchange with MM-XWO.
MM-EX produced to nominal plus tolerance.

(1) Four slots in outer ring faces.
(2) No keyway in bore.

TIMKEN MM-EX AND MM-XWO BEARINGS FOR REPLACEMENT ON EX-CELL-O SPINDLES

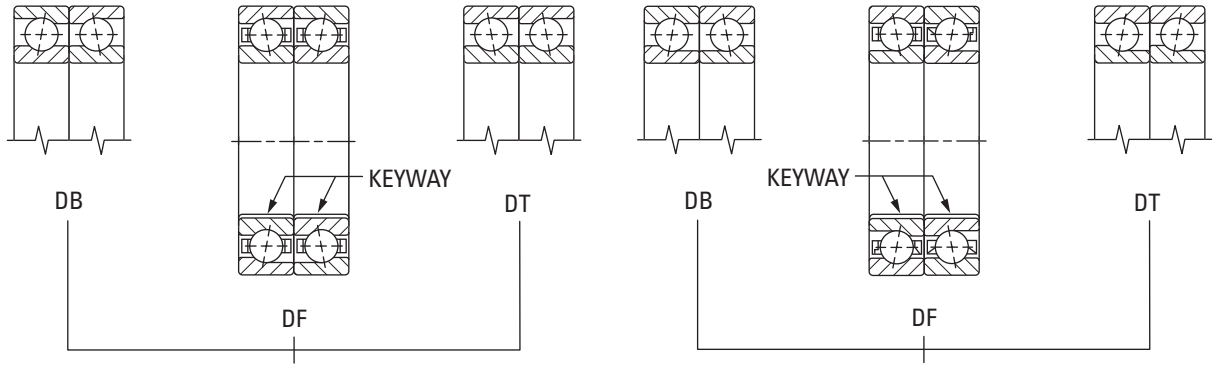

Old design, MM-EX
Bore and O.D. Tolerance
Nominal + Tolerance
"WI" Construction

New Design, MM-XWO
Bore and O.D. Tolerance
Nominal - Tolerance
"WO" Construction

MM-XWO

REPLACEMENT BEARINGS FOR EX-CELL-O SPINDLES

Bearing Number	Ex-Cell-O Part No.	Preload	Bore		O.D.		Width - Pair		Speed Rating		
			Max.	Min.	Max.	Min.	Max.	Min.	Grease	Oil	Mist
		lbs.	in.		in.		in.		RPM		
MM20XWOCRDU E9103A	XLO 20-107	0	0.37500	0.37485	1.1250	1.1248	0.6875	0.6675	40000	65000	80000
MM30XWOCRDU E9103C	XLO 30-57	10	0.62500	0.62485	1.5000	1.4998	1.0000	0.9800	27000	30000	35000
MM30XWOCRDU E9103A	XLO 30-107	0	0.62500	0.62485	1.5000	1.4998	1.0000	0.9800	35000	40000	60000
MM55XWOCRDU E9103E	XLO 55-27	50	0.81250	0.81235	2.0000	1.9998	1.0000	0.9800	5000	8000	12000
MM55XWOCRDU E9103C	XLO 55-57	20	0.81250	0.81235	2.0000	1.9998	1.0000	0.9800	20000	22000	24000
MM55XWOCRDU E9103A	XLO 55-107	0	0.81250	0.81235	2.0000	1.9998	1.0000	0.9800	24000	27000	45000
MM57XWOCRDU E9103F	XLO 57-17	100	1.06250	1.06235	2.2500	2.2498	1.0000	0.9800	2000	4000	6000
MM57XWOCRDU E9103C	XLO 57-57	20	1.06250	1.06235	2.2500	2.2498	1.0000	0.9800	18000	20000	22000
MM57XWOCRDU E9103A	XLO 57-107	0	1.06250	1.06235	2.2500	2.2498	1.0000	0.9800	22000	25000	35000
MM67XWOCRDU E9103F	XLO 67-17	90	1.25000	1.24980	2.4375	2.4373	1.2500	1.2300	36000	4500	6000
MM67XWOCRDU E9103C	XLO 67-57	20	1.25000	1.24980	2.4375	2.4373	1.2500	1.2300	12500	15000	20000
MM67XWOCRDU E9103A	XLO 67-107	0	1.25000	1.24980	2.4375	2.4373	1.2500	1.2300	16000	20000	30000
MM90XWOCRDU E9103F	XLO 90-17	250	1.62500	1.62480	3.4375	3.4372	1.6250	1.6050	1000	2000	4000
MM90XWOCRDU E9103D	XLO 90-47	175	1.62500	1.62480	3.4375	3.4372	1.6250	1.6050	3000	5000	8000
MM90XWOCRDU E9103C	XLO 90-57	100	1.62500	1.62480	3.4375	3.4372	1.6250	1.6050	5000	7000	11000
MM90XWOCRDU E9103A	XLO 90-77	20	1.62500	1.62480	3.4375	3.4372	1.6250	1.6050	10000	14000	20000
MM115XWOCRDU E9103E	XLO 115-27	300	2.25000	2.24980	4.7500	4.7496	2.2500	2.2300	1000	2000	3000
MM115XWOCRDU E9103C	XLO 115-47	150	2.25000	2.24980	4.7500	4.7496	2.2500	2.2300	3000	4500	7000
MM115XWOCRDU E9103A	XLO 115-77	30	2.25000	2.24980	4.7500	4.7496	2.2500	2.2300	6000	8000	15000
MM135XWOCRDU E9103C	XLO 135-67	50	1.25000	1.24980	2.6875	2.6873	1.2500	1.2300	6000	7000	12000
MM135XWOCRDU E9103A	XLO 135-10	70	1.25000	1.24980	2.6875	2.6873	1.2500	1.2300	15000	19000	28000
MM155XWOCRDU E9103D	XLO 155-37	300	2.75000	2.74980	4.7500	4.7496	2.2500	2.2300	1000	2000	3000
MM155XWOCRDU E9103B	XLO 155-67	150	2.75000	2.74980	4.7500	4.7496	2.2500	2.2300	4000	5000	6500
MM155XWOCRDU E9103A	XLO 155-87	50	2.75000	2.74980	4.7500	4.7496	2.2500	2.2300	6000	7000	10000
MM165XWOCRDU E9103E	XLO 165-27	800	3.50000	3.49975	6.3125	6.3121	3.0000	2.9800	500	1000	2000
MM165XWOCRDU E9103C	XLO 165-57	250	3.50000	3.49975	6.3125	6.3121	3.0000	2.9800	2000	3000	5000
MM165XWOCRDU E9103A	XLO 165-87	50	3.50000	3.49975	6.3125	6.3121	3.0000	2.9800	5000	6500	9000

Do not interchange with MM-EX.
MM-XWO produced to nominal minus tolerance.

BALL BEARING BORE DIAMETERS FOUND IN THIS CATALOG

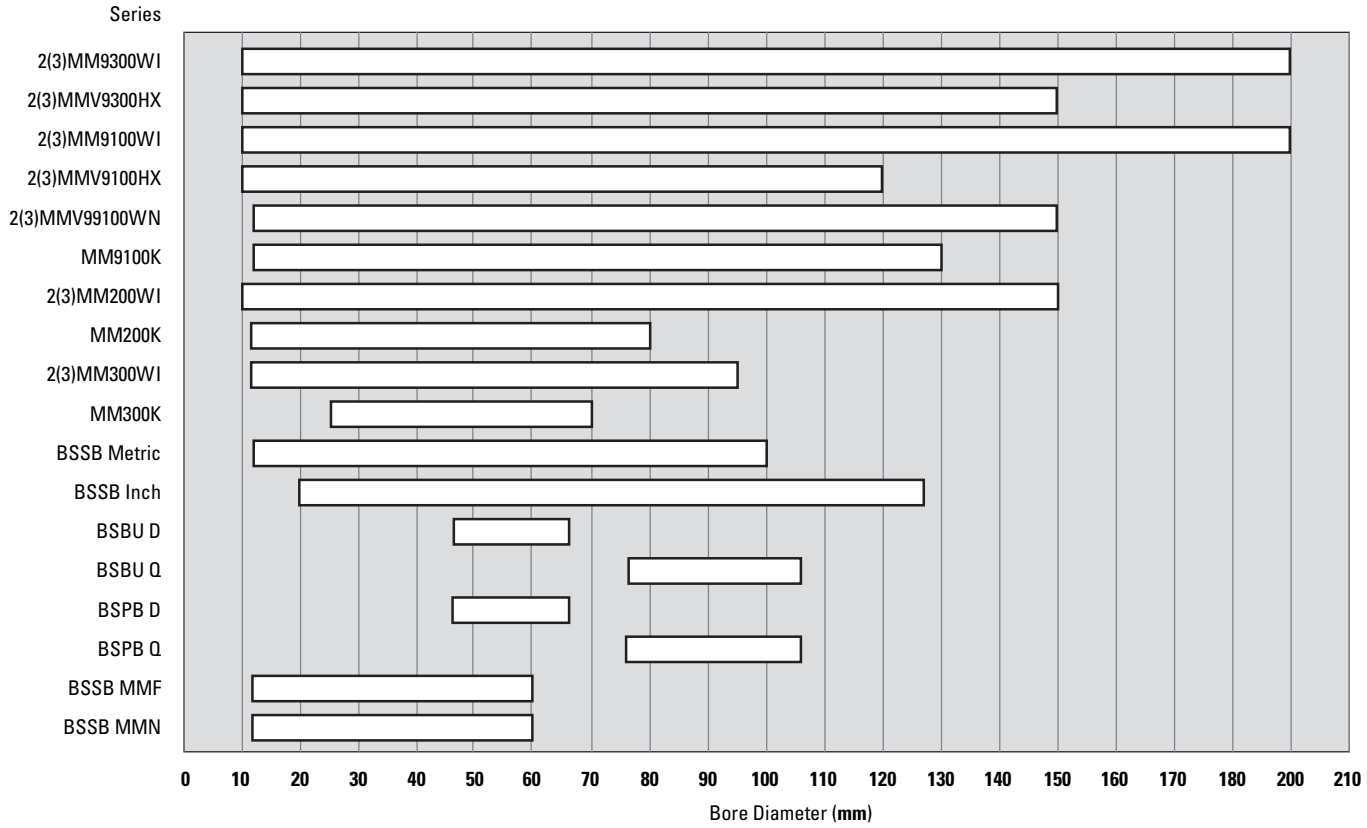

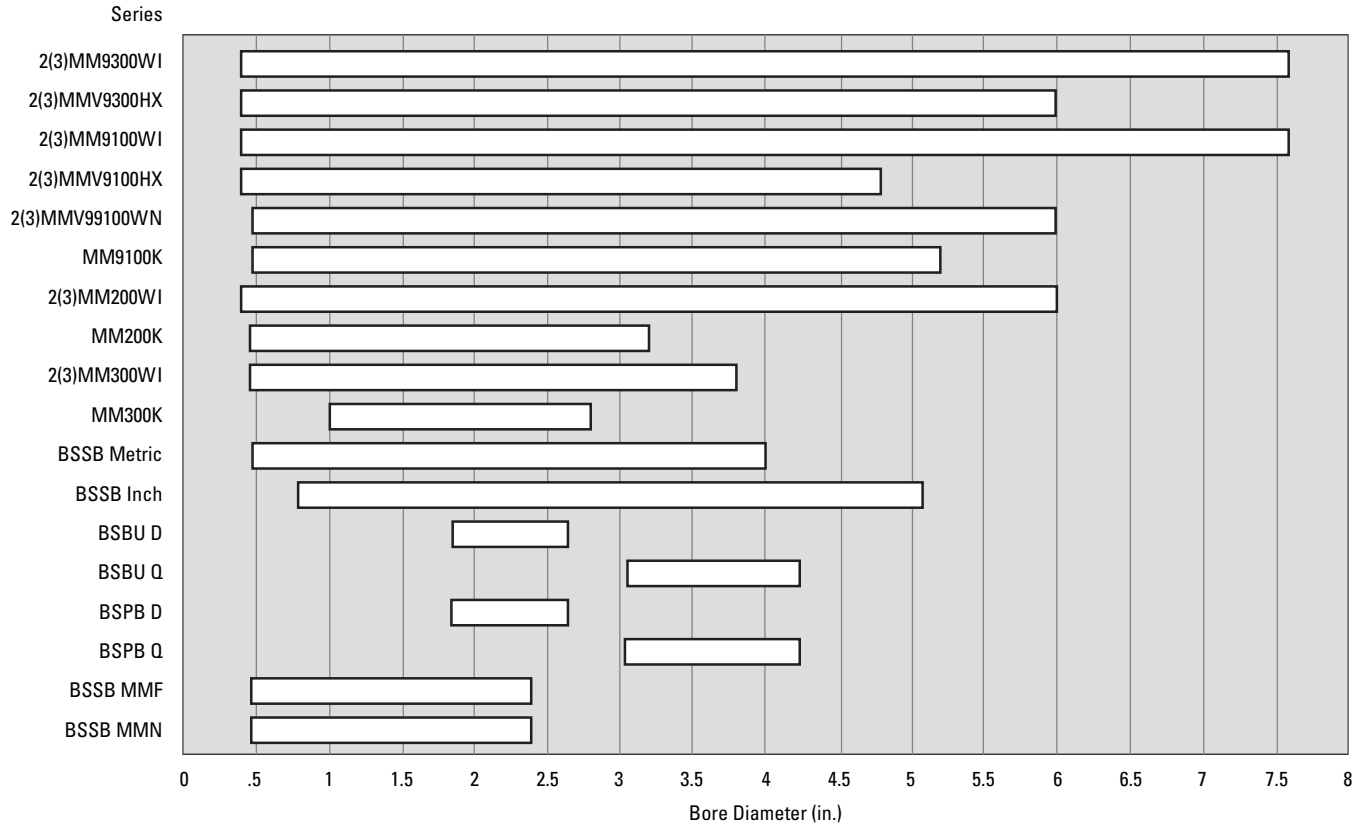

APPENDIX

D

D

D APPENDIX

Frequency Coefficients 218

Tapered Roller Bearings 218

Ball Bearings 222

Ball Screw Support Series 236

Precision Tag Deviation and Runout Charts 237

Geometry Factors 239

Radial Internal Clearance 241

Bearing Locknuts 242

Locknut Torque 242

Lubrication Specifications 243

Operating Temperatures for Bearing Component Materials 245

Conversion Tables 246

Forms 247

FREQUENCY COEFFICIENTS

TAPERED ROLLER BEARINGS

Predictive maintenance of applications requires knowledge of the frequencies that a bearing can emit, which are based on its specific design. The tables that follow provide the most commonly used coefficients for this purpose. The frequencies are expressed as "Orders." To obtain bearing defect frequencies in Hz, multiply bearing coefficient by rotating speed in revolutions per second.

Tapered roller bearing example:

(FTF of JP6049-JP6010-B)
1200 RPM x 1min/60 sec x 0.436 = 8.72 Hz

Ball bearing example:

(FTF of 2MM9300WI)
1200 RPM x 1 min/60 sec x 0.4054 = 8.108 Hz

D

TS Metric Style

FTF: Fundamental Train Frequency: the frequency at which the cage will operate.

BSF: Ball Spin Frequency: the frequency at which a single defect on a rolling element will be detected.

BPFO: Ball Pass Frequency Outer: the frequency at which a single defect in the outer race will be detected.

BPFI: Ball Pass Frequency Inner: the frequency at which a single defect in the inner race will be detected.

Part Number	FTF-Inner[1]	BSF	BPFO	BPFI	FTF-Outer[2]
JP6049-JP6010	0.436	3.676	8.275	10.725	0.564
JLM710949C-JLM710910	0.441	4.070	9.271	11.729	0.559
JP7049-JP7010	0.443	4.160	9.299	11.701	0.557
JP8049-JP8010	0.444	4.255	9.323	11.677	0.556
JM716649-JM716610	0.452	5.019	11.761	14.239	0.548
JP9049-JP9010	0.449	4.669	10.331	12.669	0.551
JP10044-JP10010	0.453	5.093	11.331	13.669	0.547
JM719149-JM719113	0.448	4.580	10.748	13.252	0.552
JP10049-JP10010	0.453	5.093	11.331	13.669	0.547
JM822049-JM822010	0.454	5.169	12.260	14.740	0.546
JLM722948-JLM722912	0.459	5.761	13.297	15.703	0.541
JL724348-JL724314	0.462	6.367	15.260	17.740	0.538
JL725346-JL725316	0.464	6.606	16.236	18.764	0.536
JP13049-JP13010	0.455	5.252	11.820	14.180	0.545
JP14049-JP14010	0.458	5.587	12.811	15.189	0.542
JL730646-JL730612	0.467	7.219	17.273	19.727	0.533
JP16049-JP16010	0.459	5.791	13.308	15.692	0.541
JP17049-JP17010	0.461	6.132	14.292	16.708	0.539
JP18049-JP18010	0.463	6.437	14.816	17.184	0.537
JM736149-JM736110	0.462	6.290	14.787	17.213	0.538

[1] For inner ring rotation.
[2] For outer ring rotation.

D

TS Inch Style

FTF: Fundamental Train Frequency: the frequency at which the cage will operate.

BSF: Ball Spin Frequency: the frequency at which a single defect on a rolling element will be detected.

BPFO: Ball Pass Frequency Outer: the frequency at which a single defect in the outer race will be detected.

BPFI: Ball Pass Frequency Inner: the frequency at which a single defect in the inner race will be detected.

Part Number	FTF-Inner[1]	BSF	BPFO	BPFI	FTF-Outer[2]
29585-29520	0.452	4.935	11.742	14.258	0.548
399A-394A	0.443	4.191	9.740	12.260	0.557
29685-29620	0.455	5.251	12.277	14.723	0.545
34301-34478	0.450	4.734	10.789	13.211	0.550
497-493	0.448	4.606	10.307	12.693	0.552
LM718947-LM718910	0.452	4.970	11.303	13.697	0.548
52400-52618	0.452	4.935	11.745	14.255	0.548
68462-68712	0.450	4.749	11.251	13.749	0.550
36690-36620	0.472	8.597	20.286	22.714	0.528
36990-36920	0.477	10.260	23.829	26.171	0.523
87750-87111	0.457	5.592	13.253	15.747	0.543
67985-67920	0.470	7.996	19.283	21.717	0.530
543085-543114	0.473	8.987	19.868	22.132	0.527

[1] For inner ring rotation.
[2] For outer ring rotation.

TSF Metric Style

FTF: Fundamental Train Frequency: the frequency at which the cage will operate.

BSF: Ball Spin Frequency: the frequency at which a single defect on a rolling element will be detected.

BPFO: Ball Pass Frequency Outer: the frequency at which a single defect in the outer race will be detected.

BPFI: Ball Pass Frequency Inner: the frequency at which a single defect in the inner race will be detected.

Part Number	FTF-Inner[1]	BSF	BPFO	BPFI	FTF-Outer[2]
JP6049-JP6010-B	0.436	3.676	8.275	10.725	0.564
JP7049-JP7010-B	0.443	4.160	9.299	11.701	0.557
JP8049-JP8010-B	0.444	4.255	9.323	11.677	0.556
JP9049-JP9010-B	0.449	4.669	10.331	12.669	0.551
JP10044-JP10010-B	0.453	5.093	11.331	13.669	0.547
JP10049-JP10010-B	0.453	5.093	11.331	13.669	0.547
JP13049-JP13010-B	0.455	5.252	11.820	14.180	0.545
JP14049-JP14010-B	0.458	5.587	12.811	15.189	0.542
JL730646-JL730612-B	0.467	7.219	17.273	19.727	0.533

[1] For inner ring rotation.
[2] For outer ring rotation.

D

TSF Inch Style

Part Number	FTF-Inner[1]	BSF	BPFO	BPFI	FTF-Outer[2]
2984-2924-B	0.434	3.643	8.244	10.755	0.566
3984-3920-B	0.443	4.191	9.740	12.260	0.557
482-472-B	0.439	3.948	8.783	11.217	0.561
566-563-B	0.435	3.713	8.705	11.295	0.565
33287-33462-B	0.448	4.568	10.295	12.705	0.552
27690-27620-B	0.457	5.599	12.340	14.660	0.543
42350-42587-B	0.454	5.118	11.793	14.207	0.546
683-672-B	0.446	4.367	10.247	12.753	0.555
687-672-B	0.446	4.367	10.247	12.753	0.555
71450-71750-B	0.444	4.296	10.217	12.783	0.556

[1] For inner ring rotation.
[2] For outer ring rotation.

TSHR Style

FTF: Fundamental Train Frequency: the frequency at which the cage will operate.

BSF: Ball Spin Frequency: the frequency at which a single defect on a rolling element will be detected.

BPFO: Ball Pass Frequency Outer: the frequency at which a single defect in the outer race will be detected.

BPFI: Ball Pass Frequency Inner: the frequency at which a single defect in the inner race will be detected.

Part Number	FTF-Inner[1]	BSF	BPFO	BPFI	FTF-Outer[2]
JP5049P-JP5019HR	0.426	3.178	6.815	9.185	0.574
JP5049P-JP5020HR	0.426	3.178	6.815	9.185	0.574
JP5049PH-JP5017HR	0.426	3.178	6.815	9.185	0.574
JP5049PH-JP5020HR	0.426	3.178	6.815	9.185	0.574
JP7548P-JP7520HR	0.446	4.387	8.918	11.082	0.554
JP7549P-JP7519HR	0.446	4.387	8.918	11.082	0.554
JP8548-JP8518HR	0.447	4.462	9.827	12.173	0.553
JP8549P-JP8519HR	0.447	4.462	9.827	12.173	0.553
JP10048-JP10019HR	0.453	5.093	9.971	12.029	0.547
JP10048-JP10019HRA	0.453	5.093	9.971	12.029	0.547
JP11035-JP11019HR	0.452	4.955	9.937	12.063	0.548
JP11048-JP11019HR	0.452	4.955	9.937	12.063	0.548
JP12043P-JP12019HR	0.455	5.317	11.835	14.165	0.545
JP12049P-JP12019HR	0.455	5.317	11.835	14.165	0.545
JP13043P-JP13016HR	0.455	5.252	11.820	14.180	0.545
JP13049P-JP13016HR	0.455	5.252	11.820	14.180	0.545
JP14043P-JP14019HR	0.458	5.587	12.353	14.647	0.542
JP14049P-JP14019HR	0.458	5.587	12.353	14.647	0.542
JP16043P-JP16019HR	0.459	5.791	12.849	15.151	0.541
JP16049P-JP16019HR	0.459	5.791	12.849	15.151	0.541
JP17049P-JP17019HR	0.461	6.132	13.831	16.169	0.539
JP18049P-JP18019HR	0.463	6.437	14.353	16.647	0.537
JP20049P-JP20019HR	0.462	6.240	12.006	13.994	0.538
JP22049E-JP22019HR	0.465	6.769	13.949	16.051	0.535
JL555235-JL55512HR	0.472	8.567	16.041	17.959	0.528
JL555239-JL55512HR	0.472	8.567	16.041	17.959	0.528

[1] For inner ring rotation.
[2] For outer ring rotation.

FREQUENCY COEFFICIENTS

BALL BEARINGS

2MM9300WI Series

FTF: Fundamental Train Frequency: the frequency at which the cage will operate.

BSF: Ball Spin Frequency: the frequency at which a single defect on a rolling element will be detected.

BPFO: Ball Pass Frequency Outer: the frequency at which a single defect in the outer race will be detected.

BPFI: Ball Pass Frequency Inner: the frequency at which a single defect in the inner race will be detected.

Bearing Number	FTF-Inner[1]	BSF	BPFO	BPFI	FTF-Outer[2]
2MM9300WI	0.4054	2.4294	4.8649	7.1351	0.5946
2MM9301WI	0.4159	2.7546	5.4070	7.5930	0.5841
2MM9302WI	0.4204	2.9335	5.4650	7.5350	0.5796
2MM9303WI	0.4272	3.2198	6.4074	8.5926	0.5728
2MM9304WI	0.4194	2.9144	5.8719	8.1281	0.5806
2MM9305WI	0.4314	3.4509	7.3346	9.6654	0.5686
2MM9306WI	0.4404	3.9846	8.3667	10.6333	0.5596
2MM9307WI	0.4405	3.9924	8.3695	10.6305	0.5595
2MM9308WI	0.4399	3.9578	8.3586	10.6414	0.5601
2MM9309WI	0.4458	4.3966	9.3612	11.6388	0.5542
2MM9310WI	0.4498	4.7547	10.3448	12.6552	0.5502
2MM9311WI	0.4490	4.6752	10.3262	12.6738	0.5510
2MM9312WI	0.4525	5.0286	11.3121	13.6879	0.5475
2MM9313WI	0.4556	5.3816	12.2999	14.7001	0.5444
2MM9314WI	0.4504	4.8196	10.8092	13.1908	0.5496
2MM9315WI	0.4531	5.1086	11.3285	13.6715	0.5469
2MM9316WI	0.4556	5.3974	12.3014	14.6986	0.5444
2MM9317WI	0.4557	5.3371	11.8322	14.1678	0.5449
2MM9318WI	0.4537	5.1643	11.7957	14.2043	0.5463
2MM9319WI	0.4557	5.4085	12.7607	15.2393	0.5443
2MM9320WI	0.4585	5.7746	13.2966	15.7034	0.5415
2MM9322WI	0.4617	6.2622	14.3126	16.6874	0.5383
2MM9324WI	0.4596	5.9438	13.7888	16.2112	0.5404
2MM9326WI	0.4580	5.7028	13.7392	16.2608	0.5420
2MM9328WI	0.4605	6.0759	14.7367	17.2633	0.5395
2MM9330WI	0.4531	5.1086	12.2348	14.7652	0.5469
2MM9332WI	0.4536	5.1589	12.2480	14.7520	0.5464
2MM9334WI	0.4559	5.4349	13.2209	15.7791	0.5441
2MM9340WI	0.4521	4.9931	12.2062	14.7938	0.5479

[1] For inner ring rotation.
[2] For outer ring rotation.

3MM9300WI Series

FTF: Fundamental Train Frequency: the frequency at which the cage will operate.

BSF: Ball Spin Frequency: the frequency at which a single defect on a rolling element will be detected.

BPFO: Ball Pass Frequency Outer: the frequency at which a single defect in the outer race will be detected.

BPFI: Ball Pass Frequency Inner: the frequency at which a single defect in the inner race will be detected.

Bearing Number	FTF-Inner[1]	BSF	BPFO	BPFI	FTF-Outer[2]
3MM9300WI	0.4100	2.4380	4.9204	7.0796	0.5900
3MM9302WI	0.4248	2.9417	5.5225	7.4775	0.5752
3MM9303WI	0.4312	3.2273	6.4681	8.5319	0.5688
3MM9305WI	0.4356	3.4586	7.4044	9.5956	0.5644
3MM9306WI	0.4439	3.9913	8.4346	10.5654	0.5561
3MM9307WI	0.4440	3.9990	8.4366	10.5634	0.5560
3MM9308WI	0.4437	3.9648	8.4295	10.5705	0.5563
3MM9309WI	0.4491	4.4029	9.4320	11.5680	0.5509
3MM9310WI	0.4529	4.7606	10.4166	12.5834	0.5471
3MM9311WI	0.4521	4.6811	10.3983	12.6017	0.5479
3MM9312WI	0.4554	5.0340	11.3851	13.6149	0.5446
3MM9313WI	0.4583	5.3867	12.3736	14.6264	0.5417
3MM9314WI	0.4535	4.8255	10.8839	13.1161	0.5465
3MM9315WI	0.4561	5.1141	11.4020	13.5980	0.5439
3MM9316WI	0.4584	5.4026	12.3766	14.6234	0.5416
3MM9317WI	0.4579	5.3423	11.9047	14.0953	0.5421
3MM9318WI	0.4565	5.1696	11.8699	14.1301	0.5435
3MM9319WI	0.4585	5.4136	12.8371	15.1629	0.5415
3MM9320WI	0.4611	5.7794	13.3708	15.6292	0.5389
3MM9322WI	0.4641	6.2666	14.3858	16.6142	0.5359
3MM9324WI	0.4622	5.9485	13.8645	16.1355	0.5378
3MM9326WI	0.4606	5.7077	13.8171	16.1829	0.5394
3MM9328WI	0.4630	6.0804	14.8147	17.1853	0.5370
3MM9330WI	0.4561	5.1141	12.3141	14.6859	0.5439
3MM9334WI	0.4586	5.4401	13.3007	15.6993	0.5414
3MM9340WI	0.4551	4.9987	12.2879	14.7121	0.5449

[1] For inner ring rotation.
[2] For outer ring rotation.

2MMV9300HX Series

FTF: Fundamental Train Frequency: the frequency at which the cage will operate.

BSF: Ball Spin Frequency: the frequency at which a single defect on a rolling element will be detected.

BPFO: Ball Pass Frequency Outer: the frequency at which a single defect in the outer race will be detected.

BPFI: Ball Pass Frequency Inner: the frequency at which a single defect in the inner race will be detected.

Part Number	FTF-inner[1]	BSF	BPFO	BPFI	FTF-Outer[2]
2MMV9300HX	0.4283	3.2887	5.5682	7.4318	0.5717
2MMV9302HX	0.4363	3.7164	6.1081	7.8919	0.5637
2MMV9302HX	0.4378	3.8096	7.0041	8.9959	0.5622
2MMV9303HX	0.4431	4.1747	7.5319	9.4681	0.5569
2MMV9304HX	0.4396	3.9312	7.4726	9.5274	0.5604
2MMV9305HX	0.4486	4.6398	8.9717	11.0283	0.5514
2MMV9306HX	0.4553	5.3464	10.4710	12.5290	0.5447
2MMV9307HX	0.4575	5.6286	11.4364	13.5636	0.5425
2MMV9308HX	0.4400	3.9579	8.3598	10.6402	0.5600
2MMV9309HX	0.4458	4.3967	9.3624	11.6376	0.5542
2MMV9310HX	0.4498	4.7548	10.3460	12.6540	0.5502
2MMV9311HX	0.4490	4.6752	10.3262	12.6738	0.5510
2MMV9312HX	0.4525	5.0286	11.3121	13.6879	0.5475
2MMV9313HX	0.4556	5.3816	12.2999	14.7001	0.5444
2MMV9314HX	0.4504	4.8197	10.8104	13.1896	0.5496
2MMV9315HX	0.4532	5.1087	11.3297	13.6703	0.5468
2MMV9316HX	0.4557	5.3975	12.3026	14.6974	0.5443
2MMV9317HX	0.4551	5.3372	11.8338	14.1662	0.5449
2MMV9318HX	0.4537	5.1642	11.7952	14.2048	0.5463
2MMV9319HX	0.4557	5.4085	12.7601	15.2399	0.5443
2MMV9320HX	0.4585	5.7746	13.2961	15.7039	0.5415
2MMV9322HX	0.4617	6.2622	14.3121	16.6879	0.5383
2MMV9324HX	0.4596	5.9438	13.7892	16.2108	0.5404
2MMV9326HX	0.4580	5.7028	13.7386	16.2614	0.5422
2MMV9328HX	0.4605	6.0759	14.7371	17.2629	0.5395
2MMV9330HX	0.4532	5.1086	12.2351	14.7649	0.5468

[1] For inner ring rotation.
[2] For outer ring rotation.

3MMV9300HX Series

FTF: Fundamental Train Frequency: the frequency at which the cage will operate.

BSF: Ball Spin Frequency: the frequency at which a single defect on a rolling element will be detected.

BPFO: Ball Pass Frequency Outer: the frequency at which a single defect in the outer race will be detected.

BPFI: Ball Pass Frequency Inner: the frequency at which a single defect in the inner race will be detected.

Part Number	FTF-Inner[1]	BSF	BPFO	BPFI	FTF-Outer[2]
3MMV9300HX	0.4327	3.2987	5.6255	7.3745	0.5673
3MMV9301HX	0.4402	3.7257	6.1629	7.8371	0.5598
3MMV9302HX	0.4416	3.8167	7.0655	8.9345	0.5584
3MMV9303HX	0.4466	4.1812	7.5916	9.4084	0.5534
3MMV9304HX	0.4434	3.9383	7.5370	9.4630	0.5566
3MMV9305HX	0.4518	4.6459	9.0361	10.9639	0.5482
3MMV9306HX	0.4581	5.3516	10.5355	12.4645	0.5419
3MMV9307HX	0.4601	5.6336	11.5035	13.4965	0.5399
3MMV9308HX	0.4436	3.9647	8.4284	10.5716	0.5564
3MMV9309HX	0.4491	4.4028	9.4309	11.5691	0.5509
3MMV9310HX	0.4528	4.7605	10.4154	12.5846	0.5472
3MMV9311HX	0.4521	4.6810	10.3976	12.6024	0.5479
3MMV9312HX	0.4554	5.0340	11.3844	13.6156	0.5446
3MMV9313HX	0.4583	5.3866	12.3729	14.6271	0.5417
3MMV9314HX	0.4535	4.8255	10.8839	13.1161	0.5465
3MMV9315HX	0.4561	5.1141	11.4020	13.5980	0.5439
3MMV9316HX	0.4584	5.4026	12.3766	14.6234	0.5416
3MMV9317HX	0.4579	5.3425	11.9063	14.0937	0.5421
3MMV9318HX	0.4566	5.1697	11.8704	14.1296	0.5434
3MMV9319HX	0.4585	5.4137	12.8376	15.1624	0.5415
3MMV9320HX	0.4611	5.7794	13.3713	15.6287	0.5389
3MMV9322HX	0.4641	6.2667	14.3863	16.6137	0.5359
3MMV9324HX	0.4622	5.9486	13.8654	16.1346	0.5378
3MMV9326HX	0.4606	5.7077	13.8183	16.1817	0.5394
3MMV9328HX	0.4630	6.0805	14.8159	17.1841	0.5370
3MMV9330HX	0.4560	5.1141	12.3132	14.6868	0.5440

[1] For inner ring rotation.
[2] For outer ring rotation.

2MM9100WI Series

FTF: Fundamental Train Frequency: the frequency at which the cage will operate.

BSF: Ball Spin Frequency: the frequency at which a single defect on a rolling element will be detected.

BPFO: Ball Pass Frequency Outer: the frequency at which a single defect in the outer race will be detected.

BPFI: Ball Pass Frequency Inner: the frequency at which a single defect in the inner race will be detected.

Bearing Number	FTF-Inner[1]	BSF	BPFO	BPFI	FTF-Outer[2]
2MM9100WI	0.3740	1.7697	2.9924	5.0076	0.6260
2MM9101WI	0.3902	2.0621	3.9015	6.0985	0.6098
2MM9102WI	0.4035	2.3754	4.8424	7.1576	0.5965
2MM9103WI	0.4126	2.6411	4.5390	6.4610	0.5874
2MM9104WI	0.4013	2.3458	4.4140	6.5860	0.5987
2MM9105WI	0.4150	2.7526	5.3947	7.6053	0.5850
2MM9106WI	0.4201	2.9387	5.8807	8.1193	0.5799
2MM9107WI	0.4210	2.9789	6.3157	8.6843	0.5790
2MM9108WI	0.4291	3.3332	6.8655	9.1345	0.5709
2MM9109WI	0.4298	3.3682	7.3063	9.6937	0.5702
2MM9110WI	0.4352	3.6596	7.8332	10.1668	0.5648
2MM9111WI	0.4314	3.4469	7.7648	10.2352	0.5686
2MM9112WI	0.4358	3.6934	8.2803	10.7197	0.5642
2MM9113WI	0.4397	3.9394	8.7939	11.2061	0.5603
2MM9114WI	0.4362	3.7179	8.2875	10.7125	0.5638
2MM9115WI	0.4395	3.9312	8.7908	11.2092	0.5605
2MM9116WI	0.4365	3.7369	8.7306	11.2694	0.5635
2MM9117WI	0.4396	3.9332	9.2317	11.7683	0.5604
2MM9118WI	0.4367	3.7517	8.7350	11.2650	0.5633
2MM9119WI	0.4394	3.9200	9.2271	11.7729	0.5606
2MM9120WI	0.4418	4.0881	9.7198	12.2802	0.5582
2MM9121WI	0.4393	3.9167	9.2256	11.7744	0.5607
2MM9122WI	0.4399	3.9507	9.6778	12.3222	0.5601
2MM9124WI	0.4439	4.2417	10.2102	12.7898	0.5561
2MM9126WI	0.4397	3.9394	9.2336	11.7664	0.5603
2MM9128WI	0.4431	4.1850	9.7491	12.2509	0.5569
2MM9130WI	0.4428	4.1640	9.7426	12.2574	0.5572
2MM9132WI	0.4426	4.1450	9.7367	12.2633	0.5574
2MM9134WI	0.4394	3.9247	9.6660	12.3340	0.5606
2MM9136WI	0.4367	3.7516	8.7339	11.2661	0.5633
2MM9140WI	0.4369	3.7645	8.7378	11.2622	0.5631

[1] For inner ring rotation.
[2] For outer ring rotation.

3MM9100WI Series

FTF: Fundamental Train Frequency: the frequency at which the cage will operate.

BSF: Ball Spin Frequency: the frequency at which a single defect on a rolling element will be detected.

BPFO: Ball Pass Frequency Outer: the frequency at which a single defect in the outer race will be detected.

BPFI: Ball Pass Frequency Inner: the frequency at which a single defect in the inner race will be detected.

Bearing Number	FTF-Inner[1]	BSF	BPFO	BPFI	FTF-Outer[2]
3MM9100WI	0.3740	1.7697	2.9924	5.0076	0.6260
3MM9101WI	0.3957	2.0724	3.9569	6.0431	0.6043
3MM9102WI	0.4084	2.3844	4.4924	6.5076	0.5916
3MM9103WI	0.4170	2.6493	4.5875	6.4125	0.5830
3MM9104WI	0.4074	2.3573	4.4816	6.5184	0.5926
3MM9105WI	0.4203	2.7625	5.4635	7.5365	0.5797
3MM9106WI	0.4243	2.9475	5.9467	8.0533	0.5752
3MM9107WI	0.4258	2.9877	6.3864	8.6136	0.5742
3MM9108WI	0.4333	3.3411	6.9332	9.0668	0.5667
3MM9109WI	0.4340	3.3761	7.3782	9.6218	0.5660
3MM9110WI	0.4391	3.6669	7.9036	10.0964	0.5609
3MM9111WI	0.4354	3.4544	7.8373	10.1627	0.5646
3MM9112WI	0.4396	3.7005	8.3519	10.6481	0.5604
3MM9113WI	0.4432	3.9461	8.8647	11.1353	0.5568
3MM9114WI	0.4400	3.7251	8.3599	10.6401	0.5600
3MM9115WI	0.4432	3.9379	8.8630	11.1370	0.5568
3MM9116WI	0.4404	3.7441	8.8074	11.1926	0.5596
3MM9117WI	0.4433	3.9400	9.3085	11.6915	0.5567
3MM9118WI	0.4405	3.7587	8.8101	11.1899	0.5595
3MM9119WI	0.4430	3.9267	9.3026	11.6974	0.5570
3MM9120WI	0.4453	4.0945	9.7958	12.2042	0.5547
3MM9121WI	0.4430	3.9235	9.3021	11.6979	0.5570
3MM9122WI	0.4434	3.9573	9.7557	12.2443	0.5566
3MM9124WI	0.4472	4.2479	10.2861	12.7139	0.5528
3MM9126WI	0.4433	3.9462	9.3096	11.6904	0.5567
3MM9128WI	0.4466	4.1914	9.8241	12.1759	0.5534
3MM9130WI	0.4463	4.1705	9.8186	12.1814	0.5537
3MM9132WI	0.4461	4.1515	9.8135	12.1865	0.5539
3MM9134WI	0.4431	3.9318	9.7492	12.2508	0.5569
3MM9136WI	0.4406	3.7588	8.8114	11.1886	0.5594
3MM9140WI	0.4408	3.7719	8.8164	11.1836	0.5592

[1] For inner ring rotation.
[2] For outer ring rotation.

2MMV9100HX Series

FTF: Fundamental Train Frequency: the frequency at which the cage will operate.

BSF: Ball Spin Frequency: the frequency at which a single defect on a rolling element will be detected.

BPFO: Ball Pass Frequency Outer: the frequency at which a single defect in the outer race will be detected.

BPFI: Ball Pass Frequency Inner: the frequency at which a single defect in the inner race will be detected.

Bearing Number	FTF-Inner[1]	BSF	BPFO	BPFI	FTF-Outer[2]
2MMV9100HX	0.3834	1.9496	3.8344	6.1656	0.6166
2MMV9101HX	0.3852	1.9890	3.8517	6.1483	0.6148
2MMV9102HX	0.4023	2.3729	4.8273	7.1727	0.5977
2MMV9103HX	0.3969	2.2403	4.7634	7.2366	0.6031
2MMV9104HX	0.4012	2.3457	4.8147	7.1853	0.5988
2MMV9105HX	0.4043	2.4274	5.2560	7.7440	0.5957
2MMV9106HX	0.4099	2.5903	5.3292	7.6708	0.5901
2MMV9107HX	0.4211	2.9789	6.3162	8.6838	0.5789
2MMV9108HX	0.4291	3.3332	6.8659	9.1341	0.5709
2MMV9109HX	0.4234	3.0758	6.3517	8.6483	0.5766
2MMV9110HX	0.4293	3.3440	6.8694	9.1306	0.5707
2MMV9111HX	0.4472	4.5160	10.7329	13.2671	0.5528
2MMV9112HX	0.4506	4.8343	11.2653	13.7347	0.5494
2MMV9113HX	0.4490	4.6751	11.2241	13.7759	0.5510
2MMV9114HX	0.4490	4.6752	11.2241	13.7759	0.5510
2MMV9115HX	0.4517	4.9403	11.7429	14.2571	0.5483
2MMV9116HX	0.4477	4.5613	11.1913	13.8087	0.5523
2MMV9117HX	0.4502	4.7888	11.7039	14.2961	0.5498
2MMV9118HX	0.4534	5.1295	12.6953	15.3047	0.5466
2MMV9119HX	0.4490	4.6752	11.6731	14.3269	0.5510
2MMV9120HX	0.4510	4.8740	12.1772	14.8228	0.5490
2MMV9121HX	0.4538	5.1719	12.7058	15.2942	0.5462
2MMV9122HX	0.4563	5.4696	13.6877	16.3123	0.5437
2MMV9124HX	0.4542	5.2052	13.1707	15.8293	0.5458

[1] For inner ring rotation.
[2] For outer ring rotation.

3MMV9100HX Series

FTF: Fundamental Train Frequency: the frequency at which the cage will operate.

BSF: Ball Spin Frequency: the frequency at which a single defect on a rolling element will be detected.

BPFO: Ball Pass Frequency Outer: the frequency at which a single defect in the outer race will be detected.

BPFI: Ball Pass Frequency Inner: the frequency at which a single defect in the inner race will be detected.

Part Number	FTF-inner[1]	BSF	BPFO	BPFI	FTF-Outer[2]
3MMV9100HX	0.4003	2.1778	4.0035	5.9965	0.5997
3MMV9101HX	0.3922	2.0022	3.9223	6.0777	0.6078
3MMV9102HX	0.4083	2.3842	4.8993	7.1007	0.5917
3MMV9103HX	0.4032	2.2519	4.8383	7.1617	0.5968
3MMV9104HX	0.4071	2.3568	4.8857	7.1143	0.5929
3MMV9105HX	0.4202	2.7625	5.4630	7.5370	0.5798
3MMV9106HX	0.4250	2.9479	5.9495	8.0505	0.5750
3MMV9107HX	0.4259	2.9879	6.3882	8.6118	0.5741
3MMV9108HX	0.4334	3.3413	6.9349	9.0651	0.5666
3MMV9109HX	0.4280	3.0844	6.4205	8.5795	0.5720
3MMV9110HX	0.4336	3.3519	6.9371	9.0629	0.5664
3MMV9111HX	0.4504	4.5220	10.8100	13.1900	0.5496
3MMV9112HX	0.4536	4.8399	11.3404	13.6596	0.5464
3MMV9113HX	0.4520	4.6809	11.3011	13.6989	0.5480
3MMV9114HX	0.4521	4.6810	11.3025	13.6975	0.5479
3MMV9115HX	0.4545	4.9457	11.8182	14.1818	0.5455
3MMV9116HX	0.4509	4.5674	11.2722	13.7278	0.5491
3MMV9117HX	0.4532	4.7945	11.7824	14.2176	0.5468
3MMV9118HX	0.4562	5.1347	12.7743	15.2257	0.5438
3MMV9119HX	0.4521	4.6810	11.7541	14.2459	0.5479
3MMV9120HX	0.4540	4.8796	12.2580	14.7420	0.5460
3MMV9121HX	0.4566	5.1772	12.7848	15.2152	0.5434
3MMV9122HX	0.4589	5.4746	13.7678	16.2322	0.5411
3MMV9124HX	0.4568	5.2102	13.2485	15.7515	0.5432

[1] For inner ring rotation.
[2] For outer ring rotation.

2MMV99100WN Series

FTF: Fundamental Train Frequency: the frequency at which the cage will operate.

BSF: Ball Spin Frequency: the frequency at which a single defect on a rolling element will be detected.

BPFO: Ball Pass Frequency Outer: the frequency at which a single defect in the outer race will be detected.

BPFI: Ball Pass Frequency Inner: the frequency at which a single defect in the inner race will be detected.

Bearing Number	FTF-Inner[1]	BSF	BPFO	BPFI	FTF-Outer[2]
2MMV99101WN	0.3887	2.0593	3.4985	5.5015	0.6113
2MMV99102WN	0.4023	2.3729	4.4250	6.5750	0.5977
2MMV99103WN	0.4115	2.6389	5.3494	7.6506	0.5885
2MMV99104WN	0.4011	2.3455	4.4120	6.5880	0.5989
2MMV99105WN	0.4148	2.7523	5.3928	7.6072	0.5852
2MMV99106WN	0.4288	3.3241	6.8615	9.1385	0.5712
2MMV99107WN	0.4448	4.3111	9.3403	11.6597	0.5552
2MMV99108WN	0.4512	4.8947	10.8295	13.1705	0.5488
2MMV99109WN	0.4489	4.6750	10.3246	12.6754	0.5511
2MMV99110WN	0.4528	5.0724	11.3207	13.6793	0.5472
2MMV99111WN	0.4525	5.0285	11.3121	13.6879	0.5475
2MMV99112WN	0.4556	5.3815	11.8443	14.1557	0.5444
2MMV99113WN	0.4582	5.7340	12.8308	15.1692	0.5418
2MMV99114WN	0.4575	5.6283	12.8104	15.1896	0.5425
2MMV99115WN	0.4602	6.0120	13.8057	16.1943	0.5398
2MMV99116WN	0.4589	5.8300	13.3085	15.6915	0.5411
2MMV99117WN	0.4610	6.1310	14.2906	16.7094	0.5390
2MMV99118WN	0.4568	5.5308	12.7902	15.2098	0.5432
2MMV99119WN	0.4586	5.7748	13.2992	15.7008	0.5414
2MMV99120WN	0.4606	6.0708	14.2782	16.7218	0.5394
2MMV99121WN	0.4596	5.9229	13.7892	16.2108	0.5404
2MMV99122WN	0.4591	5.8399	13.7729	16.2271	0.5409
2MMV99124WN	0.4618	6.2625	14.7784	17.2216	0.5382
2MMV99126WN	0.4610	6.1362	14.7512	17.2488	0.5390
2MMV99128WN	0.4633	6.5243	15.7513	18.2487	0.5367
2MMV99130WN	0.4616	6.2346	15.2336	17.7664	0.5384

[1] For inner ring rotation.
[2] For outer ring rotation.

3MMV99100WN Series

FTF: Fundamental Train Frequency: the frequency at which the cage will operate.

BSF: Ball Spin Frequency: the frequency at which a single defect on a rolling element will be detected.

BPFO: Ball Pass Frequency Outer: the frequency at which a single defect in the outer race will be detected.

BPFI: Ball Pass Frequency Inner: the frequency at which a single defect in the inner race will be detected.

Bearing Number	FTF-inner[1]	BSF	BPFO	BPFI	FTF-Outer[2]
3MMV99101WN	0.3956	2.0721	3.5600	5.4400	0.6044
3MMV99102WN	0.4083	2.3842	4.4911	6.5089	0.5917
3MMV99103WN	0.4169	2.6491	5.4201	7.5799	0.5831
3MMV99104WN	0.4075	2.3575	4.4829	6.5171	0.5925
3MMV99105WN	0.4204	2.7627	5.4648	7.5352	0.5796
3MMV99106WN	0.4335	3.3327	6.9356	9.0644	0.5665
3MMV99107WN	0.4483	4.3177	9.4149	11.5851	0.5517
3MMV99108WN	0.4544	4.9006	10.9048	13.0952	0.5456
3MMV99109WN	0.4522	4.6813	10.4011	12.5989	0.5478
3MMV99110WN	0.4559	5.0782	11.3974	13.6026	0.5441
3MMV99111WN	0.4555	5.0341	11.3872	13.6128	0.5445
3MMV99112WN	0.4584	5.3867	11.9173	14.0827	0.5416
3MMV99113WN	0.4609	5.7389	12.9047	15.0953	0.5391
3MMV99114WN	0.4601	5.6332	12.8838	15.1162	0.5399
3MMV99115WN	0.4626	6.0166	13.8794	16.1206	0.5374
3MMV99116WN	0.4615	5.8348	13.3829	15.6171	0.5385
3MMV99117WN	0.4634	6.1356	14.3663	16.6337	0.5366
3MMV99118WN	0.4594	5.5357	12.8631	15.1369	0.5406
3MMV99119WN	0.4611	5.7794	13.3715	15.6285	0.5389
3MMV99120WN	0.4630	6.0753	14.3518	16.6482	0.5370
3MMV99121WN	0.4620	5.9273	13.8611	16.1389	0.5380
3MMV99122WN	0.4615	5.8444	13.8448	16.1552	0.5385
3MMV99124WN	0.4641	6.2667	14.8500	17.1500	0.5359
3MMV99126WN	0.4633	6.1406	14.8262	17.1738	0.5367
3MMV99128WN	0.4655	6.5284	15.8262	18.1738	0.5345
3MMV99130WN	0.4639	6.2388	15.3080	17.6920	0.5361

[1] For inner ring rotation.
[2] For outer ring rotation.

2MM200WI Series

FTF: Fundamental Train Frequency: the frequency at which the cage will operate.

BSF: Ball Spin Frequency: the frequency at which a single defect on a rolling element will be detected.

BPFO: Ball Pass Frequency Outer: the frequency at which a single defect in the outer race will be detected.

BPFI: Ball Pass Frequency Inner: the frequency at which a single defect in the inner race will be detected.

Bearing Number	FTF-Inner[1]	BSF	BPFO	BPFI	FTF-Outer[2]
2MM200WI	0.3668	1.6722	2.9345	5.0655	0.6332
2MM201WI	0.3699	1.7226	3.3290	5.6710	0.6301
2MM202WI	0.3855	1.9898	3.8552	6.1448	0.6145
2MM203WI	0.3861	2.0025	3.8609	6.1391	0.6139
2MM204WI	0.3857	2.0000	3.8570	6.1430	0.6143
2MM205WI	0.4008	2.3347	4.8091	7.1909	0.5992
2MM206WI	0.4001	2.3182	4.8007	7.1993	0.5999
2MM207WI	0.3997	2.3104	4.7965	7.2035	0.6003
2MM208WI	0.3980	2.2638	4.3777	6.6223	0.6020
2MM209WI	0.4058	2.4683	5.2757	7.7243	0.5942
2MM210WI	0.4126	2.6716	5.7757	8.2243	0.5874
2MM211WI	0.4110	2.6263	5.7543	8.2457	0.5890
2MM212WI	0.4098	2.5901	5.7376	8.2624	0.5902
2MM213WI	0.4130	2.6906	5.7818	8.2182	0.5870
2MM214WI	0.4135	2.7082	5.7891	8.2109	0.5865
2MM215WI	0.4177	2.8554	6.2659	8.7341	0.5823
2MM216WI	0.4164	2.8064	6.2462	8.7538	0.5836
2MM217WI	0.4152	2.7649	6.2281	8.7719	0.5848
2MM218WI	0.4142	2.7301	5.7984	8.2016	0.5858
2MM219WI	0.4132	2.6992	5.7853	8.2147	0.5868
2MM220WI	0.4125	2.6714	5.7744	8.2256	0.5875
2MM222WI	0.4110	2.6263	5.7543	8.2457	0.5890
2MM224WI	0.4131	2.6927	5.7830	8.2170	0.5869
2MM226WI	0.4192	2.9059	7.1260	9.8740	0.5808
2MM230WI	0.4124	2.6714	6.1865	8.8135	0.5876

[1] For inner ring rotation.
[2] For outer ring rotation.

3MM200WI Series

FTF: Fundamental Train Frequency: the frequency at which the cage will operate.

BSF: Ball Spin Frequency: the frequency at which a single defect on a rolling element will be detected.

BPFO: Ball Pass Frequency Outer: the frequency at which a single defect in the outer race will be detected.

BPFI: Ball Pass Frequency Inner: the frequency at which a single defect in the inner race will be detected.

Bearing Number	FTF-Inner[1]	BSF	BPFO	BPFI	FTF-Outer[2]
3MM200WI	0.3668	1.6722	2.9345	5.0655	0.6332
3MM201WI	0.3774	1.7366	3.3966	5.6034	0.6226
3MM202WI	0.3921	2.0021	3.9212	6.0788	0.6079
3MM203WI	0.3928	2.0150	3.9277	6.0723	0.6072
3MM204WI	0.3929	2.0134	3.9290	6.0710	0.6071
3MM205WI	0.4070	2.3463	4.8841	7.1159	0.5930
3MM206WI	0.4064	2.3301	4.8769	7.1231	0.5936
3MM207WI	0.4061	2.3224	4.8734	7.1266	0.5939
3MM208WI	0.4043	2.2757	4.4476	6.5524	0.5957
3MM209WI	0.4117	2.4793	5.3519	7.6481	0.5883
3MM210WI	0.4180	2.6818	5.8519	8.1481	0.5820
3MM211WI	0.4166	2.6367	5.8323	8.1677	0.5834
3MM212WI	0.4155	2.6007	5.8171	8.1829	0.5845
3MM213WI	0.4185	2.7009	5.8587	8.1413	0.5815
3MM214WI	0.4189	2.7182	5.8639	8.1361	0.5811
3MM215WI	0.4228	2.8649	6.3421	8.6579	0.5772
3MM216WI	0.4216	2.8162	6.3241	8.6759	0.5784
3MM217WI	.4205	2.7748	6.3076	8.6924	0.5795
3MM218WI	0.4196	2.7402	5.8738	8.1262	0.5804
3MM219WI	0.4187	2.7094	5.8618	8.1382	0.5813
3MM220WI	0.4179	2.6816	5.8506	8.1494	0.5821
3MM222WI	0.4166	2.6367	5.8323	8.1677	0.5834
3MM224WI	0.4184	2.7026	5.8573	8.1427	0.5816
3MM226WI	0.4241	2.9151	7.2100	9.7900	0.5759
3MM230WI	0.4179	2.6815	6.2681	8.7319	0.5821

[1] For inner ring rotation.
[2] For outer ring rotation.

2MM300WI Series

FTF: Fundamental Train Frequency: the frequency at which the cage will operate.

BSF: Ball Spin Frequency: the frequency at which a single defect on a rolling element will be detected.

BPFO: Ball Pass Frequency Outer: the frequency at which a single defect in the outer race will be detected.

BPFI: Ball Pass Frequency Inner: the frequency at which a single defect in the inner race will be detected.

Bearing Number	FTF-Inner[1]	BSF	BPFO	BPFI	FTF-Outer[2]
2MM301WI	0.3594	1.5791	2.8751	5.1249	0.6406
2MM302WI	0.3861	2.0024	3.8609	6.1391	0.6139
2MM303WI	0.3564	1.5411	2.4946	4.5054	0.6436
2MM304WI	0.3618	1.6111	2.8941	5.1059	0.6382
2MM305WI	0.3681	1.6997	3.3127	5.6873	0.6319
2MM306WI	0.3722	1.7663	3.7221	6.2779	0.6278
2MM307WI	0.3799	1.8962	3.7990	6.2010	0.6201
2MM308WI	0.3801	1.9333	4.2025	6.7975	0.6180
2MM309WI	0.3837	1.9636	3.8373	6.1627	0.6163
2MM310WI	0.3851	1.9889	3.8510	6.1490	0.6149
2MM311WI	0.3861	2.0099	3.8606	6.1394	0.6139
2MM312WI	0.3870	2.0281	3.8704	6.1296	0.6130
2MM313WI	0.3879	2.0440	4.2665	6.7335	0.6121
2MM314WI	0.3884	2.0576	4.2729	6.7271	0.6116
2MM319WI	0.3857	2.0013	3.8570	6.1430	0.6143

[1] For inner ring rotation.
[2] For outer ring rotation.

3MM300WI Series

FTF: Fundamental Train Frequency: the frequency at which the cage will operate.

BSF: Ball Spin Frequency: the frequency at which a single defect on a rolling element will be detected.

BPFO: Ball Pass Frequency Outer: the frequency at which a single defect in the outer race will be detected.

BPFI: Ball Pass Frequency Inner: the frequency at which a single defect in the inner race will be detected.

Bearing Number	FTF-Inner[1]	BSF	BPFO	BPFI	FTF-Outer[2]
3MM301WI	0.3678	1.5949	2.9425	5.0575	0.6322
3MM302WI	0.3928	2.0149	3.9277	6.0723	0.6072
3MM303WI	0.3653	1.5578	2.5571	4.4429	0.6347
3MM304WI	0.3701	1.6268	2.9611	5.0389	0.6299
3MM305WI	0.3761	1.7147	3.3850	5.6150	0.6239
3MM306WI	0.3801	1.7811	3.8010	6.1990	0.6199
3MM307WI	0.3874	1.9101	3.8736	6.1264	0.6126
3MM308WI	0.3893	1.9469	4.2826	6.7174	0.6107
3MM309WI	0.3910	1.9772	3.9096	6.0904	0.6090
3MM310WI	0.3920	2.0019	3.9205	6.0795	0.6080
3MM311WI	0.3931	2.0231	3.9314	6.0686	0.6069
3MM312WI	0.3941	2.0412	3.9405	6.0595	0.6059
3MM313WI	0.3947	2.0567	4.3415	6.6585	0.6053
3MM314WI	0.3954	2.0705	4.3491	6.6509	0.6046
3MM319WI	0.3927	2.0144	3.9270	6.0730	0.6073

[1] For inner ring rotation.
[2] For outer ring rotation.

FREQUENCY COEFFICIENTS

BALL SCREW SUPPORT SERIES

Metric Series

FTF: Fundamental Train Frequency: the frequency at which the cage will operate.

BSF: Ball Spin Frequency: the frequency at which a single defect on a rolling element will be detected.

BPFO: Ball Pass Frequency Outer: the frequency at which a single defect in the outer race will be detected.

BPFI: Ball Pass Frequency Inner: the frequency at which a single defect in the inner race will be detected.

Bearing Number	FTF-Inner[1]	BSF	BPFO	BPFI	FTF-Outer[2]
MM12BS32	0.4460	2.2827	4.9063	6.0937	0.5540
MM15BS35	0.4525	2.6008	5.8825	7.1175	0.5475
MM17BS47	0.4362	2.1044	5.2349	6.7651	0.5638
MM20BS47	0.4362	2.1044	5.2349	6.7651	0.5638
MM25BS52	0.4423	2.3307	5.7494	7.2506	0.5577
MM25BS62	0.4554	3.0307	7.7410	9.2590	0.5446
MM30BS62	0.4554	3.0307	7.7410	9.2590	0.5446
MM30BS72	0.4569	3.1286	8.2244	9.7756	0.5431
MM35BS72	0.4569	3.1286	8.2244	9.7756	0.5431
MM35BS100	0.4564	3.0983	8.2159	9.7841	0.5436
MM40BS72	0.4569	3.1286	8.2244	9.7756	0.5431
MM40BS90	0.4676	4.1773	11.2230	12.7770	0.5324
MM40BS90-20	0.4676	4.1767	11.2228	12.7772	0.5324
MM40BS90-23	0.4676	4.1767	11.2200	12.7772	0.5324
MM40BS100	0.4564	3.0983	8.2159	9.7841	0.5436
MM45BS75	0.4605	3.4145	9.2094	10.7906	0.5395
MM45BS100	0.4564	3.0983	8.2159	9.7841	0.5436
MM50BS90	0.4676	4.1773	11.2230	12.7770	0.5324
MM50BS100	0.4564	3.0983	8.2159	9.7841	0.5436
MM55BS90	0.4676	4.1773	11.2230	12.7770	0.5324
MM55BS120	0.4644	3.7967	9.7516	11.2484	0.5356
MM60BS120	0.4644	3.7967	9.7516	11.2484	0.5356
MM75BS110	0.4747	5.3492	14.2402	15.7598	0.5253
MM100BS150	0.4790	6.4611	17.7226	19.2774	0.5210

Inch Series

Bearing Number	FTF-Inner[1]	BSF	BPFO	BPFI	FTF-Outer[2]
MM9306WI2H	0.4362	2.1044	5.2349	6.7651	0.5638
MM9308WI2H	0.4554	3.0307	7.7410	9.2590	0.5446
MM9310WI2H	0.4569	3.1286	8.2244	9.7756	0.5431
MM9311WI3H	0.4605	3.4145	9.2094	10.7906	0.5395
MM9313WI5H	0.4676	4.1773	11.2230	12.7770	0.5324
MM9316WI3H	0.4747	5.3492	14.2402	15.7598	0.5253
MM9321WI3	0.4794	6.4615	17.7378	19.2622	0.5206
MM9326WI6H	0.4778	6.1209	16.7239	18.2761	0.5222

[1] For inner ring rotation.
[2] For outer ring rotation.

PRECISION TAG DEVIATION AND RUNOUT CHARTS

TAPERED ROLLER BEARINGS

Bearing tag markings include indication of bearing accuracy, which can assist with selective assembly and installation. Refer to diagrams on page 107.

METRIC SYSTEM

Class	Designation no.	Deviation	
		mm Over Incl.	in. Over Incl.
All	-2	**0.000 to -0.002**	0.0000 to -0.0001
	-4	**-0.002 to -0.004**	-0.0001 to -0.0002
	-8	**-0.004 to -0.008**	-0.0002 to -0.0003
	-12	**-0.008 to -0.012**	-0.0003 to -0.0004
	-16	**-0.012 to -0.016**	-0.0004 to -0.0006
	-20	**-0.016 to -0.020**	-0.0006 to -0.0008
	-25	**-0.020 to -0.025**	-0.0008 to -0.0010
	-30	**-0.025 to -0.030**	-0.0010 to -0.0012
	-35	**-0.030 to -0.035**	-0.0012 to -0.0014
	-40	**-0.035 to -0.040**	-0.0014 to -0.0016
	-45	**-0.040 to -0.045**	-0.0016 to -0.0018
	-50	**-0.045 to -0.050**	-0.0018 to -0.0020
	-55	**-0.050 to -0.055**	-0.0020 to -0.0022
	-60	**-0.055 to -0.060**	-0.0022 to -0.0024
	-65	**-0.060 to -0.065**	-0.0024 to -0.0026
	-70	**-0.065 to -0.070**	-0.0026 to -0.0028
	-75	**-0.070 to -0.075**	-0.0028 to -0.0030
	-80	**-0.075 to -0.080**	-0.0030 to -0.0031

Class	Designation no.	Deviation	
		mm Over Incl.	in. Over Incl.
C & B	2	**0.000 to 0.002**	0.0000 to 0.0001
	4	**0.002 to 0.004**	0.0001 to 0.0002
	8	**0.004 to 0.008**	0.0002 to 0.0003
	12	**0.008 to 0.012**	0.0003 to 0.0004
	16	**0.012 to 0.016**	0.0004 to 0.0006
	20	**0.016 to 0.020**	0.0006 to 0.0008
	25	**0.020 to 0.025**	0.0008 to 0.0010
	30	**0.025 to 0.030**	0.0010 to 0.0012
	35	**0.030 to 0.035**	0.0012 to 0.0014
	40	**0.035 to 0.040**	0.0014 to 0.0016
	45	**0.040 to 0.045**	0.0016 to 0.0018
	50	**0.045 to 0.050**	0.0018 to 0.0020
	55	**0.050 to 0.055**	0.0020 to 0.0022
	60	**0.055 to 0.060**	0.0022 to 0.0024
	65	**0.060 to 0.065**	0.0024 to 0.0026
	70	**0.065 to 0.070**	0.0026 to 0.0028
	75	**0.070 to 0.075**	0.0028 to 0.0030
	80	**0.075 to 0.080**	0.0030 to 0.0031
A	actual amount	**0.0000 to 0.0019**	0.00000 to 0.000075
AA	actual amount	**0.0000 to 0.0010**	0.00000 to 0.00004

INCH SYSTEM

Class	Designation no.	Deviation	
		mm Over Incl.	in. Over Incl.
All	+1	**0.000 to 0.003**	0.0000 to 0.0001
	+2	**0.003 to 0.005**	0.0001 to 0.0002
	+3	**0.005 to 0.008**	0.0002 to 0.0003
	+4	**0.008 to 0.010**	0.0003 to 0.0004
	+5	**0.010 to 0.013**	0.0004 to 0.0005
	+6	**0.013 to 0.015**	0.0005 to 0.0006
	+7	**0.015 to 0.018**	0.0006 to 0.0007
	+8	**0.018 to 0.020**	0.0007 to 0.0008
	+9	**0.020 to 0.023**	0.0008 to 0.0009
	+10	**0.023 to 0.025**	0.0009 to 0.0010
	+11	**0.025 to 0.028**	0.0010 to 0.0011
	+12	**0.028 to 0.030**	0.0011 to 0.0012
	+13	**0.030 to 0.033**	0.0012 to 0.0013
	+14	**0.033 to 0.036**	0.0013 to 0.0014
	+15	**0.036 to 0.038**	0.0014 to 0.0015
	+16	**0.038 to 0.041**	0.0015 to 0.0016
	+17	**0.041 to 0.043**	0.0016 to 0.0017
	+18	**0.043 to 0.046**	0.0017 to 0.0018
	+19	**0.046 to 0.048**	0.0018 to 0.0019
	+20	**0.048 to 0.051**	0.0019 to 0.0020
	+21	**0.051 to 0.053**	0.0020 to 0.0021
	+22	**0.053 to 0.056**	0.0021 to 0.0022
	+23	**0.056 to 0.058**	0.0022 to 0.0023
	+24	**0.058 to 0.061**	0.0023 to 0.0024
	+25	**0.061 to 0.064**	0.0024 to 0.0025
	+26	**0.064 to 0.066**	0.0025 to 0.0026
	+27	**0.066 to 0.069**	0.0026 to 0.0027
	+28	**0.069 to 0.071**	0.0027 to 0.0028
	+29	**0.071 to 0.074**	0.0028 to 0.0029
	+30	**0.074 to 0.076**	0.0029 to 0.0030

Class	Designation no.	Deviation	
		mm Over Incl.	in. Over Incl.
3 & 0	+1	**0.000 to 0.003**	0.0000 to 0.0001
	+2	**0.003 to 0.005**	0.0001 to 0.0002
	+3	**0.005 to 0.008**	0.0002 to 0.0003
	+4	**0.008 to 0.010**	0.0003 to 0.0004
	+5	**0.010 to 0.013**	0.0004 to 0.0005
	+6	**0.013 to 0.015**	0.0005 to 0.0006
	+7	**0.015 to 0.018**	0.0006 to 0.0007
	+8	**0.018 to 0.020**	0.0007 to 0.0008
	+9	**0.020 to 0.023**	0.0008 to 0.0009
	+10	**0.023 to 0.025**	0.0009 to 0.0010
	+11	**0.025 to 0.028**	0.0010 to 0.0011
	+12	**0.028 to 0.030**	0.0011 to 0.0012
	+13	**0.030 to 0.033**	0.0012 to 0.0013
	+14	**0.033 to 0.036**	0.0013 to 0.0014
	+15	**0.036 to 0.038**	0.0014 to 0.0015
	+16	**0.038 to 0.041**	0.0015 to 0.0016
	+17	**0.041 to 0.043**	0.0016 to 0.0017
	+18	**0.043 to 0.046**	0.0017 to 0.0018
	+19	**0.046 to 0.048**	0.0018 to 0.0019
	+20	**0.048 to 0.051**	0.0019 to 0.0020
	+21	**0.051 to 0.053**	0.0020 to 0.0021
	+22	**0.053 to 0.056**	0.0021 to 0.0022
	+23	**0.056 to 0.058**	0.0022 to 0.0023
	+24	**0.058 to 0.061**	0.0023 to 0.0024
	+25	**0.061 to 0.064**	0.0024 to 0.0025
	+26	**0.064 to 0.066**	0.0025 to 0.0026
	+27	**0.066 to 0.069**	0.0026 to 0.0027
	+28	**0.069 to 0.071**	0.0027 to 0.0028
	+29	**0.071 to 0.074**	0.0028 to 0.0029
	+30	**0.074 to 0.076**	0.0029 to 0.0030
00	Act. amt. in microinches	**0.0000 to 0.0019**	0.0000 to 0.000075
000	Act. amt. in microinches	**0.0000 to 0.0010**	0.000000 to 0.000040

D

GEOMETRY FACTORS

TAPERED ROLLER BEARINGS

The tables below list the C_g, G_1, G_2 and K factors for tapered roller bearings covered in this catalog. These constants are used in heat generation estimates, influence of application operating speed, and other calculations relating to the bearing's internal geometry details.

Part number	C_g	G_1	G_2	K
JP6049-JP6010	0.0240	39.5	22.5	1.24
29585-29520	0.0303	70.3	25.8	1.27
JLM710949C-JLM710910	0.0273	55.5	24.5	1.29
399A-394A	0.0260	56.0	21.4	1.45
JP7049-JP7010	0.0264	51.1	31.0	1.27
29685-29620	0.0323	77.7	43.3	1.20
34301-34478	0.0297	69.3	27.0	1.30
JP8049-JP8010	0.0297	69.7	37.4	1.29
JM716649-JM716610	0.0371	117.1	38.4	1.31
497-493	0.0352	104.6	29.3	1.31
JP9049-JP9010	(Call)	83.8	46.1	1.18
LM718947-LM718910	0.0389	124.2	37.6	1.22
JP10044-JP10010	0.0357	104.0	40.9	1.24
JM719149-JM719113	0.0410	150.5	36.1	1.32
JP10049-JP10010	0.0357	104.0	40.9	1.24
52400-52618	0.0450	175.4	41.7	1.23
JM822049-JM822010	0.0474	191.5	45.8	1.18
JLM722948-JLM722912	0.0424	161.0	57.2	1.27
68462-68712	0.0274	163.1	51.7	1.18
JL724348-JL724314	0.0432	170.2	70.6	1.27
JL725346-JL725316	0.0455	186.6	77.7	1.23
JP13049-JP13010	0.0287	192.2	60.3	1.24
JP14049-JP14010	0.0311	219.5	68.2	1.16
36690-36620	0.0544	366.1	152.0	1.59
JL730646-JL730612	0.0542	295.2	104.0	1.27
JP16049-JP16010	0.0346	294.4	123.0	1.20
JP17049-JP17010	0.0266	339.3	147.0	1.27
36990-36920	0.0418	514.8	241.0	1.33
JP18049-JP18010	(Call)	369.2	162.0	1.21
JM736149-JM736110	0.0343	589.4	128.0	1.22
87750-87111	0.0318	574.6	131.0	1.41
67985-67920	0.0401	819.5	172.0	1.15
543085-543114	0.0311	608.5	232.0	1.52

Table 23. TS style.

Part Number	C_g	G_1	G_2	K
2984-2924-B	0.0832	38.2	15.7	1.69
JP6049-JP6010-B	0.0240	39.5	22.5	1.24
3984-3920-B	0.1092	75.2	21.3	1.45
482-472-B	0.1083	77.2	23.0	1.61
566-563-B	0.1167	101.0	24.0	1.61
JP7049-JP7010-B	0.0264	51.1	31.0	1.27
33287-33462-B	0.1162	84.2	24.4	1.34
27690-27620-B	0.1198	98.2	41.8	1.40
42350-42587-B	0.1386	130.0	37.2	1.19
JP8049-JP8010-B	0.0297	69.7	37.4	1.29
JP9049-JB9010-B	(Call)	83.8	46.1	1.18
JP10044-JP10010-B	0.0357	104.0	40.9	1.24
683-672-B	0.1056	182.0	37.2	1.24
JP10049-JP10010-B	0.0357	104.0	40.9	1.24
687-672-B	0.1056	182.0	37.2	1.24
71450-71750-B	0.1156	269.0	45.7	1.40
JP13049-JP13010-B	0.0287	192.2	60.3	1.24
JP14049-JP14010-B	0.0311	219.5	68.2	1.16
JL730646-JL730612-B	0.0542	295.2	104.0	1.27

Table 24. TSF style.

D

GEOMETRY FACTORS – *continued*

D

Part number	K
XR496051	0.48
JXR637050	0.45
JXR678054	0.47
JXR652050	0.46
XR678052	0.47
JXR699050	0.45
XR766051	0.45
XR820060	0.46
XR855053	0.45
XR882055	0.44
XR882054	0.44
XR889058	0.44
XR897051	0.43

Table 25. Crossed roller style.

Part number	G_1	G_2	K
JP5049P-JP5019HR	32.5	6.4	1.65
JP5049P-JP5020HR	32.5	6.4	1.65
JP5049PH-JP5017HR	32.5	6.4	1.65
JP5049PH-JP5020HR	32.5	6.4	1.65
JP7548P-JP7520HR	60.5	23.3	1.52
JP7549P-JP7519HR	60.5	23.3	1.52
JP8548-JP8518HR	86.4	15.7	1.56
JP8549P-JP8519HR	86.4	15.7	1.56
JP10048-JP10019HR	106.0	45.5	1.24
JP10048-JP10019HRA	106.0	45.5	1.24
JP11035-JP11019HR	140.4	56.1	1.63
JP11048-JP11019HR	140.4	56.1	1.63
JP12043P-JP12019HR	172.0	34.6	1.50
JP12049P-JP12019HR	172.0	34.6	1.50
JP13043P-JP13016HR	212.0	39.0	1.50
JP13049P-JP13016HR	212.0	39.0	1.50
JP14043P-JP14019HR	235.0	44.8	1.40
JP14049P-JP14019HR	235.0	44.8	1.40
JP16043P-JP16019HR	319.0	58.9	1.44
JP16049P-JP16019HR	319.0	58.9	1.44
JP17049P-JP17019HR	365.4	62.9	1.50
JP18049P-JP18019HR	397.8	70.2	1.42
JP20049P-JP20019HR	479.5	140.8	1.46
JP22049E-JP22019HR	588.1	184.9	1.33
JL555235-JL55512HR	1305.0	393.0	1.64
JL555239-JL55512HR	1305.0	393.0	1.64

Table 26. Hydra-Rib style.

RADIAL INTERNAL CLEARANCE

BALL BEARINGS

Deep groove radial type bearings may be matched to various radial internal clearances to meet specific design and performance requirements. The following chart lists the clearance options available.

Deep groove bearings ordered without a prefix for clearance specification will be supplied with a "P" fit (ISO C3) as standard.

Values shown in micrometers (µm) and ten-thousandths inches (0.0001 in.).

Bore no.	"H" fit snug (C2)		"R" fit regular (C0)		"P" fit loose (C3)-standard		"J" fit extra-loose (C4)	
	µm	0.0000 in.	**µm**	0.0000 in.	**µm**	0.0000 in.	**µm**	0.0000 in.
00	**3-8**	1-3	**5-13**	2-5	**10-20**	4-8	**18-25**	7-10
01	**3-10**	1-4	**5-15**	2-6	**13-23**	5-9	**20-30**	8-12
02	**3-10**	1-4	**5-15**	2-6	**13-23**	5-9	**20-30**	8-12
03	**3-10**	1-4	**5-15**	2-6	**13-23**	5-9	**20-30**	8-12
04	**3-10**	1-4	**8-18**	3-7	**15-25**	6-10	**23-33**	9-13
05	**3-10**	1-4	**8-18**	3-7	**15-25**	6-10	**25-38**	10-15
06	**3-10**	1-4	**8-18**	3-7	**15-25**	6-10	**25-38**	10-15
07	**3-10**	1-4	**8-18**	3-7	**18-30**	7-12	**30-43**	12-17
08	**3-10**	1-4	**8-18**	3-7	**18-30**	7-12	**30-43**	12-17
09	**3-10**	1-4	**8-20**	3-8	**20-33**	8-13	**33-48**	13-19
10	**3-10**	1-4	**8-20**	3-8	**20-33**	8-13	**33-48**	13-19
11	**3-13**	1-5	**10-25**	4-10	**25-40**	10-16	**40-58**	16-23
12	**3-13**	1-5	**10-25**	4-10	**25-40**	10-16	**40-58**	16-23
13	**3-13**	1-5	**10-25**	4-10	**25-40**	10-16	**40-58**	16-23
14	**3-13**	1-5	**10-25**	5-11	**28-48**	11-19	**48-68**	19-27
15	**3-13**	1-5	**13-28**	5-11	**28-48**	11-19	**48-68**	19-27
16	**3-13**	1-5	**13-28**	5-11	**28-48**	11-19	**48-68**	19-27
17-20	**3-15**	1-6	**13-28**	5-13	**33-55**	13-22	**55-80**	22-32
21-24	**3-15**	1-6	**18-38**	7-15	**38-63**	15-25	**63-93**	25-37
25-28	**5-20**	2-8	**20-45**	8-18	**43-79**	17-31	**74-127**	29-50

BEARING SPACERS

Spacers are used to increase shaft rigidity, moment stiffness and decrease deflection. Spacers, mounted between units of a pair of bearings, are preferably made of alloy steel, hardened and ground, and should be sturdy in cross section and equal in length. Equal lengths can be produced by grinding the inner-ring spacer and outer-ring spacer together. It is important that the faces of the spacers be square and that their parallelism be the best possible. All corners should be broken to remove sharp edges and burrs.

The inside diameter of the inner-ring spacers should clear the shaft, but not be so loose as to make it possible to mount and run them eccentrically. For short spacers and high operating speeds, clearance of not more than 0.025 mm (0.0010 in.) over the maximum shaft diameter has been found generally acceptable. For long spacers and low speeds, this clearance may be increased to prevent the shaft from disturbing the face parallelism of the spacer. The spacer outside diameter should match the shaft shoulder diameter of the bearing.

The outside diameter of the outer-ring spacers should be about 0.025 mm (0.0010 in.) smaller than the minimum bore of the housing. These should have lubricant holes and grooves where necessary and are usually centrally located.

Spacer end parallelism should be the same as the parallelism tolerance for the adjacent bearing.

BEARING LOCKNUTS

To position precision bearings on spindle shafts, precision manufactured self-locking bearing locknuts are suggested rather than the conventional locknuts and lockwashers used for bearings made to ABEC 1/ISO P0 standard class tolerances.

This precision bearing nut incorporates a locking feature in its design. The nut threads deform slightly as the locking setscrews are tightened. This slight deformation creates an interference with the shaft threads which prevents further rotation of the locknut. The precision threads of this locknut are cut square with the face to provide the necessary true-running clamping surface against the inner-ring face of the bearings.

LOCKNUT TORQUE[1]

BALL BEARINGS

General guidelines for locknut torques are shown in the table below for dry thread engagement. Bearing locknuts are to be tightened using a torque wrench and a two-point locknut wrench or other suitable torque wrench adapter.

Reference MIL-B-17931

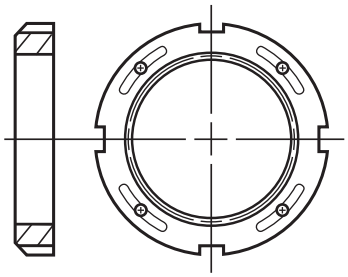

D

Bearing bore	Locknut torque[1]		Approximate clamping force	
mm	N/m	ft-lb.	kN	lb.
10	14-27	10-20	7.2-14.4	1620-3240
12	14-27	10-20	5.9-11.9	1340-2680
15	14-27	10-20	4.8-9.5	1070-2140
17	14-27	10-20	4.1-8.3	940-1880
20	16-47	12-35	4.2-12.3	950-2770
25	31-68	23-50	6.4-14.1	1450-3170
30	43-81	32-60	7.5-14.1	1690-3710
35	53-95	39-70	7.8-14.0	1750-3140
40	68-108	50-80	8.7-14.0	1970-3140
45	87-122	64-90	9.9-13.9	2220-3120
50	91-136	67-100	9.3-13.9	2090-3120
55	111-169	82-125	10.4-15.7	2330-3540
60	134-203	99-150	11.4-17.3	2560-3880
65	178-237	131-175	13.9-18.6	3130-4190
70	206-271	152-200	14.9-19.7	3360-4430
75	235-339	173-250	16.0-23.2	3610-5220
80	267-373	197-275	17.0-23.8	3840-5350
85	301-441	222-325	18.0-26.4	4060-5940
90	336-508	248-375	19.0-28.8	4280-6480
95	376-576	277-425	20.1-30.9	4520-6950
100	468-644	345-475	23.8-32.8	5360-7380
105	515-746	380-550	25.0-36.1	5620-8120
110	515-746	380-550	23.7-34.4	5340-7740
120	515-746	380-550	21.8-31.5	4900-7080
130	515-746	380-550	20.0-29.1	4510-6540
140	515-746	380-550	18.6-27.0	4190-6070
150	515-746	380-550	17.4-25.2	3910-5660
160	515-746	380-550	16.4-23.7	3680-5330

[1] Spindle bearings only. Contact Timken Engineering for use with tapered roller bearings. Valid in all preloaded bearing mounting arrangements.

LUBRICATION SPECIFICATIONS

BALL BEARINGS

Timken suggests and provides the following lubricants and rust preservatives with their bearings. Equivalents may be substituted. Note: Rust preservatives are only for temporary storage of the bearings prior to installation.

Quantity of Grease

- 25 percent to 40 percent pack for low to moderate speed (< 500000 dN).
- 15 percent to 20 percent pack for high speed (≥ 500000 dN).

Lubrication code	Lubrication	FS specification
160	Aeroshell 22	FS381B-P
436	Anticorit L-245XBF	FS890
078[1]	Chevron SRI	FS545
037	Dow Corning 44	FS137A
125	Ferrocote 5856 BF	FS639
162[1]	Isoflex NBU 15	FS637
443[1]	Isoflex NCA 15	FS905
422	Isoflex SuperLDS18	FS735
115	Isoflex Topas NB52	FS737
149	Isoflex Topas NCA52	FS883
076	Krytox 240AB	FS452
161	Krytox 240AC	FS433
—	Lubcon L252	FS915
086[1]	Mobil 28	FS381A
456	Mobilith SHC15	FS919
095	Mobiltemp SHC 32	FS612
167	Windsow Lube L101	FS179A
052	Unirex N3	FS118 or FS743
457	Thermoplex 2MTL	FS920
477	Kluberspeed BF72-22	FS934
176	Polyrex EM	FS615
150	Asonic GLY32	FS889
801	Petamo GHY133N	—

[1] Common suggestions for spindle grease.

D

LUBRICATION SPECIFICATIONS – *continued*

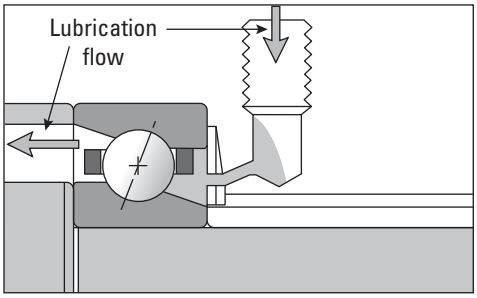

Example of lubrication inlet location and direction of lubrication flow.

Bore No.	9300	9300HX	9100	9100HX	99100	200	300
	mm in.	mm in.	mm in.	mm in.	mm in.	mm in.	mm in.
0	—	15.037	15.977	—	—	17.653	—
	—	0.592	0.6290	—	—	0.6950	—
1	—	17.043	18.288	—	—	19.456	21.641
	—	0.6710	0.7200	—	—	0.7660	0.8520
2	19.910	20.391	21.565	—	—	22.479	25.705
	0.7839	0.8028	0.8490	—	—	0.8850	1.0120
3	21.920	22.377	23.927	—	23.800	27.991	27.711
	0.8629	0.8810	0.9420	—	0.9370	1.1020	1.0910
4	26.563	27.254	28.448	28.296	28.143	30.201	31.313
	1.0458	1.0730	1.1200	1.1140	1.1080	1.1890	1.2328
5	30.716	32.233	33.325	33.172	33.147	35.408	38.705
	1.2093	1.2690	1.3120	1.3060	1.3050	1.3940	1.5238
6	36.558	37.246	39.853	39.345	40.526	42.189	45.486
	1.4393	1.4660	1.5690	1.5490	1.5955	1.6610	1.7908
7	42.743	43.599	45.314	45.339	46.177	49.047	51.722
	1.6828	1.7165	1.7840	1.7850	1.8180	1.9310	2.0363
8	48.420	48.763	50.681	50.825	52.413	54.915	58.592
	1.9063	1.9198	1.9953	2.0010	2.0635	2.1620	2.3043
9	51.582	54.267	56.510	56.185	57.137	59.920	65.451
	2.0308	2.1365	2.2248	2.2120	2.2495	2.3590	2.5768
10	58.415	58.783	61.514	61.163	62.141	64.897	72.321
	2.2998	2.3143	2.4218	2.4080	2.4465	2.5550	2.8473
11	64.562	64.981	68.372	69.342	69.300	71.780	79.179
	2.5418	2.5583	2.6918	2.7300	2.7283	2.8260	3.1173
12	69.553	70.010	73.376	74.320	74.315	78.638	85.974
	2.7383	2.7563	2.8888	2.9260	2.9258	3.0960	3.3848
13	74.582	75.001	78.379	79.019	79.294	85.827	92.895
	2.9363	2.9528	3.0858	3.1110	3.1218	3.3790	3.6573
14	81.453	81.496	85.237	86.182	86.444	90.530	99.741
	3.2068	3.2085	3.3558	3.3930	3.4033	3.5640	3.9268

Bore No.	9300	9300HX	9100	9100HX	99100	200	300
	mm in.	mm in.	mm in.	mm in.	mm in.	mm in.	mm in.
15	86.444	86.939	97.112	91.186	92.489	95.529	—
	3.4033	3.4228	3.8233	3.5900	3.6413	3.7610	—
16	91.422	91.930	102.324	98.069	98.577	102.387	—
	3.5993	3.6193	4.0285	3.8610	3.8810	4.0310	—
17	98.623	99.162	102.324	—	103.805	109.245	—
	3.8828	3.9040	4.0285	—	4.0868	4.3010	—
18	103.335	103.894	108.966	110.617	110.371	116.078	—
	4.0683	4.0903	4.2900	4.3550	4.3453	4.5700	—
19	—	108.351	113.970	—	115.324	122.961	—
	—	4.2658	4.4870	—	4.5403	4.8410	—
20	—	116.383	119.723	120.523	121.445	129.845	—
	—	4.5820	4.7135	4.7450	4.7813	5.1120	—
21	—	—	124.866	—	134.640	137.312	—
	—	—	4.9610	—	5.3008	5.4060	—
22	—	125.882	132.994	135.509	144.648	143.612	—
	—	4.9560	5.2360	5.3350	5.6948	5.6540	—
24	—	138.298	143.066	144.983	—	155.423	—
	—	5.4448	5.6325	5.7080	—	6.1190	—
26	—	—	156.743	—	160.553	162.179	—
	—	—	6.1710	—	6.3210	6.3850	—
28	157.442	160.256	167.005	—	—	—	—
	6.1985	6.3093	6.5750	—	—	—	—
30	—	1173.87	178.613	—	—	198.526	—
	—	6.8453	7.0320	—	—	7.8160	—
32	—	—	190.500	—	—	—	—
	—	—	7.5000	—	—	—	—
34	—	—	199.746	—	—	—	—
	—	—	7.8640	—	—	—	—
40	—	—	241.681	—	—	—	—
	—	—	9.5150	—	—	—	—

Table 27. Lubrication inlet location diameters.

OPERATING TEMPERATURES FOR BEARING COMPONENT MATERIALS

These tables provide standard operating temperatures for common bearing component materials. They should be used for reference purposes only. Other bearing component materials are available on request. Contact your Timken representative for further information.

Material	Approximate Chemical Analysis %	Temp. °F	Hardness HRC	-73° C -100° F	-54° C -65° F	-17° C 0° F	38° C 100° F	93° C 200° F	121° C 250° F	149° C 300° F	204° C 400° F	260° C 500°F	316° C 600° F	371° C 700° F	427° C 800° F
Low alloy carbon-chromium bearing steels. 52100 and others per ASTM A295	1C 0.5–1.5Cr 0.35Mn	70	60		STANDARD DIMENSIONAL STABILIZATION <0.0001 in./in dimensional change in 2500 hours at 100° C (212° F). Good oxidation resistance.										
Low alloy carbon-chromium bearing steels. 52100 and others per ASTM A295	1C 0.5–1.5Cr 0.35Mn	70 350 450	58 56 54	Heat stabilized per FS136. When given a stabilizing heat treatment, A295 steel is suitable for many applications in the 177°-232° C (350-450° F) range; however, it is not as stable dimensionally as it is at temperatures below 177° C (350°)F. If utmost stability is required, use materials in the 316° C (600° F) group below.											
Deep hardening steels for heavy sections per ASTM A485	1C 1–1.8Cr 1–1.5Mn .06Si	70 450 600	58 55 52	As heat-treated and tempered, it is stabilized.											
Carburizing steels per ASTM A534 a) low alloy 4118, 8X19, 5019, 8620 (Ni-Moly grades) b) high nickel 3311	Ni-Moly: 0.2C, 0.4-2.0Mn, 0.3-0.8Cr, 0-2.0Ni, 0-0.3Mo .0.1C, 1.5Cr, 0.4Mn, 3.5Ni	70	58		Nickel-Moly grades of steel frequently used to achieve extra ductility in inner rings for locking device bearings. 3311 and others used for extra-thick-section rings.										
Corrosion resistant 440C stainless steel per ASTM A756	1C 18Cr	70	58		Excellent corrosion resistance.										
Corrosion resistant 440C stainless steel per ASTM A756	1C 18Cr	70 450 600	58 55 52	As heat stabilized for maximum hardness at high temperatures (FS238). Good oxidation resistance at higher temperatures. Note load capacity drops off more rapidly at higher temperatures than M50 shown below, which should be considered if loads are high.											
M-50 medium high speed	4Cr 4Mo 1V 0.8C	70 450 600	60 59 57	Suggested where stable high hardness at elevated temperature is required.											

Bearings have been made of special material for operation at temperatures above 427° C (800° F). Consult your Timken representative regarding the application.

Note: ASTM A295 bearing steels are suitable for many applications up to 212° C (413° F) but are not as dimensionally stable as they are at the temperatures below 100° C (212° F).

Table 28. Rings, balls and rollers, single row.

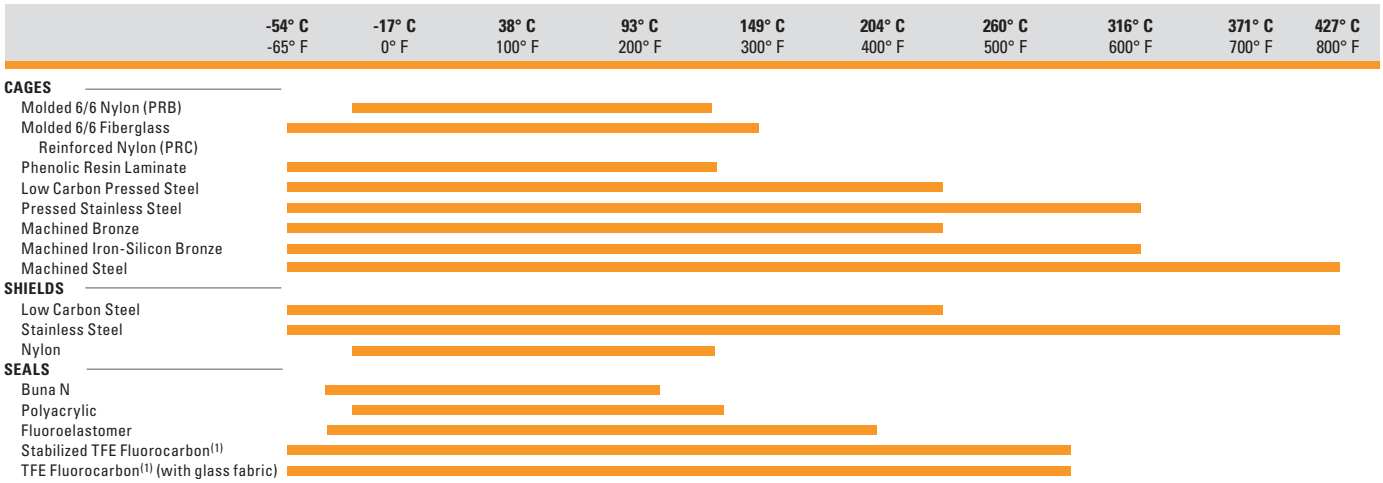

(1) Limited life above these temperatures.

Table 29. Cages, shields and seals.

D

CONVERSION TABLES

VISCOSITY CONVERSION TABLE

SUS Saybolt (sec.)	R″ Redwood (sec.)	E Engler (deg.)	cSt Centistokes (mm^2/s)
35	32.2	1.18	2.7
40	36.2	1.32	4.3
45	40.6	1.46	5.9
50	44.9	1.60	7.4
55	49.1	1.75	8.9
60	53.5	1.88	10.4
65	57.9	2.02	11.8
70	62.3	2.15	13.1
75	67.6	2.31	14.5
80	71.0	2.42	15.8
85	75.1	2.55	17.0
90	79.6	2.68	18.2
95	84.2	2.81	19.4
100	88.4	2.95	20.6
110	97.1	3.21	23.0
120	105.9	3.49	25.0
130	114.8	3.77	27.5
140	123.6	4.04	29.8
150	132.4	4.32	32.1
160	141.1	4.59	34.3
170	150.0	4.88	36.5
180	158.8	5.15	38.8
190	167.5	5.44	41.0
200	176.4	5.72	43.2
220	194.0	6.28	47.5
240	212	6.85	51.9
260	229	7.38	56.5
280	247	7.95	60.5
300	265	8.51	64.9
325	287	9.24	70.3
350	309	9.95	75.8
375	331	10.7	81.2
400	353	11.4	86.8
425	375	12.1	92.0
450	397	12.8	97.4
475	419	13.5	103
500	441	14.2	108
550	485	15.6	119
600	529	17.0	130
650	573	18.5	141
700	617	19.9	152
750	661	21.3	163
800	705	22.7	173
850	749	24.2	184
900	793	25.6	195
950	837	27.0	206
1000	882	28.4	217
1200	1058	34.1	260
1400	1234	39.8	302
1600	1411	45.5	347
1800	1587	51	390
2000	1763	57	433
2500	2204	71	542
3000	2646	85	650
3500	3087	99	758
4000	3526	114	867
4500	3967	128	974
5000	4408	142	1082
5500	4849	156	1150
6000	5290	170	1300
6500	5730	185	1400
7000	6171	199	1510
7500	6612	213	1630
8000	7053	227	1740
8500	7494	242	1850
9000	7934	256	1960
9500	8375	270	2070
10000	8816	284	2200

TO CONVERT FROM	TO		MULTIPLY BY
Acceleration			
foot/second^2	meter/second^2	m/s^2	0.3048
inch/second^2	meter/second^2	m/s^2	0.0254
Area			
foot^2	meter^2	m^2	0.09290304
inch^2	meter^2	m^2	0.00064516
inch^2	millimeter^2	mm^2	645.16
yard^2	meter^2	m^2	0.836127
mile^2 (U.S. statute)	meter^2	m^2	2589988
Bending Moment or Torque			
dyne-centimeter	newton-meter	N-m	0.0000001
kilogram-force-meter	newton-meter	N-m	9.806650
pound-force-inch	newton-meter	N-m	0.1129848
pound-force-foot	newton-meter	N-m	1.355818
Energy			
BTU (International Table)	joule	J	1055.056
foot-pound-force	joule	J	1.355818
kilowatt-hour	megajoule	MJ	3.6
Force			
kilogram-force	newton	N	9.806650
kilopound-force	newton	N	9.806650
pound-force (lbf avoirdupois)	newton	N	4.448222
Length			
fathom	meter	m	1.8288
foot	meter	m	0.3048
inch	millimeter	mm	25.4
microinch	micrometer	µm	0.0254
micron (µm)	millimeter	mm	0.0010
mile (U.S. statute)	meter	m	1609.344
yard	meter	m	0.9144
nautical mile (UK)	meter	m	1853.18
Mass			
kilogram-force-second^2/meter (mass)	kilogram	kg	9.806650
kilogram-mass	kilogram	kg	1.0
pound-mass (lbm avoirdupois)	kilogram	kg	0.4535924
ton (long, 2240 lbm)	kilogram	kg	1016.047
ton (short, 2000 lbm)	kilogram	kg	907.1847
tonn	kilogram	kg	1000.000
Power			
BTU (International Table)/hour	watt	W	0.293071
BTU (International Table)/minute	watt	W	17.58427
horsepower (550 ft lbf/s)	kilowatt	kW	0.745700
BTU (thermochemical)/minute	watt	W	17.57250
Pressure or Stress (Force/Area)			
newton/meter^2	pascal	Pa	1 .0000
kilogram-force/centimeter^2	pascal	Pa	98066.50
kilogram-force/meter^2	pascal	Pa	9.806650
kilogram-force/millimeter^2	pascal	Pa	9806650
pound-force/foot^2	pascal	Pa	47.88026
pound-force/inch^2 (psi)	megapascal	MPa	0.006894757
Temperature			
degree Celsius	kelvin	k	$t_k = t_c + 273.15$
degree Fahrenheit	kelvin	k	$k = \frac{5}{9}(t_f + 459.67)$
degree Fahrenheit	Celsius	°C	$t_c = \frac{5}{9}(t_f - 32)$
Velocity			
foot/minute	meter/second	m/s	0.00508
foot/second	meter/second	m/s	0.3048
inch/second	meter/second	m/s	0.0254
kilometer/hour	meter/second	m/s	0.27778
mile/hour (U.S. statute)	meter/second	m/s	0.44704
mile/hour (U.S. statute)	kilometer/hour	km/h	1.609344
Volume			
foot^3	meter^3	m^3	0.02831685
gallon (U.S. liquid)	liter	l	3.785412
liter	meter^3	m^3	0.001
inch^3	meter^3	m^3	0.00001638706
inch^3	centimeter^3	cm^3	16.38706
inch^3	millimeter^3	mm^3	16387.06
ounce (U.S. fluid)	centimeter^3	cm^3	29.57353
yard^3	meter^3	m^3	0.7645549

D

SUPER PRECISION BEARING MODEL REQUEST FORM

When requesting assistance, use of this form provides your Timken sales representative with a better understanding of your specific needs.

General Information

Requester: _____ Customer: _____

Country: _____ Customer country: _____

Application/type of machine:_____

Bearing Information

Type of bearings (check all that apply):

☐ Angular contact ☐ Radial ball ☐ Tapered roller bearing ☐ To be determined

Quantity of bearings in system: _____ (if applicable)

Bearing mounting (check all that apply):

Only/front:	Rear (optional):
☐ ⦶	☐ ⦶
☐ ∅	☐ ⦸
☐ ∅∅	☐ ⦸⦸
☐ ∅⦸	☐ ∅⦸
☐ ⦸∅	☐ ⦸∅
☐ ∅∅⦸	☐ ∅∅⦸
☐ ∅∅▬⦸	☐ ∅∅▬⦸
☐ ∅∅⦸⦸	☐ ∅∅⦸⦸
☐ ∅∅▬⦸⦸	☐ ∅∅▬⦸⦸

Bearing part number(s)/location (i.e. work end or drive end):

_____

_____

_____

or

New bearing:

Shaft size(s): _____

Housing size(s): _____

Width size(s): _____

(specific size(s) or range)

Bearing mounting configuration: *(please attach drawing or sketch with bearing positions and load positions OR with tool as position "0," provide distance to each bearing, including which bearing is fixed and which is float, if applicable – also, describe contact angle orientation.)*

Application Information

Speed: _____(rpm)

☐ All fixed or ☐ with rear floating

Temperature: ☐ Ambient temperature or

Lubrication method/name: _____

Rotation: ☐ Inner ring ☐ Outer ring

Shaft _____

Housing _____

Bearing _____

Sump (if applicable) _____

D

Application Information

Speed:_____ (RPM)

☐ All fixed or ☐ with rear floating

Temperature: ☐ Ambient temperature or

Lubrication method/name:_____

Rotation: ☐ Inner ring ☐ Outer ring

Shaft_____

Housing_____

Bearing_____

Sump (if applicable)_____

External Load Information

☐ Internal drive (i.e. motorized spindle)

☐ External drive loads

☐ Direct drive

☐ Belt drive or chain drive

$F_{\text{belt or chain}}$:_____ or HP:_____

D_m (pitch diameter):_____

☐ Single chain ☐ Double chain ☐ V belt

☐ Gear drive

	Spur	Helical	Herringbone	Straight bevel	Spiral bevel
Torque or HP					
Gear mesh point					
Drive or driven					
Location					
Pitch diameter				(1)	(1)
Pressure angle					
Hand (L/R)	N/A		N/A	N/A	
Mean working diameter	N/A	N/A	N/A		
Helix angle	N/A			N/A	N/A
Apex (L/R)	N/A	N/A	N/A		
Pitch angle	N/A	N/A	N/A		
Spiral angle	N/A	N/A	N/A	N/A	
Number of teeth	(1)	(1)	(1)	(1)	(1)
Gear thickness	(1)	(1)	(1)	(1)	(1)
Tooth length	N/A	N/A	N/A	(1)	(1)
Do not invert sense of rotation	N/A	N/A	N/A	☐	☐
Internal meshing	☐	☐	☐	N/A	N/A

(1)Optional fields.

External loads Radial:_____ Axial location:_____

Axial:_____ ☐ Reversing?

Moment:_____

Customer requirements (i.e. L_{10} life, stiffness, accuracy, etc.):_____

_____

SUPER PRECISION DAMAGE ANALYSIS REQUEST FORM

When requesting assistance, use of this form provides your Timken sales representative with a better understanding of your specific needs.

Customer: _____ CCR/RGA#: _____

Bearing user: _____ Qty.: _____ Date req'd: _____

Sales engineer: _____ District office: _____

Reason for analysis request: _____

Repairability and cost to repair required: Yes ____ No ____

____ Hold bearing until further notice ____ Scrap 30 days after analysis ____ Return to D.O.

Bearing Information

Brg. no.: _____ Type: _____ Date code: _____ S.N.: _____

____ New bearing ____ Repaired bearing Date installed: _____ Service life: _____

Application Information (Circle appropriate measurements)

Equipment/model no.: _____ Job no.: _____

Loads: Radial: _____(kg/lb.) Axial: _____(kg/lb.)

Moment: _____(ft-lb.) Rotation : ___I.R. ___O.R.

Speed: _____(RPM) Oscillation angle: _____(Total degrees) Freq.: _____(opm)

Lubrication Method: _____ Brand: _____

Temp.: Ambient _____(°C/°F) Housing: _____(°C/°F) Bearing: _____(°C/°F) Lubricant: _____(°C/°F)

Shaft fit/size: _____ Housing fit/size: _____

Installation method: Hydraulic:___ Mechanical: ___ Thermal: ___ Other: _____

Removal method: Hydraulic:___ Mechanical: ___ Thermal: ___ Other: _____

Operating Equipment Condition

Initial indication of bearing damage: Vibration: ___ Noise: ___ Heat: ___ Other: _____

Shaft condition: _____

Housing condition: _____

Lubricant condition: _____

Inner ring condition: _____

Outer ring condition: _____

Cage condition: _____

Rolling elements condition: _____

General comments: _____

_____

D

INDEX

ITEM	PRODUCT DESCRIPTION	PAGE	SECTION
BSBU* SERIES	Ball Bearing	206-207	C
BSPB* SERIES	Ball Bearing	208-209	C
BALL SCREW SUPPORT SERIES	Ball Bearing	200-205	C
EX-CELL-O SERIES	Ball Bearing	214-215	C
JL***	Tapered Roller Bearing	112-113, 116-117, 124-125	B
JLM***	Tapered Roller Bearing	112-113	B
JM***	Tapered Roller Bearing	112-113	B
JP***	Tapered Roller Bearing	112-113, 116-117, 122-123	B
JXR***	Tapered Roller Bearing	120	B
LM***	Tapered Roller Bearing	114-115	B
MM200K SERIES	Ball Bearing	192-193	C
MM200WI SERIES	Ball Bearing	184-191	C
MM300K SERIES	Ball Bearing	198-199	C
MM300WI SERIES	Ball Bearing	194-197	C
MMF SERIES	Ball Bearing	210-211	C
MMN SERIES	Ball Bearing	212-213	C
MM9100K SERIES	Ball Bearing	182-183	C
MM9100WI SERIES	Ball Bearing	158-165	C
MM9300WI SERIES	Ball Bearing	142-149	C
MMV9100HX SERIES	Ball Bearing	166-173	C
MMV9300HX SERIES	Ball Bearing	150-157	C
MMV99100WN SERIES	Ball Bearing	174-181	C
TS STYLE	Tapered Roller Bearing	112-115	B
TSF STYLE	Tapered Roller Bearing	116-119	B
TSHR STYLE	Tapered Roller Bearing	122-125	B
TXR STYLE	Tapered Roller Bearing	120-121	B
XR***	Tapered Roller Bearing	121	B

D

Timken application engineering expertise is only a phone call away. Highly skilled technical assistance can be reached by calling (US and Canada): 1-800-223-1954. Outside this region, call 330-438-3000 or visit our website at:

www.timken.com

NOTES

NOTES

NOTES

NOTES

NOTES

NOTES

NOTES

NOTES