NADELLA

Linear and Motion Solutions

Cam followers

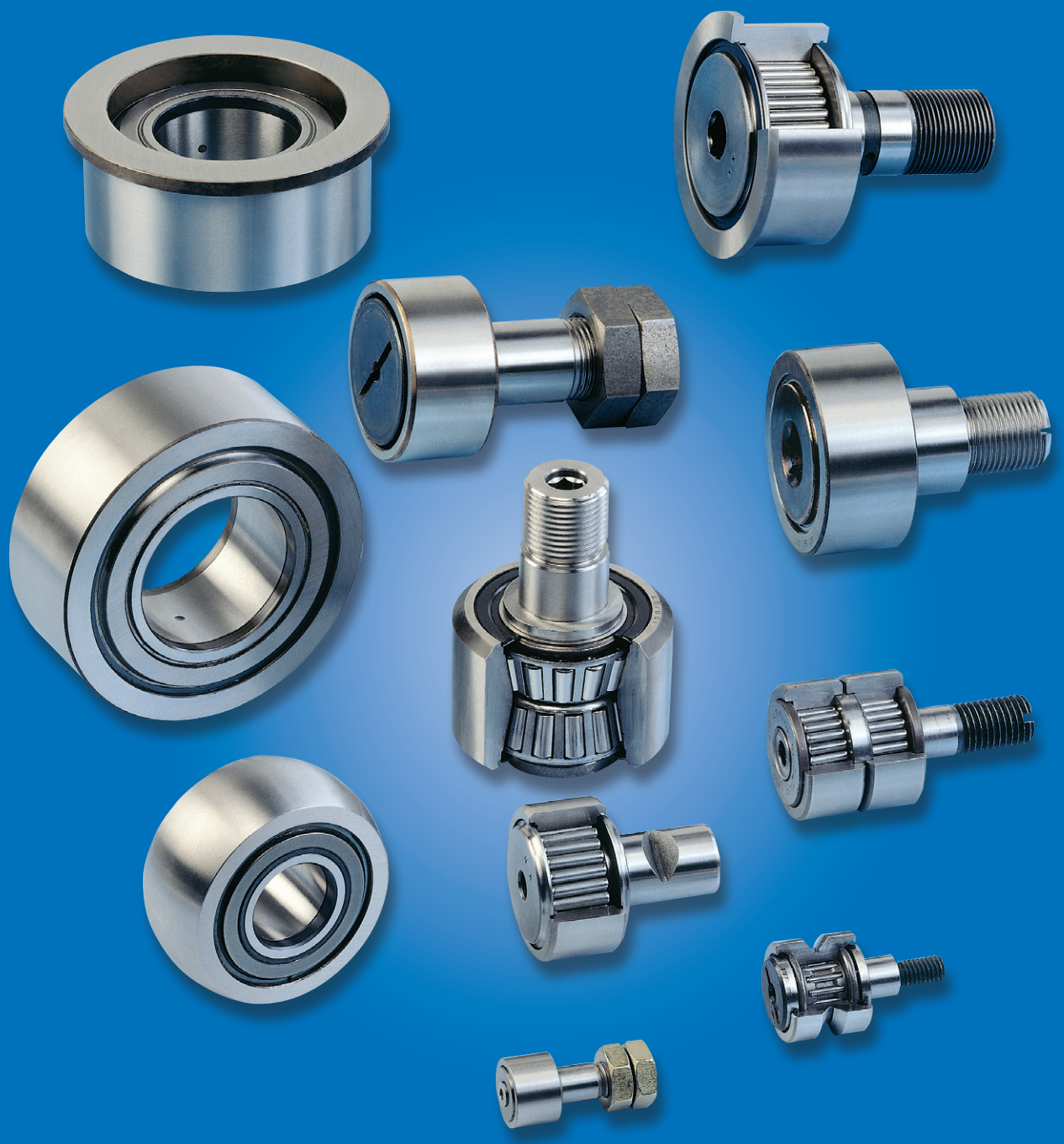

PF 809 E

Cam followers

Summary

Cam followers with stud	Full complement needle rollers	GC
	Full complement rollers	GCU
Cam followers without stud	Full complement needle rollers	FG
	Full complement rollers	FGU
Cam followers with tapered bearings with and without stud		PK
		FK
Small cam followers		FP
Cam follower with heavy stud		PFL
Cam follower with smooth stud		PFP
Double cam follower		PFDL
Examples of special executions		

	page
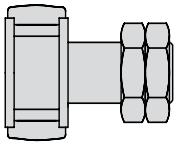	8
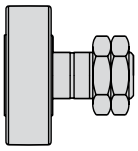	10
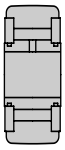	12
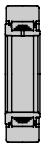	14
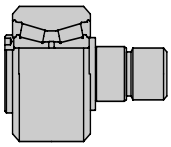	16
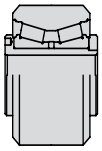	17
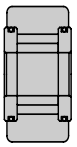	18
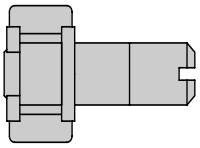	18
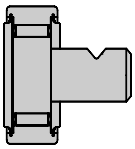	19
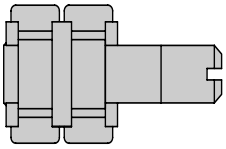	19
	20

Cam followers

Technicals characteristics

Cam followers

NADELLA cam followers are designed to run directly on various types of surface such as cams, ramps and slideways.

In order to satisfy the operating conditions imposed on this type of bearing - heavy radial loads usually accompanied by substantial and repeated shocks, the various NADELLA cam followers have these common advantages:

- heavy section outer ring of high strength steel hardened to 58-62 HRC;
- outer ring possessing no oil hole or lubrication groove, thus preventing the introduction of impurities into the bearing and scaling and galling of the bearing track;
- convex outer ring tolerating out-of-parallelism of contact surfaces;
- oil holes situated under the needles enabling lubricant replenishment through the shaft;
- full complement of needles providing maximum dynamic and static load capacities.

Although the use of a convex outer ring is advisable in many cases, cam followers are also available with cylindrical outer ring for special applications or for use as radial bearings.

For the use of cam followers with convex outer ring as bearings, please consult NADELLA Technical Department.

Types of cam follower

Convex outer ring		
without seals	with seals	
	plastic	metal
FG...	FG...EE	FG...EEM
		FGU...MM
FP...		
GC...	GC...EE	GC...EEM
GCR...	GCR...EE	GCR...EEM
		GCU...MM
		GCUR...MM

Cylindrical outer ring		
without seals	with seals	
	plastic	metal
FGL...	FGL...EE	FGL...EEM
FGUL...		FGUL...MM
FPL...		
GCL...	GCL...EE	GCL...EEM
GCRL...	GCRL...EE	GCRL...EEM
		GCUL...MM
		GCURL...MM

To use as follower

Dynamic capacity Cg NADELLA

It is the constant radial load which a follower can support during 1 000 000 revolutions before the first signs of fatigue appear on a ring or rolling element.

This dynamic capacity enables to calculate the life of a cam follower.

Limit loads

Dynamic limit load F

It is the load which should not be exceeded when follower is subject to repeated forces.

Static limit load Fo

It is the maximum strength limit that the follower can exceptionally support.

Operating conditions

Full complement needle followers types GC, FG, FP

These followers are recommended under following conditions:

- Intermediate speeds
- High radial loads
- Oscillating motions.

Full complement roller followers types GCU, FGU (light series)

Their installation is especially recommended for:

- High speeds (increased grease content)
- Limited and intermittent axial loads
- Heavy radial loads.

Cam followers

Full complement roller followers type FGU (heavy series)

This type differs from the light series in that the outer ring is thicker, hence a larger outer diameter and thus can accept heavier loads.

Cam followers types GCR, GCUR

Derivatives of GC and GCU, this type has an eccentric collar, which is tightly fitted on the stud enabling the mounting position to be adjusted. The position of the stud can vary ± k (see table of dimensions) relative to the centre of the hole in the mating member.

Misalignment tolerances

Followers with a convex outer ring permit displacement in relation to the track surface up to a maximum slope of:
7.0 in 1 000 for FG, GC and GCU.

Tolerances on outer diameter

For all types of follower:
- convex outer ring h9 on dim. De
- cylindrical outer ring h7 on dim. De
- out of roundness: in accordance ISO Standard 492 (class zero according to DIN 620).

Shaft tolerances

For FG and derivatives	Dim. Di
Load fixed in relation to the inner ring	h5
Load rotating in relation to the inner ring	k5

The cylindrical tolerance, defined as the difference in radii of two coaxial cylinders (ISO Standard 1101), should normally be less than a quarter of the manufacturing tolerance. However, for high precision or high speed applications it is advised to restrict this tolerance to one eighth of the manufacturing tolerance.

Where followers are used as bearings, please consult NADELLA Technical Department for shaft and housing tolerances.

Raceway strength

The stress capacity of the raceway on which the follower rotates depends on several factors such as load and speed, possibility of shock and width of follower. In the case of high loads, raceway stress may be calculated approximately by the formula:

$$R \geq 45 \frac{P}{De \times L}$$ where:

R in megapascals 1)	= raceway stress
P in newtons	= applied load on follower
De in mm	= outer diameter of follower
L in mm	= width of follower

1) 1 megapascal (MPa) = 1 newton (N) per mm^2

Advice on assembly

Positioning of the radial lubrication hole

In cases where the follower is subjected to high loads, shock or vibration, the lubrication hole situated under the needles should be positioned outside the loaded zone. The lubrication hole which is not visible on the cam follower with threaded stud is parallel to the screwdriver slot in the head of the stud. (The GC 13 does not possess a lubrication hole.) Where the head of the stud has a hexagonal socket, the position of the lubrication hole is indicated by the marking NA.

Lateral support of FG type followers

Shoulders on the shaft or other parts serving to retain the follower on the faces of the inner ring should have an outer diameter not less than dimensions D_1. Where there is considerable axial load or operation is subject to vibration, this outer diameter should be equal to dimension M.

Mounting cam followers with threaded studs type GC, GCR, and derivatives

The stud should fit easily into the hole in the mating member having a bore of tolerance H7. To ensure contact over the entire surface area of the yoke, the supporting face of the mating member should have a diameter of at least equal to dimension M. The locking

Technicals characteristics

Cam followers

torque applied to the nuts, as shown in the table of dimensions, is calculated to provide effective fixing of the followers.

Accessories for followers GC and GCR

Cam followers GC and GCR with threaded studs are supplied with the parts:

Type GC, GCU	Type GCR
two nuts	one nut
	one lock washer
	one flat washer
one grease nipple for followers up to De = 28 mm (except GC 10 to 15)	
one grease nipple and one plug for followers from De = 30 mm	

The stud of GC 10 to 15 has no axial hole. The stud of types GC and GCR up to De = 28 mm inclusive has a single threaded hole at its top end for a grease nipple. If this grease nipple is not used, an additional plug can be supplied on request as a substitute.

From De = 30 mm upwards the stud of the followers has a hole at each end for a grease nipple. Having filled the grease nipple into one of the holes, the other should be blanked by means of the plug supplied. If greasing is effected by means of the hole at right angles to the stud, the arrangement described still applies as the grease nipple will act as a plug in this case. However, if obstruction results from the protruding head of the grease nipple, this can be replaced by a second plug available on request.

Cam followers with threaded stud types GC and GCR have a screwdriver slot at the top end. From D = 30 mm up to 52 mm, these types may either have a screwdriver slot or a hexagonal socket at the discretion of NADELLA, unless a specific type is requested.

Lubrication - operating temperature

Types FG, GC, GCR and derivatives with or without seals are supplied with a coating of lithium soap grease permitting operation in temperatures from -20 to +120°C. On request, these followers can be supplied without grease (but protected) in case where lubrication is to be effected by oil or a special lubricant.

Type of follower	Lubrication	Operating temperature
Followers without seals type FG (FG L), GC (GCL) and GCR (GCRL)	Lithium soap grease	-20 to +120°C limits permitted by lithium soap grease
Followers with plastic seals EE		-20 to +100°C limits permitted by plastic seals
Followers with metal seals EEM		-20 to +120°C limits permitted by by lithium soap grease

At temperatures of 150°C and above, cam followers must be specially heat treated and calculation of life should take account of reduced load capacity.

Cam followers

Use of a special grease for high temperatures may reduce the limiting speeds shown in the tables of dimentions.

1) The metal seal...EEM enables operation up to 200°c with a suitable lubricant.

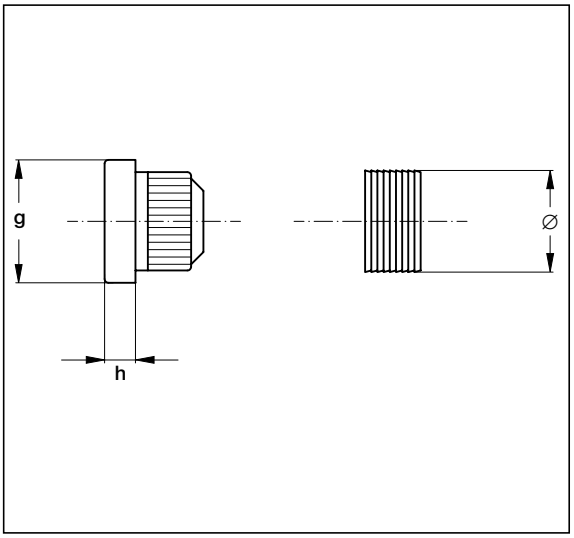

Accessory details for followers GC and GCR

The nuts, grease nipples and plugs provided with GC and GCR type followers can be supplied separately. The references and principal dimensions of these accessories are shown in the table below:

For	NUTS		GREASE NIPPLES			PLUGS	
Follower no.	Reference	h (mm)	Ref.	g (mm)	h (mm)	Ref.	Ø (mm)
10	Hm 4 x 0.7	2.2					
11	Hm 4 x 0.7	2.2					
12	Hm 5 x 0.8	2.7					
13	Hm 5 x 0.8	2.7					
14	Hm 6 x 1.0	3					
15	Hm 6 x 1.0	3					
16	Hm 6 x 1.0	3					
19	Hm 8 x 1.25	4					
22	Hm 10 x 1.25*	5	GN 4	6	2.5 to 3 mm max.	OB 4	4
24	Hm 10 x 1.25*	5					
26	Hm 10 x 1.25*	5					
28	Hm 10 x 1.25*	5					
30	Hm 12 x 1.5*	6	**			**	
32	Hm 12 x 1.5*	6	**			**	
35	Hm 16 x 1.5	8					
40	Hm 18 x 1.5	9	GN 6	8		OB 6	6
47	Hm 20 x 1.5	10					
52	Hm 20 x 1.5	10					
62	Hm 24 x 1.5	12					
72	Hm 24 x 1.5	12					
80	Hm 30 x 1.5	15	GN 8	10		OB 8	8
85	Hm 30 x 1.5	15					
90	Hm 30 x 1.5	15					

* These threads may be supplied with the old pitch of 1 mm.

** For followers of De 30 and 32 mm with screwdriver slot: grease nipple GN 6 and plug OB 6.
De 30 and 32 mm with hexagonal socket: grease nipple GN 4 and plug OB 4.

Cam followers with threaded stud GC

concentric

GC... series: without seals
GC...EE series: with plastic seals
GC...EEM series: with metal seals

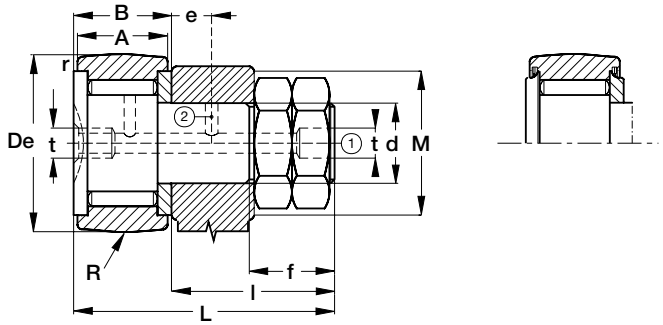

eccentric

GCR... series: without seals
GCR...EE series: with plastic seals
GCR...EEM series: with metal seals

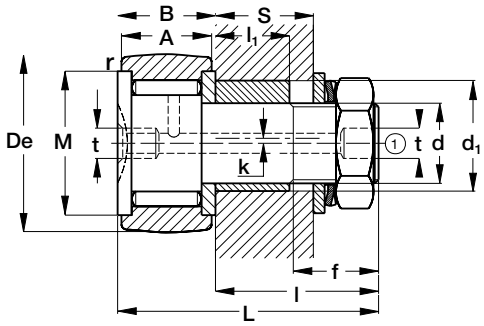

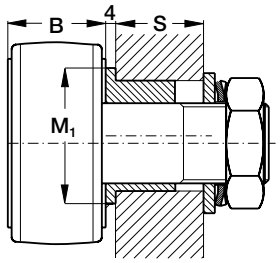

Holes ① and ② from De = 30 mm

from **GCR 16** to **GCR 52**

from **GCR 62** to **GCR 90**

Type (1)		Dimensions (mm)																
(▶) concentric	eccentric	De	A	B max	d	d_1 (8)	k	L max	l max	f	step	r min	t	e	M (7)	M_1	P (2)	l_1
GC 10	**–**	10	8	8.5	4	-	-	19.5	11	6	0.7	0.2	-	-	8.4	-	-	-
GC 11	**–**	11	8	8.5	4	-	-	19.5	11	6	0.7	0.2	-	-	8.4	-	-	-
GC 12	**–**	12	9	9.5	5	-	-	22.5	13	7	0.8	0.2	-	-	10.3	-	-	-
GC 13	**–**	13	9	9.5	5	-	-	22.5	13	7	0.8	0.2	-	-	10.3	-	-	-
GC 14	**–**	14	9	10	6	-	-	26	16	8	1	0.3	-	-	11.8	-	-	-
GC 15	**–**	15	9	10	6	-	-	26	16	8	1	0.3	-	-	11.8	-	-	-
GC 16	**GCR 16**	16	11	12.2	6	9	0.5	28.7	16.5	8	1	0.3	4	-	13.3	-	-	8
GC 19	**GCR 19**	19	11	12.2	8	11	0.5	32.7	20.5	10	1.25	0.3	4	-	15.3	-	-	10
GC 22	**GCR 22**	22	12	13.2	10	14	1	36.7	23.5	12	1.25*	0.3	4	-	18.2	-	-	11
GC 24	**GCR 24**	24	12	13.2	10	14	1	36.7	23.5	12	1.25*	0.3	4	-	18.2	-	-	11
GC 26	**GCR 26**	26	12	13.2	10	14	1	36.7	23.5	12	1.25*	0.3	4	-	20.8	-	-	11
GC 28	**GCR 28**	28	12	13.2	10	14	1	36.7	23.5	12	1.25*	0.3	4	-	20.8	-	-	11
GC 30	**GCR 30**	30	14	15.2	12	16	1	40.7	25.5	13	1.5	0.6	**	6	24.8	-	8	11
GC 32	**GCR 32**	32	14	15.2	12	16	1	40.7	25.5	13	1.5	0.6	**	6	24.8	-	8	11
GC 35	**GCR 35**	35	18	19.6	16	21	1.5	52.6	33	17	1.5	0.6	6	8	28.8	-	10	14
GC 40	**GCR 40**	40	20	21.6	18	24	1.5	58.6	37	19	1.5	1	6	8	33.8	-	12	16
GC 47	**GCR 47**	47	24	25.6	20	27	2	66.6	41	21	1.5	1	6	9	38.7	-	14	17.5
GC 52	**GCR 52**	52	24	25.6	20	27	2	66.6	41	21	1.5	1	6	9	38.7	-	14	17.5
GC 62	**GCR 62**	62	29	30.6	24	36	3	80.6	50	25	1.5	1	6	11	52	44	12	18
GC 72	**GCR 72**	72	29	30.6	24	36	3	80.6	50	25	1.5	1	6	11	52	44	12	18
GC 80	**GCR 80**	80	35	37	30	42	3	100.5	63.5	32	1.5	1	8	15	68	50	14	27
GC 85	**GCR 85**	85	35	37	30	42	3	100.5	63.5	32	1.5	1	8	15	68	50	14	27
GC 90	**GCR 90**	90	35	37	30	42	3	100.5	63.5	32	1.5	1	8	15	68	50	14	27

* These threads may be supplied with the old pitch of 1 mm (clamping torque 13 Nm).
** t = 6 mm for followers 30 and 32 with screw driver slot.
t = 4 mm for followers 30 and 32 with hexagonal socket.
Housing bore tolerance H7
▶ Seals EE and EEM type available from size GC 16.

Cam followers with threaded stud GC

1) Under the suffix ...AK, NADELLA can supply on request followers with cylindrical outer ring GCL, GCL...EE, GCL...EEM, possessing a screw driver slot at the threaded end of the stud.

2) Followers with outer diameter up to 28 mm possess a screw driver slot.
Followers with outer diameter 30 to 52 mm possess a screw driver slot or hexagonal socket at the discretion of NADELLA, except where one or other type has been specifically requested.
Followers with outer diameter above 52 mm possess an hexagonal socket.

3) These capacities are to be used for all types when the cylindrical or convex outer ring rotates directly on a cam. They take account of the repetitive loads on the follower and consequent elastic deformation of the outer ring.

4) The load shown is limited by the stregths of the stud or outer ring.

5) With oil lubrication of followers without seals GC or GCL types, these speeds can be increased by 30% for continuous rotation or, up to 50% momentarily.

6) These torques are shown for dry threads. For lubricated threads, take 0.7 to 0.8 of these values.

7) Minimum recommended abutment diameter.

8) The eccentric collar is tightly fitted on the stud.

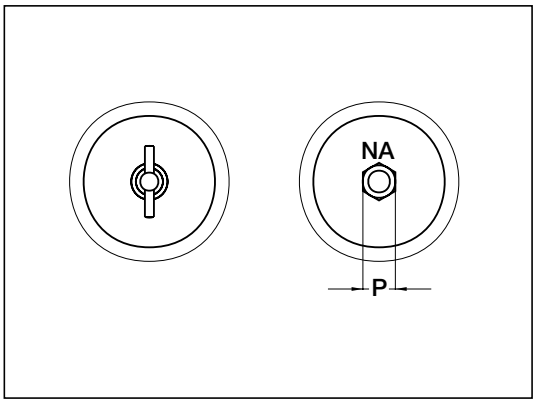

S min	S max	R	Basic capacities (3) Dyn. Cg NADELLA N	Limit loads (4) (N) GC... Dyn. F	GC... Sta. Fo	GCR... Dyn. F	GCR... Sta. Fo	Speed limits grease lubricaiton (5) r.p.m.	Clamping torque (6) (Nm) GC...	Clamping torque (6) (Nm) GCR...
-	-	130	2 130	520	960	-	-	13 800	0.9	-
-	-	130	2 480	520	960	-	-	13 800	0.9	-
-	-	130	2 980	900	1 680	-	-	11 400	1.8	-
-	-	130	3 350	900	1 680	-	-	11 400	1.8	-
-	-	130	3 500	1 480	2 750	-	-	10 100	3	-
-	-	130	3 750	1 480	2 750	-	-	10 100	3	-
8.5	10	160	5 050	1 180	2 200	1 180	2 000	9 300	3	2
10.5	13	160	5 750	2 830	5 200	2 830	4 500	7 600	8	5
11.5	14	200	6 300	4 900	8 100	4 900	5 600	6 300	20	16
11.5	14	200	6 900	5 200	9 200	5 200	5 600	6 300	20	16
11.5	14	200	8 900	5 200	9 600	5 200	6 100	5 500	20	16
11.5	14	200	9 600	5 200	9 600	5 200	6 100	5 500	20	16
11.5	14.5	250	12 900	7 700	14 300	7 700	10 400	4 800	26	22
11.5	14.5	250	13 800	7 700	14 300	7 700	10 400	4 800	26	22
14.5	19	320	19 200	11 400	24 000	11 000	11 000	3 850	64	55
16.5	22	400	20 000	14 200	27 000	12 300	12 300	3 150	90	75
18	25	500	28 300	21 400	40 000	21 400	23 700	2 700	120	100
18	25	500	34 000	21 400	40 000	21 400	23 700	2 700	120	100
18.5	25.5	640	42 000	31 000	57 500	28 800	28 800	2 330	220	180
18.5	25.5	640	44 000	31 000	57 500	28 800	28 800	2 330	220	180
27.5	36	800	60 000	50 000	93 000	50 000	54 000	1 700	450	370
27.5	36	800	64 000	50 000	93 000	50 000	54 000	1 700	450	370
27.5	36	800	65 000	50 000	93 000	50 000	54 000	1 700	450	370

- On request cam follower can be supplied in stainless steel (suffix **NX**).

- Contact NADELLA technical department for basic capacities and limit load for stainless steel version (suffix **NX**).

Roller cam followers with threaded stud GCU

concentric

GCU
GCU…MM series: with metal seals

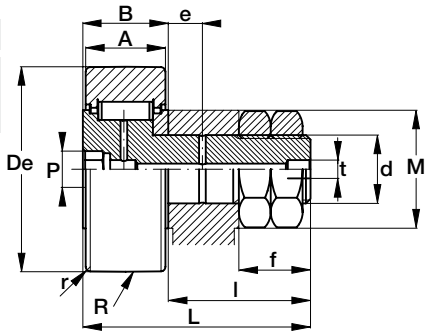

eccentric

GCUR
GCUR…MM series: with metal seals

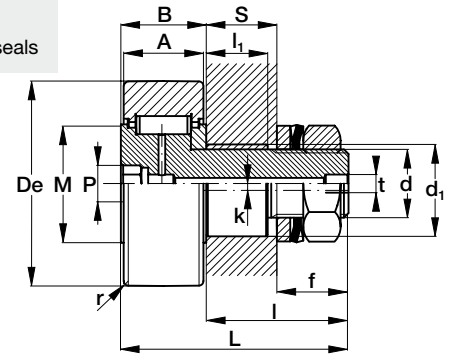

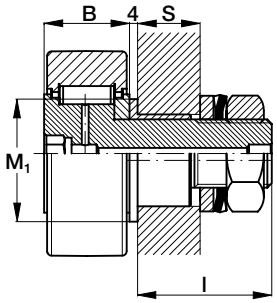

from **GCUR 62** to **GCUR 130**

Type (1)		Dimensions (mm)																
concentric	eccentric	De	A	B max	d	d_1 (6)	k	L max	l max	f	step	r min	t	e	M (5)	M_1	P	l_1
GCU 35	**GCUR 35**	35	18	19.7	16	21	1.5	52.5	32.8	17	1.5	0.6	6	8	26	-	10	14
GCU 40	**GCUR 40**	40	20	21.7	18	24	1.5	58.5	36.8	19	1.5	1	6	8	28.6	-	12	16
GCU 47	**GCUR 47**	47	24	25.7	20	27	2	66.5	40.8	21	1.5	1	6	9	33.6	-	14	17.5
GCU 52	**GCUR 52**	52	24	25.7	20	27	2	66.5	40.8	21	1.5	1	6	9	33.6	-	14	17.5
GCU 62	**GCUR 62**	62	29	30.7	24	36	3	80.5	49.8	25	1.5	2	6	11	38.9	44	12	18
GCU 72	**GCUR 72**	72	29	30.7	24	36	3	80.5	49.8	25	1.5	1.1	6	11	38.9	44	12	18
GCU 80	**GCUR 80**	80	35	37.2	30	42	3	100.5	63.3	32	1.5	1.1	8	15	51.8	50	14	27
GCU 85	**GCUR 85**	85	35	37.2	30	42	3	100.5	63.3	32	1.5	1.1	8	15	51.8	50	14	27
GCU 90	**GCUR 90**	90	35	37.2	30	42	3	100.5	63.3	32	1.5	1.1	8	15	51.8	50	14	27
GCU 100	**GCUR 100**	100	40	42.2	36	48	3	117.5	75.3	38	3	2	8	20	61	56	17	32
GCU 110	**GCUR 110**	110	40	42.2	36	48	3	117.5	75.3	38	3	2	8	20	61	56	17	32
GCU 120	**GCUR 120**	120	46	48.2	42	54	3	136.5	88.3	44	3	2	8	24	71	62	19	39
GCU 130	**GCUR 130**	130	46	48.2	42	54	3	136.5	88.3	44	3	2	8	24	71	62	19	39

Housing bore tolerance H7.

Roller cam followers with threaded stud GCU

1) Under the suffix ...AK, NADELLA can supply on request followers with cylindrical outer ring GCUL...MM, possessing a screw driver slot at the threaded end of the stud.

2) These capacities are to be used for all types when the cylindrical or convex outer ring rotates directly on a cam. They take account of the repetitive loads on the follower and consequent elastic deformation of the outer ring.

3) The load shown is limited by the strengths of the stud or outer ring.

4) These torques are shown for dry thrads. For lubricated threads, take 0.7 to 0.8 of these values.

5) Minimum recommended abutment diameter.

6) The eccentric collar is tightly fitted on the stud.

S		R	Basic capacities (2) Dyn. Cg NADELLA N	Limit loads (3) (N) GCU...		GCUR...		Speed limits grease lubrication r.p.m	Clamping torque (4) (Nm)	
min	max			Dyn. F	Sta. Fo	Dyn. F	Sta. Fo		GCU...	GCUR...
14.5	19	320	17 000	7 800	17 200	7 800	10 000	5 700	64	55
16.5	22	400	20 000	11 500	22 000	10 900	10 900	5 200	90	75
18	25	500	29 500	15 500	33 000	15 500	21 300	4 350	120	100
18	25	500	36 500	21 500	40 000	21 300	21 300	4 350	120	100
18.5	25.5	640	52 000	31 000	58 000	28 800	28 800	3 650	220	180
18.5	25.5	640	63 000	31 000	58 000	28 800	28 800	3 650	220	180
27.5	36	800	76 000	48 000	93 000	48 000	54 000	2 730	450	370
27.5	36	800	86 000	50 000	93 000	50 000	54 000	2 730	450	370
27.5	36	800	94 000	50 000	93 000	50 000	54 000	2 730	450	370
32.5	41	1 000	115 000	76 000	142 000	76 000	83 000	2 300	740	610
32.5	41	1 000	129 000	76 000	142 000	76 000	83 000	2 300	740	610
39.5	48	1 200	150 000	120 000	200 000	120 000	130 000	1 990	1 200	1 000
39.5	48	1 200	163 000	121 000	223 000	121 000	130 000	1 990	1 200	1 000

Cam followers FG (non separable inner and outer rings)

FG series without seals
FG…EE series with plastic seals
FG…EEM series with metal seals

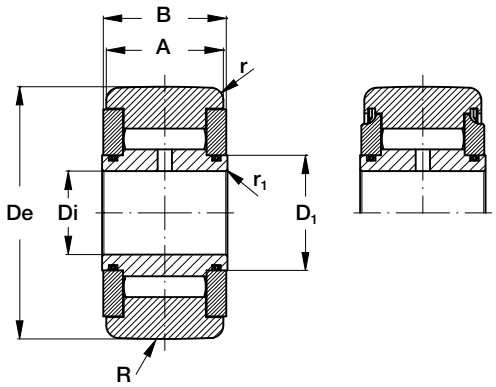

Type (1) (▶)	Dimensions (mm) De	Di	A	B max	D_1	M (2) min	r min	r_1 min	R
FG 5 16	16	5	11	12	7.1	10	0.3	0.3	160
FG 6 19	19	6	11	12	8.5	12	0.3	0.3	160
FG 8 24 (6)	24	8	12	13	10.8	14.5	0.3	0.3	200
FG 8 24 15	24	8	14	15	10.8	14.5	0.3	0.3	200
FG 10 30	30	10	14	15	13.8	19.5	0.6	0.3	250
FG 12 32	32	12	14	15	16	21.5	0.6	0.3	250
FG 15 35	35	15	18	19	18.7	24	0.6	0.3	320
FG 17 40	40	17	20	21	22	28	0.6	0.3	400
FG 20 47	47	20	24	25	25.7	32.5	1	0.3	500
FG 25 52	52	25	24	25	30.5	37	1	0.3	500
FG 30 62	62	30	28	29	35.2	44	1	0.3	640
FG 35 72	72	35	28	29	41	50	1	0.6	640
FG 40 80	80	40	30	32	46.7	56	1	0.6	800
FG 45 85	85	45	30	32	52.4	62	1	0.6	800
FG 50 90	90	50	30	32	59.1	69	1	0.6	800
FG 55 100	100	55	34	36	65	75	1.5	0.6	800
FG 60 110	110	60	34	36.2	70	82	1.5	0.6	800
FG 65 120	120	65	40	42	74	90	1.5	0.6	900
FG 70 125	125	70	40	42	79	92	1.5	0.6	900
FG 75 130*	130	75	40	42	84	96	1.5	0.6	900
FG 80 140	140	80	46	48	92	105	2	1	1 000
FG 85 150*	150	85	46	48	99	112	2	1	1 000
FG 90 160	160	90	52	54	105	120	2	1	1 200
FG 95 170*	170	95	52	54	110	125	2	1	1 200
FG 100 180	180	100	63	65	116	135	2	1.5	1 400
FG 110 200*	200	110	63	65	128	150	2	1.5	1 400
FG 120 215	215	120	63	65	138	160	2	1.5	1 400
FG 130 230*	230	130	75	78	147	170	3	1.5	1 600
FG 140 250	250	140	75	78	158	180	3	1.5	1 600
FG 150 270*	270	150	75	78	170.5	195	3	1.5	1 600

* On request.

▶ Series FG....EE with plastic seals on production up to type FG 50 90.

Cam followers FG (non separable inner and outer rings)

1) For followers with cylindrical outer ring, designation: FGL…EE, FGL…EEM.

2) Minimum recommended abutment diameter.

3) These capacities are to be used for all types when the cylindrical or convex outer ring rotates directly on a cam. They take account of the repetitive loads on the follower and consequent deformation of the outer ring.

4) The load shown is limited by the strength of the outer ring when mounted in a housing.

5) Whit oil lubrication of followers without seals FG, FGL types, these speeds can be increased by 30% for continuous rotation or, up to 50% momentarily

6) Special followers, for replacement only.
For new applications, use the FG 8 24 15.

Basic capacities (3) Dyn. Cg NADELLA N	Limit loads (4) (N) Dyn. F	Sta. Fo	Speed limit grease lubrication (5) r.p.m.	Weight approx g
5 050	3 250	5 400	9 300	16
5 800	4 050	6 700	7 600	19
6 900	6 600	9 200	6 300	37
8 700	8 500	12 300	6 300	44
12 900	8 500	15 500	4 800	66
12 900	8 300	16 200	4 200	77
18 000	12 200	25 600	3 750	103
22 300	14 200	31 000	3 150	155
28 300	21 400	44 500	2 700	295
29 000	23 600	48 000	2 330	310
38 500	38 000	73 000	2 050	490
43 500	49 000	90 000	1 800	670
54 000	66 000	123 000	1 620	890
53 000	69 000	125 000	1 450	970
51 000	74 000	123 000	1 300	1 040
60 000	88 000	142 000	1 150	1 350
67 000	102 000	168 000	1 090	1 650
83 000	135 000	223 000	1 020	2 350
83 000	144 000	228 000	960	2 500
84 000	155 000	234 000	910	2 650
99 000	197 000	275 000	820	3 400
105 000	220 000	300 000	770	4 000
120 000	288 000	370 000	710	5 300
129 000	302 000	410 000	690	6 000
175 000	353 000	530 000	650	8 050
189 000	420 000	600 000	590	10 000
199 000	486 000	660 000	550	11 500
255 000	560 000	820 000	510	15 500
280 000	630 000	930 000	480	18 500
290 000	710 000	1 020 000	440	22 000

Roller cam followers FGU

FGU
FGU...MM series: with metal seals

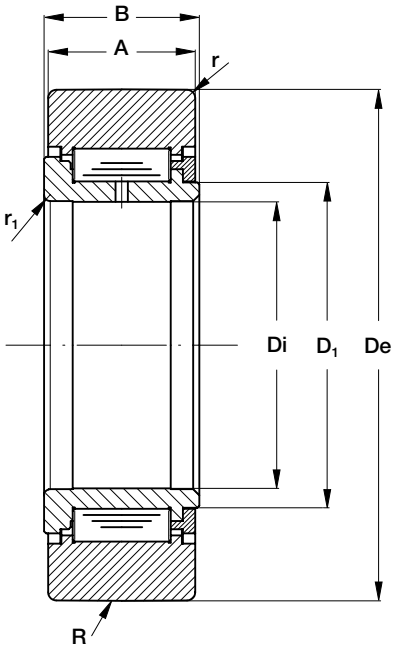

Type (1)		Dimensioni (mm)										
		De		Di	A	B	D_1	M (2)	r min		r_1	R
light series	heavy series	light series	heavy series			max		min	light series	heavy series	min	
FGU 15 35	FGU 15 42	35	42	15	18	19	19	25.4	0.6	1	0.3	320
FGU 17 40	FGU 17 47	40	47	17	20	21	22	28	0.6	1	0.3	400
FGU 20 47	FGU 20 52	47	52	20	24	25	25.8	33.5	1	1	0.3	500
FGU 25 52	FGU 25 62	52	62	25	24	25	30	38.2	1	1	0.3	500
FGU 30 62	FGU 30 72	62	72	30	28	29	36.8	45.9	1	1	0.3	640
FGU 35 72	FGU 35 80	72	80	35	28	29	44	53.6	1	1	0.6	640
FGU 40 80	FGU 40 90	80	90	40	30	32	49.5	59.3	1	1	0.6	800
FGU 45 85	FGU 45 100	85	100	45	30	32	54	63.1	1	1.5	0.6	800
FGU 50 90	FGU 50 110	90	110	50	30	32	59.5	68.8	1	1.5	0.6	800
FGU 55 100	FGU 55 120	100	120	55	34	36	64	75.8	1.5	1.5	0.6	800
FGU 60 110	FGU 60 130	110	130	60	34	36	69.5	81.5	1.5	1.5	0.6	800
FGU 65 120	FGU 65 140	120	140	65	40	42	74.5	86.7	1.5	2	0.6	900
FGU 70 125	FGU 70 150	125	150	70	40	42	79.6	91.8	1.5	2	0.6	900
FGU 75 130	FGU 75 160	130	160	75	40	42	84	97	1.5	2	0.6	900
FGU 80 140	FGU 80 170	140	170	80	46	48	90	102	2	2	1	1 000
FGU 85 150	FGU 85 180	150	180	85	46	48	94	108.5	2	2	1	1 000
FGU 90 160	FGU 90 190	160	190	90	52	54	100	114.7	2	2	1	1 200
FGU 95 170	FGU 95 200	170	200	95	52	54	106.7	121.2	2	2	1	1 200
FGU 100 180	FGU 100 215	180	215	100	63	65	113	127.6	2	2	1.5	1 400
FGU 110 200	FGU 110 240	200	240	110	63	65	122	137	2	3	1.5	1 400
FGU 120 215	FGU 120 260	215	260	120	63	65	132	149.3	2	3	1.5	1 400
FGU 130 230	FGU 130 280	230	280	130	75	78	143	160.6	3	3	1.5	1 600
FGU 140 250	FGU 140 300	250	300	140	75	78	151	168	3	3	1.5	1 600
FGU 150 270	FGU 150 320	270	320	150	75	78	162	179.5	3	3	1.5	1 600

Roller cam followers FGU

1) For followers with cylindrical outer ring, designation: FGUL, FGUL…MM.

2) Minimum recommended abutment diameter.

3) These capacities are to be used for all types when the cylindrical or convex outer ring rotates directly on a cam. They take account of the repetitive loads on the follower and consequent elastic deformation of the outer ring.

4) The load shown is limited by the strength of the outer ring when mounted in a housing.

Basic capacities (3) Dyn. Cg NADELLA N		Limit loads (4) (N)				Speed limits grease lubrication r.p.m.
		Light series		Heavy series		
Light series	Heavy series	Dyn. F	Sta. Fo	Dyn. F	Sta. Fo	
17 000	24 000	7 800	17 000	16 500	27 000	5 700
20 000	26 700	11 500	21 500	22 000	32 000	5 200
29 500	36 500	15 500	32 300	23 700	42 500	4 350
31 500	44 000	17 300	36 000	34 400	57 000	3 800
44 500	60 000	24 500	54 000	43 400	80 000	3 150
50 000	62 000	31 300	66 000	45 600	88 000	2 700
59 000	75 000	40 600	84 000	61 000	116 000	2 440
62 000	85 000	45 000	91 000	78 000	138 000	2 290
62 000	91 000	49 000	94 000	91 000	157 000	2 100
79 000	113 000	53 400	109 000	98 000	176 000	1 900
88 000	121 000	64 000	129 000	114 000	197 000	1 770
110 000	145 000	89 000	174 000	153 000	254 000	1 650
110 000	153 000	93 000	180 000	172 000	277 000	1 570
112 000	160 000	97 000	185 000	193 000	300 000	1 480
138 000	190 000	130 000	250 000	247 000	380 000	1 400
158 000	215 000	130 000	258 000	243 000	390 000	1 330
188 000	250 000	166 000	327 000	297 000	480 000	1 250
198 000	259 000	184 000	356 000	317 000	510 000	1 190
250 000	325 000	250 000	490 000	446 000	700 000	1 130
280 000	345 000	310 000	590 000	550 000	770 000	1 050
310 000	395 000	310 000	600 000	570 000	830 000	960
375 000	480 000	406 000	790 000	760 000	1 100 000	890
420 000	500 000	490 000	920 000	860 000	1 160 000	850
445 000	515 000	560 000	1 030 000	940 000	1 250 000	800

Guide Rollers PK

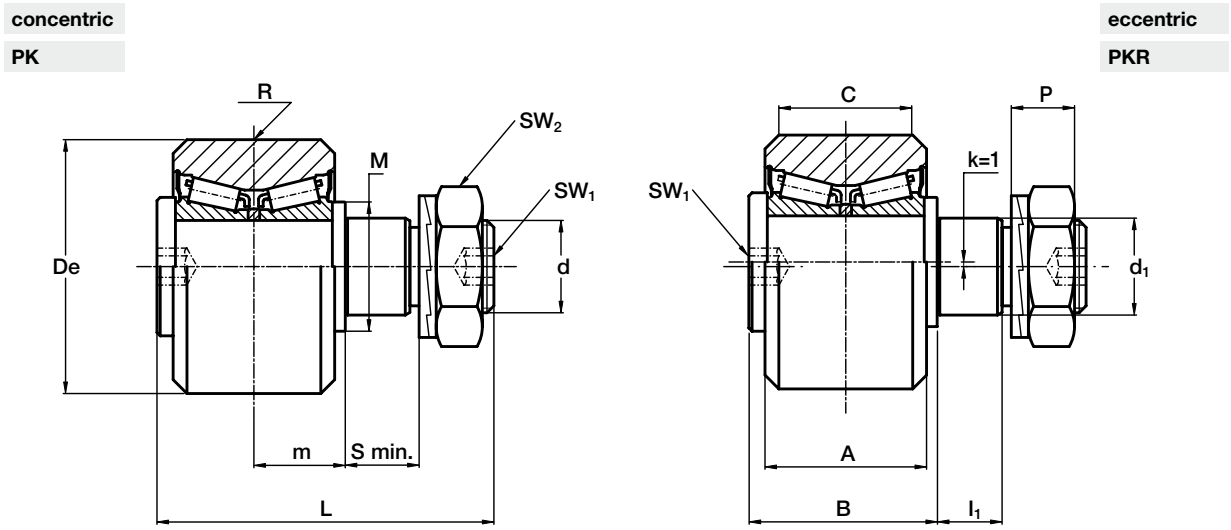

Type		Dimensions (mm)															
concentric	eccentric	De	d_1 (1)	d	m	S min.	P	L	A	B	C	R	l_1	M	SW_1	SW_2	k
PK 52C	**PKR 52C**	52	21	M 20 x 1.5	19.8	15	13.4	73	35	41	29	800	14	28	8	ch. 30	1
PK 62C	**PKR 62C**	62	27	M 24 x 1.5	20.8	19	15.4	83	37	44	29	800	18	35	10	ch. 36	1
PK 72C	**PKR 72C**	72	36	M 30 x 1.5	27	19	21.6	100	45	55	33	1 200	18	44	12	ch. 46	1
PK 90C	**PKR 90C**	90	38	M 36 x 1.5	30	24	24.6	115	53 / 56(5)	62	45	1 200	23	50	14	ch. 55	1
PK 110C	**PKR 110C**	110	42	M 36 x 1.5	34	33	24.6	135	60 / 63(5)	70	48	1 200	32	56	14	ch. 55	1

Type		Bearing rating (N)		Limit loads (N)	Torque (2) wrench setting (Nm)	Weight (Kg)
		Dynamic C	Static C_o			
PK 52C	**PKR 52C**	36 360	44 000	11 900	80	0.6
PK 62C	**PKR 62C**	39 100	50 400	22 100	160	0.9
PK 72C	**PKR 72C**	52 820	72 000	31 300	300	1.6
PK 90C	**PKR 90C**	86 440	136 000	43 700	450	2.8
PK 110C	**PKR 110C**	127 600	195 000	55 600	450	4.9

1) Housing bore tolerance: H7
2) The torque wrench settings are given for non-lubricated threads; for lubricated threads, multiply figure by 0.8
3) Standard seals: material NBR, RS type
4) On request, the guide rollers can be supplied in AISI 440 stainless steel (suffix **NX**) and with Viton seals for operating temperatures up to 120 °C (suffix **V**, up to dimension PK 90 C included)
5) Dimensions relating to the stainless-steel rollers (suffix **NX**)
6) The guide rollers are complete with self-locking washers and hexagonal nut for fitting

Guide Wheels FK

FK

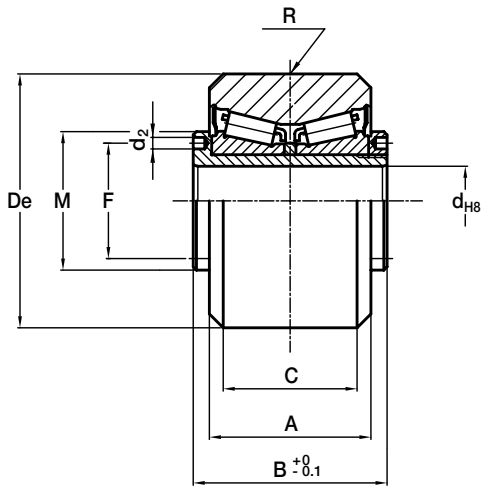

Type	Dimensions (mm)								
	De	d	A	B	C	R	F	d_2	M
FK 52C	52	15	35	42	29	800	25	2.5	30
FK 62C	62	20	37	45	29	800	29	3	35
FK 72C	72	25	45	56	33	1 200	37	4	44
FK 90C	90	28	53 / 56(3)	64	45	1 200	42	4	49
FK 110C	110	35	60 / 63(3)	72	48	1 200	52	4	59

Type	Bearing rating (N)		Weight (kg)
	Dynamic C	Static radial C_o	
FK 52C	36 360	44 000	0.5
FK 62C	39 100	50 400	0.6
FK 72C	52 820	72 000	1.2
FK 90C	86 440	136 000	2.3
FK 110C	127 600	195 200	3.9

1) Standard seals: material NBR, RS type
2) On request, the guide rollers can be supplied in AISI 440 stainless steel (suffix **NX**) and with Viton seals for operating temperatures up to 120 °C (suffix **V**, up to dimension FK 90 C included)
3) Dimensions relating to the stainless-steel rollers (suffix **NX**)
4) To prevent rotation between roller and shaft a pin can be fitted in one of the holes “d_2” positioned in the side flange

Small cam folowers FP

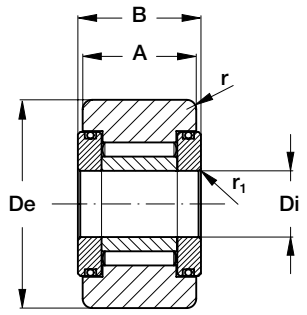

1) For followers with cylindrical outer ring, designation: FPL.
2) Minimum recommended abutment diameter.
3) These capacities are to be used only for followers FPL, when the cylindrical outer ring is mounted in a housing.
4) These capacities are to be used for all types when the cylindrical or convex outer ring rotates directly on a cam. They take account of the repetitive loads on the follower and consequent elastic deformation of the outer ring.
5) The load shown is limited by the strenght of the outer ring when mounted in a housing.
6) With oil lubrication of followers without seals FP or FPL types, these speeds can be increased by 30% for continuous rotation or, up to 50% momentarily

Type (1)	Dimensions (mm)							Basic capacities for followers (3)	Limit loads (4) (N)		Speed limits grease lubrication (6) r.p.m.
	De	Di	A	B max	r min	r_1 min	M (2) min	Dyn. Cg NADELLA N	Dyn. F	Sta. Fo	
FP 3 10	10	3	8	8.7	0.2	0.15	8.4	2 130	1 160	2 050	13 800
FP 3 11	11	3	8	8.7	0.2	0.15	8.4	2 480	1 680	2 520	13 800
FP 4 12	12	4	9	9.7	0.2	0.15	10.3	2 980	1 820	3 350	11 400
FP 4 13	13	4	9	9.7	0.2	0.15	10.3	3 350	2 450	3 950	11 400
FP 4 14	14	4	9	10.2	0.3	0.15	11.8	3 500	2 550	4 350	10 100
FP 4 15	15	4	9	10.2	0.3	0.15	11.8	3 750	3 200	4 750	10 100

Cam followers with bigger stud PFL

High precision, for employment on automatic machines, positioners with stations and cam movements.

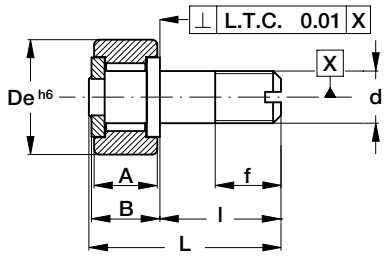

1) For followers with convex outer ring with radius of 800 mm and tolerance h6 on the external diameter: PF.
2) These load capacities are to be used for all cam followers when the cylindrical or convex outer ring rotates directly on a cam. They take account of the repetitive loads on the follower and consequent elastic deformation of the outer ring.
3) Maximum load is limited by the strength of the outer ring.
4) With oil lubrication the speeds can be increased by 30% for continuous rotation or, up 50% momentarily.

Type (1)	Dimensions (mm)							Basic capacities for followers (2)	Limit loads (3) (N)	Speed limits grease lubrication (4) r.p.m.
	De	A	B	d	l	L	f	Dyn. C NADELLA N	Dyn. F	
PFL 10	10	9	10	M 6 x 1	16	26.5	8	2 500	1 700	13 000
PFL 11	11	9	10	M 6 x 1	16	26.5	8	2 950	1 700	13 000
PFL 12	12	9	10	M 6 x 1	16	26.5	8	3 100	1 700	11 400
PFL 13	13	9	10	M 6 x 1	16	26.5	8	3 400	1 700	11 400
PFL 14	14	10	11	M 8 x 1.25	20	31.5	10	4 300	3 550	10 100
PFL 15	15	10	11	M 8 x 1.25	20	31.5	10	4 800	3 550	10 100
PFL 16	16	11	12	M 8 x 1.25	20	32.5	10	5 050	3 370	9 300
PFL 19	19	12	13	M 10 x 1.25	23	36.5	12	6 500	6 080	7 600
PFL 22	22	12	13	M 10 x 1.25	23	36.5	12	6 350	6 080	6 300

The diameter of the stud is on h6 tolerance. Lubrication holes are not provided.
Tightening torques: see the values on the tables of the cam followers with needle rollers with the same diameter of the shaft.

Cam followers with smooth stud PFP

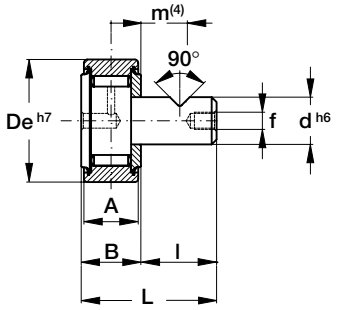

1) For cam followers with cylindrical outer ring and tolerance h6 on the external diameter: PFPL.
2) These load capacities are to be used for all cam followers when the cylindrical or convex outer ring rotates directly on a cam. They take account of the repetitive loads on the follower and consequent elastic deformation of the outer ring.
3) Maximum load is limited by the strength of the outer ring.
4) Suggested position for the grub screw.
5) With oil lubrication the speeds can be increased by 30% for continuous rotation or, up to 50% momentarily.

Type (1)	Dimensions (mm)								Basic capacities for followers (2) Dyn. Cg NADELLA N	Limit loads Dyn. F (3) (N)	Speed limits grease lubrication (5) r.p.m.
	De	d	A	B	l	L	m (4)	f			
PFP 26	26	10	12	13	15	28	7.5	M3	8 900	6 000	5 500
PFP 30	30	12	14	15	18	33	9	M3	12 900	9 100	4 800
PFP 32	32	12	14	15	18	33	9	M3	13 800	9 100	4 800
PFP 35	35	16	18	19.5	24	43.5	12	M4	19 200	16 500	3 850
PFP 40	40	18	20	21.5	27	48.5	13.5	M5	20 000	21 400	3 150
PFP 47	47	20	24	25.5	30	55.5	15	M6	28 300	24 700	2 700
PFP 52	52	20	24	25.5	30	55.5	15	M6	34 000	24 700	2 700
PFP 62	62	24	29	30.6	36	66.6	18	M8	42 600	35 600	2 330
PFP 72	72	24	29	30.6	36	66.6	18	M8	47 900	35 600	2 330

Double cam followers PFDL

For employment on cam movements with double contact.

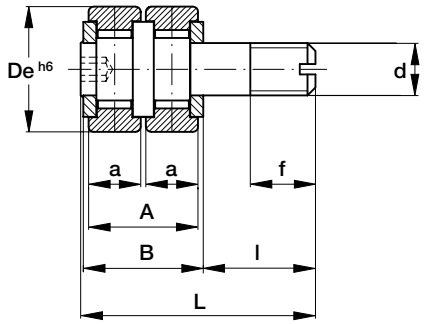

1) For followers with convex outer ring and tolerance h6 on the external diameter: PFD.
2) These load capacities are to be used for all cam followers when the cylindrical or convex outer ring rotates directly on a cam. The take account of the repetitives loads on the follower and consequent elastic deformation of the outer ring.
3) Limit load is the total load acting contemporarily and equally divided on both the rollers.
4) With oil lubrication the speeds can be increased by 30% for continuous rotation or, up to 50% momentarily.

Type (1)	Dimensions (mm)								Basic capacities for followers (2) Dyn. Cg NADELLA N	Limit loads Dyn. F (3) (N)	Speed limits grease lubrication (4) r.p.m.
	De	d	a	A	B	l	L	f			
PFDL 24.10	24	M 10 x 1,25	10	21	23	21.5	45	12.5	6 950	3 450	6 300
PFDL 28.10	28	M 12 x 1,5	10	21	22	22.5	45	13.5	7 700	6 200	5 300
PFDL 32.10	32	M 12 x 1,5	10	21	22	22.5	45	13.5	10 200	6 200	4 900
PFDL 32.14	32	M 12 x 1,5	14	29	30	29.5	60	18	13 800	4 550	4 800

The diameter of the stud is on h6 tolerance.

The load coefficients refers to each roller of the two composing the follower.

Example of special executions

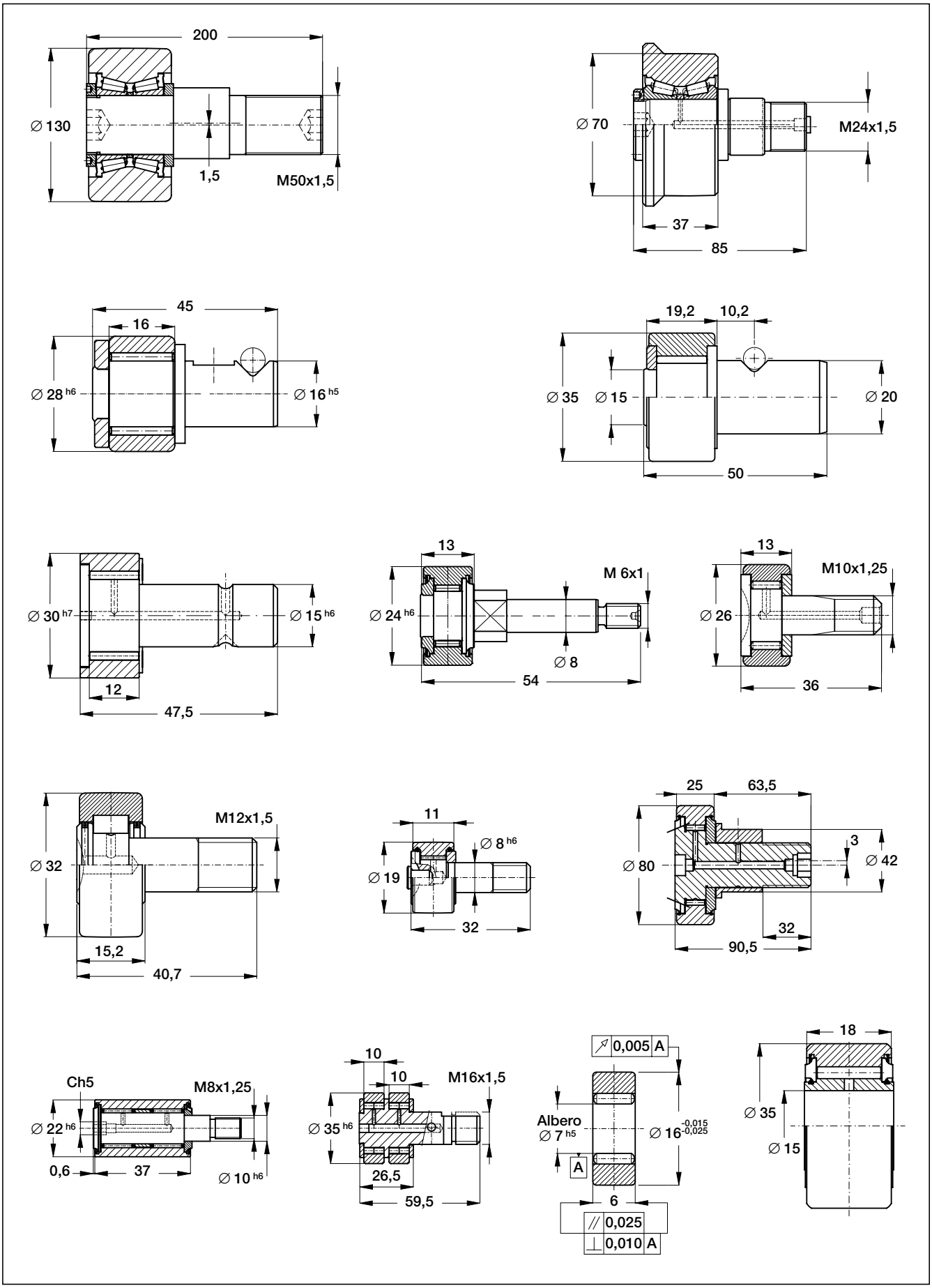

Nadella

Milano

Via Melette, 16
20128 Milano

Tel. +39 02.27.093.297
Fax +39 02.25.51.768

http: www.nadella.eu
e-mail: customer.service@nadella.it

Nadella GmbH

Nufringen

Rudolf-Diesel-Straße 28
71154 Nufringen
http://www.nadella.eu

Tel. +49 07032 95 40-0
Fax +49 07032 95 40-25
e-mail: info@nadella.de

AUSTRIA
TAT Technom Antriebstechnik GmbH

Haidbachstraße 1
4061 Pasching
Tel. +43 7229 648 400
Fax +43 7229 618 17
www.tat.at

CHINA
WENXIN Machinery

Guang Zhou Roa
Rm2001 20F JUNLIN Int. Plaza
Tel. +86 25 51 86 01 21
Fax +86 25 51 86 01 26
www.wenxinmachinery.com

CZECH REPUBLIK
TAT pohonova technika spol s.r.o.

Hranicni 53
37006 Ceske Budejovice
Tel. +420 387 414 414
Fax +420 387 414 415
www.tat.at/cz

DENMARK
ACTON A/S

Torbenfeldvej 3
2665 Vallensbaek
Tel. +45 43 73 70 43
Fax +45 86 75 27 00
www.acton.dk

FINLAND
EIE Maskin Oy

Postfach PL 80
10601 Tammisaari
Tel. +358 19 223 91 00
Fax +358 19 223 91 99
www.eie.se

FRANCE
SNR Lyon - Direction Réseau France

Le Florentin - B.P. 8
71, Chemin du Moulin Carron
Tel. +33 478 66 6800
Fax +33 478 66 6820
www.snr.bearings.fr

INDIA
NRB Bearings

Dhannur, 15 Sir P.M. Road, Fort,
Mumbai 400 001
Tel. +91 022 22 66 41 60
Fax +91 022 22 66 04 12
www.nrbbearings.com

KOREA
Intech Automation Inc.

Youngdeungpodong 7-GA
13FL, JEIL Bldg., 94-46
Seoul, Korea 150-037
Tel. +822 26 32 770
Fax +822 34 39 00 80
www.intechautomation.co.kr

NETHERLANDS
LinMotion BV

Kruisboog 2
3905 CV TG Veenendaal
Tel. +31 318 694 226
Fax +31 318 694 225
www.linmotion.nl

NORWAY
Elmeko AS

Postboks 80
1346 Gjettum
Tel. +47 675 72 270
Fax +47 675 77 280
www.eie.se

POLAND
ENITRA Sp.zo.o

ul. 1-go Maja 62 - 58300 Walbrzych
Tel. +48 74887 02 24 - Fax +48 74887 02 23
www.enitra.pl

SPAIN
GAES S.A.

Paseo Ubarburu, 58 Poligono 27
20014 - San Sebastiàn
Tel. +34 943 445 777 - Fax +34 943 445 350
www.gaessa.com

RODALSA S.L.

Barrachi, 12 - Pab. 21 - 01013 - Vitoria
Tel. +34 945 289 395 - Fax +34 945 289 246
www.rodalsa.net

SNR Rodamientos Iberica S.A.

Madrid C/Barberan, 6 - 28035 Madrid
Tel. +34 916 718 913 - Fax +34 916 736 548

SWEDEN
EIE Maskin AB

Harpsundswägen 197
12459 Bandhagen
Tel. +46 8 727 88 00 - Fax +46 8 727 88 99
www.eie.se

SWITZERLAND
Uiker Wälzlager AG

Schwerzistrasse 30 - 8807 Freienbach
Tel. +41 554 15 18 68
Fax +41 554 15 18 60
www.uiker.ch

TURKEY
EKSIM Mühendislik Sistemleri

Perpa Ticaret Merkezi B Blok Kat: 11 No: 1675
Sisli - Istanbul / Turkey
Tel. +90 212 222 81 12
Fax +90 212 222 81 02
www.eksimmuhendislik.com

© 2009 NADELLA
Printed in Italy

NADELLA
Linear and Motion Solutions

NADELLA keeps the right of all modification, even wothout notice if considered necessary to improve its products. Reproduction, even partial, are strictly forbidden if not previously authorised.