S.B. Rod End

唐立軸承企業股份有限公司
STRUENING BEARINGS CO., LTD.

Rod End & Spherical Bearings
桿端軸承・球面軸承

Introduction

Our company was established in 1989, mainly in manufacturing rod end and spherical bearings. The firm plays as a leading role on bearing manufacture technologies in Taiwan, and specializes in rod end bearings, spherical bearings, link ball bearings and rod end linkages. We not only have automatized production, precise assembly, stable and high quality products, but also provide competitive price and on time delivery service.

Research and Development Ability

Our core competence is Research and Development. R&D ability has been applied to manufacture various products. Our goals of expanding mainly focus on the connecting engineering, rod end linking solutions to industrial usages and commercial consumers, and helping clients to solve the difficulties in joint connecting.

Precisely Manufacturing Processes

- Auto-feed and auto-cutting CNC/ NC lathes
- Precise CNC/ NC grinding machines
- High performance hydraulic presses
- Precise assembling molds

3Q System - Quality Assurances

Our company has qualified the ISO 9001:2000 certificate since 2006. Meanwhile, our Quality Assurance system is the fundamental basis. This consists of three main parts:

- Assurance of Design Quality (ADQ)
- Assurance of Manufacturing Quality (AMQ)
- Assurance of Customer Quality (ACQ)

This system continuously reviews design and manufacturing quality of our products and services. ADQ emphasizes on function and performance review; AMQ includes strength and durability test, and ACQ is centered on technical supports and satisfactions.

目　錄 / CONTENTS

- **桿端軸承 / ROD END BEARINGS**

1. PHS Series ---------- Female Type ---------- p1
2. POS Series ---------- Male Type ---------- p2
3. NHS Series ---------- Female Type ---------- p3
4. NOS Series ---------- Male Type ---------- p4
5. MHS Series ---------- Female Type ---------- p5
6. MOS Series ---------- Male Type ---------- p6
7. SI_E Series ---------- Female Type ---------- p7
8. SA_E Series ---------- Male Type ---------- p8
9. SI_T Series ---------- Female Type ---------- p9
10. SA_T Series ---------- Male Type ---------- p10

- **不銹鋼桿端軸承 / STAINLESS STEEL ROD END BEARINGS**

11. LF Series ---------- Female Type ---------- p11
12. LM Series ---------- Male Type ---------- p12

- **重力耐磨型桿端軸承 / HEAVY LOAD ROD END BEARINGS**

13. HKF Series ---------- Female Type ---------- p13
14. HKM Series ---------- Male Type ---------- p14

- **鋁合金桿端軸承 / ALLUMINUM ROD END BEARINGS**

15. AXF Series ---------- Female Type ---------- p15
16. AXM Series ---------- Male Type ---------- p16

- **球面軸承 / SPHERICAL BEARINGS**

17. PB Series / PBN Series ---------- p17
18. PC Series ---------- p18
19. GE Series ---------- p19
20. GE_C Series ---------- p20

- **和尚頭軸承 / LINK BALL BEARINGS**

21. RBL Series ---------- p21
22. BI Series ---------- p22
23. BL Series ---------- p23
24. YL Series ---------- p24

- **特殊規格客製品 / OEM PRODUCTS** ---------- p25,p26

- **附錄 I / INDEX I** ---------- p27
  (單位轉換表、公差表 / Conversion Factors, Tolerances Tables)

ROD END BEARING
PHS Series

Female Type

嵌入組合型
特殊結構設計，附黃油咀，更堅實耐用。
材質
- **主體:** 中碳鋼S35C，鍛造，表面鍍鋅(Cr3+)。
- **鋼珠:** 鉻鉬軸承鋼SUJ-2，熱處理 HRC 58°±2，鍍硬鉻 。
- **外框:**合金銅。

Grease Fitting Type
An unique race structure design, Low clearance, with grease nipple, Well durable performance.
MATERIALS
- **BODY:**Medium Carbon Steel S35C, Forged, Zinc Coated(Cr3+)
- **BALL:**Bearing Steel SUJ-2, Heat Treated HRC 58°±2,Hard Chrome Plated
- **RACE:** Copper Alloy

■ Clearance (Unit: mm)
Radial Clearrance:0.035 or less
Axial Clearance:0.1 or less

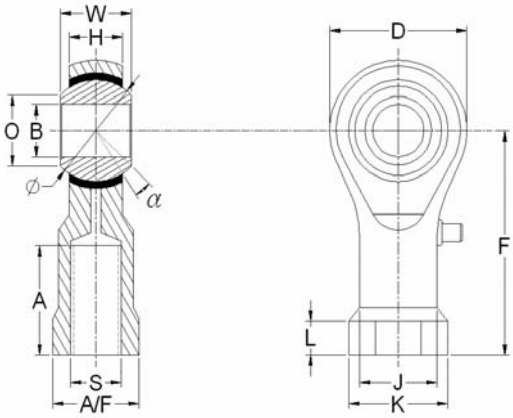

公 制 尺 寸 / DIMENSIONS IN METRIC *±0.5~1.0 mm

型 號 Model No.	B H7	W +0 -0.1	O *	H +0 -0.1	D *	F *	A +2 -0	J *	K *	L *	A/F +0 -0.2	Thread S	旋角 α	球徑 Ball Dia. Ø	徑向荷重 Radial S. load (kgf)	重量 Weight (g)
PHS 5 R/L	5	8	7.7	6	17	27	12	9	11	4	9	5x0.8	13	11.11	560	18
PHS 6 R/L	6	9	8.9	6.7	19	30	14	10	13	5	11	6x1.0	13	12.70	690	27
PHS 8 RF/LF **PHS 8 R/L**	8	12	10.4	9	23.5	36	17	13	16	5	14	8x1.0 8x1.25	13	15.88	980	48
PHS 10 RF/LF **PHS 10 R/L**	10	14	12.9	10.5	27	45	21	15	19	7	17	10x1.25 10x1.5	13	19.05	1,320	82
PHS 12 RF/LF **PHS 12 R/L**	12	16	15.4	12	32	50	24	18	22	7	19	12x1.25 12x1.75	13	22.23	1,670	123
PHS 14 RF/LF **PHS 14 R/L**	14	19	16.8	14	36	57	27	20	25	8	21	14x1.5 14x2.0	15	25.40	2,060	170
PHS 16 RF/LF **PHS 16 R/L**	16	21	19.3	15	39	64	33	22	27	8	22	16x1.5 16x2.0	15	28.58	2,500	214
PHS 18 R/L	18	23	21.8	17	44	71	36	25	31	10	27	18x1.5	15	31.75	2,940	305
PHS 20 R/L	20	25	24.3	18	47	77	40	28	34	10	30	20x1.5	15	34.93	3,430	387
PHS 22 R/L	22	28	25.9	20	50	84	43	30	37	12	32	22x1.5	15	38.10	4,120	540
PHS 25 R/L	25	31	29.6	22	56	94	48	34	42	12	36	24x2.0	15	42.85	7,240	750
PHS 30 R/L	30	37	34.8	26	67	110	56	40	50	15	41	30x2.0	15	50.80	9,210	1,130

英 制 尺 寸 / DIMENSIONS IN INCHES *±0.02~0.04 inches

型 號 Model No.	B H7	W +0 -0.004	O *	H +0 -0.004	D *	F *	A +0.080 -0	J *	K *	L *	A/F +0 -0.080	Thread S	旋角 α	球徑 Ball Dia. Ø	徑向荷重 Radial S. load (Lbs)	重量 Weight (Lbs)
PHS 1/4 R/L	0.2500	0.354	0.350	0.264	0.748	1.181	0.551	0.394	0.512	0.197	0.433	UNF 1/4-28	13	0.500	1,520	0.06
PHS 5/16 R/L	0.3125	0.472	0.409	0.354	0.925	1.417	0.669	0.512	0.630	0.197	0.551	UNF 5/16-24	13	0.625	2,160	0.11
PHS 3/8 R/L	0.3750	0.551	0.508	0.433	1.063	1.772	0.827	0.590	0.748	0.256	0.669	UNF 3/8-24	13	0.750	2,910	0.18
PHS 7/16 R/L	0.4375	0.551	0.508	0.433	1.063	1.772	0.827	0.590	0.748	0.256	0.669	UNF 7/16-20	13	0.750	2,910	0.18
PHS 1/2 R/L	0.5000	0.630	0.606	0.472	1.260	1.969	0.945	0.709	0.866	0.256	0.748	UNF 1/2-20	13	0.875	3,680	0.27
PHS 5/8 R/L	0.6250	0.827	0.760	0.590	1.535	2.520	1.299	0.866	1.063	0.315	0.866	UNF 5/8-18	15	1.125	5,510	0.47
PHS 3/4 R/L	0.7500	0.906	0.858	0.669	1.732	2.795	1.417	0.984	1.220	0.394	1.063	UNF 3/4-16	15	1.250	7,560	0.67
PHS 1 R/L	1.0000	1.220	1.165	0.866	0.000	3.700	1.890	1.339	1.654	0.472	1.417	UNF 1-12	15	1.687	15,960	1.65

ROD END BEARING
POS Series

Male Type

嵌入組合型
特殊結構設計，附黃油咀，更堅實耐用。
材質
- **主體:**中碳鋼S35C，鍛造，表面鍍鋅(Cr3+)。
- **鋼珠:**鉻鉬軸承鋼SUJ-2，熱處理 HRC 58°±2，鍍硬鉻。
- **外框:**合金銅。

Grease Fitting Type
An unique race structure design, Low clearance, with grease nipple, Well durable performance.
MATERIALS
- **BODY:**Medium Carbon Steel S35C, Forged, Zinc Coated(Cr3+)
- **BALL:**Bearing Steel SUJ-2, Heat Treated HRC 58°±2,Hard Chrome Plated
- **RACE:** Copper Alloy

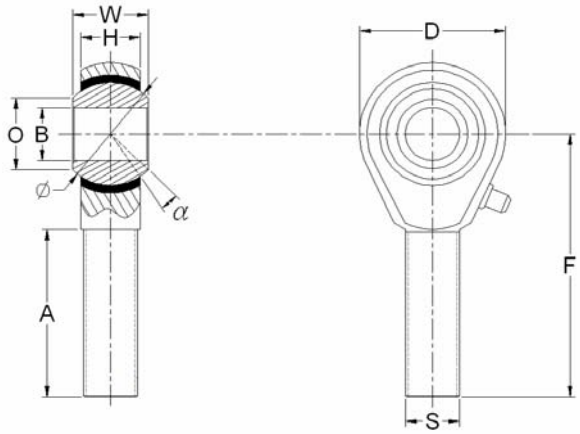

■ Clearance (Unit: mm)
Radial Clearrance:0.035 or less
Axial Clearance:0.1 or less

公 制 尺 寸 / DIMENSIONS IN METRIC *±0.5~1.0 mm

型 號 Model No.	B H7	W +0 -0.1	O *	H +0 -0.1	D *	F *	A +2 -0	Thread S	旋角 α	球徑 Ball Dia. Ø	徑向荷重 Radial S. load (kgf)	重量 Weight (g)
POS 5 R/L	5	8	7.7	6	17	35	22	5x0.8	13	11.11	340	14
POS 6 R/L	6	9	8.9	6.7	19	38	24	6x1.0	13	12.70	480	21
POS 8 RF/LF **POS 8 R/L**	8	12	10.4	9	23.5	45	26	8x1.0 8x1.25	13	15.88	680	41
POS 10 RF/LF **POS 10 R/L**	10	14	12.9	10.5	27	50	30	10x1.25 10x1.5	13	19.05	1,070	65
POS 12 RF/LF **POS 12 R/L**	12	16	15.4	12	32	56	35	12x1.25 12x1.75	13	22.23	1,650	98
POS 14 RF/LF **POS 14 R/L**	14	19	16.8	14	36	63	37	14x1.5 14x2.0	15	25.40	2,040	138
POS 16 RF/LF **POS 16 R/L**	16	21	19.3	15	39	67	40	16x1.5 16x2.0	15	28.58	2,470	191
POS 18 R/L	18	23	21.8	17	44	76	46	18x1.5	15	31.75	2,910	280
POS 20 R/L	20	25	24.3	18	47	79	48	20x1.5	15	34.93	3,390	340
POS 22 R/L	22	28	25.9	20	50	84	51	22x1.5	15	38.10	4,070	475
POS 25 R/L	25	31	29.6	22	56	94	57	24x2.0	15	42.85	7,170	650
POS 30 R/L	30	37	34.8	26	67	110	66	30x2.0	15	50.80	9,120	1,070

英 制 尺 寸 / DIMENSIONS IN INCHES *±0.02~0.04 inches

型 號 Model No.	B H7	W +0 -0.004	O *	H +0 -0.004	D *	F *	A +0.080 -0	Thread S	旋角 α	球徑 Ball Dia. Ø	徑向荷重 Radial S. load (Lbs)	重量 Weight (Lbs)
POS 1/4 R/L	0.2500	0.354	0.350	0.264	0.748	1.496	0.945	UNF 1/4-28	13	0.500	1,060	0.05
POS 5/16 R/L	0.3125	0.472	0.409	0.354	0.925	1.772	1.024	UNF 5/16-24	13	0.625	1,500	0.09
POS 3/8 R/L	0.3750	0.551	0.508	0.433	1.063	1.969	1.181	UNF 3/8-24	13	0.750	2,360	0.14
POS 7/16 R/L	0.4375	0.551	0.508	0.433	1.063	1.969	1.181	UNF 7/16-20	13	0.750	2,360	0.14
POS 1/2 R/L	0.5000	0.630	0.606	0.472	1.260	2.205	1.378	UNF 1/2-20	13	0.875	3,640	0.22
POS 5/8 R/L	0.6250	0.827	0.760	0.590	1.535	2.638	1.575	UNF 5/8-18	15	1.125	5,450	0.42
POS 3/4 R/L	0.7500	0.906	0.858	0.669	1.732	2.992	1.811	UNF 3/4-16	15	1.250	7,470	0.62
POS 1 R/L	1.0000	1.220	1.165	0.866	0.000	3.700	2.244	UNF 1-12	15	1.687	15,810	1.43

ROD END BEARING
NHS Series

Female Type

鐵氟龍耐磨型

採用超耐磨襯套材料(PTFE)，免給油耐磨設計，精密無間隙，必須微調間距之場所最合適。

材　質

- **主體：**中碳鋼S35C，鍛造，表面鍍鋅(Cr3+)。
- **鋼珠：**鉻鉬軸承鋼SUJ-2， 熱處理 HRC 58°±2，鍍硬鉻 。
- **襯墊：**鐵氟龍銅網(PTFE)-柔軟堅韌銅網和氟樹脂塗佈組成。

SELF-LUBRICATING TYPE

Highly wear-resisting PTFE liner. Well made with low clearance. Suitable for precision applications.

MATERIALS

- **BODY:**Medium Carbon Steel S35C, Forged, Zinc Coated(Cr3+)
- **BALL:**Bearing Steel SUJ-2, Heat Treated HRC58°±2, Hard Chrome Plated
- **LINER:**PTFE-Strong & flexible bronze mesh spread with fluorine resin

■ Clearance　(Unit: mm)
Radial Clearrance:0.035 or less
Axial Clearance:0.05 or less

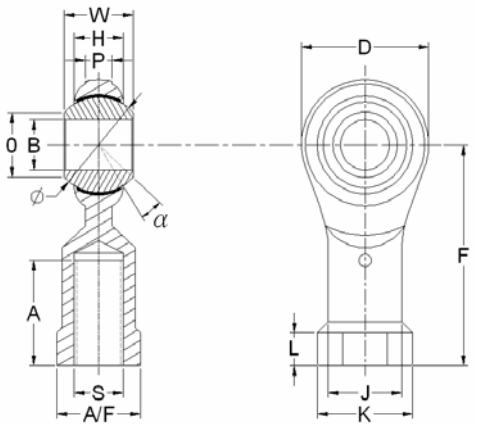

公 制 尺 寸 / DIMENSIONS IN METRIC *±0.5~1.0 mm

型　號 Model No.	B H7	W +0 -0.1	O *	H +0 -0.1	D *	F *	A +2 -0	J *	K *	L *	P *	A/F +0 -0.2	Thread S	旋角 α	球徑 Ball Dia. Ø	徑向荷重 Radial S. load (kgf)	重量 Weight (g)
NHS 3 R/L	3	6	7.4	4.5	14	21	10	6.5	8	3	-	7	3x0.5	13	9.30	180	6.5
NHS 4 R/L	4	7	7.6	5.3	14	24	12	8	9.5	4	3	8	4x0.7	13	10.32	220	10
NHS 5 R/L	5	8	7.7	5.5	17	27	12	9	11	4	3	9	5x0.8	13	11.11	390	16
NHS 6 R/L	6	9	8.9	6	19	30	14	10	13	5	3.3	11	6x1.0	13	12.70	500	24
NHS 8 RF/LF **NHS 8 R/L**	8	12	10.4	8	23.5	36	17	13	16	5	4.5	14	8x1.0 8x1.25	13	15.88	740	41
NHS 10 RF/LF **NHS 10 R/L**	10	14	12.9	10	27	45	21	15	19	7	5.5	17	10x1.25 10x1.5	13	19.05	940	70
NHS 12 RF/LF **NHS 12 R/L**	12	16	15.4	11	32	50	24	18	22	7	6	19	12x1.25 12x1.75	13	22.23	1,100	104
NHS 14 RF/LF **NHS 14 R/L**	14	19	16.8	12	36	57	27	20	25	8	7	21	14x1.5 14x2.0	15	25.40	1,520	158
NHS 16 RF/LF **NHS 16 R/L**	16	21	19.3	13	39	64	33	22	27	8	7.5	22	16x1.5 16x2.0	15	28.58	2,020	200
NHS 18 R/L	18	23	21.8	15	44	71	36	25	31	10	8.5	27	18x1.5	15	31.75	2,520	288
NHS 20 R/L	20	25	24.3	16	47	77	40	28	34	10	9	30	20x1.5	15	34.93	2,780	372
NHS 22 R/L	22	28	25.9	18	50	84	43	30	37	12	10	32	22x1.5	15	38.10	3,590	475
NHS 25 R/L	25	31	29.6	20	56	94	48	34	42	12	12	36	24x2.0	15	42.85	5,430	680
NHS 30 R/L	30	37	34.8	24	67	113	58	40	50	15	15	41	30x2.0	15	50.80	6,910	1,020

英 制 尺 寸 / DIMENSIONS IN INCHES *±0.02~0.04 inches

型　號 Model No.	B H7	W +0 -0.004	O *	H +0 -0.004	D *	F *	A +0.080 -0	J *	K *	L *	P *	A/F +0 -0.080	Thread S	旋角 α	球徑 Ball Dia. Ø	徑向荷重 Radial S. load (Lbs)	重量 Weight (Lbs)
NHS 1/4 R/L	0.2500	0.354	0.350	0.236	0.748	1.181	0.551	0.394	0.512	0.197	0.130	0.433	UNF1/4-28	13	0.500	1,100	0.05
NHS 5/16 R/L	0.3125	0.472	0.409	0.315	0.925	1.417	0.669	0.512	0.630	0.197	0.177	0.551	UNF 5/16-24	13	0.625	1,630	0.09
NHS 3/8 R/L	0.3750	0.551	0.508	0.394	1.063	1.772	0.827	0.591	0.748	0.276	0.217	0.669	UNF 3/8-24	13	0.750	2,070	0.15
NHS 7/16 R/L	0.4375	0.551	0.508	0.394	1.063	1.772	0.827	0.591	0.748	0.276	0.217	0.669	UNF 7/16-20	13	0.750	2,070	0.15
NHS 1/2 R/L	0.5000	0.630	0.606	0.433	1.260	1.969	0.945	0.709	0.866	0.276	0.236	0.748	UNF 1/2-20	13	0.875	2,430	0.23
NHS 5/8 R/L	0.6250	0.827	0.760	0.512	1.535	2.520	1.299	0.866	1.063	0.315	0.295	0.866	UNF 5/8-18	15	1.125	4,450	0.44
NHS 3/4 R/L	0.7500	0.906	0.858	0.591	1.732	2.795	1.417	0.984	1.220	0.394	0.335	1.063	UNF 3/4-16	15	1.250	6,130	0.63
NHS 1 R/L	1	1.220	1.165	0.787	2.205	3.701	1.890	1.339	1.654	0.472	0.472	1.417	UNF 1-12	15	1.687	11,970	1.50

ROD END BEARING
NOS Series

Male Type

鐵氟龍耐磨型

採用超耐磨襯套材料(PTFE)，免給油耐磨設計，精密無間隙，必須微調間距之場所最合適。

材　質

- **主體：**中碳鋼S35C，鍛造，表面鍍鋅(Cr3+)。
- **鋼珠：**鉻鉬軸承鋼SUJ-2， 熱處理 HRC 58°±2，鍍硬鉻 。
- **襯墊：**鐵氟龍銅網(PTFE)-柔軟堅韌銅網和氟樹脂塗佈組成。

SELF-LUBRICATING TYPE

Highly wear-resisting PTFE liner. Well made with low clearance. Suitable for precision applications.

MATERIALS

- **BODY:**Medium Carbon Steel S35C, Forged, Zinc Coated(Cr3+)
- **BALL:**Bearing Steel SUJ-2, Heat Treated HRC58°±2, Hard Chrome Plated
- **LINER:**PTFE-Strong & flexible bronze mesh spread with fluorine resin

■ Clearance　(Unit: mm)
Radial Clearrance:0.035 or less
Axial Clearance:0.05 or less

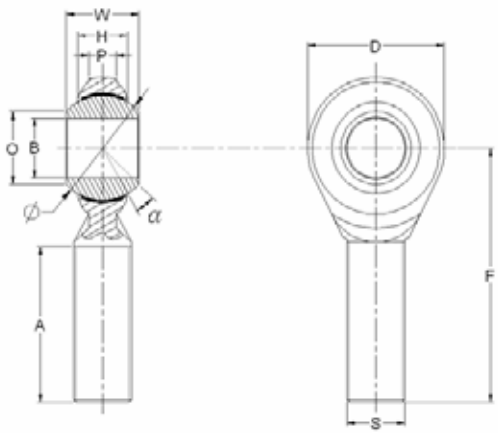

公 制 尺 寸 / DIMENSIONS IN METRIC *±0.5~1.0 mm

型　號 Model No.	B H7	W +0 -0.1	O *	H +0 -0.1	D *	F *	A +2 -0	P *	Thread S	旋角 α	球徑 Ball Dia. Ø	徑向荷重 Radial S. load (kgf)	重量 Weight (g)
NOS 4 R/L	4	7	7.6	5.3	14	30	17	3	4x0.7	13	10.32	220	7
NOS 5 R/L	5	8	7.7	5.5	17	35	22	3	5x0.8	13	11.11	340	13
NOS 6 R/L	6	9	8.9	6	19	38	24	3.3	6x1.0	13	12.70	490	17
NOS 8 RF/LF **NOS 8 R/L**	8	12	10.4	8	23.5	45	26	4.5	8x1.0 8x1.25	13	15.88	690	33
NOS 10 RF/LF **NOS 10 R/L**	10	14	12.9	10	27	50	30	5.5	10x1.25 10x1.5	13	19.05	940	54
NOS 12 RF/LF **NOS 12 R/L**	12	16	15.4	11	32	56	35	6	12x1.25 12x1.75	13	22.23	1,100	85
NOS 14 RF/LF **NOS 14 R/L**	14	19	16.8	12	36	63	37	7	14x1.5 14x2.0	15	25.40	1,520	129
NOS 16 RF/LF **NOS 16 R/L**	16	21	19.3	13	39	67	40	7.5	16x1.5 16x2.0	15	28.58	2,020	181
NOS 18 R/L	18	23	21.8	15	44	76	46	8.5	18x1.5	15	31.75	2,520	250
NOS 20 R/L	20	25	24.3	16	47	79	48	9	20x1.5	15	34.93	2,780	333
NOS 22 R/L	22	28	25.9	18	50	84	51	10	22x1.5	15	38.10	3,590	430
NOS 25 R/L	25	31	29.6	20	56	94	57	12	24x2.0	15	42.85	5,430	610
NOS 30 R/L	30	37	34.8	24	67	113	68	15	30x2.0	15	50.80	6,910	990

英 制 尺 寸 / DIMENSIONS IN INCHES　*±0.02~0.04 inches

型　號 Model No.	B H7	W +0 -0.004	O *	H +0 -0.004	D *	F *	A +0.080 -0	P *	Thread S	旋角 α	球徑 Ball Dia. Ø	徑向荷重 Radial S. load (Lbs)	重量 Weight (Lbs)
NOS 1/4　R/L	0.2500	0.354	0.350	0.236	0.748	1.496	0.945	0.130	UNF 1/4-28	13	0.500	1,080	0.04
NOS 5/16 R/L	0.3125	0.472	0.409	0.315	0.925	1.772	1.024	0.177	UNF 5/16-24	13	0.625	1,520	0.07
NOS 3/8　R/L	0.3750	0.551	0.508	0.394	1.063	1.969	1.181	0.217	UNF 3/8-24	13	0.750	2,070	0.12
NOS 7/16 R/L	0.4375	0.551	0.508	0.394	1.063	1.969	1.181	0.217	UNF 7/16-20	13	0.750	2,070	0.12
NOS 1/2　R/L	0.5000	0.630	0.606	0.433	1.260	2.205	1.378	0.236	UNF 1/2-20	13	0.875	2,430	0.19
NOS 5/8　R/L	0.6250	0.827	0.760	0.512	1.535	2.638	1.575	0.295	UNF 5/8-18	15	1.125	4,450	0.4
NOS 3/4　R/L	0.7500	0.906	0.858	0.590	1.732	2.992	1.811	0.335	UNF 3/4-16	15	1.250	6,130	0.55
NOS　1　R/L	1	1.220	1.165	0.787	2.205	3.701	2.244	0.472	UNF 1-12	15	1.687	11,970	1.34

ROD END BEARING
MHS Series

Female Type

射出密合型

特殊超耐磨複合材料襯套，自潤圓滑，免給油，長時間運轉不易磨損，使用壽命更長。

材　質

- **主體：**中碳鋼S35C，鍛造，表面鍍鋅(Cr3+)。
- **鋼珠：**鉻鉬軸承鋼SUJ-2，熱處理 HRC58°±2，鍍硬鉻。
- **襯墊：**特殊耐磨尼龍複合材料。

SELF-LUBRICATING TYPE

The special liner material which makes good lubricating performance, decreases abrasion and extends lifespan

MATERIALS

- **BODY:**Medium Carbon Steel S35C, Forged, Zinc Coated(Cr3+)
- **BALL:**Bearing Steel SUJ-2, Heat Treated HRC58°±2, Hard Chrome Plated
- **LINER:** Special Reinforce Nylon Material

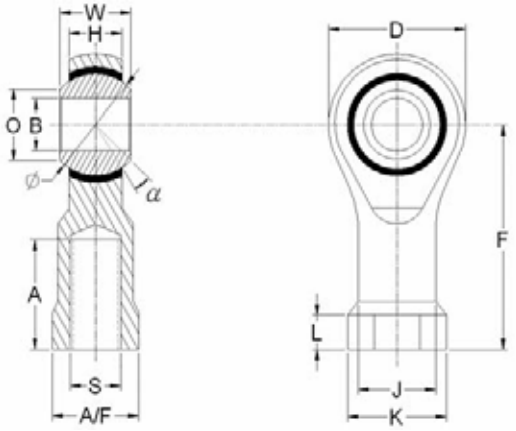

■ Clearance　(Unit: mm)
Radial Clearrance:0.035 or less
Axial Clearance:0.05 or less

公 制 尺 寸 / DIMENSIONS IN METRIC *±0.5~1.0 mm

型　號 Model No.	B H7	W +0 -0.1	O *	H +0 -0.1	D *	F *	A +2 -0	J *	K *	L *	A/F +0 -0.2	Thread S	旋角 α	球徑 Ball Dia. Ø	徑向荷重 Radial S. load (kgf)	重量 Weight (g)
MHS 5 R/L	5	8	7.7	6	17	27	12	9	11	4	9	5x0.8	13	11.11	560	18
MHS 6 R/L	6	9	8.9	6.7	19	30	14	10	13	5	11	6x1.0	13	12.70	690	27
MHS 8 RF/LF **MHS 8 R/L**	8	12	10.4	9	23.5	36	17	13	16	5	14	8x1.0 8x1.25	13	15.88	980	48
MHS 10 RF/LF **MHS 10 R/L**	10	14	12.9	10.5	27	45	21	15	19	7	17	10x1.25 10x1.5	13	19.05	1,320	82
MHS 12 RF/LF **MHS 12 R/L**	12	16	15.4	12	32	50	24	18	22	7	19	12x1.25 12x1.75	13	22.23	1,670	123
MHS 14 RF/LF **MHS 14 R/L**	14	19	16.8	14	36	57	27	20	25	8	21	14x1.5 14x2.0	15	25.40	2,060	170
MHS 16 RF/LF **MHS 16 R/L**	16	21	19.3	15	39	64	33	22	27	8	22	16x1.5 16x2.0	15	28.58	2,500	214
MHS 18 R/L	18	23	21.8	17	44	71	36	25	31	10	27	18x1.5	15	31.75	2,940	305
MHS 20 R/L	20	25	24.3	18	47	77	40	28	34	10	30	20x1.5	15	34.93	3,430	387

英 制 尺 寸 / DIMENSIONS IN INCHES *±0.02~0.04 inches

型　號 Model No.	B H7	W +0 -0.004	O *	H +0 -0.004	D *	F *	A +0.080 -0	J *	K *	L *	A/F +0 -0.080	Thread S	旋角 α	球徑 Ball Dia. Ø	徑向荷重 Radial S. load (Lbs)	重量 Weight (Lbs)
MHS 1/4 R/L	0.2500	0.354	0.350	0.264	0.748	1.181	0.551	0.394	0.512	0.197	0.433	UNF 1/4-28	13	0.500	1,520	0.06
MHS 5/16 R/L	0.3125	0.472	0.409	0.354	0.925	1.417	0.669	0.512	0.630	0.197	0.551	UNF 5/16-24	13	0.625	2,160	0.11
MHS 3/8 R/L	0.3750	0.551	0.508	0.413	1.063	1.772	0.827	0.590	0.748	0.256	0.669	UNF 3/8-24	13	0.750	2,910	0.18
MHS 7/16 R/L	0.4375	0.551	0.508	0.413	1.063	1.772	0.827	0.590	0.748	0.256	0.669	UNF 7/16-20	13	0.750	2,910	0.18
MHS 1/2 R/L	0.5000	0.630	0.606	0.472	1.260	1.969	0.945	0.709	0.866	0.256	0.748	UNF 1/2-20	13	0.875	3,680	0.27
MHS 5/8 R/L	0.6250	0.827	0.760	0.590	1.535	2.520	1.299	0.866	1.063	0.315	0.866	UNF 5/8-18	15	1.125	5,510	0.47
MHS 3/4 R/L	0.7500	0.906	0.858	0.669	1.732	2.795	1.417	0.984	1.220	0.394	1.063	UNF 3/4-16	15	1.250	7,560	0.67

ROD END BEARING
MOS Series

Male Type

射出密合型
特殊超耐磨複合材料襯套，自潤圓滑，免給油，長時間運轉不易磨損，使用壽命更長。

材　質
- **主體：**中碳鋼S35C，鍛造，表面鍍鋅(Cr3+)。
- **鋼珠：**鉻鉬軸承鋼SUJ-2， 熱處理 HRC 58°±2，鍍硬鉻 。
- **襯墊：**特殊耐磨尼龍複合材料。

SELF-LUBRICATING TYPE
The special liner material which makes good lubricating performance, decreases abrasion and extends lifespan

MATERIALS
- **BODY:**Medium Carbon Steel S35C, Forged, Zinc Coated(Cr3+)
- **BALL:**Bearing Steel SUJ-2, Heat Treated HRC58°±2, Hard Chrome Plated
- **LINER:**Special Reinforce Nylon Material

■ Clearance　(Unit: mm)
Radial Clearrance:0.035 or less
Axial Clearance:0.05 or less

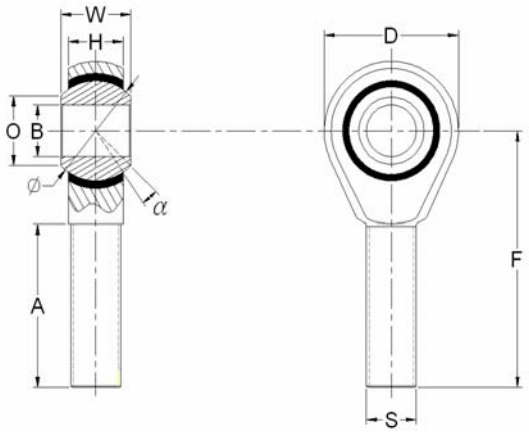

公 制 尺 寸 / DIMENSIONS IN METRIC *±0.5~1.0 mm

型　號 Model No.	B H7	W +0 -0.1	O *	H +0 -0.1	D *	F *	A +2 -0	Thread S	旋角 α	球徑 Ball Dia. Ø	徑向荷重 Radial S. load (kgf)	重量 Weight (g)
MOS 5 R/L	5	8	7.7	6	17	35	22	5x0.8	13	11.11	340	14
MOS 6 R/L	6	9	8.9	6.7	19	38	24	6x1.0	13	12.70	480	21
MOS 8 RF/LF **MOS 8 R/L**	8	12	10.4	9	23.5	45	26	8x1.0 8x1.25	13	15.88	680	41
MOS 10 RF/LF **MOS 10 R/L**	10	14	12.9	10.5	27	50	30	10x1.25 10x1.5	13	19.05	1,070	65
MOS 12 RF/LF **MOS 12 R/L**	12	16	15.4	12	32	56	35	12x1.25 12x1.75	13	22.23	1,650	98
MOS 14 RF/LF **MOS 14 R/L**	14	19	16.8	14	36	63	37	14x1.5 14x2.0	15	25.40	2,040	138
MOS 16 RF/LF **MOS 16 R/L**	16	21	19.3	15	39	67	40	16x1.5 16x2.0	15	28.58	2,470	191
MOS 18 R/L	18	23	21.8	17	44	76	46	18x1.5	15	31.75	2,910	280
MOS 20 R/L	20	25	24.3	18	47	79	48	20x1.5	15	34.93	3,390	340

英 制 尺 寸 / DIMENSIONS IN INCHES *±0.02~0.04 inches

型　號 Model No.	B H7	W +0 -0.004	O *	H +0 -0.004	D *	F *	A +0.080 -0	Thread S	旋角 α	球徑 Ball Dia. Ø	徑向荷重 Radial S. load (Lbs)	重量 Weight (Lbs)
MOS 1/4 R/L	0.2500	0.354	0.350	0.264	0.748	1.496	0.945	UNF 1/4-28	13	0.500	1,060	0.05
MOS 5/16 R/L	0.3125	0.472	0.409	0.354	0.925	1.772	1.024	UNF 5/16-24	13	0.625	1,500	0.09
MOS 3/8 R/L	0.3750	0.551	0.508	0.413	1.063	1.969	1.181	UNF 3/8-24	13	0.750	2,360	0.14
MOS 7/16 R/L	0.4375	0.551	0.508	0.413	1.063	1.969	1.181	UNF 7/16-20	13	0.750	2,360	0.14
MOS 1/2 R/L	0.5000	0.630	0.606	0.472	1.260	2.205	1.378	UNF 1/2-20	13	0.875	3,640	0.22
MOS 5/8 R/L	0.6250	0.827	0.760	0.590	1.535	2.638	1.575	UNF 5/8-18	15	1.125	5,450	0.42
MOS 3/4 R/L	0.7500	0.906	0.858	0.669	1.732	2.992	1.811	UNF 3/4-16	15	1.250	7,470	0.62

ROD END BEARING
SI-E Series

Female Type

工程塑膠射出型
襯墊以杜邦100ST工程塑膠(P.O.M)射出填充，堅實耐高拉力，
扁平小寬幅，不佔空間。

材　質
- **主體：**中碳鋼S35C，鍛造，表面鍍鋅(Cr3+)。
- **鋼珠：**鉻鉬軸承鋼SUJ-2， 熱處理 HRC 58°±2，鍍硬鉻。

SELF-LUBRICATING TYPE
High strength engineering plastic injected liner. Flat Design.

MATERIALS
- **BODY:** Medium Carbon Steel S35C, Forged, Zinc Coated(Cr3+)
- **BALL:** Bearing Steel SUJ-2, Heat Treated HRC 58°±2, Hard Chrome Plated
- **LINER:** Friction resistant P.O.M. (Dupont 100 ST)

■ Clearance (Unit: mm)
Radial Clearrance:0.035 or less
Axial Clearance:0.05 or less

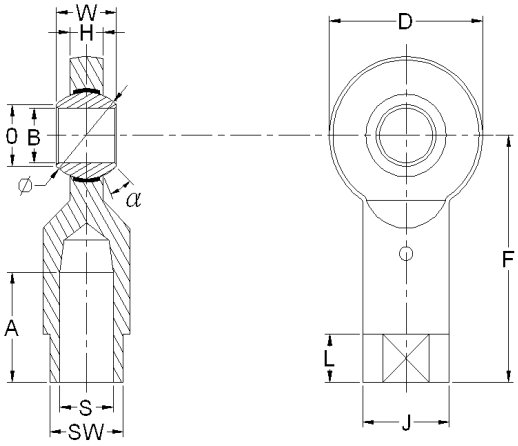

公 制 尺 寸 / DIMENSIONS IN METRIC *±0.5~1.0 mm

型　號 Model No.	B *(1)	W +0 -0.1	O *	H +0 -0.1	D *	F *	A +2 -0	J *	L *	SW +0 -0.2	Thread S	旋角 α	球徑 Ball Dia. Ø	徑向荷重 Radial S. load (kgf)	重量 Weight (g)
SI 6E ,SIL 6E	6	6	9	4	20	30	12	10	6	9	6x1.0	13	11.11	750	17
SI 8EF ,SIL 8EF **SI 8E ,SIL 8E**	8	8	10	5	23	36	16	13	7	11	8x1.0 8x1.25	15	12.70	1,180	31
SI 10EF ,SIL 10EF **SI 10E ,SIL 10E**	10	9	12	6	28	43	20	16	8	14	10x1.25 10x1.5	14	15.88	1,610	54
SI 12EF ,SIL 12EF **SI 12E ,SIL 12E**	12	10	15	7	32	50	22	19	8	17	12x1.25 12x1.75	10	18.00	2,250	86
SI 15ESF ,SIL 15ESF **SI 15ES ,SIL 15ES**	15	12	19	9	38	61	25	22	8	19	14x1.5 14x2.0	8	22.23	3,300	142
SI 17ESF ,SIL 17ESF **SI 17ES ,SIL 17ES**	17	14	21	10	44	67	28	25	8	22	16x1.5 16x2.0	10	25.40	4,130	208
SI 20ES ,SIL 20ES	20	16	25	12	51	77	33	28	10	24	20x1.5	8	28.58	5,500	290
SI 25ES ,SIL 25ES	25	20	31	16	62	94	42	35	12	30	24x2.0	7	36.50	7,610	573

***(1) 尺寸公差請詳附錄公差表，Please refer the tolerence table of index.**

英 制 尺 寸 / DIMENSIONS IN INCHES *±0.02~0.04 inches

型　號 Model No.	B *(1)	W +0 -0.004	O *	H +0 -0.004	D *	F *	A +0.080 -0	J *	L *	SW +0 -0.080	Thread S	旋角 α	球徑 Ball Dia. Ø	徑向荷重 Radial S. load (Lbs)	重量 Weight (Lbs)
SI 1/4E ,SIL 1/4E	0.2500	0.236	0.354	0.158	0.787	1.181	0.472	0.394	0.236	0.354	UNF 1/4-28	13	0.438	1,650	0.04
SI 5/16E ,SIL 5/16E	0.3125	0.315	0.394	0.197	0.906	1.417	0.630	0.512	0.276	0.433	UNF 5/16-24	15	0.500	2,600	0.07
SI 3/8E ,SIL 3/8E	0.3750	0.354	0.472	0.236	1.102	1.693	0.787	0.630	0.315	0.551	UNF 3/8-24	14	0.625	3,550	0.12
SI 1/2E ,SIL 1/2E	0.5000	0.394	0.591	0.276	1.260	1.969	0.866	0.748	0.315	0.669	UNF 1/2-20	10	0.709	4,960	0.19
SI 5/8ES ,SIL 5/8ES	0.6250	0.551	0.827	0.394	1.732	2.638	1.102	0.984	0.315	0.866	UNF 5/8-18	10	1.000	9,100	0.46
SI 3/4ES ,SIL 3/4ES	0.7500	0.630	0.984	0.472	2.008	3.032	1.299	1.102	0.394	0.945	UNF 3/4-16	8	1.125	12,130	0.64

***(1) 尺寸公差請詳附錄公差表，Please refer the tolerence table of index.**

ROD END BEARING
SA-E Series

Male Type

工程塑膠射出型
襯墊以杜邦100ST工程塑膠(P.O.M)射出填充，堅實耐高拉力，
扁平小寬幅，不佔空間。

材　質
- 主體：中碳鋼S35C，鍛造，表面鍍鋅(Cr3+)。
- 鋼珠：鉻鉬軸承鋼SUJ-2， 熱處理 HRC 58°±2，鍍硬鉻。

SELF-LUBRICATING TYPE
High strength engineering plastic injected liner. Flat Design.

MATERIALS
- **BODY:** Medium Carbon Steel S35C, Forged, Zinc Coated(Cr3+)
- **BALL:** Bearing Steel SUJ-2, Heat Treated HRC 58°±2, Hard Chrome Plated
- **LINER:** Friction resistant P.O.M. (Dupont 100 ST)

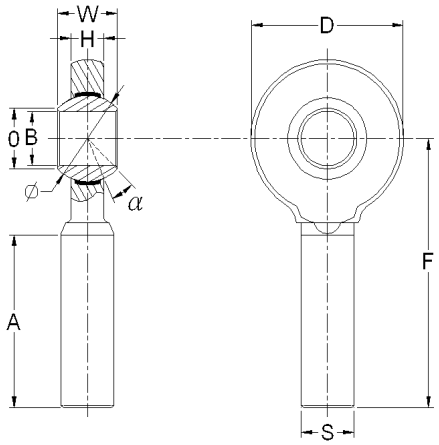

■ Clearance (Unit: mm)
Radial Clearrance:0.035 or less
Axial Clearance:0.05 or less

公 制 尺 寸 ／DIMENSIONS IN METRIC ＊±0.5~1.0 mm

型　號 Model No.	B *(1)	W +0 -0.1	O *	H +0 -0.1	D *	F *	A +2 -0	Thread S	旋角 α	球徑 Ball Dia. Ø	徑向荷重 Radial S. load (kgf)	重量 Weight (g)
SA 6E ,SAL 6E	6	6	9	4	20	36	22	6x1.0	13	11.11	750	14
SA 8EF ,SAL 8EF SA 8E ,SAL 8E	8	8	10	5	23	42	25	8x1.0 8x1.25	15	12.70	1,180	24
SA 10EF ,SAL 10EF SA 10E ,SAL 10E	10	9	12	6	28	48	29	10x1.25 10x1.5	14	15.88	1,610	41
SA 12EF ,SAL 12EF SA 12E ,SAL 12E	12	10	15	7	32	54	33	12x1.25 12x1.75	10	18.00	2,250	67
SA 15ESF ,SAL 15ESF SA 15ES ,SAL 15ES	15	12	19	9	38	63	36	14x1.5 14x2.0	8	22.23	3,300	110
SA 17ESF ,SAL 17ESF SA 17ES ,SAL 17ES	17	14	21	10	44	69	40	16x1.5 16x2.0	10	25.40	4,130	163
SA 20ES ,SAL 20ES	20	16	25	12	51	78	47	20x1.5	8	28.58	5,500	270
SA 25ES ,SAL 25ES	25	20	31	16	62	94	57	24x2.0	7	36.50	7,610	508

***(1) 尺寸公差請詳附錄公差表，Please refer the tolerence table of index.**

英 制 尺 寸 ／DIMENSIONS IN INCHES ＊±0.02~0.04 inches

型　號 Model No.	B *(1)	W +0 -0.004	O *	H +0 -0.004	D *	F *	A +0.080 -0	Thread S	旋角 α	球徑 Ball Dia. Ø	徑向荷重 Radial S. load (Lbs)	重量 Weight (Lbs)
SA 1/4E ,SAL 1/4E	0.2500	0.236	0.354	0.158	0.787	1.417	0.866	UNF 1/4-28	13	0.438	1,650	0.03
SA 5/16E ,SAL 5/16E	0.3125	0.315	0.394	0.197	0.906	1.654	0.984	UNF 5/16-24	15	0.500	2,600	0.05
SA 3/8E ,SAL 3/8E	0.3750	0.354	0.472	0.236	1.102	1.890	1.142	UNF 3/8-24	14	0.625	3,550	0.09
SA 1/2E ,SAL 1/2E	0.5000	0.394	0.591	0.276	1.260	2.126	1.299	UNF 1/2-20	10	0.709	4,960	0.15
SA 5/8ES ,SAL 5/8ES	0.6250	0.551	0.827	0.394	1.732	2.717	1.575	UNF 5/8-18	10	1.000	9,100	0.36
SA 3/4ES ,SAL 3/4ES	0.7500	0.630	0.984	0.472	2.008	3.071	1.850	UNF 3/4-16	8	1.125	12,130	0.60

***(1) 尺寸公差請詳附錄公差表，Please refer the tolerence table of index.**

ROD END BEARING
SI-T Series

Female Type

簡易式、免給油、自潤型
鋼珠週邊無襯套，一般桿端均適用。
材　質
- **主　　體：**中碳鋼S35C，鍛造，表面鍍鋅(Cr3+)。
- **外框及鋼珠：**鉻鉬軸承鋼SUJ-2， 熱處理HRC58°±2，表面磷酸錳皮膜處理。

SELF-LUBRICATING TYPE
Matel to matel economic type for general purpose.
MATERIALS
- **BODY:** Medium Carbon Steel S35C, Forged, Zinc Coated(Cr3+)
- **RACE & BALL:** Bearing Steel SUJ-2, Heat Treated HRC 58°±2, Phosphatizing treatment

■ Clearance　(Unit: mm)
Radial Clearrance:0.05 or less
Axial Clearance:0.1 or less

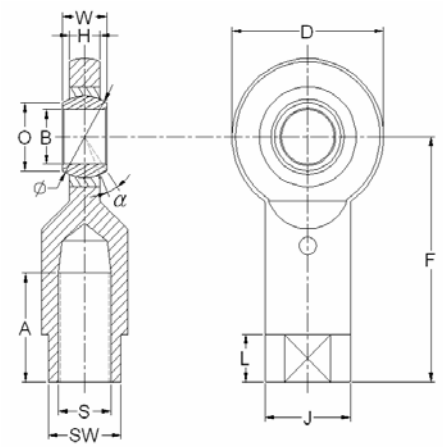

公 制 尺 寸 / DIMENSIONS IN METRIC *±0.5~1.0 mm

型　號 Model No.	B *(1)	W +0 -0.1	O *	H +0 -0.1	D *	F *	A +2 -0	J *	L *	SW +0 -0.2	Thread S	旋角 α	球徑 Ball Dia. Ø	徑向荷重 Radial S. load (kgf)	重量 Weight (g)
SI 8T RF/LF **SI 8T R/L**	8	8	10	5	23	36	16	13	7	11	8x1.0 8x1.25	15	12.70	1,180	31
SI 10T RF/LF **SI 10T R/L**	10	9	12	6	28	43	20	16	8	14	10x1.25 10x1.5	14	15.88	1,610	54
SI 12T RF/LF **SI 12T R/L**	12	10	15	7	32	50	22	19	8	17	12x1.25 12x1.75	10	18.00	2,250	86
SI 15T RF/LF **SI 15T R/L**	15	12	19	9	38	61	25	22	8	19	14x1.5 14x2.0	8	22.23	3,300	142
SI 17T RF/LF **SI 17T R/L**	17	14	21	10	44	67	28	25	8	22	16x1.5 16x2.0	10	25.40	4,130	208
SI 20T R/L	20	16	25	12	51	77	33	28	10	24	20x1.5	8	28.58	5,500	290
SI 25T R/L	25	20	31	16	62	94	42	35	12	30	24x2.0	7	36.50	7,610	573

***(1) 尺寸公差請詳附錄公差表，Please refer the tolerence table of index.**

英 制 尺 寸 / DIMENSIONS IN INCHES *±0.02~0.04 inches

型　號 Model No.	B *(1)	W +0 -0.004	O *	H +0 -0.004	D *	F *	A +0.080 -0	J *	L *	SW +0 -0.080	Thread S	旋角 α	球徑 Ball Dia. Ø	徑向荷重 Radial S. load (Lbs)	重量 Weight (Lbs)
SI 5/16T R/L	0.3125	0.315	0.394	0.197	0.906	1.417	0.630	0.512	0.276	0.433	UNF 5/16-24	15	0.500	2,600	3.40
SI 3/8T R/L	0.3750	0.354	0.472	0.236	1.102	1.693	0.787	0.630	0.315	0.551	UNF 3/8-24	14	0.625	3,550	4.56
SI 1/2T R/L	0.5000	0.394	0.591	0.276	1.260	1.969	0.866	0.748	0.315	0.669	UNF 1/2-20	10	0.709	4,960	5.78
SI 5/8T R/L	0.6250	0.551	0.827	0.394	1.732	2.638	1.102	0.984	0.315	0.866	UNF 5/8-18	10	1.000	9,100	8.64
SI 3/4T R/L	0.7500	0.630	0.984	0.472	2.008	3.032	1.299	1.102	0.394	0.945	UNF 3/4-16	8	1.125	12,130	11.90

***(1) 尺寸公差請詳附錄公差表，Please refer the tolerence table of index.**

ROD END BEARING
SA-T Series

Male Type

簡易式、免給油、自潤型
鋼珠週邊無襯套，一般桿端均適用。
材　質
- **主　　體：**中碳鋼S35C，鍛造，表面鍍鋅(Cr3+)。
- **外框及鋼珠：**鉻鉬軸承鋼SUJ-2， 熱處理 HRC 58°±2，表面磷酸錳皮膜處理。

SELF-LUBRICATING TYPE
Matel to matel economic type for general purpose.
MATERIALS
- **BODY:** Medium Carbon Steel S35C, Forged, Zinc Coated(Cr3+)
- **RACE & BALL:** Bearing Steel SUJ-2, Heat Treated HRC 58°±2, Phosphatizing treatment

■ Clearance　(Unit: mm)
Radial Clearrance:0.05 or less
Axial Clearance:0.1 or less

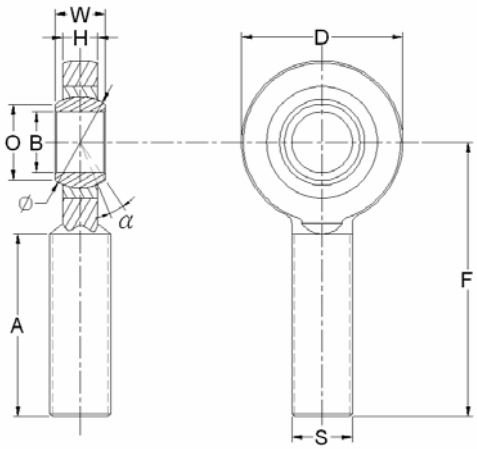

公 制 尺 寸 / DIMENSIONS IN METRIC *±0.5~1.0 mm

型　號 Model No.	B *(1)	W +0 -0.1	O *	H +0 -0.1	D *	F *	A +2 -0	Thread S	旋角 α	球徑 Ball Dia. Ø	徑向荷重 Radial S. load (kgf)	重量 Weight (g)
SA 8T RF/LF **SA 8T R/L**	8	8	10	5	23	42	25	8x1.0 8x1.25	15	12.70	1,180	24
SA 10T RF/LF **SA 10T R/L**	10	9	12	6	28	48	29	10x1.25 10x1.5	14	15.88	1,610	41
SA 12T RF/LF **SA 12T R/L**	12	10	15	7	32	54	33	12x1.25 12x1.75	10	18.00	2,250	67
SA 15T RF/LF **SA 15T R/L**	15	12	19	9	38	63	36	14x1.5 14x2.0	8	22.23	3,300	110
SA 17T RF/LF **SA 17T R/L**	17	14	21	10	44	69	40	16x1.5 16x2.0	10	25.40	4,130	163
SA 20T R/L	20	16	25	12	51	78	47	20x1.5	8	28.58	5,500	270
SA 25T R/L	25	20	31	16	62	94	57	24x2.0	7	36.50	7,610	508

***(1) 尺寸公差請詳附錄公差表，Please refer the tolerence table of index.**

英 制 尺 寸 / DIMENSIONS IN INCHES *±0.02~0.04 inches

型　號 Model No.	B *(1)	W +0 -0.004	O *	H +0 -0.004	D *	F *	A +0.080 -0	Thread S	旋角 α	球徑 Ball Dia. Ø	徑向荷重 Radial S. load (Lbs)	重量 Weight (Lbs)
SA 5/16T R/L	0.3125	0.315	0.394	0.197	0.906	1.654	0.984	UNF 5/16-24	15	0.500	2,600	0.05
SA 3/8T R/L	0.3750	0.354	0.472	0.236	1.102	1.890	1.142	UNF 3/8-24	14	0.625	3,550	0.09
SA 1/2T R/L	0.5000	0.394	0.591	0.276	1.260	2.126	1.299	UNF 1/2-20	10	0.709	4,960	0.15
SA 5/8T R/L	0.6250	0.551	0.827	0.394	1.732	2.717	1.575	UNF 5/8-18	10	1.000	9,100	0.36
SA 3/4T R/L	0.7500	0.630	0.984	0.472	2.008	3.071	1.850	UNF 3/4-16	8	1.125	12,130	0.60

***(1) 尺寸公差請詳附錄公差表，Please refer the tolerence table of index.**

ROD END BEARING
LF Series - Stainless Steel

Female Type

不銹鋼耐酸鹼型
採用超耐磨襯套材料(PTFE)，免給油設計，精密無間隙，不銹鋼材質，適合酸鹼場所使用。

材　質

- **主體：**不銹鋼SUS304。
- **鋼珠：**不銹鋼 SUS 440C， 熱處理 HRC 58°±2 。
- **襯墊：**鐵氟龍銅網(PTFE)-柔軟堅韌銅網和氟樹脂塗佈組成。

SELF-LUBRICATING TYPE
Stainless steel body and ball which are suitable for corrosive environment. Highly wear-resisting PTFE liner. Well made with low clearance.

MATERIALS

- **BODY:** Stainless Steel SUS 304
- **BALL:** Stainless Steel SUS 440C, Heat Treated HRC 58°±2
- **LINER:** PTFE-Strong & flexible bronze mesh spread with fluorine resin

■ Clearance (Unit: mm)
Radial Clearrance:0.035 or less
Axial Clearance:0.05 or less

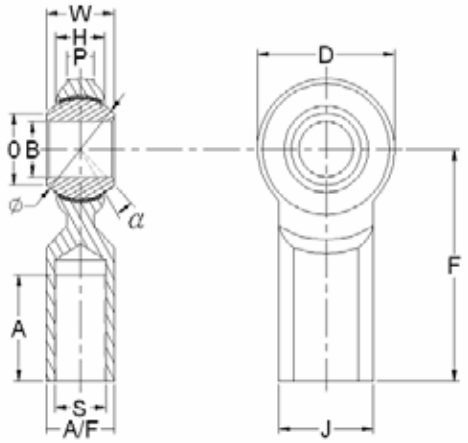

公 制 尺 寸 / DIMENSIONS IN METRIC *±0.5~1.0 mm

型　號 Model No.	B H7	W +0 -0.1	O *	H +0 -0.1	D *	F *	A +2 -0	J *	P *	A/F +0 -0.2	Thread S	旋角 α	球徑 Ball Dia. Ø	徑向荷重 Radial S. load (kgf)	重量 Weight (g)
LF 5 R/L	5	7.94	7.7	5.2	13.3	26.2	12.7	10.3	3	7.9	5x0.8	20	11.11	360	20
LF 6 R/L	6	9.53	8.6	6.4	19.3	31.5	15.9	11.9	3	9.3	6x1.0	20	12.70	590	30
LF 8 RF/LF **LF 8 R/L**	8	11.11	11.4	7.9	22.2	34.9	18.0	2.7	4.5	11.1	8x1.0 8x1.25	22	15.88	890	40
LF 10 RF/LF **LF 10 R/L**	10	12.70	12.9	9.1	25.4	41.3	19.05	17.5	5.0	12.7	10x1.25 10x1.5	22	18.00	1,190	64
LF 12 RF/LF **LF 12 R/L**	12	15.88	15.2	11.5	33.3	54	25.4	22.2	6.2	19.1	12x1.25 12x1.75	20	22.23	1,780	144
LF 16 RF/LF **LF 16 R/L**	16	19.05	19.1	12.3	38.1	63.5	31.8	25.4	7.5	22.2	16x1.5 16x2.0	21	28.58	2,370	213
LF 18 R/L	18	22.23	21.5	15.0	44.5	73	34.9	28.6	8.3	25.4	18x1.5	21	31.75	2,970	322

英 制 尺 寸 / DIMENSIONS IN INCHES *±0.02~0.04 inches

型　號 Model No.	B H7	W +0 -0.004	O *	H +0 -0.004	D *	F *	A +0.080 -0	J *	P *	A/F +0 -0.080	Thread S	旋角 α	球徑 Ball Dia. Ø	徑向荷重 Radial S. load (Lbs)	重量 Weight (Lbs)
LF 3/16 R/L	0.1875	0.312	0.303	0.204	0.525	1.032	0.500	0.405	0.118	0.312	UNF 3/16-32	20	0.437	790	0.04
LF 1/4 R/L	0.2500	0.375	0.339	0.252	0.760	1.242	0.625	0.468	0.118	0.375	UNF 1/4-28	20	0.500	1,300	0.07
LF 5/16 R/L	0.3125	0.437	0.449	0.311	0.875	1.375	0.710	0.500	0.177	0.437	UNF 5/16-24	22	0.625	1,960	0.09
LF 3/8 R/L	0.3750	0.500	0.508	0.358	1.000	1.625	0.750	0.687	0.197	0.500	UNF 3/8-24	22	0.709	2,620	0.14
LF 7/16 R/L	0.4375	0.500	0.508	0.358	1.000	1.625	0.750	0.687	0.197	0.500	UNF 7/16-20	22	0.709	2,620	0.14
LF 1/2 R/L	0.5000	0.625	0.598	0.453	1.312	2.125	1.000	0.875	0.244	0.750	UNF 1/2-20	20	0.875	3,920	0.32
LF 5/8 R/L	0.6250	0.750	0.752	0.484	1.500	2.500	1.250	1.000	0.295	0.875	UNF 5/8-18	21	1.125	5,220	0.47
LF 3/4 R/L	0.7500	0.875	0.846	0.590	1.750	2.875	1.375	1.125	0.327	1.000	UNF 3/4-16	21	1.250	6,540	0.71

ROD END BEARING
LM Series - Stainless Steel

Male Type

不銹鋼耐酸鹼型
採用超耐磨襯套材料(PTFE)，免給油設計，精密無間隙，
不銹鋼材質，適合酸鹼場所使用。

材　質

- **主體：**不銹鋼SUS304。
- **鋼珠：**不銹鋼 SUS 440C， 熱處理 HRC 58°±2 。
- **襯墊：**鐵氟龍銅網(PTFE)-柔軟堅韌銅網和氟樹脂塗佈組成。

SELF-LUBRICATING TYPE
Stainless steel body and ball which are suitable for corrosive environment.
Highly wear-resisting PTFE liner. Well made with low clearance.

MATERIALS

- **BODY:** Stainless Steel SUS 304
- **BALL:** Stainless Steel SUS 440C, Heat Treated HRC 58°±2
- **LINER:** PTFE-Strong & flexible bronze mesh spread with fluorine resin

■ Clearance (Unit: mm)
Radial Clearrance:0.035 or less
Axial Clearance:0.05 or less

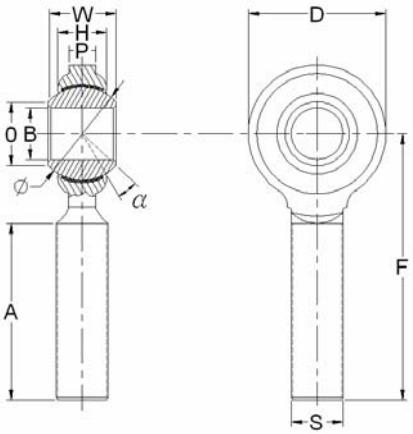

公 制 尺 寸 / DIMENSIONS IN METRIC *±0.5~1.0 mm

型　號 Model No.	B H7	W +0 -0.1	O *	H +0 -0.1	D *	F *	A +2 -0	P *	Thread S	旋角 α	球徑 Ball Dia. Ø	徑向荷重 Radial S. load (kgf)	重量 Weight (g)
LM 5 R/L	5	7.94	7.7	5.2	13.3	32	19	3	5x0.8	20	11.11	360	15
LM 6 R/L	6	9.53	8.6	6.4	19.3	40	25	3	6x1.0	20	12.70	590	25
LM 8 RF/LF **LM 8 R/L**	8	11.11	11.4	7.9	22.2	48	32	4.5	8x1.0 8x1.25	22	15.88	890	35
LM 10 RF/LF **LM 10 R/L**	10	12.70	12.9	9.1	25.4	50	35	5.0	10x1.25 10x1.5	22	18.00	1,190	60
LM 12 RF/LF **LM 12 R/L**	12	15.88	15.2	11.5	33.3	62	38	6.2	12x1.25 12x1.75	20	22.23	1,780	119
LM 16 RF/LF **LM 16 R/L**	16	19.05	19.1	12.3	38.1	67	41	7.5	16x1.5 16x2.0	21	28.58	2,370	178
LM 18 R/L	18	22.23	21.5	15.0	44.5	73	45	8.3	18x1.5	21	31.75	2,970	282

英 制 尺 寸 / DIMENSIONS IN INCHES *±0.02~0.04 inches

型　號 Model No.	B H7	W +0 -0.004	O *	H +0 -0.004	D *	F *	A +0.080 -0	P *	Thread S	旋角 α	球徑 Ball Dia. Ø	徑向荷重 Radial S. load (Lbs)	重量 Weight (Lbs)
LM 3/16 R/L	0.1875	0.312	0.303	0.204	0.525	1,250	0.750	0.118	UNF 3/16-32	20	0.437	790	0.03
LM 1/4 R/L	0.2500	0.375	0.339	0.252	0.760	1,562	1.000	0.118	UNF 1/4-28	20	0.500	1,300	0.06
LM 5/16 R/L	0.3125	0.437	0.449	0.311	0.875	1,875	1.250	0.177	UNF 5/16-24	22	0.625	1,960	0.08
LM 3/8 R/L	0.3750	0.500	0.508	0.358	1.000	1,939	1.375	0.197	UNF 3/8-24	22	0.709	2,620	0.13
LM 7/16 R/L	0.4375	0.500	0.508	0.358	1.000	1,939	1.375	0.197	UNF 7/16-20	22	0.709	2,620	0.13
LM 1/2 R/L	0.5000	0.625	0.598	0.453	1.312	2,436	1.500	0.244	UNF 1/2-20	20	0.875	3,920	0.26
LM 5/8 R/L	0.6250	0.750	0.752	0.484	1.500	2.625	1.625	0.295	UNF 5/8-18	21	1.125	5,220	0.39
LM 3/4 R/L	0.7500	0.875	0.846	0.590	1.750	2.875	1.750	0.327	UNF 3/4-16	21	1.250	6,540	0.62

ROD END BEARING
HKF, XHKF Series

Female Type

重力耐磨型
適用於重負載車輛或機器，超耐磨免給油。

材　質

- **主 體：HKF-** 中碳鋼 S35C，熱處理，鍍鋅(Cr3+)。
  XHKF- 合金鋼SCM 440 接受訂製。
- **鋼珠：**鉻鉬軸承鋼SUJ-2，熱處理 HRC 58°±2，鍍硬鉻 。
- **外框：**中碳鋼 S45C或不銹鋼 SUS416。
- **襯墊：**鐵氟龍銅網(PTFE)-柔軟堅韌銅網和氟樹脂塗佈組

SELF-LUBRICATING TYPE
Suitable for heavy load applications.

MATERIALS

- **BODY:HKF-** Carbon Steel S35C , Heat Treated, Zinc Coated(Cr3+)
  XHKF- Alloy Steel SCM 440 available made by order
- **BALL:**Bearing Steel SUJ-2, Heat Treated HRC58°±2,Hard Chrome Plated
- **RACE:**Medium Carbon Steel S45C or Stainless Steel SUS 416
- **LINER:**PTFE-Strong & flexible bronze mesh spread with fluorine resin

■ Clearance (Unit: mm)
Radial Clearrance:0.035 or less
Axial Clearance:0.05 or less

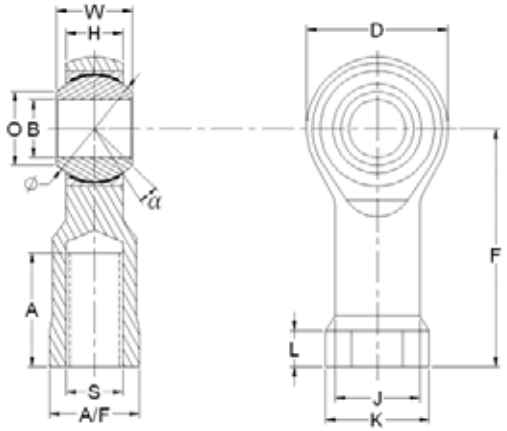

公 制 尺 寸 / DIMENSIONS IN METRIC *±0.5~1.0 mm

型 號 Model No.	B H7	W +0 -0.1	O *	H +0 -0.1	D *	F *	A +2 -0	J *	K *	L *	A/F +0 -0.2	Thread S	旋角 α	球徑 Ball Dia. Ø	徑向荷重 Radial S. HKF	XHKF	重量 Weight (g)
HKF 8 RF/LF **HKF 8 R/L**	8	12	10.4	9	23.5	36	17	13	16	5	14	8x1.0 8x1.25	13	15.88	1,360	3,220	48
HKF 10 RF/LF **HKF 10 R/L**	10	14	12.9	10.5	27	45	21	15	19	7	17	10x1.25 10x1.5	13	19.05	1,700	4,860	82
HKF 12 RF/LF **HKF 12 R/L**	12	16	15.4	12	32	50	24	18	22	7	19	12x1.25 12x1.75	13	22.23	1,890	5,220	123
HKF 14 RF/LF **HKF 14 R/L**	14	19	16.8	14	36	57	27	20	25	8	21	14x1.5 14x2.0	15	25.40	2,890	6,950	170
HKF 16 RF/LF **HKF 16 R/L**	16	21	19.3	15	39	64	33	22	27	8	22	16x1.5 16x2.0	15	28.58	3,120	7,390	214
HKF 18 R/L	18	23	21.8	17	44	71	36	25	31	10	27	18x1.5	15	31.75	4,380	8,310	305
HKF 20 R/L	20	25	24.3	18	47	77	40	28	34	10	30	20x1.5	15	34.93	4,930	11,640	387
HKF 22 R/L	22	28	25.9	20	50	84	43	30	37	12	32	22x1.5	15	38.10	5,690	11,710	495
HKF 25 R/L	25	31	29.6	22	56	94	48	34	42	12	36	24x2.0	15	42.85	6,570	13,850	686
HKF 30 R/L	30	37	34.8	26	67	113	58	40	50	15	41	30x2.0	15	50.80	8,860	18,880	1,115

英 制 尺 寸 / DIMENSIONS IN INCHES *±0.02~0.04 inches

型 號 Model No.	B H7	W +0 -0.004	O *	H +0 -0.004	D *	F *	A +0.080 -0	J *	K *	L *	A/F +0 -0.080	Thread S	旋角 α	球徑 Ball Dia. Ø	徑向荷重 Radial HKF	XHKF	重量 Weight (Lbs)
HKF 5/16 R/L	0.3125	0.472	0.409	0.354	0.925	1.417	0.669	0.512	0.630	0.197	0.551	UNF 5/16-24	13	0.625	3,000	7,100	0.11
HKF 3/8 R/L	0.3750	0.551	0.508	0.433	1.063	1.772	0.827	0.590	0.748	0.256	0.669	UNF 3/8-24	13	0.750	3,750	10,710	0.18
HKF 7/16 R/L	0.4375	0.551	0.508	0.433	1.063	1.772	0.827	0.590	0.748	0.256	0.669	UNF 7/16-20	13	0.750	2,910	10.71	0.18
HKF 1/2 R/L	0.5000	0.630	0.606	0.472	1.260	1.969	0.945	0.709	0.866	0.256	0.748	UNF 1/2-20	13	0.875	4,170	11,510	0.27
HKF 5/8 R/L	0.6250	0.827	0.760	0.590	1.535	2.520	1.299	0.866	1.063	0.315	0.866	UNF 5/8-18	15	1.125	6,880	16,290	0.47
HKF 3/4 R/L	0.7500	0.906	0.858	0.669	1.732	2.795	1.417	0.984	1.220	0.394	1.063	UNF 3/4-16	15	1.250	10,870	25,660	0.67
HKF 1 R/L	1.0000	1.220	1.165	0.866	2.205	3.701	1.890	1.339	1.654	0.472	1.417	UNF 1-12	15	1.687	14,480	30,530	1.51

ROD END BEARING
HKM, XHKM Series

Male Type

重力耐磨型
適用於重負載車輛或機器，超耐磨免給油。
材　質
- **主體：HKM-** 中碳鋼 S35C，熱處理，鍍鋅(Cr3+)。
  XHKM- 合金鋼SCM 440 接受訂製。
- **鋼珠：**鉻鉬軸承鋼SUJ-2， 熱處理 HRC 58°±2，鍍硬鉻 。
- **外框：**中碳鋼S45C或不銹鋼 SUS416。
- **襯墊：**鐵氟龍銅網(PTFE)-柔軟堅韌銅網和氟樹脂塗佈組成。

SELF-LUBRICATING TYPE
Suitable for heavy load applications.
MATERIALS
- **BODY:HKM-** Carbon Steel S35C , Heat Treated, Zinc Coated(Cr3+)
  XHKM- Alloy Steel SCM 440 is available by customer-made order
- **BALL:**Bearing Steel SUJ-2, Heat Treated HRC 58°±2,Hard Chrome Plated
- **RACE:**Medium Carbon Steel S45C or Stainless Steel SUS 416
- **LINER:**PTFE-Strong & flexible bronze mesh spread with fluorine resin

■ Clearance (Unit: mm)
Radial Clearrance:0.035 or less
Axial Clearance:0.05 or less

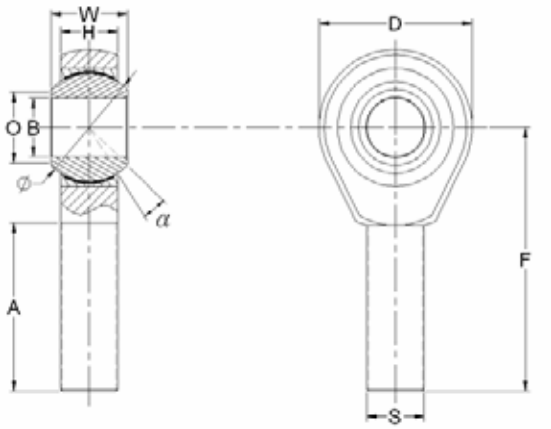

公 制 尺 寸 / DIMENSIONS IN METRIC *±0.5~1.0 mm

型　號 Model No.	B H7	W +0 -0.1	O *	H +0 -0.1	D *	F *	A +2 -0	Thread S	旋角 α	球徑 Ball Dia. Ø	徑向荷重 Radial S.load(kgf) HKM	XHKM	重量 Weight (g)
HKM 8 RF/LF **HKM 8 R/L**	8	12	10.4	9	23.5	45	26	8x1.0 8x1.25	13	15.88	1,320	3,210	41
HKM 10 RF/LF **HKM 10 R/L**	10	14	12.9	10.5	27	50	30	10x1.25 10x1.5	13	19.05	1,700	4,860	65
HKM 12 RF/LF **HKM 12 R/L**	12	16	15.4	12	32	56	35	12x1.25 12x1.75	13	22.23	1,790	4,310	98
HKM 14 RF/LF **HKM 14 R/L**	14	19	16.8	14	36	63	37	14x1.5 14x2.0	15	25.40	2,890	6,950	138
HKM 16 RF/LF **HKM 16 R/L**	16	21	19.3	15	39	67	40	16x1.5 16x2.0	15	28.58	3,120	7,390	191
HKM 18 R/L	18	23	21.8	17	44	76	46	18x1.5	15	31.75	4,380	8,310	280
HKM 20 R/L	20	25	24.3	18	47	79	48	20x1.5	15	34.93	4,930	11,640	340
HKM 22 R/L	22	28	25.9	20	50	84	51	22x1.5	15	38.10	5,690	11,710	458
HKM 25 R/L	25	31	29.6	22	56	94	57	24x2.0	15	42.85	6,570	13,850	610
HKM 30 R/L	30	37	34.8	26	67	113	68	30x2.0	15	50.80	8,860	18,880	1,070

英 制 尺 寸 / DIMENSIONS IN INCHES *±0.02~0.04 inches

型　號 Model No.	B H7	W +0 -0.004	O *	H +0 -0.004	D *	F *	A +0.080 -0	Thread S	旋角 α	球徑 Ball Dia. Ø	徑向荷重 Radial S.load(Lbs) HKM	XHKM	重量 Weight (Lbs)
HKM 5/16 R/L	0.3125	0.472	0.409	0.354	0.925	1.772	1.024	UNF 5/16-24	13	0.625	2,910	7,080	0.09
HKM 3/8 R/L	0.3750	0.551	0.508	0.433	1.063	1.969	1.181	UNF 3/8-24	13	0.750	3,750	10,710	0.14
HKM 7/16 R/L	0.4375	0.551	0.508	0.433	1.063	1.969	1.181	UNF 7/16-20	13	0.750	2,360	10.71	0.14
HKM 1/2 R/L	0.5000	0.630	0.606	0.472	1.260	2.205	1.378	UNF 1/2-20	13	0.875	4,170	11,900	0.22
HKM 5/8 R/L	0.6250	0.827	0.760	0.590	1.535	2.638	1.575	UNF 5/8-18	15	1.125	6,880	16,290	0.42
HKM 3/4 R/L	0.7500	0.906	0.858	0.669	1.732	2.992	1.811	UNF 3/4-16	15	1.250	10,870	25,660	0.62
HKM 1 R/L	1	1.220	1.165	0.866	2.205	3.701	2.244	UNF 1-12	15	1.687	14,480	30,530	1.34

ROD END BEARING
AXF Series

Female Type

鋁合金自潤型
主體採用高強度航太鋁合金鍛造，質輕、強韌，耐腐蝕。
材　質
- **主體：**航太鋁合金7075-T6，表面陽極處理(紅、藍、銀白)。
- **鋼珠：**鉻鉬軸承鋼SUJ-2， 熱處理 HRC 58°±2，鍍硬鉻 。
- **襯墊：**特殊耐磨尼龍複合材料。

SELF-LUBRICATING TYPE
Light weight, high strengh aircraft alluminum alloy forging body.
MATERIALS
- **BODY:**Aircraft Aluminum 7075-T6, Color Anodized Red (Blue or Silver)
- **BALL:**Bearing Steel SUJ-2, Heat TreatedHRC58°±2, Hard Chrome Plated
- **LINER:**Special Reinforce Nylon Material

■ Clearance　(Unit: mm)
Radial Clearrance:0.035 or less
Axial Clearance:0.05 or less

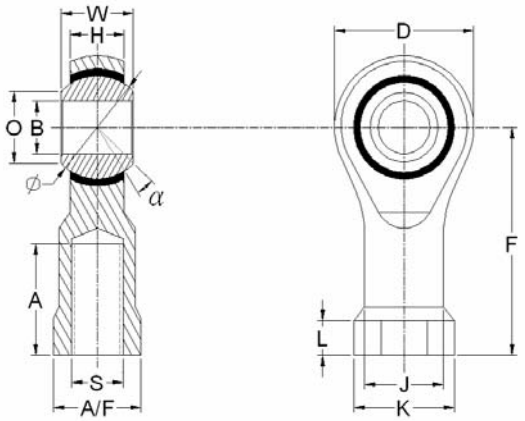

公 制 尺 寸 / DIMENSIONS IN METRIC *±0.5~1.0 mm

型　號 Model No.	B H7	W +0 -0.1	O *	H +0 -0.1	D *	F *	A +2 -0	J *	K *	L *	A/F +0 -0.2	Thread S	旋角 α	球徑 Ball Dia. Ø	徑向荷重 Radial S. load (kgf)	重量 Weight (g)
AXF 6 R/L	6	9	8.9	6.7	19	30	14	10	13	5	11	6x1.0	13	12.70	1,320	18
AXF 8 RF/LF **AXF 8 R/F**	8	12	10.4	9	23.5	36	17	13	16	5	14	8x1.0 8x1.25	13	15.88	1,630	27
AXF 10 RF/LF **AXF 10 R/L**	10	14	12.9	10.5	27	45	21	15	19	7	17	10x1.25 10x1.5	13	19.05	2,040	50
AXF 12 RF/LF **AXF 12 R/L**	12	16	15.4	12	32	50	24	18	22	7	19	12x1.25 12x1.75	13	22.23	3,180	75

英 制 尺 寸 / DIMENSIONS IN INCHES *±0.02~0.04 inches

型　號 Model No.	B H7	W +0 -0.004	O *	H +0 -0.004	D *	F *	A +0.080 -0	J *	K *	L *	A/F +0 -0.080	Thread S	旋角 α	球徑 Ball Dia. Ø	徑向荷重 Radial S. load (Lbs)	重量 Weight (Lbs)
AXF 1/4 R/L	0.2500	0.354	0.350	0.264	0.748	1.181	0.551	0.394	0.512	0.197	0.433	UNF 1/4-28	13	0.500	2,900	0.04
AXF 5/16 R/L	0.3125	0.472	0.409	0.354	0.925	1.417	0.669	0.512	0.630	0.197	0.551	UNF 5/16-24	13	0.625	3,600	0.06
AXF 3/8 R/L	0.3750	0.551	0.508	0.433	1.063	1.772	0.827	0.590	0.748	0.256	0.669	UNF 3/8-24	13	0.750	4,500	0.11
AXF 1/2 R/L	0.5000	0.630	0.606	0.472	1.260	1.969	0.945	0.709	0.866	0.256	0.748	UNF 1/2-20	13	0.875	7,000	0.17

ROD END BEARING
AXM Series

Male Type

鋁合金自潤型
主體採用高強度航太鋁合金鍛造，質輕、強韌，耐腐蝕。
材　質
- **主體：**航太鋁合金7075-T6，表面陽極處理(紅、藍、銀白)。
- **鋼珠：**鉻鉬軸承鋼SUJ-2， 熱處理 HRC 58°±2，鍍硬鉻 。
- **襯墊：**特殊耐磨尼龍複合材料。

SELF-LUBRICATING TYPE
Light weight, high strengh aircraft alluminum alloy forging body.
MATERIALS
- **BODY:**Aircraft Aluminum 7075-T6, Color Anodized Red (Blue or Silver)
- **BALL:**Bearing Steel SUJ-2, Heat TreatedHRC58°±2, Hard Chrome Plated
- **LINER:**Special Reinforce Nylon Material

■ Clearance　(Unit: mm)
Radial Clearrance:0.035 or less
Axial Clearance:0.05 or less

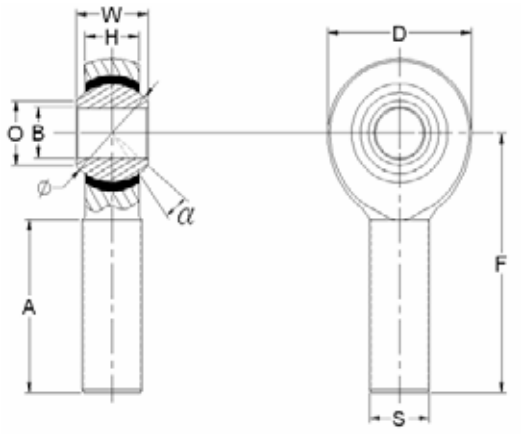

公 制 尺 寸 / DIMENSIONS IN METRIC *±0.5~1.0 mm

型　號 Model No.	B H7	W +0 -0.1	O *	H +0 -0.1	D *	F *	A +2 -0	Thread S	旋角 α	球徑 Ball Dia. Ø	徑向荷重 Radial S. load (kgf)	重量 Weight (g)
AXM 6 R/L	6	9	8.9	6.7	19	36	24	6x1.0	13	12.70	1,140	14
AXM 8 RF/LF **AXM 8 R/L**	8	12	10.4	9	23.5	42	26	8x1.0 8x1.25	13	15.88	1,450	23
AXM 10 RF/LF **AXM 10 R/L**	10	14	12.9	10.5	26	48	30	10x1.25 10x1.5	13	19.05	2,040	23
AXM 12 RF/LF **AXM 12 R/L**	12	16	15.4	12	30	54	35	12x1.25 12x1.75	13	22.23	3,500	55
AXM 16 RF/LF **AXM 16 R/L**	16	21	19.3	15	38	66	40	16x1.5 16x2.0	15	28.58	3,900	82
AXM 18 R/L	18	23	21.8	17	44	72	46	18x1.5	15	31.75	4,990	110
AXM 20 R/L	20	25	24.3	18	47	78	48	20x1.5	15	34.93	6,080	132

英 制 尺 寸 / DIMENSIONS IN INCHES *±0.02~0.04 inches

型　號 Model No.	B H7	W +0 -0.004	O *	H +0 -0.004	D *	F *	A +0.080 -0	Thread S	旋角 α	球徑 Ball Dia. Ø	徑向荷重 Radial S. load (Lbs)	重量 Weight (Lbs)
AXM 1/4 R/L	0.2500	0.354	0.350	0.264	0.748	1.417	0.945	UNF 1/4-28	13	0.500	2,500	0.03
AXM 5/16 R/L	0.3125	0.472	0.409	0.354	0.925	1.654	1.024	UNF 5/16-24	13	0.625	3,200	0.05
AXM 3/8 R/L	0.3750	0.551	0.508	0.413	1.024	1.890	1.181	UNF 3/8-24	13	0.750	4,500	0.05
AXM 1/2 R/L	0.5000	0.630	0.606	0.472	1.181	2.126	1.378	UNF 1/2-20	13	0.875	7,700	0.12
AXM 5/8 R/L	0.6250	0.827	0.760	0.590	1.496	2.598	1.575	UNF 5/8-18	15	1.125	8,600	0.18
AXM 3/4 R/L	0.7500	0.906	0.858	0.669	1.732	2.835	1.811	UNF 3/4-16	15	1.250	13,400	0.29

SPHERICAL BEARING
PB, PBN Series

材　質

・外框：**PB系列 -** 中碳鋼S45C。
　　PBN系列 - 中碳鋼S45C, 表面磷酸錳皮膜處理。
・鋼珠：鉻鉬軸承鋼SUJ-2， 熱處理 HRC 58°±2，鍍硬鉻 。
・襯墊：**PB系列 -** 合金銅。
　　PBN系列 - 特殊耐磨尼龍複合材料。

MATERIALS

・**RACE: PB Series -** Medium Carbon Steel S45C
　　PBN Series - Medium Carbon Steel S45C, Phosphatizing Treated
・**BALL:** Bearing Steel SUJ-2, Heat Treated HRC 58°±2, Hard Chrome Plated
・**LINER: PB Series -** Copper Alloy
　　PBN Series - Special Reinforce Nylon Material

PB Series

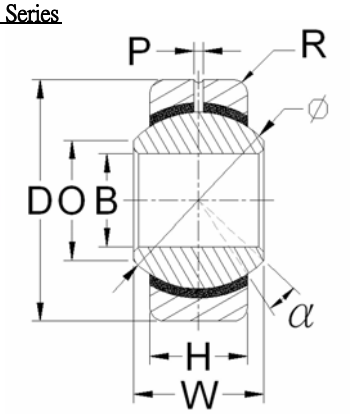

■ Clearance　(Unit: mm)
Radial Clearrance:0.035 or less
Axial Clearance:0.1 or less

PBN Series

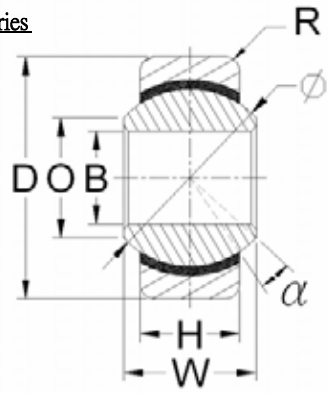

■ Clearance　(Unit: mm)
Radial Clearrance:0.035 or less
Axial Clearance:0.05 or less

公 制 尺 寸 / DIMENSIONS IN METRIC *±0.5~1.0 mm

型　號 Model No.	B H7	W +0 -0.1	O *	H +0 -0.1	D h7	P *	R	旋角 α	球徑 Ball Dia. Ø	徑向荷重 Radial S. load (kgf)	重量 Weight (g)
PB 4	4	6	7.0	4.5	13	0.8	0.5	13	10.32	550	3
PB 5 **PBN 5**	5	8	7.7	6	16	0.8	0.5	13	11.11	790	8.5
PB 6 **PBN 6**	6	9	8.9	6.7	18	0.8	1.0	13	12.70	990	13
PB 8 **PBN 8**	8	12	10.4	9	22	1.0	1.0	13	15.88	1,630	24
PB 10 **PBN 10**	10	14	12.9	10.5	26	1.0	1.5	13	19.05	2,340	39
PB 12 **PBN 12**	12	16	15.4	12	30	1.0	1.5	13	22.23	3,160	58
PB 14 **PBN 14**	14	19	16.8	14	34	1.2	2.0	15	25.40	4,080	84
PB 16 **PBN 16**	16	21	19.3	15	38	1.2	2.0	15	28.58	5,090	111
PB 18 **PBN 18**	18	23	21.8	17	42	1.5	2.0	15	31.75	6,220	160
PB 20 **PBN 20**	20	25	24.3	18	46	1.5	3.0	15	34.93	7,440	210
PB 22	22	28	25.8	20	50	1.5	3.0	15	38.10	8,970	265
PB 25	25	31	29.6	22	56	1.5	3.0	15	42.85	11,210	390

SPHERICAL BEARING
PC Series

強力耐磨軸承， 免給油、自潤型
材　質
・外框及襯墊：
PC 4~PC 10: 合金黃銅 或 中碳鋼S45C襯鐵氟龍銅網(PTFE)
PC 12~PC 25: 中碳鋼S45C襯鐵氟龍銅網(PTFE)
・鋼　珠：鉻鉬軸承鋼SUJ-2， 熱處理 HRC 58°±2，鍍硬鉻 。

SELF-LUBRICATING TYPE
MATERIALS
・**RACE & LINER:**
PC 4~PC 10: Copper Alloy or Medium Carbon Steel S45C with PTFE liner
PC12~PC25: Medium Carbon Steel S45C with PTFE liner
・**BALL:** Bearing Steel SUJ-2, Heat Treated HRC 58°±2, Hard Chrome

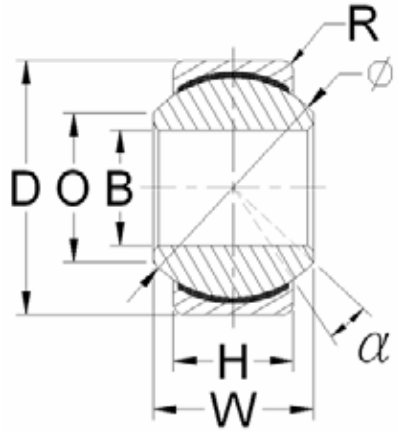

■ Clearance　(Unit: mm)
Radial Clearrance:0.035 or less
Axial Clearance:0.05 or less

公 制 尺 寸 / DIMENSIONS IN METRIC *±0.5~1.0 mm

型　號 Model No.	B H7	W +0 -0.1	O *	H +0 -0.1	D h7	R	旋角 α	球徑 Ball Dia. Ø	徑向荷重 Radial S. load (kgf)	重量 Weight (g)
PC 4	4	6	7.0	4.5	12	0.5	13	10.32	350	3.5
PC 5	5	8	7.7	6	13	0.5	13	11.11	550	6
PC 6	6	9	8.9	6.7	15	0.5	13	12.70	650	9
PC 8	8	12	10.4	9	18	1.0	13	15.88	1,150	17
PC 10	10	14	12.9	10.5	22	1.0	13	19.05	1,650	27
PC 12	12	16	15.4	12	26	1.0	13	22.23	5,500	41
PC 14	14	19	16.8	14	30	1.5	15	25.40	7,020	59
PC 16	16	21	19.3	15	34	1.5	15	28.58	8,850	78
PC 18	18	23	21.8	17	38	1.5	15	31.75	10,830	112
PC 20	20	25	24.3	18	42	2.0	15	34.93	12,840	147
PC 22	22	28	25.8	20	46	2.0	15	38.10	15,600	186
PC 25	25	31	29.6	22	50	2.0	15	42.85	19,450	273

SPHERICAL BEARING
GE Series

簡易型
鋼珠與外框間無襯墊設計，一般狀況均適用。
材　質
・**外框及鋼珠：**鉻鉬軸承鋼SUJ-2， 熱處理 HRC 58°±2，
表面磷酸錳皮膜處理。

ECONOMIC TYPE
Matel to matel, economic type for general purpose
MATERIALS
・**RACE & BALL:** Bearing Steel SUJ-2, Heat Treated HRC 58°±2,
Phosphatizing Treated

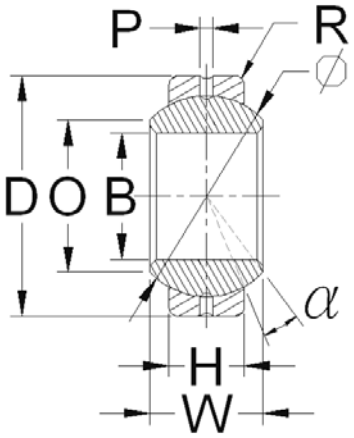

■ Clearance　(Unit: mm)
Radial Clearrance:0.035 or less
Axial Clearance:0.1 or less

公 制 尺 寸 / DIMENSIONS IN METRIC *±0.5~1.0 mm

型　號 Model No.	B *(1)	W +0 -0.1	O *	H +0 -0.1	D *(1)	P *	R	旋角 α	球徑 Ball Dia. Ø	徑向荷重 Radial S. load (kgf)	重量 Weight (g)
GE 8	8	8	10	5	16	1.0	1.0	15	12.70	2,800	8
GE 10	10	9	12	6	19	1.0	1.5	14	15.88	4,100	13
GE 12	12	10	14	7	22	1.0	1.5	10	18.00	5,500	20
GE 15	15	12	18	9	26	1.5	2.0	8	22.23	8,600	32
GE 17	17	14	20	10	30	1.5	2.0	10	25.40	10,800	45
GE 20	20	16	24	12	35	1.5	2.0	8	28.58	14,800	70
GE 25	25	20	29	16	42	2	3.0	7	36.50	24,400	130
GE 30	30	22	34	18	47	2	3.0	6	42.85	31,600	170
GE 35	35	25	39	20	55	2	3.0	6	48.00	40,700	250
GE 40	40	28	45	22	62	2.5	4.0	7	54.00	50,900	320
GE 45	45	32	50	25	68	2.5	4.0	7	60.00	65,200	450
GE 50	50	35	55	28	75	2.5	5.0	6	66.00	79,500	580
GE 60	60	44	66	36	90	2.5	5.0	6	80.00	124,300	1,100

***(1) 尺寸公差請詳附錄公差表，Please refer the tolerence table of index.**

SPHERICAL BEARING
GE-C Series

免給油、自潤型
材　質
・**外框:**中碳鋼S45C。
・**鋼珠:**鉻鉬軸承鋼SUJ-2， 熱處理 HRC 58°±2，表面鍍硬鉻 。
・**襯墊:**鐵氟龍銅網(PTFE)-柔軟堅韌銅網和氟樹脂塗佈組成。

SELF-LUBRICATING TYPE
MATERIALS
・**RACE:** Medium Carbon Steel S45C
・**BALL:** Bearing Steel SUJ-2, Heat Treated HRC 58°±2, Hard Chrome Plated
・**LINER:**PTFE, Strong & flexible bronze mesh spread with fluorine resin

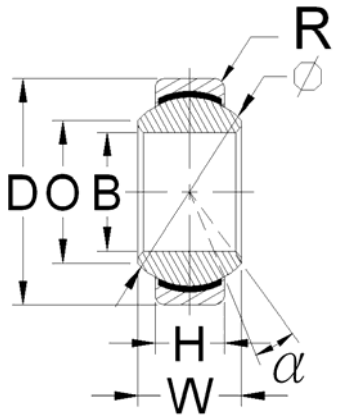

■ Clearance　(Unit: mm)
Radial Clearrance:0.035 or less
Axial Clearance:0.05 or less

公 制 尺 寸 / DIMENSIONS IN METRIC *±0.5~1.0 mm

型　號 Model No.	B *(1)	W +0 -0.1	O *	H +0 -0.1	D *(1)	R	旋角 α	球徑 Ball Dia. Ø	徑向荷重 Radial S. load (kgf)	重量 Weight (g)
GE 8 C	8	8	10	5	16	1.0	15	12.70	1,480	8
GE 10 C	10	9	12	6	19	1.5	14	15.88	2,100	13
GE 12 C	12	10	14	7	22	1.5	10	18.00	2,900	20
GE 15 C	15	12	18	9	26	2.0	8	22.23	4,480	32
GE 17 C	17	14	20	10	30	2.0	10	25.40	5,700	45
GE 20 C	20	16	24	12	35	2.0	8	28.58	7,950	70
GE 25 C	25	20	29	16	42	3.0	7	36.50	12,940	130
GE 30 C	30	22	34	18	47	3.0	6	42.85	16,920	170
GE 35 C	35	25	39	20	55	3.0	6	48.00	22,830	250
GE 40 C	40	28	45	22	62	4.0	7	54.00	28,540	320
GE 45 C	45	32	50	25	68	4.0	7	60.00	36,970	450
GE 50 C	50	35	55	28	75	5.0	6	66.00	44,850	580
GE 60 C	60	44	66	36	90	5.0	6	80.00	70,840	1,100

***(1)** 尺寸公差請詳附錄公差表，**Please refer the tolerence table of index.**

LINK BALL BEARING
RBL Series

材　質
- **主　體**：高強度鋅合金
- **活動柄**：中碳鋼 S35C, 表面鍍鋅(Cr3+)
- **防塵套**：特殊合成橡膠，NBR

MATERIALS
- **BODY:** High Strength Zinc Alloy
- **BALL STUD:** Medium Carbon Steel S35C, Zinc Coated(Cr3+)
- **BOOT:** Special Synthetic Rubber, NBR

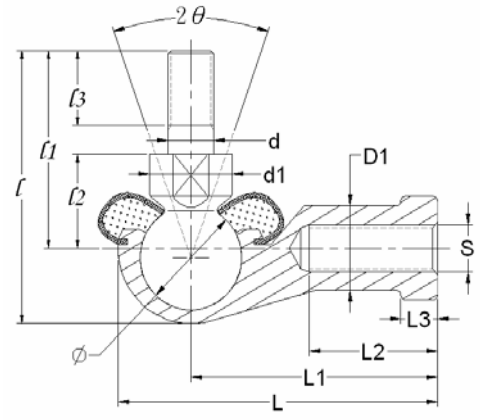

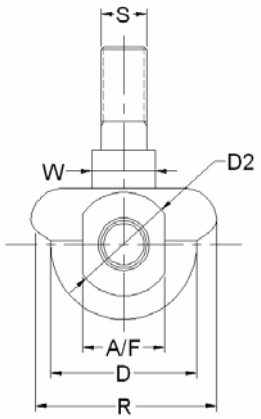

■ Clearance　(Unit: mm)
Radial Clearrance:0.02~0.06
Axial Clearance:0.3 or less

公 制 尺 寸 / DIMENSIONS IN METRIC mm

型　號	外 型 尺 寸 Outline Dimensions				螺紋 Thread	主 體 尺 寸 Body Dimensions						活 動 柄 尺 寸 Ball Stud Dimensions							旋角	荷重 S. load	重量 Weight
Model No.	L	D	ℓ	R	S	L1	L2	L3	D1	D2	A/F +0 -0.3	ℓ1	ℓ2 ±0.3	ℓ3	d	d1	W +0 -0.3	Ball Dia. Ø	2θ	(kgf)	(g)
RBL 5 R/L	35	16	29	19	5x0.8	27	12	4	9	11	9	21	10	8	5	8	7	11.11	45	840	24
RBL 6 R/L	40	19	35.5	20	6x1.0	30	14	5	10	13	11	26	11	11	6	9	7	12.70	45	1,100	37
RBL 8 R/L	48	23	42.5	24	8x1.25	36	17	5	12.5	16	14	31	14	12	8	11	9	15.88	45	1,740	67
RBL 10 RF/LF	57	27	50.5	30	10x1.25	43	21	6.5	15	19	17	37	17	15	10	14	12	19.05	45	2,480	110
RBL 10 R/L	57	27	56.5	30	10x1.5	43	21	6.5	15	19	17	43	17	21	10	14	12	19.05	45	2,480	113
RBL 12 RF/LF	66	31	57.5	32	12x1.25	50	25	6.5	17.5	22	19	42	19	17	12	19	17	22.23	45	3,390	170
RBL 12 R/L	66	31	64.5	32	12x1.75	50	25	6.5	17.5	22	19	49	19	24	12	19	17	22.23	45	3,390	175
RBL 14 RF/LF	75	35	73.5	38	14x1.5	57	26	8	20	25	22	56	21.5	22	14	20	17	25.40	45	4,400	255
RBL 14 R/L	75	35	79.5	38	14x2.0	57	26	8	20	25	22	62	21.5	28	14	20	17	25.40	45	4,400	260
RBL 16 RF/LF	84	39	79.5	44	16x1.5	64	32	8	22	27	22	60	23.5	23	16	22	19	25.40	35	5,400	355
RBL 16 R/L	84	39	85.5	44	16x2.0	64	32	8	22	27	22	66	23.5	29	16	22	19	25.40	35	5,400	340

LINK BALL BEARING
BI Series

材　質
- **主　體：**高強度鋅合金
- **活動柄：**中碳鋼 S35C, 表面鍍鋅(Cr3+)
- **防塵套：**特殊合成橡膠，NBR

MATERIALS
- **BODY:** High Strength Zinc Alloy
- **BALL STUD:** Medium Carbon Steel S35C, Zinc Coated(Cr3+)
- **BOOT:** Special Synthetic Rubber, NBR

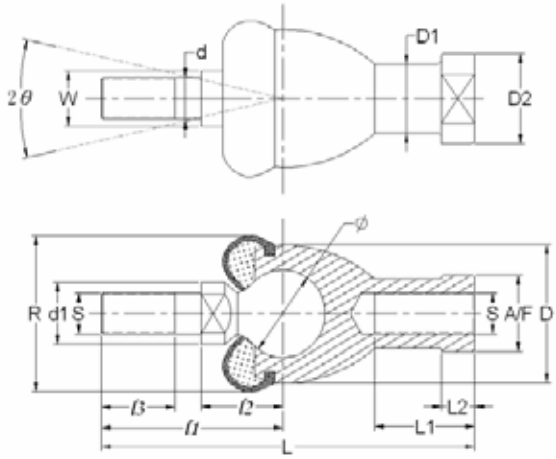

■ Clearance　(Unit: mm)
Radial Clearrance:0.03 or less
Axial Clearance:0.1 or less

公 制 尺 寸 / DIMENSIONS IN METRIC mm

型　號	外 型 尺 寸 Outline Dimensions			螺紋 Thread	主 體 尺 寸 Body Dimensions					活 動 柄 尺 寸 Ball Stud Dimensions							旋角	荷重 S. load	重量 Weight
Model No.	L	D	R	S	L1	L2	D1	D2	A/F +0 -0.3	ℓ1	ℓ2 ±0.3	ℓ3	d	d1	W +0 -0.3	Ball Dia. Ø	2θ	(kgf)	(g)
BI 5 R/L	46	17	19	5x0.8	12	4	9	11	9	22	11	8	5	9	7	11.11	45	550	25
BI 6 R/L	55.5	20	20	6x1.0	15	5	10	13	11	27.5	12.5	11	6	10	8	12.7	45	730	40
BI 8 R/L	65	24	24	8x1.25	16	5	12.5	16	14	33	16	12	8	12	10	15.88	45	1,070	75
BI 10 RF/LF	74.5	28	30	10x1.25	18	6.5	15	19	17	39.5	19.5	15	10	14	12	19.05	40	1,550	120
BI 10 R/L	80.5	28	30	10x1.5	18	6.5	15	19	17	45.5	19.5	21	10	14	12	19.05	40	1,550	125
BI 12 RF/LF	84	32	32	12x1.25	20	7	17.5	22	19	44	21	17	12	17	14	22.23	40	2,130	185
BI 12 R/L	91	32	32	12x1.75	20	7	17.5	22	19	51	21	24	12	17	14	22.23	40	2,130	190
BI 14 RF/LF	103	36	38	14x1.5	25	8	20	25	22	58	23.5	22	14	20	17	25.4	40	2,810	275
BI 14 R/L	109	36	38	14x2.0	25	8	20	25	22	64	23.5	28	14	20	17	25.4	40	2,810	280
BI 16 RF/LF	112	40	44	16x1.5	27	8	22	27	22	62	25.5	23	16	22	19	25.4	35	3,300	360
BI 16 R/L	118	40	44	16x2.0	27	8	22	27	22	68	25.5	29	16	22	19	25.4	35	3,300	370

LINK BALL BEARING
BL Series

材　質
- **主　體**：高強度鋅合金
- **活動柄**：中碳鋼 S35C, 表面鍍鋅(Cr3+)
- **防塵套**：特殊合成橡膠，NBR

MATERIALS
- **BODY:** High Strength Zinc Alloy
- **BALL STUD:** Medium Carbon Steel S35C, Zinc Coated(Cr3+)
- **BOOT:** Special Synthetic Rubber, NBR

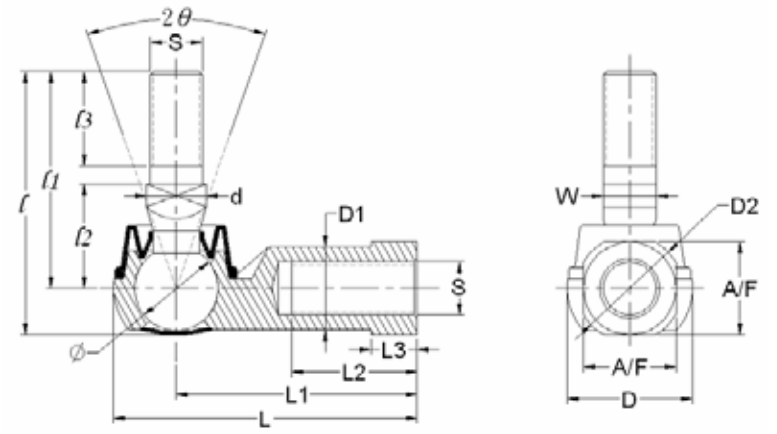

■ Clearance　(Unit: mm)
Radial Clearrance:0.02~0.06
Axial Clearance:0.3 or less

公 制 尺 寸 / DIMENSIONS IN METRIC mm

型　號	外 型 尺 寸 Outline Dimensions			螺紋 Thread	主 體 尺 寸 Body Dimensions						活 動 柄 尺 寸 Ball Stud Dimensions						旋角	荷重 S. load	重量 Weight
Model No.	L	D	ℓ	S	L1	L2	L3	D1	D2	A/F +0 -0.3	ℓ1	ℓ2	ℓ3 ±0.3	d	W +0 -0.3	Ball Dia. Ø	2θ	(kgf)	(g)
BL 6 R/L	38	16	32.6	6x1.0	30	16	5	10	13	11	26	11	11	8	7	11.11	40	910	26
BL 8 R/L	45.5	19	38.6	8x1.25	36	19	6	12.5	16	14	31	14	12	9	8	12.7	40	1,150	49
BL 10 RF/LF	55.5	25	46.3	10x1.25	43	23	7	14.5	19	17	37	17	15	14	12	15.88	40	1,680	87
BL 10 R/L	55.5	25	52.3	10x1.5	43	23	7	14.5	19	17	43	17	21	14	12	15.88	40	1,680	90

LINK BALL BEARING
YL Series

材　質
- 主　體：快削鋼SUM43, 表面鍍鉻
- 活動柄：中碳鋼 S45C，表面鍍鉻
- 卡　簧：彈簧鋼

MATERIALS
- **BODY:** Free Cutting Steel SUM 43, Chrome Plated
- **BALL STUD:** Medium Carbon Steel S45C, Chrome Plated
- **SPRING:** Spring Steel

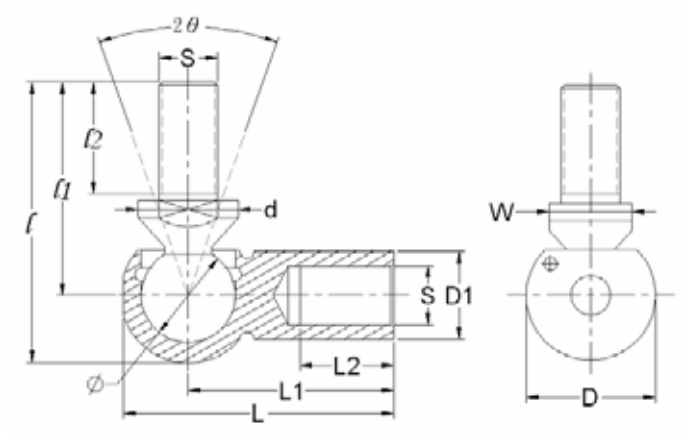

公 制 尺 寸 / DIMENSIONS IN METRIC mm

型　號	外 型 尺 寸 Outline Dimensions			螺紋 Thread	主 體 尺 寸 Body Dimensions			活 動 柄 尺 寸 Ball Stud Dimensions				旋角	重量 Weight
Model No.	L	D	ℓ	S	L1	L2	D1	ℓ1 ±0.3	ℓ2	W +0 -0.3	Ball Dia. Ø	2θ	(g)
YL 5 R/L	30	14	29	5x0.8	23	10	8	23	10	10	9	36	15
YL 6 R/L	32.5	15	30.5	6x1.0	25	11.5	10	25	12	12	10	36	25
YL 8 R/L	40	19	38	8x1.25	30.5	14	13	30.5	16	14	13	36	53
YL 10 RF/LF	46	22	46.5	10x1.25	35	16	15	35	20	17	16	36	104
YL 10 R/L	46	22	46.5	10x1.5	35	16	15	35	20	17	16	36	104
YL 12 RF/LF	46	22	46.5	12x1.25	35	16	17	35	20	17	16	36	104
YL 12 R/L	46	22	46.5	12x1.75	35	16	17	35	20	17	16	36	104
YL 14 RF/LF	57.5	25	60.5	14x1.5	45	22	19	45	28	22	19	36	220
YL 14 R/L	57.5	25	60.5	14x2.0	45	22	19	45	28	22	19	36	220
YL 16 RF/LF	57.5	25	60.5	16x1.5	45	22	21	45	28	22	19	36	220
YL 16 R/L	57.5	25	60.5	16x2.0	45	22	21	45	28	22	19	36	220

特殊規格客製品 / OEM Products

我們可為客戶生產特殊規格之客製品，以滿足您的需求。

We do OEM products (in any size, shape and structure) to meet your needs.

MP 1

MP 2

MP 3

MP 4

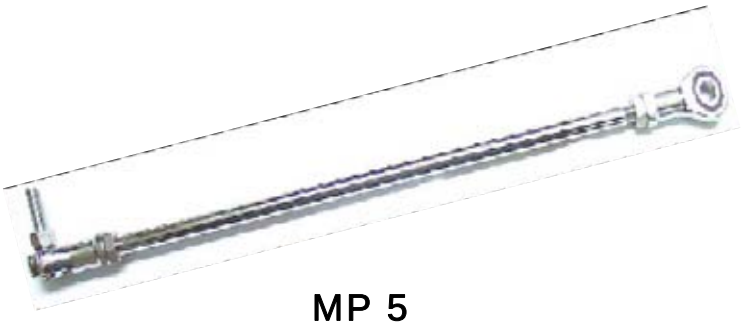

MP 5

MP 6

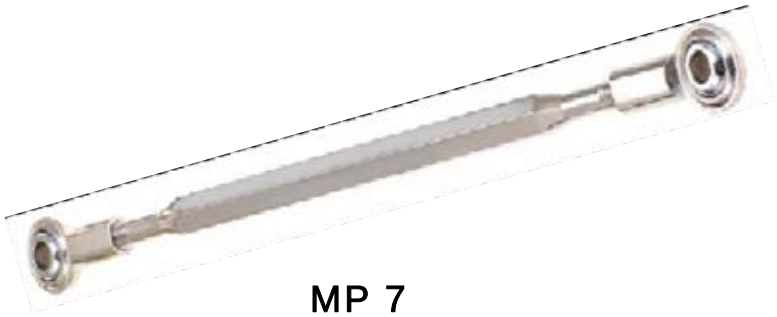

MP 7

MP 8

MP 9

MP 10

MP 11

MP 12

MP 13

MP 14

特殊規格客製品 / OEM Products

我們可為客戶生產特殊規格之客製品，以滿足您的需求。
We do OEM products (in any size, shape or structure) to meet your needs.

MP 15

MP 16

MP 17

MP 18

MP 19

MP 20

MP 21

MP 22

MP 23

附錄 I / INDEX I

- 常用轉換因子
  CONVERSION FACTORS

英吋(Inch)	X 25.4	= 公釐(mm)	公釐 (mm)	X 0.03937	= 英吋(inch)

公斤 (Kgf)	X 2.2046	= 英磅(Lbs)	公斤(Kgf)	X 9.81	= 牛頓(Newtons)
英磅 (Lbs)	X 0.4536	= 公斤(Kgf)	英磅(Lbs)	X 4.448	= 牛頓(Newtons)
牛頓(Newtons)	X 0.2248	= 英磅(Lbs)			

- ISO 孔徑誤差表(ISO 286-2), H7
  ISO Tolerances for Holes (ISO 286-2), H7

常用孔徑 / Nominal hole sizes (B mm)							
大於 Over	3	6	10	18	30	40	50
小於 Inc.	6	10	18	30	40	50	65
公差 △Bmp (*u*m)							
H7	12	15	18	21	25		30
	0	0	0	0	0	0	0

- ISO 外徑誤差表(ISO 286-2), h7
  ISO Tolerances for Shaft (ISO 286-2), h7

常用外徑 / Nominal shaft sizes (D mm)							
大於 Over	3	6	10	18	30	40	50
小於 Inc.	6	10	18	30	40	50	65
公差 △Dmp (*u*m)							
h7	0	0	0	0	0		0
	-12	-15	-18	-21	-25		-30

- 桿端軸承及球面軸承內圓誤差表(SI_E, SA_E, SI_T, SA_T 系列)（GE, GE_C 系列)
  Tolerances of inner ring for rod end bearings (SI_E,SA_E,SI_T,SA_T Series) and spherical bearings(GE, GE_C Series)

內圓 Inner ring (B mm)				
大於 Over	-	18	30	50
小於 Inc.	18	30	50	80
公差 △Bmp (*u*m)				
Max.	0	0	0	0
Min.	-8	-10	-12	-15

- 球面軸承外框誤差表（GE, GE_C 系列)
  Tolerances of outer ring for spherical bearings (GE, GE_C Series)

外框 Outer ring (D mm)					
大於 Over	-	18	30	50	80
小於 Inc.	18	30	50	80	120
公差 △Dmp (*u*m)					
Max.	0	0	0	0	0
Min.	-8	-9	-11	-13	-15

唐立軸承企業股份有限公司
STRUENING BEARINGS CO., LTD.

22154 台北縣汐止市福德工業區南陽街250號
NO. 250 Nanyan St., Sijhih City, Taipei County 22154, Taiwan
TEL: +886-2-86951771
FAX: +886-2-86951770
http://www.s-b-bearings.com/
E-mail: sales@s-b-bearings.com

ISO 9001:2000

2010版