MOTION & CONTROL
NSK

N Series Crossed Roller Bearings

- Compact, lightweight and highly rigid
- Factory-adjusted for easy handling

Design

NSK Crossed Roller Bearings are thin-wall bearings consisting of an inner ring, a two-part outer ring, cylindrical rollers, and separators. The rollers are oriented at right angles to each other and kept apart by separators.

Features

Compactness

Crossed Roller Bearings can sustain axial loads in both directions as well as radial loads and strong moment loads. Offering high load capacity within a light and compact envelope, they are widely used in the rotating joints of robots.

High Rigidity

Preloading the bearings increases rigidity and improves positioning accuracy. As a result, they are suitable for use as support bearings in indexing mechanisms and rotary tables—applications that require high rigidity.

Easy Handling

With their internal clearances factory-adjusted, NSK Crossed Roller Bearings can be installed directly without troublesome shim adjustment. Mounting is facilitated by the outer ring parts being inseparable.

N Series Crossed Roller Bearings

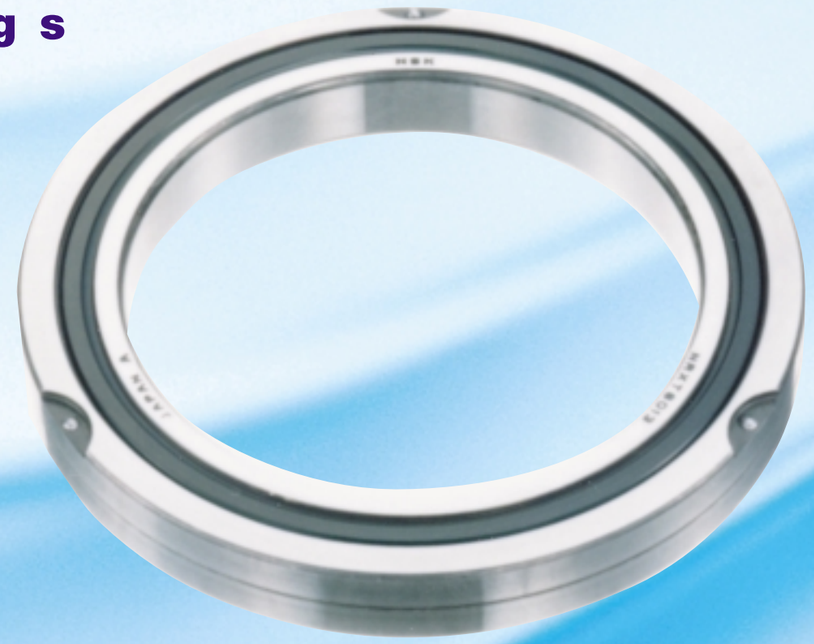

Formulation of Bearing Numbers

Example:

NRXT 100 20 DD C8 P5

- P5 — Accuracy class symbol
- C8 — Internal clearance
  - C8: Negative clearance
  - C1: Positive clearance
- DD — Seal symbol
  - DD: Seals on both sides
  - E: No seals
- 20 — Width (mm)
- 100 — Bore diameter (mm)
- NRXT — Bearing type symbol

Calculations of fatigue load rating and permissible static load for crossed roller bearings are done using the following equations.

Basic Rating Life

Suppose a number of bearings of the same type are operated individually under the same conditions. After a certain period of time, 10% of them fail as a result of flaking caused by rolling fatigue. The total number of revolutions at this point is defined as the basic rating life or, if the speed is constant, the basic rating life is often expressed by the total number of operating hours completed.

$$L=\left(\frac{C_r}{P}\right)^{\frac{10}{3}}$$

Where

L: Basic rating life, 10^6 revolutions

P: Dynamic equivalent load, N {kgf}

C_r: Basic dynamic load rating, N {kgf}

■ Dynamic Equivalent Load

The dynamic equivalent load, when radial, axial, and moment loads are applied, can be obtained by the following equation:

$$P=X\left(F_r+\frac{2M}{D_{pw}}\right)+Y\cdot F_a$$

$$\frac{F_a}{F_r+2M/D_{pw}}>1.5 \qquad \frac{F_a}{F_r+2M/D_{pw}}\leq 1.5$$

X = 1, Y = 0.45 X = 0.67, Y = 0.67

Where

P: Dynamic equivalent load, N {kgf}

F_r: Radial load, N {kgf}

F_a: Axial load, N {kgf}

M: Moment load, N•mm {kgf•mm}

X: Radial load factor

Y: Axial load factor

D_{pw}: Roller pitch diameter, mm

D_{pw} = (Bearing bore diameter, d + Bearing outside diameter, D) / 2

Permissible Static Load Factor

A bearing's static equivalent load varies depending on its basic static load rating and operating conditions. The permisible static load factor, f_s, is a safety factor that is detareminded by the relation between the badic static load rating and static equivalent load:

$$f_s=\left(\frac{C_{0r}}{P_0}\right)$$

Where

C_{0r}: Basic static load rating, N {kgf}

P_0: Static equivalent load, N {kgf}

Operating condition	Lower limit of f_s
Standard operation	1.5
Bearings subjected to vibration and shock loads	2
High running accuracy	3

The generally recommended values of f_s are listed in the table above.

■ Static Equivalent Load

Static equivalent load, when radial, axial, and moment loads are applied, can be obtained using the following equation:

$$P_0=F_r+\frac{2M}{D_{pw}}+0.44\,F_a$$

Where

P_0: Static equivalent load, N {kgf}

F_r: Radial load, N {kgf}

F_a: Axial load, N {kgf}

M: Moment load, N•mm {kgf•mm}

D_{pw}: Roller pitch diameter, mm

D_{pw} ≈ (Bearing bore diameter d + Bearing outside diameter, D) / 2

Moment Rigidity

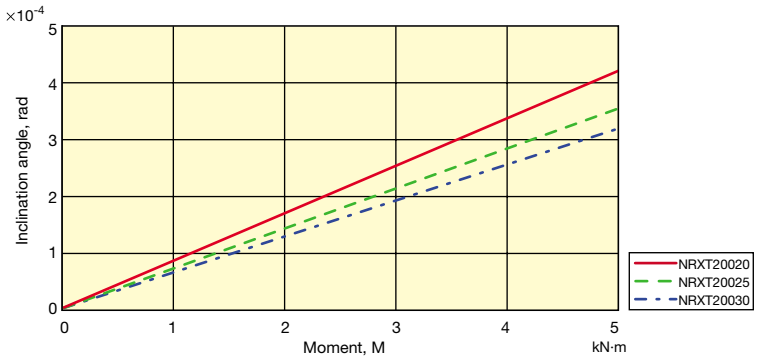

Accuracy

■ Tolerances for Inner Rings of Crossed Roller Bearings

Units: μm

Nominal Bore Diameter, d (mm)		Single Plane Mean Bore Diameter Deviation, Δd_{mp}				Deviation of Inner (or Outer) Ring Width, Δ_{Bs} (or Δ_{Cs})		Radial Runout of Inner Ring, K_{ia}		Inner Ring Face Runout with Raceway, S_{ia}
		Class Normal		Class 5				Class Normal	Class 5	Class 5
over	incl	high	low	high	low	high	low	max	max	max
(18)	30	0	-10	0	-6	0	-120	13	4	8
30	50	0	-12	0	-8	0	-120	15	5	8
50	80	0	-15	0	-9	0	-150	20	5	8
80	120	0	-20	0	-10	0	-200	25	6	9
120	180	0	-25	0	-13	0	-250	30	8	10
180	250	0	-30	0	-15	0	-300	40	10	13
250	315	0	-35	0	-18	0	-350	50	13	15
315	400	0	-40	0	-23	0	-400	60	15	20
400	500	0	-45	0	-27	0	-450	65	18	24
500	630	0	-50	0	-31	0	-500	70	20	29

Note: Regarding tolerances higher than Class 5, please contact NSK.

■ Tolerances for Outer Rings of Crossed Roller Bearings

Units: μm

Nominal Outside Diameter, D (mm)		Single Plane Mean Outside Diameter Deviation, Δd_{mp}				Radial Runout of Outer Ring, K_{ea}		Outer Ring Face Runout with Raceway, S_{ea}
		Class Normal		Class 5		Class Normal	Class 5	Class 5
over	incl	high	low	high	low	max	max	max
30	50	0	-11	0	-7	20	7	8
50	80	0	-13	0	-9	25	8	10
80	120	0	-15	0	-10	35	10	11
120	150	0	-18	0	-11	40	11	13
150	180	0	-25	0	-13	45	13	14
180	250	0	-30	0	-15	50	15	15
250	315	0	-35	0	-18	60	18	18
315	400	0	-40	0	-20	70	20	20
400	500	0	-45	0	-23	80	23	23
500	630	0	-50	0	-28	100	25	25
630	800	0	-75	0	-35	120	30	30

Note: Regarding tolerances higher than Class 5, please contact NSK.

Axial Internal Clearance

Units: μm

Nominal Bore Diameter, d (mm)		Clearance			
		C8*		C1	
over	incl	min	max	min	max
18	30	-8	0	5	15
30	50	-10	0	5	15
50	65	-10	0	5	20
65	80	-10	0	10	25
80	100	-10	0	10	30
100	120	-15	0	10	30
120	140	-15	0	10	35
140	160	-15	0	10	35
160	180	-15	0	10	40
180	200	-15	0	15	45
200	225	-20	0	15	50
225	250	-20	0	15	50
250	280	-20	0	20	55
280	315	-20	0	20	60
315	355	-25	0	20	65
355	400	-25	0	25	75
400	450	-30	0	25	85
450	500	-30	0	25	95
500	560	-30	0	30	105
560	630	-30	0	30	115

*Bearings with C8 clearance (negative clearance) are available in Tolerance Class 5 and higher.

Fittings

Axial Clearance	Load Conditions	Shaft	Housing	
C8	Inner ring rotating load	Normal load	h5 (target interference: 0-5 μm)	H6 (target clearance: 0-10 μm)
		High shock loads and vibration		
	Outer ring rotating load	Normal load	g5 (target clearance: 0-10 μm)	JS6 or J6 (target interference: 0-5 μm)
		High shock loads and vibration		
C1	Inner ring rotating load	Normal load	js5 or j5	H6
		High shock loads and vibration	k5	JS6 or J6
	Outer ring rotating load	Normal load	g6	JS6 or J6
		High shock loads and vibration	h5	K6

Note: When a bearing has a very high preload, use the fitting in parentheses.

NRXT Bearing Table (Sealed and Open Types)

Bore diameter: 25 - 600 mm

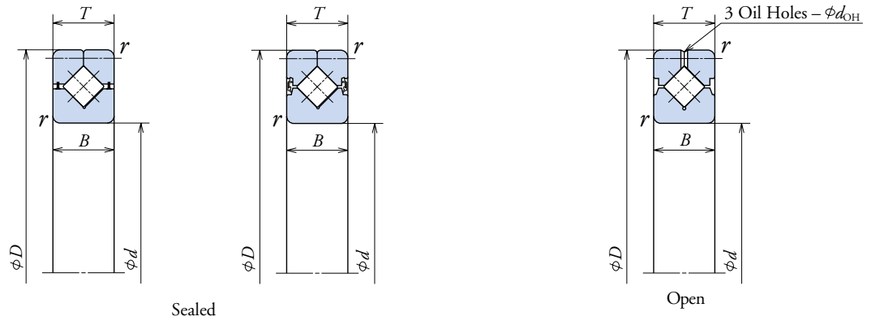

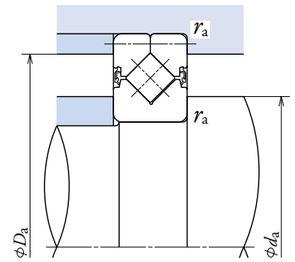

Boundary Dimensions (mm)				Basic Load Ratings				Bearing No.	Bearing No.	Oil Hole (mm)	Abutment and Fillet Dimensions (mm)					Mass (kg)
				(N)		{kgf}					d_a		D_a		r_a	
d	D	B•T	r (min.)	C_r	C_{0r}	C_r	C_{0r}	Sealed	Open	d_{OH}	min	max	min	max	max	approx
25	41	8	0.6	4 000	4 400	410	450	**NRXT 2508DD**	**NRXT 2508E**	1.5	28.5	29	34	35	0.6	0.05
40	65	10	0.6	7 700	9 850	785	1 010	**NRXT 4010DD**	**NRXT 4010E**	1.5	46.5	47.5	55.5	56.5	0.6	0.14
50	80	13	0.6	16 400	20 900	1 670	2 130	**NRXT 5013DD**	**NRXT 5013E**	2	56.5	57.5	70	71	0.6	0.26
60	90	13	0.6	17 900	24 600	1 820	2 510	**NRXT 6013DD**	**NRXT 6013E**	2	67	68	80	81	0.6	0.30
70	100	13	0.6	19 300	28 400	1 960	2 890	**NRXT 7013DD**	**NRXT 7013E**	2	77	78	90	91	0.6	0.34
80	110	13	0.6	20 500	32 000	2 090	3 250	**NRXT 8013DD**	**NRXT 8013E**	2	87	88	100	101	0.6	0.38
80	120	16	0.6	29 800	42 500	3 050	4 350	**NRXT 8016DD**	**NRXT 8016E**	2.5	92	94	106	108	0.6	0.67
90	130	16	1	31 000	46 000	3 150	4 700	**NRXT 9016DD**	**NRXT 9016E**	2.5	102	104	116	118	1	0.74
	140	20	1	32 000	49 000	3 250	5 000	**NRXT 9020DD**	**NRXT 9020E**	2.5	107	109	121	123	1	1.27
100	150	20	1	33 000	52 500	3 350	5 350	**NRXT 10020DD**	**NRXT 10020E**	2.5	117	119	131	133	1	1.37
110	160	20	1	35 000	59 000	3 600	6 000	**NRXT 11020DD**	**NRXT 11020E**	2.5	127	129	141	143	1	1.49
120	170	20	1.1	36 000	62 000	3 650	6 350	**NRXT 12020DD**	**NRXT 12020E**	2.5	137	139	151	153	1	1.60
120	180	25	1.1	70 000	110 000	7 150	11 200	**NRXT 12025DD**	**NRXT 12025E**	2.5	140	144	156	160	1	2.47
130	190	25	1.1	72 500	118 000	7 400	12 000	**NRXT 13025DD**	**NRXT 13025E**	2.5	150	154	166	170	1	2.63
140	200	25	1.1	75 000	125 000	7 650	12 800	**NRXT 14025DD**	**NRXT 14025E**	2.5	160	164	176	180	1	2.80
150	210	25	1.1	77 000	133 000	7 850	13 600	**NRXT 15025DD**	**NRXT 15025E**	2.5	170	174	186	190	1	2.96
	230	30	1.1	119 000	192 000	12 200	19 600	**NRXT 15030DD**	**NRXT 15030E**	3	176	184	196	204	1	5.55
200	260	25	1.5	88 000	172 000	9 000	17 500	**NRXT 20025DD**	**NRXT 20025E**	2.5	219	223	237	241	1.5	3.75
	280	30	1.5	136 000	247 000	13 800	25 200	**NRXT 20030DD**	**NRXT 20030E**	3	225	233	247	255	1.5	6.30
250	310	25	2	98 000	211 000	10 000	21 500	**NRXT 25025DD**	**NRXT 25025E**	2.5	269	273	287	291	2	4.55
	330	30	2	150 000	300 000	15 300	30 500	**NRXT 25030DD**	**NRXT 25030E**	3	275	283	297	305	2	7.65
300	360	25	2.1	107 000	250 000	10 900	25 500	**NRXT 30025DD**	**NRXT 30025E**	2.5	319	323	337	341	2	5.30
	395	35	2.1	194 000	405 000	19 700	41 500	**NRXT 30035DD**	**NRXT 30035E**	3	329	334	354	361	2	12.6
	405	40	2.1	199 000	425 000	20 300	43 000	**NRXT 30040DD**	**NRXT 30040E**	4	336	342	362	369	2	16.5
400	480	35	2.1	188 000	465 000	19 200	47 500	**NRXT 40035DD**	**NRXT 40035E**	3	426	430	450	456	2	13.4
	510	40	2.1	226 000	545 000	23 100	56 000	**NRXT 40040DD**	**NRXT 40040E**	4	439	444	464	471	2	22.5
500	600	40	2.1	239 000	625 000	24 400	64 000	**NRXT 50040DD**	**NRXT 50040E**	4	533	547	553	567	2	24.4
	625	50	3	325 000	810 000	33 000	82 500	**NRXT 50050DD**	**NRXT 50050E**	5	540	557	563	580	2.5	39.5
600	700	40	3	261 000	745 000	26 600	75 500	**NRXT 60040DD**	**NRXT 60040E**	4	633	647	653	667	2.5	28.9