FAG

Plummer block housings VO for Oil Lubrication

Technical Product Information

SCHAEFFLER GROUP
INDUSTRIAL

Contents

FAG plummer block housings VO 2

Application, description
Design · Advantages 2

Range · Fits · Lubrication
Sealing · Mounting · Material 4

FAG plummer block housings VO –
locating/non-locating bearings 4

Design VOS 4

Design VOG 4

Design VOB 5

Tables 6–11

FAG plummer block housings VO

Application, description · Design · Advantages

Application, description

Plummer block housings of series VO, developed for fan construction, comprise a single-piece housing for two bearing positions.
The available variants are subdivided into housings with two rolling bearings (design VOS) and housings with three rolling bearings (design VOB, VOG). The latter design has a somewhat longer housing body.

Design

The VO plummer block housing comprises:
- a housing body (1)
- a cover plate (5) with two eye bolts (6),
- two end face covers with an oil collector groove (4) in the shaft bore (into which a felt ring seal can additionally be integrated or a sealing grease can be introduced)
- two inner spacer bushes with a mounted oil flinger shield (2)
- two outer spacer bushes with oil splash grooves (3).

Housing accessories such as seals and the connecting parts required for mounting are included in delivery.

Advantages

The VO plummer block housings offer the following advantages:
- ease of assembly
- low maintenance requirements
- effective, low-friction sealing against dust and moisture
- a bearing arrangement combined in a single-piece housing, therefore requiring no time-consuming alignment work
- support of high tilting moments by means of two bearings with optimum spacing
- matching to various requirements by means of three designs (VOS, VOB, VOG)

Figure 1: Individual parts of FAG plummer block housings VO
1 Housing body, **2** Spacer bush with flinger shield, **3** Spacer with oil splash grooves, **4** Cover with oil collector and felt ring groove, **5** Cover plate, **6** Eye bolts

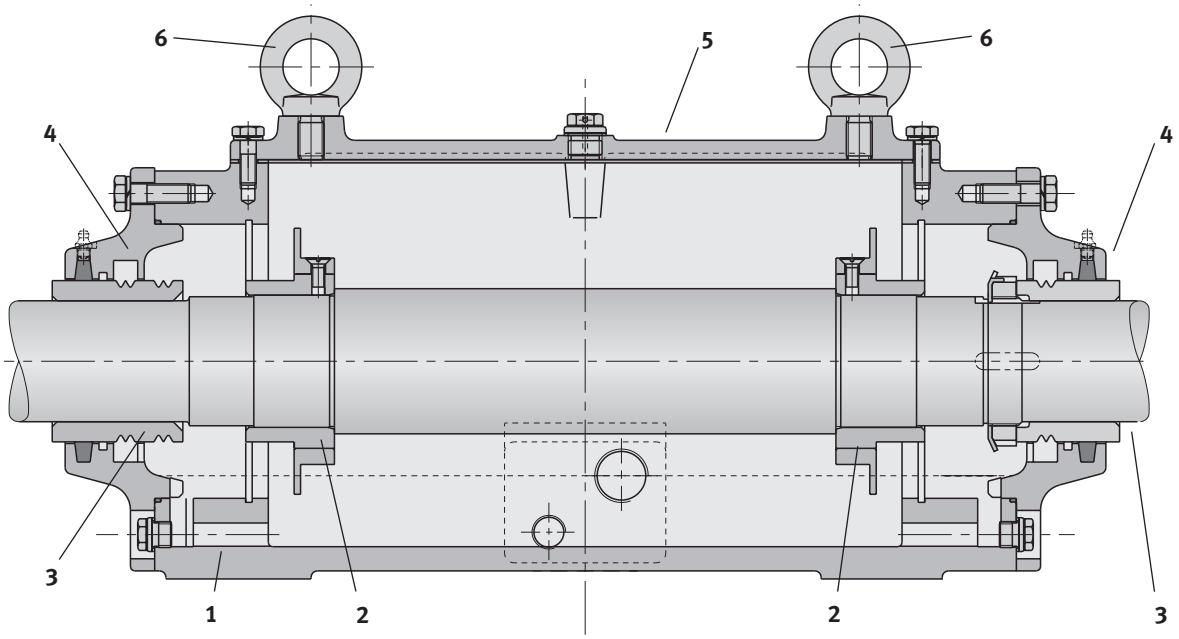

FAG plummer block housings VO

Range · Fits · Lubrication · Sealing · Mounting · Material

Range

These plummer block housings are available in the bearing bore size range from 40 mm (size code 08) to 120 mm (size code 24).

Up to a bearing bore d = 90 mm, rolling bearings of diameter series 3 are used.
From a bearing bore d = 100 mm, rolling bearings of diameter series 2 are used.

Fits

Machining of bearing seats in the housing:

Design VOS

Cylindrical roller bearing as non-locating bearing	K6
Deep groove ball bearing as locating bearing	K6

Design VOB

Cylindrical roller bearing as non-locating bearing	K6
Angular contact ball bearings in O arrangement as locating bearing	J6

Design VOG

Cylindrical roller bearing as non-locating bearing	K6
Bearing combination:	
Cylindrical roller bearing	K6
Deep groove ball bearing as locating bearing	Radially turned free

Lubrication

The bearings are lubricated using oil that is conveyed to each bearing position from the oil sump by means of a flinger disc.

Sealing

In order to prevent oil escaping, the spacer bushes are designed as splash rings. Each cover has an oil collector groove with a return hole.
The ingress of contaminants is prevented by grease chambers in the cover that are in the form of annular grooves and can be relubricated. The friction losses are small.
Felt rings can be inserted in these grease chambers if the circumferential speed of the spacer bushes does not exceed 15 m/s.

Mounting

In order to make mounting easier, the upper side of the housing has an opening that can be closed off by means of a cover. It is fixed to the mounting surface by means of four foot screws. Two of the four housing feet, arranged diagonally opposite each other, have a substantial flat area so that the housing can be located by means of dowel pins after mounting.

Material

The housing body and covers are made from flake graphite cast iron (material no. 0.6027).

FAG plummer block housings VO

Designs VOS, VOG

Plummer block housings of designs VOS, VOB and VOG are identical in their construction.
They differ in the design of the locating bearing arrangement.

Design VOS

As non-locating bearings, cylindrical roller bearings of type NU support the radial forces.

Deep groove ball bearings are used as locating bearings. In addition to the radial forces, they support the axial forces occurring.

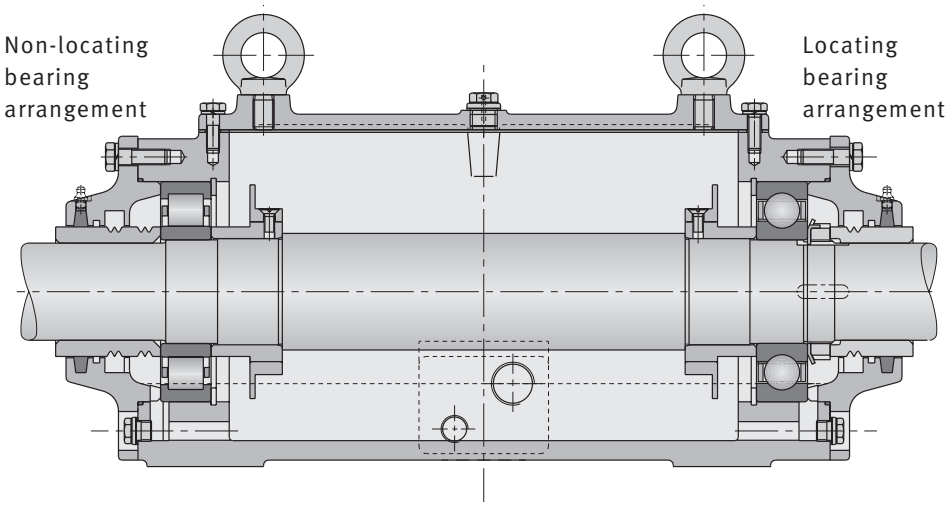

Ordering example:
1 housing VOS310
1 cylindrical roller bearing NU310-E-C3
1 deep groove ball bearing 6310-C3

Design VOG

On the locating bearing side of this design, the radial and axial forces are supported separately.
The locating bearing side comprises a cylindrical roller bearing (NU) and a deep groove ball bearing.

In order to support axial forces exclusively, the bearing seat of the ball bearing outer ring is radially turned free.

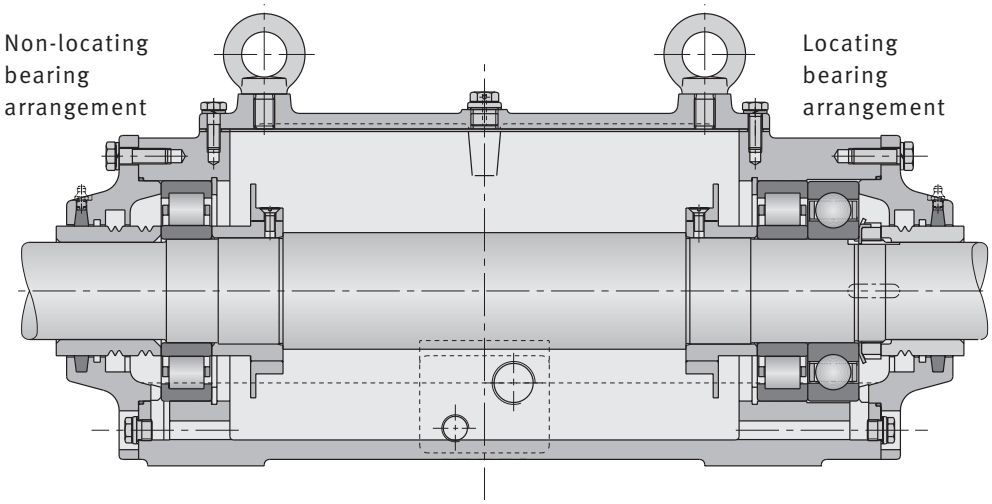

Ordering example:
1 housing VOG224
1 cylindrical roller bearing NU224-E-C3
1 cylindrical roller bearing NU224-E-C3
1 deep groove ball bearing 6224-C3

FAG plummer block housings VO

Design VOB

Design VOB

The housing body corresponds to that of the VOG design. On the locating bearing side, two rolling bearings are fitted adjacent to each other.
The non-locating bearing side comprises a cylindrical roller bearing of type NU.

The locating bearing arrangement comprises two angular contact ball bearings in an O arrangement. For both angular contact ball bearings, the type normally selected is the universal design for fitting in matched pairs with small axial internal clearance (UA design).

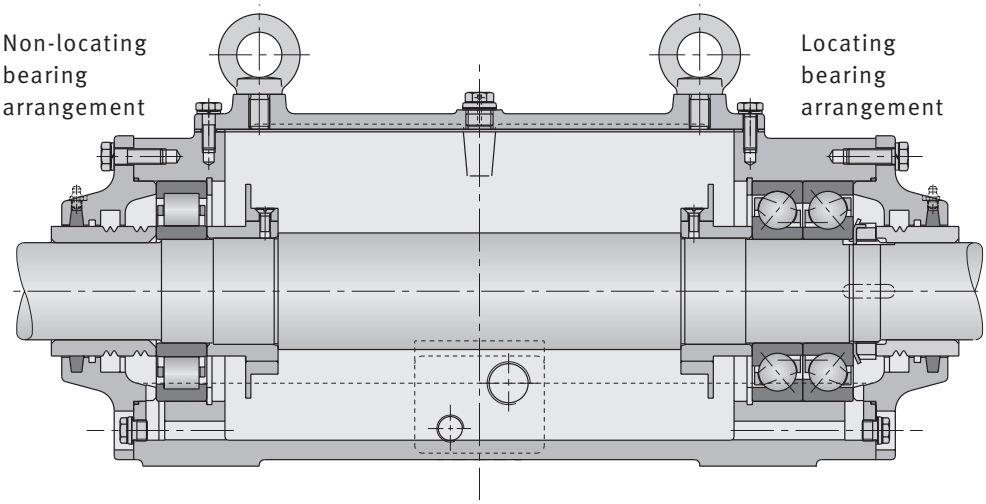

Ordering example:
1 housing VOB312
1 cylindrical roller bearing NU312-E-C3
2 angular contact ball bearings 7312-B-UA

FAG plummer block housings VO, unsplit

Designs VOS, VOB, VOG – for bearings with cylindrical bore

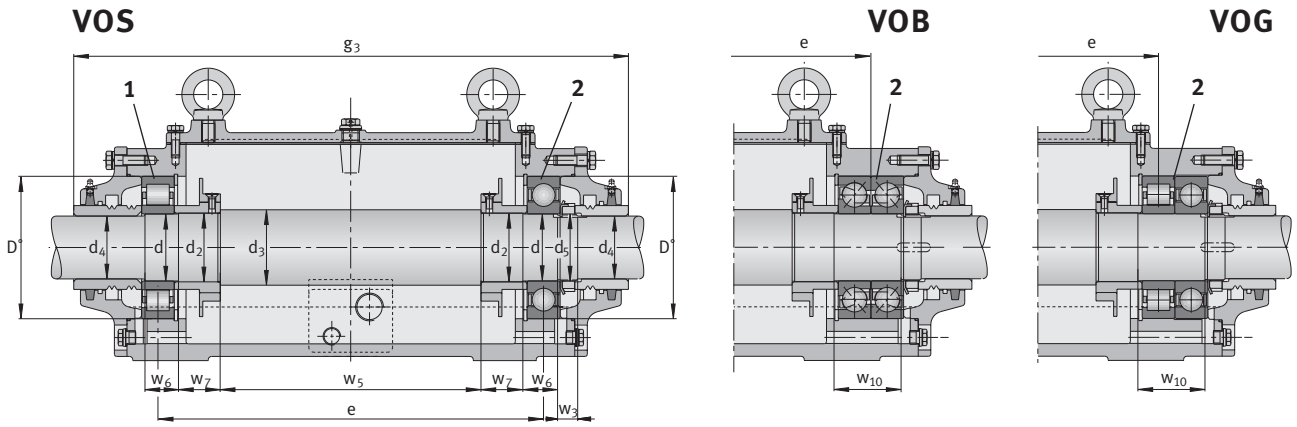

Dimension table · Dimensions in mm

Designation*) Housing	Rolling bearings 1 Non-locating bearing	2 Locating bearing	Mass Housing m kg	Dimensions Shaft d	D	d_2	d_3	d_4	d_5 Thread	w_3	w_5	w_6	w_7	w_{10}	g_3
VOS308	**NU308-E-C3**	**6308-C3**	23	40	90	42	50	37	M40×1,5	15	147	23	38	–	395
VOB308	**NU308-E-C3**	**2x 7308-B-UA**	23	40	90	42	50	37	M40×1,5	15	147	23	38	46	418
VOG308	**NU308-E-C3**	**NU308-E-C3 + 6308-C3**	23	40	90	42	50	37	M40×1,5	15	147	23	38	46	418
VOS309	**NU309-E-C3**	**6309-C3**	24	45	100	47	55	40	M45×1,5	16	145	25	38	–	395
VOB309	**NU309-E-C3**	**2x 7309-UA**	24	45	100	47	55	40	M45×1,5	16	145	25	38	50	420
VOG309	**NU309-E-C3**	**NU309-E-C3 + 6309-C3**	24	45	100	47	55	40	M45×1,5	16	145	25	38	50	420
VOS310	**NU310-E-C3**	**6310-C3**	27	50	110	52	60	45	M50×1,5	18	181	26	44	–	447
VOB310	**NU310-E-C4**	**2x 7310-B-UA**	27	50	110	52	60	45	M50×1,5	18	181	26	44	53	474
VOG310	**NU310-E-C3**	**NU310-E-C3 + 6310-C3**	27	50	110	52	60	45	M50×1,5	18	181	26	44	53	474
VOS311	**NU311-E-C3**	**6311-C3**	30	55	120	57	65	50	M55×2	19	181	29	43	–	449
VOB311	**NU311-E-C3**	**2x 7311-B-UA**	30	55	120	57	65	50	M55×2	19	181	29	43	57	478
VOG311	**NU311-E-C3**	**NU311-E-C3 + 6311-C3**	30	55	120	57	65	50	M55×2	19	181	29	43	57	478
VOS312	**NU312-E-C3**	**6312-C3**	53,6	60	130	62	70	55	M60×2	18	211	32	45	–	495
VOB312	**NU312-E-C3**	**2x 7312-B-UA**	55	60	130	62	70	55	M60×2	18	211	32	45	63	526
VOG312	**NU312-E-C3**	**NU312-E-C3 + 6312-C3**	55	60	130	62	70	55	M60×2	18	211	32	45	63	526

*) Ordering examples on page 4 and 5.

FAG plummer block housings VO, unsplit

Designs VOS, VOB, VOG – for bearings with cylindrical bore

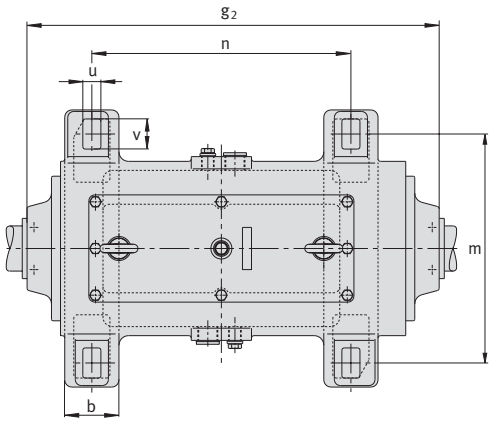

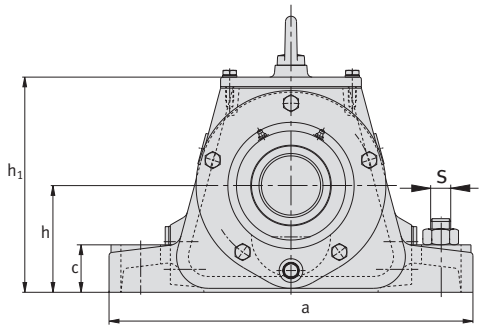

Dimension table · Dimensions in mm

Designation	Dimensions Housing											
Housing	a	g_2	h_1	b	c	e	h	m	n	u	v	s Thread
VOS308	290	380	167	60	40	250	80	230	235	20	35	M16
VOB308	290	403	167	60	40	261,5	80	230	235	20	35	M16
VOG308	290	403	167	60	40	250	80	230	235	20	35	M16
VOS309	290	380	167	60	40	250	80	230	235	20	35	M16
VOB309	290	405	167	60	40	262,5	80	230	235	20	35	M16
VOG309	290	405	167	60	40	250	80	230	235	20	35	M16
VOS310	320	432	194	63	45	300	95	260	285	20	35	M16
VOB310	320	459	194	63	45	313,5	95	260	285	20	35	M16
VOG310	320	459	194	63	45	300	95	260	285	20	35	M16
VOS311	320	432	194	63	45	300	95	260	285	20	35	M16
VOB311	320	461	194	63	45	314,5	95	260	285	20	35	M16
VOG311	320	461	194	63	45	300	95	260	285	20	35	M16
VOS312	370	480	224	70	50	340	110	300	320	25	40	M20
VOB312	370	511	224	70	50	355,5	110	300	320	25	40	M20
VOG312	370	511	224	70	50	340	110	300	320	25	40	M20

FAG plummer block housings VO, unsplit

Designs VOS, VOB, VOG – for bearings with cylindrical bore

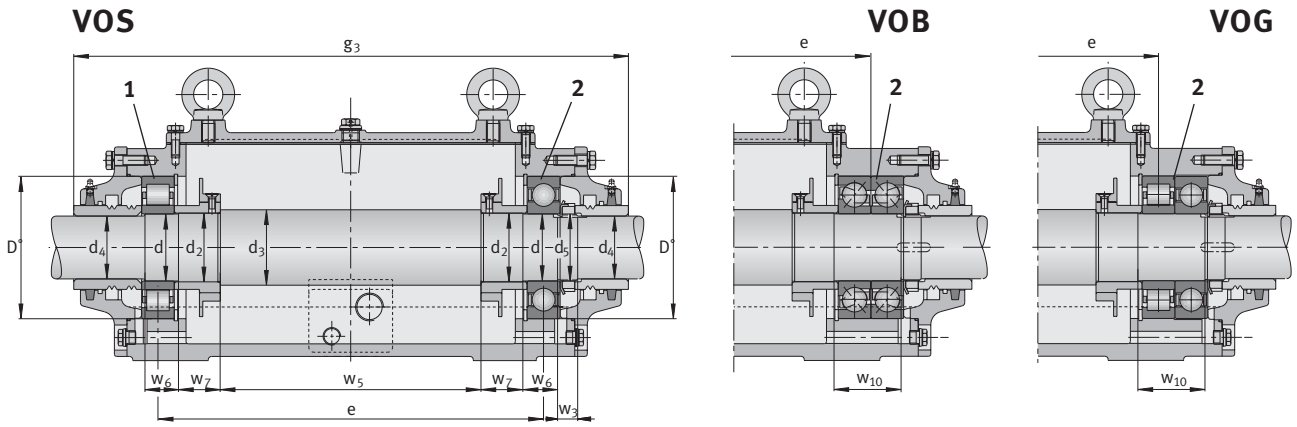

Dimension table · Dimensions in mm

Designation*) Housing	Rolling bearings 1 Non-locating bearing	2 Locating bearing	Mass m kg	Dimensions Housing d	D	Shaft d_2	d_3	d_4	d_5 Thread	w_3	w_5	w_6	w_7	w_{10}	g_3
VOS313	**NU313-E-C3**	**6313-C3**	51,6	65	140	67	75	60	M65×2	18	211	34	44	–	496
VOB313	**NU313-E-C3**	**2x 7313-B-UA**	56	65	140	67	75	60	M65×2	18	211	34	44	68	528
VOG313	**NU313-E-C3**	**NU313-E-C3 + 6313-C3**	56	65	140	67	75	60	M65×2	18	211	34	44	68	528
VOS314	**NU314-E-C3**	**6314-C3**	72	70	150	72	80	65	M70×2	19	265	35	47	–	572,5
VOB314	**NU314-E-C3**	**2x 7314-B-UA**	72	70	150	72	80	65	M70×2	19	265	35	47	70	607,5
VOG314	**NU314-E-C3**	**NU314-E-C3 + 6314-C3**	72	70	150	72	80	65	M70×2	19	265	35	47	70	607,5
VOS315	**NU315-E-C3**	**6315-C3**	70	75	160	77	85	70	M75×2	20	263	37	47	–	573,5
VOB315	**NU315-E-C3**	**2x 7315-B-UA**	70	75	160	77	85	70	M75×2	20	263	37	47	74	610,5
VOG315	**NU315-E-C3**	**NU315-E-C3 + 6315-C3**	70	75	160	77	85	70	M75×2	20	263	37	47	74	610,5
VOS316	**NU316-E-C3**	**6316-C3**	105	80	170	82	90	75	M80×2	24	311	40	50	–	661,5
VOB316	**NU316-E-C3**	**2x 7316-B-UA**	105	80	170	82	90	75	M80×2	24	311	40	50	80	700,5
VOG316	**NU316-E-C3**	**NU316-E-C3 + 6316-C3**	105	80	170	82	90	75	M80×2	24	311	40	50	80	700,5
VOS317	**NU317-E-C3**	**6317-C3**	125	85	180	87	95	80	M85×2	27	309	40	50	–	661,5
VOB317	**NU317-E-C3**	**2x 7317-B-UA**	125	85	180	87	95	80	M85×2	27	309	40	50	81	702,5
VOG317	**NU317-E-C3**	**NU317-E-C3 + 6317-C3**	125	85	180	87	95	80	M85×2	27	309	40	50	81	702,5

*) Ordering examples on page 4 and 5.

FAG plummer block housings VO, unsplit

Designs VOS, VOB, VOG – for bearings with cylindrical bore

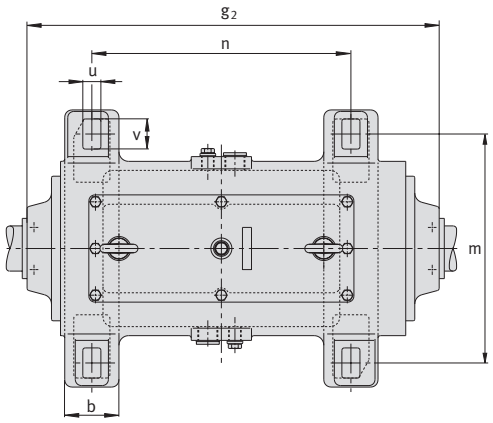

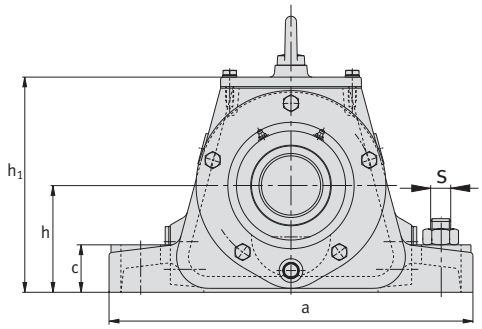

Dimension table · Dimensions in mm

Designation	Dimensions Housing											
Housing	a	g_2	h_1	b	c	e	h	m	n	u	v	s Thread
VOS313	370	480	224	70	50	340	110	300	320	25	40	M20
VOB313	370	513	224	70	50	356,5	110	300	320	25	40	M20
VOG313	370	513	224	70	50	340	110	300	320	25	40	M20
VOS314	400	556	260	80	55	400	120	330	370	25	40	M20
VOB314	400	591	260	80	55	417,5	120	330	370	25	40	M20
VOG314	400	591	260	80	55	400	120	330	370	25	40	M20
VOS315	400	556	260	80	55	400	120	330	370	25	40	M20
VOB315	400	593	260	80	55	418,5	120	330	370	25	40	M20
VOG315	400	593	260	80	55	437	120	330	370	25	40	M20
VOS316	460	645	287	90	60	460	135	380	430	30	50	M24
VOB316	460	684	287	90	60	479,5	135	380	430	30	50	M24
VOG316	460	684	287	90	60	460	135	380	430	30	50	M24
VOS317	460	645	287	90	60	460	135	380	430	30	50	M24
VOB317	460	686	287	90	60	480,5	135	380	430	30	50	M24
VOG317	460	686	287	90	60	460	135	380	430	30	50	M24

FAG plummer block housings VO, unsplit

Designs VOS, VOB, VOG – for bearings with cylindrical bore

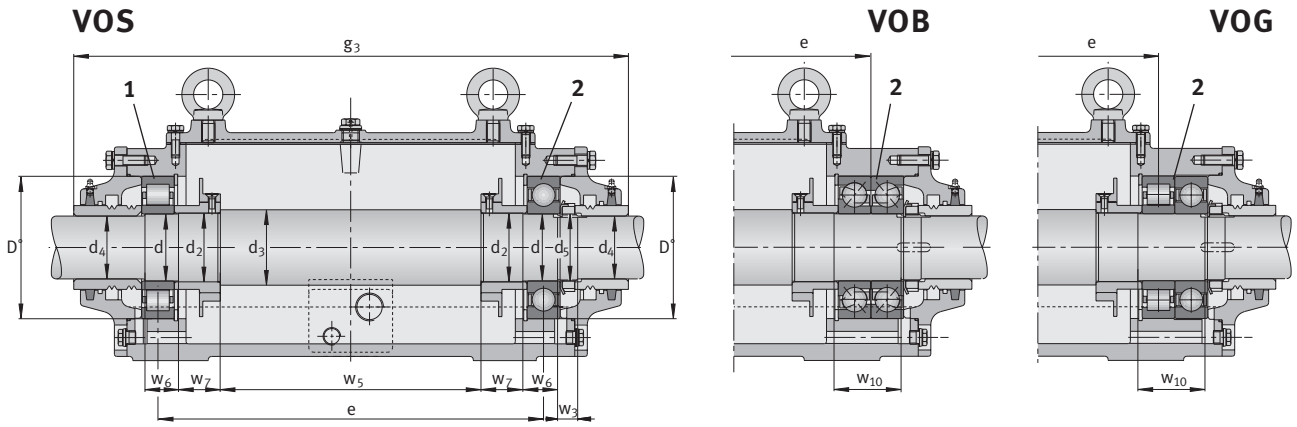

Dimension table · Dimensions in mm

Designation*) Housing	Rolling bearings 1 Non-locating bearing	2 Locating bearing	Mass m kg	Dimensions Housing d	D	Shaft d_2	d_3	d_4	d_5 Thread	w_3	w_5	w_6	w_7	w_{10}	g_3
VOS318	**NU318-E-C3**	**6318-C3**	157	90	190	92	105	85	M90×2	27	357	43	55	–	757
VOB318	**NU318-E-C3**	**2x 7318-B-UA**	171	90	190	92	105	85	M90×2	27	357	43	55	86	800
VOG318	**NU318-E-C3**	**NU318-E-C3 + 6318-C3**	171	90	190	92	105	85	M90×2	27	357	43	55	86	800
VOS319	**NU319-E-C3**	**6319-C3**	154,5	95	200	97	105	90	M95×2	27	355	45	55	–	756
VOB319	**NU319-E-C3**	**2x 7318-B-UA**	168	95	200	97	105	90	M95×2	27	355	45	55	90	801
VOG319	**NU319-E-C3**	**NU319-E + 6319-C3**	168	95	200	97	105	90	M95×2	27	355	45	55	90	801
VOS220	**NU220-E-C3**	**6220-C3**	158	100	180	102	115	95	M100×2	26	358	35	58	–	726,5
VOB220	**NU220-E-C3**	**2x 7220-B-UA**	170	100	180	102	115	95	M100×2	26	358	35	58	69	760,5
VOG220	**NU220-E-C3**	**NU220-E-C3 + 6220-C3**	170	100	180	102	115	95	M100×2	26	358	35	58	69	760,5
VOS222	**NU222-E-C3**	**6222-C3**	156	110	200	112	125	105	M110×2	27	358	38	58	–	755,8
VOB222	**NU222-E-C3**	**2x 7222-B-UA**	167,5	110	200	112	125	105	M110×2	27	358	38	58	76	793,8
VOG222	**NU222-E-C3**	**NU222-E-C3 + 6222-C3**	167,5	110	200	112	125	105	M110×2	27	358	38	58	76	793,8
VOS224	**NU224-E-C3**	**6224-C3**	238	120	215	122	140	115	M120×2	26	744	40	55	–	1 125
VOB224	**NU224-E-C3**	**2x 7224-B-UA**	252,5	120	215	122	140	115	M120×2	26	744	40	55	80	1 165
VOG224	**NU224-E-C3**	**NU224-E-C3 + 6224-C3**	238	120	215	122	140	115	M120×2	26	744	40	55	80	1 165

*) Ordering examples on page 4 and 5.

FAG plummer block housings VO, unsplit

Designs VOS, VOB, VOG – for bearings with cylindrical bore

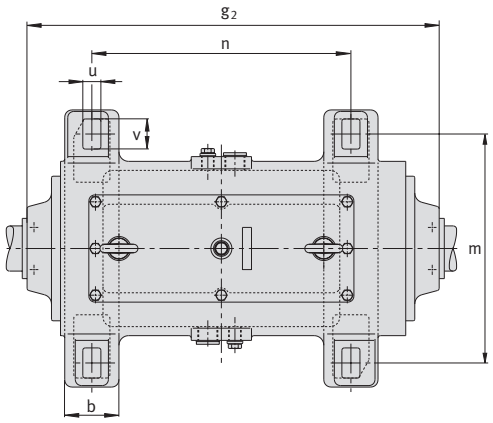

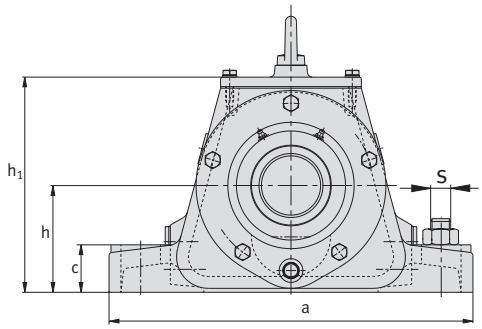

Dimension table · Dimensions in mm

Designation	Dimensions Housing											
Housing	a	g_2	h_1	b	c	e	h	m	n	u	v	s Thread
VOS318	560	737	319	95	70	520	150	445	490	42	65	M36
VOB318	560	780	319	95	70	541,5	150	445	490	42	65	M36
VOG318	560	780	319	95	70	520	150	445	490	42	65	M36
VOS319	560	736	319	95	70	520	150	445	490	42	65	M36
VOB319	560	781	319	95	70	542,5	150	445	490	42	65	M36
VOG319	560	781	319	95	70	520	150	445	490	42	65	M36
VOS220	560	706	319	95	70	516	150	445	490	42	65	M36
VOB220	560	740	319	95	70	533	150	445	490	42	65	M36
VOG220	560	740	319	95	70	516	150	445	490	42	65	M36
VOS222	560	735	319	95	70	520	150	445	490	42	65	M36
VOB222	560	773	319	95	70	539	150	445	490	42	65	M36
VOG222	560	773	319	95	70	520	150	445	490	42	65	M36
VOS224	600	1105	347	95	75	900	160	480	860	42	65	M36
VOB224	600	1145	347	95	75	920	160	480	860	42	65	M36
VOG224	600	1145	347	95	75	900	160	480	860	42	65	M36

Notes

MATNR 036781932-0000 / TPI 179 / GB-D / 2009010.5 / Printed in Germany by Weppert

Schaeffler KG

Georg-Schäfer-Straße 30
97421 Schweinfurt (Germany)
Internet www.fag.com
E-Mail air_handling@schaeffler.com

In Germany:
Phone 0180 5003872
Fax 0180 5003873

From other countries:
Phone +49 9721 91-0
Fax +49 9721 91-3435

Every care has been taken to ensure the correctness of the information contained in this publication but no liability can be accepted for any errors or omissions.
We reserve the right to make technical changes.

© Schaeffler KG · 2009, January

This publication or parts thereof may not be reproduced without our permission.

TPI 179 GB-D