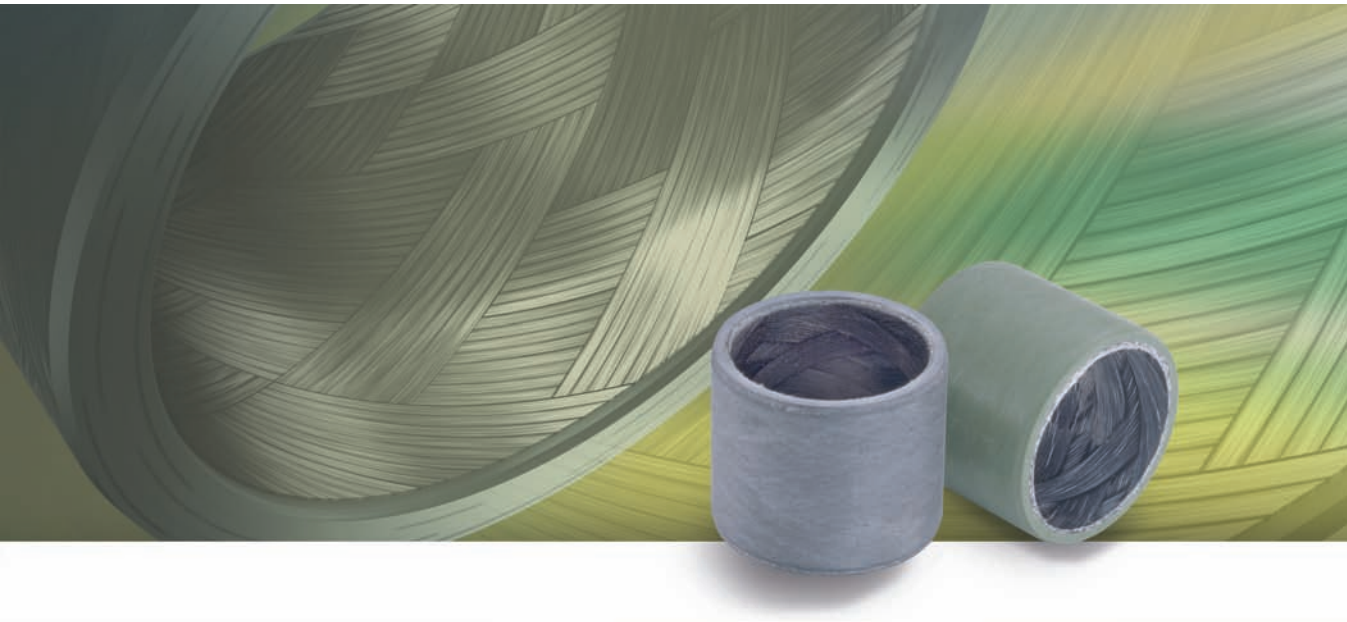

# Plain Bearings with ELGOTEX®

## Maintenance-free – wear-resistant

SCHAEFFLER GROUP
INDUSTRIAL

# Plain bearings with ELGOTEX®

## Features

The radial dry plain bearings have a sliding layer made from ELGOTEX® and a twin layer structure, *Figure 1*:

- The outer layer (the backing) ensures the strength of the bush. It comprises continuous glass fibres that are additionally stabilised by means of a specific winding angle, giving an increase in strength. The fibres are bound in epoxy resin.
- The inner layer (sliding layer), contains a Polymer/PTFE yarn that is embedded together with fillers and solid lubricants in a resin matrix.

Due to the combination of fibres and resin matrix, the bushes are suited in preference for dry-running applications, see also table, page 2.

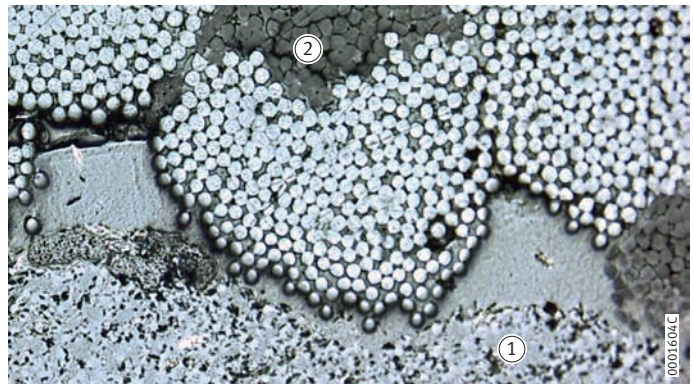


① Backing
② Sliding layer

*Figure 1*
Microsection
of a plain bush with ELGOTEX®

## Advantages

Plain bearings with an ELGOTEX® sliding layer:

- are maintenance-free for the whole operating life
- can be used to replace steel, bronze and plastic plain bearings
- have high radial load carrying capacity
- are suitable for high, static loads
- are resistant to shocks
- are suitable for high alternating loads and swivel motion
- have good resistance to corrosive media
- are suitable for applications involving vibration due to their good damping characteristics
- can be used for axial motion
- can be fitted easily, since they are simply pressed into housing bores and require no further means of axial location
- can also be combined with separate, additional seals.

## Technical data on the sliding layer

The technical/physical characteristics of the sliding layer ELGOTEX® are shown in the table.

**Data**

| Characteristic | | Value | |
|---|---|---|---|
| Maximum permissible sliding speed | v | 500 | mm/s |
| Maximum permissible dynamic contact pressure | p | 150 | $N/mm^2$ |
| Maximum permissible static contact pressure | p | 200 | $N/mm^2$ |
| Maximum pv value[1)] | p · v | 1 050 | $N/mm^2 \cdot mm/s$ |
| Coefficient of friction | μ | 0,03 to 0,08 | |
| Operating life behaviour with[2)] | | | |
| dry running | | +++ | |
| grease and oil lubrication | | + | |
| media lubrication, water lubrication | | + | |

Definition of the symbols:
+++ very good
+ adequate.

1) For higher pv values, please consult Schaeffler Application Engineering.

2) See also section Test rig assessment with dry running and section Lubrication, page 3.

## Test rig assessment with dry running

Wound plain bearings with ELGOTEX® are designed for dry running, *Figure 2*. They achieve their maximum operating life under these conditions.

Slight setting of the material occurs during running-in. Subsequently, no further noticeable wear occurs up to 1 000 hours.

At moderate contact pressures ($p = 50\ N/mm^2$), the total wear is still very low even after more than 1 000 hours.

In underwater use, there is a considerable reduction in operating life. In this case, the coefficient of friction may double.

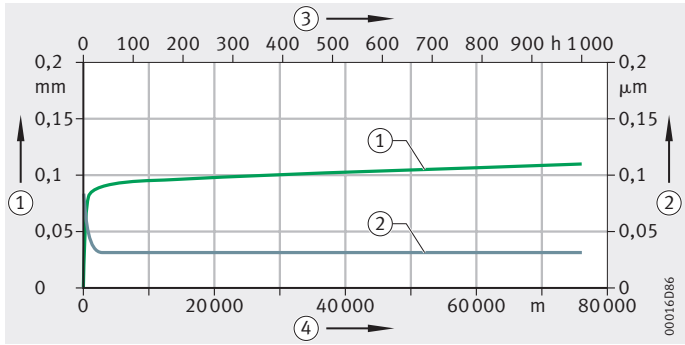


① Wear
② Friction
③ Operating hours
④ Distance covered

*Figure 2*
Dry running test

## Sealing

The plain bearings are not sealed. In order to give protection against abrasive contaminants, however, they can be supplied with integrated seals.

## Lubrication

Due to the material pairing used, the plain bearings are maintenance-free for the whole of the operating life.

Do not lubricate the bearings. Lubricant increases wear and considerably reduces the life of the bushes.

## Areas of application

The key areas for the new plain bushes are:

- agricultural and forestry machinery and equipment
- lifting and transfer equipment
- construction machinery
- metalworking machinery
- packaging machinery
- tail lift platforms
- hydraulic cylinder guides
- steel and hydraulic construction
- solar energy applications.

## Design and safety guidelines

Do not use plain bearings for movement involving spatial alignment. Skewing of the shaft gives a considerable reduction in the operating life of the bushes.

## Design of adjacent components

The shaft seat (mating sliding surface) and housing bore should be designed as specified, *Figure 3*. The bore tolerance must be H7, the shaft tolerance must be h7.

### Raceway hardness

If the full volume of the sliding layer is to be used, the raceway on the shaft must be hard, smooth and resistant to corrosion.

A hardness of >350 HB is recommended. The rating life begins to increase at a hardness of >375 HB.

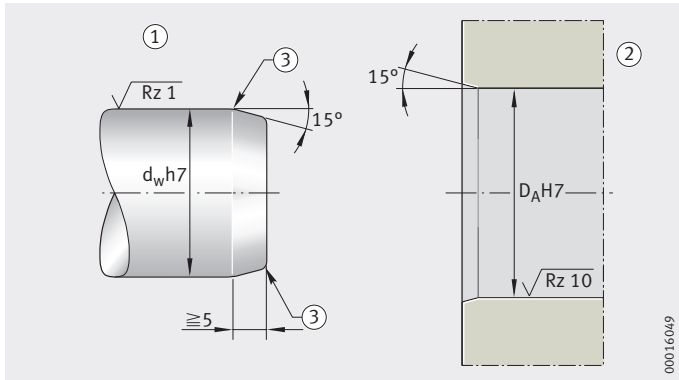


① Shaft
② Housing bore
③ Rounded

*Figure 3*
Design of adjacent components

## Fitting

Plain bushes should be pressed in using a fitting mandrel, *Figure 4*.

The chamfer on the mandrel must have rounded transitions or rounding of the end.

Sharp transitions on the entry side of the shaft and mandrel will damage the sliding layer during fitting and reduce the operating life of the plain bearings.

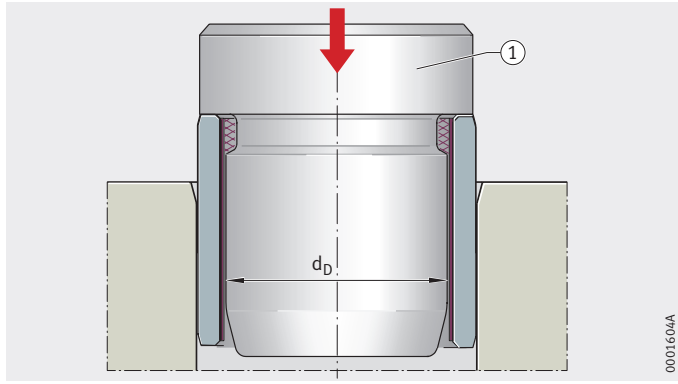


① Fitting mandrel
$d_D = d - 0{,}3$ mm to 0,5 mm

*Figure 4*
Fitting using a fitting mandrel

## Availability

ELGOTEX® plain bearings are manufactured to meet specific orders.

The available sizes are shown in the dimension table.
Special sizes and special tolerance classes may be available by agreement with Schaeffler.

# Plain bearings

ELGOTEX®

Maintenance-free, wear-resistant

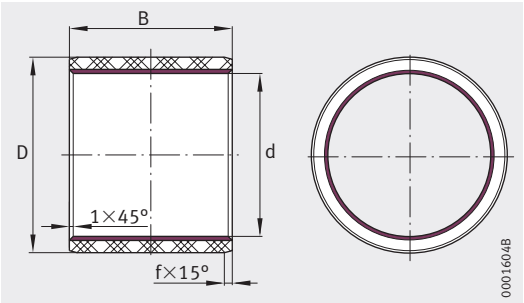


ZWB

**Dimension table** · Dimensions in mm

| Designation[1] | Mass | Dimensions[2] | | | | Basic load ratings | |
|---|---|---|---|---|---|---|---|
| | m | d | D | B | f | dyn. $C_r$ | stat. $C_{0r}$ |
| | ≈g | C10 | s8 | h13 | | N | N |
| **ZWB202415** | 4 | $20^{+0,194}_{+0,11}$ | $24^{+0,068}_{+0,035}$ | $15_{-0,27}$ | 1,5±0,5 | 40 500 | 54 000 |
| **ZWB202420** | 5 | $20^{+0,194}_{+0,11}$ | $24^{+0,068}_{+0,035}$ | $20_{-0,33}$ | 1,5±0,5 | 54 000 | 72 000 |
| **ZWB202430** | 7 | $20^{+0,194}_{+0,11}$ | $24^{+0,068}_{+0,035}$ | $30_{-0,33}$ | 1,5±0,5 | 81 000 | 108 000 |
| **ZWB253020** | 8 | $25^{+0,194}_{+0,11}$ | $30^{+0,068}_{+0,035}$ | $20_{-0,33}$ | 1,5±0,5 | 67 500 | 90 000 |
| **ZWB253030** | 12 | $25^{+0,194}_{+0,11}$ | $30^{+0,068}_{+0,035}$ | $30_{-0,33}$ | 1,5±0,5 | 101 250 | 135 000 |
| **ZWB253040** | 16 | $25^{+0,194}_{+0,11}$ | $30^{+0,068}_{+0,035}$ | $40_{-0,39}$ | 1,5±0,5 | 135 000 | 180 000 |
| **ZWB283420** | 11 | $28^{+0,194}_{+0,11}$ | $34^{+0,082}_{+0,043}$ | $20_{-0,33}$ | 1,5±0,5 | 75 600 | 100 800 |
| **ZWB283430** | 16 | $28^{+0,194}_{+0,11}$ | $34^{+0,082}_{+0,043}$ | $30_{-0,33}$ | 1,5±0,5 | 113 400 | 151 200 |
| **ZWB283440** | 21 | $28^{+0,194}_{+0,11}$ | $34^{+0,082}_{+0,043}$ | $40_{-0,39}$ | 1,5±0,5 | 151 200 | 201 600 |
| **ZWB303620** | 11 | $30^{+0,194}_{+0,11}$ | $36^{+0,082}_{+0,043}$ | $20_{-0,33}$ | 1,5±0,5 | 81 000 | 108 000 |
| **ZWB303630** | 17 | $30^{+0,194}_{+0,11}$ | $36^{+0,082}_{+0,043}$ | $30_{-0,33}$ | 1,5±0,5 | 121 500 | 162 000 |
| **ZWB303640** | 22 | $30^{+0,194}_{+0,11}$ | $36^{+0,082}_{+0,043}$ | $40_{-0,39}$ | 1,5±0,5 | 162 000 | 216 000 |
| **ZWB354130** | 19 | $35^{+0,22}_{+0,12}$ | $41^{+0,082}_{+0,043}$ | $30_{-0,33}$ | 1,5±0,5 | 141 750 | 189 000 |
| **ZWB354140** | 26 | $35^{+0,22}_{+0,12}$ | $41^{+0,082}_{+0,043}$ | $40_{-0,39}$ | 1,5±0,5 | 189 000 | 252 000 |
| **ZWB354150** | 32 | $35^{+0,22}_{+0,12}$ | $41^{+0,082}_{+0,043}$ | $50_{-0,39}$ | 1,5±0,5 | 236 250 | 315 000 |
| **ZWB404830** | 30 | $40^{+0,22}_{+0,12}$ | $48^{+0,082}_{+0,043}$ | $30_{-0,33}$ | 2 ±0,7 | 162 000 | 216 000 |
| **ZWB404840** | 40 | $40^{+0,22}_{+0,12}$ | $48^{+0,082}_{+0,043}$ | $40_{-0,39}$ | 2 ±0,7 | 216 000 | 288 000 |
| **ZWB404860** | 60 | $40^{+0,22}_{+0,12}$ | $48^{+0,082}_{+0,043}$ | $60_{-0,46}$ | 2 ±0,7 | 324 000 | 432 000 |
| **ZWB455330** | 33 | $45^{+0,23}_{+0,13}$ | $53^{+0,099}_{+0,053}$ | $30_{-0,33}$ | 2 ±0,7 | 182 250 | 243 000 |
| **ZWB455340** | 44 | $45^{+0,23}_{+0,13}$ | $53^{+0,099}_{+0,053}$ | $40_{-0,39}$ | 2 ±0,7 | 243 000 | 324 000 |
| **ZWB455360** | 66 | $45^{+0,23}_{+0,13}$ | $53^{+0,099}_{+0,053}$ | $60_{-0,46}$ | 2 ±0,7 | 364 500 | 486 000 |
| **ZWB505840** | 49 | $50^{+0,23}_{+0,13}$ | $58^{+0,099}_{+0,053}$ | $40_{-0,39}$ | 2 ±0,7 | 270 000 | 360 000 |
| **ZWB505850** | 61 | $50^{+0,23}_{+0,13}$ | $58^{+0,099}_{+0,053}$ | $50_{-0,39}$ | 2 ±0,7 | 337 500 | 450 000 |
| **ZWB505860** | 73 | $50^{+0,23}_{+0,13}$ | $58^{+0,099}_{+0,053}$ | $60_{-0,46}$ | 2 ±0,7 | 405 000 | 540 000 |
| **ZWB556340** | 53 | $55^{+0,26}_{+0,14}$ | $63^{+0,099}_{+0,053}$ | $40_{-0,39}$ | 2 ±0,7 | 297 000 | 396 000 |
| **ZWB556350** | 67 | $55^{+0,26}_{+0,14}$ | $63^{+0,099}_{+0,053}$ | $50_{-0,39}$ | 2 ±0,7 | 371 250 | 495 000 |
| **ZWB556370** | 93 | $55^{+0,26}_{+0,14}$ | $63^{+0,099}_{+0,053}$ | $70_{-0,46}$ | 2 ±0,7 | 519 750 | 693 000 |
| **ZWB607040** | 74 | $60^{+0,26}_{+0,14}$ | $70^{+0,105}_{+0,059}$ | $40_{-0,39}$ | 2 ±0,7 | 324 000 | 432 000 |
| **ZWB607060** | 110 | $60^{+0,26}_{+0,14}$ | $70^{+0,105}_{+0,059}$ | $60_{-0,46}$ | 2 ±0,7 | 486 000 | 648 000 |
| **ZWB607080** | 147 | $60^{+0,26}_{+0,14}$ | $70^{+0,105}_{+0,059}$ | $80_{-0,46}$ | 2 ±0,7 | 648 000 | 864 000 |

1) Available sizes.

2) Plain bushes with special dimensions (up to an outside diameter of 1 200 mm), special tolerances and seals on both sides are available by agreement.

# Plain bearings

ELGOTEX®
Maintenance-free, wear-resistant

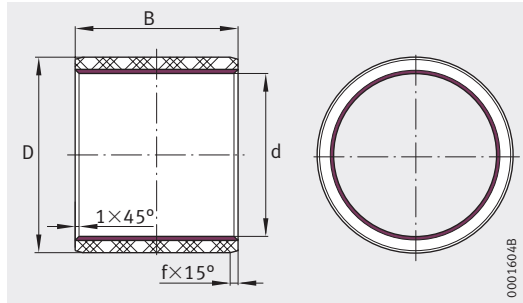


ZWB

**Dimension table** (continued) · Dimensions in mm

| Designation[1] | Mass | Dimensions[2] | | | | Basic load ratings | |
|---|---|---|---|---|---|---|---|
| | m | d | D | B | f | dyn. $C_r$ | stat. $C_{0r}$ |
| | ≈g | C10 | s8 | h13 | | N | N |
| **ZWB657550** | 99 | $65^{+0,26}_{+0,14}$ | $75^{+0,105}_{+0,059}$ | $50_{-0,39}$ | 2±0,7 | 438 750 | 585 000 |
| **ZWB657560** | 119 | $65^{+0,26}_{+0,14}$ | $75^{+0,105}_{+0,059}$ | $60_{-0,46}$ | 2±0,7 | 526 500 | 702 000 |
| **ZWB657580** | 158 | $65^{+0,26}_{+0,14}$ | $75^{+0,105}_{+0,059}$ | $80_{-0,46}$ | 2±0,7 | 702 000 | 936 000 |
| **ZWB708050** | 106 | $70^{+0,27}_{+0,15}$ | $80^{+0,105}_{+0,059}$ | $50_{-0,39}$ | 3±1 | 472 500 | 630 000 |
| **ZWB708070** | 148 | $70^{+0,27}_{+0,15}$ | $80^{+0,105}_{+0,059}$ | $70_{-0,46}$ | 3±1 | 661 500 | 882 000 |
| **ZWB708090** | 191 | $70^{+0,27}_{+0,15}$ | $80^{+0,105}_{+0,059}$ | $90_{-0,54}$ | 3±1 | 850 500 | 1 134 000 |
| **ZWB758550** | 113 | $75^{+0,27}_{+0,15}$ | $85^{+0,125}_{+0,071}$ | $50_{-0,39}$ | 3±1 | 506 250 | 675 000 |
| **ZWB758570** | 158 | $75^{+0,27}_{+0,15}$ | $85^{+0,125}_{+0,071}$ | $70_{-0,46}$ | 3±1 | 708 750 | 945 000 |
| **ZWB758590** | 204 | $75^{+0,27}_{+0,15}$ | $85^{+0,125}_{+0,071}$ | $90_{-0,54}$ | 3±1 | 911 250 | 1 215 000 |
| **ZWB809060** | 144 | $80^{+0,27}_{+0,15}$ | $90^{+0,125}_{+0,071}$ | $60_{-0,46}$ | 3±1 | 648 000 | 864 000 |
| **ZWB809080** | 192 | $80^{+0,27}_{+0,15}$ | $90^{+0,125}_{+0,071}$ | $80_{-0,46}$ | 3±1 | 864 000 | 1 152 000 |
| **ZWB8090100** | 240 | $80^{+0,27}_{+0,15}$ | $90^{+0,125}_{+0,071}$ | $100_{-0,54}$ | 3±1 | 1 080 000 | 1 440 000 |
| **ZWB859560** | 153 | $85^{+0,31}_{+0,17}$ | $95^{+0,125}_{+0,071}$ | $60_{-0,46}$ | 3±1 | 688 500 | 918 000 |
| **ZWB859580** | 204 | $85^{+0,31}_{+0,17}$ | $95^{+0,125}_{+0,071}$ | $80_{-0,46}$ | 3±1 | 918 000 | 1 224 000 |
| **ZWB8595100** | 254 | $85^{+0,31}_{+0,17}$ | $95^{+0,125}_{+0,071}$ | $100_{-0,54}$ | 3±1 | 1 147 500 | 1 530 000 |
| **ZWB9010560** | 248 | $90^{+0,31}_{+0,17}$ | $105^{+0,133}_{+0,079}$ | $60_{-0,46}$ | 3±1 | 729 000 | 972 000 |
| **ZWB9010580** | 331 | $90^{+0,31}_{+0,17}$ | $105^{+0,133}_{+0,079}$ | $80_{-0,46}$ | 3±1 | 972 000 | 1 296 000 |
| **ZWB90105120** | 496 | $90^{+0,31}_{+0,17}$ | $105^{+0,133}_{+0,079}$ | $120_{-0,54}$ | 3±1 | 1 458 000 | 1 944 000 |
| **ZWB9511060** | 261 | $95^{+0,31}_{+0,17}$ | $110^{+0,133}_{+0,079}$ | $60_{-0,46}$ | 3±1 | 769 500 | 1 026 000 |
| **ZWB95110100** | 435 | $95^{+0,31}_{+0,17}$ | $110^{+0,133}_{+0,079}$ | $100_{-0,54}$ | 3±1 | 1 282 500 | 1 710 000 |
| **ZWB95110120** | 522 | $95^{+0,31}_{+0,17}$ | $110^{+0,133}_{+0,079}$ | $120_{-0,54}$ | 3±1 | 1 539 000 | 2 052 000 |
| **ZWB10011580** | 365 | $100^{+0,31}_{+0,17}$ | $115^{+0,133}_{+0,079}$ | $80_{-0,46}$ | 3±1 | 1 080 000 | 1 440 000 |
| **ZWB100115100** | 456 | $100^{+0,31}_{+0,17}$ | $115^{+0,133}_{+0,079}$ | $100_{-0,54}$ | 3±1 | 1 350 000 | 1 800 000 |
| **ZWB100115120** | 547 | $100^{+0,31}_{+0,17}$ | $115^{+0,133}_{+0,079}$ | $120_{-0,54}$ | 3±1 | 1 620 000 | 2 160 000 |
| **ZWB10512080** | 382 | $105^{+0,32}_{+0,18}$ | $120^{+0,133}_{+0,079}$ | $80_{-0,46}$ | 4±1 | 1 134 000 | 1 512 000 |
| **ZWB105120100** | 477 | $105^{+0,32}_{+0,18}$ | $120^{+0,133}_{+0,079}$ | $100_{-0,54}$ | 4±1 | 1 417 500 | 1 890 000 |
| **ZWB105120120** | 573 | $105^{+0,32}_{+0,18}$ | $120^{+0,133}_{+0,079}$ | $120_{-0,54}$ | 4±1 | 1 701 000 | 2 268 000 |
| **ZWB11012580** | 399 | $110^{+0,32}_{+0,18}$ | $125^{+0,155}_{+0,092}$ | $80_{-0,46}$ | 4±1 | 1 188 000 | 1 584 000 |
| **ZWB110125100** | 498 | $110^{+0,32}_{+0,18}$ | $125^{+0,155}_{+0,092}$ | $100_{-0,54}$ | 4±1 | 1 485 000 | 1 980 000 |
| **ZWB110125120** | 598 | $110^{+0,32}_{+0,18}$ | $125^{+0,155}_{+0,092}$ | $120_{-0,54}$ | 4±1 | 1 782 000 | 2 376 000 |

1) Available sizes.

2) Plain bushes with special dimensions (up to an outside diameter of 1 200 mm), special tolerances and seals on both sides are available by agreement.

# Plain bearings

ELGOTEX®

Maintenance-free, wear-resistant

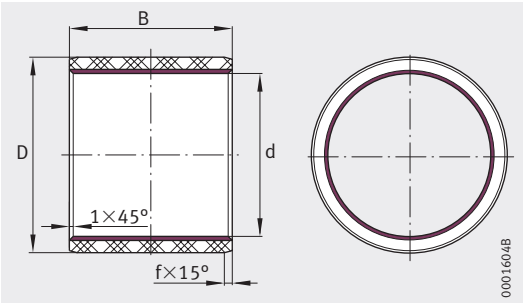


ZWB

**Dimension table** (continued) · Dimensions in mm

| Designation[1] | Mass | Dimensions[2] | | | | Basic load ratings | |
|---|---|---|---|---|---|---|---|
| | m | d | D | B | f | dyn. $C_r$ | stat. $C_{0r}$ |
| | ≈g | C10 | s8 | h13 | | N | N |
| **ZWB120135100** | 541 | $120^{+0,32}_{+0,18}$ | $135^{+0,155}_{+0,092}$ | $100_{-0,54}$ | 4±1 | 1 620 000 | 2 160 000 |
| **ZWB120135120** | 649 | $120^{+0,32}_{+0,18}$ | $135^{+0,155}_{+0,092}$ | $120_{-0,54}$ | 4±1 | 1 944 000 | 2 592 000 |
| **ZWB120135150** | 811 | $120^{+0,32}_{+0,18}$ | $135^{+0,155}_{+0,092}$ | $150_{-0,63}$ | 4±1 | 2 430 000 | 3 240 000 |
| **ZWB130145100** | 583 | $130^{+0,36}_{+0,2}$ | $145^{+0,163}_{+0,1}$ | $100_{-0,54}$ | 4±1 | 1 755 000 | 2 340 000 |
| **ZWB130145120** | 700 | $130^{+0,36}_{+0,2}$ | $145^{+0,163}_{+0,1}$ | $120_{-0,54}$ | 4±1 | 2 106 000 | 2 808 000 |
| **ZWB130145150** | 875 | $130^{+0,36}_{+0,2}$ | $145^{+0,163}_{+0,1}$ | $150_{-0,63}$ | 4±1 | 2 632 500 | 3 510 000 |
| **ZWB140155100** | 626 | $140^{+0,36}_{+0,2}$ | $155^{+0,163}_{+0,1}$ | $100_{-0,54}$ | 4±1 | 1 890 000 | 2 520 000 |
| **ZWB140155150** | 938 | $140^{+0,36}_{+0,2}$ | $155^{+0,163}_{+0,1}$ | $150_{-0,63}$ | 4±1 | 2 835 000 | 3 780 000 |
| **ZWB140155180** | 1 126 | $140^{+0,36}_{+0,2}$ | $155^{+0,163}_{+0,1}$ | $180_{-0,63}$ | 4±1 | 3 402 000 | 4 536 000 |
| **ZWB150165120** | 802 | $150^{+0,37}_{+0,21}$ | $165^{+0,171}_{+0,108}$ | $120_{-0,54}$ | 4±1 | 2 430 000 | 3 240 000 |
| **ZWB150165150** | 1 002 | $150^{+0,37}_{+0,21}$ | $165^{+0,171}_{+0,108}$ | $150_{-0,63}$ | 4±1 | 3 037 500 | 4 050 000 |
| **ZWB150165180** | 1 202 | $150^{+0,37}_{+0,21}$ | $165^{+0,171}_{+0,108}$ | $180_{-0,63}$ | 4±1 | 3 645 000 | 4 860 000 |
| **ZWB160180120** | 1 154 | $160^{+0,37}_{+0,21}$ | $180^{+0,171}_{+0,108}$ | $120_{-0,54}$ | 4±1 | 2 592 000 | 3 456 000 |
| **ZWB160180150** | 1 442 | $160^{+0,37}_{+0,21}$ | $180^{+0,171}_{+0,108}$ | $150_{-0,63}$ | 4±1 | 3 240 000 | 4 320 000 |
| **ZWB160180180** | 1 730 | $160^{+0,37}_{+0,21}$ | $180^{+0,171}_{+0,108}$ | $180_{-0,63}$ | 4±1 | 3 888 000 | 5 184 000 |
| **ZWB170190120** | 1 221 | $170^{+0,39}_{+0,23}$ | $190^{+0,194}_{+0,122}$ | $120_{-0,54}$ | 5±1 | 2 754 000 | 3 672 000 |
| **ZWB170190180** | 1 832 | $170^{+0,39}_{+0,23}$ | $190^{+0,194}_{+0,122}$ | $180_{-0,63}$ | 5±1 | 4 131 000 | 5 508 000 |
| **ZWB170190200** | 2 036 | $170^{+0,39}_{+0,23}$ | $190^{+0,194}_{+0,122}$ | $200_{-0,72}$ | 5±1 | 4 590 000 | 6 120 000 |
| **ZWB180200150** | 1 612 | $180^{+0,39}_{+0,23}$ | $200^{+0,194}_{+0,122}$ | $150_{-0,63}$ | 5±1 | 3 645 000 | 4 860 000 |
| **ZWB180200180** | 1 934 | $180^{+0,39}_{+0,23}$ | $200^{+0,194}_{+0,122}$ | $180_{-0,63}$ | 5±1 | 4 374 000 | 5 832 000 |
| **ZWB180200250** | 2 686 | $180^{+0,39}_{+0,23}$ | $200^{+0,194}_{+0,122}$ | $250_{-0,72}$ | 5±1 | 6 075 000 | 8 100 000 |
| **ZWB190210150** | 1 696 | $190^{+0,425}_{+0,24}$ | $210^{+0,202}_{+0,13}$ | $150_{-0,63}$ | 5±1 | 3 847 500 | 5 130 000 |
| **ZWB190210180** | 2 036 | $190^{+0,425}_{+0,24}$ | $210^{+0,202}_{+0,13}$ | $180_{-0,63}$ | 5±1 | 4 617 000 | 6 156 000 |
| **ZWB190210250** | 2 827 | $190^{+0,425}_{+0,24}$ | $210^{+0,202}_{+0,13}$ | $250_{-0,72}$ | 5±1 | 6 412 500 | 8 550 000 |
| **ZWB200220180** | 2 137 | $200^{+0,425}_{+0,24}$ | $220^{+0,202}_{+0,13}$ | $180_{-0,63}$ | 5±1 | 4 860 000 | 6 480 000 |
| **ZWB200220200** | 2 375 | $200^{+0,425}_{+0,24}$ | $220^{+0,202}_{+0,13}$ | $200_{-0,72}$ | 5±1 | 5 400 000 | 7 200 000 |
| **ZWB200220250** | 2 969 | $200^{+0,425}_{+0,24}$ | $220^{+0,202}_{+0,13}$ | $250_{-0,72}$ | 5±1 | 6 750 000 | 9 000 000 |

1) Available sizes.

2) Plain bushes with special dimensions (up to an outside diameter of 1 200 mm), special tolerances and seals on both sides are available by agreement.

MATNR 036888524-0000 / TPI 194 / GB-D / 201103 / pdf only

**Schaeffler Technologies**
**GmbH & Co. KG**

Industriestraße 1–3
91074 Herzogenaurach (Germany)
Internet www.ina.com
E-Mail info@schaeffler.com

In Germany:
Phone 0180 5003872
Fax 0180 5003873

From other countries:
Phone +49 9132 82-0
Fax +49 9132 82-4950

Every care has been taken to ensure the correctness of the information contained in this publication but no liability can be accepted for any errors or omissions.
We reserve the right to make technical changes.
© Schaeffler Technologies GmbH & Co. KG
Issued: 2011, March
This publication or parts thereof may not be reproduced without our permission.
TPI 194 GB-D