SEALMASTER®

MOUNTED ROLLER BEARINGS...

TOUGH

AS THEY COME!

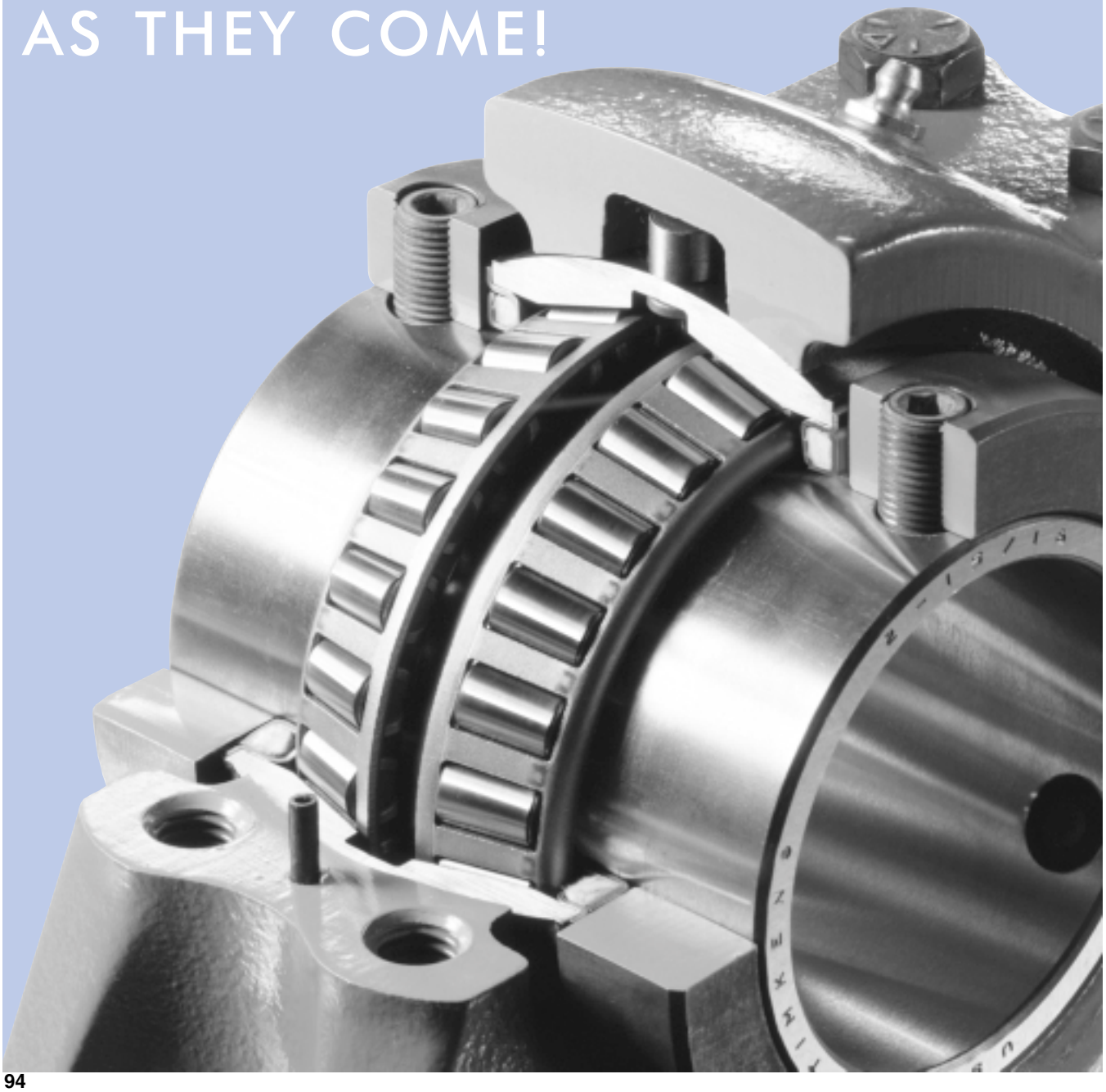

TABLE OF CONTENTS

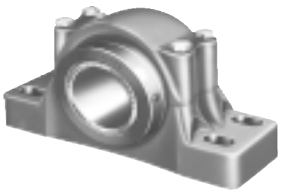

Page Number

Pictorial Index 96-97
RPB Series Bearings - Features and Benefits 98-103
RPB Series - Specifications and Dimensions - Pillow Blocks 104-106
RPB Series, Two-Bolt Pillow Blocks 104
RPB Series, Four-Bolt Pillow Blocks 104
RPB-A Series, Two-Bolt Pillow Blocks 105
RPB-A Series, Four-Bolt Pillow Blocks 105
ERPB Series, Expansion Two-Bolt Pillow Blocks 106
ERPB Series, Expansion Four-Bolt Pillow Blocks 106
DRPB Series - Specifications and Dimensions - Pillow Blocks ... 107-109
DRPB Series, Two-Bolt Pillow Blocks 107
DRPB Series, Four-Bolt Pillow Blocks 107
DRPBA Series, Two-Bolt Pillow Blocks 108
DRPBA Series, Four-Bolt Pillow Blocks 108
EDPB-A Series, Expansion Two-Bolt Pillow Blocks 109
EDPB-A Series, Expansion Four-Bolt Pillow Blocks 109
RPBXT Series - Features and Benefits 110
RPBXT Series - Specifications and Dimensions 111
RPBXT Series, Four-Bolt Pillow Blocks 111
ERPBXT Series, Expansion Four-Bolt Pillow Blocks 111
SPB Series - Specifications and Dimensions (Steel Housing) 112
SPB Series, Two-Bolt Pillow Blocks (Steel Housing) 112
SPB Series, Four-Bolt Pillow Blocks (Steel Housing) 112
RFB, RFP Series Flange Units - Specifications and Dimensions .. 114-117
RFB Series Flange Units - Four Bolts 114
RFB-A Series Flange Units - Four Bolts 115
RFP Series Piloted Flange Units - Four Bolts 116
RFP-A Series Piloted Flange Units - Four Bolts 117
RPB Series Cartridge Inserts - Specifications and Dimensions ... 118-120
ERCI Series Cylindrical Cartridge Inserts 118-119
RCI and RCI-A Cartridge Inserts (One & Two Locking Collars) 120
Custom Design RPB Series Roller Bearings 122-127
RPB-CR Corrosion Resistant 122-123
RPB-AH Series - Air Handling 124-125
RPB-M Metric Bore 126-127
Application Problem Solvers 129-143

SEALMASTER® MOUNTED ROLLER BEARINGS

	SERIES	Bearing Configuration	Fixed Type	Expansion Type	Housing Material	Mounting Base	Setscrew Locking Collar	Available Bore Sizes (Inches)	Other Important Features Selection Factors Application Information
	RPB Features & Benefits See Pages 98-103 **Dimensional Data** **Page 104**	Pillow Block	x		Cast Iron	Standard Two and Four Bolt; Elongated Bolt Holes	Double	$1^{3}/16$ - 5	The basic RPB-Series Bearing, Used in the widest range of applications; choice of *three* sealing arrangements as shown.
	RPB-A Features & Benefits See Pages 98-103 **Dimensional Data** **Page 105**	Pillow Block	x		Cast Iron	Standard Two and Four Bolt; Elongated Bolt Holes	Single	$1^{3}/16$ – 5	Particulary recommended where space is limited; fewer sizes; choice of three basic sealing arrangements.
	ERPB Features & Benefits See Pages 98-103 **Dimensional Data** **Page 106**	"Floating" Pillow Block-Expansion Type		x	Cast Iron	Two and Four Bolt; *Matches* the Mounting Dim. of RPB, RPB-A	Double	$1^{3}/4$ – 5	Generally used in conjunction with RPB/RPB-A Series units where a "floating" or expansion pillow block is required.
	RPBXT Features & Benefits See Page 110 **Dimensional Data** **Page 111** And ERPB-XT	Pillow Block (Non-Expansion and Expansion Type)	x RPB-XT	x ERPB-XT	Cast Iron	Four Bolt Only; Elongated Bolt Holes	Double	$2^{1}/4$ – 5	Interchanges base to centerline and bolt hole spacing with 500 Series SAF style spherical roller bearing pillow blocks.
	DRPB Features & Benefits See Pages 98-103 **Dimensional Data** **Page 107**	Pillow Block– *High Base* to Shaft ℄ Mounting	x		Cast Iron	*Wide Base,* Two and Four Bolt Designs	Double	$1^{3}/4$ – 4	*Dimensionally interchangeable with competitive "DI" types;* bearing load and speed capabilities equal to RPB.
	DRPB-A Features & Benefits See Pages 98-103 **Dimensional Data** **Page 108**	Pillow Block– *High Base* to Shaft ℄ Mounting	x		Cast Iron	*Wide Base,* Two and Four Bolt Designs	Single	$1^{3}/4$ – 4	*Dimensionally interchangeable with competitive "K" types;* bearing load and speed capabilities equal to RPB.
	EDPB-A Features & Benefits See Pages 98-103 **Dimensional Data** **Page 109**	"Floating" Pillow Block Expansion Type		x	Cast Iron	Two and Four Bolt *Expansion,* High Base Type	Single	$1^{3}/4$ – 4	Expansion type with high base-to-shaft centerline mounting dimensions; interchangeable with competitors "K" Series.
	SPB Features & Benefits See Pages 98-103 **Dimensional Data** **Page 112**	Pillow Block	x		Cast Steel	Two Bolt	Double	$1^{1}/2$ –$3^{1}/2$	Steel housings meet SAE J43T specifications, 65,000 psi. Choice of three sealing arrangements.

TYPE, SIZES, AVAILABILITY, SELECTION FACTORS

	SERIES	Bearing Configuration	Fixed Type	Expansion Type	Housing Material	Mounting Base	Setscrew Locking Collar	Available Bore Sizes (Inches)	Other Important Features Selection Factors Application Information
	SPB Features & Benefits See Pages 98-103 **Dimensional Data Page 112**	Pillow Block	x		Cast Steel	Four Bolt	Double	$3\frac{15}{16}$ – 5	Steel Housings meet SAE J43T specifications, 65,000 psi. Choice of three sealing arrangements.
	RFB **Dimensional Data Page 114**	Flange Units	x		Cast Iron	Standard Four Bolt	Double	$1\frac{3}{16}$ – 4 1/2	Designed for industrial machinery where heavy loads at low, medium or relatively high speeds exist; vertical or horizontal face mounting.
	RFB-A **Dimensional Data Page 115**	Flange Units	x		Cast Iron	Standard Four Bolt	Single	$1\frac{3}{16}$ – 4 1/2	For moderate loads at low to medium high speeds exist, or where space along the shaft is at a premium.
	RFP **Dimensional Data Page 116**	Piloted Flange Units	x		Cast Iron	Standard Four Bolt	Double	$1\frac{3}{16}$ – 5	Designed for applications where heavy loads at low, medium or relatively high speeds exist.
	RFP-A **Dimensional Data Page 117**	Piloted Flange Units	x		Cast Iron	Standard Four Bolt	Single	$1\frac{3}{16}$ – 5	Designed for applications where moderate loads at low to medium high speeds exist.
	ERCI **Dimensional Data Pages 118 & 119**	Cylindrical Cartridge Inserts (For ERPB)		x			Double	$1\frac{3}{4}$ – 5	Designed to mount directly in customer housings, or as replacement insert for RPB-Expansion Type Bearings.
	RCI **RCI-A** **Dimensional Data Page 120**	Replaceable Cartridge Inserts (Two Types)	x				Double Single	$1\frac{3}{16}$ – 5	Applicable to *ALL* fixed type RPB-Series Bearings in this group.
	RPB-CR Corrosion Resistant Features & Benefits **Pages 122-123**	*Available in All Standard Bearing Styles	x	x	Cast Iron	All Housing Styles	Single Double	$1\frac{3}{16}$ – 5	Designed especially for applications where the bearings may be subjected to moisture corrosive and abrasive environments.
	RPB-AH **Air Handling** Features & Benefits **See Pages 98-103,124** **Dimensional Data** Pages 125	*Available in Pillow Blocks, Flange Units Piloted Flange Units	x	x **Available**	Cast Iron	Standard Two and Four Bolt Pillow Blocks*	Double	$1\frac{3}{16}$ – 5	Designed especially for air handling applications in the HVAC... higher speeds some vibration, low noise levels.
	RPB-M **Metric** Features & Benefits See Pages 98-103,126 **Dimensional Data Pages 127**	*Available in ALL-Standard Bearing Styles	x	x **Available**	Cast Iron	Standard Two and Four Bolt Pillow Blocks*	Double	(35-125mm)	Available in RPB-Series with split housing.

Check Out the Industry's Only Tapered Roller Bearing Units in This Compact Size Range... With Unitized, Self-Aligning Replaceable Cartridge Inserts.

SEALMASTER RPB Series mounted roller bearings *'MASTER'* the *toughest* application conditions, handling combination radial and thrust loads in a broad range of severe duty services. *And they keep on going!*

For more than 20 years, RPB Series bearings have been put to the ultimate tests in a variety of tough services and most demanding environments. They've demonstrated *exceptional* service life in problem applications from aggregates to chemical processing... in sawmills and pulp and paper mills, etc... where they've *kept on rolling when other bearings failed.*

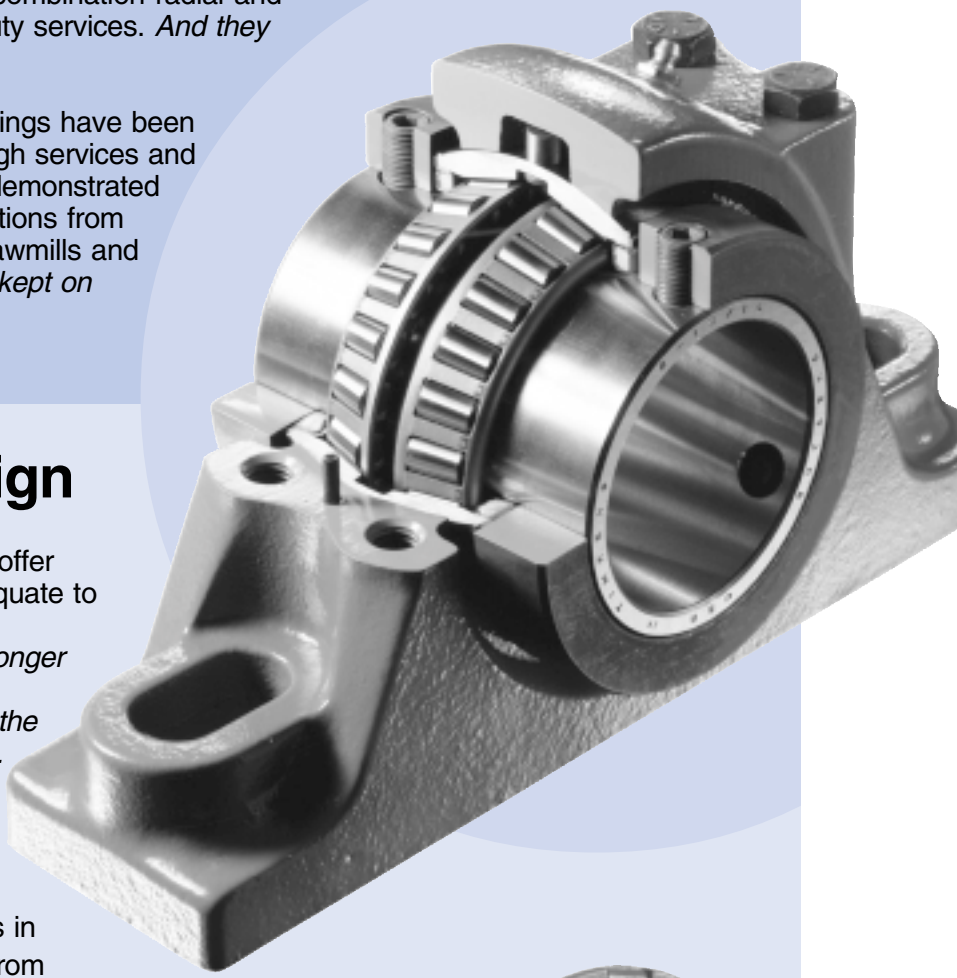

Toughness By Design

These premium heavy-duty bearing units offer outstanding design *features* that rapidly equate to money-saving *benefits...* like significantly *increased* overall reliability, substantially *longer* operating life, *reduced* maintenance, replacement and downtime... *even under the toughest and most demanding conditions.*

More Sizes, More Configurations Mean More Choices

Select from two and four-bolt pillow blocks in bore sizes from 1 3/16" - 5", flange units from 1 3/16" - 4 1/2", piloted flange units and *"one-size-fits-all"* cartridge inserts in the full range of bore sizes, 1 3/16" - 5". *All are available for quick shipment from stock.*

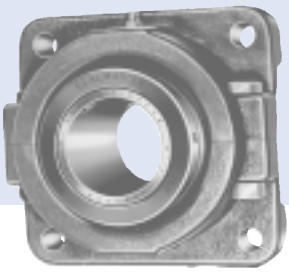

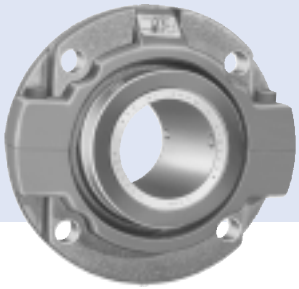

TOUGH AS THEY COME!

DURABLE CAST IRON SPLIT HOUSINGS

The user's major cost is not always the original cost of the bearing, but the installation time required to put it into productive operation. RPB cast iron split housings have a ribbed design for added strength. Cap bolts are Grade 5 minimum width 60,000 psi tensile strength.

- Quickest replacement of bearing insert whenever change out is needed.
- Once installed, the housing base *always* remains aligned with the shaft... doesn't need to be disturbed.
- Reduce downtime, replacement costs.
- Guide pins in the housing base and mating holes in the cap help eliminate error during replacement. Guide pins *ensure* the proper orientation of the top housing - *in the same direction in which it was machined at the factory* - for optimum fitup and assembly.

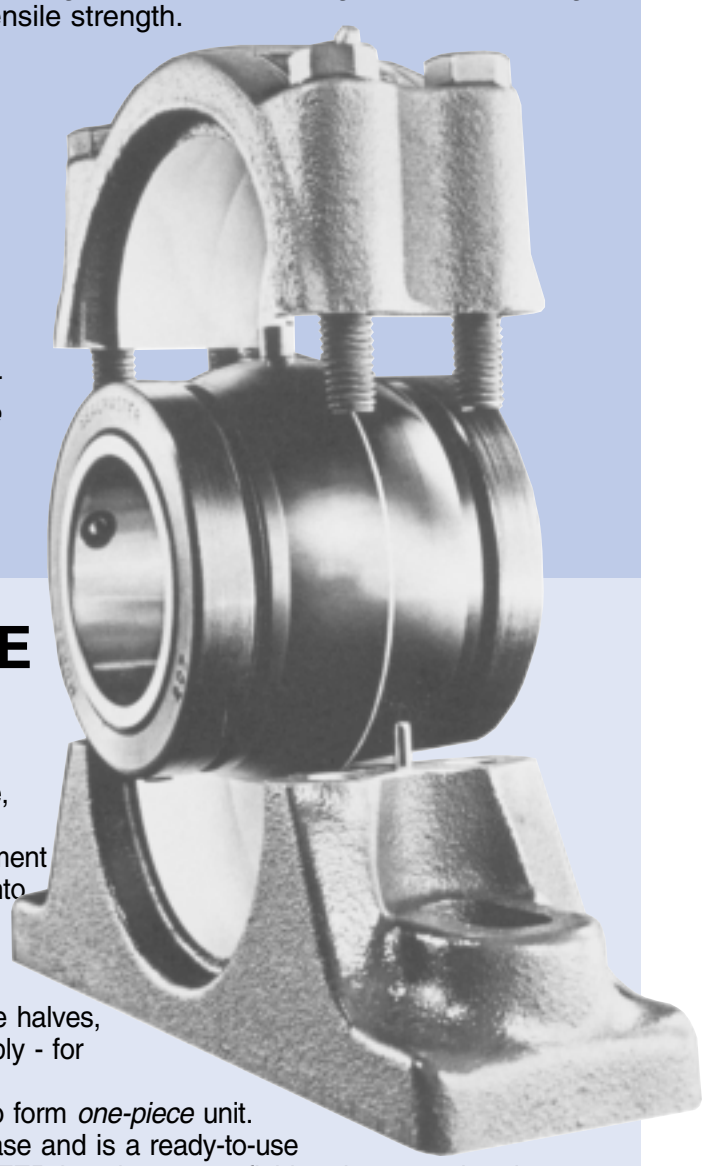

UNITIZED REPLACEABLE CARTRIDGE INSERTS

The heart of the RPB Series bearing is the one-piece, self-aligning cartridge with integral seals and double locking collars. This represents a significant achievement in engineering and manufacture. Each cartridge fits into *any* RPB housing style for maximum control of inventory and easy replacement.

- Constructed from two precision ground outer race halves, *matched* to a Timken® bearing inner race assembly - for optimum end play control.
- Outer race halves are then carefully processed to form *one-piece* unit.
- The cartridge unit is sealed and packed with grease and is a ready-to-use self-contained insert - for assembly in SEALMASTER housings or as field replacement bearings.
- Optimum factory-controlled end play eliminates use of shims, snap rings, machined shoulders and lock nuts, ensures proper roller contact with the races reducing edge loading, eliminates field adjustment problems found with other designs.

UNIQUE...UNCHALLENGED...THE UNDISPUTED LEADER IN QUALITY AND VALUE-ADDED ADVANTAGES

TIMKEN® TAPERED ROLLER BEARINGS

Offer rugged design, proven performance and outstanding reliability in a diversity of heavy-duty applications...

- Inner race, rollers and cage assemblies manufactured by Timken®, with over 80 years' experience in this type of bearing.. tapered rollers provide true rolling motion with minimum friction.
- Inner race and rollers of case-hardened, alloy steel - provide long fatigue life under heavy loads.
- Ensures optimum performance under combined radial and thrust loads. Can carry high thrust loads where spherical bearings in the same type of application may be limited.

ONE-PIECE SPHERICAL OUTER RACE

- Manufactured from through-hardened 52100 steel with a spherical outside diameter; black oxide treated for corrosion protection.
- Precision fit with the spherical seat in the housing... provides even load distribution, allows full 3° static misalignment capability - more than twice the capability of most other spherical bearings - the 3° self-aligning feature reduces abnormal stress on bearing components and seals...overcomes alignment problems common in rigid type tapered roller bearings with one-piece housings.

ALIGNMENT PIN

- Inserted between the mating outer race halves - fits into a recess in the housing top.
- Ensures positive lubrication - one of two cartridge lubrication openings always lines up with the grease fitting.
- Prevents outer race rotation of the cartridge insert; the hardened steel outer race cannot rotate in the housing under load, thus keeping intact the factory-adjusted fit between the housing and cartridge... the race will not wear away the cast iron housing because it is locked in place.

POSITIVE LUBRICATION SYSTEM

Lubrication doesn't have to travel around an annular grease groove - it follows a short path directly into the bearing!

- Cartridge contains two lubrication ports and one relief port... extra lube ports prevent seal damage by venting excess pressure from overgreasing.
- Rubber grommet is located in the housing cavity beneath the grease fitting - lines up with one of the lube ports in the cartridge to direct the grease into the bearing... competitive spherical roller bearings with one-piece outer races are designed with a circumferential grease groove and oil hole to direct grease into the bearing; soap base greases (conforming to NLGI grade #2) can dry out, cake and harden if the bearing is stored for long periods of time or not lubricated frequently. This can obstruct clean grease from entering the bearing and possibly lead to a premature bearing failure.
- The cartridge is designed for universal assembly into any RPB housing style... can be a major cost-saver where many bearings are used.

PATENTED FELT LABYRINTH RACE MOUNTED SEALS

Direct contaminants away from the sealing surfaces... provide a tight fit to exclude foreign material... have less drag and less heat generation than radial lip rubber contact seals.

- Same proven design used in SEALMASTER Gold Line Ball Bearings.
- Outer shield rotates with the shaft, creating a flinger action which reduces contaminant build-up. Outer flinger-shield extends slightly into bearing chamber to churn and break up the grease flow and direct it back into the rolling elements.
- Effective sealing in dry, dusty or dirty environments - felt acts as a filter, has low friction.
- Race mounted seals are not subject to misalignment distortion.
- Shields are black oxide treated for corrosion protection.

TOUGH AS THEY COME!

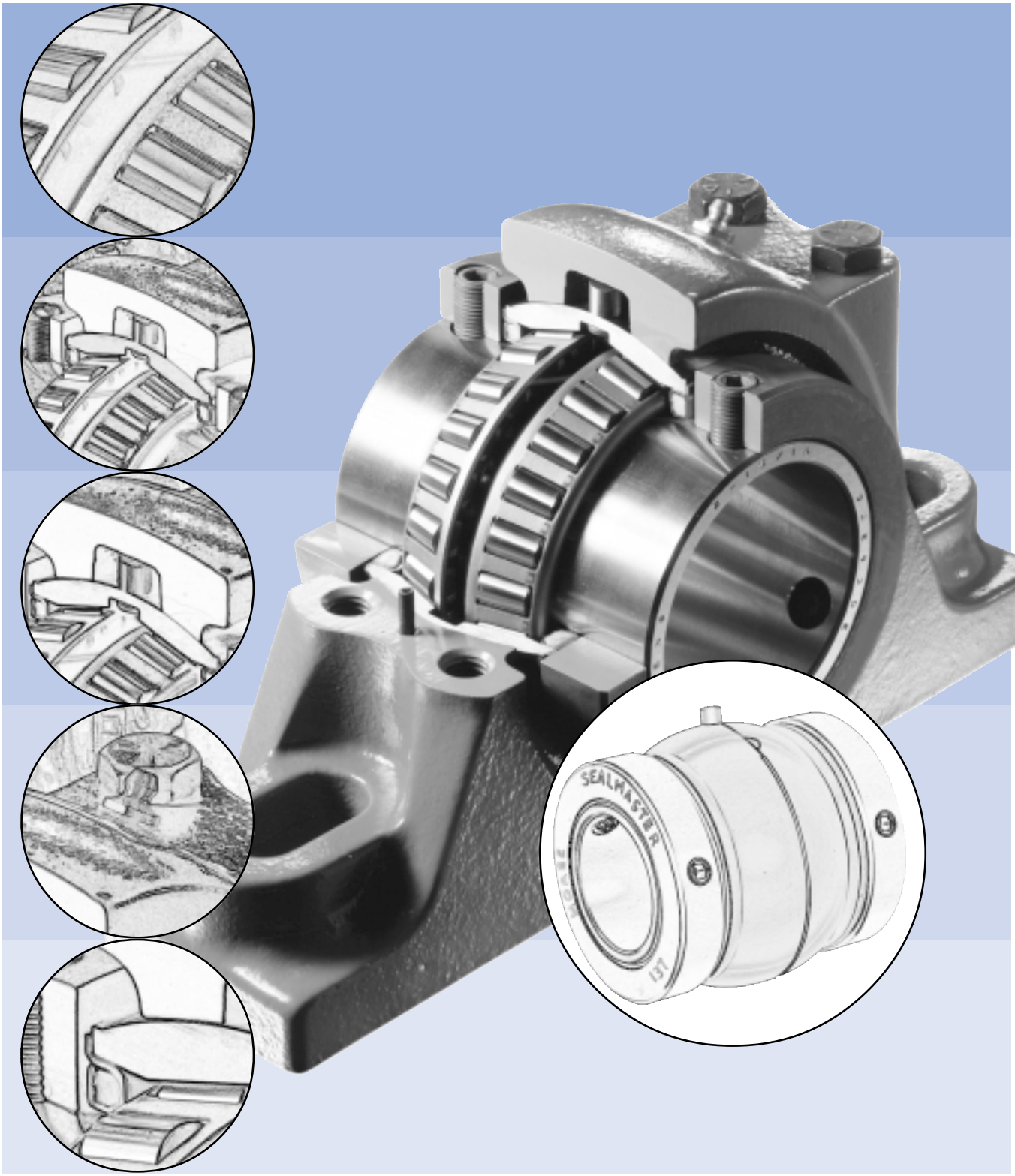

UNIQUE...UNCHALLENGED...THE UNDISPUTED LEADER IN QUALITY AND VALUE-ADDED ADVANTAGES

SINGLE LIP RACE MOUNTED CONTACT SEALS

Available on all bearing sizes recommended where moisture conditions prevail...

- Consists of an elastomeric rubber sealing element bonded to a steel shield.
- Functions well in wet and dirty environments up to 250° F.
- Has good chemical resistance properties.
- Race mounted seals are not subject to misalignment distortion.
- Shields are black oxide treated for corrosion protection.

CONCENTRIC DOUBLE LOCKING COLLARS

The RPB locking system has MORE HOLDING POWER compared to spherical roller bearings with one lock collar (4 setscrews instead of 2)

- Each collar has 2 setscrews spaced at 120° - provides balanced three-point contact and symmetrical locking.
- Hardened setscrews in a soft collar provide maximum holding power in applications involving heavy loads, reversing and vibration... a special coating on the setscrews reduces the friction when inserting and torquing them into the lock collars, resulting in more holding power.
- Double extended inner races provide excellent shaft support - load is distributed evenly over a wide area.
- Collars also serve as 2 extra flingers that rotate with the shaft to repel contaminants away from the seal.
- Black oxide treated for added corrosion protection.

OTHER FEATURES AND OPTIONS

1. SINGLE LOCKING COLLARS

Generally for applications involving shaft length considerations or limited space.

- Available from stock in bore sizes, 1 3/4" - 3 15/16".
- Designated with "A" suffix, e.g. RPBA207-2... see pages 105, 108, 109, 115, 117, and 120.

2. CYLINDRICAL CARTRIDGE INSERTS

Designed to mount directly into customer housings and as inserts in expansion RPB housings.

- Available from stock in 1 3/4" - 5" bore sizes with felt and contact seals.
- High temperature grease and seals can be supplied on request.

3. EXPANSION TWO AND FOUR BOLT PILLOW BLOCKS

- Available from stock in bore sizes 1 3/4" - 5".
- Total expansion 3/16" - 3/8"... see pages 106, 109 and 111.

4. CAST STEEL PILLOW BLOCKS

For applications requiring greater housing strength than cast iron.

- Two bolt bases - bore sizes 1 1/2" - 3 1/2"... see page 112.
- Four bolt bases - bore sizes 3 15/16" - 5"... see page 112.

5. INDUSTRY INTERCHANGEABILITY

- Same bolt centers and base-to-shaft centerline as most competitive one-piece housings. (Metal nameplate attached securely beneath the grease fitting for long-lasting identification.)
- Longer bolt slots permit easy replacement for most competitive brands.
- New RPBXT Series has interchangeable shaft-to-centerline dimensions and bolt hole spacing with the popular 500 Series SAF style spherical roller bearing pillow blocks... see pages 110 and 111.

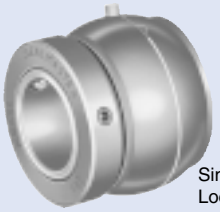

Single Locking Collars

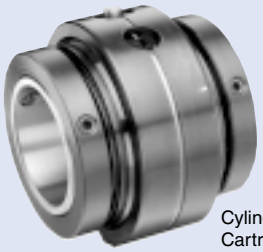

Cylindrical Cartridge Inserts

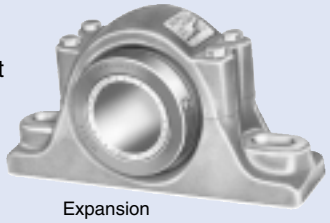

Expansion Two & Four Bolt Pillow Blocks

Cast Steel Pillow Blocks

TOUGH AS THEY COME!

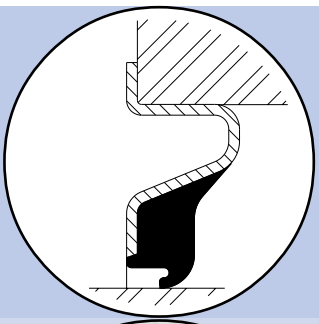

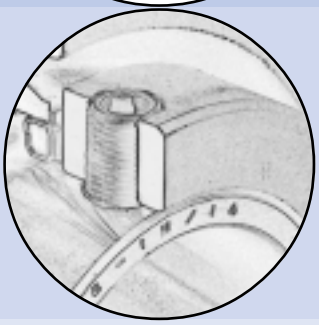

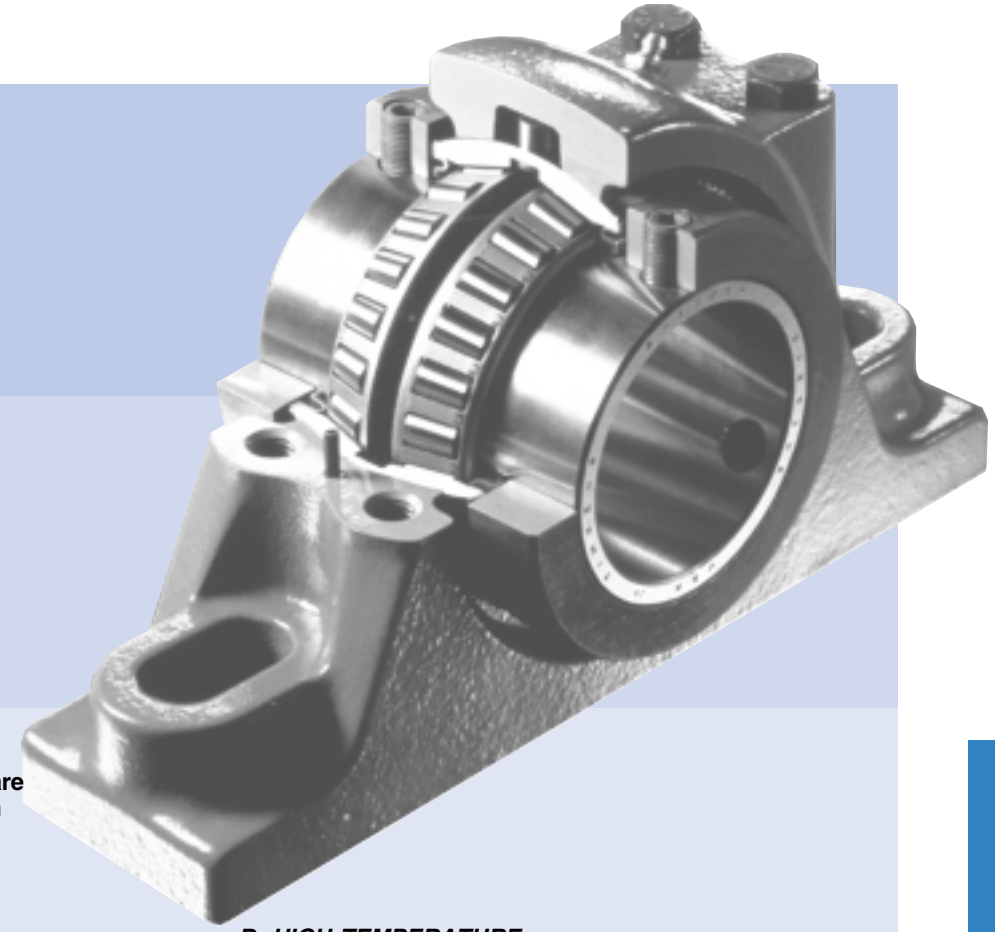

6. CUSTOM CAPABILITIES
Versatile RPB Series roller bearings are adaptable to a broad range of custom design features. Price and delivery furnished on request.
Some of these include...

A: TIGHT HOUSING FITS
• Tight housing fit "TF" for vibrating conveyor applications.

Some applications require a tight fit-up between the bearing cartridge O.D. and the housing. Typical applications of this type are on vibrating conveyors and shaker screens where eccentric and rotating loads exist. The tight fit-up prevents the movement of the cartridge in the housing. The RPB-TF units are shipped from the factory with cap bolts snugged by hand and tagged with the proper torque specifications. It is important to allow the cartridge insert to seat itself properly *before* torquing the capscrews and cap bolts.

See pages 140-141 for Vibratory Application information.

B: CUSTOM HOUSINGS
Generally require pattern and tooling charges - price and delivery furnished on request.
• Tapped base pillow blocks.
• Housing styles to match competitive base-to- centerline and bolt spacing dimensions.
• Ductile iron or steel.

C: REDUCED END PLAY
Requires an application review by our engineering department. Ask our Engineers for additional information.

D: HIGH TEMPERATURE
• High temperature seals and grease - "Nomex" material is used in place of felt where requested for elevated temperature environments...the current high temperature grease standard is Mobile SHC 460.
• Price and delivery of customer lubricants including (OSP) oil saturated polymer can be furnished on request.

For all tough applications... where performance and reliability count... specify SEALMASTER Self-Aligning RPB Series tapered roller bearings.

Refer to specifications and dimensions on the following pages.

Contact SEALMASTER Applications at 630-898-9620.

UNIQUE...UNCHALLENGED...THE UNDISPUTED LEADER IN QUALITY AND VALUE-ADDED ADVANTAGES

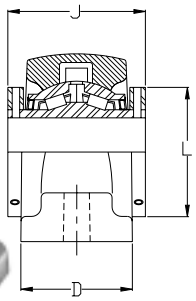

Two Bolt Base

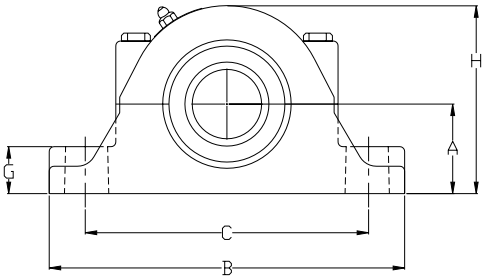

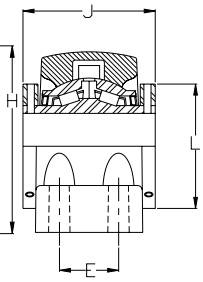

Four Bolt Base

RPB Series Pillow Blocks...**Two Bolt Base**

SHAFT DIAM. IN.	STANDARD SEAL PART NO.	CONTACT SEAL PART NO.	HI-TEMP (1) SEAL PART NO.	APPROX. WT. IN LBS.	DIMENSIONS IN INCHES										BASE BOLTS	
					A	B	C MIN.	C MAX.	D	E	G	H	J	L	NO.	SIZE
1 3/16 1 1/4	RPB-103-2 RPB-104-2	RPB-103-C2 RPB-104-C2	RPB-103-N2 RPB-104-N2	4.80	1 1/2	6 1/4	4 9/16	4.94	1.88	-	.88	3.12	2.75	2.25	2	1/2
1 3/8 1 7/16	RPB-106-2 RPB-107-2	RPB-106-C2 RPB-107-C2	RPB-106-N2 RPB-107-N2	7.7	1 7/8	7 1/4	5 5/16	5.94	2.06	-	1.12	3.81	3.00	2.62	2	1/2
1 1/2 1 5/8 1 11/16	RPB-108-2 RPB-110-2 RPB-111-2	RPB-108-C2 RPB-110-C2 RPB-111-C2	RPB-108-N2 RPB-110-N2 RPB-111-N2	10.9	2 1/8	7 3/4	5 9/16	6.44	2.31	-	1.25	4.38	3.38	2.88	2	1/2
1 3/4 1 15/16 2	RPB-112-2 RPB-115-2 RPB-200-2	RPB-112-C2 RPB-115-C2 RPB-200-C2	RPB-112-N2 RPB-115-N2 RPB-200-N2	13.2	2 1/4	8 7/8	6 5/16	7.19	2.44	-	1.25	4.62	3.50	3.25	2	5/8
2 3/16	RPB-203-2	RPB-203-C2	RPB-203-N2	15.7	2 1/2	9 5/8	6 11/16	7.94	2.56	-	1.44	5.12	3.75	3.62	2	5/8
2 1/4 2 7/16 2 1/2	RPB-204-2 RPB-207-2 RPB-208-2	RPB-204-C2 RPB-207-C2 RPB-208-C2	RPB-204-N2 RPB-207-N2 RPB-208-N2	20.7	2 3/4	10 3/8	6 15/16	8.69	2.75	-	1.62	5.62	4.00	3.94	2	5/8
2 11/16 2 3/4 2 15/16 3	RPB-211-2 RPB-212-2 RPB-215-2 RPB-300-2	RPB-211-C2 RPB-212-C2 RPB-215-C2 RPB-300-C2	RPB-211-N2 RPB-212-N2 RPB-215-N2 RPB-300-N2	29.3	3 1/8	11 3/4	8 1/6	9.69	3.00	-	1.75	6.38	4.50	4.75	2	3/4
3 3/16 3 7/16 3 1/2	RPB-303-2 RPB-307-2 RPB-308-2	RPB-303-C2 RPB-307-C2 RPB-308-C2	RPB-303-N2 RPB-307-N2 RPB-308-N2	56.0	3 3/4	13 3/4	10 1/8	11.25	4.12	-	2.06	7.75	5.00	5.55	2	7/8

RPB Series Pillow Blocks...**Four Bolt Base**

SHAFT DIAM. IN.	STANDARD SEAL PART NO.	CONTACT SEAL PART NO.	HI-TEMP (1) SEAL PART NO.	APPROX. WT. IN LBS.	DIMENSIONS IN INCHES										BASE BOLTS	
					A	B	C MIN.	C MAX.	D	E	G	H	J	L	NO.	SIZE
2 1/4 2 7/16 2 1/2	RPB-204-4 RPB-207-4 RPB-208-4	RPB-204-C4 RPB-207-C4 RPB-208-C4	RPB-204-N4 RPB-207-N4 RPB-208-N4	22.4	2.75	10.38	7.75	8.75	3.50	1.88	1.62	5.62	4.00	3.94	4	5/8
2 11/16 2 3/4 2 15/16 3	RPB-211-4 RPB-212-4 RPB-215-4 RPB-300-4	RPB-211-C4 RPB-212-C4 RPB-215-C4 RPB-300-C4	RPB-211-N4 RPB-212-N4 RPB-215-N4 RPB-300-N4	31.5	3.12	11.75	8.75	10.00	3.75	2.12	1.75	6.38	4.50	4.75	4	5/8
3 3/16 3 7/16 3 1/2	RPB-303-4 RPB-307-4 RPB-308-4	RPB-303-C4 RPB-307-C4 RPB-308-C4	RPB-303-N4 RPB-307-N4 RPB-308-N4	59.6	3.75	13.75	10.56	11.50	4.50	2.38	2.06	7.75	5.00	5.55	4	5/8
3 15/16 4	RPB-315-4 RPB-400-4	RPB-315-C4 RPB-400-C4	RPB-315-N4 RPB-400-N4	76.9	4.25	15.25	11.00	13.00	4.50	2.25	2.44	8.62	6.25	6.00	4	5/8
4 7/16 4 1/2	RPB-407-4 RPB-408-4	RPB-407-C4 RPB-408-C4	RPB-407-N4 RPB-408-N4	95.6	4.75	16.50	11.75	13.88	4.62	2.50	2.75	9.62	6.75	6.50	4	3/4
4 15/16 5	RPB-415-4 RPB-500-4	RPB-415-C4 RPB-500-C4	RPB-415-N4 RPB-500-N4	143.6	5.50	18.50	13.50	15.88	5.12	2.75	3.12	11.00	7.25	7.31	4	7/8

See page 105 for seal arrangements. (1) High temp units are factory assembled-to-order basis.
For Load Ratings, see page 121.

SEALMASTER® MOUNTED ROLLER BEARINGS

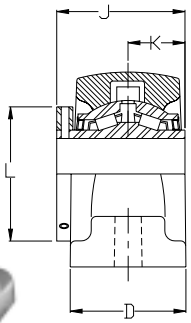

Two Bolt Base

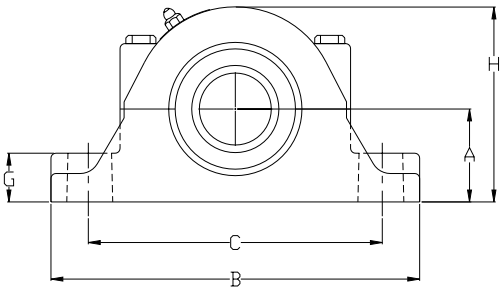

The RPB-A series is similar in design to RPB series, but has only one locking collar, and is recommended where axial shaft space is limited.

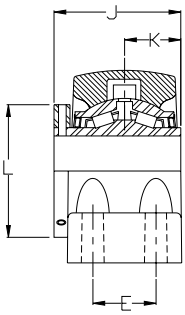

Four Bolt Base

RPB-A Series Pillow Blocks...**Two Bolt Base**

SHAFT DIAM. IN.	STANDARD SEAL PART NO.	CONTACT SEAL PART NO.	HI-TEMP (1) SEAL PART NO.	APPROX. WT. IN LBS.	DIMENSIONS IN INCHES A	B	C MIN.	C MAX	D	E	G	H	J	K	L	BASE BOLTS NO.	SIZE
1 3/16 1 1/4	RPBA-103-2 RPBA-104-2	RPBA-103-C2 RPBA-104-C2	RPBA-103-N2 RPBA-104-N2	**4.8**	1.50	6.25	4.56	4.94	1.88	-	.88	3.12	2.37	1.00	2.25	2	1/2
1 3/8 1 7/16	RPBA-106-2 RPBA-107-2	RPBA-106-C2 RPBA-107-C2	RPBA-106-N2 RPBA-107-N2	**7.7**	1.88	7.25	5,31	5.94	2.06	-	1.12	3.81	2.53	1.15	2.62	2	1/2
1 1/2 1 5/8 1 11/16	RPBA-108-2 RPBA-110-2 RPBA-111-2	RPBA-108-C2 RPBA-110-C2 RPBA-111-C2	RPBA-108-N2 RPBA-110-N2 RPBA-111-N2	**10.9**	2.12	7.75	5.56	6.44	2.31	-	1.25	4.38	2.84	1.15	2.88	2	1/2
1 3/4 1 15/16 2	RPBA-112-2 RPBA-115-2 RPBA-200-2	RPBA-112-C2 RPBA-115-C2 RPBA-200-C2	RPBA-112-N2 RPBA-115-N2 RPBA-200-C2	**13.2**	2.25	8.88	6.31	7.19	2.44	-	1.25	4.62	2.95	1.20	3.25	2	5/8
2 3/16	RPBA-203-2	RPBA-203-C2	RPBA-203-N2	**15.7**	2.50	9.62	6.69	7.94	2.56	-	1.44	5.12	3.12	1.25	3.62	2	5/8
2 1/4 2 7/16 2 1/2	RPBA-204-2 RPBA-207-2 RPBA-208-2	RPBA-204-C2 RPBA-207-C2 RPBA-208-C2	RPBA-204-N2 RPBA-207-N2 RPBA-208-N2	**20.7**	2.75	10.38	6.94	8.69	2.75	-	1.82	5.62	3.31	1.31	3.94	2	5/8
2 11/16 2 3/4 2 15/16 3	RPBA-211-2 RPBA-212-2 RPBA-215-2 RPBA-300-2	RPBA-211-C2 RPBA-212-C2 RPBA-215-C2 RPBA-300-C2	RPBA-211-N2 RPNA-212-N2 RPBA-215-N2 RPBA-300-N2	**29.3**	3.12	11.75	8.06	9.69	3.00	-	1.75	6.38	3.69	1.44	4.75	2	3/4
3 3/16 3 7/16 3 1/2	RPBA-303-2 RPBA-307-2 RPBA-308-2	RPBA-303-C2 RPBA-307-C2 RPBA-308-C2	RPBA-303-N2 RPBA-307-N2 RPBA-308-N2	**56.0**	3.75	13.75	10.12	11.25	4.12	-	2.06	7.75	4.19	1.89	5.55	2	7/8

RPB-A Series Pillow Blocks...**Four Bolt Base**

SHAFT DIAM. IN.	STANDARD SEAL PART NO.	CONTACT SEAL PART NO.	HI-TEMP (1) SEAL PART NO.	APPROX. WT. IN LBS.	DIMENSIONS IN INCHES A	B	C MIN.	C MAX	D	E	G	H	J	K	L	BASE BOLTS NO.	SIZE
2 1/4 2 7/16 2 1/2	RPBA-204-4 RPBA-207-4 RPBA-208-4	RPBA-204-C4 RPBA-207-C4 RPBA-208-C4	RPBA-204-N4 RPBA-207-N4 RPBA-208-N4	22.4	2.75	10.38	7.75	8.75	3.50	1.88	1.82	5.62	3.31	1.31	3.94	4	5/8
2 11/16 2 3/4 2 15/16 3	RPBA-211-4 RPBA-212-4 RPBA-215-4 RPBA-300-4	RPBA-211-C4 RPBA-212-C4 RPBA-215-C4 RPBA-300-C4	RPBA-211-N4 RPNA-212-N4 RPBA-215-N4 RPBA-300-N4	31.5	3.12	11.75	8.75	10.00	3.75	2.12	1.75	6.38	3.69	1.44	4.75	4	3/4
3 3/16 3 7/16 3 1/2	RPBA-303-4 RPBA-307-4 RPBA-308-4	RPBA-303-C4 RPBA-307-C4 RPBA-308-C4	RPBA-303-N4 RPBA-307-N4 RPBA-308-N4	59.8	3.75	13.75	10.56	11.50	4.50	2.38	2.06	7.75	4.19	1.89	5.55	4	7/8
3 15/16 4	RPBA-315-4 RPBA-400-4	RPBA-315-C4 RPBA-400-C4	RPBA-315-N4 RPBA-400-N4	76.9	4.25	15.25	11.00	13.00	4.50	2.25	2.44	8.62	5.25	2.13	6.00	4	5/8
4 7/16 4 1/2	RPBA-407-4 RPBA-408-4	RPBA-407-C4 RPBA-408-C4	RPBA-407-N4 RPBA-408-N4	95.6	4.75	16.50	11.75	13.88	4.62	2.50	2.87	9.63	5.50	2.12	6.50	4	3/4
4 15/16 5	RPBA-415-4 RPBA-500-4	RPBA-415-C4 RPBA-500-C4	RPBA-415-N4 RPBA-500-N4	143.6	5.50	18.50	13.50	15.88	5.12	2.75	3.12	11.00	6.21	2.58	7.31	4	7/8

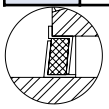

Felt Seal Standard
Positive sealing for low, medium, and high speed operation.

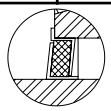

Hi-Temp Seal
Available as an option where operating temperatures are in 250-400° range.

Single Lip Contact Seal
Available on all sizes. Recommended where moisture conditions prevail.

For Replacement Cartridge Insert See Page 120.
For Load Ratings See Page 121.
For Metric Bores, See Page 127.

(1) Hi-Temp Units are factory assembled-to-order basis.

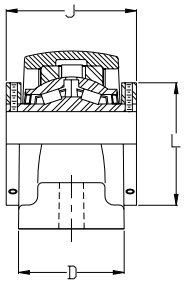

Two Bolt Base

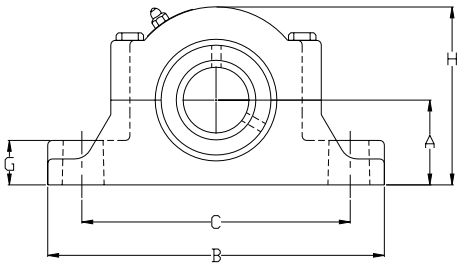

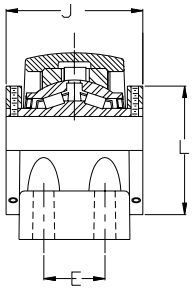

Four Bolt Base

ERPB Series Expansion Type Pillow Blocks...**Two Bolt Base**

SHAFT DIAM. IN.	STANDARD SEAL PART NO.	CONTACT SEAL PART NO.	HI-TEMP (1) SEAL PART NO.	APPROX. WT. IN LBS.	DIMENSIONS IN INCHES A	B	C MIN.	C MAX.	D	E	G	H	J	L	BASE BOLTS NO.	BASE BOLTS SIZE	TOTAL EXPANSION
1 3/4 1 15/16 2	ERPB-112-2 ERPB-115-2 ERPB-200-2	ERPB-112-C2 ERPB-115-C2 ERPB-200-C2	ERPB-112-N2 ERPB-115-N2 ERPB-200-N2	14.9	2.25	8.88	6.31	7.19	2.89	—	1.25	4.88	3.50	3.25	2	5/8	3/16
2 3/16	ERPB-203-2	ERPB-203-C2	ERPB-203-N2	17.8	2.50	9.62	6.69	7.94	3.03	—	1.44	5.31	3.75	3.62	2	5/8	3/16
2 1/4 2 7/16 2 1/2	ERPB-204-2 ERPB-207-2 ERPB-208-2	ERPB-204-C2 ERPB-207-C2 ERPB-208-C2	ERPB-204-N2 ERPB-207-N2 ERPB-208-N2	23.0	2.75	10.38	6.94	8.69	3.41	—	1.62	5.75	4.00	3.94	2	5/8	1/4
2 11/16 2 3/4 2 15/16 3	ERPB-211-2 ERPB-212-2 ERPB-215-2 ERPB-300-2	ERPB-211-C2 ERPB-212-C2 ERPB-215-C2 ERPB-300-C2	ERPB-211-N2 ERPB-212-N2 ERPB-215-N2 ERPB-300-N2	32.0	3.12	11.75	8.06	9.69	3.48	—	1.75	6.56	4.50	4.75	2	3/4	5/16
3 3/16 3 7/16 3 1/2	ERPB-303-2 ERPB-307-2 ERPB-308-2	ERPB-303-C2 ERPB-307-C2 ERPB-308-C2	ERPB-303-N2 ERPB-307-N2 ERPB-308-N2	64.0	3.75	13.75	10.12	11.25	4.51	—	2.06	7.94	5.00	5.55	2	7/8	5/16

ERPB Series Expansion Type Pillow Blocks...**Four Bolt Base**

SHAFT DIAM. IN.	STANDARD SEAL PART NO.	CONTACT SEAL PART NO.	HI-TEMP (1) SEAL PART NO.	APPROX. WT. IN LBS.	DIMENSIONS IN INCHES A	B	C MIN.	C MAX.	D	E	G	H	J	L	BASE BOLTS NO.	BASE BOLTS SIZE	TOTAL EXPANSION
3 15/16 4	ERPB-315-4 ERPB-400-4	ERPB-315-C4 ERPB-400-C4	ERPB-315-N4 ERPB-400-N4	90.0	4.25	15.25	11.00	13.00	5.15	2.25	2.44	8.88	6.25	6.00	4	3/4	3/8
4 7/16 4 1/2	ERPB-407-4 ERPB-408-4	ERPB-407-C4 ERPB-408-C4	ERPB-407-N4 ERPB-408-N4	110.6	4.75	16.50	11.75	13.88	5.35	2.50	2.75	9.88	6.75	6.50	4	3/4	3/8
4 15/16 5	ERPB-415-4 ERPB-500-4	ERPB-415-C4 ERPB-500-C4	ERPB-415-N4 ERPB-500-N4	161.0	5.50	18.50	13.50	15.88	6.07	2.75	3.12	11.31	7.25	7.31	4	7/8	3/8

The ERPB series of expansion roller bearing pillow blocks is designed for use in conjunction with the RPB and RPBA series where a "floating" or expansion type block is required.
While two fixed units mounted on one shaft are normally satisfactory for most applications, expansion units are recommended:

1. **Where bearing supports are not rigid.**
2. **Where significant temperature differentials are expected between shafts and mounting structures.**
3. **Where shaft is unusually long.**

At least one bearing on each shaft must be of the fixed type.

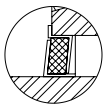

Felt Seal Standard
Positive sealing for low, medium, and high speed operation.

Single Lip Contact Seal
Available on all sizes. Recommended where moisture conditions prevail.

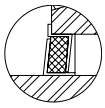

Hi-Temp Seal
Available as an option where operating temperatures are in 250-400° range.

For Replacement Cartridge Insert See Page 120.
For Load Ratings See Page 121.
For Metric Bores, See Page 127.

(1) Hi-Temp Units are factory assembled-to-order basis.

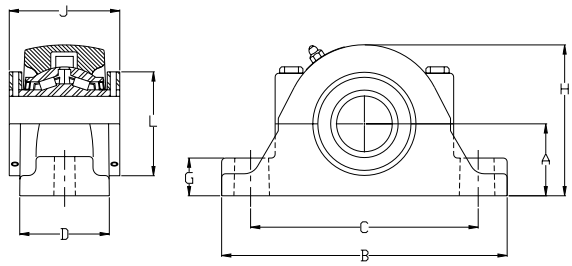

Two Bolt Base

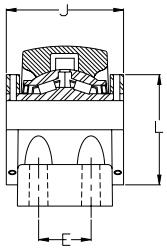

Four Bolt Base

DRPB Series Pillow Blocks...**Two Bolt Base** (DI INTERCHANGE)

SHAFT DIAM. IN.	STANDARD SEAL PART NO.	CONTACT SEAL PART NO.	HI-TEMP (1) SEAL PART NO.	APPROX. WT. IN LBS.	DIMENSIONS IN INCHES										BASE BOLTS	
					A	B	C MIN.	C MAX	D	E	G	H	J	L	NO.	SIZE
1 3/4 1 15/16 2	DRPB-112-2 DRPB-115-2 DRPB-200-2	DRPB-112-C2 DRPB-115-C2 DRPB-200-C2	DRPB-112-N2 DRPB-115-N2 DRPB-200-N2	17.5	2.88	10.00	6.75	8.50	2.57	—	1.50	5.25	3.50	3.25	2	5/8
2 3/16	DRPB-203-2	DRPB-203-C2	DRPB-203-N2	19.7	3.00	11.00	7.75	9.25	2.56	—	1.56	5.62	3.75	3.62	2	5/8
2 1/4 2 7/16 2 1/2	DRPB-204-2 DRPB-207-2 DRPB-208-2	DRPB-204-C2 DRPB-207-C2 DRPB-208-C2	DRPB-204-N2 DRPB-207-N2 DRPB-208-N2	25.5	3.25	12.00	8.50	10.38	2.88	—	1.75	6.12	4.00	3.94	2	5/8
2 11/16 2 3/4 2 15/16 3	DRPB-211-2 DRPB-212-2 DRPB-215-2 DRPB-300-2	DRPB-211-C2 DRPB-212-C2 DRPB-215-C2 DRPB-300-C2	DRPB-211-N2 DRPB-212-N2 DRPB-215-N2 DRPB-300-N2	35.2	3.75	13.50	9.32	11.56	3.12	—	2.00	7.00	4.50	4.75	2	3/4
3 3/16 3 7/16 3 1/2	DRPB-303-2 DRPB-307-2 DRPB-308-2	DRPB-303-C2 DRPB-307-C2 DRPB-308-C2	DRPB-303-N2 DRPB-307-N2 DRPB-308-N2	67.8	4.50	16.00	10.87	13.27	4.38	—	2.25	8.50	5.00	5.55	2	7/8

DRPB Series Pillow Blocks...**Four Bolt Base** (DI INTERCHANGE)

SHAFT DIAM. IN.	STANDARD SEAL PART NO.	CONTACT SEAL PART NO.	HI-TEMP (1) SEAL PART NO.	APPROX. WT. IN LBS.	DIMENSIONS IN INCHES										BASE BOLTS	
					A	B	C MIN.	C MAX	D	E	G	H	J	L	NO.	SIZE
3 15/16 4	DRPB-315-4 DRPB-400-4	DRPB-315-C4 DRPB-400-C4	DRPB-315-N4 DRPB-400-N4	93.0	5.00	17.50	12.00	15.00	4.67	2.00	2.75	9.38	6.25	6.00	4	3/4

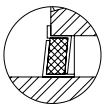

Felt Seal Standard
Positive sealing for low, medium, and high speed operation.

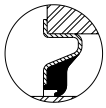

Single Lip Contact Seal
Available on all sizes. Recommended where moisture conditions prevail.

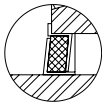

Hi-Temp Seal
Available as an option where operating temperatures are in 250-400° range.

The DRPB units have a high base-to shaft centerline and wide base mounting dimensions, and are interchangeable with competitive "DI" types. Bearing load and speed capabilities are equal to RPB.

For Replacement Cartridge Insert See Page 120.
For Load Ratings See Page 121.
For Metric Bores, See Page 127.
(1) Hi-Temp Units are factory assembled-to-order basis.

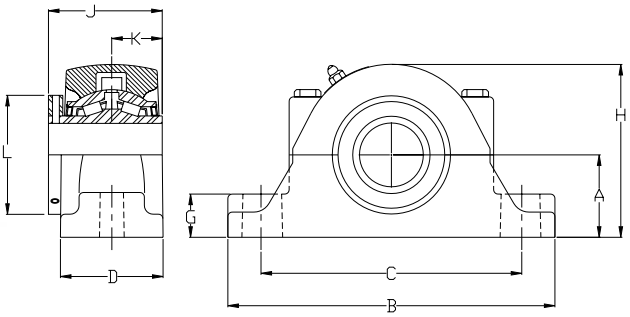

Two Bolt Base

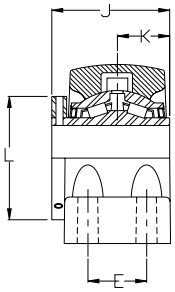

Four Bolt Base

DRPB-A Series Pillow Blocks...**Two Bolt Base** (K INTERCHANGE)

SHAFT DIAM. IN.	STANDARD SEAL PART NO.	CONTACT SEAL PART NO.	HI-TEMP (1) SEAL PART NO.	APPROX. WT. IN LBS.	DIMENSIONS IN INCHES A	B	C MIN.	C MAX	D	E	G	H	J	K	L	BASE BOLTS NO.	BASE BOLTS SIZE
1 3/4 1 15/16 2	DRPBA-112-2 DRPBA-115-2 DRPBA-200-2	DRPBA-112-C2 DRPBA-115-C2 DRPBA-200-C2	DRPBA-112-N2 DRPBA-115-N2 DRPBA-200-N2	17.5	2.88	10.00	6.75	8.50	2.57	—	1.50	5.25	2.95	1.20	3.25	2	5/8
2 3/16	DRPBA-203-2	DRPBA-203-C2	DRPBA-203-N2	19.7	3.00	11.00	7.75	9.25	2.56	—	1.56	5.62	3.12	1.25	3.62	2	5/8
2 1/4 2 7/16 2 1/2	DRPBA-204-2 DRPBA-207-2 DRPBA-208-2	DRPBA-204-C2 DRPBA-207-C2 DRPBA-208-C2	DRPBA-204-N2 DRPBA-207-N2 DRPBA-208-N2	25.5	3.25	12.00	8.50	10.38	2.88	—	1.75	6.12	3.31	1.31	3.94	2	5/8
2 11/16 2 3/4 2 15/16 3	DRPBA-211-2 DRPBA-212-2 DRPBA-215-2 DRPBA-300-2	DRPBA-211-C2 DRPBA-212-C2 DRPBA-215-C2 DRPBA-300-C2	DRPBA-211-N2 DRPBA-212-N2 DRPBA-215-N2 DRPBA-300-N2	35.2	3.75	13.50	9.32	11.56	3.12	—	2.00	7.00	3.69	1.44	4.75	2	3/4
3 3/16 3 7/16 3 1/2	DRPBA-303-2 DRPBA-307-2 DRPBA-308-2	DRPBA-303-C2 DRPBA-307-C2 DRPBA-308-C2	DRPBA-303-N2 DRPBA-307-N2 DRPBA-308-N2	67.8	4.50	16.00	10.87	13.27	4.38	—	2.25	8.50	4.19	1.69	5.55	2	7/8

DRPB-A Series Pillow Blocks...**Four Bolt Base** (K INTERCHANGE)

SHAFT DIAM. IN.	STANDARD SEAL PART NO.	CONTACT SEAL PART NO.	HI-TEMP (1) SEAL PART NO.	APPROX. WT. IN LBS.	DIMENSIONS IN INCHES A	B	C MIN.	C MAX	D	E	G	H	J	K	L	BASE BOLTS NO.	BASE BOLTS SIZE
3 15/16 4	DRPBA-315-4 DRPBA-400-4	DRPBA-315-C4 DRPBA-400-C4	DRPBA-315-N4 DRPBA-400-N4	93.0	5.00	17.50	12.00	15.00	4.67	2.00	2.75	9.38	5.25	2.13	6.00	4	3/4

See page 109 for seal arrangements.
(1) High temp units are factory assembled-to-order basis.

The DRPB-A units have a high base-to shaft centerline and wide base mounting dimensions, and are interchangeable with competitive "K" types. Bearing load and speed capabilities are equal to RPB.
The DRPB-A series units are similar in design to DRPB series, but have only one cone extension and one locking collar, and are recommended where axial shaft space is limited.

For Load Ratings, See Page 121.

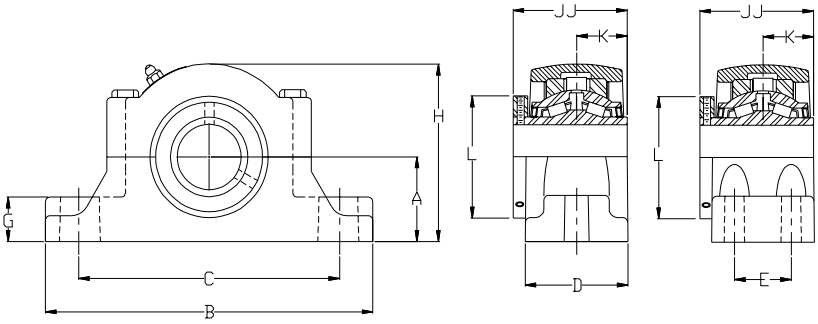

Two Bolt Base Four Bolt Base

EDPB-A Series Expansion Type Pillow Blocks...**Two Bolt Base**

SHAFT DIAM. IN.	STANDARD SEAL PART NO.	CONTACT SEAL PART NO.	HI-TEMP (1) SEAL PART NO.	APPROX. WT. IN LBS.	DIMENSIONS IN INCHES A	B	C MIN.	C MAX.	D	E	G	H	JJ	K	L	BASE BOLTS NO.	BASE BOLTS SIZE	TOTAL EXPANSION
1 3/4 1 15/16 2	EDPBA-112-2 EDPBA-115-2 EDPBA-200-2	EDPBA-112-C2 EDPBA-115-C2 EDPBA-200-C2	EDPBA-112-N2 EDPBA-115-N2 EDPBA-200-N2	19.2	2.88	10.00	6.75	8.50	2.57	—	1.50	5.50	2.95	1.20	3.25	2	5/8	3/16
2 3/16	EDPBA-203-2	EDPBA-203-C2	EDPBA-203-N2	21.8	3.00	11.00	7.75	9.25	2.56	—	1.56	5.81	3.12	1.25	3.62	2	5/8	3/16
2 1/4 2 7/16 2 1/2	EDPBA-204-2 EDPBA-207-2 EDPBA-208-2	EDPBA-204-C2 EDPBA-207-C2 EDPBA-208-C2	EDPBA-204-N2 EDPBA-207-N2 EDPBA-208-N2	27.8	3.25	12.00	8.50	10.38	2.88	—	1.75	6.25	3.31	1.31	3.94	2	5/8	1/4
2 11/16 2 3/4 2 15/16 3	EDPBA-211-2 EDPBA-212-2 EDPBA-215-2 EDPBA-300-2	EDPBA-211-C2 EDPBA-212-C2 EDPBA-215-C2 EDPBA-300-C2	EDPBA-211-N2 EDPBA-212-N2 EDPBA-215-N2 EDPBA-300-N2	38.0	3.75	13.50	9.32	11.56	3.12	—	2.00	7.18	3.69	1.44	4.75	2	3/4	5/16
3 3/16 3 7/16 3 1/2	EDPBA-303-2 EDPBA-307-2 EDPBA-308-2	EDPBA-303-C2 EDPBA-307-C2 EDPBA-308-C2	EDPBA-303-N2 EDPBA-307-N2 EDPBA-308-N2	75.8	4.50	16.00	10.87	13.27	4.38	—	2.25	8.69	4.19	1.69	5.55	2	7/8	5/16

EDPB-A Series Expansion Type Pillow Blocks...**Four Bolt Base**

SHAFT DIAM. IN.	STANDARD SEAL PART NO.	CONTACT SEAL PART NO.	HI-TEMP (1) SEAL PART NO.	APPROX. WT. IN LBS.	DIMENSIONS IN INCHES A	B	C MIN.	C MAX.	D	E	G	H	JJ	K	L	BASE BOLTS NO.	BASE BOLTS SIZE	TOTAL EXPANSION
3 15/16 4	EDPBA-315-4 EDPBA-400-4	EDPBA-315-C4 EDPBA-400-C4	EDPBA-315-N4 EDPBA-400-N4	106.00	5.00	17.50	12.00	15.00	4.67	2.00	2.75	9.62	5.25	2.13	6.00	4	3/4	3/8

The EDPB-A series of expansion roller bearing pillow blocks with single locking collar is designed for use in conjunction with the DRPB-A series where a "floating" or expansion type block is required.
Matching mounting dimensions provides for ease in application.
While two fixed units mounted on one shaft are normally satisfactory for most applications, expansion units are recommended:

1. **Where bearing supports are not rigid.**
2. **Where significant temperature differentials are expected between shafts and mounting structures.**
3. **Where shaft is unusually long.**

At least one bearing on each shaft must be of the fixed type.

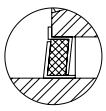

Felt Seal Standard
Positive sealing for low, medium, and high speed operation.

Single Lip Contact Seal
Available on all sizes. Recommended where
moisture conditions prevail.

Hi-Temp Seal
Available as an option where operating temperatures are in 250-400° range.

For Replacement Cartridge Insert See Page 120.
For Load Ratings See Page 121.
For Metric Bores, See Page 127.

(1) Hi-Temp Units are factory assembled-to-order basis.

TOUGH AS THEY COME!

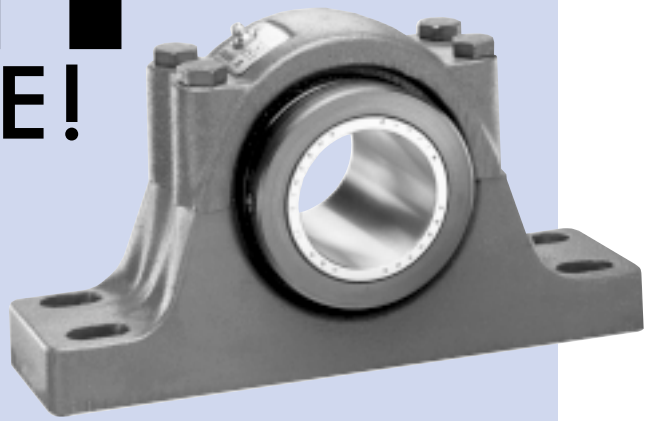

RPBXT and ERPBXT

Mounted Roller Bearings...

The Time-Savers...

That are a Dimensional Interchange with SAF... Bearings

The **RPBXT/ERPBXT** lines offer users significantly reduced costs for assembly and installation. This line of four-bolt nonexpansion (RPBXT) and expansion (ERPBXT) roller bearing pillow blocks is available in bore sizes from 2 $^1/_4$" through 5". It offers users a factory assembled, self-aligning, mounted tapered roller bearing unit that *interchanges* shaft-to-centerline and bolt hole spacing with the popular 500 series SAF style spherical roller bearing pillow blocks.

RPBXT Series Bearings Eliminate Assembly and Adjustment at Installation.

When users replace 500 series SAF style pillow blocks with the New SEALMASTER RPBXT, installation is *easier* and *faster*. Here's why:

RPBXT Units	VS	SAF Units
• **RPBXT units are fully-assembled, sealed and factory lubricated,** ready to install right onto the shaft when they're received. *You save time and money.* • At installation, the RPBXT unit is simply secured to the shaft with concentric double locking collars, each of which has two setscrews at 120°, providing balanced three-point contact and symmetrical locking.		• **SAF Units require complete assembly:** The bearing, housing, seals, adapter nut, sleeve and washer are *all* shipped loose. The user must assemble *all* components, adjust bearing clearances during assembly and lubricate the bearing unit. • SAF Units are locked to the shaft with an adapter sleeve and tightened with a locknut/lockwasher assembly.

Misalignment is a Tough Challenge for Bearings and Seals... RPBXT Handles it Better!

RPBXT Units	VS	SAF Units
RPBXT units have race mounted seals that move with the cartridge insert and are *not* subjected to shaft misalignment stress. RPBXT Seals can accommodate up to ± 3° degrees of shaft misalignment stress without loss of seal effectiveness. RPBXT roller bearings offer the user a wide choice of seals to suit application needs including patented labyrinth seals, proven in thousands of applications, a single lip contact seal, or the high temperature (Nomex) seal. Once the lubricant permeates the felt (seal), a lower coefficient of friction (reduced drag) and extended operating life result.		SAF style pillow blocks operate successfully in misaligned conditions up to ± 1 1/2° because the spherical O.D. of the bearing matches the spherical I.D. of the outer race. Thus, misalignment is internal. The seals however are mounted between the stationary housing and the shaft and are subject to movement when misaligned. The seals are designed with clearances to allow for the movement therefore reducing their effectiveness.

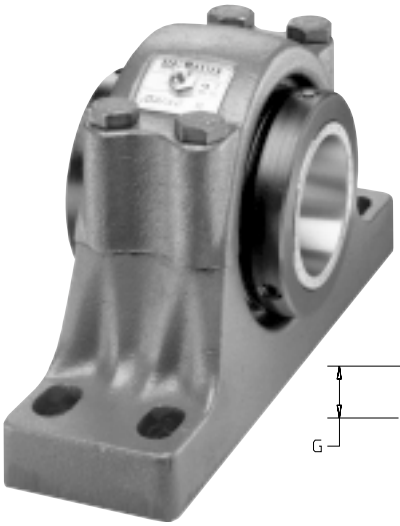

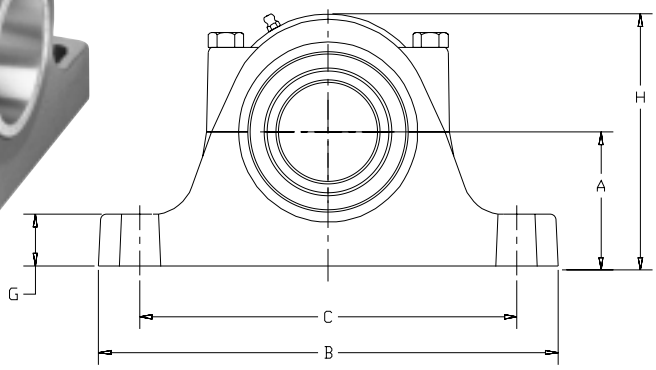

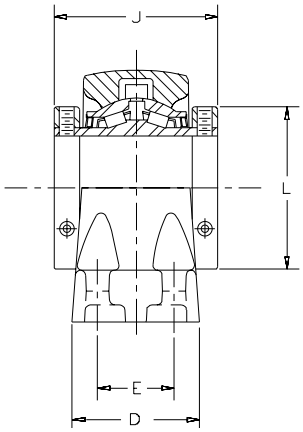

RPBXT Series Pillow Blocks...**Four Bolt Base**

SHAFT DIAM. IN.	STANDARD SEAL PART NO.	CONTACT SEAL PART NO.	HI-TEMP (1) SEAL PART NO.	APPROX. WT. IN LBS.	DIMENSIONS IN INCHES A	B	C MIN.	C MAX.	D	E	G	H	J	L	BASE BOLTS NO.	SIZE
2 1/4 2 7/16 2 1/2	RPBXT-204-4 RPBXT-207-4 RPBXT-208-4	RPBXT-204-C4 RPBXT-207-C4 RPBXT-208-C4	RPBXT-204-N4 RPBXT-207-N4 RPBXT-208-N4	25.5	3.25	11.25	8.62	9.62	3.12	1.88	1.25	6.12	4.00	3.94	4	1/2
2 11/16 2 3/4 2 15/16 3	RPBXT-211-4 RPBXT-212-4 RPBXT-215-4 RPBXT-300-4	RPBXT-211-C4 RPBXT-212-C4 RPBXT-215-C4 RPBXT-300-C4	RPBXT-211-N4 RPBXT-212-N4 RPBXT-215-N4 RPBXT-300-N4	36.2	3.75	13.00	10.00	11.00	3.50	2.12	1.50	7.00	4.50	4.75	4	5/8
3 1/4 3 7/16 3 1/2	RPBXT-304-4 RPBXT-307-4 RPBXT-308-4	RPBXT-304-C4 RPBXT-307-C4 RPBXT-308-C4	RPBXT-304-N4 RPBXT-307-N4 RPBXT308-N4	67.8	4.50	15.25	11.75	12.75	4.38	2.38	1.75	8.50	5.00	5.55	4	3/4
3 15/16 4	RPBXT-315-4 RPBXT-400-4	RPBXT-315-C4 RPBXT-400-C4	RPBXT-315-N4 RPBXT-400-N4	93.0	4.94	16.50	12.88	14.12	4.75	2.75	2.00	9.31	6.25	6.00	4	3/4
4 7/16 4 1/2	RPBXT-407-4 RPBXT-408-4	RPBXT-407-C4 RPBXT-408-C4	RPBXT-407-N4 RPBXT-408-N4	114.7	6.00	18.38	14.50	16.00	5.25	3.25	2.50	10.88	6.75	6.50	4	7/8
4 15/16 5	RPBXT-415-4 RPBXT-500-4	RPBXT-415-C4 RPBXT-500-C4	RPBXT-415-N4 RPBXT-500-N4	172.4	6.00	20.12	15.62	17.38	6.00	3.38	2.50	11.50	7.25	7.31	4	1

ERPBXT Series Pillow Blocks...**Four Bolt Base**

SHAFT DIAM. IN.	STANDARD SEAL PART NO.	CONTACT SEAL PART NO.	HI-TEMP (1) SEAL PART NO.	APPROX. WT. IN LBS.	DIMENSIONS IN INCHES A	B	C MIN.	C MAX.	D	E	G	H	J	L	BASE BOLTS NO.	SIZE
2 1/4 2 7/16 2 1/2	ERPBXT-204-4 ERPBXT-207-4 ERPBXT-208-4	ERPBXT-204-C4 ERPBXT-207-C4 ERPBXT-208-C4	ERPBXT-204-N4 ERPBXT-207-N4 ERPBXT-208-N4	27.7	3.25	11.25	8.62	9.62	3.42	1.88	1.25	6.25	4.00	3.94	4	1/2
2 11/16 2 3/4 2 15/16 3	ERPBXT-211-4 ERPBXT-212-4 ERPBXT-215-4 ERPBXT-300-4	ERPBXT-211-C4 ERPBXT-212-C4 ERPBXT-215-C4 ERPBXT-300-C4	ERPBXT-211-N4 ERPBXT-212-N4 ERPBXT-215-N4 ERPBXT-300-N4	39.0	3.75	13.00	10.00	11.00	3.50	2.12	1.50	7.19	4.50	4.75	4	5/8
3 1/4 3 7/16 3 1/2	ERPBXT-304-4 ERPBXT-307-4 ERPBXT-308-4	ERPBXT-304-C4 ERPBXT-307-C4 ERPBXT-308-C4	ERPBXT-304-N4 ERPBXT-307-N4 ERPBXT-308-N4	75.3	4.50	15.25	11.75	12.75	4.50	2.38	1.75	8.69	5.00	5.55	4	3/4
3 15/16 4	ERPBXT-315-4 ERPBXT-400-4	ERPBXT-315-C4 ERPBXT-400-C4	ERPBXT-315-N4 ERPBXT-400-N4	106.0	4.94	16.50	12.88	14.12	5.18	2.75	2.00	9.56	6.25	6.00	4	3/4
4 7/16 4 1/2	ERPBXT-407-4 ERPBXT-408-4	ERPBXT-407-C4 ERPBXT-408-C4	ERPBXT-407-N4 ERPBXT-408-N4	140.0	6.00	18.38	14.50	16.00	5.40	3.25	2.50	11.13	6.75	6.50	4	7/8
4 15/16 5	ERPBXT-415-4 ERPBXT-500-4	ERPBXT-415-C4 ERPBXT-500-C4	ERPBXT-415-N4 ERPBXT-500-N4	190.0	6.00	20.12	15.62	17.38	6.09	3.38	2.50	11.81	7.25	7.31	4	1

See page 109 for seal arrangements. (1) High temp units are factory assembled-to-order basis.
For Load Ratings, See Page 121.

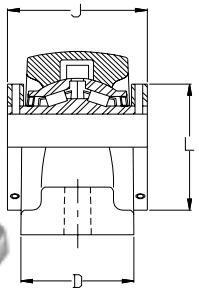

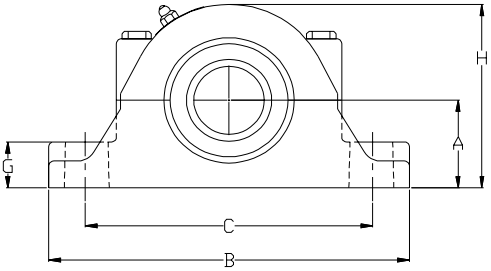

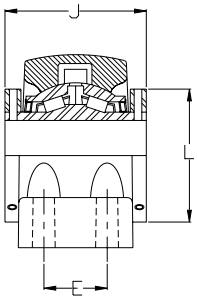

Two Bolt Base

Four Bolt Base

SPB Series Pillow Blocks...**Two Bolt Base** (Cast Steel Housing)

SHAFT DIAM. IN.	STANDARD SEAL PART NO.	CONTACT SEAL PART NO.	HI-TEMP (1) SEAL PART NO.	APPROX. WT. IN LBS.	DIMENSIONS IN INCHES										BASE BOLTS	
					A	B	C MIN.	C MAX	D	E	G	H	J	L	NO.	SIZE
1 1/2 1 5/8 1 11/16	SPB-108-2 SPB-110-2 SPB-111-2	SPB-108-C2 SPB-110-C2 SPB-111-C2	SPB-108-N2 SPB-110-N2 SPB-111-N2	12.0	2.12	7.75	5.56	6.44	2.31	—	1.25	4.38	3.38	2.88	2	1/2
1 3/4 1 15/16 2	SPB-112-2 SPB-115-2 SPB-200-2	SPB-112-C2 SPB-115-C2 SPB-200-C2	SPB-112-N2 SPB-115-N2 SPB-200-N2	14.5	2.25	8.88	6.31	7.19	2.44	—	1.25	4.62	3.50	3.25	2	5/8
2 3/16	SPB-203-2	SPB-203-C2	SPB-203-N2	17.3	2.50	9.62	6.69	7.94	2.56	—	1.44	5.12	3.75	3.62	2	5/8
2 1/4 2 7/16 2 1/2	SPB-204-2 SPB-207-2 SPB-308-2	SPB-204-C2 SPB-207-C2 SPB-208-C2	SPB-204-N2 SPB-207-N2 SPB-208-N2	22.8	2.75	10.38	6.94	8.69	2.75	—	1.62	5.62	4.00	3.94	2	5/8
2 11/16 2 3/4 2 15/16 3	SPB-211-2 SPB-212-2 SPB-215-2 SPB-300-2	SPB-211-C2 SPB-212-C2 SPB-213-C2 SPB-300-C2	SPB-211-N2 SPB-212-N2 SPB-213-N2 SPB-300-N2	32.2	3.12	11.75	8.06	9.69	3.00	—	1.75	6.38	4.50	4.75	2	3/4
3 3/16 3 7/16 3 1/2	SPB-303-2 SPB-307-2 SPB-308-2	SPB-303-C2 SPB-307-C2 SPB-308-C2	SPB-303-N2 SPB-307-N2 SPB-308-N2	65.6	3.75	13.75	10.12	11.25	4.12	—	2.06	7.75	5.00	5.55	2	7/8

SPB Series Pillow Blocks...**Four Bolt Base** (Cast Steel Housing)

SHAFT DIAM. IN.	STANDARD SEAL PART NO.	CONTACT SEAL PART NO.	HI-TEMP (1) SEAL PART NO.	APPROX. WT. IN LBS.	DIMENSIONS IN INCHES										BASE BOLTS	
					A	B	C MIN.	C MAX	D	E	G	H	J	L	NO.	SIZE
3 15/16 4	SPB-315-4 SPB-400-4	SPB-315-C2 SPB-400-C2	SPB-315-N2 SPB-400-N2	84.6	4.25	15.25	11.00	13.00	4.50	2.25	2.44	8.62	6.25	6.00	4	3/4
4 7/16 4 1/2	SPB-407-4 SPB-408-4	SPB-407-C2 SPB-408-C2	SPB-407-N2 SPB-408-N2	105.2	4.75	16.50	11.75	13.88	4.62	2.50	2.75	9.62	6.75	6.50	4	3/4
4 15/16 5	SPB-415-4 SPB-500-4	SPB-415-C2 SPB-500-C2	SPB-415-N2 SPB-500-N2	158.0	5.50	18.50	13.50	15.88	5.12	2.75	3.12	11.00	7.25	7.31	4	7/8

See page 109 for seal arrangements. (1) High temp units are factory assembled-to-order basis.

The SPB series pillow blocks use a rugged cast steel housing which provides maximum housing strength at a given unit weight. These factory assembled-to-order units have housings meeting SAE J43T specifications, 65,000 PSI. They come with Sealmaster felt lined flinger seals as standard but the contact or Hi-Temp seal may be specified.

For Load Ratings, See Page 121.

TOUGH
AS THEY COME!

FLANGE UNITS...

SEALMASTER split housed four-bolt flange units are designed for face mounting against vertical or horizontal structures where a minium amount of machining is required. These flange housings have machined foot pads on the base to facilitate installation and removal of double locking collar styles. Flange units are available from 1 3/16" to 4 1/2" bore sizes in both single and double locking collars.

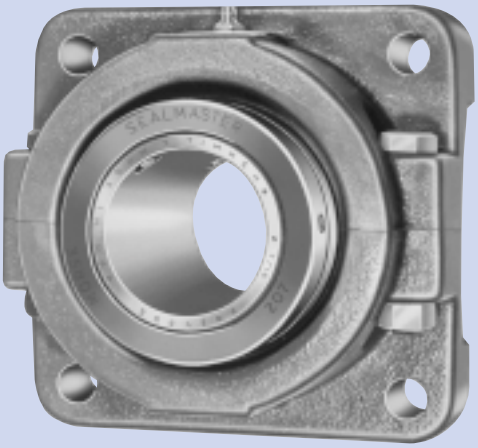

These units can be supplied with a choice of *three seals; felt, contact and high temperature nomex.* They are strongest when loads are applied in the thrust direction through the machined face.

PILOTED FLANGE UNITS...

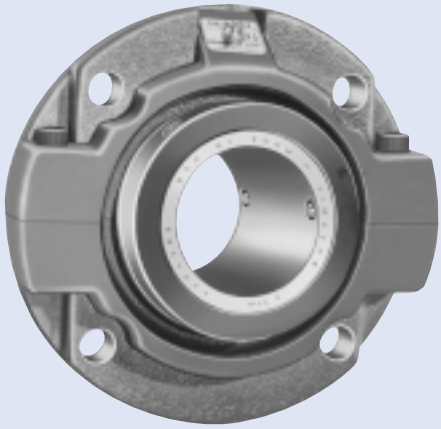

SEALMASTER split housed piloted flange units are commonly used in applications where rotating and eccentric loads are present. Typical applications include vibrating conveyors material handling, construction, and mixers. The combination of flange and pilot features allow them to be integrally mounted in both horizontal and vertical shaft applications.

The split housing is designed with a machined pilot extension that provides added support, thus reducing stress on the mounting bolts. SEALMASTER piloted flange housings are round and stocked in *shaft sizes from 1 3/16" - 5". Units through 4" contain four mounting bolts; sizes 4 7/16" through* 5" contain six mounting bolts. These units can be supplied with a *choice of three seals; felt, contact and high temperature nomex.* This series is available with both single and double lock collars. Provisions should be incorporated to facilitate installation and removal of double locking collar styles.

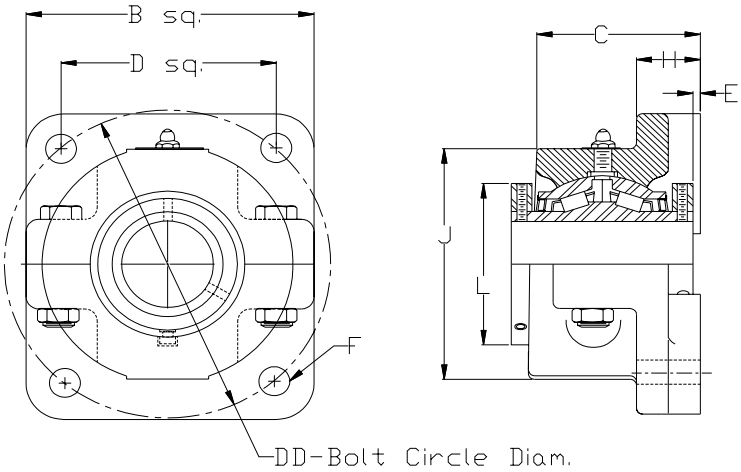

RFB Series Flange Units

SHAFT DIAM. IN.	STANDARD SEAL PART NO.	CONTACT SEAL PART NO.	HI-TEMP (1) SEAL PART NO.	APPROX. WT. IN LBS.	DIMENSIONS IN INCHES									
					A	B	C	D	DD	E	F BOLT	H	J	L
1 3/16 1 1/4	RFB-103 RFB-104	RFB-103-C RFB-104-C	RFB-103-N RFB-104-N	6.0	2.81	4.00	2.31	2.88	4.07	.06	3/8	1.00	3.50	2.25
1 3/8 1 7/16	RFB-106 RFB-107	RFB-106-C RFB-107-C	RFB-106-N RFB-107-N	8.1	3.06	4.62	2.56	3.50	4.95	.06	1/2	1.00	3.88	2.62
1 1/2 1 5/8 1 11/16	RFB-108 RFB-110 RFB-111	RFB-108-C RFB-110-C RFB-111-C	RFB-108-N RFB-110-N RFB-111-N	12.3	3.50	5.38	2.94	4.12	5.82	.12	1/2	1.19	4.50	2.88
1 3/4 1 15/16 2	RFB-112 RFB-115 RFB-200	RFB-112-C RFB-115-C RFB-200-C	RFB-112-N RFB-115-N RFB-200-N	14.5	3.62	5.62	3.06	4.38	6.19	.12	1/2	1.19	4.75	3.25
2 3/16	RFB-203	RFB-203-C	RFB-203-N	19.0	3.88	6.25	3.25	4.88	6.90	.12	5/8	1.38	5.25	3.62
2 1/4 2 7/16 2 1/2	RFB-204 RFB-207 RFB-208	RFB-204-C RFB-207-C RFB-208-C	RFB-204-N RFB-207-N RFB-208-N	24.0	4.19	6.88	3.56	5.38	7.61	.19	5/8	1.50	5.75	3.94
2 11/16 2 3/4 2 15/16 3	RFB-211 RFB-212 RFB-215 RFB-300	RFB-211-C RFB-212-C RFB-215-C RFB-300-C	RFB-211-N RFB-212-N RFB-215-N RFB-300-N	33.4	4.69	7.75	3.94	6.00	8.48	.19	3/4	1.62	6.50	4.75
3 3/16 3 7/16 3 1/2	RFB-303 RFB-307 RFB-308	RFB-303-C RFB-307-C RFB-308-C	RFB-303-N RFB-307-N RFB-308-N	57.4	5.25	9.25	4.50	7.00	9.90	.25	3/4	1.88	8.00	5.50
3 15/16 4	RFB-315 RFB-400	RFB-315-C RFB-400-C	RFB-315-N RFB-400-N	81.8	6.50	10.25	5.62	7.75	10.96	.25	7/8	2.12	8.88	6.00
4 7/16 4 1/2	RFB-407 RFB-408	RFB-407-C RFB-408-C	RFB-407-N RFB-408-N	110.0	7.00	11.50	6.00	8.75	12.37	.25	1	2.62	9.75	6.50

The RFB series of roller bearing flange units is designed for applications in industrial machinery where heavy loads at low, medium, or relatively high speeds exist. They are ideal for face mounting against vertical or horizontal frames where a minimum amount of machining is required.

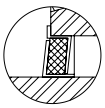

Felt Seal Standard
Positive sealing for low, medium, and high speed operation.

Single Lip Contact Seal
Available on all sizes. Recommended where moisture conditions prevail.

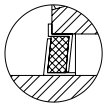

Hi-Temp Seal
Available as an option where operating temperatures are in 250-400° range.

For Replacement Cartridge Insert See Page 120.
For Load Ratings See Page 121.
For Metric Bores, See Page 127.
Installation alignment correction is ± 3 degrees equal to .052" per inch.
(1) Hi-Temp Units are factory assembled-to-order basis.

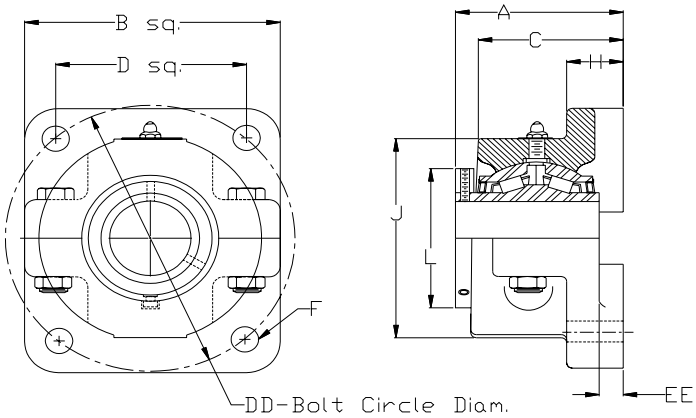

RFB-A Series Flange Units

SHAFT DIAM. IN.	STANDARD SEAL PART NO.	CONTACT SEAL PART NO.	HI-TEMP (1) SEAL PART NO.	APPROX. WT. IN LBS.	DIMENSIONS IN INCHES									
					A	B	C	D	DD	EE	F BOLT	H	J	L
1 3/16 1 1/4	RFBA-103 RFBA-104	RFBA-103-C RFBA-104-C	RFBA-103-N RFBA-104-N	6.0	2.81	4.00	2.31	2.88	4.07	.44	3/8	1.00	3.50	2.25
1 3/8 1 7/16	RFBA-106 RFBA-107	RFBA-106-C RFBA-107-C	RFBA-106-N RFBA-107-N	8.1	3.06	4.62	2.56	3.50	4.95	.53	1/2	1.00	3.88	2.62
1 1/2 1 5/8 1 11/16	RFBA-108 RFBA-110 RFBA-111	RFBA-108-C RFBA-110-C RFBA-111-C	RFBA-108-N RFBA-110-N RFBA-111-N	12.3	3.50	5.38	2.94	4.12	5.82	.67	1/2	1.19	4.50	2.88
1 3/4 1 15/16 2	RFBA-112 RFBA-115 RFBA-200	RFBA-112-C RFBA-115-C RFBA-200-C	RFBA-112-N RFBA-115-N RFBA-200-N	14.5	3.62	5.62	3.06	4.38	6.19	.67	1/2	1.19	4.75	3.25
2 3/16	RFBA-203	RFBA-203-C	RFBA-203-N	19.0	3.88	6.25	3.25	4.88	6.90	.75	5/8	1.38	5.25	3.62
2 1/4 2 7/16 2 1/2	RFBA-204 RFBA-207 RFBA-208	RFBA-204-C RFBA-207-C RFBA-208-C	RFBA-204-N RFBA-207-N RFBA-208-N	24.0	4.19	6.88	3.56	5.38	7.61	.88	5/8	1.50	5.75	3.94
2 11/16 2 3/4 2 15/16 3	RFBA-211 RFBA-212 RFBA-215 RFBA-300	RFBA-211-C RFBA-212-C RFBA-215-C RFBA-300-C	RFBA-211-N RFBA-212-N RFBA-215-N RFBA-300-N	33.4	4.69	7.75	3.94	6.00	8.48	1.00	3/4	1.62	6.50	4.75
3 3/16 3 7/16 3 1/2	RFBA-303 RFBA-307 RFBA-308	RFBA-303-C RFBA-307-C RFBA-308-C	RFBA-303-N RFBA-307-N RFBA-308-N	57.4	5.25	9.25	4.50	7.00	9.90	1.06	3/4	1.88	8.00	5.50
3 15/16 4	RFBA-315 RFBA-400	RFBA-315-C RFBA-400-C	RFBA-315-N RFBA-400-N	81.8	6.50	10.25	5.62	7.75	10.96	1.25	7/8	2.12	8.88	6.00
4 7/16 4 1/2	RFBA-407 RFBA-408	RFBA-407-C RFBA-408-C	RFBA-407-N RFBA-408-N	110.0	7.00	11.50	6.00	8.75	12.37	1.50	1	2.62	9.75	6.50

See page 114 for seal arrangements. (1) High temp units are factory assembled-to-order basis.

The RFB-A series is similar in design to RFB series, but has single locking collar. These units are designed for applications in industrial machinery where moderate loads at low to medium high speeds exist or where space along the shaft is at a premium.

For Load Ratings, See Page 121.

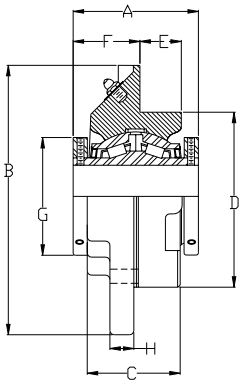

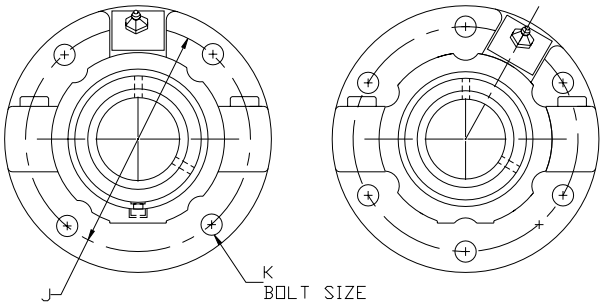

RFP Series Piloted Flange Units

SHAFT DIAM. IN.	STANDARD SEAL PART NO.	CONTACT SEAL PART NO.	HI-TEMP (1) SEAL PART NO.	APPROX. WT. IN LBS.	DIMENSIONS IN INCHES A	B	C	D (2) +.000 -.002	E	F	G	H	J	K
1 3/16 1 1/4	RFP-103 RFP-104	RFP-103-C RFP-104-C	RFP-103-N RFP-104-N	5.5	2.75	5.00	1.75	3.375	.88	1.31	2.25	.44	4.12	.38
1 3/8 1 7/16	RFP-106 RFP-107	RFP-106-C RFP-107-C	RFP-106-N RFP-107-N	6.8	3.00	5.25	2.00	3.625	.94	1.50	2.62	.50	4.38	.38
1 1/2 1 5/8 1 11/16	RFP-108 RFP-110 RFP-111	RFP-108-C RFP-110-C RFP-111-C	RFP-108-N RFP-110-N RFP-111-N	10.1	3.38	6.12	2.25	4.250	1.12	1.56	2.88	.50	5.12	.44
1 3/4 1 15/16 2	RFP-112 RFP-115 RFP-200	RFP-112-C RFP-115-C RFP-200-C	RFP-112-N RFP-115-N RFP-200-N	11.6	3.50	6.38	2.31	4.500	1.25	1.56	3.25	.56	5.38	.44
2 3/16	RFP-203	RFP-203-C	RFP-203-N	14.5	3.75	7.12	2.50	5.000	1.31	1.69	3.62	.56	6.00	.50
2 1/4 2 7/16 2 1/2	RFP-204 RFP-207 RFP-208	RFP-204-C RFP-207-C RFP-208-C	RFP-204-N RFP-207-N RFP-208-N	19.0	4.00	7.62	2.75	5.500	1.44	1.81	3.94	.62	6.50	.50
2 11/16 2 3/4 2 15/16 3	RFP-211 RFP-212 RFP-215 RFP-300	RFP-211-C RFP-212-C RFP-215-C RFP-300-C	RFP-211-N RFP-212-N RFP-215-N RFP-300-N	26.7	4.50	8.75	2.88	6.375	1.56	2.00	4.75	.75	7.50	.62
3 3/16 3 7/16 3 1/2	RFP-303 RFP-307 RFP-308	RFP-303-C RFP-307-C RFP-308-C	RFP-303-N RFP-307-N RFP-308-N	42.6	5.00	10.25	3.38	7.375	1.62	2.44	5.50	.88	8.62	.75
3 15/16 4	RFP-315 RFP-400	RFP-315-C RFP-400-C	RFP-315-N RFP-400-N	55.2	6.25	10.88	4.38	8.125	2.44	2.69	6.00	.94	9.38	.75
4 7/16 4 1/2	RFP-407 RFP-408	RFP-407-C RFP-408-C	RFP-407-N RFP-408-N	91.0	6.75	13.50	4.62	10.250	2.38	3.03	6.50	1.00	11.75*	.75
4 15/16 5	RFP-415 RFP-500	RFP-415-C RFP-500-C	RFP-415-N RFP-500-N	115.0	7.25	14.75	5.38	11.000	2.88	2.97	7.31	1.25	12.75*	.88

The RFB series of roller bearing flange units is designed for applications in industrial machinery where heavy loads at low, medium, or relatively high speeds exist. They are ideal for face mounting against vertical or horizontal frames where a minimum amount of machining is required.

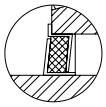

Felt Seal Standard
Positive sealing for low, medium, and high speed operation.

Single Lip Contact Seal
Available on all sizes. Recommended where moisture conditions prevail.

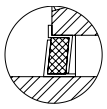

Hi-Temp Seal
Available as an option where operating temperatures are in 250-400° range.

For Replacement Cartridge Insert See Page 120.
For Load Ratings See Page 121.
For Metric Bores, See Page 127.

(1) Hi-Temp Units are factory assembled-to-order basis.
(2) Bore of frame should be the "D" dimension shown in table above. +.002", +.005", to assure adequate support of bearing pilot.
* 6 Bolt—All others four bolt.

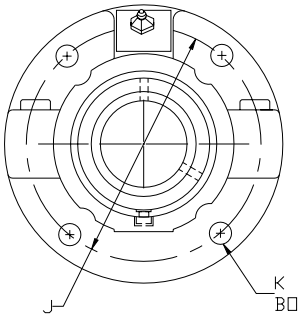

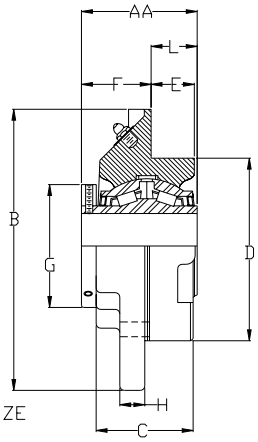

RFP-A Series Piloted Flange Units

SHAFT DIAM. IN.	STANDARD SEAL PART NO.	CONTACT SEAL PART NO.	HI-TEMP (1) SEAL PART NO.	APPROX. WT. IN LBS.	DIMENSIONS IN INCHES AA	B	C	D (2) +.000 -.002	E	F	G	H	J	K	L
1 3/16 1 1/4	RFPA-103 RFPA-104	RFPA-103-C RFPA-104-C	RFPA-103-N RFPA-104-N	5.5	2.37	5.00	1.75	3.375	.88	1.31	2.25	.44	4.12	.38	1.06
1 3/8 1 7/16	RFPA-106 RFPA-107	RFPA-106-C RFPA-107-C	RFPA-106-N RFPA-107-N	6.8	2.53	5.25	2.00	3.625	.94	1.50	2.62	.50	4.38	.38	1.03
1 1/2 1 5/8 1 11/16	RFPA-108 RFPA-110 RFPA-111	RFPA-108-C RFPA-110-C RFPA-111-C	RFPA-108-N RFPA-110-N RFPA-111-N	10.1	2.84	6.12	2.25	4.250	1.12	1.56	2.88	.50	5.12	.44	1.28
1 3/4 1 15/16 2	RFPA-112 RFPA-115 RFPA-200	RFPA-112-C RFPA-115-C RFPA-200-C	RFPA-112-N RFPA-115-N RFPA-200-N	11.6	2.95	6.38	2.31	4.500	1.25	1.56	3.25	.56	5.38	.44	1.39
2 3/16	RFPA-203	RFPA-203-C	RFPA-203-N	14.5	3.12	7.12	2.50	5.000	1.31	1.69	3.62	.56	6.00	.50	1.44
2 1/4 2 7/16 2 1/2	RFPA-204 RFPA-207 RFPA-208	RFPA-204-C RFPA-207-C RFPA-208-C	RFPA-204-N RFPA-207-N RFPA-208-N	19.0	3.31	7.62	2.75	5.500	1.44	1.81	3.94	.62	6.50	.50	1.50
2 11/16 2 3/4 2 15/16 3	RFPA-211 RFPA-212 RFPA-215 RFPA-300	RFPA-211-C RFPA-212-C RFPA-215-C RFPA-300-C	RFPA-211-N RFPA-212-N RFPA-215-N RFPA-300-N	26.7	3.69	8.75	2.88	6.375	1.56	2.00	4.75	.75	7.50	.62	1.69
3 3/16 3 7/16 3 1/2	RFPA-303 RFPA-307 RFPA-308	RFPA-303-C RFPA-307-C RFPA-308-C	RFPA-303-N RFPA-307-N RFPA-308-N	42.6	4.19	10.25	3.38	7.375	1.62	2.44	5.50	.88	8.62	.75	1.75
3 15/16 4	RFPA-315 RFPA-400	RFPA-315-C RFPA-400-C	RFPA-315-N RFPA-400-N	55.2	5.25	10.88	4.38	8.125	2.44	2.69	6.00	.94	9.38	.75	2.56
4 7/16 4 1/2	RFPA-407 RFPA-408	RFPA-407-C RFPA-408-C	RFPA-407-N RFPA-408-N	91.0	5.50	13.50	4.62	10.250	2.38	3.03	6.50	1.00	11.75*	.75	2.47
4 15/16 5	RFPA-415 RFPA-500	RFPA-415-C RFPA-500-C	RFPA-415-N RFPA-500-N	115.0	6.21	14.75	5.38	11.000	2.88	2.97	7.31	1.25	12.75*	.88	3.24

The RFBA series is similar in design to RFP series, but has single locking collar. These units are designed for applications in industrial machinery where moderate loads at low to medium high speeds exist or where space along the shaft is at a premium.

(1) Hi-Temp Units are factory assembled-to-order basis.
(2) Bore of frame should be the "D" dimension shown in table above. +.002", +.005", to assure adequate support of bearing pilot.
* 6 Bolt—All others four bolt.

See page 116 for seal arrangements.
For Load Ratings, See Page 121.

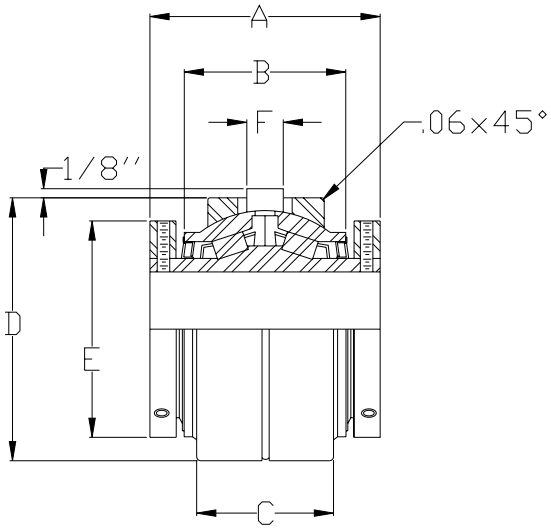

ERCI Series Cylindrical Cartridge Inserts

SHAFT DIAM. IN.	STANDARD SEAL PART NO.	CONTACT SEAL PART NO.	HI-TEMP (1) SEAL PART NO.	APPROX. WT. IN LBS.	DIMENSIONS IN INCHES A	B	C	D (2) +.000 -.002	E	F
1 3/4 1 15/16 2	ERCI-112 ERCI-115 ERCI-200	ERCI-112-C ERCI-115-C ERCI-200-C	ERCI-112-N ERCI-115-N ERCI-200-N	6.5	3.50	2.10	1.75	3.939	3.25	.25
2 3/16	ERCI-203	ERCI-203-C	ERCI-203-N	7.7	3.75	2.25	1.75	4.439	3.62	.38
2 1/4 2 7/16 2 1/2	ERCI-204 ERCI-207 ERCI-208	ERCI-204-C ERCI-207-C ERCI-208-C	ERCI-204-N ERCI-207-N ERCI-208-N	10.0	4.00	2.38	1.80	4.782	3.94	.38
2 11/16 2 3/4 2 15/16 3	ERCI-211 ERCI-212 ERCI-215 ERCI-300	ERCI-211-C ERCI-212-C ERCI-215-C ERCI-300-C	ERCI-211-N ERCI-212-N ERCI-215-N ERCI-300-N	13.0	4.50	2.50	2.00	5.376	4.75	.38
3 3/16 3 7/16 3 1/2	ERCI-303 ERCI-307 ERCI-308	ERCI-303-C ERCI-307-C ERCI-308-C	ERCI-303-N ERCI-307-N ERCI-308-N	22.0	5.00	3.00	2.25	6.595	5.50	.50
3 15/16 4	ERCI-315 ERCI-400	ERCI-315-C ERCI-400-C	ERCI-315-N ERCI-400-N	30.0	6.25	4.00	3.13	7.189	6.00	.50
4 7/16 4 1/2	ERCI-407 ERCI-408	ERCI-407-C ERCI-408-C	ERCI-407-N ERCI-408-N	38.4	6.75	4.00	3.25	8.001	6.50	.50
4 15/16 5	ERCI-415 ERCI-500	ERCI-415-C ERCI-500-C	ERCI-415-N ERCI-500-N	55.0	7.25	4.50	3.75	9.063	7.31	.50

The ERCI series of steel cylindrical roller bearing cartridge units is designed for mounting in a cylindrical bore for a wide range of general machine applications. Units are equipped with Timken® roller bearings which are factory adjusted, grease lubricated, and sealed. They have full self-aligning capability.
When used as a "fixed" bearing, provision must be made for locating outer ring in housing to prevent lateral movement. Provision for lubrication is recommended utilizing holes in cartridge O. D. located 30° on either side of the alignment pin. Recommended housing bore is nominal, +.002", -.000".
ERCI cylindrical cartridge units are replacement cartridges for ERPB expansion type pillow blocks.

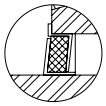

Felt Seal Standard
Positive sealing for low, medium, and high speed operation.

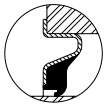

Single Lip Contact Seal
Available on all sizes. Recommended where moisture conditions prevail.

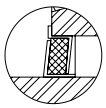

Hi-Temp Seal
Available as an option where operating temperatures are in 250-400° range.

Installation alignment correction is ± 3 degrees equal to .052" per inch.
For Load Ratings, See Page 121.

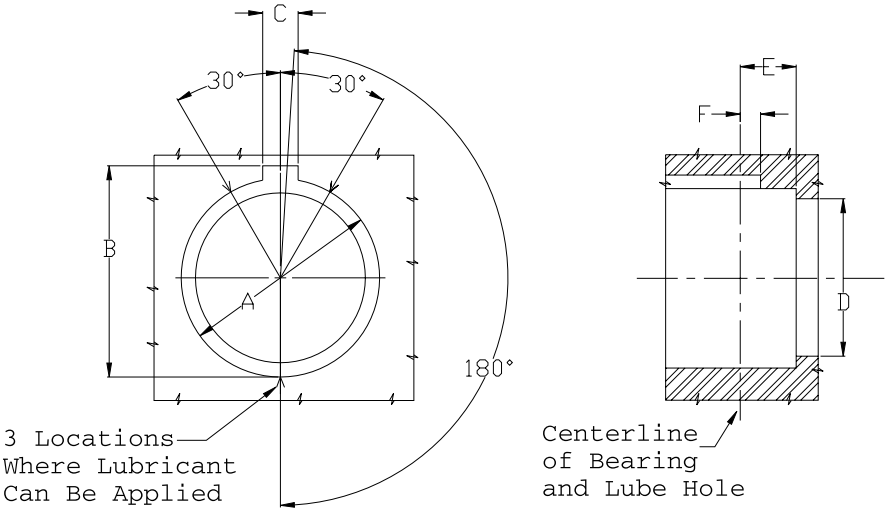

ERCI Series Housing Bore Dimensions

SHAFT DIAM.	"A" DIM. +.002/-.000	"B" DIM. +.01/.00	"C" DIM. +.01/-.00	"D" DIM. ±.01	"E" DIM. ±.01	"F" DIM. MIN. ±.005
1 3/4 1 15/16 2	3.939	4.12	.44	3.63	.97	.25
2 3/16	4.439	4.62	.56	4.00	.97	.38
2 1/4 2 7/16 2 1/2	4.782	5.01	.56	4.38	1.03	.38
2 11/16 2 3/4 2 15/16 3	5.376	5.50	.56	5.12	1.16	.38
3 3/16 3 7/16 3 1/2	6.595	6.89	.75	6.00	1.28	.50
3 15/16 4	7.189	7.46	.75	6.62	1.75	.50
4 7/16 4 1/8	8.001	8.28	.75	7.25	1.81	.50
4 15/16 5	9.063	9.34	.75	8.50	2.06	.50

TYPICAL HOUSING INSTALLATIONS

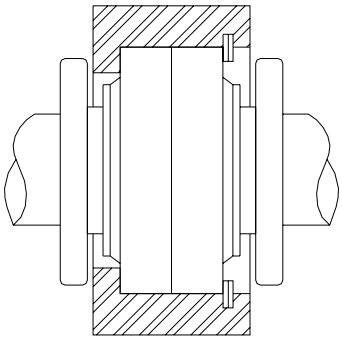

Cartridge Fixed Between Shoulder &-Snap Ring

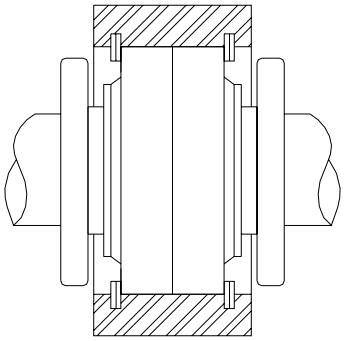

Cartridge Set For Expansion And Held Between Snap Rings

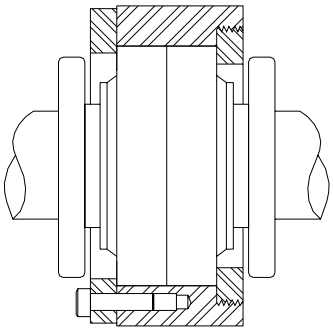

Cartridge Fixed Between Two Types of Collars

RCI Series
Double Extension
Two Locking Collars

RCIA Series
Single Extension
One Locking Collar

RCI & RCIA Series Replacement Cartridge Inserts*

RCI FELT SEAL	CONTACT SEAL	HI-TEMP SEAL	SHAFT DIAM. IN.	APPROX. SHIPPING WEIGHT LBS.	RCIA FELT SEAL	CONTACT SEAL	FELT SEAL
RCI-103	RCI-103-C	†RCI-103-N	**1 3/16**	2.0	†RCIA-103	†RCIA-103-C	†RCIA-103-N
RCI-104	RCI-104-C	†RCI-104-N	**1 1/4**	1.9	†RCIA-104	†RCIA-104-C	†RCIA-104-N
RCI-106	RCI-106-C	†RCI-106-N	**1 3/8**	2.9	†RCIA-106	†RCIA-106-C	†RCIA-106-N
RCI-107	RCI-107-C	†RCI-107-N	**1 7/16**	2.7	†RCIA-107	†RCIA-107-C	†RCIA-107-N
RCI-108	RCI-108-C	†RCI-108-N	**1 1/2**	4.5	†RCIA-108	†RCIA-108-C	†RCIA-108-N
RCI-110	RCI-110-C	†RCI-110-N	**1 5/8**	4.2	†RCIA-110	†RCIA-110-C	†RCIA-110-N
RCI-111	RCI-111-C	†RCI-111-N	**1 11/16**	4.0	†RCIA-111	†RCIA-111-C	†RCIA-111-N
RCI-112	RCI-112-C	†RCI-112-N	**1 3/4**	5.3	RCIA-112	RCIA-112-C	RCIA-112-N
RCI-115	RCI-115-C	†RCI-115-N	**1 15/16**	4.8	RCIA-115	RCIA-115-C	RCIA-115-N
RCI-200	RCI-200-C	†RCI-200-N	**2**	4.6	RCIA-200	RCIA-200-C	RCIA-200-N
RCI-203	RCI-203-C	†RCI-203-N	**2 3/16**	6.2	RCIA-203	RCIA-203-C	RCIA-203-N
RCI-204	RCI-204-C	†RCI-204-N	**2 1/4**	8.4	RCIA-204	RCIA-204-C	RCIA-204-N
RCI-207	RCI-207-C	†RCI-207-N	**2 7/16**	7.4	RCIA-207	RCIA-207-C	RCIA-207-N
RCI-208	RCI-208-C	†RCI-208-N	**2 1/2**	7.2	RCIA-208	RCIA-208-C	RCIA-208-N
RCI-211	RCI-211-C	†RCI-211-N	**2 11/16**	11.5	RCIA-211	RCIA-211-C	RCIA-211-N
RCI-212	RCI-212-C	†RCI-212-N	**2 3/4**	11.3	RCIA-212	RCIA-212-C	RCIA-212-N
RCI-215	RCI-215-C	†RCI-215-N	**2 15/16**	10.3	RCIA-215	RCIA-215-C	RCIA-215-N
RCI-300	RCI-300-C	†RCI-300-N	**3**	10.0	RCIA-300	RCIA-300-C	RCIA-300-N
RCI-303	RCI-303-C	†RCI-303-N	**3 3/16**	19.6	RCIA-303	RCIA-303-C	RCIA-303-N
RCI-307	RCI-307-C	†RCI-307-N	**3 7/16**	17.8	RCIA-307	RCIA-307-C	RCIA-307-N
RCI-308	RCI-308-C	†RCI-308-N	**3 1/2**	17.3	RCIA-308	RCIA-308-C	RCIA-308-N
RCI-315	RCI-315-C	†RCI-315-N	**3 15/16**	23.1	RCIA-315	RCIA-315-C	RCIA-315-N
RCI-400	RCI-400-C	†RCI-400-N	**4**	22.6	RCIA-400	†RCIA-400-C	RCIA-400-N
RCI-407	RCI-407-C	†RCI-407-N	**4 7/16**	30.4	RCIA-407	†RCIA-407-C	RCIA-407-N
RCI-408	RCI-408-C	†RCI-408-N	**4 1/2**	29.9	RCIA-408	†RCIA-408-C	RCIA-408-N
RCI-415	RCI-415-C	†RCI-415-N	**4 15/16**	45.6	RCIA-415	†RCIA-415-C	RCIA-415-N
RCI-500	RCI-500-C	†RCI-500-N	**5**	44.4	RCIA-500	†RCIA-500-C	RCIA-500-N

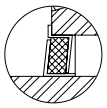

Felt Seal Standard
Positive sealing for low, medium, and high speed operation.

Single Lip Contact Seal
Available on all sizes. Recommended where moisture conditions prevail.

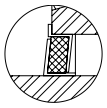

Hi-Temp Seal
Available as an option where operating temperatures are in 250-400° range.

* Insert package includes factory lubed, adjusted, and sealed cartridge complete with single or double locking collars.
† Contact Customer Service Center for availability.
For Load Ratings, See Page 121.

LOAD RATING TABLES - RPB ROLLER BEARINGS

This chart displays the Sealmaster RPB Roller Bearing's load capacity for a given L10 life, speed, and shaft size.
Areas designated by "-" exceed maximum value for standard bearings. Consult Sealmaster Application Engineering for load and speed applications not covered in this table or for operation at high speeds or high loads.

		REVOLUTIONS PER MINUTE													
SHAFT SIZE	L10 HOURS	50	100	250	500	750	1000	1250	1500	1750	2000	2500	3000	3500	4000
1 3/16	5000	3360	3360	3142	2552	2260	2073	1939	1836	1753	1684	1575	1491	1424	1368
1 1/4	10000	3360	3360	2552	2073	1836	1684	1575	1491	1424	1368	1279	1211	1156	1111
	30000	2975	2416	1836	1491	1320	1211	1279	1072	1024	984	920	871	832	902
	50000	2552	2073	1575	1279	1133	1039	1081	920	878	844	789	747	714	763
	100000	2073	1684	1279	1039	920	844	971	747	714	685	641	607	580	685
1 3/8	5000	5376	5376	5028	4084	3616	3317	3104	2937	2804	2694	2520	2386	2278	-
1 7/16	10000	5376	5376	4084	3317	2937	2694	2521	2386	2278	2188	2047	1938	1850	-
	30000	4760	3866	2937	2386	2112	1938	2048	1716	1638	1574	1472	1394	1331	-
	50000	4084	3317	2520	2047	1812	1662	1732	1472	1406	1350	1263	1196	1142	-
	100000	3317	2694	2047	1662	1472	1350	1555	1196	1142	1097	1026	971	927	-
1 1/2	5000	6934	6934	6485	5268	4664	4279	4000	3789	3617	3475	3250	3077	-	-
1 5/8	10000	6934	6934	5268	4279	3789	3475	3249	3077	2938	2823	2640	2500	-	-
1 11/16	30000	6140	4987	3789	3077	2725	2500	2640	2213	2113	2030	1899	1798	-	-
	50000	5268	4279	3250	2640	2338	2144	2231	1899	1813	1742	1629	1542	-	-
	100000	4279	3475	2640	2144	1899	1742	2007	1542	1473	1415	1323	1253	-	-
1 3/4	5000	9114	9114	8524	6923	6130	5624	5259	4979	4754	4568	4272	-	-	-
1 15/16	10000	9114	9114	6923	5624	4979	4568	4271	4045	3862	3710	3470	-	-	-
2	30000	8070	6555	4979	4045	3581	3285	3470	2909	2777	2668	2496	-	-	-
	50000	6923	5624	4272	3470	3072	2818	2934	2496	2383	2289	2141	-	-	-
	100000	5624	4568	3470	2818	2496	2289	2636	2027	1935	1859	1739	-	-	-
2 3/16	5000	9679	9679	9052	7352	6510	5972	5584	5288	5049	4851	4537	-	-	-
	10000	9679	9679	7352	5972	5288	4851	4587	4295	4101	3940	3685	-	-	-
	30000	8570	6961	5288	4295	3803	3489	3684	3089	2950	2834	2650	-	-	-
	50000	7352	5972	4538	3585	3263	2993	3115	2650	2530	2431	2274	-	-	-
	100000	5972	4851	3685	2993	2650	2431	2799	2153	2055	1975	1847	-	-	-
2 1/4	5000	10198	10198	9538	7747	6860	6293	5940	5572	5320	5111	-	-	-	-
2 7/16	10000	10198	10198	7747	6293	5572	5111	4824	4526	4321	4152	-	-	-	-
2 1/2	30000	9030	7335	5572	4526	4007	3676	3918	3255	3108	2986	-	-	-	-
	50000	7747	6293	4780	3883	3438	3154	3313	2793	2666	2562	-	-	-	-
	100000	6293	5111	3883	3154	2793	2562	2977	2268	2166	2081	-	-	-	-
2 11/16	5000	10876	10876	10171	8262	7316	6711	6279	5942	5674	-	-	-	-	-
2 3/4	10000	10876	10876	8262	6711	5942	5451	5100	4826	4608	-	-	-	-	-
2 15/16	30000	9630	7822	5942	4826	4274	3920	4143	3471	3314	-	-	-	-	-
3	50000	8262	6711	5098	4141	3666	3363	3502	2978	2843	-	-	-	-	-
	100000	6711	5451	4141	3363	2978	2732	3147	2419	2310	-	-	-	-	-
3 3/16	5000	17302	17302	16181	13143	11638	10676	9983	9453	-	-	-	-	-	-
3 7/16	10000	17302	17302	13143	10676	9453	8671	8109	7678	-	-	-	-	-	-
3 1/2	30000	15320	12444	9453	7678	6799	6237	6587	5522	-	-	-	-	-	-
	50000	13143	10676	8110	6587	5833	5351	5569	4738	-	-	-	-	-	-
	100000	10676	8671	6587	5351	4738	4346	5004	3848	-	-	-	-	-	-
3 15/16	5000	23694	23694	22159	17999	15938	14620	13673	-	-	-	-	-	-	-
4	10000	23694	23694	17999	14620	12945	11875	11106	-	-	-	-	-	-	-
	30000	20980	17041	12945	10515	9311	8541	9021	-	-	-	-	-	-	-
	50000	17999	14620	11106	9021	7988	7327	7627	-	-	-	-	-	-	-
	100000	14620	11875	9021	7327	6488	5952	6852	-	-	-	-	-	-	-
4 7/16	5000	29081	29081	27198	22091	19561	17944	16783	-	-	-	-	-	-	-
4 1/2	10000	29081	29081	22091	17944	15889	14575	13632	-	-	-	-	-	-	-
	30000	25750	20915	15889	12906	11427	10483	10072	-	-	-	-	-	-	-
	50000	22091	17944	13631	11072	9804	8993	9362	-	-	-	-	-	-	-
	100000	17944	14575	11072	8993	7963	7305	8412	-	-	-	-	-	-	-
4 15/16	5000	40114	40114	37517	30473	26983	24752	-	-	-	-	-	-	-	-
5	10000	40114	40114	30473	24752	21917	20105	-	-	-	-	-	-	-	-
	30000	35520	28851	21917	17802	15763	14460	-	-	-	-	-	-	-	-
	50000	30473	24752	18803	15273	13524	12405	-	-	-	-	-	-	-	-
	100000	24752	20105	15273	12405	10985	10076	-	-	-	-	-	-	-	-

For high load-high speed applications, see page 204.
For Bearing Selection and Engineering, see page 176.

TOUGH AS THEY COME!

Corrosion-Resistant Bearings

All RPB Series Pillow Block, Flange and Piloted Flange Units can be provided with *"CR" housings to resist corrosion in many difficult environments.* RPB-CR bearings feature a corrosion-resistant matrix with a fluoropolymer rich surface on a molecular binder layer that provides significant application advantages in harsh atmospheres:

- Excellent corrosion-resistance.
- Excellent weathering resistance.
- Hard (Matrix) polymer resists abrasion.
- Molecular binder resists peeling, etc.
- Standard silver color blends well with other equipment.
- A wide variety of other colors available on special order.
- Fluropolymer means **"Non-Stick".**

All The Longer Life Features... *Plus A Corrosion-Resistant Polymer Coating*

- Split housing, entirely polymer coated, *including bore.*
- Polymer coated Locking Collars.
- Polymer coated Cap bolts.

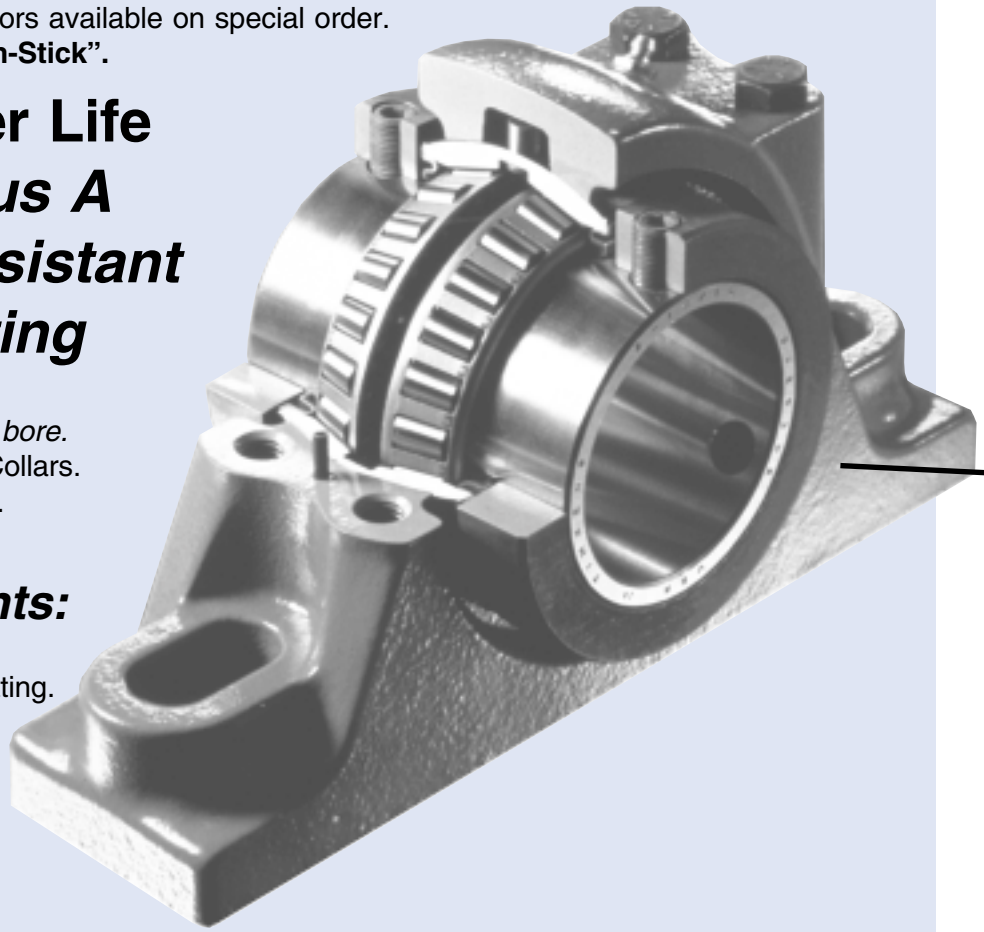

Other Components:

- Stainless Steel Grease Fitting.
- Stainless Steel Washers.
- Standard Contact Seal.
- Black Oxide Outer Race.
- Standard Setscrews.

For more information on wet environments, see applications section, page 136.

SEALMASTER Corrosion-Resistant Mounted Roller Bearings Take On The Tough Applications...

We begin with the best... and then improve the design to the most demanding specific services.

The RPB Series Bearings are used in applications where they may be subjected to moisture, corrosive and abrasive atmosphere. Typical applications include:

- Food Processing Equipment.
- Chemical Processing Plants.
- Rubber and Plastic Plants.
- Pulp and Paper Mills.
- Marine and Naval Applications.
- Waste Water Treatment Facilities.
- Bulk Material Handling.

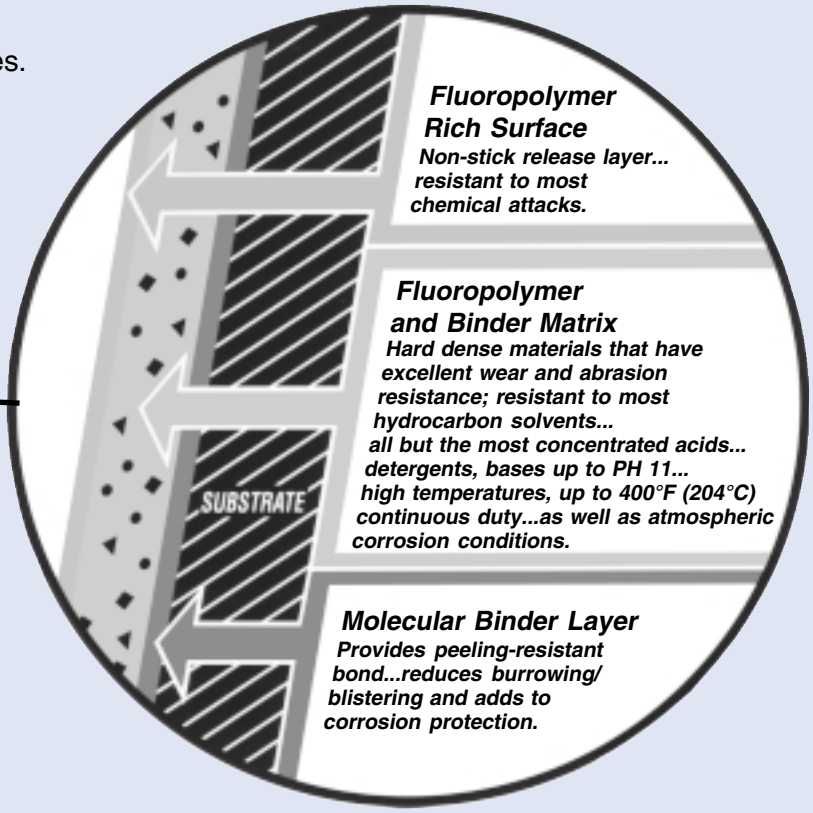

How To Specify:
SEALMASTER RPB-CR Units are identified on the metal nametag.
To specify, add "CR" to the basic part number: "RPB215-2CR"

UNIQUE...UNCHALLENGED...THE UNDISPUTED LEADER IN QUALITY, VALUE-ADDED ADVANTAGES AND CUSTOM DESIGNS

TOUGH
AS THEY COME!

SEALMASTER RPB-AH *Air Handling* Roller Bearings...

With Enhanced Performance... for the World-Wide HVAC Industry...

Roller bearing units for HVAC applications are subjected to a number of unique challenges that include:

1. Running at *higher* operating speeds.
2. Exposure to *vibration*.
3. Running with *low* noise levels.
4. Mounting on fan frames that have reduced *structural* mass.

SEALMASTER **RPB-AH** tapered roller bearings units are ***specially-designed with engineering features that address each of these challenges,*** and offer overall enhanced performance in air handling services. Here are several reasons why...

HIGH LOAD CAPACITIES... RPB-AH Tapered roller bearings offer both high radial as well as high thrust load capacities, or any combination of the two. Spherical roller bearings, on the other hand, are *not* known for their thrust capacity, and are generally not selected/specified for vertical shaft applications which are often encountered in HVAC.

PINNED OUTER RACE PREVENTS ITS ROTATION... The RPB-AH bearing has a self-aligning capability of *± 3°.* This design is similar in concept to the proven SEALMASTER ball bearing units which utilize a spherical O.D. insert mounted in a spherical I.D. cast iron housing, equipped with a locating pin. This anti-rotation pin prevents outer race rotation under load and does not limit the RPB-AH self-aligning capability. The extensions on the cartridge inserts limit misalignment to ± 3°.

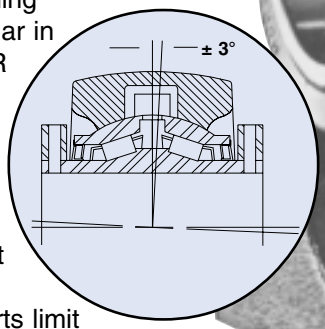

CUSTOM FIT-UP... SEALMASTER engineers have developed a custom fit-up between the bearing cartridge O.D. and the bearing housing specifically for air handling applications. This fit is looser than standard which provides lighter misalignment torque. Fan frames are generally light weight which may deflect before the bearing insert adjusts for misalignment in standard units. This special feature also allows full roller contact with the races and reduces roller edge loading in the bearing.

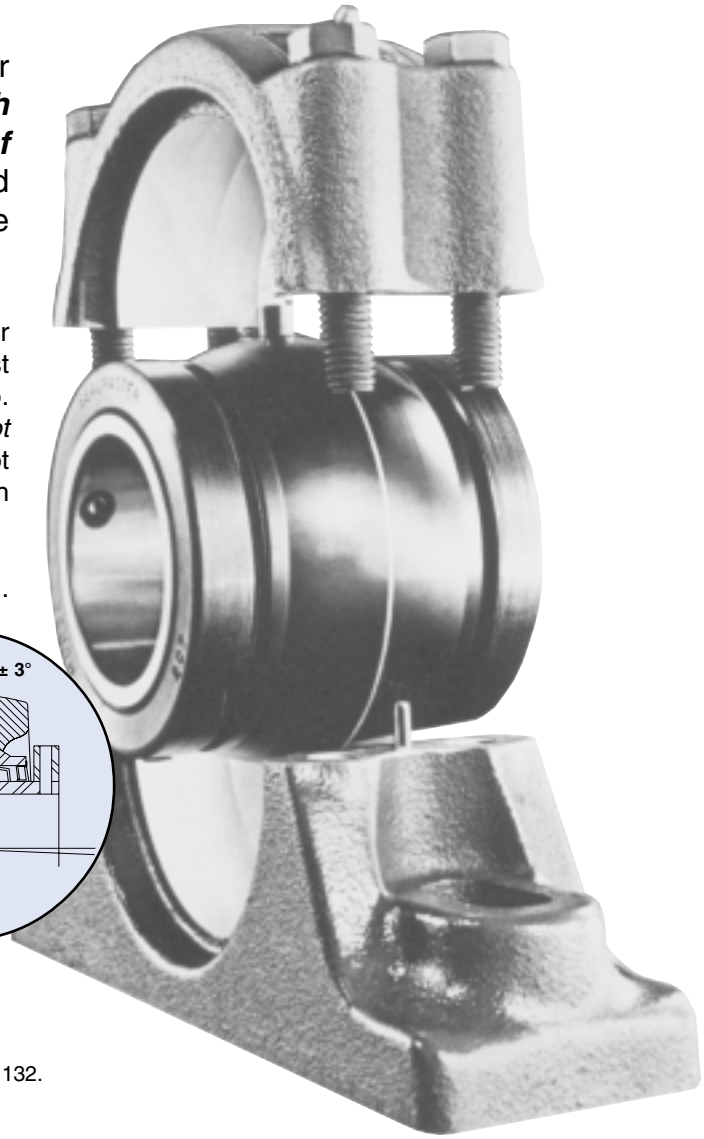

For more information on air handling, see applications section, page 132.

DURABLE CAST IRON SPLIT HOUSING - Compact split housing provides quickest replacement of bearing inserts, reduced downtime and replacement costs.

PATENTED FELT LABYRINTH SEALS - Proven design directs contaminants away from sealing surfaces, provides a tight fit to exclude foreign material; once grease permeates the felt there's a lower coefficient of friction (or reduced drag), less heat generation, extended operating life.

EXTENDED INNER RACES - With double locking collars provides a more secure locking system, more holding power and greater stability on the shaft.

MORE CHOICES... MORE STYLES AND SIZES

Air Handling - Self Aligning Roller Bearing Units

SHAFT SIZE INCH	HOUSING SIZE RANGE SIZE	2 BOLT PILLOW BLOCKS		4 BOLT PILLOW BLOCKS			FLANGE BLOCKS PILOTED FLANGES				MAX SPEEDS**
		RPB	RPB-A DRPB DRPB-A	RPB RPBXT	RPB-A	DRPB DRPB-A	RFB	RFB-A	RFP	RFP-A	
1 3/16 - 1 1.4	103/104	■	-	-	-	-	■	-	■	-	4000
1 3/8 - 1 7/16	106/107	■	-	-	-	-	■	-	■	-	3500
1 1/2 - 1 11/16	108/111	■	■	-	-	-	■	-	■	-	3000
1 3/4 - 2	112/200	■	■	-	-	-	■	■	■	■	2500
2 3/16	203	■	■	■	■	-	■	■	■	■	2500
2 1/4 - 2 1/2	204/208	■	■	■	■	-	■	■	■	■	2000
2 11/16 - 3	211/300	■	■	■	■	-	■	■	■	■	1750
3 3/16 - 3 1/2	303/308	■	■	■	■	-	■	■	■	■	1500
3 15/16 - 4	315/400	-	-	■	■	■	■	-	■	■	1250
4 7/16 - 4 1/2	407/408	-	-	■	-	-	-	-	■	-	1250
4 15/16 - 5	415/500	-	-	■	-	-	-	-	■	-	1000
SEE PAGE FOR SPECIFICATIONS		104	105,107,108	104,111	105	107,108	114	115	116	117	

■ Available as Air Handling Units.

Replacement Cartridge inserts, see page 120.

**HVAC applications are normally lightly loaded but may require higher speed capability. For these applications consult SEALMASTER Engineering for assistance.

OTHER OPTIONS:

- **EXPANSION BEARINGS -** Type ERPB-AH Expansion bearings are available on request.
- **HIGH TEMPERATURE OPERATIONS -** Standard bearings can be modified for operation at higher temperatures.

For more details on full range of features and benefits, refer to pages 98-103.

NAMEPLATE IDENTIFICATION

RPB-AH Air Handling units are identified with a special SEALMASTER metal nameplate indicating that they are equipped with the special housing fit and are custom engineered for HVAC Air Handling applications.

HOW TO SPECIFY:

SEALMASTER RPB-AH Air Handling units are clearly identified on the special metal nameplate *- to specify, add the "AH" to the basic part number:* "RPB-207-2AH"

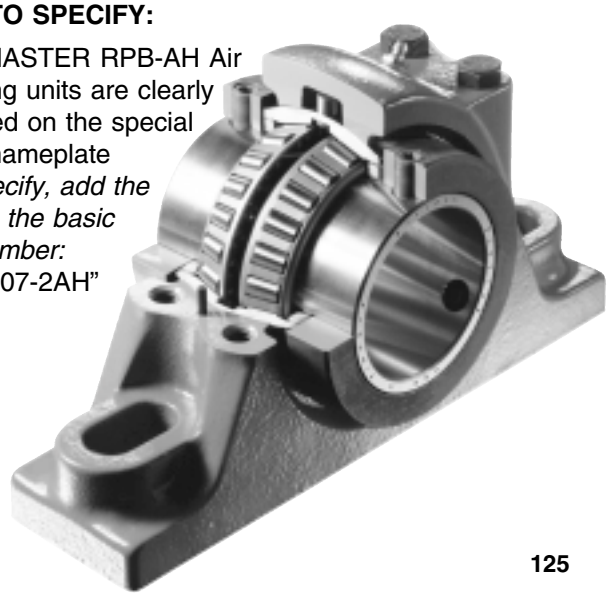

TOUGH AS THEY COME!

SEALMASTER RPB-M
Series Metric Bore Bearings

The RPB-M Series Metric bore bearing is available in the full range of sizes and various mounted bearing styles as shown in the Table on the opposite page. These metric bearings have the full range of features and benefits of the RPB Series self-aligning bearings described in detail on pages 98-103.

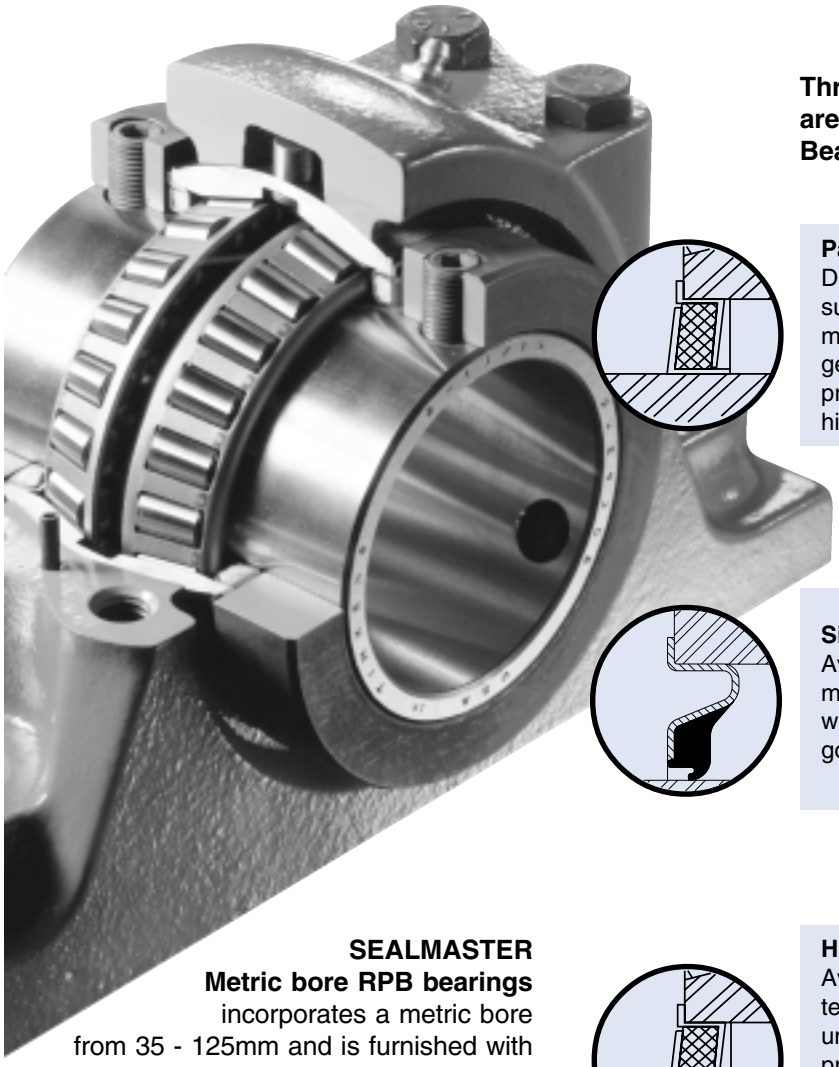

Three basic sealing arrangements are offered for the RPB-M Metric Bore Bearing...

Patented Felt Labyrinth Seal...
Directs contaminants away from the sealing surfaces... provides a tight fit to exclude foreign material... has less drag (friction) and less heat generation than radial lip contact seals; provides positive sealing for low, medium, and high speed operation.

Single Lip Contact Seal...
Available in all sizes... recommended where moisture conditions prevail... functions well in wet and dirty environments up to 250°F... has good chemical resistance properties.

SEALMASTER
Metric bore RPB bearings
incorporates a metric bore from 35 - 125mm and is furnished with metric setscrews. All other components and hardware are standard.

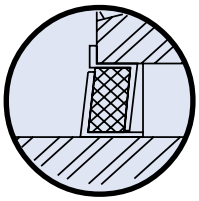

High Temperature Seal...
Available extra-cost option where operating temperatures are in the 250 - 400°F range; units with these sealing arrangements are prelubricated at the factory with a special high temperature synthetic lubricant which is normally satisfactory for the temperature range 0f -40°F to +400°F.

METRIC BORE Self-Aligning Roller Bearing Units

SHAFT SIZE METRIC	SHAFT SIZE RANGE (INCH)	HOUSING SIZE RANGE (INCH)	2 BOLT PILLOW BLOCKS				4 BOLT PILLOW BLOCKS					FLANGE BLOCKS PILOTED FLANGE CYLINDRICAL CARTRIDGE INSERTS				
			RPB	RPB-A	ERPB DRPB DRPB-A EDPB-A	SPB	RPB RPBXT ERPBXT	RPB-A	ERPB	DRPB DRPB-A EDPB EDPB-A	SPB	RFB	RFB-A	RFP	RFP-A	ERCI
35	1 3/8 - 1 7/16	106/107	■	-	-	-	-	-	-	-	-	■	-	■	-	-
40	1 1/2 - 1 11/16	108/111	■	-	-	■	-	-	-	-	-	■	-	■	-	-
45	1 3/4 - 2	112/200	■	■	■	■	-	-	-	-	-	■	■	■	■	■
50	1 3/4 - 2	112/200	■	■	■	■	-	-	-	-	-	■	■	■	■	■
55	2 3/16	203	■	■	■	■	-	-	-	-	-	■	■	■	■	■
60	2 1/4 - 2 1/2	204/208	■	■	■	■	■	■	-	-	-	■	■	■	■	■
65	2 1/4 - 2 1/2	204/208	■	■	■	■	■	■	-	-	-	■	■	■	■	■
70	2 11/16 - 3	211/300	■	■	■	■	■	■	-	-	-	■	■	■	■	■
75	2 11/16 - 3	211/300	■	■	■	■	■	■	-	-	-	■	■	■	■	■
80	3 3/16 - 3 1/2	303/308	■	■	■	■	■	■	-	-	-	■	■	■	■	■
85	3 3/16 - 3 1/2	303/308	■	■	■	■	■	■	-	-	-	■	■	■	■	■
90	3 3/16 - 3 1/2	303/308	■	■	■	■	■	■	-	-	-	■	■	■	■	■
95	3 3/16 - 3 1/2	303/308	■	■	■	■	■	■	-	-	-	■	■	■	■	■
100	3 15/16 - 4	315/400	-	-	-	-	■	■	■	■	■	■	■	■	■	■
105	3 15/16 - 4	315/400	-	-	-	-	■	■	■	■	■	■	■	■	■	■
110	4 7/16 - 4 1/2	407/408	-	-	-	-	■	-	■	-	■	-	-	■	-	■
115	4 7/16 - 4 1/2	407/408	-	-	-	-	■	-	■	-	■	-	-	■	-	■
120	4 15/16 - 5	415/500	-	-	-	-	■	-	■	-	■	-	-	■	-	■
125	4 15/16 - 5	415/500	-	-	-	-	■	-	■	-	■	-	-	■	-	■
See Page For Mounting Dimensions			104	105	106,107,108	112	104,111	105	106	107,108	112	114	115	116	117	118,119

■ Available as metric bore units, including metric setscrews. To order: Add “M” to part number. Example: RPB-65M-C2

RCI-M & RCIA-M Replacement Cartridge Units

RCI-M SERIES				RCIA-M SERIES			
BORE SIZE	FELT SEAL	CONTACT SEAL	HI-TEMP SEAL	BORE SIZE	FELT SEAL	CONTACT SEAL	HI-TEMP SEAL
35	RCI-35M	RCI35M-C	RCI35M-N	35	RCIA-35M	RCIA35M-C	RCIA35M-N
40	RCI-40M	RCI40M-C	RCI40M-N	40	RCIA-40M	RCIA40M-C	RCIA40M-N
45	RCI-45M	RCI45M-C	RCI45M-N	45	RCIA-45M	RCIA45M-C	RCIA45M-N
50	RCI-50M	RCI50M-C	RCI50M-N	50	RCIA-50M	RCIA50M-C	RCIA50M-N
55	RCI-55M	RCI55M-C	RCI55M-N	55	RCIA-55M	RCIA55M-C	RCIA55M-N
60	RCI-60M	RCI60M-C	RCI60M-N	60	RCIA-60M	RCIA60M-C	RCIA60M-N
65	RCI-65M	RCI65M-C	RCI65M-N	65	RCIA-65M	RCIA65M-C	RCIA65M-N
70	RCI-70M	RCI70M-C	RCI70M-N	70	RCIA-70M	RCIA70M-C	RCIA70M-N
75	RCI-75M	RCI75M-C	RCI75M-N	75	RCIA-75M	RCIA75M-C	RCIA75M-N
80	RCI-80M	RCI80M-C	RCI80M-N	80	RCIA-80M	RCIA80M-C	RCIA80M-N
85	RCI-85M	RCI85M-C	RCI85M-N	85	RCIA-85M	RCIA85M-C	RCIA85M-N
90	RCI-90M	RCI90M-C	RCI90M-N	90	RCIA-90M	RCIA90M-C	RCIA90M-N
95	RCI-95M	RCI95M-C	RCI95M-N	95	RCIA-95M	RCIA95M-C	RCIA95M-N
100	RCI-100M	RCI100M-C	RCI100M-N	100	RCIA-100M	RCIA100M-C	RCIA100M-N
105	RCI-105M	RCI105M-C	RCI105M-N	105	RCIA-105M	RCIA105M-C	RCIA105M-N
110	RCI-110M	RCI110M-C	RCI110M-N	110	RCIA-110M	RCIA110M-C	RCIA110M-N
115	RCI-115M	RCI115M-C	RCI115M-N	115	RCIA-115M	RCIA115M-C	RCIA115M-N
120	RCI-120M	RCI120M-C	RCI120M-N	120	RCIA-120M	RCIA120M-C	RCIA120M-N
125	RCI-125M	RCI125M-C	RCI125M-N	125	RCIA-125M	RCIA125M-C	RCIA125M-N

* Insert package includes factory lubed, adjusted, and sealed cartridge complete with single or double locking collars.

SEALMASTER® APPLICATION WORKSHEET

EMERSON POWER TRANSMISSION

EPT MOUNTED BEARING DIVISION

Mail To: Sealmaster Bearings - Application Engineering
1901 Bilter Rd.
Aurora IL 60507

Fax to: Application Engineering 630-898-6064

Distributor Information	Customer Information
Distributor Name	Company Name
Contact Name	Contact Name
Street Address	Street Address
City/State/Zip	City/State/Zip
Phone	Phone
Fax	Fax
Internet E-Mail	Internet E-Mail
Is the Customer an: OEM or End User	Industry

Application Information

Is this a new application Yes or No	Complete Climate Description
Speed: (rpm)	EXPLAIN: Climate Conditions: Wet ❑
Service Life Required: (hours):	Washdown ❑
	Dry ❑
	Clean ❑
	Dirty ❑
Shaft Diameter:	Chemicals ❑
Load Information (lbs.): Load Conditions: Steady ❑	Operating Temperature (°F):
Radial (lbs.): Shock ❑	Is the bearing in the elevated temp? Yes / No
Axial / Thrust (lbs.): Thrust ❑	Is the heat coming through the shaft? Yes / No
Oscillation ❑	
If loads unknown attach detailed sketch*** Other ❑	Can the bearings be re-lubricated? Yes ❑ No ❑
Complete Application Description: Horsepower (bhp):	Motor
	Driven Pulley Diameter (in.):
	Distance Between Bearings:

***PLEASE ATTACH DETAILED SKETCH OF APPLICATION.

INCLUDE ALL DIMENSIONS AND SYSTEM LOAD LOCATIONS

MODIFICATION AND SPECIAL CAPABILITIES

HIGH TEMPERATURE ..... Pages 130-131

AIR HANDLING ..... Pages 132-133

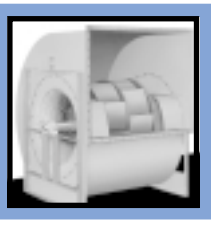

CONSTRUCTION ..... Pages 134-135

WET ENVIRONMENTS ..... Pages 136-137

AGGREGATE/MINING ..... Pages 138-139

ECCENTRIC DRIVES..... Pages 140-141

MIXERS ..... Pages 142-143

HIGH TEMPERATURE...

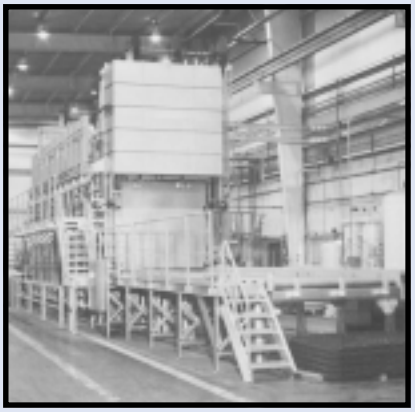

High temperature bearings are found in a broad range of industries. Temperature changes throughout the mounted bearings and shaft system impact the molecular structure of the materials causing expansion and contraction. Also, bearing components such as seals, grease, retainers, races, balls, etc., are affected by the high temperature and may require design modifications to optimize bearing performance.

Key Concerns... include effects on material and shaft expansion ranges.

SEALMASTER bearings are frequently specified for:

- Industrial Furnaces.
- Bakery Ovens.
- Heat Treat Equipment.
- Incinerators.
- Drying Ovens.
- Fans and Blowers.

MOST BEARINGS REQUIRE MORE THAN ONE COMPONENT MODIFICATION TO INCREASE ITS EFFECTIVE OPERATING TEMPERATURE LEVEL. SEALMASTER BEARINGS CAN BE MODIFIED TO OPERATE AT UP TO 375°F.

GOLD LINE SOLUTIONS FOR HIGH TEMPERATURE APPLICATIONS.

Material Temperature Ranges:

Seals...

BALL - SEALMASTER Gold Line Ball Bearings have a variety of special high temperature labyrinth and annular contact sealing options available per request. The most frequently used high temperature seals on ball bearings are the Nomex seal design (similar to the standard felt seal), HeatGard Seal (silicon fiberglass contact), or HeatGard Ultra Seal (spring loaded FKM oil seals). *Refer to the seal section found on page 188.*

ROLLER - SEALMASTER RPB Bearings offer the high temperature Nomex seal design (similar to the felt seal).

Lubrication...

Sealmaster offers a wide selection of high temperature lubricants formulated to specifically meet specific application conditions. Relubrication frequency may need to be increased to ensure adequate lubrication is maintained.

Retainer...

BALL - The optional Brass Land riding retainer provides a low coefficient of material expansion and is able to withstand elevated temperatures.

ROLLER - Metal cage is standard with all SEALMASTER Gold Tapered Roller Bearings.

Races and Balls...

SEALMASTER high quality bearing steel extends the maximum effective operating temperature to 375°F.

Material Expansion:

Internal Clearances...

Individual bearing components may expand due to wide temperature changes. This condition can cause preloading or bearing seizing. By adjusting internal clearances in the manufacturing process, bearings can be customized to function in specific high temperature applications.

BALL - The application's temperature changes physically dictate the amount of clearance required. SEALMASTER's extensive experience with high temperature applications have resulted in six unique and proprietary specifications for diametral clearance.

ROLLER - The standard Roller Bearing design has the inherent ability to accommodate expansion and contraction of bearing materials. *For more information on Bearing Clearances, see page 193.*

Shaft Expansion...

BALL - SEALMASTER Ball Bearings handle shaft expansion through the use of an external insert expansion ring (AR, EMP) or the use of a unique half-dog set screw and lock wire arrangement. Refer to the SEALMASTER standard Gold Line expansion ball bearing unit sizes for maximum allowable shaft growth. When shaft expansion requirements exceed these standard specifications, an alternate method is shaft slotting combined with the use of a special half-dog set screw and lock wire arrangement. *Contact SEALMASTER Applications engineering for information regarding this option.*

ROLLER - SEALMASTER Gold Line Tapered Roller Bearings are also offered with cylindrical insert cartridges (ERCI) that can move axially with shaft lengthening. *Refer to the expansion roller bearing unit pages for exact expansion specifications.*

Contact application engineering with your application parameters for exact bearing selection (630-898-9620).

STANDARD & CUSTOM SOLUTIONS FOR HIGH TEMPERATURE APPLICATIONS

GOOD AS GOLD... NO EQUAL!

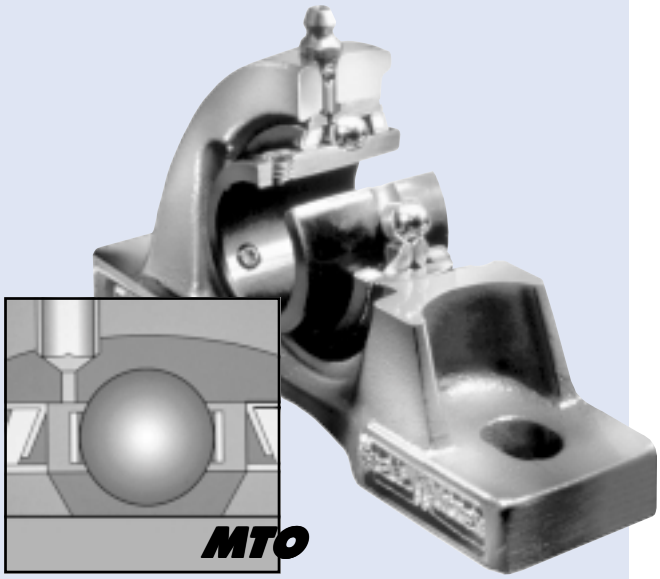

Larger Diametral Clearances

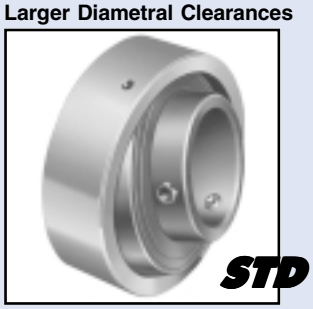

Expansion Ball Bearings

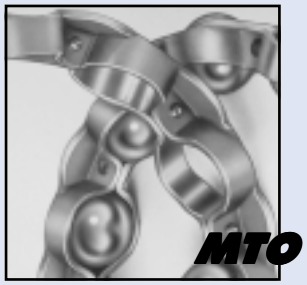

Brass Retainer

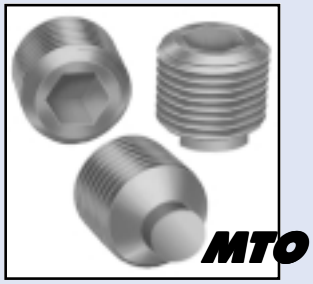

Half-dog set screw & wire

HeatGard Seal

Nomex Seals

HeatGard Ultra Seals

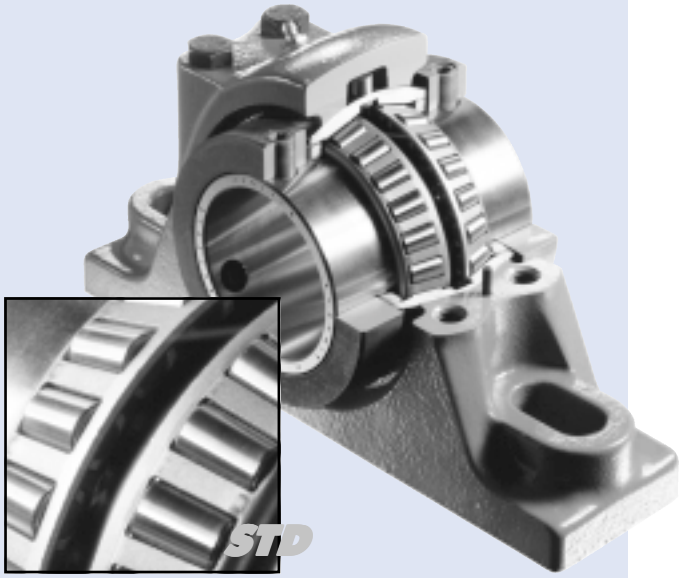

Metal Cage

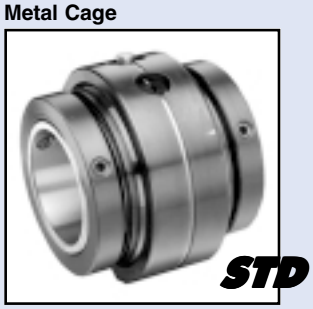

Expansion Roller Bearings

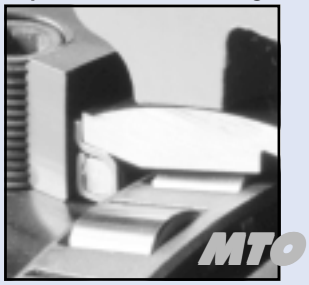

Nomex Seals

See Our...

Standard High Temperature Gold Line Furnace Bearings in the Ball Bearing section on pages 90 & 91.

Note: **MTO** (Made To Order), **STD** (Standard)

AIR HANDLING...

SEALMASTER Gold Line Bearings are used in Air Handling Applications more than any other type of equipment. They are found in a wide variety of industries including Heating, Ventilation, and Cooling (HVAC) equipment and industrial blowers. SEALMASTER bearings have been extremely effective in air handling applications for over 50 years because of the cohesive interplay of Gold Line design features that satisfy many needs of this industry.

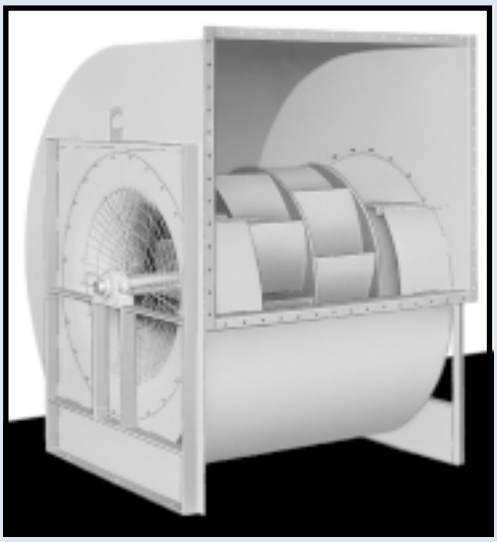

Air Handling equipment runs at relatively high speeds with high frequency vibration and ordinarily requires quiet bearing operation. Bearings are frequently mounted on light weight frames which can deform during bearing installation. In industrial blower and material handling applications, bearings are often subjected to intermittent shock loads. Energy consumption is also a growing issue in the air handling industry.

Key Concerns... are high speed, vibration, noise, frame structures, and energy efficiency.

GOLD LINE SOLUTIONS FOR AIR HANDLING APPLICATIONS.

Operating Conditions:

Misalignment...

The SEALMASTER misalignment capabilities, ±2° on ball and, ±3° roller bearings overcome static alignment problems associated with the installation of mounted bearings on air handling equipment.

Housing Fits...

SEALMASTER increases useful bearing life by incorporating a special air handling fit between the bearing insert/cartridge and the housing that allows the bearing to properly self-align when mounted on lightweight frame structures, without causing frame deflection.

Noise Test...

During SEALMASTER's Ball Bearing manufacturing process, an extra noise test check point is added to identify those bearings that meet the exacting noise level needs of the air handling industry. Sealmaster also performs a honing operation after grinding to further polish the surface finish for quiet operation.

Vertical Mounting...

Sealmaster special "Rainshield" protective cover, available on certain Mounted Ball Bearings, is often specified on vertical shaft applications where condensation and water tends to travel down the shaft and cascade over the bearing. The special flinger design repels moisture build up through rotating motion or centrifugal force. *Ask SEALMASTER Application engineers about the S2100 Series "Rainshield" Bearings.*

Label Identification...

Ball - AC/NT bearing units are labeled with a metal nameplate riveted into the housing that indicates that the unit is a *SEALMASTER Air Handling Unit.*

Roller - Sealmaster RPB-AH Air Handling units (see page 125) are identified with a special ***SEALMASTER metal nameplate*** indicating that they are equipped with the special housing fit and custom engineered for HVAC Air Handling applications.

High Speed and Vibration:

Locking Mechanism...

Often during high speed operation, any eccentricity resonates throughout the air handling system. Inner ring roundness is critical to smooth operation and longer useful bearing life. SEALMASTER's balanced 3-point contact setscrew shaft lock system has been field tested and technically studied to provide longer useful bearing life. Double sided set screw shaft locking is standard on roller bearings and also available on medium duty ball bearings using four set screws to hold the bearing to the shaft and is recommended for high speed air handling applications. *(See page 49).*

Ball - SEALMASTER Gold Line standard wide inner ring combined with our diamond faceted precision ground setscrews and zone hardened ball path all work together to increase shaft stability and improve our shaft lock ability during the most severe vibrating conditions.

For our most concentric locking available in a mounted ball bearing, see the SKWEZLOC Section on page 64.

Locking Pin...

The locking pin design significantly lessens the likelihood of outer ring rotation that could compromise the integrity of the lubrication system and contribute to corrosive fretting between the outer race and housing.

Efficiency:

Seals...

SEALMASTER's field proven felt lined labyrinth seals are ideally suited for air handling energy concerns. The labyrinth construction has an inherent low coefficient of friction between the metal flingers and the filtering material. Standard breakaway and running torques are significantly lower than contact seal designs. Sealmaster labyrinth seals can be modified to provide even lower break away and running torque values.

STANDARD & CUSTOM SOLUTIONS FOR AIR HANDLING APPLICATIONS

GOOD AS GOLD... NO EQUAL!

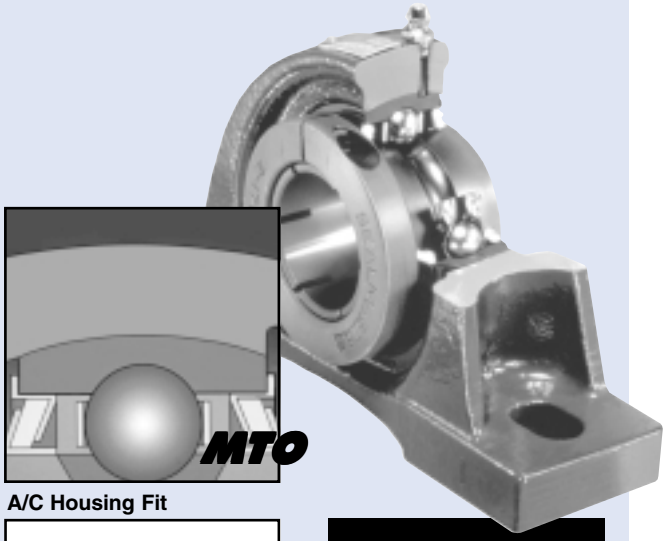

A/C Housing Fit

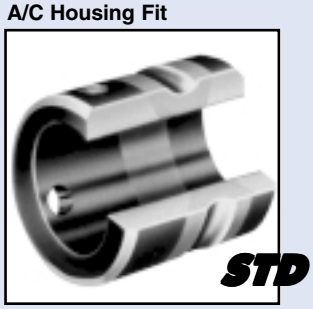

Wide Inner Ring

Solid Base Housing

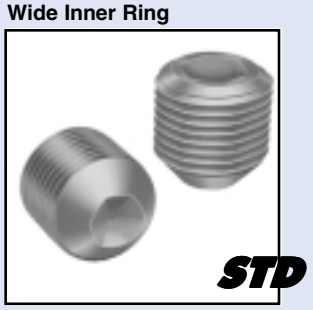

Diamond Faceted Set Screw

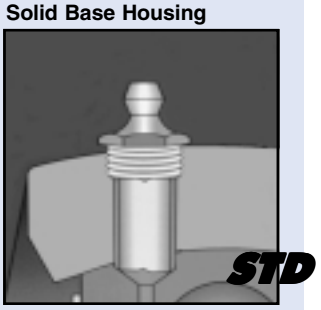

Pin & Dimple

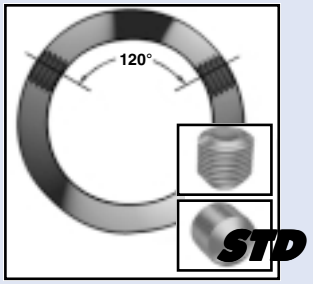

120° Set Screw Positioning

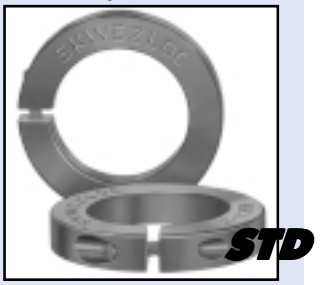

Skwezloc Locking

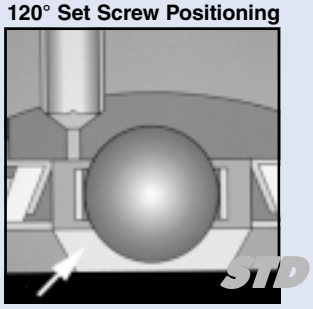

Inner Ring Zone Hardening

Felt Seal

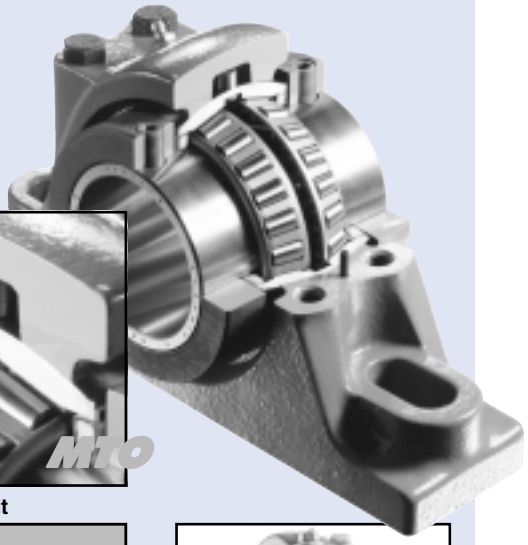

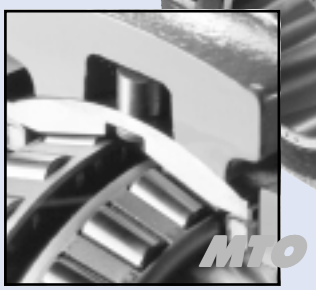

AH Housing Fit

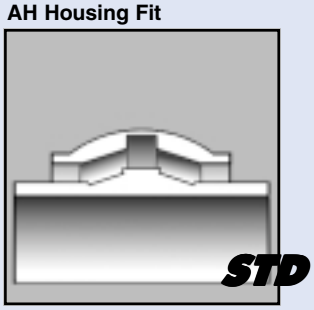

Wide Inner Race

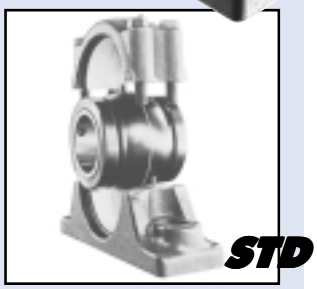

Split Housing

Felt Seals

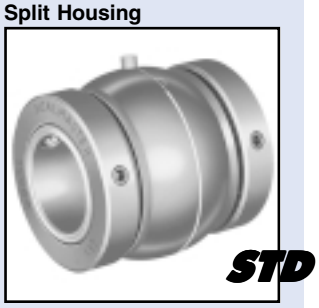

Double Locking Set Screw

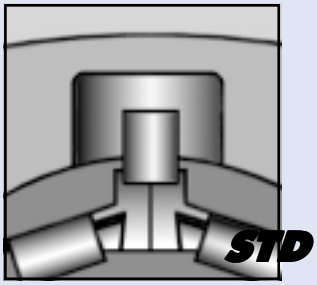

Lock Pin

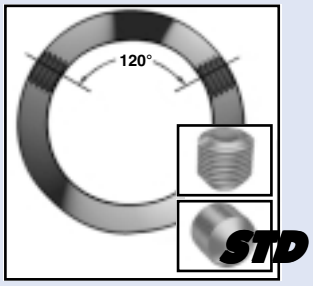

120° Set Screw Locking

Note: **MTO** (Made To Order), **STD** (Standard)

See Pages 34-35 For Rubber Mounted Air Handling Bearings.

CONSTRUCTION...

Construction equipment varies widely from hot asphalt pavers to earth movers to large material handlers, etc... The timing of construction projects is critical and it is important that equipment lasts through an entire season. Unexpected downtime delays are unacceptable.

Construction machinery typically is used outdoors and requires protection from weather, dirt, road debris, wide temperature fluctuations, etc... Bearings are normally subjected to heavy loads with vibration and operate at slow to high speeds. Seals may be exposed to abrasive materials and sharp objects found in construction environments which can lead to instant bearing problems.

In particular: Paver bearings support augers that come into direct contact with hot grading asphalt that quickly wears seals and races away. In this application bearings operate at slow to moderate speeds.

Another example: Construction saws need to cut both dry and wet concrete are also subjected to vibration and abrasive contaminant from the concrete dust. Mounted Bearings support the arbor shafts and are unusually ceiling mounted.

Key Concerns... include seal damage, shock loading, vibration, abrasives, loss of shaft lock, high temperatures, high speeds, and liquid and dry contamination.

SEALMASTER bearings are frequently specified for:

- Concrete Saws.
- Paving Equipment.
- Street Sweepers.
- Spreaders.
- Front End Loaders.
- Backhoes.
- Wheel Compactors.
- Cranes.
- Excavators.
- Power Shovels.

GOLD LINE SOLUTIONS FOR CONSTRUCTION APPLICATIONS.

Vibration/Shock and Impact Loading:

Housing Fits...

Tight housing fit (interference) between the bearing insert and housing may be required to prevent the outer race from rotating in the housing. This minimizes fretting on the outer race and housing bore. Available as made to order on ball and roller bearings.

Locking Pin...

The locking pin design significantly lessens the likelihood of outer ring rotation that could compromise the integrity of the lubrication system.

Misalignment...

The SEALMASTER misalignment capabilities ±2° on ball and ±3° on roller bearings overcome static alignment problems during installation which can be caused by inaccuracies in framework design.

Housing Style...

Piloted Flange housings are often recommended for these applications due to the 360° mounting shoulder for positive installation in the machine structure. This added support greatly reduces bolt stresses. Six mounting holes are standard on 4 7/16" through 5" roller bearing bore sizes. Sealmaster also recommends the use of 4 bolt hole mounting configurations on the pillow block style housing.

Throughout the Sealmaster ball bearing line solid base housings are standard and contribute to a more rigid mounting system.

Locking Mechanism...

Double sided set screw shaft locking, available standard on roller and medium duty ball bearings, uses four set screws to hold the bearing to the shaft and is recommended for these applications.

Contamination:

Seals...

SEALMASTER's field proven felt lined labyrinth seals keep contaminants out and lubrication in. The felt filtering material is a highly effective barrier against abrasive particulate and the labyrinth construction allows for the grease and contamination to purge during re-lubrication. Depending upon individual application needs, other optional sealing arrangements can be considered and are found in the engineering section starting on page 176.

SEALMASTER has developed a specialized MTO product known as "Shielded Ball". See picture on facing page. This extraordinary bearing incorporates a heavy duty multiple barrier sealing system that has proven valuable in the aggregate environment. One impressive feature is the use of thick structural shields staked onto the inner race to repel large aggregates. These shields protect the multiple barrier sealing system which consists of a dense high durometer seal wedge, a wave spring seal feature, and a third metal flinger contact seal. Between these features are grease chambers. Contact SEALMASTER application engineering for more information on this most unique MTO product.

End Caps...

There are a variety of made to order end caps that can be manufactured for specific needs. End caps can be produced from stainless or low carbon steels, with or without coatings, to suit application needs. *See Beverage Bearing and HF/HFT Furnace bearing product lines for End Cap solution examples.*

Elevated Temperatures... Refer to the High Temperature application section on pages 130-131.

Contact application engineering with your application parameters for exact bearing selection (630-898-9620).

STANDARD & CUSTOM SOLUTIONS FOR CONSTRUCTION APPLICATIONS

GOOD AS GOLD... NO EQUAL!

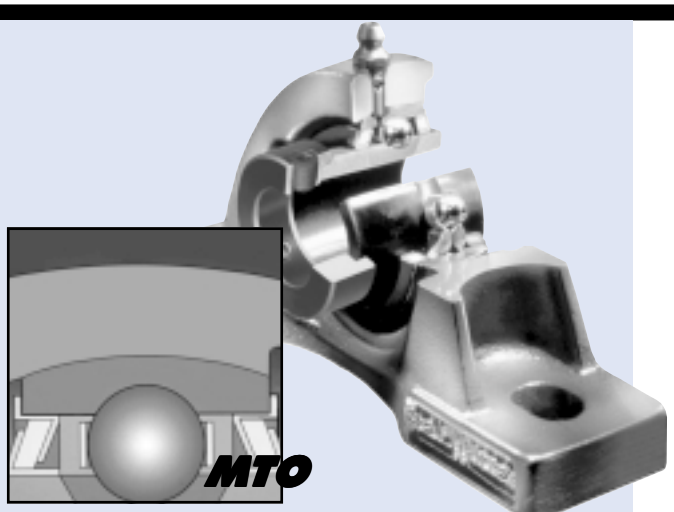

Tight Housing Fit

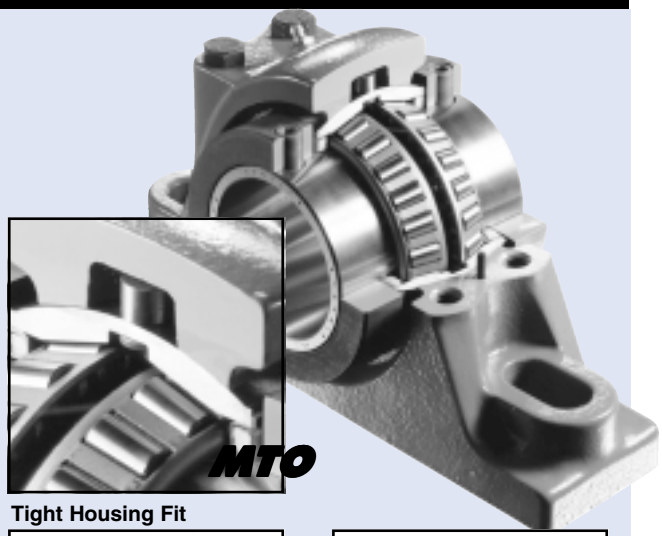

Tight Housing Fit

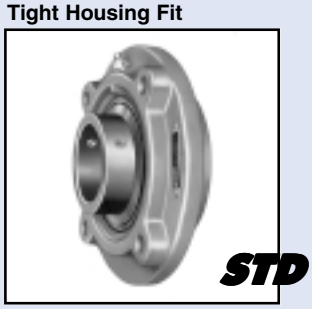

Piloted Flange Housing

4 Bolt Pillow Block

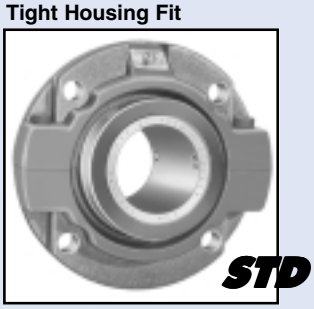

Piloted Flange Housing

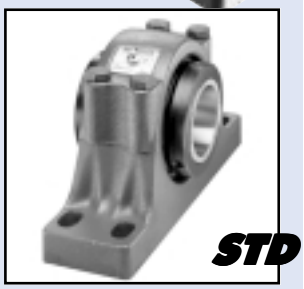

4 Bolt Pillow Blocks

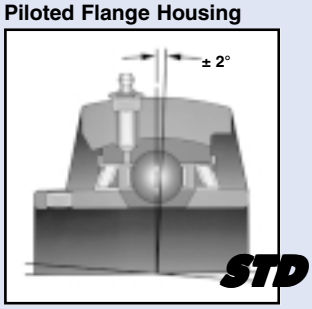

± 2° Misalignment

Solid Base Housings

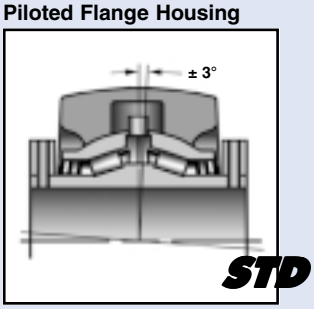

± 3° Misalignment

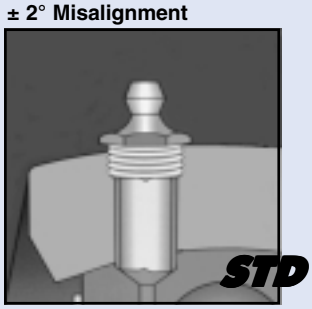

Locking Pin & Dimple

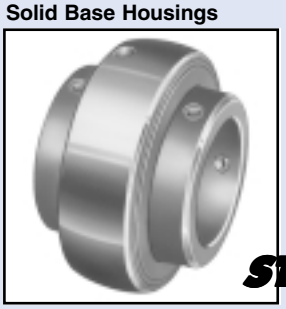

Double Lock Insert

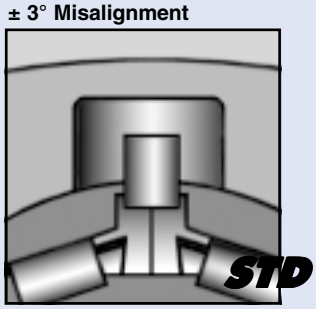

Locking Pin

Felt Seals

Examples of **"Shielded Ball"** Ball Bearings

Note: **MTO** (Made To Order), **STD** (Standard)

WET ENVIRONMENTS...

Many harsh applications expose bearings to water and chemicals which can contaminate bearing rolling elements and housings thereby reducing bearing life. Increased uptime is an overriding need in these applications and can be accomplished by preventing this rapid corrosion.

For example, machinery that packages food and beverages must remain extremely clean and is frequently washed down with high pressure caustic cleaning solutions. This can initiate corrosion, contaminate the bearing, and wash out valuable grease.

Another application where water creates a problem for mounted bearings is waste water treatment. Orbals and belt presses are subjected to moisture, chemicals, and sewage contamination. Keeping bearings operational and free from internal corrosion is critical to optimizing bearing life.

Key Concerns... include slurry, moisture, pressure wash, and chemicals.

Sealmaster bearings are frequently specified for:

- Truck and Water Washers.
- Food Processing.
- Beverage Filling.
- Pulp and Paper.
- Waste Water Treatment.
- Vertical Stroke Shake-Outs.
- Fluidizing Beds.
- Foundry Shake-Out Conveyors.
- Deburring Machines.
- Marine Applications.

GOLD LINE SOLUTIONS FOR WET ENVIRONMENTS APPLICATIONS.

Contamination and Corrosion:

Seals...

The SEALMASTER standard contact seal has good chemical resistance properties and lubrication retention characteristics in operating conditions up to 250°F.

SEALMASTER Gold Line Ball Bearings can be customized with a variety of contact seal options, Auxiliary flingers are also available when needed. The most frequently used wet condition MTO seals on ball bearings are the UltraGard Seal (spring loaded buna oil seals) and the ProGard Seals (double lip contact). Refer to the seal section found on page 188 in the engineering section.

End Caps...

There are a variety of end caps that can be manufactured for specific application needs. End caps can be produced from stainless or low carbon steels, with or without coatings, and in open or closed configuration. *See our Beverage Bearing product line on page 86.*

Auxiliary Shield...

On some housing configurations, supplementary shields and gaskets can be included to protect the back side seals from corrosive materials and high pressure sprays that may be in the surrounding climate.

Lubrication...

Lubrication frequency may need to be increased to ensure adequate lubrication is maintained. Optional food grade greases are available where required. SEALMASTER has had good experience with special wash out preventative lubricants. Contact application engineering for further information.

Coatings...

Sealmaster CR Duty mounted ball and roller bearings can be manufactured with a unique fluoropolymer coated cast iron corrosion-resistant housings. This offers excellent resistance to:

- Moisture.
- Abrasion.
- Peeling.
- Sticky Contaminants.
- High Pressure Washes.
- Most Chemical Solvents up to PH Levels of eleven.

See page 88 for a detailed description of CR Ball Bearings, and page 122 for CR Roller Bearings.

Thin dense chrome (TDC) coated races are available on request. This coating resists corrosion 10 to 15 times longer than ordinary bearing materials. TDC totally covers the entire surface area of the inner and outer race and is between 10-15% harder than industry standard bearing raceways.

Materials...

The following corrosive retardant components can be assembled into your bearings:

- Coated Set Screws
- TDC Raceways
- Brass and Nylon Coated Retainers
- Stainless Steel...Balls, Washers, End Caps, Seals, Lubrication Fittings, Flingers.

Contact application engineering with your application parameters for exact bearing selection (630-898-9620).

STANDARD & CUSTOM SOLUTIONS FOR WET ENVIRONMENTS APPLICATIONS

GOOD AS GOLD... NO EQUAL!

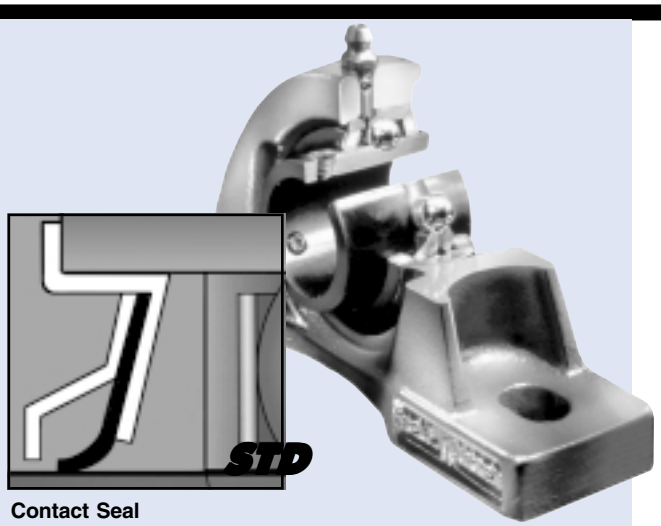

Contact Seal

Ultra Gard Seal

Flouropolymer Cast Iron Coating

ProGard Seal

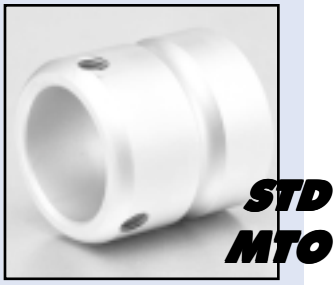

TDC Inner Ring

End Caps

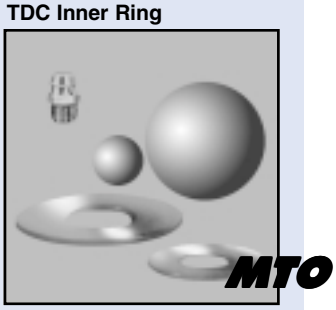

Stainless Steel Components

Auxiliary Shield

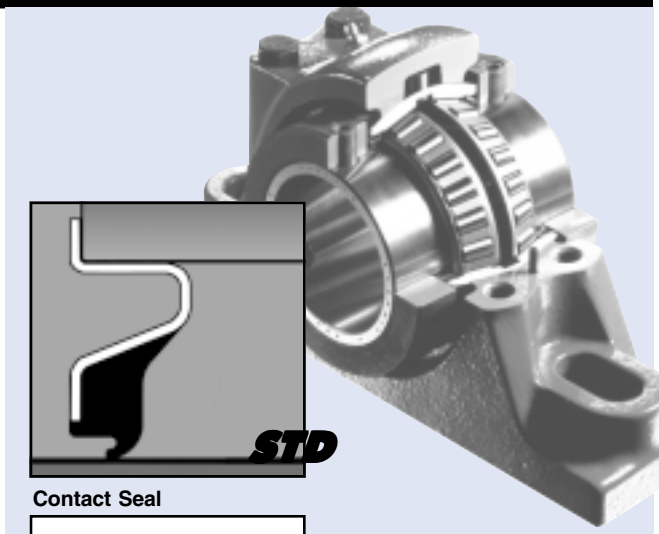

Contact Seal

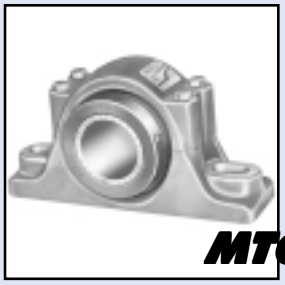

Fluoropolymer Cast Iron Coating

See Our Standard CR Duty Ball Bearings

Corrosion-Resistant Product Line on pages 88-89

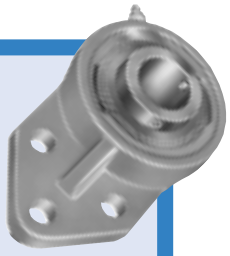

Also See Our Standard CR Duty Roller Bearings

Corrosion-Resistant Product Line on pages 122-123

And See Our Standard Beverage Bearing

Product Line on pages 86-87

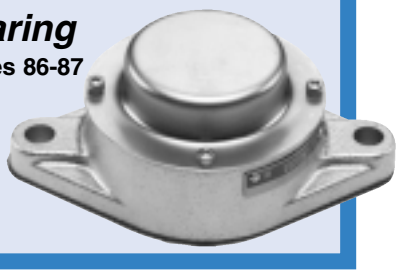

Note: **MTO** (Made To Order), **STD** (Standard)

AGGREGATE/MINING...

Aggregate and Mining applications vary widely in the types of equipment used and in the types of material being conveyed. Aggregate conveyors move stone and rock between primary, secondary, and tertiary crushers and transport finished product into trucks for highway construction projects, and industrial, commercial and residential building needs.

Bearings are subjected to heavy loads with vibration and are exposed to rock dust and grit that tend to build-up on the seals. Generally, the speeds are slow to moderate. Conveyors are often sprayed with water to keep the dust down, thus creating a slurry. Often, bearing components are buried in the sand making sealing more difficult.

Key Concerns... include shock loads, loss of shaft lock, abrasive media, and water and dust contamination.

SEALMASTER bearings are frequently specified for:

- Conveyor Pulleys.
- Augers.
- Screens.
- Crushers...Cone, Roll, Impact, Jaw, Gyratory.
- Conveyor Take-Ups.
- Screw Conveyors.
- Stackers.
- Feeders... Vibrating, Stepdeck, Recipricating, Wobblers.

GOLD LINE SOLUTIONS FOR AGGREGATE/MINING APPLICATIONS.

Contamination:

Seals...

SEALMASTER's field proven felt lined labyrinth seals keep contaminants out and lubrication in. The felt filtering material is a highly effective barrier against abrasive particulate and the labyrinth construction allows for grease and contamination to purge during re-lubrication. Rock plants generate an appreciable amount of stone dust. Water washdown is commonly used to calm the dust. Contact seals are recommended for these applications. Depending upon your individual application needs, you may consider the other optional sealing arrangements found on page 188 in our engineering section.

SEALMASTER has developed a specialized MTO Ball Bearing known as "Shielded Ball". See picture on facing page. This extraordinary bearing incorporates a heavy duty multiple barrier sealing system that has proven valuable in the aggregate environment. One impressive feature is the use of thick structural shields staked onto the inner race to repel large aggregates. These shields protect the multiple barrier sealing system which consists of a dense high durometer seal wedge, a wave spring seal feature, and yet a third metal flinger contact seal. In between these features are grease chambers. Contact SEALMASTER application engineering for more information.

Wide Inner and Outer Race...

This feature distributes the dynamic misalignment forces over a larger surface area between the bearing insert/cartridge and housing. This also provides a greater internal chamber volume that allows for increased grease capacity.

Shock and Impact Loading:

Housing Fit...

Tight housing fit (interference) may be required between the bearing insert and the housing to prevent the outer race from rotating in the housing. This minimizes fretting on the outer race and housing bore. Available as made to order on ball and roller design.

Locking Pin...

The locking pin design significantly lessens the likelihood of outer ring rotation that could compromise the integrity of the lubrication system.

Misalignment...

The SEALMASTER misalignment capabilities, ±2° on ball and ±3° on roller bearings overcome static alignment problems caused by inaccuracy in framework design and settling of the equipment on uneven ground.

Internal Clearances...

Reduced internal clearance can be applied to ball bearings on a made to order basis to reduce pounding forces and internal stresses created from vibration and impact loads.

If required, Tapered Roller Bearings can be modified with reduced clearance ("endplay") which minimizes edge loading. This distributes forces more uniformly across each loaded roller. Contact application engineering for application review.

Locking Mechanism...

Double sided set screw shaft locking, available standard on roller and medium duty ball bearings, uses four set screws to hold the bearing to the shaft and is recommended for these applications.

Contact application engineering with your application parameters for exact bearing selection (630-898-9620).

STANDARD & CUSTOM SOLUTIONS FOR AGGREGATE/MINING APPLICATIONS

GOOD AS GOLD... NO EQUAL!

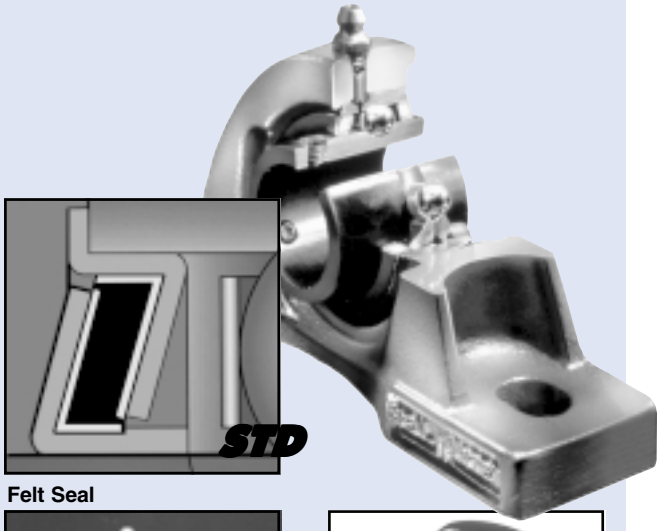

Felt Seal

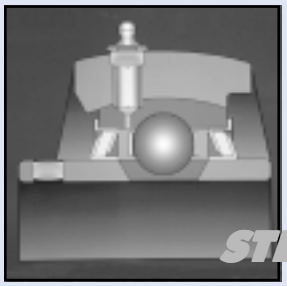

Wide Inner & Outer Ring

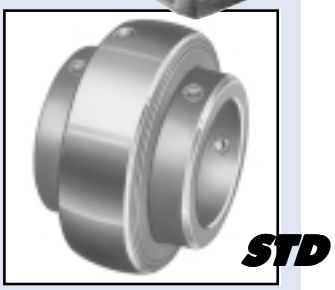

Double Side Set Screw Locking

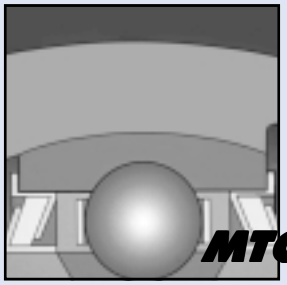

Tight Housing Fit

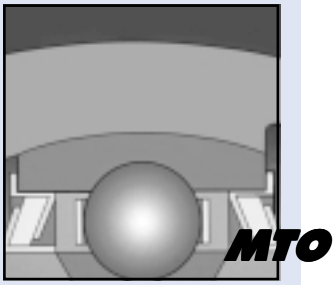

Reduced Internal Clearance

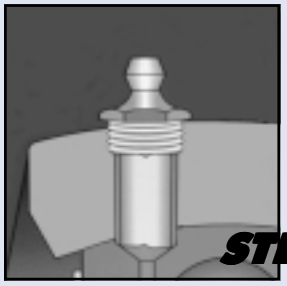

Locking Pin & Dimple

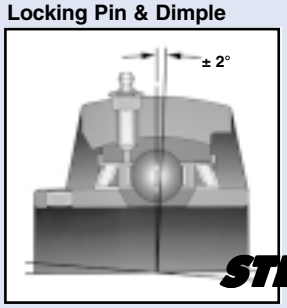

± 2° Misalignment

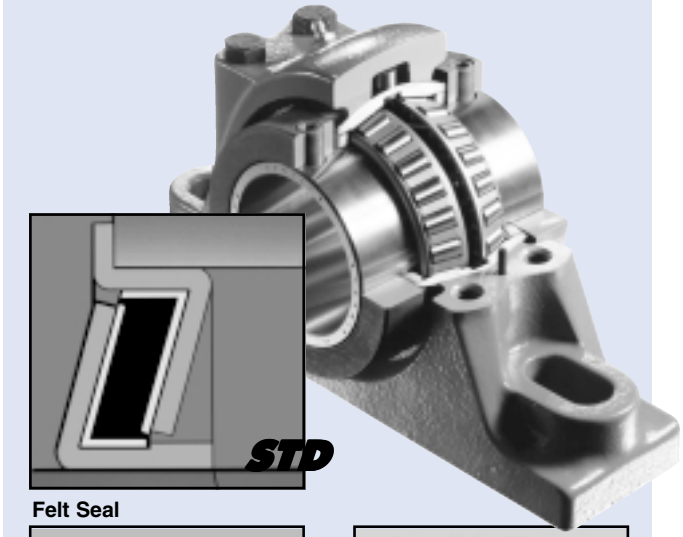

Felt Seal

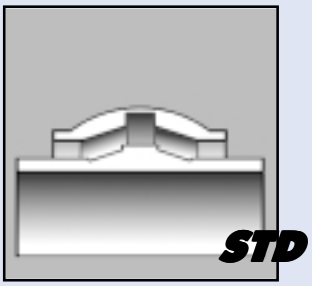

Wide Inner & Outer Ring

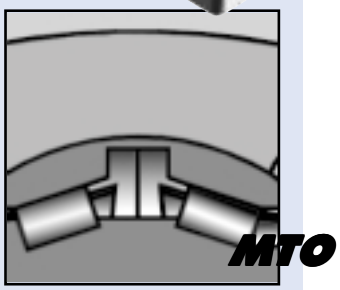

Reduced Internal Clearance

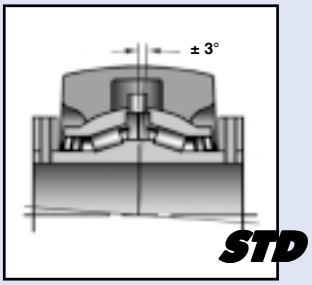

3° Misalignment

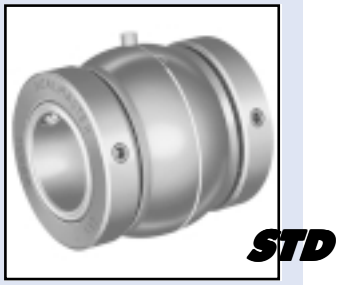

Double Side Set Screw Locking

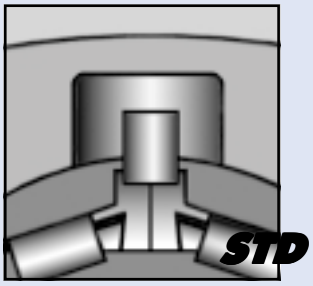

Locking Pin

Examples of **"Shielded Ball"** Ball Bearings

Note: **MTO** (Made To Order), **STD** (Standard)

ECCENTRIC DRIVES...

This equipment transfers or separates product through a reciprocating motion produced by an eccentric drive. Eccentric drive systems utilize a weight displaced asymmetrically from the centerline of rotation which creates a constantly changing force. Constant vibration and shock loads can pound the bearing rolling elements and races to reduce operational life by brinneling raceways and accelerating metal fatigue.

Eccentric drive applications tend to operate under high vibration and impact loading. The dynamic forces can cause high stress in bearing components. Many of these applications also operate in highly contaminated environments such as sand, dust, chips, etc.

Key Concerns... include shock and impact loading, vibration, loss of shaft lock, contamination, misalignment.

SEALMASTER bearings are frequently specified for:

- Gyrating Screens.
- Vibrating Conveyors.
- Agitators.
- Sand Reclamation.
- Vertical Stroke Shake-Outs.
- Fluidizing Beds.
- Foundry Shake-Out Conveyors.
- Deburring Machines.

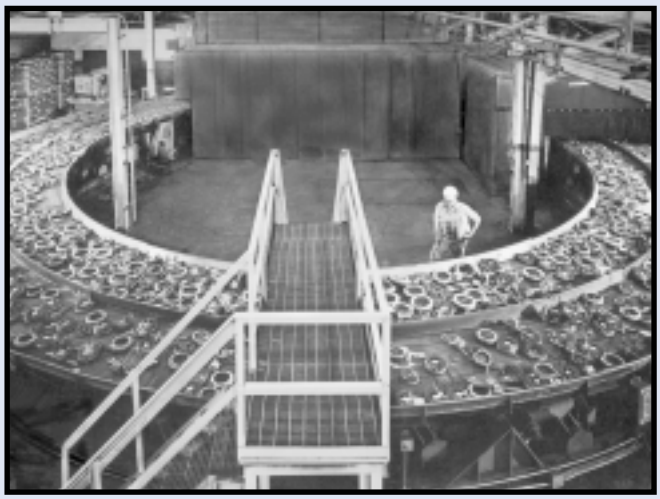

*Quality-made SEALMASTER bearings help vibrate 60-tons of conveyor and hot castings in this **tough** installation.* This 45-ton dynamically-balanced conveyor, vibrating at 360 cycles/minute, handles and cools 15 tons of hot foundry castings on a continuous basis. It operates on custom-modified SEALMASTER ball and roller bearings which have special tight housing fit-ups for this demanding vibratory service.

GOLD LINE SOLUTIONS FOR ECCENTRIC DRIVES APPLICATIONS.

Vibration/Shock and Impact Loading:

Housing Fit...

Tight housing fit (interference) is required between the bearing insert and housing to prevent the outer race from rotating in the housing. This minimizes fretting on the outer race OD and Housing bore. Available as made to order on ball and roller design.

Misalignment...

The Sealmaster misalignment capabilities, ±2° on ball and ±3° on roller bearings overcome static alignment problems during installation which can be caused by inaccuracy in framework design.

Internal Clearances...

Reduced internal clearance can be applied to ball bearings on a made to order basis to reduce pounding forces and internal stresses created from vibration and impact loads.

If required, Tapered Roller Bearings can be modified with reduced clearance ("endplay") which minimizes edge loading. This distributes forces more uniformly across each loaded roller. Contact application engineering for application review.

Housing Styles...

Piloted Flange housings are often recommended for these applications due to the 360° mounting shoulder for precision installation in the machine structure. This added support greatly reduces bolt stresses. Six mounting holes are standard on 4 7/16" through 5" roller bearing bore sizes. SEALMASTER also recommends the use of four bolt hole mounting configurations on the pillow block style housings.

Throughout the SEALMASTER ball bearing line, solid base housings are standard and contribute to a more rigid mounting system.

Locking Mechanism...

Double sided set screw shaft locking, available standard on roller and medium duty ball bearings, uses four set screws to hold the bearing to the shaft and is recommended for these applications.

Contamination:

Seals...

SEALMASTER's field proven felt lined labyrinth seals keep contaminants out and lubrication in. The felt filtering material is highly effective barrier against abrasive particulate and the labyrinth construction allows for the grease and contamination purge during re-lubrication. Depending upon your individual application needs, you may consider the other optional sealing arrangements found on page 188 in our engineering section.

Commonly Used SEALMASTER Bearings:

Generally, Roller bearings are specified with a "TF" suffix and will be modified with a Tight Fit between the housing and the bearing insert. All Tight Fit bearings are furnished with the cap bolts snugged by hand and tagged with proper torque specifications. For reduced internal clearances ("RC suffix) contact SEALMASTER Engineering for application review.

To order a Tight Fit bearing, add "TF" to the catalog part number.

For example: "RPB215-2TF"

SEALMASTER ENGINEERING SHOULD BE CONTACTED TO REVIEW ANY SPECIFIC APPLICATION REQUIREMENTS.

STANDARD & CUSTOM SOLUTIONS FOR ECCENTRIC DRIVES APPLICATIONS

GOOD AS GOLD... NO EQUAL!

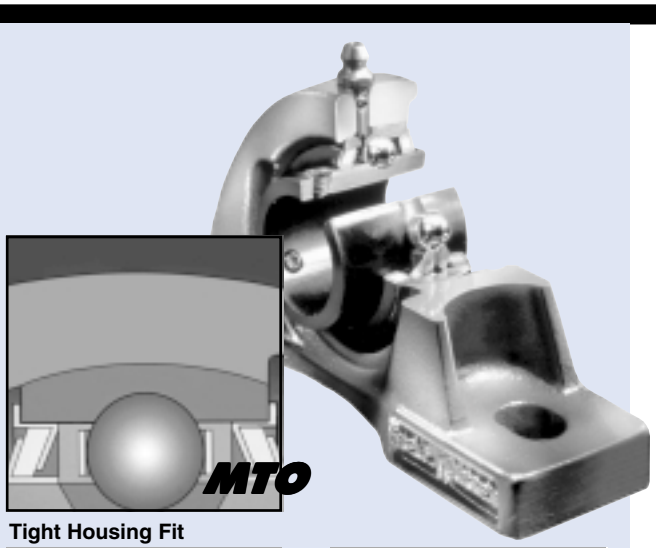

Tight Housing Fit

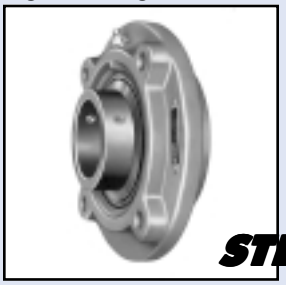

Piloted Flange Housing Styles

Four Bolt Pillow Blocks

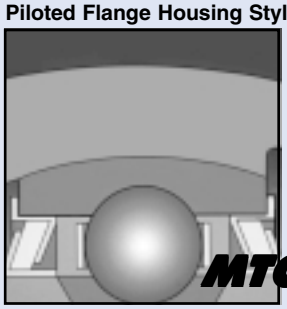

Tight Internal Clearances

Solid Base Housing Styles

Double Side Set Screw Locking

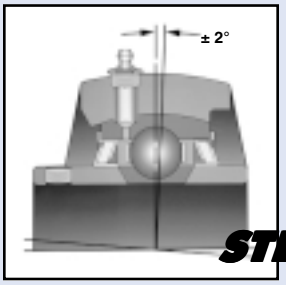

± 2° Misalignment

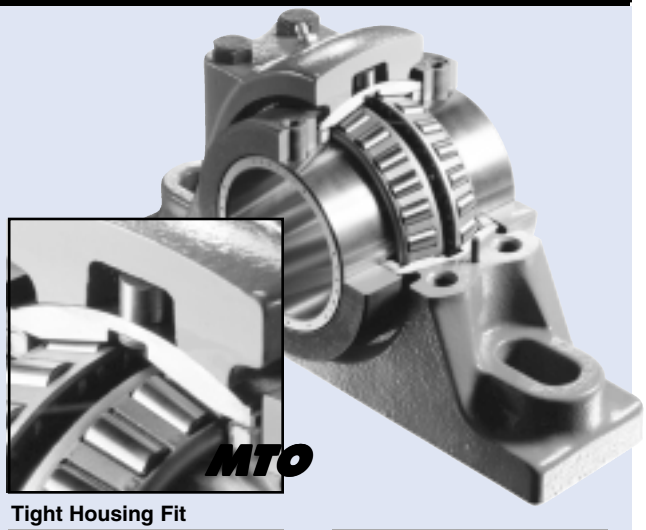

Tight Housing Fit

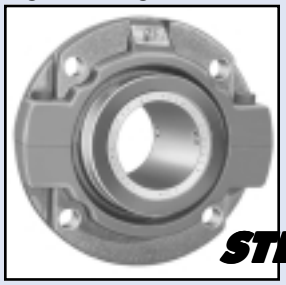

Piloted Flange Housing Styles

Four Bolt Pillow Block

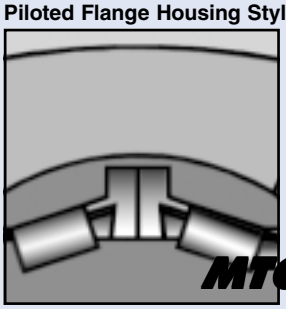

Tight Internal Clearances

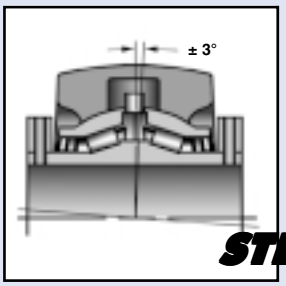

± 3° Misalignment

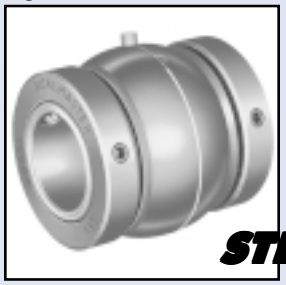

Double Side Set Screw Locking

Note: **MTO** (Made To Order), **STD** (Standard)

MIXERS...

Industrial mixers are designed to combine materials in industries such as paint, ink, film, chemicals and food products. Mixers benefit from the standard Gold platform as well as special bearing modifications that address the demanding application dynamics.

Thrust loads are present due to the shaft weight, the mixing wheel, and the media being mixed. Often, mixers have a vertical shaft orientation. The bearings typically have close center distances and an extended shaft cantilevered into a mixing drum. The blade is positioned at the end of the mixing shaft to blend media. Shaft deflection results in dynamic loading on the bearing which causes dynamic misalignment. Often bearings must be protected from liquid splash or dry media debris.

Key Concerns... include misalignment, thrust, system imbalance, loss of shaft lock, and liquid, dry, and chemical contamination.

GOLD LINE SOLUTIONS FOR MIXERS APPLICATIONS.

Misalignment:

The SEALMASTER misalignment capabilities, ±2° on ball and ±3° on roller bearings overcome static alignment problem associated with the extended cantilever set up found in mixers.

Thrust Loading:

Bearing Load Capability...

SEALMASTER RPB tapered roller bearings are the recommended bearing choice for mixers because of their increased ability to perform heavy combined radial and thrust loading. Although, high speed applications may require the use of mounted ball bearings.

Locking Mechanism...

Double sided set screw shaft locking, available standard on roller and medium duty ball bearings, uses four set screws to hold the bearing to the shaft and is recommended for these applications.

System Imbalance:

Wide Inner and Outer Race...

This feature distributes the dynamic misalignment forces over a large surface area between the bearing insert/cartridge and housing. This also provides a greater internal chamber volume that allows for increased grease capacity.

Locking Pin...

The locking pin design significantly lessens the likelihood of outer ring rotation that could compromise the integrity of the lubrication system.

Housing Fits...

SEALMASTER provides increased useful bearing life by incorporating a custom fit between the bearing insert/cartridge and the housing to minimize corrosive fretting, and accomodate dynamic misalignment.

Internal Clearances...

In SEALMASTER RPB Roller Bearings the optional, reduced clearance modification diminishes edge loading from dynamic shaft misalignment caused by bending of the shaft and the overhung load due to viscous or heavy media.

Contamination:

Seals...

In wet or slurry applications the SEALMASTER contact seal with protective flingers is suggested. Seal materials may need to be considered if media being mixed contains any aggressive chemicals.
Non-purgable spring loaded "V" seals (oil seals) can be utilized for grease retention on ball bearings in these vertical applications.

Lubrication...

Lubrication frequency may need to be increased to ensure adequate lubrication is maintained. Optional food grade greases are available where required.

Contact application engineering with your application parameters for exact bearing selection (630-898-9620).

STANDARD & CUSTOM SOLUTIONS FOR MIXERS APPLICATIONS

GOOD AS GOLD... NO EQUAL!

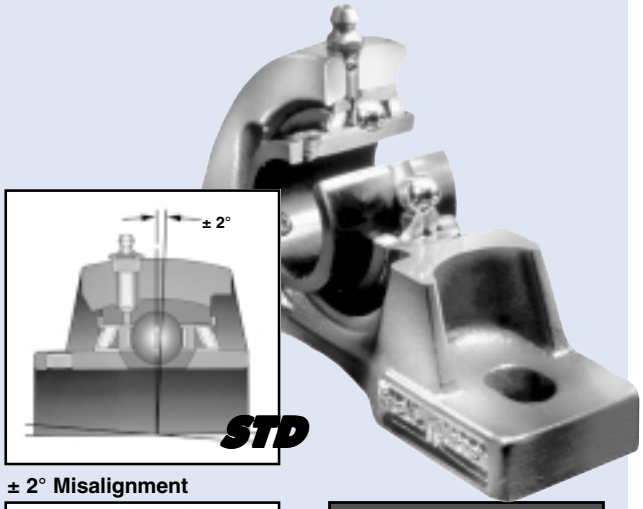

± 2° Misalignment

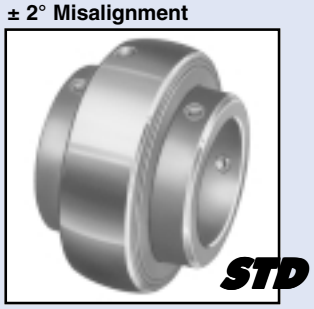

Double Sided Set Screw Locking

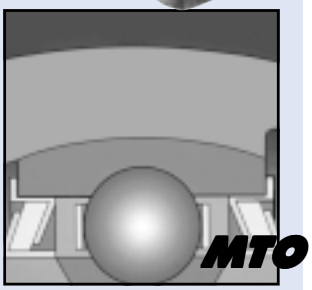

Reduced Internal Clearance

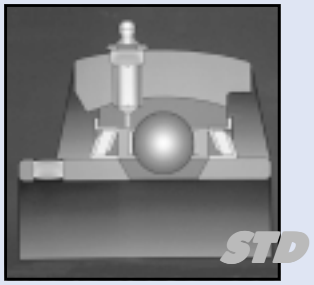

Wide Inner & Outer Race

Spring Loaded "V" Seal

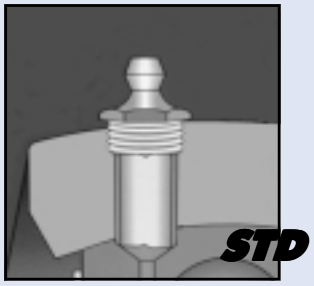

Locking Pin & Dimple

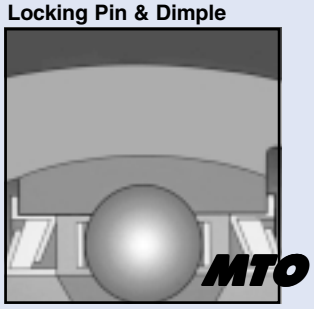

Tight Housing Fit

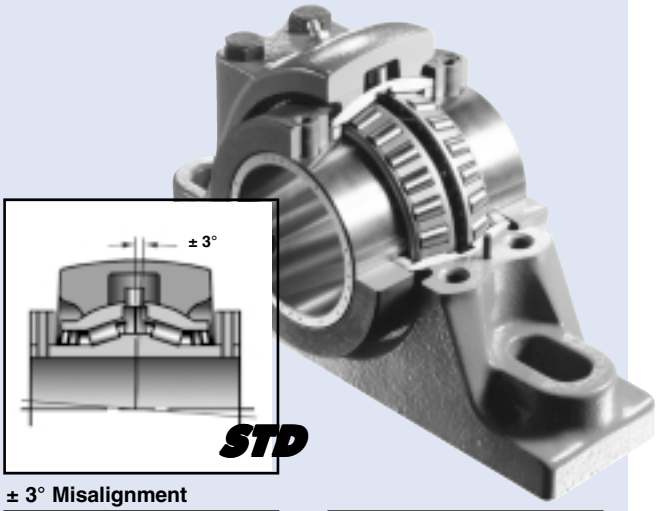

± 3° Misalignment

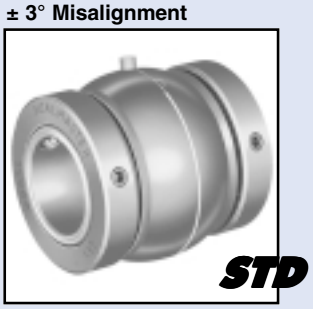

Double Sided Set Screw Locking

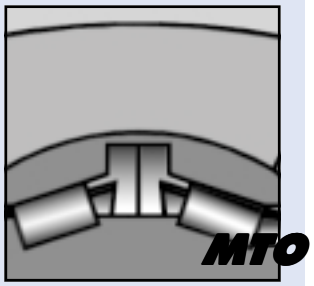

Reduced Internal Clearance

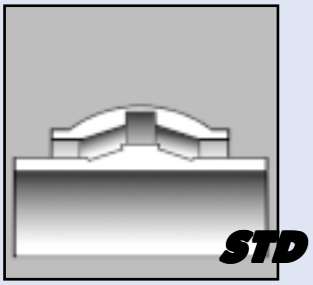

RCI Inner & Outer Race

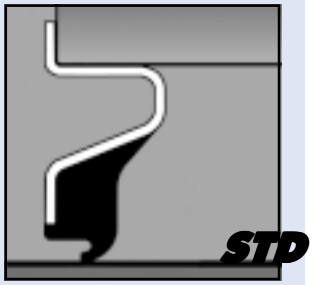

Contact Seal

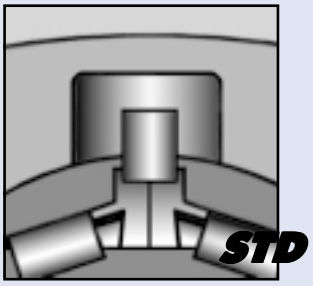

Locking Pin

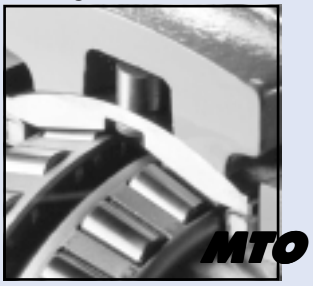

Tight Housing Fit

Note: **MTO** (Made To Order), **STD** (Standard)